Last Modified: 3-10-2010	6.4 F	**From:** 200901
Model Year: 2010	**Model:** Corolla	**Doc ID:** RM0000010EW133X
Title: FOREWORD / CAUTION / SECTION: FOREWORD: FOREWORD (2010 Corolla)		

FOREWORD

This is Volume 1 of the 2010 COROLLA manual. There are four volumes to this manual. The sections included in each volume are indicated by black type in the Section Index. Use the Section Index of each volume to find the volume with the section you need.
This manual applies to the models listed below. It covers all information in the previously issued Pub. No. RM12R0U, and includes all production changes effective July, 2009 or later.

Applicable models	ZRE142 series
	AZE141 series

Please note that the publications below have also been prepared as relevant service manuals for the components and system in these vehicles.

MANUAL NAME	PUB. NO.
2010 COROLLA Electrical Wiring Diagram	EM12R1U

All information in this manual is based on the latest product information at the time of publication. However, specifications and procedures are subject to change without notice. For the most current information available, refer to the Toyota Technical Information System (TIS) online at dealership locations or on the Internet at http://techinfo.toyota.com.
If you find any failures in this manual, you are kindly requested to inform us by using the report form on the next page.

TOYOTA MOTOR CORPORATION

Copyright (C) 2009 TOYOTA MOTOR CORPORATION
All rights reserved. This book may not be reproduced or copied, in whole or in part, without the written permission of Toyota Motor Corporation.

Repair Manual Quality Report

Att.) Service Manager, Your Distributor

Pub. No.	Issue Date
Name of Dealer	Name of Reporter
Subject	
Problem Description	
Correction Proposal	

Last Modified: 3-10-2010	6.4 F	**From:** 200901
Model Year: 2010	**Model:** Corolla	**Doc ID:** RM0000010EX0QMX
Title: FOREWORD / CAUTION / SECTION: FOREWORD: CAUTION (2010 Corolla)		

CAUTION

This contents does not include all the necessary items about repair and service. This manual is made for the use of persons who have special techniques and certifications. If non-specialized or uncertified technicians perform repairs or service only using this manual or without proper equipment or tools, this may cause severe injury to you or other persons nearby and also cause damage to your customer's vehicle.
In order to prevent dangerous operation and damage to your customer's vehicle, be sure to follow the instructions shown below.

- This contents must be read thoroughly. It is especially important to have a good understanding of all the contents written in the PRECAUTION of "INTRODUCTION" section.
- The service method written in this manual is very effective to perform repair and service. When performing the operations following the procedures using this manual, be sure to use tools specified and recommended. If using non-specified or tools other than recommended tools and service methods, be sure to confirm the safety of the technicians and that there is no possibility of causing personal injury or damage to the customer's vehicle before starting the operation.
- If part replacement is necessary, the part must be replaced with the same part number or equivalent part. Do not replace it with an inferior quality part.
- It is important to note that this manual contains various "Cautions" and "Notices" that must be carefully observed in order to reduce the risk of personal injury during service or repair, or reduce the possibility that improper service or repair may damage the vehicle or render it unsafe. It is also important to understand that these "Cautions" and "Notices" are not exaggerations and are possible hazardous consequences that might result from failure to follow these instructions.

Last Modified: 3-10-2010	6.4 D	**From:** 200901
Model Year: 2010	**Model:** Corolla	**Doc ID:** RM00000315Z015X
Title: INTRODUCTION: REPAIR INSTRUCTION: INITIALIZATION (2010 Corolla)		

INITIALIZATION

1. PROCEDURES NECESSARY WHEN BATTERY TERMINAL IS DISCONNECTED/RECONNECTED

NOTICE:

It may not be possible to release the steering lock or start the engine when the battery voltage is low. If this occurs, initialization of the steering lock system is required. INFO

2. PROCEDURES NECESSARY WHEN ECU OR OTHER PARTS ARE REPLACED

REPLACEMENT PART	NECESSARY PROCEDURE	EFFECT / INOPERATIVE FUNCTION WHEN NECESSARY PROCEDURES ARE NOT PERFORMED	NOTE
ECM	Vehicle Identification Number (VIN) registration	MIL comes on	Using the Techstream.
	ECU communication ID registration	Engine start	-
• Automatic transmission assembly*1 • Engine assembly*1 • ECM*1	Reset memory	• Large shift shock • The deterioration of fuel efficiency	Use the Techstream.
Tire pressure warning ECU	1. Register transmitter IDs 2. Initialize tire pressure warning system	• When DTC detection conditions of "transmitter ID not received" DTC are met, TPWS indicator blinks for 1 minute, and then illuminates. • Tire pressure monitoring function	-
Tire pressure warning valve and transmitter	1. Register transmitter IDs 2. Initialize tire pressure warning system	1. When DTC detection conditions of "transmitter ID not received" DTC are met,	Even if only one wheel is replaced, IDs for all 4 wheels must be registered.

REPLACEMENT PART	NECESSARY PROCEDURE	EFFECT / INOPERATIVE FUNCTION WHEN NECESSARY PROCEDURES ARE NOT PERFORMED	NOTE
		TPWS indicator blinks for 1 minute, and then illuminates. 2. Tire pressure monitoring function of replaced wheel	
Brake actuator assembly (Skid control ECU)	Perform yaw rate and acceleration sensor zero point calibration	• VSC OFF indicator light blinks • VSC disabled or malfunctioning	Perform yaw rate and acceleration sensor zero point calibration with the ignition switch ON (engine stopped).
• Yaw rate and acceleration sensor • Front wheel alignment adjustment	1. Clear zero point calibration data 2. Perform yaw rate and acceleration sensor zero point calibration	• VSC OFF indicator light blinks • VSC disabled or malfunctioning	Perform yaw rate and acceleration sensor zero point calibration with the ignition switch ON (engine stopped).
• Power steering ECU*2 • Steering column*2	Perform rotation angle sensor initialization and torque sensor zero point calibration	• P/S warning light comes on • EPS control	DTC (C1515/C1525) will be stored when the power steering ECU is replaced.
Power steering ECU*3	1. Assist map writing 2. Torque sensor zero point calibration	• P/S warning light comes on • EPS control	DTC (C1515) will be stored when the power steering ECU is replaced.
Steering column*3	Torque sensor zero point calibration	Steering effort is different between turning steering wheel to left and right	-
• Door control transmitter*5 • Door control receiver*5	1. Perform identification code registration (key code) 2. Refer to wireless door lock control system "REGISTRATION" procedures	Wireless door lock control system	-

REPLACEMENT PART	NECESSARY PROCEDURE	EFFECT / INOPERATIVE FUNCTION WHEN NECESSARY PROCEDURES ARE NOT PERFORMED	NOTE
Transponder key ECU*5	1. Key code registration 2. ECU communication ID registration	Engine start	-
key*5	Key code registration	Engine start	-
Steering lock actuator (Steering lock ECU)*4	ECU code registration	Engine start	-
• Certification ECU*4 • Electrical key transmitter*4	Key ID registration	• Wireless door lock control system • Smart key system • Engine start	-
ID code box*4	1. ECU code registration 2. ECU communication ID registration	Engine start	-
Occupant classification ECU	• Perform zero point calibration • Perform sensitivity check • Registration ECU data	• Occupant classification system • Passenger airbag ON/OFF indicator • Airbag system (Front passenger side) • Seat belt warning system (Front passenger side)	-
• Sliding roof drive gear (Sliding roof ECU) • Sliding roof housing • Sliding roof drive cable	Perform sliding roof drive gear reset	• Automatic open/close function of roof glass • Jam protection function • Operation function after ignition switch off	Necessary when removed and installed (Not necessary when the sliding roof drive gear (sliding roof ECU) is removed and installed together with the sliding roof housing.)

*1: for U341E,U250E Automatic Transaxle
*2: for 2AZ-FE
*3: for 2ZR-FE
*4: w/ Smart Key System

*5: w/o Smart Key System

3. VEHICLE IDENTIFICATION NUMBER (VIN) REGISTRATION

NOTICE:

The Vehicle Identification Number (VIN) must be input into a replacement ECM.

HINT:

The VIN is a 17-digit alphanumeric vehicle identification number. The Techstream is required to register the VIN.

(a) Description

HINT:

This registration section consists of two parts: Read VIN and Write VIN.

(1) Read VIN: This process allows the VIN stored in the ECM to be read in order to confirm that the two VINs, provided with the vehicle and stored in the vehicle's ECM, are the same.

(2) Write VIN: This process allows the VIN to be input into the ECM. If the ECM is changed, or the ECM VIN and vehicle VIN do not match, the VIN can be registered, or overwritten in the ECM by following procedure.

(b) Read VIN

(1) Confirm the vehicle VIN.

(2) Connect the Techstream to the DLC3.

(3) Turn the ignition switch to ON.

(4) Turn the Techstream on.

(5) Enter the following menus: Powertrain / Engine and ECT / Utility / VIN / VIN Read.

(c) Write VIN

(1) Confirm the vehicle VIN.

(2) Connect the Techstream to the DLC3.

(3) Turn the ignition switch to ON.

(4) Turn the Techstream on.

(5) Enter the following menus: Powertrain / Engine and ECT / Utility / VIN / VIN Write.

4. DESCRIPTION OF CODE REGISTRATION (Engine Immobiliser System (w/ Smart Key System))

HINT:

- The ID codes are the same as recognition codes for the wireless transmitter and the engine immobiliser function. Registering an ID code enables the smart key system, the wireless door lock control function and the engine immobiliser function to be operated.
- Code registration is necessary when the certification ECU (smart key ECU assembly), ID code box (immobiliser code ECU), steering lock ECU, or key is replaced with a new one.

(a) Vehicles with the smart key system do not have a key slot. Therefore, hold the key close to the engine switch to register the key, as shown in the illustration.

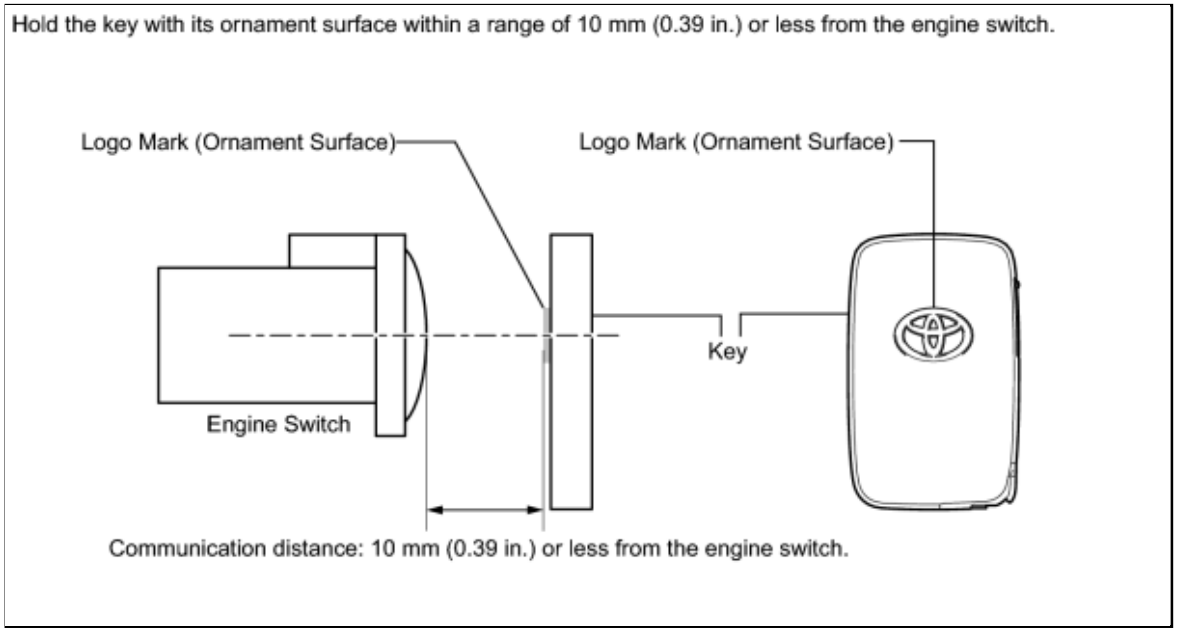

5. PART REPLACEMENT AND KEY REGISTRATION (Engine Immobiliser System (w/ Smart Key System))

(a) The following table shows ECU replacement and key registration procedures for cases in which a malfunctioning ECU has been identified through the troubleshooting of the smart key system.

HINT:

- The following procedures can be performed:
  - New key ID registration
  - Additional key ID registration
  - Key ID erasure
  - All key ID erasure
  - ECU code registration
- If the customer has not brought all the registered keys, replacement of the ID code box (immobiliser code ECU) is also required.
- A maximum of 4 keys can be registered.

PART TO BE REPLACED	CONDITION		PROCEDURE	REFERENCE
Certification ECU (Smart key ECU assembly)	Customer has brought all keys		1. Replace certification ECU (smart key ECU assembly)	-
			2. Reregister all keys (New key ID registration)	PROCEDURE "B"
	Some keys are lost	Key ID codes can be registered and erased	1. Erase key codes (Key ID erasure)	PROCEDURE "D"
			2. Perform additional key registration procedure (Additional key ID registration)	PROCEDURE "C"
			3. Replace certification ECU (smart key ECU assembly)	-

PART TO BE REPLACED	CONDITION	PROCEDURE	REFERENCE
		4. Reregister all keys (New key ID registration) **HINT:** **If some keys are not registered during the above steps, they will be disabled because they cannot be registered later.**	PROCEDURE "B"
	Key ID codes cannot be either registered or erased	1. Replace certification ECU (smart key ECU assembly)	-
		2. Replace ID code box (immobiliser code ECU)	-
		3. Reregister all keys (New key ID registration) **HINT:** **If key codes cannot be erased or additional keys cannot be registered due to a malfunction in the certification ECU (smart key ECU assembly), replace the ID code box (immobiliser code ECU) and certification ECU (smart key ECU assembly). If some keys are not registered during the above steps, they will be disabled because they cannot be registered later.**	PROCEDURE "A"
		4. Register ECU communication ID	PROCEDURE "G"
Certification ECU (Smart key ECU assembly)	All keys are lost	1. Replace certification ECU (smart key ECU assembly)	-
		2. Replace ID code box (immobiliser code ECU)	-
		3. Reregister all keys (New key ID registration) **HINT:** **If key codes cannot be erased or additional keys cannot be registered due to a malfunction in the certification ECU (smart key ECU assembly), replace the ID code box (immobiliser code ECU) and certification ECU (smart key ECU assembly). If some keys are not registered during the above steps, they will be disabled because they cannot be registered later.**	PROCEDURE "A"
		4. Register ECU communication ID	PROCEDURE "G"
ID code box (Immobiliser code ECU)	Customer has brought at least 1 key	1. Replace ID code box (immobiliser code ECU)	-
		2. Register recognition codes in ECUs (ECU code registration)	PROCEDURE "F"

PART TO BE REPLACED	CONDITION	PROCEDURE	REFERENCE
		3. ECU communication ID registration	PROCEDURE "G"
	All keys are lost	1. Replace ID code box (immobiliser code ECU)	-
		2. Replace certification ECU (smart key ECU assembly)	-
		3. Reregister all keys (New key ID registration) **HINT:** **If some keys are not registered during the above steps, they will be disabled because they cannot be registered later.**	PROCEDURE "A"
		4. Register ECU communication ID	PROCEDURE "G"
Steering lock ECU	Customer has brought at least 1 key	1. Replace steering lock ECU	-
		2. Register recognition codes in ECUs (ECU code registration)	PROCEDURE "F"
	All keys are lost	1. Replace steering lock ECU	-
		2. Replace certification ECU (smart key ECU assembly)	-
		3. Replace ID code box (immobiliser code ECU)	-
		4. Reregister all keys (New key ID registration) **HINT:** **If some keys are not registered during the above steps, they will be disabled because they cannot be registered later.**	PROCEDURE "A"
		5. Register ECU communication ID	PROCEDURE "G"
Main body ECU (Instrument panel junction block)	No condition required	Replace main body ECU (instrument panel junction block)	-
ECM	No condition required	1. Replace ECM	-
		2. Register ECU communication ID	PROCEDURE "H"
Key (for replacement)	Customer has brought at least 1 key	1. Using remaining key, erase lost key code (Key ID erasure)	PROCEDURE "D"
		2. Register additional keys as necessary (Additional key ID registration)	PROCEDURE "C"

PART TO BE REPLACED	CONDITION	PROCEDURE	REFERENCE
	All keys are lost	1. Erase all key codes (All key ID erasure)	PROCEDURE "E"
		2. Register all keys (New key ID registration) **HINT:** **If the customer brings lost keys at a later date, they can be registered using the additional key ID registration function.**	PROCEDURE "A"
Key (for addition)	Customer has brought at least 1 key **HINT:** **When adding keys (Additional registration)**	1. Register additional keys as necessary (Additional key ID registration)	PROCEDURE "C"

6. KEY REGISTRATION (Engine Immobiliser System (w/ Smart Key System))

(a) PROCEDURE "A"

New key ID registration (when replacing the certification ECU (smart key ECU assembly) and ID code box (immobiliser code ECU), or when replacing the certification ECU (smart key ECU assembly), ID code box (immobiliser code ECU) and steering lock ECU)

PROCESS	PROCEDURE
1. Start of registration	1. Connect the Techstream to DLC3 2. Turn the engine switch on (IG) 3. Enter the following menus: Body Electrical / Smart Key / Utility / Smart Code Registration **HINT:** **The engine switch cannot be turned on (IG) more than 10 times. After connecting the Techstream, turn the Techstream on while turning the driver's side door courtesy light switch on and off repeatedly at 1.5-second intervals or less to continue key registration procedure.**
2. Confirmation of ECU code	• Perform operation according to prompts on the Techstream screen **HINT:** **Mode is automatically selected by the Techstream (new registration mode or add mode).**
3. Verification of unregistered key*1	1. Hold the unregistered key close to the engine switch (For details, refer to "Description of Code Registration") 2. Confirm that the wireless door lock buzzer sounds once (short beep) 3. Place the unregistered key on the driver's seat 4. Confirm that the wireless door lock buzzer sounds once (short beep)

PROCESS	PROCEDURE
4. Registration of ID code	• Perform operation according to prompts on the Techstream screen
5. End of registration	• Finish new key ID code registration

- *1: Repeat this process for each key which is to be registered for the vehicle. Finish the procedure for each key within 30 seconds. If the procedure for any of the keys has not been finished within the specified time, perform the registration procedures again from process 1. Make sure that only 1 key is in the cabin during the registration procedures. If 2 or more keys are in the cabin simultaneously, electric waves will interfere with each other, preventing normal registration.

(b) PROCEDURE "B"

New key ID registration (when replacing the certification ECU (smart key ECU assembly))

PROCESS	PROCEDURE
1. Start of registration	1. Connect the Techstream to DLC3 2. Turn the engine switch on (IG) 3. Enter the following menus: Body Electrical / Smart Key / Utility / Smart Code Registration **HINT:** **The engine switch cannot be turned on (IG) more than 10 times. After connecting the Techstream, turn the Techstream on while turning the driver's side door courtesy light switch on and off repeatedly at 1.5-second intervals or less to continue key registration procedure.**
2. Confirmation of ECU code	• Perform operation according to prompts on the Techstream screen **HINT:** **Mode is automatically selected by the Techstream (new registration mode or add mode).**
3. Confirmation of all registered keys*1	1. Hold the registered key close to the engine switch (For details, refer to "Description of Code Registration") 2. Confirm that wireless door lock buzzer sounds once (short beep)
4. Confirmation of ECU code	• Perform operation according to prompts on the Techstream screen
5. Verification of unregistered key*2	1. Hold the unregistered key close to the engine switch (For details, refer to "Description of Code Registration") 2. Confirm that wireless door lock buzzer sounds once (short beep) 3. Place the unregistered key on the driver's seat 4. Confirm that the wireless door lock buzzer sounds once (short beep)
5. Registration of ID code	• Perform operation according to prompts on the Techstream screen

PROCESS	PROCEDURE
6. End of registration	• Finish new key ID code registration

- *1: Repeat this process for each key registered for the vehicle. Finish the procedure for each key within 30 seconds. If the procedure for any of the keys has not been finished within the specified time, perform the registration procedures again from process 1. If the key confirmation procedure for a key is performed, the security indicator light comes on and remains on until all the keys are confirmed.
- *2: Repeat this process for each key which is to be registered for the vehicle. Finish the procedure for each key within 30 seconds. If the procedure for any of the keys is not finished within the specified time, perform the registration procedures again from 1. Make sure that only 1 key is in the cabin during the registration procedures. If 2 or more keys are in the cabin simultaneously, electric waves will interfere with each other, preventing normal registration.

(c) PROCEDURE "C"

Additional key ID registration

PROCESS	PROCEDURE
1. Start of registration	1. Connect the Techstream to DLC3 2. Turn the engine switch on (IG) 3. Enter the following menus: Body Electrical / Smart Key / Utility / Smart Code Registration
2. Confirmation of registered key*1	1. Perform operation according to prompts on the Techstream screen **HINT:** **Mode is automatically selected by the Techstream (new registration mode or add mode)** 2. Hold the registered key close to the engine switch (For details, refer to "Description of Code Registration") 3. Confirm that the wireless door lock buzzer sounds once (short beep)
3. Confirmation of ECU code	• Perform operation according to prompts on the Techstream screen
4. Verification of unregistered key*2	1. Hold the unregistered key close to the engine switch (For details, refer to "Description of Code Registration") 2. Confirm that the wireless door lock buzzer sounds once (short beep) 3. Place the unregistered key on driver's seat 4. Confirm that the wireless door lock buzzer sounds once (short beep)
5. Registration of ID code	• Perform operation according to prompts on the Techstream screen
6. End of registration	• Finish additional key ID code registration

- *1: Perform this process for one of the keys registered for the vehicle. Finish the procedure within 30 seconds. If the procedure has not been finished within the specified time, perform the registration procedures again from process 1.
- *2: Repeat this process for each key which is to be registered for the vehicle. Finish the procedure for

each key within 30 seconds. If the procedure for any of the keys is not finished within the specified time, perform the registration procedures again from 1. Make sure that only 1 key is in the cabin during the registration procedures. If 2 or more keys are in the cabin simultaneously, electric waves will interfere with each other, preventing normal registration.

(d) PROCEDURE "D"

Key ID erasure

HINT:

Erase all registered key codes except one.

PROCESS	PROCEDURE
1. Start of erasure	1. Connect the Techstream to DLC3 2. Turn the engine switch on (IG) 3. Enter the following menus: Body Electrical / Smart Key / Utility / Smart Code Erasure
2. Confirmation of registered key*1 **HINT:** **Select the key that will not be erased.**	1. Perform operation according to prompts on the Techstream screen 2. Hold the registered key close to engine switch (For details, refer to "Description of Code Registration") 3. Confirm that the wireless door lock buzzer sounds once (short beep)
3. Confirmation of ECU code	• Perform operation according to prompts on the Techstream screen
4. Erasure of ID code	• Perform operation according to prompts on the Techstream screen
5. End of erasure	• Finish key ID code erasure

- *1: Perform this process for one of the keys registered for the vehicle. Finish the procedure within 30 seconds. If the procedure has not been finished within the specified time, perform the erasure procedures again from process 1.

(e) PROCEDURE "E"

All key ID erasure

HINT:

All the key codes registered in the vehicle are erased.

PROCESS	PROCEDURE
1. Start of erasure	1. Connect the Techstream to DLC3 2. Turn the engine switch on (IG) 3. Turn the Techstream on while turning driver side door courtesy light switch on and off repeatedly at 1.5-second intervals or less 4. Enter the following menus: Body Electrical / Smart Key / Utility / Smart Code Erasure

PROCESS	PROCEDURE
2. Confirmation of ECU code	• Perform operation according to prompts on the Techstream screen
3. Erasure of ID code	• Perform operation according to prompts on the Techstream screen
4. End of erasure	• Finish key ID code erasure

(f) PROCEDURE "F"

ECU code registration

PROCESS	PROCEDURE
1. Start of registration	1. Connect the Techstream to DLC3 2. Turn the engine switch on (IG) 3. Enter the following menus: Body Electrical / Smart Key / Utility / ECU Communication ID Registration
2. Confirmation of registered key*1	1. Hold the registered key close to engine switch (For details, refer to "Description of Code Registration") 2. Confirm that the wireless door lock buzzer sounds once (short beep)
3. Registration of ECU code	• Perform operation according to prompts on the Techstream screen
4. End of registration	• Finish ECU code registration

- *1: Perform this process for one of the keys registered for the vehicle. Finish the procedure within 30 seconds. If the procedure has not been finished within the specified time, perform the erasure procedures again from process 1.

(g) PROCEDURE "G"

ECU communication ID registration

NOTICE:

- The ECU communication ID should be registered when the ID code box (immobiliser code ECU) is replaced in order to match these ECU communication IDs.
- The engine cannot be started unless the ECU communication IDs match.
- After the registration, pressing the engine switch may not start the engine on the first try. If so, press the engine switch again.
- Erase DTC B2799 (code for ECM's immobiliser communication error) by either of the following:

  - Use the Techstream.

  - Disconnect the battery for 30 seconds.

(1) Using SST, connect terminals TC and CG of the DLC3.

SST: 09843-18040

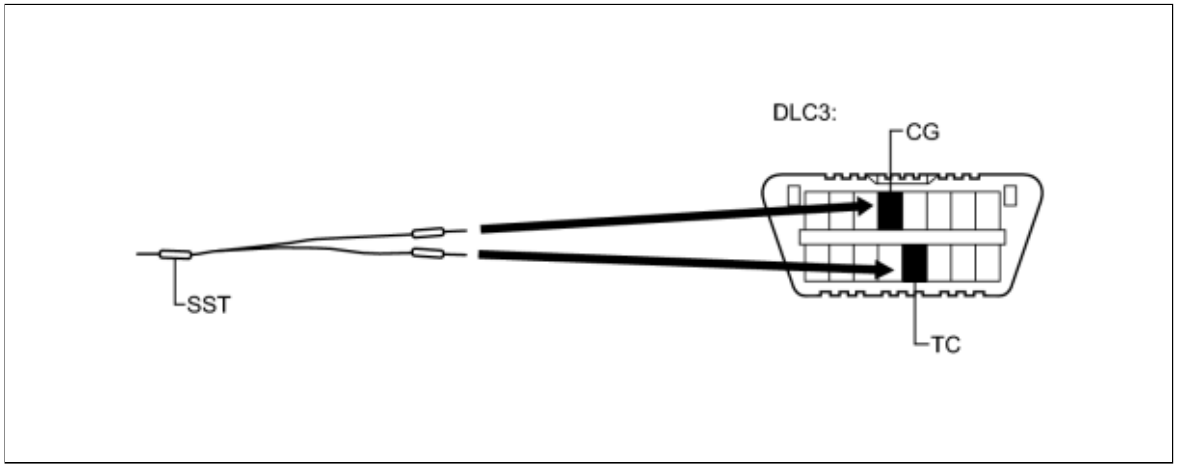

(2) Turn the engine switch on (IG) and leave it as is for 30 minutes.

HINT:

Do not start the engine.

(3) Turn the engine switch off and disconnect terminals TC and CG.

(4) Check that the engine starts and stays running for more than 3 seconds.

(h) PROCEDURE "H"

ECU communication ID registration

NOTICE:

The ECU communication ID should be registered when the ECM is replaced in order to match the ECU communication IDs.

PROCEDURE	SECURITY INDICATOR LIGHT CONDITION
1. Start	OFF
2. Hold an already registered key close to the engine switch and turn the engine switch on (IG) with the brake pedal depressed	
3. Check that the engine starts and stays running for more than 3 seconds	
4. Next	
5. End	

7. DESCRIPTION OF CODE REGISTRATION (Engine Immobiliser System (w/o Smart Key System))

HINT:

The key has 2 codes: the key code (immobiliser code) and the wireless code. Both of these codes need to be registered. For the wireless code registration procedures, refer to Wireless Door Lock Control System.

(a) When adding master keys or sub keys (Additional registration):

(1) Register the key code (immobiliser code) in the transponder key ECU assembly.

TARGET ECU	REFER TO

TARGET ECU	REFER TO
Transponder key ECU assembly	Procedure "B"

(b) When replacing the transponder key ECU assembly (New registration):

(1) Register the key code (immobiliser code) in the transponder key ECU assembly.

TARGET ECU	REFER TO
Transponder key ECU assembly	Procedure "A"

(2) Register the ECU communication ID between the new transponder key ECU assembly and the ECM.

TARGET ECU	REFER TO
ECM	Procedure "D"

(c) When replacing the ECM:

(1) Register the ECU communication ID between the transponder key ECU assembly and the new ECM.

TARGET ECU	REFER TO
Transponder key ECU assembly	Procedure "E"

(d) When replacing the transponder key ECU assembly and the ECM:

(1) Register the key codes (immobiliser codes) in the new transponder key ECU assembly.

TARGET ECU	REFER TO
Transponder key ECU assembly	Procedure "A"

(2) Register the ECU communication ID between the new transponder key ECU assembly and the new ECM.

TARGET ECU	REFER TO
Transponder key ECU assembly	Procedure "E"

(e) When clearing the key code(s):

(1) Clear the key code(s) of lost key(s).

TARGET ECU	REFER TO
Transponder key ECU assembly	Procedure "C"

8. KEY REGISTRATION (Engine Immobiliser System (w/o Smart Key System))

(a) New key code registration (Procedure "A"):

NOTICE:

Make sure that no key codes are registered in the transponder key ECU assembly.

HINT:

- In this mode, a maximum of 3 key codes for 2 master keys and 1 sub-key can be registered. The master keys and sub-key can be registered in any order because the transponder key ECU assembly can distinguish between different types of keys.
- New key codes must be registered with the battery connected. The ignition switch can be either on or off.
- When a new transponder key ECU assembly is installed, key codes must be registered in the transponder key ECU assembly.

Automatic Key Code Registration (New Registration)

PROCEDURE	SECURITY INDICATOR LIGHT CONDITION
1. Start	Blinking **HINT:** **Until first key is inserted**
2. Insert the master key into the ignition key cylinder.	ON
3. Techstream operation 1. Select Body Electrical 2. Select Immobiliser 3. Select Utility 4. Select Key Registration **HINT:** **After completing the above operation, proceed to the next step in accordance with the prompts on the Techstream screen.**	OFF for 1 second and then ON
4. Remove the key and then select Next on the Techstream.	ON
5. Insert the master key to be registered and then select Next on the Techstream.	OFF for 1 second and then ON
6. Remove the key and then select Next on the Techstream.	ON
7. Insert the sub-key to be registered and then select Next on the Techstream.	OFF for 1 second and then ON for 0.5 seconds and then OFF
8. Remove the key.	Blinking
9. End (Procedure "E")	

HINT:

- When the engine immobiliser system is operating normally and the key is pulled out, the security indicator light blinks continuously.
- If the new key code registration fails, code 2-1 will be output through the security indicator light. Trying to re-register an already registered key will cause code 2-2 to be output when the key is inserted. If the number of registered key codes exceeds the maximum limit, code 2-3 will be output through the security indicator light. The output details are shown below.

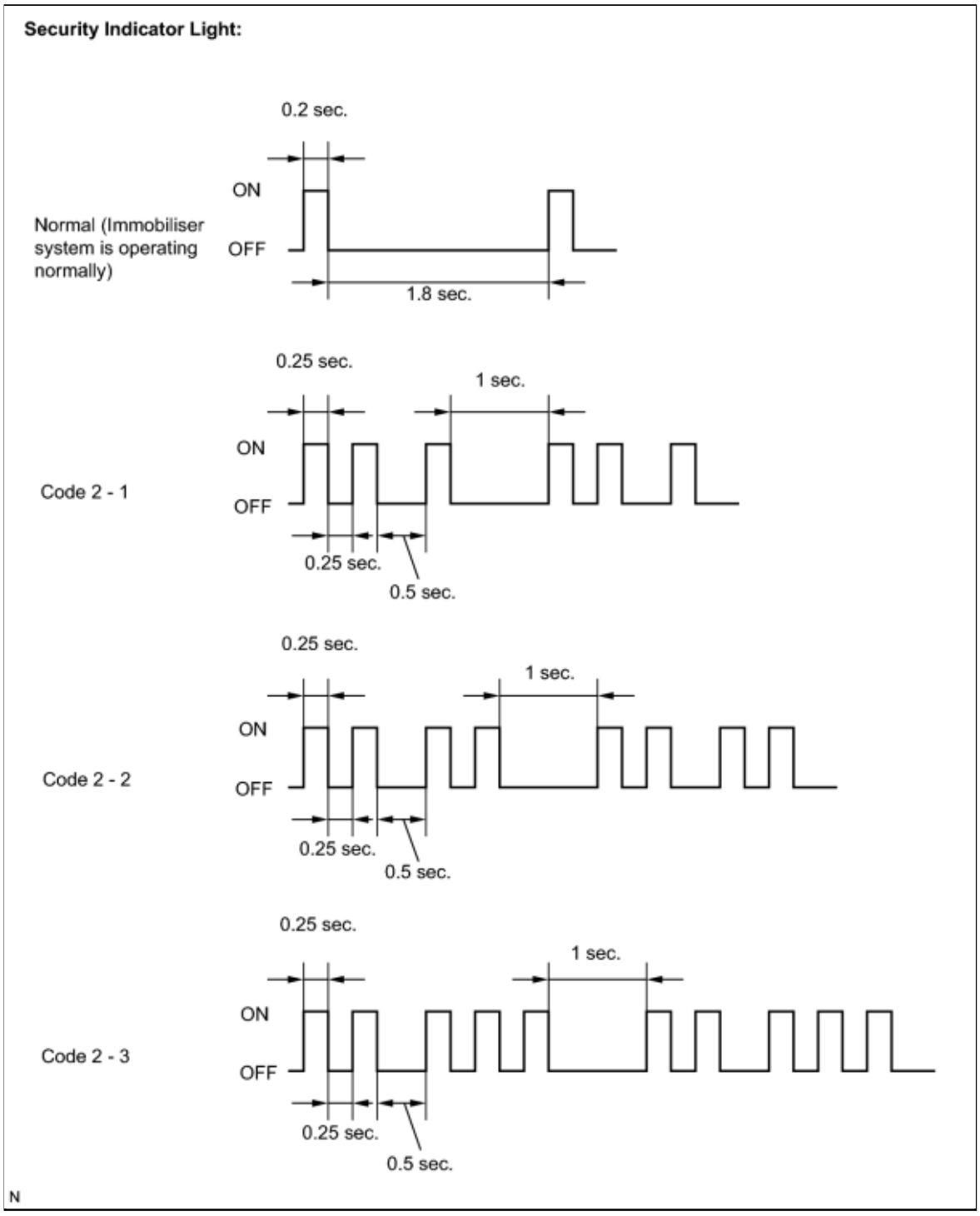

(b) Finish the automatic key code registration mode. The automatic key code registration mode can be forced to end when at least 1 key code (immobiliser code) for the master key has been registered.

HINT:

Follow the instruction on the Techstream screen to end new key code registration mode.

9. REGISTRATION OF ADDITIONAL KEY (Engine Immobiliser System (w/o Smart Key System))

(a) Additional registration (Procedure "B"):

HINT:

- A maximum of 5 key codes and 3 sub-key codes can be registered.
- Registration mode will end if any step is not completed within the specified time.
- When the ignition cylinder or the key cylinder set is replaced, remove the transmitter module from the original master key. Then install this transmitter module to a new key and use the new key as the master key. If necessary, use this master key to register other keys.

NOTICE:

When the ignition key cylinder has been replaced, locking and unlocking doors are possible with the new master key's transmitter module (removed from the original master key). However, the new master key will not be able to lock and unlock doors through the door key cylinder. Keep the original master key. If the battery in the new master key's transmitter module fails, the original master key can be used to lock and unlock doors through the door key cylinder.

Additional Registration

PROCEDURE	TIME TO COMPLETE OPERATION	SECURITY INDICATOR LIGHT CONDITION
1. Start	-	Blinking **HINT:** **Until first key is inserted**
2. Insert the already registered master key into the ignition key cylinder and turn the ignition switch to ON.	-	OFF
3. Techstream operation 1. Select Body Electrical 2. Select Immobiliser 3. Select Utility 4. Select Key Registration **HINT:** **After completing the above operation, proceed to the next step in accordance with the prompts on the Techstream screen.**	Within 120 sec.	ON
4. Remove the master key.	Within 20 sec. **HINT:** **After the Techstream instruction**	ON
5. Insert the key to be registered in the ignition key cylinder.	Within 10 sec.	Blinking
6. Wait for 60 sec. after the key is registered. **HINT:** **The security indicator light goes off.**	-	OFF
7. Remove the key.	-	Blinking
8. End		

HINT:

- A brief outline of key code registration procedures is shown above. For detailed information, refer to the Techstream screen.
- When the engine immobiliser system is operating normally and the key is pulled out, the security indicator light blinks continuously.
- If the key code registration has failed in automatic key code registration mode, code 2-1 will be output through the security indicator light. Trying to re-register an already registered key will cause code 2-2 to be output when the key is inserted. If the number of registered key codes exceeds the maximum limit, code 2-3 will be output through the security indicator light. The details are shown in procedure "A".

10. ERASURE OF KEY CODE (Engine Immobiliser System (w/o Smart Key System))

(a) Key code erasure (Procedure "C").

HINT:

- Performing this procedure will erase all key codes except for the master key, which is used for erasing the key codes. In order to use a key whose code has been erased, a new key code must be registered
- This procedure will be canceled if each step is not completed within the specified time.

Key Code Erasure

PROCEDURE	TIME TO COMPLETE OPERATION	SECURITY INDICATOR LIGHT CONDITION
1. Start	-	Blinking **HINT:** **Until first key is inserted**
2. Insert the already registered master key in the ignition key cylinder and turn the ignition switch to ON.	-	OFF
3. Techstream operation 1. Select Body Electrical 2. Select Immobiliser 3. Select Utility 4. Select Transponder Code Erasure **HINT:** **After completing the above operation, proceed to the next step in accordance with the prompts on the Techstream screen.**	Within 120 sec.	ON for 1 sec. then OFF
4. Remove the master key.	Within 10 sec. **HINT:** **After the Techstream instruction**	ON
5. End		

HINT:

- A brief outline of key code registration procedures is shown above. For detailed information, refer to the Techstream screen.

- When the engine immobiliser system is operating normally and the key is pulled out, the security indicator light blinks continuously.

11. ECU COMMUNICATION ID REGISTRATION (Engine Immobiliser System (w/o Smart Key System))

(a) ECU communication ID registration (Procedure "D"):

NOTICE:

- When the transponder key ECU assembly is replaced, the ECU communication ID of the ECM must be registered into the transponder key ECU assembly to match their ECU communication IDs.
- The engine cannot be started unless the ECU communication IDs match.
- Do not turn the ignition switch from on to off 20 times or more before registering the ECU communication ID. Turning the ignition switch from on to off 20 times or more will result in the engine not starting unless the transponder key ECU assembly is replaced with a new one.
- After the registration, turning the ignition switch to the START position may not start the engine on the first try. If so, turn the ignition switch to the START position again.
- After the engine is started, erase DTC B2799 (code for ECM's immobiliser communication error) by either of the following:

  - Using the Techstream.

  - Disconnecting the battery for 30 seconds.

(1) Using SST, connect terminals TC and CG of the DLC3.

SST: 09843-18040

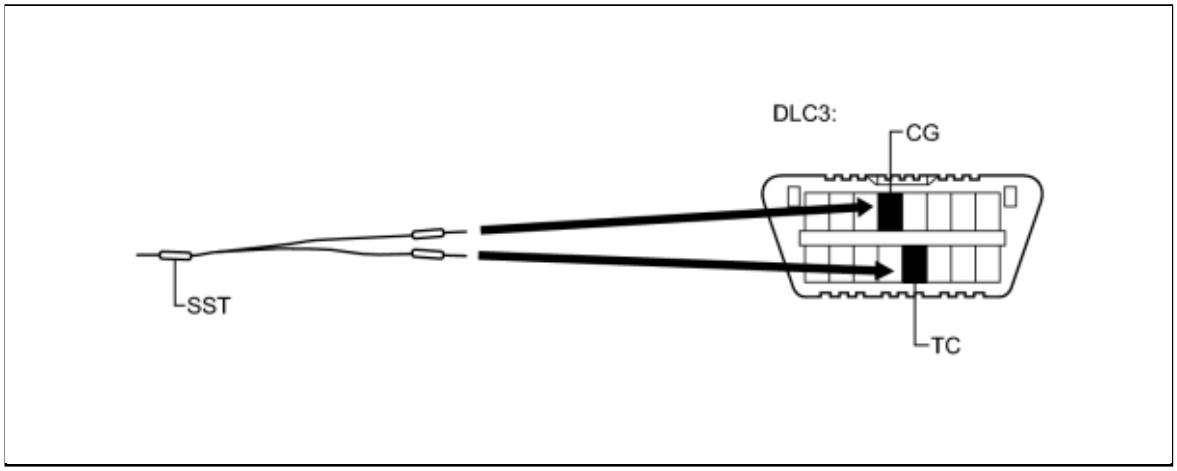

(2) Turn the ignition switch to ON and leave the vehicle as is for 30 minutes.

HINT:

Do not start the engine.

(3) Check that the engine starts.

(b) ECU communication ID registration (Procedure "E"):

NOTICE:

The ECU communication ID should be registered when the ECM and transponder key ECU assembly are replaced or when the ECM only is replaced in order to match the ECU communication ID.

PROCEDURE	SECURITY INDICATOR LIGHT CONDITION

PROCEDURE	SECURITY INDICATOR LIGHT CONDITION
1. Start	OFF
2. Insert an already registered key into the ignition key cylinder.	
3. Start the engine.	
4. Check that the engine starts and stays on for more than 3 seconds.	
6. End	

12. RESET MEMORY (INITIALIZATION for U341E)

NOTICE:

- Perform the RESET MEMORY (AT initialization) when replacing the automatic transaxle assembly, engine assembly or ECM.
- The RESET MEMORY can be performed only with the Techstream.

HINT:

The ECM memorizes the condition that the ECT controls the automatic transaxle assembly and engine assembly according to those characteristics. Therefore, when the automatic transaxle assembly, engine assembly, or ECM has been replaced, it is necessary to reset the memory so that the ECM can memorize the new information.

Reset procedure is as follows.

(a) Turn the ignition switch off.

(b) Connect the Techstream to the DLC3.

(c) Turn the ignition switch to ON and the Techstream main switch on.

(d) Enter the following menus: Powertrain / Engine and ECT / Utility / Reset Memory. Then, press "Next".

CAUTION:

After performing the RESET MEMORY, be sure to perform the ROAD TEST  **described earlier.**

HINT:

The ECM is learned by performing the ROAD TEST.

13. RESET MEMORY (INITIALIZATION for U250E)

NOTICE:

- Perform the RESET MEMORY (AT initialization) when replacing the automatic transaxle assembly, engine assembly or ECM.
- The RESET MEMORY can be performed only with the Techstream.

HINT:

The ECM memorizes the condition that the ECT controls the automatic transaxle assembly and engine assembly according to those characteristics. Therefore, when the automatic transaxle assembly, engine assembly, or ECM has been replaced, it is necessary to reset the memory so that the ECM can memorize the new information.

Reset procedure is as follows.

(a) Turn the ignition switch off.

(b) Connect the Techstream to the DLC3.

(c) Turn the ignition switch to ON and the Techstream main switch on.

(d) Enter the following menus: Powertrain / Engine and ECT / Utility / Reset Memory. Then, press "Next".

CAUTION:

After performing the RESET MEMORY, be sure to perform the ROAD TEST INFO described earlier.

HINT:

The ECM is learned by performing the ROAD TEST.

14. DESCRIPTION OF CODE REGISTRATION (Tire Pressure Warning System)

It is necessary to register the transmitter ID in the tire pressure warning ECU when replacing the tire pressure warning valve and transmitter and/or tire pressure warning ECU.

Prepare all transmitter ID data before starting registration.

(a) Before registration

(1) When replacing the tire pressure warning ECU:

- Read the registered transmitter IDs that are stored in the old ECU using the Techstream and note them down.
- If reading stored transmitter IDs is impossible due to malfunctions of components such as the tire pressure warning antenna and receiver, remove the tires from the wheels and check the IDs located on the tire pressure warning valve and transmitters INFO .

(2) When replacing a tire pressure warning valve and transmitter:

- Take note of the 7-digit number (transmitter ID) written on the tire pressure warning valve and transmitter.

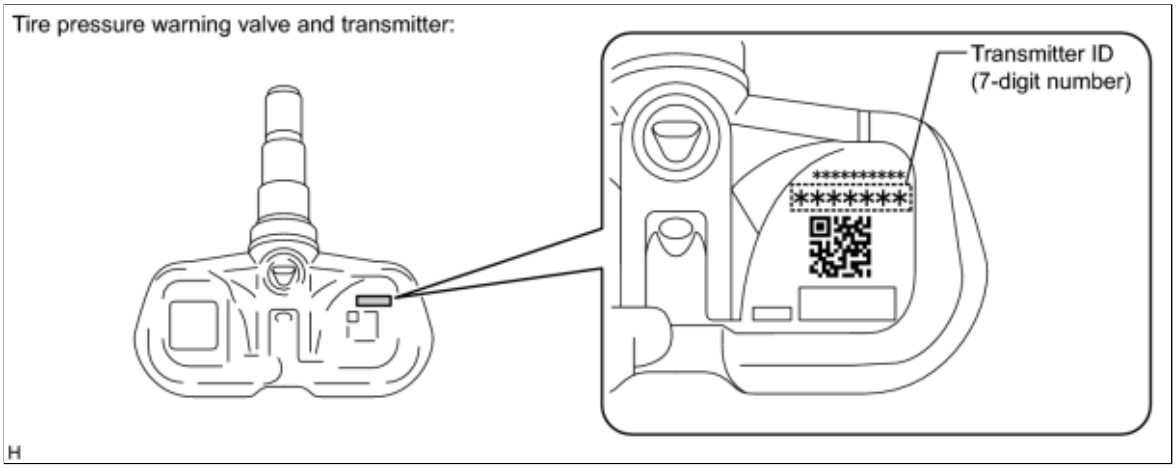

NOTICE:

- The transmitter ID is written on the tire pressure warning valve and transmitter. It will be unable to be read after installing the tire pressure warning valve and transmitter on the tire and wheel. Therefore, take a note of the transmitter ID before installing the tire pressure warning valve and transmitter.
- The ID registration must be performed for all tire pressure warning valve and transmitters. Check the Data List, replace the exchanged ID with a new ID, and make a new DATA LIST of all 4 tires for the vehicle.

15. REGISTER TRANSMITTER ID (USING TECHSTREAM) (Tire Pressure Warning System)

(a) Set the all tire pressure to the specified value INFO .

(b) Turn the ignition switch off.

(c) Connect the Techstream to the DLC3.

(d) Turn the ignition switch to ON.

(e) Turn the Techstream on.

(f) Enter the following menus: Chassis / Tire Pressure Monitor / Utility / ID Registration.

(g) Perform the following procedure displayed on the screen.

(h) Confirmation of transmitter ID registration.

(1) Enter the following menus: Chassis / Tire Pressure Monitor / Data List.

(2) Read the "ID Tire Inflation Pressure" values.

(3) Confirm that the data of tire pressure of all tires are displayed on the Techstream.

NOTICE:

- It takes about 2 or 3 minutes to display the updated tire pressure data. If the values are not displayed after a few minutes, perform troubleshooting according to the inspection procedure for DTCs C2121/21 to C2124/24 INFO .
- If the IDs have not been registered, DTC C2171/71 is set in the tire pressure warning ECU after 3 minutes or more.
- If normal pressure values are displayed, the IDs have been registration correctly.
- If the tire pressure values are not displayed after a few minutes, the IDs may be incorrect or the system may have a malfunction.
- After all IDs are registered, DTC C2126/26 (Transmitter ID not Received) is set in the tire pressure warning ECU and the tire pressure warning light blinks for 1 minute and then comes on. When the tire pressure warning ECU successfully receives radio waves from all the transmitters whose IDs are stored in the ECU, DTC C2126/26 is deleted and the tire pressure warning light goes off.

16. INITIALIZATION PROCEDURE (Tire Pressure Warning System)

(a) Adjust all tire (except spare tire) to the standard tire inflation pressure, as indicated on the tire and loading information label on the vehicle.

(b) Turn the ignition switch to ON.

(c) Push and hold the tire pressure warning reset switch for 3 seconds or more so that the tire pressure warning light blinks 3 times.

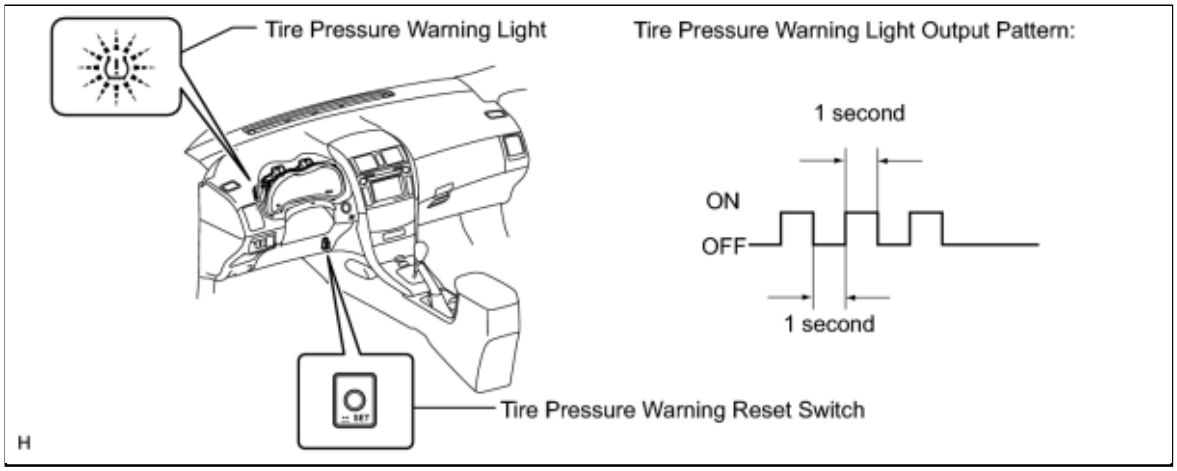

(d) Turn the ignition switch off.

(e) Connect the Techstream to the DLC3.

(f) Turn the ignition switch to ON.

(g) Turn the Techstream on.

(h) Enter the following menus: Chassis / Tire Pressure Monitor / Data List.

(i) Check that the initialization has been completed.

(j) Confirm that the tire pressure data of all wheels are displayed on the Techstream.

NOTICE:

- The initialization is normally completed within 2 or 3 minutes.
- If the initialization has not been completed successfully, DTC C2177/77 is set after a vehicle speed 8 km/h (5 mph) or more continues for 20 minutes or more.
- The initialization can be terminated by connecting terminals TC and CG of the DLC3.

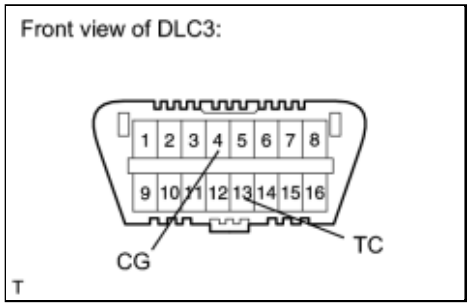

Tire Pressure Monitor

TESTER DISPLAY	MEASUREMENT ITEM/RANGE	NORMAL CONDITION	DIAGNOSTIC NOTE
ID1 Tire Inflation Pressure	ID1 tire inflation pressure/ min.: Absolute pressure / 0 kPa (0 kgf/cm^2, 0 psi), Relative pressure / -100 kPa (-1.0 kgf/cm^2, -14 psi) max.: Absolute pressure / 638 kPa (6.4 kgf/cm^2, 93 psi), Relative pressure / 538 kPa (5.4 kgf/cm^2, 78 psi)	Actual tire inflation pressure	If 0 kPa (0 kgf/cm^2, 0 psi) is displayed for absolute pressure or -100 kPa (-1.0 kgf/cm^2, -14 psi) is displayed for relative pressure, data has not been received.*
ID2 Tire Inflation Pressure	ID2 tire inflation pressure / min.: Absolute pressure / 0 kPa (0 kgf/cm^2, 0 psi), Relative pressure / -100 kPa (-1.0 kgf/cm^2, -14 psi) max.: Absolute pressure / 638 kPa (6.4 kgf/cm^2, 93 psi), Relative pressure / 538 kPa (5.4 kgf/cm^2, 78 psi)	Actual tire inflation pressure	If 0 kPa (0 kgf/cm^2, 0 psi) is displayed for absolute pressure or -100 kPa (-1.0 kgf/cm^2, -14 psi) is displayed for relative pressure, data has not been received.*

ID3 Tire Inflation Pressure	ID3 tire inflation pressure / min.: Absolute pressure / 0 kPa (0 kgf/cm^2, 0 psi), Relative pressure / -100 kPa (-1.0 kgf/cm^2, -14 psi) max.: Absolute pressure / 638 kPa (6.4 kgf/cm^2, 93 psi), Relative pressure / 538 kPa (5.4 kgf/cm^2, 78 psi)	Actual tire inflation pressure	If 0 kPa (0 kgf/cm^2, 0 psi) is displayed for absolute pressure or -100 kPa (-1.0 kgf/cm^2, -14 psi) is displayed for relative pressure, data has not been received.*
ID4 Tire Inflation Pressure	ID4 tire inflation pressure / min.: Absolute pressure / 0 kPa (0 kgf/cm^2, 0 psi), Relative pressure / -100 kPa (-1.0 kgf/cm^2, -14 psi) max.: Absolute pressure / 638 kPa (6.4 kgf/cm^2, 93 psi), Relative pressure / 538 kPa (5.4 kgf/cm^2, 78 psi)	Actual tire inflation pressure	If 0 kPa (0 kgf/cm^2, 0 psi) is displayed for absolute pressure or -100 kPa (-1.0 kgf/cm^2, -14 psi) is displayed for relative pressure, data has not been received.*

HINT:

- The initialization is completed when the "ID Tire Information Pressure" display shows the correct pressures.
- *: It may take about 2 or 3 minutes until the values are displayed. If the values are not displayed after a few minutes, perform troubleshooting according to the inspection procedure for DTCs C2121/21 to C2124/24 INFO .

17. OBTAIN ZERO POINT OF YAW RATE AND ACCELERATION SENSOR (When Using the Techstream) (Vehicle Stability Control System)

NOTICE:

- While obtaining the zero point, keep the vehicle stationary and do not vibrate, tilt, move, or shake it. (Do not start the engine.)
- Be sure to perform this procedure on a level surface (with an inclination of less than 1 degree).

(a) Clear the zero point calibration data.

(1) Turn the ignition switch off.

(2) Check that the steering wheel is centered.

(3) Check that the shift lever is in P (for automatic transaxle model) or the parking brake is applied (for manual transaxle model).

(4) Connect the Techstream to the DLC3.

(5) Turn the ignition switch to ON.

(6) Turn the Techstream on.

(7) Select the skid control ECU to clear the zero point calibration data using the Techstream. Enter the following menus: Chassis / ABS/VSC/TRAC / Utility / Reset Memory.

(8) Turn the ignition switch off.

NOTICE:

If the ignition switch is turned to ON for more than 15 seconds with the shift lever in P (for automatic transaxle model) or the parking brake applied (for manual transaxle model) after zero point of the yaw rate and acceleration sensor has been cleared, only the zero point of the yaw rate sensor will be stored. If the vehicle is driven under these conditions, the skid control ECU will store the zero point calibration for the acceleration sensor as not being completed. The skid control ECU will then also indicate this as a malfunction of the VSC system using the indicator lights.

(b) Perform zero point calibration of the yaw rate and acceleration sensor.

(1) Turn the ignition switch off.

(2) Check that the steering wheel is centered.

(3) Check that the shift lever is in P (for automatic transaxle model) or the parking brake is applied (for manual transaxle model).

NOTICE:

DTCs C1210/36 and C1336/39 will be recorded if the shift lever is not in P (for automatic transaxle model) or the parking brake is not applied (for manual transaxle model).

(4) Connect the Techstream to the DLC3.

(5) Turn the ignition switch to ON.

(6) Turn the Techstream on.

(7) Switch the skid control ECU to Test Mode using the Techstream. Enter the following menus: Chassis / ABS/VSC/TRAC / Utility / Test Mode.

(8) After the system enters Test Mode, keep the vehicle stationary on a level surface for 2 seconds or more.

(9) Check that the VSC OFF indicator light comes on for several seconds and then blinks in Test Mode.

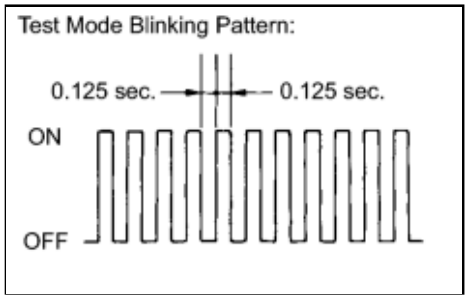

HINT:

- The slip indicator light remains on during Test Mode because traction control operation is prohibited (The slip indicator light goes off when the VSC OFF switch is on).
- If the VSC OFF indicator light does not blink, perform zero point calibration again.
- The zero point calibration is performed only once after the system enters Test Mode.
- Calibration cannot be performed again until the stored data is cleared.

(10) Turn the ignition switch off and disconnect the Techstream.

18. OBTAIN ZERO POINT OF YAW RATE AND ACCELERATION SENSOR (When not Using the Techstream) (Vehicle Stability Control System)

NOTICE:

- While obtaining the zero point, keep the vehicle stationary and do not vibrate, tilt, move, or shake it. (Do not start the engine.)
- Be sure to perform this procedure on a level surface (with an inclination of less than 1 degree).

(a) Clear the zero point calibration data.

(1) Turn the ignition switch off.

(2) Check that the steering wheel is centered.

(3) Check that the shift lever is in P (for automatic transaxle model) or the parking brake is applied (for manual transaxle model).

(4) Turn the ignition switch to ON.

(5) The warning and indicator light come on for 3 seconds to indicate that the initial check is completed.

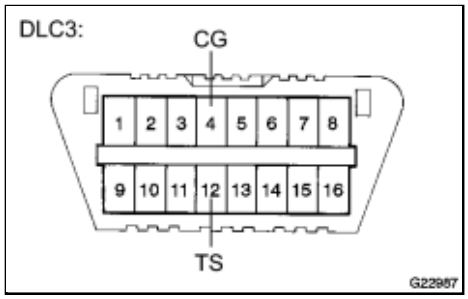

(6) Using SST, connect and disconnect terminals TS and CG of the DLC3 4 times or more within 8 seconds.

SST: 09843-18040

(7) Check that the VSC OFF indicator light comes on.

NOTICE:

If the ignition switch is turned to ON for more than 15 seconds with the shift lever in P (for automatic transaxle model) or the parking brake applied (for manual transaxle model) after zero point of the yaw rate and acceleration sensor has been cleared, only the zero point of the yaw rate sensor will be stored. If the vehicle is driven under these conditions, the skid control ECU will store the zero point calibration for the acceleration sensor as not being completed. The skid control ECU will then also indicate this as a malfunction of the VSC system using the indicator lights.

(b) Perform zero point calibration of the yaw rate and acceleration sensor.

(1) Turn the ignition switch off.

(2) Check that the steering wheel is centered.

(3) Check that the shift lever is in P (for automatic transaxle model) or the parking brake is applied (for manual transaxle model).

NOTICE:

DTCs C1210/36 and C1336/39 will be recorded if the shift lever is not in P (for automatic transaxle model) or the parking brake is not applied (for manual transaxle model).

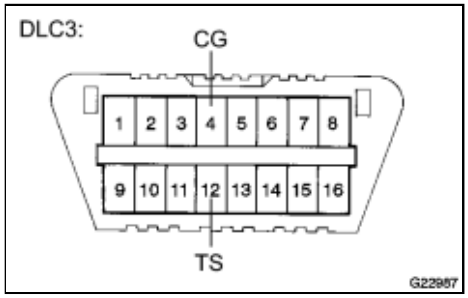

(4) Using SST, connect terminals TS and CG of the DLC3.

SST: 09843-18040

(5) Turn the ignition switch to ON.

(6) Keep the vehicle stationary on a level surface for 2 seconds or more.

(7) Check that the VSC OFF indicator light comes on for several seconds and then blinks in Test Mode.

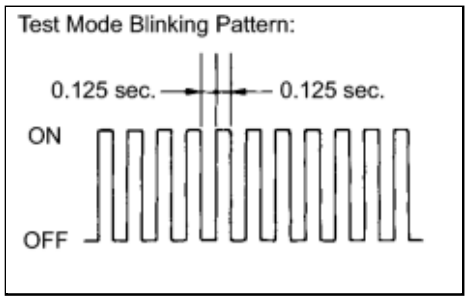

HINT:

- The slip indicator light remains on during Test Mode because traction control operation is prohibited (The slip indicator light goes off when the VSC OFF switch is on).
- If the VSC OFF indicator light does not blink, perform zero point calibration again.
- The zero point calibration is performed only once after the system enters Test Mode.
- Calibration cannot be performed again until the stored data is cleared.

(8) Turn the ignition switch off and disconnect SST from the DLC3.

19. ROTATION ANGLE SENSOR INITIALIZATION AND TORQUE SENSOR ZERO POINT CALIBRATION (Power Steering System (for 2AZ-FE))

NOTICE:

Clear the rotation angle sensor calibration value, initialize the rotation angle sensor, and calibrate the torque sensor zero point if any of the following has occurred:

- The power steering ECU has been replaced.
- The steering column assembly has been replaced.
- Steering effort differs between left and right.

(a) Inspection before calibration.

(1) Turn the ignition switch off.

(2) Connect the Techstream to the DLC3.

(3) Turn the ignition switch to ON.

(4) Turn the Techstream on.

(5) Calibrate the power steering ECU. Enter the following menus: Chassis / EMPS / Data List.

(6) Check the values by referring to the table below.

Power Steering ECU

TESTER DISPLAY	MEASUREMENT ITEM/RANGE	NORMAL CONDITION	DIAGNOSTIC NOTE
IG Power Supply	ECU power source voltage / Min.: 0 V, Max.: 20.1531 V	11 to 14 V	Ignition switch to ON

Standard voltage:
11 to 14 V

NOTICE:

If the IG power supply voltage is 9 V or less, calibration cannot be performed. In this case, charge or replace the battery, and then perform calibration.

(b) Rotation angle sensor calibration value clear, rotation angle sensor initialization, and torque sensor zero point calibration.

NOTICE:

- If DTC C1516 (Torque Sensor Zero Point Adjustment Incomplete) is stored, the torque sensor zero point cannot be calibrated. Clear the DTC before starting calibration.
- If DTC C1526 (Rotation Angle Sensor Initialization Incomplete) is stored, the rotation angle sensor cannot be initialized. Clear the DTC before starting initialization.

(1) Turn the ignition switch off.

(2) Connect the Techstream to the DLC3.

(3) Turn the ignition switch to ON.

(4) Turn the Techstream on.

(5) Enter the following menus: Chassis / EMPS / Utility / Torque Sensor Adjustment.

NOTICE:

- Set the steering wheel to the center point and align the front tires straight ahead.
- Do not turn the steering wheel sharply.
- Do not touch the steering wheel during the torque sensor zero point calibration (for 3 seconds).

20. ASSIST MAP WRITING (USING TECHSTREAM) (Power Steering System (for 2ZR-FE))

HINT:

Perform the assist map writing when the power steering ECU is replaced.

(a) Turn the ignition switch off.

(b) Connect the Techstream to the DLC3.

(c) Turn the ignition switch to ON.

(d) Turn the Techstream on.

(e) Enter the following menus: Chassis / EMPS / Assist Map.

(f) Wait for 7 seconds or more.

(g) Check for DTCs.

HINT:

If DTC C1581 is output, perform the troubleshooting for DTC C1581 INFO .

21. TORQUE SENSOR ZERO POINT CALIBRATION (USING TECHSTREAM) (Power Steering System (for 2ZR-FE))

NOTICE:

Perform the torque sensor zero point calibration if any of the following conditions occur:

- The steering column assembly (containing the torque sensor) has been replaced.
- The power steering ECU has been replaced.
- There is a difference in steering effort between turning right and left.

(a) Perform the torque sensor zero point calibration.

NOTICE:

If DTC C1516 (Torque Sensor Zero Point Adjustment Incomplete) is stored, the torque sensor zero point cannot be calibrated. Clear the DTC before starting calibration.

(1) Set the steering wheel to the center point and align the front wheels straight ahead.

(2) Turn the ignition switch off.

(3) Connect the Techstream to the DLC3.

(4) Turn the ignition switch to ON.

(5) Turn the Techstream on.

(6) Calibrate the power steering ECU. Enter the following menus: Chassis / EMPS / Utility / Torque Sensor Adjustment.

NOTICE:

- Do not touch the steering wheel during the torque sensor zero point calibration.
- Do not start the engine.
- Perform the calibration only when the vehicle is stopped.

(7) Check for DTCs INFO .

NOTICE:

- After zero point calibration is completed normally, confirm that DTC is not output.
- If DTC C1515, C1516 or C1534 is output, perform troubleshooting for the corresponding DTC.

Result:

RESULT	SEE PROCEDURE
DTC C1515 is output.	INFO
DTC C1516 is output.	INFO
DTC C1534 is output.	INFO

22. REGISTRATION OF RECOGNITION CODE (MANUAL OPERATION) (Wireless door lock control system (w/o Smart Key System))

HINT:

- Register a new recognition code when replacing the door control transmitter or the door control receiver.
- Add mode is used to retain the already registered codes while registering a new recognition code. This mode is used when adding a transmitter. If the number of registered codes exceeds 6, the previously registered code will be correspondingly erased in order, starting from the code registered first.
- Rewrite mode is used to erase all the previously registered codes and register only new recognition codes. This mode is used when exchanging the transmitter or the door control receiver for new one.
- Confirmation mode is used to confirm how many recognition codes have already been registered before an additional registration of a recognition code.
- Prohibition mode is used to erase all the registered codes and cancel the wireless door lock function. Use this mode when the transmitter is lost.
- All of the steps in the following registration procedure must be performed in sequential order continuously.

(a) The following conditions should be met.

(1) No key is inserted in the ignition key cylinder.

(2) Only driver side door is opened.

(b) Perform the following operations to select the desired mode.

(1) Insert and remove the key from the ignition switch twice within 5 seconds. (End in removed)

(2) After the above operation, close and open the driver's door twice. (End in open)

Then insert the key into the ignition key cylinder and remove it.

HINT:

Complete this procedure within 40 seconds.

(3) After the above operations, close and open the driver side door twice. (End in open)

Then insert the key into the ignition key cylinder and close the door.

HINT:

Complete this procedure within 40 seconds.

(4) Turn the ignition switch from LOCK to ON and back to LOCK at approximately 1 second intervals 1 to 5 times to select a mode (see the illustration). Then remove the key from the ignition key cylinder.

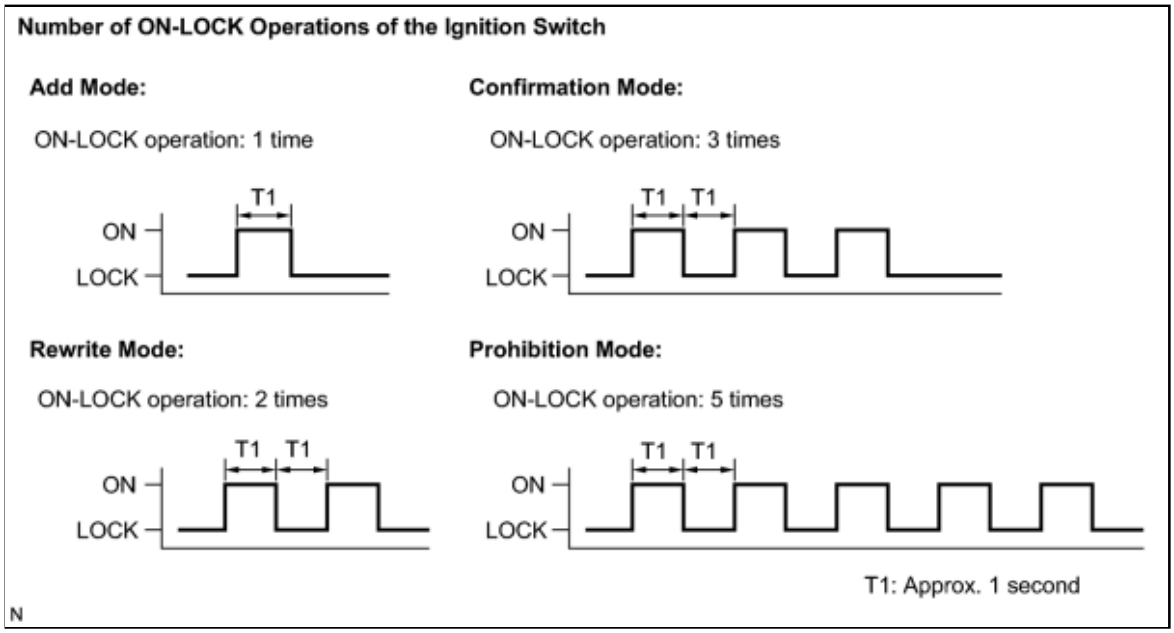

HINT:

Complete this procedure within 40 seconds.

NOTICE:

If the number of the ON-LOCK operations of the ignition switch is 0, 4, 6 or more, there will be no response to inform which mode has been selected.

(5) After selecting a mode, the main body ECU automatically performs the power door LOCK- UNLOCK operation within 5 seconds to inform the selected mode (see the illustration).

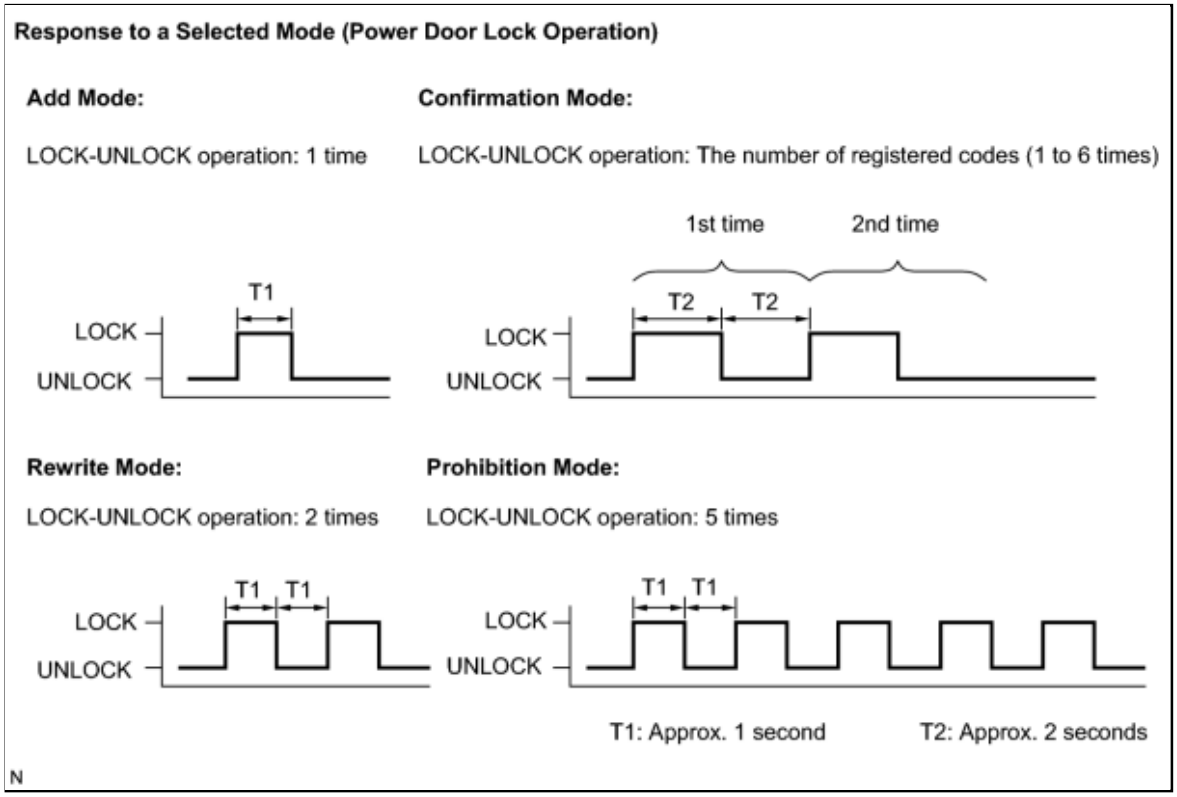

HINT:

- In confirmation mode, the LOCK- UNLOCK operation will occur once for each recognition code that has been registered. For example, if 2 recognition codes have been registered, the LOCK-UNLOCK operation will occur 2 times.
- In confirmation mode and prohibition mode, once a LOCK-UNLOCK operation response has occurred, the registration procedure will end.

(c) Register new recognition codes (Add mode or Rewrite mode):

(1) Within 45 seconds after add mode or rewrite mode has been selected, press the LOCK and UNLOCK switches on the transmitter switch simultaneously for 1.0 to 1.5 seconds.

Then, press either one of the switches for more than 1.0 second (Procedure "A").

(2) Within 5 seconds after the transmitter switch has been released, the LOCK-UNLOCK operation will be automatically performed once if the registration of the recognition code of the transmitter is completed correctly.

If the LOCK-UNLOCK operation is performed twice, registration of the recognition code has failed. Perform the registration procedure from the beginning (Procedure "B").

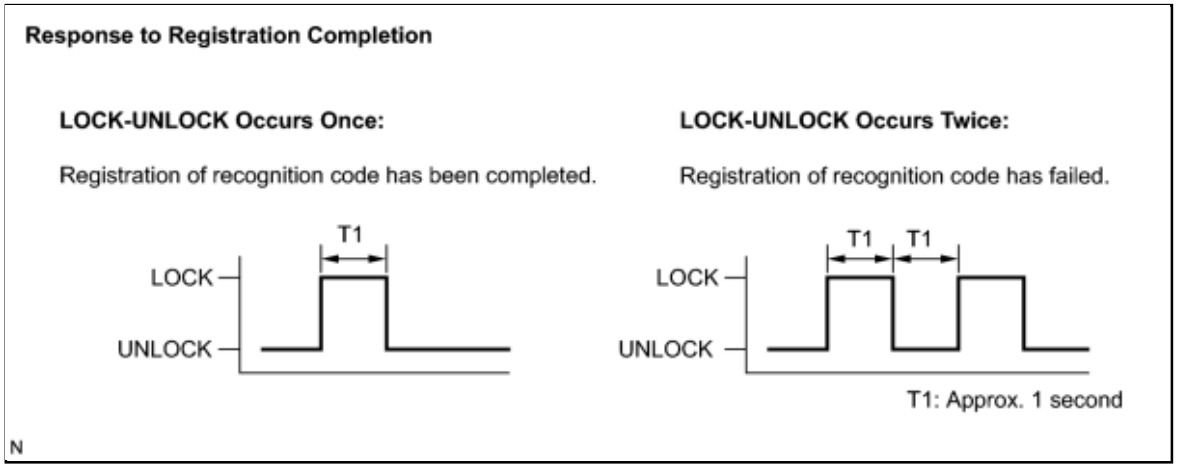

(3) If multiple transmitters need to be registered, repeat procedures "A" and "B" within 45 seconds each.

HINT:

- Up to 6 recognition codes can be registered at once.
- If even one of the following conditions is satisfied, registration mode will end.
    - 40 seconds have elapsed after a recognition code has been registered.
    - Any of the doors are opened.
    - The key is inserted into the ignition key cylinder.
    - 6 recognition codes are registered.

23. REGISTRATION OF RECOGNITION CODE (USING TECHSTREAM) (Wireless door lock control system (w/o Smart Key System))

HINT:

- Register a new recognition code when replacing the door control transmitter or the door control receiver.
- Add mode is used to retain the already registered codes while registering a new recognition code. This mode is used when adding a transmitter. If the number of registered codes exceeds 6, the previously registered code will be correspondingly erased in order, starting from the code registered first.
- Rewrite mode is used to erase all the previously registered codes and register only new recognition codes. This mode is used when exchanging the transmitter or the door control receiver for new one.
- Confirmation mode is used to confirm how many recognition codes have already been registered before an additional registration of a recognition code.
- Prohibition mode is used to erase all the registered codes and cancel the wireless door lock function. Use this mode when the transmitter is lost.
- All of the steps in the following registration procedure must be performed in sequential order continuously.

(a) Turn the ignition switch to ON.

(b) Select either add or rewrite mode according to the Techstream display.

(c) The number of registered codes is indicated.

(d) Registration of the door control transmitter.

(1) If either add mode or rewrite mode has been selected, press the LOCK and UNLOCK switches on the transmitter simultaneously.

(2) Within 3 seconds of releasing the LOCK and UNLOCK switches, press either of the switches on the door control transmitter.

NOTICE:

- Do not press the LOCK and UNLOCK switches simultaneously for more than 1.5 seconds.
- Perform this operation within 1 meter of the driver's seat to register the transmitter.
- Do not push other transmitter switches during the transmitter registration process.

(3) The main body ECU automatically performs the power door LOCK-UNLOCK operation once in order to indicate whether registration has been completed correctly or not.

(4) If continuing registration, the next recognition code must be registered in the door control transmitter within 30 seconds.

HINT:

Up to 6 recognition codes can be registered.

(e) Completing registration mode.

(1) Registration mode will end when any of the following occurs:

- 30 seconds or more have elapsed after a code is registered.
- The Techstream is used to finish registration.
- The Techstream is disconnected.
- The ignition switch is turned off.

(f) Perform the following after registration is completed.

(1) Perform the wireless door lock control operation check INFO .

HINT:

If the wireless door lock control does not operate, perform the registration procedure again.

24. ZERO POINT CALIBRATION (Occupant Classification System)

(a) Zero point calibration procedures

(1) Check that all of the following conditions are met:

- The vehicle is parked on a flat surface.
- No objects are placed on the front passenger seat.
- The front passenger seat belt buckle switch is OFF.

(2) Adjust the seat position according to the table below.

ADJUSTMENT ITEM	POSITION
Slide Direction	Rearmost position
Reclining Angle	Upright position
Headrest Height	Lowest position
Lifter Height	Lowest position

(3) Connect the Techstream to the DLC3.

(4) Turn the ignition switch to ON.

(5) Enter the following menus: Body Electrical / Occupant Detection / Utility / Zero Point Calibration.

(6) Perform the zero point calibration by following the prompts on the Techstream screen.

HINT:

- Refer to the Techstream operator's manual for further details.
- If the zero point calibration is performed when the calibration conditions are not satisfied, DTC B1797 is

output.

- If the zero point calibration has failed, DTC B1797 is output.
- If After Exchange is selected before the previous ECU data are stored in the Techstream, the display screen returns to CONDITION SELECT ECU: Occupant Detect.

ITEM	PROCEDURE
DTC	Perform DTC check and repair
Write error	Replace front seat cushion assembly (with occupant classification ECU and occupant classification sensor)
Temperature	Check value of THERMISTOR TEMP in ECU DATA LIST
Pressure	Check value of FILTERED PRESS in ECU DATA LIST
Crash counter	-

25. SENSITIVITY CHECK (Occupant Classification System)

(a) Sensitivity check procedures

(1) Turn the ignition switch off.

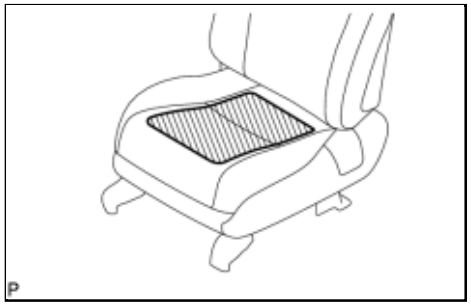

(2) Place a 20 kg (44.0 lb) weight on the front passenger seat.

NOTICE:

- Do not allow the weight to come into contact with the seatback when placing it on the seat cushion.
- Place the weight in the area shown in the illustration.

(3) Turn the ignition switch to ON, and wait for at least 6 seconds.

(4) Check that the passenger airbag ON/OFF indicator indicates OFF.

OK:

The passenger airbag ON/OFF indicator indicates OFF.

(5) Add a 30 kg (66.1 lb) weight to the front passenger seat (total 50 kg (110.2 lb)).

NOTICE:

- Do not allow the weight to come into contact with the seatback when placing it on the seat cushion.
- Place the weight in the area shown in the illustration.

(6) Check that the passenger airbag ON/OFF indicator indicates ON.

OK:

The passenger airbag ON/OFF indicator indicates ON.

26. REGISTRATION ECU DATA (Occupant Classification System)

NOTICE:

- If any DTCs related to the occupant classification ECU are output, troubleshoot those DTCs by referring to Diagnostic Trouble Code Chart.
- When ECU data saving or loading operations cannot be performed, replace the front seat cushion assembly (with occupant classification ECU and occupant classification sensor).

HINT:

- When the occupant classification ECU is replaced, the previous ECU data must be saved in the Techstream and loaded into the new ECU by following the procedure below.
- Until the data from the previous ECU are loaded into the new occupant classification ECU, these data are not cleared even when the Techstream is turned off.
- ECU EXCHANGE PROCEDURE (Before Exchange) describes the procedure to save the data in the Techstream from the occupant classification ECU installed on the vehicle. ECU EXCHANGE PROCEDURE (After Exchange) describes the procedure to load the data from the previous ECU, stored in the Techstream, into the new ECU.

(a) Connect the Techstream to the DLC3.

(b) Turn the ignition switch to ON.

(c) Store the occupant classification ECU data in the Techstream by following the prompts on the Techstream screen.

HINT:

If the ECU data cannot be stored in the Techstream, replace the front seat cushion assembly (with occupant classification ECU and occupant classification sensor).

(d) Turn the ignition switch to ON.

(e) Disconnect the cable from the negative (-) battery terminal, and wait for at least 90 seconds.

(f) Replace the occupant classification ECU INFO .

(g) Connect the cable to the negative (-) battery terminal.

(h) Turn the ignition switch to ON.

(i) Load the data from the previous ECU stored in the Techstream into the newly installed ECU by following the prompts on the Techstream screen.

(j) Turn the ignition switch off.

(k) Turn the ignition switch to ON.

(l) Clear the DTCs stored in the memory INFO .

HINT:

If the DTCs are not cleared at this time, past DTCs will remain.

27. INITIALIZE SLIDING ROOF DRIVE GEAR SUB-ASSEMBLY (Sliding Roof System)

NOTICE:

When removing the sliding roof drive gear sub-assembly, the sliding roof drive gear sub-assembly (sliding roof control ECU) requires initialization. If a reset is not executed, the following functions do not operate: auto operation, key off operation and jam protection function.

(a) Turn the ignition switch to ON.

(b) Make sure that the sliding roof is fully closed.

(c) Press the TILT UP switch until the sliding roof stops at the fully tilt up position. Then release the switch.

(d) Press and hold the TILT UP switch until the following movement finishes and then release the switch: approximately 10 seconds → tilt up (approximately 5 mm) → tilt down (approximately 5 mm).

(e) Within 5 seconds after finishing the previous step, press and hold the TILT UP switch until the following movement finishes and then release the switch: approximately 5 seconds → tilt down → fully closed → slide open → fully open → slide close → fully closed.

(f) Finish the initialization.

(g) Check that the AUTO operation works normally.

NOTICE:

If the following conditions occur during initialization procedure, initialization will fail:

- One of the following electric loads is given to the vehicle during the initialization: Cranking the engine, Power window operation, Rear defogger operation, Blower operation, Power seat operation, Power door lock operation or Headlight illumination.
- The ignition switch is turned off.
- Another switch is turned on during initialization.
- The vehicle experiences a strong vibration during initialization, such as slamming of a door.

HINT:

- If the sliding roof cannot be fully closed or its position has become misaligned, perform initialization again.
- If the roof glass stops moving or starts moving in the opposite direction while the CLOSE/UP switch is held down, continue to hold the switch for another 10 seconds or more to return the sliding roof control ECU to an uninitialized condition. Then perform the initialization procedure again.
- If the AUTO operation function and jam protection function do not operate after the drive gear has been reset, replace the sliding roof drive gear sub-assembly (sliding roof control ECU).

Last Modified: 3-10-2010	6.4 F	**From:** 200901
Model Year: 2010	**Model:** Corolla	**Doc ID:** RM000000UYW07QX
Title: INTRODUCTION: IDENTIFICATION INFORMATION: VEHICLE IDENTIFICATION AND SERIAL NUMBERS (2010 Corolla)		

VEHICLE IDENTIFICATION AND SERIAL NUMBERS

1. VEHICLE IDENTIFICATION NUMBER

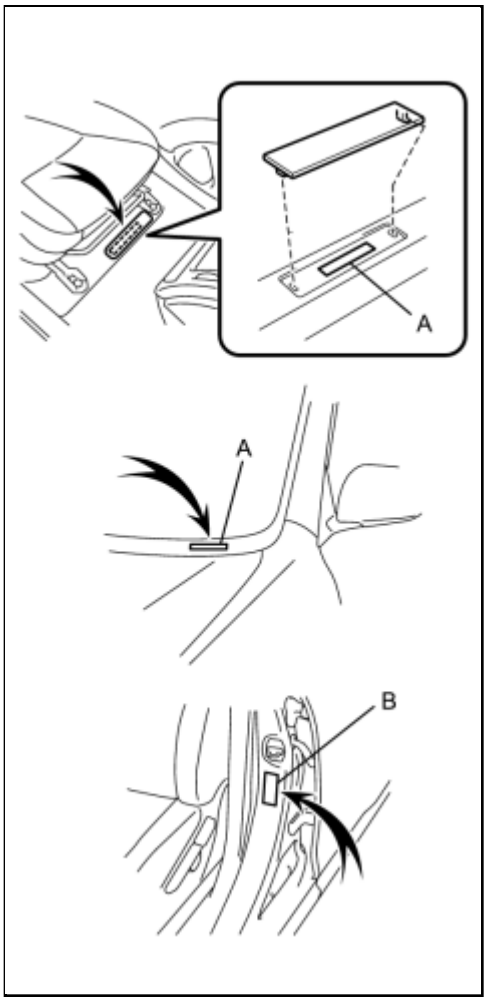

(a) The vehicle identification number is stamped on the vehicle body and on the certification label, as shown in the illustration.

A:
Vehicle Identification Number
B:
Certification Label

2. ENGINE SERIAL NUMBER AND TRANSAXLE SERIAL NUMBER

(a) The engine serial number is stamped on the cylinder block of the engine as shown in the illustration.

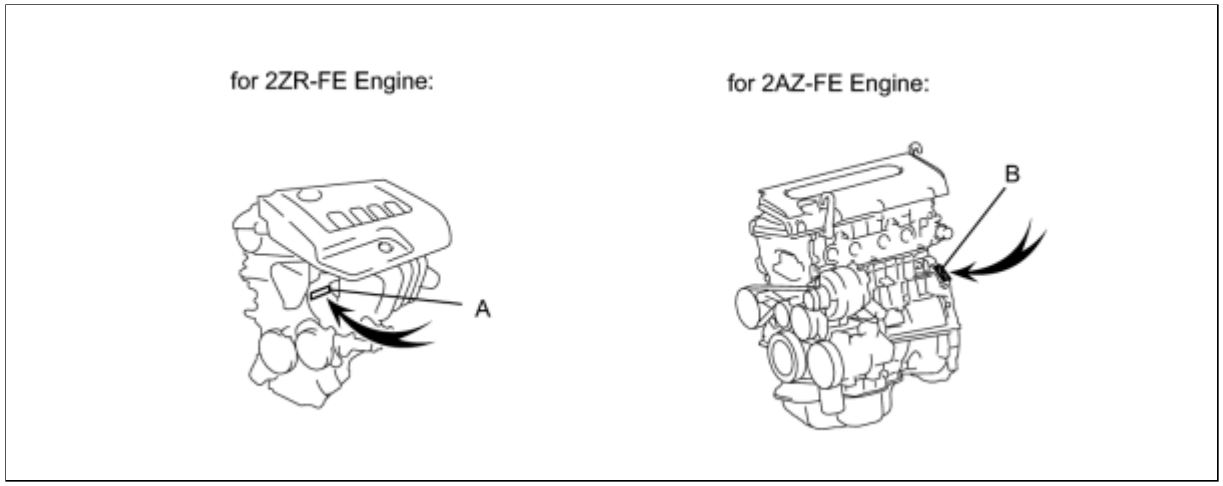

A:
2ZR-FE Engine Serial Number
B:
2AZ-FE Engine Serial Number

(b) The transaxle serial number is stamped on the case as shown in the illustration.

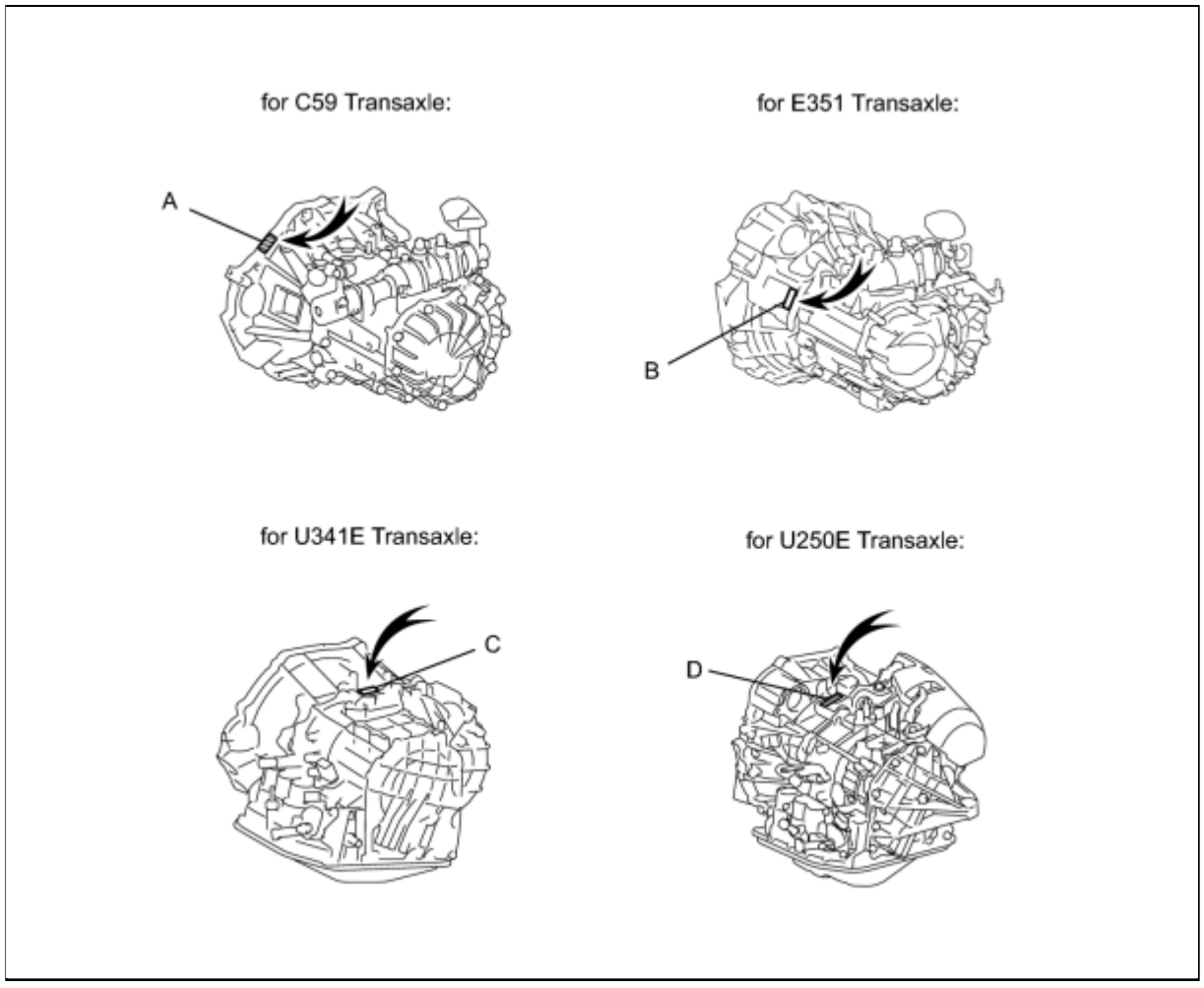

A:
C59 Transaxle Serial Number
B:

E351 Transaxle Serial Number

C:

U341E Transaxle Serial Number

D:

U250E Transaxle Serial Number

Last Modified: 3-10-2010	6.4 L	**From:** 200901
Model Year: 2010	**Model:** Corolla	**Doc ID:** RM000000UYX07JX
Title: INTRODUCTION: REPAIR INSTRUCTION: PRECAUTION (2010 Corolla)		

PRECAUTION

1. BASIC REPAIR HINT

(a) HINTS ON OPERATIONS

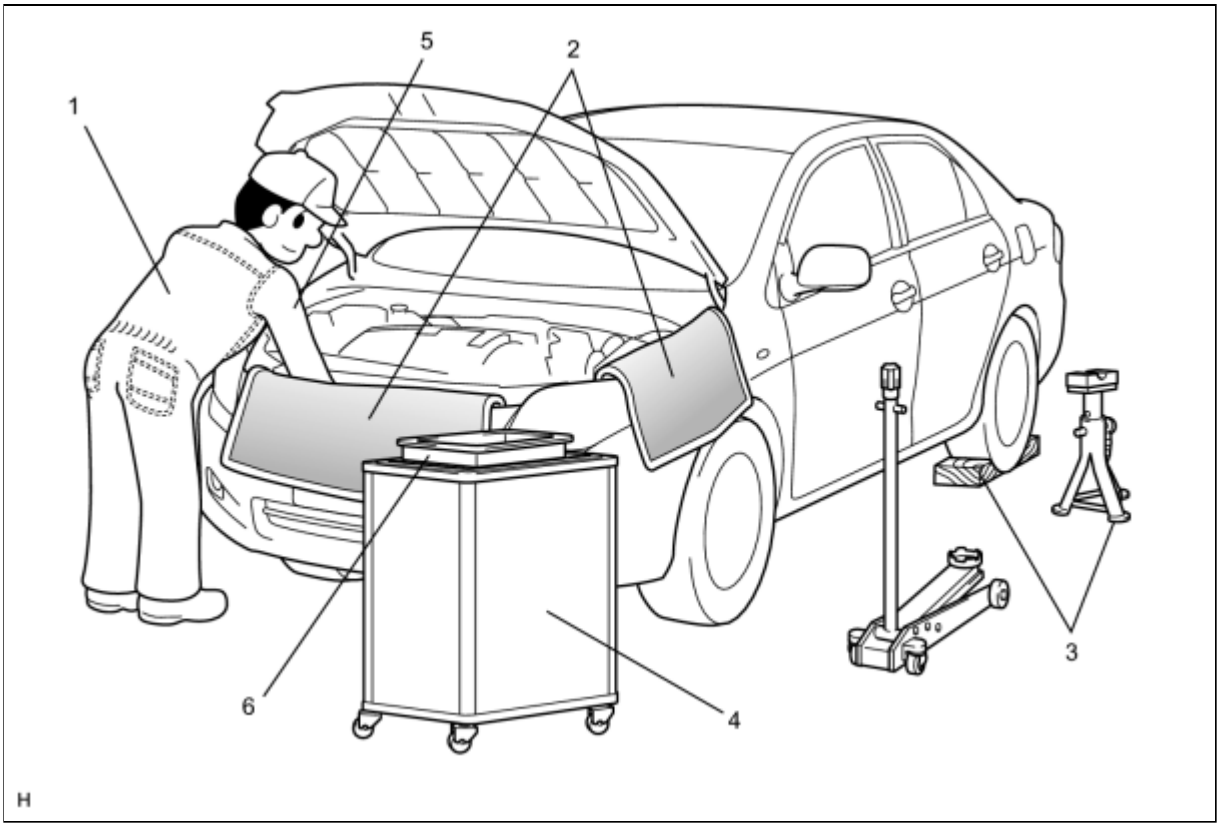

1	Attire	• Always wear a clean uniform. • Hat and safety shoes must be worn.
2	Vehicle protection	Prepare a grille cover, fender cover, seat cover and floor mat before starting an operation.
3	Safety procedure	• When working with 2 or more persons, be sure to check the safety of one another. • When working with the engine running, make sure to provide ventilation for exhaust fumes in the workshop. • If working on high temperature, high pressure, rotating, moving, or vibrating parts, wear appropriate safety equipment and take extra care not to injure yourself or others.

		• When jacking up the vehicle, be sure to support the specified location with a safety stand. • When lifting up the vehicle, use appropriate safety equipment.
4	Preparation of tools and measuring equipment	Before starting an operation, prepare a tool stand, SST, measuring equipment, oil, and any replacement parts required.
5	Removal and installation, disassembly and assembly operations	• Diagnose with a thorough understanding of proper procedures and of the reported problem. • Before removing any parts, check the general condition of the assembly and for deformation and damage. • If the procedure is complicated, take notes. For example, note the total number of electrical connections, bolts, or hoses removed. Add matchmarks to ensure reassembly of components in the original positions. Temporarily mark hoses and their fittings if needed. • Clean and wash the removed parts if necessary and assemble them after a thorough check.
6	Removed parts	• Place the removed parts in a separate box to avoid mixing them up with the new parts or contaminating the new parts. • For non-reusable parts such as gaskets, O-rings, and self-locking nuts, replace them with new ones as instructed in this manual. • Retain the removed parts for customer inspection, if requested.

(b) JACKING UP AND SUPPORTING VEHICLE

(1) Care must be taken when jacking up and supporting the vehicle. Be sure to lift and support the vehicle at the proper locations.

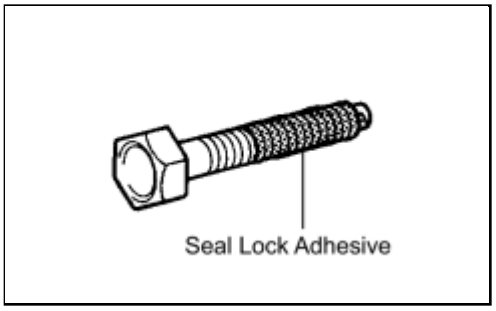

(c) PRECOATED PARTS

(1) Precoated parts are bolts and nuts that are coated with a seal lock adhesive at the factory.

(2) If a precoated part is retightened, loosened or moved in any way, it must be recoated with the specified adhesive.

(3) When reusing a precoated part, clean off the old adhesive and dry the part with compressed air. Then apply new seal lock adhesive appropriately to that part.

(4) Some seal lock agents harden slowly. You may have to wait for the seal lock adhesive to harden.

(d) GASKETS

(1) When necessary, use a sealer on gaskets to prevent leaks.

(e) BOLTS, NUTS AND SCREWS

(1) Carefully follow all the specifications for tightening torques. Always use a torque wrench.

(f) FUSES

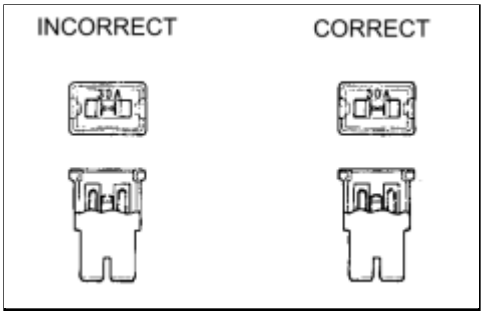

(1) When inspecting a fuse, check that the wire of the fuse is not broken.

(2) If the wire of a fuse is broken, confirm that there are no shorts in its circuit.

(3) When a fuse is replaced, a fuse with the same amperage rating must be used.

ILLUSTRATION	SYMBOL	PART NAME	ABBREVIATION
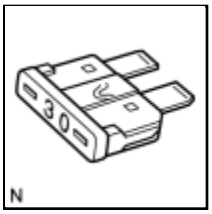	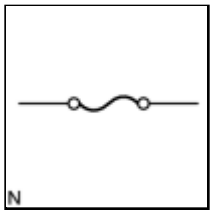	FUSE	FUSE
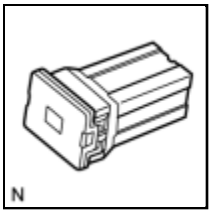	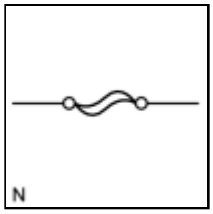	MEDIUM CURRENT FUSE	M-FUSE
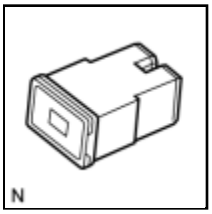	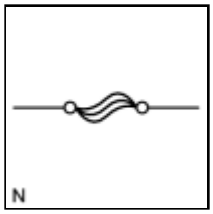	HIGH CURRENT FUSE	H-FUSE
		FUSIBLE LINK	FL

ILLUSTRATION	SYMBOL	PART NAME	ABBREVIATION
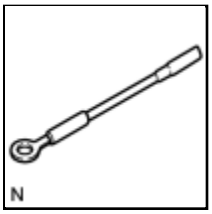	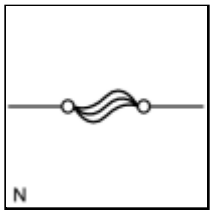		
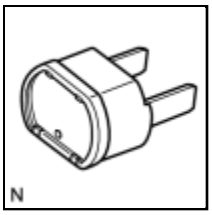	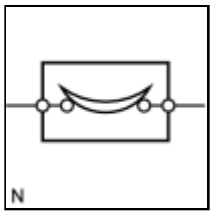	CIRCUIT BREAKER	CB

(g) CLIPS

(1) The removal and installation methods of typical clips used for vehicle body parts are shown in the table below.

HINT:

If clips are damaged during a procedure, always replace the damaged clips with new ones.

SHAPE (EXAMPLE)	REMOVAL/INSTALLATION
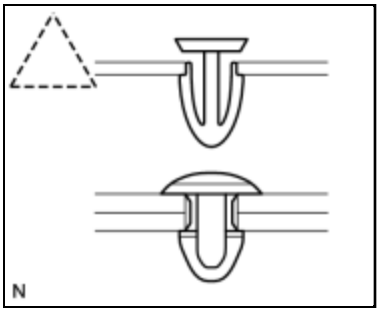	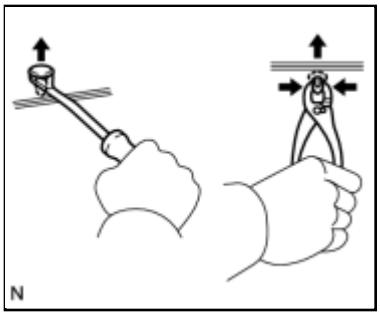 Remove the clips with a clip remover or pliers.
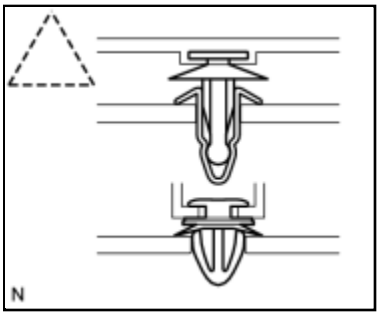	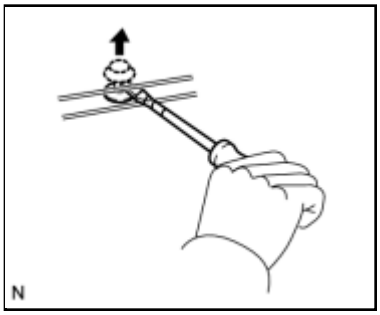 Remove the clips with a clip remover or screwdriver.

SHAPE (EXAMPLE)	REMOVAL/INSTALLATION
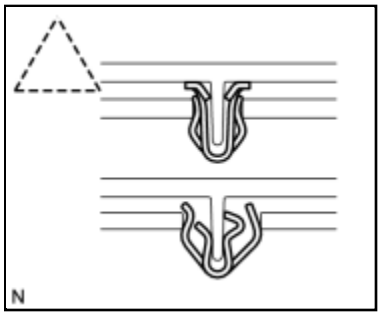	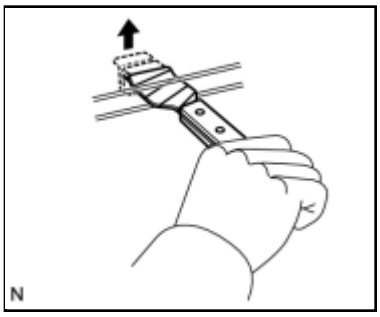 Remove the clips with a wide scraper to prevent panel damage.
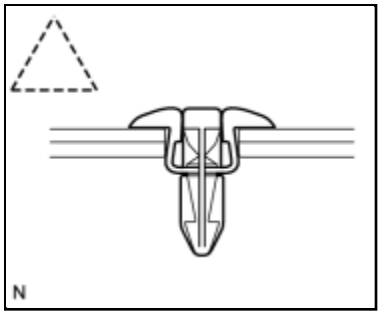	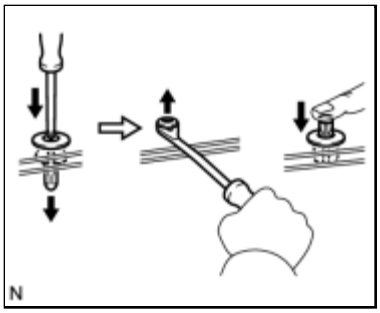 Remove the clips by pushing the center pin through and prying out the shell.
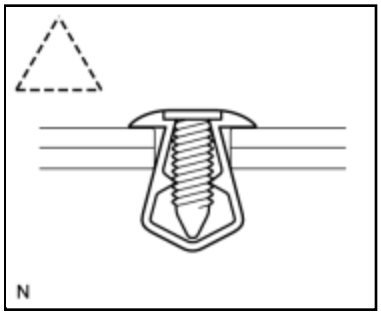	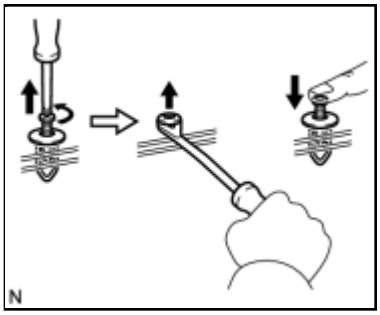 Remove the clips by unscrewing the center pin and prying out the shell.
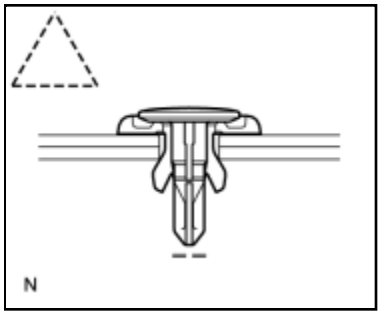	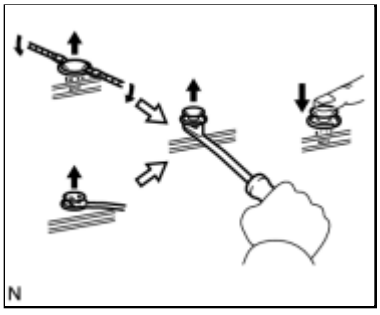 Remove the clips by prying out the pin and then prying out the shell.

(h) CLAWS

(1) The removal and installation methods of typical claws used for vehicle body parts are shown in the table below.

HINT:

If claws are damaged during a procedure, always replace the cap or cover that has damaged claws with a new one.

SHAPE (EXAMPLE)	ILLUSTRATION	PROCEDURE
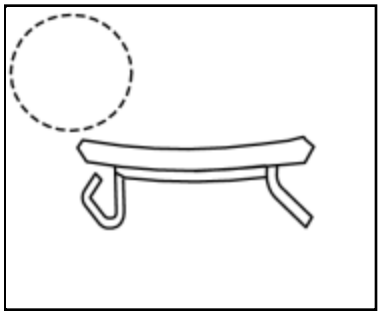	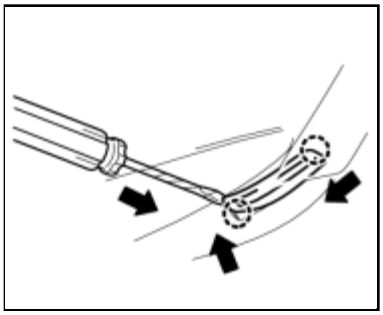	Using a screwdriver, disengage the claws and remove the cap or cover.
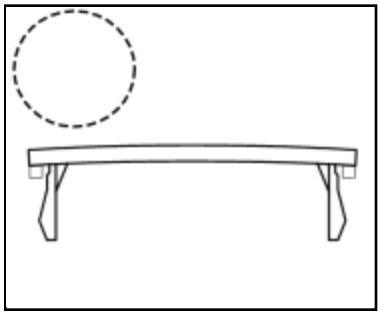	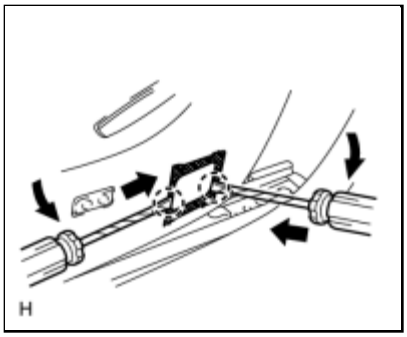	Using a screwdriver, disengage the claws and remove the cap or cover.
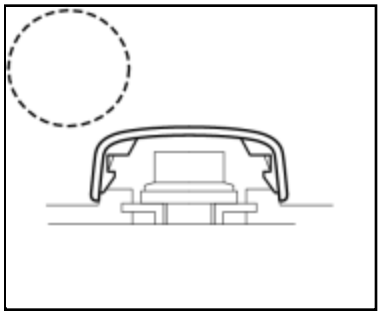	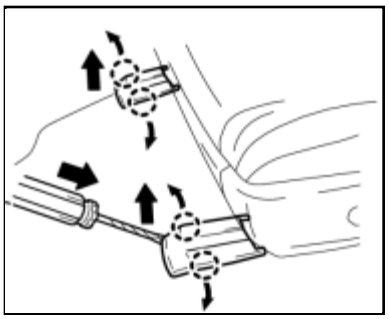	Using a screwdriver, detach the claws and remove the cap or cover.

(i) HINGES, GUIDES, CLAMPS, PINS, ETC.

(1) The removal and installation methods of typical hinges, guides, clamps and pins used for vehicle body parts are shown in the table below.

HINT:

If clamps are damaged during a procedure, always replace the cap or cover that has damaged clamps with a new one.

SHAPE (EXAMPLE)	REMOVAL/INSTALLATION
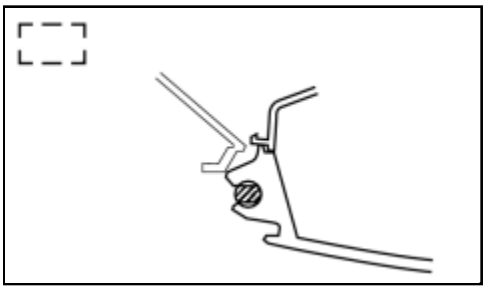	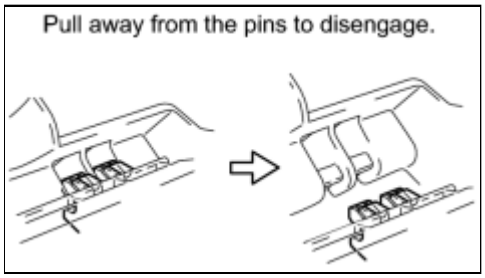
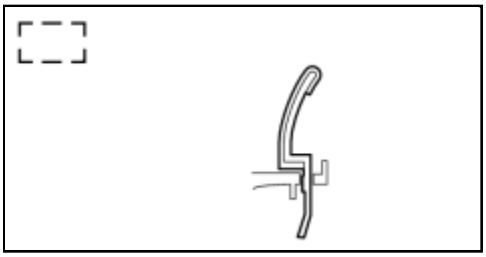	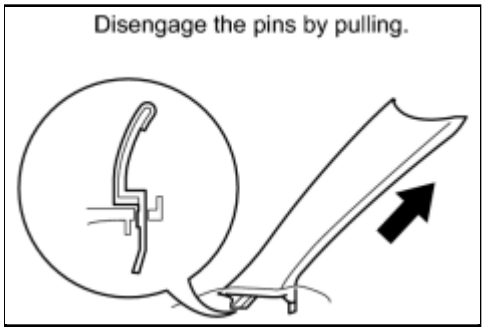
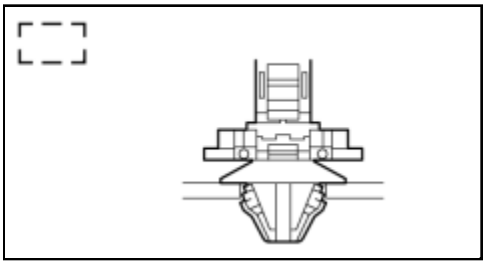	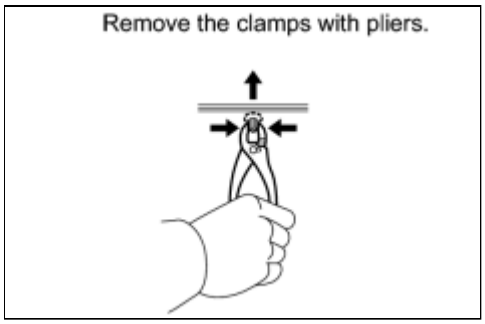
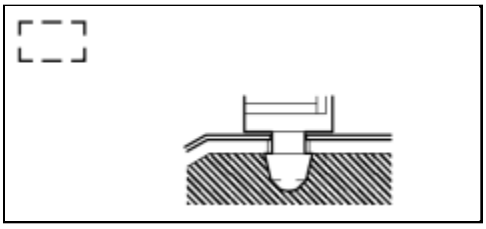	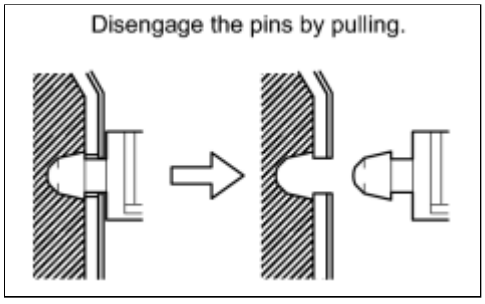

(j) REMOVAL AND INSTALLATION OF VACUUM HOSES

(1) To disconnect a vacuum hose, pull and twist from the end of the hose. Do not pull from the middle of the hose as this may damage the hose.

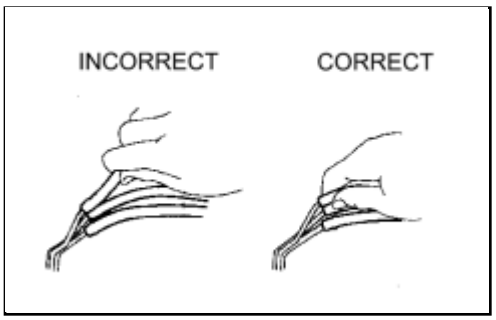

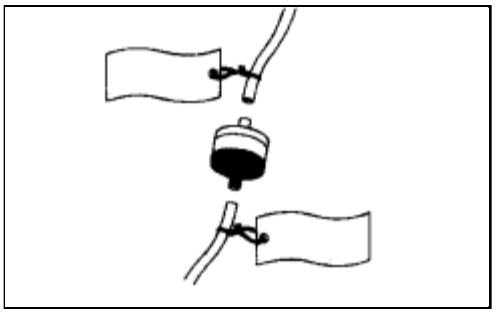

(2) When disconnecting vacuum hoses, use tags to identify where they should be reconnected.

(3) After completing any hose related repairs, double check that the vacuum hoses are properly connected. The label under the hood shows the proper layout.

(4) When using a vacuum gauge, never force the hose onto a connector that is too large. If a hose has been stretched, air may leak. Use a step-down adapter if necessary.

(k) TORQUE WHEN USING TORQUE WRENCH WITH EXTENSION TOOL

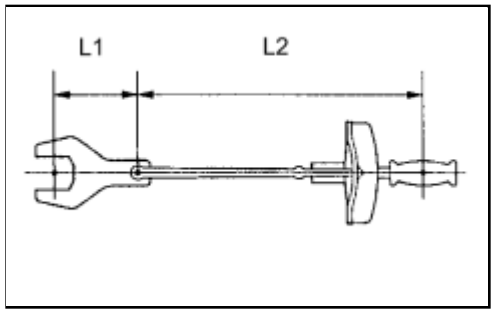

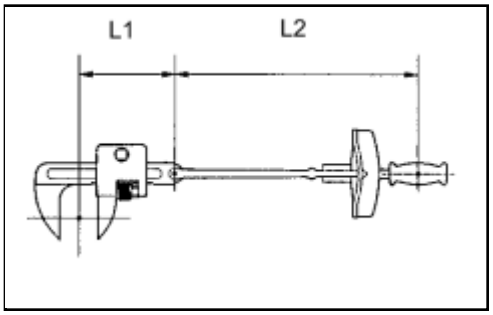

(1) Use the formula below to calculate special torque values for situations where SST or an extension tool is combined with the torque wrench.

Formula

$$T' = (L2/(L1 + L2)) * T$$

T'	Reading of torque wrench {N*m (kgf*cm, ft.*lbf)}
T	Torque {N*m (kgf*cm, ft.*lbf)}
L1	Length of SST or extension tool {cm (in.)}

L2	Length of torque wrench {cm (in.)}

NOTICE:

If an extension tool or SST is combined with a torque wrench and used to tighten to a torque specification in this manual, the actual torque will be excessive and parts will be damaged.

2. FOR VEHICLES EQUIPPED WITH SRS AIRBAG AND SEAT BELT PRETENSIONER

This vehicle is equipped with a Supplemental Restraint System (SRS).

CAUTION:

- Before performing pre-disposal deployment of any SRS component, review and closely follow all applicable environmental and hazardous material regulations. Pre-disposal deployment may be considered hazardous material treatment.
- Failure to carry out the service operations in the correct sequence could cause the SRS to unexpectedly deploy during servicing and lead to serious injury. Furthermore, if a mistake is made when servicing the SRS, it is possible that the SRS may fail to operate properly. Before servicing (including removal or installation of parts, inspection or replacement), be sure to read the following section carefully.

(a) GENERAL NOTICE

(1) As malfunctions of the SRS are difficult to confirm, the Diagnostic Trouble Codes (DTCs) become the most important source of information when troubleshooting. When troubleshooting the SRS, always check for DTCs before disconnecting the battery.

(2) Work must be started at least 90 seconds after the ignition switch is turned off and after the cable is disconnected from the negative (-) battery terminal.

The SRS is equipped with a back-up power source. If work is started within 90 seconds after turning the ignition switch off and disconnecting the cable from the negative (-) battery terminal, the SRS may deploy.

When the cable is disconnected from the negative (-) battery terminal, the clock and audio system memory is erased. Before starting work, make a note of the settings of each memory system. When work is finished, reset the clock and audio system as before.

CAUTION:

Never use a back-up power source (battery or other) to avoid erasing the system memory. The back-up power source may inadvertently power the SRS and cause it to deploy.

(3) If the vehicle has been involved in a minor collision where the SRS does not deploy, the steering pad, front passenger airbag assembly, front seat side airbag assembly, curtain shield airbag assembly and front seat outer belt assembly should be inspected before further use of the vehicle.

(4) Never use the SRS parts from another vehicle. When replacing parts, use new parts.

(5) Before repairs, remove the airbag sensor assemblies if impacts are likely to be applied to the sensor during repairs.

(6) Never disassemble and attempt to repair any airbag sensor assemblies or airbag assemblies.

1. Steering pad
2. Front passenger airbag assembly
3. Front seat side airbag assembly
4. Curtain shield airbag assembly

5. Front seat outer belt assembly

(7) Replace the airbag sensor assemblies and the airbag assemblies if: 1) damage has occurred from being dropped, or 2) cracks, dents or other defects in the case, bracket or connector are present.

(8) Do not directly expose the airbag sensor assemblies or airbag assemblies to hot air or flames.

(9) Use a voltmeter/ohmmeter with high impedance (minimum = 10 kΩ) for troubleshooting electrical circuits.

(10) Information labels are attached to the SRS components. Follow the instructions on the labels.

(11) After work on the SRS is completed, check the SRS warning light.

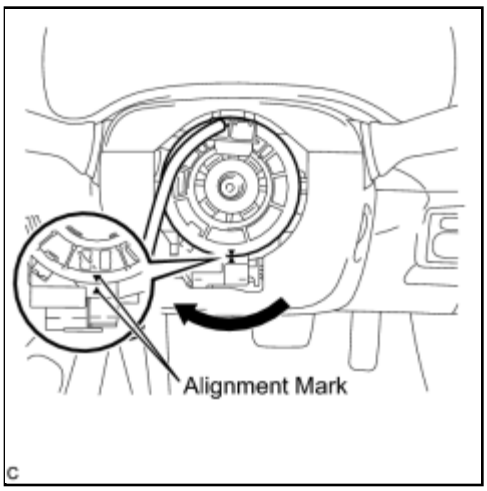

(b) SPIRAL CABLE

(1) The steering wheel must be fitted correctly to the steering column with the spiral cable at the neutral position, as otherwise cable disconnection and other problems may occur. Refer to the information about correct installation of the steering wheel INFO .

(c) STEERING PAD

(1) Always place a removed or new steering pad surface upward as shown in the illustration. Placing the steering pad with the pad surface facing down could cause a serious accident if the airbag deploys. Also, do not place anything on top of the steering pad.

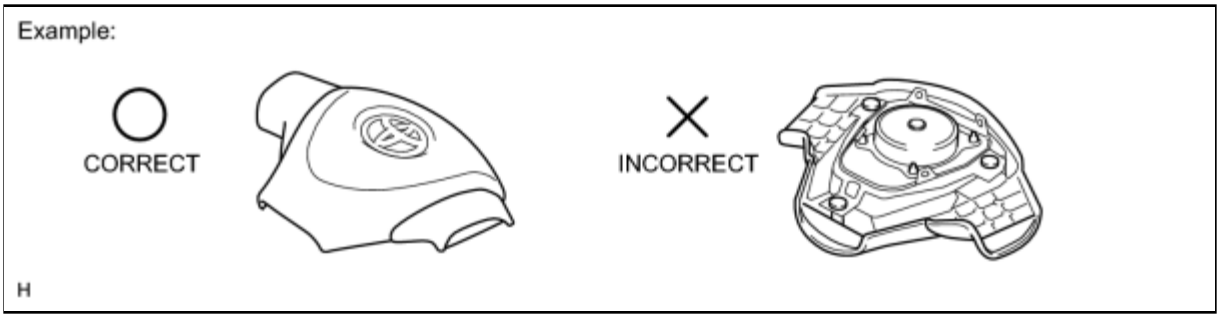

(2) Never measure the resistance of the airbag squib. This may cause the airbag to deploy, which could cause serious injury.

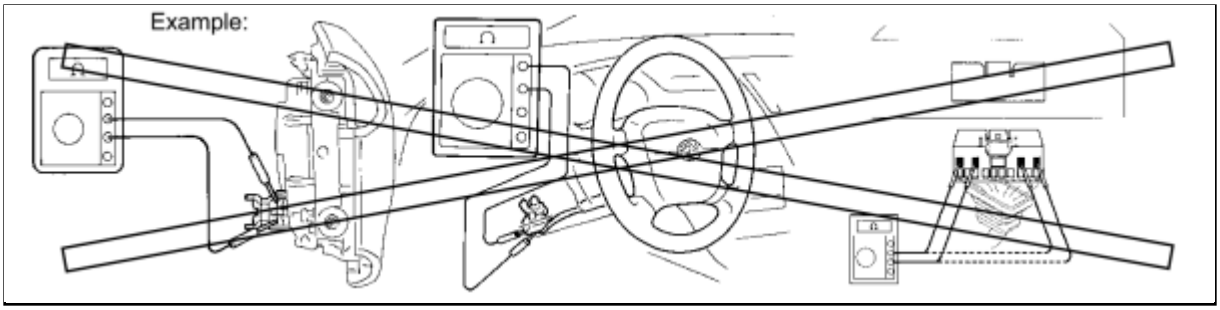

(3) Grease or detergents of any kind should not be applied to the steering pad.

(4) Store the steering pad in an area where the ambient temperature is below 93°C (200°F), the humidity is not high and there is no electrical noise.

(5) Before using an electric welder anywhere on the vehicle, disconnect the center airbag sensor assembly connectors. These connectors contain shorting springs. This feature reduces the possibility of the airbag deploying due to current entering the squib wiring.

(6) When disposing of the vehicle or the steering pad by itself, the airbag should be deployed using SST before disposal INFO . Deploy the airbag in a safe place away from electrical noise.

(d) FRONT PASSENGER AIRBAG ASSEMBLY

(1) Always place a removed or new front passenger airbag assembly with the pad surface facing upward as shown in the illustration. Placing the airbag assembly with the airbag deployment direction facing downword could cause a serious accident if the airbag deploys.

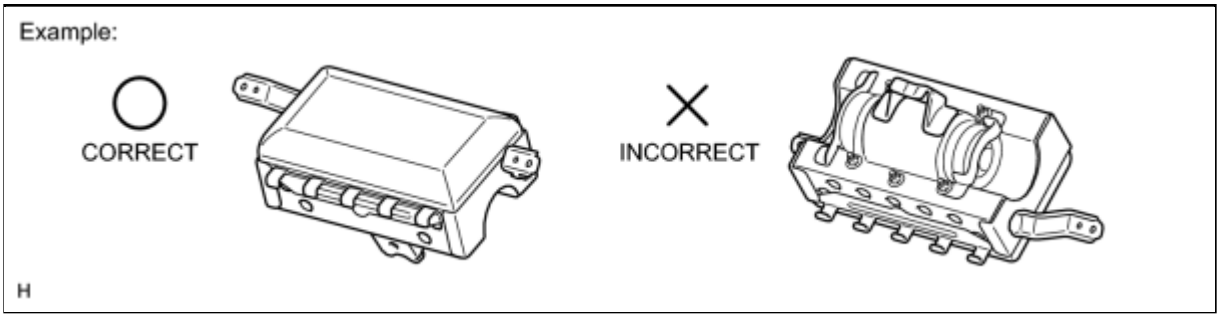

(2) Never measure the resistance of the airbag squib. This may cause the airbag to deploy, which could cause serious injury.

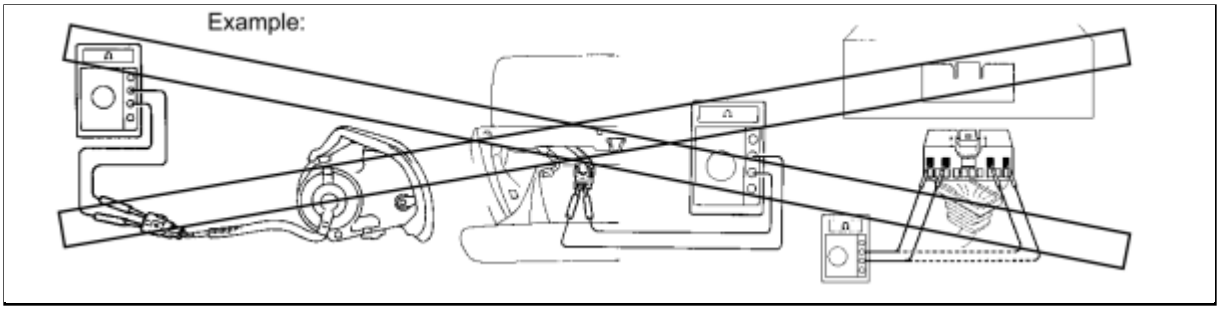

(3) Grease or detergents of any kind should not be applied to the front passenger airbag assembly.

(4) Store the airbag assembly in an area where the ambient temperature is below 93°C (200°F), the humidity is not high and there is no electrical noise.

(5) Before using an electric welder anywhere on the vehicle, disconnect the center airbag sensor

assembly connectors. These connectors contain shorting springs. This feature reduces the possibility of the airbag deploying due to current entering the squib wiring.

(6) When disposing of the vehicle or the airbag assembly unit by itself, the airbag should be deployed using SST before disposal INFO . Deploy the airbag in a safe place away from electrical noise.

(e) FRONT SEAT SIDE AIRBAG ASSEMBLY

(1) Always place a removed or new front seat side airbag assembly with the airbag deployment direction facing upword.

(2) Never measure the resistance of the airbag squib. This may cause the airbag to deploy, which could cause serious injury.

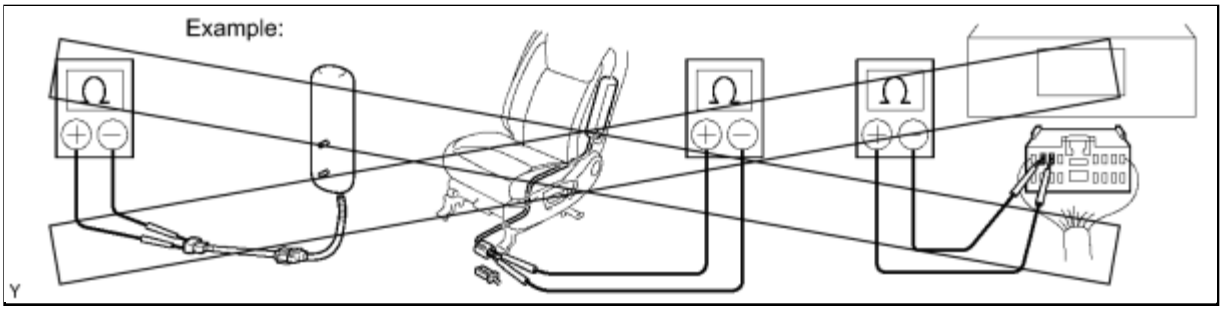

(3) Grease or detergents of any kind should not be applied to the front seat side airbag assembly.

(4) Store the airbag assembly in an area where the ambient temperature is below 93°C (200°F), the humidity is not high and there is no electrical noise.

(5) Before using an electric welder anywhere on the vehicle, disconnect the center airbag sensor assembly connectors. These connectors contain shorting springs. This feature reduces the possibility of the airbag deploying due to current entering the squib wiring.

(6) When disposing of a vehicle or the airbag assembly unit by itself, the airbag should be deployed using SST before disposal INFO . Deploy the airbag in a safe place away from electrical noise.

(f) CURTAIN SHIELD AIRBAG ASSEMBLY

(1) Always place a removed or new curtain shield airbag assembly in a clear plastic bag, and keep it in a safe place.

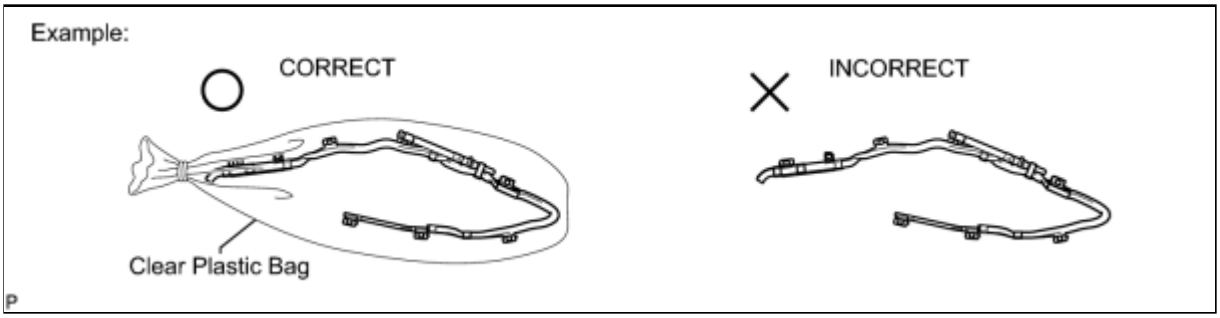

CAUTION:

The plastic bag should be disposed of after use.

NOTICE:

Never disassemble the curtain shield airbag assembly.

(2) Never measure the resistance of the airbag squib. This may cause the airbag to deploy, which could cause serious injury.

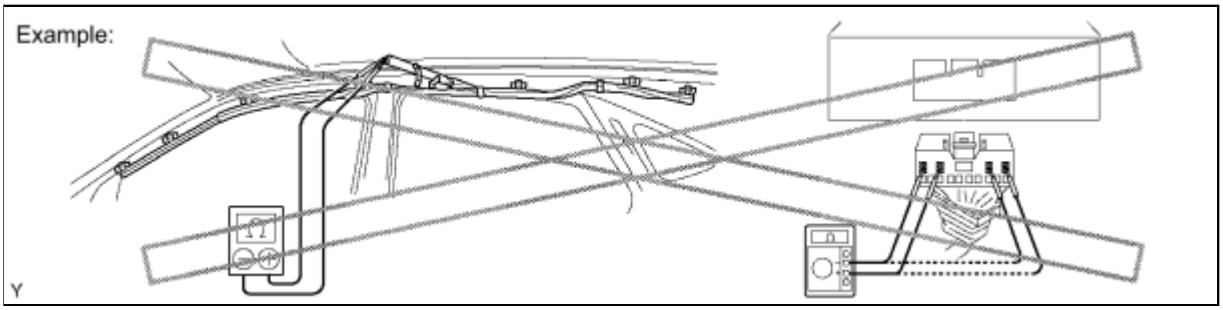

(3) Grease or detergents of any kind should not be applied to the curtain shield airbag assembly.

(4) Store the airbag assembly in an area where the ambient temperature is below 93°C (200°F), the humidity is not high and there is no electrical noise.

(5) Before using an electric welder anywhere on the vehicle, disconnect the center airbag sensor assembly connectors. These connectors contain shorting springs. This feature reduces the possibility of the airbag deploying due to current entering the squib wiring.

(6) When disposing of a vehicle or the airbag assembly unit by itself, the airbag should be deployed using SST before disposal INFO . Deploy the airbag in a safe place away from electrical noise.

(g) FRONT SEAT OUTER BELT ASSEMBLY (SEAT BELT PRETENSIONER)

(1) Never measure the resistance of the front seat outer belt assembly. This may cause the pretensioner of the front seat outer belt assembly to activate, which could cause serious injury.

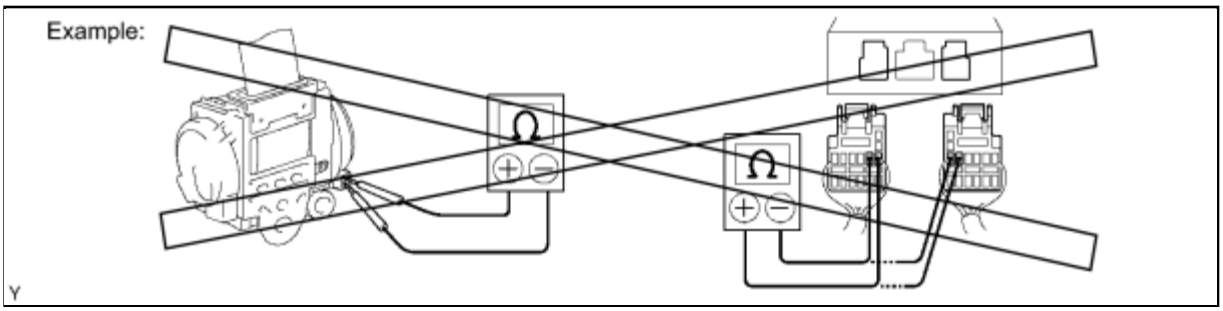

(2) Never disassemble the front seat outer belt assembly.

(3) Never install the front seat outer belt assembly on another vehicle.

(4) Store the front seat outer belt assembly in an area where the ambient temperature is below 80°C (176°F), the humidity is not high and there is no electrical noise.

(5) Before using an electric welder anywhere on the vehicle, disconnect the center airbag sensor assembly connectors. These connectors contain shorting springs. This feature reduces the possibility of the airbag deploying due to current entering the squib wiring.

(6) When disposing of a vehicle or the front seat outer belt assembly unit by itself, the front seat outer belt assembly should be activated before disposal INFO . Activate the front seat outer belt assembly in a safe place away from electrical noise.

(7) As the front seat outer belt assembly is hot after being activated, allow some time for it to cool down sufficiently before disposal. Never apply water to cool down the front seat outer belt

assembly.

(8) Grease, detergents, oil or water should not be applied to the front seat outer belt assembly.

(h) CENTER AIRBAG SENSOR ASSEMBLY

(1) Never reuse a center airbag sensor assembly that has been involved in a collision where the SRS has deployed.

(2) The connectors to the center airbag sensor assembly should be connected or disconnected with the sensor installed to the vehicle. If the connectors are connected or disconnected while the center airbag sensor assembly is not installed, the SRS may activate.

(3) Work must be started at least 90 seconds after the ignition switch is turned off and the cable is disconnected from the negative (-) battery terminal, even if only loosening the bolts of the center airbag sensor assembly.

(i) WIRE HARNESS AND CONNECTOR

(1) All the connectors in the system are a standard yellow color. If an SRS wire harness has an open circuit or a connector is broken, replace it.

3. ELECTRONIC CONTROL

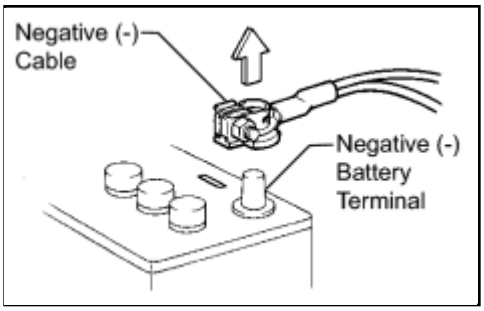

(a) REMOVAL AND INSTALLATION OF BATTERY TERMINAL

(1) Before performing electrical work, disconnect the cable from the negative (-) battery terminal to prevent component and wire damage caused by accidental short circuits.

(2) When disconnecting the cable, turn the ignition switch and headlight switch off and loosen the cable nut completely. Perform these operations without twisting or prying the cable. Then disconnect the cable.

(3) Clock settings, radio settings, audio system memory, DTCs and other data are erased when the cable is disconnected from the negative (-) battery terminal. Write down any necessary data before disconnecting the cable.

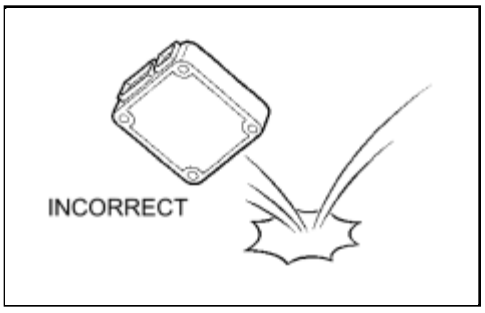

(b) HANDLING OF ELECTRONIC PARTS

(1) Do not open the cover or case of the ECU unless absolutely necessary. If the IC terminals are touched, the IC may be rendered inoperative by static electricity.

(2) Do not pull the wires when disconnecting electronic connectors. Pull the connector itself.

(3) Do not drop electronic components, such as sensors or relays. If they are dropped on a hard surface, they should be replaced.

(4) When cleaning the engine with steam, protect the electronic components, air filter and emission-related components from water.

(5) Never use an impact wrench to remove or install temperature switches or temperature sensors.

(6) When measuring the resistance between terminals of a wire connector, insert the tester probe carefully to prevent terminals from bending.

4. REMOVAL AND INSTALLATION OF FUEL CONTROL PARTS

(a) PLACE FOR REMOVING AND INSTALLING FUEL SYSTEM PARTS

(1) Work in a location with good air ventilation that does not have welders, grinders, drills, electric motors, stoves, or any other ignition sources.

(2) Never work in a pit or near a pit as vaporized fuel will collect in those places.

(b) REMOVING AND INSTALLING FUEL SYSTEM PARTS

(1) Prepare a fire extinguisher before starting the operation.

(2) To prevent static electricity, install a ground wire to the fuel changer, vehicle and fuel tank, and do not spray the surrounding area with water. Be careful when performing work in this area, as the work surface will become slippery. Do not clean up gasoline spills with water, as this may cause the gasoline to spread, and possibly create a fire hazard.

(3) Avoid using electric motors, work lights and other electric equipment that can cause sparks or high temperatures.

(4) Avoid using iron hammers as they may create sparks.

(5) Dispose of fuel-contaminated cloth separately using a fire resistant container.

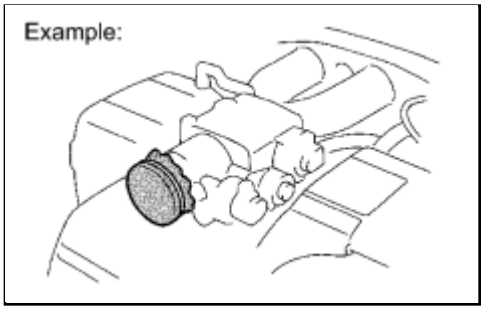

5. REMOVAL AND INSTALLATION OF ENGINE INTAKE PARTS

(a) If any metal particles enter intake system parts, this may damage the engine.

(b) When removing and installing intake system parts, cover the openings of the removed parts and engine openings. Use adhesive tape or other suitable materials.

(c) When installing intake system parts, check that no metal particles have entered the engine or installed parts.

6. HANDLING OF HOSE CLAMPS

(a) Before removing a hose, check the clamp position so that it can be reinstalled in the same position.

(b) Replace any deformed or dented clamps with new ones.

(c) When reusing a hose, attach the clamp on the clamp track portion of the hose.

(d) For a spring type clamp, you may want to spread the tabs slightly after installation by pushing in the direction of the

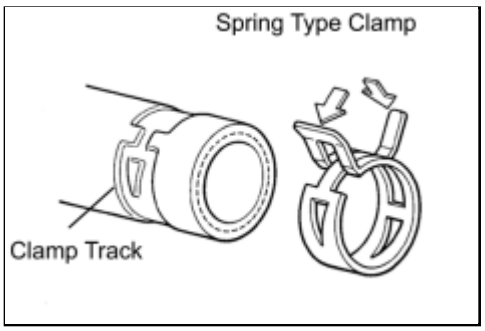

arrows as shown in the illustration.

7. FOR VEHICLES EQUIPPED WITH MOBILE COMMUNICATION SYSTEMS

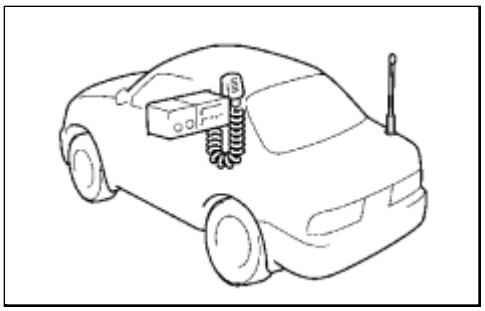

(a) Install the antenna as far away from the ECU and sensors of the vehicle electronic systems as possible.

(b) Install an antenna and feeder at least 20 cm (7.87 in.) away from the ECU and sensors of the vehicle electronic systems. For details about ECU and sensor locations, refer to the section on the applicable components.

(c) Keep the antenna and feeder separate from other wirings as much as possible. This will prevent signals sent from the communication equipment from affecting vehicle equipment and vice-versa.

(d) Check that the antenna and feeder are correctly adjusted.

(e) Do not install high-powered mobile communication system.

8. FOR VEHICLES EQUIPPED WITH TRACTION CONTROL (TRAC) AND VEHICLE STABILITY CONTROL (VSC) SYSTEMS

When testing with a 2-wheel drum tester such as a speedometer tester, a combination speedometer and brake tester, or a chassis dynamometer, or when jacking up the front wheels and turning the wheels, perform the following procedure to enter inspection mode and disable the TRAC and VSC systems.

HINT:

- The vehicle may slip unexpectedly out of the dynamometer because of TRAC and VSC operations.
- Pressing the VSC OFF switch (for vehicles with the VSC OFF switch) does not disable TRAC and VSC operation completely.

NOTICE:

- Make sure that the VSC warning light is blinking.
- Secure the vehicle with chains for safety.

(a) Activating inspection mode (Not using the Techstream)

HINT:

- Perform steps "D" to "H" within 30 seconds.
- Perform steps "F" and "G" within 15 seconds each.

(1) Ensure that the ignition switch is off and the engine is stopped. (Step "A")

(2) Make sure that the shift lever is in P. (Step "B")

(3) Start the engine. (Step "C")

(4) Apply the parking brake by pulling the parking brake lever. (Step "D")

(5) Depress and release the brake pedal twice. (Step "E")

(6) While holding the brake pedal down, release and apply the parking brake twice. (Step "F")

(7) With the parking brake applied, depress and release the brake pedal twice. (Step "G")

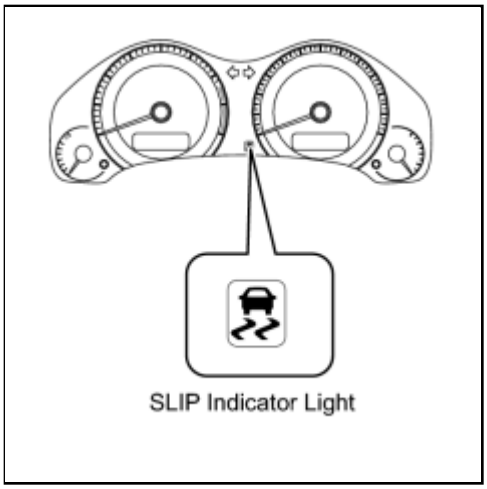

(8) Check if the SLIP indicator light comes on. (Step "H")

HINT:

- If the SLIP indicator light does not come on in step "H", repeat the steps from "A" to "H".
- Turning the ignition switch off ends inspection mode.

(b) Activating inspection mode (Using the Techstream)

(1) Ensure that the ignition switch is off and the engine is stopped. (Step "A")

(2) Make sure that the shift lever is in P. (Step "B")

(3) Connect the Techstream to the DLC3. (Step "C")

(4) Start the engine. (Step "D")

(5) Turn the Techstream main switch on. (Step "E")

(6) Enter the following menus: Chassis / ABS/VSC/TRAC / Utility / Inspection Mode. (Step "F")

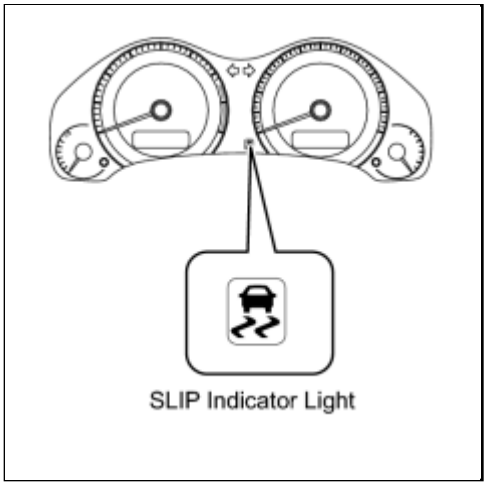

(7) Check that the SLIP indicator light comes on. (Step "G")

HINT:

- If the SLIP indicator light does not come on in step "G", repeat the steps from "A" to "G".
- Turning the ignition switch off ends inspection mode.

9. FOR VEHICLES EQUIPPED WITH CATALYTIC CONVERTER

CAUTION:

If a large amount of unburned gasoline or gasoline vapors flow into the converter, it may cause converter overheating and create a fire hazard. To prevent this, observe the following precautions.

(a) Use only unleaded gasoline.

(b) Avoid idling the engine for more than 20 minutes.

(c) Avoid performing unnecessary spark tests.

(1) Perform a spark test only when absolutely necessary. Perform this test as rapidly as possible.

(2) While testing, never race the engine unless instructed.

(d) Avoid a prolonged engine compression measurement. Engine compression measurements must be performed as rapidly as possible.

(e) Do not run the engine when the fuel tank is nearly empty. This may cause the engine to misfire and create an extra load on the converter.

10. EXPRESSIONS OF IGNITION SWITCH

(a) The type of ignition switch used on this model differs according to the specifications of the vehicle.

The expressions listed in the table below are used in this section.

SWITCH TYPE		IGNITION SWITCH (POSITION)	ENGINE SWITCH (CONDITION)
Expression	Ignition Switch off	LOCK	Off
	Ignition Switch ON	ON	On (IG)
	Ignition Switch ACC	ACC	On (ACC)
	Engine Start	START	Start

Last Modified: 3-10-2010	6.4 D	**From:** 200901
Model Year: 2010	**Model:** Corolla	**Doc ID:** RM000000UZ1045X
Title: INTRODUCTION: HOW TO TROUBLESHOOT ECU CONTROLLED SYSTEMS: HOW TO PROCEED WITH TROUBLESHOOTING (2010 Corolla)		

HOW TO PROCEED WITH TROUBLESHOOTING

1. OPERATION FLOW

HINT:

Perform troubleshooting in accordance with the procedure below. The following is an outline of basic troubleshooting procedure. Confirm the troubleshooting procedure for the circuit you are working on before beginning troubleshooting.

1.	**VEHICLE BROUGHT TO WORKSHOP**

NEXT

2.	**CUSTOMER PROBLEM ANALYSIS**

(a) Ask the customer about the conditions and environment when the problem occurred.

NEXT

3.	**INSPECT BATTERY VOLTAGE**

Standard voltage:
11 to 14 V
If the voltage is below 11 V, recharge or replace the battery before proceeding.

NEXT

4.	SYMPTOM CONFIRMATION AND DTC (AND FREEZE FRAME DATA) CHECK

(a) Visually check the wire harnesses, connectors and fuses for open and short circuits.

(b) Warm up the engine to the normal operating temperature.

(c) Confirm the problem symptoms and conditions, and check for DTCs.

Result:

RESULT	PROCEED TO
DTC is output	A
DTC is not output	B

B ▶ **Go to step 6**

A

▼

5.	DTC CHART

(a) Check the results obtained in step 4. Then find the output DTC in the DTC chart. Look at the "Trouble Area" column for a list of potentially malfunctioning circuits and/or parts.

NEXT ▶ **Go to step 7**

6.	PROBLEM SYMPTOMS CHART

(a) Check the results obtained in step 4. Then find the problem symptoms in the problem symptoms table. Look at the "Suspected Area" column for a list of potentially malfunctioning circuits and/or parts.

NEXT

▼

7.	CIRCUIT INSPECTION OR PARTS INSPECTION

(a) Identify the malfunctioning circuit or part.

NEXT

8.	ADJUST, REPAIR OR REPLACE

(a) Adjust, repair or replace the malfunctioning circuit or parts.

NEXT

9.	CONFIRMATION TEST

(a) After the adjustment, repairs or replacement of components, confirm that the malfunction no longer exists. If the malfunction does not reoccur, perform a confirmation test under the same conditions and in the same environment as when the malfunction first occurred.

NEXT **END**

2. CUSTOMER PROBLEM ANALYSIS

HINT:

- When troubleshooting, confirm that the problem symptoms have been accurately identified. Preconceptions should be discarded in order to make an accurate judgment. To clearly understand what the problem symptoms are, it is extremely important to ask the customer about the problem and the conditions at the time the malfunction occurred.
- Gather as much information as possible for reference. Past problems that seem unrelated may also help in some cases.
  - The following 5 items are important points in the problem analysis:

What	Vehicle model, system name

When	Date, time, occurrence frequency
Where	Road conditions
Under what conditions?	Driving conditions, weather conditions
How did it happen?	Problem symptoms

3. SYMPTOM CONFIRMATION AND DIAGNOSTIC TROUBLE CODE

HINT:

The diagnostic system in this vehicle has various functions.

- The first function is the Diagnostic Trouble Code (DTC) check. A DTC is a code stored in the ECU memory whenever a malfunction in the signal circuits to the ECU occurs. In a DTC check, a previous malfunction's DTC can be checked by a technician during troubleshooting.
- Another function is the Input Signal Check, which checks if the signals from various switches are sent to the ECU correctly.

By using these functions, the problem areas can be narrowed down and troubleshooting can be more effective. Diagnostic functions are incorporated in the following system in this vehicle.

SYSTEM	SYMPTOM CONFIRMATION AND DIAGNOSTIC TROUBLE CODE				
	DTC CHECK (NORMAL MODE)	DTC CHECK (CHECK MODE)	SENSOR CHECK/TEST MODE (INPUT SIGNAL CHECK)	DATA LIST	ACTIVE TEST
2ZR-FE SFI System	○	○	-	○	○
2AZ-FE SFI System	○	○	-	○	○
Cruise Control System	○	-	-	○	-
U250E Automatic Transaxle System	○	○	-	○	○
U341E Automatic Transaxle System	○	○	-	○	○
Tire Pressure Warning System	○	-	○	○	-
Anti-lock Brake System	○	-	○	○	○
Vehicle Stability Control System	○	-	○	○	○
Power Steering System	○	-	-	○	-
Steering Lock System	○	-	-	○	○
Audio and Visual System	○	-	-	-	-
Navigation System	-	-	-	-	-

SYSTEM	SYMPTOM CONFIRMATION AND DIAGNOSTIC TROUBLE CODE				
	DTC CHECK (NORMAL MODE)	DTC CHECK (CHECK MODE)	SENSOR CHECK/TEST MODE (INPUT SIGNAL CHECK)	DATA LIST	ACTIVE TEST
LIN Communication System	○	-	-	-	-
CAN Communication System	○	-	-	-	-
Power Door Lock Control System	-	-	-	○	○
Wireless Door Lock Control System (w/ Smart Key System)	○	-	-	○	○
Wireless Door Lock Control System (w/o Smart Key System)	○	-	-	○	○
Key Reminder Warning System	-	-	-	○	-
Smart Key System (for Entry Function)	-	-	-	○	○
Smart Key System (for Start Function)	○	-	-	○	○
Engine Immobilizer System (w/ Smart Key System)	○	-	-	○	○
Engine Immobilizer System (w/o Smart Key System)	○	-	-	○	○
Theft Deterrent System	○	-	-	○	○
Lighting System (INT)	-	-	-	○	○
Meter/Gauge System	○	-	-	○	○
Airbag System	○	○	-	○	-
Occupant Classification System	○	-	-	○	-
Front Power Seat Control System	-	-	-	-	-
Seat Belt Warning System	-	-	-	-	○
Air Conditioning System (for Automatic Air	○	-	-	○	○

SYSTEM	SYMPTOM CONFIRMATION AND DIAGNOSTIC TROUBLE CODE				
	DTC CHECK (NORMAL MODE)	DTC CHECK (CHECK MODE)	SENSOR CHECK/TEST MODE (INPUT SIGNAL CHECK)	DATA LIST	ACTIVE TEST
Conditioning System)					
Air Conditioning System (for Manual Air Conditioning System)	○	-	-	○	○
Power Window Control System	-	-	-	○	○
Window Defogger System (for Automatic Air Conditioning System)	-	-	-	-	○
Window Defogger System (for Manual Air Conditioning System)	-	-	-	-	-
Sliding Roof System	-	-	-	-	-
Power Mirror Control System	-	-	-	-	-
Wiper and Washer System	-	-	-	-	-
Lighting System (EXT)	-	-	-	-	-

- In the DTC check, it is very important to determine whether the problem indicated by the DTC either: 1) still occurs, or 2) occurred in the past but has returned to normal. In addition, the DTC should be compared to the problem symptom to see if they are related. For this reason, DTCs should be checked before and after confirmation of symptoms (i.e., whether or not problem symptoms exist) to determine current system conditions, as shown in the flowchart below.
- Never skip the DTC check. Failing to check DTCs may, depending on the case, result in unnecessary troubleshooting for systems operating normally or lead to repairs not related to the problem. Follow the procedure listed in the flowchart in the correct order.
- The following flowchart shows how to proceed with troubleshooting using the DTC check. Directions from the flowchart will indicate how to proceed either to DTC troubleshooting or to the troubleshooting of each problem symptom.

1.	**DTC CHECK**

NEXT

2.	**MAKE A NOTE OF DTC DISPLAYED AND THEN CLEAR MEMORY**

NEXT

3.	**SYMPTOM CONFIRMATION**

Result:

RESULT	PROCEED TO
No symptoms exist	A
Symptoms exist	B

B ▶ **Go to step 5**

A

4.	**SIMULATION TEST USING SYMPTOM SIMULATION METHODS**

NEXT

5.	**DTC CHECK**

Result:

RESULT	PROCEED TO
DTC is not output	A

RESULT	PROCEED TO
DTC is output	B

B ▶ **TROUBLESHOOTING OF PROBLEM INDICATED BY DTC**

A
▼

6.	SYMPTOM CONFIRMATION

Result:

RESULT	PROCEED TO
No symptoms exist	A
Symptoms exist	B

If a DTC was displayed in the initial DTC check, the problem may have occurred in a wire harness or connector in that circuit in the past. Check the wire harness and connectors.

B ▶ **END**

A ▶ **TROUBLESHOOTING OF EACH PROBLEM SYMPTOM**

The problem still occurs in a place other than the diagnostic circuit (the DTC displayed first is either for a past problem or a secondary problem).

4. SYMPTOM SIMULATION

HINT:

The most difficult case in troubleshooting is when no problem symptoms occur. In such a case, a thorough problem analysis must be carried out. A simulation of the same or similar conditions and environment in which the problem occurred in the customer's vehicle should be carried out. No matter how much skill or experience a technician has, troubleshooting without confirming the problem symptoms will lead to important repairs being overlooked and mistakes or delays.

For example:
With a problem that only occurs when the engine is cold or as a result of vibration caused by the road during driving, the problem can never be determined if the symptoms are being checked on a stationary vehicle or a vehicle with a warmed-up engine. Vibration, heat or water penetration (moisture) is difficult to reproduce. The symptom simulation tests below are effective substitutes for the conditions and can be applied to a stationary vehicle. Important points in the symptom simulation test:

In the symptom simulation test, the problem symptoms as well as the problem area or parts must be confirmed. First, narrow down the possible problem circuits according to the symptoms. Then, connect the tester and carry out the symptom simulation test, judging whether the circuit being tested is defective or normal. Also, confirm the problem symptoms at the same time. Refer to the problem symptoms table for each system to narrow down the possible causes.

To reproduce DTCs, it is necessary to satisfy the respective DTC detection conditions.

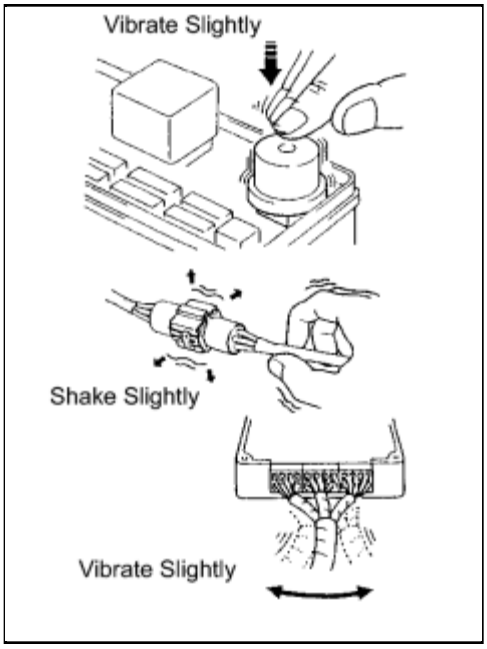

(a) VIBRATION METHOD: When a malfunction seems to occur as a result of vibration.

(1) PART AND SENSOR

Apply slight vibration with a finger to the part of the sensor suspected to be the cause of the problem, and check whether the malfunction occurs.

NOTICE:

Applying strong vibration to relays may open the relays.

(2) CONNECTORS

Slightly shake the connector vertically and horizontally.

(3) WIRE HARNESS

Slightly shake the wire harness vertically and horizontally.

HINT:

The connector joint and fulcrum of the vibration are the major areas that should be checked thoroughly.

(b) HEAT METHOD: When a malfunction seems to occur when the area in question is heated.

(1) Heat the component that is the possible cause of the malfunction with a hair dryer or similar device. Check if the malfunction occurs.

NOTICE:

- Do not heat to more than 60°C (140°F). Exceeding this temperature may damage the components.
- Do not apply heat directly to the parts in the ECU.

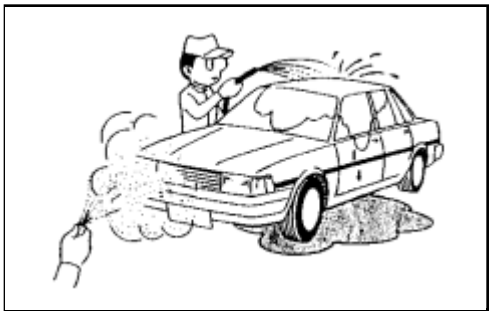

(c) WATER SPRINKLING METHOD: When a malfunction seems to occur on a rainy day or in high-humidity.

(1) Sprinkle water onto the vehicle and check if the malfunction occurs.

NOTICE:

- Never sprinkle water directly into the engine compartment. Indirectly change the temperature and humidity by spraying water onto the front of the radiator.
- Never apply water directly onto the electronic components.

HINT:

If the vehicle has or had a water leakage problem, the leakage may have damaged the ECU or connections. Look for evidence of corrosion or short circuits. Proceed with caution during water tests.

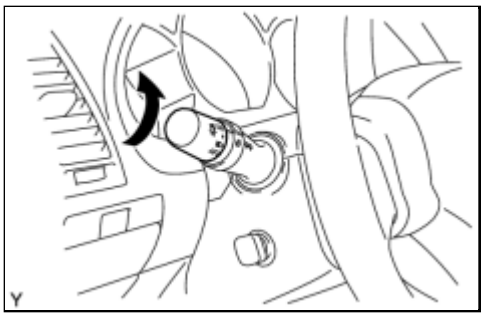

(d) HIGH ELECTRICAL LOAD METHOD: When a malfunction seems to occur when an electrical load is excessive.

(1) Turn on the heater blower, headlights, rear window defogger and all other electrical loads. Check if the malfunction recurs.

5. DIAGNOSTIC TROUBLE CODE CHART

Look for output Diagnostic Trouble Codes (DTCs) (from the DTC checks) in the appropriate section's Diagnostic Trouble Code Chart. Use the chart to determine the trouble area and the proper inspection procedure. A description of each of the chart's columns is shown in the table below.

ITEM	DESCRIPTION
DTC No.	Indicates the diagnostic trouble code
Detection Item	Indicates the system or details of the problem
Trouble Area	Indicates the suspected areas of the problem
See page	Indicates the page where the inspection procedure for each circuit is to be found, or gives instruction for checking and repairs.

6. PROBLEM SYMPTOMS TABLE

When no DTC is output but the problem still occurs, use the Problem Symptoms Table. The suspected areas (circuits or parts) for each problem symptom are shown in the table. The suspected areas are listed in order of probability. A description of each of the table columns is shown in the following table.

HINT:

In some cases, the problem is not detected by the diagnostic system even though a problem symptom occurs. It is possible that the problem occurs outside the detection range of the diagnostic system, or that the problem occurs in a completely different system.

ITEM	DESCRIPTION
Symptom	-
Suspected Area	Indicates the circuit or part which needs to be checked.
See page	Indicates the page where the inspection procedure is located.

7. INSPECTION

A description of the main points for inspection of suspected areas is shown in the following table.

ITEM	DESCRIPTION
Description	The major role and operation of the circuit or system and its component parts are explained.
DTC No., DTC Detection Condition and Trouble Area	Indicates the diagnostic trouble codes, DTC detection conditions and suspected areas for a problem.
Wiring Diagram	This is a wiring diagram for the circuit or system. This diagram can be used together with the Electrical Wiring Diagram to thoroughly understand the circuit. Wire colors are indicated by alphabetical codes. B = Black, L = Blue, R = Red, BR = Brown, LG = Light Green, V = Violet, G = Green, O = Orange, W = White, GR = Gray, P = Pink, Y = Yellow, SB = Sky Blue The first letter indicates the basic wire color and the second letter indicates the color of the stripe.
Inspection Procedure	This shows the procedure not only to determine whether the circuit is normal or abnormal, but also to determine whether the problem is located in the sensors, actuators, wire harness or ECU.
Illustration of the ECU connector during the check	The illustration shows whether the connector being checked is connected or disconnected. The connections for an electrical tester are indicated by (+) or (-) after the terminal name. For inspections between a connector and body ground, information about the ground is not shown in the illustration.

Last Modified: 3-10-2010	6.4 F	**From:** 200901
Model Year: 2010	**Model:** Corolla	**Doc ID:** RM000000UZ306ZX
Title: INTRODUCTION: HOW TO TROUBLESHOOT ECU CONTROLLED SYSTEMS: ELECTRONIC CIRCUIT INSPECTION PROCEDURE (2010 Corolla)		

ELECTRONIC CIRCUIT INSPECTION PROCEDURE

1. BASIC INSPECTION

(a) WHEN MEASURING RESISTANCE OF ELECTRONIC PARTS

(1) Unless otherwise stated, all resistance measurements are standard values measured at an ambient temperature of 20°C (68°F). Resistance measurements may be inaccurate if measured at high temperatures, i.e. immediately after the vehicle has been running. Measurements should be made after the engine has cooled down.

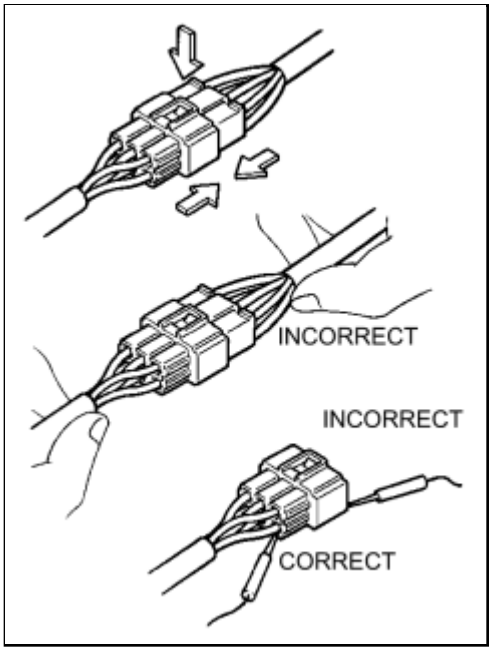

(b) HANDLING CONNECTORS

(1) When disconnecting a connector, first squeeze the mating connector housing halves tightly together to release the lock, and then press the lock claw and separate the connector.

(2) When disconnecting a connector, do not pull on the harnesses. Grasp the connector directly and separate it.

(3) Before connecting a connector, check that there are no deformations, damage, looseness or missing terminals.

(4) When connecting a connector, press firmly until it locks with a "click" sound.

(5) If checking a connector with a TOYOTA electrical tester, check the connector from the backside (harness side) using a mini test lead.

NOTICE:

- As a waterproof connector cannot be checked from the backside, check it by connecting a sub-harness.
- Do not damage the terminals by moving the inserted tester needle.

(c) CHECKING CONNECTORS

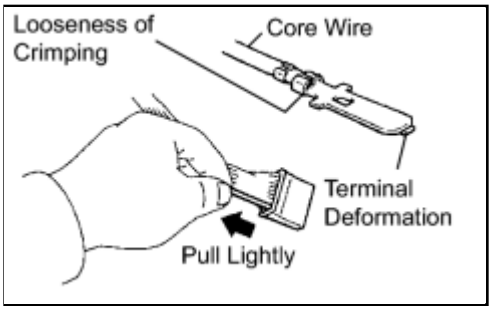

(1) Checking when a connector is connected: Squeeze the connectors together to confirm that they are fully connected and locked.

(2) Checking when a connector is disconnected: Check by pulling the wire harness lightly from the backside of the connector. Look for unlatched terminals, missing terminals, loose crimps or broken conductor wires. Check visually for corrosion, metallic or foreign matter and water, and bent, rusted, overheated, contaminated, or deformed terminals.

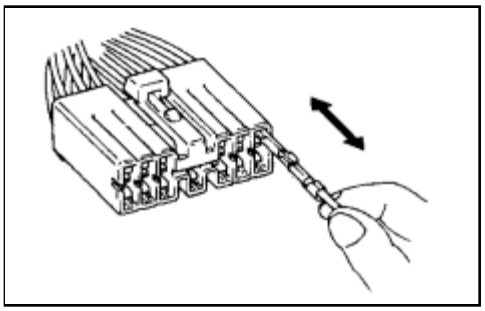

(3) Checking the contact pressure of the terminal: Prepare a spare male terminal. Insert it into a female terminal, and check for ample tension when inserting and after full engagement.

NOTICE:

When testing a gold-plated female terminal, always use a gold-plated male terminal.

(d) REPAIR METHOD OF CONNECTOR TERMINAL

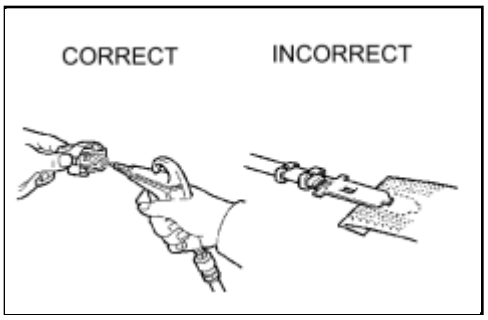

(1) If there is any foreign matter on the terminal, clean the contact point with compressed air or a cloth. Never rub the contact point using sandpaper as the plating may come off.

(2) If there is abnormal contact pressure, replace the female terminal. If the male terminal is gold-plated (gold color), use a gold-plated female terminal; if it is silver-plated (silver color), use a silver-plated female terminal.

(3) Damaged, deformed, or corroded terminals should be replaced. If the terminal does not lock into the housing, the housing may have to be replaced.

(e) HANDLING OF WIRE HARNESS

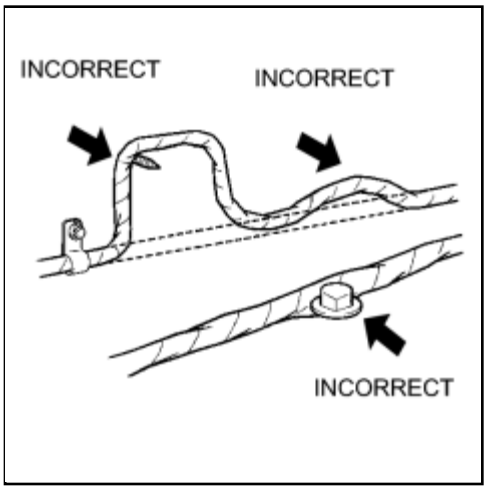

(1) If removing a wire harness, check the wiring and clamps before proceeding so that it can be restored in the same way.

(2) Never twist, pull or slacken the wire harness more than necessary.

(3) The wire harness should never come into contact with any high temperature part, rotating, moving, vibrating, or sharp-edged parts. Avoid contact with panel edges, screw tips and other sharp items.

(4) When installing parts, never pinch the wire harness.

(5) Never cut or break the cover of the wire harness. If it is cut or broken, replace it or repair it with insulating tape.

2. CHECK FOR OPEN CIRCUIT

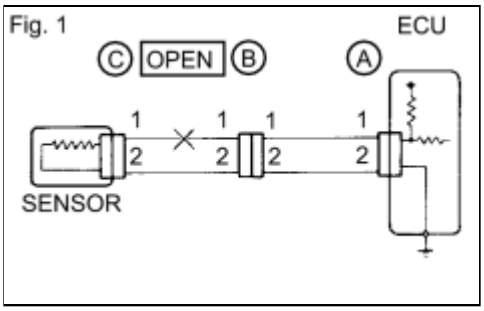

(a) For an open circuit in the wire harness in Fig. 1, measure the resistance and voltage as follows:

(b) Check the resistance.

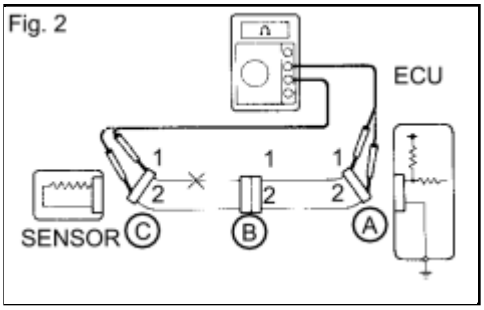

(1) Disconnect connectors A and C and measure the resistance between the terminals of the connectors.

Standard Resistance (Fig. 2):

TESTER CONNECTION	SPECIFIED CONDITION
Connector A terminal 1 - Connector C terminal 1	10 kΩ or higher
Connector A terminal 2 - Connector C terminal 2	Below 1 Ω

HINT:

Measure the resistance while lightly shaking the wire harness vertically and horizontally. If the results match the preceding values, an open circuit exists between terminal 1 of connector A and terminal 1 of connector C.

(2) Disconnect connector B and measure the resistance between the terminals of the connectors.

Standard Resistance (Fig. 3):

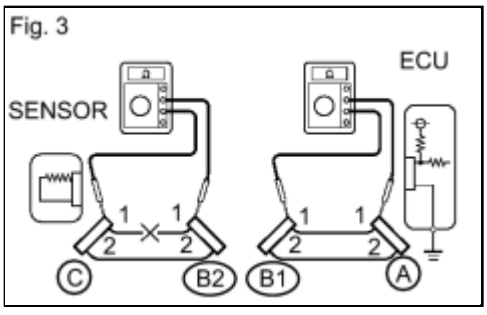

TESTER CONNECTION	SPECIFIED CONDITION
Connector A terminal 1 - Connector B1 terminal 1	Below 1 Ω
Connector B2 terminal 2 - Connector C terminal 2	10 kΩ or higher

If the results match the values specified above, an open circuit exists between terminal 1 of connector B2 and terminal 1 of connector C.

(c) Check the voltage.

(1) In a circuit in which voltage is applied to the ECU connector terminal, an open circuit can be checked by conducting a voltage check.

With each connector still connected, measure the voltage between body ground and the following terminals (in this order): 1) terminal 1 of connector A, 2) terminal 1 of connector B, and 3) terminal 1 of connector C.

Fig. 4

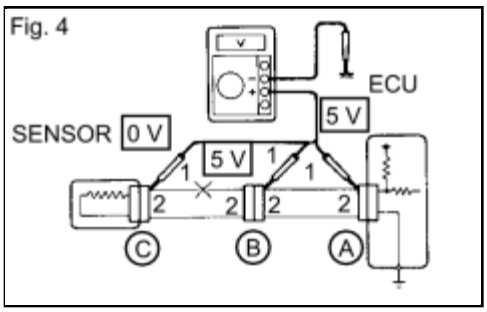

Standard Voltage (Fig. 4):

TESTER CONNECTION	SPECIFIED CONDITION
Connector A terminal 1 - Body ground	5 V
Connector B terminal 1 - Body ground	5 V
Connector C terminal 1 - Body ground	Below 1 V

If the results match the values specified above, an open circuit exists in the wire harness between terminal 1 of connector B and terminal 1 of connector C.

3. CHECK FOR SHORT CIRCUIT

Fig. 5

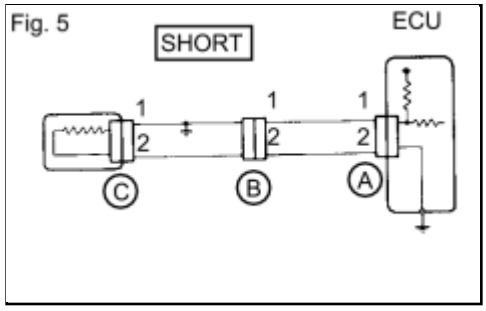

(a) If the wire harness is shorted to ground (Fig. 5), locate the shorted section by conducting following resistance check to body ground.

(b) Check the resistance to body ground.

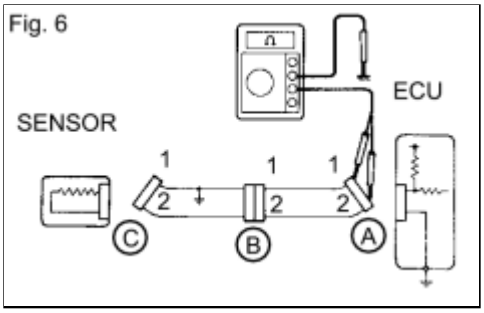

(1) Disconnect connectors A and C and measure the resistance.

Standard Resistance (Fig. 6):

TESTER CONNECTION	SPECIFIED CONDITION
Connector A terminal 1 - Body ground	Below 1 Ω
Connector A terminal 2 - Body ground	10 kΩ or higher

HINT:

Measure the resistance while lightly shaking the wire harness vertically and horizontally. If the results match the values specified above, a short circuit exists between terminal 1 of connector A and terminal 1 of connector C.

(2) Disconnect connector B and measure the resistance.

Standard Resistance (Fig. 7):

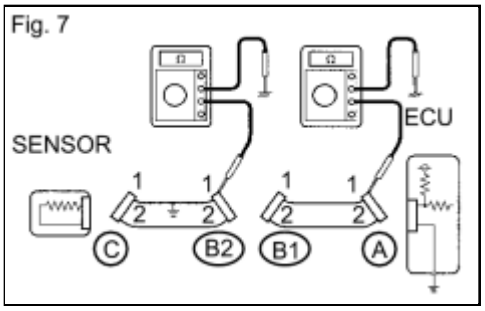

TESTER CONNECTION	SPECIFIED CONDITION
Connector A terminal 1 - Body ground	10 kΩ or higher
Connector B2 terminal 2 - Body ground	Below 1 Ω

If the results match the values specified above, a short circuit exists between terminal 1 of connector B2 and terminal 1 of connector C.

4. CHECK AND REPLACE ECU

NOTICE:

- The connector should not be disconnected from the ECU. Perform the inspection from the backside of the connector on the wire harness side.
- When no measuring condition is specified, perform the inspection with the engine stopped and the ignition switch ON.
- Check that the connectors are fully seated. Check for loose, corroded or broken wires.

(a) First, check the ECU ground circuit. If it is faulty, repair it. If it is normal, the ECU could be faulty. Temporarily replace the ECU with a normally functioning one and check if the symptoms occur. If the trouble symptoms disappear, replace the original ECU.

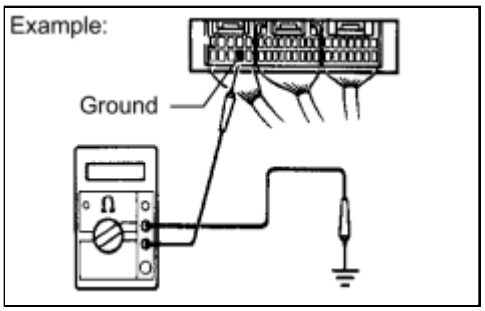

(1) Measure the resistance between the ECU ground terminal and body ground.

Standard resistance:

Below 1 Ω

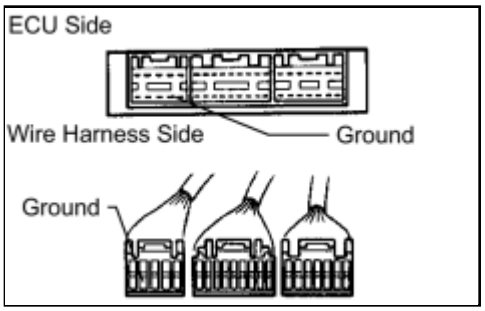

(2) Disconnect the ECU connector. Check the ground terminal on the ECU side and wire harness side for bent terminals, corrosion or foreign matter. Lastly, check the contact pressure of the female terminals.

Last Modified: 3-10-2010	6.4 F	**From:** 200901
Model Year: 2010	**Model:** Corolla	**Doc ID:** RM000000UZ2070X
Title: INTRODUCTION: HOW TO TROUBLESHOOT ECU CONTROLLED SYSTEMS: GENERAL INFORMATION (2010 Corolla)		

GENERAL INFORMATION

A large number of ECU controlled systems are used in this vehicle. In general, ECU controlled systems are considered to be very intricate, requiring a high level of technical knowledge to troubleshoot. However, most problem checking procedures only involve inspecting the ECU controlled system circuits one by one. An adequate understanding of the system and a basic knowledge of electricity is enough to perform effective troubleshooting, accurate diagnosis and necessary repairs.

(For using the Techstream*)

HINT:

***: The Techstream is the name for the diagnostic tester in North America.**

- Before using the Techstream, read the operator's manual thoroughly.
- If the Techstream cannot communicate with the ECU controlled systems when connected to the DLC3 with the ignition switch ON and the Techstream turned on, there is a problem on the vehicle side or the Techstream side.
    i. If communication is possible when the Techstream is connected to another vehicle, inspect the diagnosis data link line (bus (+) line), CANH and CANL lines, and the power circuits for the vehicle ECUs.
    ii. If communication is still not possible when the Techstream is connected to another vehicle, the problem is probably in the Techstream itself. Perform the Self Test procedure outlined in Techstream's instruction manual.

1. TROUBLESHOOTING PROCEDURES

- The troubleshooting procedures consist of diagnosis procedures for when a DTC is stored and diagnosis procedures for when no DTC is stored. The basic idea is explained in the following table.

PROCEDURE TYPE	DETAILS	TROUBLESHOOTING METHOD
DTC Based Diagnosis	The diagnosis procedure is based on the DTC that is stored.	The malfunctioning part is identified based on the DTC detection conditions using a process of elimination. The possible trouble areas are eliminated one-by-one by use of the Techstream and inspection of related parts.
Symptom Based Diagnosis (No DTCs stored)	The diagnosis procedure is based on problem symptoms.	The malfunctioning part is identified based on the problem symptoms using a process of elimination. The possible trouble areas are eliminated one-by-one by use of the Techstream and inspection of related parts.

- Vehicle systems are complex and use many ECUs that are difficult to inspect independently. Therefore, a process of elimination is used, where components that can be inspected individually are inspected, and if no problems are found in these components, the related ECU is identified as the problem and replaced.
- It is extremely important to ask the customer about the environment and the conditions present when the problem occurred (Customer Problem Analysis). This makes it possible to simulate the conditions

and confirm the symptom. If the symptom cannot be confirmed or the DTC does not recur, the malfunctioning part may not be identified using the troubleshooting procedure, and the ECU for the related system may be replaced even though it is not defective. If this happens, the original problem will not be solved.

- In order to prevent endless expansion of troubleshooting procedures, the troubleshooting procedures are written with the assumption that multiple malfunctions do not occur simultaneously for a single problem symptom.
- To identify the malfunctioning part, troubleshooting procedures narrow down the target by separating components, ECUs and wire harnesses during the inspection. If the wire harness is identified as the cause of the problem, it is necessary to inspect not only the connections to components and ECUs but also all of the wire harness connectors between the component and the ECU.

2. DESCRIPTION

(a) Each system data and the Diagnostic Trouble Codes (DTCs) can be read from the Data Link Connector 3 (DLC3) of the vehicle. When the system seems to be malfunctioning, use the Techstream to check for malfunctions and perform repairs.

3. CHECK DLC3

(a) The vehicle ECUs use ISO 15765-4 communication protocol. The terminal arrangement of the DLC3 complies with SAE J1962 and matches the ISO 15765-4 format.

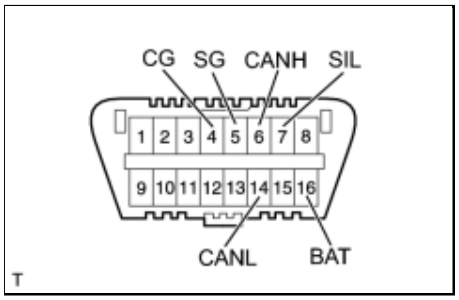

SYMBOL	TERMINAL NO.	NAME	REFERENCE TERMINAL	RESULT	CONDITION
SIL	7	Bus "+" line	5 - Signal ground	Pulse generation	During transmission
CG	4	Chassis ground	Body ground	1 Ω or less	Always
SG	5	Signal ground	Body ground	1 Ω or less	Always
BAT	16	Battery positive	Body ground	11 to 14V	Always
CANH	6	CAN "High" line	14 - CANL	54 to 69 Ω	Ignition switch off*
			Battery positive	6 kΩ or higher	Ignition switch off*
			4 - CG	200 Ω or higher	Ignition switch off*
CANL	14	CAN "Low" line	Battery positive	6 kΩ or higher	Ignition switch off*
			4 - CG	200 Ω or higher	Ignition switch off*

NOTICE:

***: Before measuring the resistance, leave the vehicle as is for at least 1 minute and do not operate the ignition switch, any other switches, or the doors.**

If the result is not as specified, the DLC3 may have a malfunction. Repair or replace the harness and connector.

Last Modified: 3-10-2010	6.4 F	**From:** 200901
Model Year: 2010	**Model:** Corolla	**Doc ID:** RM000000UYV06RX
Title: INTRODUCTION: HOW TO USE THIS MANUAL: GENERAL INFORMATION (2010 Corolla)		

GENERAL INFORMATION

1. GENERAL DESCRIPTION

(a) This manual is written in accordance with SAE J2008.

(b) Repair operations can be separated mainly into the following 3 processes:

(1) Diagnosis

(2) Removing / Installing, Replacing, Disassembling / Reassembling, Checking and Adjusting

(3) Final Inspection

(c) The following procedure is omitted from this manual. However, this procedure must be performed.

(1) Use a jack or lift to perform operations.

(2) Clean all removed parts.

(3) Perform a visual check before and after performing any work.

2. INDEX

(a) An alphabetical INDEX section is provided at the end of the manual as a reference to help find the item to be repaired.

3. PREPARATION

(a) Use of Special Service Tools (SST) and Special Service Materials (SSM) may be required, depending on the repair procedure. Be sure to use SST and SSM when they are required and follow the work procedure properly. A list of SST and SSM is in the "Preparation" section of this manual.

4. REPAIR PROCEDURES

(a) A component illustration is placed under the title where necessary.

(b) Non-reusable parts, grease application areas, precoated parts and torque specifications are noted in the component illustrations.

- The following illustration is an example.

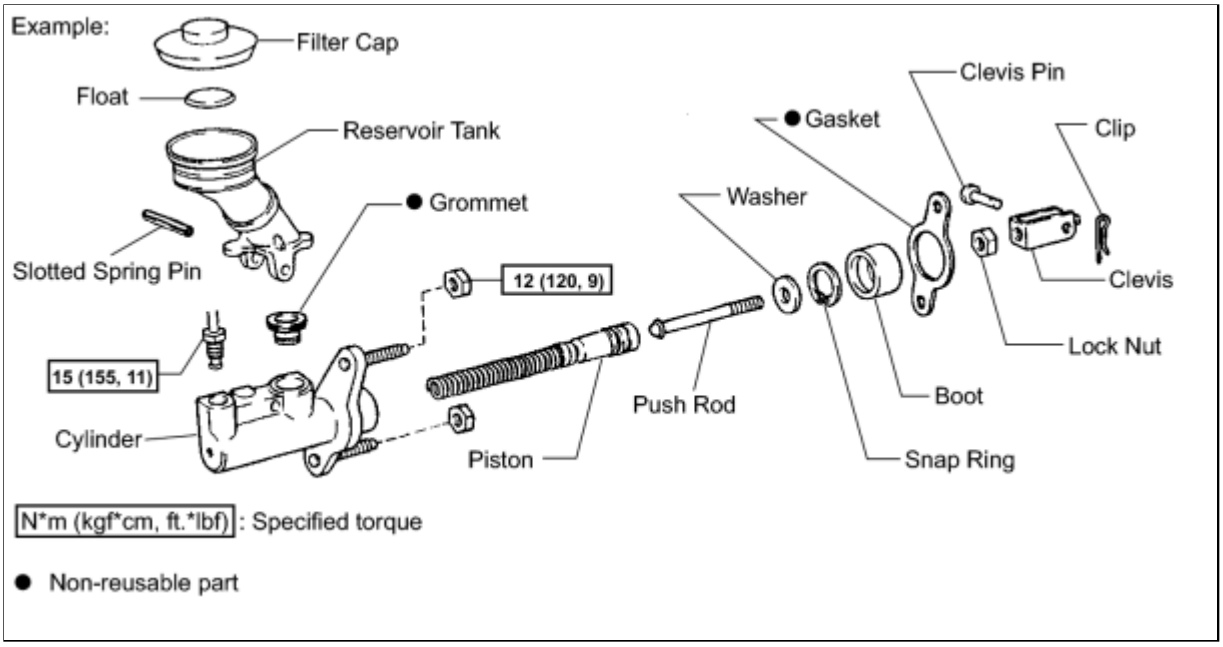

(c) Torque specifications, grease application areas and non-reusable parts are emphasized in the procedure.

HINT:

There are cases where such information can only be explained by using an illustration. In these cases, torque, oil and other information are described in the illustration.

(d) Only items with key points are described in the text. What to do and other details are explained using illustrations next to the text. Both the text and illustrations are accompanied by standard values and notices.

Illustration	What to do and where to do it
Task heading	What work will be performed
Explanation text	How to perform the task Also has information such as specifications and warnings, which are written in boldface text

(e) Illustrations of similar vehicle models are sometimes used. In these cases, minor details may be different from the actual vehicle.

(f) Procedure is presented in a step-by-step format.

5. SERVICE SPECIFICATIONS

(a) SPECIFICATIONS are presented in boldface text throughout the manual. The specifications are also found in the "Service Specifications" section for reference.

6. TERM DEFINITIONS

CAUTION	Possibility of injury to you or other people.
NOTICE	Possibility of damage to components being repaired.

HINT	Provides additional information to help you perform repairs.

7. INTERNATIONAL SYSTEM OF UNITS

(a) The units used in this manual comply with the International System of Units (SI UNIT) standard. Other units from the metric system and the English systems are also provided.

- Example:

Torque: 30 N·m (310 kgf·cm, 22ft·lbf)

Last Modified: 3-10-2010	6.4 F	**From:** 200901
Model Year: 2010	**Model:** Corolla	**Doc ID:** RM000000UYY066X
Title: INTRODUCTION: REPAIR INSTRUCTION: VEHICLE LIFT AND SUPPORT LOCATIONS (2010 Corolla)		

VEHICLE LIFT AND SUPPORT LOCATIONS

1. NOTICE ABOUT VEHICLE CONDITION WHEN JACKING UP

(a) As a rule, the vehicle must be unloaded when jacking up. Never jack up or lift up a vehicle loaded with heavy items.

(b) When removing any heavy components like the engine or transaxle, the center of gravity of the vehicle will move. Place a balance weight so as to keep the vehicle from rolling, or support a vehicle jacking position using a transmission jack.

2. NOTICE FOR USING 4 POST LIFT

(a) Follow the instruction manual for safe operation.

(b) Do not damage tires or wheels while driving onto the lift.

(c) Using wheel stoppers, secure the vehicle.

3. NOTICE FOR USING JACK AND SAFETY STAND

(a) Work in a flat place using wheel stoppers at all times.

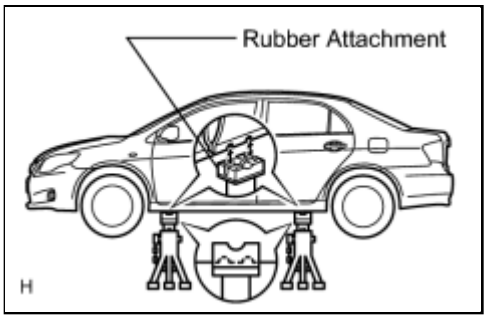

(b) Use safety stands with rubber attachments as shown in the illustration.

(c) Securely support the specified locations with a jack and safety stands.

(d) When jacking up the front wheels, release the parking brake and place wheel stoppers only behind the rear wheels. When jacking up the rear wheels, place wheel stoppers only in front of the front wheels.

(e) Do not work or leave the vehicle supported only by a jack. Be sure to support the vehicle with safety stands.

(f) When jacking up only the front wheels or only the rear wheels, place wheel stoppers on both sides of the wheels that contact ground.

(g) When lowering the vehicle with its front wheels jacked up, release the parking brake and place wheel stoppers only in front of the rear wheels. When lowering the vehicle with its rear wheels jacked up, place wheel stoppers only behind the front wheels.

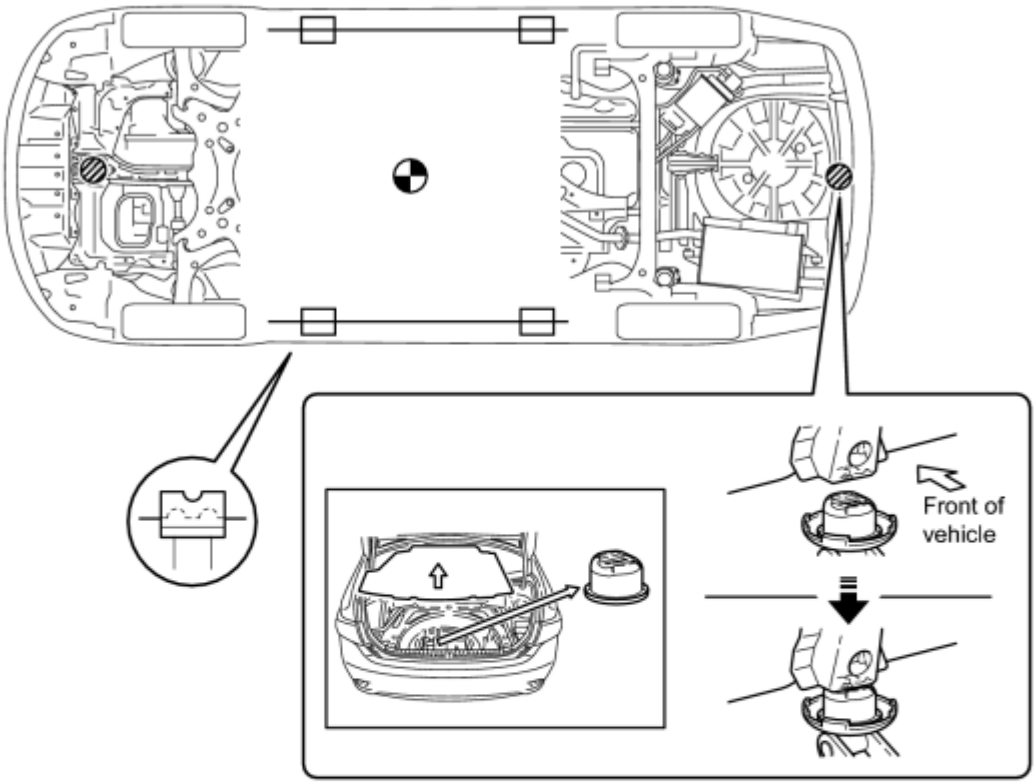

Remove the jack attachment from the the spare tire cover in the trunk, then align the concave portion with the rear jack position and jack up the vehicle.

NOTICE:

Set the jack attachment with the arrow facing towards the front of the vehicle.

: JACK POSITION

: SUPPORT POSITION, PANTOGRAPH JACK POSITION

: VEHICLE CENTER OF GRAVITY (Unloaded Condition)

H

4. NOTICE FOR USING SWING ARM TYPE LIFT

(a) Follow the lift instruction manual for safe operation.

(b) Use a cradle with a rubber attachment as shown in the illustration.

(c) Set the vehicle so as to make its center of gravity as close as possible to the center of the lift.

(d) Place the vehicle horizontally by adjusting the height of the cradle, and match the groove of the cradle and the safety stand support location accurately.

(e) Be sure to lock the swing arm during the operation.

(f) Lift the vehicle up until the tires are off the ground, and shake the vehicle to ensure that it is stable.

5. NOTICE FOR USING PLATE TYPE LIFT

(a) Follow the lift instruction manual for safe operation.

(b) Use a plate lift attachment.

(c) Be sure to set the vehicle to the specified position.

Right and left set position	• Place the vehicle over the center of the lift.
Front and rear set position	• Align the cushion ends of the plate with the attachment lower ends (A and C). • Align the attachment upper end (B) with the rocker flange front side notch.

(d) Lift the vehicle up until the tires are slightly off the ground a bit, and shake the vehicle to make sure that the vehicle is stable.

Swing Arm Type Lift:

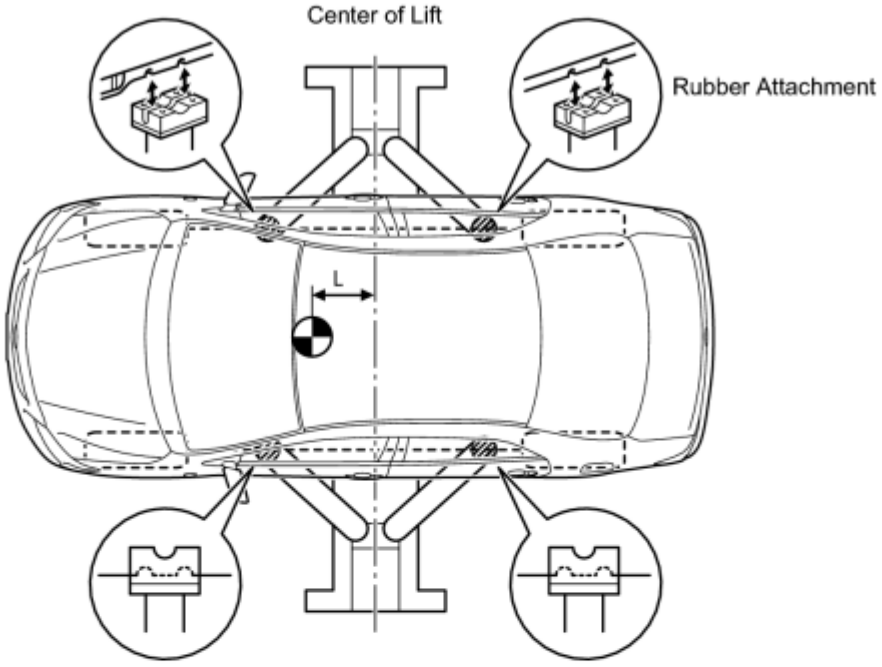

: VEHICLE CENTER OF GRAVITY (Unloaded Condition)

Plate Type Lift:

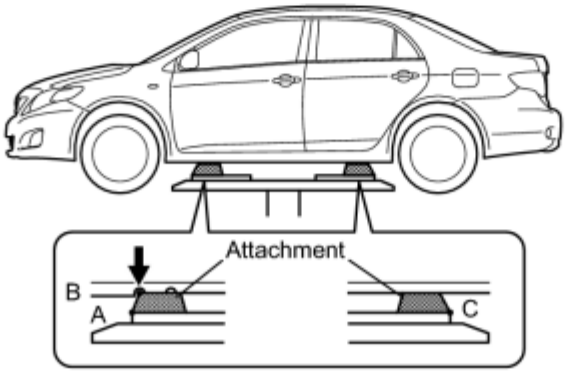

Attachment Dimensions

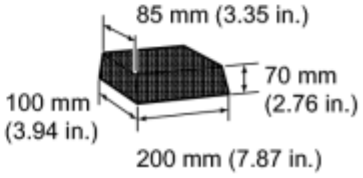

H

Last Modified: 3-10-2010	6.4 D	**From:** 200901
Model Year: 2010	**Model:** Corolla	**Doc ID:** RM000000UZ004SX
Title: INTRODUCTION: REPAIR INSTRUCTION: CUSTOMIZE PARAMETERS (2010 Corolla)		

CUSTOMIZE PARAMETERS

HINT:

The following items can be customized.

NOTICE:

- When the customer requests a change in a function, first make sure that the function can be customized.
- Be sure to make a note of the current settings before customizing.
- When troubleshooting a function, first make sure that the function is set to the default setting.

1. POWER DOOR LOCK CONTROL SYSTEM

Main Body

TESTER DISPLAY	DEFAULT	CONTENT	SETTING
Unlock Key Twice	ON	Function that unlocks only driver side door when driver side door key cylinder is turned to UNLOCK once, and unlock all doors when it is turned to UNLOCK twice. For OFF setting, turning it once unlocks all doors.	ON / OFF
Auto Lock/Shift*	ON	Function that locks all doors when shift lever is shifted from P to any other position with engine running and all doors closed	ON / OFF
Auto Unlock/Shift*	ON	Function that unlocks all doors when shift lever is shifted to P from any other position while the ignition switch is ON	ON / OFF
All Unlock/Open-Close	OFF	Function that unlocks all doors when opening driver door within 10 seconds after turning the ignition switch is OFF	ON / OFF
Auto Lock	OFF	Function that locks all doors when vehicle speed reaches a certain level	ON / OFF

*: for A/T

2. WIRELESS DOOR LOCK CONTROL SYSTEM (w/ Smart Key System)

Wireless Door Lock Control System

DISPLAY (ITEM)	DEFAULT	FUNCTION	SETTING
Wireless Control	ON	Function that turns wireless door lock function ON/OFF	ON/OFF

DISPLAY (ITEM)	DEFAULT	FUNCTION	SETTING
Hazard Answer Back	ON	• When the doors are locked by wireless operation, the hazard warning lights flash once. • When the doors are unlocked by wireless operation, the hazard warning lights flash twice.	ON/OFF
Wireless Auto Lock	ON	This function turns the wireless auto lock function on or off.	ON / OFF
Open Door Warning	ON	The buzzer sounds when LOCK is pressed when any of the doors are ajar.	ON/OFF
Unlock 2 Operation	ON	Function that unlocks driver side door when unlock switch on transmitter is pressed once, and unlocks all doors when pressed twice. If setting is OFF, pressing unlock switch once makes all doors unlock.	ON/OFF
Panic Function	ON	Function to operate theft deterrent system by continuously pressing panic switch on transmitter for 0.8 seconds	ON/OFF
Auto Lock Time	60 s	This function regulates the interval between unlocking and automatic relocking of doors.	30 s/60 s/120 s
Wireless Buzzer Resp	ON	Wireless door lock buzzer response / ON or OFF	ON/OFF
Trunk Lid Operation	0.8PR	This function changes operation method of transmitter to open luggage compartment door. • 1TIME: Push once • 2 TIMES: Push twice • 0.8PR: Push and hold for 0.8 seconds • OFF: Does not operate	1TIME/2 TIMES/0.8PR/OFF

3. WIRELESS DOOR LOCK CONTROL SYSTEM (w/o Smart Key System)

Wireless Door Lock Control System

DISPLAY (ITEM)	DEFAULT	FUNCTION	SETTING
Wireless Control	ON	Function that turns wireless door lock function ON/OFF	ON/OFF
Hazard Answer Back	ON	• When the doors are locked by wireless operation, the hazard warning lights flash once. • When the doors are unlocked by wireless operation, the hazard warning lights flash twice.	ON/OFF

4. SMART KEY SYSTEM (for Entry Function)

Smart Key/Access (Certification ECU (Smart Key ECU assembly))

DISPLAY (ITEM)	DEFAULT	CONTENT	SETTING
Park Wait Time	2.5s	Function to set waiting time to permit opening door after door is locked with entry lock function.	0.5s / 1.5s / 2.5s / 5.0s
Ignition Available Area	ALL	Function to choose the available area for key to start the engine and cancel the steering lock.	FRONT / ALL
Trunk Open Mode	ON	Function to open the luggage compartment door when the driver has the key and presses the luggage open button.	ON / OFF
Key Low Battery Warning	ON	Function to set a warning function for a low battery.	ON / OFF

5. ENTRY UNLOCK MODE SWITCHING FUNCTION

(a) To change the vehicle to entry unlock mode switching function, make sure that the engine switch is off and simultaneously press and hold the electrical key's LOCK switch and another electrical key switch for 5 seconds.

- Driver door unlock default setting:

  When the switches are pressed and held for 5 seconds, the entry door unlock mode changes in the following order: driver door mode, all door mode.

NOTICE:

After pressing and holding the switches for 5 seconds, wait 5 seconds before performing the same procedure again.

- Driver door unlock mode:

  When the driver door's touch sensor is touched, only the driver door unlocks. When another touch sensor is touched, all doors unlock.
- All door unlock mode:

  When the touch sensor is touched, all doors unlock.

(b) The certification ECU (smart key ECU assembly) receives this signal from the entry door control receiver and changes the smart key system to the entry unlock mode.

(c) The certification ECU (smart key ECU assembly) sounds the wireless door lock buzzer and combination meter buzzer to inform the user that the mode has been switched.

MODE	WIRELESS DOOR LOCK BUZZER	COMBINATION METER BUZZER
Driver Door (Default)	Sounds 3 times	Sounds once
All Doors (Customized)	Sounds 2 times	Sounds once

HINT:

The function only changes the entry unlock mode of the smart key system. It does not switch the unlocking of

the wireless door lock control.

6. ELECTRICAL KEY CANCEL

The electrical key cancel operation disables the following functions:

- Entry Unlock / Lock
- Entry Luggage Compartment Open
- Key Lock-in Prevention
- Warning

(a) The operation procedures are as follows:

Precondition:

Engine switch off, driver side door closed and unlocked.

(1) Unlock the driver side door once with the UNLOCK switch of the key.

(2) Open the driver door within 5 seconds.

(3) Unlock the driver side door twice with the UNLOCK switch of the key within 5 seconds.

(4) Close and open the driver door twice within 30 seconds.

(Driver door: Close → Open → Close → Open)

(5) Unlock the driver side door twice with the UNLOCK switch of the key within 5 seconds.

(6) Close and open the driver door within 30 seconds.

(Driver door: Close → Open)

(7) Close the driver door within 5 seconds.

When electrical key cancel is activated, the wireless door lock buzzer sounds twice.

To return to the original condition, perform the procedures again. When the original condition is returned, the wireless door lock buzzer sounds once.

7. SMART KEY SYSTEM (for Start Function)

Smart Key / Access

DISPLAY (ITEM)	DEFAULT	CONTENT	SETTING
Ignition Available Area (Entry ignition available area)	All	Function to choose the available area for electrical key to start E/G and cancel the steering lock.	Front / All

8. THEFT DETERRENT SYSTEM

Security

DISPLAY (ITEM)	DEFAULT	CONTENTS	SETTING
Passive Mode	OFF	• Passive Mode is a function that switches the theft deterrent system from the arming preparation state to the armed state 30 seconds after the key is removed from the key cylinder and all doors and luggage compartment door are closed, even if the doors are not locked by wireless or door key lock operation.	ON/OFF

DISPLAY (ITEM)	DEFAULT	CONTENTS	SETTING
		• In Passive Mode, if the following operations are not performed within 14 seconds after a door is opened during the armed state, the theft deterrent system will judge that condition as a theft and switch to the alarm sounding state. • Unlock any door by key or wireless operation • Turn the ignition switch to ON • Open the luggage compartment door by key or wireless operation	
Warning by Glass Sen	ON	Function that turns the glass breakage sensor on/off this function is only effective for vehicles with glass breakage sensor.	ON/OFF
Entry Delay Time	14 s	Function that changes entry delay time (time before warning starts) for Passive Mode	0 s/14 s/30 s

9. LIGHTING SYSTEM

Illuminated Entry

DISPLAY	DEFAULT	CONTENT	SETTING
Lighting Time	15 s	Changes the lighting time of the personal light*1, room light and engine switch illumination*2 after closing all of the doors. (It will quickly fade out in case of turning the ignition switch to ON)	7.5 s / 15 s / 30 s
I/L when ACC OFF	ON	Lights up the personal light*1, room light and engine switch illumination*2 when the ignition switch is turned from ACC or ON to off.	ON / OFF
I/L ON W/Door Key Unlock*3	ON	Lights up the personal light*1, room light and engine switch illumination when the doors are unlocked using mechanical key or door control transmitter.	ON / OFF

*1: w/ Sliding Roof
*2: w/ Smart Key System
*2: w/ Power Door Lock Control System

10. METER/GAUGE SYSTEM

Combination Meter

TESTER DISPLAY	DEFAULT	CONTENT	SETTING
Driver Side Seatbelt Warning Buzzer*	On	Function to change the setting of the seat belt warning buzzer.	On, Off
Front Passenger Side Seatbelt Warning Buzzer*	On	Function to change the setting of the seat belt warning buzzer.	On, Off

*: This setting is only valid for the buzzer which sounds at 20 km/h (12 mph) or more.

11. AIR CONDITIONING SYSTEM (for Automatic Air Conditioning System)

Air Conditioner

TESTER DISPLAY	DEFAULT	CONTENT	SETTING
Set Temperature Shift	NORMAL	Function to shift the temperature against the displayed temperature	+2 C / +1 C / NORMAL / -1 C / -2 C
Air Inlet Mode	AUTO	When turning the A/C ON to make the cabin cool down quickly, this is the function to change the mode automatically to RECIRCULATION mode	MANUAL / AUTO
Compressor Mode	AUTO	Function to turn the A/C ON automatically by pressing the AUTO button when the blower is ON and the A/C is OFF	MANUAL / AUTO
Compressor/Air Inlet DEF operation	LINK	Function to turn the A/C ON automatically linked with the FRONT DEF button when the A/C is OFF	NORMAL / LINK
Evaporator Control	AUTO	Function to set the evaporator control to the coldest position	MANUAL / AUTO
Foot/DEF Auto Mode	ON	Function to turn the airflow from FOOT / DEF ON automatically when AUTO MODE is ON	OFF / ON
Foot/DEF Automatic Blow Up Function	ON	Function to change the blower level automatically when the defroster is ON	OFF / ON

Last Modified: 3-10-2010	6.4 F	**From:** 200901
Model Year: 2010	**Model:** Corolla	**Doc ID:** RM000000UZB05PX
Title: INTRODUCTION: TERMS: ABBREVIATIONS USED IN MANUAL (2010 Corolla)		

ABBREVIATIONS USED IN MANUAL

ABBREVIATION	MEANING
ABS	Anti-Lock Brake System
A/C	Air Conditioner
AC	Alternating Current
ACC	Accessory
ACIS	Acoustic Control Induction System
ACM	Active Control Engine Mount
ACSD	Automatic Cold Start Device
A.D.D	Automatic Disconnecting Differential
A/F	Air-Fuel Ratio
AHC	Active Height Control Suspension
ALR	Automatic Locking Retractor
ALT	Alternator
AMP	Amplifier
ANT	Antenna
APPROX.	Approximately
ASSY	Assembly
A/T, ATM	Automatic Transmission (Transaxle)
ATF	Automatic Transmission Fluid
AUTO	Automatic
AUX	Auxiliary
AVG	Average
AVS	Adaptive Variable Suspension
AWD	All Wheel Drive Vehicle
B+	Battery Voltage
BA	Brake Assist
BACS	Boost Altitude Compensation System
BAT	Battery

ABBREVIATION	MEANING
BDC	Bottom Dead Center
B/L	Bi-Level
B/S	Bore-Stroke Ratio
BTDC	Before Top Dead Center
BVSV	Bimetallic Vacuum Switching Valve
CAN	Controller Area Network
CB	Circuit Breaker
CCo	Catalytic Converter for Oxidation
CCV	Canister Closed Valve
CD	Compact Disc
CF	Cornering Force
CG	Center of Gravity
CH	Channel
CKD	Complete Knock Down
COMB.	Combination
CPE	Coupe
CPS	Combustion Pressure Sensor
CPU	Central Processing Unit
CRS	Child Restraint System
CTR	Center
C/V	Check Valve
CV	Control Valve
CW	Curb Weight
DC	Direct Current
DEF	Defogger
DFL	Deflector
DIFF.	Differential
DIFF. LOCK	Differential Lock
D/INJ	Direct Injection
DLC	Data Link Connector
DLI	Distributorless Ignition
DOHC	Double Overhead Camshaft

ABBREVIATION	MEANING
DP	Dash Pot
DS	Dead Soak
DSP	Digital Signal Processor
DTC	Diagnostic Trouble Code
DVD	Digital Versatile Disc
EBD	Electric Brake Force Distribution
EC	Electrochromic
ECAM	Engine Control And Measurement System
ECD	Electronically Controlled Diesel
ECDY	Eddy Current Dynamometer
ECT	Electronic Controlled Automatic Transmission
ECU	Electronic Control Unit
ED	Electro-Deposited Coating
EDU	Electronic Driving Unit
EDIC	Electric Diesel Injection Control
EFI	Electronic Fuel Injection
E/G	Engine
EGR	Exhaust Gas Recirculation
EGR-VM	EGR-Vacuum Modulator
ELR	Emergency Locking Retractor
EPS	Electric Power Steering
ENG	Engine
ES	Easy & Smooth
ESA	Electronic Spark Advance
ETCS-i	Electronic Throttle Control System-intelligent
EVAP	Evaporative Emission Control
EVP	Evaporator
E-VRV	Electric Vacuum Regulating Valve
EX	Exhaust
FE	Fuel Economy
FF	Front-Engine-Front-Wheel-Drive
F/G	Fuel Gauge

ABBREVIATION	MEANING
FIPG	Formed In Place Gasket
FL	Fusible Link
F/P	Fuel Pump
FPU	Fuel Pressure Up
FR	Front
F/W	Flywheel
FW/D	Flywheel Damper
FWD	Front-Wheel-Drive
GAS	Gasoline
GND	Ground
GPS	Global Positioning System
GSA	Gear Shift Actuator
H/B	Hatchback
H-FUSE	High Current Fuse
HI	High
HID	High Intensity Discharge (Headlight)
HPU	Hydraulic Power Unit
HSG	Housing
HT	Hard Top
HV	Hybrid Vehicle
HWS	Heated Windshield System
IC	Integrated Circuit
IDI	Indirect Diesel Injection
IFS	Independent Front Suspension
IG	Ignition
IIA	Integrated Ignition Assembly
IN	Intake (Manifold, Valve)
INT	Intermittent
I/P	Instrument Panel
IRS	Independent Rear Suspension
ISC	Idle Speed Control
J/B	Junction Block

ABBREVIATION	MEANING
J/C	Junction Connector
KD	Kick-Down
KDSS	Kinetic Dynamic Suspension System
LAN	Local Area Network
LB	Liftback
LCD	Liquid Crystal Display
LED	Light Emitting Diode
LH	Left-Hand
LHD	Left-Hand Drive
LIN	Local Interconnect Network
L/H/W	Length, Height, Width
LLC	Long-Life Coolant
LNG	Liquefied Natural Gas
LO	Low
LPG	Liquefied Petroleum Gas
LSD	Limited Slip Differential
LSP & BV	Load Sensing Proportioning and Bypass Valve
LSPV	Load Sensing Proportioning Valve
MAP	Manifold Absolute Pressure
MAX.	Maximum
MIC	Microphone
MIL	Malfunction Indicator Lamp
MIN.	Minimum
MG1	Motor Generator No. 1
MG2	Motor Generator No. 2
MMT	Multi-mode Manual Transmission
MP	Multipurpose
MPI	Multipoint Electronic Injection
MPX	Multiplex Communication System
M/T, MTM	Manual Transmission (Transaxle)
MT	Mount
MTG	Mounting

ABBREVIATION	MEANING
N	Neutral
NA	Natural Aspiration
NO.	Number
O2S	Oxygen Sensor
OC	Oxidation Catalyst
OCV	Oil Control Valve
O/D	Overdrive
OEM	Original Equipment Manufacturing
OHC	Overhead Camshaft
OHV	Overhead Valve
OPT	Option
ORVR	On-board Refilling Vapor Recovery
O/S	Oversize
P & BV	Proportioning and Bypass Valve
PBD	Power Back Door
PCS	Power Control System
PCV	Positive Crankcase Ventilation
PKB	Parking Brake
PPS	Progressive Power Steering
PROM	Programmable Read Only Memory
PS	Power Steering
PSD	Power Slide Door
PTC	Positive Temperature Coefficient
PTO	Power Take-Off
PZEV	Partial Zero Emission Vehicle
P/W	Power Window
R & P	Rack and Pinion
RAM	Random Access Memory
R/B	Relay Block
RBS	Recirculating Ball Type Steering
R/F	Reinforcement
REAS	Relative Absorber System

ABBREVIATION	MEANING
RFS	Rigid Front Suspension
RH	Right-Hand
RHD	Right-Hand Drive
RLY	Relay
ROM	Read Only Memory
RR	Rear
RRS	Rigid Rear Suspension
RSE	Rear Seat Entertainment
RWD	Rear-Wheel Drive
SC	Supercharger
SCV	Swirl Control Valve (for gasoline engine)
	Suction Control Valve (for diesel engine)
SDN	Sedan
SEN	Sensor
SICS	Starting Injection Control System
SOC	State Of Charge
SOHC	Single Overhead Camshaft
SPEC	Specification
SPI	Single Point Injection
SPV	Spill Control Valve
SRS	Supplemental Restraint System
SSM	Special Service Materials
SST	Special Service Tools
STD	Standard
STJ	Cold-Start Fuel Injection
SW	Switch
SYS	System
T/A	Transaxle
TACH	Tachometer
TBI	Throttle Body Electronic Fuel Injection
TC	Turbocharger
TCCS	TOYOTA Computer-Controlled System

ABBREVIATION	MEANING
TCM	Transmission Control Module
TCV	Timing Control Valve (for diesel engine)
	Tumble Control Valve (for gasoline engine)
TDC	Top Dead Center
TEMP.	Temperature
TFT	TOYOTA Free-Tronic
TIS	Total Information System for Vehicle Development
T/M	Transmission
TMC	TOYOTA Motor Corporation
TMMIN	PT. TOYOTA Motor Manufacturing Indonesia
TMMK	TOYOTA Motor Manufacturing Kentucky, Inc.
TMT	TOYOTA Motor Thailand Co. Ltd.
TRAC/TRC	Traction Control System
TURBO	Turbocharge
TVIP	TOYOTA Vehicle Intrusion Protection
TWC	Three-Way Catalyst
U/D	Underdrive
U/S	Undersize
VCV	Vacuum Control Valve
VDIM	Vehicle Dynamics Integrated Management
VENT	Ventilator
VIM	Vehicle Interface Module
VGRS	Variable Gear Ratio Steering
VIN	Vehicle Identification Number
VPS	Variable Power Steering
VSC	Vehicle Stability Control
VSV	Vacuum Switching Valve
VTV	Vacuum Transmitting Valve
VVT-i	Variable Valve Timing-intelligent
W/	With
WGN	Wagon
W/H	Wire Harness

ABBREVIATION	MEANING
W/O	Without
1ST	First
2ND	Second
2WD	Two Wheel Drive Vehicle (4 x 2)
3RD	Third
4TH	Fourth
4WD	Four Wheel Drive Vehicle (4 x 4)
4WS	Four Wheel Steering System
5TH	Fifth

Last Modified: 3-10-2010	6.4 F	**From:** 200901
Model Year: 2010	**Model:** Corolla	**Doc ID:** RM000002867011X
Title: INTRODUCTION: TERMS: GLOSSARY OF SAE AND TOYOTA TERMS (2010 Corolla)		

GLOSSARY OF SAE AND TOYOTA TERMS

This glossary lists all SAE-J1930 terms and abbreviations used in this manual in compliance with SAE recommendations, as well as their TOYOTA equivalents.

SAE ABBREVIATION	SAE TERM	TOYOTA TERM ( )-ABBREVIATION
A/C	Air Conditioning	Air Conditioner
ACL	Air Cleaner	Air Cleaner, A/CL
AIR	Secondary Air Injection	Air Injection (AI)
AP	Accelerator Pedal	-
B+	Battery Positive Voltage	+B, Battery Voltage
BARO	Barometric Pressure	HAC
CAC	Charge Air Cooler	Intercooler
CARB	Carburetor	Carburetor
CFI	Continuous Fuel Injection	-
CKP	Crankshaft Position	Crank Angle
CL	Closed Loop	Closed Loop
CMP	Camshaft Position	Cam Angle
CPP	Clutch Pedal Position	-
CTOX	Continuous Trap Oxidizer	-
CTP	Closed Throttle Position	LL ON, Idle ON
DFI	Direct Fuel Injection	Direct Injection (DI./INJ)
DI	Distributor Ignition	-
DLC3	Data Link Connector 3	OBD II Diagnostic Connector
DTC	Diagnostic Trouble Code	Diagnostic Trouble Code
DTM	Diagnostic Test Mode	-
ECL	Engine Coolant Level	-
ECM	Engine Control Module	Engine Electronic Control Unit (ECU)
ECT	Engine Coolant Temperature	Coolant Temperature, Water Temperature (THW)
EEPROM	Electrically Erasable Programmable Read Only Memory	Electrically Erasable Programmable Read Only Memory (EEPROM)

SAE ABBREVIATION	SAE TERM	TOYOTA TERM ( )-ABBREVIATION
EFE	Early Fuel Evaporation	Cold Mixture Heater (CMH), Heat Control Valve (HCV)
EGR	Exhaust Gas Recirculation	Exhaust Gas Recirculation (EGR)
EI	Electronic Ignition	Distributorless Ignition (DLI)
EM	Engine Modification	Engine Modification (EM)
EPROM	Erasable Programmable Read Only Memory	Programmable Read Only Memory (PROM)
EVAP	Evaporative Emission	Evaporative Emission Control (EVAP)
FC	Fan Control	-
FEEPROM	Flash Electrically Erasable Programmable Read Only Memory	-
FEPROM	Flash Erasable Programmable Read Only Memory	-
FF	Flexible Fuel	-
FP	Fuel Pump	Fuel Pump
GEN	Generator	Alternator
GND	Ground	Ground (GND)
HO2S	Heated Oxygen Sensor	Heated Oxygen Sensor (HO_2S)
IAC	Idle Air Control	Idle Speed Control (ISC)
IAT	Intake Air Temperature	Intake or Inlet Air Temperature
ICM	Ignition Control Module	-
IFI	Indirect Fuel Injection	Indirect Injection (IDL)
IFS	Inertia Fuel-Shutoff	-
ISC	Idle Speed Control	-
KS	Knock Sensor	Knock Sensor
MAF	Mass Airflow	Air Flow Meter
MAP	Manifold Absolute Pressure	Manifold Pressure Intake Vacuum
MC	Mixture Control	Electric Bleed Air Control Valve (EBCV) Mixture Control Valve (MCV) Electric Air Control Valve (EACV)
MDP	Manifold Differential Pressure	-
MFI	Multiport Fuel Injection	Electronic Fuel Injection (EFI)
MIL	Malfunction Indicator Lamp	Check Engine Light
MST	Manifold Surface Temperature	-

SAE ABBREVIATION	SAE TERM	TOYOTA TERM ( )-ABBREVIATION
MVZ	Manifold Vacuum Zone	-
NVRAM	Non-Volatile Random Access Memory	-
O2S	Oxygen Sensor	Oxygen Sensor, O_2 Sensor (O_2S)
OBD	On-Board Diagnostic	On-Board Diagnostic System (OBD)
OC	Oxidation Catalytic Converter	Oxidation Catalytic Convert (OC), CCo
OL	Open Loop	Open Loop
PAIR	Pulsed Secondary Air Injection	Air Suction (AS)
PCM	Powertrain Control Module	-
PNP	Park/Neutral Position	-
PROM	Programmable Read Only Memory	-
PSP	Power Steering Pressure	-
PTOX	Periodic Trap Oxidizer	Diesel Particulate Filter (DPF) Diesel Particulate Trap (DPT)
RAM	Random Access Memory	Random Access Memory (RAM)
RM	Relay Module	-
ROM	Read Only Memory	Read Only Memory (ROM)
RPM	Engine Speed	Engine Speed
SC	Supercharger	Supercharger
SCB	Supercharger Bypass	E-ABV
SFI	Sequential Multiport Fuel Injection	Electronic Fuel Injection (EFI), Sequential Injection
SPL	Smoke Puff Limiter	-
SRI	Service Reminder Indicator	-
SRT	System Readiness Test	-
ST	Scan Tool	-
TB	Throttle Body	Throttle Body
TBI	Throttle Body Fuel Injection	Single Point Injection Central Fuel Injection (Ci)
TC	Turbocharger	Turbocharger
TCC	Torque Converter Clutch	Torque Converter
TCM	Transmission Control Module	Transmission ECU, ECT ECU
TP	Throttle Position	Throttle Position
TR	Transmission Range	-

SAE ABBREVIATION	SAE TERM	TOYOTA TERM ( )-ABBREVIATION
TVV	Thermal Vacuum Valve	Bimetallic Vacuum Switching Valve (BVSV) Thermostatic Vacuum Switching Valve (TVSV)
TWC	Three-Way Catalytic Converter	Three-Way Catalytic (TWC) Manifold Converter CC_{RO}
TWC+OC	Three-Way + Oxidation Catalytic Converter	$CC_R + CCo$
VAF	Volume Airflow	Air Flow Meter
VR	Voltage Regulator	Voltage Regulator
VSS	Vehicle Speed Sensor	Vehicle Speed Sensor
WOT	Wide Open Throttle	Full Throttle
WU-OC	Warm Up Oxidation Catalytic Converter	-
WU-TWC	Warm Up Three-Way Catalytic Converter	-
3GR	Third Gear	-
4GR	Fourth Gear	-

Last Modified: 3-10-2010	6.4 F	**From:** 200901
Model Year: 2010	**Model:** Corolla	**Doc ID:** RM0000010EW19FX
Title: TOC2: TOC2: FOREWORD (2010 Corolla)		

FOREWORD

This is Volume 2 of the 2010 COROLLA manual. There are four volumes to this manual. The sections included in each volume are indicated by black type in the Section Index. Use the Section Index of each volume to find the volume with the section you need.
This manual applies to the models listed below. It covers all information in the previously issued Pub. No. RM12R0U, and includes all production changes effective July, 2009 or later.

Applicable models	ZRE142 series
	AZE141 series

Please note that the publications below have also been prepared as relevant service manuals for the components and system in these vehicles.

MANUAL NAME	PUB. NO.
2010 COROLLA Electrical Wiring Diagram	EM12R1U

All information in this manual is based on the latest product information at the time of publication. However, specifications and procedures are subject to change without notice. For the most current information available, refer to the Toyota Technical Information System (TIS) online at dealership locations or on the Internet at http://techinfo.toyota.com.
If you find any failures in this manual, you are kindly requested to inform us by using the report form on the next page.

TOYOTA MOTOR CORPORATION

Copyright (C) 2009 TOYOTA MOTOR CORPORATION
All rights reserved. This book may not be reproduced or copied, in whole or in part, without the written permission of Toyota Motor Corporation.

Repair Manual Quality Report

Att.) Service Manager, Your Distributor

Pub. No.	Issue Date
Name of Dealer	Name of Reporter
Subject	
Problem Description	
Correction Proposal	

Last Modified: 3-10-2010	6.4 F	**From:** 200901
Model Year: 2010	**Model:** Corolla	**Doc ID:** RM0000010EX0UDX
Title: TOC2: TOC2: CAUTION (2010 Corolla)		

CAUTION

This contents does not include all the necessary items about repair and service. This manual is made for the use of persons who have special techniques and certifications. If non-specialized or uncertified technicians perform repairs or service only using this manual or without proper equipment or tools, this may cause severe injury to you or other persons nearby and also cause damage to your customer's vehicle.
In order to prevent dangerous operation and damage to your customer's vehicle, be sure to follow the instructions shown below.

- This contents must be read thoroughly. It is especially important to have a good understanding of all the contents written in the PRECAUTION of "INTRODUCTION" section.
- The service method written in this manual is very effective to perform repair and service. When performing the operations following the procedures using this manual, be sure to use tools specified and recommended. If using non-specified or tools other than recommended tools and service methods, be sure to confirm the safety of the technicians and that there is no possibility of causing personal injury or damage to the customer's vehicle before starting the operation.
- If part replacement is necessary, the part must be replaced with the same part number or equivalent part. Do not replace it with an inferior quality part.
- It is important to note that this manual contains various "Cautions" and "Notices" that must be carefully observed in order to reduce the risk of personal injury during service or repair, or reduce the possibility that improper service or repair may damage the vehicle or render it unsafe. It is also important to understand that these "Cautions" and "Notices" are not exaggerations and are possible hazardous consequences that might result from failure to follow these instructions.

Last Modified: 3-10-2010	6.4 F	**From:** 200901
Model Year: 2010	**Model:** Corolla	**Doc ID:** RM0000010EW19GX
Title: TOC3: TOC3: FOREWORD (2010 Corolla)		

FOREWORD

This is Volume 3 of the 2010 COROLLA manual. There are four volumes to this manual. The sections included in each volume are indicated by black type in the Section Index. Use the Section Index of each volume to find the volume with the section you need.
This manual applies to the models listed below. It covers all information in the previously issued Pub. No. RM12R0U, and includes all production changes effective July, 2009 or later.

Applicable models	ZRE142 series
	AZE141 series

Please note that the publications below have also been prepared as relevant service manuals for the components and system in these vehicles.

MANUAL NAME	PUB. NO.
2010 COROLLA Electrical Wiring Diagram	EM12R1U

All information in this manual is based on the latest product information at the time of publication. However, specifications and procedures are subject to change without notice. For the most current information available, refer to the Toyota Technical Information System (TIS) online at dealership locations or on the Internet at http://techinfo.toyota.com.
If you find any failures in this manual, you are kindly requested to inform us by using the report form on the next page.

TOYOTA MOTOR CORPORATION

Copyright (C) 2009 TOYOTA MOTOR CORPORATION
All rights reserved. This book may not be reproduced or copied, in whole or in part, without the written permission of Toyota Motor Corporation.

Repair Manual Quality Report

Att.) Service Manager, Your Distributor

Pub. No.	Issue Date
Name of Dealer	Name of Reporter
Subject	
Problem Description	
Correction Proposal	

Last Modified: 3-10-2010	6.4 F	**From:** 200901
Model Year: 2010	**Model:** Corolla	**Doc ID:** RM0000010EX0UEX
Title: TOC3: TOC3: CAUTION (2010 Corolla)		

CAUTION

This contents does not include all the necessary items about repair and service. This manual is made for the use of persons who have special techniques and certifications. If non-specialized or uncertified technicians perform repairs or service only using this manual or without proper equipment or tools, this may cause severe injury to you or other persons nearby and also cause damage to your customer's vehicle.
In order to prevent dangerous operation and damage to your customer's vehicle, be sure to follow the instructions shown below.

- This contents must be read thoroughly. It is especially important to have a good understanding of all the contents written in the PRECAUTION of "INTRODUCTION" section.
- The service method written in this manual is very effective to perform repair and service. When performing the operations following the procedures using this manual, be sure to use tools specified and recommended. If using non-specified or tools other than recommended tools and service methods, be sure to confirm the safety of the technicians and that there is no possibility of causing personal injury or damage to the customer's vehicle before starting the operation.
- If part replacement is necessary, the part must be replaced with the same part number or equivalent part. Do not replace it with an inferior quality part.
- It is important to note that this manual contains various "Cautions" and "Notices" that must be carefully observed in order to reduce the risk of personal injury during service or repair, or reduce the possibility that improper service or repair may damage the vehicle or render it unsafe. It is also important to understand that these "Cautions" and "Notices" are not exaggerations and are possible hazardous consequences that might result from failure to follow these instructions.

Last Modified: 3-10-2010	6.4 F	**From:** 200901
Model Year: 2010	**Model:** Corolla	**Doc ID:** RM0000010EW19HX
Title: TOC4: TOC4: FOREWORD (2010 Corolla)		

FOREWORD

This is Volume 4 of the 2010 COROLLA manual. There are four volumes to this manual. The sections included in each volume are indicated by black type in the Section Index. Use the Section Index of each volume to find the volume with the section you need.
This manual applies to the models listed below. It covers all information in the previously issued Pub. No. RM12R0U, and includes all production changes effective July, 2009 or later.

Applicable models	ZRE142 series
	AZE141 series

Please note that the publications below have also been prepared as relevant service manuals for the components and system in these vehicles.

MANUAL NAME	PUB. NO.
2010 COROLLA Electrical Wiring Diagram	EM12R1U

All information in this manual is based on the latest product information at the time of publication. However, specifications and procedures are subject to change without notice. For the most current information available, refer to the Toyota Technical Information System (TIS) online at dealership locations or on the Internet at http://techinfo.toyota.com.
If you find any failures in this manual, you are kindly requested to inform us by using the report form on the next page.

TOYOTA MOTOR CORPORATION

Copyright (C) 2009 TOYOTA MOTOR CORPORATION
All rights reserved. This book may not be reproduced or copied, in whole or in part, without the written permission of Toyota Motor Corporation.

Repair Manual Quality Report

Att.) Service Manager, Your Distributor

Pub. No.	Issue Date
Name of Dealer	Name of Reporter
Subject	
Problem Description	
Correction Proposal	

Last Modified: 3-10-2010	6.4 F	**From:** 200901
Model Year: 2010	**Model:** Corolla	**Doc ID:** RM0000010EX0UFX
Title: TOC4: TOC4: CAUTION (2010 Corolla)		

CAUTION

This contents does not include all the necessary items about repair and service. This manual is made for the use of persons who have special techniques and certifications. If non-specialized or uncertified technicians perform repairs or service only using this manual or without proper equipment or tools, this may cause severe injury to you or other persons nearby and also cause damage to your customer's vehicle.
In order to prevent dangerous operation and damage to your customer's vehicle, be sure to follow the instructions shown below.

- This contents must be read thoroughly. It is especially important to have a good understanding of all the contents written in the PRECAUTION of "INTRODUCTION" section.
- The service method written in this manual is very effective to perform repair and service. When performing the operations following the procedures using this manual, be sure to use tools specified and recommended. If using non-specified or tools other than recommended tools and service methods, be sure to confirm the safety of the technicians and that there is no possibility of causing personal injury or damage to the customer's vehicle before starting the operation.
- If part replacement is necessary, the part must be replaced with the same part number or equivalent part. Do not replace it with an inferior quality part.
- It is important to note that this manual contains various "Cautions" and "Notices" that must be carefully observed in order to reduce the risk of personal injury during service or repair, or reduce the possibility that improper service or repair may damage the vehicle or render it unsafe. It is also important to understand that these "Cautions" and "Notices" are not exaggerations and are possible hazardous consequences that might result from failure to follow these instructions.

Last Modified: 3-10-2010	6.4 N	**From:** 200901
Model Year: 2010	**Model:** Corolla	**Doc ID:** RM0000019FS025X
Title: MAINTENANCE: BODY: GENERAL MAINTENANCE (2010 Corolla)		

GENERAL MAINTENANCE

1. TIGHTEN BOLTS AND NUTS ON CHASSIS AND BODY

(a) Where necessary, tighten all the parts of the chassis.

- Front axle and suspension
- Drive train
- Rear axle and suspension
- Brake system
- Engine mounting, etc.

(b) Where necessary, tighten all the parts of the body.

- Seat belt system
- Seat
- Doors and hood
- Body mountings
- Fuel tank
- Exhaust pipe system, etc.

2. REPLACE AIR CONDITIONING FILTER

(a) Remove the glove compartment assembly.

(b) Remove the filter case from the filter outlet.

(c) Remove the filter from the filter case.

(d) Replace the filter with a new one.

(e) Installation is in the reverse order.

3. ROAD TEST

(a) Check the engine and chassis for abnormal noises.

(b) Check that the vehicle does not wander or pull to one side.

(c) Check that the brakes work properly and do not drag.

(d) Settle the parking brake shoes.

4. BODY INSPECTION

(a) Check the body exterior for dents, scratches and rust.

(b) Check the underbody for rust and damage.

If necessary, replace or repair.

5. FINAL INSPECTION

(a) Check the operation of the body parts.

(1) Hood

- Auxiliary catch operates properly.
- Hood locks securely when closed.

(2) Front and rear doors

- Door locks operate properly.
- Doors close properly.

(3) Trunk

- Trunk opens and closes properly.

(4) Seats

- Seat adjusts easily and locks securely in any position.
- Front seatbacks lock securely in any position.
- Folding-down rear seatbacks lock securely.

(5) Be sure to deliver a clean car. Especially check:

- Steering wheel
- Shift lever knob
- All switch knobs
- Door handles
- Seats

Last Modified: 3-10-2010	6.4 N	**From:** 200901
Model Year: 2010	**Model:** Corolla	**Doc ID:** RM000001AQU02GX
Title: MAINTENANCE: BRAKE: GENERAL MAINTENANCE (2010 Corolla)		

GENERAL MAINTENANCE

1. INSPECT BRAKE LINE PIPES AND HOSES

HINT:

Work in a well-lighted area. Turn the front wheels fully to the right or left before beginning the inspection.

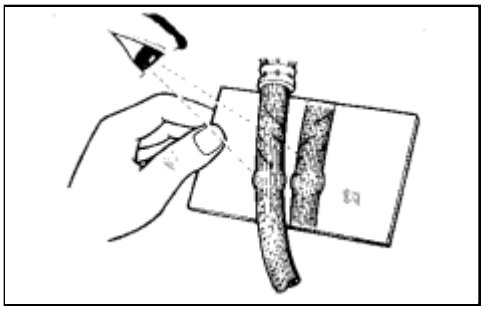

(a) Using a mirror, check the entire circumference and length of the brake lines and hoses for:

- Damage
- Wear
- Deformation
- Cracks
- Corrosion
- Leaks
- Bends
- Twists

(b) Check all the clamps for tightness and the connections for leakage.

(c) Check that the hoses and lines are not near sharp edges, moving parts or the exhaust system.

(d) Check that the lines are installed properly and pass through the center of the grommets.

2. INSPECT BRAKE PEDAL

INFO

3. INSPECT PARKING BRAKE

INFO

4. INSPECT BRAKE LININGS AND DRUMS

(a) Check the parking brake linings and drums.

5. INSPECT FRONT BRAKE

(a) Check the front brake pads and discs INFO .

6. INSPECT REAR BRAKE

TYPE	SEE PROCEDURE
Drum Type	INFO
Disc Type	INFO

7. INSPECT OR CHANGE BRAKE FLUID

INFO

Fluid:

SAE J1703 or FMVSS No. 116 DOT3

Last Modified: 3-10-2010	6.4 N	**From:** 200901
Model Year: 2010	**Model:** Corolla	**Doc ID:** RM000001AQV02EX
Title: MAINTENANCE: CHASSIS: GENERAL MAINTENANCE (2010 Corolla)		

GENERAL MAINTENANCE

1. INSPECT STEERING LINKAGE AND GEAR HOUSING

(a) Check the steering wheel free play INFO .

(b) Check the steering linkage for looseness or damage.

(1) Check that the tie rod ends do not have excessive play.

(2) Check that the dust seals and boots are not damaged.

(3) Check that the boot clamps are not loose.

(4) Check that the steering gear housing is not damaged.

2. INSPECT BALL JOINT AND DUST COVER

(a) Inspect the ball joints for excessive looseness.

(1) Jack up the front of the vehicle and place wooden blocks with a height of 180 to 200 mm (7.09 to 7.87 in.) under the front tires.

(2) Lower the vehicle until the front coil spring has about half its ordinary load. Place stands under the vehicle for safety.

(3) Check that the front wheels are pointing straight ahead. Use wheel chocks on all 4 wheels.

(4) Using a lever, pry up the end of the lower arm. Check the amount of play.

Maximum ball joint vertical play:
0 mm (0 in.)

If there is any play, replace the ball joint.

(b) Check the dust cover for damage.

3. INSPECT DRIVE SHAFT BOOTS

(a) Check the drive shaft boots for loose clamps, grease leakage, kinks or damage.

4. CHECK AUTOMATIC TRANSAXLE FLUID

(a) Visually check the automatic transaxle for fluid leakage. If oil is leaking, find the cause and repair it.

5. CHECK MANUAL TRANSAXLE FLUID

(a) Visually check the manual transaxle for fluid leakage. If oil is leaking, find the cause and repair it.

6. INSPECT FRONT AND REAR SUSPENSION

TYPE	SEE PROCEDURE
Front Suspension	INFO
Rear Suspension	INFO

7. ROTATE TIRES

INFO



Last Modified: 3-10-2010	6.4 N	**From:** 200901
Model Year: 2010	**Model:** Corolla	**Doc ID:** RM000001AQT02GX
Title: MAINTENANCE: ENGINE: GENERAL MAINTENANCE (2010 Corolla)		

GENERAL MAINTENANCE

HINT:

Inspect these items on a cooled down engine.

1. INSPECT DRIVE BELT

TYPE	SEE PROCEDURE
2ZR-FE	INFO
2AZ-FE	INFO

2. REPLACE ENGINE OIL AND OIL FILTER

TYPE	SEE PROCEDURE
2ZR-FE	INFO
2AZ-FE	INFO

3. REPLACE ENGINE COOLANT

TYPE	SEE PROCEDURE
2ZR-FE	INFO
2AZ-FE	INFO

4. INSPECT EXHAUST PIPES AND MOUNTINGS

(a) Visually check the pipes, hangers and connections for severe corrosion, leaks or damage.

5. INSPECT SPARK PLUGS

TYPE	SEE PROCEDURE
2ZR-FE	INFO
2AZ-FE	INFO

6. INSPECT BATTERY

TYPE	SEE PROCEDURE
2ZR-FE	INFO
2AZ-FE	INFO

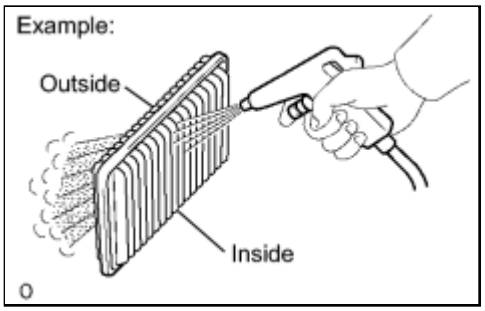

7. INSPECT AIR CLEANER FILTER

(a) Remove the air cleaner cap.

(b) Remove the air filter element.

(c) Visually check that the air filter is not excessively damaged or oily. If necessary, replace the air filter.

8. REPLACE AIR CLEANER FILTER

(a) Replace the air filter with a new one.

9. INSPECT FUEL TANK CAP GASKET

TYPE	SEE PROCEDURE
2ZR-FE	INFO
2AZ-FE	INFO

10. INSPECT FUEL LINES, CONNECTIONS, FUEL TANK VAPOR VENT SYSTEM HOSES AND FUEL TANK BANDS

(a) Visually check the fuel lines for cracks, leakage, loose connections, deformation or tank band looseness.

11. INSPECT CHARCOAL CANISTER

TYPE	SEE PROCEDURE
2ZR-FE	INFO
2AZ-FE	INFO

12. INSPECT VALVE CLEARANCE

TYPE	SEE PROCEDURE
2AZ-FE	INFO

Last Modified: 3-10-2010	6.4 N	**From:** 200901
Model Year: 2010	**Model:** Corolla	**Doc ID:** RM000000UZE04MX
Title: MAINTENANCE: INSIDE VEHICLE: GENERAL MAINTENANCE (2010 Corolla)		

GENERAL MAINTENANCE

These are maintenance and inspection items that are considered to be the owner's responsibility.

The owner can do them or they can have them done at a service center.

These items include those that should be checked on a daily basis, those that in most cases do not require special tools, and those that are considered to be reasonable for the owner to do.

General maintenance items and procedures are as follows:

1. GENERAL NOTES

- Maintenance requirements vary depending on the country.
- Check the maintenance schedule in the owner's manual supplement.
- Determine the appropriate time to service the vehicle using either miles driven or time (months) elapsed, whichever reaches the specification first.
- Maintain similar intervals between periodic maintenance unless noted.
- Failing to check each vehicle part could lead to poor engine performance and increase exhaust emissions.

2. LIGHTS

(a) Check that the headlights, stop lights, taillights, turn signal lights, and other lights illuminate or blink. Also, check that they have enough brightness.

3. WARNING LIGHTS AND BUZZERS

(a) Check that all the warning lights and buzzers are working.

4. HORNS

(a) Check that the horn is working.

5. WINDSHIELD GLASS

(a) Check for scratches, pits or abrasions.

6. WINDSHIELD WIPER AND WASHER

(a) Check that the washers are aimed properly. Also, check that the washer fluid hits the center of the operating range of each wiper on the windshield.

(b) Check that the wipers streak or not. Replace the wiper if necessary.

7. WINDSHIELD DEFROSTER

(a) When the air conditioning is on the defroster setting, check that air comes out of the defroster outlet.

8. REAR VIEW MIRROR

(a) Check that the rear view mirror is securely mounted.

9. SUN VISORS

(a) Check that the sun visors move freely and are securely mounted.

10. STEERING WHEEL

(a) Check that the steering wheel has the proper free play. Also check for steering difficulty and unusual noises INFO .

11. SEATS

(a) Check that the seat adjusters, seatback recliner and other front seat controls operate smoothly.

(b) Check that the headrests move up and down smoothly and that the locks hold securely in all latched positions.

(c) Check that all the latches lock securely in all positions. (for Manual Seat)

(d) Check that the locks hold securely in all positions. (for Manual Seat)

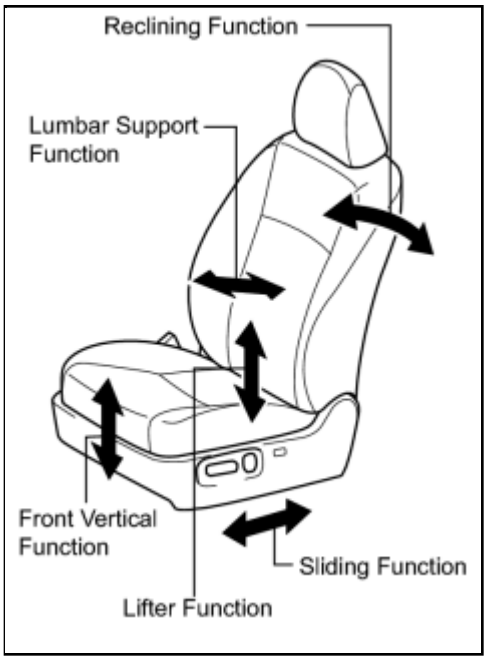

(e) Check the basic functions. (for Power Seat)

(1) Operate the power seat switches and check that the following functions work:

- Sliding
- Reclining
- Front vertical
- Lumbar support
- Lifter

12. SEAT BELTS

(a) Check that the seat belt system such as the buckles, retractors and anchors operate properly and smoothly.

(b) Check that the belt webbing is not cut, frayed, worn or damaged.

13. ACCELERATOR PEDAL

(a) Check that the pedal operates smoothly. Check that the pedal does not have uneven resistance or stick in certain positions.

14. CLUTCH PEDAL

(a) Check that the pedal operates smoothly.

(b) Check that the pedal has the proper free play INFO .

15. BRAKE PEDAL

(a) Check that the pedal operates smoothly.

(b) Check that the pedal has the proper reserve distance and free play INFO .

(c) Start the engine and check the brake booster function INFO .

16. BRAKES

(a) In a safe place, check that the vehicle remains straight when applying the brakes.

17. PARKING BRAKE

(a) Check that the lever has the proper range of motion INFO .

(b) On a low incline, check that the parking brake alone can hold the vehicle in place.

18. AUTOMATIC TRANSAXLE "PARK" MECHANISM

(a) Check the shift lock release button for proper and smooth operation.

(b) When the shift lever is in P and all brakes are released on a low incline, check that the vehicle is held in place.

Last Modified: 3-10-2010	6.4 N	**From:** 200901
Model Year: 2010	**Model:** Corolla	**Doc ID:** RM000000UZD04FX
Title: MAINTENANCE: OUTSIDE VEHICLE: GENERAL MAINTENANCE (2010 Corolla)		

GENERAL MAINTENANCE

These are maintenance and inspection items that are considered to be the owner's responsibility.

The owner can do them or they can have them done at a service center.

These items include those that should be checked on a daily basis, those that in most cases do not require special tools, and those that are considered to be reasonable for the owner to do.

General maintenance items and procedures are as follows:

1. GENERAL NOTES

- Maintenance requirements vary depending on the country.
- Check the maintenance schedule in the owner's manual supplement.
- Following the maintenance schedule is mandatory.
- Determine the appropriate time to service the vehicle using either miles driven or time (months) elapsed, whichever reaches the specification first.
- Failing to check each vehicle part could lead to poor engine performance and increase exhaust emissions.

2. TIRES

(a) Check the tire pressure with a gauge. Make adjustments if necessary.

(b) Check the surfaces of tires for cuts, damage or excessive wear.

3. WHEEL NUTS

(a) Check for nuts that are loose or missing. Tighten them if necessary.

4. TIRE ROTATION

Check the maintenance schedule in the owner's manual supplement.

5. WINDSHIELD WIPER BLADES

(a) Check the blades for wear or cracks when they are unable to wipe the windshield clean. Replace them if necessary.

6. FLUID LEAKS

(a) Check under the vehicle for leaking fuel, oil, water and other fluids.

NOTICE:

If you smell gasoline fumes or notice any leaks, locate the cause and correct it.

7. DOORS AND ENGINE HOOD

(a) Check that all of the doors operate smoothly, and that all the latches lock securely.

(b) When the primary latch is released, check that the engine hood secondary latch prevents the hood from opening.

Last Modified: 3-10-2010	6.4 N	**From:** 200901
Model Year: 2010	**Model:** Corolla	**Doc ID:** RM000000UZF04FX
Title: MAINTENANCE: UNDER HOOD: GENERAL MAINTENANCE (2010 Corolla)		

GENERAL MAINTENANCE

1. GENERAL NOTES

- Maintenance requirements vary depending on the country.
- Check the maintenance schedule in the owner's manual supplement.
- Following the maintenance schedule is mandatory.
- Determine the appropriate time to service the vehicle using either miles driven or time elapsed, whichever reaches the specification first.
- Maintain similar intervals between periodic maintenance unless noted.
- Failing to check each maintenance item could lead to poor engine performance and increase exhaust emissions.

2. WINDSHIELD WASHER FLUID

(a) Check that there is sufficient fluid in the tank.

3. ENGINE COOLANT LEVEL

(a) Check that the coolant level is between the "FULL" and "LOW" lines on the see-through reservoir.

4. RADIATOR AND HOSES

(a) Check that the front of the radiator is clean and free of leaves, dirt and bugs.

(b) Check the hoses for cracks, kinks, rotting or loose connections.

5. BATTERY ELECTROLYTE LEVEL

(a) Check that the electrolyte level of all the battery cells is between the upper and lower lines on the case.

HINT:

If the electrolyte level is difficult to see, lightly shake the vehicle.

6. BRAKE FLUID LEVEL

(a) Check that the brake fluid levels are near the upper level line on the see-through reservoirs.

7. ENGINE DRIVE BELT

(a) Check the drive belt for fraying, cracks, wear or oil.

8. ENGINE OIL LEVEL

(a) Check that the level of engine oil is between "F" and "L" on the dipstick with the engine turned off.

9. AUTOMATIC TRANSAXLE FLUID LEVEL

TYPE	SEE PROCEDURE
U341E	INFO

TYPE	SEE PROCEDURE
U250E	INFO

10. EXHAUST SYSTEM

(a) Check for unusual exhaust sounds or abnormal exhaust fumes. Locate the cause and correct it.

Last Modified: 3-10-2010	6.4 F	**From:** 200901
Model Year: 2010	**Model:** Corolla	**Doc ID:** RM000002I9Y00IX
Title: SPECIFICATIONS: 2AZ-FE BATTERY / CHARGING: SERVICE DATA (2010 Corolla)		

SERVICE DATA

Battery voltage	Standard voltage		12.5 to 12.9 V at 20°C (68°F)
Fuse	Standard resistance		Below 1 Ω
Charging circuit without load	Standard current		10 A or less
	Standard voltage		13.2 to 14.8 V
Charging circuit with load	Standard amperage		30 A or more
Generator brush holder assembly	Standard length		9.5 to 11.5 mm (0.374 to 0.453 in.)
	Minimum length		4.5 mm (0.177 in.)
Generator rotor assembly	Standard resistance	Between the slip rings	2.3 to 2.7 Ω at 20°C (68°F)
		Slip ring - Rotor core	1 MΩ or higher
	Standard diameter		14.2 to 14.4 mm (0.559 to 0.567 in.)
	Minimum diameter		14 mm (0.551 in.)



Last Modified: 3-10-2010	6.4 F	**From:** 200901
Model Year: 2010	**Model:** Corolla	**Doc ID:** RM000002I9Z00IX
Title: SPECIFICATIONS: 2AZ-FE BATTERY / CHARGING: TORQUE SPECIFICATIONS (2010 Corolla)		

TORQUE SPECIFICATIONS

PART TIGHTENED		N*M	KGF*CM	FT.*LBF
Generator drive end frame x Bearing retainer plate		2.3	23	20 in.*lbf
Generator coil assembly x Generator drive end frame		5.8	59	51 in.*lbf
Cord clip x Generator coil assembly		4.6	47	41 in.*lbf
Generator brush holder assembly x Generator coil assembly		1.8	18	16 in.*lbf
Generator rear end cover x Generator coil assembly		4.6	47	41 in.*lbf
Generator clutch pulley x Generator rotor assembly	without SST	111	1127	82
	with SST	84	857	62
Generator assembly x Cylinder block	Bolt A	21	215	16
	Bolt B	52	530	38
Generator wire x Terminal B		9.8	100	87 in.*lbf

Last Modified: 3-10-2010	6.4 F	**From:** 200901
Model Year: 2010	**Model:** Corolla	**Doc ID:** RM000002N4M007X
Title: SPECIFICATIONS: 2AZ-FE COOLING: SERVICE DATA (2010 Corolla)		

SERVICE DATA

Thermostat	Valve opening temperature	80 to 84°C (176 to 183°F)
	Valve lift	10 mm (0.39 in.) or more at 95°C (203°F)
Cooling fan motor		7.4 to 11.4A (at 12V) 20°C (68°F)
No. 2 cooling fan motor		4.7 to 8.7A (at 12V) 20°C (68°F)
No. 1 fan relay	3-5	10kΩ or higher
		Below 1Ω (when battery voltage is applied to terminals 1 and 2)
No. 2 fan relay	3 - 4	Below 1 Ω
		10 kΩ or higher (when battery voltage is applied to terminals 1 and 2)
	3 - 5	10 kΩ or higher
		Below 1 Ω (when battery voltage is applied to terminals 1 and 2)
No. 3 fan relay	3 - 5	10 kΩ or higher
		Below 1 Ω (when battery voltage is applied to terminals 1 and 2)
Radiator cap sub-assembly	Standard valve (for brand new cap)	74.0 to 103.0 kPa (0.75 to 1.05 kgf/cm^2, 10.7 to 15.0 psi)
	Minimum standard valve (for used cap)	59.0 kPa (0.60 kgf/cm^2, 8.6 psi)

Last Modified: 3-10-2010	6.4 F	**From:** 200901
Model Year: 2010	**Model:** Corolla	**Doc ID:** RM000002N4N007X
Title: SPECIFICATIONS: 2AZ-FE COOLING: TORQUE SPECIFICATIONS (2010 Corolla)		

TORQUE SPECIFICATIONS

PART TIGHTENED	N*M	KGF*CM	FT*LBF
Cylinder block drain cock plug x Cylinder block	13	130	9
Water pump x Cylinder block	9.0	92	80 in.*lbf
Water pump pulley x Water pump	26	265	19
Water inlet x Cylinder block	9.0	92	80 in.*lbf
Cooling fan motor x Fan shroud	3.9	40	35 in.*lbf
No. 2 cooling fan motor x Fan shroud	3.9	40	35 in.*lbf
Fan x Cooling fan motor	6.3	64	56 in.*lbf
Oil cooler hose x Fan shroud (for Automatic transaxle)	5.5	56	49 in.*lbf
Fan shroud x Radiator assembly	7.0	71	62 in.*lbf
No. 2 fan shroud x Radiator assembly	7.0	71	62 in.*lbf
Upper radiator support sub-assembly x Body	5.5	56	49 in.*lbf
Hood lock support sub-assembly x Radiator support sub-assembly	7.0	71	62 in.*lbf
Upper radiator support x Upper radiator support sub-assembly	19	194	14



Last Modified: 3-10-2010	6.4 F	**From:** 200901
Model Year: 2010	**Model:** Corolla	**Doc ID:** RM000003K64001X
Title: SPECIFICATIONS: 2AZ-FE EMISSION CONTROL: SERVICE DATA (2010 Corolla)		

SERVICE DATA

Vacuum switching valve		
Resistance	1 - 2	23 to 26 Ω at 20°C (68°F)
	1 - Body ground	10 MΩ or higher
	2 - Body ground	10 MΩ or higher



Last Modified: 3-10-2010	6.4 F	**From:** 200901
Model Year: 2010	**Model:** Corolla	**Doc ID:** RM000003K65001X
Title: SPECIFICATIONS: 2AZ-FE EMISSION CONTROL: TORQUE SPECIFICATIONS (2010 Corolla)		

TORQUE SPECIFICATIONS

PART TIGHTENED	N*M	KGF*CM	FT.*LBF
Ventilation valve sub-assembly x Cylinder head cover	19	194	14
Charcoal canister x Body	19	194	14
No. 1 fuel tank protector sub-assembly x Fuel tank	5.5	56	49 in.*lbf

Last Modified: 3-10-2010	6.4 F	**From:** 200901
Model Year: 2010	**Model:** Corolla	**Doc ID:** RM0000036OB00SX
Title: SPECIFICATIONS: 2AZ-FE ENGINE CONTROL: SERVICE DATA (2010 Corolla)		

SERVICE DATA

Spark plug		Standard resistance	10 MΩ or more
		Recommended spark plug	SK20R11 DENSO made
			IFR6A11 NGK made
		Electrode gap	1.0 to 1.1 mm (0.0394 to 0.0433 in.)
		Maximum electrode gap	1.3 mm (0.0512 in.) for used plug
Camshaft oil control valve		1 - 2	Resistance: 6.9 to 7.9 Ω at 20°C (68°F)
Throttle body		1 (M-) - 2 (M+)	Resistance: 0.3 to 100 Ω at 20°C (68°F)
Accelerator pedal	Accelerator position No. 1 standard voltage	Accelerator pedal is released	0.5 to 1.1 V
		Accelerator pedal is depressed	2.6 to 4.5 V
	Accelerator position No. 2 standard voltage	Accelerator pedal is released	1.2 to 2.0 V
		Accelerator pedal is depressed	3.4 to 5.0 V
Mass air flow meter		Engine not running 30 seconds after ignition switch is turned to ON	Less than 0.48 g/sec.
		1 (THA) - 2 (E2)	Resistance: 13.6 to 18.4 kΩ at -20°C (-4°F) 2.21 to 2.69 kΩ at 20°C (68°F) 0.493 to 0.667 kΩ at 60°C (140°F)
Camshaft position sensor		1 - 2	Resistance: 835 to 1400 Ω at -10 to 50°C (14 to 122°F) 1060 to 1645 Ω at 50 to 100°C (122 to 212°F)
Crankshaft position sensor		1 - 2	Resistance: 985 to 1600 Ω at -10 to 50°C

		(14 to 122°F) 1265 to 1890 Ω at 50 to 100°C (122 to 212°F)
Engine coolant temperature sensor	1 - 2	Resistance: 2.32 to 2.59 kΩ at 20°C (68°F) 0.310 to 0.326 kΩ at 80°C (176°F)
Knock sensor	1 - 2	Resistance: 120 to 280 kΩ Always
Air fuel ratio sensor	(HT) - (+B)	Resistance: 1.8 to 3.4 Ω at 20°C (68°F)
	(HT) - (AF-)	Resistance: 10 kΩ or higher
Heated oxygen sensor	(HT) - (+B)	Resistance: 11 to 16 Ω at 20°C (68°F)
	(HT) - (E)	Resistance: 10 kΩ or higher
Integration relay (EFI MAIN RELAY)	1E-1 - 1B-4	Resistance: 10 kΩ or higher (Battery voltage is not applied between terminals 1B-3 and 1B-2)
		Resistance: Below 1 Ω (Battery voltage is applied between terminals 1B-3 and 1B-2)
Integration relay (IG2 RELAY)	1E-1 - 1A-4	Resistance: 10 kΩ or higher (Battery voltage is not applied between terminals 1A-2 and 1A-3)
		Resistance: Below 1 Ω (Battery voltage is applied between terminals 1A-2 and 1A-3)
Integration relay (HORN RELAY)	1E-1 - 1A-8	Resistance: 10 kΩ or higher (Battery voltage is not applied between terminals 1A-6 and 1A-7)

		Resistance: Below 1 Ω (Battery voltage is applied between terminals 1A-6 and 1A-7)
Circuit opening relay	2A-8 - 2B-11	Resistance: 10 kΩ or higher (Battery voltage is not applied between terminals 2B-10 and 2B-9)
		Resistance: Below 1 Ω (Battery voltage is applied between terminals 2B-10 and 2B-9)

Last Modified: 3-10-2010	6.4 F	**From:** 200901
Model Year: 2010	**Model:** Corolla	**Doc ID:** RM0000036OC00SX
Title: SPECIFICATIONS: 2AZ-FE ENGINE CONTROL: TORQUE SPECIFICATIONS (2010 Corolla)		

TORQUE SPECIFICATIONS

PART TIGHTENED		N*M	KGF*CM	FT.*LBF
Camshaft timing oil control valve assembly x Cylinder head sub-assembly		9.0	92	80 in.*lbf
Throttle body x Intake manifold		30	306	22
ECM x Body		8.0	82	71 in.*lbf
Accelerator pedal assembly x Body		5.5	56	49 in.*lbf
Mass air flow meter x Air cleaner cap		1.0	10	9 in.*lbf
Camshaft position sensor x Cylinder head sub-assembly		9.0	92	80 in.*lbf
Crankshaft position sensor x Timing chain cover		9.0	92	80 in.*lbf
Spark plug x Cylinder head sub-assembly		19	194	14
Ignition coil x Cylinder head cover sub-assembly		9.0	92	80 in.*lbf
Engine coolant temperature sensor x Cylinder head sub-assembly		20	204	14
Knock control sensor x Cylinder block		20	204	15
Air fuel ratio sensor x Exhaust manifold	Without SST	44	449	32
	With SST	40	408	30
Heated oxygen sensor x Front exhaust pipe assembly	Without SST	44	449	32
	With SST	40	408	30

Last Modified: 3-10-2010	6.4 F	**From:** 200901
Model Year: 2010	**Model:** Corolla	**Doc ID:** RM0000028K700AX
Title: SPECIFICATIONS: 2AZ-FE ENGINE MECHANICAL: SERVICE DATA (2010 Corolla)		

SERVICE DATA

Engine	Ignition timing	Standard	When using Techstream	BTDC 5 to 15° at idle
			When not using Techstream	BTDC 8 to 12° at idle (Connect terminals 13 (TC) and 4 (CG))
				BTDC 5 to 15° at idle (Remove terminals 13 (TC) and 4 (CG))
	Engine idling speed	Standard		600 to 700 rpm
	Compression	Standard		1300 kPa (13.3 kgf/cm^2, 189 psi)
		Minimum		1000 kPa (10.0 kgf/cm^2, 145 psi)
		Difference between each cylinder		100 kPa (1.0 kgf/cm^2, 15 psi)
Camshaft	Valve clearance	Standard	Intake	0.19 to 0.29 mm (0.00748 to 0.0114 in.)
			Exhaust	0.38 to 0.48 mm (0.0150 to 0.189 in.)
	Thrust clearance	Standard	Intake	0.040 to 0.095 mm (0.00157 to 0.00374 in.)
			Exhaust	0.090 to 0.145 mm (0.00354 to 0.00570 in.)
		Maximum	Intake	0.110 mm (0.00433 in.)
			Exhaust	0.150 mm (0.00591 in.)
	Oil clearance	Standard	Camshaft No. 1 journal bearing mark 1	0.007 to 0.038 mm (0.000276 to 0.00150 in.)
			Camshaft No. 1 journal bearing	0.008 to 0.038 mm (0.000315 to 0.00150

			mark 2	in.)
			Camshaft No. 1 journal bearing mark 3	0.008 to 0.038 mm (0.000315 to 0.00150 in.)
			Camshaft other journals	0.025 to 0.062 mm (0.000984 to 0.00244 in.)
			No. 2 camshaft No. 1 journal	0.040 to 0.072 mm (0.00157 to 0.00283 in.)
			No. 2 camshaft No. 1 journals	0.025 to 0.062 mm (0.000984 to 0.00244 in.)
		Maximum	Intake	0.070 mm (0.00276 in.)
			Exhaust	0.100 mm (0.00394 in.)
	Circle runout	Maximum		0.03 mm (0.00118 in.)
	Cam lobe height	Standard	Intake	47.306 to 47.406 mm (1.8654 to 1.8664 in.)
			Exhaust	46.063 to 46.163 mm (1.8135 to 1.8174 in.)
		Minimum	Intake	47.196 mm (1.8581 in.)
			Exhaust	45.953 mm (1.8092 in.)
	Journal diameter	Standard		No. 1: 35.971 to 35.985 mm (1.4162 to 1.4167 in.) Other: 22.959 to 22.975 mm (0.9039 to 0.9045 in.)
Cylinder head	Flatness	Standard	Cylinder block side	0.08 mm (0.00315 in.)
			Intake manifold side	0.08 mm (0.00315 in.)
			Exhaust manifold side	0.08 mm (0.00315 in.)
	Lifter bore diameter	Standard		31.009 to 31.025 mm (1.2208 to 1.2215 in.)
Cylinder head set bolt	Length	Standard		141.3 to 142.7 mm (5.563 to 5.618 in.)

		Maximum	144.2 mm (5.677 in.)
Inner compression spring	Length	Standard	47.43 mm (1.867 in.)
	Deviation	Maximum	1.6 mm (0.0630 in.)
Intake valve	Overall length	Standard	101.71 mm (4.0043 in.)
		Minimum	101.21 mm (3.9846 in.)
	Valve stem diameter	Standard	5.470 to 5.485 mm (0.2154 to 0.2159 in.)
	Margin thickness	Standard	1.05 to 1.45 mm (0.0413 to 0.0571 in.)
		Minimum	0.50 mm (0.0197 in.)
Exhaust valve	Overall length	Standard	101.15 mm (3.9823 in.)
		Minimum	100.70 mm (3.9646 in.)
	Valve stem diameter	Standard	5.465 to 5.480 mm (0.2152 to 0.2157 in.)
	Margin thickness	Standard	1.20 to 1.60 mm (0.0472 to 0.0630 in.)
		Minimum	0.50 mm (0.0197 in.)
Intake valve guide bush	Inside diameter	Standard	5.510 to 5.530 mm (0.2169 to 0.2177 in.)
	Oil clearance	Standard	0.025 to 0.060 mm (0.000984 to 0.00236 in.)
		Maximum	0.090 mm (0.00354 in.)
Exhaust valve guide bush	Inside diameter	Standard	5.510 to 5.530 mm (0.2169 to 0.2177 in.)
	Oil clearance	Standard	0.030 to 0.065 mm (0.00118 to 0.00256 in.)
		Maximum	0.095 mm (0.00374 in.)
Valve lifter	Diameter	Standard	30.966 to 30.976 mm (1.2191 to 1.2195 in.)
	Oil clearance	Standard	0.033 to 0.059 mm (0.00130 to 0.00232 in.)

			Maximum	0.079 mm (0.00311 in.)
Connecting rod	Thrust clearance		Standard	0.160 to 0.362 mm (0.00630 to 0.0143 in.)
			Maximum	0.362 mm (0.0143 in.)
	Oil clearance		Standard	0.024 to 0.048 mm (0.000945 to 0.00189 in.)
			Maximum	0.063 mm (0.00248 in.)
Cylinder block	Warpage		Maximum	0.05 mm (0.00197 in.)
	Cylinder bore diameter		Standard	88.500 to 88.513 mm (3.4843 to 3.4847 in.)
			Maximum	88.613 mm (3.4887 in.)
Piston	Diameter		Standard	88.469 to 88.479 mm (3.4830 to 3.4834 in.)
	Oil clearance		Standard	0.021 to 0.044 mm (0.000827 to 0.00173 in.)
			Maximum	0.10 mm (0.00394 in.)
	Ring groove clearance	Standard	No. 1	0.020 to 0.070 mm (0.000787 to 0.00276 in.)
			No. 2	0.020 to 0.060 mm (0.000787 to 0.00236 in.)
			Oil	0.020 to 0.070 mm (0.000787 to 0.00276 in.)
Piston ring	End gap	Standard	No. 1	0.24 to 0.31 mm (0.00945 to 0.0122 in.)
			No. 2	0.33 to 0.43 mm (0.0130 to 0.0169 in.)
			Oil	0.10 to 0.30 mm (0.00394 to 0.0118 in.)
		Maximum	No. 1	0.31 mm (0.0122 in.)
			No. 2	0.43 mm (0.0169 in.)

		Oil	0.30 mm (0.0118 in.)
Piston pin	Oil clearance (Piston pin x Piston pin bore)	Standard	0.001 to 0.007 mm (0.0000394 to 0.000276 in.)
		Maximum	0.010 mm (0.000394 in.))
	Oil clearance (Piston pin x Connecting rod small end bore)	Standard	0.005 to 0.011 mm (0.000197 to 0.000433 in.)
		Maximum	0.011 mm (0.000433 in.)
Connecting rod bolt	Diameter	Standard	7.2 to 7.3 mm (0.283 to 0.287 in.)
		Minimum	7.0 mm (0.276 in.)
Connecting rod	Misalignment	Maximum	0.05 mm (0.00197 in.) per 100 mm (3.94 in.)
	Twist	Maximum	0.05 mm (0.00197 in.) per 100 mm (3.94 in.)
Crankshaft	Circle runout	Maximum	0.03 mm (0.00118 in.)
	Main journal diameter	Standard	54.988 to 55.000 mm (2.1649 to 2.1654 in.)
	Main journal for taper and distortion	Maximum	0.003 mm (0.000118 in.)
	Crank pin diameter	Standard	47.990 to 48.000 mm (1.8894 to 1.8898 in.)
	Crank pin for taper and distortion	Maximum	0.003 mm (0.000118 in.)
	Thrust clearance	Standard	0.04 to 0.24 mm (0.00157 to 0.00945 in.)
		Maximum	0.30 mm (0.0118 in.)
	Oil clearance	Standard	0.017 to 0.040 mm (0.000669 to 0.00157 in.)
		Maximum	0.060 mm (0.00236 in.)
Crankshaft bearing cap set bolt	Diameter	Standard	7.5 to 7.6 mm (0.295 to 0.299 in.)
		Minimum	7.5 mm (0.295 in.)

Balanceshaft	Thrust clearance	Standard	0.05 to 0.09 mm (0.00197 to 0.00354 in.)
		Maximum	0.09 mm (0.00354 in.)
	Oil clearance	Standard	0.022 to 0.049 mm (0.000866 to 0.00193 in.)
		Maximum	0.049 mm (0.00193 in.)
Balanceshaft housing bolt	Length	Standard	58.3 to 59.7 mm (2.295 to 2.350 in.)
		Maximum	60.3 mm (2.374 in.)
Chain sub-assembly	Elongation	Maximum	114.5 mm (4.508 in.)
No. 2 chain sub-assembly	Elongation	Maximum	102.2 mm (4.024 in.)
Oil pump drive gear	Diameter (with chain)	Minimum	48.2 mm (1.898 in.)
Oil pump drive shaft gear	Diameter (with chain)	Minimum	48.2 mm (1.898 in.)
Camshaft timing gear assembly	Diameter (with chain)	Minimum	97.3 mm (3.831 in.)
Camshaft timing gear or sprocket	Diameter (with chain)	Minimum	97.3 mm (3.831 in.)
Crankshaft timing gear or sprocket	Diameter (with chain)	Minimum	51.6 mm (2.031 in.)
Chain tensioner slipper	Maximum	Wear	1.0 mm (0.0394 in.)
No. 1 chain vibration damper	Maximum	Wear	1.0 mm (0.0394 in.)
Chain tensioner plate	Maximum	Wear	0.5 mm (0.0197 in.)

Last Modified: 3-10-2010	6.4 F	**From:** 200901
Model Year: 2010	**Model:** Corolla	**Doc ID:** RM0000028K800AX
Title: SPECIFICATIONS: 2AZ-FE ENGINE MECHANICAL: TORQUE SPECIFICATIONS (2010 Corolla)		

TORQUE SPECIFICATIONS

PART TIGHTENED		N*M	KGF*CM	FT.*LBF
Camshaft timing gear assembly x Camshaft		54	551	40
Camshaft bearing cap x Cylinder head	No. 1	30	301	22
	Other	9.0	92	80 in.*lbf
No. 2 camshaft bearing cap x Cylinder head	No. 2	30	301	22
	Other	9.0	92	80 in.*lbf
Camshaft timing gear or sprocket x No. 2 camshaft		54	551	40
No. 1 chain tensioner assembly x Timing chain or belt cover sub-assembly		9.0	92	80 in.*lbf
Cylinder head cover sub-assembly x Cylinder head sub-assembly	Bolt A	11	112	8
	Bolt B	14	143	10
	Nut	11	112	8
Cylinder head sub-assembly x Cylinder block	1st	70	714	52
	2nd	Turn 90°	Turn 90°	Turn 90°
Ground cable x Cylinder head sub-assembly		8.4	86	74 in.*lbf
Chain tensioner plate x Cylinder block		12	122	9
Oil pump drive shaft sprocket x Oil pump		30	301	22
No. 1 chain vibration damper x Cylinder head sub-assembly		9.0	92	80 in.*lbf
No. 1 chain vibration damper x Cylinder block		9.0	92	80 in.*lbf
Chain tensioner slipper x Cylinder block		19	194	14
Timing chain guide x Cylinder block		9.0	92	80 in.*lbf
V-ribbed belt tensioner assembly x Timing chain or belt cover sub-assembly		60	607	44
Crankshaft pulley x Crankshaft		180	1835	133

PART TIGHTENED		N*M	KGF*CM	FT.*LBF
Oil pan sub-assembly x Stiffening crankcase assembly or Timing chain or belt cover sub-assembly		9.0	92	80 in.*lbf
Idler pulley sub-assembly x Cylinder block sub-assembly		50	510	37
Engine mounting insulator sub-assembly RH x Transverse engine engine mounting bracket	Bolt A	52	530	38
	Bolt B	95	969	70
	Nut A	95	969	70
	Nut B	52	530	38
Exhaust manifold converter sub-assembly x Cylinder head sub-assembly		37	377	27
Engine oil level dipstick guide x Cylinder block		9.0	92	80 in.*lbf
for Automatic Transaxle: Drive plate and ring gear sub-assembly x Crankshaft		98	999	72
for Manual Transaxle: Flywheel sub-assembly x Crankshaft		130	1326	96
No. 1 engine hanger x Cylinder head sub-assembly		38	387	28
No. 2 engine hanger x Cylinder head sub-assembly		38	387	28
Drive shaft bearing bracket x Cylinder block		64	653	47
Engine mounting insulator sub-assembly LH x Frame		52	530	38
Engine mounting insulator sub-assembly LH x Engine mounting bracket		56	571	41
Front engine mounting insulator sub-assembly x Front cross member sub-assembly	Through bolt	73	744	54
	Bolt	81	827	59
Rear engine mounting insulator sub-assembly x Rear engine mounting bracket		65	663	48
Transmission control cable assembly x Control shaft lever		12	122	9
for Manual Transaxle: Ground cable x Transaxle		13	130	10
for Automatic Transaxle: Ground cable x Transaxle		26	260	19
Engine wire harness x Engine room relay block		8.4	85	74 in.*lbf
Battery carrier x Frame		13	133	10
Battery clamp x Battery clamp bolt		3.5	36	31 in.*lbf

PART TIGHTENED		N*M	KGF*CM	FT.*LBF
Battery clamp x Body		6.5	66	58 in.*lbf
Air cleaner case x Engine mounting insulator sub-assembly LH		7.0	71	62 in.*lbf
Radiator reserve tank assembly x Body		7.0	71	62 in.*lbf
No. 1 engine cover sub-assembly x Cylinder head cover sub-assembly		9.0	92	80 in.*lbf
Balanceshaft housing x Stiffening crankcase assembly	1st	22	220	16
	2nd	Turn 90°	Turn 90°	Turn 90°
Stiffening crankcase assembly x Cylinder block		24	245	18
No. 1 taper head screw plug x Cylinder block		26	265	19
Oil control valve filter x Cylinder head sub-assembly		30	306	22
Inlet water housing drain cock assembly x Inlet water housing		25	255	18
Plug x Inlet water housing drain cock		13	130	10
Camshaft timing oil control valve assembly x Cylinder head sub-assembly		9.0	92	80 in.*lbf
Crankshaft position sensor x Timing chain or belt cover sub-assembly		9.0	92	80 in.*lbf
Oil pan drain plug x Oil pan sub-assembly		25	255	18
Camshaft position sensor x Cylinder head sub-assembly		9.0	92	80 in.*lbf
Oil filter union x Stiffening crankcase assembly		30	306	22
Ventilation valve sub-assembly x Cylinder head cover sub-assembly		19	194	14
Radio setting condenser x Cylinder head sub-assembly		10	102	7
No. 1 water by-pass pipe x Cylinder block		9.0	92	80 in.*lbf
Stud bolt x Cylinder head sub-assembly	Bolt A	5.0	51	44 in.*lbf
	Bolt B	5.0	51	44 in.*lbf
	Bolt C	9.5	97	84 in.*lbf
	Bolt D	9.5	97	84 in.*lbf
No. 1 straight head screw plug x Cylinder head sub-assembly		86	877	64

PART TIGHTENED		N*M	KGF*CM	FT.*LBF
Stud bolt x Cylinder block	Bolt A	22	220	16
	Bolt B	5.0	51	44 in.*lbf
	Bolt C	9.5	97	84 in.*lbf
	Bolt D	5.0	51	44 in.*lbf
No. 1 oil nozzle sub-assembly x Cylinder block		7.0	71	62 in.*lbf
Crankshaft bearing cap x Cylinder block	1st	20	204	15
	2nd	40	408	30
	3rd	Turn 90°	Turn 90°	Turn 90°
Connecting rod cap x Connecting rod	1st	25	250	18
	2nd	Turn 90°	Turn 90°	Turn 90°

Last Modified: 3-10-2010	6.4 F	**From:** 200901
Model Year: 2010	**Model:** Corolla	**Doc ID:** RM000001SB900PX
Title: SPECIFICATIONS: 2AZ-FE FUEL: SERVICE DATA (2010 Corolla)		

SERVICE DATA

Fuel pressure	Standard fuel pressure	304 to 343 kPa (3.1 to 3.5 kgf/cm^2, 44.1 to 49.7 psi)
Fuel pressure : at fuel pressure remains for 5 minutes after engine has stopped	Standard fuel pressure	147 kPa (1.5 kgf/cm^2, 21 psi) or more
Fuel injector assembly	Standard resistance	11.6 to 12.4 Ω at 20°C (68°F)
	Injection volume	76 to 92 cc (4.6 to 5.6 cu in.) per 15 seconds
	Difference between each fuel injector	16 cc (1.0 cu in.) or less
	Standard leakage	1 drop or less every 12 minutes
Fuel pump	Standard resistance	0.2 to 3.0 Ω at 20°C (68°F)
Fuel Sender gauge assembly	Standard resistance	13.5 to 16.5 Ω (Float level F)
		13.5 to 414.5 Ω (Float level E to F)
		405.5 to 414.5 Ω (Float level E)

Last Modified: 3-10-2010	6.4 F	**From:** 200901
Model Year: 2010	**Model:** Corolla	**Doc ID:** RM000001SBA00PX
Title: SPECIFICATIONS: 2AZ-FE FUEL: TORQUE SPECIFICATIONS (2010 Corolla)		

TORQUE SPECIFICATIONS

PART TIGHTENED	N*M	KGF*CM	FT.*LBF
Fuel delivery pipe sub-assembly x Cylinder head sub-assembly	20	205	15
Fuel delivery pipe sub-assembly x Fuel pressure pulsation damper	9.0	90	80 in.*lbf
Fuel tank band x Body	39	400	29
No. 1 fuel tank protector x Fuel tank band	5.5	56	49 in.*lbf
No. 1 fuel tank protector x Body	5.5	56	49 in.*lbf
Parking brake cable x Body	5.4	55	48 in.*lbf

Last Modified: 3-10-2010	6.4 F	**From:** 200901
Model Year: 2010	**Model:** Corolla	**Doc ID:** RM000003K68001X
Title: SPECIFICATIONS: 2AZ-FE INTAKE / EXHAUST: SERVICE DATA (2010 Corolla)		

SERVICE DATA

Compression spring	Front exhaust pipe assembly x Exhaust manifold converter sub-assembly.	Minimum length: 41.5 mm (1.63 in.)
	Front exhaust pipe assembly x Tail exhaust pipe assembly	Minimum length: 38.5 mm (1.52 in.)

Last Modified: 3-10-2010	6.4 F	**From:** 200901
Model Year: 2010	**Model:** Corolla	**Doc ID:** RM000003K69001X
Title: SPECIFICATIONS: 2AZ-FE INTAKE / EXHAUST: TORQUE SPECIFICATIONS (2010 Corolla)		

TORQUE SPECIFICATIONS

PART TIGHTENED	N*M	KGF*CM	FT.*LBF
Front exhaust pipe assembly x Exhaust manifold converter sub-assembly	43	440	32
Front exhaust pipe assembly x Center exhaust pipe assembly	43	440	32
Center exhaust pipe assembly x Tail exhaust pipe assembly	43	440	32
Exhaust manifold converter sub-assembly x Cylinder head assembly	37	377	27
No. 1 exhaust manifold heat insulator x Exhaust manifold converter sub-assembly	12	122	9
No. 1 exhaust manifold converter insulator x Exhaust manifold converter sub-assembly	12	122	9
No. 2 exhaust manifold heat insulator x Exhaust manifold converter sub-assembly	12	122	9
Manifold stay x Exhaust manifold converter sub-assembly	44	449	33
Manifold stay x Cylinder block	44	449	33
No. 2 manifold stay x Exhaust manifold converter sub-assembly	44	449	33
No. 2 manifold stay x Cylinder block	44	449	33
Intake manifold x Cylinder head assembly	30	306	22

Last Modified: 3-10-2010	6.4 F	**From:** 200901
Model Year: 2010	**Model:** Corolla	**Doc ID:** RM0000028KB00BX
Title: SPECIFICATIONS: 2AZ-FE LUBRICATION: SERVICE DATA (2010 Corolla)		

SERVICE DATA

Oil pressure switch	Oil pressure	Standard	Idling	29 kPa (0.3 kgf/cm^2, 4.3 psi) or more
			3000 rpm	170 to 300 kPa (1.7 to 3.1 kgf/cm^2, 24 to 44 psi)
Oil pump rotor	Side clearance	Standard		0.030 to 0.085 mm (0.00118 to 0.00335 in.)
		Maximum		0.16 mm (0.00630 in.)
	Tip clearance	Standard		0.080 to 0160 mm (0.00315 to 0.00630 in.)
		Maximum		0.35 mm (0.0138 in.)
	Body clearance	Standard		0.100 to 0170 mm (0.00394 to 0.00669 in.)
		Maximum		0.325 mm (0.0128 in.)
Chain tensioner plate	Wear	Maximum		0.5 mm (0.0197 in.)

Last Modified: 3-10-2010	6.4 F	**From:** 200901
Model Year: 2010	**Model:** Corolla	**Doc ID:** RM000002N2Y007X
Title: SPECIFICATIONS: 2AZ-FE LUBRICATION: TORQUE SPECIFICATIONS (2010 Corolla)		

TORQUE SPECIFICATIONS

PART TIGHTENED		N*M	KGF*CM	FT.*LBF
Oil filter x Stiffening crankcase		18	179	13
Oil drain plug x Oil pan		25	255	18
Oil pump cover x Oil pump		8.8	90	78 in.*lbf
Oil pump relief valve plug x Oil pump		49	500	36
Oil pump strainer x Oil pump		8.8	90	78 in.*lbf
Oil pump X Cylinder block		19	194	14
Oil pressure switch x Cylinder block		15	153	11
Timing chain cover x Cylinder block, Cylinder head	Bolt A	9.0	92	80 in.*lbf
	Bolt B	25	255	18
	Bolt C	55	561	41
	Nut	11	112	8
Stud bolt x Cylinder block		22	220	16

Last Modified: 3-10-2010	6.4 F	**From:** 200901
Model Year: 2010	**Model:** Corolla	**Doc ID:** RM00000313400UX
Title: SPECIFICATIONS: 2AZ-FE STARTING: SERVICE DATA (2010 Corolla)		

SERVICE DATA

Starter assembly	Standard current	Below 90 A at 11.5 V
Starter relay	Standard resistance 3 - 5	Below 1 Ω (battery voltage is applied to terminals 1 and 2)
		10 kΩ or higher (battery voltage is not applied to terminals 1 and 2)
Acc relay	Standard resistance 3 - 5	Below 1 Ω (battery voltage is applied to terminals 1 and 2)
		10 kΩ or higher (battery voltage is not applied to terminals 1 and 2)
Ignition switch	Standard resistance Between all terminals	10 kΩ or higher (LOCK)
	Standard resistance 2 - 3	Below 1 Ω (ACC)
	Standard resistance 2 - 3	Below 1 Ω (ON)
	Standard resistance 2 - 4	
	Standard resistance 6 - 7	
	Standard resistance 1 - 2	Below 1 Ω (START)
	Standard resistance 1 - 4	
	Standard resistance 6 - 7	
	Standard resistance 6 - 8	
Starter armature assembly resistance	Segment - Segment	Below 1 Ω
	Commutator - Armature coil	10 kΩ or higher
Starter armature assembly commutator diameter	Standard diameter	29.0 mm (1.14 in.)
	Minimum diameter	28.0 mm (1.10 in.)
Starter armature assembly	Standard runout	0.02 mm (0.000787 in.)

commutator circle runout	Maximum runout	0.05 mm (0.00197 in.)
Starter armature assembly commutator undercut depth	Standard runout	0.7 mm (0.0276 in.)
	Maximum runout	0.2 mm (0.00787 in.)
Starter brush holder assembly Brush length	Standard length	14.4 mm (0.567in.)
	Minimum length	9.0 mm (0.354 in.)
Starter brush holder assembly resistance	Standard resistance Positive brush holder - Negative brush holder	10 kΩ or higher
	Standard resistance Positive brush holder - Positive brush holder Negative brush holder - Negative brush holder	Below 1 Ω
Stater magnetic switch assembly resistance	Terminal 50 - Terminal C	Below 1 Ω
	Terminal 50 - Switch body	Below 2 Ω



Last Modified: 3-10-2010	6.4 F	**From:** 200901
Model Year: 2010	**Model:** Corolla	**Doc ID:** RM00000313500UX
Title: SPECIFICATIONS: 2AZ-FE STARTING: TORQUE SPECIFICATIONS (2010 Corolla)		

TORQUE SPECIFICATIONS

PART TIGHTENED	N*M	KGF*CM	FT.*LBF
Stater assembly x Transaxle housing	37	377	27
Terminal 30 x Wire harness	9.8	100	87 in.*lbf
Terminal C x Lead wire	10	102	7.4
Commutator end frame x Starter brush holder assembly	1.5	15	13 in.*lbf
Commutator end frame x Starter housing	6.0	61	53 in.*lbf
Magnet starter switch assembly x Starter housing	7.5	77	66 in.*lbf

Last Modified: 3-10-2010	6.4 F	**From:** 200901
Model Year: 2010	**Model:** Corolla	**Doc ID:** RM000002I9Y00HX
Title: SPECIFICATIONS: 2ZR-FE BATTERY / CHARGING: SERVICE DATA (2010 Corolla)		

SERVICE DATA

Battery voltage	Standard voltage		12.5 to 12.9 V at 20°C (68°F)
Fuse	Standard resistance		Below 1 Ω
Charging circuit without load	Standard current		10 A or less
	Standard voltage		13.2 to 14.8 V
Charging circuit with load	Standard amperage		30 A or more
Generator brush holder assembly	Standard length		9.5 to 11.5 mm (0.374 to 0.453 in.)
	Minimum length		4.5 mm (0.177 in.)
Generator rotor assembly	Standard resistance	Between the slip rings	2.3 to 2.7 Ω at 20°C (68°F)
		Slip ring - Rotor core	1 MΩ or higher
	Standard diameter		14.2 to 14.4 mm (0.559 to 0.567 in.)
	Minimum diameter		14 mm (0.551 in.)



Last Modified: 3-10-2010	6.4 F	**From:** 200901
Model Year: 2010	**Model:** Corolla	**Doc ID:** RM000002I9Z00HX
Title: SPECIFICATIONS: 2ZR-FE BATTERY / CHARGING: TORQUE SPECIFICATIONS (2010 Corolla)		

TORQUE SPECIFICATIONS

PART TIGHTENED		N*M	KGF*CM	FT.*LBF
Generator drive end frame x Bearing retainer plate		2.3	23	20 in.*lbf
Generator coil assembly x Generator drive end frame		5.8	59	51 in.*lbf
Generator brush holder assembly x Generator coil assembly		1.8	18	16 in.*lbf
Generator rear end cover x Generator coil assembly		4.6	47	41 in.*lbf
Generator clutch pulley x Generator rotor assembly	without SST	111	1127	82
	with SST	84	857	62
Generator assembly x Cylinder block	Bolt A	52	530	38
	Bolt B	21	215	16
wire harness clamp bracket x Generator end frame assembly		8.4	86	74 in.*lbf
Generator wire x Terminal B		9.8	100	87 in.*lbf

Last Modified: 3-10-2010	6.4 F	**From:** 200901
Model Year: 2010	**Model:** Corolla	**Doc ID:** RM00000343300FX
Title: SPECIFICATIONS: 2ZR-FE COOLING: SERVICE DATA (2010 Corolla)		

SERVICE DATA

Thermostat	Valve opening temperature	80 to 84°C (176 to 183°F)
	Valve lift	10 mm (0.39 in.) or more at 95°C (203°F)
Cooling fan motor		7.4 to 10.9A (at 12V) 20°C (68°F)
Cooling fan ECU		2.0 to 15.2A (at 12V) 20°C (68°F)
Cooling fan relay	3-5	10kΩ or higher
	3-5	Below 1Ω (when battery voltage is applied to terminals 1 and 2)
Radiator cap sub-assembly	Standard valve (for brand new cap)	74.0 to 103.0 kPa (0.75 to 1.05 kgf/cm^2, 10.7 to 14.9 psi)
	Minimum standard valve (for used cap)	59.0 kPa (0.6 kgf/cm^2, 8.6 psi)



Last Modified: 3-10-2010	6.4 F	**From:** 200901
Model Year: 2010	**Model:** Corolla	**Doc ID:** RM00000343400FX
Title: SPECIFICATIONS: 2ZR-FE COOLING: TORQUE SPECIFICATIONS (2010 Corolla)		

TORQUE SPECIFICATIONS

PART TIGHTENED		N*M	KGF*CM	FT*LBF
Water pump assembly x Timing chain or belt cover sub-assembly	Bolt A	26	260	18
	Bolt B	24	245	18
Water inlet x Cylinder head sub-assembly		10	102	7
Cylinder block x Drain cock plug		13	130	9
Cooling fan motor x Fan		6.3	64	56 in.*lbf
Fan shroud x Radiator assembly		7.0	71	62 in.*lbf
No. 2 fan shroud x Radiator assembly		7.0	71	62 in.*lbf
Oil cooler hose x Fan shroud (for Automatic transaxle)		5.5	56	49 in.*lbf
Upper radiator support x Body		5.5	56	49 in.*lbf
Hood lock support sub-assembly x Upper radiator support sub-assembly		7.0	71	62 in.*lbf

Last Modified: 3-10-2010	6.4 F	**From:** 200901
Model Year: 2010	**Model:** Corolla	**Doc ID:** RM000003K62001X
Title: SPECIFICATIONS: 2ZR-FE EMISSION CONTROL: SERVICE DATA (2010 Corolla)		

SERVICE DATA

Vacuum switching valve		
Resistance	1 - 2	23 to 26 Ω at 20°C (68°F)
	1 - Body ground	10 MΩ or higher
	2 - Body ground	10 MΩ or higher

Last Modified: 3-10-2010	6.4 F	**From:** 200901
Model Year: 2010	**Model:** Corolla	**Doc ID:** RM0000036OB00RX
Title: SPECIFICATIONS: 2ZR-FE ENGINE CONTROL: SERVICE DATA (2010 Corolla)		

SERVICE DATA

Spark plug		Recommended spark plug	SC20HR11 DENSO made
		Standard Resistance	10 MΩ or more
		Electrode gap	1.0 to 1.1 mm (0.0394 to 0.0433 in.)
		Maximum electrode gap	1.3 mm (0.0512 in.) for used plug
Camshaft timing oil control valve		1 - 2	Resistance: 6.9 to 7.9 Ω at 20°C (68°F)
Throttle body		1 (M-) - 2 (M+)	Resistance: 0.3 to 100 Ω at 20°C (68°F)
Accelerator pedal	Accelerator position No. 1 standard voltage	Accelerator pedal is released	0.5 to 1.1 V
		Accelerator pedal is depressed	2.6 to 4.5 V
	Accelerator position No. 2 standard voltage	Accelerator pedal is released	1.2 to 2.0 V
		Accelerator pedal is depressed	3.4 to 5.0 V
Mass air flow meter		Engine not running 30 seconds after ignition switch is turned to ON	Less than 0.26 g/sec.
		1 (THA) - 2 (E2)	Resistance: 13.6 to 18.4 kΩ at -20°C (-4°F) 2.21 to 2.69 kΩ at 20°C (68°F) 0.49 to 0.67 kΩ at 60°C (140°F)
Crankshaft position sensor		1 - 2	Resistance: 1630 to 2740 Ω at -10 to 50°C (14 to 122°F) 2065 to 3225 Ω at 50 to 100°C (122 to 212°F)
Engine coolant temperature sensor		1 - 2	Resistance: 2.32 to 2.59 kΩ at 20°C (68°F) 0.310 to 0.326 kΩ at 80°C

		(176°F)
Knock sensor	1 - 2	Resistance: 120 to 280 kΩ Always
Air fuel ratio sensor	(HT) - (+B)	Resistance: 1.8 to 3.4 Ω at 20°C (68°F)
	(HT) - (AF-)	Resistance: 10 kΩ or higher
Heated oxygen sensor	(HT) - (+B)	Resistance: 11 to 16 Ω at 20°C (68°F)
	(HT) - (E)	Resistance: 10 kΩ or higher
Integration relay (EFI MAIN RELAY)	1E-1 - 1B-4	Resistance: 10 kΩ or higher (Battery voltage is not applied between terminals 1B-3 and 1B-2)
		Resistance: Below 1 Ω (Battery voltage is applied between terminals 1B-3 and 1B-2)
Integration relay (IG2 RELAY)	1E-1 - 1A-4	Resistance: 10 kΩ or higher (Battery voltage is not applied between terminals 1A-2 and 1A-3)
		Resistance: Below 1 Ω (Battery voltage is applied between terminals 1A-2 and 1A-3)
Integration relay (HORN RELAY)	1E-1 - 1A-8	Resistance: 10 kΩ or higher (Battery voltage is not applied between terminals 1A-6 and 1A-7)
		Resistance: Below 1 Ω (Battery voltage is applied between terminals 1A-6 and 1A-7)

Circuit opening relay	2A-8 - 2B-11	Resistance: 10 kΩ or higher (Battery voltage is not applied between terminals 2B-10 and 2B-9)
		Resistance: Below 1 Ω (Battery voltage is applied between terminals 2B-10 and 2B-9)

Last Modified: 3-10-2010	6.4 F	**From:** 200901
Model Year: 2010	**Model:** Corolla	**Doc ID:** RM000003K63001X
Title: SPECIFICATIONS: 2ZR-FE EMISSION CONTROL: TORQUE SPECIFICATIONS (2010 Corolla)		

TORQUE SPECIFICATIONS

PART TIGHTENED	N*M	KGF*CM	FT.*LBF
Ventilation valve sub-assembly x Cylinder Block	20	204	15
Duty vacuum switching valve x Bracket	3.4	35	30 in.*lbf
charcoal canister x Body	19	194	14

Last Modified: 3-10-2010	6.4 F	**From:** 200901
Model Year: 2010	**Model:** Corolla	**Doc ID:** RM000002PM000SX
Title: SPECIFICATIONS: 2ZR-FE ENGINE MECHANICAL: SERVICE DATA (2010 Corolla)		

SERVICE DATA

V belt deflection	New belt	7.0 to 8.2 mm (0.276 to 0.323 in.)
	Used belt	7.6 to 10.0 mm (0.299 to 0.394 in.)
V belt tension	New belt	700 to 800 N (71 to 82 kg, 157 to 180 lb)
	Used belt	550 to 750 N (56 to 77 kg, 124 to 169 lb)
Ignition timing	with Terminals TC and CG of DLC3 connected	8 to 12°BTDC at idle
Idle speed		600 to 700 rpm
Compression	Compression pressure	1373 kPa (14.0 kgf/cm^2, 199 psi)
	Minimum pressure	1079 kPa (11.0 kgf/cm^2, 157 psi)
	Difference between each cylinder	98 kPa (1.0 kgf/cm^2, 14 psi)
Oil pump drive sprocket	Minimum sprocket diameter (with chain)	48.2 mm (1.898 in.)
Oil pump drive shaft sprocket	Minimum sprocket diameter (with chain)	48.8 mm (1.921 in.)
Crankshaft timing sprocket	Minimum sprocket diameter (with chain)	51.1 mm (2.012 in.)
Chain tensioner slipper	Maximum wear	1.0 mm (0.039 in.)
Chain vibration damper	Maximum wear	1.0 mm (0.039 in.)
Chain tensioner plate	Maximum wear	1.0 mm (0.039 in.)
Cylinder head set bolt	Standard bolt length	146.8 to 148.2 mm (5.7795 to 5.8346 in.)
	Maximum bolt length	149.2 mm (5.874 in.)
Cylinder head set bolt	Standard outside diameter	9.77 to 9.96 mm (0.3846 to 0.3921 in.)
	Minimum outside diameter	9.4 mm (0.3701 in.)

Ring pin (Cylinder head)	Protrusion	6.5 to 7.5 mm (0.26 to 0.30 in.)
Ring pin (Crankcase)	Protrusion	3 mm (0.12 in.)
No. 1 camshaft bearing	Dimension A-B	0.7 mm (0.0276 in.) or less
No. 2 camshaft bearing	Dimension A	1.05 to 1.75 mm (0.0413 to 0.0689 in.)
Camshaft housing	Seal diameter	3.5 to 4.0 mm (0.138 to 0.158 in.)
Chain sub-assembly	Maximum chain elongation	115.2 mm (4.535 in.)
No. 2 Chain sub-assembly	Maximum chain elongation	102.1 mm (4.019 in.)
Camshaft timing gear assembly	Minimum gear or sprocket diameter (with chain)	96.8 mm (3.811 in.)
Camshaft timing exhaust gear assembly	Minimum gear or sprocket diameter (with chain)	96.8 mm (3.811 in.)
Camshaft (Intake)		
Maximum circle runout		0.04 mm (0.0016 in.)
Standard cam lobe height		42.816 to 42.916 mm (1.6857 to 1.6896 in.)
Maximum cam lobe height		42.666 mm (1.6798 in.)
No. 1 journal diameter		34.449 to 34.465 mm (1.3563 to 1.3569 in.)
Other journal diameter		22.949 to 22.965 mm (0.9035 to 0.9041 in.)
Standard thrust clearance	Intake	0.06 to 0.155 mm (0.0024 to 0.0061 in.)
Maximum thrust clearance		0.17 mm (0.0067 in.)
Standard oil clearance	Camshaft No. 1 journal	0.03 to 0.063 mm (0.0012 to 0.0025 in.)
	Camshaft Other journals	0.035 to 0.072 mm (0.0014 to 0.0028 in.)
Maximum oil clearance camshaft No. 1 journal		0.085 mm (0.0033 in.)
Maximum oil clearance camshaft other journals		0.09 mm (0.0035 in.)
Camshaft No. 2 (Exhaust)		
Maximum circle runout		0.04 mm (0.0016 in.)
Standard cam lobe height		44.336 to 44.436 mm (1.7455 to 1.7494 in.)
Minimum cam lobe height		44.186 mm (1.7396 in.)

No. 1 journal diameter		34.449 to 34.465 mm (1.3563 to 1.3569 in.)
Other journal diameter		22.949 to 22.965 mm (0.9035 to 0.9041 in.)
Standard thrust clearance	Exhaust	0.06 to 0.155 mm (0.0024 to 0.0061 in.)
Maximum thrust clearance		0.17 mm (0.0067 in.)
Standard oil clearance	Camshaft No. 1 journal	0.03 to 0.079 mm (0.0012 to 0.0031 in.)
	Camshaft Other journals	0.035 to 0.072 mm (0.0014 to 0.0028 in.)
Maximum oil clearance camshaft No. 1 journal		0.085 mm (0.0033 in.)
Maximum oil clearance camshaft other journals		0.09 mm (0.0035 in.)
Exhaust manifold	Maximum warpage	0.70 mm (0.028 in.)
Cylinder head		
Maximum warpage	Cylinder block side	0.05 mm (0.0020 in.)
	Intake manifold side	0.10 mm (0.0039 in.)
	Exhaust manifold side	0.10 mm (0.0039 in.)
Compression spring	Free length	53.36 mm (2.1008 in.)
	Maximum deviation	1.0 mm (0.0394 in.)
Intake valve	Standard overall length	109.34 mm (4.3047 in.)
	Minimum overall length	108.84 mm (4.2850 in.)
	Valve stem diameter	5.470 to 5.485 mm (0.2154 to 0.2159 in.)
	Standard margin thickness	1.0 mm (0.0394 in.)
	Minimum margin thickness	0.50 mm (0.0197 in.)
	Valve seat width	1.0 to 1.4 mm (0.039 to 0.055 in.)
Exhaust valve	Standard overall length	108.25 mm (4.2618 in.)
	Minimum overall length	107.75 mm (4.2421 in.)
	Valve stem diameter	5.465 to 5.480 mm (0.2152 to 0.2157 in.)
	Standard margin thickness	1.01 mm (0.0398 in.)
	Minimum margin thickness	0.50 mm (0.0197 in.)
	Valve seat width	1.0 to 1.4 mm (0.039 to 0.55 in)

Intake valve guide bush	Bush inside diameter	5.510 to 5.530 mm (0.2169 to 0.2177 in.)
	Standard bush oil clearance	0.025 to 0.060 mm (0.0010 to 0.0024 in.)
	Maximum bush oil clearance	0.080 mm (0.0031 in.)
Bush bore diameter	Use STD	10.285 to 10.306 mm (0.4049 to 0.4057 in.)
	Use O/S 0.05	10.335 to 10.356 mm (0.4069 to 0.4077 in.)
Protrusion height (bush)		9.9 to 10.3 mm (0.3898 to 0.4055 in.)
Standard oil clearance		0.025 to 0.060 mm (0.0010 to 0.0024 in.)
Exhaust valve guide bush	Bush inside diameter	5.510 to 5.530 mm (0.2169 to 0.2177 in.)
	Standard oil clearance	0.030 to 0.065 mm (0.0012 to 0.0026 in.)
	Maximum oil clearance	0.085 mm (0.0033 in.)
Bush bore diameter	Use STD	10.285 to 10.306 mm (0.4049 to 0.4057 in.)
	Use O/S 0.05	10.335 to 10.356 mm (0.4069 to 0.4077 in.)
Protrusion height		11.15 to 11.55 mm (0.4390 to 0.4547 in.)
Standard oil clearance		0.030 to 0.065 mm (0.0012 to 0.0026 in.)
Protrusion height (ring pin)		6.5 to 7.5 mm (0.26 to 0.30 in.)
Valve seat width		1.0 to 1.4 mm (0.039 to 0.055 in.)
Connecting rod		
Standard oil clearance		0.03 to 0.062 mm (0.0012 to 0.0024 in.)
Maximum oil clearance		0.07 mm (0.0028 in.)
Standard oil clearance		0.016 to 0.039 mm (0.0006 to 0.0015 in.)
Maximum oil clearance		0.05 mm (0.0020 in.)
Connecting rod bearing thickness	Mark 1	1.489 to 1.493 mm (0.0586 to 0.0588 in.)

	Mark 2		1.494 to 1.497 mm (0.0588 to 0.0589 in.)
	Mark 3		1.498 to 1.501 mm (0.0590 to 0.0591 in.)
Connecting rod small end bore diameter			20.012 to 20.021 mm (0.7879 to 0.7882 in.)
Connecting rod small end bore diameter (Reference)	Mark A		20.012 to 20.015 mm (0.7879 to 0.7880 in.)
	Mark B		20.016 to 20.018 mm (0.7880 to 0.7881 in.)
	Mark C		20.019 to 20.021 mm (0.7881 to 0.7882 in.)
Connecting rod large end bore diameter (Resistance)	Mark 1		47.000 to 47.008 mm (1.8504 to 1.8507 in.)
	Mark 2		47.009 to 47.016 mm (1.8507 to 1.8510 in.)
	Mark 3		47.017 to 47.024 mm (1.8510 to 1.8513 in.)
Crankshaft pin diameter	Mark 1		43.992 to 44.000 mm (1.7320 to 1.7323 in.)
	Mark 2		43.992 to 44.000 mm (1.7320 to 1.7323 in.)
	Mark 3		43.992 to 44.000 mm (1.7320 to 1.7323 in.)
Standard oil clearance			0.005 to 0.011 mm (0.0002 to 0.0004 in.)
Maximum oil clearance			0.014 mm (0.0006 in.)
Maximum rod out-of alignment per 100 mm (3.94 in.)			0.05 mm (0.0020 in.)
Maximum rod twist per 100 mm (3.94 in.)			0.15 mm (0.0059 in.)
Cylinder block	Maximum warpage		0.05 mm (0.0020 in.)
	Standard cylinder bore diameter		80.500 to 80.513 mm (3.1693 to 3.1698 in.)
	Maximum cylinder bore diameter		80.633 mm (3.1745 in.)
	Protrusion height (ring pin)		7.5 to 8.5 mm (0.295 to 0.335 in.)
	Protrusion height (straight pin)	Pin A	18.5 to 19.5 mm (0.729 to 0.768 in.)

		Pin B	5.0 to 7.0 mm (0.197 to 0.276 in.)
		Pin C	11 to 13 mm (0.433 to 0.512 in.)
		Pin D	5.0 to 7.0 mm (0.197 to 0.276 in.)
		Pin E	5.0 to 6.0 mm (0.197 to 0.236 in.)
No. 1 ventilation case	Seal packing		2.0 mm (0.0787 in.)
Piston			
Standard piston diameter			80.461 to 80.471 mm (3.1677 to 3.1681 in.)
Standard piston oil clearance			0.029 to 0.052 mm (0.0011 to 0.0020 in.)
Maximum piston oil clearance			0.09 mm (0.0035 in.)
Piston pin bore diameter			20.006 to 20.015 mm (0.7876 to 0.7880 in.)
Piston pin bore diameter (Reference)	Mark A		20.006 to 20.009 mm (0.7876 to 0.7878 in.)
	Mark B		20.010 to 20.012 mm (0.7878 to 0.7879 in.)
	Mark C		20.013 to 20.015 mm (0.7879 to 0.7880 in.)
Piston ring			
Ring groove clearance	No. 1 Ring		0.020 to 0.070 mm (0.0008 to 0.0028 in.)
	No. 2 Ring		0.020 to 0.060 mm (0.0008 to 0.0024 in.)
	Oil Ring		0.020 to 0.065 mm (0.0008 to 0.0026 in.)
Standard end gap	No. 1 Ring		0.2 to 0.3 mm (0.0079 to 0.0118 in.)
	No. 2 Ring		0.3 to 0.5 mm (0.0118 to 0.0197 in.)
	Oil Ring		0.1 to 0.4 mm (0.0039 to 0.0157 in.)
Maximum end gap	No. 1 Ring		0.5 mm (0.0197 in.)
	No. 2 Ring		0.7 mm (0.0276 in.)
	Oil Ring		0.7 mm (0.0276 in.)

Piston pin		
Piston pin diameter		20.004 to 20.013 mm (0.7876 to 0.7879 in.)
Piston pin diameter (Resistance)	Mark A	20.004 to 20.007 mm (0.7876 to 0.7877 in.)
	Mark B	20.008 to 20.010 mm (0.7877 to 0.7878 in.)
	Mark C	20.011 to 20.013 mm (0.7878 to 0.7879 in.)
Standard oil clearance		-0.001 to 0.005 mm (-0.00004 to 0.0002 in.)
Maximum oil clearance		0.010 mm (0.0004 in.)
Connecting rod bolt	Standard diameter	6.6 to 6.7 mm (0.2598 to 0.2638 in.)
	Minimum diameter	6.4 mm (0.252 in.)
Crankshaft		
Standard thrust clearance		0.04 to 0.14 mm (0.0016 to 0.0055 in.)
Maximum thrust clearance		0.18 mm (0.0071 in.)
Thrust washer thickness		2.43 to 2.48 mm (0.0957 to 0.0976 in.)
Cylinder block main journal bore diameter (Reference)	Mark 0	52.000 to 52.003 mm (2.0472 to 2.0474 in.)
	Mark 1	52.003 to 52.005 mm (2.0474 to 2.0474 in.)
	Mark 2	52.005 to 52.007 mm (2.0474 to 2.0475 in.)
	Mark 3	52.007 to 52.010 mm (2.0475 to 2.0476 in.)
	Mark 4	52.010 to 52.012 mm (2.0476 to 2.0477 in.)
	Mark 5	52.012 to 52.014 mm (2.0477 to 2.0478 in.)
	Mark 6	52.014 to 52.016 mm (2.0478 to 2.0479 in.)
Main journal diameter		47.988 to 48.000 mm (1.8893 to 1.8898 in.)
Maximum taper and distortion		0.004 mm (0.0002 in.)

Main journal diameter (Reference)	Mark 0	47.999 to 48.000 mm (1.8897 to 1.8898 in.)
	Mark 1	47.997 to 47.998 mm (1.8896 to 1.8897 in.)
	Mark 2	47.995 to 47.996 mm (1.8896 to 1.8896 in.)
	Mark 3	47.993 to 47.994 mm (1.8895 to 1.8895 in.)
	Mark 4	47.991 to 47.992 mm (1.8894 to 1.8894 in.)
	Mark 5	47.988 to 47.990 mm (1.8893 to 1.8894 in.)
Crankshaft journal diameter (Reference)	Mark 0	47.999 to 48.000 mm (1.8897 to 1.8898 in.)
	Mark 1	47.997 to 47.998 mm (1.8896 to 1.8897 in.)
	Mark 2	47.995 to 47.996 mm (1.8896 to 1.8896 in.)
	Mark 3	47.993 to 47.994 mm (1.8895 to 1.8895 in.)
	Mark 4	47.991 to 47.992 mm (1.8894 to 1.8894 in.)
	Mark 5	47.988 to 47.990 mm (1.8893 to 1.8894 in.)
Standard main bearing center wall thickness (Reference)	Mark 1	1.994 to 1.997 mm (0.0785 to 0.0786 in.)
	Mark 2	1.998 to 2.000 mm (0.0787 to 0.0787 in.)
	Mark 3	2.001 to 2.003 mm (0.0788 to 0.0789 in.)
	Mark 4	2.004 to 2.006 mm (0.0789 to 0.0790 in.)
Maximum circle runout		0.03 mm (0.0012 in.)
Standard oil clearance		0.016 to 0.039 mm (0.0006 to 0.0015 in.)
Maximum oil clearance		0.050 mm (0.0020 in.)
Crank pin diameter		43.992 to 44.000 mm (1.7320 to 1.7323 in.)
Maximum taper and distortion		0.004 mm (0.0002 in.)

Crankshaft bearing cap set bolt	Standard diameter	84.3 to 85.7 mm (3.3189 to 3.3740 in.)
	Minimum diameter	86.7 mm (3.4134 in.)
Crankshaft bearing	Dimension A	0.5 to 1.0 mm (0.020 to 0.039 in.)
	Dimension A-B	0.5 mm (0.0197 in.) or less

Last Modified: 3-10-2010	6.4 F	**From:** 200901
Model Year: 2010	**Model:** Corolla	**Doc ID:** RM0000036OC00RX
Title: SPECIFICATIONS: 2ZR-FE ENGINE CONTROL: TORQUE SPECIFICATIONS (2010 Corolla)		

TORQUE SPECIFICATIONS

PART TIGHTENED		N*M	KGF*CM	FT.*LBF
Camshaft timing oil control valve assembly x Cylinder head cover sub-assembly		10	102	7
Throttle body x Intake manifold		10	102	7
ECM x Bracket		8.8	90	78 in.*lbf
ECM x Body		8.0	82	71 in.*lbf
Accelerator pedal assembly x Body		5.5	56	49 in.*lbf
Mass air flow meter x Air cleaner cap		1.0	10	9 in.*lbf
No. 1 crank position sensor x Cylinder head cover sub-assembly		10	102	7
Crankshaft position sensor x Timing chain cover		10	102	7
Spark plug x Cylinder head sub-assembly		20	204	15
Ignition coil assembly x Cylinder head cover sub-assembly		10	102	7
Engine coolant temperature sensor x Cylinder head sub-assembly		20	200	14
Knock sensor x Cylinder block		20	204	15
Air fuel ratio sensor x Exhaust manifold	Without SST	44	449	32
	With SST	40	408	30
Heated oxygen sensor x Front exhaust pipe assembly	Without SST	44	449	32
	With SST	40	408	30

Last Modified: 3-10-2010	6.4 F	**From:** 200901
Model Year: 2010	**Model:** Corolla	**Doc ID:** RM000002PM100SX
Title: SPECIFICATIONS: 2ZR-FE ENGINE MECHANICAL: TORQUE SPECIFICATIONS (2010 Corolla)		

TORQUE SPECIFICATIONS

PART TIGHTENED		N*M	KGF*CM	FT.*LBF
Engine mounting bracket RH x Timing chain cover		51	520	37
Engine mounting bracket RH x Engine mounting insulator RH	Nut A	95	969	70
	Nut B	52	530	38
	Bolt	95	969	70
Engine mounting insulator RH x Body		52	530	38
Engine mounting insulator LH x Engine mounting bracket LH		56	571	41
Engine mounting insulator LH x Body		52	530	38
Front engine mounting bracket x Front engine mounting insulator		73	744	54
Front engine mounting insulator x Front crossmember	for TMMT made	81	826	60
	for TMC made	52	520	38
Rear engine mounting bracket x Rear engine mounting insulator	for TMMT made	65	663	50
	for TMC made	87	887	64
Rear engine mounting insulator x Front suspension crossmember sub-assembly		52	530	38
Engine hanger x Cylinder head		43	439	32
Knock control sensor x Cylinder block		20	204	15
Engine oil pressure switch assembly x Cylinder head		15	153	11
Engine coolant temperature x Cylinder head		20	204	15
No. 1 Water by-pass pipe x Cylinder block		21	214	16
Exhaust manifold x Cylinder head		21	214	16
Exhaust manifold stay x Exhaust manifold		43	439	32
Exhaust manifold stay x Cylinder block		43	439	32
Air tube x Cylinder head cover		10	102	7
No. 1 exhaust manifold heat insulator X Exhaust manifold		12	122	9
Oil level dipstick guide x Cylinder block		21	214	16
Intake manifold x Cylinder head		28	286	21

PART TIGHTENED		N*M	KGF*CM	FT.*LBF
Drive plate and ring gear x Crankshaft		88	897	65
Drive plate and ring gear x Torque converter		28	286	21
Flywheel sub-assembly x Crankshaft	1st	49	500	36
	2nd	Turn 90°	Turn 90°	Turn 90°
Clutch release cylinder assembly x Transaxle	Bolt A,B	12	122	9
	Bolt C	8.0	82	71 in.*lbf
Battery carrier x Body		13	130	9
Radiator pipe x Battery carrier		8.8	90	78 in.*lbf
Battery clamp x Body	Bolt	17	170	12
	Nut	3.5	36	31 in.*lbf
Battery terminal		5.4	55	48 in.*lbf
Air cleaner case x Body		7.0	71	62 in.*lbf
Stiffening crankcase assembly x Cylinder block		21	214	16
No. 1 oil nozzle sub-assembly x Cylinder block		10	102	7
No. 1 ventilation case x Cylinder block		10	102	7
Cylinder block water drain cock x Stiffening crankcase assembly		20 13	204 130	15 9
Cylinder head x Cylinder block	1st	49	500	36
	2nd	Turn 90°	Turn 90°	Turn 90°
	3nd	Turn 45°	Turn 45°	Turn 45°
Camshaft timing gear assembly x Camshaft		54	551	40
Camshaft timing exhaust gear x Camshaft	With SST	39	397	29
	Without SST	54	551	40
Camshaft bearing cap x Cylinder head		27	275	20
Camshaft bearing cap x Camshaft housing		16	163	12
Camshaft housing x Cylinder head		27	275	20
Oil pump assembly x Stiffening crankcase assembly		21	214	16

PART TIGHTENED		N*M	KGF*CM	FT.*LBF
Chain tensioner plate x Stiffening crankcase assembly		10	102	7
Oil pump drive shaft gear x Oil pump		28	286	21
No. 2 chain vibration damper x Cylinder head	With SST	5.5	56	48 in.*lbf
	Without SST	10	102	7
No. 1 chain vibration damper x Cylinder block		21	214	16
No. 2 Oil pan sub-assembly x Stiffening crankcase assembly		10	102	7
Oil pan drain plug x Oil pan		37	377	27
Water pump x Timing chain cover		24	241	17
Water inlet housing x Timing chain cover		21	214	16
Water inlet x Water inlet housing		10	102	7
Oil filter bracket x Timing chain cover		26	260	19
Camshaft oil control valve x Cylinder head cover		10	102	7
Timing chain cover x Cylinder block, Cylinder head	Bolt A	26	260	19
	Bolt B	51	520	38
	Bolt C	51	520	38
	Bolt D	10	102	7
	Bolt E	26	260	19
Crankshaft position sensor x Timing chain cover		10	102	7 ft.*lbf
Crankshaft pulley x Crankshaft		190	1940	140
No. 1 chain tensioner assembly x Timing chain cover		10	102	7 ft.*lbf
No. 1 generator bracket x Cylinder block		21	214	16
Fan belt adjusting bar x Cylinder head		19	190	14
Fan belt adjusting bar x Generator assembly		19	190	14
Camshaft position sensor x Cylinder head cover		10	102	7
Radio setting condenser x Cylinder head		10	102	7
Cylinder head cover x Cylinder head		10	102	7
Ignition coil assembly x Cylinder head		10	102	7
Spark plug x Cylinder head		20	204	15
No. 2 straight screw plug x Cylinder head		44	449	33
Ventilation valve x Cylinder block		20	204	15
Stud bolt x Cylinder head	Bolt A	9.5	97	84 in.*lbf

PART TIGHTENED		N*M	KGF*CM	FT.*LBF
	Bolt B	9.5	97	84 in.*lbf
Stud bolt x Crankcase		5.0	51	44 in.*lbf
Stud bolt x No. 1 ventilation case		10	102	7
Crankshaft bearing cap x Cylinder block	1st	40	408	30
	2nd	Turn 90°	Turn 90°	Turn 90°
Wire harness bracket x Cylinder head		52	530	38
Radiator reserve tank x Body		7.0	71	62 in.*lbf
Connecting rod cap x Connecting rod	1st	20	204	15
	2nd	Turn 90°	Turn 90°	Turn 90°

Last Modified: 3-10-2010	6.4 F	**From:** 200901
Model Year: 2010	**Model:** Corolla	**Doc ID:** RM000001SB900OX
Title: SPECIFICATIONS: 2ZR-FE FUEL: SERVICE DATA (2010 Corolla)		

SERVICE DATA

Fuel pressure	Standard fuel pressure	304 to 343 kPa (3.1 to 3.5 kgf/cm^2, 44.1 to 49.7 psi)
Fuel pressure : at fuel pressure remains for 5 minutes after engine has stopped	Standard fuel pressure	147 kPa (1.5 kgf/cm^2, 21 psi) or more
Fuel injector assembly	Standard resistance	11.6 to 12.4 Ω at 20°C (68°F)
	Injection volume	60 to 73 cc (3.7 to 4.5 cu in.) per 15 seconds
	Difference between each fuel injector	13 cc (0.8 cu in.) or less
	Standard leakage	1 drop or less every 12 minutes
Fuel pump	Standard resistance	0.2 to 3.0 Ω at 20°C (68°F)
Fuel Sender gauge assembly	Standard resistance	13.5 to 16.5 Ω (Float level F)
		13.5 to 414.5 Ω (Float level E to F)
		405.5 to 414.5 Ω (Float level E)

Last Modified: 3-10-2010	6.4 F	**From:** 200901
Model Year: 2010	**Model:** Corolla	**Doc ID:** RM000001SBA00OX
Title: SPECIFICATIONS: 2ZR-FE FUEL: TORQUE SPECIFICATIONS (2010 Corolla)		

TORQUE SPECIFICATIONS

PART TIGHTENED	N*M	KGF*CM	FT.*LBF
Fuel delivery pipe sub-assembly x Cylinder head sub-assembly	21	214	15
Fuel delivery pipe sub-assembly x Cylinder head sub-assembly	21	214	15
Fuel tank band x Body	39	400	29
Parking brake cable assembly x Body	5.4	55	48 in.*lbf
No. 1 fuel tank protector x Fuel tank band	5.5	56	49 in.*lbf
No. 1 fuel tank protector x Body	5.5	56	49 in.*lbf
Wire harness bracket x Intake manifold	5.0	51	44 in.*lbf
Wire harness bracket x Cylinder head sub-assembly	13	133	10

Last Modified: 3-10-2010	6.4 F	**From:** 200901
Model Year: 2010	**Model:** Corolla	**Doc ID:** RM000003K66001X
Title: SPECIFICATIONS: 2ZR-FE INTAKE / EXHAUST: SERVICE DATA (2010 Corolla)		

SERVICE DATA

Compression spring	Front exhaust pipe assembly x Exhaust manifold converter sub-assembly.	Minimum length: 41.5 mm (1.63 in.)
	Front exhaust pipe assembly x Tail exhaust pipe assembly	Minimum length: 38.5 mm (1.52 in.)

Last Modified: 3-10-2010	6.4 F	**From:** 200901
Model Year: 2010	**Model:** Corolla	**Doc ID:** RM000003K67001X
Title: SPECIFICATIONS: 2ZR-FE INTAKE / EXHAUST: TORQUE SPECIFICATIONS (2010 Corolla)		

TORQUE SPECIFICATIONS

PART TIGHTENED	N*M	KGF*CM	FT.*LBF
Front exhaust pipe assembly x Exhaust manifold	43	440	32
Front exhaust pipe assembly x Tail exhaust pipe assembly	43	440	32
Exhaust manifold x Cylinder head assembly	21	214	16
No. 1 exhaust manifold heat insulator x Exhaust manifold	12	122	9
No. 2 exhaust manifold heat insulator x Exhaust manifold	12	122	9
Manifold stay x Cylinder block assembly	43	439	32
Manifold stay x Exhaust manifold assembly	43	439	32
Intake manifold x Cylinder head assembly	28	286	21
Bracket x Cylinder head assembly	10	102	8

Last Modified: 3-10-2010	6.4 F	**From:** 200901
Model Year: 2010	**Model:** Corolla	**Doc ID:** RM00000343500EX
Title: SPECIFICATIONS: 2ZR-FE LUBRICATION: SERVICE DATA (2010 Corolla)		

SERVICE DATA

Oil pump assembly		
Tip clearance	Standard	0.08 to 0.0160 mm (0.0031 to 0.0063 in.)
	Maximum	0.35 mm (0.0138 in.)
Side clearance	Standard	0.003 to 0.08 mm (0.0011 to 0.0031 in.)
	Maximum	0.16 mm (0.0063 in.)
Body clearance	Standard	0.12 to 0.19 mm (0.0047 to 0.0075 in.)
	Maximum	0.325 mm (0.0128 in.)
Oil pressure	at idle	25 kPa (0.3 kgf/cm^2, 3.6 psi) or more
	at 3,000 rpm	150 to 400 kPa (1.5 to 4.1 kgf/cm^2, 22 to 58 psi)

Last Modified: 3-10-2010	6.4 F	**From:** 200901
Model Year: 2010	**Model:** Corolla	**Doc ID:** RM00000343600EX
Title: SPECIFICATIONS: 2ZR-FE LUBRICATION: TORQUE SPECIFICATIONS (2010 Corolla)		

TORQUE SPECIFICATIONS

PART TIGHTENED		N*M	KGF*CM	FT.*LBF
Oil pressure switch x Cylinder block		15	153	11
No. 2 oil pan sub-assembly x Cylinder block		10	102	7
Oil filter cap assembly x Oil filter bracket		25	255	18
Oil pan drain plug x Oil pan sub-assembly		37	377	27
Oil pump relief valve plug x Oil pump body		49	500	36
Oil pump cover x Oil pump body		8.8	90	78in.*lbf
Oil pump assembly x Cylinder block sub-assembly		21	214	16
Chain tensioner plate x Engine		10	102	7
Oil pump drive shaft gear x Engine		28	286	21
Water pump x Cylinder block sub-assembly		21	214	16
Timing chain cover sub-assembly x Cylinder block sub-assembly	A, E	26	260	19
	B, C	51	520	37
	D	10	102	7
No. 2 chain vibration damper		10	102	7

Last Modified: 3-10-2010	6.4 F	**From:** 200901
Model Year: 2010	**Model:** Corolla	**Doc ID:** RM00000313400TX
Title: SPECIFICATIONS: 2ZR-FE STARTING: SERVICE DATA (2010 Corolla)		

SERVICE DATA

Starter assembly	Standard current	Below 90 A at 11.5 V
Starter relay	Standard resistance 3 - 5	Below 1 Ω (battery voltage is applied to terminals 1 and 2)
		10 kΩ or higher (battery voltage is not applied to terminals 1 and 2)
Acc relay	Standard resistance 3 - 5	Below 1 Ω (battery voltage is applied to terminals 1 and 2)
		10 kΩ or higher (battery voltage is not applied to terminals 1 and 2)
Acc cut relay	Standard resistance 3 - 4	Below 1 Ω (battery voltage is applied to terminals 1 and 2)
		10 kΩ or higher (battery voltage is not applied to terminals 1 and 2)
	Standard resistance 3 - 5	Below 1 Ω (battery voltage is applied to terminals 1 and 2)
		10 kΩ or higher (battery voltage is not applied to terminals 1 and 2)
Engine switch	Standard resistance 7 - 5	Below 1 Ω (Pushed)
	Standard resistance 2 - 5	
	Standard resistance 7 - 5	10 kΩ or higher (Not pushed)
	Standard resistance 2 - 5	
Ignition switch	Standard resistance Between all terminals	10 kΩ or higher (LOCK)
	Standard resistance 2 - 3	Below 1 Ω (ACC)
	Standard resistance 2 - 3	Below 1 Ω (ON)
	Standard resistance 2 - 4	

	Standard resistance 6 - 7	
	Standard resistance 1 - 2	Below 1 Ω (START)
	Standard resistance 1 - 4	
	Standard resistance 6 - 7	
	Standard resistance 6 - 8	
Starter armature assembly resistance	Segment - Segment	Below 1 Ω
	Commutator - Armature coil	10 kΩ or higher
Starter armature assembly commutator diameter	Standard diameter	29 mm (1.14 in.)
	Minimum diameter	28 mm (1.10 in.)
Starter armature assembly commutator circle runout	Standard runout	0.02 mm (0.000787 in.)
	Maximum runout	0.05 mm (0.00197 in.)
Starter armature assembly commutator undercut depth	Standard runout	0.7 mm (0.0276 in.)
	Maximum runout	0.2 mm (0.00787 in.)
Starter brush holder assembly Brush length	Standard length	14.4 mm (0.567in.)
	Minimum length	9.0 mm (0.354 in.)
Starter brush holder assembly resistance	Standard resistance Positive brush holder - Negative brush holder	10 kΩ or higher
	Standard resistance Positive brush holder - Positive brush holder Negative brush holder - Negative brush holder	Below 1 Ω
Stater magnetic switch assembly resistance	Terminal 50 - Terminal C	Below 1 Ω
	Terminal 50 - Switch body	Below 2 Ω

Last Modified: 3-10-2010	6.4 F	**From:** 200901
Model Year: 2010	**Model:** Corolla	**Doc ID:** RM00000312N00WX
Title: SPECIFICATIONS: ALIGNMENT / HANDLING DIAGNOSIS: SERVICE DATA (2010 Corolla)		

SERVICE DATA

Vehicle Height (Unloaded Vehicle)

-	ENGINE	FRONT C - A	REAR D - B
for TMC Made	2ZR-FE	92 mm (3.62 in.)	45 mm (1.77 in.)
except TMC Made	2ZR-FE	92 mm (3.62 in.) 80 mm (3.15 in.)*	45 mm (1.77 in.) 32 mm (1.26 in.)*
	2AZ-FE	96 mm (3.78 in.) 81 mm (3.19 in.)*	51 mm (2.01 in.) 36 mm (1.42 in.)*

* For vehicle height for Mexico, add 15 mm (0.591 in.).

Measuring points:

A: No. 1 lower suspension arm bushing set bolt ground clearance

B: Rear axle beam set bolt ground clearance

C: Front wheel center ground clearance

D: Rear wheel center ground clearance

Wheel Angle (Unloaded Vehicle)

-	-	ENGINE	TIRE SIZE	INSIDE WHEEL	OUTSIDE WHEEL REFERENCE
Front	for TMC Made	2ZR-FE	195/65R15	38°13' +/- 2° (38.22° +/- 2°)	32°50' (32.83°)
			205/55R16		
	except TMC Made	2ZR-FE	195/65R15	38°13' +/- 2° (38.22° +/- 2°)	32°50' (32.83°)
			205/55R16	38°13' +/- 2° (38.22° +/- 2°) 38°31' +/- 2° (38.52° +/- 2°)*	32°50' (32.83°) 33°04' (33.07°)*
		2AZ-FE	205/55R16*	37°19' +/- 2° (37.32° +/- 2°)*	32°18' (32.30°)*
			215/45R17	36°59' +/- 2° (36.98° +/- 2°)	32°01' (32.02°)

* For vehicle height for Mexico, add 15 mm (0.591 in.).

Camber (Unloaded Vehicle)

-	-	ENGINE	TIRE SIZE	GRADE	CAMBER INCLINATION	RIGHT-LEFT DIFFERENCE
Front	for TMC Made	2ZR-FE	195/65R15	-	-0°35' +/- 45' (-0.58° +/- 0.75°)	45' (0.75°) or less
			205/55R16			
	except TMC Made	2ZR-FE	195/65R15	-	- 0°34' +/- 45' (- 0.57° +/- 0.75°)	
			205/55R16	-	- 0°35' +/- 45' (- 0.58° +/- 0.75°) - 0°26' +/- 45' (- 0.43° +/- 0.75°)*	
		2AZ-FE	205/55R16*	-	- 0°27' +/- 45' (- 0.45° +/- 0.75°)*	
			215/45R17	-	- 0°37' +/- 45' (- 0.62° +/- 0.75°)	
Rear	for TMC Made	-	-	except XRS	-1°28' +/- 30' (-1.47° +/- 0.50°)	30' (0.50°) or less
	except TMC Made	-	-	except XRS	-1°27' +/- 30' (-1.45° +/- 0.50°)	
		-	-	for XRS	-1°28' +/- 30' (-1.47° +/- 0.50°)	

* For vehicle height for Mexico, add 15 mm (0.591 in.).

Caster (Unloaded Vehicle)

-	-	ENGINE	TIRE SIZE	CASTER INCLINATION	RIGHT-LEFT DIFFERENCE
Front	for TMC Made	2ZR-FE	195/65R15	2°50' +/- 45' (2.83° +/- 0.75°)	45' (0.75°) or less
			205/55R16	2°51' +/- 45' (2.85° +/- 0.75°)	
	except TMC Made	2ZR-FE	195/65R15	2°50' +/- 45' (2.83° +/- 0.75°)	
			205/55R16	2°50' +/- 45' (2.83° +/- 0.75°) 2°41' +/- 45' (2.68° +/- 0.75°)*	
		2AZ-FE	205/55R16*	2°45' +/- 45' (2.75° +/- 0.75°)*	

-	-	ENGINE	TIRE SIZE	CASTER INCLINATION	RIGHT-LEFT DIFFERENCE
			215/45R17	2°55' +/- 45' (2.92° +/- 0.75°)	

* For vehicle height for Mexico, add 15 mm (0.591 in.).

Steering Axis Inclination (Unloaded Vehicle)

-	-	ENGINE	TIRE SIZE	STEERING AXIS INCLINATION
Front	for TMC Made	2ZR-FE	195/65R15	12°32' (12.53°)
			205/55R16	
	except TMC Made	2ZR-FE	195/65R15	12°32' (12.53°) 12°13' (12.22°)*
			205/55R16	
		2AZ-FE	205/55R16*	12°16' (12.27°)*
			215/45R17	12°37' (12.62°)

* For vehicle height for Mexico, add 15 mm (0.591 in.).

Toe-in

-	-	GRADE	SPECIFIED CONDITION	RIGHT-LEFT DIFFERENCE
Front	-	-	C + D: 0°00' +/- 0°12' (0° +/- 0.2°)	-
	-	-	B - A: 0 +/- 2.0 mm (0 +/- 0.0787 in.)	-
Rear	for TMC Made	except XRS	C + D: 0°16' +/- 15' (0.27° +/- 0.25°)	45' (0.75°) or less
			B - A: 2.8 +/- 2.7 mm (0.110 +/- 0.106 in.)	-
	except TMC Made	except XRS	C + D: 0°16' +/- 15' (0.27° +/- 0.25°) C + D: 0°16' +/- 15' (0.27° +/- 0.25°)*	45' (0.75°) or less
			B - A: 2.8 +/- 2.7 mm (0.110 +/- 0.106 in.) B - A: 2.0 +/- 2.8 mm (0.0787 +/- 0.110 in.)*	-
		for XRS	C + D: 0°16' +/- 15' (0.27° +/- 0.25°) C + D: 0°16' +/- 15' (0.27° +/- 0.25°)*	45' (0.75°) or less
			B - A: 3.1 +/- 2.6 mm (0.122 +/- 0.102 in.) B - A: 2.2 +/- 2.8 mm (0.0866 +/-	-

-	-	GRADE	SPECIFIED CONDITION	RIGHT-LEFT DIFFERENCE
			0.110 in.)*	

* For vehicle height for Mexico, add 15 mm (0.591 in.).

Last Modified: 3-10-2010	6.4 F	**From:** 200901
Model Year: 2010	**Model:** Corolla	**Doc ID:** RM00000313500TX
Title: SPECIFICATIONS: 2ZR-FE STARTING: TORQUE SPECIFICATIONS (2010 Corolla)		

TORQUE SPECIFICATIONS

PART TIGHTENED	N*M	KGF*CM	FT.*LBF
Stater assembly x Transaxle housing	37	377	27
Terminal 30 x Wire harness	9.8	100	87 in.*lbf
Terminal C x Lead wire	10	102	7.4
Commutator end frame x Starter brush holder assembly	1.5	15	13 in.*lbf
Commutator end frame x Starter housing	6.0	61	53 in.*lbf
Magnet starter switch assembly x Starter housing	7.5	77	66 in.*lbf

Last Modified: 3-10-2010	6.4 F	**From:** 200901
Model Year: 2010	**Model:** Corolla	**Doc ID:** RM00000312O00ZX
Title: SPECIFICATIONS: ALIGNMENT / HANDLING DIAGNOSIS: TORQUE SPECIFICATIONS (2010 Corolla)		

TORQUE SPECIFICATIONS

PART TIGHTENED	N*M	KGF*CM	FT.*LBF
Front shock absorber with coil spring x Steering knuckle	240	2448	176
Front flexible hose x Steering knuckle	29	296	21
Tie rod end lock nut	74	755	55

Last Modified: 3-10-2010	6.4 F	**From:** 200901
Model Year: 2010	**Model:** Corolla	**Doc ID:** RM0000030U600IX
Title: SPECIFICATIONS: AUDIO / VIDEO: TORQUE SPECIFICATIONS (2010 Corolla)		

TORQUE SPECIFICATIONS

PART TIGHTENED	N*M	KGF*CM	FT.*LBF
RADIO ANTENNA (for Satellite Radio)			
Satellite radio antenna assembly x Body	4.5	46	40 in.*lbf
RADIO ANTENNA CORD			
No. 2 antenna cord sub-assembly x Body	8.4	86	74 in.*lbf
STEERING PAD SWITCH			
Steering pad switch LH x Steering wheel assembly	2.4	24	21 in.*lbf
Steering pad switch assembly x Steering wheel assembly	2.4	24	21 in.*lbf

Last Modified: 3-10-2010	6.4 F	**From:** 200901
Model Year: 2010	**Model:** Corolla	**Doc ID:** RM000003K4K002X
Title: SPECIFICATIONS: AXLE AND DIFFERENTIAL: SERVICE DATA (2010 Corolla)		

SERVICE DATA

Axle

Front axle hub bearing looseness	Maximum looseness: 0.05 mm (0.00196 in.)
Front axle hub runout	Maximum runout: 0.03 mm (0.00118 in.)
Rear axle hub bearing looseness (for Rear drum brake)	Maximum looseness: 0.05 mm (0.00196 in.)
Rear axle hub runout (for Rear drum brake)	Maximum runout: 0.06 mm (0.00236 in.)
Rear axle hub bearing looseness (for Rear disc brake)	Maximum looseness: 0.05 mm (0.00196 in.)
Rear axle hub runout (for Rear disc brake)	Maximum runout: 0.06 mm (0.00236 in.)

Last Modified: 3-10-2010	6.4 F	**From:** 200901
Model Year: 2010	**Model:** Corolla	**Doc ID:** RM000003K4L002X
Title: SPECIFICATIONS: AXLE AND DIFFERENTIAL: TORQUE SPECIFICATIONS (2010 Corolla)		

TORQUE SPECIFICATIONS

Axle

PART TIGHTENED	N*M	KGF*CM	FT.*LBF
Front wheel	103	1050	76
Rear wheel	103	1050	76
Steering knuckle x Front disc brake dust cover	8.3	85	73 in.*lbf
Steering knuckle x Front disc brake caliper assembly	107	1089	79
Steering knuckle x Front shock absorber	240	2448	176
Front drive shaft assembly x Front axle hub nut	216	2203	158
Rear disc brake dust cover sub-assembly x Rear disc brake caliper assembly	63	642	46
Rear axle beam assembly x Rear axle hub and bearing assembly	100	1020	74

Last Modified: 3-10-2010	6.4 F	**From:** 200901
Model Year: 2010	**Model:** Corolla	**Doc ID:** RM000003EFG008X
Title: SPECIFICATIONS: BRAKE (FRONT): SERVICE DATA (2010 Corolla)		

SERVICE DATA

Front brake pad lining thickness	Standard	12.0 mm (0.472 in.)
	Minimum	1.0 mm (0.0394 in.)
Front brake disc thickness	Standard	22.0 mm (0.866 in.)
	Minimum	19.0 mm (0.748 in.)
Front brake disc runout	Maximum	0.05 mm (0.00197 in.)

Last Modified: 3-10-2010	6.4 F	**From:** 200901
Model Year: 2010	**Model:** Corolla	**Doc ID:** RM000003EFH008X
Title: SPECIFICATIONS: BRAKE (FRONT): TORQUE SPECIFICATIONS (2010 Corolla)		

TORQUE SPECIFICATIONS

PARTS TIGHTENED	N*M	KGF*CM	FT.*LBF
Front wheel	103	1050	76
Front disc brake cylinder assembly x Front disc brake cylinder mounting	34	347	25
Front disc brake cylinder mounting x Steering knuckle	107	1089	79
Front disc brake bleeder plug	8.3	85	73 in.*lbf
Front flexible hose x Front disc brake cylinder assembly	29	296	21
Front flexible hose x Absorber bracket	29	296	21
Brake line x Front flexible hose	14 (15)	143 (155)	10 (11)

(): For use without a union nut wrench

Last Modified: 3-10-2010	6.4 F	**From:** 200901
Model Year: 2010	**Model:** Corolla	**Doc ID:** RM000003ED300FX
Title: SPECIFICATIONS: BRAKE (REAR): SERVICE DATA (2010 Corolla)		

SERVICE DATA

for Disc Type

Rear disc brake pad lining thickness	Standard	9.5 mm (0.374 in.)
	Minimum	1.0 mm (0.0394 in.)
Rear brake disc thickness	Standard	9.0 mm (0.354 in.)
	Minimum	7.5 mm (0.295 in.)
Rear brake disc runout	Maximum	0.15 mm (0.00591 in.)

for Drum Type

Brake drum inside diameter	Standard	228.6 mm (9.00 in.)
	Maximum	229.6 mm (9.04 in.)
Rear brake shoe lining thickness	Standard	5.0 mm (0.197 in.)
	Minimum	1.0 mm (0.0394 in.)

Last Modified: 3-10-2010	6.4 F	**From:** 200901
Model Year: 2010	**Model:** Corolla	**Doc ID:** RM000003ED400GX
Title: SPECIFICATIONS: BRAKE (REAR): TORQUE SPECIFICATIONS (2010 Corolla)		

TORQUE SPECIFICATIONS

for Disc Type

PARTS TIGHTENED	N*M	KGF*CM	FT.*LBF
Rear wheel	103	1050	76
Rear brake flexible hose x Rear disc brake cylinder assembly	29	296	21
Rear disc brake cylinder assembly x Rear disc brake cylinder mounting	35	357	26
Rear disc brake cylinder mounting x Backing plate	63	642	46
No. 3 parking brake cable assembly x Rear axle beam	6.0	61	53 in.*lbf
Rear disc brake bleeder plug	10	102	7
Rear flexible hose x Rear axle beam	29	296	21
Rear flexible hose x Brake line	14 (15)	143 (155)	10 (11)

for Drum Type

PARTS TIGHTENED	N*M	KGF*CM	FT.*LBF
Rear wheel	103	1050	76
Rear wheel brake cylinder assembly x Backing plate	9.8	100	87 in.*lbf
Rear drum brake bleeder plug	8.5	87	75 in.*lbf
Rear wheel brake cylinder assembly x Brake line	14 (15)	143 (155)	10 (11)
Rear flexible hose x Brake line	14 (15)	143 (155)	10 (11)

(): For use without a union nut wrench

Last Modified: 3-10-2010	6.4 F	**From:** 200901
Model Year: 2010	**Model:** Corolla	**Doc ID:** RM000003K1Z002X
Title: SPECIFICATIONS: BRAKE CONTROL / DYNAMIC CONTROL SYSTEMS: SERVICE DATA (2010 Corolla)		

SERVICE DATA

VSC off switch.	3 - 6	Released	10 kΩ or higher
	3 - 6	Pushed in	Below 25 Ω
	4 - 5	Battery's positive (+) lead connected to terminal 5 and negative (-) lead to terminal 4	LED illuminates

Last Modified: 3-10-2010	6.4 F	**From:** 200901
Model Year: 2010	**Model:** Corolla	**Doc ID:** RM000003K20002X
Title: SPECIFICATIONS: BRAKE CONTROL / DYNAMIC CONTROL SYSTEMS: TORQUE SPECIFICATIONS (2010 Corolla)		

TORQUE SPECIFICATIONS

PART TIGHTENED			N*M	KGF*CM	FT.*LBF
Brake actuator x Brake actuator bracket			5.4	55	48 in.*lbf
Brake actuator bracket x Body			19	194	14
Brake actuator x Brake line	w/o VSC		14 (15)	143 (155)	10 (11)
	w/ VSC	Flare nut (10 mm)	14 (15)	143 (155)	10 (11)
		Flare nut (12 mm)	18 (20)	178 (200)	13 (14)
Front speed sensor x Knuckle			8.5	87	76 in.*lbf
Front speed sensor x Body			8.0	82	71 in.*lbf
Front speed sensor with brake flexible hose x Absorber			29	296	21
Windshield washer jar assembly x Body			5.5	56	49 in.*lbf
Radiator reserve tank assembly x Body			7.0	71	62 in.*lbf
Yaw rate and acceleration sensor x Body			20	204	15

( ) For use without union nut wrench

Last Modified: 3-10-2010	6.4 F	**From:** 200901
Model Year: 2010	**Model:** Corolla	**Doc ID:** RM000002Z3V00BX
Title: SPECIFICATIONS: BRAKE SYSTEM (OTHER): SERVICE DATA (2010 Corolla)		

SERVICE DATA

Brake pedal height from dash panel		141.4 to 151.4 mm (5.57 to 5.96 in.)
Brake pedal free play		1.0 to 6.0 mm (0.0394 to 0.236 in.)
Brake pedal reserve distance from dash panel at 294 N (30 kgf, 66 lbf)	w/ ABS	81 mm (3.19 in.)
	w/ VSC	87 mm (3.43 in.)

Last Modified: 3-10-2010	6.4 F	**From:** 200901
Model Year: 2010	**Model:** Corolla	**Doc ID:** RM0000029K5012X
Title: SPECIFICATIONS: C59 MANUAL TRANSMISSION / TRANSAXLE: SERVICE DATA (2010 Corolla)		

SERVICE DATA

5th gear thrust clearance	Standard Maximum	0.10 to 0.55 mm (0.00394 to 0.0217 in.) 0.55 mm (0.0217 in.)
5th gear radial clearance	NSK made Standard Maximum JTEKT made Standard Maximum	0.015 to 0.056 mm (0.000591 to 0.00220 in.) 0.056 mm (0.00220 in.) 0.015 to 0.058 mm (0.000591 to 0.00228 in.) 0.058 mm (0.00228 in.)
No. 3 synchronizer ring back and 5th gear spline end clearance	Standard	0.75 to 1.65 mm (0.0295 to 0.0649 in.)
	Minimum	0.75 mm (0.0295 in.)
No. 3 transmission hub sleeve and No. 3 gear shift fork clearance	Standard	0.3 to 0.5 mm (0.0118 to 0.0197 in.)
5th gear inner diameter	Standard Maximum	29.915 to 29.931 mm (1.1778 to 1.1783 in.) 29.931 mm (1.1783 in.)
Reverse idler gear inner diameter	Standard Maximum	18.040 to 18.058 mm (0.7102 to 0.7109 in.) 18.058 mm (0.7109 in.)
Reverse idler gear outer diameter	Standard Minimum	17.966 to 17.984 mm (0.7073 to 0.7080 in.) 17.966 mm (0.7073 in.)
Front transaxle case oil seal drive in depth	-	15.6 mm to 16.0 mm (0.6141 to 0.6299 in.)
Input shaft front bearing drive in depth	-	0 to 0.3 mm (0 to 0.0118 in.)
Shift and select lever shaft slide ball bearing drive in depth	-	0 to 0.5 mm (0 to 0.0197 in.)
Shift and select lever shaft oil seal drive in depth	-	9.7 to 10.3 mm (0.382 to 0.406 in.)
Front differential case tapered roller bearing preload	New bearing Used bearing	0.8 to 1.5 N*m (8 to 16 kgf*cm, 7 to 13 in.*lbf) 0.5 to 0.9 N*m (5 to 10 kgf*cm, 5 to 8 in.*lbf)

Front differential case shim thickness	AA BB CC DD EE FF GG HH JJ KK LL MM NN PP QQ RR SS TT UU	2.10 mm (0.0827 in.) 2.15 mm (0.0846 in.) 2.20 mm (0.0866 in.) 2.25 mm (0.0886 in.) 2.30 mm (0.0906 in.) 2.35 mm (0.0925 in.) 2.40 mm (0.0945 in.) 2.45 mm (0.0965 in.) 2.50 mm (0.0984 in.) 2.55 mm (0.1004 in.) 2.60 mm (0.1024 in.) 2.65 mm (0.1043 in.) 2.70 mm (0.1063 in.) 2.75 mm (0.1083 in.) 2.80 mm (0.1102 in.) 2.85 mm (0.1122 in.) 2.90 mm (0.1142 in.) 2.95 mm (0.1161 in.) 3.00 mm (0.1181 in.)
Transmission case oil seal drive in depth	-	9.6 to 10.2 mm (0.378 to 0.402 in.)
Transaxle case oil seal drive in depth	-	1.6 to 2.2 mm (0.0630 to 0.0866 in.)
Reverse restrict pin slotted pin drive in depth	-	15.5 to 16.5 mm (0.6102 to 0.6496 in.)
No. 3 transmission clutch hub snap ring thickness	A B C D E F G	2.25 mm (0.0886 in.) 2.31 mm (0.0909 in.) 2.37 mm (0.0933 in.) 2.43 mm (0.0957 in.) 2.49 mm (0.0980 in.) 2.55 mm (0.1004 in.) 2.61 mm (0.1028 in.)
Control shaft cover oil seal drive in depth	-	0.2 to 1.2 mm (0.00787 to 0.0472 in.)
4th gear thrust clearance	Standard Maximum	0.10 to 0.55 mm (0.00394 to 0.0217 in.) 0.55 mm (0.0217 in.)
3rd gear thrust clearance	Standard Maximum	0.10 to 0.35 mm (0.00394 to 0.0138 in.) 0.35 mm (0.0138 in.)
4th gear radial clearance	Standard Maximum	0.009 to 0.050 mm (0.000354 to 0.00197 in.) 0.050 mm (0.00197 in.)

3rd gear radial clearance	NSK made Standard Maximum JTEKT made Standard Maximum	0.015 to 0.056 mm (0.000591 to 0.00220 in.) 0.056 mm (0.00220 in.) 0.015 to 0.058 mm (0.000591 to 0.00228 in.) 0.058 mm (0.00228 in.)
Input shaft runout	Maximum	0.015 mm (0.000591 in.)
Input shaft outer diameter	Standard Part A Part B Part C Part D Minimum Part A Part B Part C Part D	24.885 to 24.900 mm (0.9797 to 0.9803 in.) 28.991 to 29.006 mm (1.1414 to 1.1420 in.) 30.985 to 31.000 mm (1.2198 to 1.2204 in.) 24.985 to 25.000 mm (0.9836 to 0.9842 in.) 24.885 mm (0.9797 in.) 28.991 mm (1.1414 in.) 30.985 mm (1.2198 in.) 24.985 mm (0.9836 in.)
4th gear inside diameter	Standard Maximum	34.015 to 34.031 mm (1.3391 to 1.3398 in.) 34.031 mm (1.3398 in.)
3rd gear inside diameter	Standard Maximum	36.015 to 36.031 mm (1.4179 to 1.4185 in.) 36.031 mm (1.4185 in.)
3rd gear synchronizer ring back and 3rd gear spline end clearance	Standard Minimum	0.75 to 1.65 mm (0.0295 to 0.0649 in.) 0.75 mm (0.0295 in.)
4th gear synchronizer ring back and 4th gear spline end clearance	Standard Minimum	0.65 to 1.75 mm (0.0256 to 0.0689 in.) 065 mm (0.0256 in.)
No. 2 gear shift fork claw and glove of the No. 2 transmission hub sleeve clearance	-	0.15 to 0.35 mm (0.00591 to 0.0137 in.)
No. 2 transmission clutch hub snap ring clearance	-	0.1 mm (0.00394 in.) or less
No. 2 transmission clutch hub snap ring thickness	0 1 2 3 4 5	2.30 mm (0.0906 in.) 2.36 mm (0.0929 in.) 2.42 mm (0.0953 in.) 2.48 mm (0.0976 in.) 2.54 mm (0.1000 in.) 2.60 mm (0.1024 in.)
Input shaft rear bearing shaft snap ring clearance	-	0.1 mm (0.00394 in.) or less

Input shaft rear bearing shaft snap ring thickness	A B C D E F	2.29 mm (0.0901 in.) 2.35 mm (0.0925 in.) 2.41 mm (0.0948 in.) 2.47 mm (0.0972 in.) 2.53 mm (0.0996 in.) 2.59 mm (0.1019 in.)
1st gear thrust clearance	Standard Maximum	0.10 to 0.40 mm (0.00394 to 0.0157 in.) 0.40 mm (0.0157 in.)
2nd gear thrust clearance	Standard Maximum	0.10 to 0.55 mm (0.00394 to 0.0217 in.) 0.55 mm (0.0217 in.)
1st gear radial clearance	NSK made Standard Maximum JTEKT made Standard Maximum	0.015 to 0.056 mm (0.000591 to 0.00220 in.) 0.056 mm (0.00220 in.) 0.015 to 0.058 mm (0.000591 to 0.00228 in.) 0.058 mm (0.00228 in.)
2nd gear radial clearance	NSK made Standard Maximum JTEKT made Standard Maximum	0.015 to 0.056 mm (0.000591 to 0.00220 in.) 0.056 mm (0.00220 in.) 0.015 to 0.058 mm (0.000591 to 0.00228 in.) 0.058 mm (0.00228 in.)
Output shaft runout	Maximum	0.015 mm (0.000591 in.)
Output shaft outer diameter	Part A Part B Part C	31.985 to 32.000 mm (1.2592 to 1.2598 in.) 37.985 to 38.000 mm (1.4955 to 1.4961 in.) 32.985 to 33.000 mm (1.2986 to 1.2992 in.)
2nd gear inside diameter	Standard Maximum	38.015 to 38.031 mm (1.4967 to 1.4972 in.) 38.031 mm (1.4972 in.)
1st gear inside diameter	Standard Maximum	44.015 to 44.031 mm (1.7328 to 1.7335 in.) 44.031 mm (1.7335 in.)
1st gear thrust washer thickness	Standard Minimum	5.975 to 6.025 mm (0.2352 to 0.2372 in.) 5.975 mm (0.2352 in.)
No. 2 synchronizer ring set back and 2nd gear spline end clearance	Standard Minimum	0.60 to 1.40 mm (0.0236 to 0.0551 in.) 0.60 mm (0.0236 in.)

No. 1 synchronizer ring set back and 1st gear spline end clearance	Standard Minimum	0.60 to 1.40 mm (0.0236 to 0.0551 in.) 0.60 mm (0.0236 in.)
Reverse gear glove and reverse gear shift fork claw clearance	-	0.15 to 0.35 mm (0.00591 to 0.0138 in.)
No. 1 clutch hub shaft snap ring clearance	-	0.1 mm (0.0394 in.) or less
No. 1 clutch hub shaft snap ring thickness	A B C D E F	2.50 mm (0.0984 in.) 2.56 mm (0.1008 in.) 2.62 mm (0.1031 in.) 2.68 mm (0.1055 in.) 2.74 mm (0.1079 in.) 2.80 mm (0.1102 in.)
Shift lever slotted pin (for select inner lever) drive in depth	-	3.0 to 4.0 mm (0.1181 to 01575 in.)
Shift lever slotted pin (for shift lever inner No. 1) drive in depth	-	-0.5 to 0.5 mm (-0.197 to 0.0197 in.)
Shift lever slotted pin (for shift lever inner No. 2) drive in depth	-	1.0 to 2.0 mm (0.0394 to 0.0787 in.)
Front differential pinion thrust washer	Minimum	0.92 mm (0.0362 in.)
Front No. 1 differential pinion shaft outer diameter	Minimum	16.982 mm (0.6685 in.)
Front differential side gear backlash	Standard backlash	0.05 to 0.20 mm (0.00197 to 0.00787 in.)
Front differential side gear thrust washer thickness	41361-22140	0.95 mm (0.0374 in.)
	41361-22020	1.00 mm (0.0394 in.)
	41361-22150	1.05 mm (0.0413 in.)
	41361-22030	1.10 mm (0.0433in.)
	41361-22160	1.15 mm (0.0452in.)
	41361-22040	1.20 mm (0.0472 in.)
Back-up light switch	Push Release	Below 1 Ω 10 kΩ or higher

Last Modified: 3-10-2010	6.4 F	**From:** 200901
Model Year: 2010	**Model:** Corolla	**Doc ID:** RM000002Z3W00CX
Title: SPECIFICATIONS: BRAKE SYSTEM (OTHER): TORQUE SPECIFICATIONS (2010 Corolla)		

TORQUE SPECIFICATIONS

PARTS TIGHTENED		N*M	KGF*CM	FT.*LBF
Brake pedal support x Instrument panel reinforcement		24	245	18
Brake pedal support x Brake booster assembly		13	132	10
Brake pedal sub-assembly x Brake pedal support		37	377	27
Cowl top panel outer x Body		8.8	90	78 in.*lbf
Brake tube union nut (from brake master cylinder sub-assembly to brake actuator assembly	w/o VSC	14 (15)	143 (155)	10 (11)
	w/ VSC	18 (20)	178 (200)	13 (14)
Brake tube union nut		14 (15)	143 (155)	10 (11)
Brake master cylinder sub-assembly x Brake booster assembly		13	132	10
Brake master cylinder push rod clevis lock nut		26	265	19
Front brake bleeder plug		8.3	85	73 in.*lbf
Rear brake bleeder plug	for Drum Type	8.5	87	75 in.*lbf
	for Disc Type	10	102	7

(): For use without a union nut wrench

Last Modified: 3-10-2010	6.4 F	**From:** 200901
Model Year: 2010	**Model:** Corolla	**Doc ID:** RM0000029K6019X
Title: SPECIFICATIONS: C59 MANUAL TRANSMISSION / TRANSAXLE: TORQUE SPECIFICATIONS (2010 Corolla)		

TORQUE SPECIFICATIONS

PART TIGHTENED	N*M	KGF*CM	FT.*LBF
Filler plug x Manual transmission case	39	400	29
Drain plug x Manual transmission case	39	400	29
Shift lever assembly x Body	12	122	9
front No. 1 floor insulator x Body	5.5	56	49 in.*lbf
Transmission control cable x Body	5.0	51	44 in.*lbf
Rear engine mounting bracket x Manual transaxle assembly	45	459	33
Front engine mounting bracket x Manual transaxle assembly	64	653	47
Engine mounting bracket LH x Manual transaxle assembly	52	531	38
Control cable bracket x Manual transaxle assembly	25	250	18
Manual transaxle assembly x Engine	33	337	24
Bearing lock plate x Front transaxle case	11	115	8
No.1 oil receiver pipe x Transmission case	17	175	13
No.2 oil receiver pipe x Transmission case	17	175	13
Reverse restrict pin plug x transmission case	13	130	9
Manual transaxle case receiver x Transaxle case	11	115	8
No. 1 gear shift fork x No. 1 gear shift fork shaft	16	160	12
No. 2 gear shift fork x No. 2 gear shift fork shaft	16	160	12
No. 1 gear shift head x No. 2 gear shift fork shaft	16	160	12
Reverse shift arm bracket x Transaxle case	17	175	13
Transmission case x Transaxle case	29	300	22
Reverse idler gear shaft bolt x Transmission case	29	300	22
No. 2 lock ball assembly x Transmission case	29	300	22
Shift detent ball plug x Transmission case	22	224	16
Shift detent ball plug x Transaxle case	22	224	16
rear bearing retainer x Transmission case	27	280	20
No. 3 gear shift fork x No. 3 gear shift fork shaft	16	160	12
Transmission output shaft rear set nut x Output shaft	118	1200	87

PART TIGHTENED	N*M	KGF*CM	FT.*LBF
Transmission case cover x Transmission case	21	214	15
Control shaft cover x Transmission case	20	200	14
Shift gate pin x Transmission case	11	112	8
No. 1 lock ball assembly x Transmission case	29	300	22
Shift lever damper x Shift and select lever shaft assembly	12	120	9
Floor shift control shift lever x Shift and select lever shaft assembly	12	120	9
Selecting bell crank assembly x Transmission case for bolt	25	250	18
Selecting bell crank assembly x Transmission case for nut	12	120	9
Floor shift control shaft assembly x Selecting bellcrank support	12	122	9
No. 2 selecting bellcrank plate washer x Selecting bellcrank	12	122	9
Back-up light switch x Transmission case	40	410	30
Speedometer driven hole cover x Transaxle case	11	115	8
Front differential ring gear x Front differential case	77	785	57



Last Modified: 3-10-2010	6.4 F	**From:** 200901
Model Year: 2010	**Model:** Corolla	**Doc ID:** RM0000030XQ00KX
Title: SPECIFICATIONS: CLUTCH: SERVICE DATA (2010 Corolla)		

SERVICE DATA

Pedal height from dash panel	2AZ-FE 2ZR-FE	166.4 to 176.4 mm (6.551 to 6.945 in.) 157.7 to 167.7 mm (6.209 to 6.602 in.)
Pedal free play	-	5.0 to 15.0 mm (0.197 to 0.591 in.)
Push rod play at pedal top	-	1.0 to 5.0 mm (0.0394 to 0.197 in.)
Clutch release point from pedal full stroke end position	-	25 mm (0.984 in.) or more
Clutch disc rivet depth	Minimum	0.3 mm (0.0118 in.)
Clutch disc runout	Maximum	0.8 mm (0.0315 in.)
Diaphragm spring fingerwear	Maximum depth Maximum width	0.5 mm (0.0197 in.) 6.0 mm (0.236 in.)
Flywheel runout	Maximum	0.1 mm (0.00394 in.)
Diaphragm spring tip non-alignment	Maximum	0.9 mm (0.0354 in.)
Clutch pedal switch resistance	ON (pushed in) OFF (released)	Blow 1Ω 10 kΩ or higher

Last Modified: 3-10-2010	6.4 F	**From:** 200901
Model Year: 2010	**Model:** Corolla	**Doc ID:** RM0000030XR00KX
Title: SPECIFICATIONS: CLUTCH: TORQUE SPECIFICATIONS (2010 Corolla)		

TORQUE SPECIFICATIONS

PART TIGHTENED	N*M	KGF*CM	FT.*LBF
Clutch pedal stopper bolt x Lock nut	25	250	18
Clutch master cylinder push rod clevis lock nut	12	120	9
Clutch pedal sub-assembly x Clutch pedal support	37	375	27
Clutch pedal switch assembly x Clutch pedal support	16	160	12
Clutch switch assembly x Clutch pedal support	16	160	12
Clutch pedal support x Body	24	241	17
Clutch master cylinder x Clutch pedal support	13	130	9
Clutch line x Clutch master cylinder	14 (15)	143 (155)	10 (11)
Clutch line clamp x Clutch release cylinder (for C59)	12	120	9
Clutch tube bracket x Manual transaxle (for C59)	12	122	9
Clutch line bracket x Manual transaxle (for C59)	8.0	82	71 in.*lbf
Release cylinder bleeder plug x Clutch release cylinder	8.4	86	74 in.*lbf
Clutch release cylinder x Manual transaxle case	12	120	9
Clutch line x Clutch release cylinder	14 (15)	143 (155)	10 (11)
Clutch cover assembly x Flywheel sub-assembly	19	195	14
Release fork support x Manual transaxle (for C59)	37	375	27
Release fork support x Manual transaxle (for E351)	47	480	35
Clutch accumulator bracket x Clutch accumulator (for E351)	12	120	9
Clutch accumulator bracket x Starter assembly (for E351)	37	377	27
Clutch tube bracket x Manual transaxle case (for E351)	8.0	80	69 in.*lbf
Clutch accumulator assembly x Clutch line	14 (15)	143 (155)	10 (11)
Release cylinder heat insulator x Release cylinder assembly (for E351)	12	120	9

PART TIGHTENED		N*M	KGF*CM	FT.*LBF
Clutch accumulator assembly x Release cylinder assembly (for E351)		12	120	9

(): For use without union nut wrench

Last Modified: 3-10-2010	6.4 F	**From:** 200901
Model Year: 2010	**Model:** Corolla	**Doc ID:** RM000002G3B009X
Title: SPECIFICATIONS: CRUISE CONTROL: TORQUE SPECIFICATIONS (2010 Corolla)		

TORQUE SPECIFICATIONS

PART TIGHTENED	N*M	KGF*CM	FT.*LBF
Clutch switch x Clutch Pedal	16	160	12

Last Modified: 3-10-2010	6.4 F	**From:** 200901
Model Year: 2010	**Model:** Corolla	**Doc ID:** RM00000312400GX
Title: SPECIFICATIONS: DOOR / HATCH: TORQUE SPECIFICATIONS (2010 Corolla)		

TORQUE SPECIFICATIONS

PART TIGHTENED	N*M	KGF*CM	FT.*LBF
HOOD			
Hood hinge x Hood panel	13	133	10
Hood lock x Body (Centering bolt)	7.5	77	66 in.*lbf
Hood lock x Body (Standard bolt)	8.0	82	71 in.*lbf
FRONT DOOR			
Door check x Body	30	306	22
Door check x Door panel	5.5	56	49 in.*lbf
Door hinge x Body	26	265	19
Door hinge x Door panel (Unpainted door hinge installation surface)	26	265	19
Door hinge x Door panel (Painted door hinge installation surface)	34	347	25
Door lock x Door panel	5.0	51	44 in.*lbf
Door lock striker x Body	23	235	17
Power window regulator motor x Window regulator	5.4	55	48 in.*lbf
Window regulator x Door panel	8.0	82	71 in.*lbf
Door glass x Window regulator	8.0	82	71 in.*lbf
Outer rear view mirror x Door panel	9.0	92	80 in.*lbf
Door outside handle frame x Door panel	4.0	41	35 in.*lbf
Door rear lower frame x Door panel	6.2	63	55 in.*lbf
Front door No. 2 stiffener cushion x Door panel	6.2	63	55 in.*lbf
REAR DOOR			
Door check x Body	30	306	22
Door check x Door panel	5.5	56	49 in.*lbf
Door hinge x Body	26	265	19
Door hinge x Door panel (Unpainted door hinge installation surface)	26	265	19
Door hinge x Door panel (Painted door hinge installation surface)	29	296	21
Door lock x Door panel	5.0	51	44 in.*lbf
Door lock striker x Body	23	235	17

PART TIGHTENED	N*M	KGF*CM	FT.*LBF
Power window regulator motor x Window regulator	5.4	55	48 in.*lbf
Window regulator x Door panel	8.0	82	71 in.*lbf
Door outside handle frame x Door panel	4.0	41	35 in.*lbf
Window division bar x Door panel	6.2	63	55 in.*lbf
Separator door No. 2 stiffener cushion x Door panel	6.2	63	55 in.*lbf
LUGGAGE DOOR			
Luggage door hinge x Door panel	7.5	77	66 in.*lbf
Luggage lock striker x Body	5.5	56	49 in.*lbf
Luggage lock x Door panel	5.5	56	49 in.*lbf
Luggage door lock open lever x Body	5.5	56	49 in.*lbf

Last Modified: 3-10-2010	6.4 F	**From:** 200901
Model Year: 2010	**Model:** Corolla	**Doc ID:** RM000002EQY00AX
Title: SPECIFICATIONS: E351 MANUAL TRANSMISSION / TRANSAXLE: SERVICE DATA (2010 Corolla)		

SERVICE DATA

MANUAL TRANSAXLE ASSEMBLY:

Transmission case oil seal driven in depth	3.0 to 4.0 mm (0.118 to 0.158 in.)
Transaxle case oil seal drive in depth	-0.5 to 0.5 mm (-0.0197 to 0.0197 in.)

MANUAL TRANSAXLE UNIT:

5th gear thrust clearance	Standard clearance	0.10 to 0.57 mm (0.00394 to 0.0224 in.)
5th gear radial clearance	Standard clearance	0.009 to 0.050 mm (0.000354 to 0.00197 in.)
Reverse idler gear sub-assembly inside diameter	Standard inside diameter	20.056 to 20.074 mm (0.7896 to 0.7903 in.)
	Maximum inside diameter	20.074 (0.7903 in.)
Reverse idler gear shaft outer diameter	Standard outer diameter	19.984 to 20.000 mm (0.7868 to 0.7874 in.)
	Minimum outer diameter	19.984 mm (0.7868 in.)
No. 3 transmission hub sleeve groove - thickness of the claw part on No. 3 gear shift fork	Standard clearance	0.15 to 0.35 mm (0.00591 to 0.0138 in.)
5th gear inside diameter	Standard inside diameter	34.981 to 34.997 mm (1.3772 to 1.3778 in.)
	Maximum inside diameter	34.997 mm (1.3778 in.)
Output shaft rear bearing clearance		3.8 to 4.4 mm (0.150 to 0.173 in.)
Output shaft bearing preload	New bearing	0.8 to 1.6 N*m (8.16 to 16.32 kgf*cm, 7.1 to 14.2 in.*lbf)
	Used bearing	0.5 to 1.0 N*m (5.10 to 10.20 kgf*cm, 4.4 to 8.9 in.*lbf)
Output shaft rear bearing shim thickness	0	1.30 mm (0.0512 in.)
	1	1.35 mm (0.0531 in.)

	2	1.40 mm (0.0551 in.)
	3	1.45 mm (0.0571 in.)
	4	1.50 mm (0.0591 in.)
	5	1.55 mm (0.0610 in.)
	6	1.60 mm (0.0630 in.)
	7	1.65 mm (0.0650 in.)
	8	1.70 mm (0.0669 in.)
	9	1.75 mm (0.0689 in.)
	A	1.80 mm (0.0709 in.)
	B	1.85 mm (0.0728 in.)
	C	1.90 mm (0.0748 in.)
	D	1.95 mm (0.0768 in.)
	E	2.00 mm (0.0787 in.)
	F	2.05 mm (0.0807 in.)
	G	2.10 mm (0.0827 in.)
	H	2.15 mm (0.0846 in.)
	J	2.20 mm (0.0866 in.)
	K	2.25 mm (0.0886 in.)
	L	2.30 mm (0.0906 in.)
	M	2.35 mm (0.0925 in.)
	N	2.40 mm (0.0945 in.)
	P	2.45 mm (0.0965 in.)
	Q	2.50 mm (0.0984 in.)
Front differential case tapered roller bearing preload	New bearing	0.8 to 1.6 N*m (8.16 to 16.32 kgf*cm, 7.1 to 14.2 in.*lbf)
	Used bearing	0.5 to 1.0 N*m (5.10 to 10.20 kgf*cm, 4.4 to 8.9 in.*lbf)
Front differential case shim rear thickness	0	2.00 mm (0.0787 in.)
	1	2.05 mm (0.0807 in.)
	2	2.10 mm (0.0827 in.)
	3	2.15 mm (0.0846 in.)
	4	2.20 mm (0.0866 in.)
	5	2.25 mm (0.0886 in.)
	6	2.30 mm (0.0906 in.)

	7	2.35 mm (0.0925 in.)
	8	2.40 mm (0.0945 in.)
	9	2.45 mm (0.0965 in.)
	A	2.50 mm (0.0984 in.)
	B	2.55 mm (0.1004 in.)
	C	2.60 mm (0.1024 in.)
	D	2.65 mm (0.1043 in.)
	E	2.70 mm (0.1063 in.)
	F	2.75 mm (0.1083 in.)
	G	2.80 mm (0.1102 in.)
	H	2.85 mm (0.1122 in.)
Front transaxle case cover oil seal clearance		1.0 to 2.0 mm (0.0394 to 0.0.787 in.)
Input shaft front bearing clearance		4.28 to 4.60 mm (0.169 to 0.181 in.)
Reverse restrict pin clearance		12.5 to 13.5 mm (0.492 to 0.531 in.)
No. 3 transmission clutch hub snap ring clearance		0.1 mm or less (0.00391 in. or less)
No. 3 transmission clutch hub snap ring thickness	a	1.75 to 1.80 mm (0.0689 to 0.0709 in.)
	b	1.80 to 1.85 mm (0.0709 to 0.0728 in.)
	c	1.85 to 1.90 mm (0.0728 to 0.0748 in.)
	d	1.90 to 1.95 mm (0.0748 to 0.0768 in.)
	e	1.95 to 2.00 mm (0.0768 to 0.0787 in.)
	f	2.00 to 2.05 mm 0.0787 to 0.0807 in.)
	g	2.05 to 2.10 mm (0.0807 to 0.0827 in.)
	h	2.10 to 2.15 mm (0.0827 to 0.0846 in.)
	j	2.15 to 2.20 mm (0.0846 to 0.0866 in.)

INPUT SHAFT ASSEMBLY:

4th gear thrust clearance	Standard clearance	0.10 to 0.57 mm (0.00394 to 0.0224 in.)
3rd gear thrust clearance	Standard clearance	0.10 to 0.35 mm (0.00394 to 0.0138 in.)
4th gear radial clearance	KOYO made	0.009 to 0.053 mm (0.000354 to 0.00209 in.)
	NSK made	0.009 to 0.051 mm (0.000354 to 0.00201 in.)
3rd gear radial clearance	KOYO made	0.009 to 0.053 mm (0.000354 to 0.00209 in.)
	NSK made	0.009 to 0.051 mm (0.000354 to 0.00201 in.)
Input shaft run out	Maximum run out	0.03 mm (0.00118 in.)
Input shaft standard outer diameter	A	35.984 to 36.000 mm (1.4167 to 1.4173 in.)
	B	35.984 to 36.000 mm (1.4167 to 1.4173 in.)
	C	27.957 to 27.972 mm (1.1007 to 1.1013 in.)
Input shaft minimum outer diameter	A	35.984 mm (1.4167 in.)
	B	35.984 mm (1.4167 in.)
	C	27.957 mm (1.1007 in.)
4th gear inside diameter	Standard inside diameter	42.009 to 42.025 mm (1.6539 to 1.6545 in.)
	Maximum inside diameter	42.025 mm (1.6545 in.)
3rd gear inside diameter	Standard inside diameter	43.009 to 43.025 mm (1.6933 to 1.6939 in.)
	Maximum inside diameter	43.025 mm (1.6939 in.)
Between the 4th gear spline end and synchronizer outer ring back clearance		0.75 to 1.65 mm (0.0295 to 0.0650 in.)
Between the 3rd gear spline end and synchronizer outer ring back clearance		0.65 to 1.75 mm (0.0256 to 0.0689 in.)
No. 2 transmission hub sleeve groove - thickness of the claw part on No.1 gear shift fork	Standard clearance	0.11 to 0.69 mm (0.00433 to 0.0272 in.)
No. 2 transmission clutch hub snap ring clearance	Standard clearance	0.1 mm or less (0.00394 in. or less)

No. 2 transmission clutch hub snap ring thickness	H	2.30 to 2.35 mm (0.0906 to 0.0925 in.)
	J	2.35 to 2.40 mm (0.0925 to 0.0945 in.)
	K	2.40 to 2.45 mm (0.0945 to 0.0965 in.)
	L	2.45 to 2.50 mm (0.0965 to 0.0984 in.)
	M	2.50 to 2.55 mm (0.0984 to 0.1004 in.)
	N	2.55 to 2.60 mm (0.1004 to 0.1024 in.)
	P	2.60 to 2.65 mm (0.1024 to 0.1043 in.)
Input shaft rear radial ball bearing snap ring clearance	Standard clearance	0.1 mm or less (0.00394 in. or less)
Input shaft rear radial ball bearing snap ring thickness	1	2.35 to 2.40 mm (0.0925 to 0.0945 in.)
	2	2.40 to 2.45 mm (0.0945 to 0.0965 in.)
	3	2.45 to 2.50 mm (0.0965 to 0.0984 in.)
	4	2.50 to 2.55 mm (0.0984 to 0.1004 in.)
	5	2.55 to 2.60 mm (0.1004 to 0.1024 in.)
	6	2.60 to 2.65 mm (0.1024 to 0.1043 in.)
	7	2.65 to 2.70 mm (0.1043 to 0.1063 in.)
	8	2.70 to 2.75 mm (0.1063 to 0.1083 in.)

OUTPUT SHAFT ASSEMBLY:

1st gear thrust clearance	Standard clearance	0.25 to 0.40 mm (0.00984 to 0.0157 in.)
2nd gear thrust clearance	Standard clearance	0.10 to 0.35 mm (0.00394 to 0.0138 in.)
1st gear radial clearance	KOYO made	0.009 to 0.053 mm (0.000354 to 0.00209 in.)

	NSK made	0.009 to 0.051mm (0.000354 to 0.00201 in.)
2nd gear radial clearance	KOYO made	0.009 to 0.053 mm (0.000354 to 0.00209 in.)
	NSK made	0.009 to 0.051mm (0.000354 to 0.00201 in.)
Output shaft run out	Maximum run out	0.03 mm (0.00118 in.)
Output shaft standard outer diameter	A	37.610 to 37.626 mm (1.4807 to 1.4813 in.)
	B	34.502 to 34.512 mm (1.3583 to 1.3587 in.)
Output shaft minimum outer diameter	A	37.610 mm (1.4807 in.)
	B	34.502 mm (1.3583 in.)
2nd gear inside diameter	Standard inside diameter	50.009 to 50.025 mm (1.9689 to 1.9695 in.)
	Maximum inside diameter	50.025 mm (1.9695 in.)
1st gear inside diameter	Standard inside diameter	51.009 to 51.025 mm (2.0082 to 2.0089 in.)
	Maximum inside diameter	51.025 mm (2.0089 in.)
Between the 2nd gear while and No. 2 synchronizer ring back clearance		0.70 to 1.45 mm (0.0276 to 0.0571 in.)
Between the 1st gear while and No. 1 synchronizer ring set back clearance		0.70 to 1.45 mm (0.0276 to 0.0571 in.)
Reverse gear groove - thickness of the claw part on No .1 gear shift fork clearance	Standard clearance	0.15 to 0.35 mm (0.00591 to 0.0138 in.)

SHIFT AND SELECT LEVER SHAFT ASSEMBLY:

Control shaft cover oil seal drive in depth	28.0 to 29.0 mm (1.10 to 1.14 in.)
Shift lever slotted pin clearance to the No. 1 shift lever inner assembly	-0.4 to 0.5 mm (-0.0157 to 0.0197 in.)
Shift lever slotted pin clearance to the No. 2 shift lever inner	0.7 to 1.7 mm (0.0276 to 0.0669 in.)

DIFFERENTIAL CASE ASSEMBLY:

Front differential pinion thrust washer thickness	Minimum thickness	0.9 mm (0.0354 in.)

Front differential No. 1 pinion shaft thickness	Minimum diameter	17.975 mm (0.70768 in.)
Front differential side gear backlash	Standard backlash	0.05 to 0.20 mm (0.00197 to 0.00787 in.)
Front differential side gear thrust washer thickness	1	1.00 mm (0.0394 in.)
	2	1.10 mm (0.0433 in.)
	3	1.20 mm (0.0472 in.)
	4	1.30 mm (0.0512 in.)

Last Modified: 3-10-2010	6.4 F	**From:** 200901
Model Year: 2010	**Model:** Corolla	**Doc ID:** RM00000313B00PX
Title: SPECIFICATIONS: DOOR LOCK: TORQUE SPECIFICATIONS (2010 Corolla)		

TORQUE SPECIFICATIONS

FRONT DOOR LOCK

PART TIGHTENED	N*M	KGF*CM	FT*LBF
Front door lock assembly x Door panel	5.0	51	44 in.*lbf

REAR DOOR LOCK

PART TIGHTENED	N*M	KGF*CM	FT*LBF
Rear door lock assembly x Door panel	5.0	51	44 in.*lbf

LUGGAGE COMPARTMENT DOOR LOCK

PART TIGHTENED	N*M	KGF*CM	FT*LBF
Luggage compartment door lock assembly x Door panel	5.5	56	49 in.*lbf

Last Modified: 3-10-2010	6.4 F	**From:** 200901
Model Year: 2010	**Model:** Corolla	**Doc ID:** RM000003K6R001X
Title: SPECIFICATIONS: DRIVE SHAFT / PROPELLER SHAFT: TORQUE SPECIFICATIONS (2010 Corolla)		

TORQUE SPECIFICATIONS

for 2AZ-FE

PART TIGHTENED	N*M	KGF*CM	FT.*LBF
Front drive shaft assembly RH x Bearing bracket	32	330	24
Manual transmission case protector set bolts (for manual transaxle)	18	184	13
Front axle shaft nuts	216	2203	160
Front wheel set nuts	103	1050	76

for 2ZR-FE

PART TIGHTENED	N*M	KGF*CM	FT.*LBF
Front axle shaft nuts	216	2203	160
Front wheel set nuts	103	1050	76

Last Modified: 3-10-2010	6.4 F	**From:** 200901
Model Year: 2010	**Model:** Corolla	**Doc ID:** RM000002EQZ00AX
Title: SPECIFICATIONS: E351 MANUAL TRANSMISSION / TRANSAXLE: TORQUE SPECIFICATIONS (2010 Corolla)		

TORQUE SPECIFICATIONS

PART TIGHTENED		N*M	KGF*CM	FT.*LBF
Shift lever assembly x Body		12	122	9
Front No. 1 floor heat insulator x Body		5.5	56	49 in.*lbf
Transmission control cable assembly x Body		5.0	51	44 in.*lbf
Wire harness clamp bracket x Manual transaxle		13	130	9
Wire harness clamp bracket x Manual transaxle		26	260	19
Rear engine mounting bracket x Manual transaxle		45	459	33
Front engine mounting bracket x Manual transaxle		64	653	47
Engine mounting bracket LH x Manual transaxle		52	530	38
Manual transmission case protector x Manual transaxle		18	183	13
Manual transaxle x Engine	Bolt A	64	652	47
	Bolt B	64	652	47
	Bolt C	46	469	34
	Bolt D	46	469	34
Manual transaxle x Engine		44	448	32
Manual transaxle case receiver x Manual transaxle case		7.0	71	62 in.*lbf
No. 1 gear shift head x No. 2 gear shift fork shaft		24	245	18
No. 1 gear shift fork x No. 1 gear shift fork shaft		24	245	18
Reverse shift arm bracket x Manual transaxle case		17	173	13
No. 1 oil receiver pipe x Transmission case		17	173	13
No. 2 oil receiver pipe x Transmission case		17	173	13
transmission oil baffle x Manual transmission case		17	173	13
Reverse restrict pin plug x Transmission case		13	133	9.6
Transmission case x Manual transaxle case		29	296	21
Reverse idler gear shaft bolt x Transmission case		30	306	22
Rear bearing retainer x Transmission case		43	438	32
No. 3 gear shift fork x No. 1 gear shift fork shaft		24	245	18
Manual transmission output rear set nut x Output shaft		123	1254	90

PART TIGHTENED	N*M	KGF*CM	FT.*LBF
Drain plug x Transmission case	49	500	36
Filler plug x Transmission case	49	500	36
Control shift cover x Manual transaxle	20	204	15
Back up light switch assembly x Manual transaxle	40	408	30
Shift gate pin x Manual transaxle	29	296	21
No. 1 lock ball assembly x Manual transaxle	29	296	21
No. 2 clutch tube bracket x Manual transaxle	15	153	11
Control shift lever x Shift and select lever shaft	12	120	9
Selecting bellcrank assembly x Manual transaxle	20	204	15
Speedometer driven gear sub-assembly x Manual transaxle	5.5	56	48 in.*lbf
Control cable bracket x Manual transaxle	17	173	12
Selecting bellcrank support sub-assembly x No. 2 selecting bellcrank	12	122	9
Front differential ring gear x Front differential case	106	1080	78

Last Modified: 3-10-2010	6.4 F	**From:** 200901
Model Year: 2010	**Model:** Corolla	**Doc ID:** RM0000031 3I00DX
Title: SPECIFICATIONS: EXTERIOR PANELS / TRIM: TORQUE SPECIFICATIONS (2010 Corolla)		

TORQUE SPECIFICATIONS

FRONT BUMPER

PART TIGHTENED	N*M	KGF*CM	FT.*LBF
Front bumper reinforcement sub-assembly x Body	36	367	27

REAR BUMPER

PART TIGHTENED	N*M	KGF*CM	FT.*LBF
Rear bumper arm LH x Body	36	367	27
Rear bumper arm RH x Body	36	367	27
No. 1 Rear bumper reinforcement x Body	36	367	27

Last Modified: 3-10-2010	6.4 F	**From:** 200901
Model Year: 2010	**Model:** Corolla	**Doc ID:** RM000003GGD003X
Title: SPECIFICATIONS: FRONT SUSPENSION: SERVICE DATA (2010 Corolla)		

SERVICE DATA

Turning torque:

TURNING TORQUE	
Front lower ball joint turning torque	1.0 to 3.4 N*m (10 to 35 kgf*cm, 9 to 30 in.*lbf) (for 2AZ-FE) 1.0 to 4.9 N*m (10 to 50 kgf*cm, 9 to 43 in.*lbf) (for 2ZR-FE)
Front stabilizer link ball joint turning torque	0.1 to 2.0N*m (1 to 20 kgf*cm, 1 to 17 in.*lbf)

Last Modified: 3-10-2010	6.4 F	**From:** 200901
Model Year: 2010	**Model:** Corolla	**Doc ID:** RM000003GGE003X
Title: SPECIFICATIONS: FRONT SUSPENSION: TORQUE SPECIFICATIONS (2010 Corolla)		

TORQUE SPECIFICATIONS

PART TIGHTENED	N*M	KGF*CM	FT.*LBF
Tower bar bracket sub-assembly LH x Suspension tower damper assembly	52	530	38
Tower bar bracket sub-assembly LH x Body	50	510	37
(for TMC Made) Front shock absorber with coil spring x Body	39	398	29
(except TMC Made) Front shock absorber with coil spring x Body	50	510	37
Front shock absorber with coil spring x Steering knuckle	240	2447	177
Front shock absorber nut x Piston rod	47	479	35
Front flexible hose x Front shock absorber	29	296	21
Front speed sensor wire x Front shock absorber	29	296	21
Front shock absorber with coil spring x Front stabilizer link	74	755	55
(for TMC Made) Front suspension crossmember x Rear engine mounting insulator	Bolt : 52 Nut : 52	Bolt : 530 Nut : 530	Bolt : 38 Nut : 38
(except TMC Made) Front suspension crossmember x Rear engine mounting insulator	Bolt (front side) :87 Bolt : 52 Nut : 52	Bolt (front side) :887 Bolt : 530 Nut : 530	Bolt (front side) :64 Bolt : 38 Nut : 38
Front suspension crossmember (Front side) x Body	113	1152	83
Front suspension crossmember (Rear side) x Body	157	1600	116
(for TMC Made) Center engine mounting member sub-assembly x Body	39	398	29
(except TMC Made) Center engine mounting member sub-assembly x Body	60	612	44
(for TMC Made) Center engine mounting member sub-assembly x Front engine mounting insulator	52	530	38

PART TIGHTENED	N*M	KGF*CM	FT.*LBF
(except TMC Made) Center engine mounting member sub-assembly x Front engine mounting insulator	81	827	60
Front stabilizer link x Front stabilizer bar	74	755	55
(for TMC Made) No. 1 front stabilizer bracket x Front suspension member	19	194	14
(except TMC Made) No. 1 front stabilizer bracket x Front suspension member	24	245	18
Front lower suspension arm x Front suspension crossmember	Bolt type (1): 137 Bolt type (2): 145	Bolt type (1): 1397 Bolt type (2): 1479	Bolt type (1): 101 Bolt type (2): 107
Front lower ball joint x Steering knuckle (2ZR-FE)	103	1050	76
Front lower ball joint x Steering knuckle (2AZ-FE)	123	1254	91

Last Modified: 3-10-2010	6.4 F	**From:** 200901
Model Year: 2010	**Model:** Corolla	**Doc ID:** RM00000314W00IX
Title: SPECIFICATIONS: HEATING / AIR CONDITIONING: SERVICE DATA (2010 Corolla)		

SERVICE DATA

Refrigerant charge volume (Standard:)	410 to 470g (14.5 to 16.6 oz.)



Last Modified: 3-10-2010	6.4 F	**From:** 200901
Model Year: 2010	**Model:** Corolla	**Doc ID:** RM00000314X00JX
Title: SPECIFICATIONS: HEATING / AIR CONDITIONING: TORQUE SPECIFICATIONS (2010 Corolla)		

TORQUE SPECIFICATIONS

PART TIGHTENED	N*M	KGF*CM	FT.*LBF
AIR CONDITIONING UNIT			
Air conditioning unit assembly x Body	9.8	100	87 in.*lbf
Air conditioning unit assembly x Instrument panel reinforcement assembly	9.8	100	87 in.*lbf
Instrument panel reinforcement assembly x No. 1 instrument panel brace sub-assembly (Screw)	9.8	100	87 in.*lbf
Instrument panel reinforcement assembly x No. 2 instrument panel brace sub-assembly (Screw)	9.8	100	87 in.*lbf
No. 1 cooler evaporator sub-assembly x Cooler expansion valve	3.5	36	31 in.*lbf
Suction pipe sub-assembly x Air conditioning tube assembly	9.8	100	87 in.*lbf
No. 1 air duct sub-assembly x Body	9.8	100	87 in.*lbf
Instrument panel reinforcement assembly x Pedal	24	245	18
Instrument panel reinforcement assembly x Earth wire	8.4	86	74 in.*lbf
COMPRESSOR (for 2AZ-FE)			
Compressor assembly with pulley x Engine	25	255	18
Compressor assembly with pulley (stud bolt) x Engine	9.8	100	87 in.*lbf
Discharge hose sub-assembly x Compressor assembly with pulley	9.8	100	87 in.*lbf
Suction hose sub-assembly x Compressor assembly with pulley	9.8	100	87 in.*lbf
COMPRESSOR (for 2ZR-FE)			
Compressor assembly with pulley x Engine	25	255	18
Compressor assembly with pulley (stud bolt) x Engine	9.8	100	87 in.*lbf

PART TIGHTENED	N*M	KGF*CM	FT.*LBF
Discharge hose sub-assembly x Compressor assembly with pulley	9.8	100	87 in.*lbf
Suction hose sub-assembly x Compressor assembly with pulley	9.8	100	87 in.*lbf
CONDENSER			
Discharge hose sub-assembly x Condenser assembly with receiver	5.4	55	48 in.*lbf
Air conditioning tube assembly x Condenser assembly with receiver	5.4	55	48 in.*lbf
Cap x Condenser assembly with receiver	2.9	30	26 in.*lbf
AIR CONDITIONING PRESSURE SENSOR			
Air conditioning pressure sensor x Air conditioning tube assembly	11	112	8

Last Modified: 3-10-2010	6.4 F	**From:** 200901
Model Year: 2010	**Model:** Corolla	**Doc ID:** RM000002PNH013X
Title: SPECIFICATIONS: HORN: TORQUE SPECIFICATIONS (2010 Corolla)		

TORQUE SPECIFICATIONS

PART TIGHTENED	N*M	KGF*CM	FT.*LBF
Low pitched horn assembly x Body	20	204	15

Last Modified: 3-10-2010	6.4 F	**From:** 200901
Model Year: 2010	**Model:** Corolla	**Doc ID:** RM0000030QU00JX
Title: SPECIFICATIONS: INTERIOR PANELS / TRIM: TORQUE SPECIFICATIONS (2010 Corolla)		

TORQUE SPECIFICATIONS

UPPER INSTRUMENT PANEL

PART TIGHTENED	N*M	KGF*CM	FT.*LBF
Instrument panel reinforcement x Passenger airbag	20	204	15

ROOF HEADLINING

PART TIGHTENED	N*M	KGF*CM	FT.*LBF
Amplifier antenna assembly x body	8.4	86	74 in.*lbf

Last Modified: 3-10-2010	6.4 F	**From:** 200901
Model Year: 2010	**Model:** Corolla	**Doc ID:** RM000003K15001X
Title: SPECIFICATIONS: LIGHTING (EXT): TORQUE SPECIFICATIONS (2010 Corolla)		

TORQUE SPECIFICATIONS

PART TIGHTENED	N*M	KGF*CM	FT.*LBF
HEADLIGHT ASSEMBLY			
Headlight assembly x Body	5.4	55	48 in.*lbf
REAR COMBINATION LIGHT ASSEMBLY			
Rear combination light assembly x Body	5.4	55	48 in.*lbf
REAR LIGHT ASSEMBLY			
Rear light assembly x Body	5.4	55	48 in.*lbf

Last Modified: 3-10-2010	6.4 F	**From:** 200901
Model Year: 2010	**Model:** Corolla	**Doc ID:** RM000003K16001X
Title: SPECIFICATIONS: LIGHTING (INT): TORQUE SPECIFICATIONS (2010 Corolla)		

TORQUE SPECIFICATIONS

PART TIGHTENED	N*M	KGF*CM	FT.*LBF
FRONT DOOR COURTESY SWITCH			
Front door courtesy switch assembly x Body	8.0	82	71 in.*lbf
REAR DOOR COURTESY SWITCH			
Rear door courtesy switch assembly x Body	8.0	82	71 in.*lbf
BACK DOOR COURTESY SWITCH			
Back door lock assembly x Back door	5.5	56	49 in.*lbf

Last Modified: 3-10-2010	6.4 F	**From:** 200901
Model Year: 2010	**Model:** Corolla	**Doc ID:** RM000002JIX00PX
Title: SPECIFICATIONS: MIRROR (EXT): TORQUE SPECIFICATIONS (2010 Corolla)		

TORQUE SPECIFICATIONS

PART TIGHTENED	N*M	KGF*CM	FT.*LBF
Outer rear view mirror assembly x Door panel	9.0	92	80 in.*lbf

Last Modified: 3-10-2010	6.4 F	**From:** 200901
Model Year: 2010	**Model:** Corolla	**Doc ID:** RM000002JIX00OX
Title: SPECIFICATIONS: MIRROR (INT): TORQUE SPECIFICATIONS (2010 Corolla)		

TORQUE SPECIFICATIONS

w/ EC Mirror:

PART TIGHTENED	N*M	KGF*CM	FT.*LBF
Inner rear view mirror x Windshield glass	1.5	15	13 in.*lbf

w/o EC Mirror:

PART TIGHTENED	N*M	KGF*CM	FT.*LBF
for TMMC, NUMMI Made			
Inner rear view mirror x Windshield glass	1.5	15	13 in.*lbf

Last Modified: 3-10-2010	6.4 F	**From:** 200901
Model Year: 2010	**Model:** Corolla	**Doc ID:** RM000003JJ6002X
Title: SPECIFICATIONS: PARKING BRAKE: SERVICE DATA (2010 Corolla)		

SERVICE DATA

Parking brake lever travel	6 to 9 notches at 200 N (20 kgf, 45.0 lbf)
Rear disc brake cylinder operation lever and stopper clearance	0.5 mm (0.0197 in.) or less

Last Modified: 3-10-2010	6.4 F	**From:** 200901
Model Year: 2010	**Model:** Corolla	**Doc ID:** RM000003JJ7002X
Title: SPECIFICATIONS: PARKING BRAKE: TORQUE SPECIFICATIONS (2010 Corolla)		

TORQUE SPECIFICATIONS

PARKING BRAKE LEVER

PART TIGHTENED	N*M	KGF*CM	FT.*LBF
Parking brake switch assembly set screw	0.9	9	8 in.*lbf
No. 1 parking brake cable assembly lock nut	6.0	61	53 in.*lbf
Parking brake lever assembly set bolts	15	148	11
No. 3 belt anchor reinforcement sub-assembly set bolts	27	275	19
No. 2 belt anchor reinforcement sub-assembly set bolts	27	275	19

PARKING BRAKE CABLE (for Rear Disc Brake)

PART TIGHTENED	N*M	KGF*CM	FT.*LBF
No. 3 parking brake cable assembly set bolts	6.0	61	53 in.*lbf
No. 2 front floor heat insulator set nuts	5.5	56	49 in.*lbf
No. 1 front floor heat insulator set nuts	5.5	56	49 in.*lbf

PARKING BRAKE CABLE (for Rear Drum Brake)

PART TIGHTENED	N*M	KGF*CM	FT.*LBF
No. 3 parking brake cable assembly set bolts	6.0	61	53 in.*lbf
No. 3 parking brake cable assembly x Backing plate	8.0	82	71 in.*lbf
No. 2 front floor heat insulator set nuts	5.5	56	49 in.*lbf
No. 1 front floor heat insulator set nuts	5.5	56	49 in.*lbf

PARKING BRAKE SWITCH

PART TIGHTENED	N*M	KGF*CM	FT.*LBF
Parking brake switch assembly set screw	0.9	9	8 in.*lbf

Last Modified: 3-10-2010	6.4 F	**From:** 200901
Model Year: 2010	**Model:** Corolla	**Doc ID:** RM000003K6E001X
Title: SPECIFICATIONS: POWER ASSIST SYSTEMS: SERVICE DATA (2010 Corolla)		

SERVICE DATA

Steering effort (Reference)	5.5 N*m (56 kgf*cm, 49 in.*lbf) or less

Last Modified: 3-10-2010	6.4 F	**From:** 200901
Model Year: 2010	**Model:** Corolla	**Doc ID:** RM000003K6D001X
Title: SPECIFICATIONS: POWER ASSIST SYSTEMS: TORQUE SPECIFICATIONS (2010 Corolla)		

TORQUE SPECIFICATIONS

PART TIGHTENED	N*M	KGF*CM	FT.*LBF
Steering wheel set nut	50	510	37
Power steering ECU assembly set bolt	8.0	82	71 in.*lbf
Power steering ECU assembly set nuts	8.0	82	71 in.*lbf

Last Modified: 3-10-2010	6.4 F	**From:** 200901
Model Year: 2010	**Model:** Corolla	**Doc ID:** RM000000312O010X
Title: SPECIFICATIONS: REAR SUSPENSION: TORQUE SPECIFICATIONS (2010 Corolla)		

TORQUE SPECIFICATIONS

PART TIGHTENED		N*M	KGF*CM	FT.*LBF
Rear shock absorber with coil spring x Rear axle beam		80	816	59
Rear shock absorber with coil spring x Body		80	816	59
Rear support to rear shock absorber nut x Piston rod		39	398	29
No. 3 parking brake cable x Rear axle beam		6.0	61	53 in.*lbf
No. 2 parking brake cable x Rear axle beam		6.0	61	53 in.*lbf
Rear speed sensor wire x Rear axle beam		8.0	82	71 in.*lbf
Rear flexible hose x Rear brake tube	for Rear Drum Brake	14 (15)	143 (155)	10 (11)
Rear brake tube x Rear wheel cylinder		14 (15)	143 (155)	10 (11)
Rear flexible hose x Rear axle beam	for Rear Disc Brake	29	296	21
Rear axle beam x Body		85	867	63
Rear axle beam x Rear stabilizer bar		250	2549	184

(): For use without a union nut wrench

Last Modified: 3-10-2010	6.4 F	**From:** 200901
Model Year: 2010	**Model:** Corolla	**Doc ID:** RM000002Z9300TX
Title: SPECIFICATIONS: SEAT: TORQUE SPECIFICATIONS (2010 Corolla)		

TORQUE SPECIFICATIONS

FRONT SEAT ASSEMBLY (for Manual Seat)

PART TIGHTENED	N*M	KGF*CM	FT.*LBF
Front seat assembly x Body	37	377	27
Front seatback cover x Front seat frame assembly with adjuster	5.5	56	49 in.*lbf
Active headrest upper unit x Front seat frame assembly with adjuster	14	143	10
Active headrest lower unit x Front seat frame assembly with adjuster	5.0	51	44 in.*lbf

FRONT SEAT ASSEMBLY (for Power Seat)

PART TIGHTENED	N*M	KGF*CM	FT.*LBF
Front seat assembly x Body	37	377	27
Front seatback cover x Front seat frame assembly with adjuster	5.5	56	49 in.*lbf
Active headrest upper unit x Front seat frame assembly with adjuster	14	143	10
Active headrest lower unit x Front seat frame assembly with adjuster	5.0	51	44 in.*lbf

REAR SEAT ASSEMBLY

PART TIGHTENED	N*M	KGF*CM	FT.*LBF
Rear seatback assembly LH x Body	18	184	13
Rear seatback assembly RH x Body	18	184	13
Rear seat center armrest assembly x Rear seatback frame sub-assembly RH	4.5	46	40 in.*lbf

Last Modified: 3-10-2010	6.4 F	**From:** 200901
Model Year: 2010	**Model:** Corolla	**Doc ID:** RM0000030RS00JX
Title: SPECIFICATIONS: SEAT BELT: TORQUE SPECIFICATIONS (2010 Corolla)		

TORQUE SPECIFICATIONS

PART TIGHTENED	N*M	KGF*CM	FT.*LBF
FRONT SEAT INNER BELT ASSEMBLY			
Front seat inner belt assembly x Front seat assembly	41	420	30
FRONT SEAT OUTER BELT ASSEMBLY			
Front seat outer belt assembly (Floor anchor) x Body	41	420	30
Front seat outer belt assembly (Shoulder anchor) x Front shoulder belt anchor adjuster assembly	41	420	30
Front shoulder belt anchor adjuster assembly x Body	41	420	30
Front seat outer belt assembly (for Upper bolt) x Body	5.0	51	44 in.*lbf
Front seat outer belt assembly (for Lower bolt) x Body	41	420	30
REAR SEAT INNER BELT ASSEMBLY			
Rear seat inner with center belt assembly LH x Body	41	420	30
Rear seat inner with center belt assembly RH (Floor anchor) x Body	41	420	30
Rear seat inner with center belt assembly RH x Body	41	420	30
REAR SEAT OUTER BELT ASSEMBLY			
Rear seat outer belt assembly (Floor anchor) x Body	41	420	30
Rear seat outer belt assembly x Body	41	420	30
CHILD RESTRAINT SEAT TETHER ANCHOR			
Child restraint seat tether anchor x Body	41	420	30
CHILD RESTRAINT SEAT ANCHOR BRACKET			
Child restraint seat anchor bracket x Body	31	316	23

Last Modified: 3-10-2010	6.4 F	**From:** 200901
Model Year: 2010	**Model:** Corolla	**Doc ID:** RM0000030QV00OX
Title: SPECIFICATIONS: SLIDING ROOF / CONVERTIBLE: TORQUE SPECIFICATIONS (2010 Corolla)		

TORQUE SPECIFICATIONS

PART TIGHTENED	N*M	KGF*CM	FT.*LBF
Sliding roof glass sub-assembly x Sliding roof housing sub-assembly	4.0	41	35 in.*lbf
Sliding roof housing sub-assembly (Bolt) x Body	5.5	56	49 in.*lbf
Sliding roof housing sub-assembly (Nut) x Body	5.5	56	49 in.*lbf
Sliding roof drive gear sub-assembly x Sliding roof housing sub-assembly	5.4	55	48 in.*lbf

Last Modified: 3-10-2010	6.4 F	**From:** 200901
Model Year: 2010	**Model:** Corolla	**Doc ID:** RM00000118V06CX
Title: SPECIFICATIONS: STANDARD BOLT: HOW TO DETERMINE BOLT STRENGTH (2010 Corolla)		

HOW TO DETERMINE BOLT STRENGTH

Bolt Type

HEXAGON HEAD BOLT			STUD BOLT	WELD BOLT	CLASS
NORMAL RECESS BOLT		DEEP RECESS BOLT			
	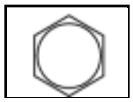 No Mark	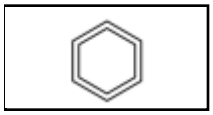 No Mark	 • No Mark	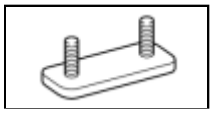	4T
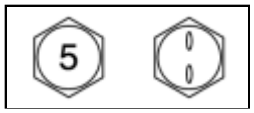		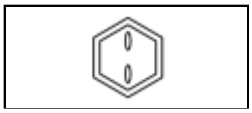			5T
	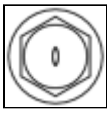 w/ Washer	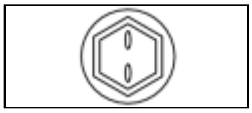 w/ Washer	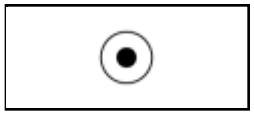		6T
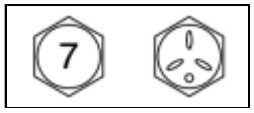		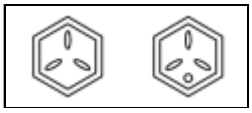			7T
					8T
					9T
		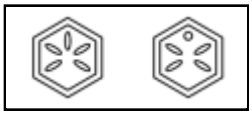			10T

HEXAGON HEAD BOLT		STUD BOLT	WELD BOLT	CLASS
NORMAL RECESS BOLT	DEEP RECESS BOLT			
	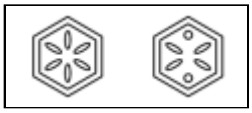			11T

Last Modified: 3-10-2010	6.4 F	**From:** 200901
Model Year: 2010	**Model:** Corolla	**Doc ID:** RM00000118W06CX
Title: SPECIFICATIONS: STANDARD BOLT: SPECIFIED TORQUE FOR STANDARD BOLTS (2010 Corolla)		

SPECIFIED TORQUE FOR STANDARD BOLTS

CLASS	DIAMETER (MM)	PITCH (MM)	SPECIFIED TORQUE					
			HEXAGON HEAD BOLT			HEXAGON FLANGE BOLT		
			N*M	KGF*CM	FT.*LBF	N*M	KGF*CM	FT.*LBF
4T	6	1	5	55	48 in.*lbf	6	60	52 in.*lbf
	8	1.25	12.5	130	9	14	145	10
	10	1.25	26	260	19	29	290	21
	12	1.25	47	480	35	53	540	39
	14	1.5	74	760	55	84	850	61
	16	1.5	115	1,150	83	-	-	-
5T	6	1	6.5	65	56 in.*lbf	7.5	75	65 in.*lbf
	8	1.25	15.5	160	12	17.5	175	13
	10	1.25	32	330	24	36	360	26
	12	1.25	59	600	43	65	670	48
	14	1.5	91	930	67	100	1,050	76
	16	1.5	140	1,400	101	-	-	-
6T	6	1	8	80	69 in.*lbf	9	90	78 in.*lbf
	8	1.25	19	195	14	21	210	15
	10	1.25	39	400	29	44	440	32
	12	1.25	71	730	53	80	810	59
	14	1.5	110	1,100	80	125	1,250	90
	16	1.5	170	1,750	127	-	-	-
7T	6	1	10.5	110	8	12	120	9
	8	1.25	25	260	19	28	290	21
	10	1.25	52	530	38	58	590	43
	12	1.25	95	970	70	105	1,050	76
	14	1.5	145	1,500	108	165	1,700	123
	16	1.5	230	2,300	166	-	-	-
8T	8	1.25	29	300	22	33	330	24

CLASS	DIAMETER (MM)	PITCH (MM)	SPECIFIED TORQUE					
			HEXAGON HEAD BOLT			HEXAGON FLANGE BOLT		
			N*M	KGF*CM	FT.*LBF	N*M	KGF*CM	FT.*LBF
	10	1.25	61	620	45	68	690	50
	12	1.25	110	1,100	80	120	1,250	90
9T	8	1.25	34	340	25	37	380	27
	10	1.25	70	710	51	78	790	57
	12	1.25	125	1,300	94	140	1,450	105
10T	8	1.25	38	390	28	42	430	31
	10	1.25	78	800	58	88	890	64
	12	1.25	140	1,450	105	155	1,600	116
11T	8	1.25	42	430	31	47	480	35
	10	1.25	87	890	64	97	990	72
	12	1.25	155	1,600	116	175	1,800	130



Last Modified: 3-10-2010	6.4 F	**From:** 200901
Model Year: 2010	**Model:** Corolla	**Doc ID:** RM00000118X06CX
Title: SPECIFICATIONS: STANDARD BOLT: HOW TO DETERMINE NUT STRENGTH (2010 Corolla)		

HOW TO DETERMINE NUT STRENGTH

Nut Type

PRESENT STANDARD HEXAGON NUT	OLD STANDARD HEXAGON NUT		CLASS
	COLD FORGING NUT	CUTTING PROCESSED NUT	
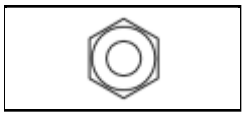 No Mark	-	-	4N
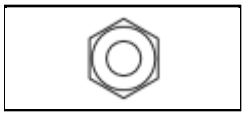 No Mark (w/ Washer)	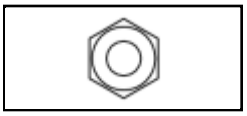 No Mark (w/ Washer)	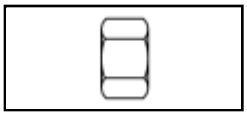 No Mark	5N (4T)
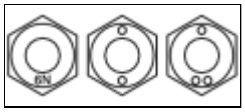	-	-	6N
-	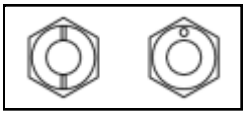	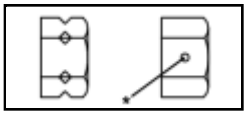	7N (5T)
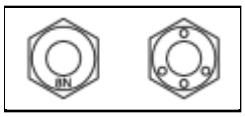	-	-	8N
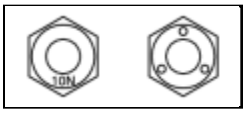	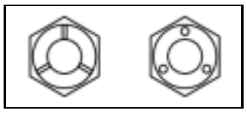	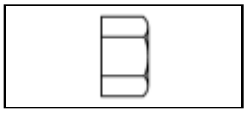 No Mark	10N (7T)
	-	-	11N

PRESENT STANDARD HEXAGON NUT	OLD STANDARD HEXAGON NUT		CLASS
	COLD FORGING NUT	CUTTING PROCESSED NUT	
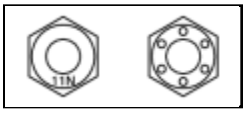			
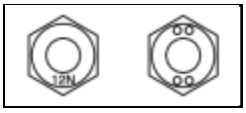	-	-	12N

HINT:

- *: Nut with 1 or more marks on one side surface of the nut.
- Use a nut with the same nut strength classification number (or more) as the bolt strength classification number when tightening parts with a bolt and nut.

Example:

- Bolt = 4T
- Nut = 4N or more

Last Modified: 3-10-2010	6.4 F	**From:** 200901
Model Year: 2010	**Model:** Corolla	**Doc ID:** RM000003JJ4001X
Title: SPECIFICATIONS: STEERING COLUMN: SERVICE DATA (2010 Corolla)		

SERVICE DATA

STEERING SYSTEM

Maximum steering wheel free play	30 mm (1.18 in.)

STEERING COLUMN ASSEMBLY

Steering column assembly preload	0.8 to 1.2 N*m (8 to 12 kgf*cm, 7 to 10 in.*lbf)

Last Modified: 3-10-2010	6.4 F	**From:** 200901
Model Year: 2010	**Model:** Corolla	**Doc ID:** RM000003JJ5001X
Title: SPECIFICATIONS: STEERING COLUMN: TORQUE SPECIFICATIONS (2010 Corolla)		

TORQUE SPECIFICATIONS

PART TIGHTENED	N*M	KGF*CM	FT.*LBF
No. 2 steering intermediate shaft assembly x Steering column assembly	35	360	26
Steering post assembly set bolt	25	255	18
Steering post assembly set nuts	25	255	18
No. 2 steering intermediate shaft assembly x Steering intermediate shaft assembly	35	360	26
Steering wheel set nut	50	510	37

Last Modified: 3-10-2010	6.4 F	**From:** 200901
Model Year: 2010	**Model:** Corolla	**Doc ID:** RM000003K6B001X
Title: SPECIFICATIONS: STEERING GEAR / LINKAGE: SERVICE DATA (2010 Corolla)		

SERVICE DATA

Tie rod end sub-assembly ball joint turning torque	0.3 to 2.0 N*m (3 to 20 kgf*cm, 3 to 17 in.*lbf)
Power steering gear assembly total preload (turning) (for 2AZ-FE)	0.7 to 1.1N*m (8 to 11 kgf*cm, 7 to 9 in.*lbf)
Power steering gear assembly total preload (turning) (for 2ZR-FE)	0.5 to 0.9 N*m (6 to 9 kgf*cm, 5 to 7 in.*lbf)

Last Modified: 3-10-2010	6.4 F	**From:** 200901
Model Year: 2010	**Model:** Corolla	**Doc ID:** RM000003K6C001X
Title: SPECIFICATIONS: STEERING GEAR / LINKAGE: TORQUE SPECIFICATIONS (2010 Corolla)		

TORQUE SPECIFICATIONS

PART TIGHTENED	N*M	KGF*CM	FT.*LBF
Steering link assembly set bolts	58	591	43
Steering intermediate shaft x Steering link assembly	35	357	26
Tie rod end sub-assembly x Steering knuckle	49	500	36
Tie rod end sub-assembly lock nuts	74	755	54
Front wheel set nuts	103	1050	75

Last Modified: 3-10-2010	6.4 F	**From:** 200901
Model Year: 2010	**Model:** Corolla	**Doc ID:** RM000003KA9001X
Title: SPECIFICATIONS: SUPPLEMENTAL RESTRAINT SYSTEMS: TORQUE SPECIFICATIONS (2010 Corolla)		

TORQUE SPECIFICATIONS

PART TIGHTENED	N*M	KGF*CM	FT.*LBF
Steering pad x Steering wheel assembly	8.8	90	78 in.*lbf
Curtain shield airbag assembly x Body	9.8	100	87 in.*lbf
Center airbag sensor assembly x Body	11 (18)	112 (184)	8 (13)
Front airbag sensor x Body	9.0	92	80 in.*lbf
Side airbag sensor x Body	9.0	92	80 in.*lbf
Rear airbag sensor x Body	9.0	92	80 in.*lbf
Seat position sensor x front seat	8.0	82	71 in.*lbf
Occupant classification ECU x front seat	3.0	31	27 in.*lbf

( ) For use without SST

Last Modified: 3-10-2010	6.4 F	**From:** 200901
Model Year: 2010	**Model:** Corolla	**Doc ID:** RM0000032JG00QX
Title: SPECIFICATIONS: U250E AUTOMATIC TRANSMISSION / TRANSAXLE: SERVICE DATA (2010 Corolla)		

SERVICE DATA

Line Pressure (Wheel Locked)		
Engine idling	D position	372 to 412 kPa (3.8 to 4.2 kgf/cm^2, 54 to 60 psi)
	R position	672 to 742 kPa (6.9 to 7.6 kgf/cm^2, 97 to 108 psi)
AT stall (Throttle valve fully open)	D position	931 to 1031 kPa (9.5 to 11.0 kgf/cm^2, 135 to 150 psi)
	R position	1768 to 1968 kPa (18.0 to 20.0 kgf/cm^2, 256 to 285 psi)
Engine stall revolution	D position	2310 +/- 150 rpm
Time lag	N → D position	Less than 1.2 seconds
	N → R position	Less than 1.5 seconds
Engine idle speed (A/C OFF)	N position	approx. 700 rpm
Drive plate runout	Maximum	0.30 mm (0.0118 in.)
Shift Schedule (Normal)		
Throttle valve fully open	1 → 2	45 to 51 km/h (28 to 32 mph)
	2 → 3	89 to 94 km/h (55 to 58 mph)
	3 → 4	140 to 149 km/h (87 to 93 mph)
	4 → 5	201 to 210 km/h (125 to 130 mph)
	5 → 4	194 to 203 km/h (121 to 126 mph)
	4 → 3	132 to 141 km/h (82 to 88 mph)
	3 → 2	81 to 86 km/h (50 to 53 mph)
	2 → 1	32 to 37 km/h (20 to 23 mph)
Throttle valve fully closed	4 → 5	59 to 64 km/h (37 to 40 mph)
	5 → 4	35 to 40 km/h (22 to 25 mph)
Shift Schedule (Cold)		
Throttle valve fully open	1 → 2	30 to 35 km/h (19 to 22 mph)
	2 → 3	55 to 60 km/h (34 to 37 mph)
	3 → 4	78 to 83 km/h (48 to 52 mph)

	4 → 3	71 to 76 km/h (44 to 47 mph)
	3 → 2	48 to 53 km/h (30 to 33 mph)
	2 → 1	25 to 29 km/h (16 to 18 mph)
Shift Schedule (Failure)		
Throttle valve fully open	1 → 3	26 to 31 km/h (16 to 19 mph)
	3 → 4	78 to 83 km/h (48 to 52 mph)
	4 → 3	71 to 76 km/h (44 to 47 mph)
	3 → 1	22 to 27 km/h (14 to 17 mph)
Manual down shift speed	→ 3	136 to 145 km/h (85 to 90 mph)
	→ 2	86 to 91 km/h (53 to 57 mph)
	→ 1	38 to 43 km/h (24 to 27 mph)
Lock-up Point (Throttle Valve Opening 5%)		
D position		
5th gear	Lock-up ON	70 to 75 km/h (43 to 47 mph)
	Lock-up OFF	64 to 68 km/h (40 to 42 mph)
4th gear	Lock-up ON	56 to 61 km/h (35 to 38 mph)
	Lock-up OFF	54 to 59 km/h (34 to 37 mph)
Flex Lock-up Point (Throttle Valve Opening 5%)		
D position		
5th gear	Lock-up ON	65 to 70 km/h (40 to 43 mph)
	Lock-up OFF	59 to 64 km/h (37 to 40 mph)
4th gear	Lock-up ON	41 to 46 km/h (25 to 29 mph)
	Lock-up OFF	32 to 36 km/h (20 to 22 mph)

Standard Resistance		
Item	Condition (Tester Connection)	Specified Condition
Speed sensor NT	20°C (68°F) (1 - 2)	560 to 680 Ω
Speed sensor NC	20°C (68°F) (1 - 2)	560 to 680 Ω
Transmission wire	10°C (50°F) (1 (THO) - 7 (E2))	5 to 8 kΩ

	25°C (77°F) (1 (THO) - 7 (E2))	2.5 to 4.5 kΩ
	110°C (230°F) (1 (THO) - 7 (E2))	0.22 to 0.28 kΩ
Shift solenoid valve SL3	20°C (68°F) (1 - 2)	5.0 to 5.6 Ω
Shift solenoid valve SLT	20°C (68°F) (1 - 2)	5.0 to 5.6 Ω
Shift solenoid valve S4	20°C (68°F) (Solenoid connector S4 - Solenoid body S4)	11 to 15 Ω
Shift solenoid valve SR	20°C (68°F) (Solenoid connector SR - Solenoid body SR)	11 to 15 Ω
Shift solenoid valve DSL	20°C (68°F) (Solenoid connector DSL - Solenoid body DSL)	11 to 13 Ω
Shift solenoid valve SL2	20°C (68°F) (1 - 2)	5.0 to 5.6 Ω
Shift solenoid valve SL1	20°C (68°F) (1 - 2)	5.0 to 5.6 Ω
Park/neutral position switch	P position (2 - 6 and 4 - 5)	Below 1 Ω
	Except P position (2 - 6 and 4 - 5)	10 kΩ or higher
	R position (2 - 1)	Below 1 Ω
	Except R position (2 - 1)	10 kΩ or higher
	N position (2 - 9 and 4 - 5)	Below 1 Ω
	Except N position (2 - 9 and 4 - 5)	10 kΩ or higher
	D position and S position (2 - 7)	Below 1 Ω
	Except D position and S position (2 - 7)	10 kΩ or higher

Oil pump		
Body clearance	STD	0.10 to 0.17 mm (0.00394 to 0.00669 in.)

	Maximum	0.17 mm (0.0067 in.)
Tip clearance	STD	0.07 to 0.15 mm (0.00276 to 0.00591 in.)
	Maximum	0.15 mm (0.00591 in.)
Side clearance	STD	0.02 to 0.05 mm (0.000787 to 0.00197 in.)
	Maximum	0.05 mm (0.00197 in.)
Drive gear thickness	Mark A	11.690 to 11.699 mm (0.4602 to 0.4606 in.)
	Mark B	11.700 to 11.709 mm (0.4606 to 0.4610 in.)
	Mark C	11.710 to 11.720 mm (0.4610 to 0.4614 in.)
	Mark D	11.721 to 11.730 mm (0.4615 to 0.4618 in.)
	Mark E	11.731 to 11.740 mm (0.4619 to 0.4622 in.)
Driven gear thickness	Mark A	11.690 to 11.699 mm (0.4602 to 0.4606 in.)
	Mark B	11.700 to 11.709 mm (0.4606 to 0.4610 in.)
	Mark C	11.710 to 11.720 mm (0.4610 to 0.4614 in.)
	Mark D	11.721 to 11.730 mm (0.4615 to 0.4618 in.)
	Mark E	11.731 to 11.740 mm (0.4619 to 0.4622 in.)
Pump body bushing inside diameter	STD	38.113 to 38.138 mm (1.50051 to 1.50149 in.)
	Maximum	38.188 mm (1.50346 in.)
Stator shaft bushing inside diameter	STD	21.500 to 21.526 mm (0.84646 to 0.84748 in.)
	Maximum	21.57 mm (0.8492 in.)
Multiple disc clutch hub		
Inside diameter	STD	23.025 to 23.046 mm (0.9065 to 0.9073 in.)
	Maximum	23.09 mm (0.9091 in.)
Overdrive direct clutch drum sub-assembly		

Inside diameter	STD	23.025 to 23.046 mm (0.9065 to 0.9073 in.)
	Maximum	23.09 mm (0.9091 in.)
Forward clutch		
Pack clearance		1.00 to 1.25 mm (0.0394 to 0.0492 in.)
Return spring free length		26.74 mm (1.0528 in.)
Flange thickness	Mark 0	2.85 mm (0.1122 in.)
	Mark 1	3.00 mm (0.1181 in.)
	Mark 2	3.15 mm (0.1240 in.)
	Mark 3	3.30 mm (0.1299 in.)
	Mark 4	3.45 mm (0.1358 in.)
	Mark 5	3.60 mm (0.1417 in.)
	Mark 6	3.75 mm (0.1476 in.)
Direct clutch		
Pack clearance		1.05 to 1.47 mm (0.04134 to 0.05787 in.)
Flange thickness	Mark 0	2.9 mm (0.114 in.)
	Mark 1	3.0 mm (0.118 in.)
	Mark 2	3.1 mm (0.122 in.)
	Mark 3	3.2 mm (0.126 in.)
	Mark 4	3.3 mm (0.130 in.)
	Mark 5	3.4 mm (0.134 in.)
	Mark 6	3.5 mm (0.138 in.)
	Mark 7	3.6 mm (0.142 in.)
Overdrive clutch		
Pack clearance		0.61 to 0.83 mm (0.02402 to 0.03268 in.)
Return spring free length		25.91 mm (1.0201 in.)
Flange thickness	Mark 0	2.5 mm (0.0984 in.)
	Mark 1	2.6 mm (0.102 in.)
	Mark 2	2.7 mm (0.106 in.)
	Mark 3	2.8 mm (0.110 in.)
	Mark 4	2.9 mm (0.114 in.)
	Mark 5	3.0 mm (0.118 in.)

	Mark 6	3.1 mm (0.122 in.)
2nd brake		
Pack clearance		0.53 to 0.91 mm (0.0209 to 0.0358 in.)
Flange thickness	Mark 0	2.9 mm (0.114 in.)
	Mark 1	3.0 mm (0.118 in.)
	Mark 2	3.1 mm (0.122 in.)
	Mark 3	3.2 mm (0.126 in.)
	Mark 4	3.3 mm (0.130 in.)
	Mark 5	3.4 mm (0.134 in.)
	Mark 6	3.5 mm (0.138 in.)
	Mark 7	3.6 mm (0.142 in.)
	Mark 8	3.7 mm (0.146 in.)
2nd brake piston		
Return spring free length		16.61 mm (0.6539 in.)
Inside diameter		More than 167 mm (6.57 in.)
Underdrive clutch		
Pack clearance		1.51 to 1.71 mm (0.0594 to 0.0673 in.)
Underdrive clutch drum bushing inside diameter	STD	32.56 to 32.58 mm (1.2818 to 1.2826 in.)
	Max.	32.63 mm (1.2846 in.)
Return spring free length		17.14 mm (0.6748 in.)
Underdrive brake		
Pack clearance		1.81 to 2.20 mm (0.0713 to 0.0866 in.)
Return spring free length		13.24 mm (0.5213 in.)
Flange thickness	Mark Y	2.8 mm (0.110 in.)
	Mark A	3.0 mm (0.118 in.)
	Mark B	3.2 mm (0.126 in.)
	Mark C	3.4 mm (0.134 in.)
	Mark D	3.6 mm (0.142 in.)
1st and reverse brake		
Pack clearance		0.745 to 1.21 mm (0.0293 to 0.0476 in.)

Return spring free length		17.63 mm (0.6941 in.)
Flange thickness	Mark 1	1.8 mm (0.0708 in.)
	Mark 2	1.9 mm (0.0748 in.)
	Mark 3	2.0 mm (0.0787 in.)
	Mark 4	2.1 mm (0.0827 in.)
	Mark 5	2.2 mm (0.0866 in.)
	Mark 6	2.3 mm (0.0906 in.)
	Mark 7	2.4 mm (0.0945 in.)
	Mark 8	2.5 mm (0.0984 in.)
Underdrive planetary gear		
Preload (at 60 rpm)		0.28 to 0.89 N*m (2.9 to 9.1 kgf*cm, 2.5 to 7.9 in.*lbf)
Front planetary gear		
Turning torque (at 60 rpm)		0.19 to 0.4 N*m (1.9 to 4.1 kgf*cm, 1.7 to 3.5 in.*lbf)
Input shaft		
End play		0.262 to 1.249 mm (0.0103 to 0.0492 in.)
Direct clutch to transaxle rear cover		
End play		0.199 to 0.970 mm (0.00783 to 0.0382 in.)
Underdrive planetary gear assembly to Underdrive cylindrical roller bearing		
End play		0.198 to 0.693 mm (0.00779 to 0.02728 in.)
Race thickness	Less than 7.339 mm (0.2894 in.)	3.5 mm (0.138 in.)
	7.339 mm (0.2894 in.) or more	3.8 mm (0.154 in.)
Transaxle rear cover		
Bearing press fit depth		20.55 to 21.25 mm (0.8091 to 0.8366 in.)
Transmission valve body		
Valve body installation bolt length	A	25 mm (0.984 in.)
	B	57 mm (2.244 in.)
	C	41 mm (1.614 in.)
Manual valve lever shaft oil seal		

Oil seal drive in depth		-0.5 to 0.5 mm (-0.0197 to 0.0197 in.)
Front differential		
Backlash		0.05 to 0.20 mm (0.00197 to 0.00787 in.)
Thrust washer thickness	Mark 1	1.000 mm (0.0394 in.)
	Mark 2	1.100 mm (0.0433 in.)
	Mark 3	1.200 mm (0.0472 in.)
	Mark 4	1.300 mm (0.0512 in.)
Preload (at 60 rpm)	New bearing	0.20 to 1.0 N*m (2.0 to 10.2 kgf*cm, 1.8 to 8.9 in.*lbf)
	Used bearing	0.10 to 0.50 N*m (1.0 to 5.1 kgf*cm, 0.9 to 4.4 in.*lbf)
Flange thickness	Mark 0	1.90 mm (0.0748 in.)
	Mark 1	1.95 mm (0.0768 in.)
	Mark 2	2.00 mm (0.0787 in.)
	Mark 3	2.05 mm (0.0807 in.)
	Mark 4	2.10 mm (0.0827 in.)
	Mark 5	2.15 mm (0.0846 in.)
	Mark 6	2.20 mm (0.0866 in.)
	Mark 7	2.25 mm (0.0886 in.)
	Mark 8	2.30 mm (0.0906 in.)
	Mark 9	2.35 mm (0.0925 in.)
	Mark A	2.40 mm (0.0945 in.)
	Mark B	2.45 mm (0.0965 in.)
	Mark C	2.50 mm (0.0984 in.)
	Mark D	2.55 mm (0.1004 in.)
	Mark E	2.60 mm (0.1024 in.)
	Mark F	2.65 mm (0.1043 in.)
	Mark G	2.70 mm (0.1063 in.)
	Mark H	2.75 mm (0.1083 in.)
	Mark J	2.80 mm (0.1102 in.)

Last Modified: 3-10-2010	6.4 F	**From:** 200901
Model Year: 2010	**Model:** Corolla	**Doc ID:** RM00000312400FX
Title: SPECIFICATIONS: THEFT DETERRENT / KEYLESS ENTRY: TORQUE SPECIFICATIONS (2010 Corolla)		

TORQUE SPECIFICATIONS

PART TIGHTENED	N*M	KGF*CM	FT.*LBF
GLASS BREAKAGE SENSOR ECU			
Glass breakage sensor ECU x Body	8.0	82	71 in.*lbf
ENGINE HOOD COURTESY SWITCH			
Hood lock assembly x Body (Centering bolt)	7.5	77	66 in.*lbf
Hood lock assembly x Body (Standard bolt)	8.0	82	71 in.*lbf

Last Modified: 3-10-2010	6.4 F	**From:** 200901
Model Year: 2010	**Model:** Corolla	**Doc ID:** RM000003JJ2002X
Title: SPECIFICATIONS: TIRE PRESSURE MONITORING: TORQUE SPECIFICATIONS (2010 Corolla)		

TORQUE SPECIFICATIONS

TIRE PRESSURE WARNING RECEIVER

PART TIGHTENED	N*M	KGF*CM	FT.*LBF
Tire pressure warning receiver set bolt	7.5	76	66 in.*lbf

TIRE PRESSURE WARNING VALVE AND TRANSMITTER

PART TIGHTENED	N*M	KGF*CM	FT.*LBF
Tire pressure warning valve and transmitter set nut	4.0	41	35 in.*lbf
Front wheel set nuts	103	1050	76
Rear wheel set nuts	103	1050	76

Last Modified: 3-10-2010	6.4 F	**From:** 200901
Model Year: 2010	**Model:** Corolla	**Doc ID:** RM0000032JH00OX
Title: SPECIFICATIONS: U250E AUTOMATIC TRANSMISSION / TRANSAXLE: TORQUE SPECIFICATIONS (2010 Corolla)		

TORQUE SPECIFICATIONS

PART TIGHTENED		N*M	KGF*CM	FT.*LBF
Speed sensor NC x Automatic transaxle		8.8	90	78 in.*lbf
Speed sensor NT x Automatic transaxle		11	115	8
Drain plug x Oil pan		49	500	36
Transmission wire x Transaxle housing		5.4	55	48 in.*lbf
ATF temperature sensor x Valve body		6.6	67	58 in.*lbf
Oil pan x Automatic transaxle		7.8	80	69 in.*lbf
Valve body x Automatic transaxle		11	110	8
Oil strainer x Valve body		11	110	8
Shift solenoid valve SL1 x Transmission valve body assembly		6.6	67	58 in.*lbf
Shift solenoid valve SL2 x Transmission valve body assembly		11	112	8
Shift solenoid valve DSL x Transmission valve body assembly		11	112	8
Shift solenoid valve SR and S4 x Transmission valve body assembly		11	112	8
Shift solenoid valve SL3 and SLT x Transmission valve body assembly		6.6	67	58 in.*lbf
Park/neutral position switch	Bolt	5.4	55	48 in.*lbf
	Nut	6.9	70	61 in.*lbf
Control shaft lever x Control shaft		13	130	9
Shift control cable x Control shaft lever		12	122	9
Shift lever assembly x Body		12	122	9
Transmission control cable assembly x Body		5.0	51	44 in.*lbf
Transmission control cable bracket x Body		5.0	51	44 in.*lbf
Front No. 1 floor heat insulator x Body		5.5	56	49 in.*lbf
Wire harness clamp bracket x Automatic transaxle		11	112	8
Upper transaxle case cover x Automatic transaxle		12	122	9
Speedometer driven hole cover x Automatic transaxle		5.5	56	49 in.*lbf
Oil cooler tube x Automatic transaxle		12	122	9

PART TIGHTENED		N*M	KGF*CM	FT.*LBF
Transmission oil filler tube sub-assembly x Automatic transaxle		5.5	56	49 in.*lbf
No. 1 transmission control cable bracket x Automatic transaxle		12	122	9
Engine mounting bracket LH x Automatic transaxle		52	530	38
Rear engine mounting bracket x Automatic transaxle		45	459	33
Front engine mounting bracket x Automatic transaxle		64	652	47
Transaxle housing x Engine	Bolt A	64	652	47
	Bolt B	46	469	34
	Bolt C	46	469	34
	Bolt D	44	448	32
Transmission control cable support x Automatic transaxle		12	122	9
Torque converter clutch x Drive plate		41	418	30
Front planetary gear lock nut		185 to 350	1886 to 3569	136 to 258
Brake apply tube clamp x Transaxle case		5.4	55	48 in.*lbf
No. 1 Transaxle case plug x Transaxle rear cover		7.4	75	65 in.*lbf
No. 1 Transaxle case plug x Transaxle case		7.4	75	65 in.*lbf
Transaxle rear cover x Transaxle case	Bolt A	19	190	14
	Other bolt	25	250	18
Pawl shaft clamp x Transaxle case		9.8	100	87 in.*lbf
Oil pump assembly x Transaxle case		22	225	16
Transaxle housing x Transaxle case	Bolt A	29	296	21
	Bolt B	29	296	21
	Bolt C	22	225	16
	Bolt D	10	102	7
	Bolt E	33	336	24
	Bolt F	25	255	18
Parking lock pawl bracket x Transaxle case		20	205	15
Manual detent spring x Transaxle case	Bolt A	20	205	15
	Bolt B	12	120	9
Oil cooler tube union (Outlet oil cooler union) x Transaxle case		27	275	20
Oil cooler tube elbow (Inlet oil cooler elbow) x Transaxle case		27	275	20
Oil pump body x Stator shaft assembly		9.8	100	87 in.*lbf

PART TIGHTENED	N*M	KGF*CM	FT.*LBF
Differential gear lube apply tube and No. 1 transaxle apply tube clamp x Transaxle housing	9.8	100	87 in.*lbf
Front differential case x Front differential ring gear	95	970	70
Front planetary gear nut	280	2855	207

Last Modified: 3-10-2010	6.4 F	**From:** 200901
Model Year: 2010	**Model:** Corolla	**Doc ID:** RM0000032JG00PX
Title: SPECIFICATIONS: U341E AUTOMATIC TRANSMISSION / TRANSAXLE: SERVICE DATA (2010 Corolla)		

SERVICE DATA

Line Pressure (Wheel Locked)		
Engine idling	D position	372 to 412 kPa (3.8 to 4.2 kgf/cm^2, 54 to 60 psi)
	R position	553 to 623 kPa (5.6 to 6.4 kgf/cm^2, 80 to 90 psi)
AT stall (Throttle valve fully open)	D position	1120 to 1230 kPa (11.0 to 13.0 kgf/cm^2, 162 to 178 psi)
	R position	1660 to 1870 kPa (17.0 to 19.0 kgf/cm^2, 241 to 271 psi)
Engine stall revolution	D position	2410 +/- 300 rpm
Time lag	N → D position	Less than 1.2 seconds
	N → R position	Less than 1.5 seconds
Engine idle speed (A/C OFF)	N position	approx. 700 rpm
Shift Schedule (Normal)		
D position		
Throttle valve fully open	1 → 2	53 to 60 km/h (33 to 37 mph)
	2 → 3	102 to 112 km/h (63 to 70 mph)
	3 → 4	162 to 173 km/h (101 to 108 mph)
	4 → 3	156 to 167 km/h (97 to 104 mph)
	3 → 2	96 to 105 km/h (60 to 65 mph)
	2 → 1	43 to 48 km/h (27 to 30 mph)
Throttle valve fully closed	3 → 4	36 to 41 km/h (22 to 25 mph)
	4 → 3	32 to 36 km/h (20 to 22 mph)
2 position		
Throttle valve fully open	1 → 2	53 to 60 km/h (33 to 37 mph)
	3 → 2	95 to 104 km/h (59 to 65 mph)
	2 → 1	43 to 48 km/h (27 to 30 mph)
L position		
Throttle valve fully open	3 → 2	95 to 104 km/h (59 to 65 mph)

	2 → 1	46 to 51 km/h (29 to 32 mph)
Lock-up Point (Throttle Valve Opening 5%)		
D position		
4th gear	Lock-up ON	53 to 59 km/h (33 to 37 mph)
	Lock-up OFF	51 to 57 km/h (32 to 35 mph)
3rd gear	Lock-up ON	72 to 78 km/h (45 to 48 mph)
	Lock-up OFF	64 to 69 km/h (40 to 43 mph)
Flex Lock-up Point (Throttle Valve Opening 5%)		
D position		
4th gear	Lock-up ON	48 to 54 km/h (30 to 34 mph)
	Lock-up OFF	47 to 52 km/h (29 to 32 mph)
3rd gear	Lock-up ON	31 to 36 km/h (19 to 22 mph)
	Lock-up OFF	30 to 34 km/h (19 to 21 mph)

Standard Resistance		
Item	Condition (Tester Connection)	Specified Condition
Speed sensor	20°C (68°F) (1 - 2)	560 to 680 Ω
Transmission wire	10°C (50°F) (1 (THO) - 6 (E2))	5 to 8 kΩ
	25°C (77°F) (1 (THO) - 6 (E2))	2.5 to 4.5 kΩ
	110°C (230°F) (1 (THO) - 6 (E2))	0.22 to 0.28 kΩ
Shift solenoid valve S1	15 to 25°C (59 to 77°F) (Solenoid connector S1 - Solenoid body S1)	11 to 15 Ω
Shift solenoid valve S2	15 to 25°C (59 to 77°F) (Solenoid connector S2 - Solenoid body S2)	11 to 15 Ω
Shift solenoid valve ST	15 to 25°C (59 to 77°F) (Solenoid connector ST - Solenoid body ST)	11 to 15 Ω
Shift solenoid valve SLT	20°C (68°F) (1 -2)	5.0 to 5.6 Ω
Shift solenoid valve SLU	20°C (68°F) (1 -2)	5.0 to 5.6 Ω

Park/neutral position switch	P position (2 - 6 and 4 - 5)	Below 1 Ω
	Except P position (2 - 6 and 4 - 5)	10 kΩ or higher
	R position (2 - 1)	Below 1 Ω
	Except R position (2 - 1)	10 kΩ or higher
	N position (2 - 9 and 4 - 5)	Below 1 Ω
	Except N position (2 - 9 and 4 - 5)	10 kΩ or higher
	D position and 3 position (2 - 7)	Below 1 Ω
	Except D position and 3 position (2 - 7)	10 kΩ or higher
	2 position (2 - 3)	Below 1 Ω
	Except 2 position (2 - 3)	10 kΩ or higher
	L position (2 - 8)	Below 1 Ω
	Except L position (2 - 8)	10 kΩ or higher

No. 1 transaxle case oil seal	Drive in depth	-0.5 to 0.5 mm (-0.0197 to 0.0197 in.)
No. 2 transaxle case oil seal	Drive in depth	2.2 to 3.2 mm (0.0866 to 0.126 in.)
Drive plate runout	Maximum	0.30 mm (0.0118 in.)
Input shaft end play	Standard	0.38 to 1.29 mm (0.0149 to 0.0507 in.)
Intermediate shaft clearance	Standard	0.21 to 0.96 mm (0.00826 to 0.0377 in.)
Rear clutch drum thrust needle roller bearing	Brown	0.785 mm (0.0309 in.)
	Black	1.1 mm (0.0433 in.)
1st and reverse brake return spring free length	Standard	13.96 mm (0.549 in.)
Differential case tapered roller bearing preload	New bearing	0.98 to 1.57 N*m (10.0 to 16.0 kgf*cm, 8.7 to 13.9 in.*lbf)

	Used bearing	0.49 to 0.78 N*m (5.0 to 8.0 kgf*cm, 4.3 to 6.9 in.*lbf)
Transaxle case side adjusting shim	Mark 01	1.90 mm (0.0748 in.)
	Mark 02	1.95 mm (0.0768 in.)
	Mark 03	2.00 mm (0.0787 in.)
	Mark 04	2.05 mm (0.0807 in.)
	Mark 05	2.10 mm (0.0827 in.)
	Mark 06	2.15 mm (0.0846 in.)
	Mark 07	2.20 mm (0.0866 in.)
	Mark 08	2.25 mm (0.0885 in.)
	Mark 09	2.30 mm (0.0906 in.)
	Mark 10	2.35 mm (0.0925 in.)
	Mark 11	2.40 mm (0.0945 in.)
	Mark 12	2.45 mm (0.0965 in.)
	Mark 13	2.50 mm (0.0984 in.)
	Mark 14	2.55 mm (0.1004 in.)
	Mark 15	2.60 mm (0.1024 in.)
	Mark 16	2.65 mm (0.1043 in.)
	Mark 17	2.70 mm (0.1063 in.)
	Mark 18	2.75 mm (0.1083 in.)
	Mark 19	2.80 mm (0.1102 in.)
Manual valve lever shaft oil seal	Drive in depth	-0.5 to 0.5 mm (-0.0197 to 0.0197 in.)
Differential drive pinion plug clearance	Standard	2.5 to 3.5 mm (0.0984 to 0.137 in.)
1st and reverse brake pack clearance	Standard	0.81 to 1.20 mm (0.0318 to 0.0472 in.)
1st and reverse brake flange thickness	Mark -	3.4 mm (0.134 in.)
	Mark 1	3.6 mm (0.142 in.)
	Mark 2	3.8 mm (0.150 in.)
	Mark 3	4.0 mm (0.157 in.)
2nd brake pack clearance	Standard	0.85 to 1.24 mm (0.0334 to 0.0488 in.)
2nd brake flange thickness	Mark -	3.0 mm (0.118 in.)
	Mark 1	3.2 mm (0.126 in.)
	Mark 2	3.4 mm (0.134 in.)

	Mark 3	3.6 mm (0.142 in.)
2nd coast and overdrive brake pack clearance	Standard	2.10 to 2.49 mm (0.0826 to 0.0980 in.)
2nd coast and overdrive brake flange thickness	Mark 4	4.0 mm (0.1575 in.)
	Mark 5	4.2 mm (0.1654 in.)
	Mark 6	4.4 mm (0.1732 in.)
	Mark 7	4.6 mm (0.1811 in.)
C-2 accumulator spring	Free length	66.20 to 67.60 mm (2.606 to 2.661 in.)
	Outer diameter	17.20 mm (0.677 in.)
C-3 accumulator spring	Free length	87.30 mm (3.437 in.)
	Outer diameter	18.70 mm (0.736 in.)
B-2 accumulator spring	Free length	66.90 mm (2.633 in.)
	Outer diameter	15.50 mm (0.610 in.)
Stator shaft inside diameter	Standard	21.50 to 21.52 mm (0.846 to 0.847 in.)
	Maximum	21.52 mm (0.847 in.)
Oil pump gear clearance (Driven gear to drive gear clearance)	Standard	0.07 to 0.15 mm (0.00275 to 0.00590 in.)
	Maximum	0.15 mm (0.00590 in.)
Oil pump gear clearance (Driven gear to oil pump body clearance)	Standard	0.10 to 0.15 mm (0.00393 to 0.00590 in.)
	Maximum	0.15 mm (0.00590 in.)
Oil pump clearance (Side clearance)	Standard	0.02 to 0.05 mm (0.000787 to 0.00196 in.)
	Maximum	0.05 mm (0.00196 in.)
Drive gear thickness	No. 1	9.440 to 9.449 mm (0.3717 to 0.3720 in.)
	No. 2	9.450 to 9.459 mm (0.3720 to 0.3724 in.)
	No. 3	9.460 to 9.470 mm (0.3724 to 0.3728 in.)
	No. 4	9.471 to 9.480 mm (0.3729 to 0.3732 in.)
	No. 5	9.481 to 9.490 mm (0.3733 to 0.3736 in.)
Driven gear thickness	No. 1	9.440 to 9.449 mm (0.3717 to 0.3720 in.)
	No. 2	9.450 to 9.459 mm (0.3720 to 0.3724 in.)
	No. 3	9.460 to 9.470 mm (0.3724 to 0.3728 in.)
	No. 4	9.471 to 9.480 mm (0.3729 to 0.3732 in.)
	No. 5	9.481 to 9.490 mm (0.3733 to 0.3736 in.)

Front oil pump body inside diameter	Standard	38.12 to 38.13 mm (1.500 to 1.501 in.)
	Maximum	38.13 mm (1.501 in.)
Front oil pump oil seal	Drive in depth	-0.15 to 0.15 mm (-0.00590 to 0.00590 in.)
Forward clutch return spring free length	Standard	21.69 mm (0.853 in.)
Forward clutch pack clearance	Standard	1.41 to 1.80 mm (0.0555 to 0.0708 in.)
Forward clutch flange thickness	Mark -	3.0 mm (0.118 in.)
	Mark 1	3.2 mm (0.126 in.)
	Mark 2	3.4 mm (0.134 in.)
	Mark 3	3.6 mm (0.142 in.)
2nd brake piston return spring free length	Standard	14.65 mm (0.576 in.)
Direct clutch return spring free length	Standard	31.7 mm (1.248 in.)
Reverse clutch pack clearance	Standard	0.62 to 1.16 mm (0.0244 to 0.0456 in.)
Reverse clutch flange thickness	Mark -	3.0 mm (0.118 in.)
	Mark 1	3.2 mm (0.126 in.)
	Mark 2	3.4 mm (0.134 in.)
	Mark 3	3.6 mm (0.142 in.)
Direct clutch pack clearance	Standard	0.62 to 1.02 mm (0.0244 to 0.0402 in.)
Direct clutch flange thickness	Mark -	3.0 mm (0.118 in.)
	Mark 1	3.2 mm (0.126 in.)
	Mark 2	3.4 mm (0.134 in.)
	Mark 3	3.6 mm (0.142 in.)
Overdrive brake return spring free length	Standard	17.88 mm (0.703 in.)
Transaxle rear cover needle roller bearing depth	Standard	25.1 mm (0.988 in.)
Differential side gear backlash	Standard	0.05 to 0.20 mm (0.00196 to 0.00787 in.)
Thrust washer thickness		0.95 mm (0.0374 in.)
		1.00 mm (0.0394 in.)
		1.05 mm (0.0413 in.)
		1.10 mm (0.0433 in.)
		1.15 mm (0.0453 in.)
		1.20 mm (0.0472 in.)

Last Modified: 3-10-2010	6.4 F	**From:** 200901
Model Year: 2010	**Model:** Corolla	**Doc ID:** RM0000032JH00NX
Title: SPECIFICATIONS: U341E AUTOMATIC TRANSMISSION / TRANSAXLE: TORQUE SPECIFICATIONS (2010 Corolla)		

TORQUE SPECIFICATIONS

PART TIGHTENED	N*M	KGF*CM	FT.*LBF
Speed sensor x Automatic transaxle	5.4	55	48 in.*lbf
Transmission wire x Automatic transaxle case	5.4	55	48 in.*lbf
Transmission valve body assembly x Automatic transaxle	11	112	8
Manual detent spring sub-assembly x Transmission valve body assembly	11	112	8
ATF temperature sensor lock plate x Transmission valve body assembly	11	112	8
Valve body oil strainer sub-assembly x Transmission valve body assembly	11	112	8
Automatic transaxle oil pan sub-assembly x Automatic transaxle case	7.8	80	69 in.*lbf
Park/neutral position switch assembly x Automatic transaxle	5.4	55	48 in.*lbf
Lock plate x Park/neutral position switch assembly	6.9	70	61 in.*lbf
Control shaft lever x Park/neutral position switch assembly	13	133	10
Transmission control cable assembly x Control shaft lever	12	122	9
Drain plug x Automatic transaxle oil pan sub-assembly	49	500	36
Shift solenoid valve x Valve body	11	112	8
Shift lever assembly x Body	12	122	9
Transmission control cable assembly x Body	5.0	51	44 in.*lbf
Transmission control cable bracket x Body	5.0	51	44 in.*lbf
Front No. 1 floor heat insulator x Body	5.5	56	49 in.*lbf
Speedometer driven hole cover sub-assembly x Automatic transaxle	5.5	56	49 in.*lbf
Transmission oil filler tube sub-assembly x Automatic transaxle	12	122	9
Oil cooler tube x Transmission oil filler tube sub-assembly	12	122	9

PART TIGHTENED	N*M	KGF*CM	FT.*LBF
Engine mounting bracket LH x Automatic transaxle	52	530	38
Front engine mounting bracket x Automatic transaxle	64	653	47
for TMC made: (Silver colored bolt) Rear engine mounting bracket x Automatic transaxle	45	459	33
for TMC made: (Black colored bolt) Rear engine mounting bracket x Automatic transaxle	64	653	47
except TMC made: Rear engine mounting bracket x Automatic transaxle	45	459	33
Automatic transaxle assembly x Engine	30	301	22
No. 1 transmission control cable bracket x Automatic transaxle	12	122	9
Transmission control cable support x Automatic transaxle	12	122	9
Torque converter set bolt x Drive plate	28	286	21
Oil cooler tube union x Automatic transaxle	27	275	20
Transaxle housing x Transaxle case Bolt A	29	296	21
Transaxle housing x Transaxle case Bolt B	22	224	16
Bearing lock plate x Transaxle housing	11	112	8
Parking lock pawl bracket x Transaxle case	20	204	15
Planetary gear assembly x Counter drive gear nut	280	2855	207
Rear transaxle cover assembly x Transaxle case	25	255	18
Oil pump assembly x Transaxle housing	22	224	16
No. 1 transaxle case plug x Automatic transaxle	7.4	76	66 in.*lbf
Stator shaft assembly x Front oil pump body	9.8	100	87 in.*lbf
Rear transaxle cover plug x Rear transaxle cover	7.4	76	66 in.*lbf
Differential case x Front differential ring gear	88	898	65

Last Modified: 3-10-2010	6.4 F	**From:** 200901
Model Year: 2010	**Model:** Corolla	**Doc ID:** RM000002E8X00QX
Title: SPECIFICATIONS: WINDOW / GLASS: TORQUE SPECIFICATIONS (2010 Corolla)		

TORQUE SPECIFICATIONS

PART TIGHTENED	N*M	KGF*CM	FT.*LBF
Amplifier antenna assembly x Body	8.4	86	74 in.*lbf

Last Modified: 3-10-2010	6.4 F	**From:** 200901
Model Year: 2010	**Model:** Corolla	**Doc ID:** RM000003138000X
Title: SPECIFICATIONS: WIPER / WASHER: TORQUE SPECIFICATIONS (2010 Corolla)		

TORQUE SPECIFICATIONS

PART TIGHTENED	N*M	KGF*CM	FT.*LBF
FRONT WIPER MOTOR			
Front wiper arm and blade assembly LH x Windshield wiper motor and link assembly	26	265	19
Front wiper arm and blade assembly RH x Windshield wiper motor and link assembly	26	265	19
Windshield wiper motor and link assembly x Body	5.5	56	49 in.*lbf
Windshield wiper link assembly x Windshield wiper motor assembly	5.4	55	48 in.*lbf
Windshield wiper motor assembly x Crank arm assembly	17	173	13

Last Modified: 3-10-2010	6.4 F	**From:** 200901
Model Year: 2010	**Model:** Corolla	**Doc ID:** RM000003JJ3001X
Title: SPECIFICATIONS: TIRE / WHEEL: SERVICE DATA (2010 Corolla)		

SERVICE DATA

Cold Tire Inflation Pressure

TIRE SIZE	FRONT KPA (KGF/CM^2, PSI)	REAR KPA (KGF/CM^2, PSI)
P195/65R15 89S	210 (2.1, 30)	210 (2.1, 30)
P205/55R16 89H P215/45R17 87W 205/55R16 91V	220 (2.2, 32)	220 (2.2, 32)

Maximum tire runout	1.4 mm (0.0551 in.)
Maximum wheel imbalance	8.0 g (0.0176 lb)



Last Modified: 3-10-2010	6.4 K	**From:** 200901
Model Year: 2010	**Model:** Corolla	**Doc ID:** RM000002XAO00GX
Title: AUDIO / VIDEO: FRONT DOOR SPEAKER: COMPONENTS (2010 Corolla)		

COMPONENTS

ILLUSTRATION

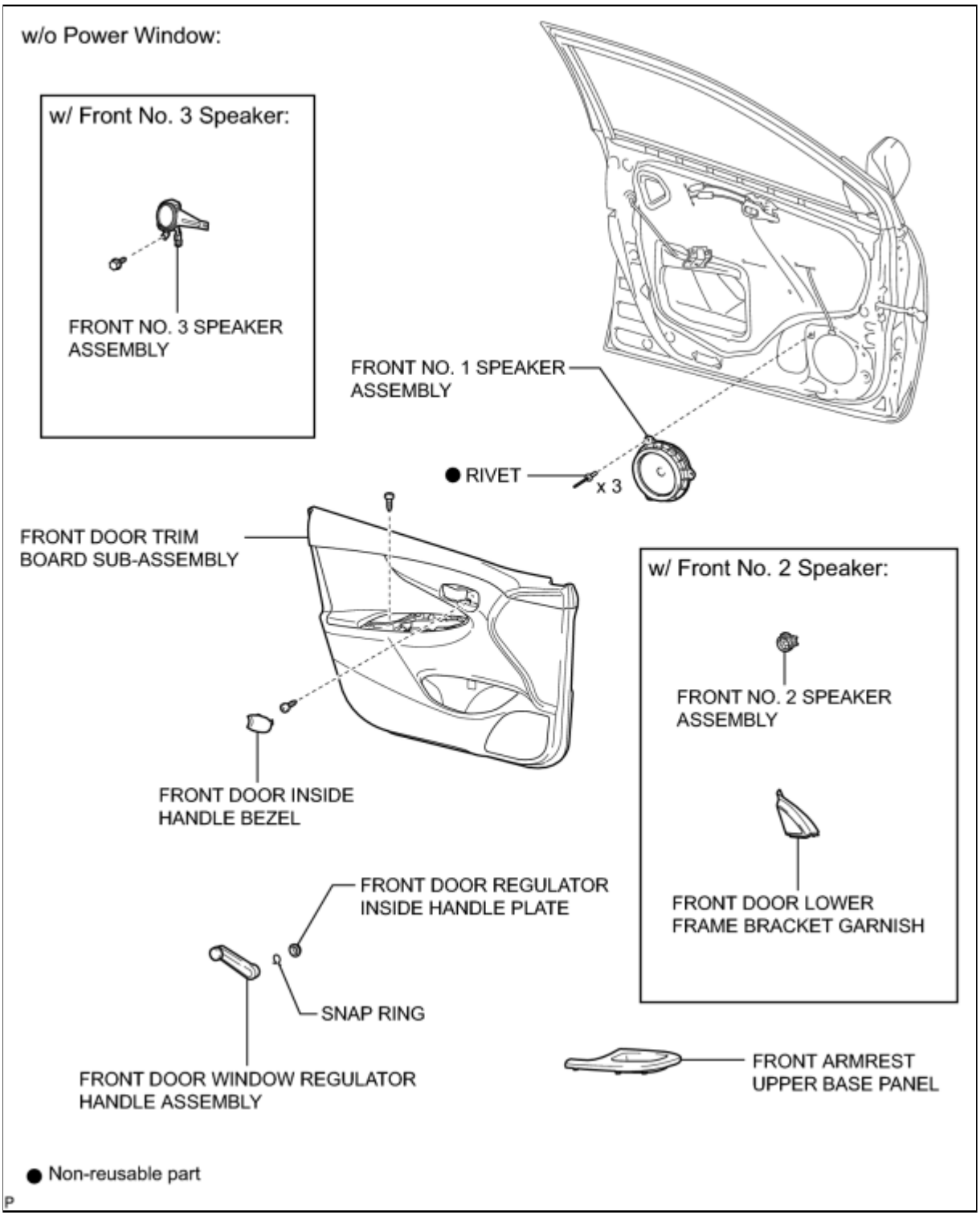

ILLUSTRATION

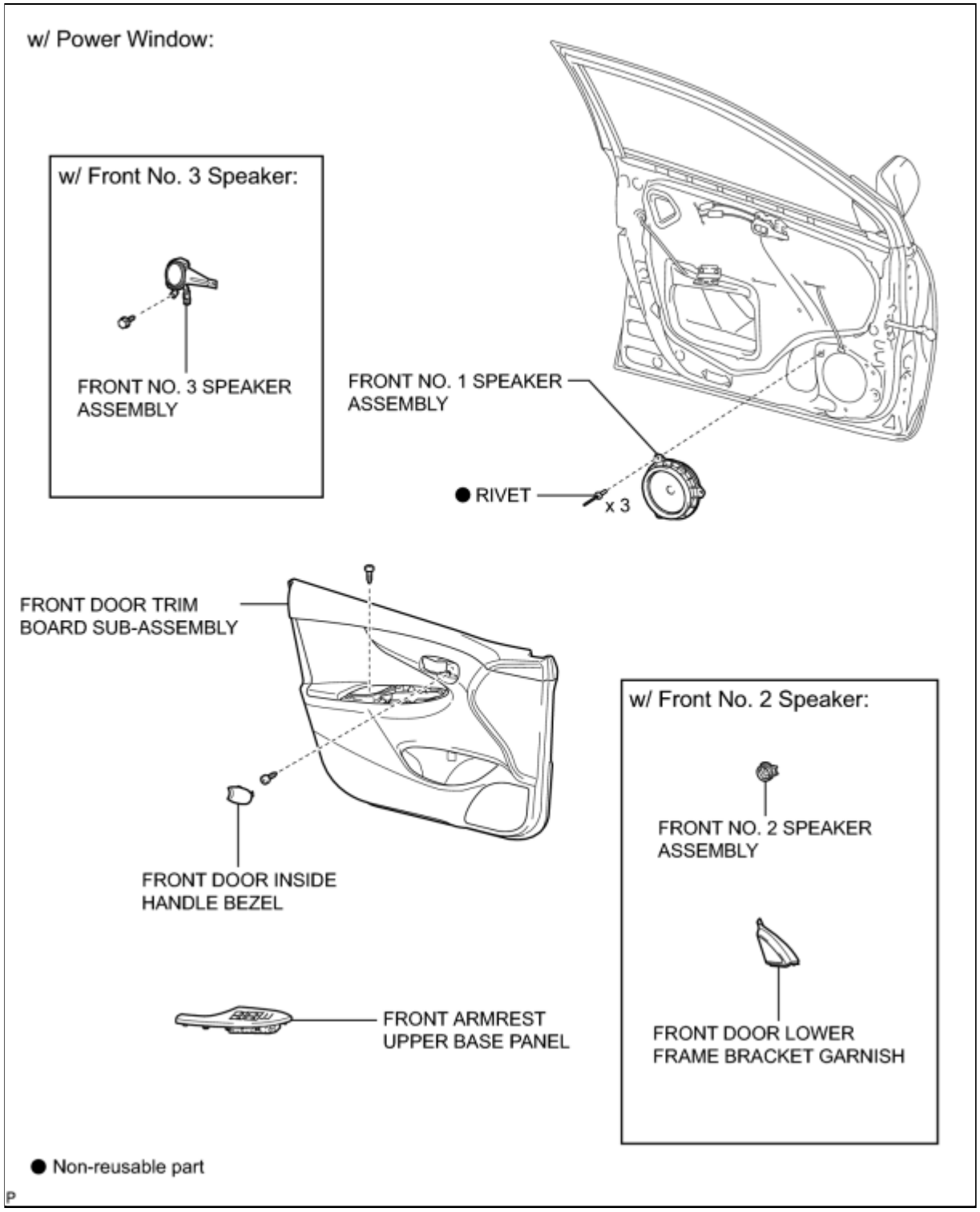

Last Modified: 3-10-2010	6.4 G	**From:** 200901
Model Year: 2010	**Model:** Corolla	**Doc ID:** RM0000020Q2025X
Title: AUDIO / VIDEO: FRONT DOOR SPEAKER: ON-VEHICLE INSPECTION (2010 Corolla)		

ON-VEHICLE INSPECTION

1. INSPECT FRONT NO. 1 SPEAKER

HINT:

Remove interior parts so that the front No. 1 speaker can be seen.

(a) Check the speaker installation.

OK:

The speaker is securely installed.

If the result is not as specified, reinstall the front No. 1 speaker.

(b) Visually check the speaker.

OK:

The cone paper of the speaker is not torn.

If the result is not as specified, replace the front No. 1 speaker.

(c) Speaker resistance check

(1) Disconnect the front No. 1 speaker connector.

(2) Measure the resistance between the terminals of the speaker.

Standard Resistance:

for 8 Speakers

Except for 8 Speakers

TESTER CONNECTION	CONDITION	SPECIFIED CONDITION
1 - 2	Always	1.5 to 2.2 Ω

TESTER CONNECTION	CONDITION	SPECIFIED CONDITION
1 - 2	Always	3.2 to 4.8 Ω

If the result is not as specified, replace the front No. 1 speaker.

2. INSPECT FRONT NO. 2 SPEAKER (for 6 Speakers)

HINT:

Remove interior parts so that the front No. 2 speaker can be seen.

(a) Check the speaker installation.

OK:

The speaker is securely installed.

If the result is not as specified, reinstall the front No. 2 speaker.

(b) Visually check the speaker.

OK:

The cone paper of the speaker is not torn.

If the result is not as specified, replace the front No. 2 speaker.

3. INSPECT FRONT NO. 3 SPEAKER (for 8 Speakers)

HINT:

Remove interior parts so that the front No. 3 speaker can be seen.

(a) Check the speaker installation.

OK:

The speaker is securely installed.

If the result is not as specified, reinstall the front No. 3 speaker.

(b) Visually check the speaker.

OK:

The cone paper of the speaker is not torn.

If the result is not as specified, replace the front No. 3 speaker.

(c) Speaker resistance check

(1) Disconnect the front No. 3 speaker connector.

(2) Measure the resistance between the terminals of the speaker.

Standard Resistance:

TESTER CONNECTION	CONDITION	SPECIFIED CONDITION
1 - 2	Always	1.5 to 2.5 Ω

If the result is not as specified, replace the front No. 3 speaker.

Last Modified: 3-10-2010	6.4 A	**From:** 200901
Model Year: 2010	**Model:** Corolla	**Doc ID:** RM000002XAP00GX
Title: AUDIO / VIDEO: FRONT DOOR SPEAKER: REMOVAL (2010 Corolla)		

REMOVAL

1. REMOVE FRONT DOOR WINDOW REGULATOR HANDLE ASSEMBLY (w/o Power Window) INFO

2. REMOVE FRONT DOOR INSIDE HANDLE BEZEL INFO

3. REMOVE FRONT ARMREST UPPER BASE PANEL (w/o Power Window) INFO

4. REMOVE FRONT ARMREST UPPER BASE PANEL (w/ Power Window) INFO

5. REMOVE FRONT DOOR TRIM BOARD SUB-ASSEMBLY INFO

6. REMOVE FRONT NO. 1 SPEAKER ASSEMBLY

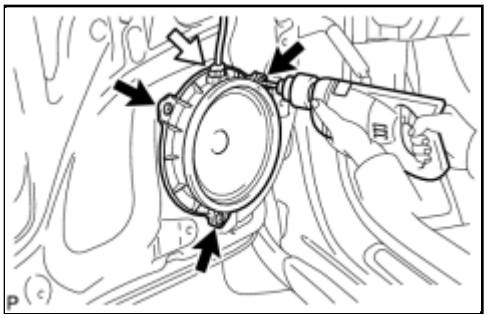

(a) Disconnect the connector.

(b) Using a drill bit with a diameter of less than 4 mm (0.158 in.), drill out the 3 rivet heads and remove the front No. 1 speaker assembly.

NOTICE:

- Do not touch the cone part of the speaker.
- Do not drill the rivet at an angle as this will cause damage to the drill and drill hole. Line up the drill and rivet, and carefully drill out the rivet head.
- Be careful as the cut rivet will be very hot.

(c) Continue drilling and push out the remaining rivet fragments.

(d) Using a vacuum cleaner, remove the rivet fragments and shavings from the inside of the door.

7. REMOVE FRONT DOOR LOWER FRAME BRACKET GARNISH (w/ Front No. 2 Speaker) INFO

8. REMOVE FRONT NO. 2 SPEAKER ASSEMBLY (w/ Front No. 2 Speaker)

(a) Disengage the 3 claws and remove the front No. 2 speaker assembly.

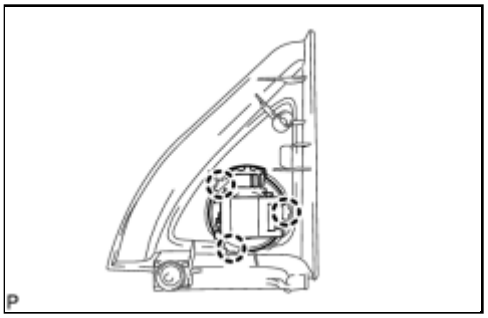

9. REMOVE FRONT NO. 3 SPEAKER ASSEMBLY (w/ Front No. 3 Speaker)

(a) Disconnect the connector.

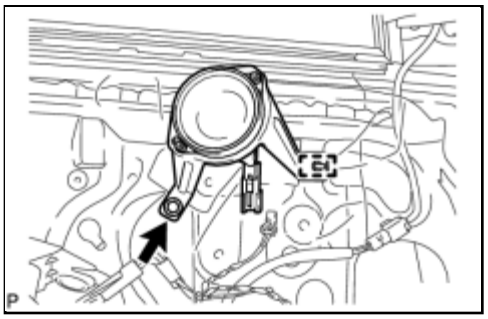

(b) Remove the screw.

(c) Disengage the clamp and remove the front No. 3 speaker assembly.

Last Modified: 3-10-2010	6.4 A	**From:** 200901
Model Year: 2010	**Model:** Corolla	**Doc ID:** RM000002XAN00GX
Title: AUDIO / VIDEO: FRONT DOOR SPEAKER: INSTALLATION (2010 Corolla)		

INSTALLATION

1. INSTALL FRONT NO. 3 SPEAKER ASSEMBLY (w/ Front No. 3 Speaker)

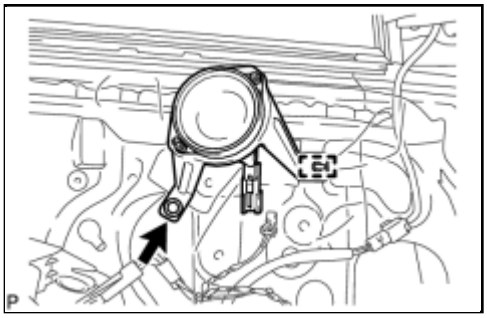

(a) Engage the clamp and install the front No. 3 speaker assembly.

(b) Install the screw.

(c) Connect the connector.

2. INSTALL FRONT NO. 2 SPEAKER ASSEMBLY (w/ Front No. 2 Speaker)

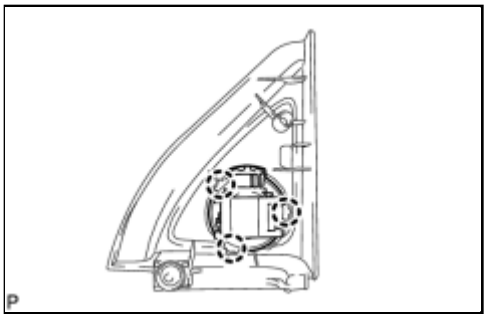

(a) Engage the 3 claws and install the front No. 2 speaker assembly.

3. INSTALL FRONT DOOR LOWER FRAME BRACKET GARNISH (w/ Front No. 2 Speaker)

INFO

4. INSTALL FRONT NO. 1 SPEAKER ASSEMBLY

(a) Using an air riveter or hand riveter, install the front No. 1 speaker assembly with 3 new rivets.

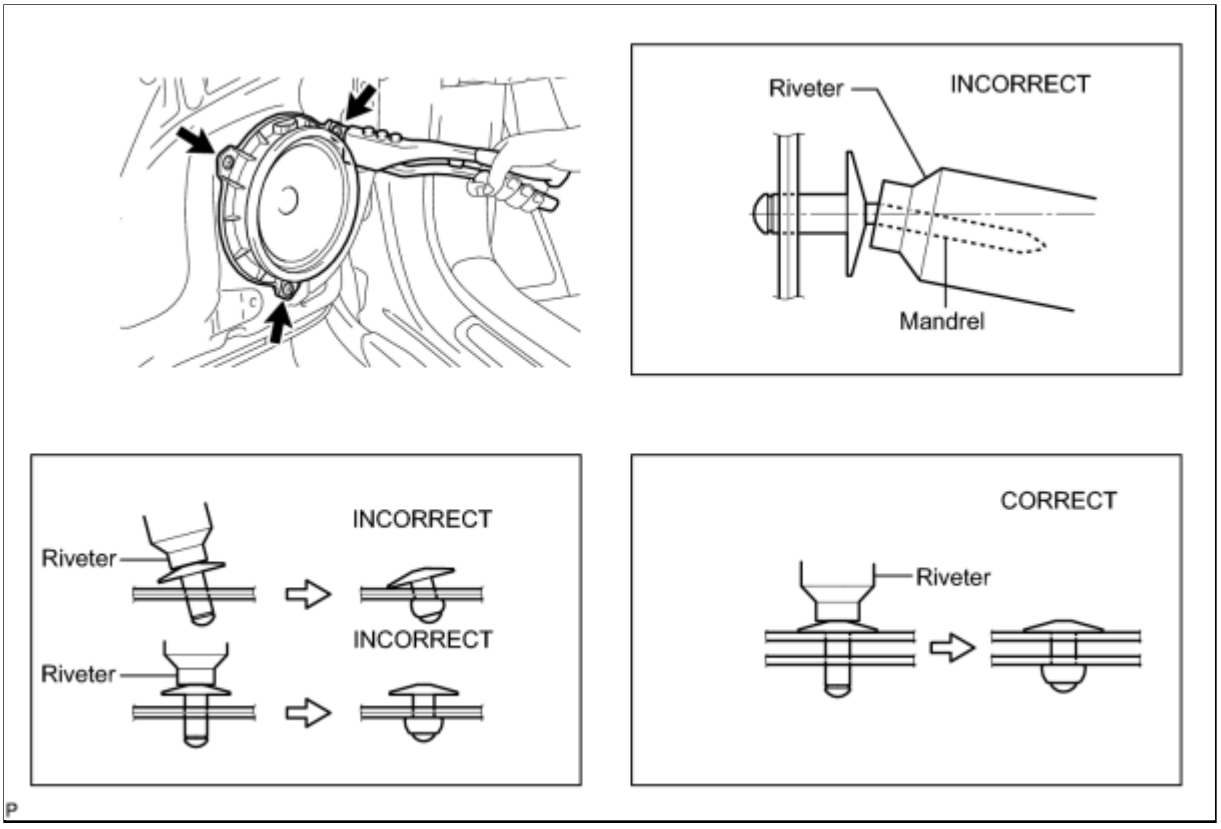

NOTICE:

- Do not pry the rivet with the riveter, as this will cause damage to the riveter and mandrel.
- Confirm that the rivet is seated properly against the moulding. Do not tilt the riveter when installing the rivet to the moulding. Do not leave any space between the rivets head and moulding.
- Do not leave any space between the moulding and door frame. Firmly hold the 2 items together while installing the rivet.

HINT:

If the rivet cannot be cut, pull it once and cut it.

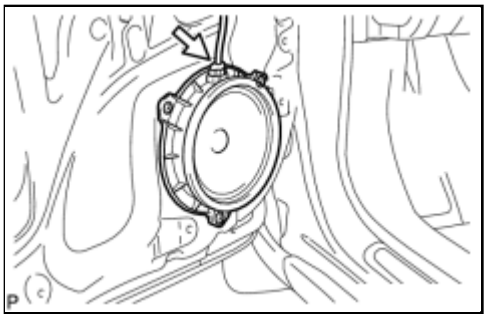

(b) Connect the connector.

5. INSTALL FRONT DOOR TRIM BOARD SUB-ASSEMBLY INFO

6. INSTALL FRONT ARMREST UPPER BASE PANEL (w/o Power Window) INFO

7. INSTALL FRONT ARMREST UPPER BASE PANEL (w/ Power Window) INFO

8. INSTALL FRONT DOOR INSIDE HANDLE BEZEL INFO

9. INSTALL FRONT DOOR WINDOW REGULATOR HANDLE ASSEMBLY (w/o Power Window) INFO

Last Modified: 3-10-2010	6.4 K	**From:** 200901
Model Year: 2010	**Model:** Corolla	**Doc ID:** RM000001Q0000SX
Title: AUDIO / VIDEO: MICROPHONE: COMPONENTS (2010 Corolla)		

COMPONENTS

ILLUSTRATION

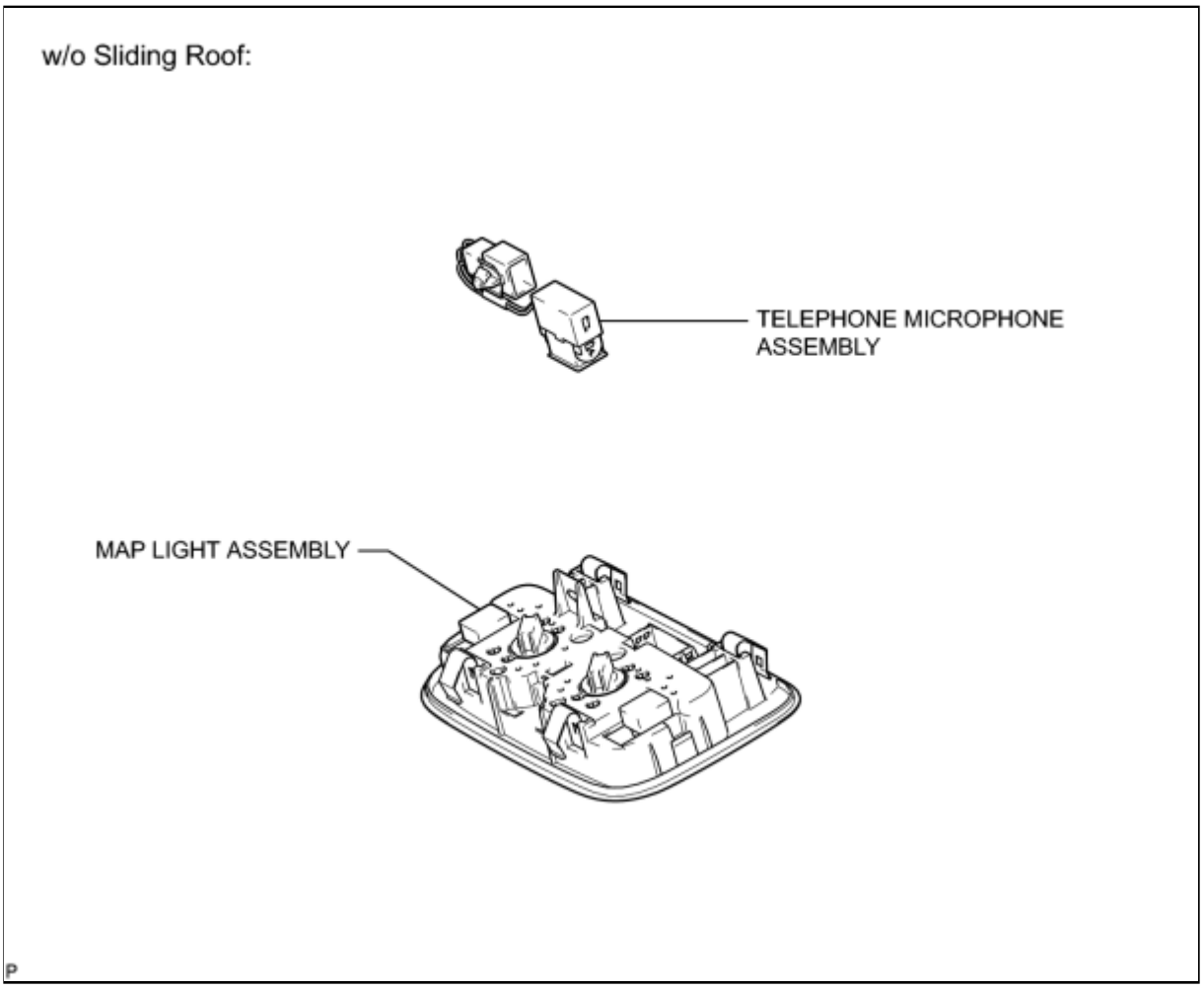

ILLUSTRATION

w/ Sliding Roof:

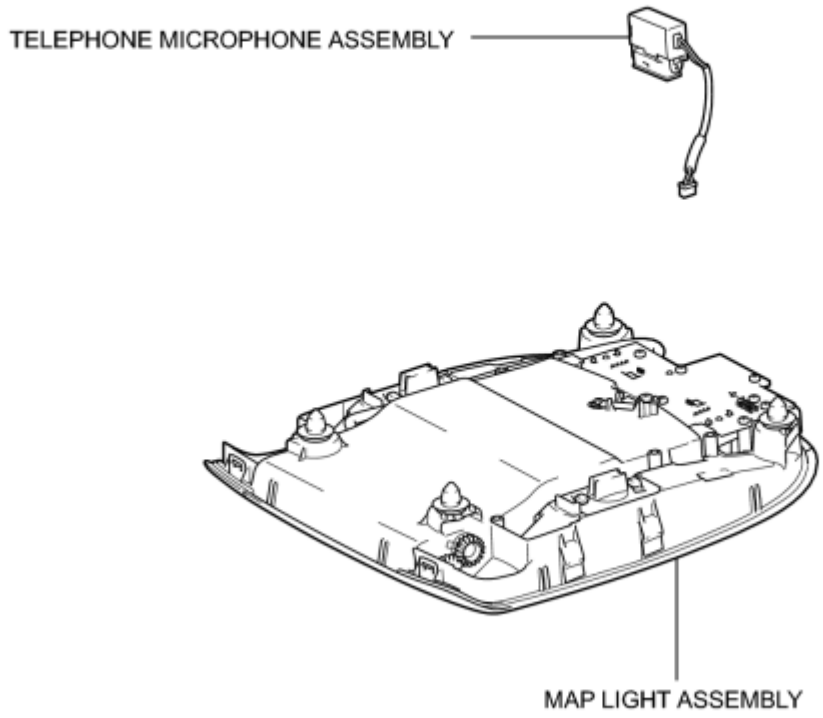

P

Last Modified: 3-10-2010	6.4 K	**From:** 200901
Model Year: 2010	**Model:** Corolla	**Doc ID:** RM000002XB000IX
Title: AUDIO / VIDEO: RADIO ANTENNA (for Satellite Radio): COMPONENTS (2010 Corolla)		

COMPONENTS

ILLUSTRATION

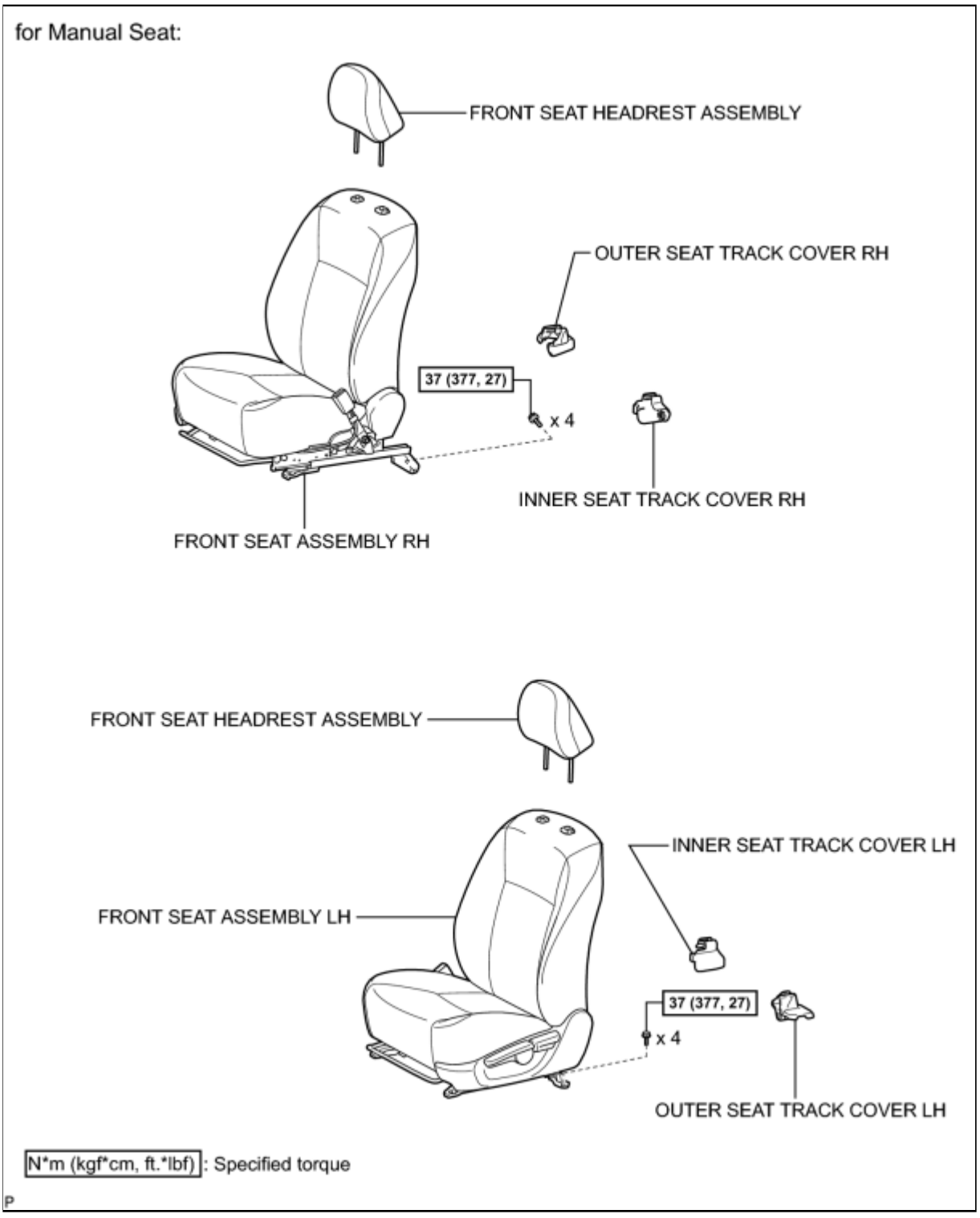

ILLUSTRATION

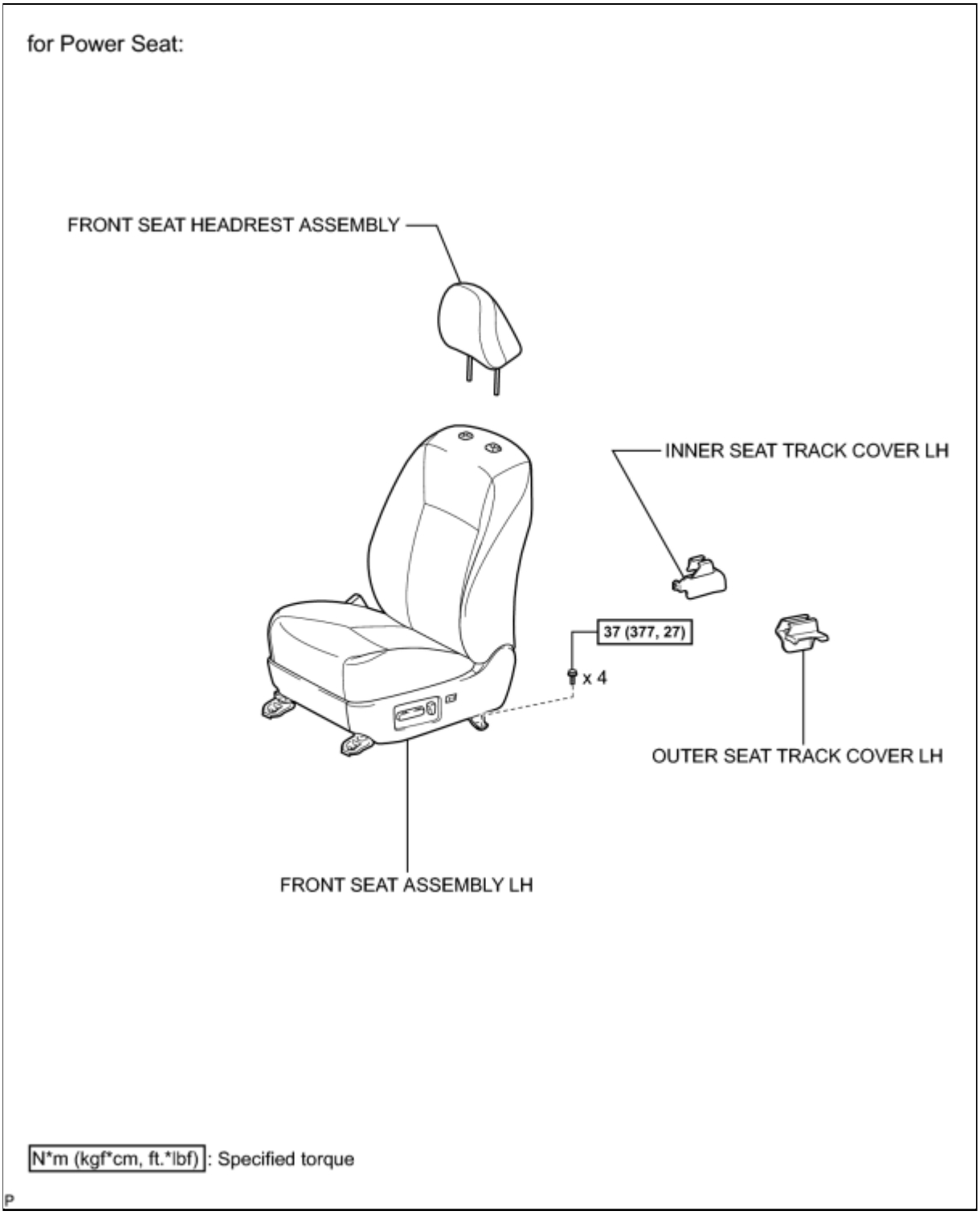

ILLUSTRATION

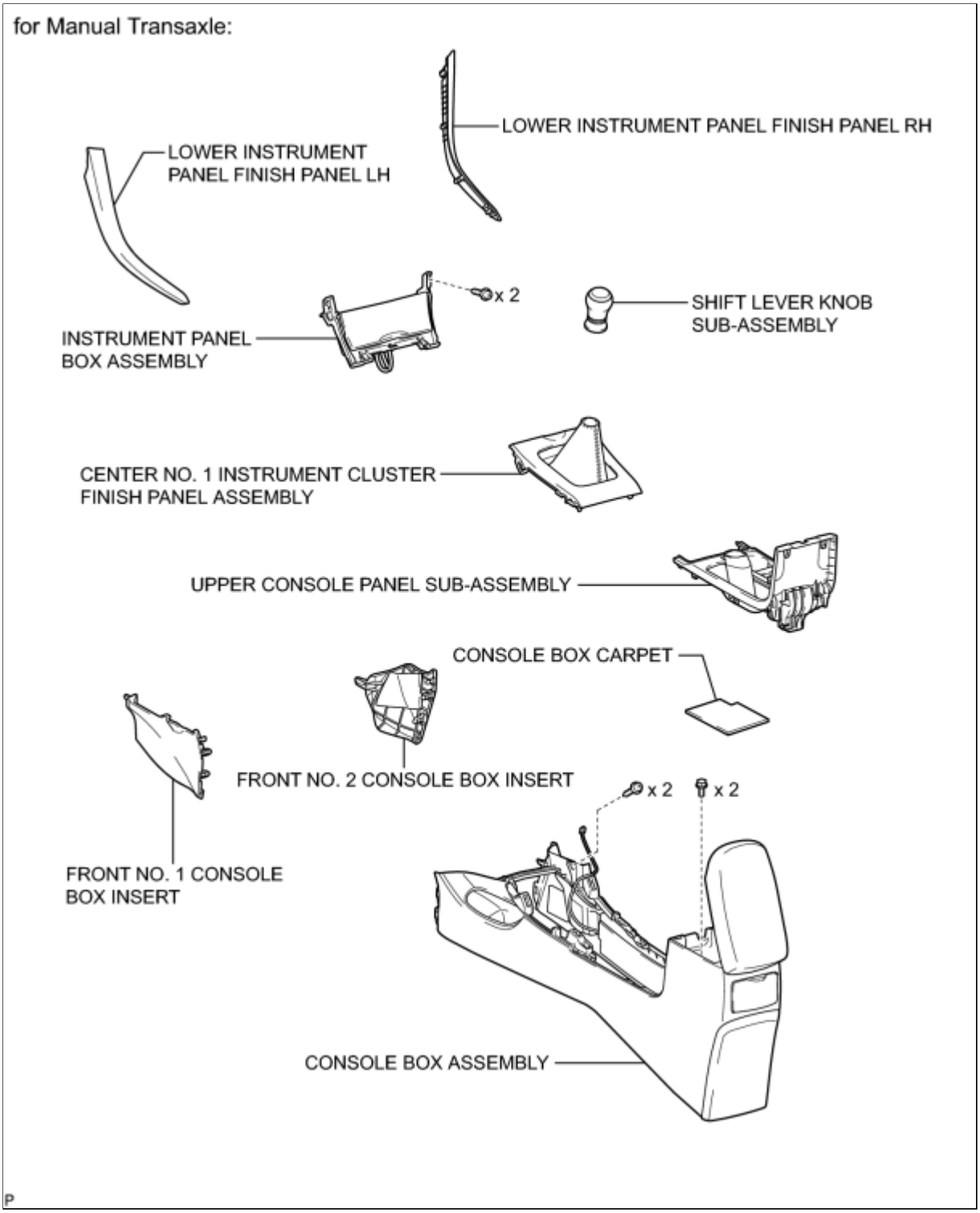

ILLUSTRATION

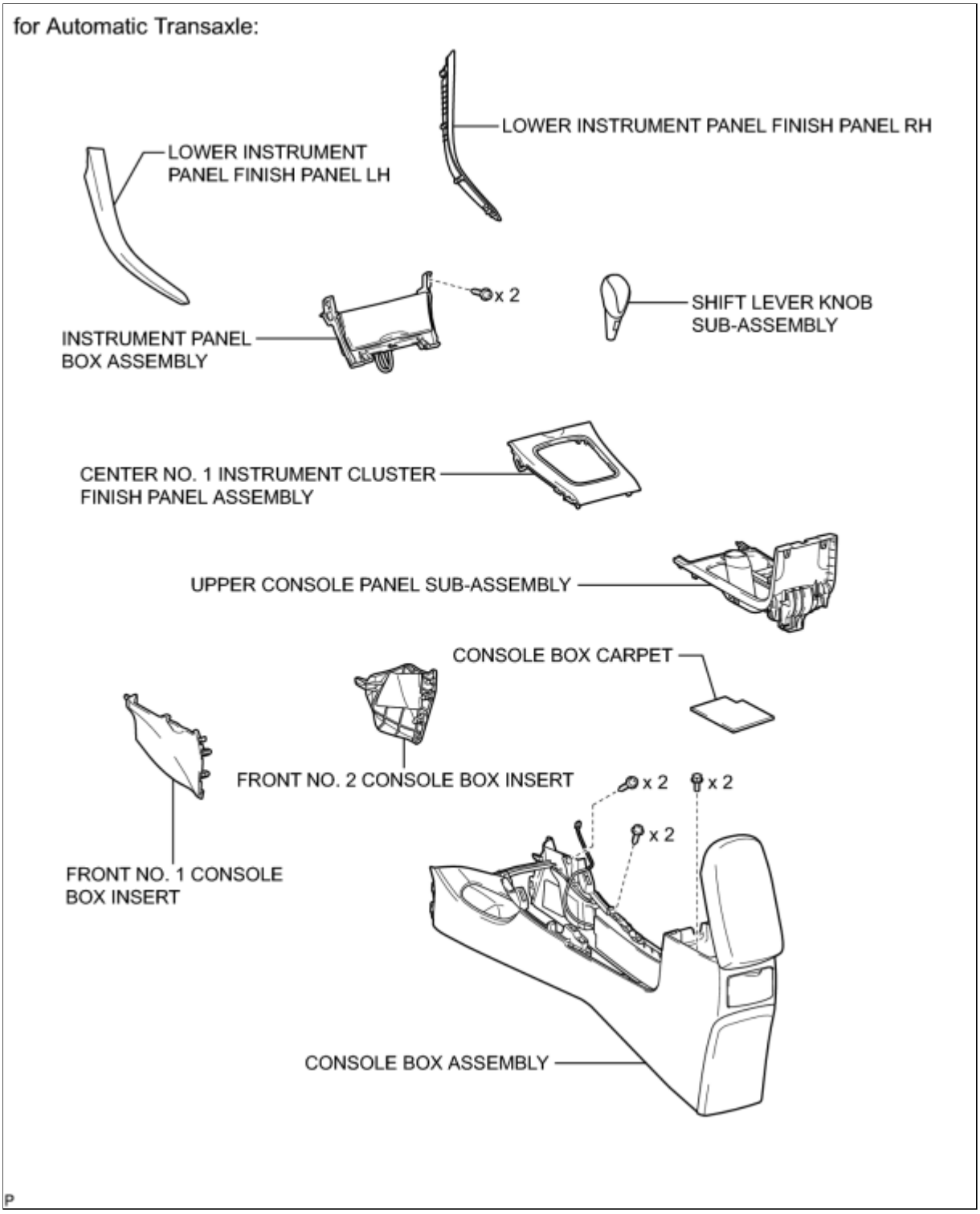

ILLUSTRATION

for Manual Transaxle:

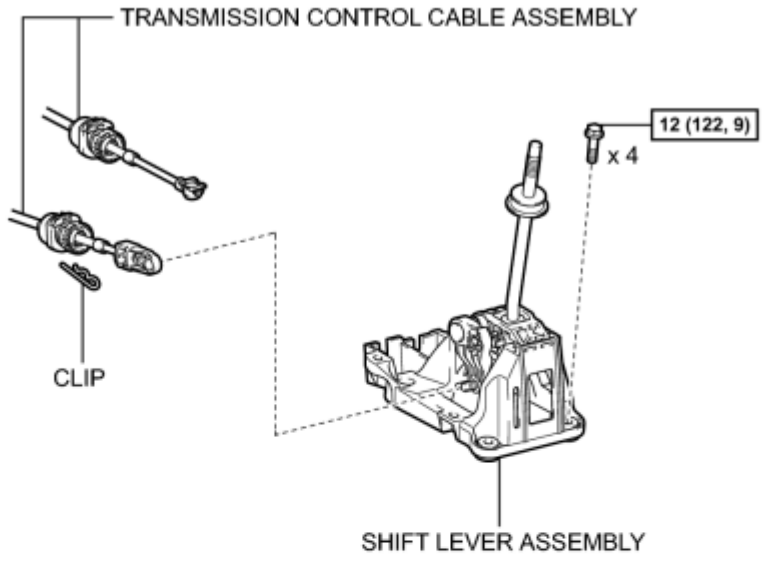

for Automatic Transaxle:

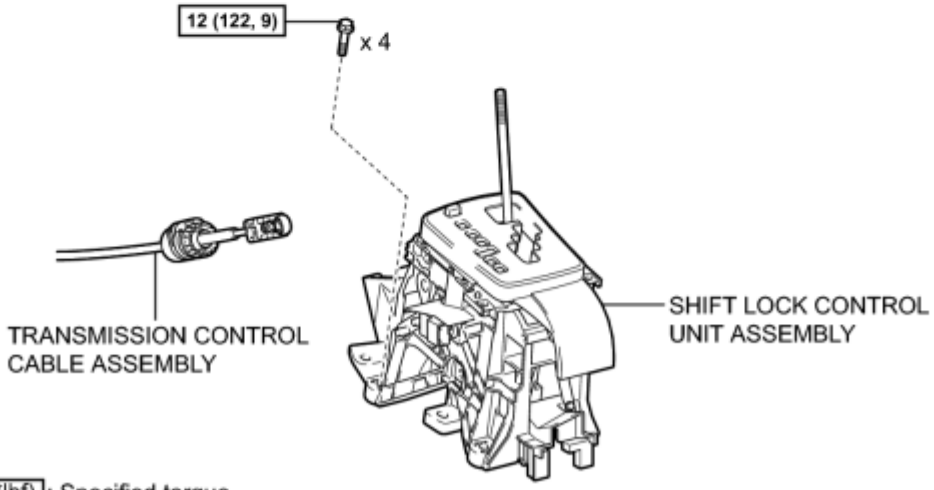

N*m (kgf*cm, ft.*lbf) : Specified torque

P

ILLUSTRATION

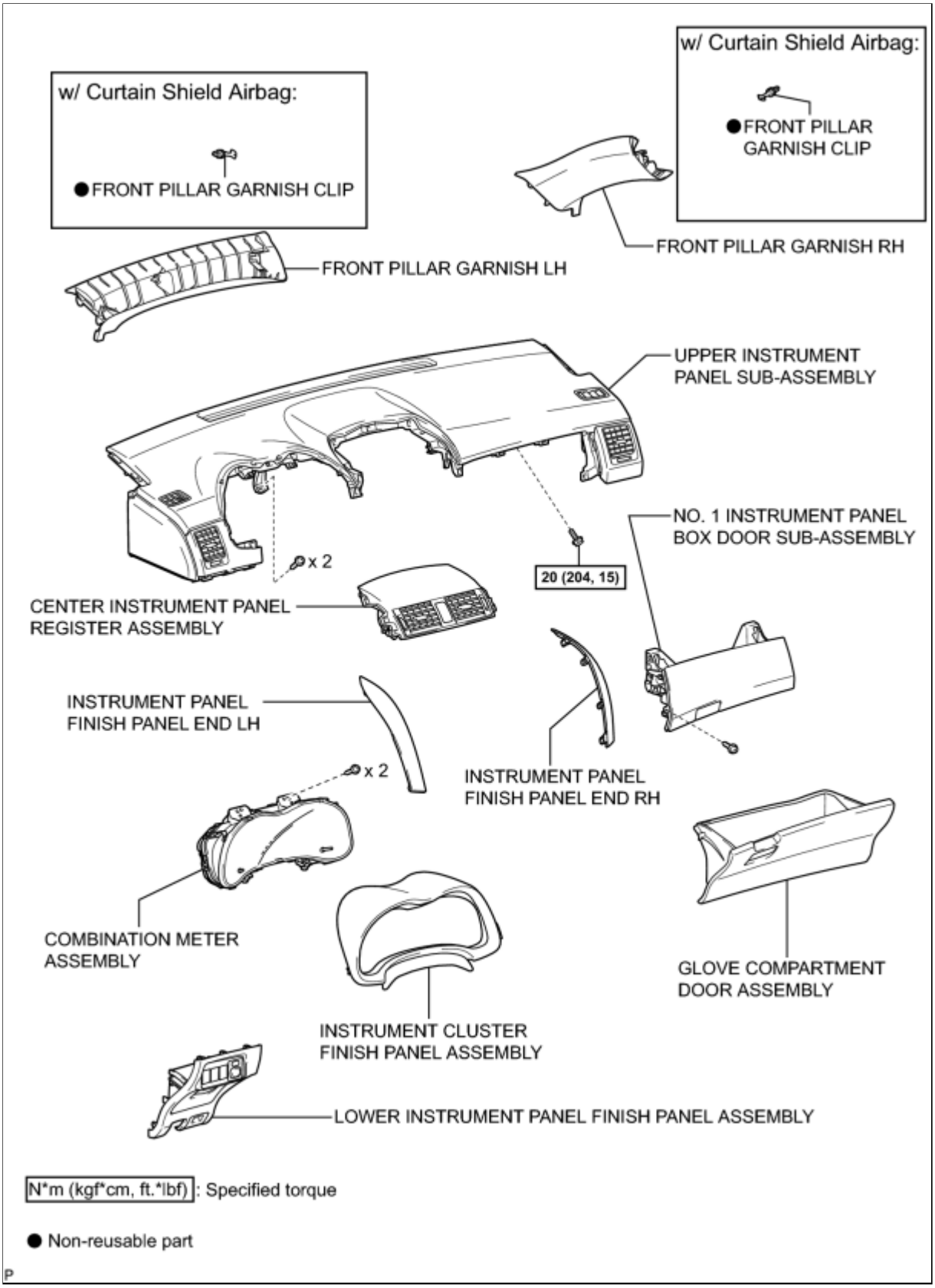

ILLUSTRATION

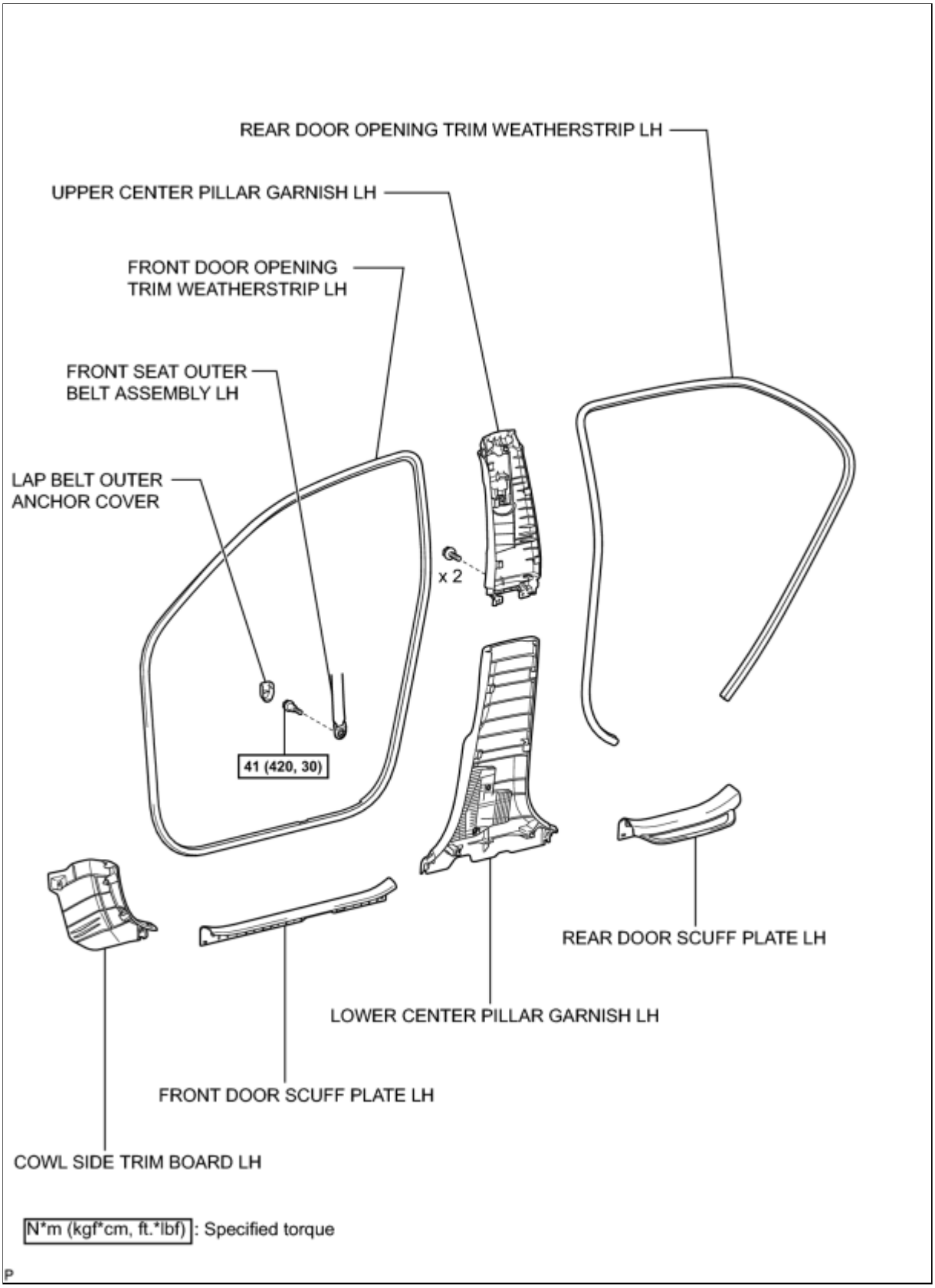

ILLUSTRATION

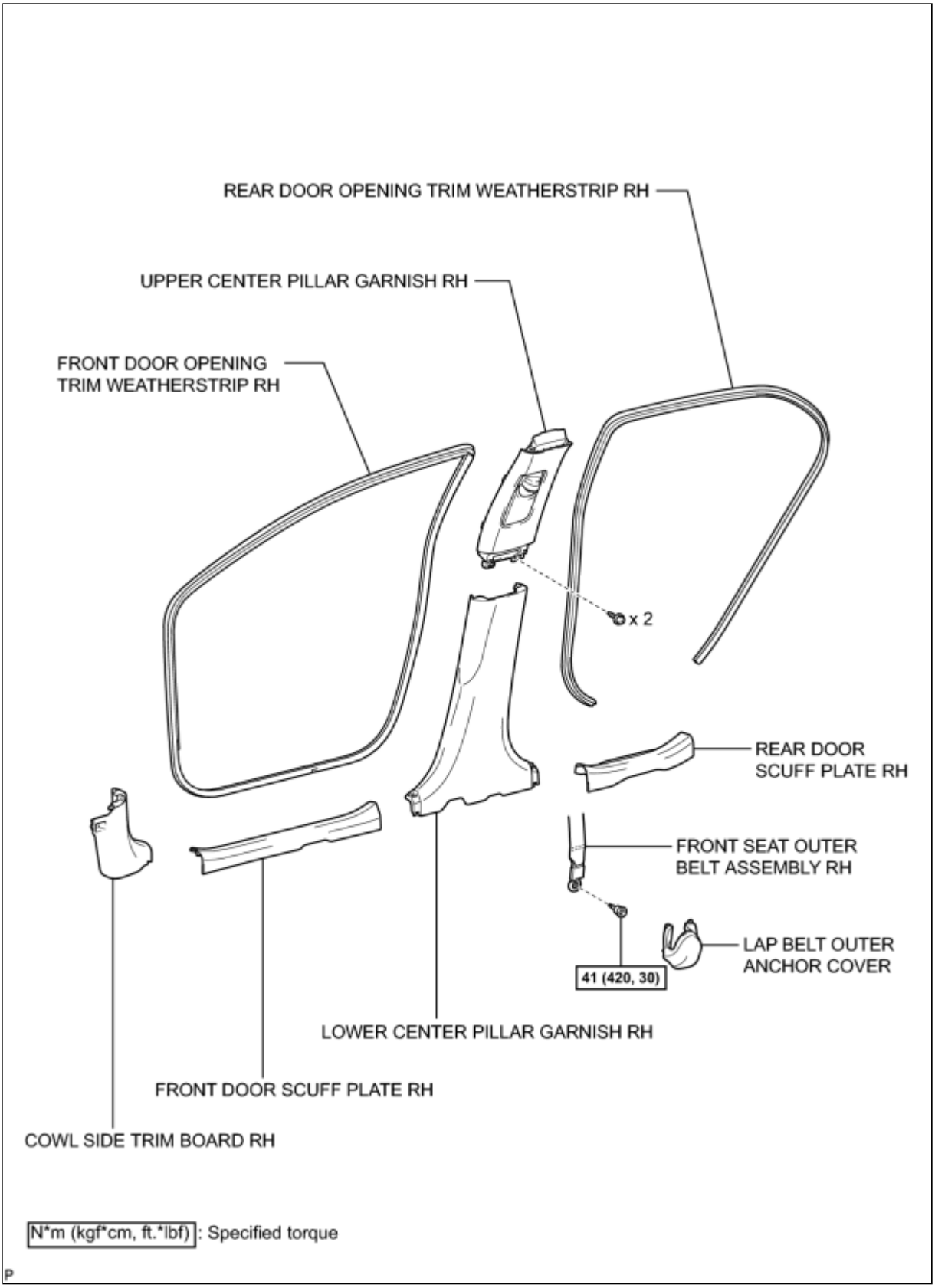

ILLUSTRATION

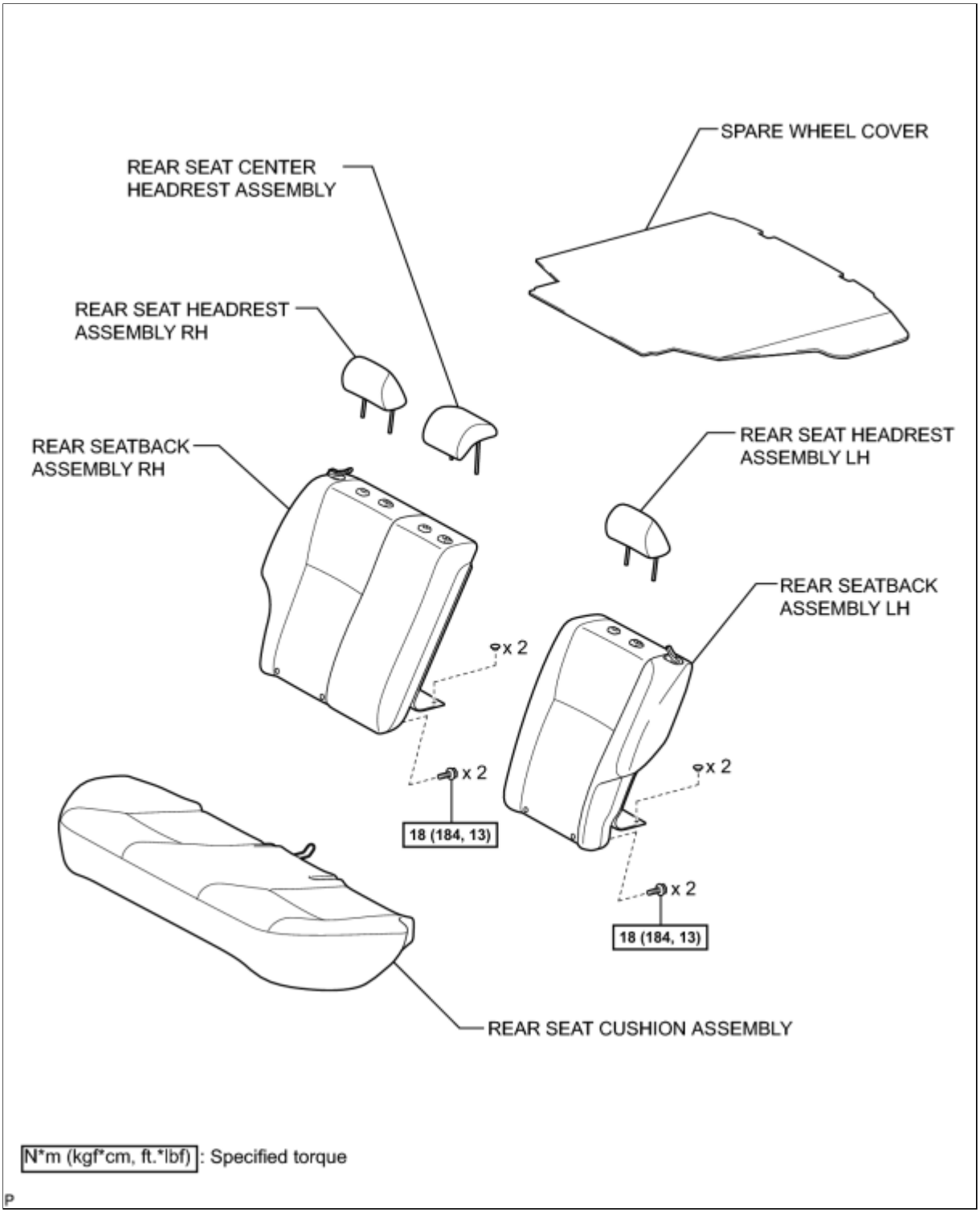

ILLUSTRATION

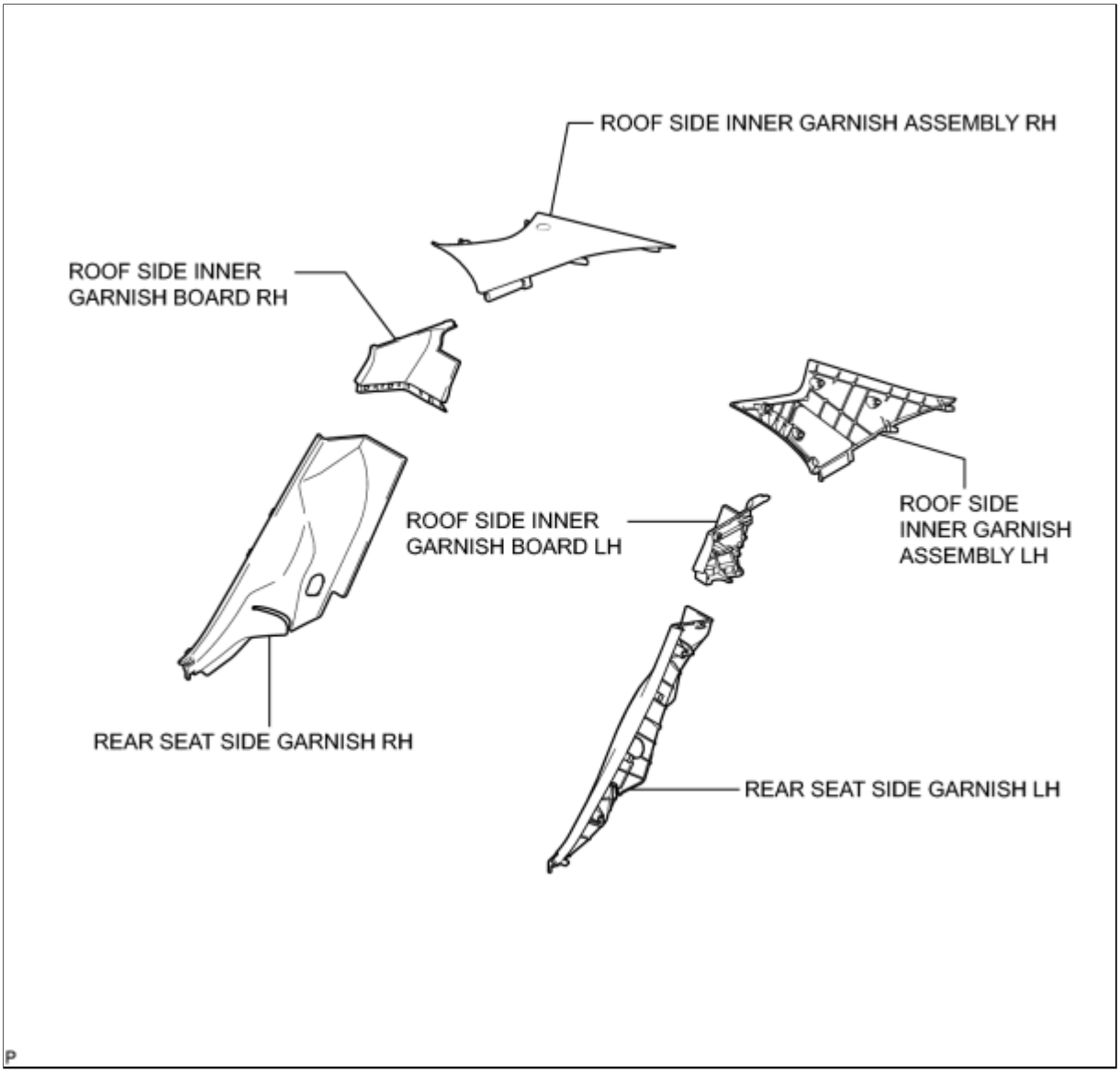

ILLUSTRATION

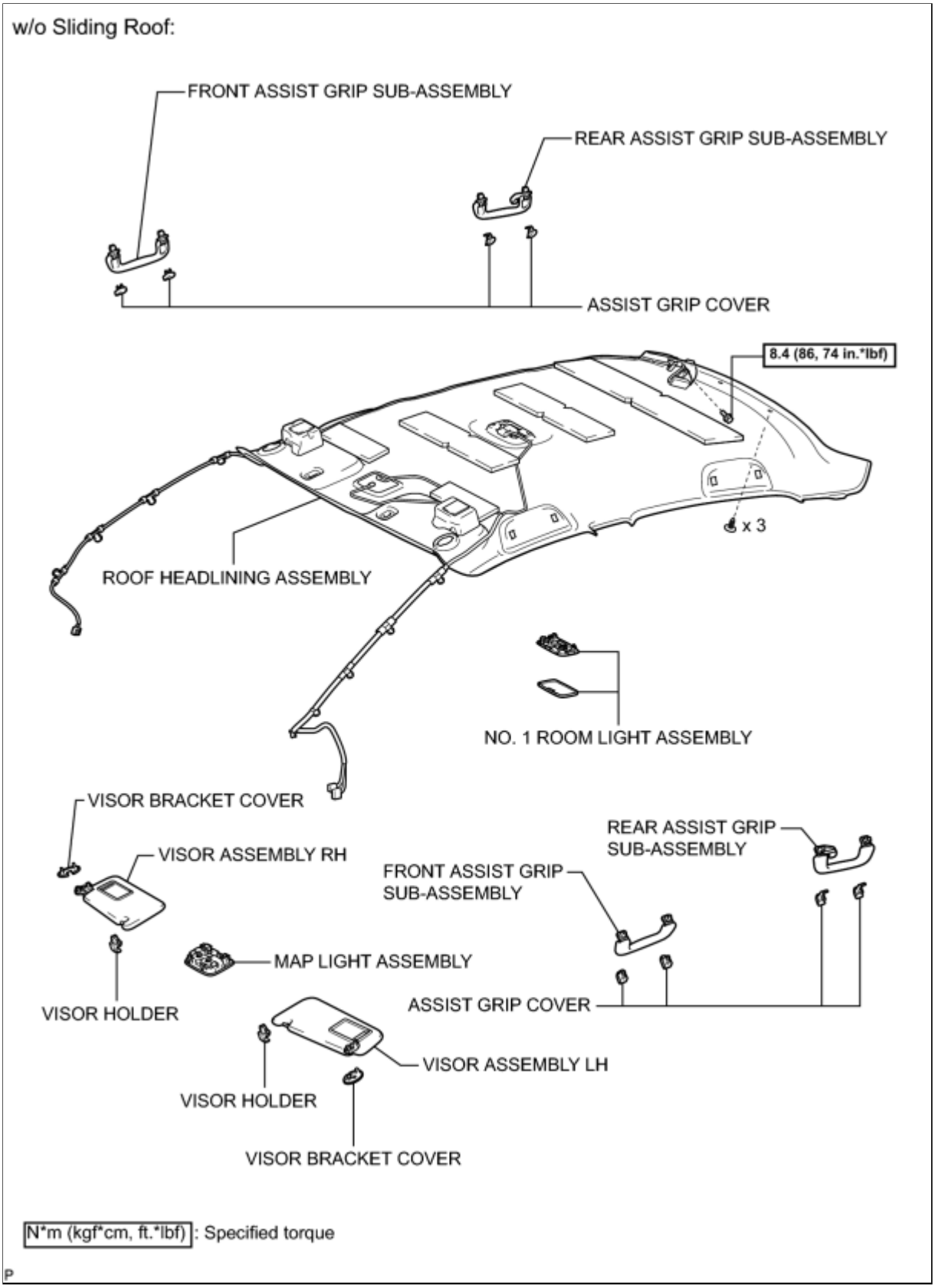

ILLUSTRATION

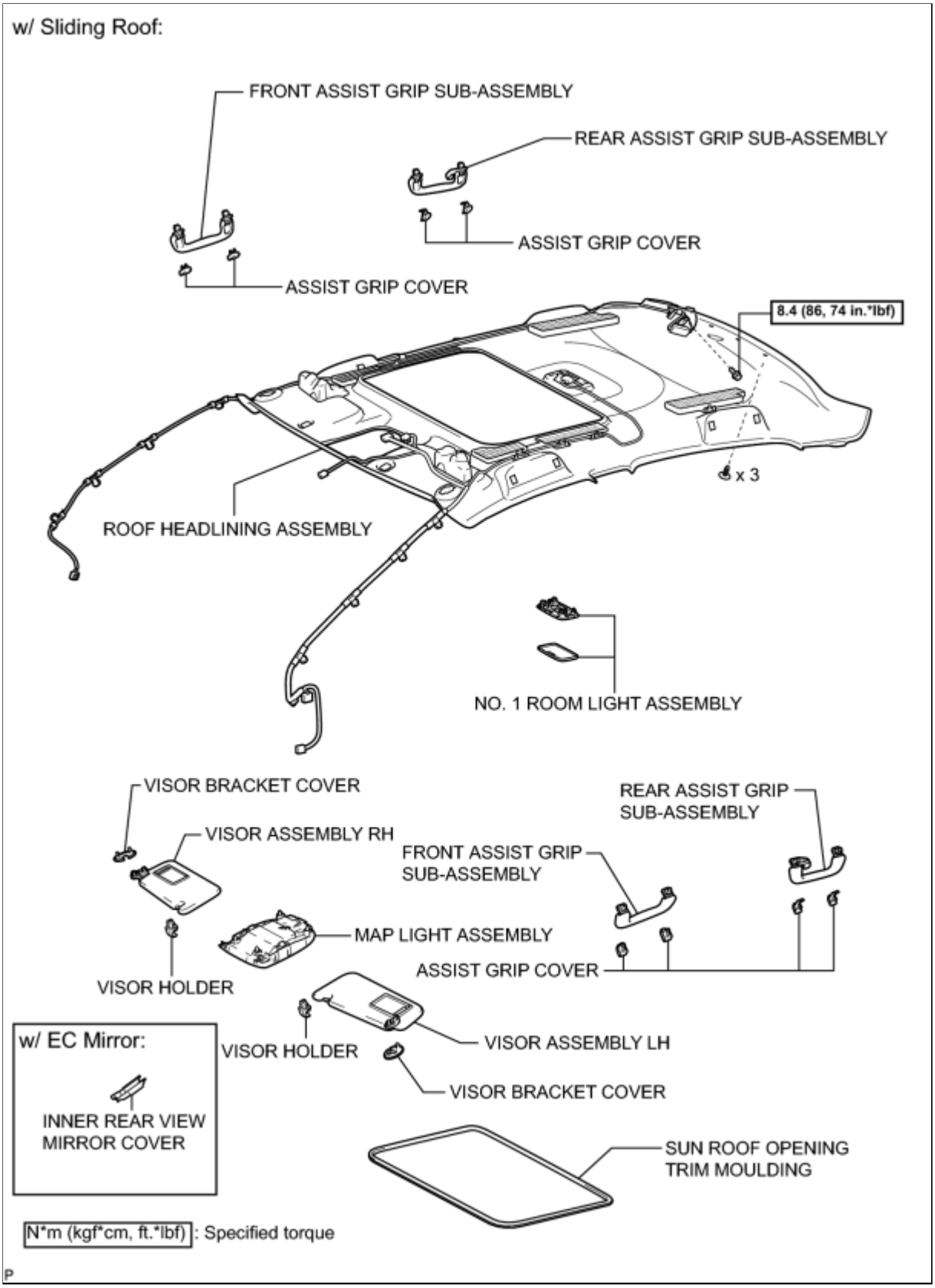

ILLUSTRATION

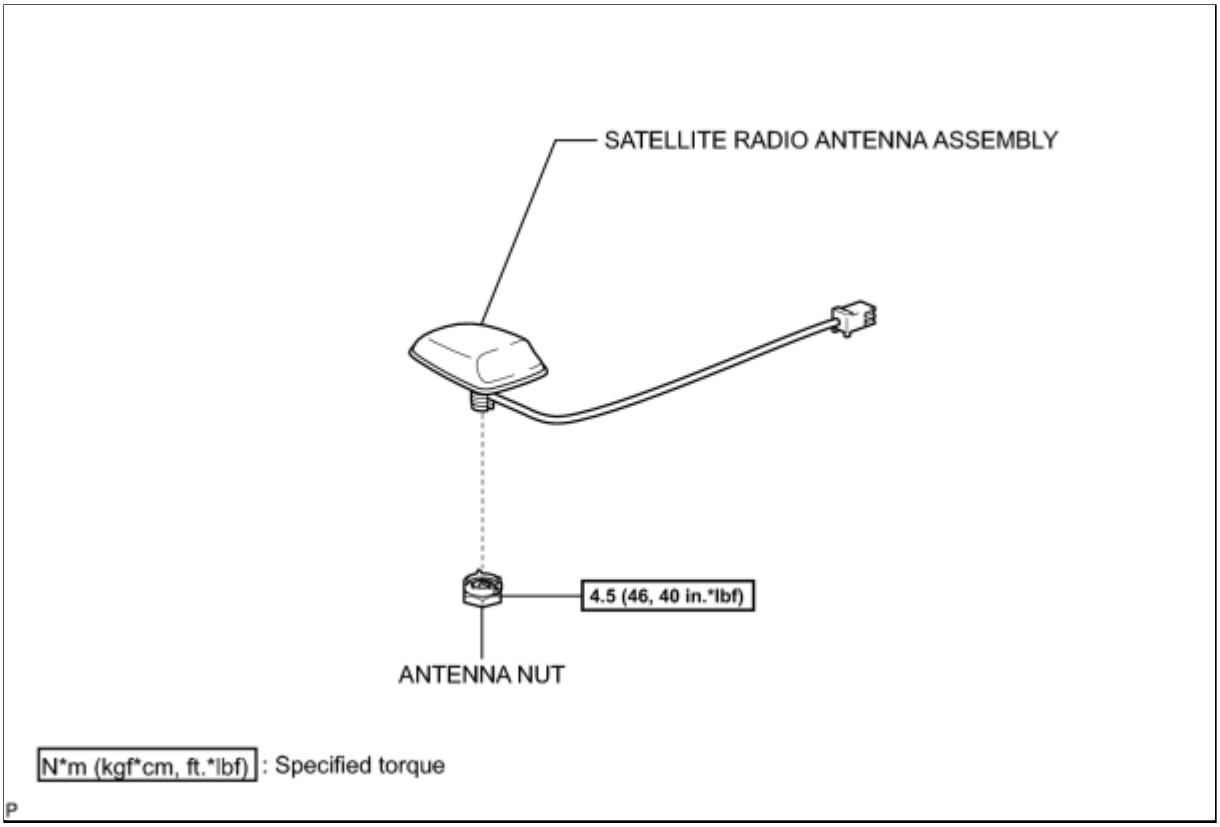

N*m (kgf*cm, ft.*lbf) : Specified torque

P

Last Modified: 3-10-2010	6.4 A	**From:** 200901
Model Year: 2010	**Model:** Corolla	**Doc ID:** RM000001Q0100ZX
Title: AUDIO / VIDEO: MICROPHONE: REMOVAL (2010 Corolla)		

REMOVAL

1. REMOVE MAP LIGHT ASSEMBLY (w/o Sliding Roof) INFO

2. REMOVE MAP LIGHT ASSEMBLY (w/ Sliding Roof) INFO

3. REMOVE TELEPHONE MICROPHONE ASSEMBLY (w/o Sliding Roof)

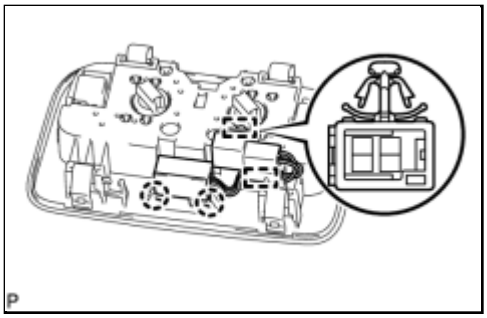

(a) Disengage the 2 clamps.

(b) Disengage the 2 claws and remove the telephone microphone assembly.

4. REMOVE TELEPHONE MICROPHONE ASSEMBLY (w/ Sliding Roof)

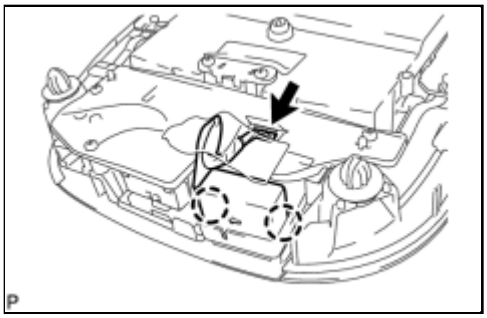

(a) Disconnect the connector.

(b) Disengage the 2 claws and remove the telephone microphone assembly.

Last Modified: 3-10-2010	6.4 A	**From:** 200901
Model Year: 2010	**Model:** Corolla	**Doc ID:** RM000001PZZ00ZX
Title: AUDIO / VIDEO: MICROPHONE: INSTALLATION (2010 Corolla)		

INSTALLATION

1. INSTALL TELEPHONE MICROPHONE ASSEMBLY (w/o Sliding Roof)

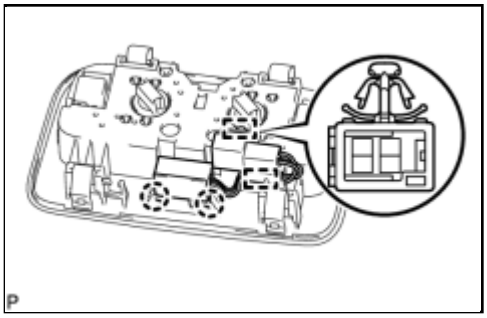

(a) Engage the 2 claws and install the telephone microphone assembly.

(b) Engage the 2 clamps.

2. INSTALL TELEPHONE MICROPHONE ASSEMBLY (w/ Sliding Roof)

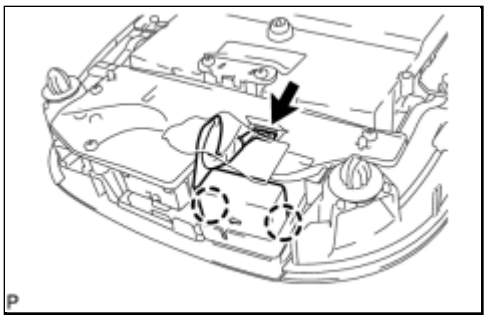

(a) Engage the 2 claws and install the telephone microphone assembly.

(b) Connect the connector.

3. INSTALL MAP LIGHT ASSEMBLY (w/o Sliding Roof) INFO

4. INSTALL MAP LIGHT ASSEMBLY (w/ Sliding Roof) INFO

Last Modified: 3-10-2010	6.4 A	**From:** 200901
Model Year: 2010	**Model:** Corolla	**Doc ID:** RM000002XB100KX
Title: AUDIO / VIDEO: RADIO ANTENNA (for Satellite Radio): REMOVAL (2010 Corolla)		

REMOVAL

1. DISCONNECT CABLE FROM NEGATIVE BATTERY TERMINAL (for Manual Seat)

CAUTION:

Wait at least 90 seconds after disconnecting the cable from the negative (-) battery terminal to disable the SRS system.

2. REMOVE FRONT SEAT HEADREST ASSEMBLY (for Manual Seat)

3. REMOVE OUTER SEAT TRACK COVER LH (for Manual Seat) INFO

4. REMOVE INNER SEAT TRACK COVER LH (for Manual Seat) INFO

5. REMOVE FRONT SEAT ASSEMBLY LH (for Manual Seat) INFO

6. REMOVE FRONT SEAT HEADREST ASSEMBLY (for Power Seat)

7. REMOVE OUTER SEAT TRACK COVER LH (for Power Seat) INFO

8. REMOVE INNER SEAT TRACK COVER LH (for Power Seat) INFO

9. REMOVE FRONT SEAT ASSEMBLY LH (for Power Seat) INFO

10. REMOVE FRONT SEAT HEADREST ASSEMBLY (for Manual Seat)

11. REMOVE OUTER SEAT TRACK COVER RH (for Manual Seat) INFO

12. REMOVE INNER SEAT TRACK COVER RH (for Manual Seat) INFO

13. REMOVE FRONT SEAT ASSEMBLY RH (for Manual Seat) INFO

14. REMOVE LOWER INSTRUMENT PANEL FINISH PANEL LH INFO

15. REMOVE LOWER INSTRUMENT PANEL FINISH PANEL RH INFO

16. REMOVE SHIFT LEVER KNOB SUB-ASSEMBLY (for Manual Transaxle) INFO

17. REMOVE SHIFT LEVER KNOB SUB-ASSEMBLY (for Automatic Transaxle) INFO

18. REMOVE CENTER NO. 1 INSTRUMENT CLUSTER FINISH PANEL ASSEMBLY (for Manual Transaxle) INFO

19. REMOVE CENTER NO. 1 INSTRUMENT CLUSTER FINISH PANEL ASSEMBLY (for Automatic Transaxle) INFO

20. REMOVE INSTRUMENT PANEL BOX ASSEMBLY INFO

21. REMOVE FRONT NO. 1 CONSOLE BOX INSERT INFO

22. REMOVE FRONT NO. 2 CONSOLE BOX INSERT INFO

23. REMOVE UPPER CONSOLE PANEL SUB-ASSEMBLY INFO

24. REMOVE CONSOLE BOX CARPET INFO

25. REMOVE CONSOLE BOX ASSEMBLY (for Manual Transaxle) INFO

26. REMOVE CONSOLE BOX ASSEMBLY (for Automatic Transaxle) INFO

27. DISCONNECT TRANSMISSION CONTROL CABLE ASSEMBLY (for Manual Transaxle)

for C59: INFO

for E351: INFO

28. DISCONNECT TRANSMISSION CONTROL CABLE ASSEMBLY (for Automatic Transaxle)

for U250E: INFO

for U341E: INFO

29. REMOVE SHIFT LEVER ASSEMBLY (for Manual Transaxle)

for C59: INFO

for E351: INFO

30. REMOVE SHIFT LOCK CONTROL UNIT ASSEMBLY (for Automatic Transaxle)

for U250E: INFO

for U341E: INFO

31. REMOVE INSTRUMENT PANEL FINISH PANEL END LH INFO

32. REMOVE INSTRUMENT PANEL FINISH PANEL END RH INFO

33. REMOVE CENTER INSTRUMENT PANEL REGISTER ASSEMBLY INFO

34. REMOVE INSTRUMENT CLUSTER FINISH PANEL ASSEMBLY INFO

35. REMOVE COMBINATION METER ASSEMBLY INFO

36. REMOVE FRONT PILLAR GARNISH LH (w/o Curtain Shield Airbag) INFO

37. REMOVE FRONT PILLAR GARNISH LH (w/ Curtain Shield Airbag) INFO

38. REMOVE FRONT PILLAR GARNISH RH (w/o Curtain Shield Airbag) INFO

39. REMOVE FRONT PILLAR GARNISH RH (w/ Curtain Shield Airbag) INFO

40. REMOVE LOWER INSTRUMENT PANEL FINISH PANEL ASSEMBLY INFO

41. REMOVE FRONT DOOR SCUFF PLATE LH INFO

42. REMOVE COWL SIDE TRIM BOARD LH INFO

43. REMOVE FRONT DOOR OPENING TRIM WEATHERSTRIP LH INFO

44. REMOVE GLOVE COMPARTMENT DOOR ASSEMBLY INFO

45. REMOVE NO. 1 INSTRUMENT PANEL BOX DOOR SUB-ASSEMBLY INFO

46. REMOVE FRONT DOOR SCUFF PLATE RH INFO

47. REMOVE COWL SIDE TRIM BOARD RH INFO

48. REMOVE FRONT DOOR OPENING TRIM WEATHERSTRIP RH INFO

49. DISCONNECT INSTRUMENT PANEL WIRE ASSEMBLY INFO

50. REMOVE UPPER INSTRUMENT PANEL SUB-ASSEMBLY INFO

51. REMOVE REAR DOOR SCUFF PLATE LH INFO

52. REMOVE REAR DOOR OPENING TRIM WEATHERSTRIP LH INFO

53. REMOVE LAP BELT OUTER ANCHOR COVER (for LH Side) INFO

54. DISCONNECT FRONT SEAT OUTER BELT ASSEMBLY LH INFO

55. REMOVE LOWER CENTER PILLAR GARNISH LH INFO

56. REMOVE UPPER CENTER PILLAR GARNISH LH INFO

57. REMOVE REAR DOOR SCUFF PLATE RH INFO

58. REMOVE REAR DOOR OPENING TRIM WEATHERSTRIP RH INFO

59. REMOVE LAP BELT OUTER ANCHOR COVER (for RH Side) INFO

60. REMOVE LOWER CENTER PILLAR GARNISH RH INFO

61. DISCONNECT FRONT SEAT OUTER BELT ASSEMBLY RH INFO

62. REMOVE UPPER CENTER PILLAR GARNISH RH INFO

63. REMOVE SPARE WHEEL COVER INFO

64. REMOVE REAR SEAT HEADREST ASSEMBLY LH

65. REMOVE REAR SEAT HEADREST ASSEMBLY RH

66. REMOVE REAR SEAT CENTER HEADREST ASSEMBLY

67. REMOVE REAR SEAT CUSHION ASSEMBLY INFO

68. REMOVE REAR SEATBACK ASSEMBLY LH INFO

69. REMOVE REAR SEATBACK ASSEMBLY RH INFO

70. REMOVE REAR SEAT SIDE GARNISH LH INFO

71. REMOVE ROOF SIDE INNER GARNISH BOARD LH INFO

72. REMOVE ROOF SIDE INNER GARNISH ASSEMBLY LH INFO

73. REMOVE REAR SEAT SIDE GARNISH RH INFO

74. REMOVE ROOF SIDE INNER GARNISH BOARD RH INFO

75. REMOVE ROOF SIDE INNER GARNISH ASSEMBLY RH INFO

76. REMOVE MAP LIGHT ASSEMBLY (w/o Sliding Roof) INFO

77. REMOVE MAP LIGHT ASSEMBLY (w/ Sliding Roof) INFO

78. REMOVE VISOR ASSEMBLY LH INFO

79. REMOVE VISOR ASSEMBLY RH INFO

80. REMOVE FRONT ASSIST GRIP SUB-ASSEMBLY INFO

81. REMOVE REAR ASSIST GRIP SUB-ASSEMBLY INFO

82. REMOVE NO. 1 ROOM LIGHT ASSEMBLY INFO

83. REMOVE INNER REAR VIEW MIRROR COVER (w/ EC Mirror) INFO

84. REMOVE VISOR HOLDER INFO

85. REMOVE SUN ROOF OPENING TRIM MOULDING (w/ Sliding Roof) INFO

86. REMOVE ROOF HEADLINING ASSEMBLY (w/o Sliding Roof) INFO

87. REMOVE ROOF HEADLINING ASSEMBLY (w/ Sliding Roof) INFO

88. REMOVE SATELLITE RADIO ANTENNA ASSEMBLY

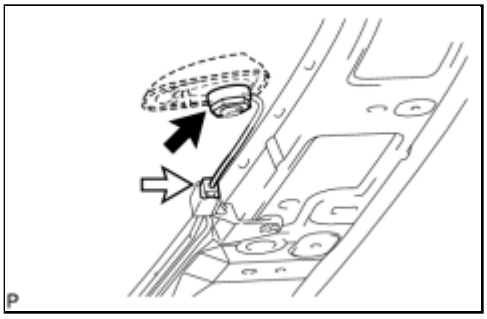

(a) Disconnect the connector.

(b) Remove the antenna nut.

(c) Disengage the 2 claws and remove the satellite radio antenna assembly.

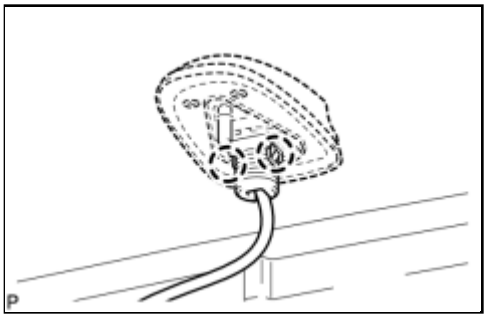
P

Last Modified: 3-10-2010	6.4 A	**From:** 200901
Model Year: 2010	**Model:** Corolla	**Doc ID:** RM000002XAZ00KX
Title: AUDIO / VIDEO: RADIO ANTENNA (for Satellite Radio): INSTALLATION (2010 Corolla)		

INSTALLATION

1. INSTALL SATELLITE RADIO ANTENNA ASSEMBLY

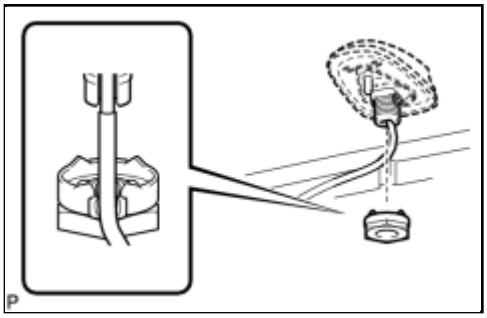

(a) Set the satellite radio antenna assembly into the hole on the roof and place the antenna cord in the cutout on the satellite radio antenna.

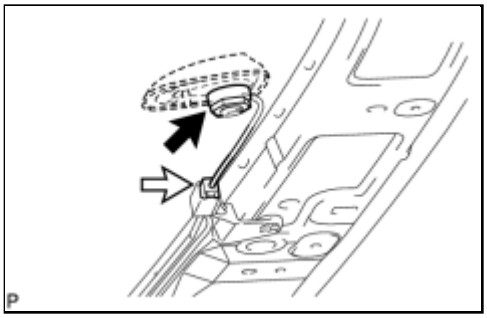

(b) Install the satellite radio antenna assembly with the antenna nut.

Torque: 4.5 N·m (46 kgf·cm, 40in·lbf)

(c) Connect the connector.

2. INSTALL ROOF HEADLINING ASSEMBLY (w/ Sliding Roof) INFO

3. INSTALL ROOF HEADLINING ASSEMBLY (w/o Sliding Roof) INFO

4. INSTALL SUN ROOF OPENING TRIM MOULDING (w/ Sliding Roof) INFO

5. INSTALL VISOR HOLDER INFO

6. INSTALL INNER REAR VIEW MIRROR COVER (w/ EC Mirror) INFO

7. INSTALL NO. 1 ROOM LIGHT ASSEMBLY INFO

8. INSTALL REAR ASSIST GRIP SUB-ASSEMBLY INFO

9. INSTALL FRONT ASSIST GRIP SUB-ASSEMBLY INFO

10. INSTALL VISOR ASSEMBLY LH INFO

11. INSTALL VISOR ASSEMBLY RH INFO

12. INSTALL MAP LIGHT ASSEMBLY (w/ Sliding Roof) INFO

13. INSTALL MAP LIGHT ASSEMBLY (w/o Sliding Roof) INFO

14. INSTALL ROOF SIDE INNER GARNISH ASSEMBLY LH INFO

15. INSTALL ROOF SIDE INNER GARNISH BOARD LH INFO

16. INSTALL REAR SEAT SIDE GARNISH LH INFO

17. INSTALL ROOF SIDE INNER GARNISH ASSEMBLY RH INFO

18. INSTALL ROOF SIDE INNER GARNISH BOARD RH INFO

19. INSTALL REAR SEAT SIDE GARNISH RH INFO

20. INSTALL REAR SEATBACK ASSEMBLY LH INFO

21. INSTALL REAR SEATBACK ASSEMBLY RH INFO

22. INSTALL REAR SEAT CENTER HEADREST ASSEMBLY

23. INSTALL REAR SEAT HEADREST ASSEMBLY LH

24. INSTALL REAR SEAT HEADREST ASSEMBLY RH

25. INSTALL SPARE WHEEL COVER INFO

26. INSTALL UPPER CENTER PILLAR GARNISH LH INFO

27. INSTALL LOWER CENTER PILLAR GARNISH LH INFO

28. CONNECT FRONT SEAT OUTER BELT ASSEMBLY LH INFO

29. INSTALL LAP BELT OUTER ANCHOR COVER (for LH Side) INFO

30. INSTALL REAR DOOR OPENING TRIM WEATHERSTRIP LH INFO

31. INSTALL REAR DOOR SCUFF PLATE LH INFO

32. INSTALL UPPER CENTER PILLAR GARNISH RH INFO

33. CONNECT FRONT SEAT OUTER BELT ASSEMBLY RH INFO

34. INSTALL LOWER CENTER PILLAR GARNISH RH INFO

35. INSTALL LAP BELT OUTER ANCHOR COVER (for RH Side) INFO

36. INSTALL REAR DOOR OPENING TRIM WEATHERSTRIP RH INFO

37. INSTALL REAR DOOR SCUFF PLATE RH INFO

38. INSTALL UPPER INSTRUMENT PANEL SUB-ASSEMBLY INFO

39. CONNECT INSTRUMENT PANEL WIRE ASSEMBLY INFO

40. INSTALL FRONT DOOR OPENING TRIM WEATHERSTRIP LH INFO

41. INSTALL COWL SIDE TRIM BOARD LH INFO

42. INSTALL FRONT DOOR SCUFF PLATE LH INFO

43. INSTALL LOWER INSTRUMENT PANEL FINISH PANEL ASSEMBLY INFO

44. INSTALL FRONT DOOR OPENING TRIM WEATHERSTRIP RH INFO

45. INSTALL COWL SIDE TRIM BOARD RH INFO

46. INSTALL FRONT DOOR SCUFF PLATE RH INFO

47. INSTALL NO. 1 INSTRUMENT PANEL BOX DOOR SUB-ASSEMBLY INFO

48. INSTALL GLOVE COMPARTMENT DOOR ASSEMBLY INFO

49. INSTALL FRONT PILLAR GARNISH LH (w/ Curtain Shield Airbag) INFO

50. INSTALL FRONT PILLAR GARNISH LH (w/o Curtain Shield Airbag) INFO

51. INSTALL FRONT PILLAR GARNISH RH (w/ Curtain Shield Airbag) INFO

52. INSTALL FRONT PILLAR GARNISH RH (w/o Curtain Shield Airbag) INFO

53. INSTALL COMBINATION METER ASSEMBLY INFO

54. INSTALL INSTRUMENT CLUSTER FINISH PANEL ASSEMBLY INFO

55. INSTALL CENTER INSTRUMENT PANEL REGISTER ASSEMBLY INFO

56. INSTALL INSTRUMENT PANEL FINISH PANEL END LH INFO

57. INSTALL INSTRUMENT PANEL FINISH PANEL END RH INFO

58. INSTALL SHIFT LOCK CONTROL UNIT ASSEMBLY (for Automatic Transaxle)

for U250E: INFO

for U341E: INFO

59. INSTALL SHIFT LEVER ASSEMBLY (for Manual Transaxle)

for C59: INFO

for E351: INFO

60. CONNECT TRANSMISSION CONTROL CABLE ASSEMBLY (for Automatic Transaxle)

for U250E: INFO

for U341E: INFO

61. CONNECT TRANSMISSION CONTROL CABLE ASSEMBLY (for Manual Transaxle)

for C59: INFO

for E351: INFO

62. ADJUST TRANSMISSION CONTROL SELECT CABLE (for Manual Transaxle)

for C59: INFO

for E351: INFO

63. INSTALL CONSOLE BOX ASSEMBLY (for Automatic Transaxle) INFO

64. INSTALL CONSOLE BOX ASSEMBLY (for Manual Transaxle) INFO

65. INSTALL CONSOLE BOX CARPET INFO

66. INSTALL UPPER CONSOLE PANEL SUB-ASSEMBLY INFO

67. INSTALL FRONT NO. 1 CONSOLE BOX INSERT INFO

68. INSTALL FRONT NO. 2 CONSOLE BOX INSERT INFO

69. INSTALL INSTRUMENT PANEL BOX ASSEMBLY INFO

70. INSTALL CENTER NO. 1 INSTRUMENT CLUSTER FINISH PANEL ASSEMBLY (for Automatic Transaxle) INFO

71. INSTALL CENTER NO. 1 INSTRUMENT CLUSTER FINISH PANEL ASSEMBLY (for Manual Transaxle) INFO

72. INSTALL SHIFT LEVER KNOB SUB-ASSEMBLY (for Automatic Transaxle) INFO

73. INSTALL SHIFT LEVER KNOB SUB-ASSEMBLY (for Manual Transaxle) INFO

74. INSTALL LOWER INSTRUMENT PANEL FINISH PANEL LH INFO

75. INSTALL LOWER INSTRUMENT PANEL FINISH PANEL RH INFO

76. INSTALL FRONT SEAT ASSEMBLY LH (for Manual Seat) INFO

77. INSPECT FRONT SEAT SLIDE ADJUSTER LOCK (for Manual Seat) INFO

78. INSTALL INNER SEAT TRACK COVER LH (for Manual Seat) INFO

79. INSTALL OUTER SEAT TRACK COVER LH (for Manual Seat) INFO

80. INSTALL FRONT SEAT HEADREST ASSEMBLY (for Manual Seat)

81. INSTALL FRONT SEAT ASSEMBLY LH (for Power Seat) INFO

82. INSTALL INNER SEAT TRACK COVER LH (for Power Seat) INFO

83. INSTALL OUTER SEAT TRACK COVER LH (for Power Seat) INFO

84. INSTALL FRONT SEAT HEADREST ASSEMBLY (for Power Seat)

85. INSTALL FRONT SEAT ASSEMBLY RH (for Manual Seat) INFO

86. INSPECT FRONT SEAT SLIDE ADJUSTER LOCK (for Manual Seat) INFO

87. INSTALL INNER SEAT TRACK COVER RH (for Manual Seat) INFO

88. INSTALL OUTER SEAT TRACK COVER RH (for Manual Seat) INFO

89. INSTALL FRONT SEAT HEADREST ASSEMBLY (for Manual Seat)

90. CONNECT CABLE TO NEGATIVE BATTERY TERMINAL (for Manual Seat)

91. INSPECT SHIFT LEVER POSITION (for Automatic Transaxle)

for U250E: INFO

for U341E: INFO

92. ADJUST SHIFT LEVER POSITION (for Automatic Transaxle)

for U250E: INFO

for U341E: INFO

93. INSPECT SRS WARNING LIGHT

INFO

94. INSPECT FRONT SEAT ASSEMBLY (for Power Seat) INFO

Last Modified: 3-10-2010	6.4 K	**From:** 200901
Model Year: 2010	**Model:** Corolla	**Doc ID:** RM000002XB900FX
Title: AUDIO / VIDEO: RADIO ANTENNA CORD: COMPONENTS (2010 Corolla)		

COMPONENTS

ILLUSTRATION

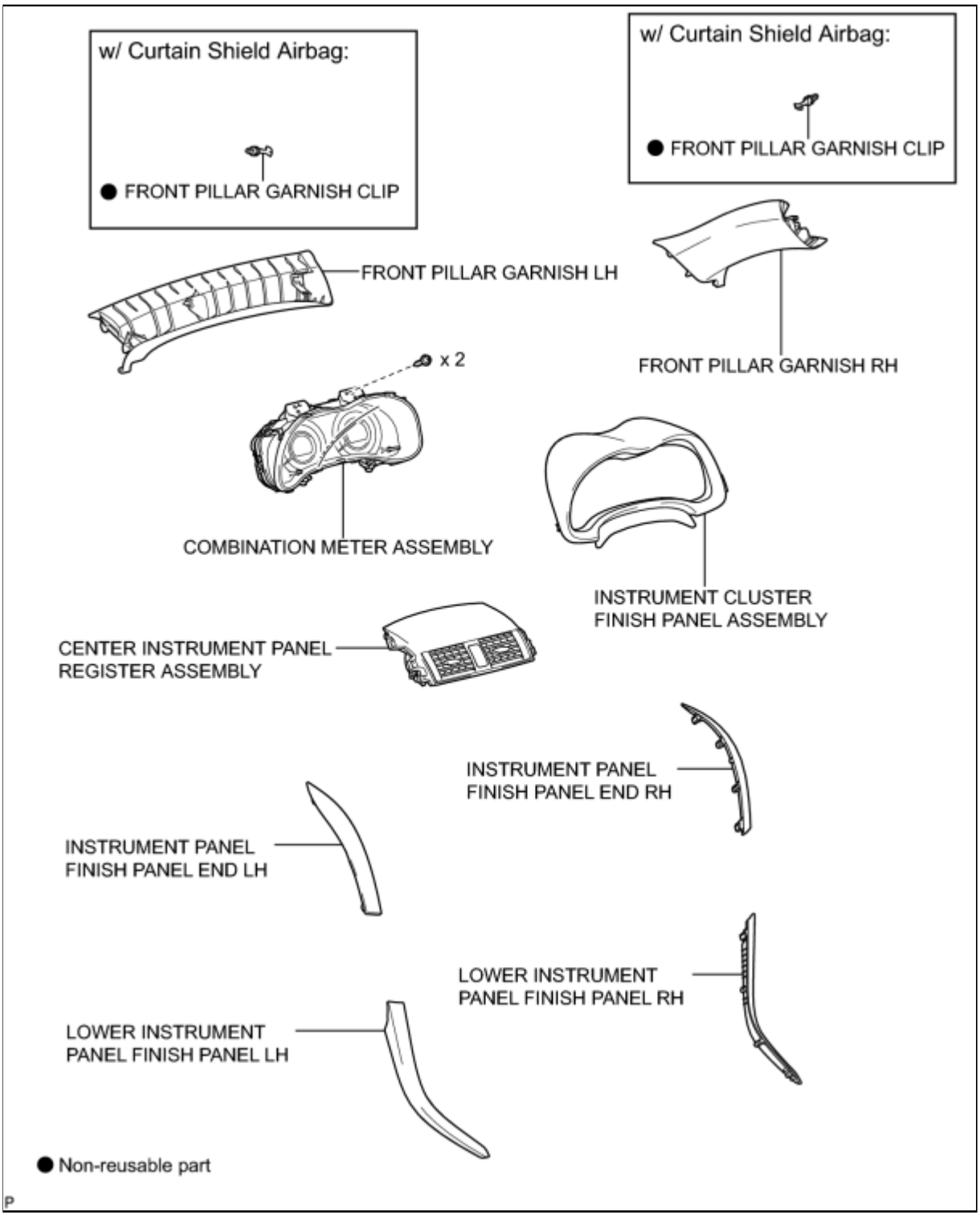

ILLUSTRATION

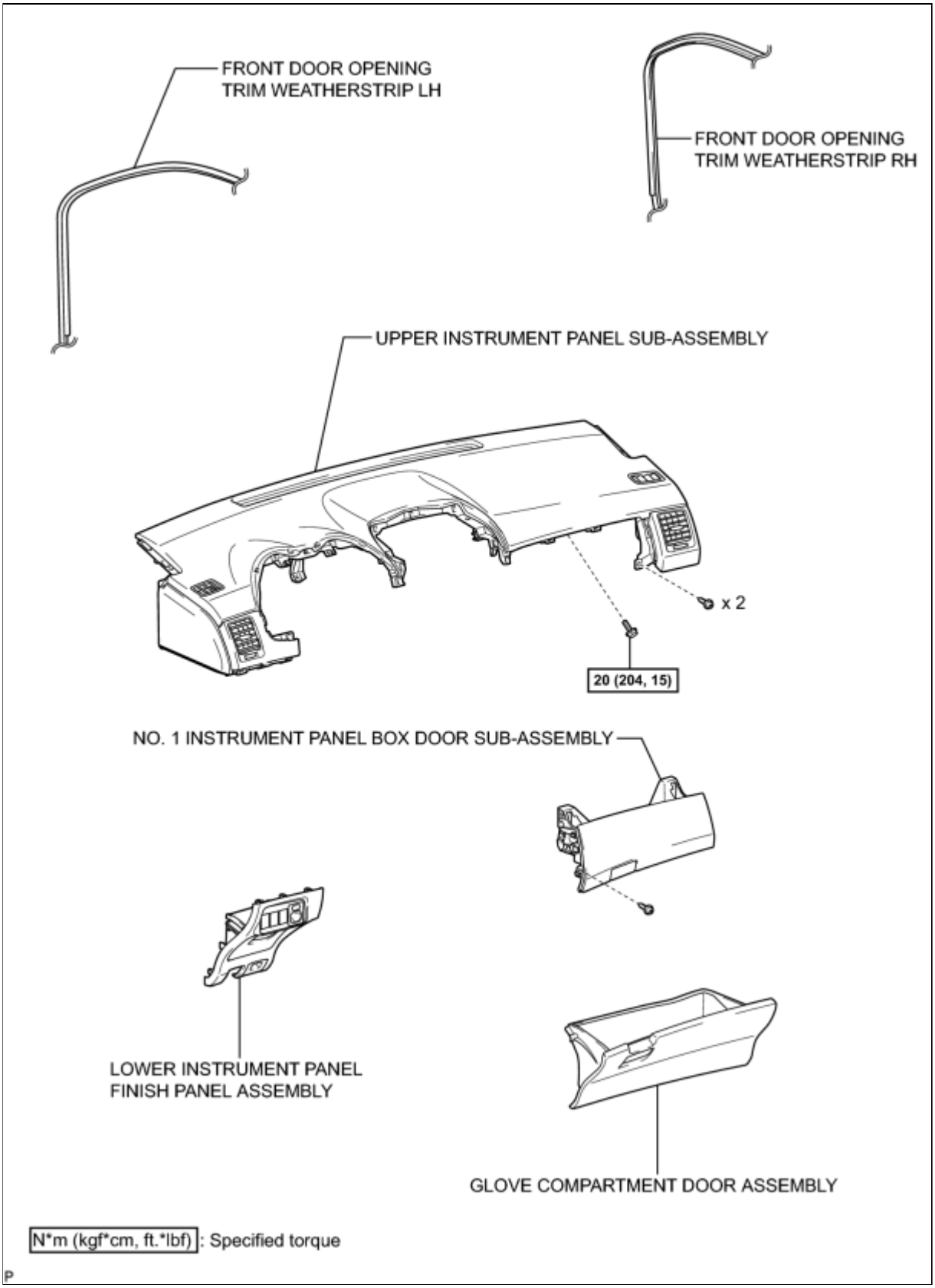

ILLUSTRATION

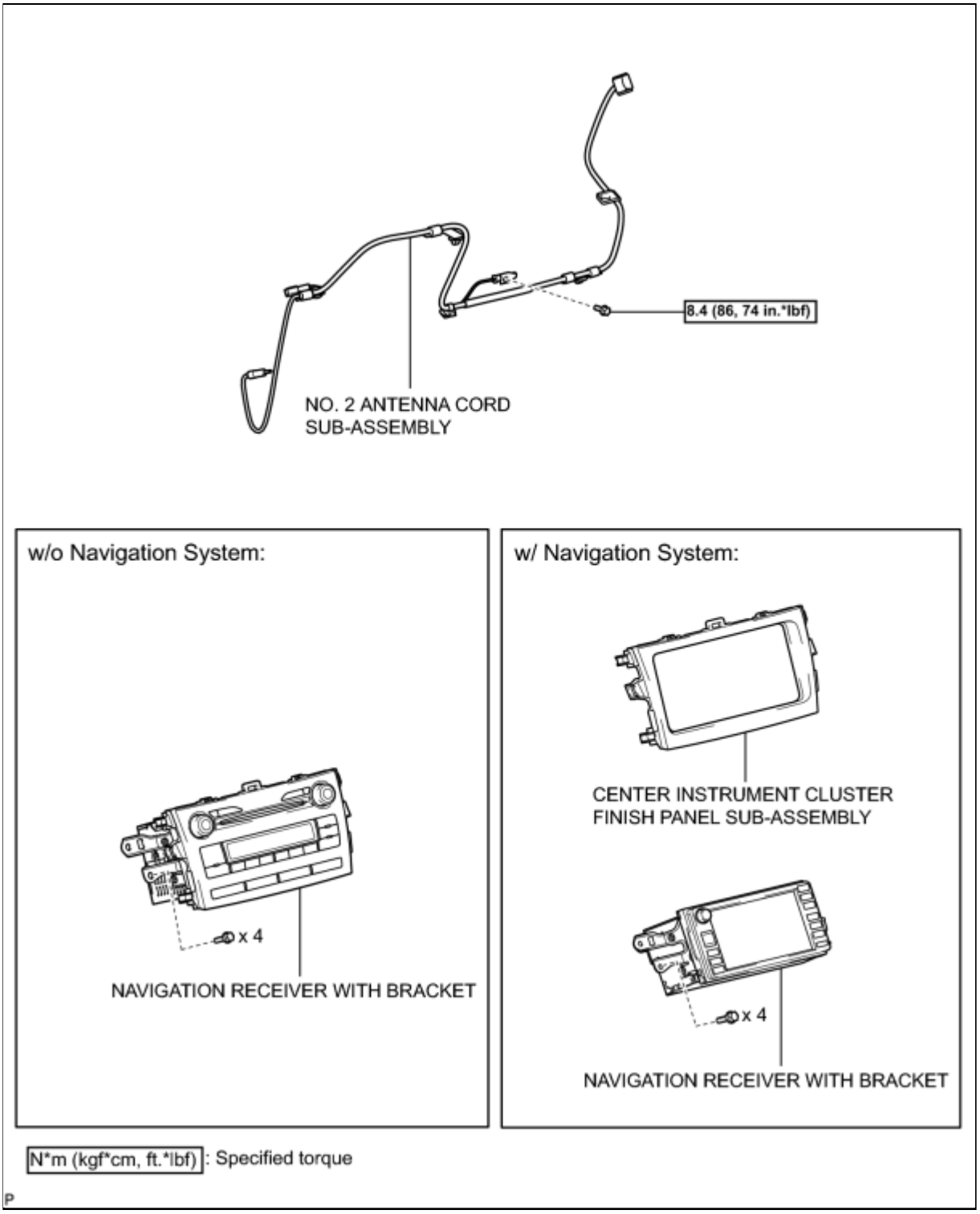

Last Modified: 3-10-2010	6.4 A	**From:** 200901
Model Year: 2010	**Model:** Corolla	**Doc ID:** RM000002XB800HX
Title: AUDIO / VIDEO: RADIO ANTENNA CORD: INSTALLATION (2010 Corolla)		

INSTALLATION

1. INSTALL NO. 2 ANTENNA CORD SUB-ASSEMBLY

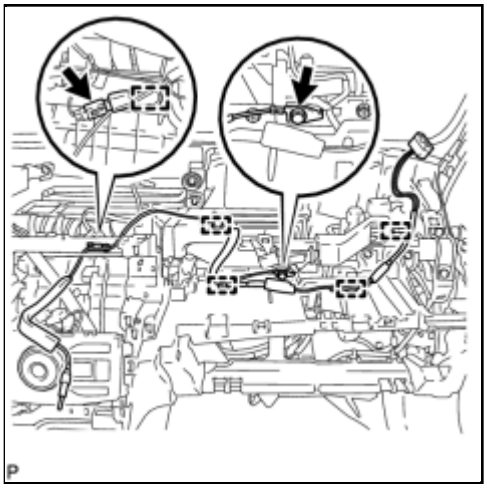

(a) Engage the 5 clamps and install the No. 2 antenna cord sub-assembly.

(b) Connect the connector.

(c) Install the bolt.

Torque: 8.4 N·m (86 kgf·cm, 74in·lbf)

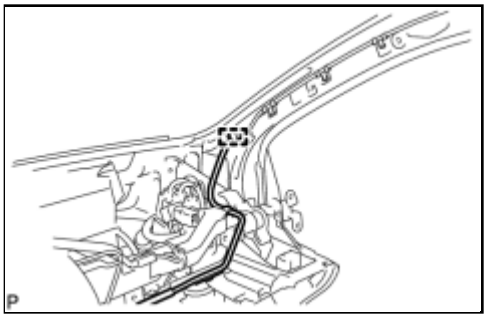

(d) Engage the clamp.

(e) Connect the connector.

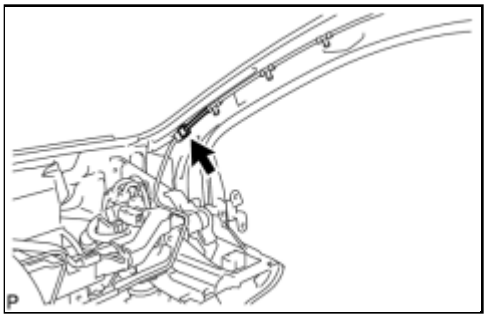

2. INSTALL RADIO RECEIVER WITH BRACKET (w/o Navigation System) INFO

3. INSTALL NAVIGATION RECEIVER WITH BRACKET (w/ Navigation System) INFO

4. INSTALL CENTER INSTRUMENT CLUSTER FINISH PANEL SUB-ASSEMBLY (w/ Navigation System) INFO

5. INSTALL UPPER INSTRUMENT PANEL SUB-ASSEMBLY INFO

6. CONNECT INSTRUMENT PANEL WIRE ASSEMBLY INFO

7. CONNECT FRONT DOOR OPENING TRIM WEATHERSTRIP LH INFO

8. INSTALL LOWER INSTRUMENT PANEL FINISH PANEL ASSEMBLY INFO

9. CONNECT FRONT DOOR OPENING TRIM WEATHERSTRIP RH INFO

10. INSTALL NO. 1 INSTRUMENT PANEL BOX DOOR SUB-ASSEMBLY INFO

11. INSTALL GLOVE COMPARTMENT DOOR ASSEMBLY INFO

12. INSTALL FRONT PILLAR GARNISH LH (w/ Curtain Shield Airbag) INFO

13. INSTALL FRONT PILLAR GARNISH LH (w/o Curtain Shield Airbag) INFO

14. INSTALL FRONT PILLAR GARNISH RH (w/ Curtain Shield Airbag) INFO

15. INSTALL FRONT PILLAR GARNISH RH (w/o Curtain Shield Airbag) INFO

16. INSTALL COMBINATION METER ASSEMBLY INFO

17. INSTALL INSTRUMENT CLUSTER FINISH PANEL ASSEMBLY INFO

18. INSTALL CENTER INSTRUMENT PANEL REGISTER ASSEMBLY INFO

19. INSTALL INSTRUMENT PANEL FINISH PANEL END LH INFO

20. INSTALL INSTRUMENT PANEL FINISH PANEL END RH INFO

21. INSTALL LOWER INSTRUMENT PANEL FINISH PANEL LH INFO

22. INSTALL LOWER INSTRUMENT PANEL FINISH PANEL RH INFO

23. CONNECT CABLE TO NEGATIVE BATTERY TERMINAL

24. INSPECT SRS WARNING LIGHT

INFO



Last Modified: 3-10-2010	6.4 A	**From:** 200901
Model Year: 2010	**Model:** Corolla	**Doc ID:** RM000002XBA00HX
Title: AUDIO / VIDEO: RADIO ANTENNA CORD: REMOVAL (2010 Corolla)		

REMOVAL

1. DISCONNECT CABLE FROM NEGATIVE BATTERY TERMINAL

CAUTION:

Wait at least 90 seconds after disconnecting the cable from the negative (-) battery terminal to disable the SRS system.

2. REMOVE LOWER INSTRUMENT PANEL FINISH PANEL LH INFO

3. REMOVE LOWER INSTRUMENT PANEL FINISH PANEL RH INFO

4. REMOVE INSTRUMENT PANEL FINISH PANEL END LH INFO

5. REMOVE INSTRUMENT PANEL FINISH PANEL END RH INFO

6. REMOVE CENTER INSTRUMENT PANEL REGISTER ASSEMBLY INFO

7. REMOVE INSTRUMENT CLUSTER FINISH PANEL ASSEMBLY INFO

8. REMOVE COMBINATION METER ASSEMBLY INFO

9. REMOVE FRONT PILLAR GARNISH LH (w/o Curtain Shield Airbag) INFO

10. REMOVE FRONT PILLAR GARNISH LH (w/ Curtain Shield Airbag) INFO

11. REMOVE FRONT PILLAR GARNISH RH (w/o Curtain Shield Airbag) INFO

12. REMOVE FRONT PILLAR GARNISH RH (w/ Curtain Shield Airbag) INFO

13. REMOVE LOWER INSTRUMENT PANEL FINISH PANEL ASSEMBLY INFO

14. DISCONNECT FRONT DOOR OPENING TRIM WEATHERSTRIP LH INFO

15. REMOVE GLOVE COMPARTMENT DOOR ASSEMBLY INFO

16. REMOVE NO. 1 INSTRUMENT PANEL BOX DOOR SUB-ASSEMBLY INFO

17. DISCONNECT FRONT DOOR OPENING TRIM WEATHERSTRIP RH INFO

18. DISCONNECT INSTRUMENT PANEL WIRE ASSEMBLY INFO

19. REMOVE UPPER INSTRUMENT PANEL SUB-ASSEMBLY INFO

20. REMOVE RADIO RECEIVER WITH BRACKET (w/o Navigation System) INFO

21. REMOVE CENTER INSTRUMENT CLUSTER FINISH PANEL SUB-ASSEMBLY (w/ Navigation System) INFO

22. REMOVE NAVIGATION RECEIVER WITH BRACKET (w/ Navigation System) INFO

23. REMOVE NO. 2 ANTENNA CORD SUB-ASSEMBLY

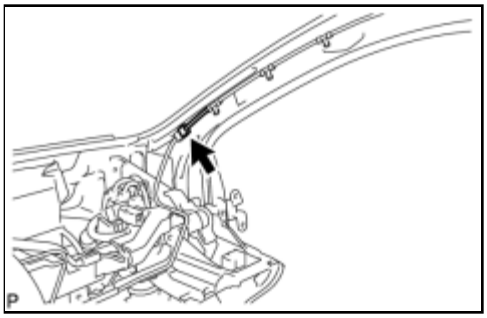

(a) Disconnect the connector.

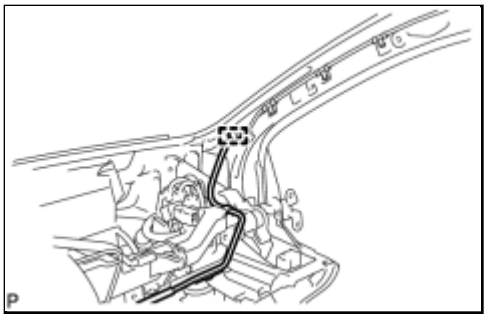

(b) Disengage the clamp.

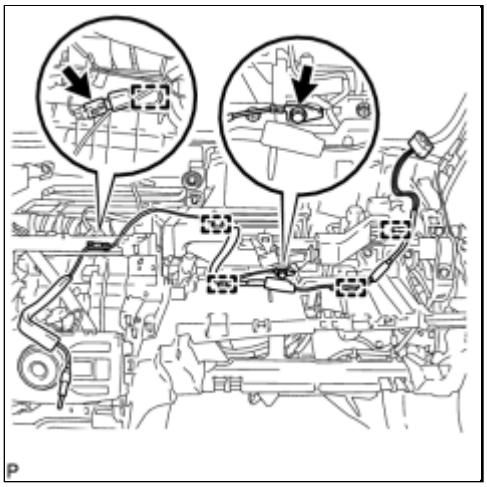

(c) Remove the bolt.

(d) Disconnect the connector.

(e) Disengage the 5 clamps and remove the No. 2 antenna cord sub-assembly.

Last Modified: 3-10-2010	6.4 K	**From:** 200901
Model Year: 2010	**Model:** Corolla	**Doc ID:** RM000002XAI00GX
Title: AUDIO / VIDEO: RADIO RECEIVER: COMPONENTS (2010 Corolla)		

COMPONENTS

ILLUSTRATION

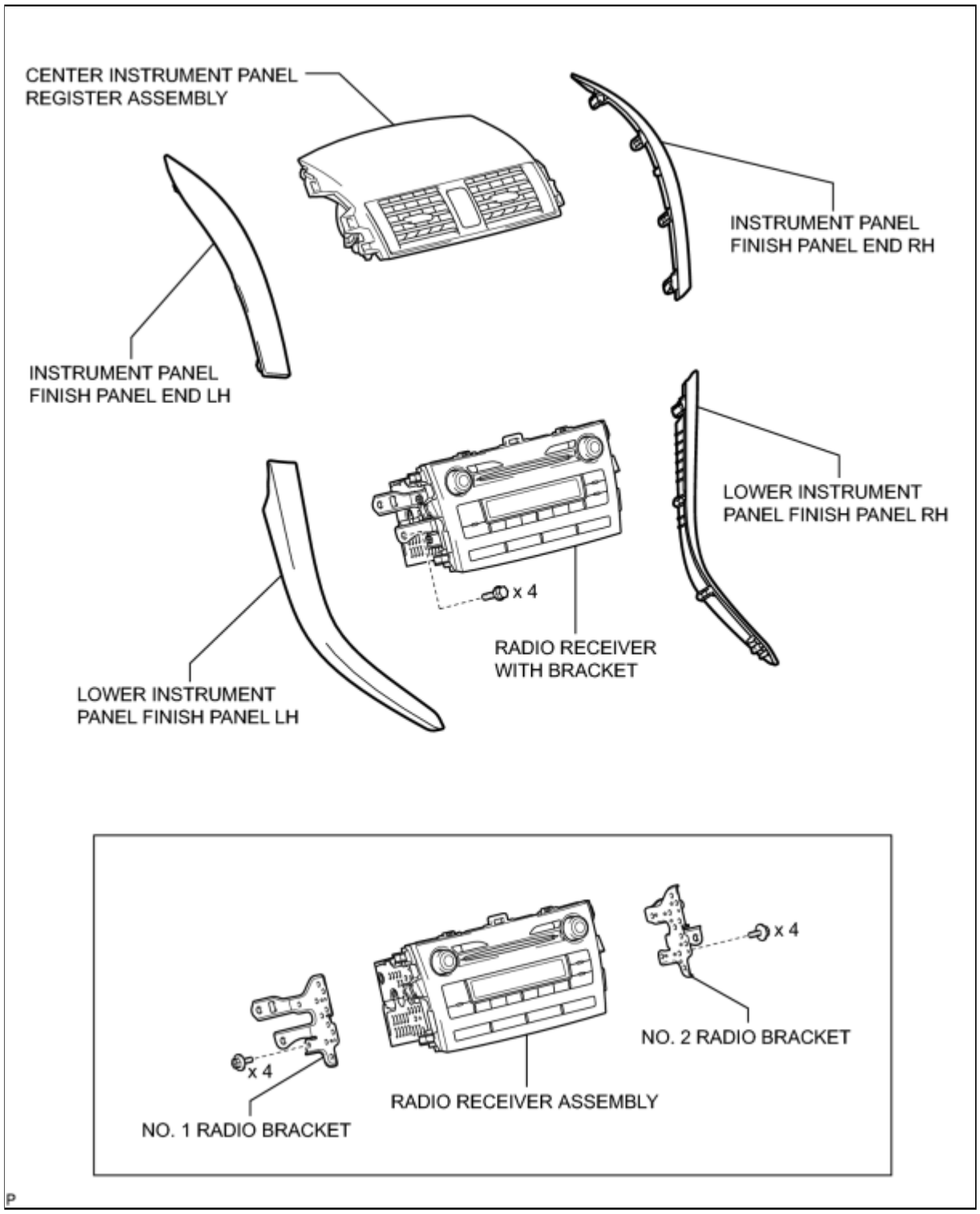

Last Modified: 3-10-2010	6.4 A	**From:** 200901
Model Year: 2010	**Model:** Corolla	**Doc ID:** RM000002XAJ00JX
Title: AUDIO / VIDEO: RADIO RECEIVER: REMOVAL (2010 Corolla)		

REMOVAL

1. **REMOVE LOWER INSTRUMENT PANEL FINISH PANEL LH** INFO
2. **REMOVE LOWER INSTRUMENT PANEL FINISH PANEL RH** INFO
3. **REMOVE INSTRUMENT PANEL FINISH PANEL END LH** INFO
4. **REMOVE INSTRUMENT PANEL FINISH PANEL END RH** INFO
5. **REMOVE CENTER INSTRUMENT PANEL REGISTER ASSEMBLY** INFO
6. **REMOVE RADIO RECEIVER WITH BRACKET**

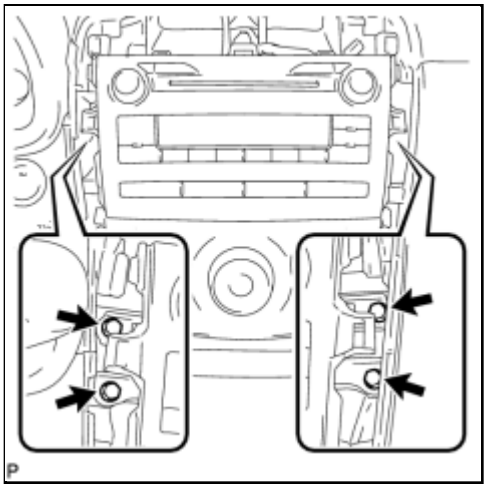

(a) Remove the 4 bolts.

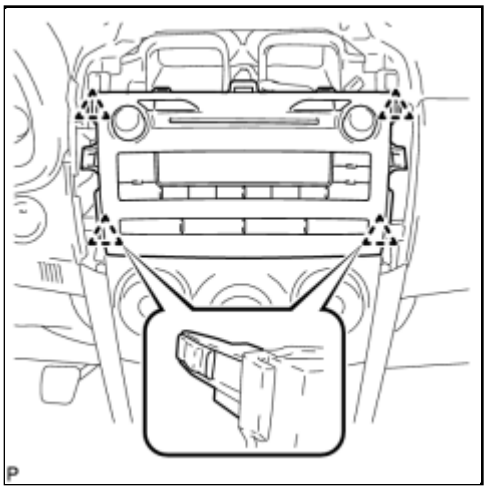

(b) Pull the radio receiver with bracket toward the rear of the vehicle and disengage the 4 clips.

(c) Disconnect each connector and remove the radio receiver with bracket.

7. REMOVE NO. 2 RADIO BRACKET

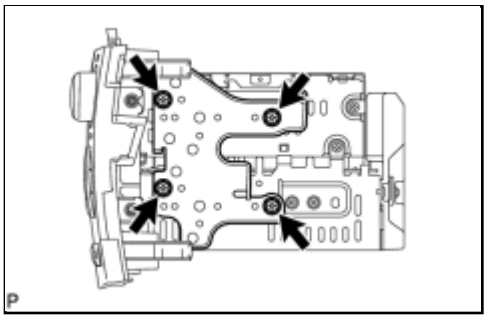

(a) Remove the 4 screws and No. 2 radio bracket.

8. REMOVE NO. 1 RADIO BRACKET

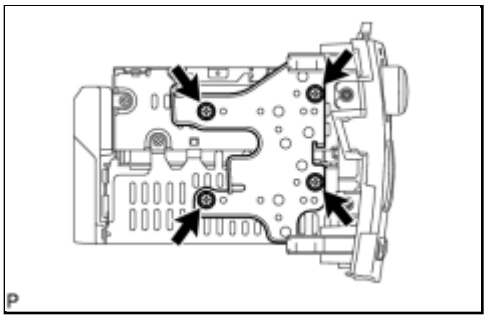

(a) Remove the 4 screws and No. 1 radio bracket.

9. REMOVE RADIO RECEIVER ASSEMBLY

Last Modified: 3-10-2010	6.4 A	**From:** 200901
Model Year: 2010	**Model:** Corolla	**Doc ID:** RM000002XAH00JX
Title: AUDIO / VIDEO: RADIO RECEIVER: INSTALLATION (2010 Corolla)		

INSTALLATION

1. INSTALL RADIO RECEIVER ASSEMBLY

2. INSTALL NO. 1 RADIO BRACKET

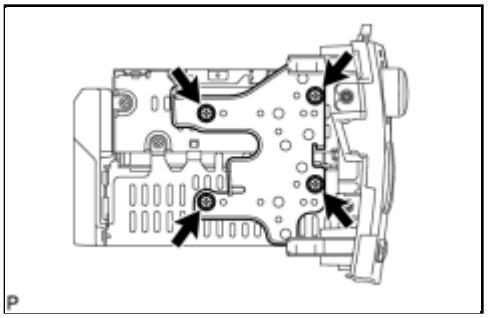

(a) Install the No. 1 radio bracket with the 4 screws.

3. INSTALL NO. 2 RADIO BRACKET

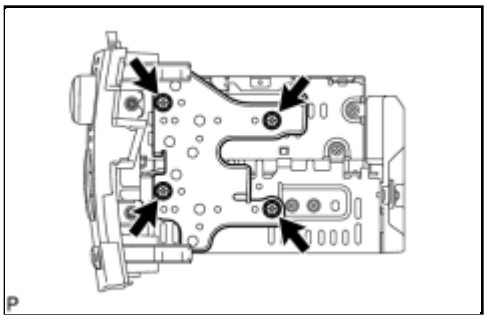

(a) Install the No. 2 radio bracket with the 4 screws.

4. INSTALL RADIO RECEIVER WITH BRACKET

(a) Connect each connector.

(b) Engage the 4 clips.

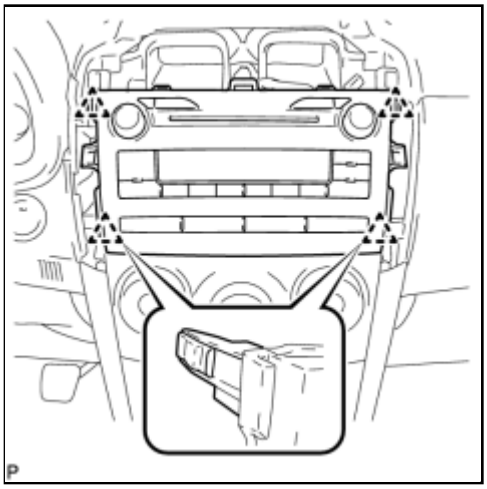

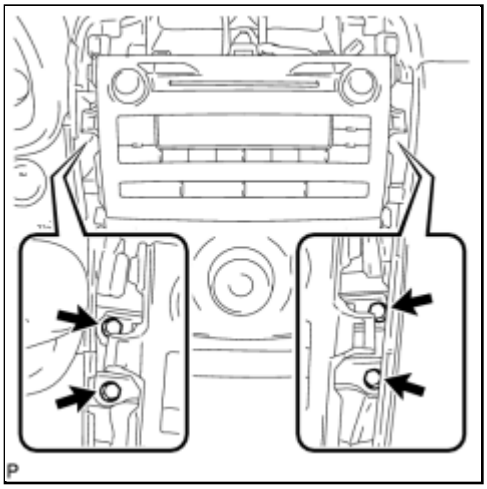

(c) Install the radio receiver with bracket with the 4 bolts.

5. INSTALL CENTER INSTRUMENT PANEL REGISTER ASSEMBLY INFO

6. INSTALL INSTRUMENT PANEL FINISH PANEL END LH INFO

7. INSTALL INSTRUMENT PANEL FINISH PANEL END RH INFO

8. INSTALL LOWER INSTRUMENT PANEL FINISH PANEL LH INFO

9. INSTALL LOWER INSTRUMENT PANEL FINISH PANEL RH INFO

Last Modified: 3-10-2010	6.4 K	**From:** 200901
Model Year: 2010	**Model:** Corolla	**Doc ID:** RM000002XAX00FX
Title: AUDIO / VIDEO: REAR PACKAGE TRAY SPEAKER: COMPONENTS (2010 Corolla)		

COMPONENTS

ILLUSTRATION

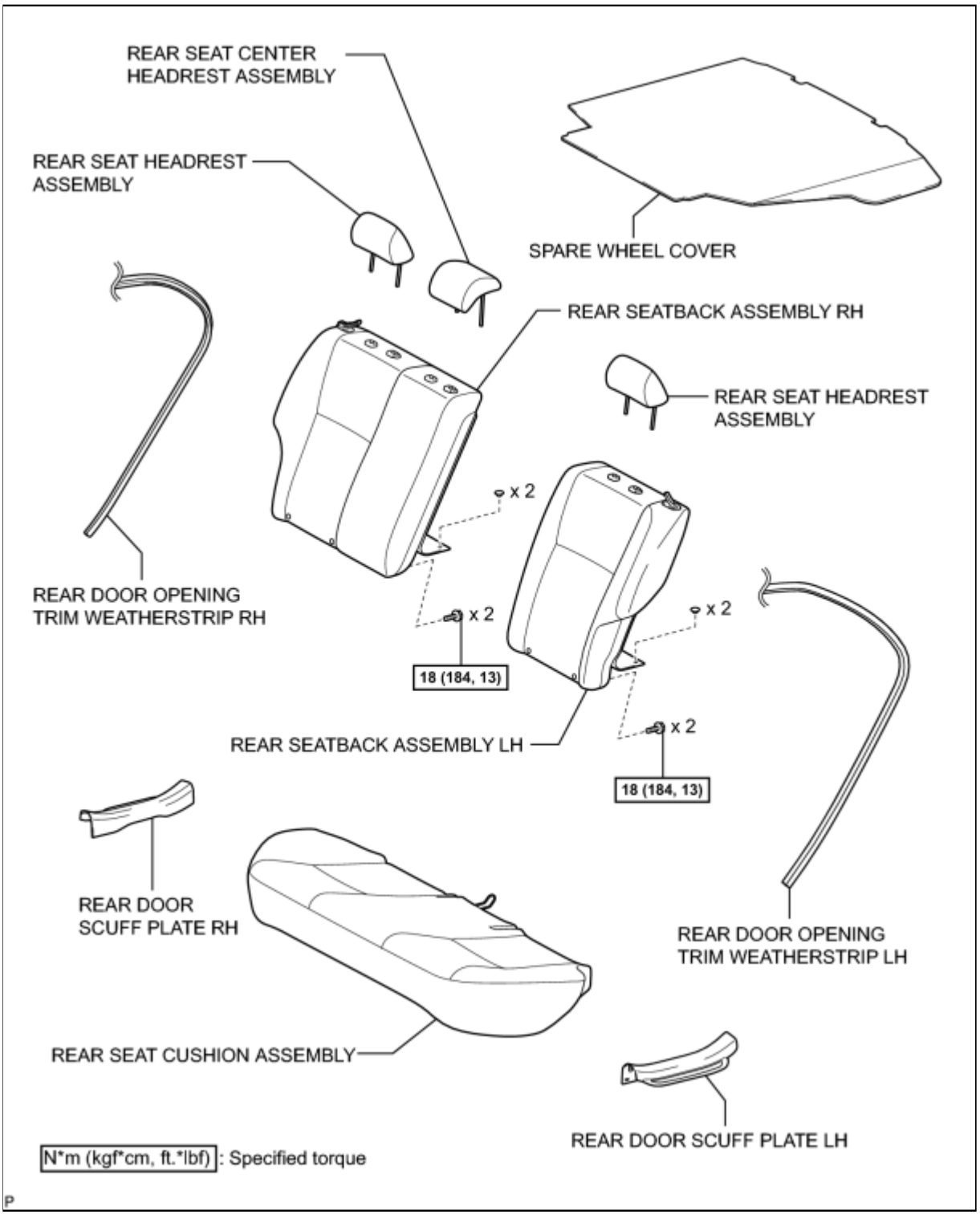

ILLUSTRATION

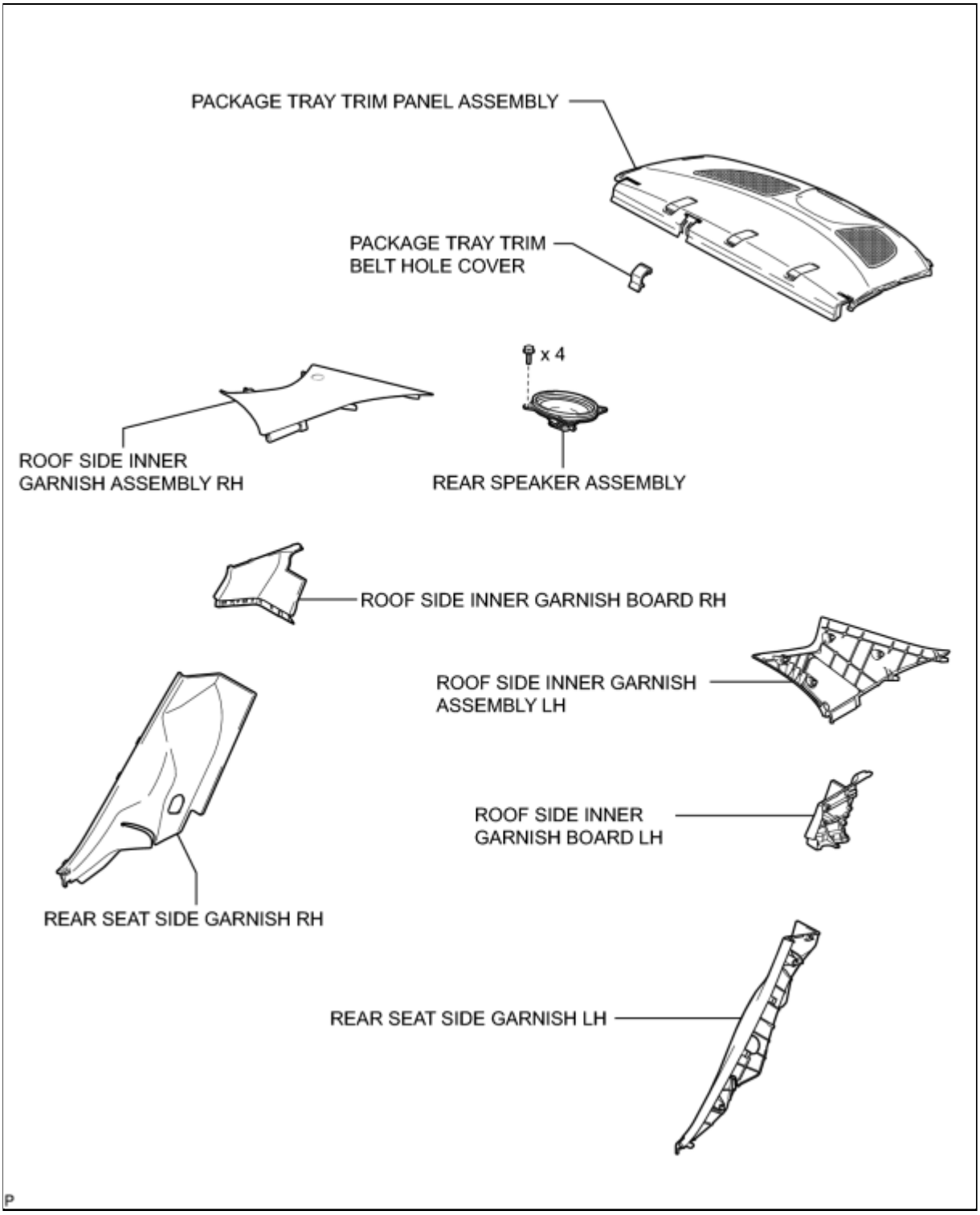

Last Modified: 3-10-2010	6.4 G	**From:** 200901
Model Year: 2010	**Model:** Corolla	**Doc ID:** RM0000020Q301TX
Title: AUDIO / VIDEO: REAR PACKAGE TRAY SPEAKER: ON-VEHICLE INSPECTION (2010 Corolla)		

ON-VEHICLE INSPECTION

1. INSPECT REAR SPEAKER

HINT:

Remove interior parts so that the rear speaker can be seen.

(a) Check the speaker installation.

OK:

The speaker is securely installed.

If the result is not as specified, reinstall the rear speaker.

(b) Visually check the speaker.

OK:

The cone paper of the speaker is not torn.

If the result is not as specified, replace the rear speaker.

(c) Speaker resistance check

(1) Disconnect the rear speaker connector.

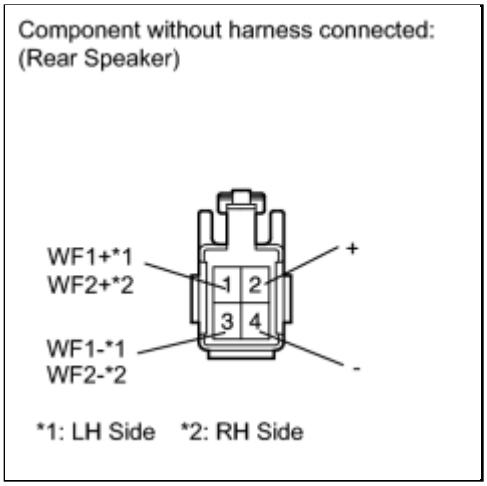

(2) for 8 Speakers:

Measure the resistance between the terminals of the speaker.

Standard Resistance:

for Tweeter

for Woofer

TESTER CONNECTION	CONDITION	SPECIFIED CONDITION
1 (WF1+) - 3 (WF1-)*1	Always	5.9 to 7.1 Ω
1 (WF2+) - 3 (WF2-)*2	Always	5.9 to 7.1 Ω

TESTER CONNECTION	CONDITION	SPECIFIED CONDITION
2 (+) - 4 (-)	Always	1.8 to 2.6 Ω

*1: LH Side

*2: RH Side

If the result is not as specified, replace the rear speaker.

(3) Except for 8 Speakers:

Measure the resistance between the terminals of the speaker.

Standard Resistance:

TESTER CONNECTION	CONDITION	SPECIFIED CONDITION
1 - 2	Always	3.2 to 4.8 Ω

If the result is not as specified, replace the rear speaker.

Last Modified: 3-10-2010	6.4 A	**From:** 200901
Model Year: 2010	**Model:** Corolla	**Doc ID:** RM000002XAY00IX
Title: AUDIO / VIDEO: REAR PACKAGE TRAY SPEAKER: REMOVAL (2010 Corolla)		

REMOVAL

1. REMOVE SPARE WHEEL COVER INFO

2. REMOVE REAR SEAT HEADREST ASSEMBLY LH

3. REMOVE REAR SEAT HEADREST ASSEMBLY RH

4. REMOVE REAR SEAT CENTER HEADREST ASSEMBLY

5. REMOVE REAR SEAT CUSHION ASSEMBLY INFO

6. REMOVE REAR SEATBACK ASSEMBLY LH INFO

7. REMOVE REAR SEATBACK ASSEMBLY RH INFO

8. REMOVE REAR DOOR SCUFF PLATE LH INFO

9. DISCONNECT REAR DOOR OPENING TRIM WEATHERSTRIP LH

10. REMOVE REAR SEAT SIDE GARNISH LH INFO

11. REMOVE ROOF SIDE INNER GARNISH BOARD LH INFO

12. REMOVE ROOF SIDE INNER GARNISH ASSEMBLY LH INFO

13. REMOVE REAR DOOR SCUFF PLATE RH INFO

14. DISCONNECT REAR DOOR OPENING TRIM WEATHERSTRIP RH

15. REMOVE REAR SEAT SIDE GARNISH RH INFO

16. REMOVE ROOF SIDE INNER GARNISH BOARD RH INFO

17. REMOVE ROOF SIDE INNER GARNISH ASSEMBLY RH INFO

18. REMOVE PACKAGE TRAY TRIM BELT HOLE COVER INFO

19. REMOVE PACKAGE TRAY TRIM PANEL ASSEMBLY (w/o Rear Spoiler) INFO

20. REMOVE PACKAGE TRAY TRIM PANEL ASSEMBLY (w/ Rear Spoiler) INFO

21. REMOVE REAR SPEAKER ASSEMBLY

(a) Disconnect the connector.

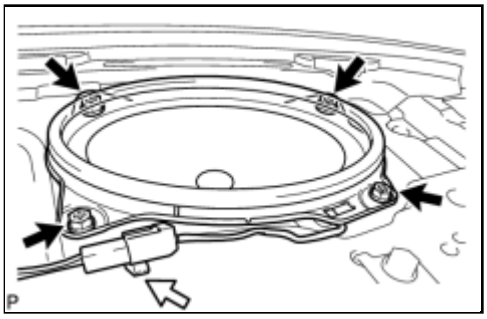

(b) Remove the 4 bolts and rear speaker assembly.

NOTICE:

Do not touch the cone part of the speaker.

Last Modified: 3-10-2010	6.4 A	**From:** 200901
Model Year: 2010	**Model:** Corolla	**Doc ID:** RM000002XAW00IX
Title: AUDIO / VIDEO: REAR PACKAGE TRAY SPEAKER: INSTALLATION (2010 Corolla)		

INSTALLATION

1. INSTALL REAR SPEAKER ASSEMBLY

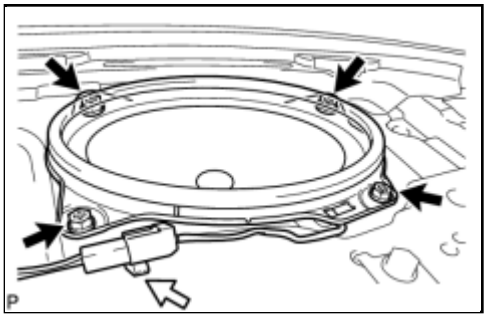

(a) Install the rear speaker assembly with the 4 bolts.

(b) Connect the connector.

2. INSTALL PACKAGE TRAY TRIM PANEL ASSEMBLY (w/o Rear Spoiler) INFO

3. INSTALL PACKAGE TRAY TRIM PANEL ASSEMBLY (w/ Rear Spoiler) INFO

4. INSTALL PACKAGE TRAY TRIM BELT HOLE COVER INFO

5. INSTALL ROOF SIDE INNER GARNISH ASSEMBLY LH INFO

6. INSTALL ROOF SIDE INNER GARNISH BOARD LH INFO

7. INSTALL REAR SEAT SIDE GARNISH LH INFO

8. INSTALL REAR DOOR OPENING TRIM WEATHERSTRIP LH INFO

9. INSTALL REAR DOOR SCUFF PLATE LH INFO

10. INSTALL ROOF SIDE INNER GARNISH ASSEMBLY RH INFO

11. INSTALL ROOF SIDE INNER GARNISH BOARD RH INFO

12. INSTALL REAR SEAT SIDE GARNISH RH INFO

13. INSTALL REAR DOOR OPENING TRIM WEATHERSTRIP RH INFO

14. INSTALL REAR DOOR SCUFF PLATE RH INFO

15. INSTALL REAR SEATBACK ASSEMBLY LH INFO

16. INSTALL REAR SEATBACK ASSEMBLY RH INFO

17. INSTALL REAR SEAT CUSHION ASSEMBLY INFO

18. INSTALL REAR SEAT CENTER HEADREST ASSEMBLY

19. INSTALL REAR SEAT HEADREST ASSEMBLY LH

20. INSTALL REAR SEAT HEADREST ASSEMBLY RH

21. INSTALL SPARE WHEEL COVER INFO

Last Modified: 3-10-2010	6.4 K	**From:** 200901
Model Year: 2010	**Model:** Corolla	**Doc ID:** RM000002XBI00PX
Title: AUDIO / VIDEO: STEERING PAD SWITCH: COMPONENTS (2010 Corolla)		

COMPONENTS

ILLUSTRATION

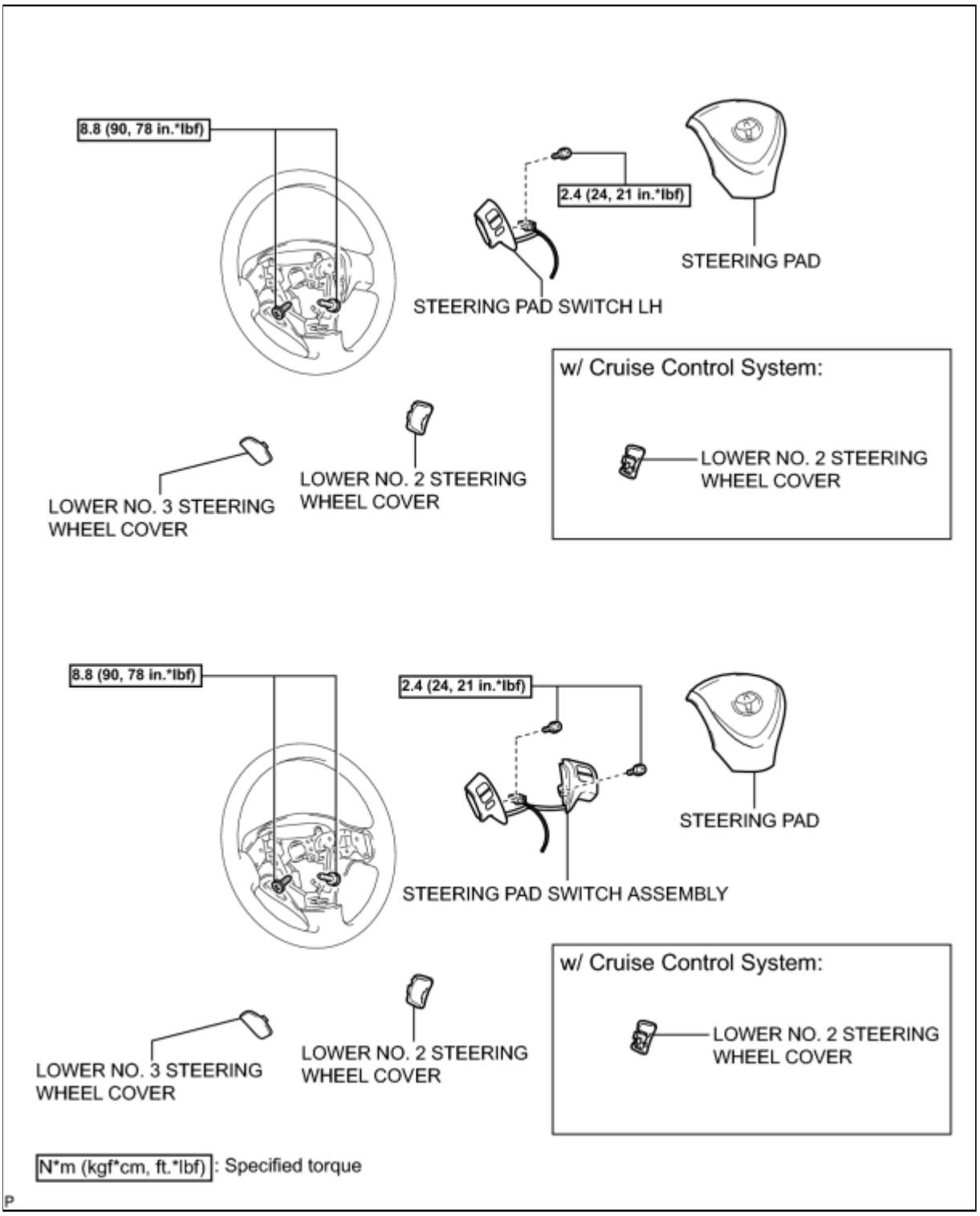

Last Modified: 3-10-2010	6.4 A	**From:** 200901
Model Year: 2010	**Model:** Corolla	**Doc ID:** RM000002XBJ00WX
Title: AUDIO / VIDEO: STEERING PAD SWITCH: REMOVAL (2010 Corolla)		

REMOVAL

1. PRECAUTION

INFO

2. DISCONNECT CABLE FROM NEGATIVE BATTERY TERMINAL

CAUTION:

Wait at least 90 seconds after disconnecting the cable from the negative (-) battery terminal to disable the SRS system.

3. REMOVE LOWER NO. 3 STEERING WHEEL COVER INFO

4. REMOVE LOWER NO. 2 STEERING WHEEL COVER INFO

5. REMOVE STEERING PAD INFO

6. REMOVE STEERING PAD SWITCH LH

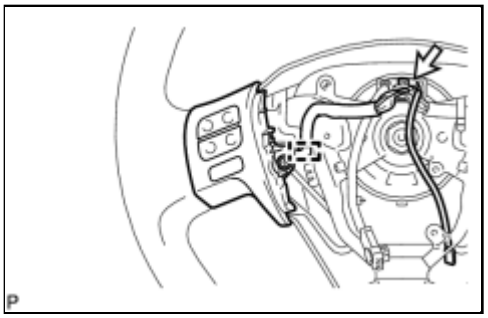

(a) Disconnect the pad switch connector from the spiral cable and disengage the clamp.

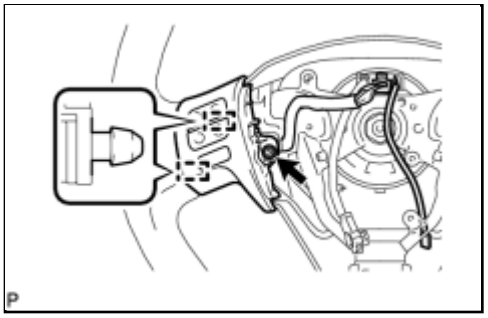

(b) Remove the screw.

(c) Disengage the 2 pins and remove the steering pad switch LH.

7. REMOVE STEERING PAD SWITCH ASSEMBLY

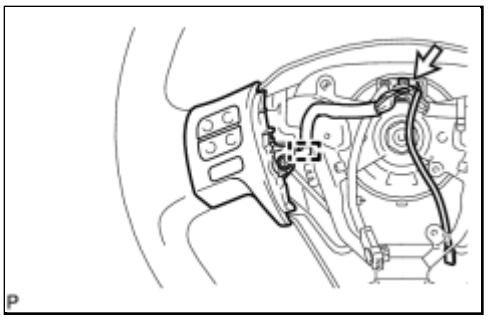

(a) Disconnect the pad switch connector from the spiral cable and disengage the clamp.

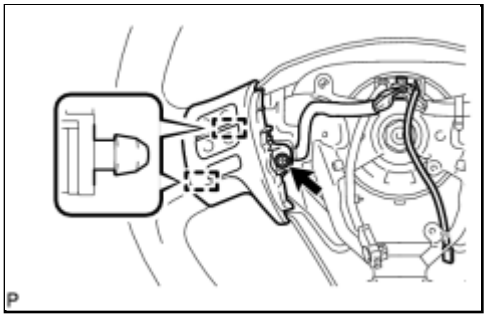

(b) Remove the screw.

(c) Disengage the 2 pins and remove the steering pad switch.

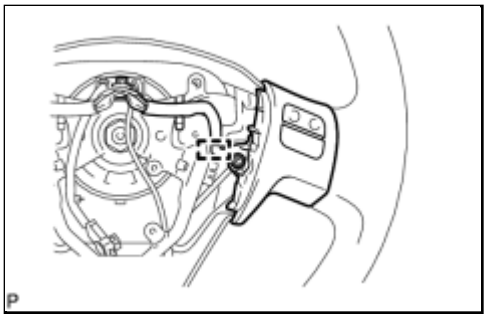

(d) Disengage the clamp.

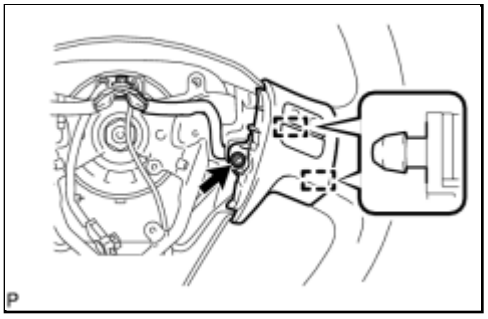

(e) Remove the screw.

(f) Disengage the 2 pins and remove the steering pad switch assembly.

Last Modified: 3-10-2010	6.4 G	**From:** 200901
Model Year: 2010	**Model:** Corolla	**Doc ID:** RM0000020Q602BX
Title: AUDIO / VIDEO: STEERING PAD SWITCH: INSPECTION (2010 Corolla)		

INSPECTION

1. INSPECT STEERING PAD SWITCH ASSEMBLY

(a) Disconnect the steering pad switch assembly connector.

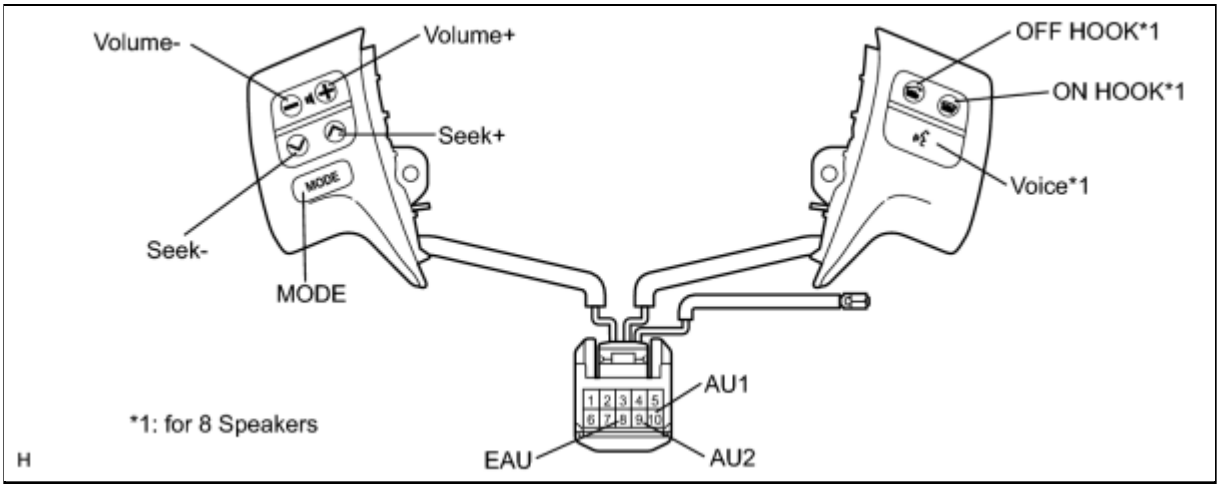

(b) Measure the resistance according to the values in the table below.

Standard Resistance:

TESTER CONNECTION	CONDITION	SPECIFIED CONDITION
10 (AU1) - 8 (EAU)	No switch is pushed	95 to 105 kΩ
10 (AU1) - 8 (EAU)	Seek+ switch: pushed	0 to 2.5 Ω
10 (AU1) - 8 (EAU)	Seek- switch: pushed	313.5 to 346.5 Ω
10 (AU1) - 8 (EAU)	Volume+ switch: pushed	959.5 to 1060.5 Ω
10 (AU1) - 8 (EAU)	Volume- switch: pushed	3049.5 to 3370.5 Ω
9 (AU2) - 8 (EAU)	No switch is pushed	95 to 105 kΩ
9 (AU2) - 8 (EAU)	MODE switch: pushed	0 to 2.5 Ω
9 (AU2) - 8 (EAU)	Voice switch: pushed*1	3049.5 to 3370.5 Ω
9 (AU2) - 8 (EAU)	ON HOOK switch: pushed*1	313.5 to 346.5 Ω
9 (AU2) - 8 (EAU)	OFF HOOK switch: pushed*1	959.5 to 1060.5 Ω

- *1: for 8 Speakers

If the result is not as specified, replace the steering pad switch assembly.

Last Modified: 3-10-2010	6.4 A	**From:** 200901
Model Year: 2010	**Model:** Corolla	**Doc ID:** RM000002XBH00WX
Title: AUDIO / VIDEO: STEERING PAD SWITCH: INSTALLATION (2010 Corolla)		

INSTALLATION

1. INSTALL STEERING PAD SWITCH LH

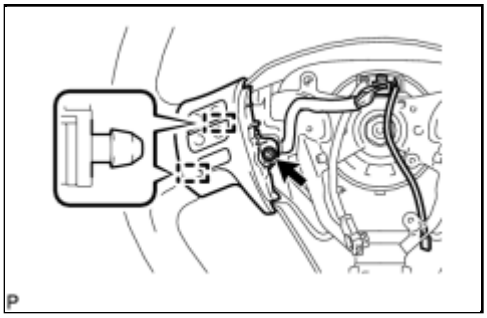

(a) Engage the 2 pins and install the steering pad switch LH.

(b) Install the screw.

Torque: 2.4 N·m (24 kgf·cm, 21in·lbf)

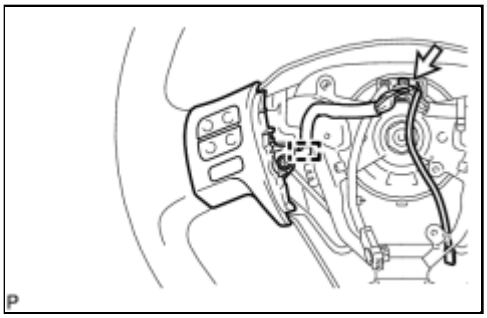

(c) Engage the clamp.

(d) Connect the connector to the spiral cable.

2. INSTALL STEERING PAD SWITCH ASSEMBLY

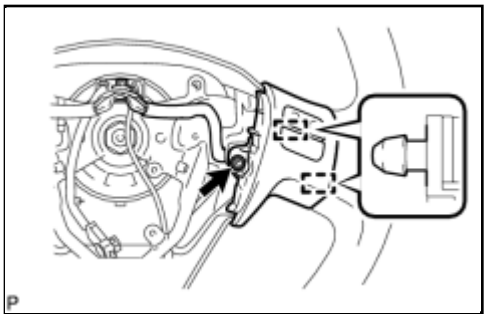

(a) Engage the 2 pins and install the steering pad switch assembly.

(b) Install the screw.

Torque: 2.4 N·m (24 kgf·cm, 21in·lbf)

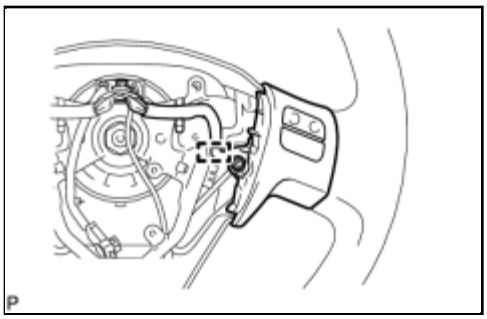

(c) Engage the clamp.

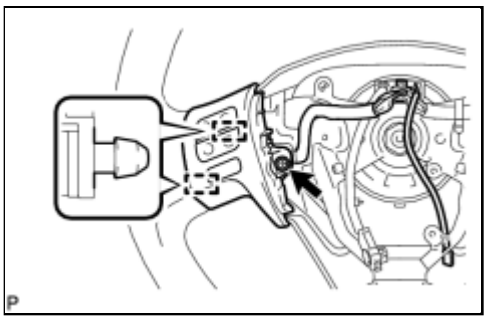

(d) Engage the 2 pins and install the steering pad switch.

(e) Install the screw.

Torque: 2.4 N·m (24 kgf·cm, 21in·lbf)

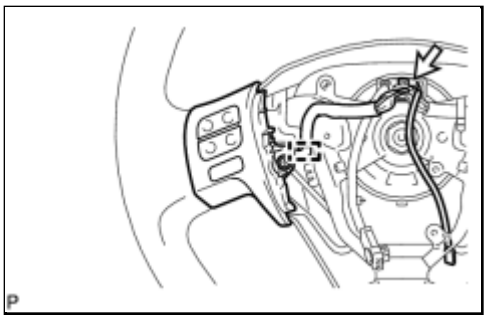

(f) Engage the clamp.

(g) Connect the connector to the spiral cable.

3. INSTALL STEERING PAD INFO

4. INSTALL LOWER NO. 3 STEERING WHEEL COVER INFO

5. INSTALL LOWER NO. 2 STEERING WHEEL COVER INFO

6. CONNECT CABLE TO NEGATIVE BATTERY TERMINAL

7. INSPECT STEERING PAD INFO

8. INSPECT SRS WARNING LIGHT

INFO



Last Modified: 3-10-2010	6.4 K	**From:** 200901
Model Year: 2010	**Model:** Corolla	**Doc ID:** RM000003FU6001X
Title: AUDIO / VIDEO: STEREO COMPONENT AMPLIFIER: COMPONENTS (2010 Corolla)		

COMPONENTS

ILLUSTRATION

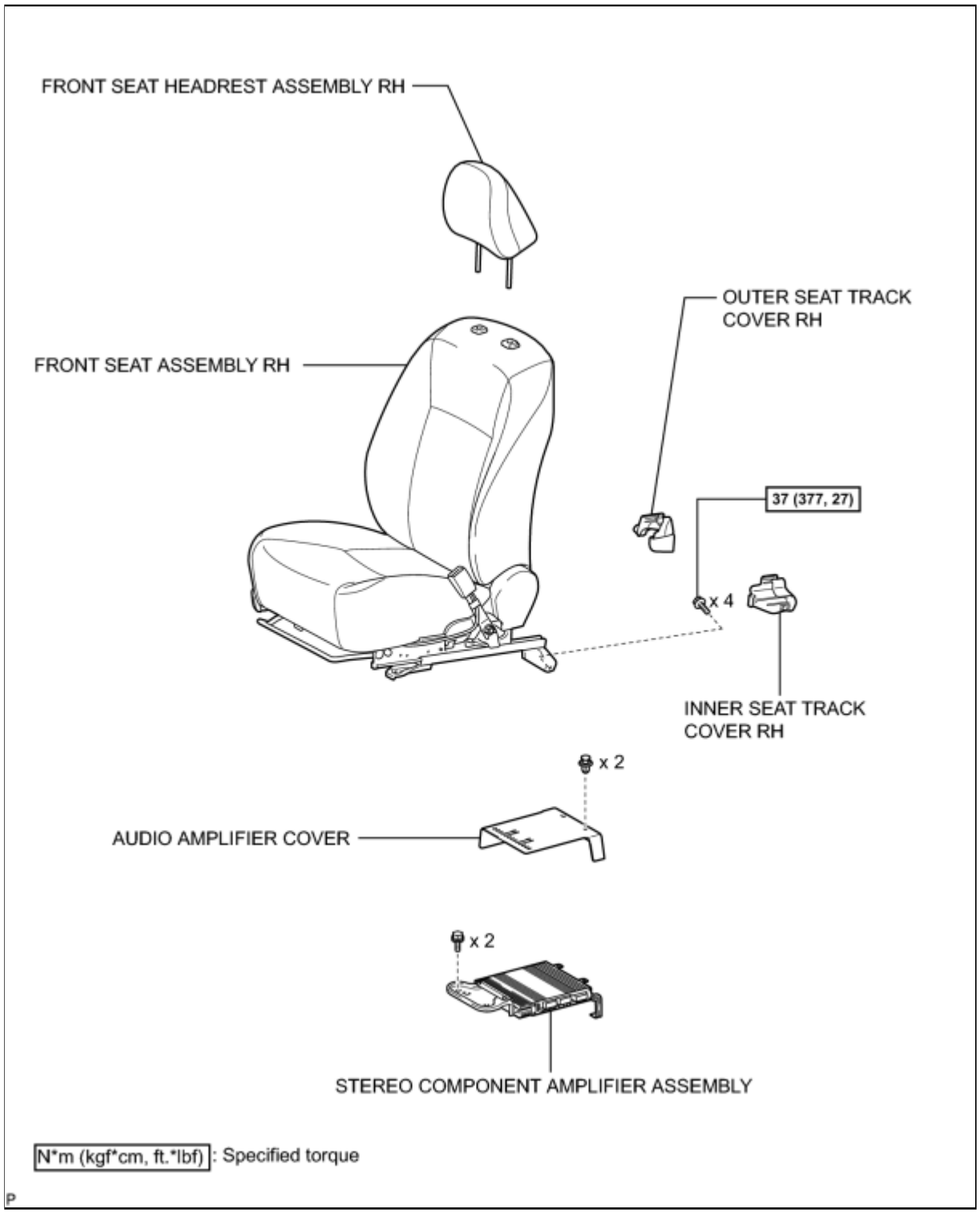

Last Modified: 3-10-2010	6.4 A	**From:** 200901
Model Year: 2010	**Model:** Corolla	**Doc ID:** RM000003FU7001X
Title: AUDIO / VIDEO: STEREO COMPONENT AMPLIFIER: REMOVAL (2010 Corolla)		

REMOVAL

1. DISCONNECT CABLE FROM NEGATIVE BATTERY TERMINAL (w/ Front Seat Side Airbag)

CAUTION:

Wait at least 90 seconds after disconnecting the cable from the negative (-) battery terminal to disable the SRS system.

2. REMOVE FRONT SEAT HEADREST ASSEMBLY RH

3. REMOVE OUTER SEAT TRACK COVER RH

HINT:

Use the same procedure for the RH side and the LH side INFO **.**

4. REMOVE INNER SEAT TRACK COVER RH

HINT:

Use the same procedure for the RH side and the LH side INFO **.**

5. REMOVE FRONT SEAT ASSEMBLY RH

HINT:

Use the same procedure for the RH side and the LH side INFO **.**

6. REMOVE AUDIO AMPLIFIER COVER

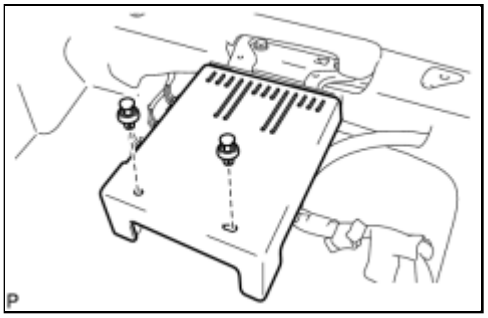

(a) Disengage the 2 clips and remove the audio amplifier cover.

7. REMOVE STEREO COMPONENT AMPLIFIER ASSEMBLY

(a) Disconnect each connector.

(b) Remove the 2 bolts and stereo component amplifier assembly.

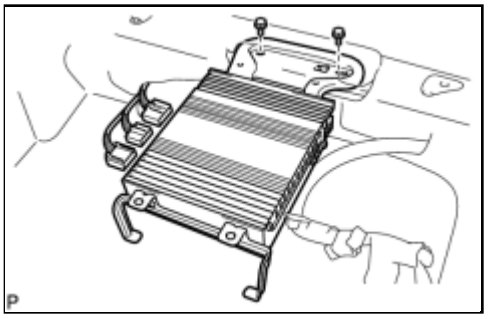
P

Last Modified: 3-10-2010	6.4 A	**From:** 200901
Model Year: 2010	**Model:** Corolla	**Doc ID:** RM000003FU5001X
Title: AUDIO / VIDEO: STEREO COMPONENT AMPLIFIER: INSTALLATION (2010 Corolla)		

INSTALLATION

1. INSTALL STEREO COMPONENT AMPLIFIER ASSEMBLY

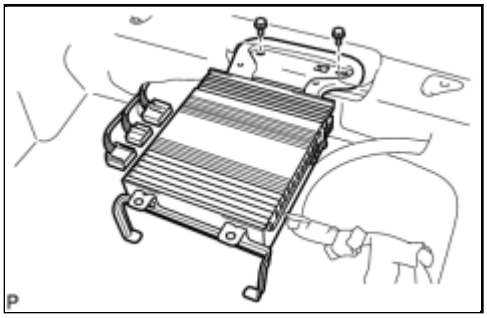

(a) Install the stereo component amplifier assembly with the 2 bolts.

(b) Connect each connector.

2. INSTALL AUDIO AMPLIFIER COVER

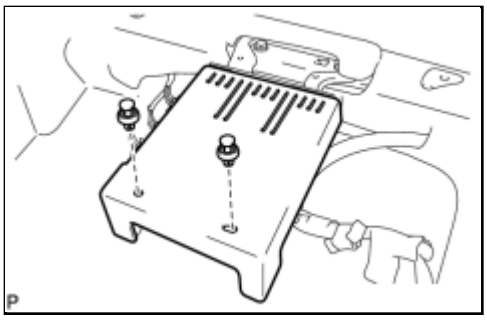

(a) Engage the 2 clips and install the audio amplifier cover.

3. INSTALL FRONT SEAT ASSEMBLY RH

HINT:

Use the same procedure for the RH side and the LH side INFO .

4. INSPECT FRONT SEAT SLIDE ADJUSTER LOCK INFO

5. INSTALL INNER SEAT TRACK COVER RH

HINT:

Use the same procedure for the RH side and the LH side INFO .

6. INSTALL OUTER SEAT TRACK COVER RH

HINT:

Use the same procedure for the RH side and the LH side INFO .

7. INSTALL FRONT SEAT HEADREST ASSEMBLY RH

8. CONNECT CABLE TO NEGATIVE BATTERY TERMINAL (w/ Front Seat Side Airbag)

9. INSPECT SRS WARNING LIGHT (w/ Front Seat Side Airbag)

INFO



Last Modified: 3-10-2010	6.4 K	**From:** 200901
Model Year: 2010	**Model:** Corolla	**Doc ID:** RM000003FUC001X
Title: AUDIO / VIDEO: STEREO JACK ADAPTER ASSEMBLY: COMPONENTS (2010 Corolla)		

COMPONENTS

ILLUSTRATION

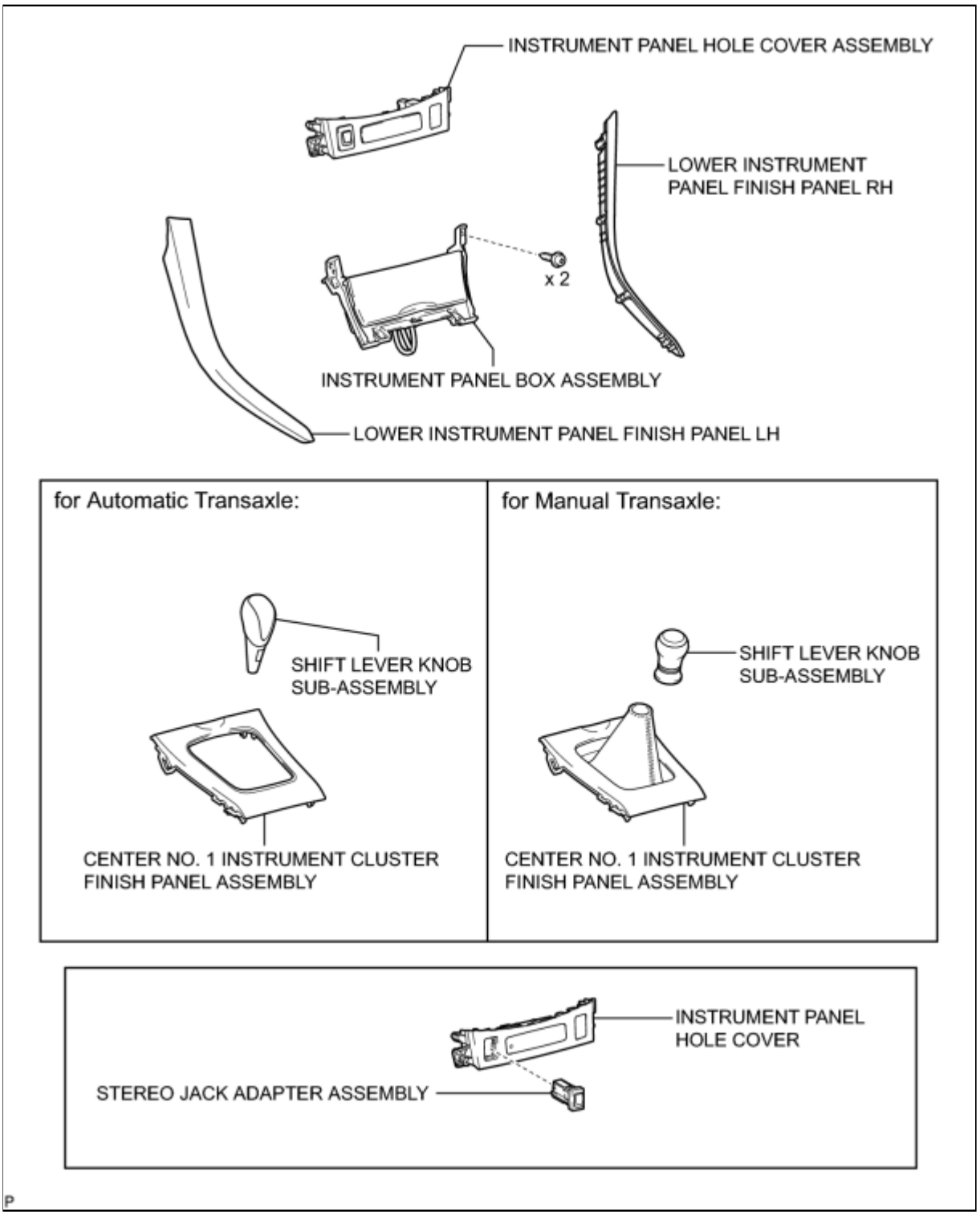

Last Modified: 3-10-2010	6.4 A	**From:** 200901
Model Year: 2010	**Model:** Corolla	**Doc ID:** RM000003FUD001X
Title: AUDIO / VIDEO: STEREO JACK ADAPTER ASSEMBLY: REMOVAL (2010 Corolla)		

REMOVAL

1. **REMOVE LOWER INSTRUMENT PANEL FINISH PANEL LH** INFO
2. **REMOVE LOWER INSTRUMENT PANEL FINISH PANEL RH** INFO
3. **REMOVE SHIFT LEVER KNOB SUB-ASSEMBLY (for Manual Transaxle)** INFO
4. **REMOVE SHIFT LEVER KNOB SUB-ASSEMBLY (for Automatic Transaxle)** INFO
5. **REMOVE CENTER NO. 1 INSTRUMENT CLUSTER FINISH PANEL ASSEMBLY (for Manual Transaxle)** INFO
6. **REMOVE CENTER NO. 1 INSTRUMENT CLUSTER FINISH PANEL ASSEMBLY (for Automatic Transaxle)** INFO
7. **REMOVE INSTRUMENT PANEL BOX ASSEMBLY** INFO
8. **REMOVE INSTRUMENT PANEL HOLE COVER ASSEMBLY** INFO
9. **REMOVE STEREO JACK ADAPTER ASSEMBLY**

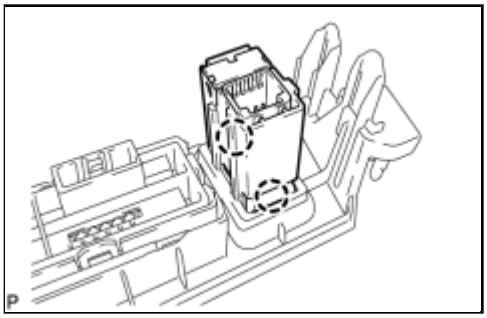

(a) Disengage the 2 claws and remove the stereo jack adapter assembly.

Last Modified: 3-10-2010	6.4 A	**From:** 200901
Model Year: 2010	**Model:** Corolla	**Doc ID:** RM000003FUB001X
Title: AUDIO / VIDEO: STEREO JACK ADAPTER ASSEMBLY: INSTALLATION (2010 Corolla)		

INSTALLATION

1. INSTALL STEREO JACK ADAPTER ASSEMBLY

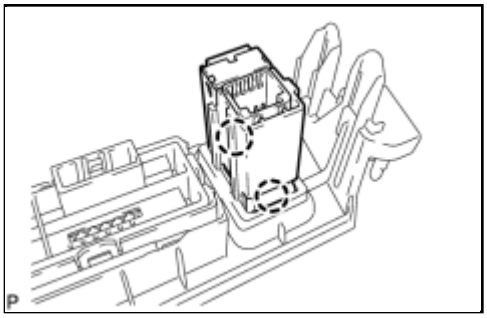

(a) Engage the 2 claws and install the stereo jack adapter assembly.

2. INSTALL INSTRUMENT PANEL HOLE COVER ASSEMBLY INFO

3. INSTALL INSTRUMENT PANEL BOX ASSEMBLY INFO

4. INSTALL CENTER NO. 1 INSTRUMENT CLUSTER FINISH PANEL ASSEMBLY (for Manual Transaxle) INFO

5. INSTALL CENTER NO. 1 INSTRUMENT CLUSTER FINISH PANEL ASSEMBLY (for Automatic Transaxle) INFO

6. INSTALL SHIFT LEVER KNOB SUB-ASSEMBLY (for Manual Transaxle) INFO

7. INSTALL SHIFT LEVER KNOB SUB-ASSEMBLY (for Automatic Transaxle) INFO

8. INSTALL LOWER INSTRUMENT PANEL FINISH PANEL LH INFO

9. INSTALL LOWER INSTRUMENT PANEL FINISH PANEL RH INFO

Last Modified: 3-10-2010	6.4 G	**From:** 200901
Model Year: 2010	**Model:** Corolla	**Doc ID:** RM0000020Q701KX
Title: AUDIO / VIDEO: WINDOW GLASS ANTENNA WIRE: ON-VEHICLE INSPECTION (2010 Corolla)		

ON-VEHICLE INSPECTION

1. INSPECT WINDOW GLASS ANTENNA WIRE

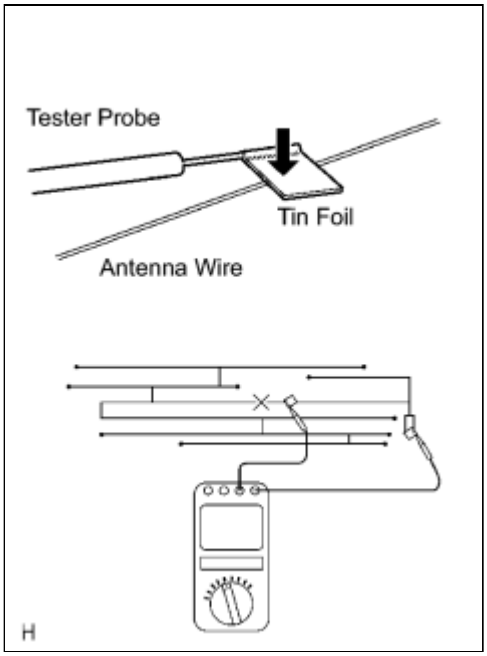

(a) Check for continuity of the antenna.

HINT:

Check for continuity at the center of each antenna wire as shown in the illustration.

NOTICE:

- When cleaning the glass, wipe it in the direction of the wire with a soft dry cloth. Take care not to damage the wire. Do not use detergents or glass cleaners with abrasive ingredients.
- When measuring voltage, wrap a piece of tin foil around the tip of the negative probe and press the foil against the wire with your finger as shown in the illustration.

OK:

There is continuity in the antenna.

If the result is not specified, repair the window glass antenna wire.

Last Modified: 3-10-2010	6.4 A	**From:** 200901
Model Year: 2010	**Model:** Corolla	**Doc ID:** RM000001Q0501LX
Title: AUDIO / VIDEO: WINDOW GLASS ANTENNA WIRE: REPAIR (2010 Corolla)		

REPAIR

1. REPAIR WINDOW GLASS ANTENNA WIRE

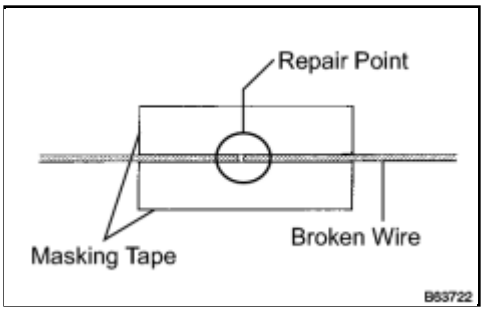

(a) Clean the broken wire tips with grease, wax or silicone remover.

(b) Place masking tape along both sides of the wire to be repaired.

(c) Thoroughly mix the repair agent (Dupont paste No. 4817 or equivalent).

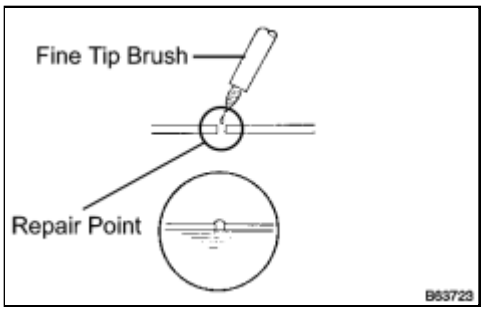

(d) Using a fine tip brush, apply a small amount of the repair agent to the wire.

(e) After a few minutes, remove the masking tape.

NOTICE:

Do not repair the antenna wire for at least 24 hours.

Last Modified: 3-10-2010	6.4 K	**From:** 200901
Model Year: 2010	**Model:** Corolla	**Doc ID:** RM000002XB000HX
Title: AUDIO / VIDEO: AMPLIFIER ANTENNA: COMPONENTS (2010 Corolla)		

COMPONENTS

ILLUSTRATION

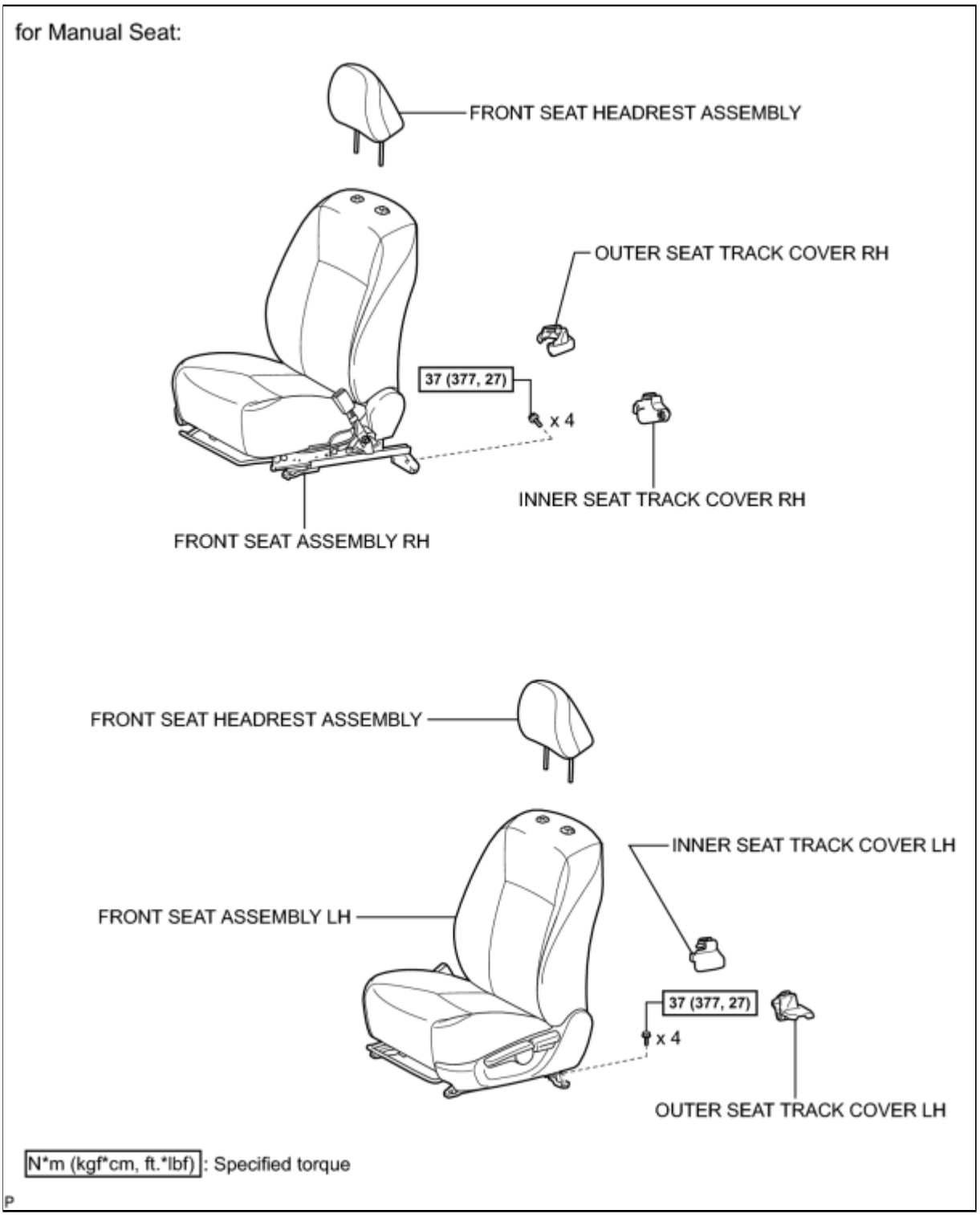

ILLUSTRATION

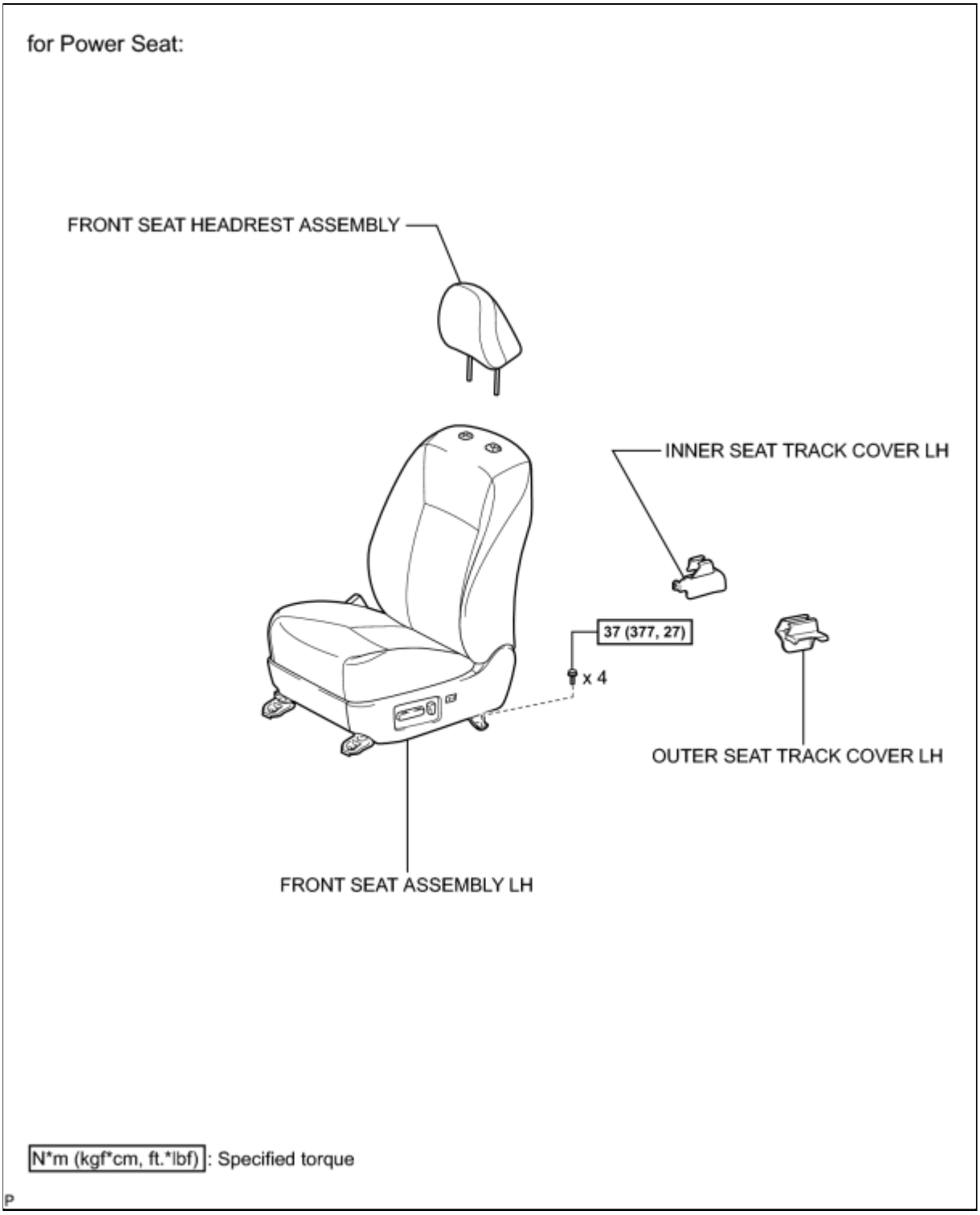

ILLUSTRATION

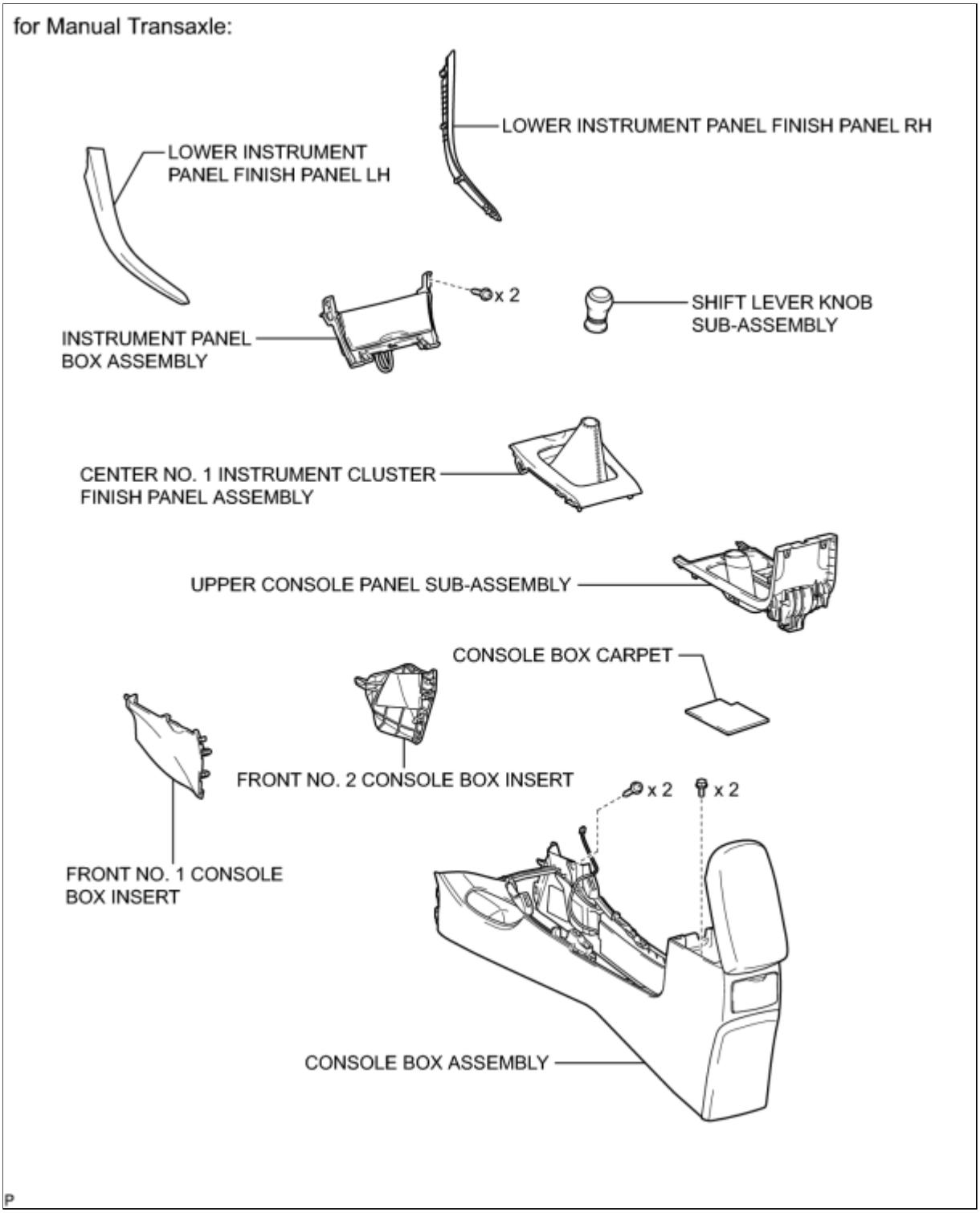

ILLUSTRATION

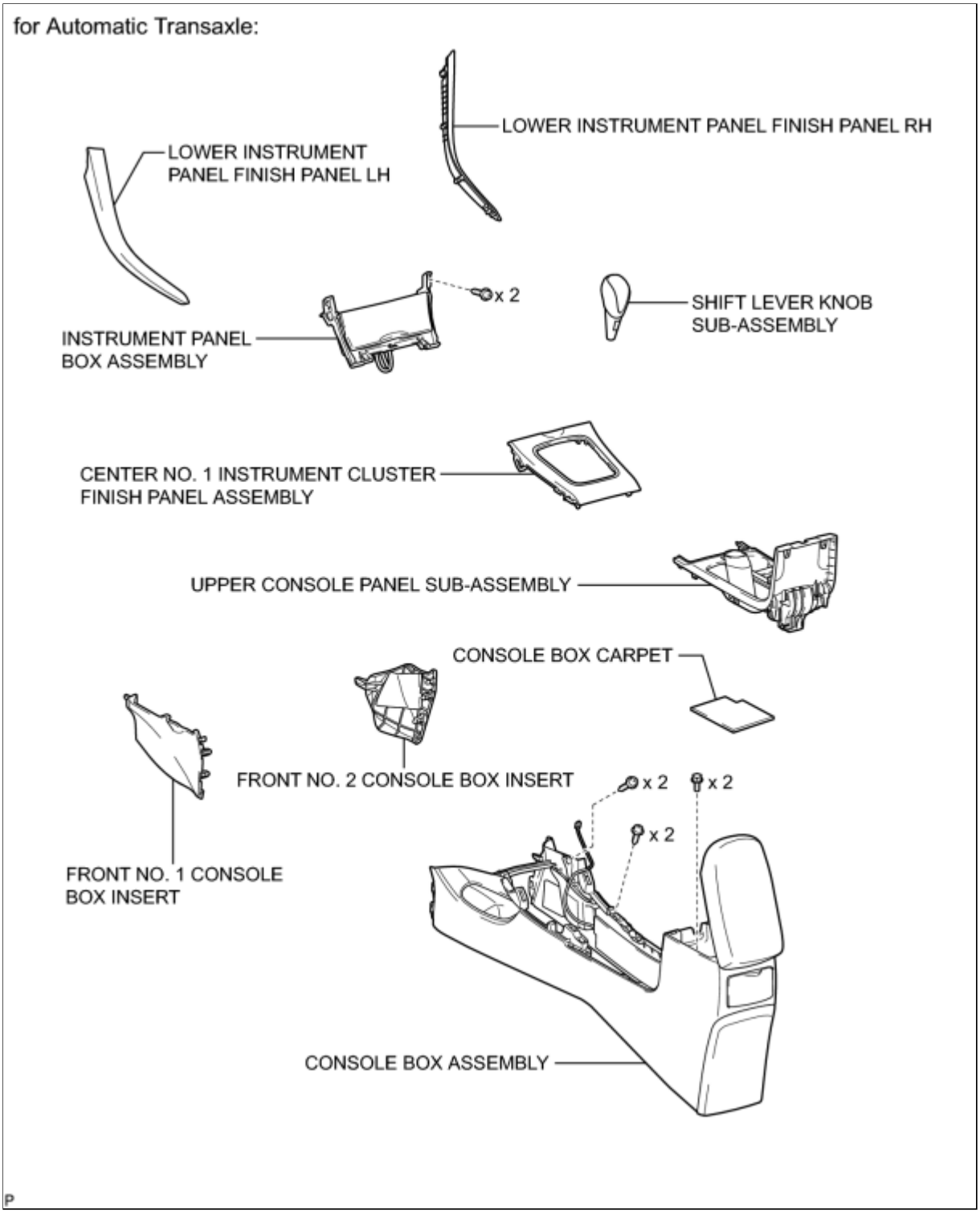

ILLUSTRATION

for Manual Transaxle:

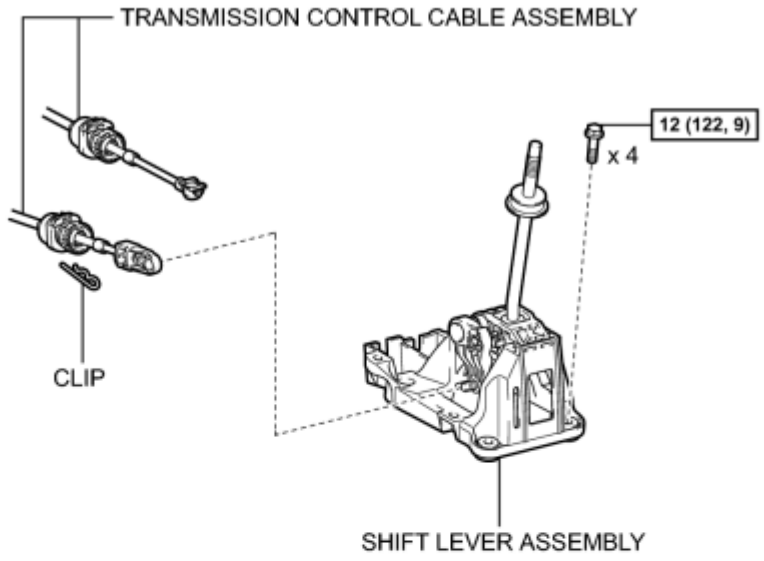

for Automatic Transaxle:

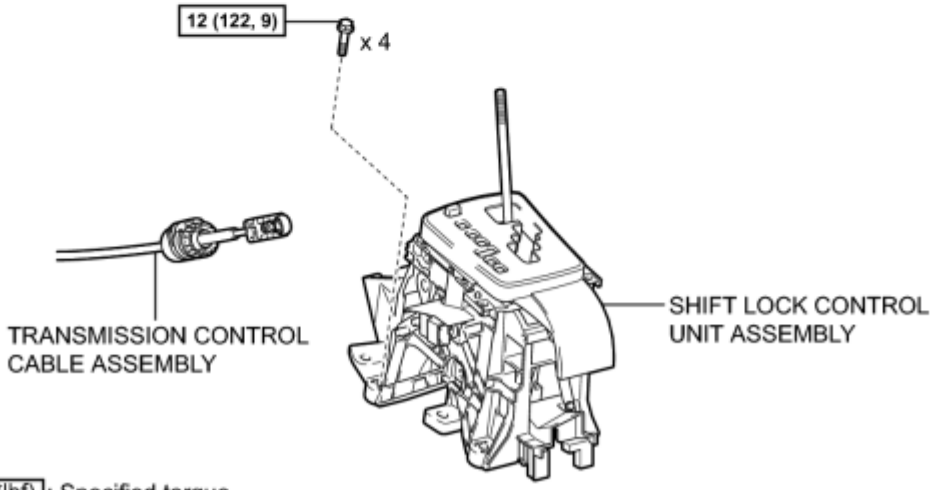

N*m (kgf*cm, ft.*lbf) : Specified torque

P

ILLUSTRATION

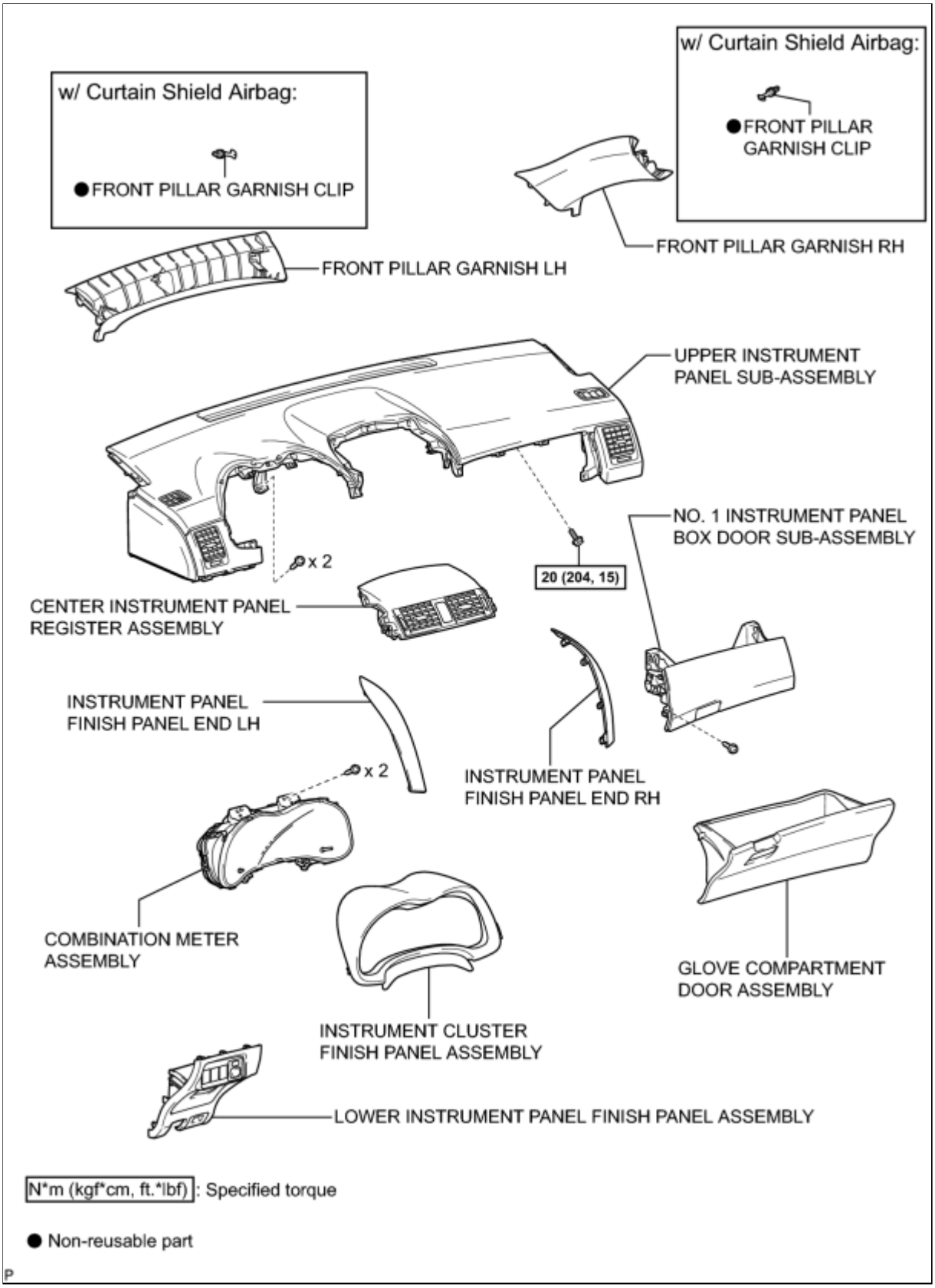

ILLUSTRATION

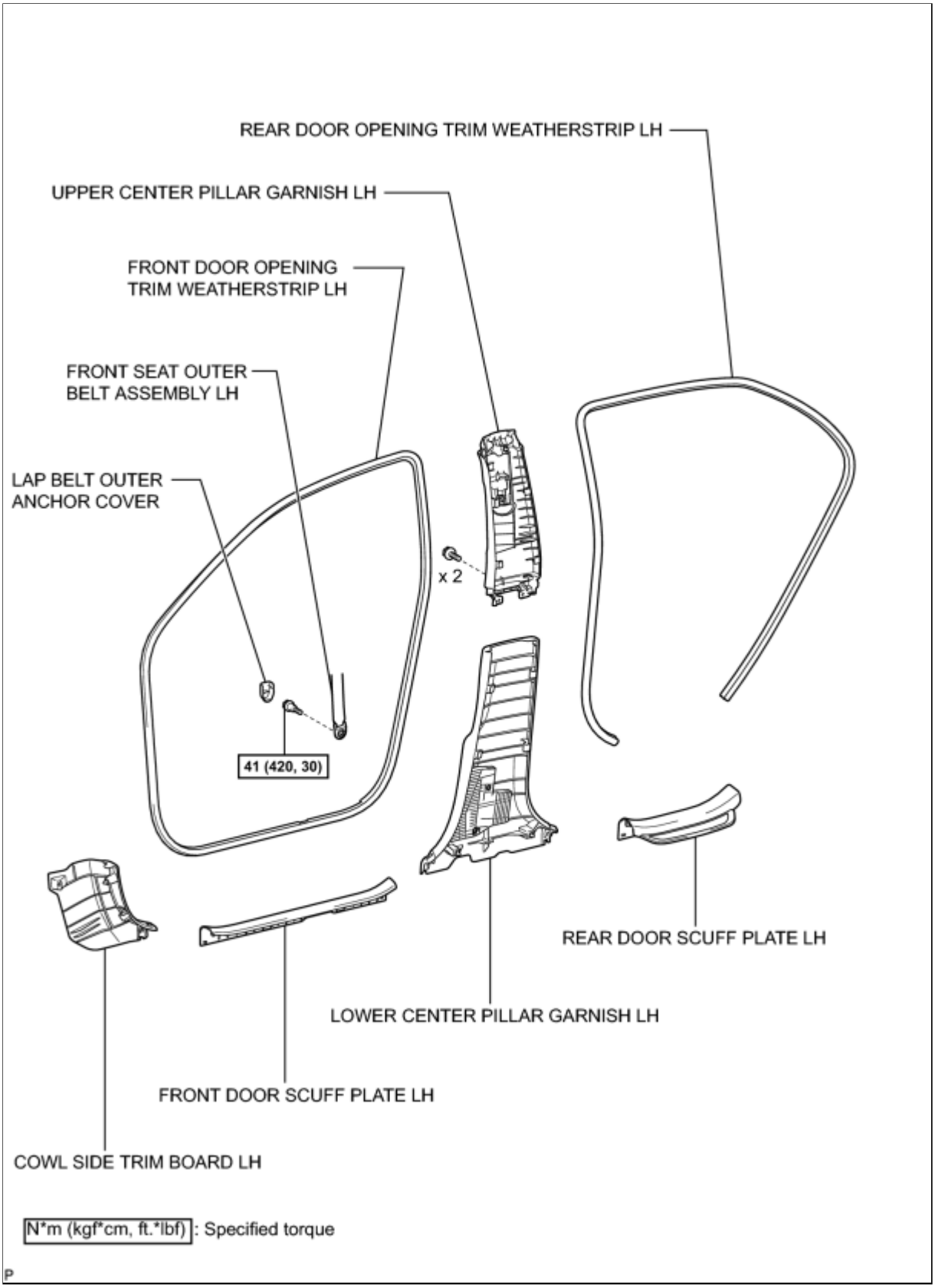

ILLUSTRATION

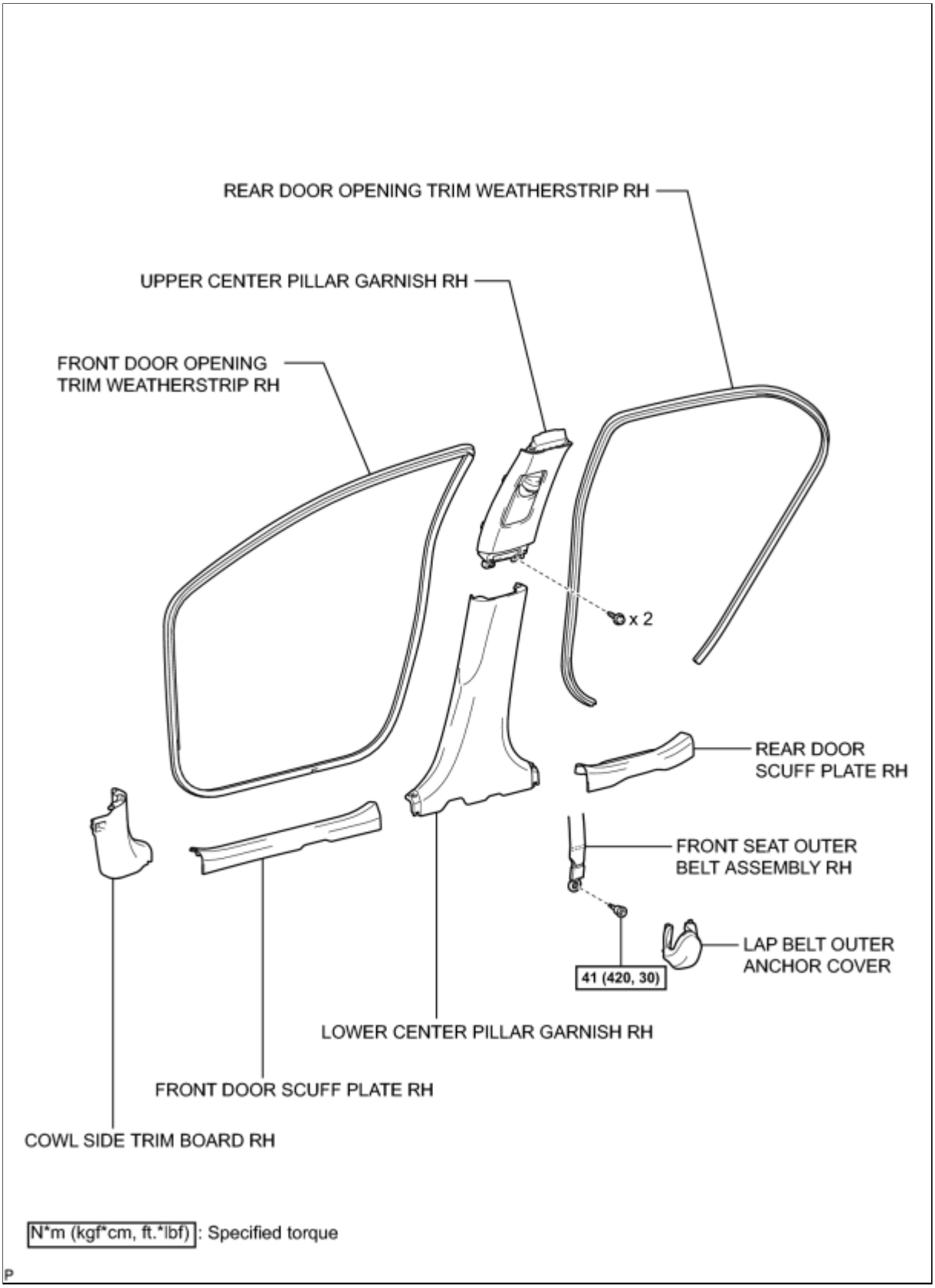

ILLUSTRATION

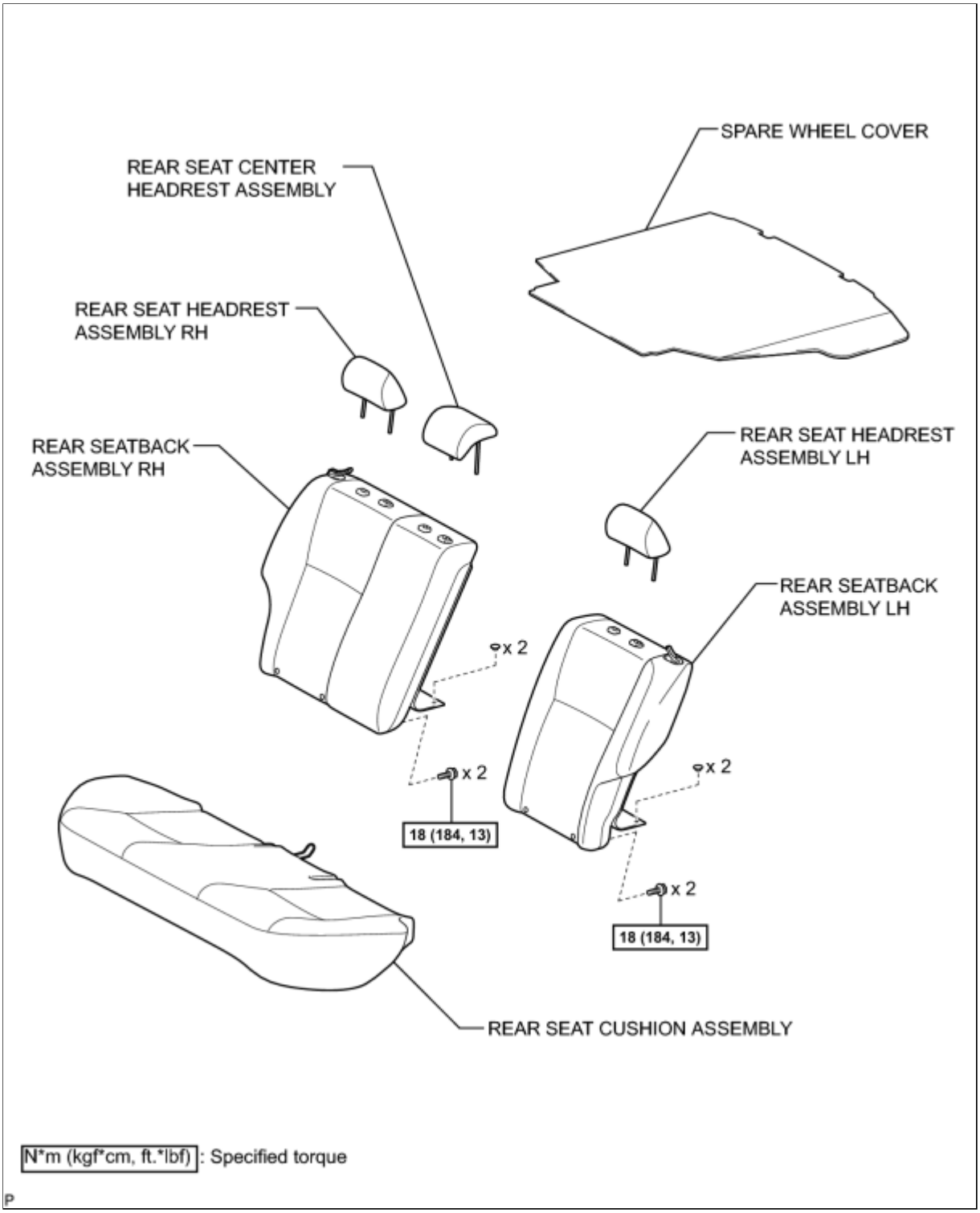

ILLUSTRATION

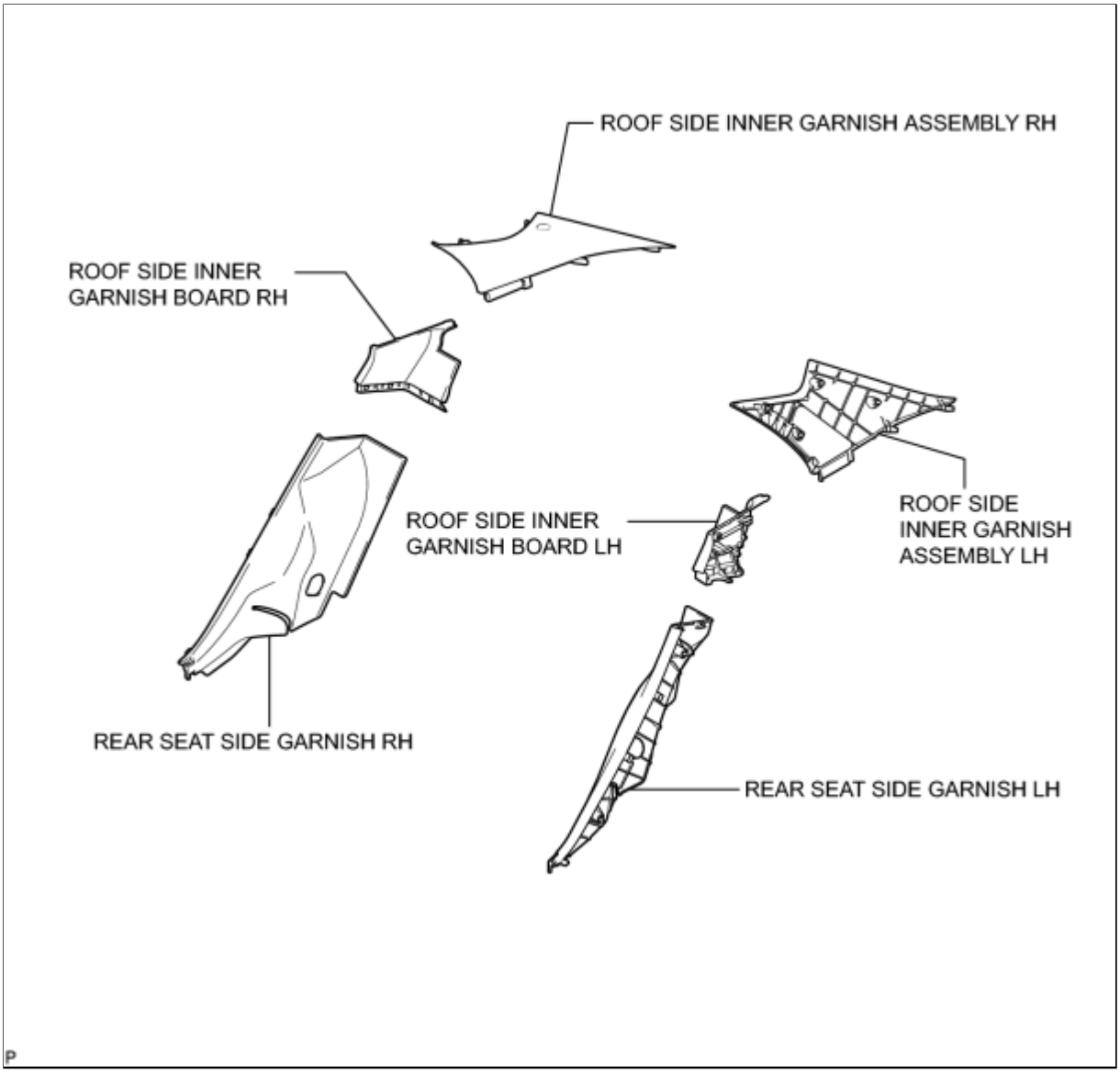

ILLUSTRATION

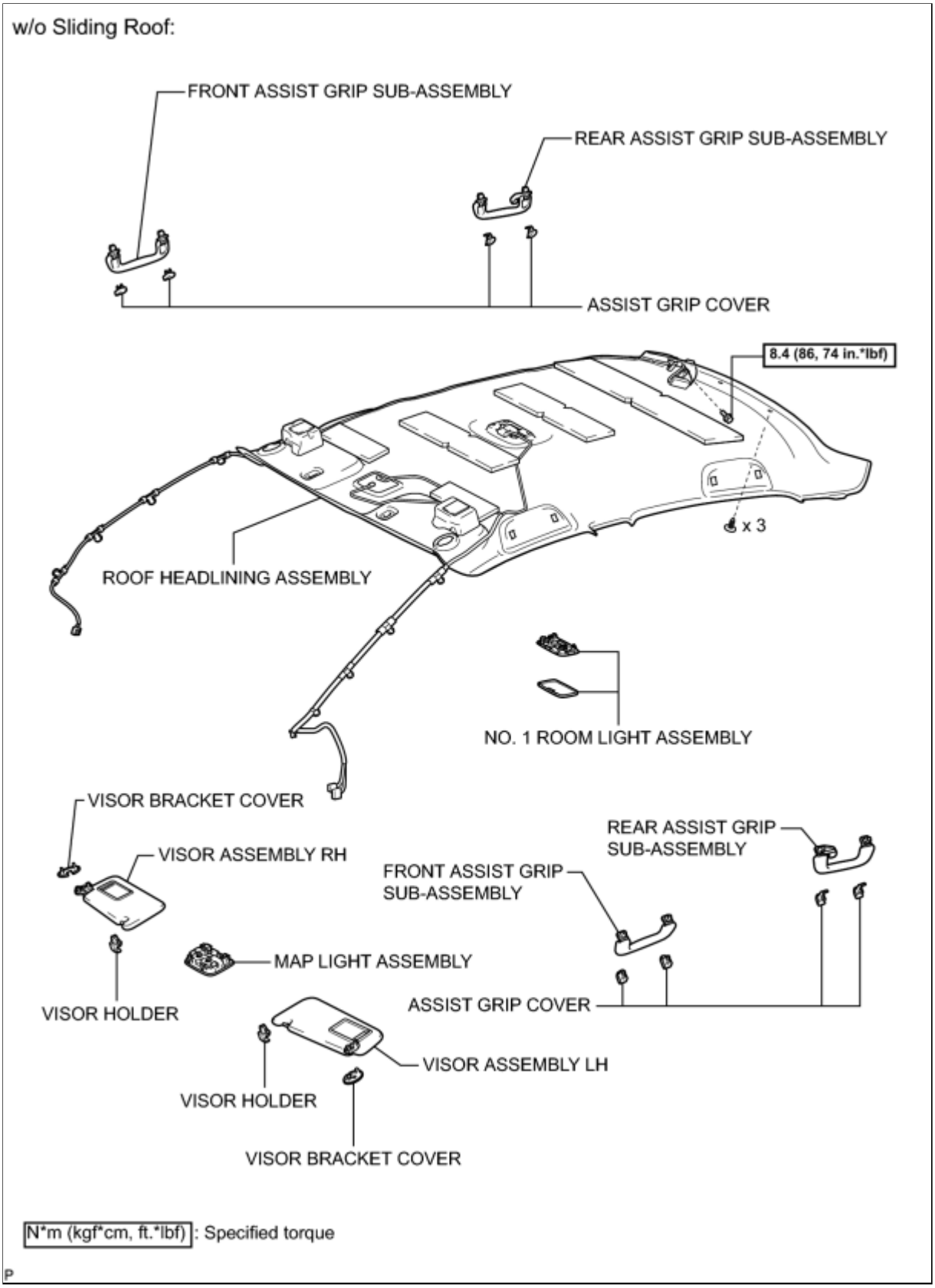

ILLUSTRATION

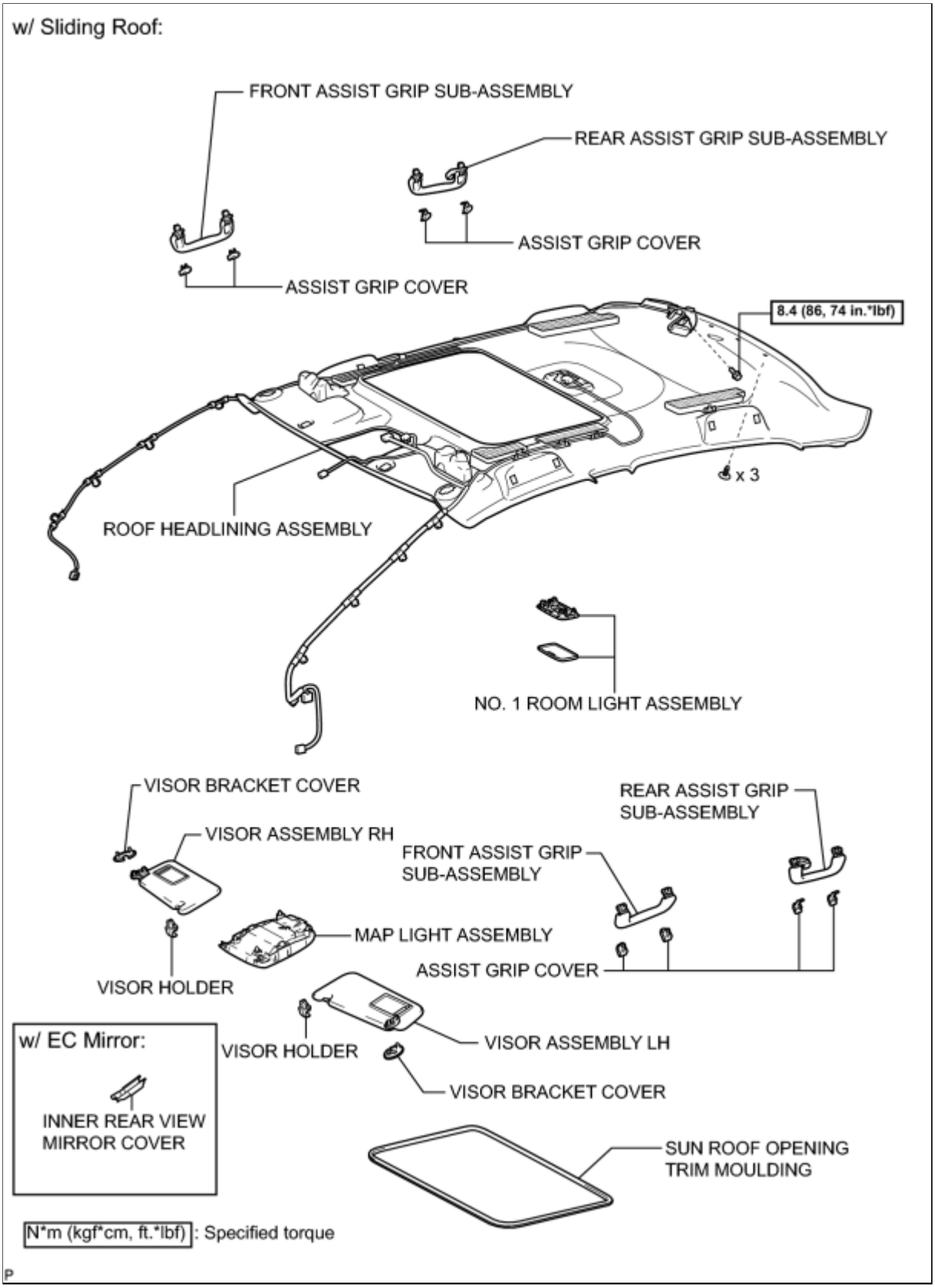

ILLUSTRATION

w/o Satellite Radio:

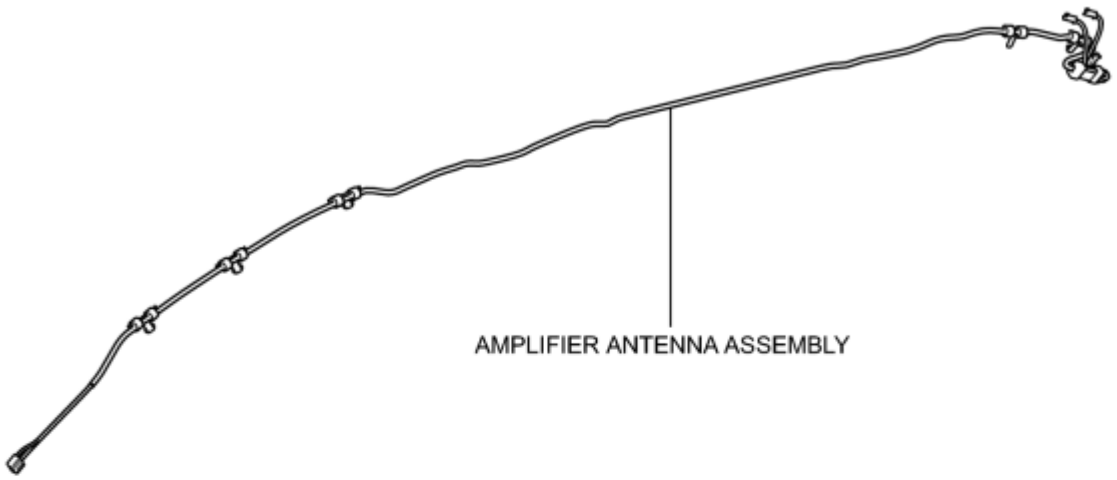

w/ Satellite Radio:

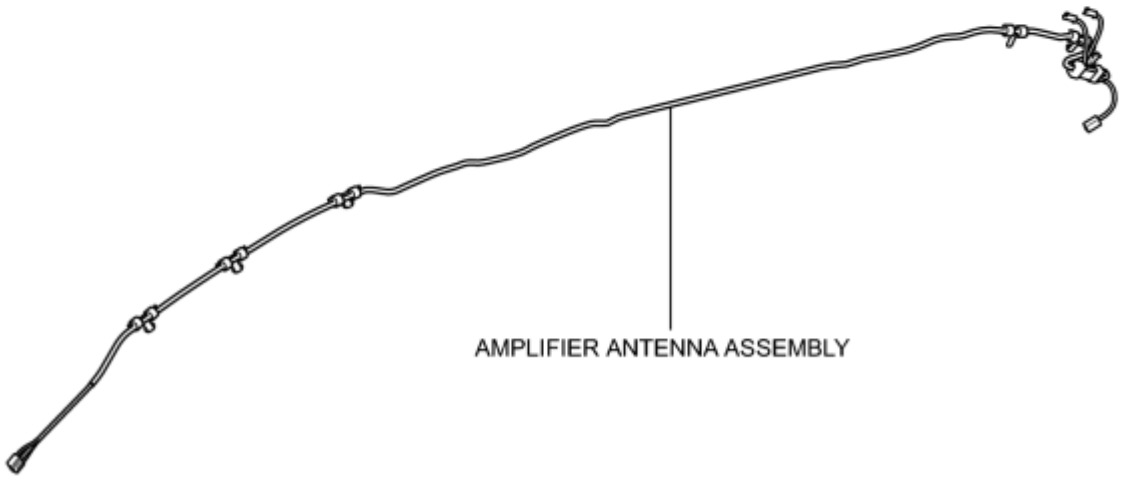

P

Last Modified: 3-10-2010	6.4 A	**From:** 200901
Model Year: 2010	**Model:** Corolla	**Doc ID:** RM000002XB100JX
Title: AUDIO / VIDEO: AMPLIFIER ANTENNA: REMOVAL (2010 Corolla)		

REMOVAL

1. DISCONNECT CABLE FROM NEGATIVE BATTERY TERMINAL (for Manual Seat)

CAUTION:

Wait at least 90 seconds after disconnecting the cable from the negative (-) battery terminal to disable the SRS system.

2. REMOVE FRONT SEAT HEADREST ASSEMBLY (for Manual Seat)

3. REMOVE OUTER SEAT TRACK COVER LH (for Manual Seat) INFO

4. REMOVE INNER SEAT TRACK COVER LH (for Manual Seat) INFO

5. REMOVE FRONT SEAT ASSEMBLY LH (for Manual Seat) INFO

6. REMOVE FRONT SEAT HEADREST ASSEMBLY (for Power Seat)

7. REMOVE OUTER SEAT TRACK COVER LH (for Power Seat) INFO

8. REMOVE INNER SEAT TRACK COVER LH (for Power Seat) INFO

9. REMOVE FRONT SEAT ASSEMBLY LH (for Power Seat) INFO

10. REMOVE FRONT SEAT HEADREST ASSEMBLY (for Manual Seat)

11. REMOVE OUTER SEAT TRACK COVER RH (for Manual Seat) INFO

12. REMOVE INNER SEAT TRACK COVER RH (for Manual Seat) INFO

13. REMOVE FRONT SEAT ASSEMBLY RH (for Manual Seat) INFO

14. REMOVE LOWER INSTRUMENT PANEL FINISH PANEL LH INFO

15. REMOVE LOWER INSTRUMENT PANEL FINISH PANEL RH INFO

16. REMOVE SHIFT LEVER KNOB SUB-ASSEMBLY (for Manual Transaxle) INFO

17. REMOVE SHIFT LEVER KNOB SUB-ASSEMBLY (for Automatic Transaxle) INFO

18. REMOVE CENTER NO. 1 INSTRUMENT CLUSTER FINISH PANEL ASSEMBLY (for Manual Transaxle) INFO

19. REMOVE CENTER NO. 1 INSTRUMENT CLUSTER FINISH PANEL ASSEMBLY (for Automatic Transaxle) INFO

20. REMOVE INSTRUMENT PANEL BOX ASSEMBLY INFO

21. REMOVE FRONT NO. 1 CONSOLE BOX INSERT INFO

22. REMOVE FRONT NO. 2 CONSOLE BOX INSERT INFO

23. REMOVE UPPER CONSOLE PANEL SUB-ASSEMBLY INFO

24. REMOVE CONSOLE BOX CARPET INFO

25. REMOVE CONSOLE BOX ASSEMBLY (for Manual Transaxle) INFO

26. REMOVE CONSOLE BOX ASSEMBLY (for Automatic Transaxle) INFO

27. DISCONNECT TRANSMISSION CONTROL CABLE ASSEMBLY (for Manual Transaxle)

for C59: INFO

for E351: INFO

28. DISCONNECT TRANSMISSION CONTROL CABLE ASSEMBLY (for Automatic Transaxle)

for U250E: INFO

for U341E: INFO

29. REMOVE SHIFT LEVER ASSEMBLY (for Manual Transaxle)

for C59: INFO

for E351: INFO

30. REMOVE SHIFT LOCK CONTROL UNIT ASSEMBLY (for Automatic Transaxle)

for U250E: INFO

for U341E: INFO

31. REMOVE INSTRUMENT PANEL FINISH PANEL END LH INFO

32. REMOVE INSTRUMENT PANEL FINISH PANEL END RH INFO

33. REMOVE CENTER INSTRUMENT PANEL REGISTER ASSEMBLY INFO

34. REMOVE INSTRUMENT CLUSTER FINISH PANEL ASSEMBLY INFO

35. REMOVE COMBINATION METER ASSEMBLY INFO

36. REMOVE FRONT PILLAR GARNISH LH (w/o Curtain Shield Airbag) INFO

37. REMOVE FRONT PILLAR GARNISH LH (w/ Curtain Shield Airbag) INFO

38. REMOVE FRONT PILLAR GARNISH RH (w/o Curtain Shield Airbag) INFO

39. REMOVE FRONT PILLAR GARNISH RH (w/ Curtain Shield Airbag) INFO

40. REMOVE LOWER INSTRUMENT PANEL FINISH PANEL ASSEMBLY INFO

41. REMOVE FRONT DOOR SCUFF PLATE LH INFO

42. REMOVE COWL SIDE TRIM BOARD LH INFO

43. REMOVE FRONT DOOR OPENING TRIM WEATHERSTRIP LH INFO

44. REMOVE GLOVE COMPARTMENT DOOR ASSEMBLY INFO

45. REMOVE NO. 1 INSTRUMENT PANEL BOX DOOR SUB-ASSEMBLY INFO

46. REMOVE FRONT DOOR SCUFF PLATE RH INFO

47. REMOVE COWL SIDE TRIM BOARD RH INFO

48. REMOVE FRONT DOOR OPENING TRIM WEATHERSTRIP RH INFO

49. DISCONNECT INSTRUMENT PANEL WIRE ASSEMBLY INFO

50. REMOVE UPPER INSTRUMENT PANEL SUB-ASSEMBLY INFO

51. REMOVE REAR DOOR SCUFF PLATE LH INFO

52. REMOVE REAR DOOR OPENING TRIM WEATHERSTRIP LH INFO

53. REMOVE LAP BELT OUTER ANCHOR COVER (for LH Side) INFO

54. DISCONNECT FRONT SEAT OUTER BELT ASSEMBLY LH INFO

55. REMOVE LOWER CENTER PILLAR GARNISH LH INFO

56. REMOVE UPPER CENTER PILLAR GARNISH LH INFO

57. REMOVE REAR DOOR SCUFF PLATE RH INFO

58. REMOVE REAR DOOR OPENING TRIM WEATHERSTRIP RH INFO

59. REMOVE LAP BELT OUTER ANCHOR COVER (for RH Side) INFO

60. REMOVE LOWER CENTER PILLAR GARNISH RH INFO

61. DISCONNECT FRONT SEAT OUTER BELT ASSEMBLY RH INFO

62. REMOVE UPPER CENTER PILLAR GARNISH RH INFO

63. REMOVE SPARE WHEEL COVER INFO

64. REMOVE REAR SEAT HEADREST ASSEMBLY LH

65. REMOVE REAR SEAT HEADREST ASSEMBLY RH

66. REMOVE REAR SEAT CENTER HEADREST ASSEMBLY

67. REMOVE REAR SEAT CUSHION ASSEMBLY INFO

68. REMOVE REAR SEATBACK ASSEMBLY LH INFO

69. REMOVE REAR SEATBACK ASSEMBLY RH INFO

70. REMOVE REAR SEAT SIDE GARNISH LH INFO

71. REMOVE ROOF SIDE INNER GARNISH BOARD LH INFO

72. REMOVE ROOF SIDE INNER GARNISH ASSEMBLY LH INFO

73. REMOVE REAR SEAT SIDE GARNISH RH INFO

74. REMOVE ROOF SIDE INNER GARNISH BOARD RH INFO

75. REMOVE ROOF SIDE INNER GARNISH ASSEMBLY RH INFO

76. REMOVE MAP LIGHT ASSEMBLY (w/o Sliding Roof) INFO

77. REMOVE MAP LIGHT ASSEMBLY (w/ Sliding Roof) INFO

78. REMOVE VISOR ASSEMBLY LH INFO

79. REMOVE VISOR ASSEMBLY RH INFO

80. REMOVE FRONT ASSIST GRIP SUB-ASSEMBLY INFO

81. REMOVE REAR ASSIST GRIP SUB-ASSEMBLY INFO

82. REMOVE NO. 1 ROOM LIGHT ASSEMBLY INFO

83. REMOVE INNER REAR VIEW MIRROR COVER (w/ EC Mirror) INFO

84. REMOVE VISOR HOLDER INFO

85. REMOVE SUN ROOF OPENING TRIM MOULDING (w/ Sliding Roof) INFO

86. REMOVE ROOF HEADLINING ASSEMBLY (w/o Sliding Roof) INFO

87. REMOVE ROOF HEADLINING ASSEMBLY (w/ Sliding Roof) INFO

88. REMOVE AMPLIFIER ANTENNA ASSEMBLY (w/o Sliding Roof)

(a) Remove the adhesive tape to the extent that the amplifier antenna assembly can be removed.

(b) Disconnect the amplifier antenna assembly from the slit on the roof headlining assembly and remove the amplifier antenna assembly from the roof headlining assembly.

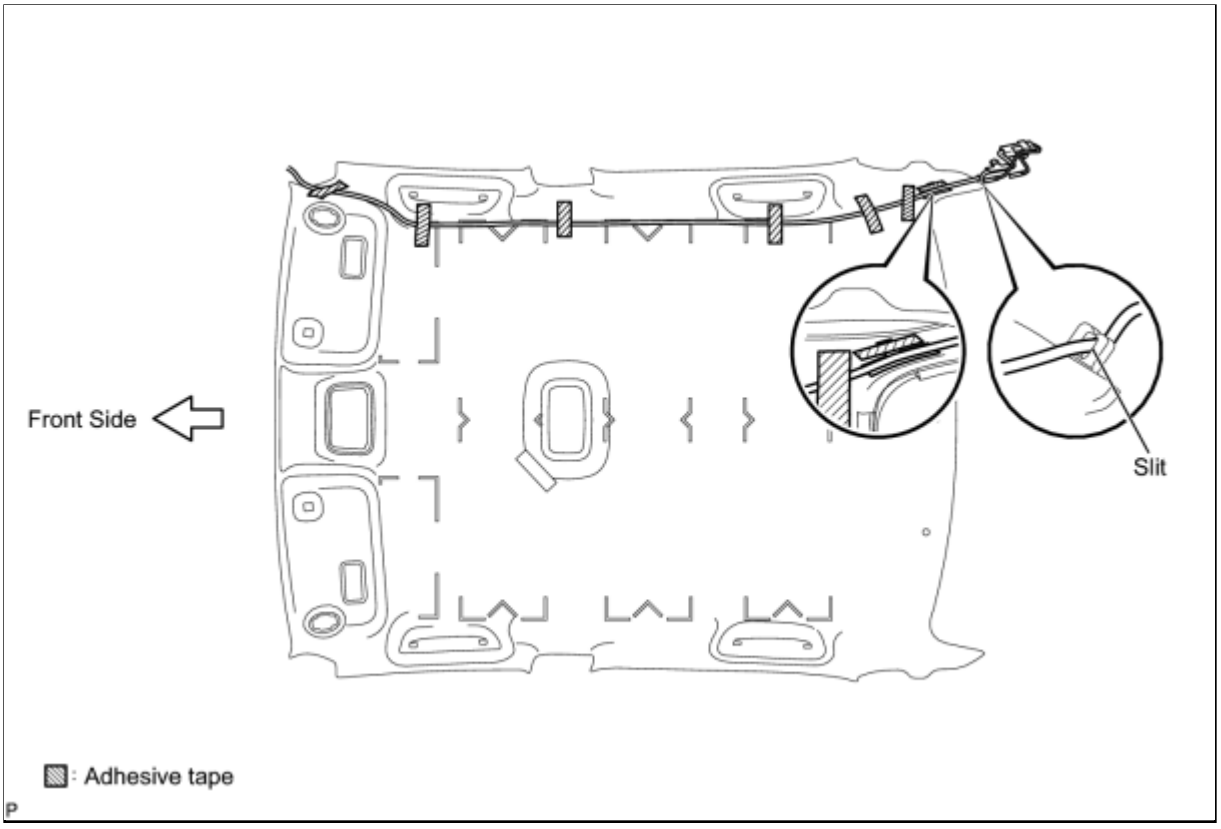

89. REMOVE AMPLIFIER ANTENNA ASSEMBLY (w/ Sliding Roof)

(a) Remove the adhesive tape to the extent that the amplifier antenna assembly can be removed.

(b) Disengage the 4 clamps.

(c) Disconnect the amplifier antenna assembly from the slit on the roof headlining assembly and remove the amplifier antenna assembly from the roof headlining assembly.

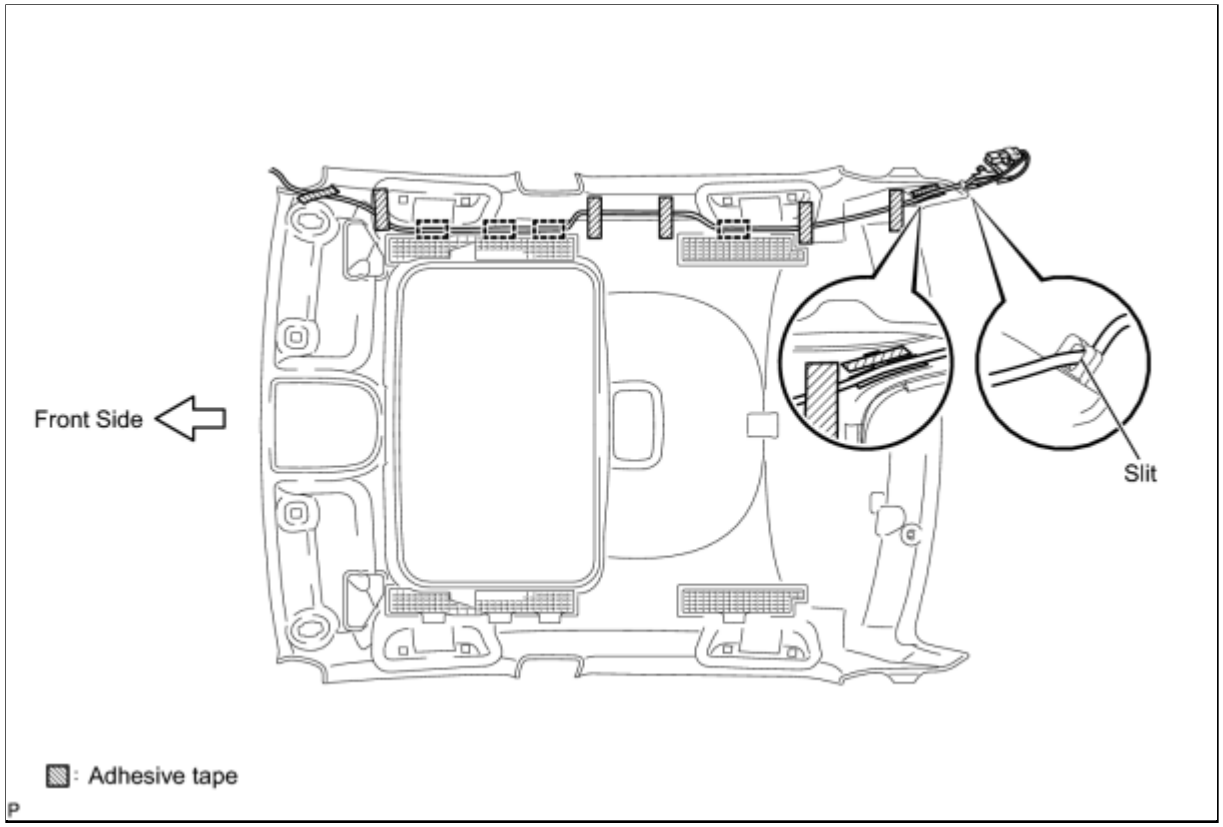

P

Last Modified: 3-10-2010	6.4 A	**From:** 200901
Model Year: 2010	**Model:** Corolla	**Doc ID:** RM000002XAZ00JX
Title: AUDIO / VIDEO: AMPLIFIER ANTENNA: INSTALLATION (2010 Corolla)		

INSTALLATION

1. INSTALL AMPLIFIER ANTENNA ASSEMBLY (w/o Sliding Roof)

(a) Temporarily install the amplifier antenna assembly, aligning it with the marking on the roof headlining assembly.

(b) Attach pieces of adhesive tape in the sequence shown in the illustration, aligning them with the markings on the roof headlining assembly.

NOTICE:

To prevent noise, be sure to attach adhesive tape securely.

HINT:

Adjust the length of the amplifier antenna assembly at point A shown in the illustration.

(c) Insert the amplifier antenna assembly into the slit on the roof headlining assembly to install the amplifier antenna assembly to the roof headlining assembly.

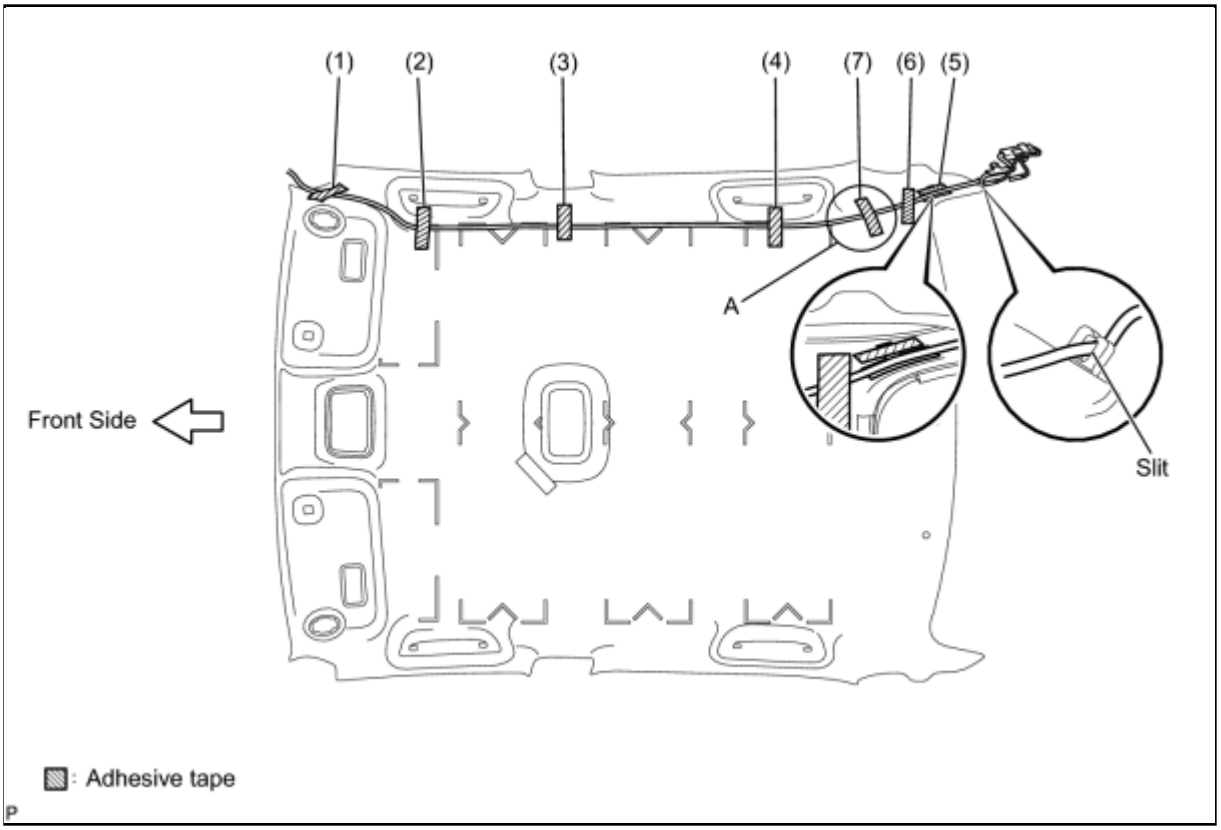

2. INSTALL AMPLIFIER ANTENNA ASSEMBLY (w/ Sliding Roof)

(a) Temporarily install the amplifier antenna assembly, aligning it with the marking on the roof headlining assembly.

(b) Attach pieces of adhesive tape and clamp in the sequence shown in the illustration, aligning them with the markings on the roof headlining assembly.

NOTICE:

To prevent noise, be sure to attach adhesive tape securely.

HINT:

Adjust the length of the amplifier antenna assembly at point A shown in the illustration.

(c) Insert the amplifier antenna assembly into the slit on the roof headlining assembly to install the amplifier antenna assembly to the roof headlining assembly.

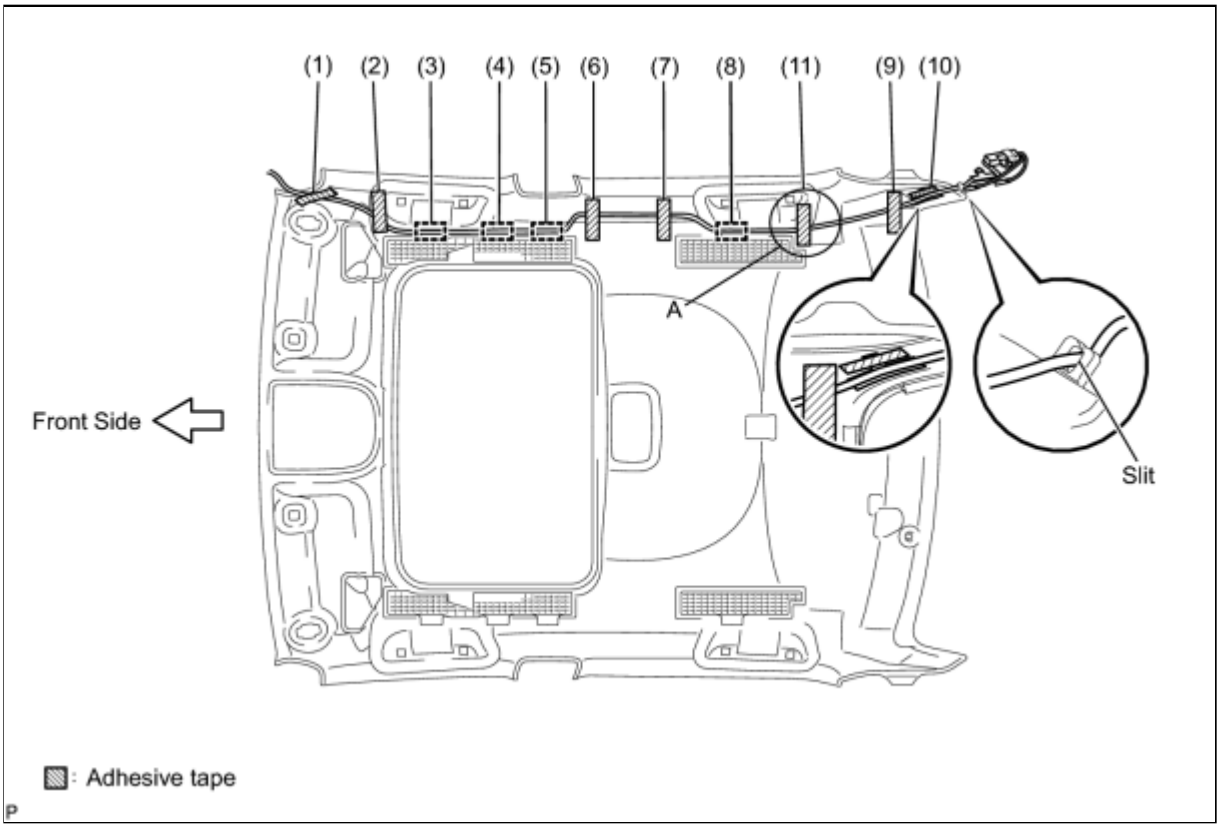

3. INSTALL ROOF HEADLINING ASSEMBLY (w/ Sliding Roof) INFO

4. INSTALL ROOF HEADLINING ASSEMBLY (w/o Sliding Roof) INFO

5. INSTALL SUN ROOF OPENING TRIM MOULDING (w/ Sliding Roof) INFO

6. INSTALL VISOR HOLDER INFO

7. INSTALL INNER REAR VIEW MIRROR COVER (w/ EC Mirror) INFO

8. INSTALL NO. 1 ROOM LIGHT ASSEMBLY INFO

9. INSTALL REAR ASSIST GRIP SUB-ASSEMBLY INFO

10. INSTALL FRONT ASSIST GRIP SUB-ASSEMBLY INFO

11. INSTALL VISOR ASSEMBLY LH INFO

12. INSTALL VISOR ASSEMBLY RH INFO

13. INSTALL MAP LIGHT ASSEMBLY (w/ Sliding Roof) INFO

14. INSTALL MAP LIGHT ASSEMBLY (w/o Sliding Roof) INFO

15. INSTALL ROOF SIDE INNER GARNISH ASSEMBLY LH INFO

16. INSTALL ROOF SIDE INNER GARNISH BOARD LH INFO

17. INSTALL REAR SEAT SIDE GARNISH LH INFO

18. INSTALL ROOF SIDE INNER GARNISH ASSEMBLY RH INFO

19. INSTALL ROOF SIDE INNER GARNISH BOARD RH INFO

20. INSTALL REAR SEAT SIDE GARNISH RH INFO

21. INSTALL REAR SEATBACK ASSEMBLY LH INFO

22. INSTALL REAR SEATBACK ASSEMBLY RH INFO

23. INSTALL REAR SEAT CUSHION ASSEMBLY INFO

24. INSTALL REAR SEAT CENTER HEADREST ASSEMBLY

25. INSTALL REAR SEAT HEADREST ASSEMBLY LH

26. INSTALL REAR SEAT HEADREST ASSEMBLY RH

27. INSTALL SPARE WHEEL COVER INFO

28. INSTALL UPPER CENTER PILLAR GARNISH LH INFO

29. INSTALL LOWER CENTER PILLAR GARNISH LH INFO

30. CONNECT FRONT SEAT OUTER BELT ASSEMBLY LH INFO

31. INSTALL LAP BELT OUTER ANCHOR COVER (for LH Side) INFO

32. INSTALL REAR DOOR OPENING TRIM WEATHERSTRIP LH INFO

33. INSTALL REAR DOOR SCUFF PLATE LH INFO

34. INSTALL UPPER CENTER PILLAR GARNISH RH INFO

35. CONNECT FRONT SEAT OUTER BELT ASSEMBLY RH INFO

36. INSTALL LOWER CENTER PILLAR GARNISH RH INFO

37. INSTALL LAP BELT OUTER ANCHOR COVER (for RH Side) INFO

38. INSTALL REAR DOOR OPENING TRIM WEATHERSTRIP RH INFO

39. INSTALL REAR DOOR SCUFF PLATE RH INFO

40. INSTALL UPPER INSTRUMENT PANEL SUB-ASSEMBLY INFO

41. CONNECT INSTRUMENT PANEL WIRE ASSEMBLY INFO

42. INSTALL FRONT DOOR OPENING TRIM WEATHERSTRIP LH INFO

43. INSTALL COWL SIDE TRIM BOARD LH INFO

44. INSTALL FRONT DOOR SCUFF PLATE LH INFO

45. INSTALL LOWER INSTRUMENT PANEL FINISH PANEL ASSEMBLY INFO

46. INSTALL FRONT DOOR OPENING TRIM WEATHERSTRIP RH INFO

47. INSTALL COWL SIDE TRIM BOARD RH INFO

48. INSTALL FRONT DOOR SCUFF PLATE RH INFO

49. INSTALL NO. 1 INSTRUMENT PANEL BOX DOOR SUB-ASSEMBLY INFO

50. INSTALL GLOVE COMPARTMENT DOOR ASSEMBLY INFO

51. INSTALL FRONT PILLAR GARNISH LH (w/ Curtain Shield Airbag) INFO

52. INSTALL FRONT PILLAR GARNISH LH (w/o Curtain Shield Airbag) INFO

53. INSTALL FRONT PILLAR GARNISH RH (w/ Curtain Shield Airbag) INFO

54. INSTALL FRONT PILLAR GARNISH RH (w/o Curtain Shield Airbag) INFO

55. INSTALL COMBINATION METER ASSEMBLY INFO

56. INSTALL INSTRUMENT CLUSTER FINISH PANEL ASSEMBLY INFO

57. INSTALL CENTER INSTRUMENT PANEL REGISTER ASSEMBLY INFO

58. INSTALL INSTRUMENT PANEL FINISH PANEL END LH INFO

59. INSTALL INSTRUMENT PANEL FINISH PANEL END RH INFO

60. INSTALL SHIFT LOCK CONTROL UNIT ASSEMBLY (for Automatic Transaxle)

for U250E: INFO

for U341E: INFO

61. INSTALL SHIFT LEVER ASSEMBLY (for Manual Transaxle)

for C59: INFO

for E351: INFO

62. CONNECT TRANSMISSION CONTROL CABLE ASSEMBLY (for Automatic Transaxle)

for U250E: INFO

for U341E: INFO

63. CONNECT TRANSMISSION CONTROL CABLE ASSEMBLY (for Manual Transaxle)

for C59: INFO

for E351: INFO

64. ADJUST TRANSMISSION CONTROL SELECT CABLE (for Manual Transaxle)

for C59: INFO

for E351: INFO

65. INSTALL CONSOLE BOX ASSEMBLY (for Automatic Transaxle) INFO

66. INSTALL CONSOLE BOX ASSEMBLY (for Manual Transaxle) INFO

67. INSTALL CONSOLE BOX CARPET INFO

68. INSTALL UPPER CONSOLE PANEL SUB-ASSEMBLY INFO

69. INSTALL FRONT NO. 1 CONSOLE BOX INSERT INFO

70. INSTALL FRONT NO. 2 CONSOLE BOX INSERT INFO

71. INSTALL INSTRUMENT PANEL BOX ASSEMBLY INFO

72. INSTALL CENTER NO. 1 INSTRUMENT CLUSTER FINISH PANEL ASSEMBLY (for Automatic Transaxle) INFO

73. INSTALL CENTER NO. 1 INSTRUMENT CLUSTER FINISH PANEL ASSEMBLY (for Manual Transaxle) INFO

74. INSTALL SHIFT LEVER KNOB SUB-ASSEMBLY (for Automatic Transaxle) INFO

75. INSTALL SHIFT LEVER KNOB SUB-ASSEMBLY (for Manual Transaxle) INFO

76. INSTALL LOWER INSTRUMENT PANEL FINISH PANEL LH INFO

77. INSTALL LOWER INSTRUMENT PANEL FINISH PANEL RH INFO

78. INSTALL FRONT SEAT ASSEMBLY LH (for Manual Seat) INFO

79. INSPECT FRONT SEAT SLIDE ADJUSTER LOCK (for Manual Seat) INFO

80. INSTALL INNER SEAT TRACK COVER LH (for Manual Seat) INFO

81. INSTALL OUTER SEAT TRACK COVER LH (for Manual Seat) INFO

82. INSTALL FRONT SEAT HEADREST ASSEMBLY (for Manual Seat)

83. INSTALL FRONT SEAT ASSEMBLY LH (for Power Seat) INFO

84. INSTALL INNER SEAT TRACK COVER LH (for Power Seat) INFO

85. INSTALL OUTER SEAT TRACK COVER LH (for Power Seat) INFO

86. INSTALL FRONT SEAT HEADREST ASSEMBLY (for Power Seat)

87. INSTALL FRONT SEAT ASSEMBLY RH (for Manual Seat) INFO

88. INSPECT FRONT SEAT SLIDE ADJUSTER LOCK (for Manual Seat) INFO

89. INSTALL INNER SEAT TRACK COVER RH (for Power Seat) INFO

90. INSTALL OUTER SEAT TRACK COVER RH (for Manual Seat) INFO

91. INSTALL FRONT SEAT HEADREST ASSEMBLY (for Manual Seat)

92. CONNECT CABLE TO NEGATIVE BATTERY TERMINAL (for Manual Seat)

93. INSPECT SHIFT LEVER POSITION (for Automatic Transaxle)

for U250E: INFO

for U341E: INFO

94. ADJUST SHIFT LEVER POSITION (for Automatic Transaxle)

for U250E: INFO

for U341E: INFO

95. INSPECT SRS WARNING LIGHT

INFO

96. INSPECT FRONT SEAT ASSEMBLY (for Power Seat) INFO

Last Modified: 3-10-2010	6.4 L	**From:** 200901
Model Year: 2010	**Model:** Corolla	**Doc ID:** RM000002YLQ00RX
Title: AUDIO / VIDEO: AUDIO AND VISUAL SYSTEM: PRECAUTION (2010 Corolla)		

PRECAUTION

1. EXPRESSIONS OF IGNITION SWITCH

(a) The type of ignition switch used on this model differs according to the specifications of the vehicle. The expressions listed in the table below are used in this section.

SWITCH TYPE		IGNITION SWITCH (POSITION)	ENGINE SWITCH (CONDITION)
Expression	Ignition switch off	LOCK	Off
	Ignition switch ON	ON	On (IG)
	Ignition switch ACC	ACC	On (ACC)
	Engine start	START	Start

Last Modified: 3-10-2010	6.4 R	**From:** 200901
Model Year: 2010	**Model:** Corolla	**Doc ID:** RM0000012A6026X
Title: AUDIO / VIDEO: AUDIO AND VISUAL SYSTEM: PARTS LOCATION (2010 Corolla)		

PARTS LOCATION

ILLUSTRATION

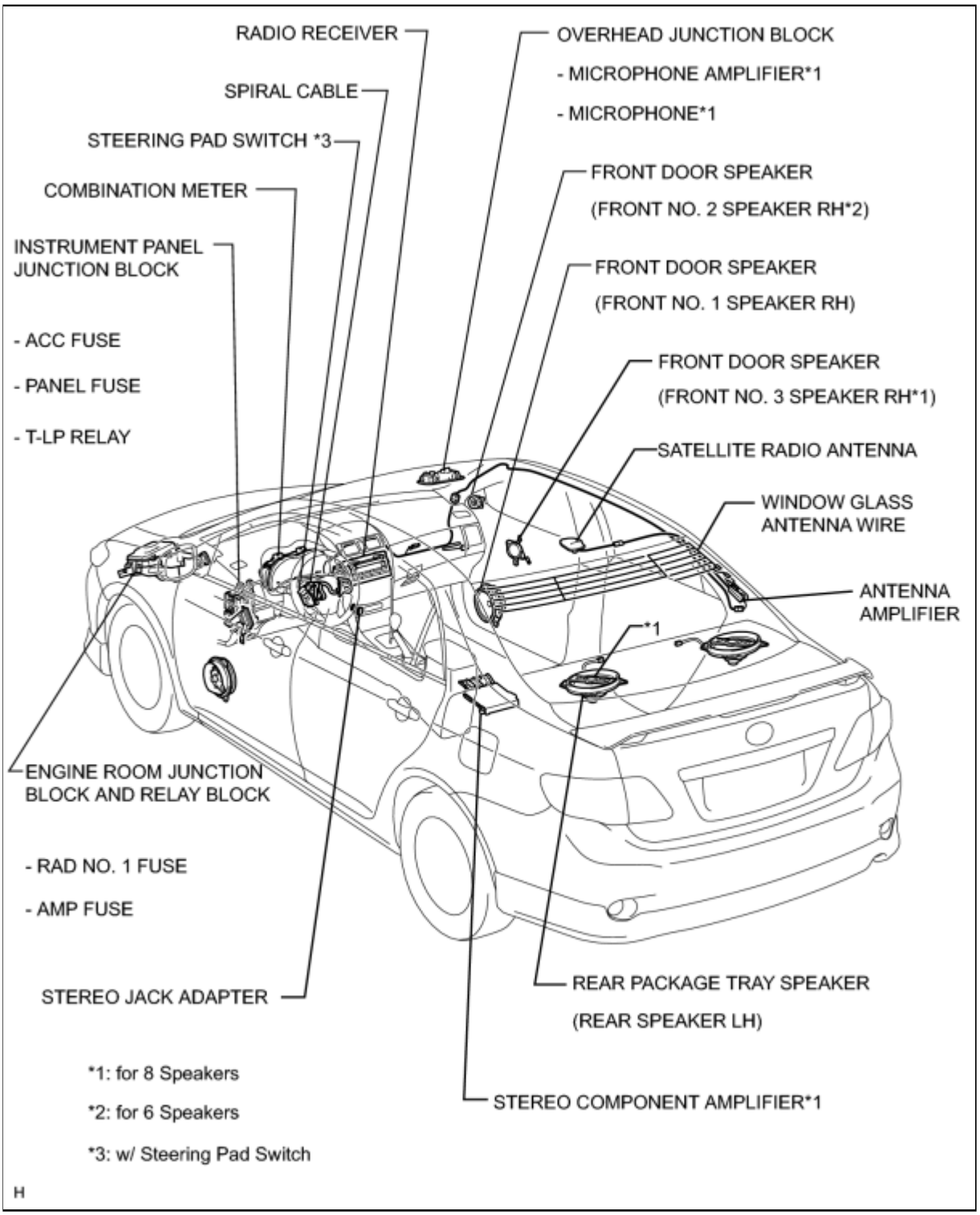

Last Modified: 3-10-2010	6.4 D	**From:** 200901
Model Year: 2010	**Model:** Corolla	**Doc ID:** RM000000NKZ04QX
Title: AUDIO / VIDEO: AUDIO AND VISUAL SYSTEM: SYSTEM DESCRIPTION (2010 Corolla)		

SYSTEM DESCRIPTION

1. DISC PLAYER OUTLINE

(a) A CD player uses a laser pickup to read digital signals recorded on CDs. By converting the digital signals to analog, music and other content can be played.

CAUTION:

Do not look directly at the laser pickup because the CD player uses an invisible laser beam. Be sure to operate the player only as instructed.

NOTICE:

- Do not disassemble any part of the CD player.
- Do not apply oil to the CD player.
- Do not insert anything but a CD into the CD player.

(b) Usable discs

(1) The CD player can only play audio CDs, CD-Rs (CD-Recordable), and CD-RWs (CD-ReWritable) that have any of the following marks:

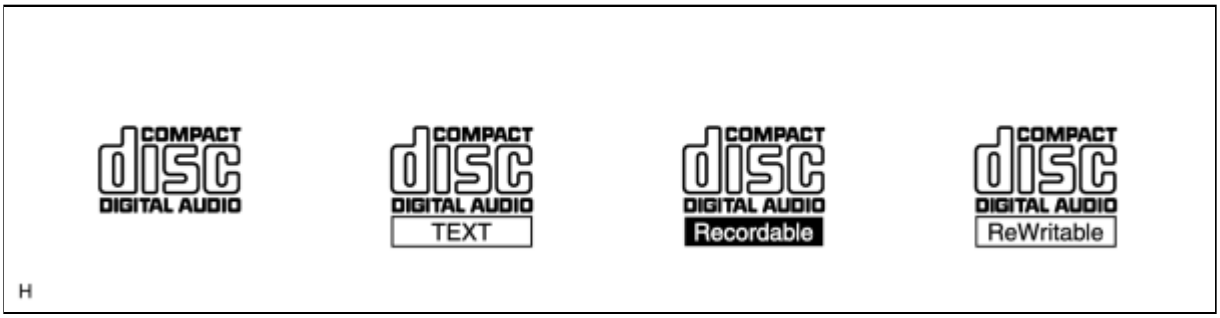

H

(c) Precautions for use of discs

NOTICE:

- Copy-protected CDs cannot be played.
- CD-Rs and CD-RWs may not be played depending on the recording conditions or characteristics of the discs, or due to damage, dirt, or deterioration caused by leaving the discs in the cabin for a long time.
- Unfinalized CD-Rs and CD-RWs cannot be played.
- Keep the discs away from dirt. Be careful not to damage the discs or leave your fingerprints on them.
- Hold discs by the outer edge and center hole with the label side up.
- Leaving the disc exposed halfway out of the slot for a long time after pressing the disc eject button may cause deformation of the disc, making the disc unusable.
- If discs have adhesive tape, stickers, CD-R labels, or any traces of such labels attached, the discs may not be ejected or player malfunctions may result.
- Keep the discs away from direct sunlight. (Exposure to direct sunlight may cause deformation of the disc, making the disc unusable.)
- Do not use odd-shaped CDs because these may cause player malfunctions.
- Do not use discs whose recording portion is transparent or translucent because they may not be

inserted, ejected, or played normally.

HINT:

- When it is cold or it is raining, if the windows mist up, mist and condensation may form in the player. In such cases, the CD may skip or stop in the middle of play. Ventilate or dehumidify the cabin for a while before using the player.
- The CD may skip if the player experiences strong vibrations when the vehicle is driven on rough road or similar uneven surface(s).

(d) Cleaning

NOTICE:

Do not use a lens cleaner because it may cause a malfunction in the pickup portion of the player.

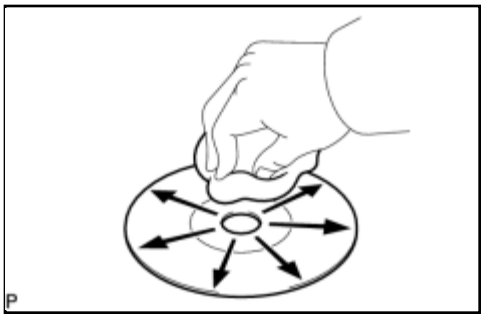

(1) If dirt is on the disc surface, wipe it clean with a soft dry cloth such as an eyeglass cleaner for plastic lenses from the inside to the outside in a radial direction.

NOTICE:

- Pressing on the disc by hand or rubbing the disc with a hard cloth may scratch the disc surface.
- Use of solvent such as a record spray, antistatic agent, alcohol, benzine, and thinner, or a chemical cloth may cause damage to the disc, making the disc unusable.

2. MP3/WMA OUTLINE

(a) Playable MP3 file standards

Compatible standard	MP3 (MPEG1 LAYER3, MPEG2 LSF LAYER3)
Compatible sampling frequency	• MPEG1 LAYER3: 32, 44.1, 48 (kHz) • MPEG2 LSF LAYER3: 16, 22.05, 24 (kHz)
Compatible bit rate	• MPEG1 LAYER3: 64, 80, 96, 112, 128, 160, 192, 224, 256, 320 (kbps) • MPEG2 LSF LAYER3: 64, 80, 96, 112, 128, 144, 160 (kbps) • Compatible with VBR
Compatible channel mode	Stereo, joint stereo, dual channel, monaural

(b) Playable WMA file standards

Compatible standard	WMA Ver. 7, 8 and 9
Compatible sampling frequency	32, 44.1, 48 (kHz)
Compatible bit rate	• Ver. 7, 8: CBR48, 64, 80, 96, 128, 160, 192 (kbps) • Ver. 9: CBR48, 64, 80, 96, 128, 160, 192, 256, 320 (kbps)

	• Compatible with 2 channel playback only

(c) ID3 tag and WMA tag

(1) Additional textual information called ID3 tag can be input to MP3 files. Information such as song titles and artist names can be stored.

HINT:

This player is compatible with the ID3 tags of ID3 Ver. 1.0 and 1.1, and ID3 Ver. 2.2 and 2.3. (Number of characters complies with ID3 Ver. 1.0 and 1.1.)

(2) Additional textual information called WMA tag can be input to WMA files. Information such as song titles and artist names can be stored.

(d) Usable media

(1) Only CD-ROMs, CD-Rs (CD-Recordable), and CD-RWs (CD-ReWritable) can be used to play MP3/WMA files.

NOTICE:

- CD-Rs and CD-RWs are more easily affected by a hot and humid environment than discs used for normal audio CDs. For this reason, some CD-Rs and CD-RWs do not play.
- If there are fingerprints or scratches on the disc, the disc may not play or the CD may skip.
- Some CD-Rs and CD-RWs may deteriorate if they are left in the cabin for a long time.
- Keep CD-Rs and CD-RWs in an opaque case.

(e) Usable media format

(1) Usable media format

Disc format	CD-ROM Mode 1, CD-ROM XA Mode 2 Form1
File format	ISO9660 Level 1 and Level 2 (Joliet, Romeo)

HINT:

- As for MP3/WMA files written in any unlisted format, the contents of the files may not play normally or the file names or folder names may not display correctly.
- This player is compatible with multi-session discs and can play CD-Rs and CD-RWs on which MP3/WMA files are added. However, only the first session can be played.
- Discs whose first session includes both music data and MP3 or WMA format data cannot be played.

(2) Standard and restrictions

Maximum directory levels	8 levels
Maximum number of characters for a folder name/file name	32 characters
Maximum number of folders	192 (Including empty folders, route folders, and folders that do not contain MP3/WMA files)

Maximum number of files in a disc	255 (Including non-MP3/WMA files)

(f) File names

(1) Only files with an extension of ".mp3" or ".wma" can be recognized and played as MP3 or WMA files.

(2) Save MP3 or WMA files with an extension of ".mp3" or ".wma".

NOTICE:

If saving non-MP3 or non-WMA files with an extension of ".mp3" or ".wma", those files are wrongly recognized as MP3 or WMA files and played. A loud noise may occur and damage to the speaker may result.

3. AVC-LAN DESCRIPTION

(a) What is AVC-LAN?

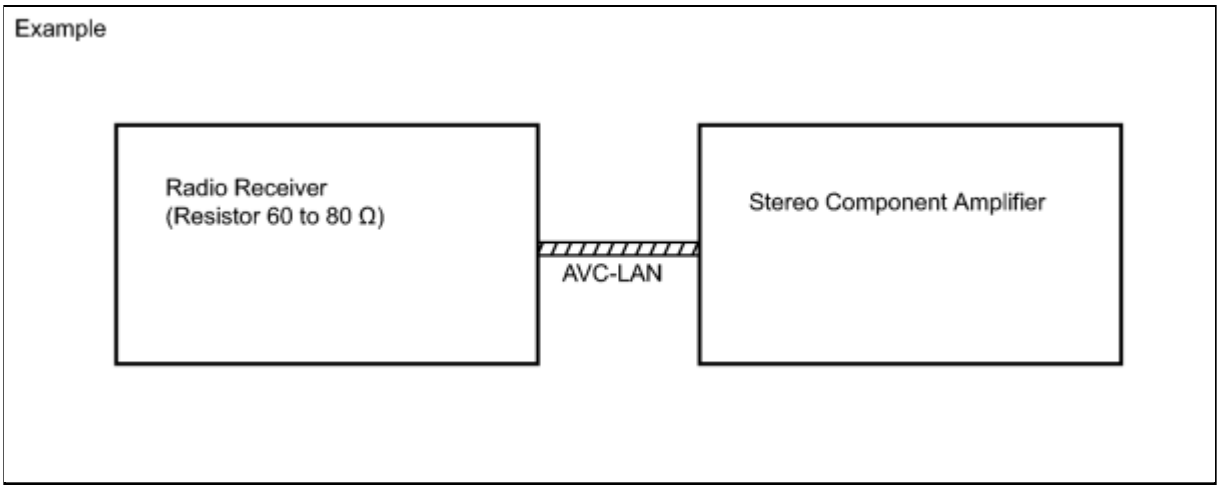

AVC-LAN, an abbreviation for "Audio Visual Communication Local Area Network", is a united standard developed by the manufacturers in affiliation with Toyota Motor Corporation. This standard pertains to audio and visual signals as well as switch and communication signals.

(b) Purpose:

Recently, car audio systems have rapidly developed and the functions have vastly changed. The conventional car audio system is being integrated with multi-media interfaces similar to those in navigation systems. At the same time, customers are demanding higher quality from their audio systems. This is merely an overview of the standardization background. The specific purposes are as follows:

(1) To solve sound problems, etc. caused by using components of different manufacturers through signal standardization.

(2) To allow each manufacturer to concentrate on developing products they do best. From this, reasonably priced products can be produced.

HINT:

- If a short to +B or short to ground is detected in the AVC-LAN circuit, communication is interrupted and the audio system will stop functioning.
- The radio receiver contains a resistor that is necessary to enable communication on the different AVC-LAN circuits.
- The car audio system with an AVC-LAN circuit has a diagnostic function.

- Each component has a specified number (3-digit) called a physical address. Each function has a number (2-digit) called a logical address.

4. COMMUNICATION SYSTEM OUTLINE

(a) Components of the audio system communicate with each other via the AVC-LAN.

(b) The master component of the AVC-LAN is a radio receiver with a 60 to 80 Ω resistor. This is essential for communication.

(c) If a short circuit or open circuit occurs in the AVC-LAN circuit, communication is interrupted and the audio system will stop functioning.

5. DIAGNOSTIC FUNCTION OUTLINE

(a) The audio system has a diagnostic function (the result is indicated on the master unit).

(b) A 3-digit hexadecimal component code (physical address) is allocated to each component on the AVC-LAN. Using this code, the component in the diagnostic function can be displayed.

6. "BLUETOOTH" OUTLINE

(a) "Bluetooth" is a trademark owned by Bluetooth SIG. Inc.

(b) "Bluetooth" is a new wireless connection technology that uses the 2.4 GHz frequency band. This makes it possible to connect a cellular phone ("Bluetooth" compatible phone[*1]) to the radio receiver (the "Bluetooth" system is built in), and use the handsfree function of the cellular phone, even if it is in a pocket or bag. As a result, it is not necessary to use a connector attached directly to the cellular phone.

[*1]: Some versions of "Bluetooth" compatible cellular phones may not function.

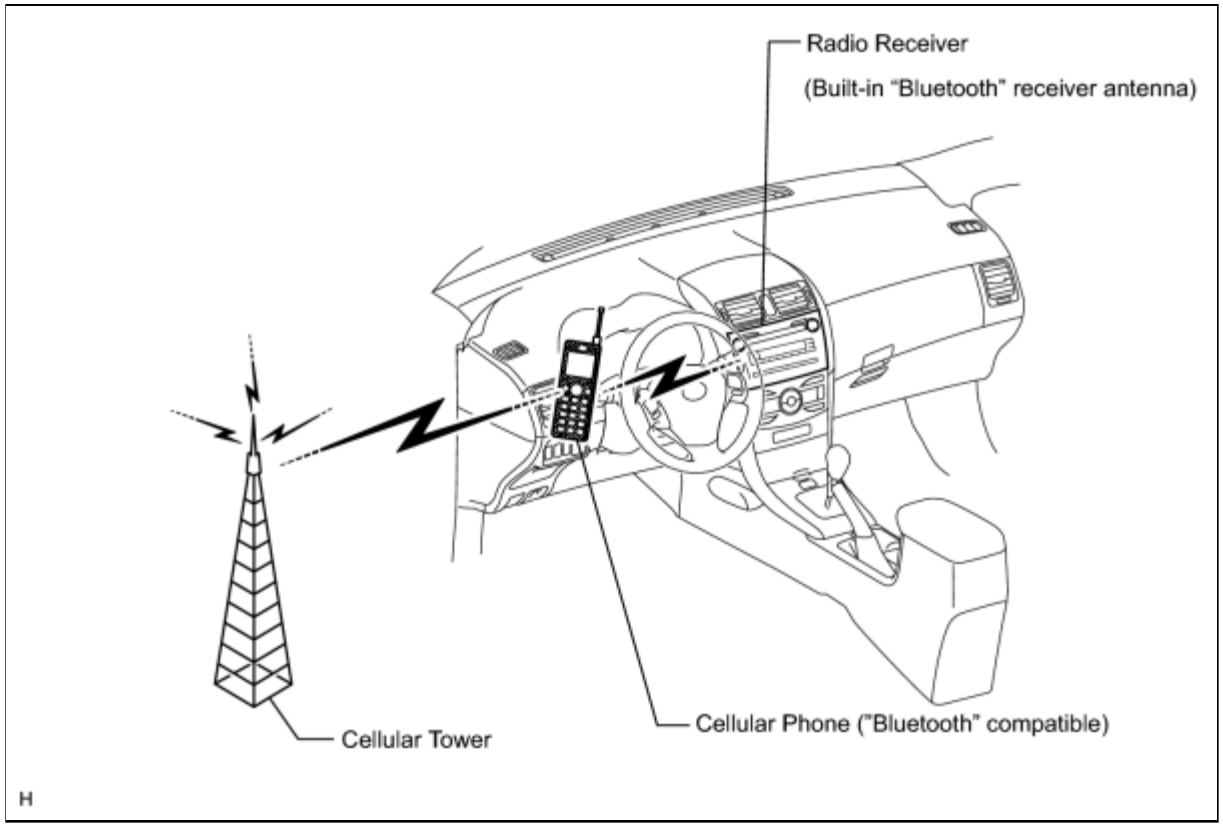

HINT:

The communication performance of "Bluetooth" may vary depending on obstructions or radio wave conditions between communication devices, electromagnetic radiation, communication device sensitivity, or antenna capacity.

7. ASL (Automatic Sound Levelizer) FUNCTION OUTLINE

(a) The ASL (Automatic Sound Levelizer) function automatically adjusts the sound data in order to enable to hear the clear audio sound even when vehicle noise increases (as vehicle noise increases, the volume is turned up etc.). Vehicle speed signals are received from the combination meter and used for the ASL (Automatic Sound Levelizer).

Last Modified: 3-10-2010	6.4 U	**From:** 200901
Model Year: 2010	**Model:** Corolla	**Doc ID:** RM0000012AB02XX
Title: AUDIO / VIDEO: AUDIO AND VISUAL SYSTEM: SYSTEM DIAGRAM (2010 Corolla)		

SYSTEM DIAGRAM

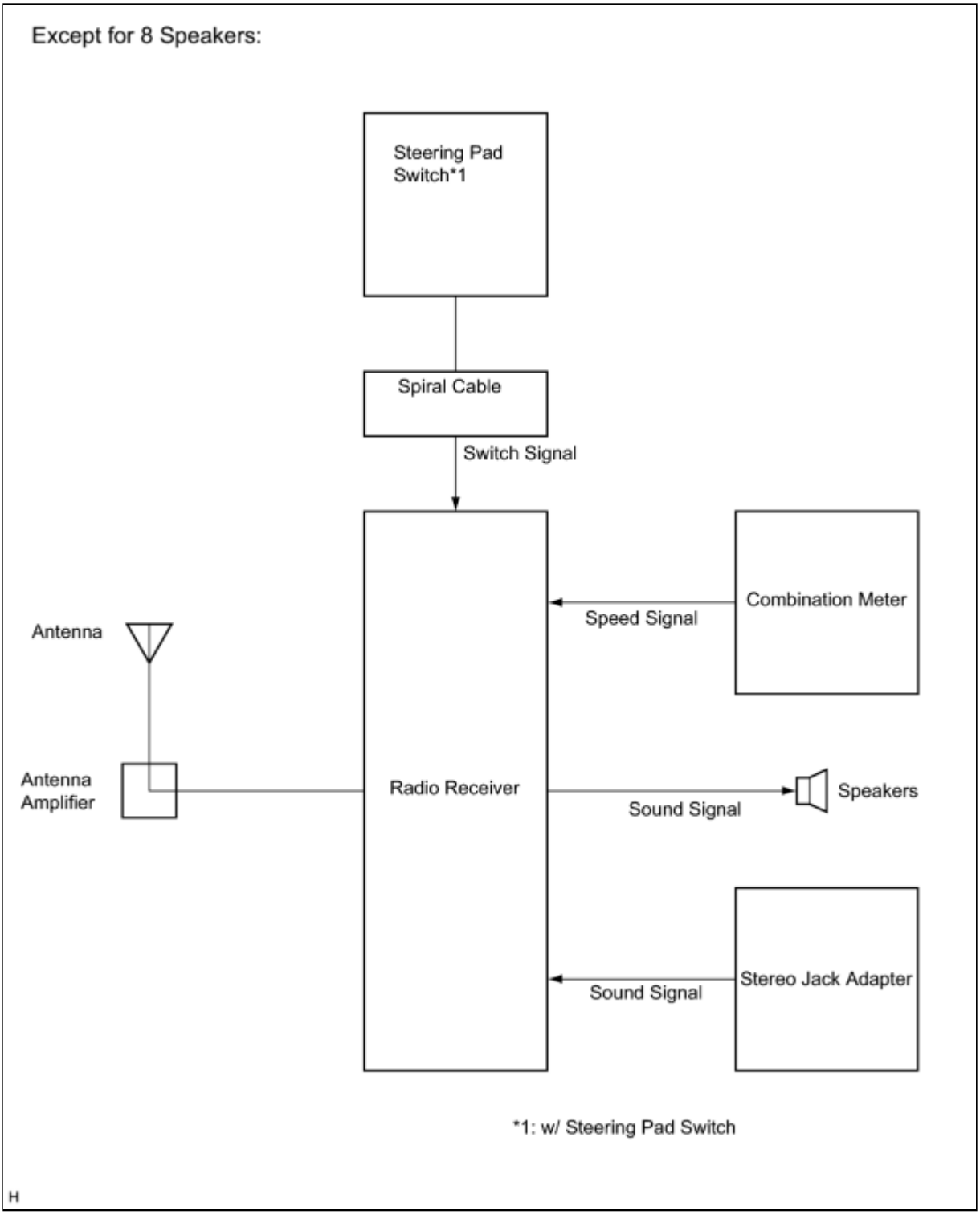

for 8 Speakers:

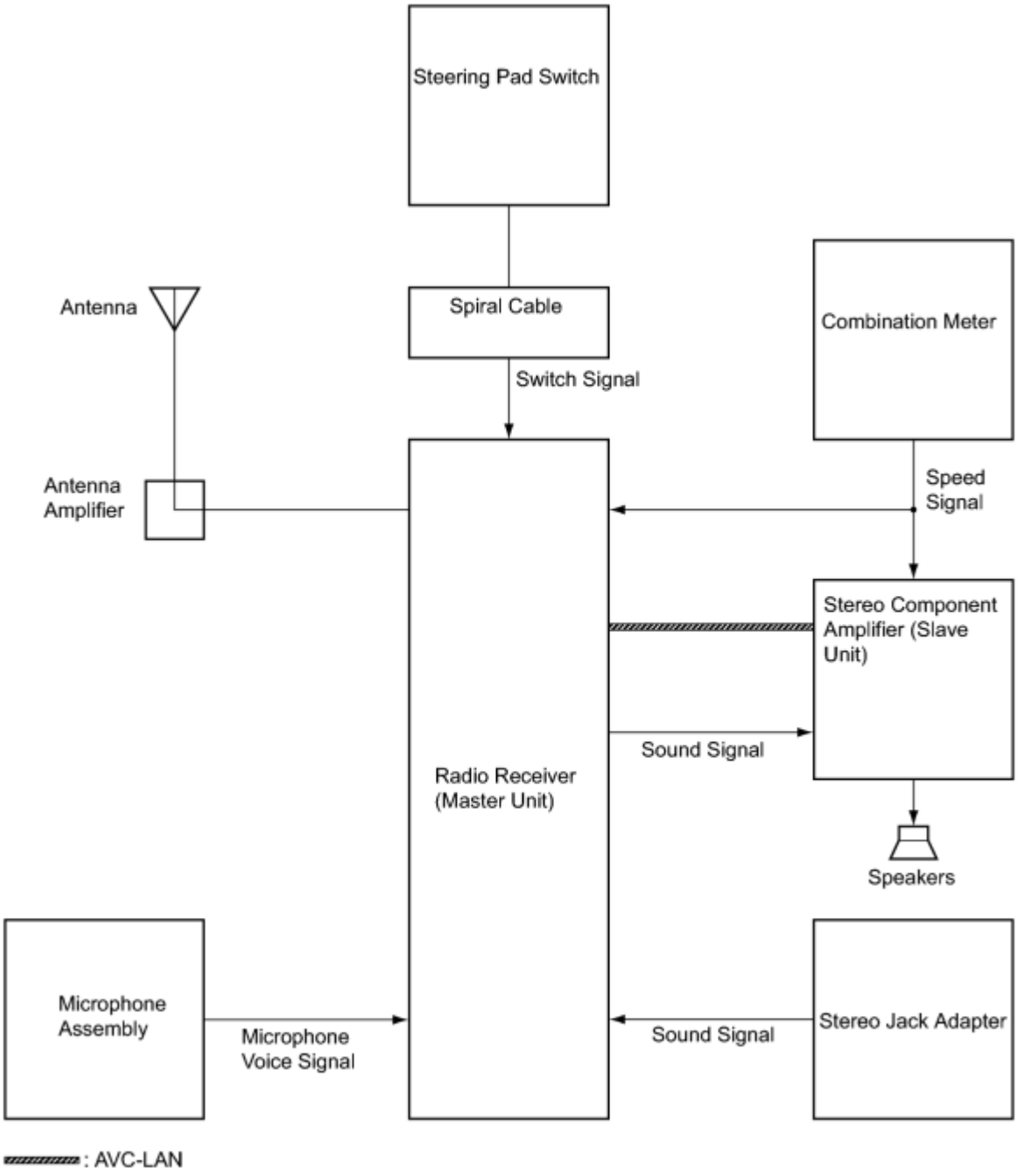

H

Last Modified: 3-10-2010	6.4 D	**From:** 200901
Model Year: 2010	**Model:** Corolla	**Doc ID:** RM000000PMP044X
Title: AUDIO / VIDEO: AUDIO AND VISUAL SYSTEM: HOW TO PROCEED WITH TROUBLESHOOTING (2010 Corolla)		

HOW TO PROCEED WITH TROUBLESHOOTING

1.	**VEHICLE BROUGHT TO WORKSHOP**

NEXT

2.	**INSPECT BATTERY VOLTAGE**

Standard voltage:
11 to 14 V

If the voltage is below 11 V, recharge or replace the battery before proceeding.

NEXT

3.	**BASIC INSPECTION**

(a) Turn the ignition switch to ON.

(b) Check whether or not the radio receiver turns on.

Result:

RESULT	PROCEED TO
Radio receiver turns on	A
Radio receiver does not turn on	B

B **Go to step 7**

A

4.	CONFIRM MODEL

Result:

RESULT	PROCEED TO
for 8 Speakers	A
Except for 8 Speakers	B

B Go to step 7

A

5.	CHECK FOR DTC

(a) Check for DTCs and note any codes that are output.

(b) Clear the DTCs.

(c) Recheck for DTCs by simulating the operation indicated by the DTCs.

HINT:

- If the system cannot enter diagnostic mode, inspect the AVC-LAN and all the components that connect to the AVC-LAN for short circuits and repair or replace the malfunctioning part.
- Even if the symptom malfunction is not confirmed, check the DTCs. This is because the system stores past DTCs.
- Check and clear past DTCs. Then recheck for DTCs.

Result:

RESULT	PROCEED TO
DTC is output again	A
DTC is not output	B

B Go to step 7

A

6.	DIAGNOSTIC TROUBLE CODE CHART

Find the output code in the Diagnostic Trouble Code Chart INFO .

NEXT **Go to step 9**

7.	PROBLEM SYMPTOMS TABLE

Refer to the Problem Symptoms Table INFO .

Result:

RESULT	PROCEED TO
Fault is not listed in problem symptoms table	A
Fault is listed in problem symptoms table	B

B **Go to step 9**

A

8.	OVERALL ANALYSIS AND TROUBLESHOOTING

(a) Terminals of ECU INFO .

NEXT

9.	ADJUST, REPAIR OR REPLACE

NEXT

10.	CONFIRMATION TEST

NEXT END

Last Modified: 3-10-2010	6.4 U	**From:** 200901
Model Year: 2010	**Model:** Corolla	**Doc ID:** RM0000012A703FX
Title: AUDIO / VIDEO: AUDIO AND VISUAL SYSTEM: TERMINALS OF ECU (2010 Corolla)		

TERMINALS OF ECU

1. RADIO RECEIVER (for 8 Speakers)

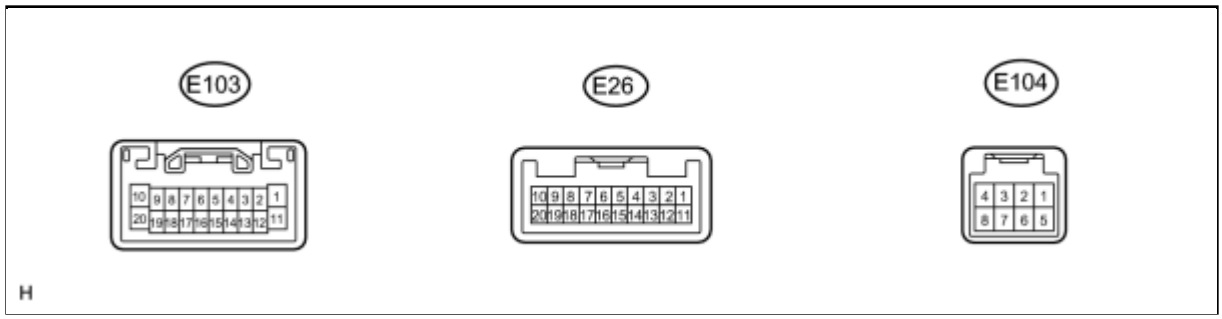

TERMINAL NO. (SYMBOL)	WIRING COLOR	TERMINAL DESCRIPTION	CONDITION	SPECIFICATION
E103-1 (B) - E103-20 (E)	SB - BR	Battery	Always	11 to 14 V
E103-2 (ILL+) - E103-20 (E)	G - BR	Illumination signal	Light control switch OFF	Below 1 V
E103-2 (ILL+) - E103-20 (E)	G - BR	Illumination signal	Light control switch TAIL	11 to 14 V
E103-5 (ATX+) - E103-15 (ATX-)	P - B	AVC-LAN communication signal	Ignition switch ACC	2 to 3 V
E103-7 (MUTE) - E103-20 (E)	LG - BR	MUTE signal	Audio system is playing	Above 3.5 V
E103-7 (MUTE) - E103-20 (E)	LG - BR	MUTE signal	Audio system is changing	Below 1 V
E103-8 (R+) - E103-20 (E)	R - BR	Sound signal (Right)	Audio system is playing	A waveform synchronized with sounds is output
E103-9 (L+) - E103-20 (E)	B - BR	Sound signal (Left)	Audio system is playing	A waveform synchronized with sounds is output
E103-10 (SLD) - Body ground	Shielded - Body ground	Shield ground	Always	Below 1 V
E103-11 (ACC) - E103-20 (E)	GR - BR	Accessory (ON)	Ignition switch ACC	11 to14 V

TERMINAL NO. (SYMBOL)	WIRING COLOR	TERMINAL DESCRIPTION	CONDITION	SPECIFICATION
E103-12 (ILL-) - E103-20 (E)	W - BR	Illumination (rheostat) signal	Light control switch OFF	Below 1 V
E103-12 (ILL-) - E103-20 (E)	W - BR	Illumination (rheostat) signal	Light control switch TAIL	Pulse generation
E103-13 (ANT) - E103-20 (E)	BE - BR	Power source of antenna	Radio switch ON and AM or FM	11 to 14 V
E103-18 (R-) - E103-20 (E)	W - BR	Sound signal (Right)	Audio system is playing	A waveform synchronized with sounds is output
E103-19 (L-) - E103-20 (E)	G - BR	Sound signal (Left)	Audio system is playing	A waveform synchronized with sounds is output
E103-20 (E) - Body ground	BR - Body ground	Ground	Always	Below 1 V
E26-3 (SPD) - E103-20 (E)	V - BR	Speed signal from combination meter	Ignition switch ON Turn drive wheels slowly	Pulse generation
E26-6 (SWG) - E103-20 (E)	SB - BR	Steering pad switch ground	Always	Below 1 V
E26-7 (SW1) - E103-20 (E)	BE - BR	Steering pad switch signal	Steering pad switch not operated	4.5 to 5.5 V
E26-7 (SW1) - E103-20 (E)	BE - BR	Steering pad switch signal	SEEK+ switch pushed	Below 0.5 V
E26-7 (SW1) - E103-20 (E)	BE - BR	Steering pad switch signal	SEEK- switch pushed	0.86 to 0.95 V
E26-7 (SW1) - E103-20 (E)	BE - BR	Steering pad switch signal	VOL+ switch pushed	1.91 to 2.01 V
E26-7 (SW1) - E103-20 (E)	BE - BR	Steering pad switch signal	VOL- switch pushed	3.23 to 3.57 V
E26-8 (SW2) - E103-20 (E)	P - BR	Steering pad switch signal	Steering pad switch not operated	4.5 to 5.5 V
E26-8 (SW2) - E103-20 (E)	P - BR	Steering pad switch signal	MODE switch pushed	Below 0.5 V
E26-8 (SW2) - E103-20 (E)	P - BR	Steering pad switch signal	ON HOOK switch pushed	0.86 to 0.95 V
E26-8 (SW2) - E103-20 (E)	P - BR	Steering pad switch signal	OFF HOOK switch pushed	1.91 to 2.01 V
E26-8 (SW2) - E103-20 (E)	P - BR	Steering pad switch signal	VOICE switch pushed	3.23 to 3.57 V

TERMINAL NO. (SYMBOL)	WIRING COLOR	TERMINAL DESCRIPTION	CONDITION	SPECIFICATION
E26-11 (IVO+) - E103-20 (E)	G - BR	Voice signal	"Bluetooth" handsfree voice signal is received	A waveform synchronized with sounds is output
E26-12 (IVO-) - E103-20 (E)	R - BR	Voice signal	"Bluetooth" handsfree voice signal is received	A waveform synchronized with sounds is output
E26-13 (SLD1) - Body ground	Shielded - Body ground	Shield ground	Always	Below 1 V
E26-15 (ARI) - E103-20 (E)	B - BR	Sound signal (Right)	External device is playing (When stereo jack is used)	A waveform synchronized with sounds is output
E26-16 (ASGN) - E103-20 (E)	R - BR	Shield ground	Always	Below 1 V
E26-17 (ALI) - E103-20 (E)	W - BR	Sound signal (Left)	External device is playing (When stereo jack is used)	A waveform synchronized with sounds is output
E26-18 (AGND) - Body ground	Shielded - Body ground	Shield ground	Always	Below 1 V
E26-19 (AUXI) - E103-20 (E)	L - BR	External device connection detection signal	External device is connected	Below 1 V
E104-1 (SNS2) - E103-20 (E)	Y - BR	Microphone connection detection signal	Always	Below 1 V
E104-2 (MIC+) - E103-20 (E)	B - BR	Microphone voice signal	"Bluetooth" handsfree function is ON	A waveform synchronized with sounds is output
E104-3 (MACC) - E103-20 (E)	R - BR	Microphone amplifier power supply	Ignition switch off	Below 1 V
E104-3 (MACC) - E103-20 (E)	R - BR	Microphone amplifier power supply	Ignition switch ON	4 to 6 V
E104-5 (MIC-) - E103-20 (E)	W - BR	Microphone voice signal	"Bluetooth" handsfree function is ON	A waveform synchronized with sounds is output
E104-6 (SGND) - E103-20 (E)	Shielded - BR	Shielded ground	Always	Below 1 V

2. RADIO RECEIVER (Except for 8 Speakers)

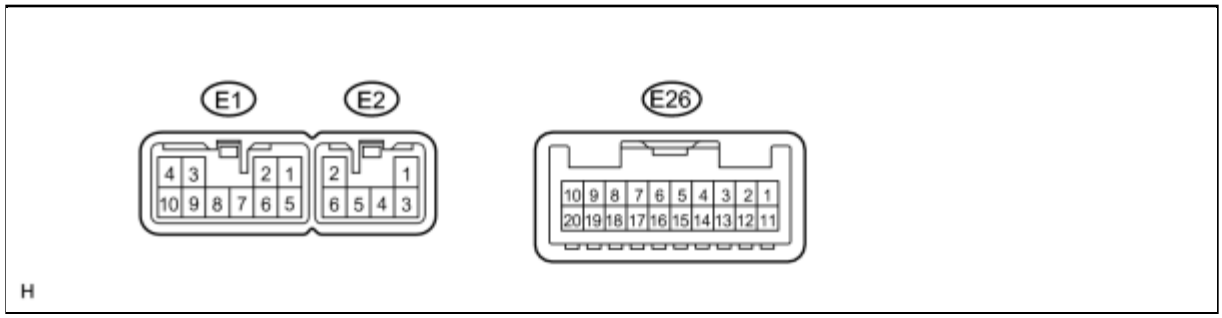

TERMINAL NO. (SYMBOL)	WIRING COLOR	TERMINAL DESCRIPTION	CONDITION	SPECIFICATION
E1-1 (FR+) - E1-7 (E)	LG - BR	Sound signal (Front Right)	Audio system is playing	A waveform synchronized with sounds is output
E1-2 (FL+) - E1-7 (E)	P - BR	Sound signal (Front Left)	Audio system is playing	A waveform synchronized with sounds is output
E1-3 (ACC) - E1-7 (E)	GR - BR	Accessory (ON)	Ignition switch off	Below 1 V
E1-3 (ACC) - E1-7 (E)	GR - BR	Accessory (ON)	Ignition switch ACC	11 to 14 V
E1-4 (B) - E1-7 (E)	SB - BR	Battery	Always	11 to 14 V
E1-5 (FR-) - E1-7 (E)	L - BR	Sound signal (Front Right)	Audio system is playing	A waveform synchronized with sounds is output
E1-6 (FL-) - E1-7 (E)	V - BR	Sound signal (Front Left)	Audio system is playing	A waveform synchronized with sounds is output
E1-7 (E) - Body ground	BR - Body ground	Ground	Always	Below 1 V
E1-8 (ANT) - E1-7 (E)	O*2, BE*3 - BR	Power source of antenna	Radio switch ON and AM or FM	11 to 14 V
E1-10 (ILL+) - E1-7 (E)	G - BR	Illumination signal	Light control switch OFF	Below 1 V
E1-10 (ILL+) - E1-7 (E)	G - BR	Illumination signal	Light control switch TAIL or HEAD	11 to 14 V
E2-1 (RR+) - E1-7 (E)	R - BR	Sound signal (Rear Right)	Audio system is playing	A waveform synchronized with sounds is output

TERMINAL NO. (SYMBOL)	WIRING COLOR	TERMINAL DESCRIPTION	CONDITION	SPECIFICATION
E2-2 (RL+) - E1-7 (E)	B - BR	Sound signal (Rear Left)	Audio system is playing	A waveform synchronized with sounds is output
E2-3 (RR-) - E1-7 (E)	W - BR	Sound signal (Rear Right)	Audio system is playing	A waveform synchronized with sounds is output
E2-5 (ILL-) - E1-7 (E)	W - BR	Illumination (rheostat) signal	Light control switch OFF	Below 1 V
E2-5 (ILL-) - E1-7 (E)	W - BR	Illumination (rheostat) signal	Light control switch TAIL or HEAD	Pulse generation
E2-6 (RL-) - E1-7 (E)	Y - BR	Sound signal (Rear Left)	Audio system is playing	A waveform synchronized with sounds is output
E26-3 (SPD) - E1-7 (E)	V - BR	Speed signal from combination meter	Ignition switch ON Turn drive wheels slowly	Pulse generation
E26-6 (SWG) - E1-7 (E)*1	SB - BR	Steering pad switch ground	Always	Below 1 V
E26-7 (SW1) - E1-7 (E)*1	BE - BR	Steering pad switch signal	Steering pad switch not operated	4.5 to 5.5 V
E26-7 (SW1) - E1-7 (E)*1	BE - BR	Steering pad switch signal	SEEK+ switch pushed	Below 0.5 V
E26-7 (SW1) - E1-7 (E)*1	BE - BR	Steering pad switch signal	SEEK- switch pushed	0.86 to 0.95 V
E26-7 (SW1) - E1-7 (E)*1	BE - BR	Steering pad switch signal	VOL+ switch pused	1.91 to 2.01 V
E26-7 (SW1) - E1-7 (E)*1	BE - BR	Steering pad switch signal	VOL- switch pushed	3.23 to 3.57 V
E26-8 (SW2) - E1-7 (E)*1	P - BR	Steering pad switch signal	Steering pad switch not operated	4.5 to 5.5 V
E26-8 (SW2) - E1-7 (E)*1	P - BR	Steering pad switch signal	MODE switch pushed	Below 0.5 V
E26-15 (ARI) - E1-7 (E)	B - BR	Sound signal (Right)	External device is playing (When stereo jack is used)	A waveform synchronized with sounds is output
E26-16 (ASGN) - E1-7 (E)	R - BR	Shield ground	Always	Below 1 V

TERMINAL NO. (SYMBOL)	WIRING COLOR	TERMINAL DESCRIPTION	CONDITION	SPECIFICATION
E26-17 (ALI) - E1-7 (E)	W - BR	Sound signal (Left)	External device is playing (When stereo jack is used)	A waveform synchronized with sounds is output
E26-18 (AGND) - Body ground	Shielded - Body ground	Shield ground	Always	Below 1 V
E26-19 (AUXI) - E1-7 (E)	L - BR	External device connection detection signal	External device is connected	Below 1 V

- *1: w/ Steering Pad Switch
- *2: TMC Made
- *3: Except TMC Made

3. STEREO COMPONENT AMPLIFIER (for 8 Speakers)

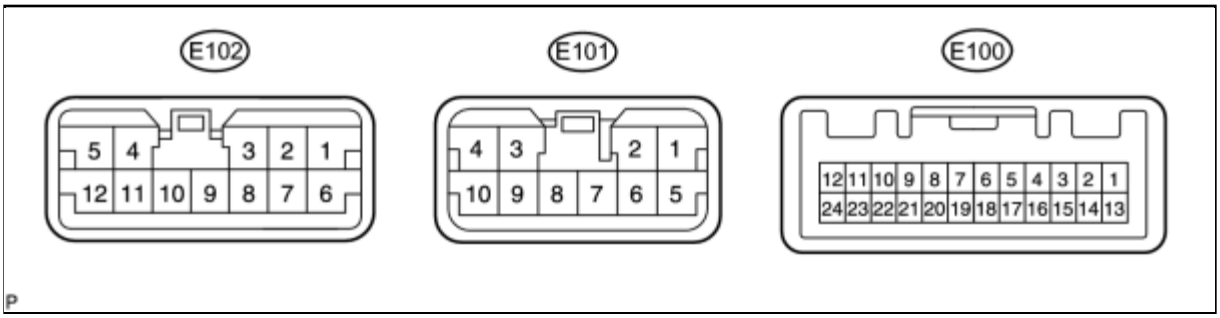

TERMINAL NO. (SYMBOL)	WIRING COLOR	TERMINAL DESCRIPTION	CONDITION	SPECIFICATION
E100-1 (MUTE) - E102-6 (GND)	LG - W-B	Mute signal from radio receiver	Audio system is playing	Above 3.5 V
E100-1 (MUTE) - E102-6 (GND)	LG - W-B	Mute signal from radio receiver	Audio system is changing sources	Below 1 V
E100-2 (L-) - E102-6 (GND)	G - W-B	Sound signal (Left)	Audio system is playing	A waveform synchronized with sounds is output
E100-3 (L+) - E102-6 (GND)	B - W-B	Sound signal (Left)	Audio system is playing	A waveform synchronized with sounds is output
E100-4 (R-) - E102-6 (GND)	W - W-B	Sound signal (Right)	Audio system is playing	A waveform synchronized with sounds is output

TERMINAL NO. (SYMBOL)	WIRING COLOR	TERMINAL DESCRIPTION	CONDITION	SPECIFICATION
E100-5 (R+) - E102-6 (GND)	R - W-B	Sound signal (Right)	Audio system is playing	A waveform synchronized with sounds is output
E100-7 (TX-) - E100-8 (TX+)	B - P	AVC-LAN communication signal	Ignition switch ACC	2 to 3 V
E100-11 (SPD) - E102-6 (GND)	V - W-B	Speed signal from combination meter	Ignition switch ON Turn drive wheels slowly	Pulse generation
E100-12 (ACC) - E102-6 (GND)	GR - W-B	Accessory (ON)	Ignition switch off	Below 1 V
E100-12 (ACC) - E102-6 (GND)	GR - W-B	Accessory (ON)	Ignition switch ACC	11 to 14 V
E100-22 (INT-) - E102-6 (GND)	R - W-B	Voice signal	Navigation or "Bluetooth" handsfree voice signal is transmitted	A waveform synchronized with sounds is output
E100-23 (INT+) - E102-6 (GND)	G - W-B	Voice signal	Navigation or "Bluetooth" handsfree voice signal is transmitted	A waveform synchronized with sounds is output
E101-1 (+B) - E102-6 (GND)	R - W-B	Battery	Always	11 to 14 V
E101-2 (FR+) - E102-6 (GND)	BR - W-B	Sound signal (Front Right)	Audio system is playing	A waveform synchronized with sounds is output
E101-3 (RL+) - E102-6 (GND)	B - W-B	Sound signal (Rear Left)	Audio system is playing	A waveform synchronized with sounds is output
E101-4 (RR-) - E102-6 (GND)	W - W-B	Sound signal (Rear Right)	Audio system is playing	A waveform synchronized with sounds is output
E101-5 (+B2) - E102-6 (GND)	R - W-B	Battery	Always	11 to 14 V
E101-6 (FR-) - E102-6 (GND)	P - W-B	Sound signal (Front Right)	Audio system is playing	A waveform synchronized with sounds is output
E101-7 (FL-) - E102-6 (GND)	R - W-B	Sound signal (Front Left)	Audio system is playing	A waveform synchronized with

TERMINAL NO. (SYMBOL)	WIRING COLOR	TERMINAL DESCRIPTION	CONDITION	SPECIFICATION
				sounds is output
E101-8 (FL+) - E102-6 (GND)	W - W-B	Sound signal (Front Left)	Audio system is playing	A waveform synchronized with sounds is output
E101-9 (RL-) - E102-6 (GND)	Y - W-B	Sound signal (Rear Left)	Audio system is playing	A waveform synchronized with sounds is output
E101-10 (RR+) - E102-6 (GND)	R - W-B	Sound signal (Rear Right)	Audio system is playing	A waveform synchronized with sounds is output
E102-1 (WFL-) - E102-6 (GND)	V - W-B	Sound signal (Front Left)	Audio system is playing	A waveform synchronized with sounds is output
E102-2 (WFL+) - E102-6 (GND)	P - W-B	Sound signal (Front Left)	Audio system is playing	A waveform synchronized with sounds is output
E102-3 (WFR-) - E102-6 (GND)	L - W-B	Sound signal (Front Right)	Audio system is playing	A waveform synchronized with sounds is output
E102-4 (SL+) - E102-6 (GND)	BR - W-B	Sound signal (Rear Left)	Audio system is playing	A waveform synchronized with sounds is output
E102-5 (SR+) - E102-6 (GND)	P - W-B	Sound signal (Rear Right)	Audio system is playing	A waveform synchronized with sounds is output
E102-6 (GND) - Body ground	W-B - Body ground	Ground	Always	Below 1 V
E102-7 (GND2) - Body ground	W-B - Body ground	Ground	Always	Below 1 V
E102-9 (WFR+) - E102-6 (GND)	LG - W-B	Sound signal (Rear Left)	Audio system is playing	A waveform synchronized with sounds is output
E102-10 (SL-) - E102-6 (GND)	LG - W-B	Sound signal (Rear Left)	Audio system is playing	A waveform synchronized with sounds is output
E102-12 (SR-) - E102-6 (GND)	SB - W-B	Sound signal (Rear Right)	Audio system is playing	A waveform synchronized with sounds is output

Last Modified: 3-10-2010	6.4 D	**From:** 200901
Model Year: 2010	**Model:** Corolla	**Doc ID:** RM000000NL0065X
Title: AUDIO / VIDEO: AUDIO AND VISUAL SYSTEM: IDENTIFICATION OF NOISE SOURCE (2010 Corolla)		

IDENTIFICATION OF NOISE SOURCE

1. Radio Description

(a) Radio frequency band

(1) Radio broadcasts use the radio frequency bands shown in the table below.

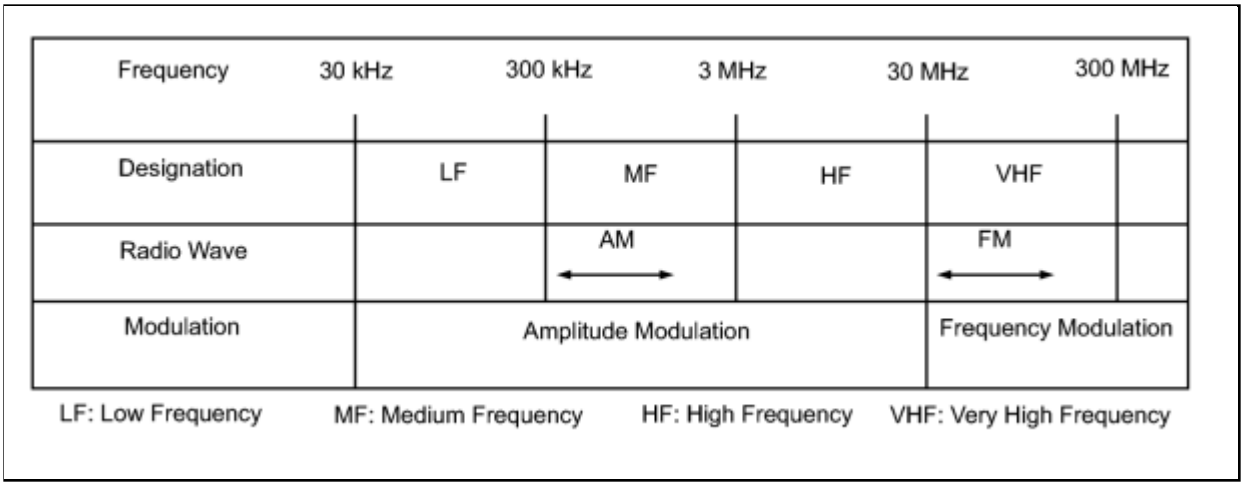

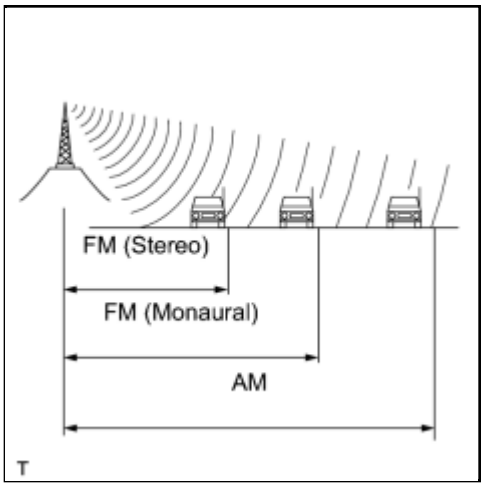

(b) Service area

(1) The service areas of AM and FM broadcasts are vastly different. Sometimes an AM broadcast can be received very clearly but an FM stereo cannot. FM stereo has the smallest service area, and is prone to pick up static and other types of interference such as noise.

(c) Radio reception problems

HINT:

In addition to static, other problems such as "phasing", "multipath", and "fade out" exist. These problems are not caused by electrical noise, but by the radio signal propagation method itself.

(1) Phasing

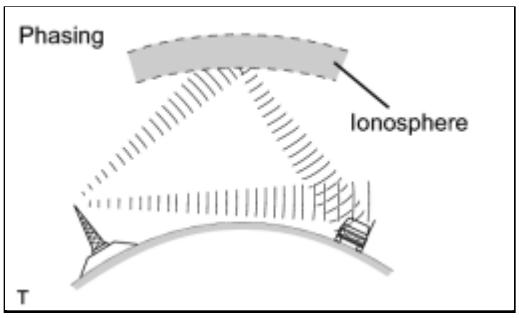

AM broadcasts are susceptible to electrical interference and another kind of interference called phasing. Occurring only at night, phasing is the interference created when a vehicle receives 2 radio wave signals from the same transmitter. One signal is reflected off the ionosphere and the other signal is received directly from the transmitter.

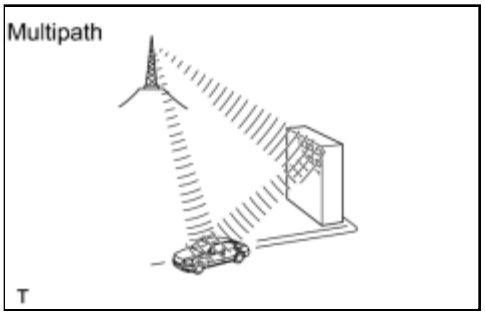

(2) Multipath

Multipath is a type of interference created when a vehicle receives 2 radio wave signals from the same transmitter. One signal is reflected off buildings or mountains and the other signal is received directly from the transmitter.

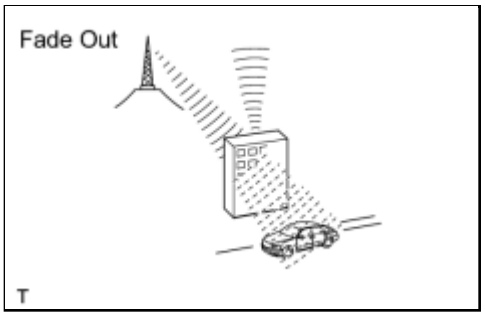

(3) Fade out

Fade out is caused by objects (buildings, mountains, and other such large obstacles) that deflect away part of a signal, resulting in a weaker signal when the object is between the transmitter and vehicle. High frequency radio waves, such as FM broadcasts, are easily deflected by obstructions. Low frequency radio waves, such as AM broadcasts, are less likely to deflect.

(d) Noise problem

Technicians must have a clear understanding about each customer's noise complaint. Use the following table to diagnose noise problems.

RADIO FREQUENCY	NOISE OCCURRENCE CONDITION	PRESUMABLE CAUSE
AM	Noise occurs in a specified area	Foreign noise
AM	Noise occurs when listening to an intermittent broadcast	An identical program transmitted from multiple towers can cause noise where the signals overlap
AM	Noise occurs only at night	Signal phasing
FM	Noise occurs while driving in a specified area	Multipath resulting from a change in FM frequency

Last Modified: 3-10-2010	6.4 T	**From:** 200901
Model Year: 2010	**Model:** Corolla	**Doc ID:** RM0000012A803OX
Title: AUDIO / VIDEO: AUDIO AND VISUAL SYSTEM: PROBLEM SYMPTOMS TABLE (2010 Corolla)		

PROBLEM SYMPTOMS TABLE

HINT:

- Use the table below to help determine the cause of problem symptoms. If multiple suspected areas are listed, the potential causes of the symptoms are listed in order of probability in the "Suspected Area" column of the table. Check each symptom by checking the suspected areas in the order they are listed. Replace parts as necessary.
- Inspect the fuses and relays related to this system before inspecting the suspected areas below.

Audio Function

SYMPTOM	SUSPECTED AREA	SEE PAGE
Pressing power switch does not turn on system.	Proceed to "Pressing Power Switch does not Turn on System"	INFO
	Radio receiver power source circuit	INFO
	AVC-LAN circuit*1	INFO
	Radio receiver	INFO
Panel switch does not function.	Steering pad switch circuit*2	INFO
	AVC-LAN circuit*1	INFO
	Radio receiver	INFO
No sound can be heard from speakers. (Audio is mute.) (for 8 speakers)	Radio receiver power source circuit	INFO
	Proceed to "No Sound can be Heard from Speakers"	INFO
	Stereo component amplifier power source circuit	INFO
	Proceed to "Sound Signal Circuit between Radio Receiver and Stereo Component Amplifier"	INFO
	Speaker circuit	INFO
	Proceed to "Mute Signal Circuit between Radio Receiver and Stereo Component Amplifier"	INFO
	Stereo component amplifier	INFO
	Radio receiver	INFO
No sound can be heard from speakers.	Radio receiver power source circuit	INFO

SYMPTOM	SUSPECTED AREA	SEE PAGE
(Audio is mute.) (except for 8 speakers)	Proceed to "No Sound can be Heard from Speakers"	INFO
	Speaker circuit	INFO
	Radio receiver	INFO
Sound quality is bad in all modes. (Volume is too low.) (for 8 speakers)	Proceed to "Poor Sound Quality in All Modes (Low Volume)"	INFO
	Speaker circuit.	INFO
	Proceed to "Sound Signal Circuit between Radio Receiver and Stereo Component Amplifier"	INFO
	Proceed to "Mute Signal Circuit between Radio Receiver and Stereo Component Amplifier"	INFO
	Stereo component amplifier	INFO
	Radio receiver	INFO
Sound quality is bad in all modes. (Volume is too low.) (except for 8 speakers)	Proceed to "Poor Sound Quality in All Modes (Low Volume)"	INFO
	Speaker circuit	INFO
	Radio receiver	INFO
ASL does not function. (for 8 speakers)	Proceed to "Vehicle Speed Signal Circuit between Stereo Component Amplifier and Combination Meter"	INFO
ASL does not function. (except for 8 speakers)	Proceed to "Vehicle Speed Signal Circuit between Radio Receiver and Combination Meter"	INFO
External device sound cannot be heard or sound quality is bad. (Stereo jack is used.)	Radio receiver power source circuit	INFO
	Proceed to "Sound Signal Circuit between Radio Receiver and Stereo Jack Adapter"	INFO
	Stereo jack adapter	INFO
	Radio receiver	INFO
Abnormal noise occurs. (for 8 speakers)	Proceed to "Noise Occurs"	INFO
	Stereo component amplifier	INFO
	Radio receiver	INFO
Abnormal noise occurs. (except for 8 speakers)	Proceed to "Noise Occurs"	INFO
	Radio receiver	INFO

SYMPTOM	SUSPECTED AREA	SEE PAGE
Radio broadcast cannot be received or poor reception.	Proceed to "Radio Broadcast cannot be Received or Poor Reception"	INFO
CD cannot be inserted / played or CD is ejected right after insertion.	Radio receiver power source circuit	INFO
	Proceed to "CD cannot be Inserted / Played or CD is Ejected Right After Insertion"	INFO
CD cannot be ejected.	Radio receiver power source circuit	INFO
	Proceed to "CD cannot be Ejected"	INFO
Sound quality is bad only when CD is played. (Volume is too low.)	Proceed to "Sound Quality is Bad Only when CD is Played (Volume is Too Low)"	INFO
CD sound skips.	Proceed to "CD Sound Skips"	INFO
Radio receiver cannot be illuminated at night.	Illumination circuit	INFO
	Radio receiver	INFO

Steering Pad Switch Function*2

SYMPTOM	SUSPECTED AREA	SEE PAGE
Audio system cannot be operated with steering pad switch.	Steering pad switch circuit	INFO
	Radio receiver	INFO
Steering pad switch cannot be illuminated at night.	Illumination circuit	INFO
	Radio receiver	INFO

"Bluetooth" Function*1

SYMPTOM	SUSPECTED AREA	SEE PAGE
Cellular phone registration failure, phone directory transfer failure.	Proceed to "Cellular Phone Registration Failure, Phone Directory Transfer Failure"	INFO
Cellular phone cannot send / receive.	Proceed to "Cellular Phone cannot Send / Receive"	INFO
	Steering pad switch circuit	INFO
	Radio receiver	INFO
The other callers voice cannot be heard, is too quiet, or distorted.	Proceed to "The Other Callers Voice cannot be Heard, is too Quiet, or Distorted"	INFO
	Proceed to "Cellular Phone Voice Circuit between Radio Receiver and Stereo Component Amplifier"	INFO

SYMPTOM	SUSPECTED AREA	SEE PAGE
	Radio receiver	INFO
	Stereo component amplifier	INFO
The other caller cannot hear your voice, or your voice is too quiet or distorted.	Proceed to "The Other Caller cannot Hear Your Voice, or Your Voice is too Quiet or Distorted"	INFO
	Proceed to "Microphone Circuit between Microphone and Radio Receiver"	INFO
	Microphone	INFO
	Radio receiver	INFO

SDARS system Function*3

SYMPTOM	SUSPECTED AREA	SEE PAGE
Satellite radio broadcast cannot be received or reception is bad.	Proceed to "Satellite Radio Broadcast cannot be Received"	INFO
	Radio receiver	INFO
Pay type satellite radio broadcast cannot be received.	Proceed to "Satellite Radio Broadcast cannot be Received"	INFO
	Radio receiver	INFO
Satellite radio broadcast cannot be selected or after selecting broadcast, broadcast cannot be add into memory.	Proceed to "Satellite Radio Broadcast cannot be Received"	INFO
	Proceed to "Satellite Radio Broadcast cannot be Selected or After Selecting Broadcast, Broadcast cannot be Added into Memory"	INFO
	Radio receiver	INFO

- *1: for 8 Speakers
- *2: w/ Steering Pad Switch
- *3: w/ Satellite Radio

Last Modified: 3-10-2010	6.4 D	**From:** 200901
Model Year: 2010	**Model:** Corolla	**Doc ID:** RM0000014CZ03EX
Title: AUDIO / VIDEO: AUDIO AND VISUAL SYSTEM: DTC CHECK / CLEAR (2010 Corolla)		

DTC CHECK / CLEAR

HINT:

If the system cannot enter the diagnostic mode, inspect the AVC-LAN and all the components that connect to the AVC-LAN for short circuits and repair or replace the problem part INFO **.**

1. STARTING DIAGNOSTIC MODE

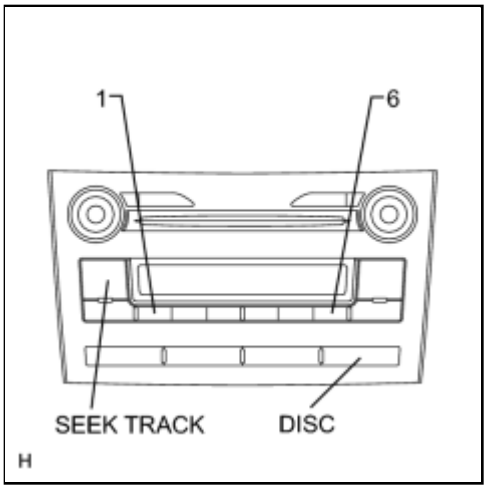

(a) Turn the ignition switch to ACC.

(b) Turn off the audio system.

(c) While pressing the preset switches "1" and "6" at the same time, press the "DISC" switch 3 times.

HINT:

A beep is emitted 3 times and the diagnostic function is activated. The system enters the all element illumination mode and the switch check mode.

2. ALL ELEMENT ILLUMINATION MODE AND SWITCH CHECK MODE

HINT:

Illumination status of all switches and operations of the panel switches can be checked.

(a) Check that all elements are on.

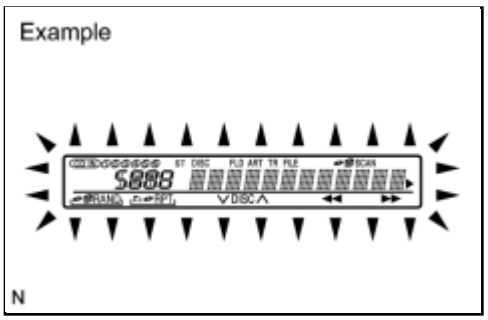

(b) When pressing each panel switch, check that a beep is emitted.

HINT:

Pressing the "SEEK TRACK UP" switch transfers the screen to the stereo jack adapter connection check screen. Check the operation of this switch by confirming the transfer of the screen.

3. STEREO JACK ADAPTER CONNECTION CHECK MODE

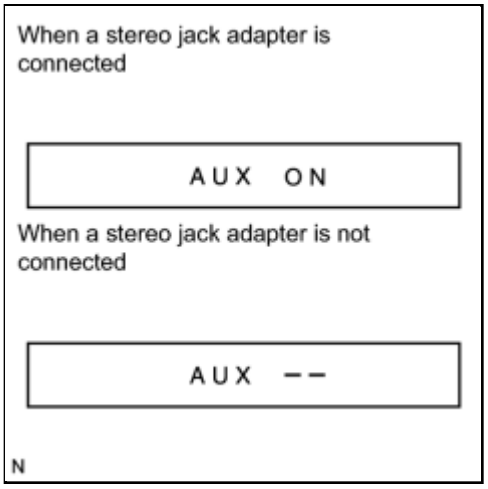

(a) Press the "SEEK TRACK UP" switch.

(b) Check if the stereo jack adapter is recognized.

HINT:

- Vehicles that do not have a stereo jack adapter also have this function.
- This function is not to check connection status to an external device, but to check recognition of the stereo jack adapter.

4. SERVICE CHECK MODE

(a) Press the "SEEK TRACK UP" switch.

HINT:

For details of the service check mode, refer to "6. Check DTC" and "7. DTC Clear/Recheck".

5. FINISHING DIAGNOSTIC MODE

(a) Press the "DISC" switch for 2 seconds or more, or turn the ignition switch off.

6. CHECK DTC

HINT:

Illustrations may differ from the actual vehicle depending on the device settings and options. Therefore, some detailed areas may not be shown exactly the same as on the actual vehicle.

(a) Reference:

In the system check mode, the system check and the diagnostic memory check are performed, and the check results are displayed in ascending order of the component codes (physical address).

TERM	MEANING
Component code (Physical address)	Three-digit code (in hexadecimal) given to each device comprising AVC-LAN. Corresponding to its function, individual symbol is provided.
Logical address	Two-digit code (in hexadecimal) given to each function and device unit in each device comprising AVC-LAN.

(b) Service check result display

DISPLAY	PREVIOUS TERM	MEANING	ACTION TO BE TAKEN
good	Good (normal)	No DTCs are detected in both "System Check Mode" and "Diagnostic Memory Mode".	-
nCon	No connection	The system recognized the component when it was registered, but the component gives no response to the "Diagnostic Mode ON Request".	Check the power source circuit and the communication circuit of the component indicated by the component code (physical address).
ECHn	Exchange	One or more DTCs for "Exchange" are detected in either "System Check Mode" or "Diagnostic Memory Mode".	Go to the detailed information mode to check the trouble area referring to the DTC list.
CHEC	Check	When no DTCs are detected for "Exchange", one or more DTCs for "Check" are detected in either "System Check Mode" or "Diagnostic Memory Mode".	Go to the detailed information mode to check the trouble area referring to the DTC list.
OLd	Old version	Old DTC application is identified and DTC is detected in either "System Check Mode" or "Diagnostic Memory Mode".	-
nrES	No response	The device gives no response to any one of "System Check Mode ON Request", "System Check Result	Check the power source circuit and the communication circuit of the component indicated by the

DISPLAY	PREVIOUS TERM	MEANING	ACTION TO BE TAKEN
		Request", and "Diagnostic Memory Request".	component code (physical address).

(c) Device name and physical address

PHYSICAL ADDRESS NO.	NAME
190	Radio receiver
440	Stereo component amplifier

(d) Service check mode

(1) Press the "SEEK TRACK" switch to see the check result of each component.

(2) The component code (physical address) is displayed first, and then the check result follows.

HINT:

- If all check results are "good", the system judges that no DTC exists.
- If the preset switch "1" is pressed in the service check mode, service check is performed again.
- This illustration is only an example and may differ for each optional part and output DTCs.

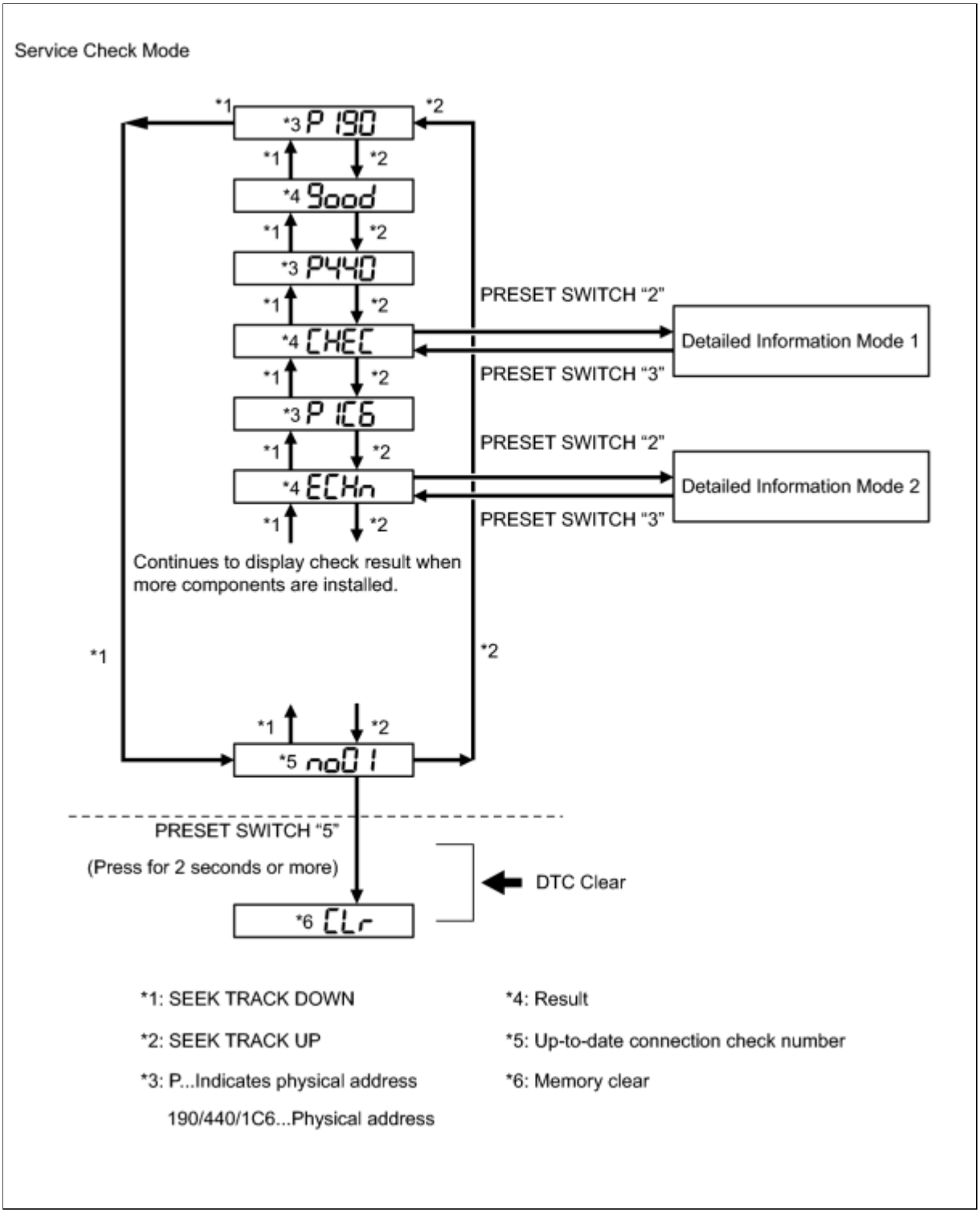

(e) Detailed information mode 1

HINT:

- "Detailed Information Mode 1" is displayed when there is no response to "System Check Result Request" and DTC is detected only in "Diagnostic Memory Request".
- The component device code (physical address) is displayed first, and then the check result follows.
- This illustration is only an example and may differ in cases such as for each option part and output DTCs.

(1) Press the preset switch "2" to go to the "Detailed Information Mode 1".

(2) Press the "SEEK TRACK" switch to display the physical address and DTC of the component.

(3) Press the preset switch "3" to go to the "Service Check Mode".

(4) Select between the displays of the responses to "System Check Result Request" and "Diagnostic Memory Request". In order to distinguish the information detected in "System Check Mode" and "Diagnostic Memory Mode" in "ECHn", "CHEC", and "OLd" in "Detailed Information Mode 1", refer to the following:

- "SyS" is displayed before the detailed codes detected as a result of "System Check Result Request" are displayed.
- "COdE" is displayed before the detailed codes detected as a result of "Diagnostic Memory Request" are displayed.

HINT:

- The response to "System Check Result Request" is the current information given from each ECU as a result of the system check.
- The response to "Diagnostic Memory Request" contains the information received from each ECU or stored in each ECU in the past.
- The response to "Diagnostic Memory Request" is the output DTCs as a result of the diagnostic memory check or the DTCs received from each ECU.
- "System Check Result Request (SyS)" is displayed first, and then the logical address and DTC appear in order.
- "Diagnostic Memory Request (COdE)" is displayed first, and then the logical address, DTC, sub-code, connection check number, and the number of occurrence appear in order.

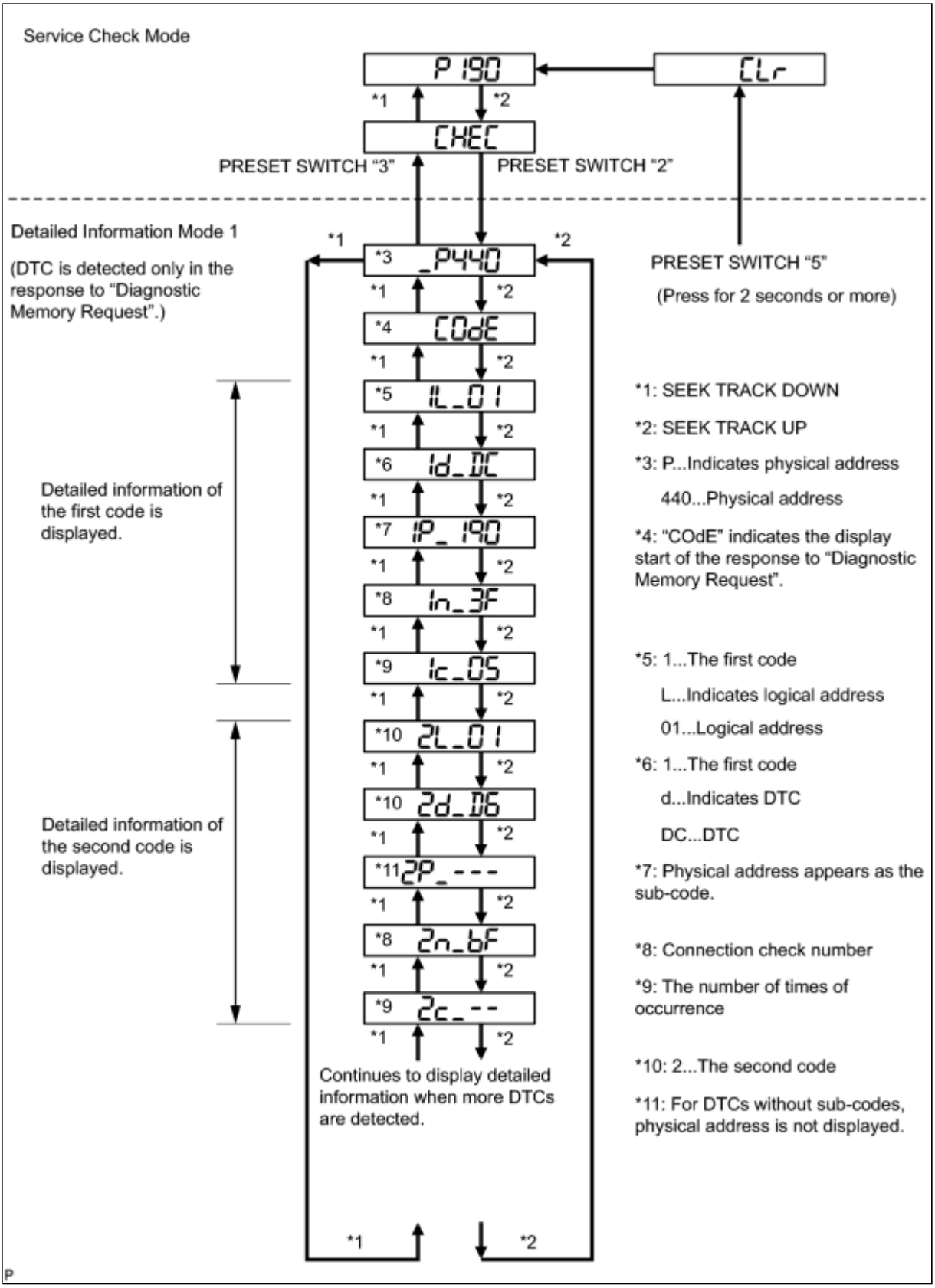

(f) Detailed information mode 2

HINT:

- "Detailed Information Mode 2" is displayed when DTCs are detected in the responses to both "System Check Result Request" and "Diagnostic Memory Request".

- The component device code (physical address) is displayed first, and then the check result follows.
- This illustration is only an example and may differ in cases such as for each option part and output DTCs.

(1) Press the preset switch "2" to go to the "Detailed Information Mode 2".

(2) Press the "SEEK TRACK" switch to display the physical address and DTC of the component.

(3) Press the preset switch "3" to go to the "Service Check Mode".

(4) Select between the displays of the responses to "System Check Result Request" and "Diagnostic Memory Request". In order to distinguish the information detected in "System Check Mode" and "Diagnostic Memory Mode" in "ECHn", "CHEC", and "OLd" in "Detailed Information Mode 2", refer to the following:

- "SyS" is displayed before the detailed codes detected as a result of "System Check Result Request" are displayed.
- "COdE" is displayed before the detailed codes detected as a result of "Diagnostic Memory Request" are displayed.

HINT:

- The response to "System Check Result Request" is the current information given from each ECU as a result of the system check.
- The response to "Diagnostic Memory Request" contains the information received from each ECU or stored in each ECU in the past.
- The response to "Diagnostic Memory Request" are the output DTCs as a result of the diagnostic memory check or the DTCs received from each ECU.
- "System Check Result Request (SyS)" is displayed first, and then the logical address and DTC appear in order.
- "Diagnostic Memory Request (COdE)" is displayed first, and then the logical address, DTC, sub-code, connection check number, and the number of occurrence appear in order.

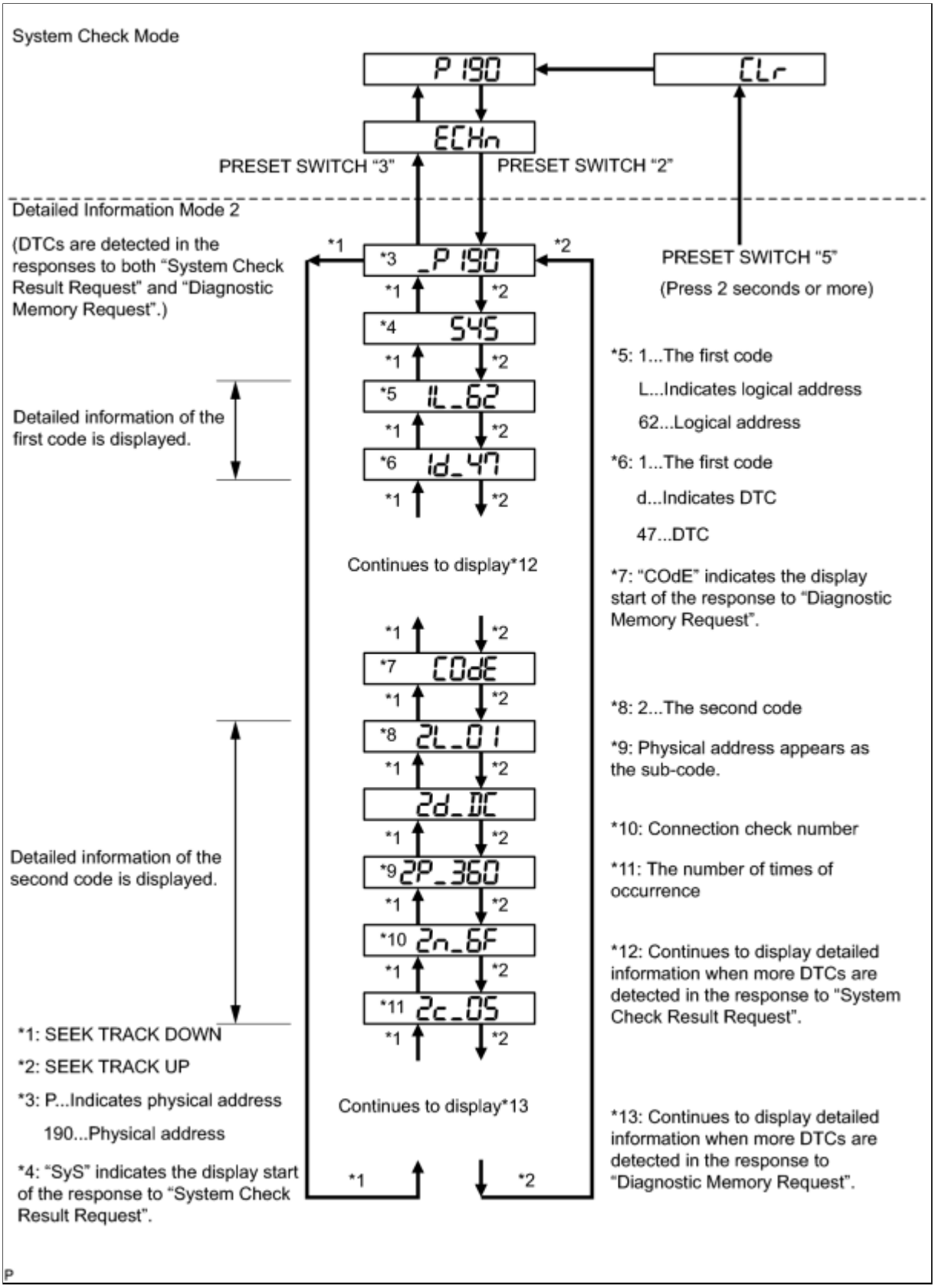

7. DTC CLEAR/RECHECK

(a) Clearing All DTC Memory (when clearing all the memory of the previously detected DTCs).

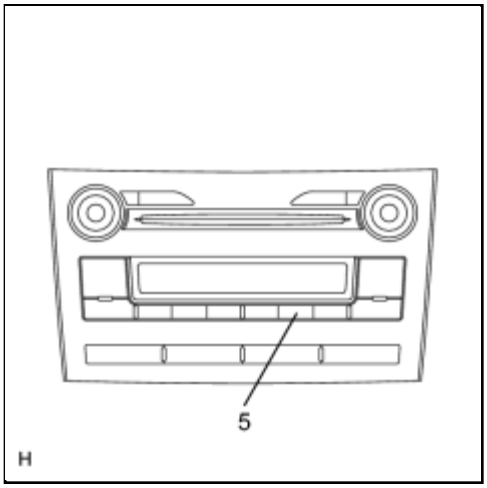

(1) When the preset switch "5" is pressed for 2 seconds or more during "Service Check Mode", the DTCs for all components are cleared. ("CLr" is displayed at this time.)

HINT:

- A beep sound is emitted once when the DTC memory is completely cleared.
- When the DTC memory for all the components is cleared, only the component codes (physical address) are displayed.
- After the DTC memory is cleared, the "Service Check Mode" is restored.

(b) Clearing the specified DTC Memory (when clearing the specified memory of the previously detected DTC).

(1) When the preset switch "5" is pressed for 2 seconds or more during "Detailed Information Mode 1" or "Detailed Information Mode 2", the DTCs for the target component are cleared.

HINT:

- A beep sound is emitted once when the DTC memory is completely cleared.
- When the DTC memory is cleared, only the component code (physical address) is displayed for the target component.
- After the DTC memory is cleared, the "Service Check Mode" is restored.
- To check DTCs, press the preset switch "1" and perform the system check again.

(c) Press the preset switch "1" to perform the service check again, and check that no DTCs are displayed for all the component codes (physical address).

Last Modified: 3-10-2010	6.4 S	**From:** 200901
Model Year: 2010	**Model:** Corolla	**Doc ID:** RM0000017YP02UX
Title: AUDIO / VIDEO: AUDIO AND VISUAL SYSTEM: DIAGNOSTIC TROUBLE CODE CHART (2010 Corolla)		

DIAGNOSTIC TROUBLE CODE CHART

Communication Diagnosis

DTC CODE	DETECTION ITEM	TROUBLE AREA	SEE PAGE
01-21	ROM Error	Radio receiver	INFO
01-22	RAM Error	Radio receiver	INFO
01-2E	EEPROM Error	Radio receiver	INFO
01-D5	Absence of Registration Unit	1. Power source circuit of the component shown by the sub-code 2. AVC-LAN circuit between the radio receiver and the component shown by the sub-code 3. Component shown by the sub-code	INFO
01-D6	No Master	1. Radio receiver power source circuit 2. Power source circuit of the component which has stored this code 3. AVC-LAN circuit between the radio receiver and the component which has stored this code 4. Component which has stored this code 5. Radio receiver	INFO
01-D7	Connection Check Error	1. Radio receiver power source circuit 2. Power source circuit of the component which has stored this code 3. AVC-LAN circuit between the radio receiver and the component which has stored this code 4. Component which has stored this code 5. Radio receiver	INFO
01-D8	No Response for Connection Check	1. Power source circuit of the component shown by the sub-code 2. AVC-LAN circuit between the radio receiver and the component shown by the sub-code 3. Component shown by the sub-code	INFO
01-D9	Last Mode Error	1. Power source circuit of the component shown by the sub-code 2. AVC-LAN circuit between the radio receiver and the component shown by the sub-code 3. Component shown by the sub-code	INFO

DTC CODE	DETECTION ITEM	TROUBLE AREA	SEE PAGE
01-DA	No Response Against ON / OFF Command	1. Power source circuit of the component shown by the sub-code 2. AVC-LAN circuit between the radio receiver and the component shown by the sub-code 3. Component shown by the sub-code	INFO
01-DB	Mode Status Error	1. Power source circuit of the component shown by the sub-code 2. AVC-LAN circuit between the radio receiver and the component shown by the sub-code 3. Component shown by the sub-code	INFO
01-DC	Transmission Error	If the same sub-code is recorded in other components, check power source circuit and communication system of all components shown by code	INFO
01-DD	Master Reset	1. Radio receiver power source circuit 2. AVC-LAN circuit between the radio receiver and the component which has stored this code 3. Radio receiver 4. Component which has stored this code	INFO
01-DE	Slave Reset	1. Power source circuit of the component shown by the sub-code 2. AVC-LAN circuit between the radio receiver and the component shown by the sub-code 3. Component shown by the sub-code	INFO
01-DF	Master Error	1. Radio receiver power source circuit 2. AVC-LAN circuit between the radio receiver and the component which has stored this code 3. Radio receiver 4. Component which has stored this code	INFO
01-E0	Registration Complete Indication Error	-	INFO
01-E1	Voice Processing Device ON Error	1. Radio receiver power source circuit 2. AVC-LAN circuit between the radio receiver and the component which has stored this code 3. Radio receiver 4. Component which has stored this code	INFO
01-E2	ON / OFF Indication Parameter Error	Radio receiver	INFO
01-E3	Registration Demand Transmission	-	INFO
01-E4	Multiple Frame Incomplete	-	INFO

DTC CODE	DETECTION ITEM	TROUBLE AREA	SEE PAGE
01-F2	No Response from Diagnosis Memory Request	Stereo component amplifier	INFO
01-FF	No Response to Diagnosis Request	Stereo component amplifier	INFO

Radio Unit

DTC CODE	DETECTION ITEM	TROUBLE AREA	SEE PAGE
60-10	AM Tuner PLL does not Lock	Radio Receiver	INFO
60-11	FM Tuner PLL does not Lock	Radio Receiver	INFO
60-42	Tuner Power Source Error	Radio Receiver	INFO
60-43	AM Tuner Error	Radio Receiver	INFO
60-44	FM Tuner Error	Radio Receiver	INFO
60-50	Malfunction in Internal IC	Radio Receiver	INFO

Telephone

DTC CODE	DETECTION ITEM	TROUBLE AREA	SEE PAGE
57-47	Bluetooth Module Initialization Failed	Radio receiver	INFO

CD Player

DTC CODE	DETECTION ITEM	TROUBLE AREA	SEE PAGE
62-10	CD Player Mechanical Error	Radio receiver	INFO
62-11	CD Insertion and Ejection Error	Radio receiver	INFO
62-12	CD Reading Abnormal	Radio receiver	INFO
62-41	Wrong Disc	1. CD 2. Radio receiver	INFO
62-42	Disc cannot be Read	1. CD 2. Radio receiver	INFO
62-43	CD-ROM Abnormal	1. CD 2. Radio receiver	INFO
62-44	CD Abnormal	Radio receiver	INFO
62-45	Eject Error	Radio receiver	INFO

DTC CODE	DETECTION ITEM	TROUBLE AREA	SEE PAGE
62-46	Scratched / Reversed Disc	1. CD 2. Radio receiver	INFO
62-47	High Temperature	Radio receiver	INFO
62-48	Excess Current	Radio receiver	INFO
62-50	Tray Insertion / Ejection Error	Radio receiver	INFO
62-51	Elevator Error	Radio receiver	INFO
62-52	Clamp Error	Radio receiver	INFO
62-78	DSP Error	-	INFO
62-7D	Disc cannot be Played	1. CD 2. Radio receiver	INFO
62-7E	No Playable Files	1. CD 2. Radio receiver	INFO
62-7F	Copyright Protection Error	1. CD 2. Radio receiver	INFO

In-dash CD Changer

DTC CODE	DETECTION ITEM	TROUBLE AREA	SEE PAGE
63-10	CD Changer Mechanical Error	Radio receiver	INFO
63-11	CD Insertion and Ejection Error	Radio receiver	INFO
63-12	CD Reading Abnormal	Radio receiver	INFO
63-41	Wrong Disc	1. CD 2. Radio receiver	INFO
63-42	Disc cannot be Read	1. CD 2. Radio receiver	INFO
63-43	CD-ROM Abnormal	1. CD 2. Radio receiver	INFO
63-44	CD Abnormal	Radio receiver	INFO
63-45	Eject Error	Radio receiver	INFO
63-46	Scratched / Reversed Disc	1. CD 2. Radio receiver	INFO
63-47	High Temperature	Radio receiver	INFO
63-48	Excess Current	Radio receiver	INFO
63-50	Tray Insertion / Ejection Error	Radio receiver	INFO

DTC CODE	DETECTION ITEM	TROUBLE AREA	SEE PAGE
63-51	Elevator Error	Radio receiver	INFO
63-52	Clamp Error	Radio receiver	INFO
63-78	DSP Error	-	INFO
63-7D	Disc cannot be Played	1. CD 2. Radio receiver	INFO
63-7E	No Playable Files	1. CD 2. Radio receiver	INFO
63-7F	Copyright Protection Error	1. CD 2. Radio receiver	INFO

XM Tuner

DTC CODE	DETECTION ITEM	TROUBLE AREA	SEE PAGE
C0-11	Satellite Radio Tuner Internal Circuit Error 1	Radio receiver	INFO
C0-12	Satellite Radio Tuner Internal Circuit Error 2	Radio receiver	INFO
C0-13	Satellite Radio Tuner Internal Circuit Error 3	Radio receiver	INFO
C0-14	Satellite Radio Tuner Internal Circuit Error 4	Radio receiver	INFO
C0-15	Satellite Radio Tuner Internal Circuit Error 5	Radio receiver	INFO
C0-16	Satellite Radio Tuner Internal Circuit Error 6	Radio receiver	INFO
C0-40	Antenna not Connected	1. Antenna cord 2. Satellite radio antenna 3. Radio receiver	INFO
C0-41	Antenna Shorted	1. Antenna cord 2. Satellite radio antenna 3. Radio receiver	INFO

Last Modified: 3-10-2010	6.4 C	**From:** 200901
Model Year: 2010	**Model:** Corolla	**Doc ID:** RM00000183S02WX
Title: AUDIO / VIDEO: AUDIO AND VISUAL SYSTEM: 01-21,01-22,01-2E: ROM Error (2010 Corolla)		

DTC	**01-21**	**ROM Error**

DTC	**01-22**	**RAM Error**

DTC	**01-2E**	**EEPROM Error**

DESCRIPTION

DTC NO.	DTC DETECTION CONDITION	TROUBLE AREA
01-21	A ROM malfunction exists.	Radio receiver
01-22	A RAM malfunction exists.	
01-2E	A checksum malfunction exists.	

INSPECTION PROCEDURE

HINT:

After the inspection is completed, clear the DTCs.

PROCEDURE

1.	**REPLACE RADIO RECEIVER**

HINT:

Removal INFO

Last Modified: 3-10-2010	6.4 C	**From:** 200901
Model Year: 2010	**Model:** Corolla	**Doc ID:** RM0000183U02ZX
Title: AUDIO / VIDEO: AUDIO AND VISUAL SYSTEM: 01-D6,01-D7: No Master (2010 Corolla)		

DTC	**01-D6**	**No Master**

DTC	**01-D7**	**Connection Check Error**

DESCRIPTION

DTC NO.	DTC DETECTION CONDITION	TROUBLE AREA
01-D6 *1	When either of the following conditions is met: • The device that stores (stored) the code has (had) been disconnected while the ignition switch is ON or ACC. • The master device has (had) been disconnected when this code is stored.	• Radio receiver power source circuit • Power source circuit of the component which has stored this code • AVC-LAN circuit between the radio receiver and the component which has stored this code • Component which has stored this code • Radio receiver
01-D7 *2	When either of the following conditions is met: • The device that stored the code has (had) been disconnected after the engine starts (started). • The master device has (had) been disconnected when this code is (was) stored.	

HINT:

- *1: Even if no fault is present, this trouble code may be stored depending on the battery condition or engine start voltage.
- *2: When 210 seconds have elapsed after disconnecting the power supply connector of the master component with the ignition switch ON or ACC, this code is stored.

NOTICE:

- Before starting troubleshooting, be sure to clear the DTCs stored due to the reasons described in the HINT above. Then, check for DTCs and troubleshoot according to the output DTCs.
- The radio receiver is the master unit.
- Be sure to clear and recheck for the DTCs after the inspection is completed to confirm that no DTCs are output.

INSPECTION PROCEDURE

NOTICE:

Be sure to read Description before performing the following procedures.

PROCEDURE

1.	**CHECK RADIO RECEIVER POWER SOURCE CIRCUIT**

Refer to Radio Receiver Power Source Circuit INFO .

If the power source circuit is operating normally, proceed to the next step.

NEXT

2.	**IDENTIFY THE COMPONENT WHICH HAS STORED THIS CODE**

(a) Enter the diagnostic mode.

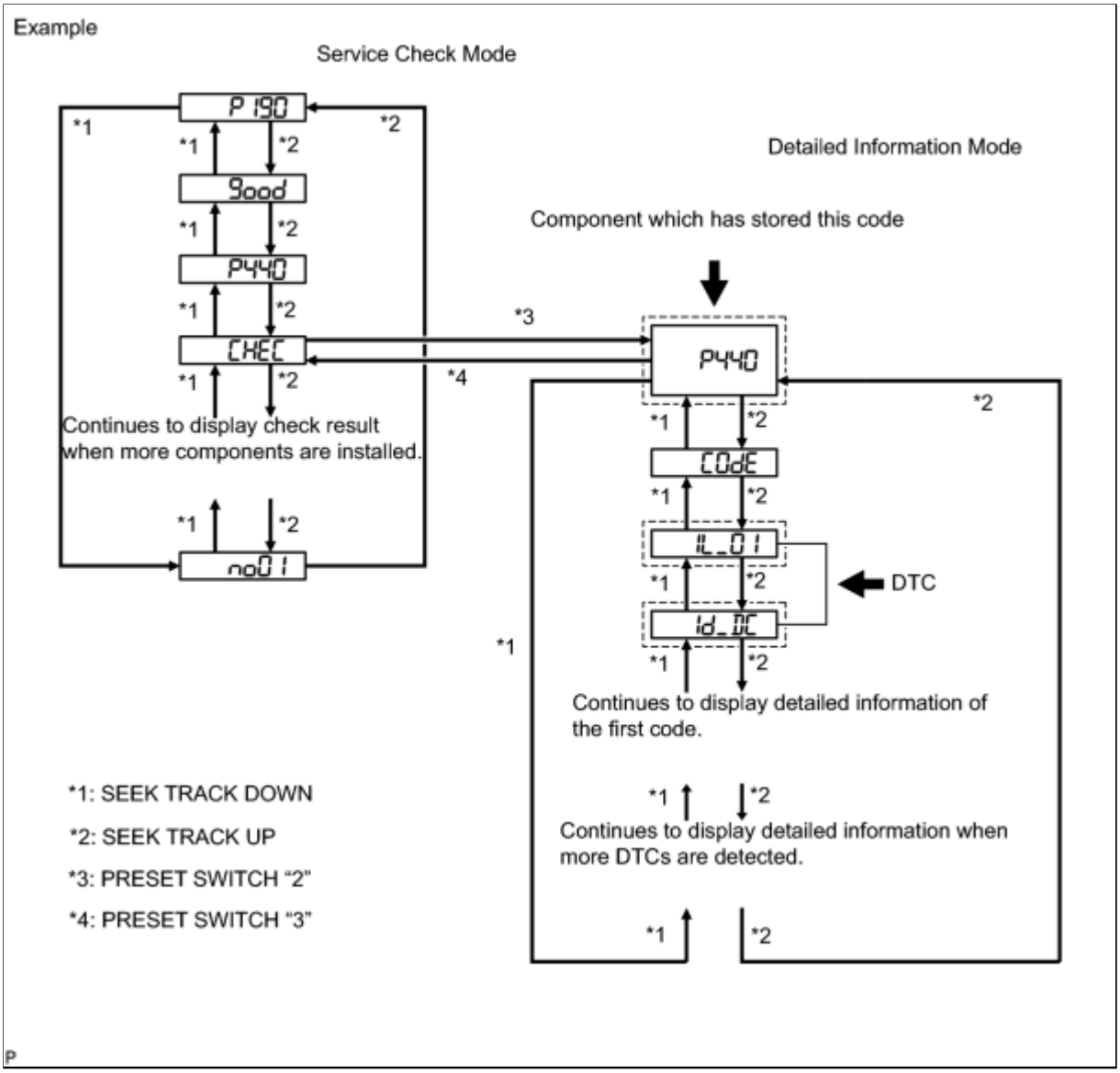

(b) Press the preset switch "3" to change the mode to "Detailed Information Mode".

(c) Identify the component which has stored this code.

Component Table

COMPONENT	PHYSICAL ADDRESS
Stereo component amplifier	440

HINT:

- "P440" set by the stereo component amplifier shown in the preceding illustration as an example.
- For details of the DTC display, refer to DTC Check/Clear INFO .

NEXT

3.	**CHECK POWER SOURCE CIRCUIT OF COMPONENT WHICH HAS STORED THIS CODE**

(a) Inspect the power source circuit of the component which has stored this code.

If the power source circuit is operating normally, proceed to the next step.

Component Table

COMPONENT	PROCEED TO
Stereo component amplifier	Stereo component amplifier power source circuit INFO

NEXT

4.	**INSPECT RADIO RECEIVER**

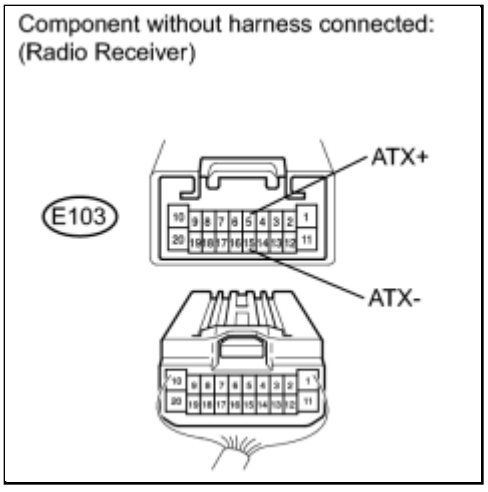

(a) Disconnect the radio receiver connector.

(b) Measure the resistance according to the value(s) in the table below.

Standard Resistance:

TESTER CONNECTION	CONDITION	SPECIFIED CONDITION
E103-5 (ATX+) - E103-15 (ATX-)	Always	60 to 80 Ω

NG ▶ REPLACE RADIO RECEIVER

OK ▼

5.	CHECK HARNESS AND CONNECTOR (RADIO RECEIVER - COMPONENT WHICH HAS STORED THIS CODE)

HINT:

For details of the connectors, refer to Terminals of ECU INFO **.**

(a) Referring to the following AVC-LAN Wiring Diagram, check the AVC-LAN circuit between the radio receiver and the component which has stored this code.

(1) Disconnect all connectors between the radio receiver and the component which has stored this code.

(2) Check for an open or short in the AVC-LAN circuit between the radio receiver and the component which has stored this code.

OK:

There is no open or short circuit.

AVC-LAN Wiring Diagram

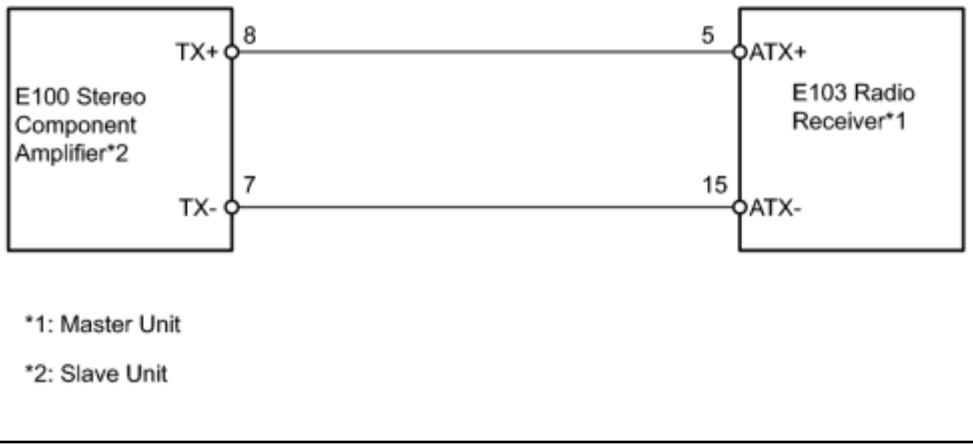

*1: Master Unit

*2: Slave Unit

NG ▶ REPAIR OR REPLACE HARNESS OR CONNECTOR

OK

6.	**REPLACE COMPONENT WHICH HAS STORED THIS CODE**

(a) Replace the component which has stored this code with a known good one and check if the same problem occurs again.

OK:

Same problem does not occur.

NG ▶ **REPLACE RADIO RECEIVER**

OK ▶ **END**

Last Modified: 3-10-2010	6.4 C	**From:** 200901
Model Year: 2010	**Model:** Corolla	**Doc ID:** RM00000183T02XX
Title: AUDIO / VIDEO: AUDIO AND VISUAL SYSTEM: 01-D5,01-D8,01-D9,01-DA,01-DB,01-DE: Absence of Registration Unit (2010 Corolla)		

DTC	**01-D5**	**Absence of Registration Unit**

DTC	**01-D8**	**No Response for Connection Check**

DTC	**01-D9**	**Last Mode Error**

DTC	**01-DA**	**No Response Against ON / OFF Command**

DTC	**01-DB**	**Mode Status Error**

DTC	**01-DE**	**Slave Reset**

DESCRIPTION

DTC NO.	DTC DETECTION CONDITION	TROUBLE AREA
01-D5 *1, *3	A device indicated by the sub-code is (was) disconnected from the system while the ignition switch is ON or ACC. The communication condition with the device that the code shows cannot be obtained when the engine starts.	• Power source circuit of the component shown by the sub-code • AVC-LAN circuit between the radio receiver and the component shown by the sub-code • Component shown by the sub-code
01-D8 *2, *3	The device indicated by the sub-code is (was) disconnected from the system after the engine starts.	
01-D9 *1, *3	The device that had functioned before the engine stopped is (was) disconnected from the system	

DTC NO.	DTC DETECTION CONDITION	TROUBLE AREA
	while the ignition switch is ON or ACC.	
01-DA *3	No response is identified when changing mode. Sound and image do not change by switch operation.	
01-DB *1, *3	A dual alarm is detected.	
01-DE *3, *4	A slave device has been disconnected after the engine starts	

HINT:

- *1: Even if no fault is present, this trouble code may be stored depending on the battery condition or engine start voltage.
- *2: If the power connector is disconnected after the engine starts, this code is stored after 180 seconds.
- *3: If the device is reported as not existing during verification, check the power source circuit and AVC-LAN circuit for the device.
- *4: This code may be stored if the engine is started and the ignition switch is turned to START again. (Key type ignition switch only)

NOTICE:

- Before starting troubleshooting, be sure to clear the DTCs stored due to the reasons described in the HINT above. Then, check for DTCs and troubleshoot according to the output DTCs.
- The radio receiver is the master unit.
- Be sure to clear and recheck for the DTCs after the inspection is completed to confirm that no DTCs are output.

INSPECTION PROCEDURE

NOTICE:

Be sure to read Description before performing the following procedures.

PROCEDURE

1.	**CHECK "RADIO RECEIVER COMMUNICATION ERROR" IN FLOW CHART**

Refer to Radio Receiver Communication Error INFO .

NEXT END

Last Modified: 3-10-2010	6.4 C	**From:** 200901
Model Year: 2010	**Model:** Corolla	**Doc ID:** RM00000183V02WX
Title: AUDIO / VIDEO: AUDIO AND VISUAL SYSTEM: 01-DC: Transmission Error (2010 Corolla)		

DTC	**01-DC**	**Transmission Error**

DESCRIPTION

DTC NO.	DTC DETECTION CONDITION	TROUBLE AREA
01-DC *1	Transmission to component shown by sub-code failed (Detecting this DTC does not always mean actual failure)	If the same sub-code is recorded in other components, check power source circuit and communication system of all components shown by code

HINT:

***1: This code may be stored if the engine is started, idled for 60 seconds and then the ignition switch is turned to START again. (Key type ignition switch only)**

NOTICE:

- Before starting troubleshooting, be sure to clear the DTCs stored due to the reasons described in the HINT above. Then, check for DTCs and troubleshoot according to the output DTCs.
- The radio receiver is the master unit.
- Be sure to clear and recheck for the DTCs after the inspection is completed to confirm that no DTCs are output.

INSPECTION PROCEDURE

NOTICE:

Be sure to read Description before performing the following procedures.

PROCEDURE

1.	**CHECK FOR DTC OF OTHER COMPONENTS**

(a) Check if the component shown by the sub-code is displayed in the check result of the other components.

(1) Check if "01-DC" is output for the other components.

(2) If "01-DC" is output for any other components, check if the same physical address is displayed.

Result:

RESULT	PROCEED TO
"01-DC" is output and the same physical address is displayed	A
"01-DC" is not output or the same physical address is not displayed	B

HINT:

For the list of the components shown by sub-codes, refer to the table in step 2.

B ▶ **CLEAR DTC**

A ▼

2.	**IDENTIFY THE COMPONENT WHICH HAS STORED THIS CODE**

(a) Enter the diagnostic mode.

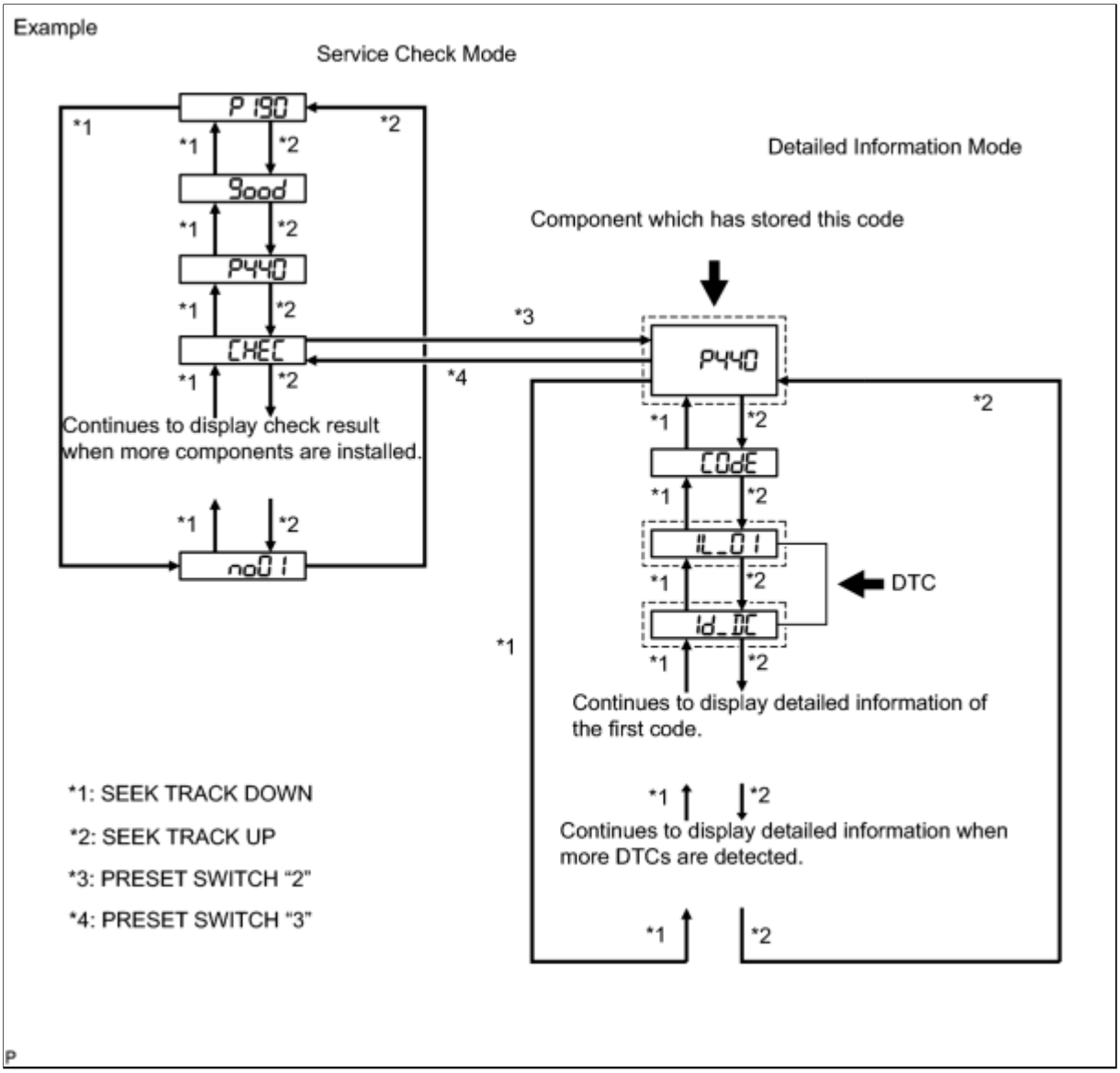

(b) Press the preset switch "3" to change the mode to "Detailed Information Mode".

(c) Identify the component which has stored this code.

Component Table

COMPONENT	PHYSICAL ADDRESS
Stereo component amplifier	440
Radio receiver	190

HINT:

- "P440" set by the stereo component amplifier is shown in the preceding illustration as an example.
- For details of the DTC display, refer to DTC Check/Clear INFO .

NEXT

3.	CHECK COMPONENT WHICH HAS STORED THIS CODE

(a) Select the component which has stored this code.

Component Table

COMPONENT	PROCEED TO
Stereo component amplifier	Stereo component amplifier communication error INFO
Radio receiver	Radio receiver communication error INFO

NEXT **END**

4.	CLEAR DTC

(a) Clear the DTCs INFO .

HINT:

If "01-DC" is output for only one component, this may not indicate a malfunction.

NEXT

5.	RECHECK FOR DTC

(a) Recheck for DTCs and check if the same trouble occurs again.

OK:
Malfunction disappears.

NG **CHECK COMPONENT WHICH HAS STORED THIS CODE**

OK **END**

6.	CHECK COMPONENT WHICH HAS STORED THIS CODE

(a) Select the component which has stored this code.

Component Table

COMPONENT	PROCEED TO
Stereo component amplifier	Stereo component amplifier communication error INFO
Radio receiver	Radio receiver communication error INFO

NEXT END

Last Modified: 3-10-2010	6.4 C	**From:** 200901
Model Year: 2010	**Model:** Corolla	**Doc ID:** RM00000183W02ZX
Title: AUDIO / VIDEO: AUDIO AND VISUAL SYSTEM: 01-DD,01-E1: Master Reset (2010 Corolla)		

DTC	**01-DD**	**Master Reset**

DTC	**01-E1**	**Voice Processing Device ON Error**

DESCRIPTION

DTC NO.	DTC DETECTION CONDITION	TROUBLE AREA
01-DD *1	The device that should be the master has been disconnected after engine start.	• Radio receiver power source circuit • AVC-LAN circuit between the radio receiver and the component which has stored this code • Radio receiver • Component which has stored this code
01-E1 *2	The AMP device records that the AMP output does not function even while the source device operates.	

HINT:

***1: This code may be stored if the engine is started and the ignition switch is turned to START again. (Key type ignition switch only)**

***2: Even if no fault is present, this trouble code may be stored depending on the battery condition or engine start voltage.**

NOTICE:

- Before starting troubleshooting, be sure to clear the DTCs stored due to the reasons described in the HINT above. Then, check for DTCs and troubleshoot according to the output DTCs.
- The radio receiver is the master unit.
- Be sure to clear and recheck for the DTCs after the inspection is completed to confirm that no DTCs are output.

INSPECTION PROCEDURE

NOTICE:

Be sure to read Description before performing the following procedures.

PROCEDURE

1.	CHECK RADIO RECEIVER POWER SOURCE CIRCUIT

Refer to Radio Receiver Power Source Circuit INFO .

If the power source circuit is operating normally, proceed to the next step.

NEXT

2.	INSPECT RADIO RECEIVER

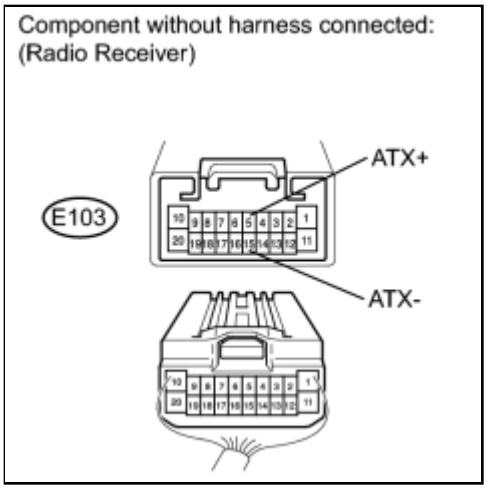

(a) Disconnect the radio receiver connector.

(b) Measure the resistance according to the value(s) in the table below.

Standard Resistance:

TESTER CONNECTION	CONDITION	SPECIFIED CONDITION
E103-5 (ATX+) - E103-15 (ATX-)	Always	60 to 80 Ω

NG ▶ **REPLACE RADIO RECEIVER**

OK

3.	IDENTIFY THE COMPONENT WHICH HAS STORED THIS CODE

(a) Enter the diagnostic mode.

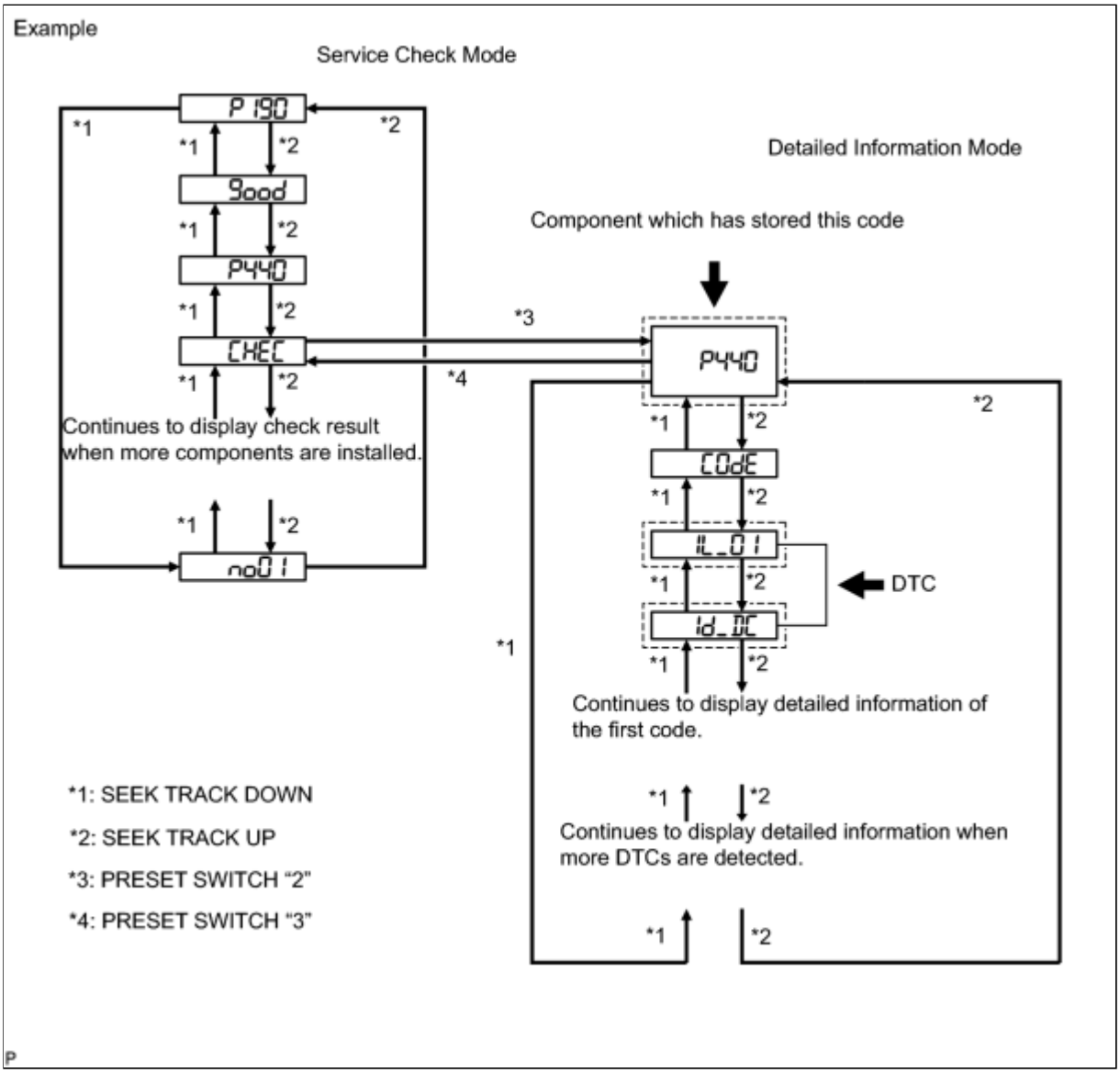

(b) Press the preset switch "3" to change the mode to "Detailed Information Mode".

(c) Identify the component which has stored this code.

Component Table

COMPONENT	PHYSICAL ADDRESS
Stereo component amplifier	440

HINT:

- "P440" set by the stereo component amplifier is shown in the preceding illustration as an example.
- For details of the DTC display, refer to DTC Check/Clear INFO .

NEXT

4.	**CHECK HARNESS AND CONNECTOR (RADIO RECEIVER - COMPONENT WHICH HAS STORED THIS CODE)**

HINT:

For details of the connectors, refer to Terminals of ECU INFO .

(a) Referring to the following AVC-LAN Wiring Diagram, check the AVC-LAN circuit between the radio receiver and the component which has stored this code.

(1) Disconnect all connectors between the radio receiver and the component which has stored this code.

(2) Check for an open or short in the AVC-LAN circuit between the radio receiver and the component which has stored this code.

OK:

There is no open or short circuit.

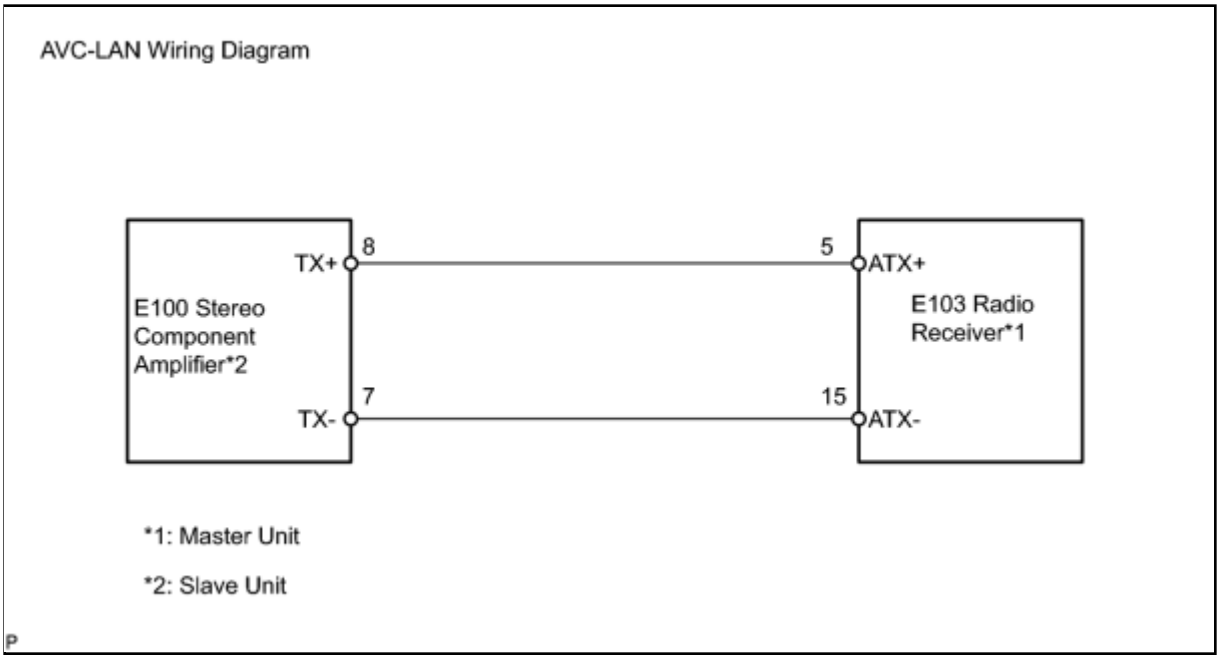

NG **REPAIR OR REPLACE HARNESS OR CONNECTOR**

OK

5.	**REPLACE RADIO RECEIVER**

(a) Replace the radio receiver with a known good one and check if the same problem occurs again.

OK:

Same problem does not occur.

NG → **REPLACE COMPONENT WHICH HAS STORED THIS CODE**

OK → **END**

Last Modified: 3-10-2010	6.4 C	**From:** 200901
Model Year: 2010	**Model:** Corolla	**Doc ID:** RM00000183X02ZX
Title: AUDIO / VIDEO: AUDIO AND VISUAL SYSTEM: 01-DF: Master Error (2010 Corolla)		

DTC	**01-DF**	**Master Error**

DESCRIPTION

DTC NO.	DTC DETECTION CONDITION	TROUBLE AREA
01-DF *1	The device with a display fails and the master is switched to the audio device. Also when a communication error between the sub-master (audio) and master occurs, this code is stored.	• Radio receiver power source circuit • AVC-LAN circuit between the radio receiver and the component which has stored this code • Radio receiver • Component which has stored this code

HINT:

***1: When 210 seconds have elapsed after disconnecting the power supply connector of the master component with the ignition switch ON or ACC, this code is stored.**

NOTICE:

- Before starting troubleshooting, be sure to clear the DTCs stored due to the reasons described in the HINT above. Then, check for DTCs and troubleshoot according to the output DTCs.
- The radio receiver is the master unit.
- Be sure to clear and recheck for the DTCs after the inspection is completed to confirm that no DTCs are output.

INSPECTION PROCEDURE

NOTICE:

Be sure to read Description before performing the following procedures.

PROCEDURE

1.	**CHECK RADIO RECEIVER POWER SOURCE CIRCUIT**

Refer to Radio Receiver Power Source Circuit INFO .

If the power source circuit is operating normally, proceed to the next step.

NEXT

2.	**INSPECT RADIO RECEIVER**

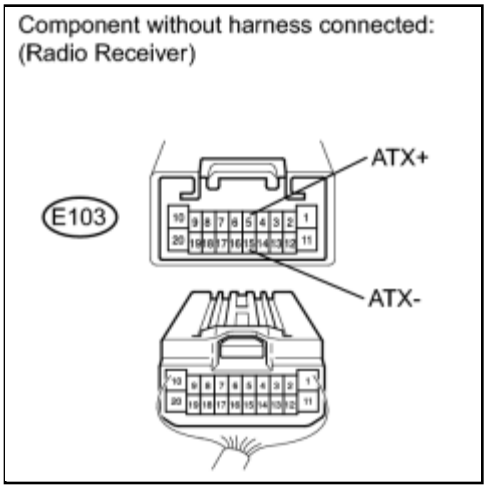

(a) Disconnect the radio receiver connector.

(b) Measure the resistance according to the value(s) in the table below.

Standard Resistance:

TESTER CONNECTION	CONDITION	SPECIFIED CONDITION
E103-5 (ATX+) - E103-15 (ATX-)	Always	60 to 80 Ω

NG ▶ **REPLACE RADIO RECEIVER**

OK

3.	**IDENTIFY THE COMPONENT WHICH HAS STORED THIS CODE**

(a) Enter the diagnostic mode.

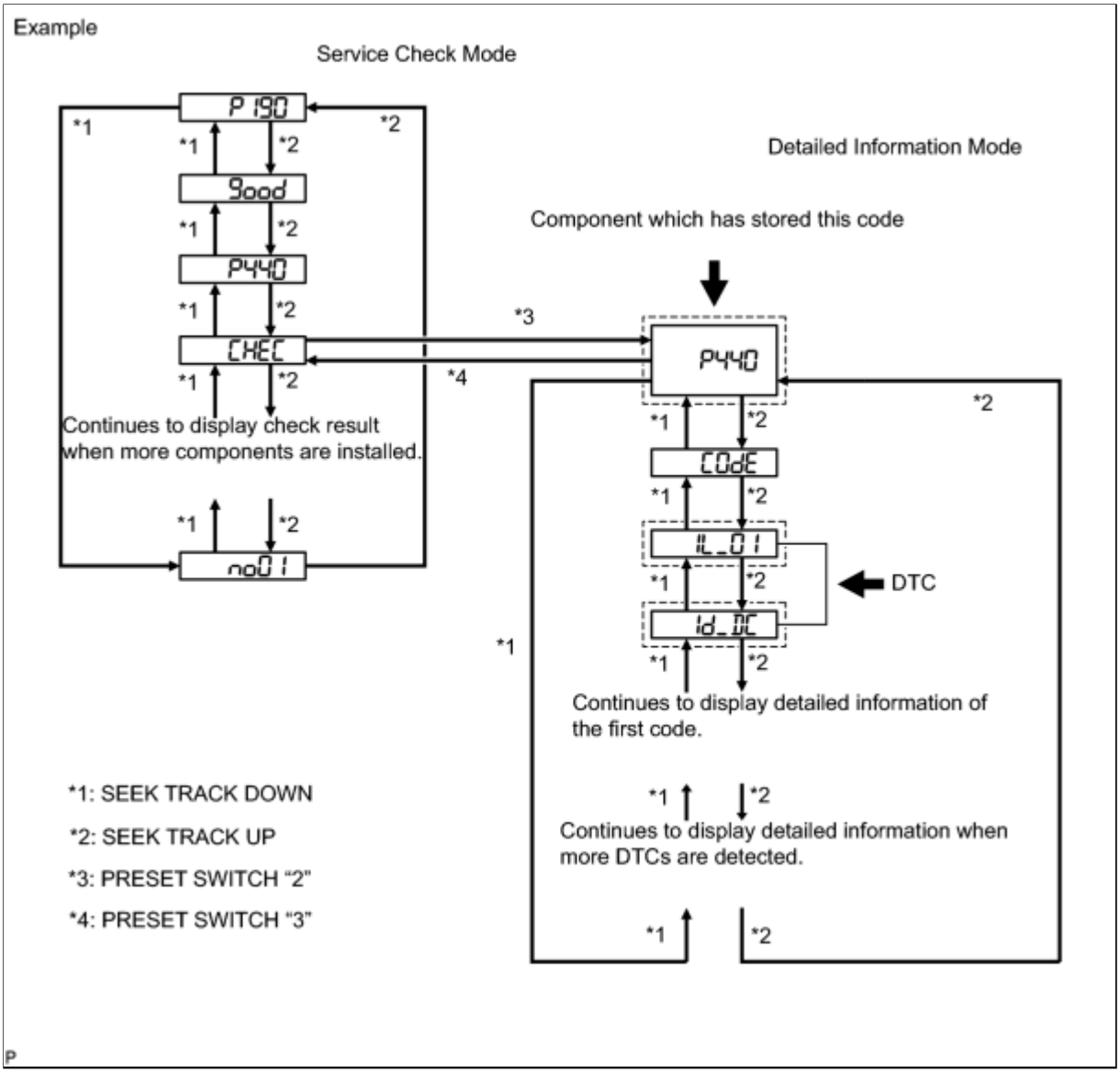

(b) Press the preset switch "3" to change the mode to "Detailed Information Mode".

(c) Identify the component which has stored this code.

Component Table

COMPONENT	PHYSICAL ADDRESS
Stereo component amplifier	440

HINT:

- "P440" set by the stereo component amplifier is shown in the preceding illustration as an example.
- For details of the DTC display, refer to DTC Check/Clear INFO .

NEXT

4.	**CHECK HARNESS AND CONNECTOR (RADIO RECEIVER - COMPONENT WHICH HAS STORED THIS CODE)**

HINT:

For details of the connectors, refer to Terminals of ECU INFO **.**

(a) Referring to the following AVC-LAN Wiring Diagram, check the AVC-LAN circuit between the radio receiver and the component which has stored this code.

(1) Disconnect all connectors between the radio receiver and the component which has stored this code.

(2) Check for an open or short in the AVC-LAN circuit between the radio receiver and the component which has stored this code.

OK:

There is no open or short circuit.

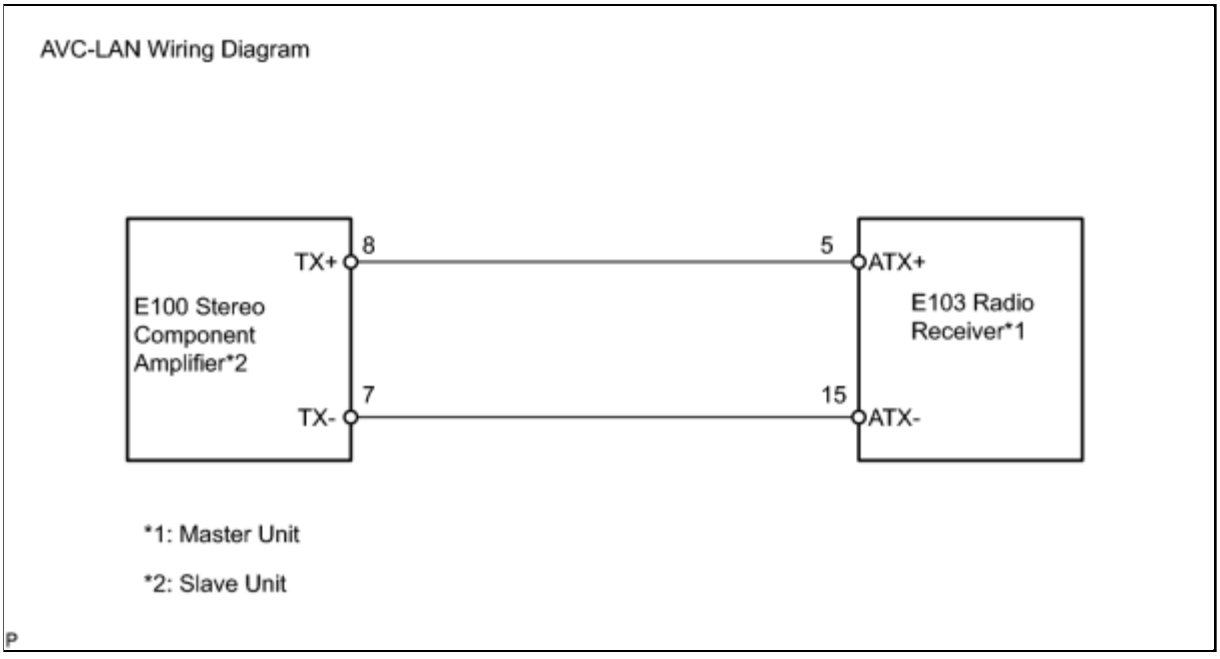

NG **REPAIR OR REPLACE HARNESS OR CONNECTOR**

OK

5.	**REPLACE RADIO RECEIVER**

(a) Replace the radio receiver with a known good one and check if the same problem occurs again.

OK:

Same problem does not occur.

NG ▶ **REPLACE COMPONENT WHICH HAS STORED THIS CODE**

OK ▶ **END**

Last Modified: 3-10-2010	6.4 C	**From:** 200901
Model Year: 2010	**Model:** Corolla	**Doc ID:** RM000001WQS02HX
Title: AUDIO / VIDEO: AUDIO AND VISUAL SYSTEM: 01-E0,01-E3,01-E4: Registration Complete Indication Error (2010 Corolla)		

DTC	**01-E0**	**Registration Complete Indication Error**

DTC	**01-E3**	**Registration Demand Transmission**

DTC	**01-E4**	**Multiple Frame Incomplete**

DESCRIPTION

DTC NO.	DTC DETECTION CONDITION	TROUBLE AREA
01-E0	"Registration complete" signal from the master device cannot be received.	-
01-E3	The registration demand signal from the slave device is output. Or the registration demand signal is output by receiving connection confirmation signal from the sub-master device.	-
01-E4	The multiple frame transmission is incomplete.	-

HINT:

Even if no fault is present, this trouble code may be stored depending on the battery condition or engine start voltage.

INSPECTION PROCEDURE

HINT:

After the inspection is completed, clear the DTCs. These DTCs do not indicate a malfunction.

Last Modified: 3-10-2010	6.4 C	**From:** 200901
Model Year: 2010	**Model:** Corolla	**Doc ID:** RM0000183Z02VX
Title: AUDIO / VIDEO: AUDIO AND VISUAL SYSTEM: 01-E2: ON / OFF Indication Parameter Error (2010 Corolla)		

DTC	**01-E2**	**ON / OFF Indication Parameter Error**

DESCRIPTION

DTC NO.	DTC DETECTION CONDITION	TROUBLE AREA
01-E2	The command for ON/OFF control from the master device has a problem.	Radio receiver

INSPECTION PROCEDURE

HINT:

After the inspection is completed, clear the DTCs.

PROCEDURE

1.	**REPLACE RADIO RECEIVER**

HINT:

Removal INFO

TOYOTA

Last Modified: 3-10-2010	6.4 C	**From:** 200901
Model Year: 2010	**Model:** Corolla	**Doc ID:** RM000001WWI00MX
Title: AUDIO / VIDEO: AUDIO AND VISUAL SYSTEM: 01-F2,01-FF: No Response from Diagnosis Memory Request (2010 Corolla)		

DTC	**01-F2**	**No Response from Diagnosis Memory Request**

DTC	**01-FF**	**No Response to Diagnosis Request**

DESCRIPTION

DTC NO.	DTC DETECTION CONDITION	TROUBLE AREA
01-F2	Any reply to a system inspection instruction, system inspection result request or diagnosis memory request could not be completed within a designated time.	Stereo component amplifier
01-FF	No response to a diagnosis request	

INSPECTION PROCEDURE

HINT:

After the inspection is completed, clear the DTCs.

PROCEDURE

1.	**CLEAR DTC**

(a) Clear the DTC INFO .

NEXT

2.	**RECHECK FOR DTC**

(a) Recheck for DTCs and check if the same trouble occurs again.

OK:

Malfunction disappears.

NG ▶ **REPLACE STEREO COMPONENT AMPLIFIER**

OK ▶ **END**

Last Modified: 3-10-2010	6.4 C	**From:** 200901
Model Year: 2010	**Model:** Corolla	**Doc ID:** RM000001YYZ05JX
Title: AUDIO / VIDEO: AUDIO AND VISUAL SYSTEM: 57-47: Bluetooth Module Initialization Failed (2010 Corolla)		

DTC	**57-47**	**Bluetooth Module Initialization Failed**

DESCRIPTION

DTC NO.	DTC DETECTION CONDITION	TROUBLE AREA
57-47	• "Bluetooth" module is not installed. • Problem with "Bluetooth" module • Problem in communication line to "Bluetooth" module	Radio receiver

INSPECTION PROCEDURE

HINT:

After the inspection is completed, clear the DTCs.

PROCEDURE

1.	**REPLACE RADIO RECEIVER**

HINT:

Removal INFO

Last Modified: 3-10-2010	6.4 C	**From:** 200901
Model Year: 2010	**Model:** Corolla	**Doc ID:** RM00000200N02HX
Title: AUDIO / VIDEO: AUDIO AND VISUAL SYSTEM: 60-10,60-11: AM Tuner PLL does not Lock (2010 Corolla)		

DTC	**60-10**	**AM Tuner PLL does not Lock**

DTC	**60-11**	**FM Tuner PLL does not Lock**

DESCRIPTION

DTC NO.	DTC DETECTION CONDITION	TROUBLE AREA
60-10	AM tuner PLL (phase locked loop) synchronization is impossible.	Radio receiver
60-11	FM tuner PLL (phase locked loop) synchronization is impossible.	

INSPECTION PROCEDURE

HINT:

After the inspection is completed, clear the DTCs.

PROCEDURE

1.	**REPLACE RADIO RECEIVER**

HINT:

Removal INFO

Last Modified: 3-10-2010	6.4 C	**From:** 200901
Model Year: 2010	**Model:** Corolla	**Doc ID:** RM00000200Q02NX
Title: AUDIO / VIDEO: AUDIO AND VISUAL SYSTEM: 60-42-60-44,60-50: Tuner Power Source Error (2010 Corolla)		

DTC	**60-42**	**Tuner Power Source Error**

DTC	**60-43**	**AM Tuner Error**

DTC	**60-44**	**FM Tuner Error**

DTC	**60-50**	**Malfunction in Internal IC**

DESCRIPTION

DTC NO.	DTC DETECTION CONDITION	TROUBLE AREA
60-42	The power source of the tuner is abnormal.	Radio receiver
60-43	The AM tuner is abnormal.	
60-44	The FM tuner is abnormal.	
60-50	A problem occurs in the IC inside the tuner unit and radio reception is not normal.	

INSPECTION PROCEDURE

HINT:

After the inspection is completed, clear the DTCs.

PROCEDURE

1.	**CLEAR DTC**

(a) Clear the DTCs INFO.

NEXT

2.	**RECHECK FOR DTC**

(a) Recheck for DTCs and check if the same trouble occurs again.

HINT:

If DTCs are detected frequently, replace the radio receiver.

OK:
Malfunction disappears.

NG ▶ **REPLACE RADIO RECEIVER**

OK ▶ **END**

Last Modified: 3-10-2010	6.4 C	**From:** 200901
Model Year: 2010	**Model:** Corolla	**Doc ID:** RM0000020EW01JX
Title: AUDIO / VIDEO: AUDIO AND VISUAL SYSTEM: 62-10-62-12,63-10-63-12: CD Player Mechanical Error (2010 Corolla)		

DTC	**62-10**	**CD Player Mechanical Error**

DTC	**62-11**	**CD Insertion and Ejection Error**

DTC	**62-12**	**CD Reading Abnormal**

DTC	**63-10**	**CD Changer Mechanical Error**

DTC	**63-11**	**CD Insertion and Ejection Error**

DTC	**63-12**	**CD Reading Abnormal**

DESCRIPTION

DTC NO.	DTC DETECTION CONDITION	TROUBLE AREA
62-10	A mechanical error in the CD player is detected while the CD is not being inserted or ejected.	Radio receiver
62-11	CDs cannot be inserted or ejected.	
62-12	CD read problem occurs.	
63-10	A mechanical error in the CD changer is detected while the CD is not being inserted or ejected.	
63-11	CDs cannot be inserted or ejected.	
63-12	CD read problem occurs.	

INSPECTION PROCEDURE

HINT:

After the inspection is completed, clear the DTCs.

PROCEDURE

1.	**REPLACE RADIO RECEIVER**

HINT:

Removal INFO

NEXT END

Last Modified: 3-10-2010	6.4 C	**From:** 200901
Model Year: 2010	**Model:** Corolla	**Doc ID:** RM0000020EY01JX
Title: AUDIO / VIDEO: AUDIO AND VISUAL SYSTEM: 62-41,62-42,63-41,63-42: Wrong Disc (2010 Corolla)		

DTC	**62-41**	**Wrong Disc**

DTC	**62-42**	**Disc cannot be Read**

DTC	**63-41**	**Wrong Disc**

DTC	**63-42**	**Disc cannot be Read**

DESCRIPTION

DTC NO.	DTC DETECTION CONDITION	TROUBLE AREA
62-41	An unsuitable disc is inserted.	• CD • Radio receiver
62-42	The disc cannot be read.	
63-41	An unsuitable disc is inserted.	
63-42	The disc cannot be read.	

INSPECTION PROCEDURE

HINT:

After the inspection is completed, clear the DTCs.

PROCEDURE

1.	**CHECK DISC**

(a) Check that the disc is not deformed or cracked.

OK:

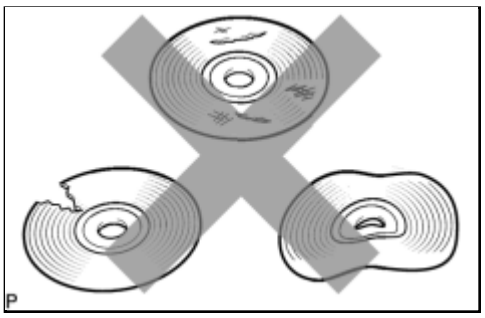

No deformation or cracks on the disc.

NG ▶ **CHANGE DISC**

OK
▼

2.	**DISC CLEANING**

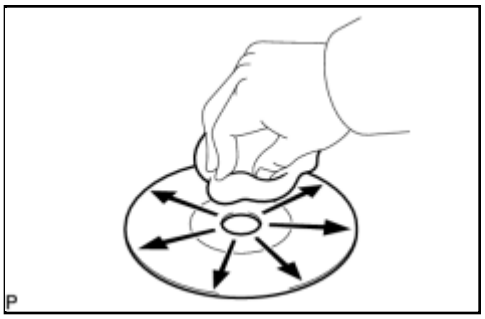

(a) Disc cleaning

(1) If dirt is on the disc surface, wipe it clean with a soft cloth from the inside to the outside in a radial direction.

NOTICE:

Do not use a conventional record cleaner or anti-static preservative.

NEXT
▼

3.	**CLEAR DTC**

(a) Clear the DTCs INFO .

NEXT
▼

4.	RECHECK FOR DTC

(a) Recheck for DTCs and check if the same trouble occurs again.

OK:
Malfunction disappears.

NG ▶ **REPLACE DISC AND RECHECK**

OK ▶ **END**

5.	REPLACE DISC AND RECHECK

(a) Replace the disc and recheck.

(1) Replace the disc with a known good one.

(2) Clear the DTCs [INFO] .

(3) Recheck for DTCs and check if the same trouble occurs again.

OK:
Malfunction disappears.

NG ▶ **REPLACE RADIO RECEIVER**

OK ▶ **END**

Last Modified: 3-10-2010	6.4 C	**From:** 200901
Model Year: 2010	**Model:** Corolla	**Doc ID:** RM0000020EZ01JX
Title: AUDIO / VIDEO: AUDIO AND VISUAL SYSTEM: 62-43,63-43: CD-ROM Abnormal (2010 Corolla)		

DTC	**62-43**	**CD-ROM Abnormal**

DTC	**63-43**	**CD-ROM Abnormal**

DESCRIPTION

DTC NO.	DTC DETECTION CONDITION	TROUBLE AREA
62-43	CD-ROM operation is abnormal	• CD • Radio receiver
63-43	CD-ROM operation is abnormal	

INSPECTION PROCEDURE

HINT:

After the inspection is completed, clear the DTCs.

PROCEDURE

1.	**CHECK IF A PROPER CD IS INSERTED**

(a) Make sure that the CD is an audio CD or a CD with MP3 or WMA files, and that it is not deformed, flawed, stained, burred, or otherwise defective.

OK:

Normal CD

HINT:

- Translucent or uniquely-shaped CDs cannot be played.
- CDs with adhesive paper labels should not be played.
- Commercial audio CDs can be played.
- CD-DA files on CD-ROMs, CD-Rs, and CD-RWs can be played.
- MP3 and WMA files on CD-ROMs, CD-Rs, and CD-RWs can be played.
- For details on playable CDs, refer to the Owner's Manual.

NG ▶ CHANGE DISC

OK ▼

2.	REPLACE CD AND RECHECK

(a) Replace the CD and recheck.

(1) Replace the CD with a known good one.

(2) Clear the DTCs [INFO] .

(3) Recheck for DTCs and check if the same trouble occurs again.

OK:
Malfunction disappears.

NG ▶ REPLACE RADIO RECEIVER

OK ▶ END

Last Modified: 3-10-2010	6.4 C	**From:** 200901
Model Year: 2010	**Model:** Corolla	**Doc ID:** RM0000020F001JX
Title: AUDIO / VIDEO: AUDIO AND VISUAL SYSTEM: 62-44,62-48,62-50,63-44,63-48,63-50: CD Abnormal (2010 Corolla)		

DTC	**62-44**	**CD Abnormal**

DTC	**62-48**	**Excess Current**

DTC	**62-50**	**Tray Insertion / Ejection Error**

DTC	**63-44**	**CD Abnormal**

DTC	**63-48**	**Excess Current**

DTC	**63-50**	**Tray Insertion / Ejection Error**

DESCRIPTION

DTC NO.	DTC DETECTION CONDITION	TROUBLE AREA
62-44	Operation error in the CD mechanism	Radio receiver
62-48	Excess current is present in the CD player	
62-50	Malfunction in insertion/ejection system	
63-44	Operation error in the CD mechanism	
63-48	Excess current is present in the CD changer	
63-50	Malfunction in insertion/ejection system	

INSPECTION PROCEDURE

HINT:

After the inspection is completed, clear the DTCs.

PROCEDURE

1.	**CLEAR DTC**

(a) Clear the DTCs INFO .

NEXT

2.	**RECHECK FOR DTC**

(a) Recheck for DTCs and check if the same trouble occurs again.

HINT:

If DTCs are detected frequently, replace the radio receiver.

OK:
Malfunction disappears.

NG ▶ **REPLACE RADIO RECEIVER**

OK ▶ **END**

Last Modified: 3-10-2010	6.4 C	**From:** 200901
Model Year: 2010	**Model:** Corolla	**Doc ID:** RM0000020F101JX
Title: AUDIO / VIDEO: AUDIO AND VISUAL SYSTEM: 62-45,62-51,62-52,63-45,63-51,63-52: Eject Error (2010 Corolla)		

DTC	**62-45**	**Eject Error**

DTC	**62-51**	**Elevator Error**

DTC	**62-52**	**Clamp Error**

DTC	**63-45**	**Eject Error**

DTC	**63-51**	**Elevator Error**

DTC	**63-52**	**Clamp Error**

DESCRIPTION

DTC NO.	DTC DETECTION CONDITION	TROUBLE AREA
62-45	Disc cannot be ejected.	Radio receiver
62-51	Mechanical error occurs during elevator operation.	
62-52	Error occurs in CD player clamp.	
63-45	Magazine cannot be ejected.	
63-51	Mechanical error occurs during elevator operation.	
63-52	Error occurs in CD changer clamp.	

INSPECTION PROCEDURE

HINT:

After the inspection is completed, clear the DTCs.

PROCEDURE

1.	**CHECK RADIO RECEIVER**

(a) Check if a disc can be changed, inserted or ejected normally.

OK:

Malfunction disappears.

NG ▶ **REPLACE RADIO RECEIVER**

OK ▶ **END**

Last Modified: 3-10-2010	6.4 C	**From:** 200901
Model Year: 2010	**Model:** Corolla	**Doc ID:** RM0000020F201JX
Title: AUDIO / VIDEO: AUDIO AND VISUAL SYSTEM: 62-46,63-46: Scratched / Reversed Disc (2010 Corolla)		

DTC	**62-46**	**Scratched / Reversed Disc**

DTC	**63-46**	**Scratched / Reversed Disc**

DESCRIPTION

DTC NO.	DTC DETECTION CONDITION	TROUBLE AREA
62-46	Scratches or dirt is found on CD surface or CD is set upside down.	• CD • Radio receiver
63-46	Scratches or dirt is found on CD surface or CD is set upside down.	

INSPECTION PROCEDURE

HINT:

After the inspection is completed, clear the DTCs.

PROCEDURE

1.	**CHECK THAT CD IS INSERTED PROPERLY**

(a) Check whether or not the CD is inserted upside down.

OK:

CD is properly inserted.

NG ▶ **REPLACE CD AND RECHECK**

OK ▼

2.	CHECK DISC

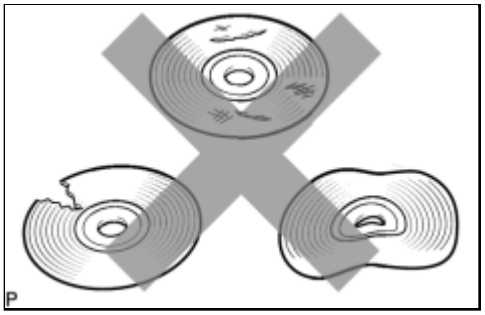

(a) Check that the disc is not deformed or cracked.

OK:

No deformation or cracks on the disc.

NG ▶ **CHANGE DISC**

OK
▼

3.	DISC CLEANING

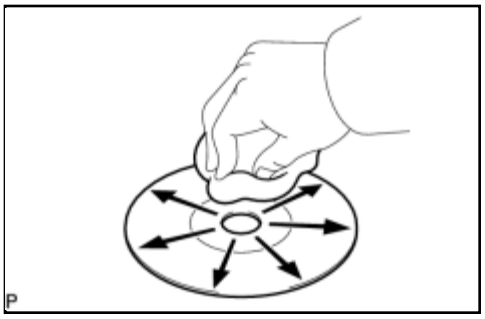

(a) Disc cleaning

(1) If dirt is on the disc surface, wipe it clean with a soft cloth from the inside to the outside in a radial direction.

NOTICE:

Do not use a conventional record cleaner or anti-static preservative.

NEXT
▼

4.	CLEAR DTC

(a) Clear the DTCs INFO .

NEXT

5.	RECHECK FOR DTC

(a) Recheck for DTCs and check if the same trouble occurs again.

OK:

Malfunction disappears.

NG ▶ **REPLACE CD AND RECHECK**

OK ▶ **END**

6.	REPLACE CD AND RECHECK

(a) Replace the disc and recheck.

(1) Replace the disc with a known good one.

(2) Clear the DTCs INFO .

(3) Recheck for DTCs and check if the same trouble occurs again.

OK:

Malfunction disappears.

NG ▶ **REPLACE RADIO RECEIVER**

OK ▶ **END**

Last Modified: 3-10-2010	6.4 C	**From:** 200901
Model Year: 2010	**Model:** Corolla	**Doc ID:** RM0000020F301JX
Title: AUDIO / VIDEO: AUDIO AND VISUAL SYSTEM: 62-47,63-47: High Temperature (2010 Corolla)		

DTC	**62-47**	**High Temperature**

DTC	**63-47**	**High Temperature**

DESCRIPTION

DTC NO.	DTC DETECTION CONDITION	TROUBLE AREA
62-47	Sensor detects that CD unit temperature is high. (Over 80°C (176°F))	Radio receiver
63-47	Sensor detects that CD unit temperature is high. (Over 80°C (176°F))	

INSPECTION PROCEDURE

HINT:

After the inspection is completed, clear the DTCs.

PROCEDURE

1.	**CHECK RADIO RECEIVER**

(a) Park the vehicle in a cool place.

(b) Operate the radio receiver after it has sufficiently cooled down. Check that the malfunction disappears.

OK:

Malfunction disappears.

NG ▶ **REPLACE RADIO RECEIVER**

OK ▶ **END**

Last Modified: 3-10-2010	6.4 C	**From:** 200901
Model Year: 2010	**Model:** Corolla	**Doc ID:** RM0000020FB019X
Title: AUDIO / VIDEO: AUDIO AND VISUAL SYSTEM: 62-78,63-78: DSP Error (2010 Corolla)		

DTC	**62-78**	**DSP Error**

DTC	**63-78**	**DSP Error**

DESCRIPTION

DTC NO.	DTC DETECTION CONDITION	TROUBLE AREA
62-78	An error occurs during the decode process (MP3/WMA).	-
63-78	An error occurs during the decode process (MP3/WMA).	-

INSPECTION PROCEDURE

HINT:

After the inspection is completed, clear the DTCs.

NOTICE:

- These codes may be output even if there is no malfunction.
- If these codes are output frequently, replace the radio receiver.

PROCEDURE

1.	**CLEAR DTC**

(a) Clear the DTCs INFO .

NEXT

2.	**RECHECK FOR DTC**

(a) Recheck for DTCs and check if the same trouble occurs again.

OK:

Malfunction disappears.

NG ▶ **REPLACE RADIO RECEIVER**

OK ▶ **END**

Last Modified: 3-10-2010	6.4 C	**From:** 200901
Model Year: 2010	**Model:** Corolla	**Doc ID:** RM0000020S4019X
Title: AUDIO / VIDEO: AUDIO AND VISUAL SYSTEM: 62-7D-62-7F,63-7D-63-7F: Disc cannot be Played (2010 Corolla)		

DTC	**62-7D**	**Disc cannot be Played**

DTC	**62-7E**	**No Playable Files**

DTC	**62-7F**	**Copyright Protection Error**

DTC	**63-7D**	**Disc cannot be Played**

DTC	**63-7E**	**No Playable Files**

DTC	**63-7F**	**Copyright Protection Error**

DESCRIPTION

DTC NO.	DTC DETECTION CONDITION	TROUBLE AREA
62-7D	• An incompatible MP3/WMA file is used. • Although the file has an extension of ".mp3" or ".wma", the header information cannot be read.	• CD • Radio receiver
62-7E	• A disc with no music data is used. • Playable files are not on the disc (MP3/WMA).	
62-7F	A copy-protected file, which cannot be played, is used.	
63-7D	• An incompatible MP3/WMA file is used • Although the file has an extension of ".mp3" or ".wma", the	

DTC NO.	DTC DETECTION CONDITION	TROUBLE AREA
	header information cannot be read.	
63-7E	• A disc with no music data is used. • Playable files are not on the disc (MP3/WMA).	
63-7F	A copy-protected file, which cannot be played, is used.	

INSPECTION PROCEDURE

HINT:

After the inspection is completed, clear the DTCs.

PROCEDURE

1.	**CHANGE DISC**

(a) Insert a disc with a playable file and check if the disc can be played correctly.

HINT:

For details on playable files and discs, refer to the Owner's Manual.

OK:
The disc can be played correctly.

NG ▶ **REPLACE RADIO RECEIVER**

OK ▶ **END**

Last Modified: 3-10-2010	6.4 C	**From:** 200901
Model Year: 2010	**Model:** Corolla	**Doc ID:** RM000001YYR02LX
Title: AUDIO / VIDEO: AUDIO AND VISUAL SYSTEM: C0-11-C0-16: Satellite Radio Tuner Internal Circuit Error 1 (2010 Corolla)		

DTC	**C0-11**	**Satellite Radio Tuner Internal Circuit Error 1**

DTC	**C0-12**	**Satellite Radio Tuner Internal Circuit Error 2**

DTC	**C0-13**	**Satellite Radio Tuner Internal Circuit Error 3**

DTC	**C0-14**	**Satellite Radio Tuner Internal Circuit Error 4**

DTC	**C0-15**	**Satellite Radio Tuner Internal Circuit Error 5**

DTC	**C0-16**	**Satellite Radio Tuner Internal Circuit Error 6**

DESCRIPTION

DTC NO.	DTC DETECTION CONDITION	TROUBLE AREA
C0-11	Tuner PLL synchronization is impossible.	Radio receiver
C0-12	A communication error occurred in CDED.	
C0-13	A communication error occurred in SSDEC.	
C0-14	Received no response from SSDEC.	
C0-15	An error occurred in CAP internal NVM.	
C0-16	An error occurred in CAP.	

INSPECTION PROCEDURE

HINT:

After the inspection is completed, clear the DTCs.

PROCEDURE

1.	**REPLACE RADIO RECEIVER**

HINT:

Removal INFO

NEXT END

Last Modified: 3-10-2010	6.4 C	**From:** 200901
Model Year: 2010	**Model:** Corolla	**Doc ID:** RM00000182T04KX
Title: AUDIO / VIDEO: AUDIO AND VISUAL SYSTEM: C0-40,C0-41: Antenna not Connected (2010 Corolla)		

DTC	**C0-40**	**Antenna not Connected**

DTC	**C0-41**	**Antenna Shorted**

DESCRIPTION

DTC NO.	DTC DETECTION CONDITION	TROUBLE AREA
C0-40	Antenna is not connected	• Antenna cord • Satellite radio antenna • Radio receiver
C0-41	Short in antenna circuit	

INSPECTION PROCEDURE

HINT:

After the inspection is completed, clear the DTCs.

PROCEDURE

1.	**CHECK CONNECTOR CONNECTION CONDITION**

(a) Check that the satellite radio antenna cord is securely connected to the radio receiver connector.

OK:

The cord is securely connected.

NG ▶ **RECONNECT CONNECTOR CORRECTLY**

OK ▼

2.	CHECK ANTENNA CORD

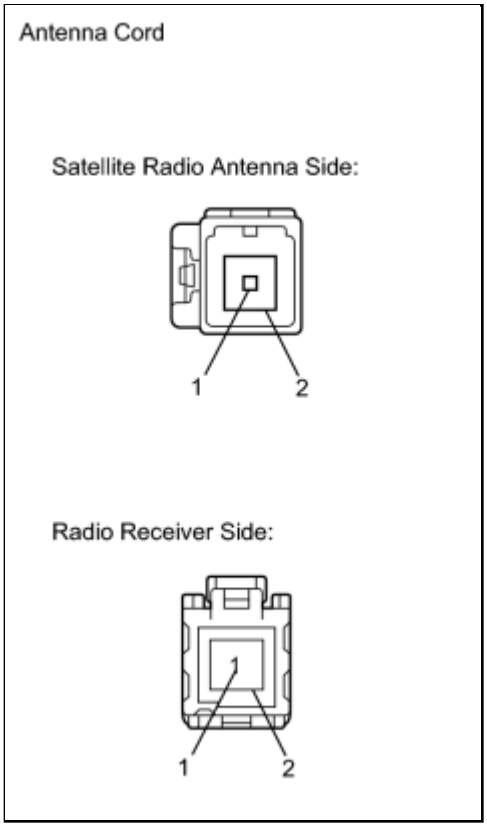

(a) Disconnect the satellite radio antenna connector and the radio receiver connector.

(b) Measure the resistance according to the value(s) in the table below.

Standard Resistance:

TESTER CONNECTION	CONDITION	SPECIFIED CONDITION
1 - 1	Always	Below 1 Ω
2 - 2	Always	Below 1 Ω
1 - Body ground	Always	10 kΩ or higher
2 - Body ground	Always	10 kΩ or higher

NG ▶ **REPAIR OR REPLACE ANTENNA CORD**

OK ▼

3.	INSPECT SATELLITE RADIO ANTENNA

Component without harness connected:
(Satellite Radio Antenna)

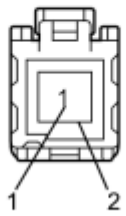

(a) Disconnect the satellite radio antenna connector.

(b) Measure the resistance according to the value(s) in the table below.

Standard Resistance:

TESTER CONNECTION	CONDITION	SPECIFIED CONDITION
1 - 2	Always	27.5 to 47.5 Ω

NG ▶ **REPLACE SATELLITE RADIO ANTENNA**

OK ▼

4.	REPLACE RADIO RECEIVER

(a) Replace the radio receiver with a known good one and check if the same problem occurs again.

(1) Clear the DTCs INFO .

(2) Recheck for DTCs and check if the same trouble occurs again.

OK:

Same problem does not occur.

NG ▶ **REPLACE SATELLITE RADIO ANTENNA**


OK
END
TOYOTA

Last Modified: 3-10-2010	6.4 J	**From:** 200901
Model Year: 2010	**Model:** Corolla	**Doc ID:** RM000003UTY005X
Title: AUDIO / VIDEO: AUDIO AND VISUAL SYSTEM: Satellite Radio Broadcast cannot be Received (2010 Corolla)		

Satellite Radio Broadcast cannot be Received

INSPECTION PROCEDURE

NOTICE:

- Some satellite radio broadcast require payment. A contract must be made between a satellite radio company and the user. If the contract expires, the broadcast will not be able to be listened to or viewed.
- After replacing the radio receiver assembly of vehicles subscribed to pay-type satellite radio broadcasts, the XM Radio ID registration is necessary.

PROCEDURE

1.	**CHECK SURROUNDINGS**

(a) Check if the vehicle is in an environment where reception is difficult due to something blocking the area above the vehicle.

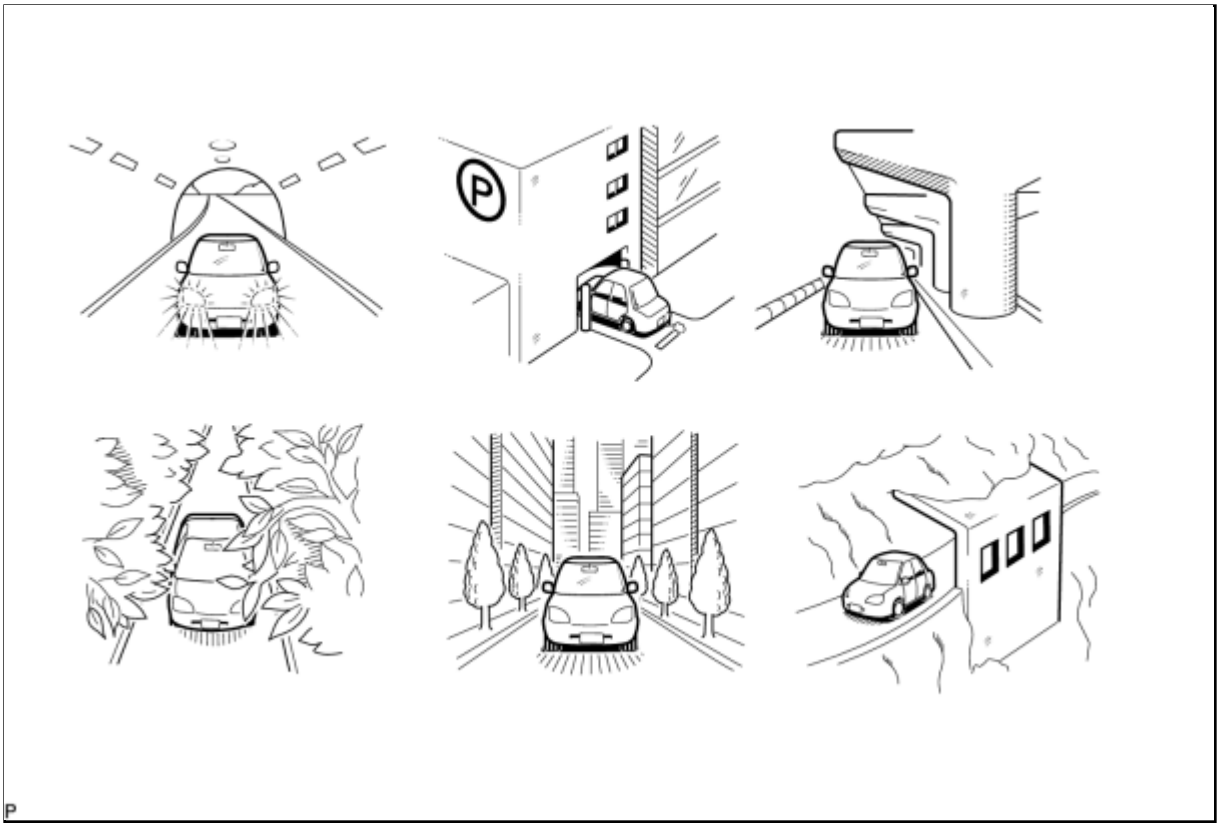

HINT:

If the area above the vehicle is blocked, such as when in a building or tunnel, reception may not be possible.

OK:
Area above the vehicle is not blocked.

NG ▶ **END (MOVE VEHICLE TO LOCATION WHERE RECEPTION IS BETTER)**

OK ▼

2.	**CHECK RADIO RECEIVER**

(a) Check if CH001 (free broadcast) can be received.

OK:
CH001 can be received.

NG ▶ **CHECK DISPLAY**

OK

3.	CHECK DISPLAY SETTING

(a) Check the display screen.

Result:

RESULT	PROCEED TO
"UPDATING" is displayed	A
"-----" is displayed	B
None of the displays above are shown	C

C → **CHECK DISPLAY**

B → **THERE IS NO SONG/PROGRAM TITLE OR ARTIST NAME/FEATURE ASSOCIATED WITH CHANNEL AT THAT TIME**

A

4.	CHECK CONTRACT CONDITIONS

(a) Check if the pay-type contract has been extended, or if the contract period has ended.

OK:

Pay-type contract is valid.

NG → **TO RECEIVE PAY-TYPE BROADCASTS, CONTRACT MUST BE MADE WITH SATELLITE RADIO TUNER COMPANY**

OK

5.	PERFORM ACTIVATION REFRESH

(a) Perform activation refresh by referring to the satellite radio service web site (http://www.xmradio.com/refresh/).

HINT:

The XM radio ID that is necessary to perform activation refresh can be displayed when CH000 is selected on the satellite radio.

OK:

Malfunction disappears.

NG ▶ **PROCEED TO NEXT SUSPECTED AREA SHOWN IN PROBLEM SYMPTOMS TABLE**

OK ▶ **END**

6.	CHECK DISPLAY

(a) Check the display screen.

Result:

RESULT	PROCEED TO
"ANTENNA" is displayed	A
"NO SIGNAL" is displayed	B
"LOADING" is displayed	B
"OFF AIR" is displayed	C
After "---" is displayed, display automatically switches to CH001	D
None of the displays above are shown	E

E ▶ **CONFIRM CURRENTLY SELECTED CHANNEL**

D ▶ **CHANNEL BROADCAST HAS ENDED CONDITION (CONFIRM WITH RADIO STATION)**

C ▶ **CHANNEL IS CURRENTLY NOT BEING BROADCAST. BROADCAST CAN BE LISTENED TO OR VIEWED WHEN IT IS BACK ON AIR CONDITION (CONFIRM WITH RADIO STATION)**

B ▶ **END (MOVE VEHICLE TO LOCATION WHERE**

RECEPTION IS BETTER)

A

7.	CHECK CONNECTION OF ANTENNA CABLE

(a) Check if the satellite radio antenna cable is securely connected to the satellite radio tuner.

OK:

Satellite radio antenna cable is securely connected.

NG ▶ SECURELY CONNECT SATELLITE RADIO ANTENNA CABLE

OK ▶ REPLACE SATELLITE RADIO ANTENNA

8.	CONFIRM CURRENTLY SELECTED CHANNEL

(a) Confirm if CH000 is currently selected.

OK:

CH000 is selected.

NG ▶ PROCEED TO NEXT SUSPECTED AREA SHOWN IN PROBLEM SYMPTOMS TABLE

OK ▶ END (CH000 HAS NO SOUND. SELECT ANOTHER CHANNEL)

Last Modified: 3-10-2010	6.4 J	**From:** 200901
Model Year: 2010	**Model:** Corolla	**Doc ID:** RM000003UTZ005X
Title: AUDIO / VIDEO: AUDIO AND VISUAL SYSTEM: Satellite Radio Broadcast cannot be Selected or After Selecting Broadcast, Broadcast cannot be Added into Memory (2010 Corolla)		

Satellite Radio Broadcast cannot be Selected or After Selecting Broadcast, Broadcast cannot be Added into Memory

INSPECTION PROCEDURE

NOTICE:

- Some satellite radio broadcast require payment. A contract must be made between a satellite radio company and the user. If the contract expires, the broadcast will not be able to be listened to or viewed.
- After replacing the radio receiver assembly of vehicles subscribed to pay-type satellite radio broadcasts, the XM Radio ID registration is necessary.

PROCEDURE

1.	**CHECK RADIO RECEIVER**

(a) Check radio condition.

Result:

RESULT	PROCEED TO
Broadcast cannot be selected	A
Broadcast can be selected, but selection can not be memorized	B

B ▶ **CHECK RADIO RECEIVER**

A ▶ **REPLACE RADIO RECEIVER**

2.	**CHECK RADIO RECEIVER**

(a) Check the number of preset channels.

OK:

18 channels have already been preset.

NG ▶ CHECK BATTERY

OK ▶ END (ONLY 18 CHANNELS CAN BE PRESET)

3.	CHECK BATTERY

(a) Check if the battery was replaced.

OK:

Battery was not replaced.

NG ▶ ADD PRESET CHANNEL INTO MEMORY AGAIN

OK ▶ REPLACE RADIO RECEIVER

4.	ADD PRESET CHANNEL INTO MEMORY AGAIN

(a) Check if the preset channels that have been cleared can be added into memory again.

OK:

Preset channels can be added into memory.

NG ▶ PROCEED TO NEXT SUSPECTED AREA SHOWN IN PROBLEM SYMPTOMS TABLE

OK ▶ END

Last Modified: 3-10-2010	6.4 J	**From:** 200901
Model Year: 2010	**Model:** Corolla	**Doc ID:** RM000000NL505OX
Title: AUDIO / VIDEO: AUDIO AND VISUAL SYSTEM: Noise Occurs (2010 Corolla)		

Noise Occurs

INSPECTION PROCEDURE

PROCEDURE

1.	**NOISE CONDITION**

(a) Check from which direction the noise comes (front left or right, rear left or right).

(1) Check from which direction the noise comes.

OK:

The location of the noise source can be determined.

NG ▶ **CHECK NOISE CONDITIONS**

OK ▼

2.	**CHECK SPEAKERS**

(a) Check the installation conditions of the speaker units that are located near the noise source and that there are no cracks, scratches, deformation, or other malfunctions.

Result:

CONDITION	PROCEED TO
A speaker is installed incorrectly	A
Foreign objects are in the speaker	B
A speaker cone paper is broken	C
No malfunction is found	D

C ▶ **REPLACE SPEAKER**

B REMOVE FOREIGN OBJECT

A REINSTALL SPEAKER

D

3.	CHECK NOISE CONDITIONS

(a) Check the noise condition.

HINT:

The radio has a noise prevention function to reduce noise when listening to the radio. If a loud noise occurs, check whether the ground at the antenna mounting base and the noise prevention unit are installed and wired correctly.

CONDITION UNDER WHICH NOISE OCCURS	NOISE SOURCE
Noise increases when the accelerator pedal is depressed, but stops when the engine is stopped.	Generator
Noise occurs during A/C or heater operation.	Blower motor
Noise occurs when the horn switch is pressed and released or when pressed and held.	Horn
Noise occurs synchronously with the blink of the turn signal.	Flasher
Noise occurs during window washer operation.	Washer
Noise occurs during wiper operation.	Wiper
Noise occurs when the brake pedal is depressed.	Stop light switch
Others	Static electricity

HINT:

- In the chart's left column, find the situation that matches the customer's complaint. Then, in the right column, find the part that is causing the noise. Check the respective noise filter.
- To save time and avoid a misdiagnosis, first make sure that the noise is not coming from outside the vehicle.
- Troubleshoot noises in descending order of loudness.
- Setting the radio to a frequency where no signal is received may make recognition of the noise problem easier.

OK:

The noise source cannot be determined.

NG ▶ **REPAIR OR REPLACE NOISE SOURCE**

OK ▶ **PROCEED TO NEXT CIRCUIT INSPECTION SHOWN IN PROBLEM SYMPTOMS TABLE**

Last Modified: 3-10-2010	6.4 J	**From:** 200901
Model Year: 2010	**Model:** Corolla	**Doc ID:** RM000000NL803JX
Title: AUDIO / VIDEO: AUDIO AND VISUAL SYSTEM: Pressing Power Switch does not Turn on System (2010 Corolla)		

Pressing Power Switch does not Turn on System

INSPECTION PROCEDURE

PROCEDURE

1.	**CHECK VEHICLE CONDITION**

(a) Check that conditions in the cabin are not likely to cause condensation.

HINT:

This problem occurs if the cabin is humid and the temperature changes rapidly. This may produce condensation, resulting in a short circuit.

OK:

Condensation is not likely being produced.

NG ▶ **DRY OUT CABIN AND RECHECK CONDITION**

OK ▶ **PROCEED TO NEXT CIRCUIT INSPECTION SHOWN IN PROBLEM SYMPTOMS TABLE**

Last Modified: 3-10-2010	6.4 J	**From:** 200901
Model Year: 2010	**Model:** Corolla	**Doc ID:** RM000000NLC03KX
Title: AUDIO / VIDEO: AUDIO AND VISUAL SYSTEM: No Sound can be Heard from Speakers (2010 Corolla)		

No Sound can be Heard from Speakers

INSPECTION PROCEDURE

PROCEDURE

1.	**CHECK RADIO RECEIVER**

(a) Check radio receiver setting.

(1) Check that the volume is not set to "0".

(2) Check that "MUTE" is off.

OK:

The volume is not set to "0" and "MUTE" is off.

NG ▶ **PROCEED TO NEXT CIRCUIT INSPECTION SHOWN IN PROBLEM SYMPTOMS TABLE**

OK ▶ **END**

Last Modified: 3-10-2010	6.4 J	**From:** 200901
Model Year: 2010	**Model:** Corolla	**Doc ID:** RM0000012CB03IX
Title: AUDIO / VIDEO: AUDIO AND VISUAL SYSTEM: Sound Quality is Bad Only when CD is Played (Volume is Too Low) (2010 Corolla)		

Sound Quality is Bad Only when CD is Played (Volume is Too Low)

INSPECTION PROCEDURE

PROCEDURE

1.	**REPLACE CD AND RECHECK**

(a) Replace the CD with a known good one and recheck.

(1) Check if the same trouble occurs again.

OK:
Malfunction disappears.

NG ▶ **REPLACE RADIO RECEIVER**

OK ▶ **END**

Last Modified: 3-10-2010	6.4 J	**From:** 200901
Model Year: 2010	**Model:** Corolla	**Doc ID:** RM000000NL703XX
Title: AUDIO / VIDEO: AUDIO AND VISUAL SYSTEM: CD cannot be Ejected (2010 Corolla)		

CD cannot be Ejected

INSPECTION PROCEDURE

PROCEDURE

1.	**PRESS "EJECT" AND CHECK OPERATION**

(a) Press the CD EJECT switch of the radio receiver for 2 seconds or more and check that the CD is ejected.

OK:
CD is ejected.

NG ▶ **REPLACE RADIO RECEIVER**

OK ▼

2.	**REPLACE CD AND RECHECK**

(a) Replace the CD with a known good one and recheck.

OK:
CD is ejected.

NG ▶ **REPLACE RADIO RECEIVER**

OK ▶ **END**

Last Modified: 3-10-2010	6.4 J	**From:** 200901
Model Year: 2010	**Model:** Corolla	**Doc ID:** RM000000NL603UX
Title: AUDIO / VIDEO: AUDIO AND VISUAL SYSTEM: CD cannot be Inserted / Played or CD is Ejected Right After Insertion (2010 Corolla)		

CD cannot be Inserted / Played or CD is Ejected Right After Insertion

INSPECTION PROCEDURE

PROCEDURE

1.	**CHECK IF A PROPER CD IS INSERTED**

(a) Make sure that the CD is an audio CD or a CD with an MP3 or WMA file, and that it is not deformed, flawed, stained, burred, or otherwise defective.

OK:

Normal CD.

HINT:

- Translucent or uniquely-shaped CDs cannot be played.
- CDs with adhesive paper labels should not be played.
- Commercial audio CDs can be played.
- CD-DA files on CD-ROMs, CD-Rs, and CD-RWs can be played.
- MP3 and WMA files on CD-ROMs, CD-Rs, and CD-RWs can be played.
- For details on playable CDs, refer to the Owner's Manual.

NG ▶ **CHANGE DISC**

OK ▼

2.	**CHECK THAT CD IS INSERTED PROPERLY**

(a) Check whether or not the CD is inserted upside down.

OK:

CD is properly inserted.

NG ▶ **INSERT CD PROPERLY**

OK

3.	CHECK CD

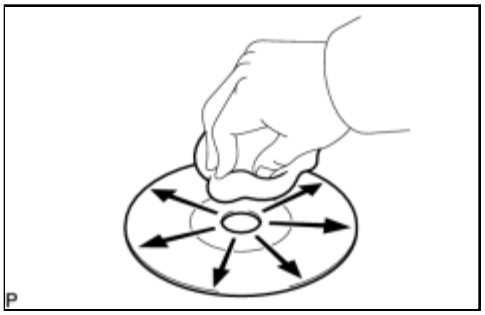

(a) Clean the disc by wiping it with a soft cloth from the inside to the outside in a radial direction.

OK:

Malfunction disappears.

NOTICE:

Do not use a conventional record cleaner or anti-static preservative.

NG ▶ **REPLACE CD AND RECHECK**

OK ▶ **END**

4.	REPLACE CD AND RECHECK

(a) Replace the CD with a known good one and check that the malfunction disappears.

OK:

Malfunction disappears.

NG ▶ **REPLACE RADIO RECEIVER**

OK ▶ **END**

Last Modified: 3-10-2010	6.4 J	**From:** 200901
Model Year: 2010	**Model:** Corolla	**Doc ID:** RM0000012CN04MX
Title: AUDIO / VIDEO: AUDIO AND VISUAL SYSTEM: Radio Broadcast cannot be Received or Poor Reception (2010 Corolla)		

Radio Broadcast cannot be Received or Poor Reception

INSPECTION PROCEDURE

PROCEDURE

1.	**CHECK RADIO RECEIVER**

(a) Check the radio's automatic station search function.

(1) Check the radio's automatic station search function by activating it.

OK:

The radio's automatic station search function works properly.

NG ▶ **CHECK OPTIONAL COMPONENTS**

OK ▶ **REPLACE RADIO RECEIVER**

2.	**CHECK OPTIONAL COMPONENTS**

(a) Check optional components (sun-shade film, telephone antenna, etc.).

(1) Check if any optional components that may decrease reception capacity, such as sunshade film or a telephone antenna, are installed.

OK:

Optional components are installed.

NOTICE:

Do not remove any optional components installed by the customer without his or her consent.

NG ▶ **CHECK RADIO RECEIVER**

OK ▶ **REMOVE OPTIONAL COMPONENTS AND CHECK AGAIN (SEE NOTICE ABOVE)**

3.	**CHECK RADIO RECEIVER**

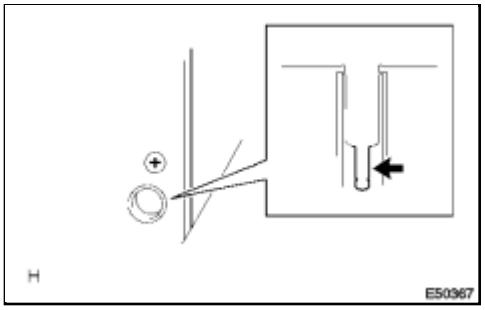

(a) Preparation for check

(1) Remove the antenna plug from the radio receiver.

(b) Check for noise

(1) Turn the ignition switch to ACC with the radio receiver connector connected.

(2) Turn the radio on and tune into AM mode.

(3) Place a screwdriver, thin wire, or other metal object on the radio receiver's antenna jack and check that noise can be heard from the speaker.

OK:

Noise can be heard from the speaker.

NG ▶ **REPLACE RADIO RECEIVER**

OK ▼

4.	**CHECK HARNESS AND CONNECTOR (RADIO RECEIVER - ANTENNA AMPLIFIER)**

(a) Disconnect the radio receiver connector and the antenna amplifier connector.

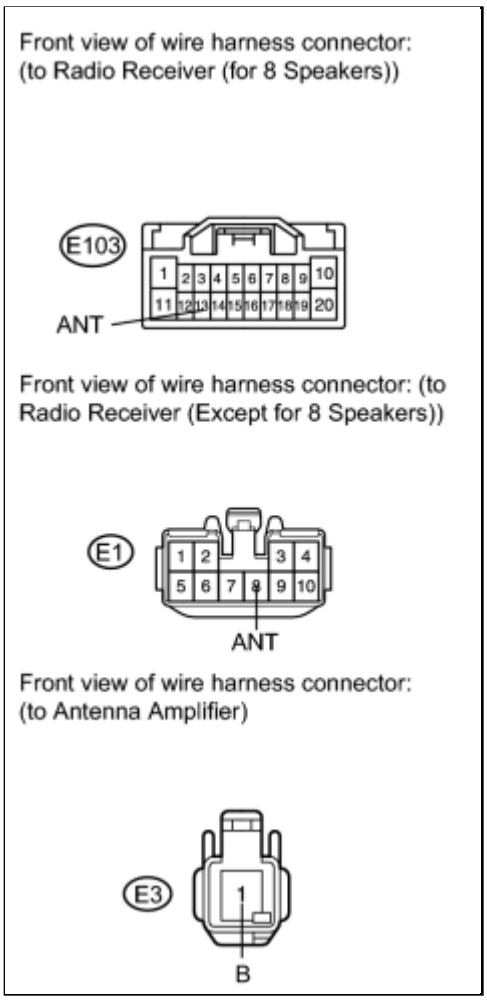

(b) Measure the resistance according to the value(s) in the table below.

Standard Resistance:

TESTER CONNECTION	CONDITION	SPECIFIED CONDITION
E103-13 (ANT) - E3-1 (B)*1	Always	Below 1 Ω
E1-8 (ANT) - E3-1 (B)*2	Always	Below 1 Ω
E103-13 (ANT) - Body ground*1	Always	10 kΩ or higher
E1-8 (ANT) - Body ground*2	Always	10 kΩ or higher

- *1: for 8 Speakers
- *2: Except for 8 Speakers

NG ▶ **REPAIR OR REPLACE HARNESS OR CONNECTOR**

OK ▼

5.	INSPECT RADIO RECEIVER

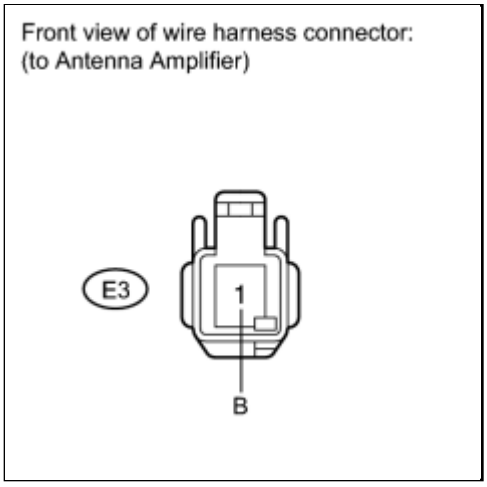

(a) Reconnect the radio receiver connector.

(b) Measure the voltage according to the value(s) in the table below.

Standard Voltage:

TESTER CONNECTION	CONDITION	SPECIFIED CONDITION
E3-1 (B) - Body ground	Ignition switch ON Radio switch ON	11 to 14 V

NG ▶ **REPLACE RADIO RECEIVER**

OK ▼

6.	CHECK ANTENNA CORD

(a) Remove the antenna plug of the radio receiver and antenna.

(b) Measure the resistance between the antenna and radio receiver to check for an open circuit in the antenna cord.

Standard resistance:

Below 1 Ω

(c) Measure the resistance between the antenna cord and body ground to check for a short circuit in the antenna cord.

Standard resistance:

10 kΩ or higher

NG ▶ REPLACE ANTENNA CORD

OK ▼

7.	CHECK GLASS ANTENNA

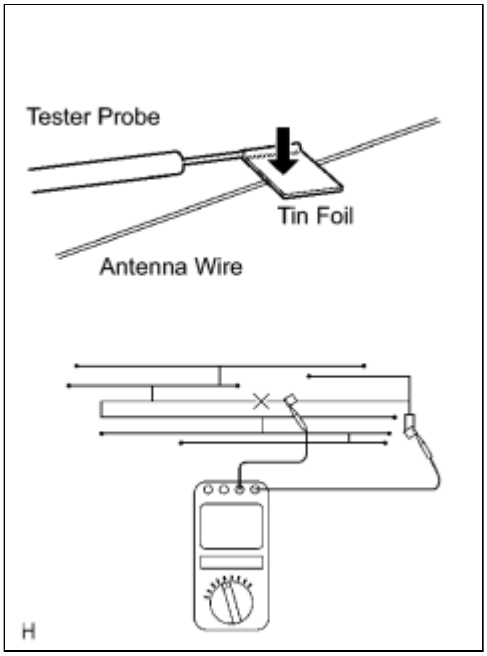

(a) Check for continuity of the antenna.

HINT:

Check for continuity at the center of each antenna wire as shown in the illustration.

NOTICE:

When cleaning the glass, wipe it in the direction of the wire with a soft dry cloth. Take care not to damage the wire. Do not use detergents or glass cleaners with abrasive ingredients. When measuring resistance, wrap a piece of tin foil around the tip of the negative probe and press the foil against the wire with your finger, as shown in the illustration.

OK:

There is continuity in the antenna.

NG ▶ REPAIR GLASS ANTENNA

OK ▼

8.	REPLACE AMPLIFIER ANTENNA

(a) Replace the amplifier antenna and check if radio broadcasts can be received normally.

OK:

Radio broadcasts can be received.

NG ▶ REPLACE RADIO RECEIVER

OK ▼

NORMAL OPERATION

Last Modified: 3-10-2010	6.4 J	**From:** 200901
Model Year: 2010	**Model:** Corolla	**Doc ID:** RM000000NLH03XX
Title: AUDIO / VIDEO: AUDIO AND VISUAL SYSTEM: CD Sound Skips (2010 Corolla)		

CD Sound Skips

INSPECTION PROCEDURE

PROCEDURE

1.	**CHECK CD**

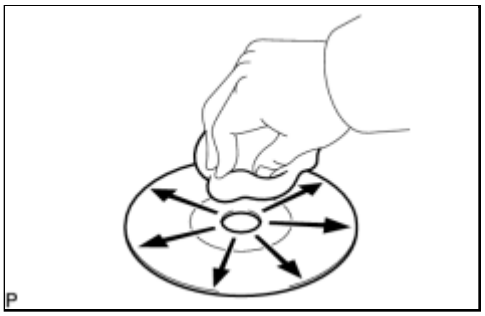

(a) Check the CD.

OK:

The CD is clean.

HINT:

If dirt is on the CD surface, wipe it clean with a soft cloth from the inside to the outside in a radial direction.

NOTICE:

Do not use a conventional record cleaner or anti-static preservative.

NG ▶ **CLEAN CD**

OK ▼

2.	**CHECK CD**

(a) Check that the CD is not deformed or cracked.

OK:

No deformation or cracks on the CD.

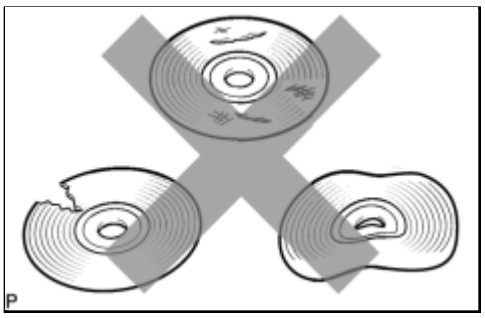

NG ▶ CHANGE DISC

OK ▼

3.	CHECK OPERATION

(a) Check if the problem recurs using a known good CD.

OK:
The problem does not occur.

NG ▶ CHECK RADIO RECEIVER

OK ▶ END

4.	CHECK RADIO RECEIVER

(a) Check the radio receiver installation condition.

(1) Check that the radio receiver is properly installed.

OK:
Radio receiver is properly installed.

NG ▶ REINSTALL RADIO RECEIVER PROPERLY

OK ▶ REPLACE RADIO RECEIVER

Last Modified: 3-10-2010	6.4 J	**From:** 200901
Model Year: 2010	**Model:** Corolla	**Doc ID:** RM0000012CQ03DX
Title: AUDIO / VIDEO: AUDIO AND VISUAL SYSTEM: Poor Sound Quality in All Modes (Low Volume) (2010 Corolla)		

Poor Sound Quality in All Modes (Low Volume)

INSPECTION PROCEDURE

PROCEDURE

1.	**CHECK AUDIO SETTINGS**

(a) Set "BASS", "MID", and "TREB" to the initial values and check that sound is normal.

OK:
Malfunction disappears.

NG ▶ **COMPARE WITH ANOTHER VEHICLE OF SAME MODEL**

OK ▶ **END**

2.	**COMPARE WITH ANOTHER VEHICLE OF SAME MODEL**

(a) Compare with another vehicle of the same model.

(1) Compare with another vehicle of the same model which does not have trouble to see if there is any difference in the sound quality.

OK:
No difference is found.

NG ▶ **PROCEED TO NEXT CIRCUIT INSPECTION SHOWN IN PROBLEM SYMPTOMS TABLE**

OK ▶ **END**

Last Modified: 3-10-2010	6.4 J	**From:** 200901
Model Year: 2010	**Model:** Corolla	**Doc ID:** RM0000011FD03RX
Title: AUDIO / VIDEO: AUDIO AND VISUAL SYSTEM: Cellular Phone Registration Failure, Phone Directory Transfer Failure (2010 Corolla)		

Cellular Phone Registration Failure, Phone Directory Transfer Failure

INSPECTION PROCEDURE

PROCEDURE

1.	**CHECK CURRENT CONDITIONS**

(a) Proceed to the next step according to the table below.

Result:

RESULT	PROCEED TO
Another "Bluetooth" compatible cellular phone is present.	A
Another "Bluetooth" compatible vehicle is present.	B
None of the above	C

C ▶ **CHECK CELLULAR PHONE**

B ▶ **CHECK USING ANOTHER "BLUETOOTH" COMPATIBLE VEHICLE**

A ▼

2.	**CHECK USING ANOTHER CELLULAR PHONE**

(a) Check if the system functions using another "Bluetooth" compatible cellular phone.

HINT:

- Confirm that either the same or a different version of another "Bluetooth" compatible cellular

phone complies with the system.

- Depending on the version, some "Bluetooth" compatible cellular phones cannot be used.

OK:
The system functions.

NG ▶ **REPLACE RADIO RECEIVER**

OK ▶ **USE A "BLUETOOTH" COMPATIBLE CELLULAR PHONE**

3.	CHECK USING ANOTHER "BLUETOOTH" COMPATIBLE VEHICLE

(a) Register the cellular phone with another vehicle and check if the system functions normally.

HINT:

Depending on the version, some "Bluetooth" compatible cellular phones cannot be used.

OK:
The system functions.

NG ▶ **USE A "BLUETOOTH" COMPATIBLE CELLULAR PHONE**

OK ▶ **REPLACE RADIO RECEIVER**

4.	CHECK CELLULAR PHONE

(a) Check if the cellular phone is "Bluetooth" compatible.

HINT:

Some versions of "Bluetooth" compatible cellular phones may not function.

OK:
The phone is "Bluetooth" compatible.

NG ▶ **USE A "BLUETOOTH" COMPATIBLE CELLULAR PHONE**

OK ▼

5.	**CHECK CELLULAR PHONE**

(a) Check if the cellular phone can make a call.

HINT:

When the battery is low, registration or directory transfer cannot be done.

OK:
Cellular phone can make a call.

NG ▶ **REPAIR OR REPLACE CELLULAR PHONE**

OK ▶ **REPLACE RADIO RECEIVER**

Last Modified: 3-10-2010	6.4 J	**From:** 200901
Model Year: 2010	**Model:** Corolla	**Doc ID:** RM000000POK03WX
Title: AUDIO / VIDEO: AUDIO AND VISUAL SYSTEM: Cellular Phone cannot Send/Receive (2010 Corolla)		

Cellular Phone cannot Send/Receive

INSPECTION PROCEDURE

PROCEDURE

1.	**CHECK "BLUETOOTH" SETTINGS**

(a) Check if the "Bluetooth" settings are correct.

OK:
"Bluetooth" settings are correct.

NG ▶ **SET SETTINGS CORRECTLY**

OK ▼

2.	**CHECK CELLULAR PHONE**

(a) Check if the cellular phone is "Bluetooth" compatible.

HINT:

Some versions of "Bluetooth" compatible cellular phones may not function.

OK:
Phone is "Bluetooth" compatible.

NG ▶ **END (ONLY A "BLUETOOTH" COMPATIBLE CELLULAR PHONE CAN BE USED)**

OK ▼

3.	CHECK SETTINGS

(a) Check if the cellular phone functions.

HINT:

The cellular phone is unable to call under any of the following conditions.

- The cellular phone is locked.
- The directory is being transferred.
- The line is crossed.
- Outside service range.
- The power is off.
- The cellular phone is not connected to "Bluetooth" ("BT" is displayed while connected).

OK:

None of the above conditions exist.

NG ▶ **SET CORRECTLY**

OK ▼

4.	CHECK CELLULAR PHONE

(a) Check if the cellular phone can make a call.

HINT:

When the battery is low, calls cannot be made or received.

OK:

Cellular phone can make a call.

NG ▶ **REPAIR OR REPLACE CELLULAR PHONE**

OK ▼

5.	CHECK RECEPTION

(a) Set the cellular phone so that it can receive calls.

(b) Place the cellular phone close to the radio receiver.

(c) Check if the cellular phone has reception according to the radio receiver.

OK:

Cellular phone has reception.

NG ▶ **REPLACE RADIO RECEIVER**

OK ▶ **PROCEED TO NEXT CIRCUIT INSPECTION SHOWN IN PROBLEM SYMPTOMS TABLE**

Last Modified: 3-10-2010	6.4 J	**From:** 200901
Model Year: 2010	**Model:** Corolla	**Doc ID:** RM0000014SU065X
Title: AUDIO / VIDEO: AUDIO AND VISUAL SYSTEM: The Other Caller's Voice cannot be Heard, is too Quiet, or Distorted (2010 Corolla)		

The Other Caller's Voice cannot be Heard, is too Quiet, or Distorted

INSPECTION PROCEDURE

PROCEDURE

1.	**CHECK CELLULAR PHONE**

(a) Check if the voice on the other side can be heard using a cellular phone.

OK:

Voice can be heard.

NG ▶ **REPAIR OR REPLACE CELLULAR PHONE**

OK ▼

2.	**CHECK AUDIO AND VISUAL SYSTEM**

(a) Check that sound from the audio system can be heard from the driver side speaker.

OK:

Sound from the audio system can be heard.

HINT:

If sound from the audio system cannot be heard, proceed to "No sound can be heard from speakers. (Audio is mute.)" in Problem Symptoms Table INFO **.**

NG ▶ **PROCEED TO NEXT CIRCUIT INSPECTION SHOWN IN PROBLEM SYMPTOMS TABLE**

OK

3.	**CHECK SETTINGS**

(a) Check that the received voice level setting on the cellular phone is not too low.

OK:

The received voice level setting is not too low.

NG → **SET VOLUME TO HIGH**

OK → **PROCEED TO NEXT CIRCUIT INSPECTION SHOWN IN PROBLEM SYMPTOMS TABLE**

Last Modified: 3-10-2010	6.4 J	**From:** 200901
Model Year: 2010	**Model:** Corolla	**Doc ID:** RM0000012CL03YX
Title: AUDIO / VIDEO: AUDIO AND VISUAL SYSTEM: Speaker Circuit (2010 Corolla)		

Speaker Circuit

DESCRIPTION

- If the vehicle has a built-in type amplifier, a sound signal is sent from the radio receiver to the speakers via the "Except for 8 Speakers" circuit.
- If the vehicle has a separate type amplifier, a sound signal from the radio receiver is amplified by the stereo component amplifier and then transmitted to the speaker via the "for 8 Speakers" circuit.

If there is a short in this circuit, the stereo component amplifier detects it and stops output to the speakers.

Thus sound cannot be heard from the speakers even if there is no malfunction in the stereo component amplifier or speakers.

WIRING DIAGRAM

Except for 8 Speakers:

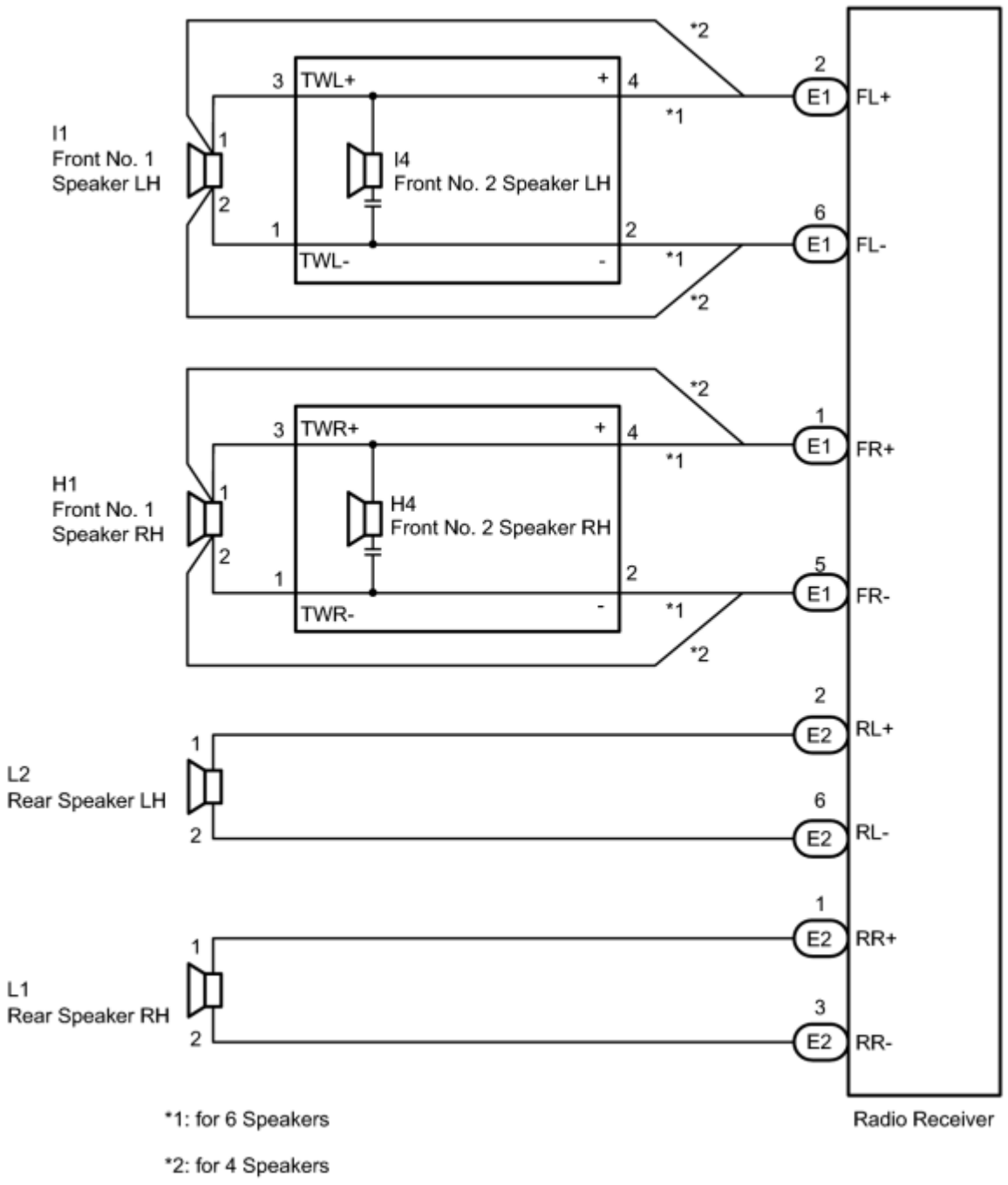

*1: for 6 Speakers

*2: for 4 Speakers

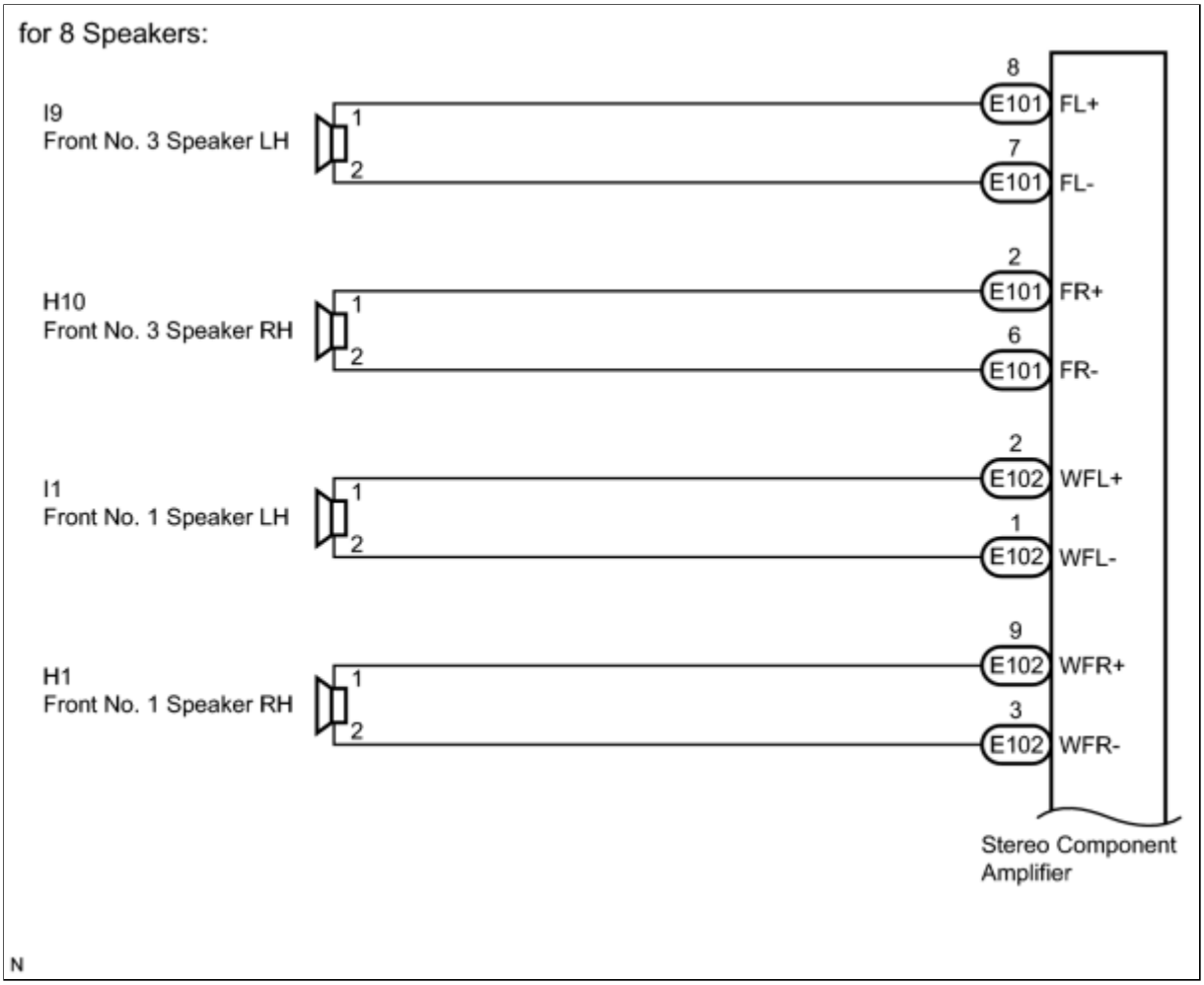
for 8 Speakers:
I9
Front No. 3 Speaker LH
H10
Front No. 3 Speaker RH
I1
Front No. 1 Speaker LH
H1
Front No. 1 Speaker RH
1
2
8
E101
FL+
7
E101
FL-
2
E101
FR+
6
E101
FR-
2
E102
WFL+
1
E102
WFL-
9
E102
WFR+
3
E102
WFR-
Stereo Component Amplifier
N

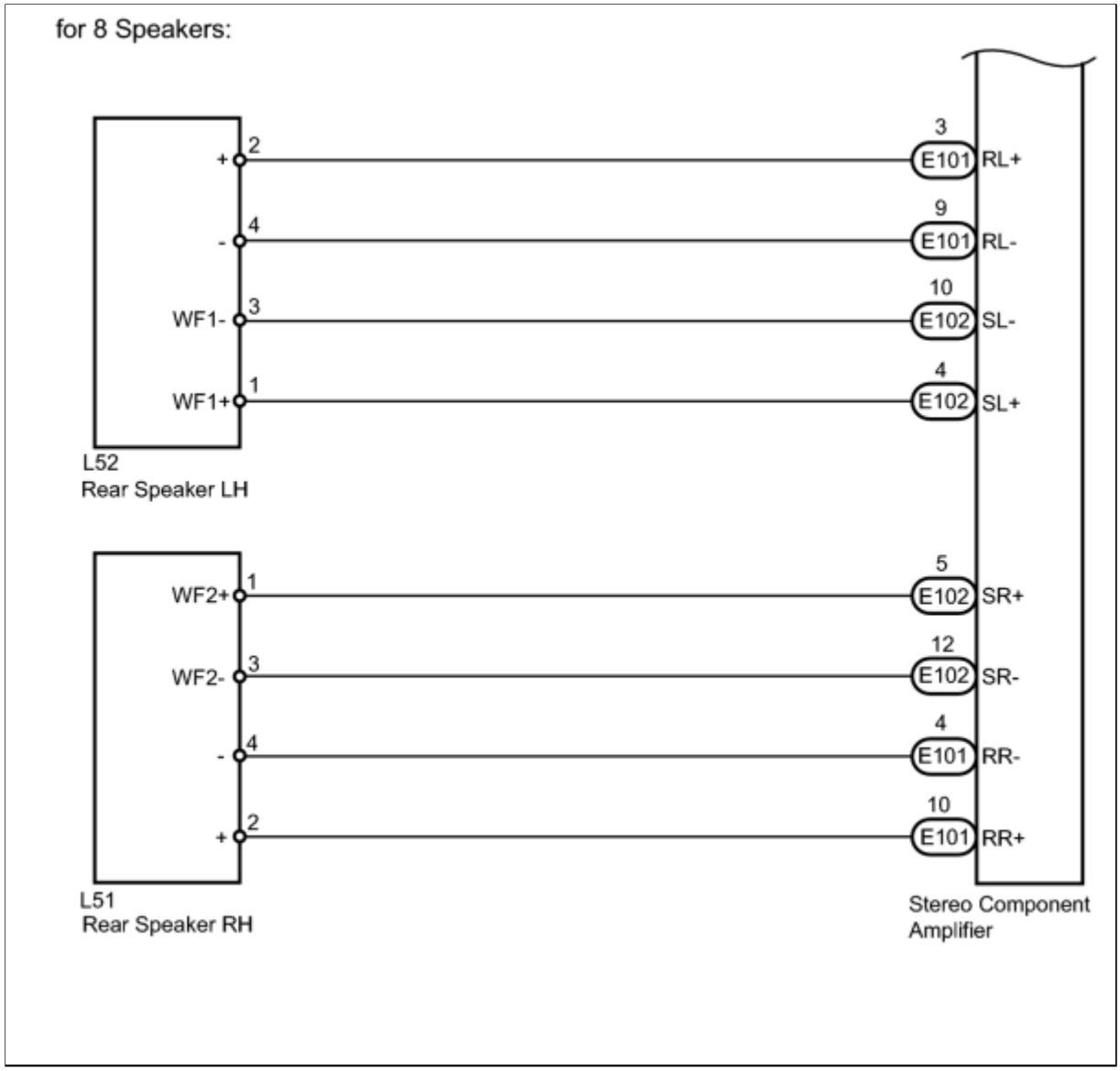

INSPECTION PROCEDURE

PROCEDURE

1.	**CHECK HARNESS AND CONNECTOR**

(a) Disconnect the connectors shown in the illustration from the stereo component amplifier or radio receiver and speakers.

Front view of wire harness connector:
(to Stereo Component Amplifier)

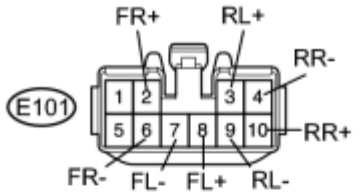

Front view of wire harness connector:
(to Stereo Component Amplifier)

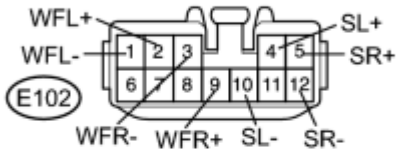

Front view of wire harness connector:
(to Radio Receiver)

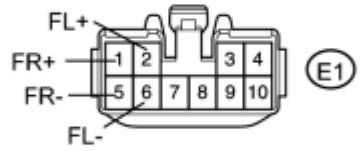

Front view of wire harness connector:
(to Radio Receiver)

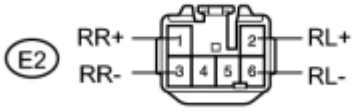

Front view of wire harness connector:
(to Front No. 1 Speaker)

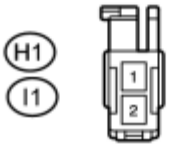

(b) for 8 Speakers:

Measure the resistance between each of the front No. 3 speakers and the stereo component amplifier to check for an open circuit in the wire harness.

Standard Resistance:

Front view of wire harness connector: (to Front No. 3 Speaker (for 8 Speakers))

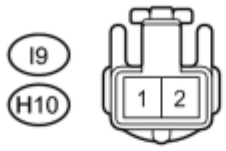

Front view of wire harness connector: (to Rear Speaker (Except for 8 Speakers))

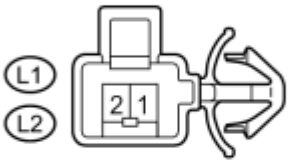

Front view of wire harness connector: (to Front No. 2 Speaker (for 6 Speakers))

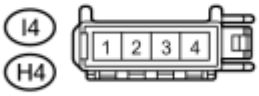

Front view of wire harness connector: (to Rear Speaker (for 8 Speakers))

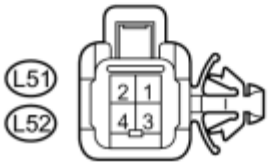

H

TESTER CONNECTION	CONDITION	SPECIFIED CONDITION
E101-8 (FL+) - I9-1	Always	Below 1 Ω
E101-7 (FL-) - I9-2	Always	Below 1 Ω
E101-2 (FR+) - H10-1	Always	Below 1 Ω
E101-6 (FR-) - H10-2	Always	Below 1 Ω

(c) for 6 Speakers:

Measure the resistance between each of the front No. 2 speakers and the radio receiver to check for an open circuit in the wire harness.

Standard Resistance:

TESTER CONNECTION	CONDITION	SPECIFIED CONDITION
E1-2 (FL+) - I4-4 (+)	Always	Below 1 Ω
E1-6 (FL-) - I4-2 (-)	Always	Below 1 Ω
E1-1 (FR+) - H4-4 (+)	Always	Below 1 Ω

TESTER CONNECTION	CONDITION	SPECIFIED CONDITION
E1-5 (FR-) - H4-2 (-)	Always	Below 1 Ω

(d) for 8 Speakers:

Measure the resistance between each of the front No. 1 speakers and the stereo component amplifier to check for an open circuit in the wire harness.

Standard Resistance:

TESTER CONNECTION	CONDITION	SPECIFIED CONDITION
E102-2 (WFL+) - I1-1	Always	Below 1 Ω
E102-1 (WFL-) - I1-2	Always	Below 1 Ω
E102-9 (WFR+) - H1-1	Always	Below 1 Ω
E102-3 (WFR-) - H1-2	Always	Below 1 Ω

(e) for 4 Speakers:

Measure the resistance between each of the front No. 1 speakers and the radio receiver to check for an open circuit in the wire harness.

Standard Resistance:

TESTER CONNECTION	CONDITION	SPECIFIED CONDITION
E1-2 (FL+) - I1-1	Always	Below 1 Ω
E1-6 (FL-) - I1-2	Always	Below 1 Ω
E1-1 (FR+) - H1-1	Always	Below 1 Ω
E1-5 (FR-) - H1-2	Always	Below 1 Ω

(f) for 8 Speakers:

Measure the resistance between each of the rear speakers and the stereo component amplifier to check for an open circuit in the wire harness.

Standard Resistance:

TESTER CONNECTION	CONDITION	SPECIFIED CONDITION
E101-3 (RL+) - L52-2 (+)	Always	Below 1 Ω
E101-9 (RL-) - L52-4 (-)	Always	Below 1 Ω
E101-10 (RR+) - L51-2 (+)	Always	Below 1 Ω
E101-4 (RR-) - L51-4 (-)	Always	Below 1 Ω
E102-10 (SL-) - L52-3 (WF1-)	Always	Below 1 Ω

TESTER CONNECTION	CONDITION	SPECIFIED CONDITION
E102-4 (SL+) - L52-1 (WF1+)	Always	Below 1 Ω
E102-5 (SR+) - L51-1 (WF2+)	Always	Below 1 Ω
E102-12 (SR-) - L51-3 (WF2-)	Always	Below 1 Ω

(g) Except for 8 Speakers:

Measure the resistance between each of the rear speakers and the radio receiver to check for an open circuit in the wire harness.

Standard Resistance:

TESTER CONNECTION	CONDITION	SPECIFIED CONDITION
E2-2 (RL+) - L2-1	Always	Below 1 Ω
E2-6 (RL-) - L2-2	Always	Below 1 Ω
E2-1 (RR+) - L1-1	Always	Below 1 Ω
E2-3 (RR-) - L1-2	Always	Below 1 Ω

(h) for 6 Speakers:

Measure the resistance between each of the front No. 1 speaker and front No. 2 speaker to check for an open circuit in the wire harness.

Standard Resistance:

TESTER CONNECTION	CONDITION	SPECIFIED CONDITION
I4-3 (TWL+) - I1-1	Always	Below 1 Ω
I4-1 (TWL-) - I1-2	Always	Below 1 Ω
H4-3 (TWR+) - H1-1	Always	Below 1 Ω
H4-1 (TWR-) - H1-2	Always	Below 1 Ω

(i) for 8 Speakers:

Measure the resistance between the stereo component amplifier and body ground to check for a short circuit in the wire harness.

Standard Resistance:

TESTER CONNECTION	CONDITION	SPECIFIED CONDITION
E101-8 (FL+) - Body ground	Always	10 kΩ or higher
E101-7 (FL-) - Body ground	Always	10 kΩ or higher
E101-2 (FR+) - Body ground	Always	10 kΩ or higher

TESTER CONNECTION	CONDITION	SPECIFIED CONDITION
E101-6 (FR-) - Body ground	Always	10 kΩ or higher
E101-3 (RL+) - Body ground	Always	10 kΩ or higher
E101-9 (RL-) - Body ground	Always	10 kΩ or higher
E101-10 (RR+) - Body ground	Always	10 kΩ or higher
E101-4 (RR-) - Body ground	Always	10 kΩ or higher
E102-2 (WFL+) - Body ground	Always	10 kΩ or higher
E102-1 (WFL-) - Body ground	Always	10 kΩ or higher
E102-9 (WFR+) - Body ground	Always	10 kΩ or higher
E102-3 (WFR-) - Body ground	Always	10 kΩ or higher
E102-5 (SR+) - Body ground	Always	10 kΩ or higher
E102-12 (SR-) - Body ground	Always	10 kΩ or higher
E102-4 (SL+) - Body ground	Always	10 kΩ or higher
E102-10 (SL-) - Body ground	Always	10 kΩ or higher

(j) Except for 8 Speakers:

Measure the resistance between each speaker or radio receiver and body ground to check for a short circuit in the wire harness.

Standard Resistance:

TESTER CONNECTION	CONDITION	SPECIFIED CONDITION
E1-2 (FL+) - Body ground	Always	10 kΩ or higher
E1-6 (FL-) - Body ground	Always	10 kΩ or higher
E1-1 (FR+) - Body ground	Always	10 kΩ or higher
E1-5 (FR-) - Body ground	Always	10 kΩ or higher
E2-2 (RL+) - Body ground	Always	10 kΩ or higher
E2-6 (RL-) - Body ground	Always	10 kΩ or higher
E2-1 (RR+) - Body ground	Always	10 kΩ or higher
E2-3 (RR-) - Body ground	Always	10 kΩ or higher
I4-3 (TWL+) - Body ground*1	Always	10 kΩ or higher
I4-1 (TWL-) - Body ground*1	Always	10 kΩ or higher
H4-3 (TWR+) - Body ground*1	Always	10 kΩ or higher
H4-1 (TWR-) - Body ground*1	Always	10 kΩ or higher

- *1: for 6 Speakers

NG ▶ REPAIR OR REPLACE HARNESS OR CONNECTOR

OK ▼

2.	INSPECT FRONT NO. 1 SPEAKER

(a) Resistance check

(1) Measure the resistance between the terminals of the speaker.

Standard Resistance:

for 8 Speakers

Except for 8 Speakers

TESTER CONNECTION	CONDITION	SPECIFIED CONDITION
I1-1 - I1-2	Always	1.5 to 2.2 Ω
H1-1 - H1-2	Always	1.5 to 2.2 Ω

TESTER CONNECTION	CONDITION	SPECIFIED CONDITION
I1-1 - I1-2	Always	3.2 to 4.8 Ω
H1-1 - H1-2	Always	3.2 to 4.8 Ω

NG ▶ REPLACE FRONT NO. 1 SPEAKER

OK ▼

3.	CONFIRM MODEL

Result:

RESULT	PROCEED TO
Except 8 Speakers	A
8 Speakers	B

B ▶ INSPECT REAR SPEAKER

A ▼

4.	INSPECT REAR SPEAKER

(a) Resistance check

(1) Measure the resistance between the terminals of the speaker.

Standard Resistance:

TESTER CONNECTION	CONDITION	SPECIFIED CONDITION
L1-1 - L1-2	Always	3.2 to 4.8 Ω
L2-1 - L2-2	Always	3.2 to 4.8 Ω

NG ▶ REPLACE REAR SPEAKER

OK ▼

5.	CONFIRM MODEL

Result:

RESULT	PROCEED TO
4 Speakers	A
6 Speakers	B

B ▶ INSPECT FRONT NO. 2 SPEAKER

A ▶ PROCEED TO NEXT CIRCUIT INSPECTION SHOWN IN PROBLEM SYMPTOMS TABLE

6.	INSPECT FRONT NO. 2 SPEAKER

(a) Check that the malfunction disappears when a known good speaker is installed.

OK:

Malfunction disappears.

HINT:

- Connect all the connectors to the front No. 2 speaker.
- When there is a possibility that either the right or left front speaker is defective, inspect by interchanging the right one with the left one.
- Perform the above inspection on both LH and RH sides.

NG ▶ **PROCEED TO NEXT CIRCUIT INSPECTION SHOWN IN PROBLEM SYMPTOMS TABLE**

OK ▶ **REPLACE FRONT NO. 2 SPEAKER**

7.	INSPECT REAR SPEAKER

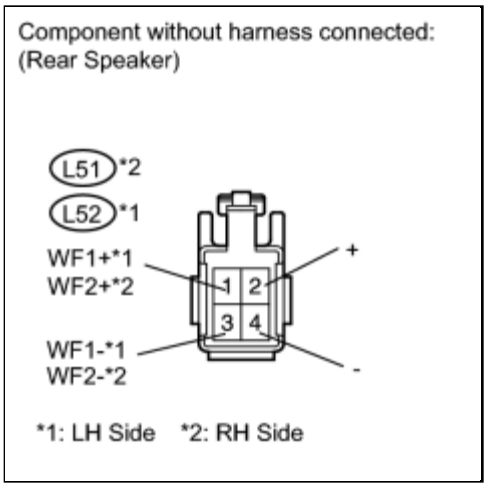

(a) Resistance check

(1) Measure the resistance according to the value(s) in the table below.

Standard Resistance:

for Tweeter

for Woofer

TESTER CONNECTION	CONDITION	SPECIFIED CONDITION
L52-1 (WF1+) - L52-3 (WF1-)	Always	5.9 to 7.1 Ω
L51-1 (WF2+) - L51-3 (WF2-)	Always	5.9 to 7.1 Ω

TESTER CONNECTION	CONDITION	SPECIFIED CONDITION
L52-2 (+) - L52-4 (-)	Always	1.8 to 2.6 Ω
L51-2 (+) - L51-4 (-)	Always	1.8 to 2.6 Ω

NOTICE:

The speaker should not be removed when checking resistance.

NG ▶ REPLACE REAR SPEAKER

OK ▼

8.	INSPECT FRONT NO. 3 SPEAKER

(a) Resistance check

(1) Measure the resistance between the terminals of the speaker.

Standard Resistance:

TESTER CONNECTION	CONDITION	SPECIFIED CONDITION
I9-1 - I9-2	Always	1.5 to 2.5 Ω
H10-1 - H10-2	Always	1.5 to 2.5 Ω

NG ▶ REPLACE FRONT NO. 3 SPEAKER

OK ▶ PROCEED TO NEXT CIRCUIT INSPECTION SHOWN IN PROBLEM SYMPTOMS TABLE

Last Modified: 3-10-2010	6.4 J	**From:** 200901
Model Year: 2010	**Model:** Corolla	**Doc ID:** RM000002NNE03EX
Title: AUDIO / VIDEO: AUDIO AND VISUAL SYSTEM: Vehicle Speed Signal Circuit between Radio Receiver and Combination Meter (2010 Corolla)		

Vehicle Speed Signal Circuit between Radio Receiver and Combination Meter

DESCRIPTION

The circuit is necessary for the ASL (Automatic Sound Levelizer) built into the radio receiver.

Speed signals are received from the combination meter and used for the ASL.

The ASL function automatically adjusts the sound volume in order to enable clear audio quality even when vehicle noise increases (as vehicle noise increases, the volume is turned up etc.).

HINT:

- A voltage of 12 V or 5 V is output from each ECU and then input to the combination meter. The signal is changed to a pulse signal at the transistor in the combination meter. Each ECU controls the respective system based on the pulse signal.
- If a short occurs in any of the ECUs or in the wire harness connected to an ECU, all systems in the diagram below will not operate normally.

WIRING DIAGRAM

1. for TMC Made 2ZR-FE:

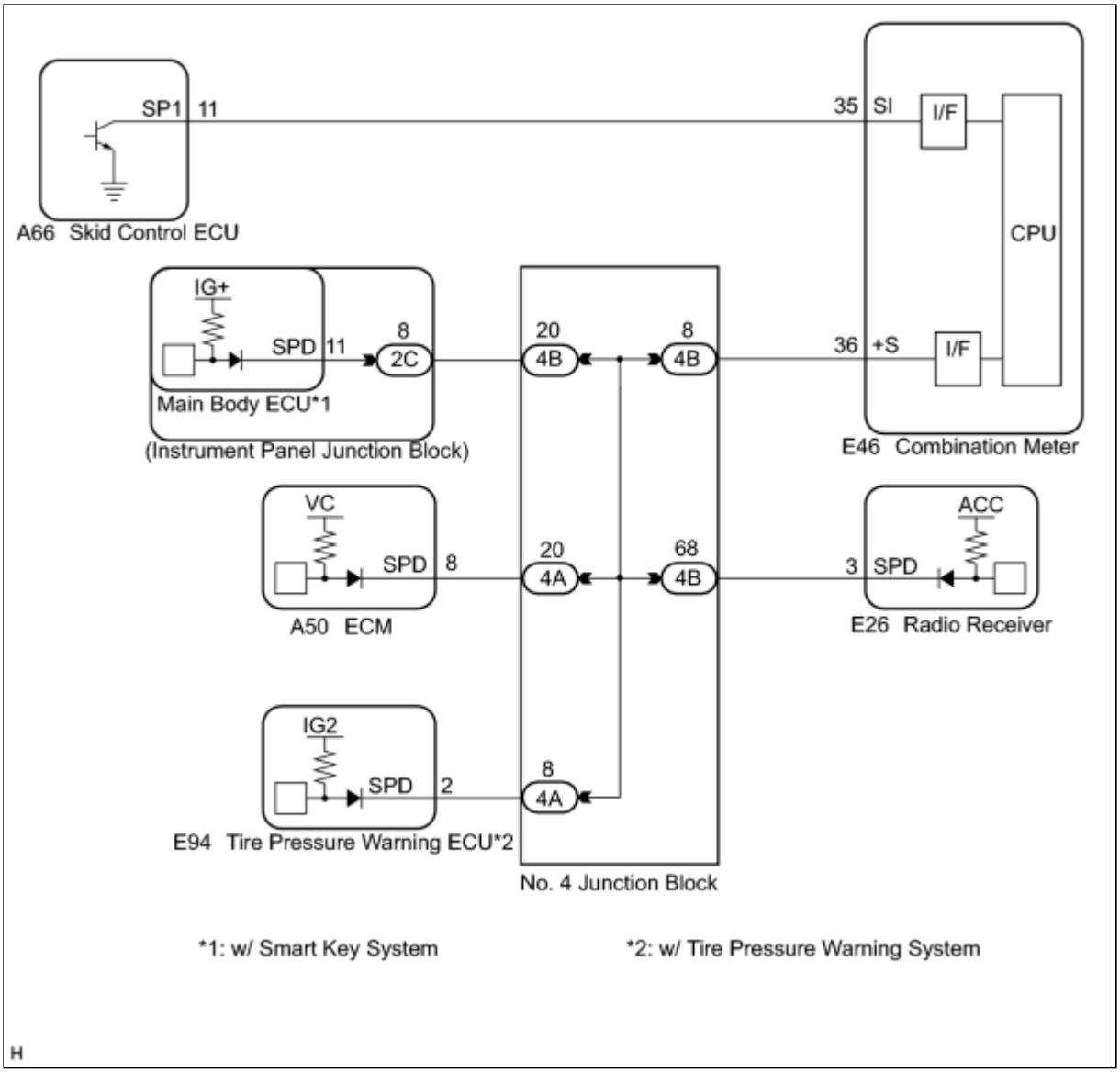

2. except TMC Made 2ZR-FE:

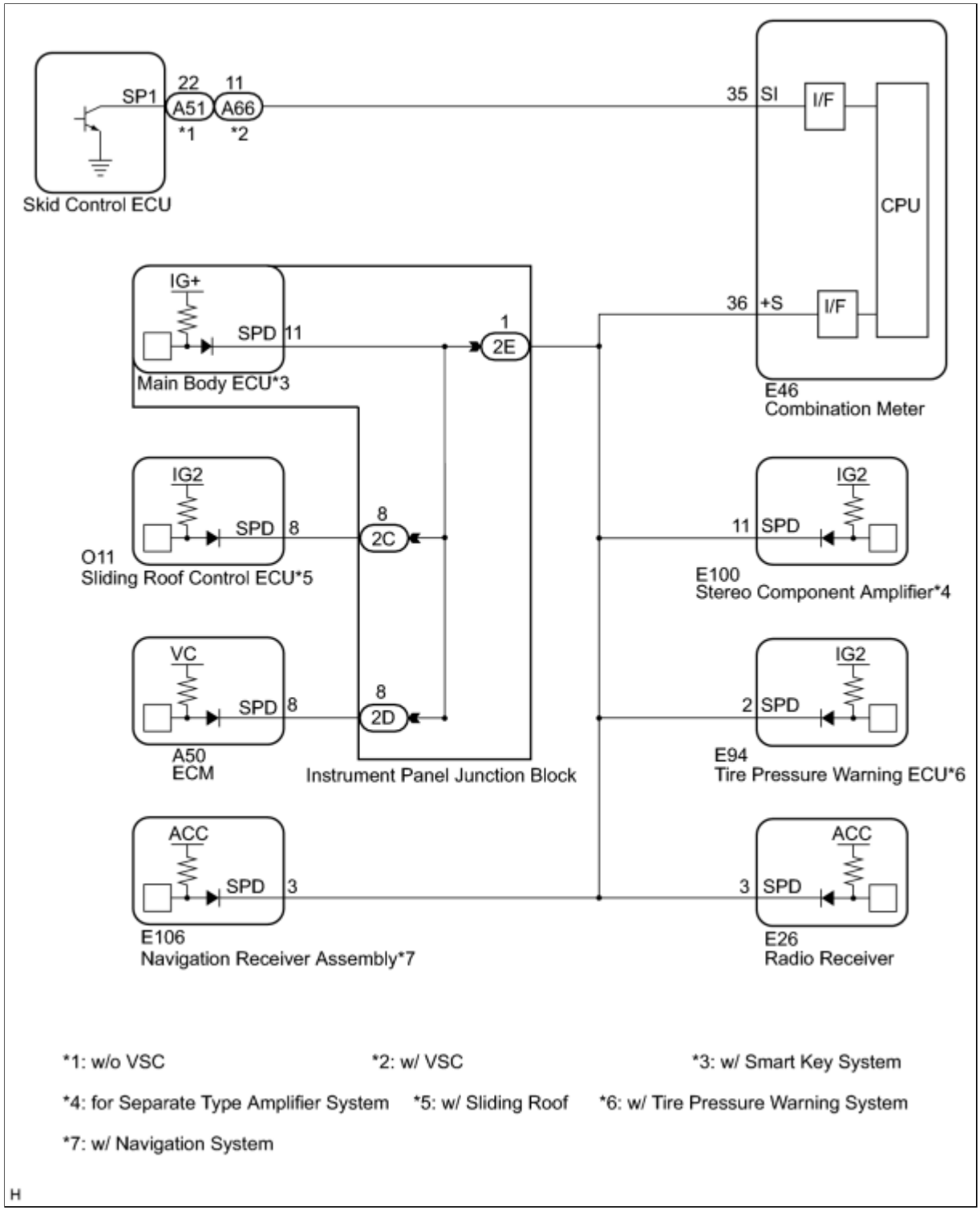

3. except TMC Made 2AZ-FE:

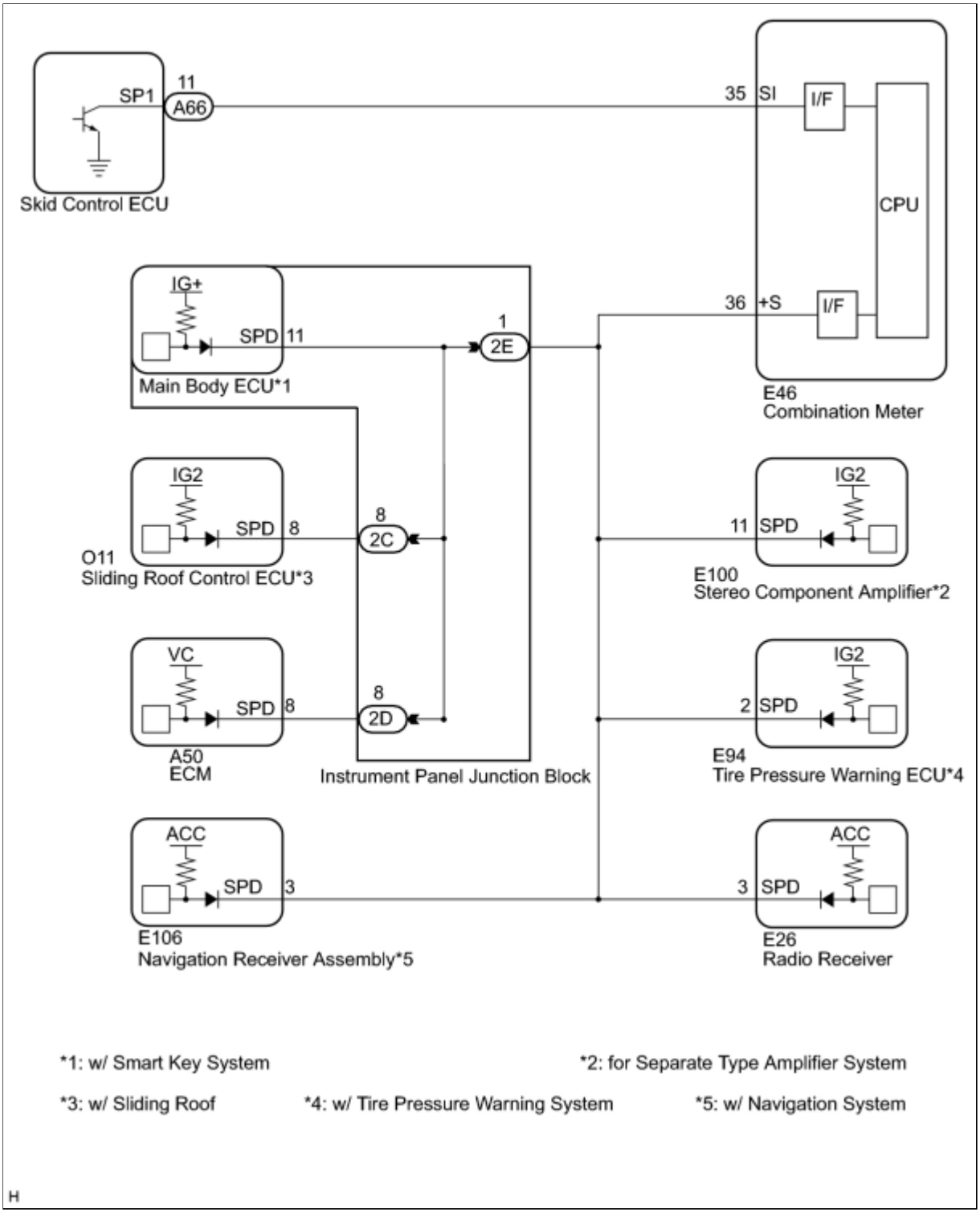

INSPECTION PROCEDURE

PROCEDURE

1.	**INSPECT COMBINATION METER ASSEMBLY (OUTPUT WAVEFORM)**

(a) Check the output waveform.

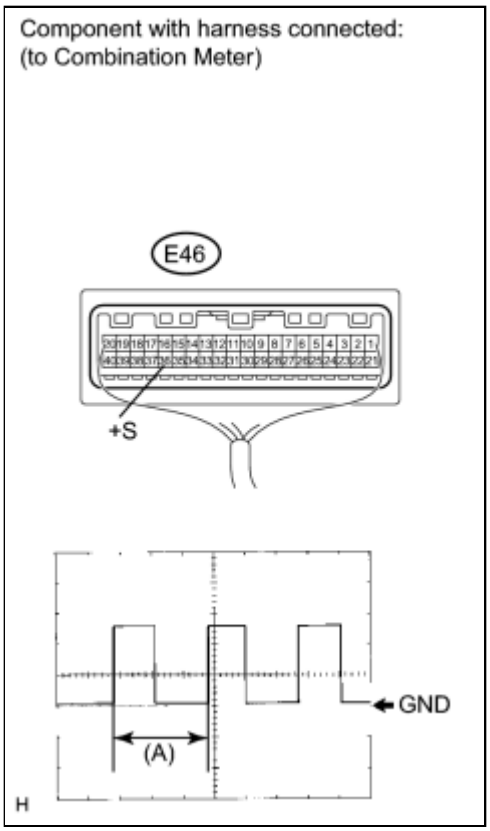

(1) Remove the combination meter assembly with the connector still connected.

(2) Connect an oscilloscope to terminals E46-36 (+S) and body ground.

(3) Turn the ignition switch to ON.

(4) Turn the wheel slowly.

(5) Check the signal waveform according to the condition(s) in the table below.

ITEM	CONDITION
Tool setting	5 V/DIV., 20 ms./DIV.
Vehicle condition	Driving at approx. 20 km/h (12 mph)

OK:

The waveform is displayed as shown in the illustration.

HINT:

When the system is functioning normally, one wheel revolution generates 4 pulses. As the vehicle speed increases, the width indicated by (A) in the illustration narrows.

NG ▶ **GO TO METER / GAUGE SYSTEM**

OK ▼

2.	**CHECK HARNESS AND CONNECTOR (RADIO RECEIVER - COMBINATION METER ASSEMBLY)**

(a) Disconnect the radio receiver connector and the combination meter assembly connector.

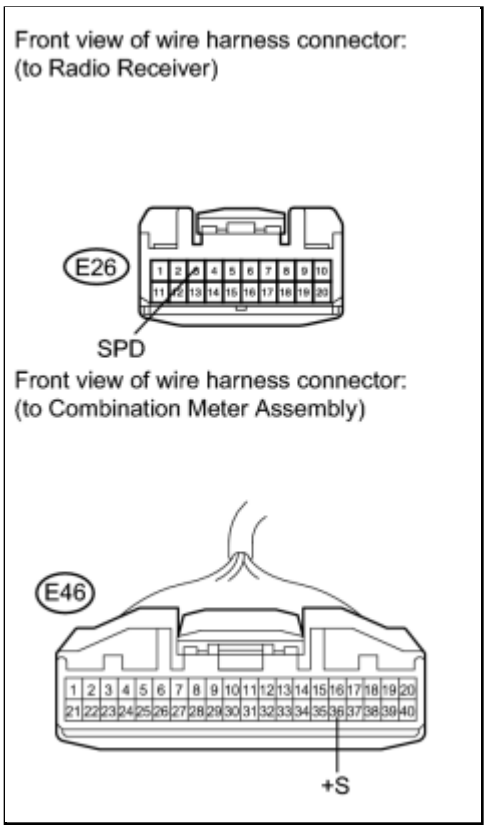

(b) Measure the resistance according to the value(s) in the table below.

Standard Resistance:

TESTER CONNECTION	CONDITION	SPECIFIED CONDITION
E26-3 (SPD) - E46-36 (+S)	Always	Below 1 Ω

NG ▶ **REPAIR OR REPLACE HARNESS OR CONNECTOR**

OK ▶ **REPLACE RADIO RECEIVER**

Last Modified: 3-10-2010	6.4 J	**From:** 200901
Model Year: 2010	**Model:** Corolla	**Doc ID:** RM0000014SV066X
Title: AUDIO / VIDEO: AUDIO AND VISUAL SYSTEM: The Other Caller cannot Hear Your Voice, or Your Voice is too Quiet or Distorted (2010 Corolla)		

The Other Caller cannot Hear Your Voice, or Your Voice is too Quiet or Distorted

INSPECTION PROCEDURE

PROCEDURE

1.	**CHECK CELLULAR PHONE**

(a) Check if the other caller can hear your voice properly.

OK:

Your voice can be heard correctly.

NG ▶ **REPLACE CELLULAR PHONE**

OK ▼

2.	**CHECK SETTINGS**

(a) Check if the mute is set to ON.

OK:

Mute is not set to ON.

NG ▶ **TURN MUTE OFF**

OK ▶ **PROCEED TO NEXT CIRCUIT INSPECTION SHOWN IN PROBLEM SYMPTOMS TABLE**

Last Modified: 3-10-2010	6.4 J	**From:** 200901
Model Year: 2010	**Model:** Corolla	**Doc ID:** RM0000012CG047X
Title: AUDIO / VIDEO: AUDIO AND VISUAL SYSTEM: Illumination Circuit (2010 Corolla)		

Illumination Circuit

DESCRIPTION

Power is supplied to the radio receiver and steering pad switch illumination when the light control switch is in the TAIL or HEAD position.

WIRING DIAGRAM

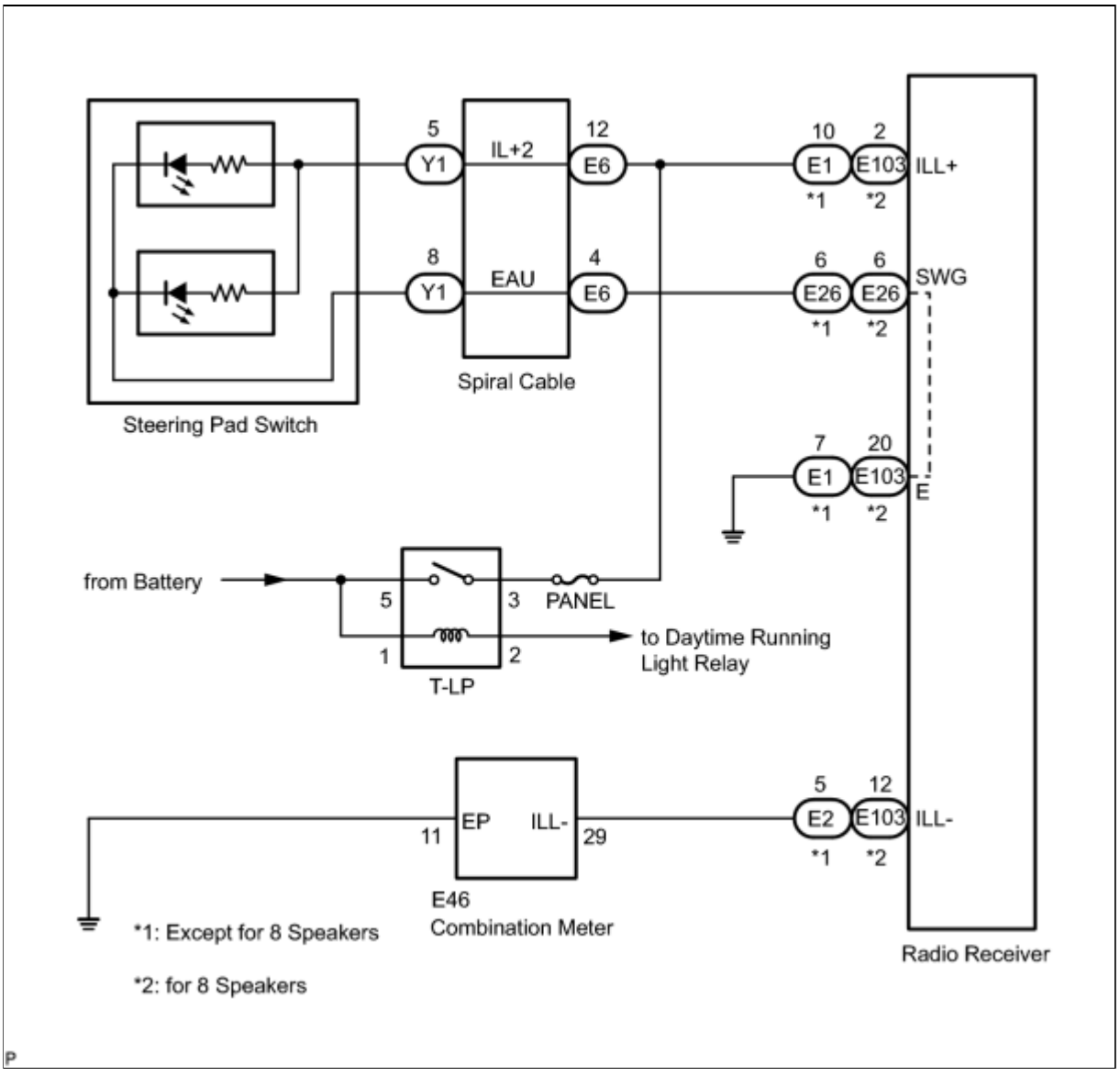

INSPECTION PROCEDURE

NOTICE:

The vehicle is equipped with an SRS (Supplemental Restraint System) which includes components such as airbags. Before servicing (including removal or installation of parts), be sure to read the precautionary notice for Supplemental Restraint System INFO .

PROCEDURE

1.	**CHECK ILLUMINATION**

(a) Check if the illumination for the radio receiver, steering pad switch, heater control switch or others (hazard switch, transmission control switch, etc.) comes on when the light control switch is turned to the HEAD or TAIL position.

Result:

RESULT	PROCEED TO
Illumination comes on for all components except steering pad switch.	A
Illumination comes on for all components except radio receiver.	B
No illumination comes on (radio receiver, hazard switch, heater control switch, etc.).	C
Illumination comes on only for hazard switch and steering pad switch.	D

D ▶ **GO TO METER / GAUGE SYSTEM**

C ▶ **GO TO LIGHTING SYSTEM**

B ▶ **CHECK HARNESS AND CONNECTOR (BATTERY - RADIO RECEIVER)**

A ▼

2.	**CHECK HARNESS AND CONNECTOR (BATTERY - SPIRAL CABLE)**

(a) Disconnect the spiral cable connector.

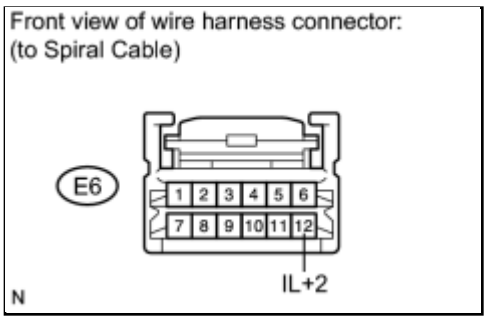

(b) Measure the voltage according to the value(s) in the table below.

Standard Voltage:

TESTER CONNECTION	CONDITION	SPECIFIED CONDITION
E6-12 (IL+2) - Body ground	Light control SW TAIL or HEAD	11 to 14 V

NG ▶ **REPAIR OR REPLACE HARNESS OR CONNECTOR**

OK ▼

3.	**INSPECT STEERING PAD SWITCH ASSEMBLY**

(a) Disconnect the steering pad switch connector.

(b) Connect a battery positive (+) lead to terminal IL+2 and a negative (-) lead to terminal EAU of the steering pad switch assembly connector.

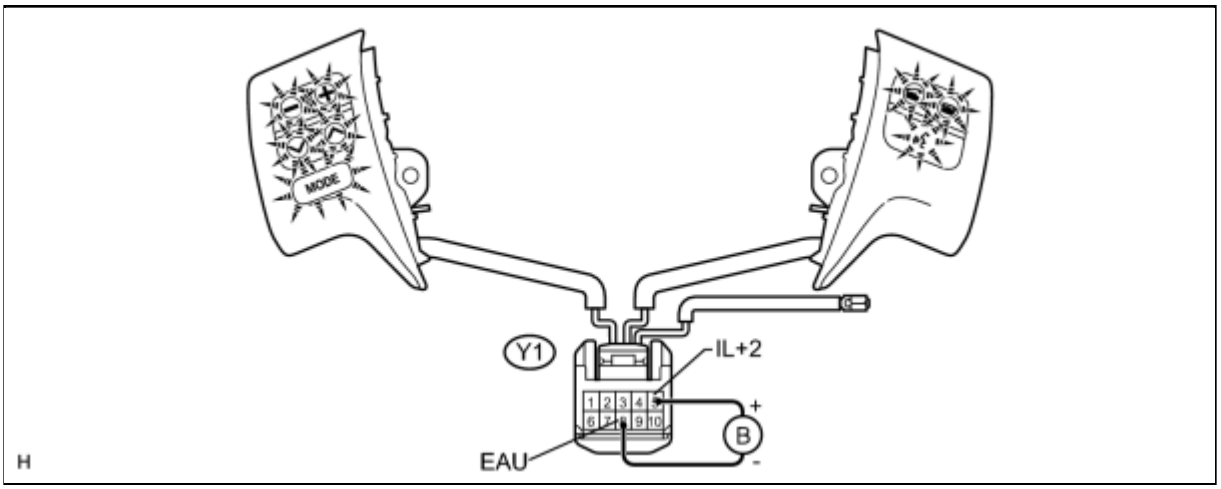

(c) Check if the illumination for the steering pad switch assembly comes on.

OK:

Illumination for the steering pad switch assembly comes on.

NG ▶ **REPLACE STEERING PAD SWITCH ASSEMBLY**

OK
▼

4.	INSPECT SPIRAL CABLE

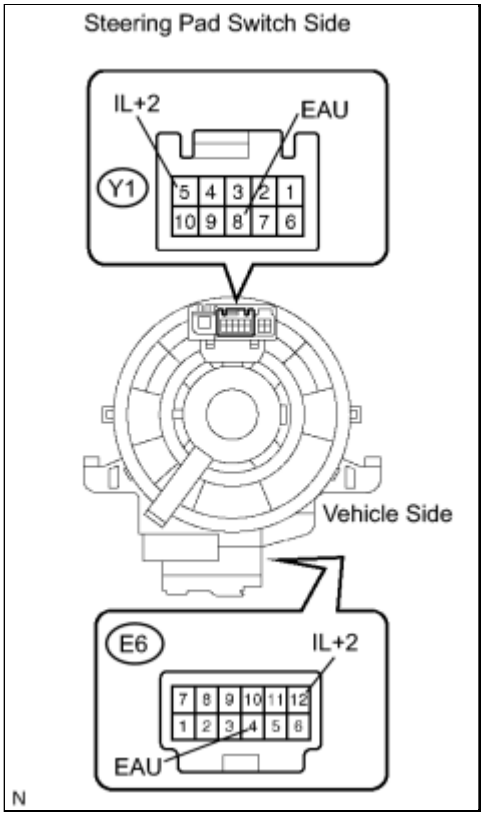

(a) Disconnect the steering pad switch and the spiral cable connectors.

(b) Measure the resistance according to the value(s) in the table below.

Standard Resistance:

TESTER CONNECTION	CONDITION	SPECIFIED CONDITION
Y1-8 (EAU) - E6-4 (EAU)	Center	Below 1 Ω
	2.5 rotations to the left	
	2.5 rotations to the right	
Y1-5 (IL+2) - E6-12 (IL+2)	Center	Below 1 Ω
	2.5 rotations to the left	

TESTER CONNECTION	CONDITION	SPECIFIED CONDITION
	2.5 rotations to the right	

NOTICE:

The spiral cable is an important part of the SRS airbag system. Incorrect removal or installation of the spiral cable may prevent the airbag from deploying. Be sure to read the page shown in the brackets.

HINT:

- Removal INFO
- Installation INFO

NG ▶ **REPLACE SPIRAL CABLE**

OK ▼

5.	CHECK HARNESS AND CONNECTOR (SPIRAL CABLE - RADIO RECEIVER)

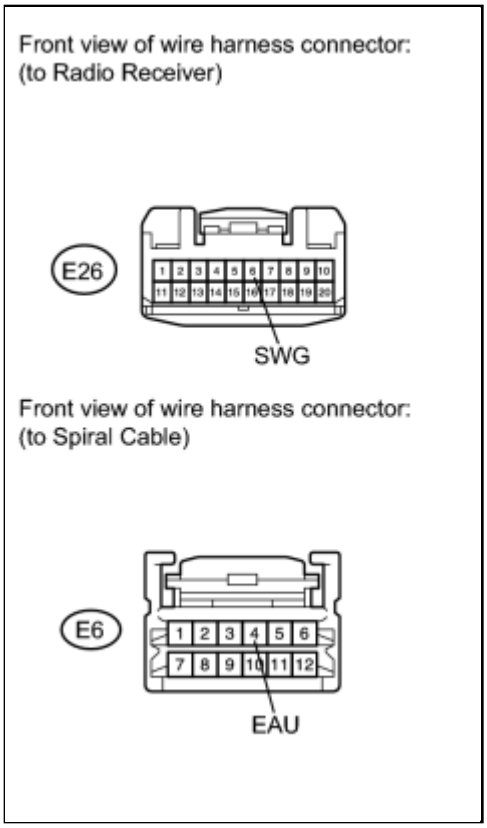

(a) Disconnect the connectors from the radio receiver and spiral cable.

(b) Measure the resistance according to the value(s) in the table below.

Standard Resistance:

TESTER CONNECTION	CONDITION	SPECIFIED CONDITION
E26-6 (SWG) - E6-4 (EAU)	Always	Below 1 Ω
E26-6 (SWG) - Body ground	Always	10 kΩ or higher

NG ▶ **REPAIR OR REPLACE HARNESS OR CONNECTOR**

OK ▶ **PROCEED TO NEXT CIRCUIT INSPECTION SHOWN IN PROBLEM SYMPTOMS TABLE**

6.	CHECK HARNESS AND CONNECTOR (BATTERY - RADIO RECEIVER)

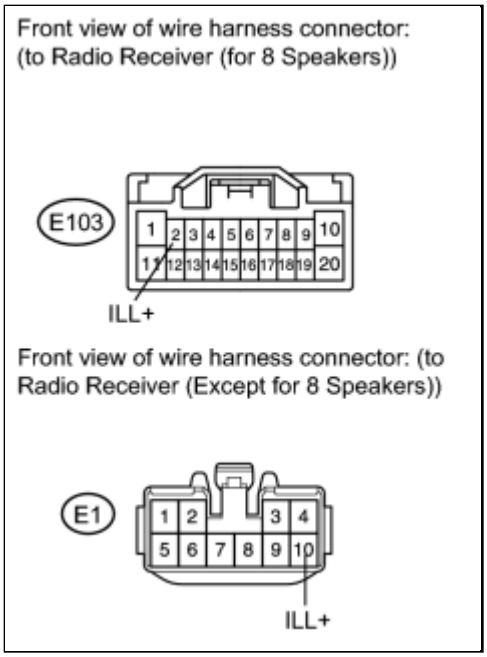

(a) Disconnect the radio receiver connector.

(b) Measure the voltage according to the value(s) in the table below.

Standard Voltage:

TESTER CONNECTION	CONDITION	SPECIFIED CONDITION
E103-2 (ILL+) - Body ground*1	Light control switch TAIL or HEAD	11 to 14 V
E1-10 (ILL+) - Body ground*2	Light control switch TAIL or HEAD	11 to 14 V

- *1: for 8 Speakers
- *2: Except for 8 Speakers

NG ▶ **REPAIR OR REPLACE HARNESS OR CONNECTOR**

OK

7.	CHECK HARNESS AND CONNECTOR (RADIO RECEIVER - COMBINATION METER)

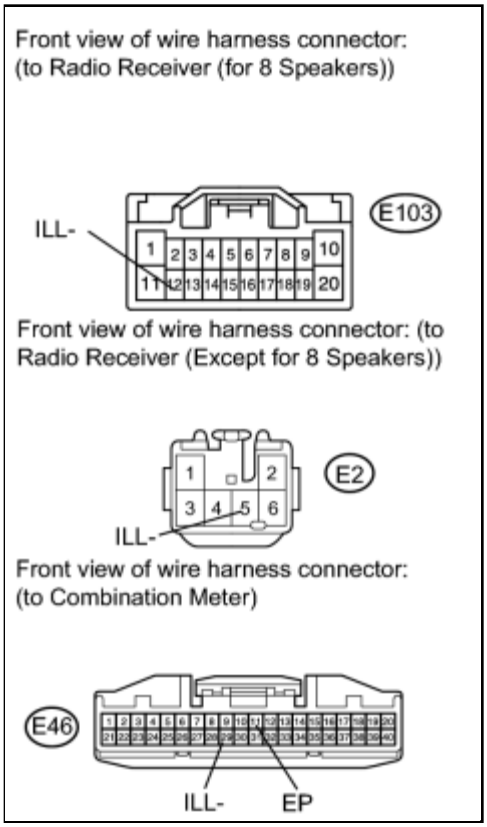

(a) Disconnect the radio receiver connector and the combination meter connector.

(b) Measure the resistance according to the value(s) in the table below.

Standard Resistance:

TESTER CONNECTION	CONDITION	SPECIFIED CONDITION
E103-12 (ILL-) - E46-29 (ILL-)*1	Always	Below 1 Ω
E2-5 (ILL-) - E46-29 (ILL-)*2	Always	Below 1 Ω
E46-11 (EP) - Body ground	Always	Below 1 Ω
E46-29 (ILL-) - Body ground	Always	10 kΩ or higher

- *1: for 8 Speakers
- *2: Except for 8 Speakers

NG ▶ **REPAIR OR REPLACE HARNESS OR CONNECTOR**

OK	PROCEED TO NEXT CIRCUIT INSPECTION SHOWN IN PROBLEM SYMPTOMS TABLE

Last Modified: 3-10-2010	6.4 J	**From:** 200901
Model Year: 2010	**Model:** Corolla	**Doc ID:** RM0000012CK04DX
Title: AUDIO / VIDEO: AUDIO AND VISUAL SYSTEM: Steering Pad Switch Circuit (2010 Corolla)		

Steering Pad Switch Circuit

DESCRIPTION

This circuit sends an operation signal from the steering pad switch to the radio receiver.

If there is an open in the circuit, the audio system cannot be operated using the steering pad switch.

If there is a short in the circuit, the same condition as to when a switch is continuously depressed occurs.

Therefore, the radio receiver cannot be operated using the steering pad switch, and also the radio receiver itself cannot function.

WIRING DIAGRAM

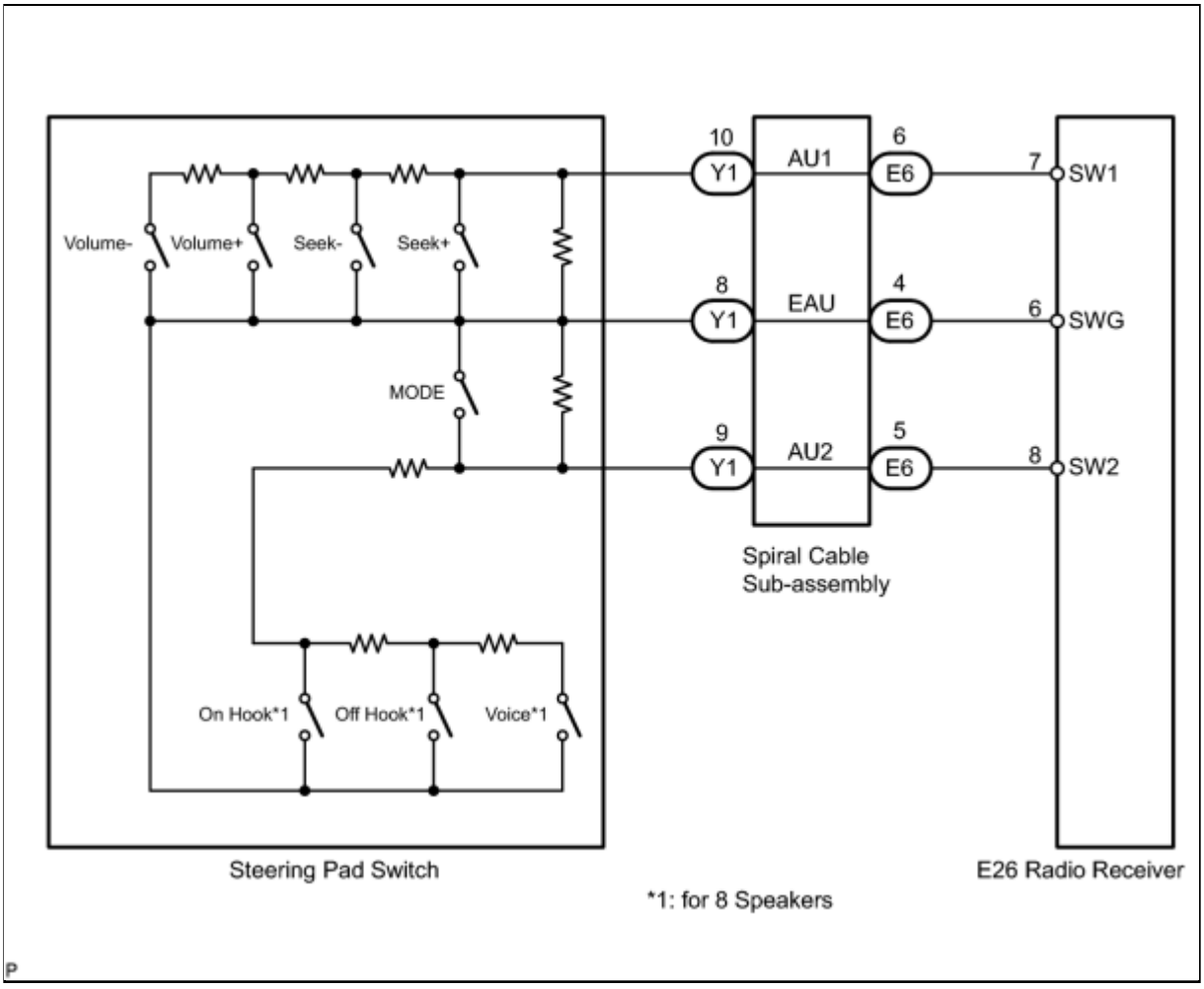

INSPECTION PROCEDURE

NOTICE:

The vehicle is equipped with an SRS (Supplemental Restraint System) which includes components such as airbags. Before servicing (including removal or installation of parts), be sure to read the precautionary notice for the Supplemental Restraint System INFO .

PROCEDURE

1.	**INSPECT RADIO RECEIVER**

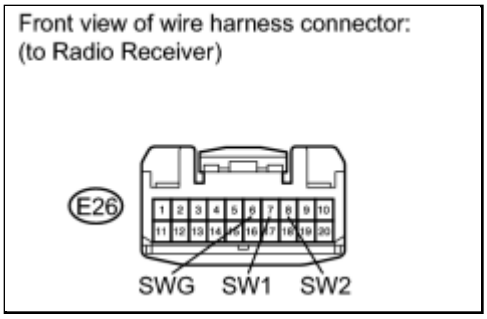

(a) Disconnect the radio receiver connector.

(b) Measure the resistance according to the value(s) in the table below.

Standard Resistance:

TESTER CONNECTION	CONDITION	SPECIFIED CONDITION
E26-7 (SW1) - E26-6 (SWG)	No switch is pushed	95 to 105 kΩ
E26-7 (SW1) - E26-6 (SWG)	Seek+ switch: pushed	Below 2.5 Ω
E26-7 (SW1) - E26-6 (SWG)	Seek- switch: pushed	313.5 to 346.5 Ω
E26-7 (SW1) - E26-6 (SWG)	Volume+ switch: pushed	959.5 to 1060.5 Ω
E26-7 (SW1) - E26-6 (SWG)	Volume- switch: pushed	3049.5 to 3370.5 Ω
E26-8 (SW2) - E26-6 (SWG)	No switch is pushed	95 to 105 kΩ
E26-8 (SW2) - E26-6 (SWG)	MODE switch: pushed	Below 2.5 Ω
E26-8 (SW2) - E26-6 (SWG)	Voice switch: pushed*1	3049.5 to 3370.5 Ω
E26-8 (SW2) - E26-6 (SWG)	On Hook switch: pushed*1	313.5 to 346.5 Ω
E26-8 (SW2) - E26-6 (SWG)	Off Hook switch: pushed*1	959.5 to 1060.5 Ω

- *1: for 8 Speakers

NG ▶ **INSPECT STEERING PAD SWITCH ASSEMBLY**

OK ▶ **PROCEED TO NEXT CIRCUIT INSPECTION SHOWN**

IN PROBLEM SYMPTOMS TABLE

2.	INSPECT STEERING PAD SWITCH ASSEMBLY

(a) Disconnect the steering pad switch assembly connector.

(b) Measure the resistance according to the values in the table below.

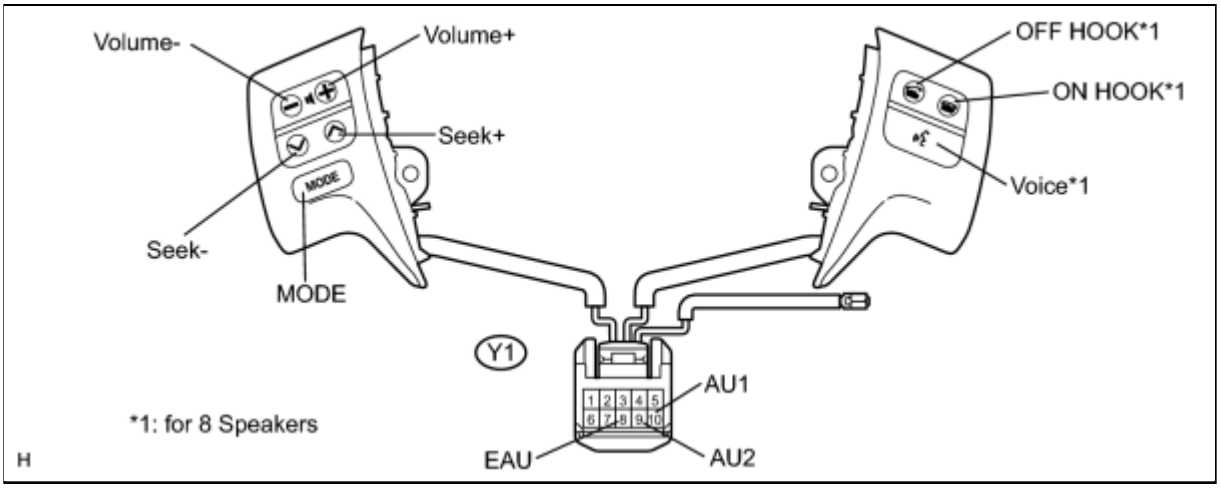

Standard Resistance:

TESTER CONNECTION	CONDITION	SPECIFIED CONDITION
Y1-10 (AU1) - Y1-8 (EAU)	No switch is pushed	95 to 105 kΩ
Y1-10 (AU1) - Y1-8 (EAU)	Seek+ switch: pushed	Below 2.5 Ω
Y1-10 (AU1) - Y1-8 (EAU)	Seek- switch: pushed	313.5 to 346.5 Ω
Y1-10 (AU1) - Y1-8 (EAU)	Volume+ switch: pushed	959.5 to 1060.5 Ω
Y1-10 (AU1) - Y1-8 (EAU)	Volume- switch: pushed	3049.5 to 3370.5 Ω
Y1-9 (AU2) - Y1-8 (EAU)	No switch is pushed	95 to 105 kΩ
Y1-9 (AU2) - Y1-8 (EAU)	MODE switch: pushed	Below 2.5 Ω
Y1-9 (AU2) - Y1-8 (EAU)	Voice switch: pushed*1	3049.5 to 3370.5 Ω
Y1-9 (AU2) - Y1-8 (EAU)	ON HOOK switch: pushed*1	313.5 to 346.5 Ω
Y1-9 (AU2) - Y1-8 (EAU)	OFF HOOK switch: pushed*1	959.5 to 1060.5 Ω

- *1: for 8 Speakers

NG ▶ REPLACE STEERING PAD SWITCH ASSEMBLY

OK

3.	**INSPECT SPIRAL CABLE**

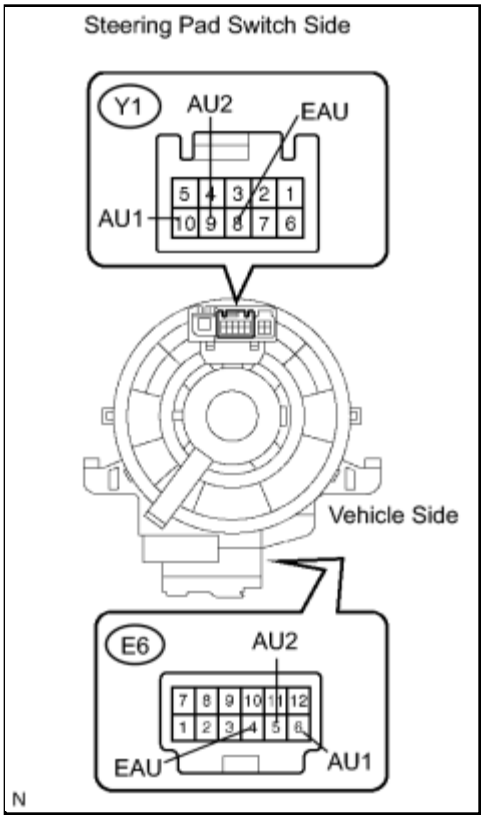

(a) Disconnect the steering pad switch and spiral cable connectors.

(b) Measure the resistance according to the value(s) in the table below.

Standard Resistance:

TESTER CONNECTION	CONDITION	SPECIFIED CONDITION
Y1-8 (EAU) - E6-4 (EAU)	Center	Below 1 Ω
	2.5 rotations to the left	
	2.5 rotations to the right	
Y1-10 (AU1) - E6-6 (AU1)	Center	Below 1 Ω
	2.5 rotations to the left	
	2.5 rotations to the right	
Y1-9 (AU2) - E6-5 (AU2)	Center	Below 1 Ω

TESTER CONNECTION	CONDITION	SPECIFIED CONDITION
	2.5 rotations to the left	
	2.5 rotations to the right	

NOTICE:

The spiral cable is an important part of the SRS airbag system. Incorrect removal or installation of the spiral cable may prevent the airbag from deploying. Be sure to read the page shown in the brackets.

HINT:

- Removal INFO
- Installation INFO

NG ▶ **REPLACE SPIRAL CABLE**

OK ▶ **REPAIR OR REPLACE HARNESS OR CONNECTOR (SPIRAL CABLE - RADIO RECEIVER)**

Last Modified: 3-10-2010	6.4 J	**From:** 200901
Model Year: 2010	**Model:** Corolla	**Doc ID:** RM0000014OV02LX
Title: AUDIO / VIDEO: AUDIO AND VISUAL SYSTEM: Sound Signal Circuit between Radio Receiver and Stereo Component Amplifier (2010 Corolla)		

Sound Signal Circuit between Radio Receiver and Stereo Component Amplifier

DESCRIPTION

The radio receiver sends a sound signal to the stereo component amplifier through this circuit.

The sound signal that has been sent is amplified by the stereo component amplifier, and then is sent to the speakers.

If there is an open or short in the circuit, sound cannot be heard from the speakers even if there is no malfunction in the stereo component amplifier or speakers.

WIRING DIAGRAM

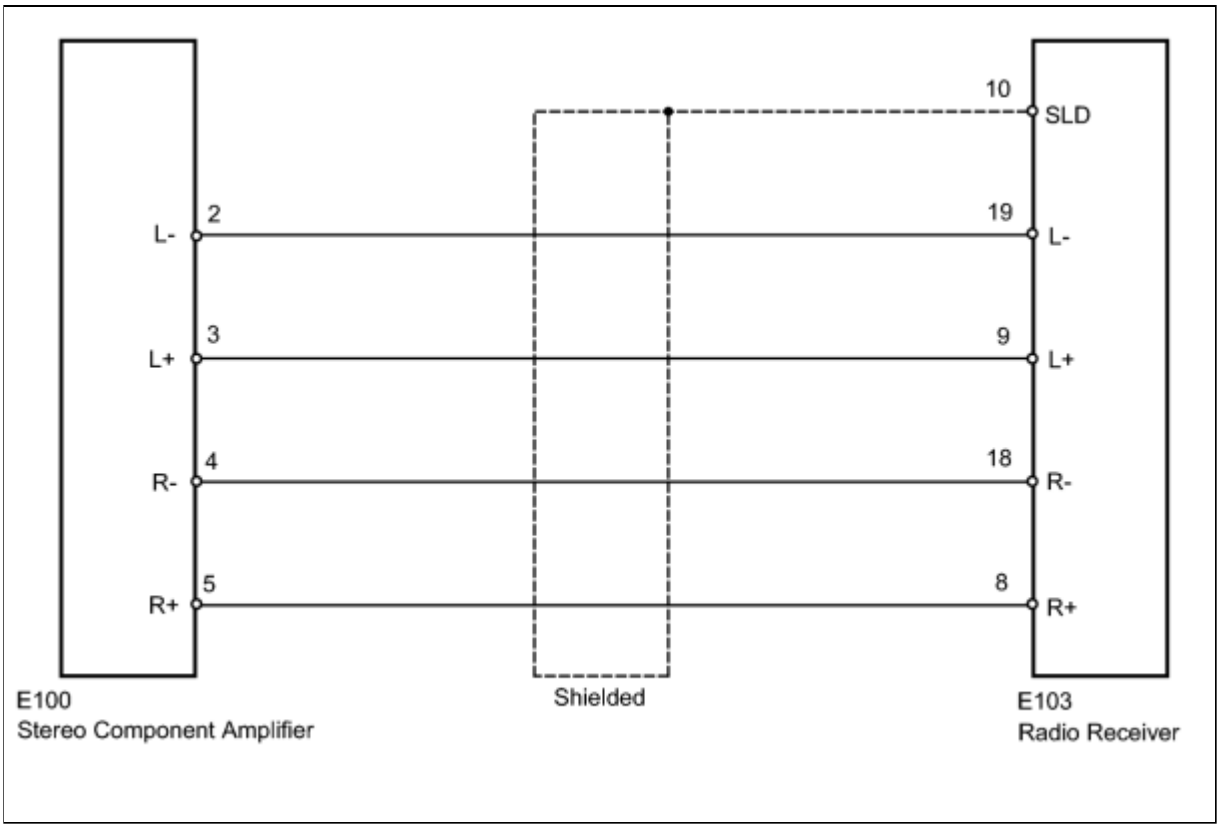

INSPECTION PROCEDURE

PROCEDURE

1.	**CHECK HARNESS AND CONNECTOR (RADIO RECEIVER - STEREO COMPONENT AMPLIFIER)**

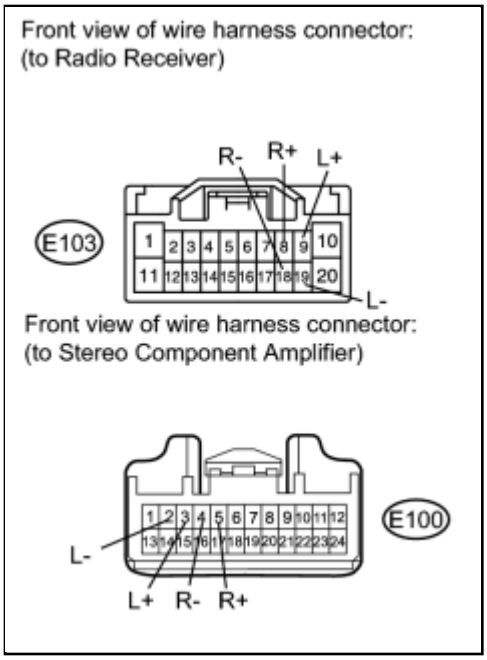

(a) Disconnect the connectors from the radio receiver and the stereo component amplifier.

(b) Measure the resistance according to the value(s) in the table below.

Standard Resistance:

TESTER CONNECTION	CONDITION	SPECIFIED CONDITION
E103-9 (L+) - E100-3 (L+)	Always	Below 1 Ω
E103-19 (L-) - E100-2 (L-)	Always	Below 1 Ω
E103-8 (R+) - E100-5 (R+)	Always	Below 1 Ω
E103-18 (R-) - E100-4 (R-)	Always	Below 1 Ω
E103-9 (L+) - Body ground	Always	10 kΩ or higher
E103-19 (L-) - Body ground	Always	10 kΩ or higher
E103-8 (R+) - Body ground	Always	10 kΩ or higher
E103-18 (R-) - Body ground	Always	10 kΩ or higher

NG ▶ **REPAIR OR REPLACE HARNESS OR CONNECTOR**

OK ▶ **PROCEED TO NEXT CIRCUIT INSPECTION SHOWN IN PROBLEM SYMPTOMS TABLE**

Last Modified: 3-10-2010	6.4 J	**From:** 200901
Model Year: 2010	**Model:** Corolla	**Doc ID:** RM0000014OW02LX
Title: AUDIO / VIDEO: AUDIO AND VISUAL SYSTEM: Mute Signal Circuit between Radio Receiver and Stereo Component Amplifier (2010 Corolla)		

Mute Signal Circuit between Radio Receiver and Stereo Component Amplifier

DESCRIPTION

This circuit sends a signal to the stereo component amplifier to mute noise. Because of that, the noise produced by changing the sound source ceases.

If there is an open in the circuit, noise can be heard from the speakers when changing the sound source.

If there is a short in the circuit, even though the stereo component amplifier is functioning, no sound, or only an extremely faint sound, can be heard.

WIRING DIAGRAM

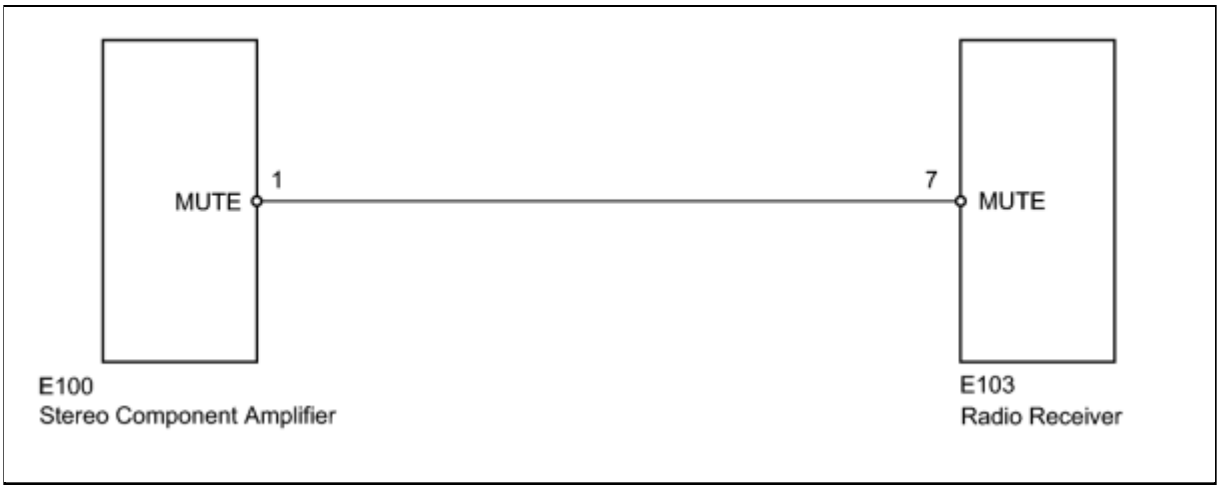

INSPECTION PROCEDURE

PROCEDURE

1.	**INSPECT STEREO COMPONENT AMPLIFIER**

(a) Measure the voltage according to the value(s) in the table below.

Standard Voltage:

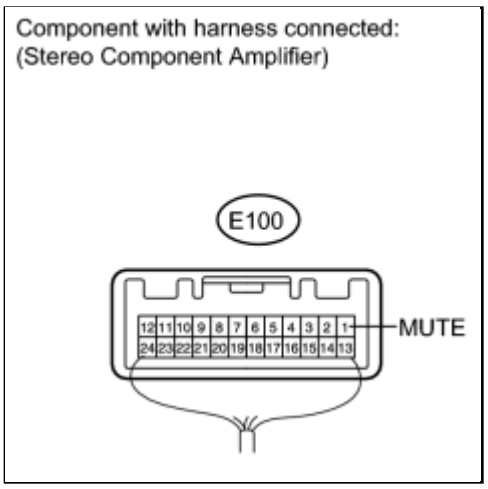

TESTER CONNECTION	CONDITION	SPECIFIED CONDITION
E100-1 (MUTE) - Body ground	Ignition switch ACC, Audio system is playing → Changing sources	Above 3.5 V → Below 1 V

NG ▶ **CHECK HARNESS AND CONNECTOR (RADIO RECEIVER - STEREO COMPONENT AMPLIFIER)**

OK ▶ **PROCEED TO NEXT CIRCUIT INSPECTION SHOWN IN PROBLEM SYMPTOMS TABLE**

2.	**CHECK HARNESS AND CONNECTOR (RADIO RECEIVER - STEREO COMPONENT AMPLIFIER)**

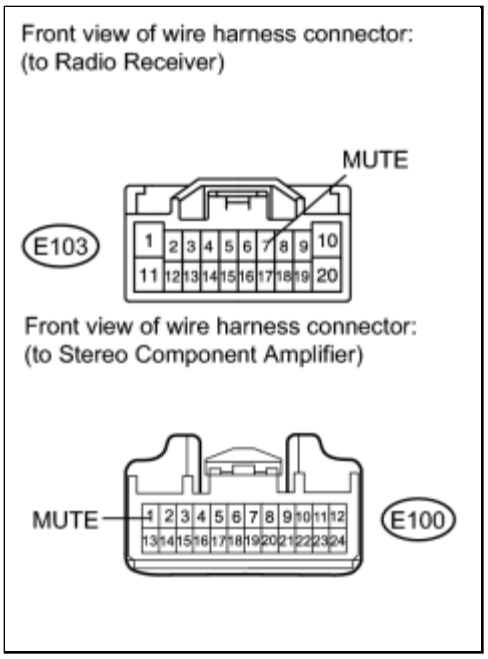

(a) Disconnect the radio receiver connector and the stereo component amplifier connector.

(b) Measure the resistance according to the value(s) in the table below.

Standard Resistance:

TESTER CONNECTION	CONDITION	SPECIFIED CONDITION
E103-7 (MUTE) - E100-1 (MUTE)	Always	Below 1 Ω
E103-7 (MUTE) - Body ground	Always	10 kΩ or higher

NG ▶ **REPAIR OR REPLACE HARNESS OR CONNECTOR**

OK ▼

3.	**INSPECT STEREO COMPONENT AMPLIFIER (OUTPUT SIGNAL)**

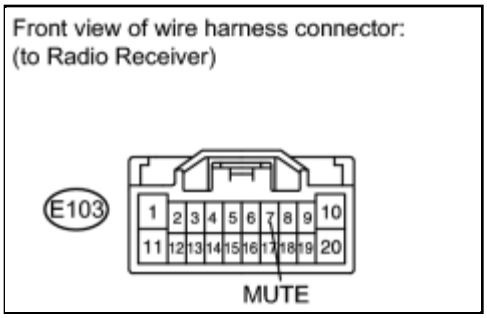

(a) Reconnect the stereo component amplifier connector.

(b) Measure the voltage according to the value(s) in the table below.

Standard Voltage:

TESTER CONNECTION	CONDITION	SPECIFIED CONDITION
E103-7 (MUTE) - Body ground	Ignition switch ACC, Audio system is playing.	Above 3.5 V

NG ▶ **REPLACE STEREO COMPONENT AMPLIFIER**

OK ▶ **REPLACE RADIO RECEIVER**

Last Modified: 3-10-2010	6.4 J	**From:** 200901
Model Year: 2010	**Model:** Corolla	**Doc ID:** RM000001ZYU02FX
Title: AUDIO / VIDEO: AUDIO AND VISUAL SYSTEM: Sound Signal Circuit between Radio Receiver and Stereo Jack Adapter (2010 Corolla)		

Sound Signal Circuit between Radio Receiver and Stereo Jack Adapter

DESCRIPTION

The stereo jack adapter sends an external device sound signal to the radio receiver through this circuit.

The sound signal that has been sent is amplified by the stereo component amplifier or radio receiver, and then is sent to the speakers.

If there is an open or short in the circuit, sound cannot be heard from the speakers even if there is no malfunction in the stereo component amplifier, radio receiver, or speakers.

WIRING DIAGRAM

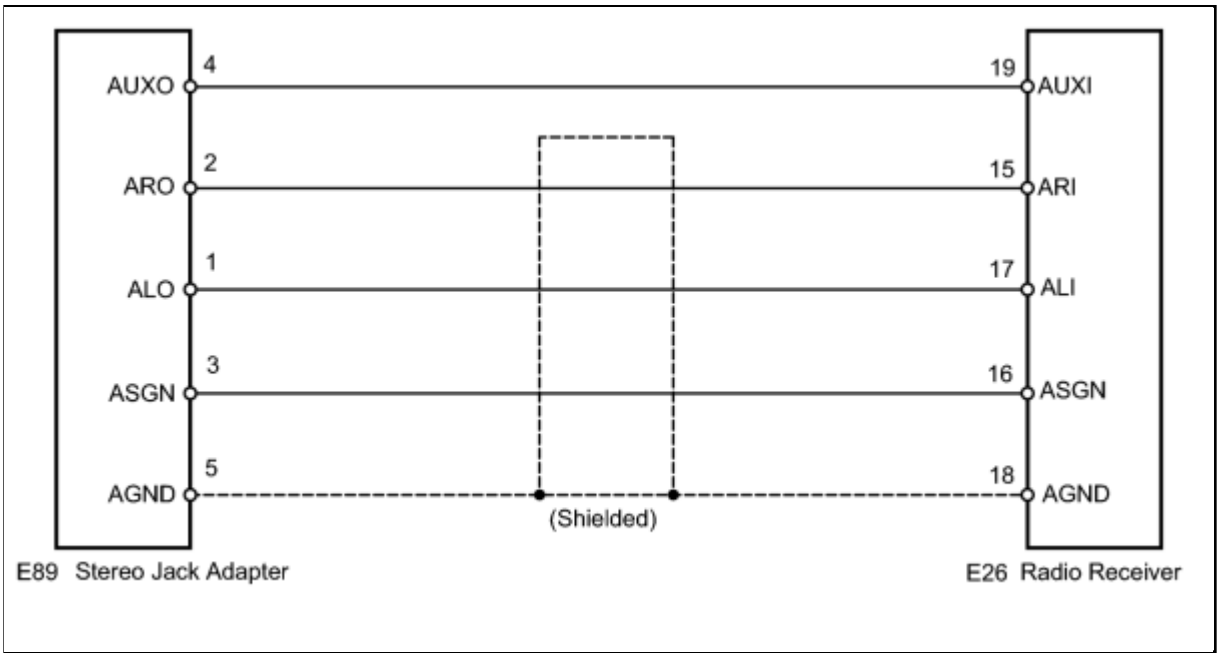

INSPECTION PROCEDURE

PROCEDURE

1.	**CHECK HARNESS AND CONNECTOR (RADIO RECEIVER - STEREO JACK ADAPTER)**

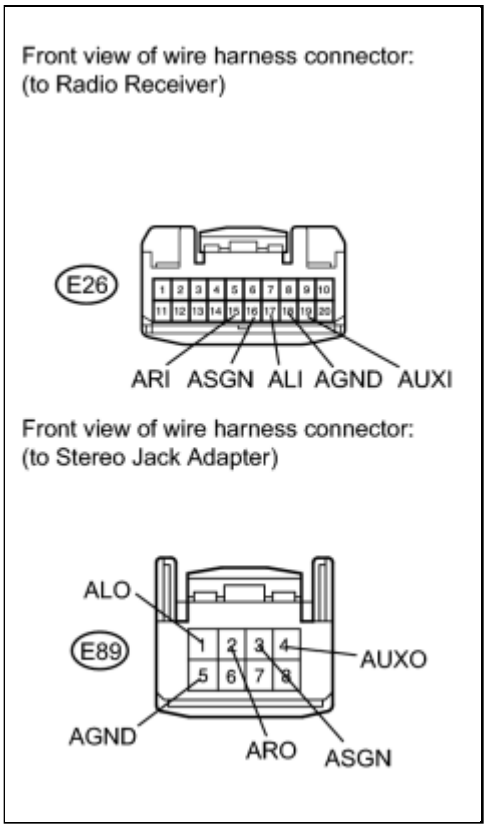

(a) Disconnect the connectors from the stereo jack adapter and the radio receiver.

(b) Measure the resistance according to the value(s) in the table below.

Standard Resistance:

TESTER CONNECTION	CONDITION	SPECIFIED CONDITION
E89-4 (AUXO) - E26-19 (AUXI)	Always	Below 1 Ω
E89-3 (ASGN) - E26-16 (ASGN)	Always	Below 1 Ω
E89-2 (ARO) - E26-15 (ARI)	Always	Below 1 Ω
E89-1 (ALO) - E26-17 (ALI)	Always	Below 1 Ω
E89-5 (AGND) - E26-18 (AGND)	Always	Below 1 Ω
E89-4 (AUXO) - Body ground	Always	10 kΩ or higher
E89-3 (ASGN) - Body ground	Always	10 kΩ or higher
E89-2 (ARO) - Body ground	Always	10 kΩ or higher
E89-1 (ALO) - Body ground	Always	10 kΩ or higher
E89-5 (AGND) - Body ground	Always	Below 1 Ω

NG ▶ **REPAIR OR REPLACE HARNESS OR CONNECTOR**

OK ▶ **PROCEED TO NEXT CIRCUIT INSPECTION SHOWN IN PROBLEM SYMPTOMS TABLE**

Last Modified: 3-10-2010	6.4 J	**From:** 200901
Model Year: 2010	**Model:** Corolla	**Doc ID:** RM0000019NG07IX
Title: AUDIO / VIDEO: AUDIO AND VISUAL SYSTEM: AVC-LAN Circuit (2010 Corolla)		

AVC-LAN Circuit

DESCRIPTION

Each audio system component connected to the AVC-LAN (communication bus) transfers the switch signals by the audio visual communication local area network.

If a short to +B or short to ground occurs in this AVC-LAN, the audio system will not function normally as communication is stopped.

INSPECTION PROCEDURE

PROCEDURE

1.	**INSPECT RADIO RECEIVER**

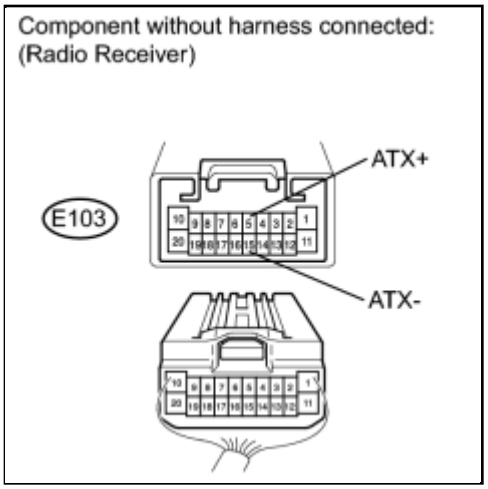

(a) Disconnect the radio receiver connector.

(b) Measure the resistance according to the value(s) in the table below.

Standard Resistance:

TESTER CONNECTION	CONDITION	SPECIFIED CONDITION
E103-5 (ATX+) - E103-15 (ATX-)	Always	60 to 80 Ω

NG ▶ **REPLACE RADIO RECEIVER**

OK

2.	CHECK HARNESS AND CONNECTOR

HINT:

For details of the connectors, refer to Terminals of ECU INFO **.**

(a) Referring to the following AVC-LAN Wiring Diagram, check all AVC-LAN circuits.

(1) Disconnect all connectors in all AVC-LAN circuits.

(2) Check for an open or short in all AVC-LAN circuits.

OK:

There is no open or short circuit.

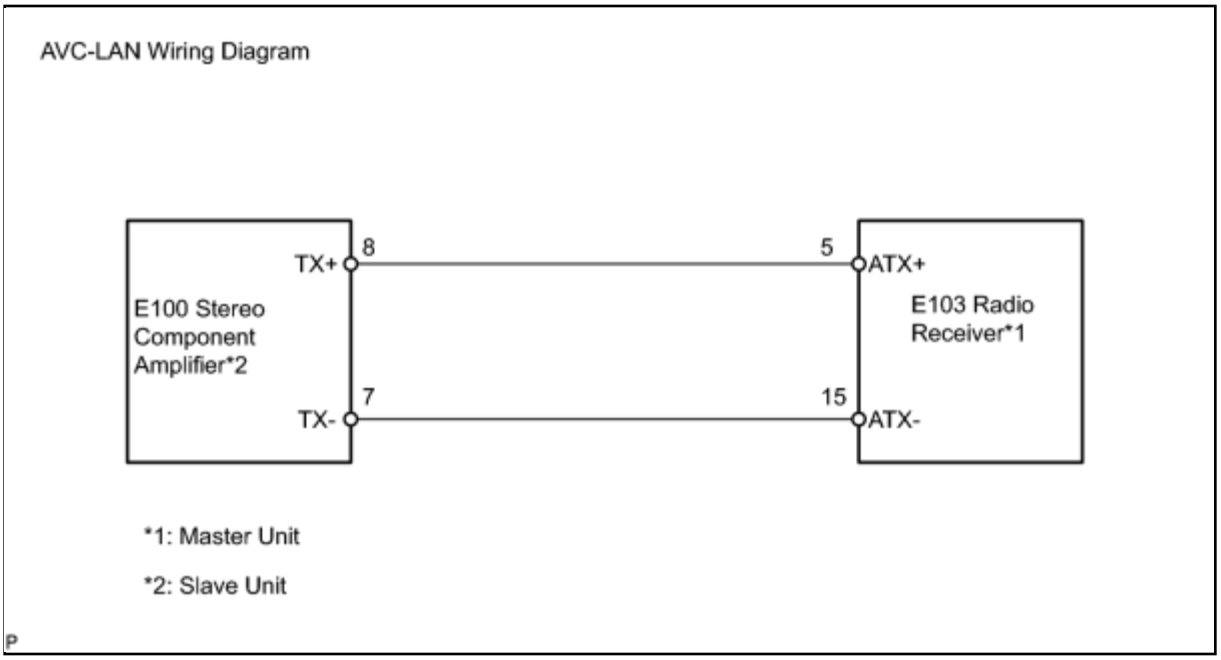

NG **REPAIR OR REPLACE HARNESS OR CONNECTOR**

OK

3.	INSPECT MALFUNCTIONING PARTS

(a) Disconnect and reconnect each slave unit one by one until the master unit returns to

normal operation.

HINT:

- Check all slave units.
- When disconnecting a slave unit causes the master unit to return to normal operation, this indicates that the slave unit is malfunctioning. Replace the malfunctioning slave unit.

OK:
Master unit returns to normal operation.

NG ▶ **PROCEED TO NEXT CIRCUIT INSPECTION SHOWN IN PROBLEM SYMPTOMS TABLE**

OK ▶ **REPLACE MALFUNCTIONING PARTS**

Last Modified: 3-10-2010	6.4 J	**From:** 200901
Model Year: 2010	**Model:** Corolla	**Doc ID:** RM000002NNE03DX
Title: AUDIO / VIDEO: AUDIO AND VISUAL SYSTEM: Vehicle Speed Signal Circuit between Stereo Component Amplifier and Combination Meter (2010 Corolla)		

Vehicle Speed Signal Circuit between Stereo Component Amplifier and Combination Meter

DESCRIPTION

The circuit is necessary for the ASL (Automatic Sound Levelizer) built into the stereo component amplifier.

Speed signals are received from the combination meter and used for the ASL.

The ASL function automatically adjusts the sound volume in order to clear audio quality even when vehicle noise increases (as vehicle noise increases, the volume is turned up etc.).

HINT:

- A voltage of 12 V or 5 V is output from each ECU and then input to the combination meter. The signal is changed to a pulse signal at the transistor in the combination meter. Each ECU controls the respective system based on the pulse signal.
- If a short occurs in any of the ECUs or in the wire harness connected to an ECU, all systems in the diagram below will not operate normally.

WIRING DIAGRAM

1. for TMC Made 2ZR-FE:

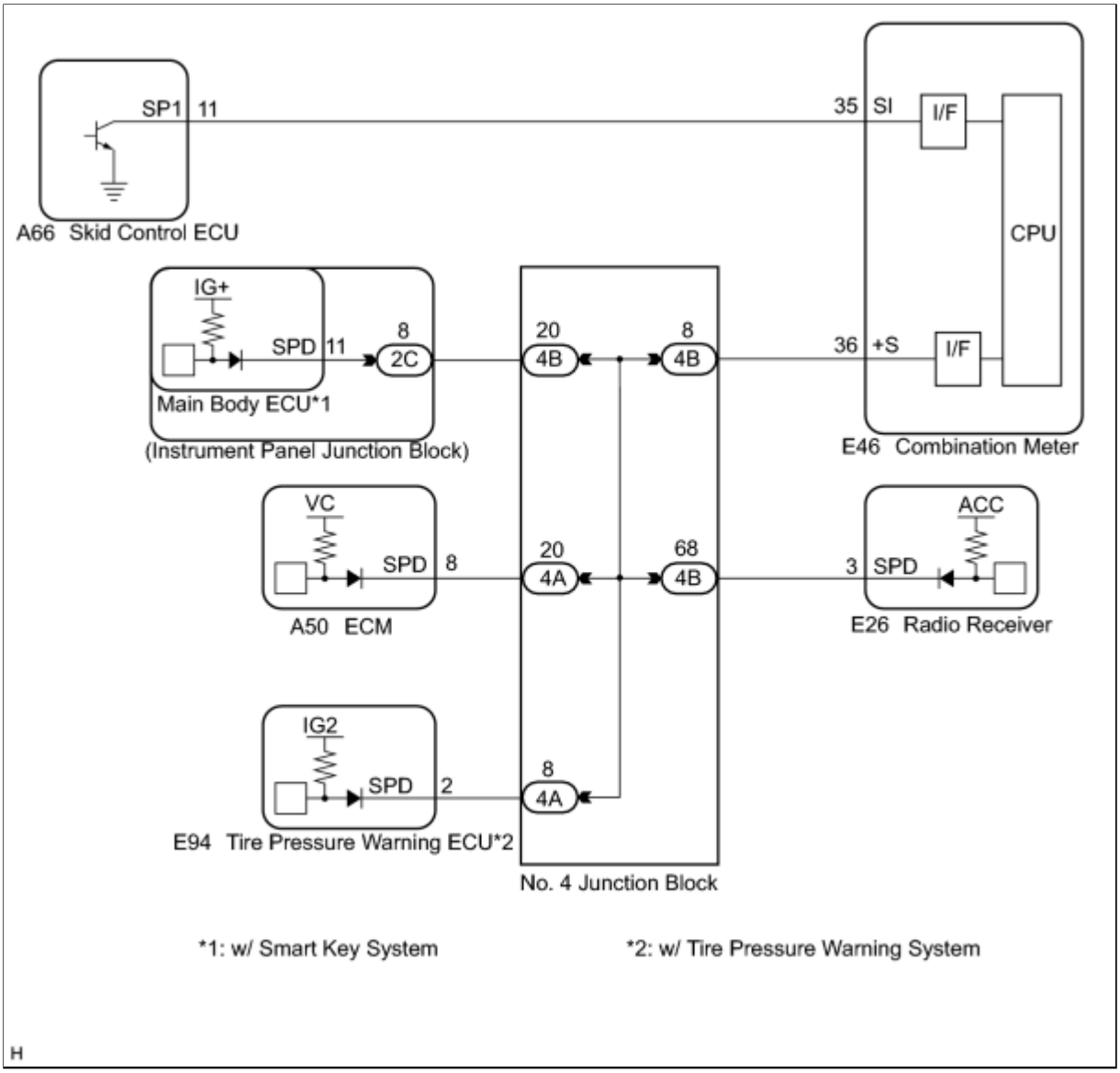

2. except TMC Made 2ZR-FE:

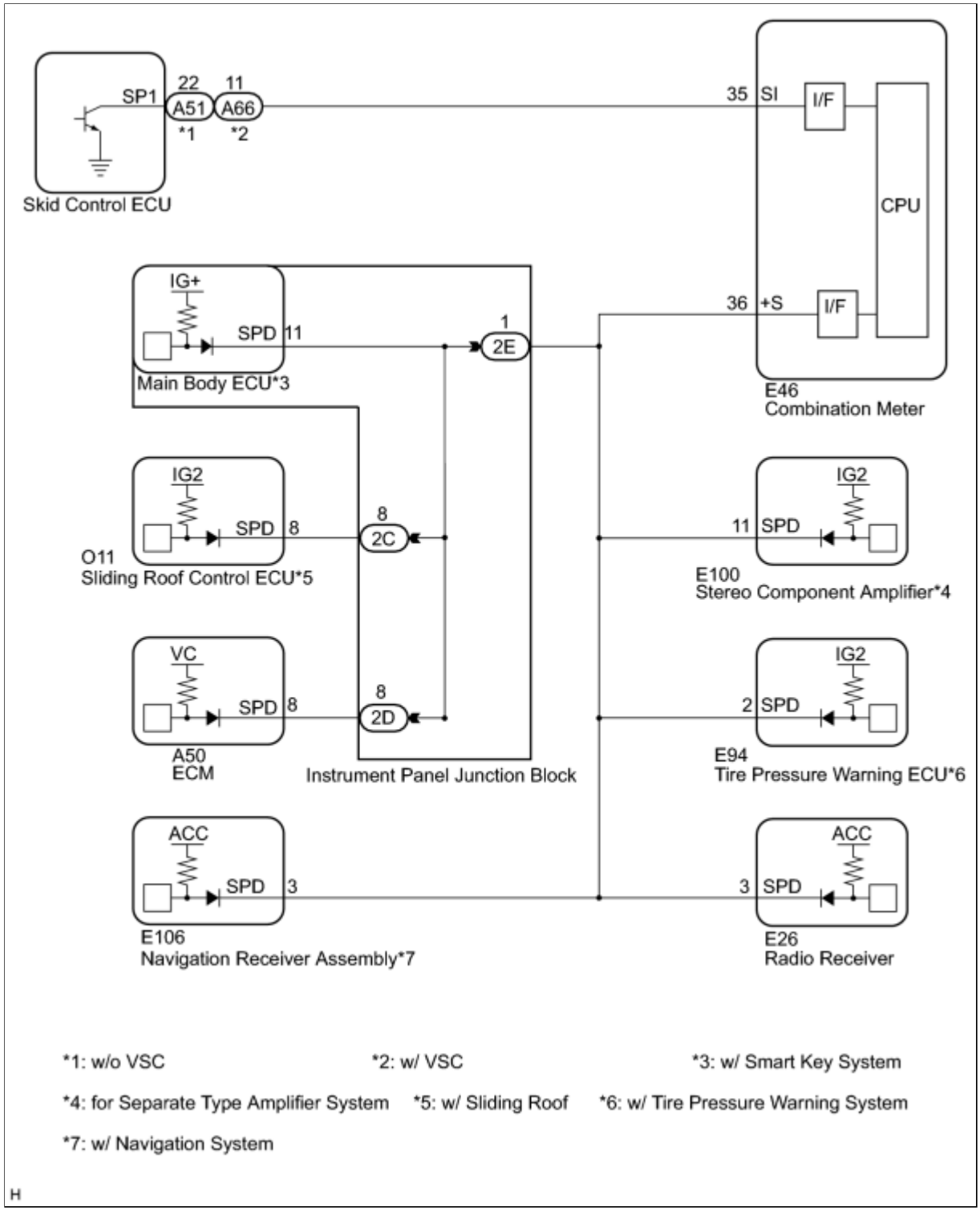

3. except TMC Made 2AZ-FE:

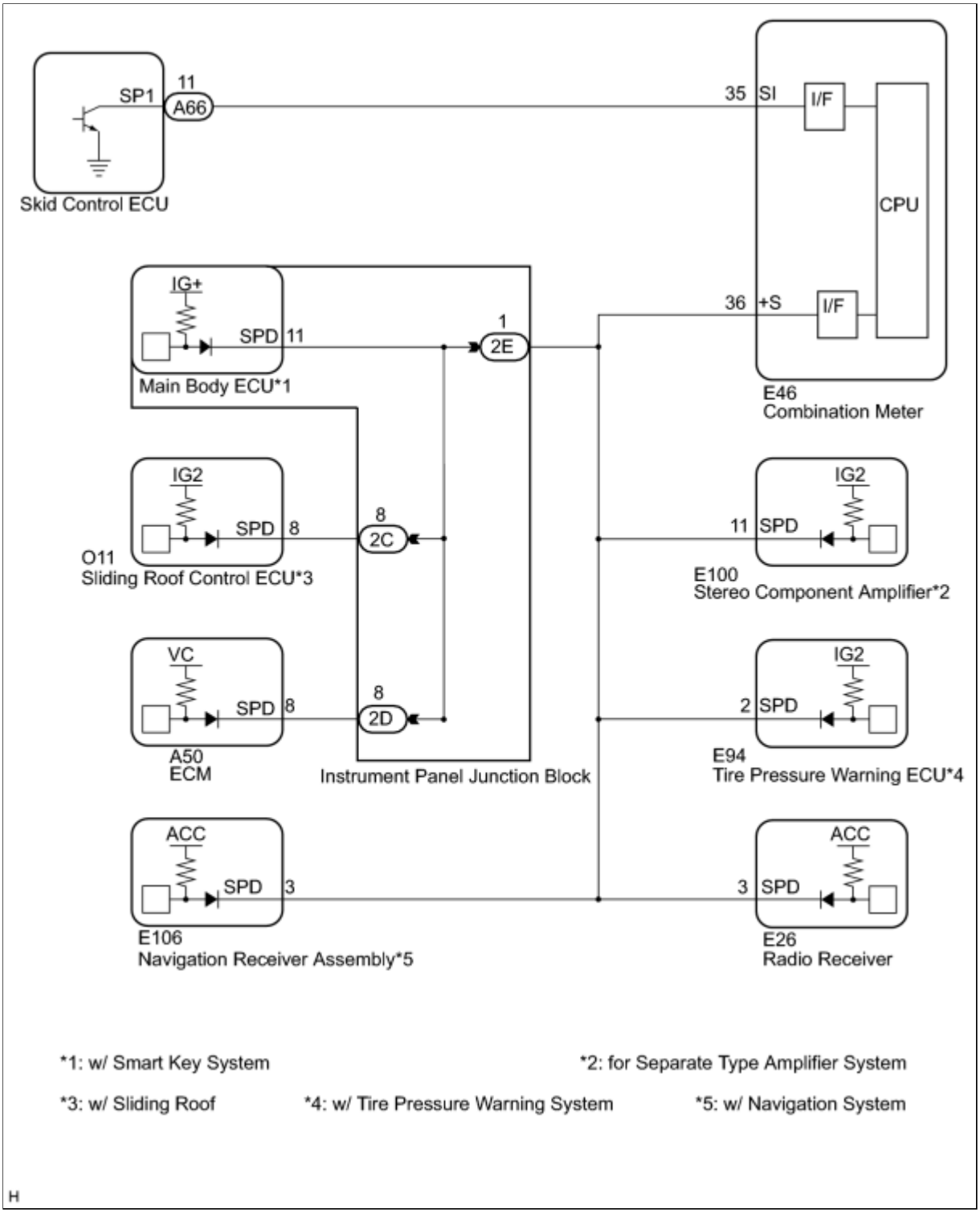

INSPECTION PROCEDURE

PROCEDURE

1.	**INSPECT COMBINATION METER ASSEMBLY (OUTPUT WAVEFORM)**

(a) Check the output waveform.

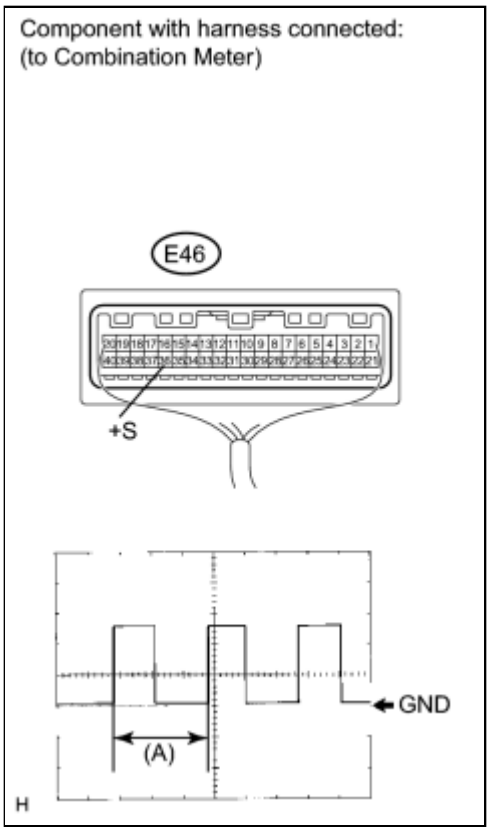

(1) Remove the combination meter assembly with the connector still connected.

(2) Connect an oscilloscope to terminals E46-36 (+S) and body ground.

(3) Turn the ignition switch to ON.

(4) Turn the wheel slowly.

(5) Check the signal waveform according to the condition(s) in the table below.

ITEM	CONDITION
Tool setting	5 V/DIV., 20 ms./DIV.
Vehicle condition	Driving at approx. 20 km/h (12 mph)

OK:

The waveform is displayed as shown in the illustration.

HINT:

When the system is functioning normally, one wheel revolution generates 4 pulses. As the vehicle speed increases, the width indicated by (A) in the illustration narrows.

NG ▶ **GO TO METER / GAUGE SYSTEM**

OK ▼

2.	**CHECK HARNESS AND CONNECTOR (STEREO COMPONENT AMPLIFIER - COMBINATION METER ASSEMBLY)**

(a) Disconnect the stereo component amplifier connector and combination meter assembly connector.

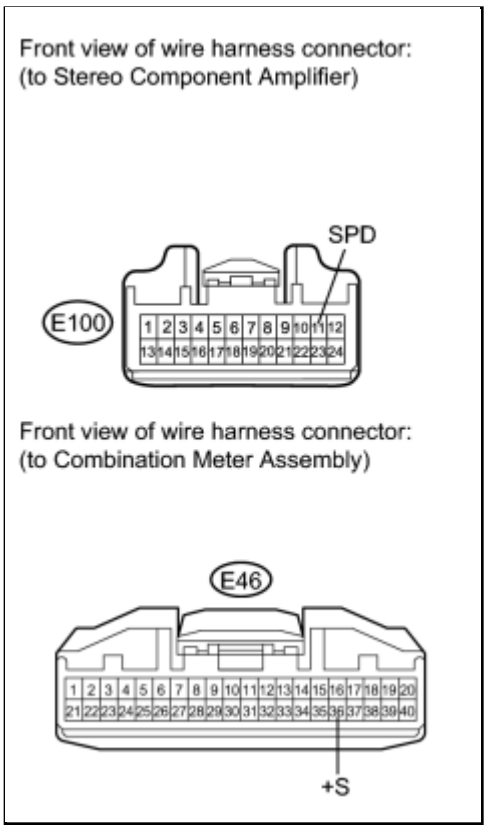

(b) Measure the resistance according to the value(s) in the table below.

Standard Resistance:

TESTER CONNECTION	CONDITION	SPECIFIED CONDITION
E100-11 (SPD) - E46-36 (+S)	Always	Below 1 Ω

NG ▶ **REPAIR OR REPLACE HARNESS OR CONNECTOR**

OK ▶ **REPLACE STEREO COMPONENT AMPLIFIER**

Last Modified: 3-10-2010	6.4 J	**From:** 200901
Model Year: 2010	**Model:** Corolla	**Doc ID:** RM000002EXE019X
Title: AUDIO / VIDEO: AUDIO AND VISUAL SYSTEM: Cellular Phone Voice Circuit between Radio Receiver and Stereo Component Amplifier (2010 Corolla)		

Cellular Phone Voice Circuit between Radio Receiver and Stereo Component Amplifier

SYSTEM DESCRIPTION

This circuit is used when an incoming cellular phone voice in the "Bluetooth" handsfree system is received.

WIRING DIAGRAM

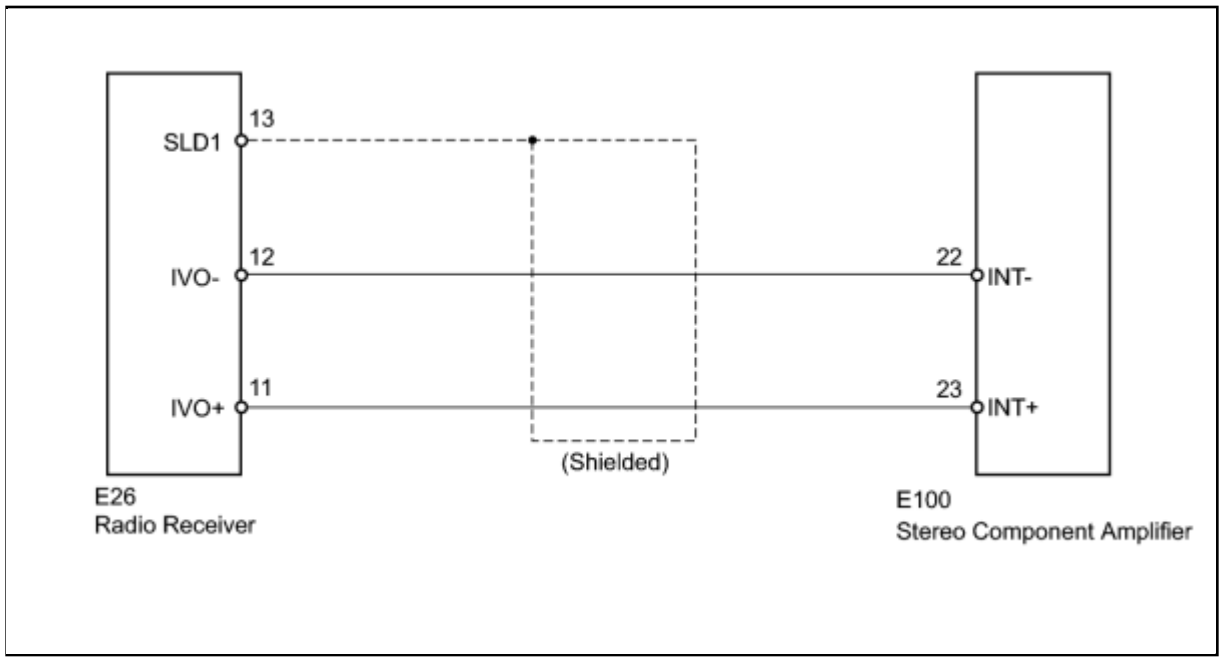

INSPECTION PROCEDURE

PROCEDURE

1.	**CHECK HARNESS AND CONNECTOR (RADIO RECEIVER - STEREO COMPONENT AMPLIFIER)**

(a) Disconnect the radio receiver connector and the stereo component amplifier connector.

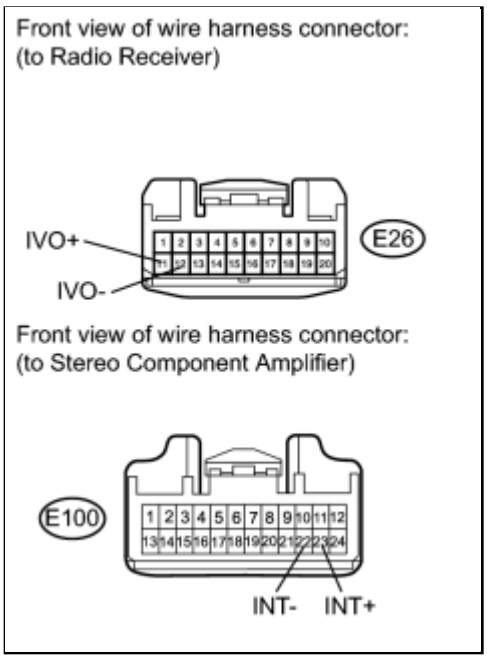

(b) Measure the resistance according to the value(s) in the table below.

Standard Resistance:

TESTER CONNECTION	CONDITION	SPECIFIED CONDITION
E26-11 (IVO+) - E100-23 (INT+)	Always	Below 1 Ω
E26-12 (IVO-) - E100-22 (INT-)	Always	Below 1 Ω
E26-11 (IVO+) - Body ground	Always	10 kΩ or higher
E26-12 (IVO-) - Body ground	Always	10 kΩ or higher

NG ▶ **REPAIR OR REPLACE HARNESS OR CONNECTOR**

OK ▶ **PROCEED TO NEXT CIRCUIT INSPECTION SHOWN IN PROBLEM SYMPTOMS TABLE**

Last Modified: 3-10-2010	6.4 J	**From:** 200901
Model Year: 2010	**Model:** Corolla	**Doc ID:** RM000002EBY015X
Title: AUDIO / VIDEO: AUDIO AND VISUAL SYSTEM: Microphone Circuit between Microphone and Radio Receiver (2010 Corolla)		

Microphone Circuit between Microphone and Radio Receiver

DESCRIPTION

This circuit sends a microphone signal from the microphone to the radio receiver.

It also supplies power from the radio receiver to the microphone.

WIRING DIAGRAM

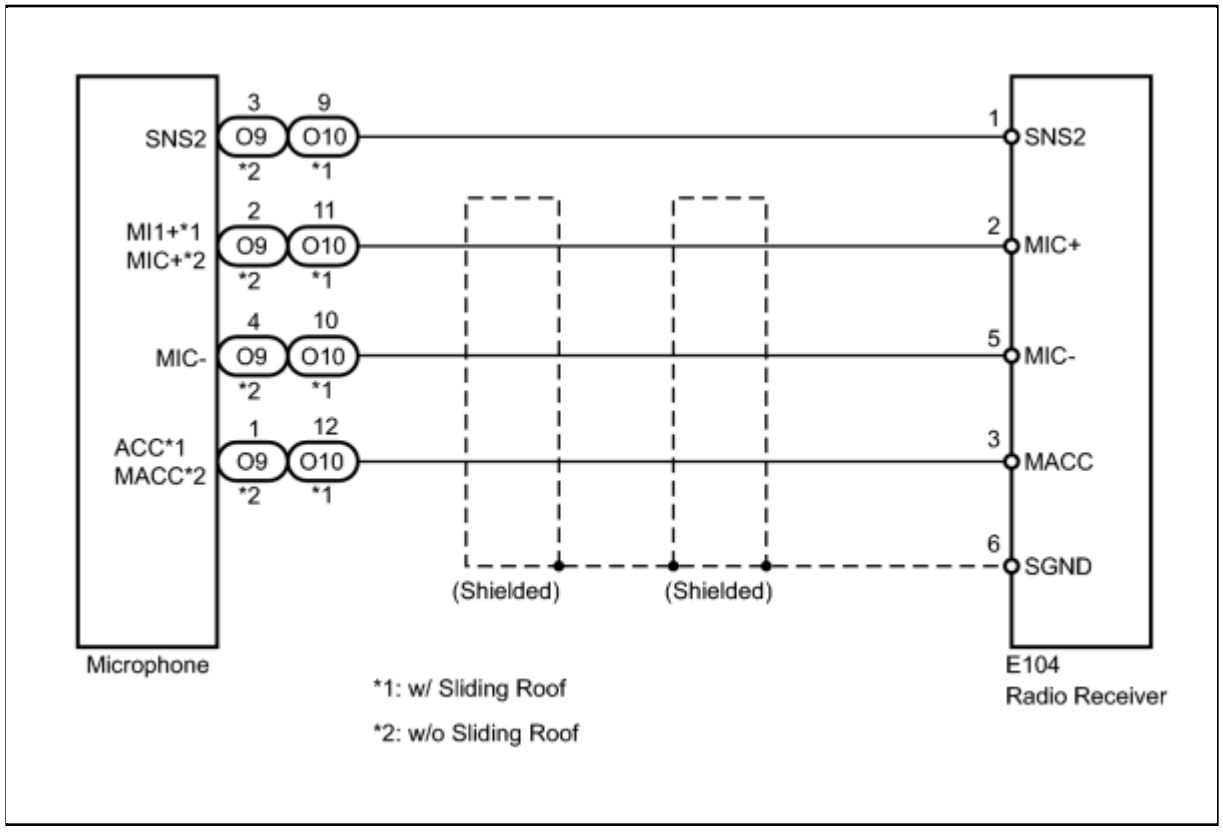

INSPECTION PROCEDURE

PROCEDURE

1.	**INSPECT RADIO RECEIVER**

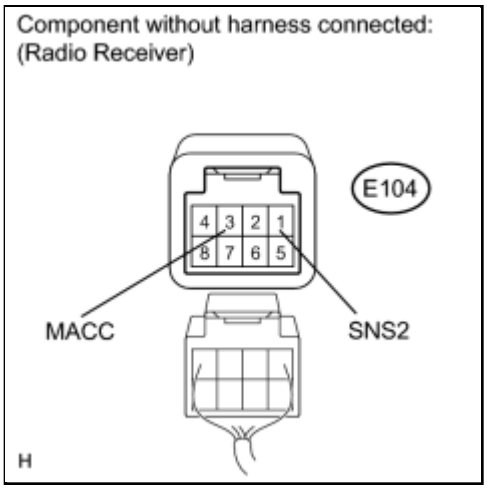

(a) Disconnect the radio receiver connector.

(b) Measure the voltage according to the value(s) in the table below.

Standard Voltage:

TESTER CONNECTION	CONDITION	SPECIFIED CONDITION
E104-3 (MACC) - Body ground	Ignition switch ON	4 to 6 V
E104-1 (SNS2) - Body ground	Ignition switch ON	4 to 6 V

NG ▶ **REPLACE RADIO RECEIVER**

OK ▼

2.	**CHECK HARNESS AND CONNECTOR (MICROPHONE - RADIO RECEIVER)**

(a) Disconnect the microphone connector and the radio receiver connector.

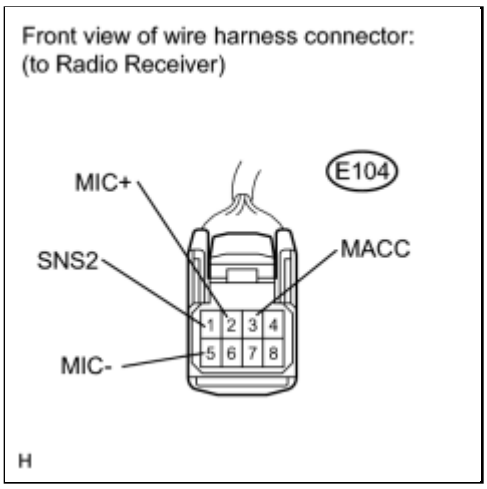

(b) Measure the resistance according to the value(s) in the table below.

Standard Resistance:

w/ Sliding Roof

w/o Sliding Roof

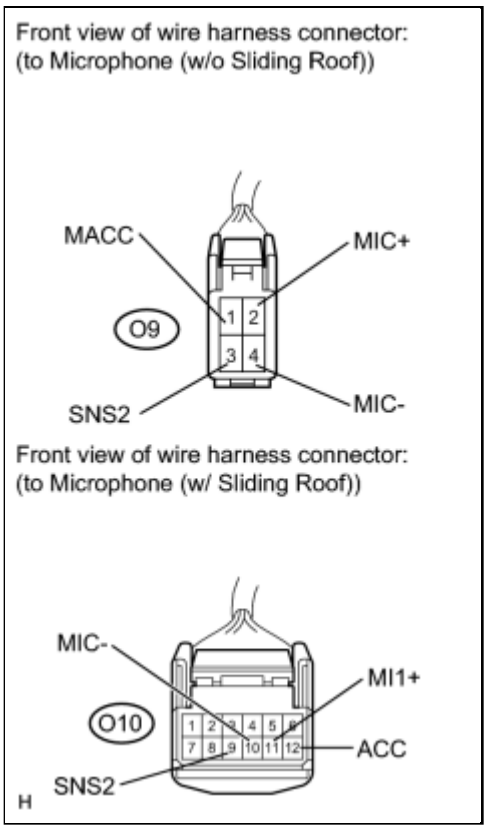

TESTER CONNECTION	CONDITION	SPECIFIED CONDITION
O10-9 (SNS2) - E104-1 (SNS2)	Always	Below 1 Ω
O10-11 (MI1+) - E104-2 (MIC+)	Always	Below 1 Ω
O10-10 (MIC-) - E104-5 (MIC-)	Always	Below 1 Ω
O10-12 (ACC) - E104-3 (MACC)	Always	Below 1 Ω
O10-9 (SNS2) - Body ground	Always	10 kΩ or higher
O10-11 (MI1+) - Body ground	Always	10 kΩ or higher
O10-10 (MIC-) - Body ground	Always	10 kΩ or higher
O10-12 (ACC) - Body ground	Always	10 kΩ or higher

TESTER CONNECTION	CONDITION	SPECIFIED CONDITION
O9-3 (SNS2) - E104-1 (SNS2)	Always	Below 1 Ω

O9-2 (MIC+) - E104-2 (MIC+)	Always	Below 1 Ω
O9-4 (MIC-) - E104-5 (MIC-)	Always	Below 1 Ω
O9-1 (MACC) - E104-3 (MACC)	Always	Below 1 Ω
O9-3 (SNS2) - Body ground	Always	10 kΩ or higher
O9-2 (MIC+) - Body ground	Always	10 kΩ or higher
O9-4 (MIC-) - Body ground	Always	10 kΩ or higher
O9-1 (MACC) - Body ground	Always	10 kΩ or higher

NG ▶ **REPAIR OR REPLACE HARNESS OR CONNECTOR**

OK ▶ **PROCEED TO NEXT CIRCUIT INSPECTION SHOWN IN PROBLEM SYMPTOMS TABLE**

Last Modified: 3-10-2010	6.4 J	**From:** 200901
Model Year: 2010	**Model:** Corolla	**Doc ID:** RM000001841064X
Title: AUDIO / VIDEO: AUDIO AND VISUAL SYSTEM: Radio Receiver Communication Error (2010 Corolla)		

Radio Receiver Communication Error

INSPECTION PROCEDURE

PROCEDURE

1.	**IDENTIFY THE COMPONENT SHOWN BY SUB-CODE**

(a) Enter the diagnostic mode.

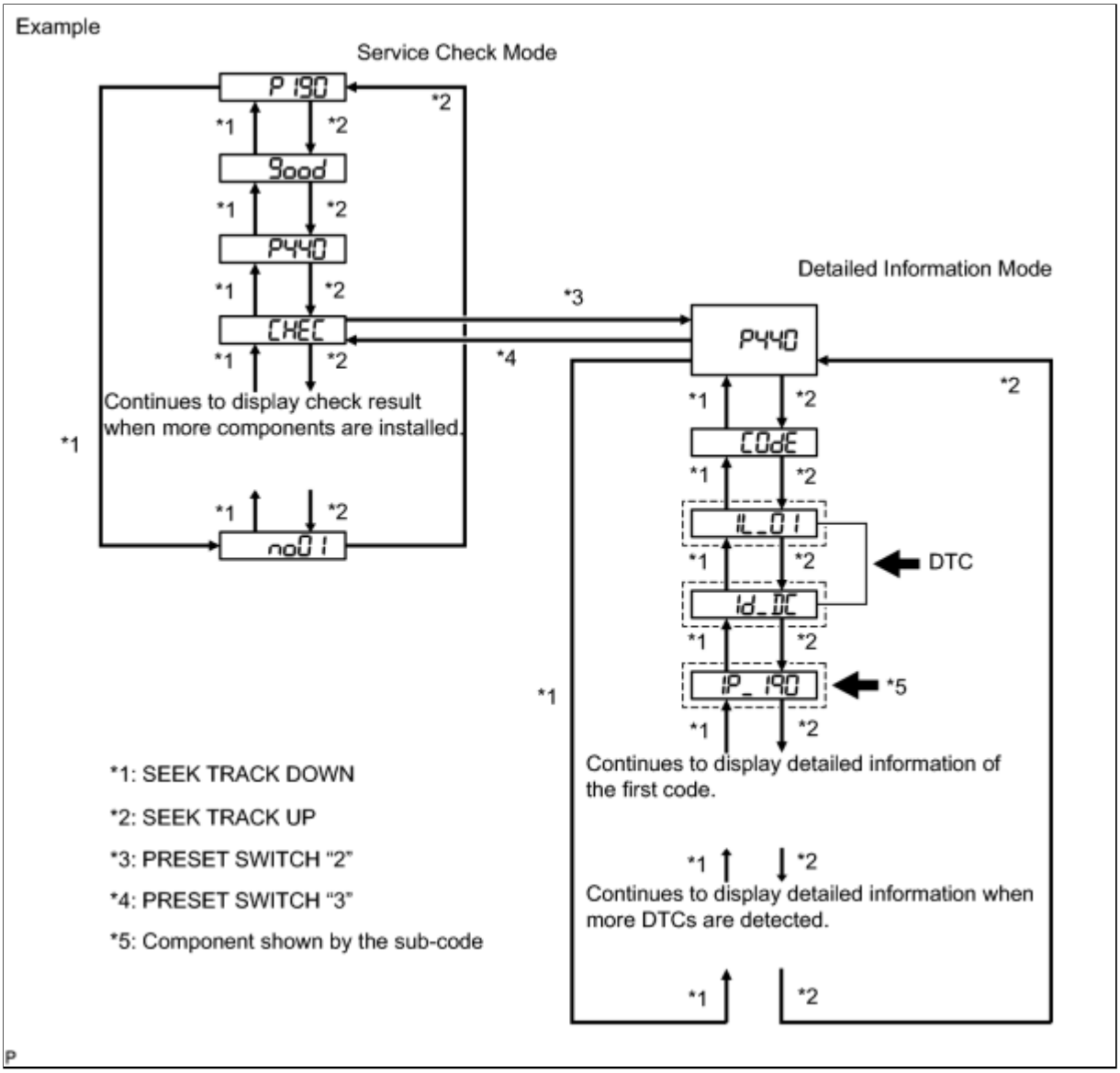

(b) Press the preset switch "3" to change the mode to "Detailed Information Mode".

(c) Identify the component shown by the sub-code.

HINT:

- "P190" set by the radio receiver is shown in the preceding illustration as an example.
- For details of the DTC display, refer to DTC Check/Clear INFO .

NEXT

2.	**CHECK POWER SOURCE CIRCUIT OF COMPONENT SHOWN BY SUB-CODE**

(a) Inspect the power source circuit of the component shown by the sub-code.

If the power source circuit is operating normally, proceed to the next step.

Component Table

COMPONENT	PROCEED TO
Stereo component amplifier (440)	Stereo component amplifier power source circuit INFO

NEXT

3.	**INSPECT RADIO RECEIVER**

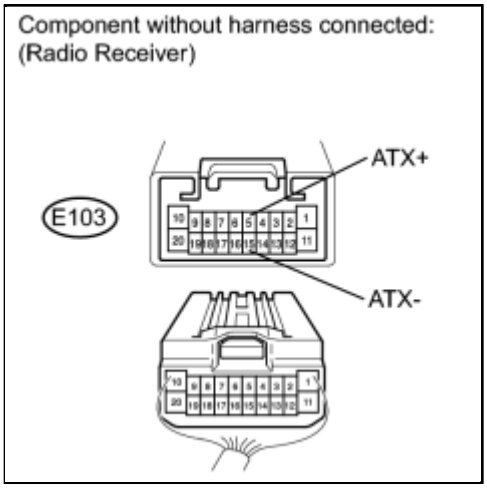

(a) Disconnect the radio receiver connector.

(b) Measure the resistance according to the value(s) in the table below.

Standard Resistance:

TESTER CONNECTION	CONDITION	SPECIFIED CONDITION
E103-5 (ATX+) - E103-15 (ATX-)	Always	60 to 80 Ω

NG ▶ **REPLACE RADIO RECEIVER**

OK

4.	**CHECK HARNESS AND CONNECTOR (RADIO RECEIVER - COMPONENT SHOWN BY SUB-CODE)**

HINT:

- Start the check from the circuit that is near the component shown by the sub-code first.
- For details of the connectors, refer to Terminals of ECU INFO .

(a) Referring to the following AVC-LAN Wiring Diagram, check the AVC-LAN circuit between the radio receiver and the component shown by the sub-code.

(1) Disconnect all connectors between the radio receiver and the component shown by the sub-code.

(2) Check for an open or short in the AVC-LAN circuit between the radio receiver and the component shown by the sub-code.

OK:

There is no open or short circuit.

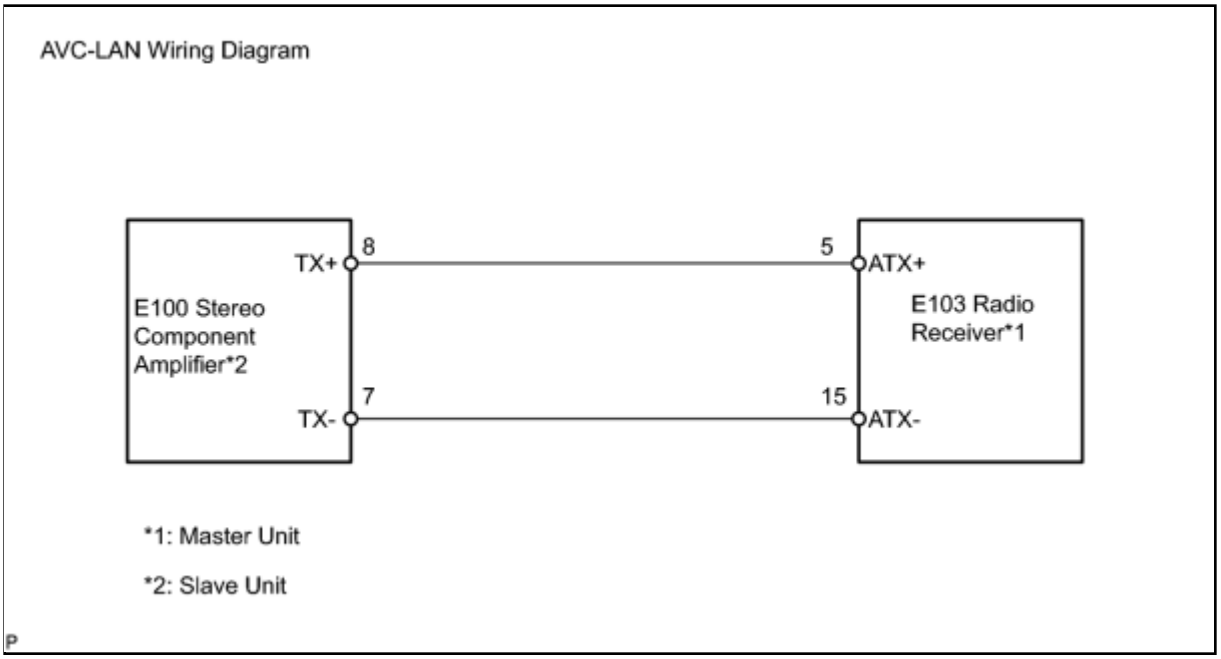

NG ▶ **REPAIR OR REPLACE HARNESS OR CONNECTOR**

OK ▼

5.	**REPLACE COMPONENT SHOWN BY SUB-CODE**

(a) Replace the component shown by the sub-code with a known good one and check if the same problem occurs again.

OK:

Same problem does not occur.

NG ▶ **REPLACE RADIO RECEIVER**

OK ▶ **END**

Last Modified: 3-10-2010	6.4 J	**From:** 200901
Model Year: 2010	**Model:** Corolla	**Doc ID:** RM000001842072X
Title: AUDIO / VIDEO: AUDIO AND VISUAL SYSTEM: Stereo Component Amplifier Communication Error (2010 Corolla)		

Stereo Component Amplifier Communication Error

INSPECTION PROCEDURE

PROCEDURE

1.	**IDENTIFY THE COMPONENT SHOWN BY SUB-CODE**

(a) Enter the diagnostic mode.

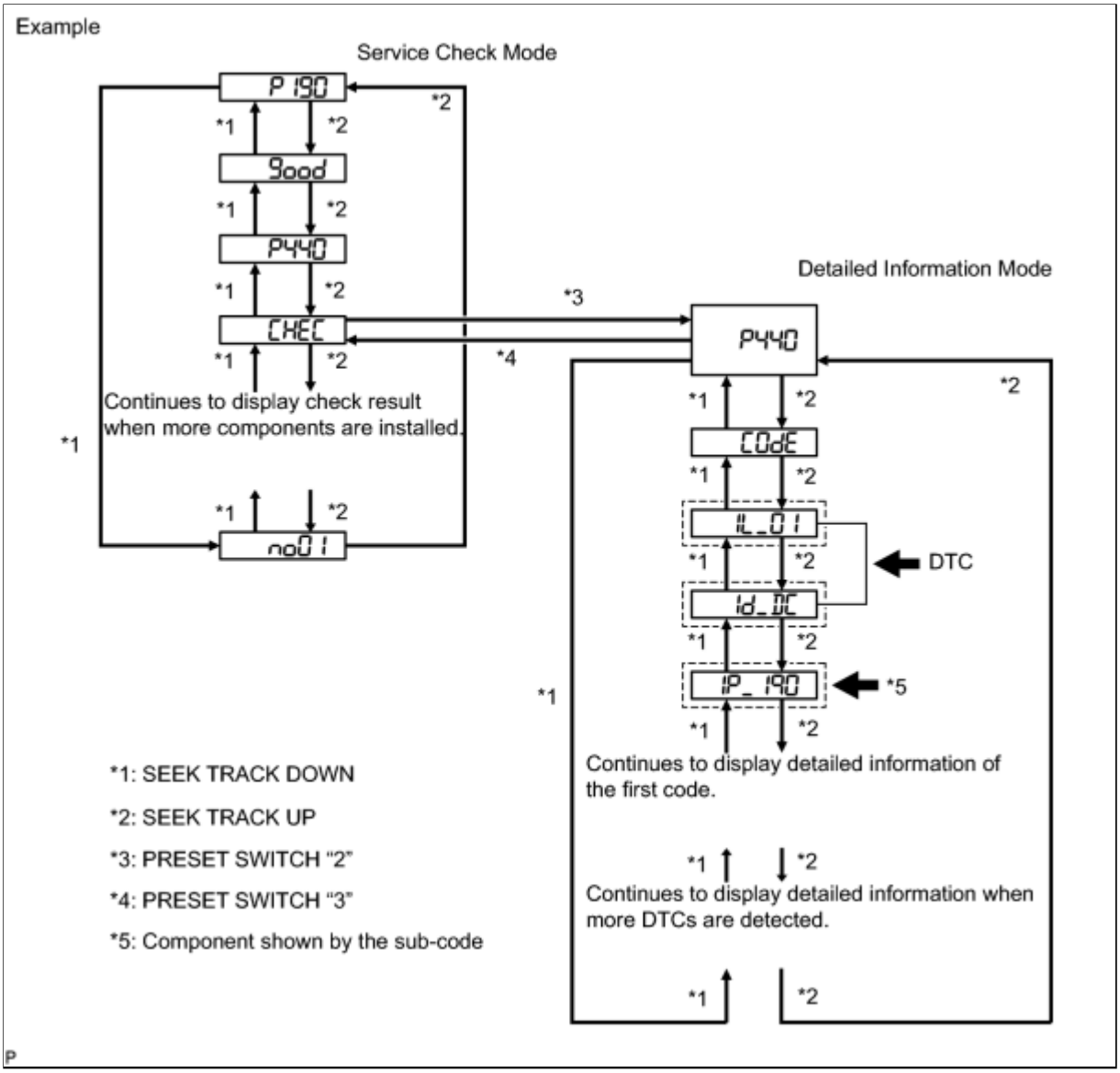

(b) Press the preset switch "3" to change the mode to "Detailed Information Mode".

(c) Identify the component shown by the sub-code.

HINT:

- "P190" set by the radio receiver is shown in the preceding illustration as an example.
- For details of the DTC display, refer to DTC Check/Clear INFO .

NEXT

2.	**CHECK POWER SOURCE CIRCUIT OF COMPONENT SHOWN BY SUB-CODE**

(a) Inspect the power source circuit of the component shown by the sub-code.

If the power source circuit is operating normally, proceed to the next step.

HINT:

The "Bluetooth" handsfree module is built into the radio receiver.

Component Table

COMPONENT	PROCEED TO
Radio receiver (190)	Radio receiver power source circuit INFO

NEXT

3.	**INSPECT RADIO RECEIVER**

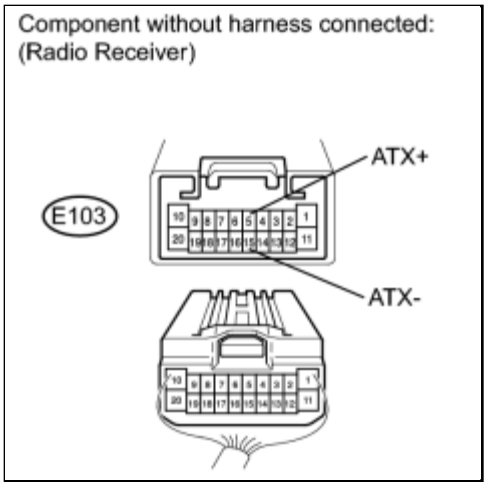

(a) Disconnect the radio receiver connector.

(b) Measure the resistance according to the value(s) in the table below.

Standard Resistance:

TESTER CONNECTION	CONDITION	SPECIFIED CONDITION
E103-5 (ATX+) - E103-15 (ATX-)	Always	60 to 80 Ω

NG ▶ **REPLACE RADIO RECEIVER**

OK

4.	**CHECK HARNESS AND CONNECTOR (STEREO COMPONENT AMPLIFIER - COMPONENT SHOWN BY SUB-CODE)**

HINT:

- Start the check from the circuit that is near the component shown by the sub-code first.
- For details of the connectors, refer to Terminals of ECU INFO .

(a) Referring to the following AVC-LAN Wiring Diagram, check the AVC-LAN circuit between the stereo component amplifier and the component shown by the sub-code.

(1) Disconnect all connectors between the stereo component amplifier and the component shown by the sub-code.

(2) Check for an open or short in the AVC-LAN circuit between the stereo component amplifier and the component shown by the sub-code.

OK:

There is no open or short circuit.

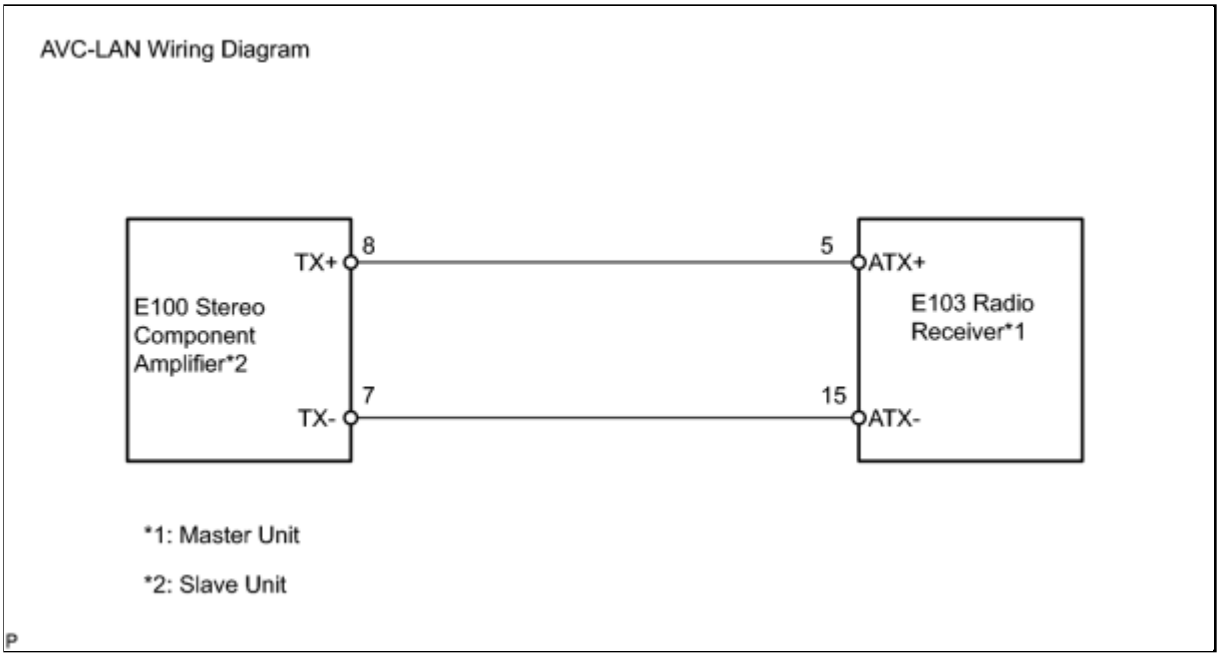

NG **REPAIR OR REPLACE HARNESS OR CONNECTOR**

OK

5.	**REPLACE COMPONENT SHOWN BY SUB-CODE**

(a) Replace the component shown by the sub-code with a known good one and check if the same problem occurs again.

OK:

Same problem does not occur.

NG ▶ **REPLACE STEREO COMPONENT AMPLIFIER**

OK ▶ **END**

Last Modified: 3-10-2010	6.4 J	**From:** 200901
Model Year: 2010	**Model:** Corolla	**Doc ID:** RM0000012CI04GX
Title: AUDIO / VIDEO: AUDIO AND VISUAL SYSTEM: Radio Receiver Power Source Circuit (2010 Corolla)		

Radio Receiver Power Source Circuit

DESCRIPTION

This circuit provides power to the radio receiver.

WIRING DIAGRAM

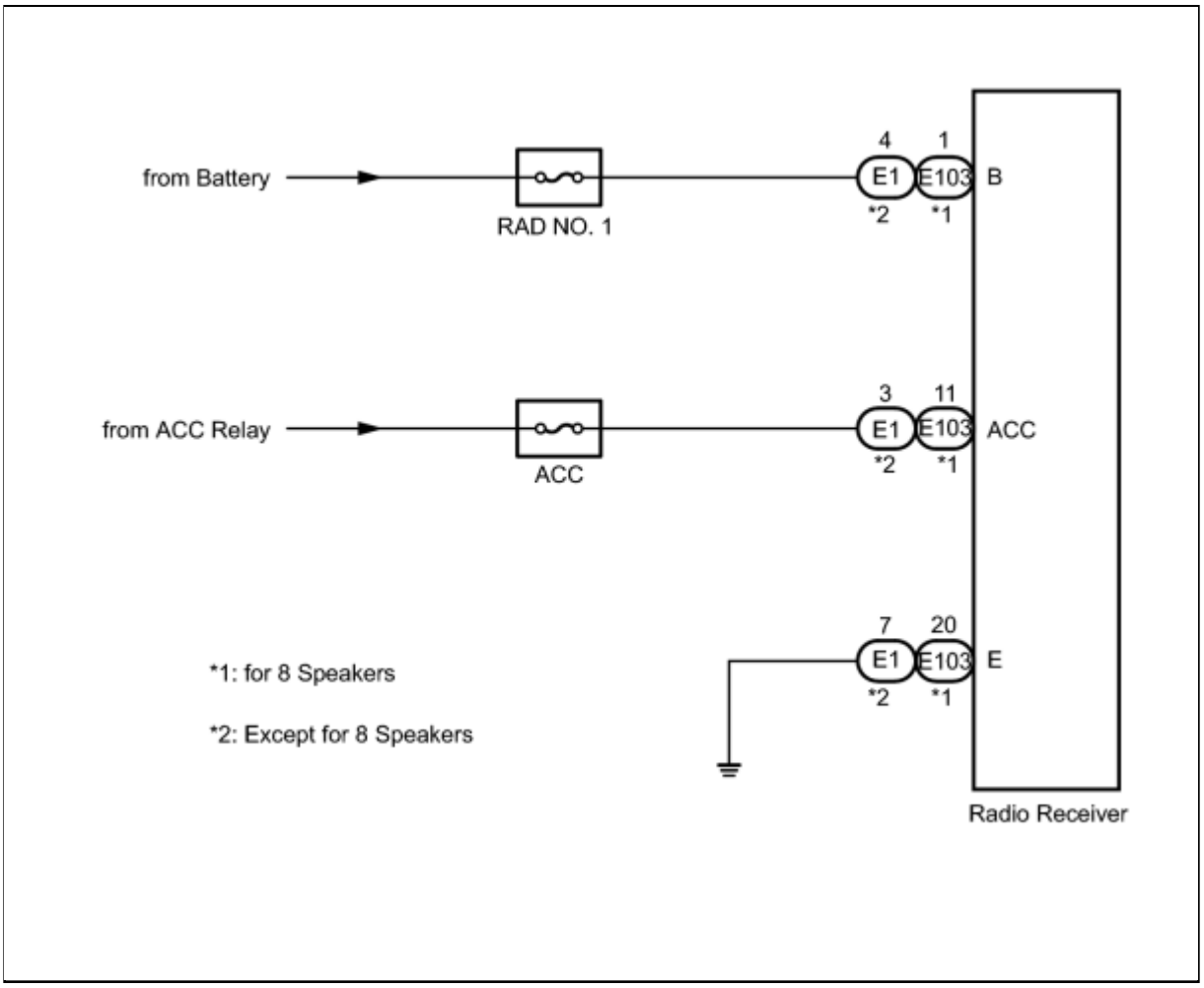

INSPECTION PROCEDURE

PROCEDURE

1.	INSPECT RADIO RECEIVER

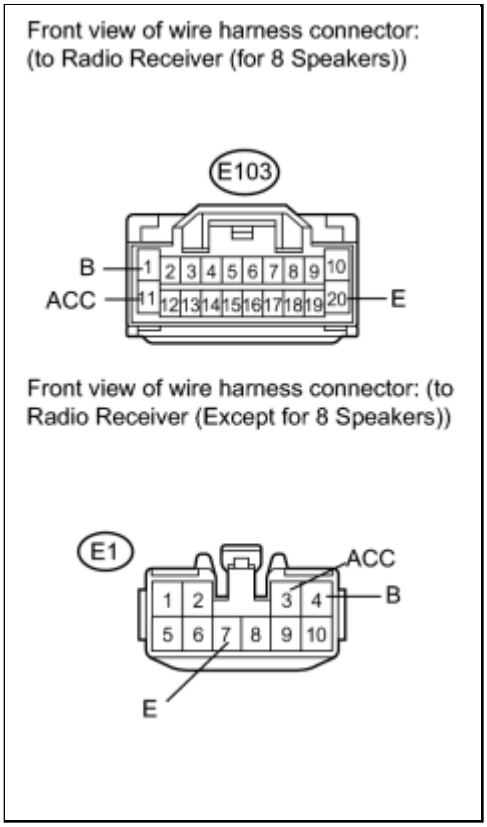

(a) Disconnect the radio receiver connector.

(b) Measure the resistance according to the value(s) in the table below.

Standard Resistance:

TESTER CONNECTION	CONDITION	SPECIFIED CONDITION
E103-20 (E) - Body ground*1	Always	Below 1 Ω
E1-7 (E) - Body ground*2	Always	Below 1 Ω

(c) Measure the voltage according to the value(s) in the table below.

Standard Voltage:

TESTER CONNECTION	CONDITION	SPECIFIED CONDITION
E103-1 (B) - E103-20 (E)*1	Always	11 to 14 V
E1-4 (B) - E1-7 (E)*2	Always	11 to 14 V
E103-11 (ACC) - E103-20 (E)*1	Ignition switch ACC	11 to 14 V
E1-3 (ACC) - E1-7 (E)*2	Ignition switch ACC	11 to 14 V

- *1: for 8 Speakers
- *2: Except for 8 Speakers

NG ▶ **REPAIR OR REPLACE HARNESS OR CONNECTOR**

OK ▶ **PROCEED TO NEXT CIRCUIT INSPECTION SHOWN IN PROBLEM SYMPTOMS TABLE**

Last Modified: 3-10-2010	6.4 J	**From:** 200901
Model Year: 2010	**Model:** Corolla	**Doc ID:** RM0000012CJ03DX
Title: AUDIO / VIDEO: AUDIO AND VISUAL SYSTEM: Stereo Component Amplifier Power Source Circuit (2010 Corolla)		

Stereo Component Amplifier Power Source Circuit

DESCRIPTION

This circuit provides power to the stereo component amplifier.

WIRING DIAGRAM

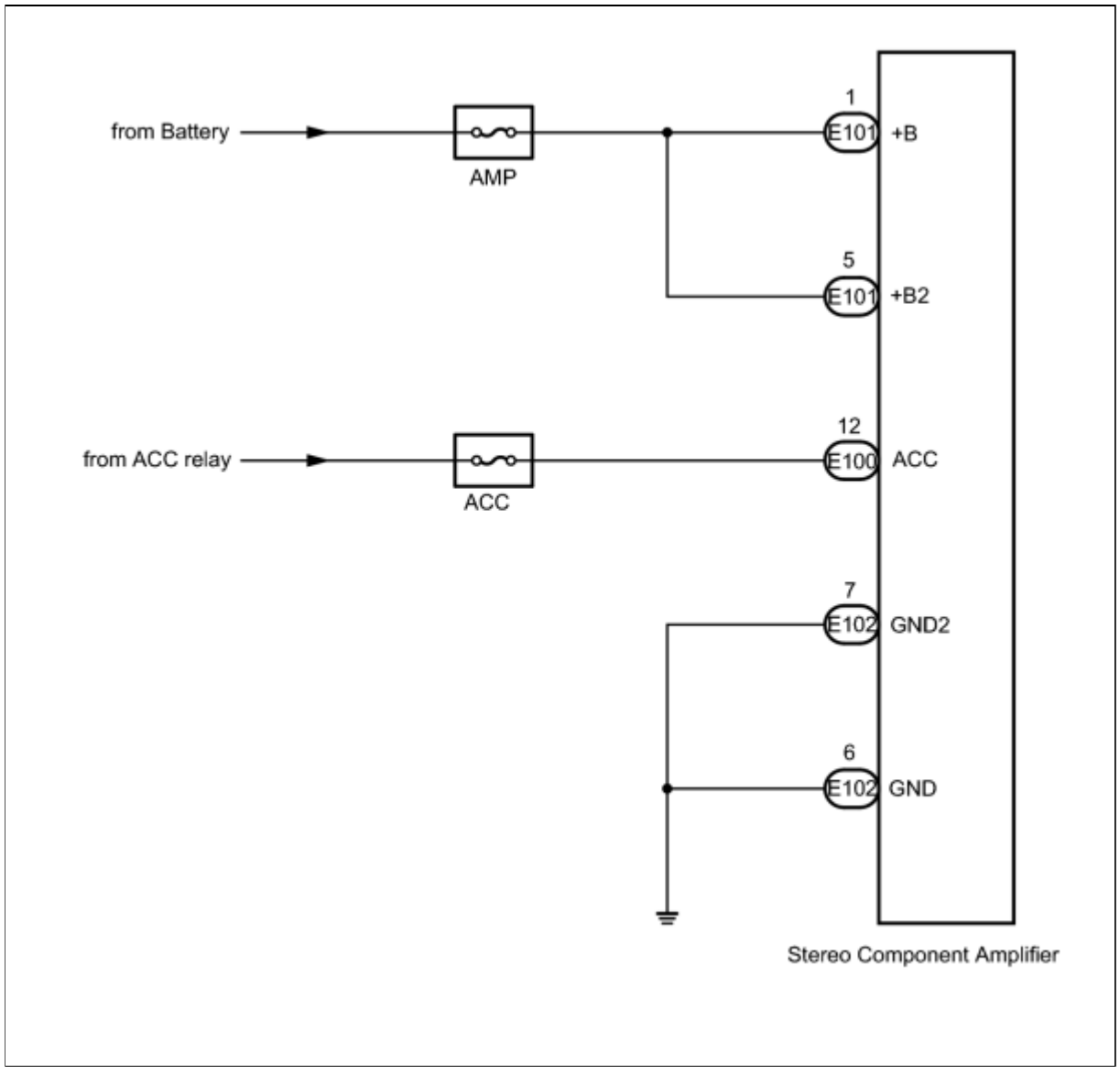

INSPECTION PROCEDURE

PROCEDURE

1.	**INSPECT STEREO COMPONENT AMPLIFIER**

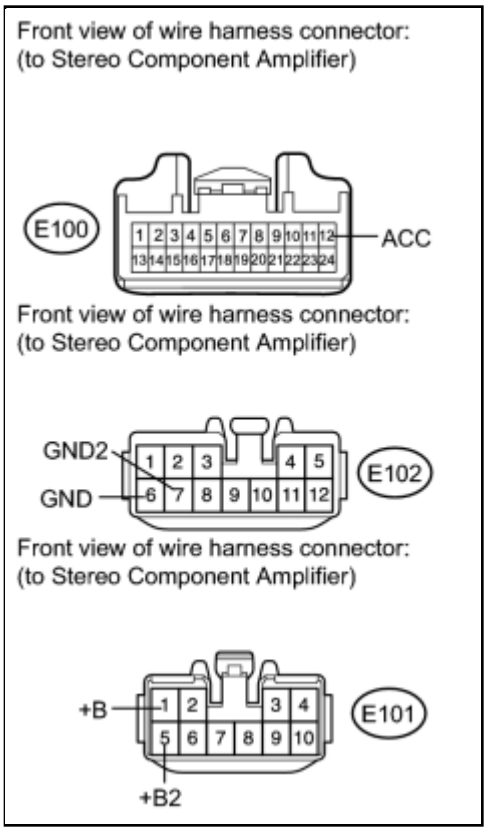

(a) Disconnect the stereo component amplifier connectors.

(b) Measure the resistance according to the value(s) in the table below.

Standard Resistance:

TESTER CONNECTION	CONDITION	SPECIFIED CONDITION
E102-6 (GND) - Body ground	Always	Below 1 Ω
E102-7 (GND2) - Body ground	Always	Below 1 Ω

(c) Measure the voltage according to the value(s) in the table below.

Standard Voltage:

TESTER CONNECTION	CONDITION	SPECIFIED CONDITION
E101-1 (+B) - E102-6 (GND)	Always	11 to 14 V
E101-5 (+B2) - E102-6 (GND)	Always	11 to 14 V
E100-12 (ACC) - E102-6 (GND)	Ignition switch ACC	11 to 14 V

NG ▶ REPAIR OR REPLACE HARNESS OR CONNECTOR

OK ▶ PROCEED TO NEXT CIRCUIT INSPECTION SHOWN IN PROBLEM SYMPTOMS TABLE

Last Modified: 3-10-2010	6.4 K	**From:** 200901
Model Year: 2010	**Model:** Corolla	**Doc ID:** RM000002XBT006X
Title: NAVIGATION / MULTI INFO DISPLAY: NAVIGATION ANTENNA: COMPONENTS (2010 Corolla)		

COMPONENTS

ILLUSTRATION

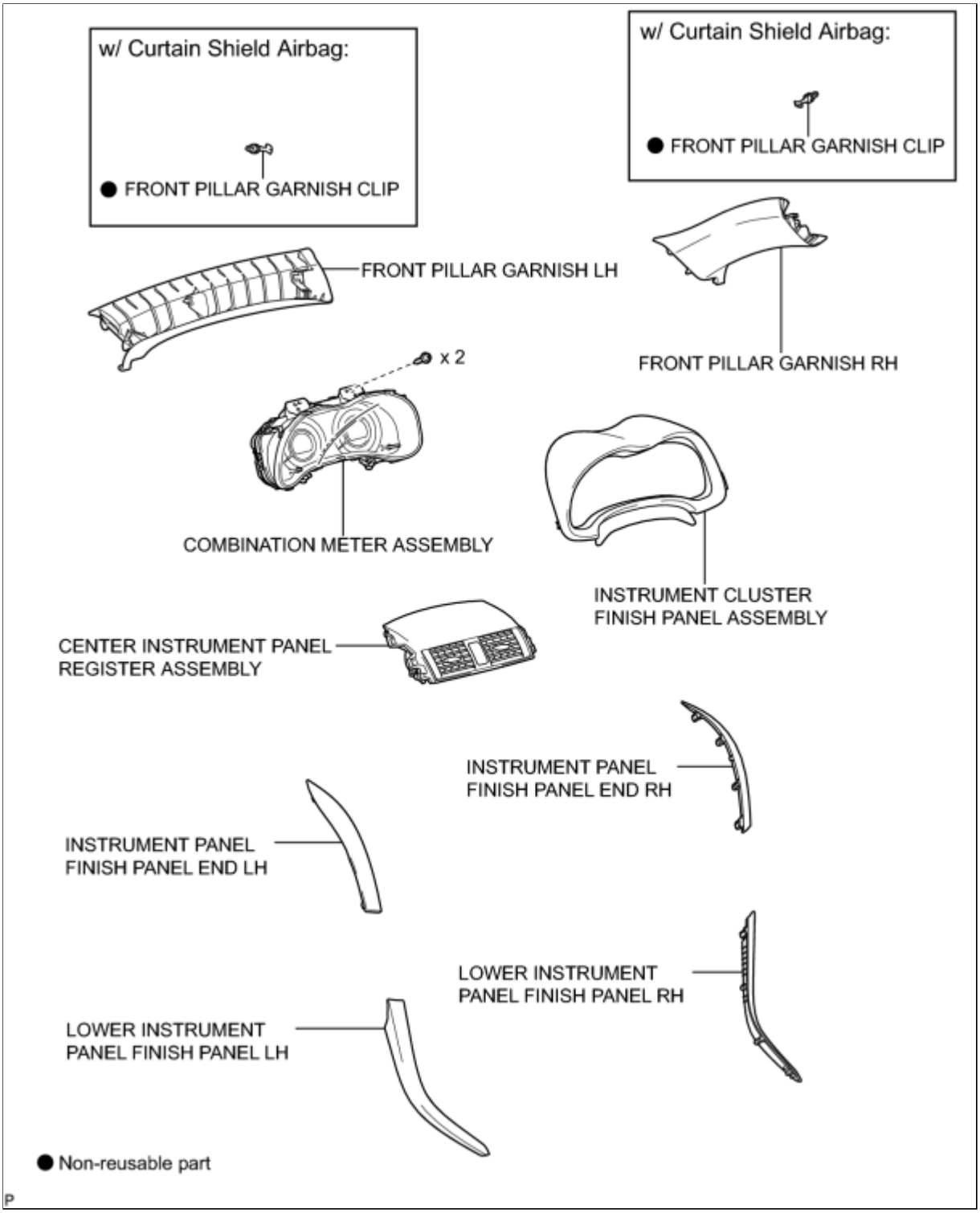

ILLUSTRATION

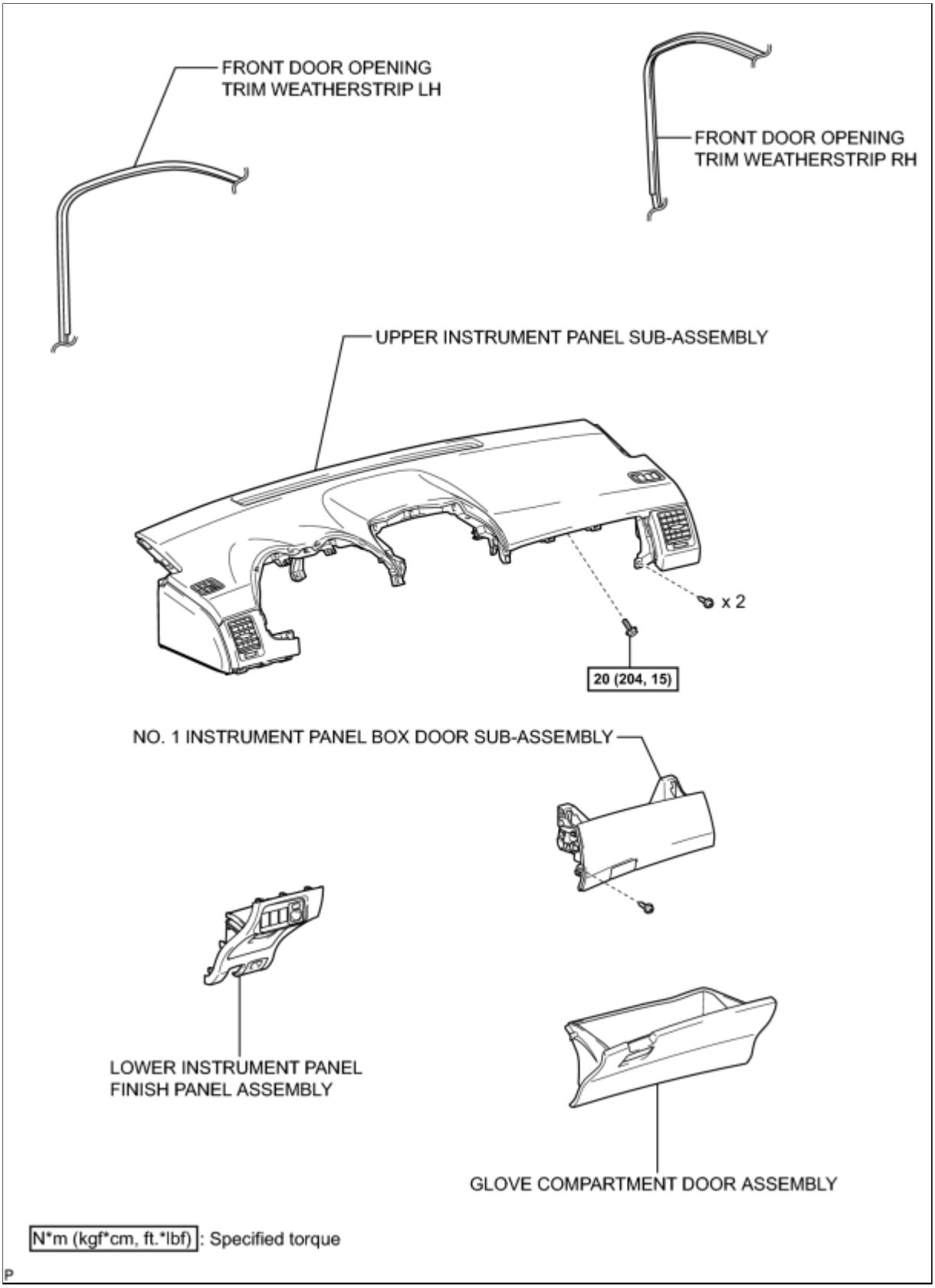

ILLUSTRATION

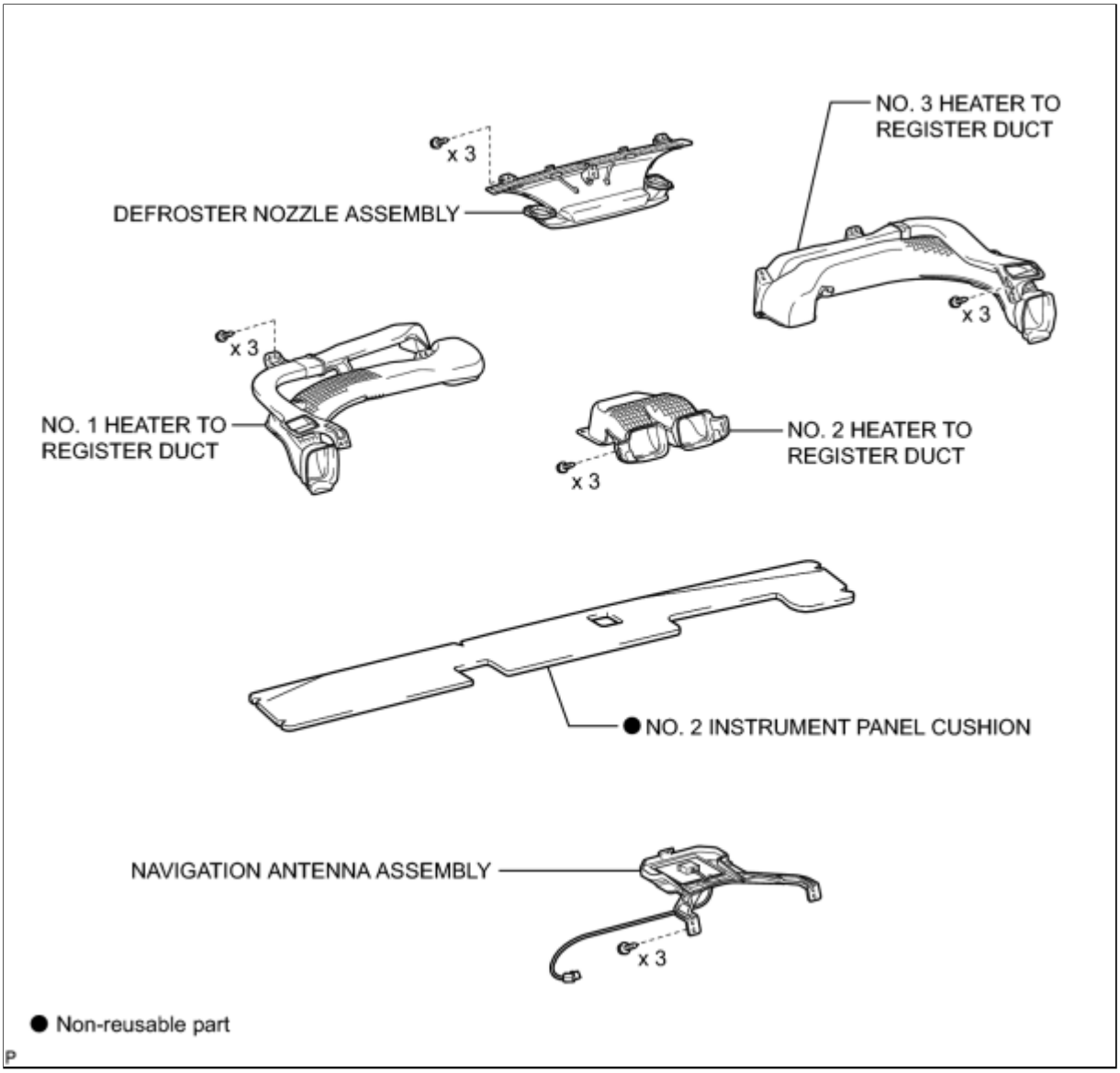
x 3
DEFROSTER NOZZLE ASSEMBLY
NO. 3 HEATER TO
REGISTER DUCT
x 3
x 3
NO. 1 HEATER TO
REGISTER DUCT
NO. 2 HEATER TO
REGISTER DUCT
x 3
● NO. 2 INSTRUMENT PANEL CUSHION
NAVIGATION ANTENNA ASSEMBLY
x 3
● Non-reusable part

Last Modified: 3-10-2010	6.4 A	**From:** 200901
Model Year: 2010	**Model:** Corolla	**Doc ID:** RM000002XBU007X
Title: NAVIGATION / MULTI INFO DISPLAY: NAVIGATION ANTENNA: REMOVAL (2010 Corolla)		

REMOVAL

1. DISCONNECT CABLE FROM NEGATIVE BATTERY TERMINAL

CAUTION:

Wait at least 90 seconds after disconnecting the cable from the negative (-) battery terminal to disable the SRS system.

2. REMOVE LOWER INSTRUMENT PANEL FINISH PANEL LH INFO

3. REMOVE LOWER INSTRUMENT PANEL FINISH PANEL RH INFO

4. REMOVE INSTRUMENT PANEL FINISH PANEL END LH INFO

5. REMOVE INSTRUMENT PANEL FINISH PANEL END RH INFO

6. REMOVE CENTER INSTRUMENT PANEL REGISTER ASSEMBLY INFO

7. REMOVE INSTRUMENT CLUSTER FINISH PANEL ASSEMBLY INFO

8. REMOVE COMBINATION METER ASSEMBLY INFO

9. REMOVE FRONT PILLAR GARNISH LH (w/o Curtain Shield Airbag) INFO

10. REMOVE FRONT PILLAR GARNISH LH (w/ Curtain Shield Airbag) INFO

11. REMOVE FRONT PILLAR GARNISH RH (w/o Curtain Shield Airbag) INFO

12. REMOVE FRONT PILLAR GARNISH RH (w/ Curtain Shield Airbag) INFO

13. REMOVE LOWER INSTRUMENT PANEL FINISH PANEL ASSEMBLY INFO

14. DISCONNECT FRONT DOOR OPENING TRIM WEATHERSTRIP LH INFO

15. REMOVE GLOVE COMPARTMENT DOOR ASSEMBLY INFO

16. REMOVE NO. 1 INSTRUMENT PANEL BOX DOOR SUB-ASSEMBLY INFO

17. DISCONNECT FRONT DOOR OPENING TRIM WEATHERSTRIP RH INFO

18. DISCONNECT INSTRUMENT PANEL WIRE ASSEMBLY INFO

19. REMOVE UPPER INSTRUMENT PANEL SUB-ASSEMBLY INFO

20. REMOVE DEFROSTER NOZZLE ASSEMBLY INFO

21. REMOVE NO. 2 HEATER TO REGISTER DUCT INFO

22. REMOVE NO. 1 HEATER TO REGISTER DUCT INFO

23. REMOVE NO. 3 HEATER TO REGISTER DUCT INFO

24. REMOVE NO. 2 INSTRUMENT PANEL CUSHION INFO

25. REMOVE NAVIGATION ANTENNA ASSEMBLY

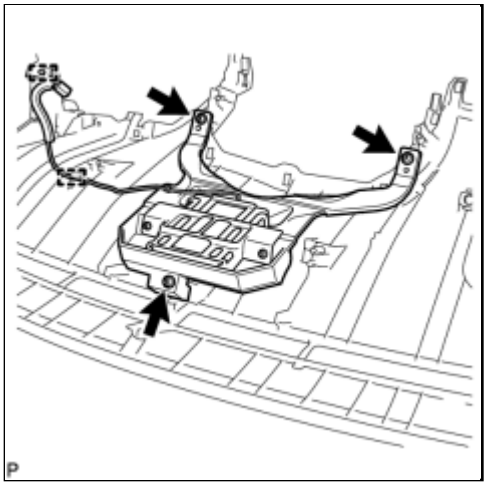

(a) Disengage the 2 clamps.

(b) Remove the 3 screws and navigation antenna assembly.

Last Modified: 3-10-2010	6.4 K	**From:** 200901
Model Year: 2010	**Model:** Corolla	**Doc ID:** RM000002XBZ006X
Title: NAVIGATION / MULTI INFO DISPLAY: NAVIGATION ANTENNA CORD: COMPONENTS (2010 Corolla)		

COMPONENTS

ILLUSTRATION

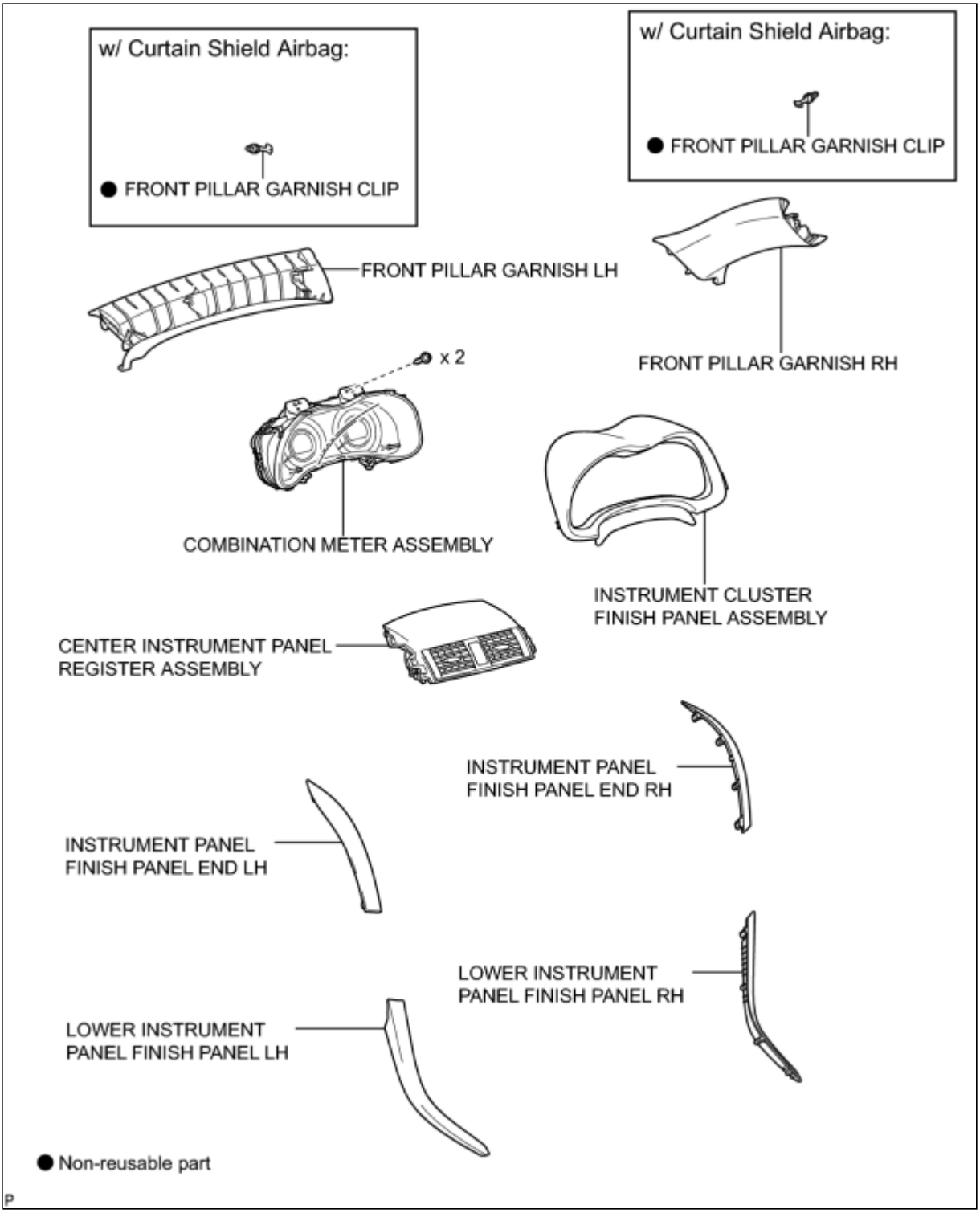

ILLUSTRATION

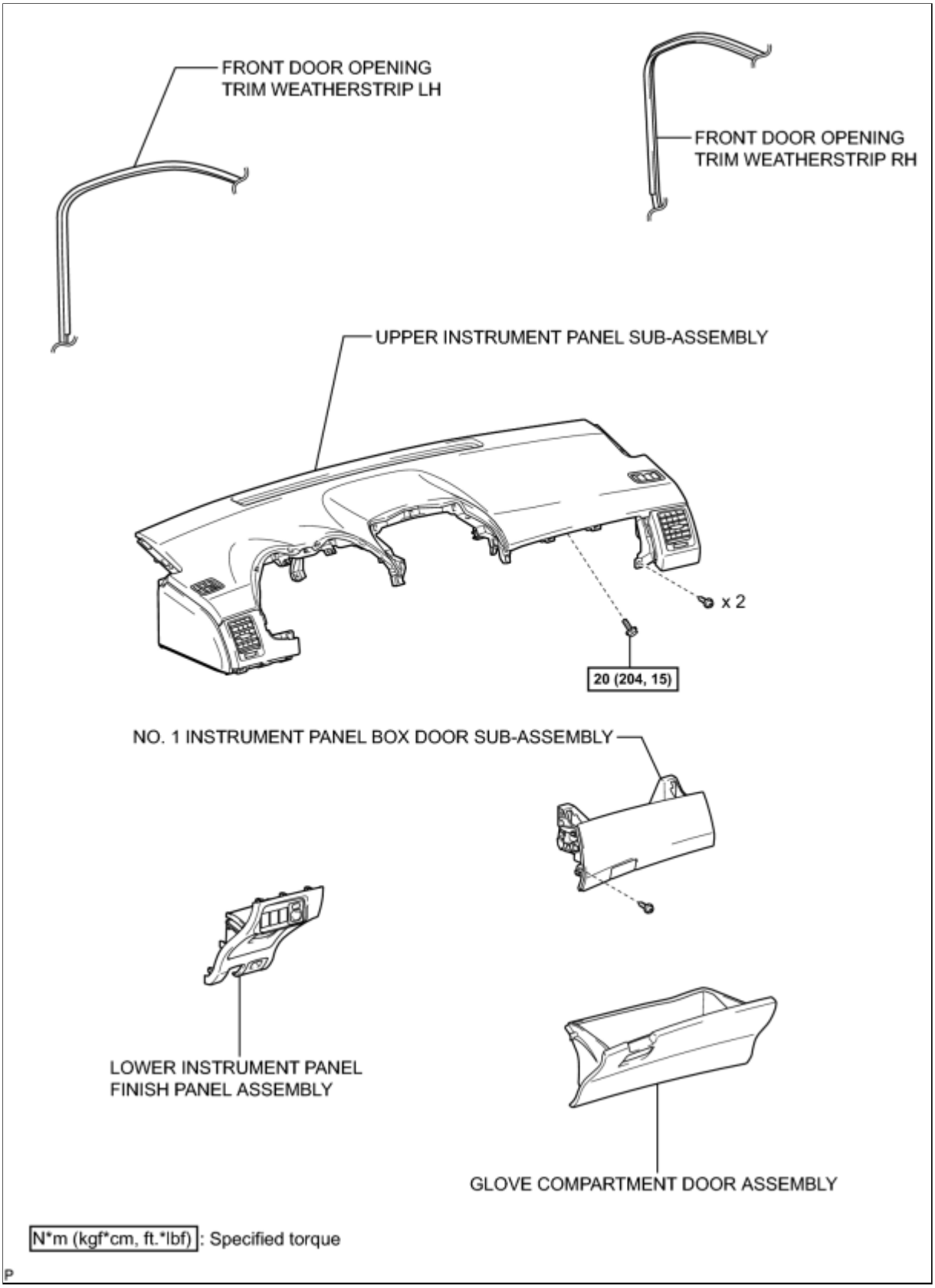

ILLUSTRATION

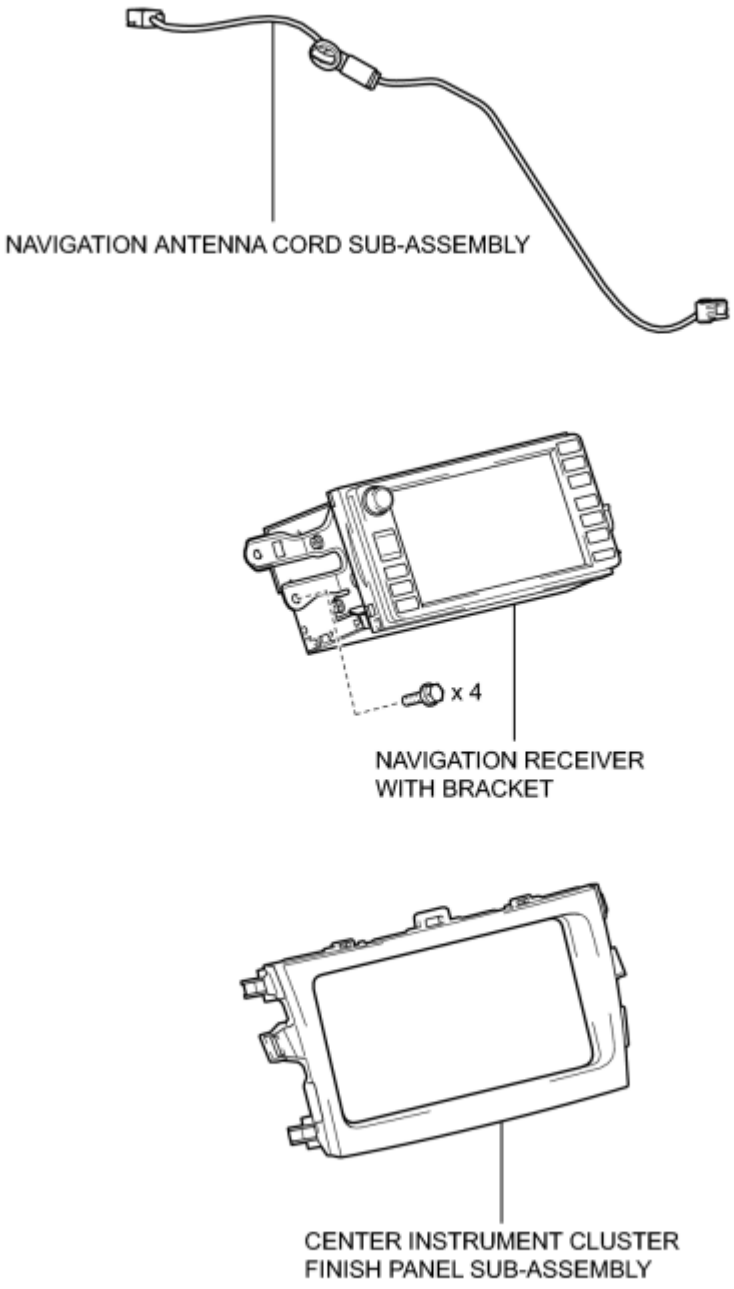
NAVIGATION ANTENNA CORD SUB-ASSEMBLY
x 4
NAVIGATION RECEIVER
WITH BRACKET
CENTER INSTRUMENT CLUSTER
FINISH PANEL SUB-ASSEMBLY

P

Last Modified: 3-10-2010	6.4 A	**From:** 200901
Model Year: 2010	**Model:** Corolla	**Doc ID:** RM000002XBS007X
Title: NAVIGATION / MULTI INFO DISPLAY: NAVIGATION ANTENNA: INSTALLATION (2010 Corolla)		

INSTALLATION

1. INSTALL NAVIGATION ANTENNA ASSEMBLY

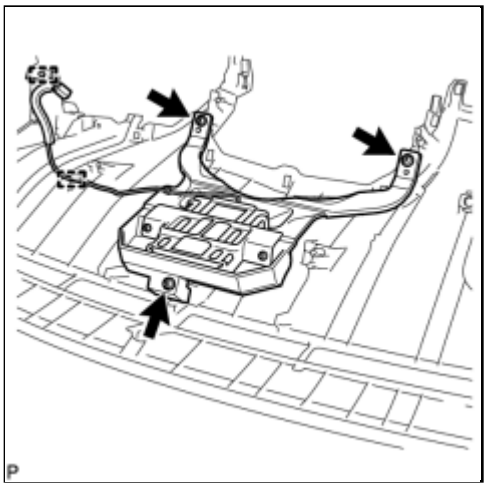

(a) Install the navigation antenna assembly with the 3 screws.

(b) Engage the 2 clamps.

2. INSTALL NO. 2 INSTRUMENT PANEL CUSHION INFO

3. INSTALL NO. 3 HEATER TO REGISTER DUCT INFO

4. INSTALL NO. 1 HEATER TO REGISTER DUCT INFO

5. INSTALL NO. 2 HEATER TO REGISTER DUCT INFO

6. INSTALL DEFROSTER NOZZLE ASSEMBLY INFO

7. INSTALL UPPER INSTRUMENT PANEL SUB-ASSEMBLY INFO

8. CONNECT INSTRUMENT PANEL WIRE ASSEMBLY INFO

9. CONNECT FRONT DOOR OPENING TRIM WEATHERSTRIP LH INFO

10. INSTALL LOWER INSTRUMENT PANEL FINISH PANEL ASSEMBLY INFO

11. CONNECT FRONT DOOR OPENING TRIM WEATHERSTRIP RH INFO

12. INSTALL NO. 1 INSTRUMENT PANEL BOX DOOR SUB-ASSEMBLY INFO

13. INSTALL GLOVE COMPARTMENT DOOR ASSEMBLY INFO

14. INSTALL FRONT PILLAR GARNISH LH (w/ Curtain Shield Airbag) INFO

15. INSTALL FRONT PILLAR GARNISH LH (w/o Curtain Shield Airbag) INFO

16. INSTALL FRONT PILLAR GARNISH RH (w/ Curtain Shield Airbag) INFO

17. INSTALL FRONT PILLAR GARNISH RH (w/o Curtain Shield Airbag) INFO

18. INSTALL COMBINATION METER ASSEMBLY INFO

19. INSTALL INSTRUMENT CLUSTER FINISH PANEL ASSEMBLY INFO

20. INSTALL CENTER INSTRUMENT PANEL REGISTER ASSEMBLY INFO

21. INSTALL INSTRUMENT PANEL FINISH PANEL END LH INFO

22. INSTALL INSTRUMENT PANEL FINISH PANEL END RH INFO

23. INSTALL LOWER INSTRUMENT PANEL FINISH PANEL LH INFO

24. INSTALL LOWER INSTRUMENT PANEL FINISH PANEL RH INFO

25. CONNECT CABLE TO NEGATIVE BATTERY TERMINAL

26. INSPECT SRS WARNING LIGHT

INFO

Last Modified: 3-10-2010	6.4 A	**From:** 200901
Model Year: 2010	**Model:** Corolla	**Doc ID:** RM000002XC0007X
Title: NAVIGATION / MULTI INFO DISPLAY: NAVIGATION ANTENNA CORD: REMOVAL (2010 Corolla)		

REMOVAL

1. DISCONNECT CABLE FROM NEGATIVE BATTERY TERMINAL

CAUTION:

Wait at least 90 seconds after disconnecting the cable from the negative (-) battery terminal to disable the SRS system.

2. REMOVE LOWER INSTRUMENT PANEL FINISH PANEL LH INFO

3. REMOVE LOWER INSTRUMENT PANEL FINISH PANEL RH INFO

4. REMOVE INSTRUMENT PANEL FINISH PANEL END LH INFO

5. REMOVE INSTRUMENT PANEL FINISH PANEL END RH INFO

6. REMOVE CENTER INSTRUMENT PANEL REGISTER ASSEMBLY INFO

7. REMOVE INSTRUMENT CLUSTER FINISH PANEL ASSEMBLY INFO

8. REMOVE COMBINATION METER ASSEMBLY INFO

9. REMOVE FRONT PILLAR GARNISH LH (w/o Curtain Shield Airbag) INFO

10. REMOVE FRONT PILLAR GARNISH LH (w/ Curtain Shield Airbag) INFO

11. REMOVE FRONT PILLAR GARNISH RH (w/o Curtain Shield Airbag) INFO

12. REMOVE FRONT PILLAR GARNISH RH (w/ Curtain Shield Airbag) INFO

13. REMOVE LOWER INSTRUMENT PANEL FINISH PANEL ASSEMBLY INFO

14. DISCONNECT FRONT DOOR OPENING TRIM WEATHERSTRIP LH INFO

15. REMOVE GLOVE COMPARTMENT DOOR ASSEMBLY INFO

16. REMOVE NO. 1 INSTRUMENT PANEL BOX DOOR SUB-ASSEMBLY INFO

17. DISCONNECT FRONT DOOR OPENING TRIM WEATHERSTRIP RH INFO

18. DISCONNECT INSTRUMENT PANEL WIRE ASSEMBLY INFO

19. REMOVE UPPER INSTRUMENT PANEL SUB-ASSEMBLY INFO

20. REMOVE CENTER INSTRUMENT CLUSTER FINISH PANEL SUB-ASSEMBLY INFO

21. REMOVE NAVIGATION RECEIVER WITH BRACKET INFO

22. REMOVE NAVIGATION ANTENNA CORD SUB-ASSEMBLY

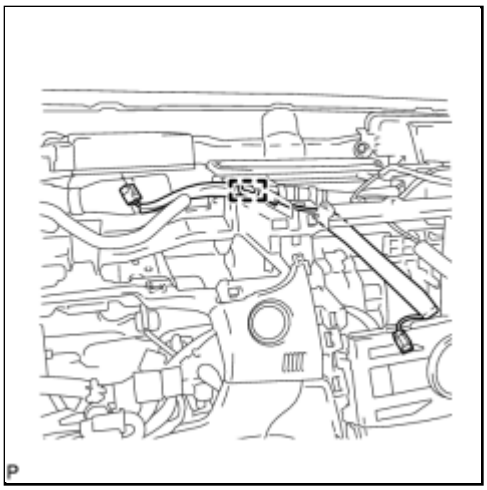

(a) Disengage the clamp and remove the navigation antenna cord sub-assembly.

Last Modified: 3-10-2010	6.4 A	**From:** 200901
Model Year: 2010	**Model:** Corolla	**Doc ID:** RM000002XBY007X
Title: NAVIGATION / MULTI INFO DISPLAY: NAVIGATION ANTENNA CORD: INSTALLATION (2010 Corolla)		

INSTALLATION

1. INSTALL NAVIGATION ANTENNA CORD SUB-ASSEMBLY

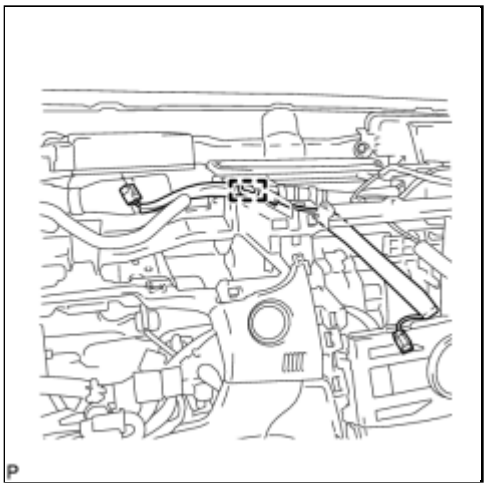

(a) Engage the clamp and install the navigation antenna cord sub-assembly.

2. INSTALL NAVIGATION RECEIVER WITH BRACKET INFO

3. INSTALL CENTER INSTRUMENT CLUSTER FINISH PANEL SUB-ASSEMBLY INFO

4. INSTALL UPPER INSTRUMENT PANEL SUB-ASSEMBLY INFO

5. CONNECT INSTRUMENT PANEL WIRE ASSEMBLY INFO

6. CONNECT FRONT DOOR OPENING TRIM WEATHERSTRIP LH INFO

7. REMOVE LOWER INSTRUMENT PANEL FINISH PANEL ASSEMBLY INFO

8. CONNECT FRONT DOOR OPENING TRIM WEATHERSTRIP RH INFO

9. INSTALL NO. 1 INSTRUMENT PANEL BOX DOOR SUB-ASSEMBLY INFO

10. INSTALL GLOVE COMPARTMENT DOOR ASSEMBLY INFO

11. INSTALL FRONT PILLAR GARNISH LH (w/ Curtain Shield Airbag) INFO

12. INSTALL FRONT PILLAR GARNISH LH (w/o Curtain Shield Airbag) INFO

13. INSTALL FRONT PILLAR GARNISH RH (w/ Curtain Shield Airbag) INFO

14. INSTALL FRONT PILLAR GARNISH RH (w/o Curtain Shield Airbag) INFO

15. INSTALL COMBINATION METER ASSEMBLY INFO

16. INSTALL INSTRUMENT CLUSTER FINISH PANEL ASSEMBLY INFO

17. INSTALL CENTER INSTRUMENT PANEL REGISTER ASSEMBLY INFO

18. INSTALL INSTRUMENT PANEL FINISH PANEL END LH INFO

19. INSTALL INSTRUMENT PANEL FINISH PANEL END RH INFO

20. INSTALL LOWER INSTRUMENT PANEL FINISH PANEL LH INFO

21. INSTALL LOWER INSTRUMENT PANEL FINISH PANEL RH INFO

22. CONNECT CABLE TO NEGATIVE BATTERY TERMINAL

23. INSPECT SRS WARNING LIGHT

INFO

Last Modified: 3-10-2010	6.4 D	**From:** 200901
Model Year: 2010	**Model:** Corolla	**Doc ID:** RM000000NY601ZX
Title: NAVIGATION / MULTI INFO DISPLAY: NAVIGATION SYSTEM: SYSTEM DESCRIPTION (2010 Corolla)		

SYSTEM DESCRIPTION

1. NAVIGATION SYSTEM OUTLINE

(a) Vehicle position tracking methods

(1) It is essential that the navigation system correctly tracks the current vehicle position and displays it on the map. There are 2 methods to track the current vehicle position: autonomous (dead reckoning) and GPS* (satellite) navigation. Both navigation methods are used in conjunction with each other.

HINT:

***: GPS (Global Positioning System)**

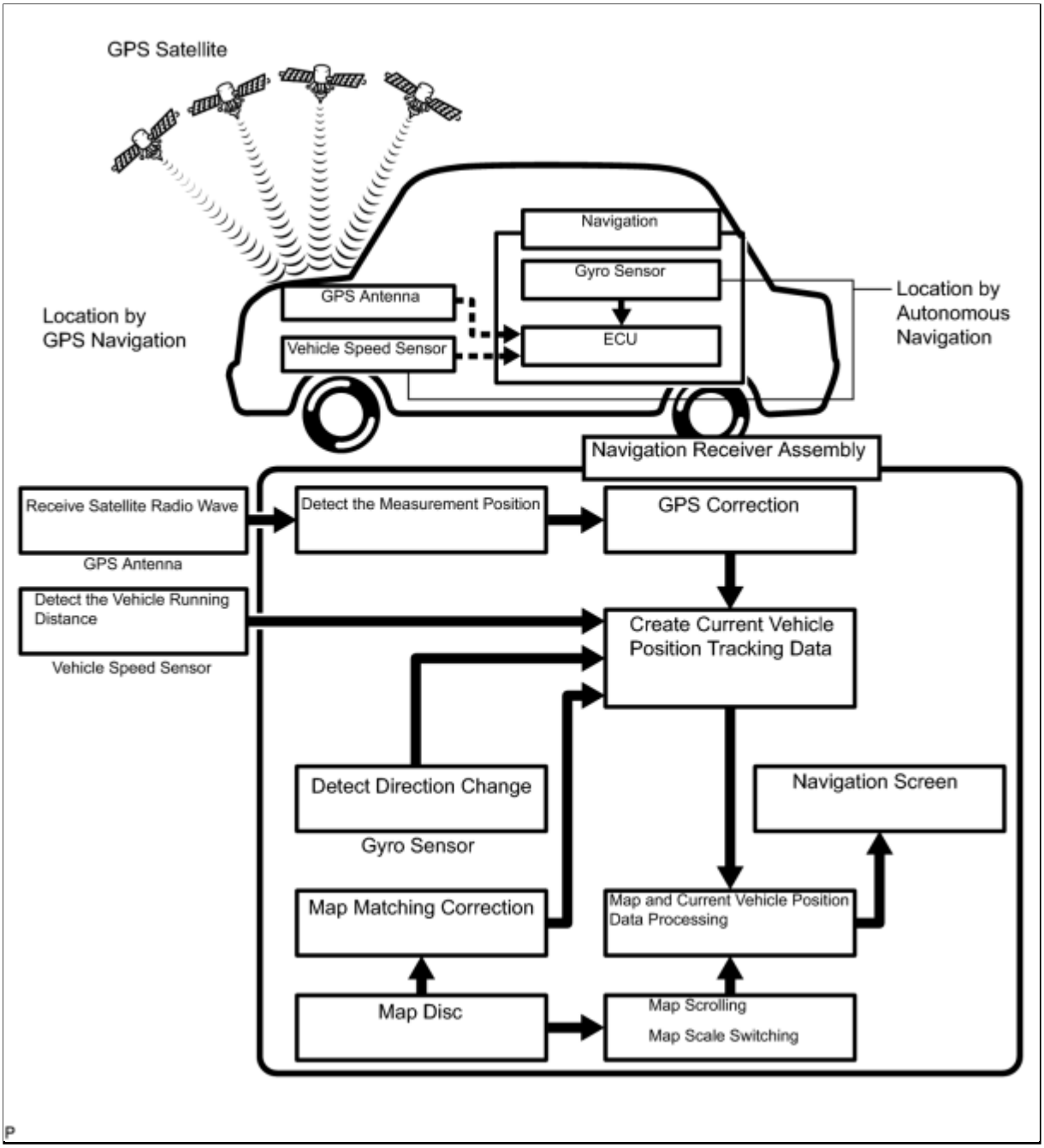

OPERATION	DESCRIPTION
Vehicle Position Calculation	The navigation receiver assembly calculates the current vehicle position (direction and current position) using the direction deviation signal from the gyro sensor and running distance signal from the vehicle speed sensor and creates the driving route.
Map Display Processing	The navigation receiver assembly processes the vehicle position data, vehicle running track, and map data from the map disc.
Map Matching	The map data from the map disc is compared to the vehicle position and running track data. Then, the vehicle position is matched with the nearest road.
GPS Correction	The vehicle position is matched to the position measured by the GPS. Then, the measurement position data from the GPS unit is compared with the vehicle position and running track data. If the position is very different, the GPS measurement

OPERATION	DESCRIPTION
	position is used.
Distance Correction	The running distance signal from the vehicle speed sensor includes error caused by tire wear and slippage between the tires and road surface. Distance correction is performed to account for this. The navigation ECU automatically offsets the running distance signal to make up for the difference between it and the distance data of the map. The offset is automatically updated.

HINT:

The combination of autonomous and GPS navigation makes it possible to display the vehicle position even when the vehicle is in places where the GPS radio wave cannot be received. When only autonomous navigation is used, the mapping accuracy may slightly decline.

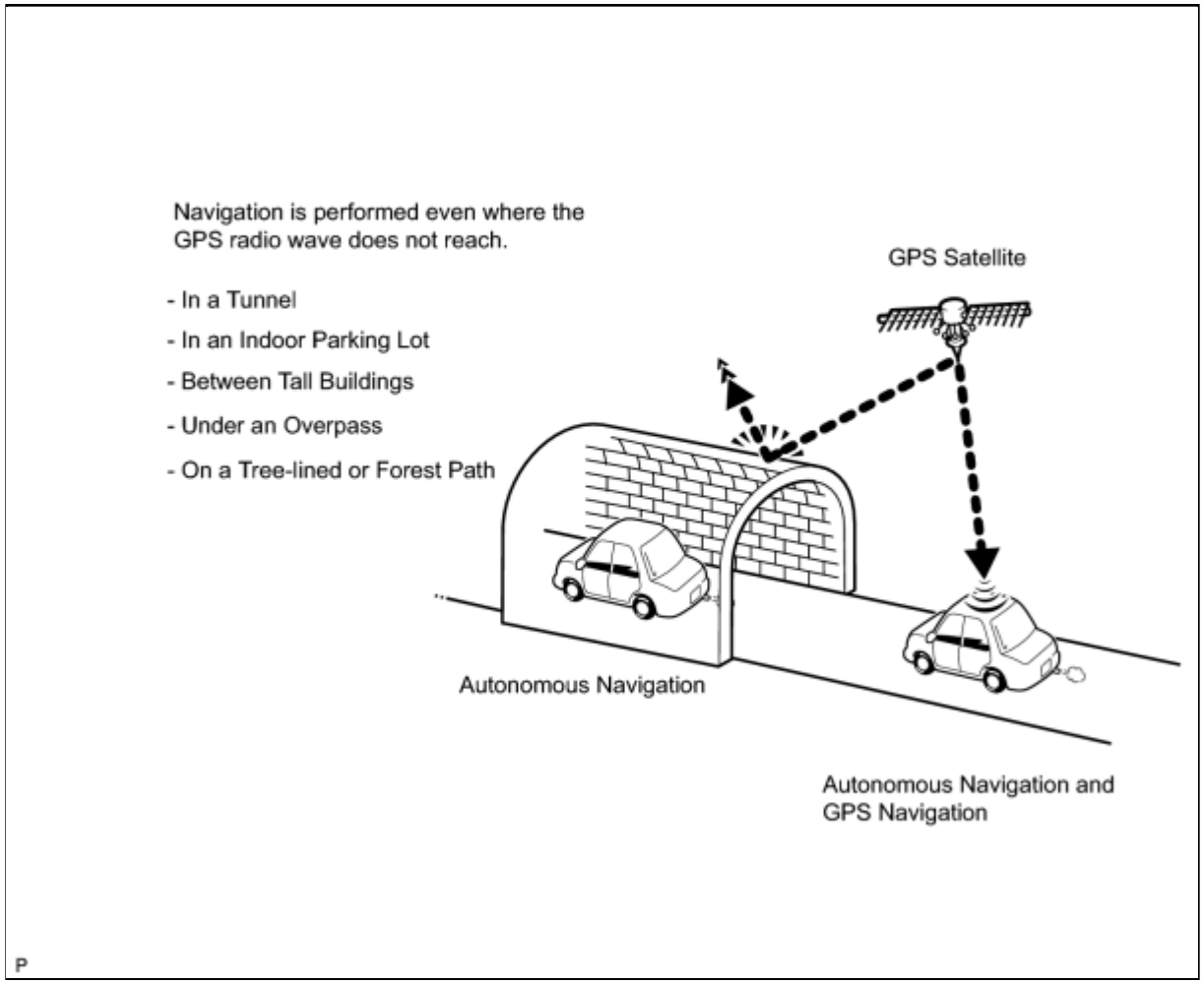

(b) Autonomous navigation

This method determines the relative vehicle position based on the running track determined by the gyro and vehicle speed sensors located in the navigation receiver assembly.

(1) Gyro sensor

Calculates the direction by detecting angular velocity. It is located in the navigation receiver assembly.

(2) Vehicle speed sensor

Used to calculate the vehicle running distance.

(c) GPS navigation (satellite navigation)

This method detects the absolute vehicle position using radio waves from a GPS satellite*.

HINT:

***: GPS satellites were launched by the U.S. Department of Defense for military purposes.**

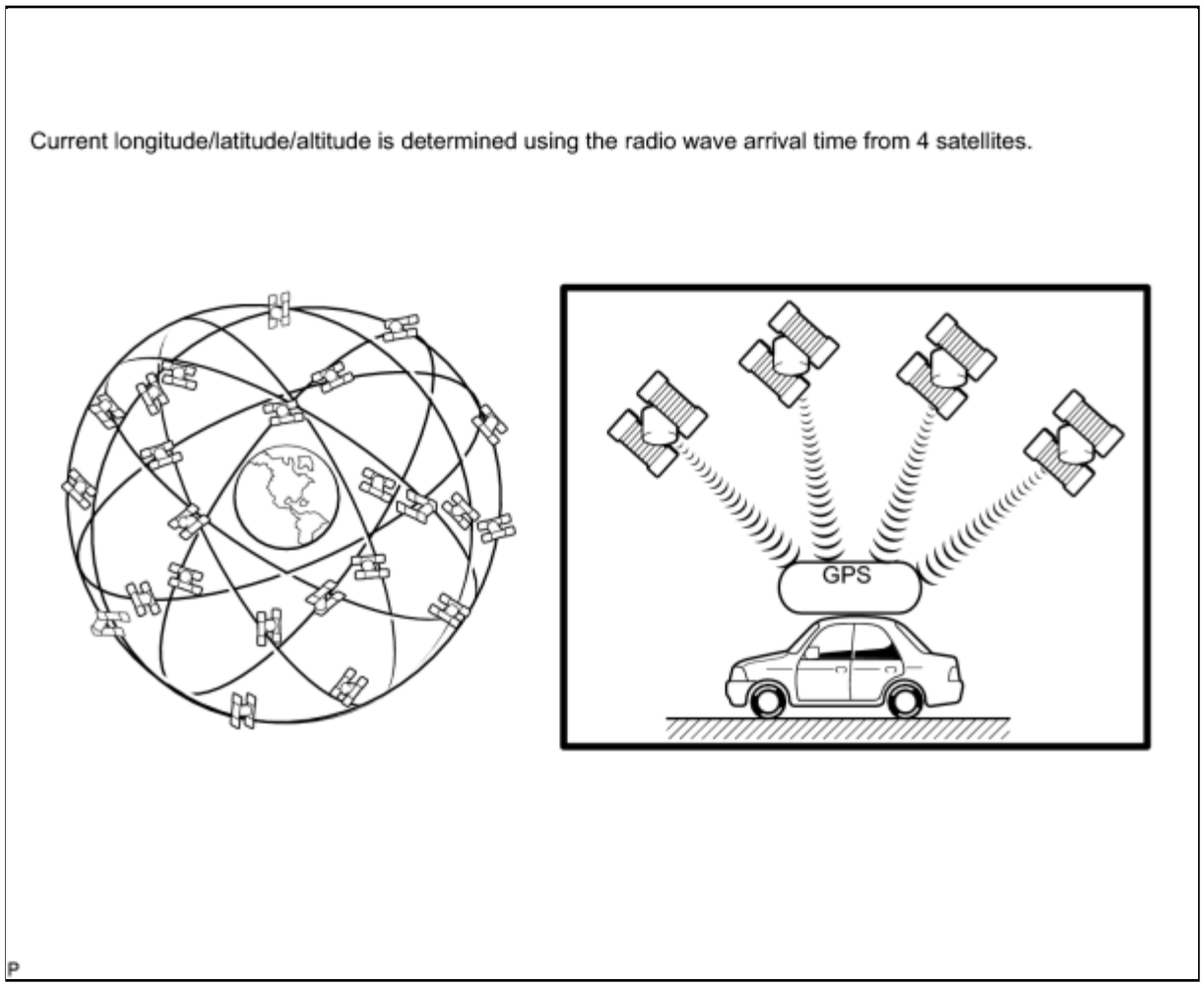

NUMBER OF SATELLITES	MEASUREMENT	DESCRIPTION
2 or less	Measurement impossible	The vehicle position cannot be obtained because the number of satellites is not enough.
3	2-dimensional measurement is possible	The vehicle position is obtained based on current longitude and latitude (this is less precise than 3-dimensional measurement).
4	3-dimensional measurement is possible	The vehicle position is obtained based on current longitude, latitude and altitude.

(d) Map matching

The current driving route is calculated by autonomous navigation (according to the gyro sensor and vehicle speed sensor) and GPS navigation. This information is then compared with possible road shapes from the map data in the map disc and the vehicle position is set onto the most appropriate road.

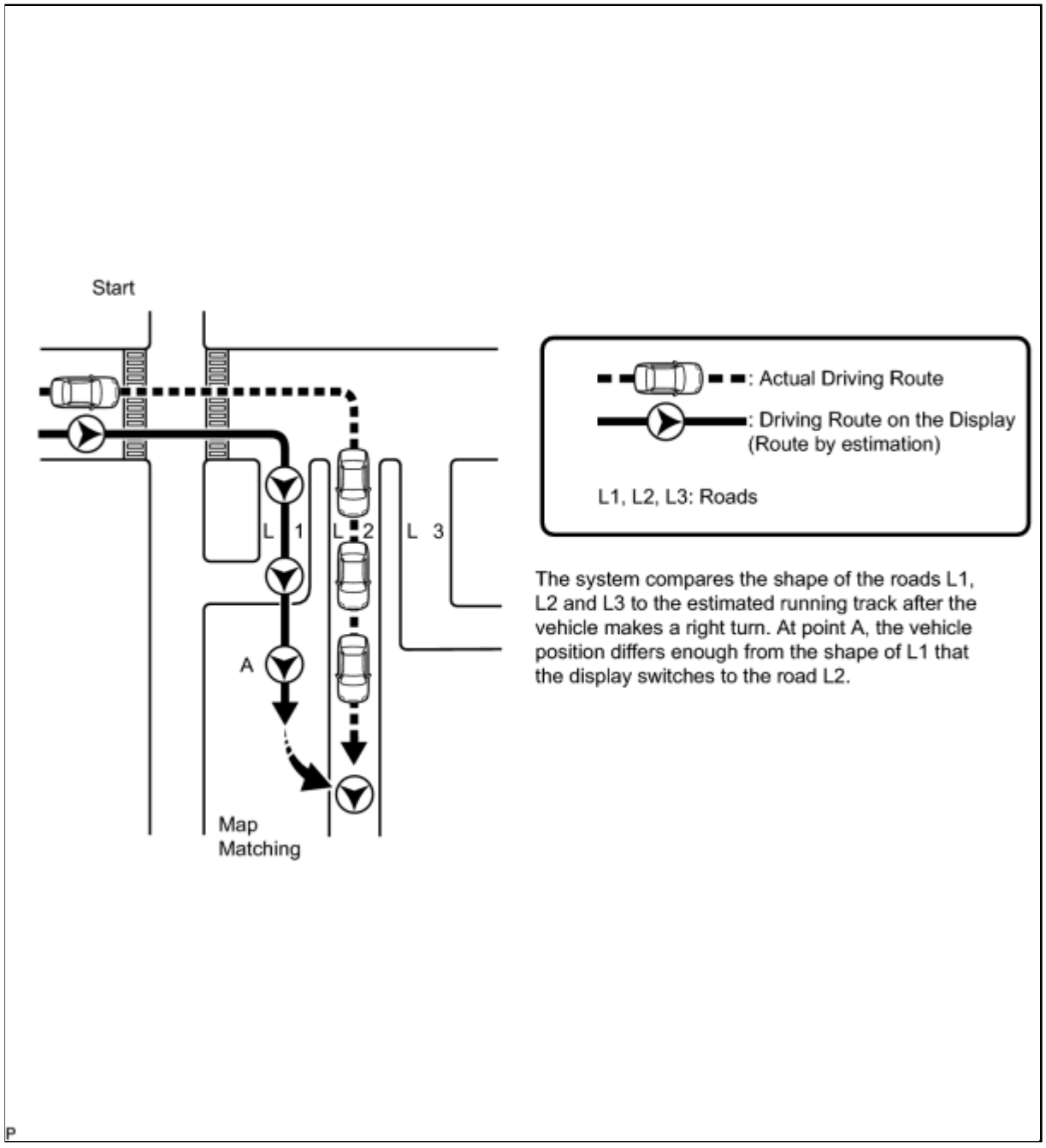

2. NAVIGATION RECEIVER ASSEMBLY OUTLINE

(a) Conventionally, 2 separate devices, a "radio and display" and a "navigation ECU" are used. This model has adopted a new type, combining these devices into a signal unit.

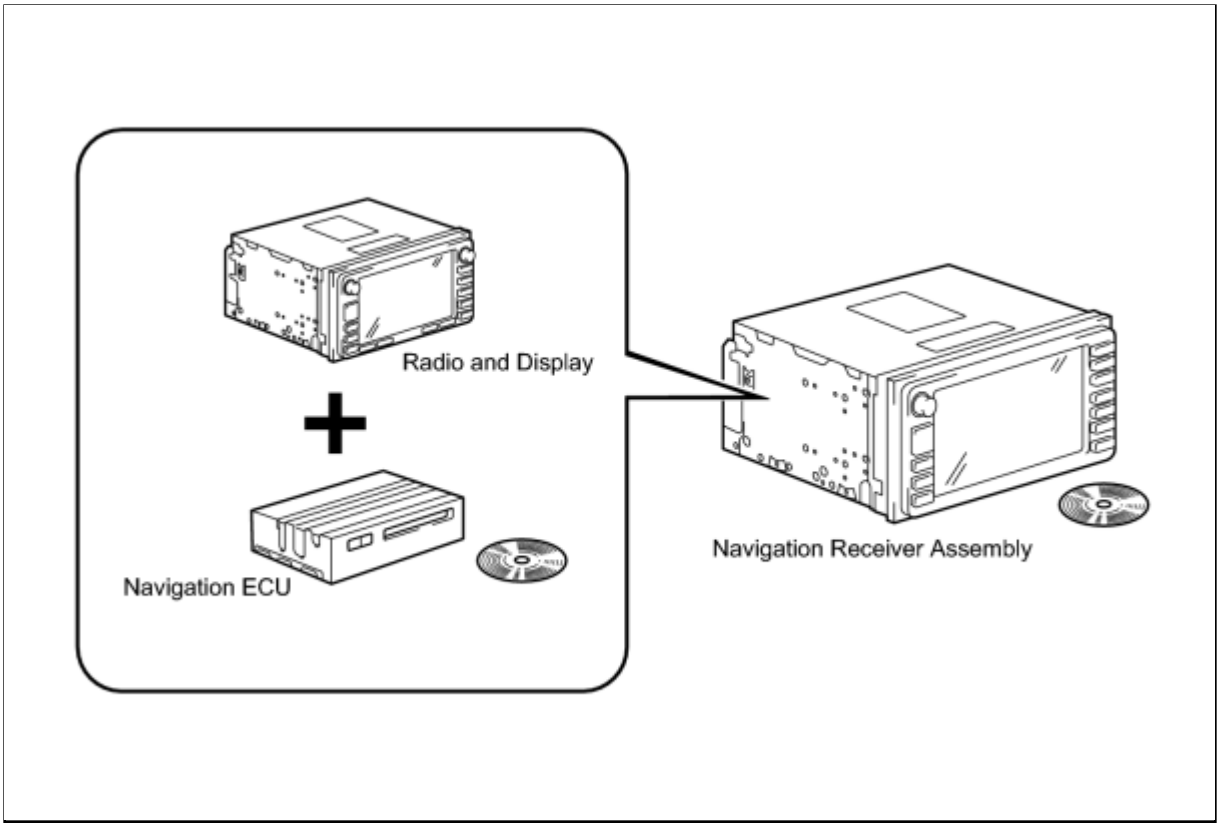

(b) Touch switches are touch-sensitive (interactive) switches operated by touching the screen. When a switch is pressed, the outer glass bends to contact the inner glass at the pressed position. By doing this, the voltage ratio is measured and the pressed position is detected.

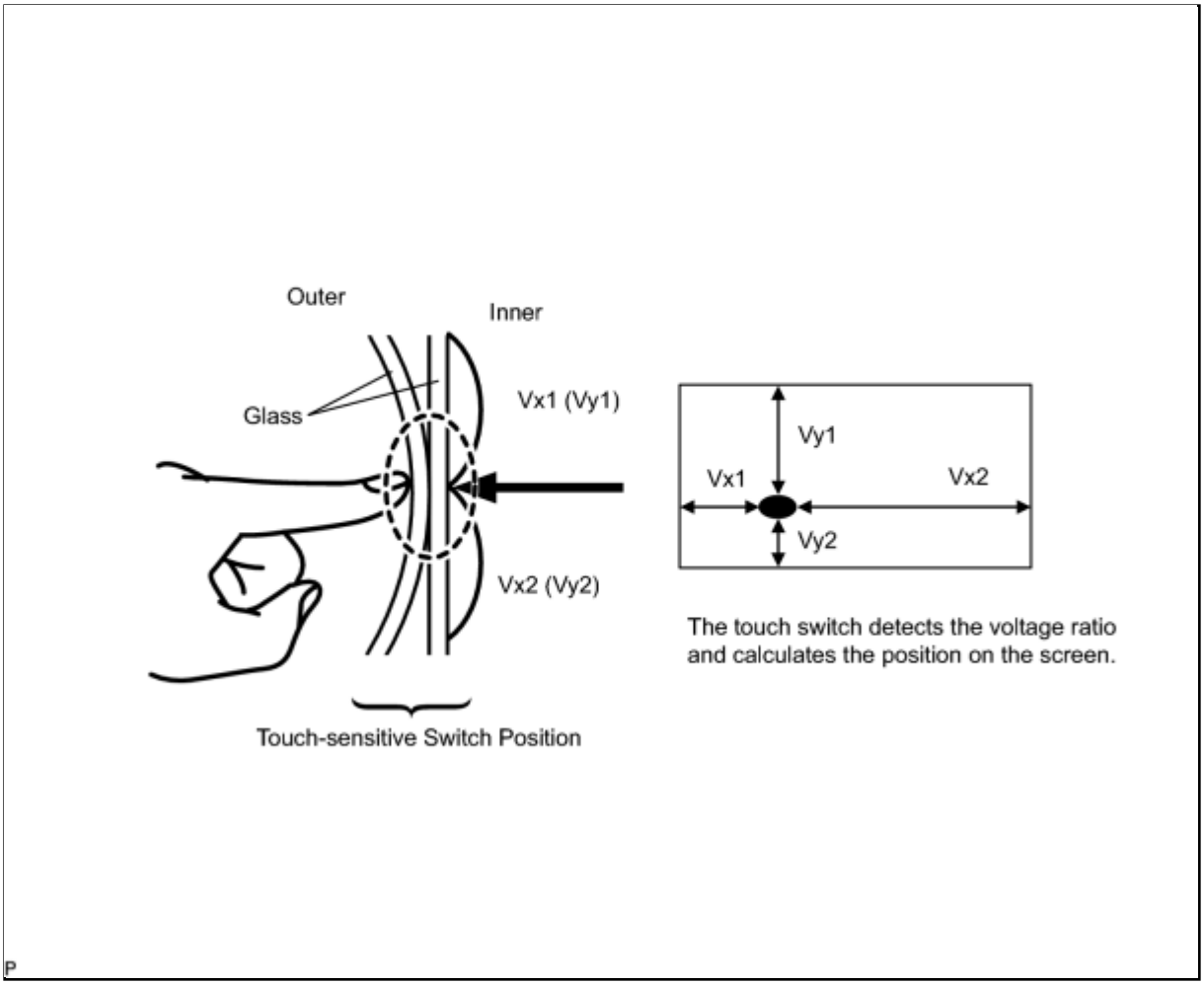

P

3. DVD (Digital Versatile Disc) PLAYER OUTLINE (for Navigation Map)

(a) The navigation receiver assembly (built-in navigation ECU) uses a laser pickup to read the digital signals recorded on a DVD.

CAUTION:

Because the navigation system uses an invisible laser beam, do not look directly at the laser pickup. Be sure to only operate the navigation as instructed.

NOTICE:

- Do not disassemble any part of the navigation receiver assembly (built-in navigation ECU).
- Do not apply oil to the navigation receiver assembly (built-in navigation ECU).
- Do not insert anything but a DVD into the navigation receiver assembly (built-in navigation ECU).

4. CD (Compact Disc) player outline

(a) A compact disc player uses a laser pickup to read digital signals recorded on a compact disc (CD). By converting the digital signals to analog, it can play music and other content.

NOTICE:

- Do not disassemble any part of the CD player.
- Do not apply oil to the CD player.
- Do not insert anything but a CD into the CD player.

CAUTION:

Do not look directly at the laser pickup because the CD player uses an invisible laser beam. Be sure to operate the player only as instructed.

(b) Usable discs

(1) This player can play only audio CDs, CD-Rs (CD-Recordable), and CD-RWs (CD-ReWritable) that have any of the following marks:

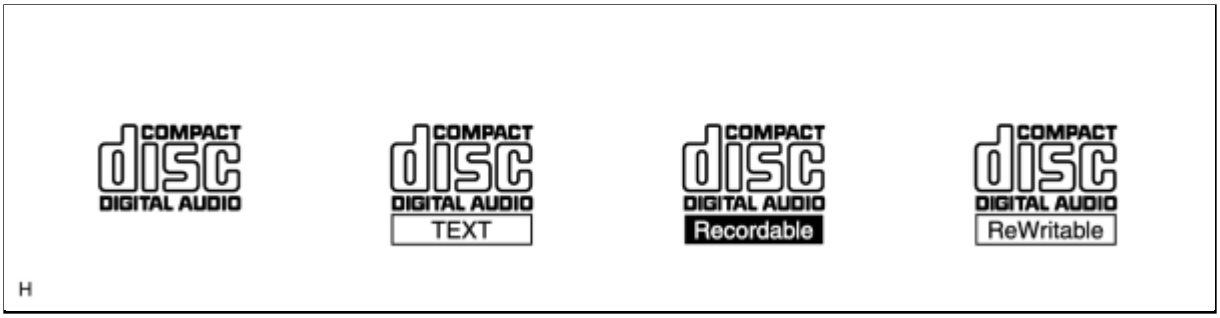

(c) Precautions for use of discs

NOTICE:

- Copy-protected CDs cannot be played.
- CD-Rs and CD-RWs may not be played depending on the recording conditions or characteristics of the discs, or due to damage, dirt, or deterioration caused by leaving the discs in the cabin for a long time.
- Unfinalized CD-Rs and CD-RWs cannot be played.
- DualDiscs that mate DVD recorded material on one side with CD digital audio material on the other cannot be played.
- Keep the discs away from dirt. Be careful not to damage the discs or leave your fingerprints on them.
- Hold discs by the outer edge and center hole with the label side up.
- Leaving the disc exposed halfway out of the slot for a long time after pressing the disc eject button may cause deformation of the disc, making the disc unusable.
- If discs have adhesive tape, stickers, CDR labels, or any traces of such labels attached, the discs may not be ejected or player malfunctions may result.
- Keep the discs away from direct sunlight. (Exposure to direct sunlight may cause deformation of the disc, making the disc unusable.)
- Do not use odd-shaped CDs because these may cause player malfunctions.
- Do not use discs whose recording portion is transparent or translucent because they may not be inserted, ejected, or played normally.

HINT:

- When it is cold or it is raining, if the windows mist up, mist and condensation may form in the player. In such cases, the CD may skip or stop in the middle of play. Ventilate or dehumidify the cabin for a while before using the player.
- The CD may skip if the player experiences strong vibrations when the vehicle is driven on rough roads or similar uneven surface(s).

(d) Cleaning

NOTICE:

Do not use a lens cleaner because it may cause a malfunction in the pickup portion of the player.

(1) If dirt is on the disc surface, wipe it clean with a soft dry cloth such as an eyeglass cleaner for plastic lenses

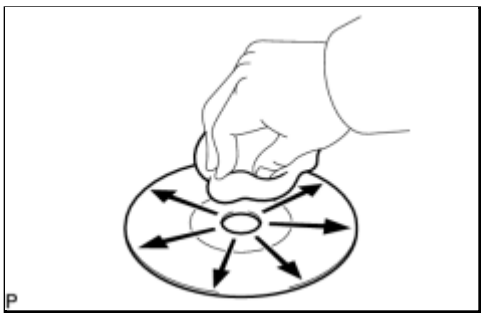

from the inside to the outside in a radial direction.

NOTICE:

- Pressing on the disc by hand or rubbing the disc with a hard cloth may scratch the disc surface.
- Use of solvent such as a record spray, antistatic agent, alcohol, benzine, and thinner, or a chemical cloth may cause damage to the disc, making the disc unusable.

5. MP3/WMA OUTLINE

(a) Playable MP3 file standards

COMPATIBLE STANDARD	MP3 (MPEG1 LAYER3, MPEG2 LSF LAYER 3)
Compatible sampling frequency	• MPEG1 LAYER3: 44.1, 48 (kHz) • MPEG2 LSF LAYER3: 16, 22.05, 24 (kHz)
Compatible bit rate	• MPEG1 LAYER3: 64, 80, 96, 112, 128, 160, 192, 224, 256, 320 (kbps) • MPEG2 LSF LAYER3: 64, 80, 96, 112, 128, 144, 160 (kbps) • Compatible with VBR
Compatible channel mode	Stereo, joint stereo, dual channel, monaural

(b) Playable WMA file standards

COMPATIBLE STANDARD	WMA VER. 7, 8, AND 9
Compatible sampling frequency	44.1, 48 (kHz)
Compatible bit rate	• Ver. 7, 8: CBR48, 64, 80, 96, 128, 160, 192 (kbps) • Ver. 9: CBR48, 64, 80, 96, 128, 160, 192, 256, 320 (kbps) • Compatible with playback of channel 2 only

(c) ID3 tag and WMA tag

(1) Additional textual information called ID3 tag can be input to MP3 files. Information such as song titles and artist names can be stored.

HINT:

This player is compatible with the ID3 tags of ID3 Ver. 1.0 and 1.1, and ID3 Ver. 2.2 and 2.3. (Number of characters complies with ID3 Ver. 1.0 and 1.1.)

(2) Additional textual information called WMA tag can be input to WMA files. Information such as song titles and artist names can be stored.

(d) Usable media

(1) Only CD-ROMs, CD-Rs (CD-Recordable), and CD-RWs (CD-ReWritable) can be used to play MP3/WMA files.

NOTICE:

- CD-Rs and CD-RWs are more easily affected by a hot and humid environment than discs used for normal audio CDs. For this reason, some CD-Rs and CD-RWs may not be played.
- If there are fingerprints or scratches on the disc, the disc may not be played or the CD may skip.
- Some CD-Rs and CD-RWs deteriorate if they are left in the cabin for a long time.
- Keep CD-Rs and CD-RWs in a storage case that is impenetrable to light.

(e) Usable media format

(1) Usable media format

Disc format	CD-ROM Mode 1, CD-ROM XA Mode 2 Form 1
File format	ISO9660 Level 1 and Level 2 (Joliet, Romeo)

HINT:

- As for MP3/WMA files written in any format other than those above, the contents of the files may not be played normally or the file names or folder names may not be displayed correctly.
- This player is compatible with multi-session discs and can play CD-Rs and CD-RWs on which MP3/WMA files are added. However, only the first session can be played.
- Discs whose first session includes both music data and MP3 or WMA format data cannot be played.

(2) Standard and restrictions

Maximum directory levels	8 levels
Maximum number of characters for a folder name/file name	32 characters
Maximum number of folders	192 (Including empty folders, route folders, and folders that do not contain MP3/WMA files)
Maximum number of files in a disc	255 (Including non-MP3/WMA files)

(f) File names

(1) Only files with an extension of ".mp3" or ".wma" can be recognized and played as MP3 or WMA files.

(2) Save MP3 or WMA files with an extension of ".mp3" or ".wma".

NOTICE:

If saving non-MP3 or non-WMA files with an extension of ".mp3" or ".wma", those files are wrongly recognized as MP3 or WMA files and played. A loud noise may occur and damage to the speaker may result.

6. RADIO DESCRIPTION

(a) Radio frequency band

(1) Radio broadcasts use the radio frequency bands shown in the table below.

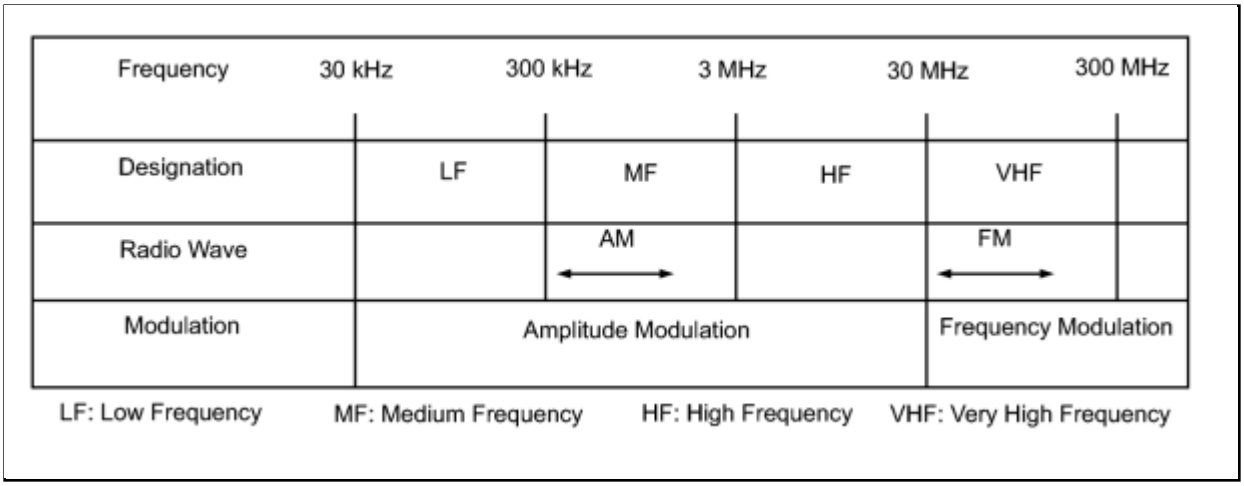

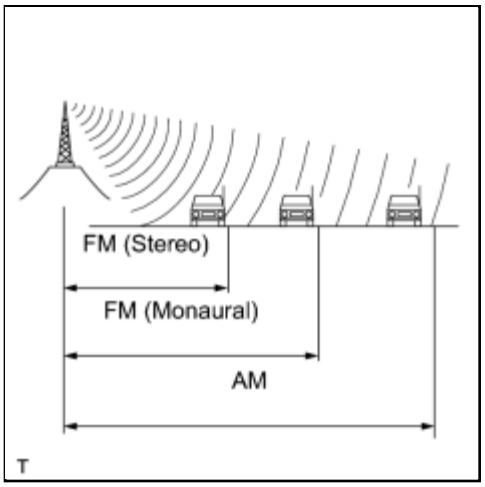

(b) Service area

(1) The service areas of AM and FM broadcasts are vastly different. Sometimes an AM broadcast can be received very clearly but an FM stereo cannot. FM stereo has the smallest service area, and is prone to pick up static and other types of interference such as noise.

(c) Radio reception problems

HINT:

In addition to static, other problems such as "phasing", "multipath", and "fade out" exist. These problems are not caused by electrical noise, but by the radio signal propagation method itself.

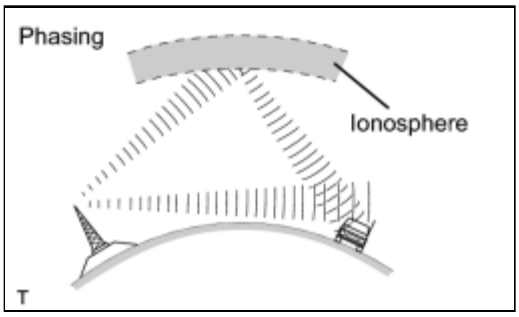

(1) Phasing

AM broadcasts are susceptible to electrical interference and another kind of interference called phasing. Occurring only at night, phasing is the interference created when a vehicle receives 2 radio wave signals from the same transmitter. One signal is reflected off the ionosphere and the other signal is received directly from the transmitter.

(2) Multipath

Multipath is a type of interference created when a vehicle receives 2 radio wave signals from the same

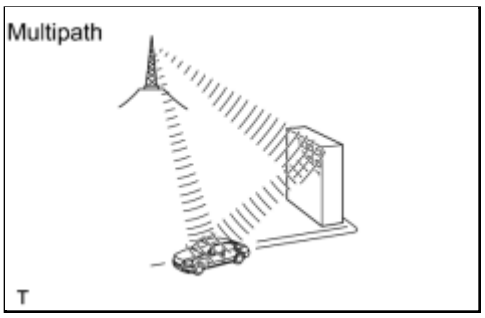

transmitter. One signal is reflected off buildings or mountains and the other signal is received directly from the transmitter.

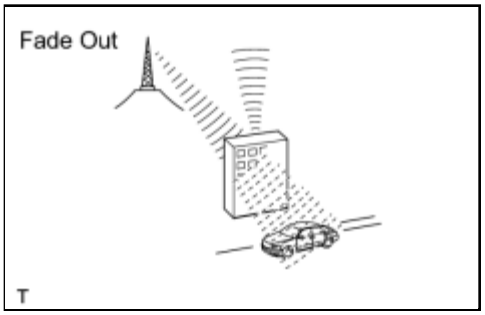

(3) Fade out

Fade out is caused by objects (buildings, mountains, and other such large obstacles) that deflect away part of a signal, resulting in a weaker signal when the object is between the transmitter and vehicle. High frequency radio waves, such as FM broadcasts, are easily deflected by obstructions. Low frequency radio waves, such as AM broadcasts, are much more difficult to deflect.

(d) Noise problem

Technicians must have a clear understanding about each customer's noise complaint. Use the following table to diagnose noise problems.

RADIO FREQUENCY	NOISE OCCURRENCE CONDITION	PRESUMABLE CAUSE
AM	Noise occurs in a specified area	Foreign noise
AM	Noise occurs when listening to an intermittent broadcast	An identical program transmitted from multiple towers can cause noise where the signals overlap
AM	Noise occurs only at night	Music beat from a distant broadcast
FM	Noise occurs while driving in a specified area	Multipath or phasing noise resulting from a change in FM frequency

HINT:

If the noise does not match the examples above, refer to the descriptions about phasing and multipath.

7. ASL (Automatic Sound Levelizer) FUNCTION OUTLINE

(a) The ASL (Automatic Sound Levelizer) function automatically adjusts the sound data in order to maintain clear audio sound even when vehicle noise increases (as vehicle noise increases, the volume is turned up etc.). Vehicle speed signals are received from the combination meter and used for the ASL (Automatic Sound Levelizer).

8. AVC-LAN DESCRIPTION

(a) What is AVC-LAN?

AVC-LAN, an abbreviation for "Audio Visual Communication Local Area Network", is a united

standard developed by manufacturers in affiliation with Toyota Motor Corporation. This standard pertains to audio and visual signals as well as switch and communication signals.

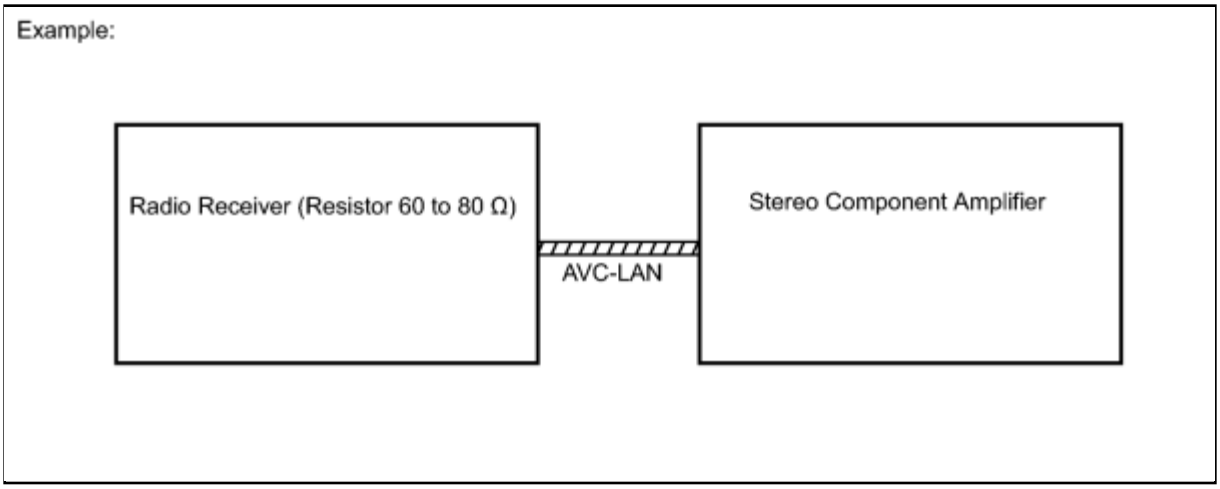

(b) Purpose:

Recently, car audio systems have rapidly developed and the functions have vastly changed. The conventional car audio system is being integrated with multimedia interfaces similar to those in navigation systems. At the same time, customers are demanding higher quality from their audio systems. This is merely an overview of the standardization background. The specific purposes are as follows:

(1) To solve sound problems, etc. caused by using components of different manufacturers through signal standardization.

(2) To allow each manufacturer to concentrate on developing products they do best. From this, reasonably priced products can be produced.

HINT:

- If a short to +B or short to ground is detected in the AVC-LAN circuit, communication is interrupted and the navigation system will stop functioning.
- The multi-display unit acts as the master unit.

9. COMMUNICATION SYSTEM OUTLINE

(a) Components of the navigation system communicate with each other via the AVC-LAN.

(b) The navigation receiver assembly has enough resistance (60 to 80 Ω) necessary for transmitting communication signals. This is essential for communication.

(c) If a short circuit or open circuit occurs in the AVC-LAN circuit, communication is interrupted and the navigation system will stop functioning.

10. DIAGNOSTIC FUNCTION OUTLINE

(a) The navigation system has a diagnostic function (the result is indicated on the master unit).

(b) Each component has a specified number (3-digit) called a physical address. Each function has a number (2-digit) called a logical address.

(c) A 3-digit hexadecimal component code (physical address) is allocated to each component on the AVC-LAN. Using this code, the component in the diagnostic function can be displayed.

11. DIAGNOSIS DISPLAY DETAILED DESCRIPTION

HINT:

- This section contains a detailed description of displays within diagnostic mode.
- Illustrations may differ from the actual vehicle depending on the device settings and options. Therefore, some detailed areas may not be exactly the same as on the actual vehicle.

(a) SYSTEM CHECK

(1) System Check Mode Screen

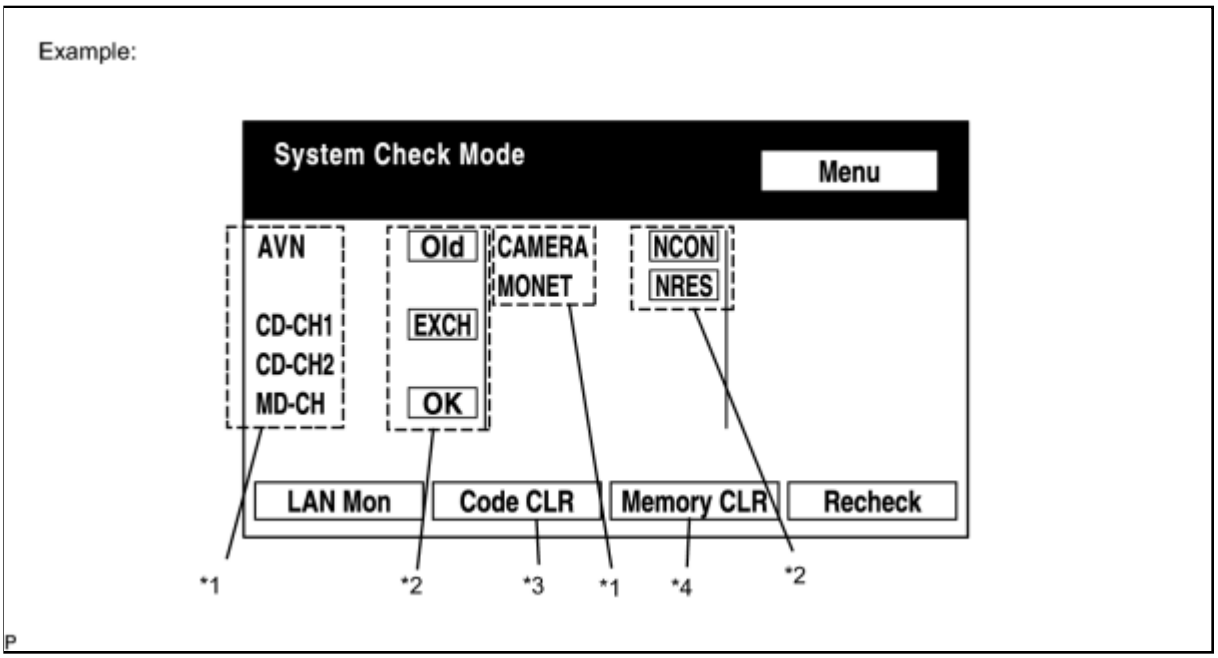

*1 : Device Names and Hardware Address

HINT:

- Registered device names are displayed.
- If a device name is unknown to the system, its physical address is shown instead.

ADDRESS NO.	NAME	ADDRESS NO.	NAME
110	EMV	120	AVX
128	1DIN TV	140	AVN
144	G-BOOK	178	NAVI
17C	MONET	190	AUDIO H/U
1AC	CAMERA-C	1B0	Rr-TV
1C0	Rr-CONT	19D	BT-HF
1C4	PANEL	1C6	G/W
1C8	FM-M-LCD	1D8	CONT-SW
1EC	Body	118	EMVN
1F1	XM	1F2	SIRIUS

ADDRESS NO.	NAME	ADDRESS NO.	NAME
230	TV-TUNER	240	CD-CH2
250	DVD-CH	280	CAMERA
360	CD-CH1	3A0	MD-CH
17D	TEL	440	DSP-AMP
530	ETC	1F6	RSE
1A0	DVD-P	1D6	CLOCK
238	DTV	480	AMP

*2: Check Result

HINT:

Result codes for all devices are displayed.

RESULT	MEANING	ACTION
OK	Device did not respond with DTC (excluding communication DTCs from AVC-LAN).	-
EXCH	Device responds with "replace" type DTC.	Look up DTC in "Unit Check Mode" and replace device.
CHEK	Device responds with "check" type DTC.	Look up DTC in "Unit Check Mode".
NCON	Device was previously present, but does not respond in diagnostic mode.	- Check power supply wire harness of device. - Check AVC-LAN of device.
Old	Device responds with "old" type DTC.	Look up DTC in "Unit Check Mode".
NRES	Device responds in diagnostic mode, but gives no DTC information.	- Check power supply wire harness of device. - Check AVC-LAN of device.

*3: Code Clear

- Present DTCs are cleared.
- Press the "Code CLR" switch for 3 seconds.

*4: Memory Clear

- Present and past DTCs and registered connected device names are cleared.
- Press the "Memory CLR" switch for 3 seconds.

(2) Diagnosis MENU Screen

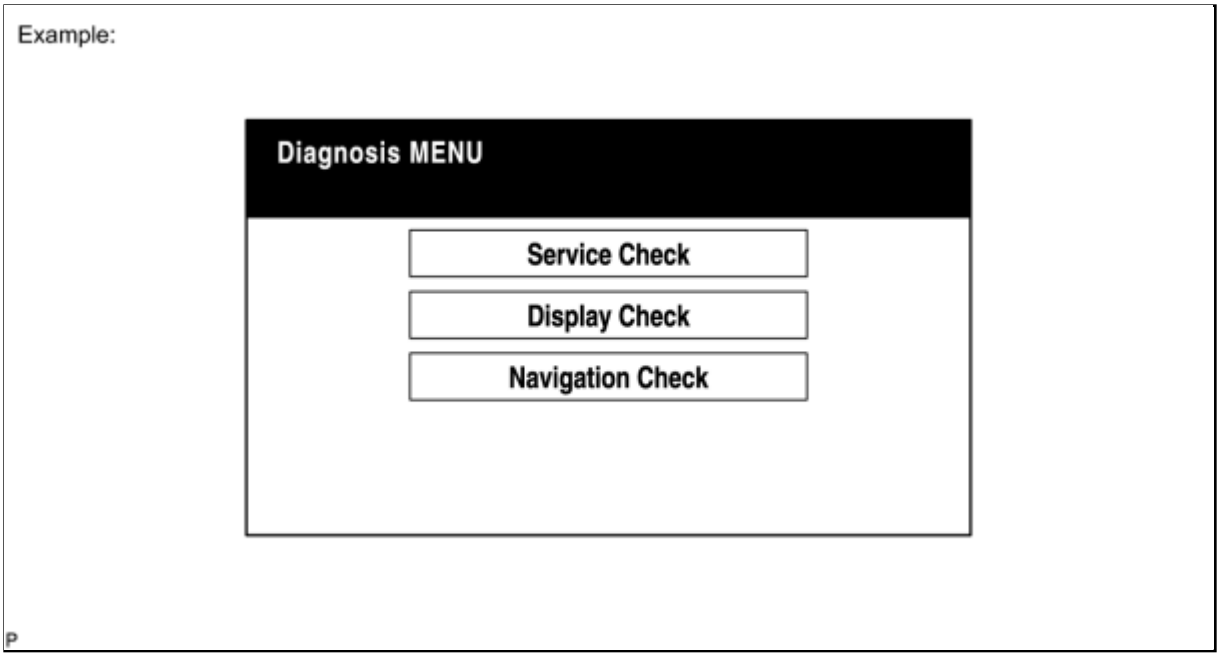

HINT:

Some items may be grayed out or not displayed, as the functions are different depending on the vehicle.

(3) Unit Check Mode Screen

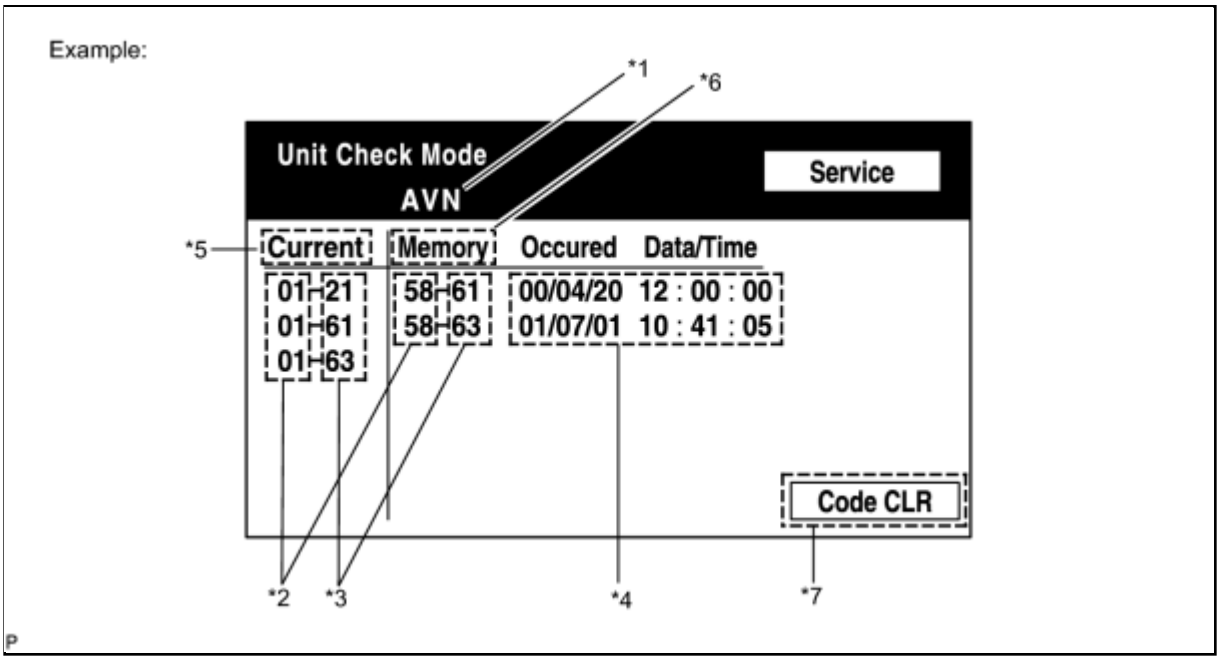

Screen Description

DISPLAY	CONTENT
*1: Device name	Target device
*2: Segment	Target device logical address
*3: DTC	DTC (Diagnostic Trouble Code)

DISPLAY	CONTENT
*4: Timestamp	Time and date of past DTCs are displayed (year is displayed in 2-digit format).
*5: Present Code	DTCs output at service check are displayed.
*6: Past Code	Diagnostic memory results and stored DTCs are displayed.
*7: Diagnosis Clear Switch	Pushing this switch for 3 seconds clears diagnostic memory data of target device (responses to diagnostic system check result and displayed data are cleared).

(4) LAN Monitor (Original) Screen

Example:

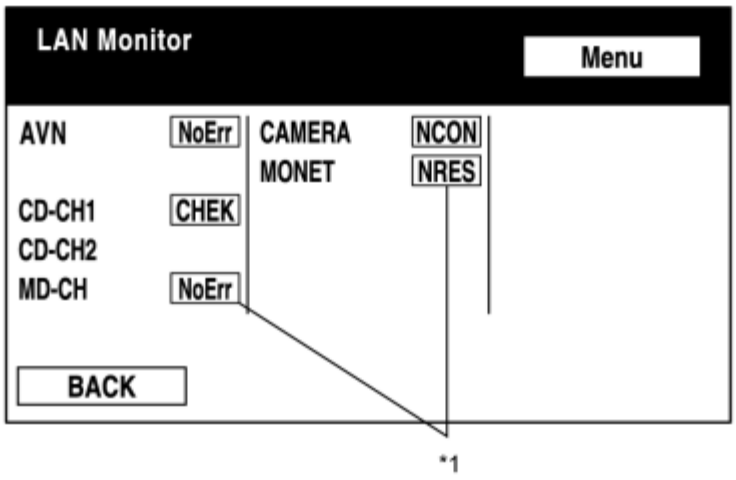

*1: Check Result

HINT:

Check results of all the devices are displayed.

RESULT	MEANING	ACTION
No Err (OK)	There are no communication DTCs.	-
CHEK	Device responds with "check" type DTC.	Look up DTC in "Unit Check Mode".
NCON	Device was previously present, but does not respond in diagnostic mode.	1. Check power supply wire harness of device. 2. Check AVC-LAN of device.
Old	Device responds with "old" type DTC.	Look up DTC in "Unit Check Mode".

RESULT	MEANING	ACTION
NRES	Device responds in diagnostic mode, but gives no DTC information.	1. Check power supply wire harness of device. 2. Check AVC-LAN of device.

(5) LAN Monitor (Individual) Screen

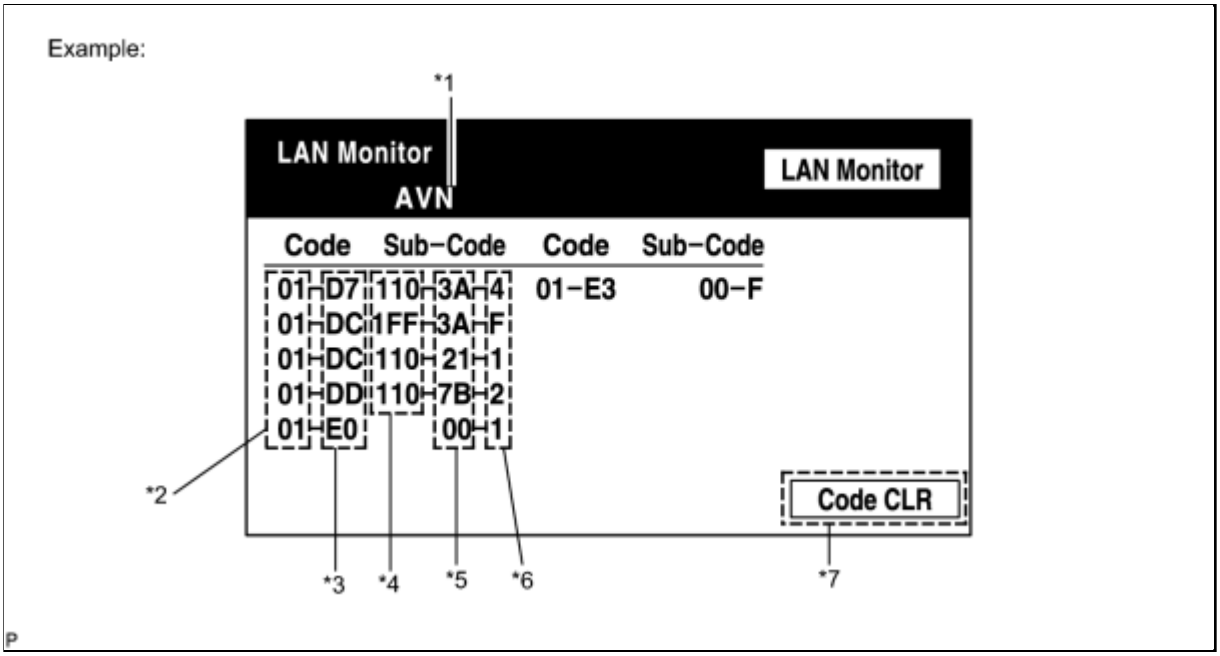

Screen Description

DISPLAY	CONTENT
*1: Device name	Target device
*2: Segment	Target logical address
*3: DTC	DTC (Diagnostic Trouble Code)
*4: Sub-code (device address)	Physical address stored with DTC (if there is no address, nothing is displayed).
*5: Connection check No.	Connection check number stored with DTC
*6: DTC occurrence	Number of times same DTC has been stored
*7: Diagnosis Clear Switch	Pushing this switch for 3 seconds clears diagnostic memory data of target device (responses to diagnostic system check result and displayed data are cleared).

(b) DISPLAY CHECK

(1) Vehicle Signal Check Mode Screen

Example:

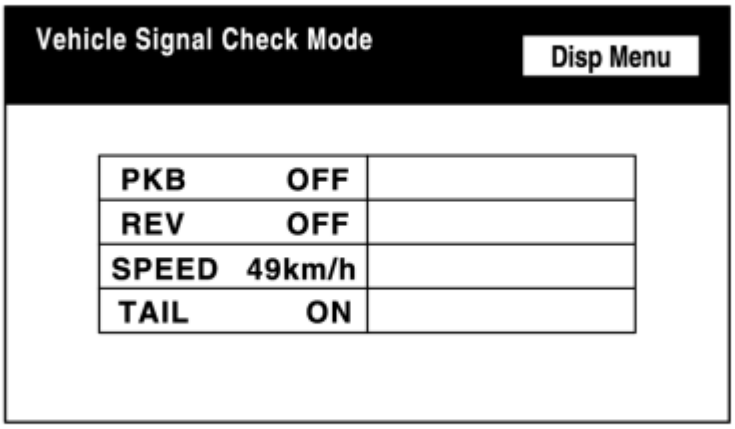

Screen Description

NAME	CONTENT
Battery	Battery voltage is displayed.
PKB	Parking brake ON/OFF state is displayed.
REV	Reverse signal ON/OFF state is displayed.
IG	Engine switch ON/OFF state is displayed.
ADIM/TCAN	Brightness state DIM (with) / BRIGHT (without) is displayed.
TAIL	TAIL signal (Light control switch) ON/OFF state is displayed.
SPEED	Vehicle speed is displayed in km/h.

HINT:

- Only items sending vehicle signals will be displayed.
- This screen is updated once per second when input signals to the vehicle are changed.

(c) NAVIGATION CHECK

(1) Navigation Check Screen

Example:

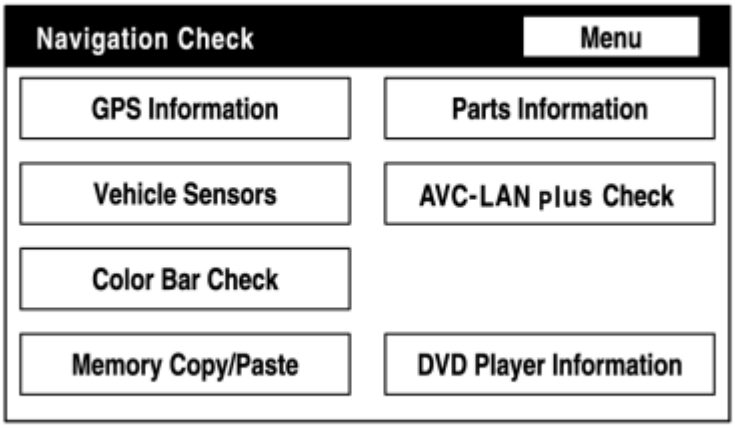

HINT:

Some items may be grayed out or not displayed, as the functions are different depending on the vehicle.

(2) GPS Information Screen

Example:

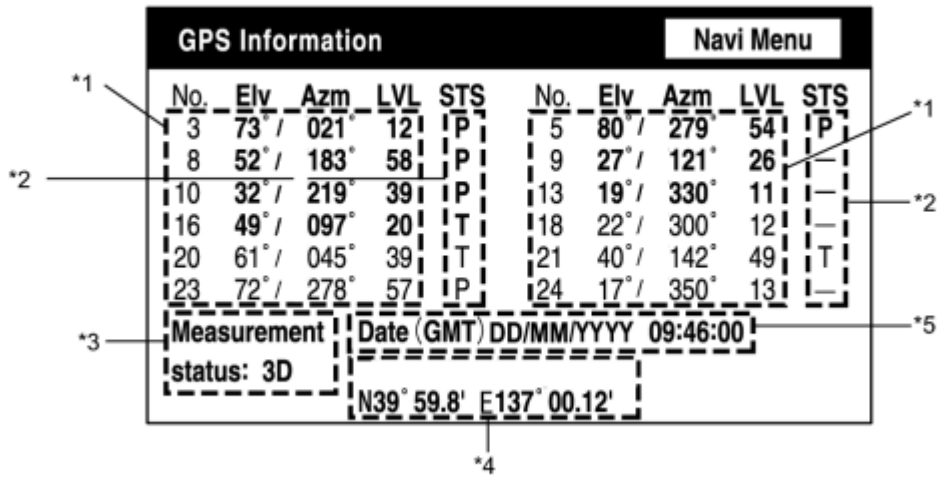

*1 : Satellite information

Information from a maximum of 12 satellites is displayed on the screen. This information includes the target GPS satellite number, elevation angle, direction, and signal level.

*2 : Receiving condition

DENSO Model

DISPLAY	CONTENT
T	System is receiving GPS signal, but is not using it for location.
P	System is using GPS signal for location.
-	System cannot receive GPS signal.

AISIN AW Model

DISPLAY	CONTENT
01H	System cannot receive a GPS signal.
02H	System is tracing a satellite.
03H	System is receiving a GPS signal, but is not using it for location.
04H	System is using the GPS signal for location.

*3: Measurement information

DISPLAY	CONTENT
2D	2-dimensional location method is being used.
3D	3-dimensional location method is being used.
NG	Location data cannot be used.
Error	Reception error has occurred.
-	Any other state.

*4: Position information

DISPLAY	CONTENT
Position	Latitude and longitude information on current position is displayed.

*5: Date information

DISPLAY	CONTENT
Date	Date/time information obtained from GPS signal is displayed in Greenwich mean time (GMT). Last 4 digits are displayed.

(3) Vehicle Sensors Screen

Example:

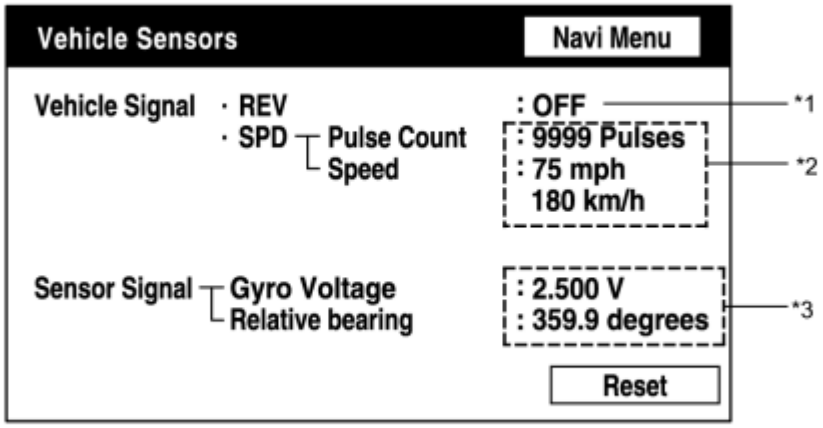

P

Vehicle Signal

DISPLAY	CONTENT
*1: REV	REV signal ON/OFF state is displayed.
*2: SPD	SPD signal condition is displayed.

Sensor Signal

DISPLAY	CONTENT
*3: Gyro sensor	Gyro sensor output condition is displayed (when vehicle is driven straight or is stationary, voltage is approximately 2.5 V).

HINT:

Signals are updated once per second only when vehicle sensor signals are changed.

(4) DVD player information Screen

Example:

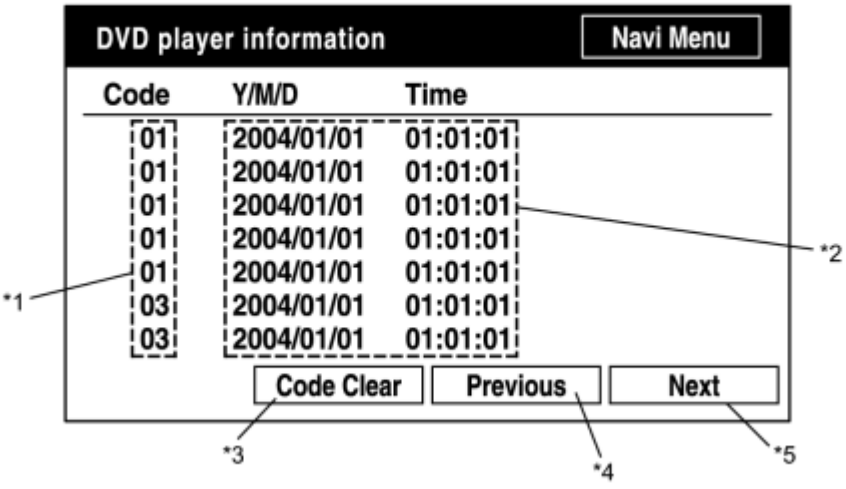

Screen Description

DISPLAY	CONTENTS
*1: Trouble code	Each code corresponding to malfunctions is displayed. For details, refer to "Trouble Code Description".
*2: Occurrence time	• Date (year, month, day) and time (hour, minute, second) when trouble code was stored are displayed as time stamp (Greenwich mean time). • Time data to be displayed is received from GPS receiver.
*3: Trouble code clear switch	All code data being displayed is cleared by pushing this switch for 3 seconds.
*4: Returning switch	Previous page is displayed. If current displayed page is first page, this switch cannot be operated.
*5: Proceeding switch	Next page is displayed. If current displayed page is last page, this switch cannot be operated.

Trouble Code Description

CODE	MALFUNCTION	COUNTERMEASURE
01	Cannot be recognized	Replace navigation receiver assembly.
03	Cannot be read	Follow inspection procedure for DTC 58-42 INFO .

HINT:

There is a DVD player check function in the navigation ECU.

Last Modified: 3-10-2010	6.4 K	**From:** 200901
Model Year: 2010	**Model:** Corolla	**Doc ID:** RM000002XBN006X
Title: NAVIGATION / MULTI INFO DISPLAY: NAVIGATION RECEIVER: COMPONENTS (2010 Corolla)		

COMPONENTS

ILLUSTRATION

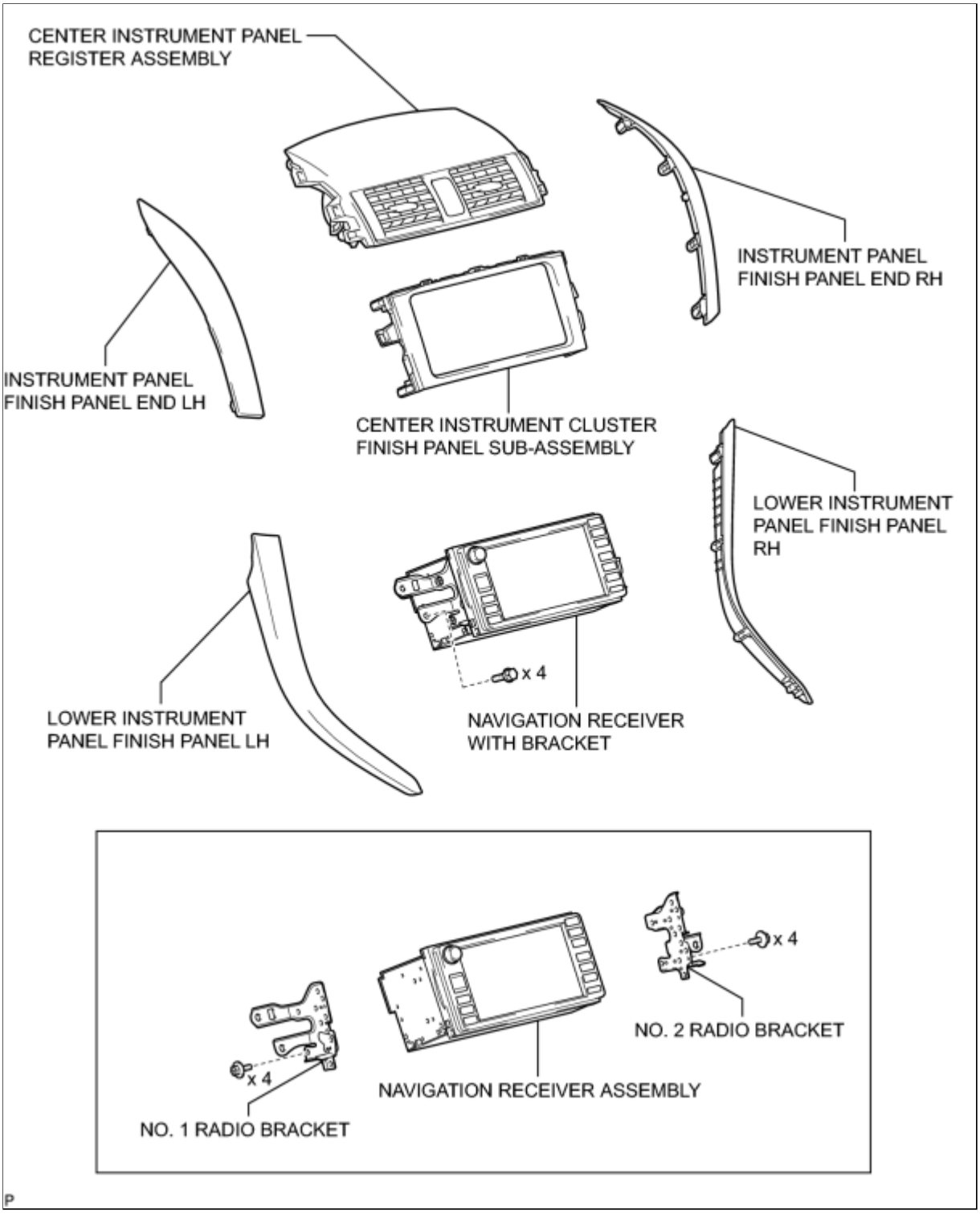
CENTER INSTRUMENT PANEL REGISTER ASSEMBLY
INSTRUMENT PANEL FINISH PANEL END RH
INSTRUMENT PANEL FINISH PANEL END LH
CENTER INSTRUMENT CLUSTER FINISH PANEL SUB-ASSEMBLY
LOWER INSTRUMENT PANEL FINISH PANEL RH
x 4
LOWER INSTRUMENT PANEL FINISH PANEL LH
NAVIGATION RECEIVER WITH BRACKET
x 4
NO. 2 RADIO BRACKET
x 4
NAVIGATION RECEIVER ASSEMBLY
NO. 1 RADIO BRACKET
P

Last Modified: 3-10-2010	6.4 A	**From:** 200901
Model Year: 2010	**Model:** Corolla	**Doc ID:** RM000002XBO007X
Title: NAVIGATION / MULTI INFO DISPLAY: NAVIGATION RECEIVER: REMOVAL (2010 Corolla)		

REMOVAL

1. EJECT MAP DISC

(a) Turn the ignition switch to ON.

(b) Push the "OPEN" button.

(c) Push the "MAP" button to eject the map disc.

2. REMOVE LOWER INSTRUMENT PANEL FINISH PANEL LH INFO

3. REMOVE LOWER INSTRUMENT PANEL FINISH PANEL RH INFO

4. REMOVE INSTRUMENT PANEL FINISH PANEL END LH INFO

5. REMOVE INSTRUMENT PANEL FINISH PANEL END RH INFO

6. REMOVE CENTER INSTRUMENT PANEL REGISTER ASSEMBLY INFO

7. REMOVE CENTER INSTRUMENT CLUSTER FINISH PANEL SUB-ASSEMBLY INFO

8. REMOVE NAVIGATION RECEIVER WITH BRACKET

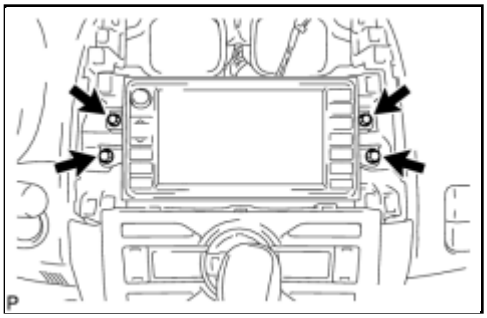

(a) Remove the 4 bolts.

(b) Disconnect each connector and remove the navigation receiver with bracket.

9. REMOVE NO. 2 RADIO BRACKET

(a) Remove the 4 screws and No. 2 radio bracket.

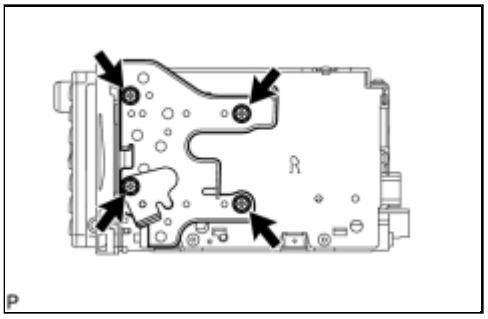

10. REMOVE NO. 1 RADIO BRACKET

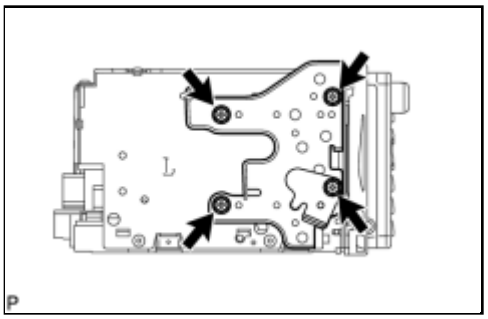

(a) Remove the 4 screws and No. 1 radio bracket.

11. REMOVE NAVIGATION RECEIVER ASSEMBLY

Last Modified: 3-10-2010	6.4 A	**From:** 200901
Model Year: 2010	**Model:** Corolla	**Doc ID:** RM000002XBM007X
Title: NAVIGATION / MULTI INFO DISPLAY: NAVIGATION RECEIVER: INSTALLATION (2010 Corolla)		

INSTALLATION

1. INSTALL NAVIGATION RECEIVER ASSEMBLY

2. INSTALL NO. 1 RADIO BRACKET

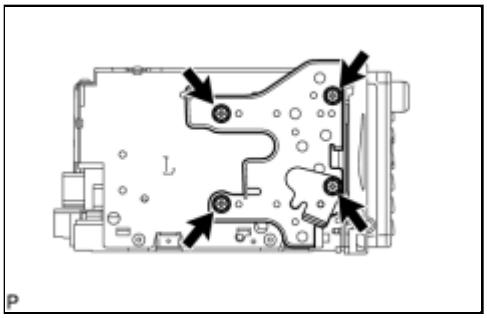

(a) Install the No. 1 radio bracket with the 4 screws.

3. INSTALL NO. 2 RADIO BRACKET

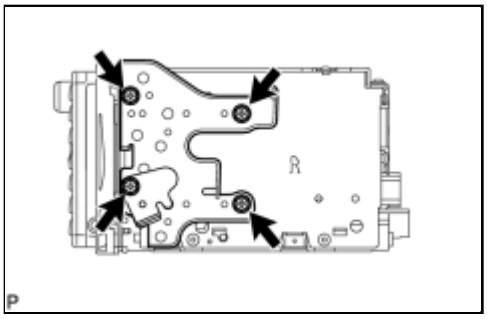

(a) Install the No. 2 radio bracket with the 4 screws.

4. INSTALL NAVIGATION RECEIVER WITH BRACKET

(a) Connect each connector.

(b) Install the navigation receiver with bracket with the 4 bolts.

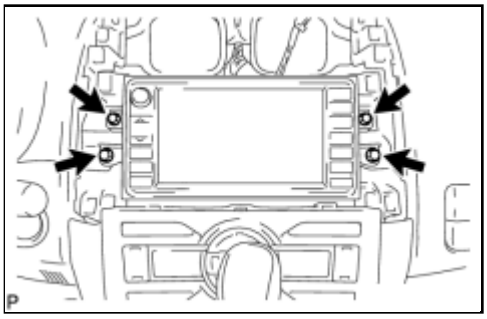

5. INSTALL CENTER INSTRUMENT CLUSTER FINISH PANEL SUB-ASSEMBLY INFO

6. INSTALL CENTER INSTRUMENT PANEL REGISTER ASSEMBLY INFO

7. INSTALL INSTRUMENT PANEL FINISH PANEL END LH INFO

8. INSTALL INSTRUMENT PANEL FINISH PANEL END RH INFO

9. INSTALL LOWER INSTRUMENT PANEL FINISH PANEL LH INFO

10. INSTALL LOWER INSTRUMENT PANEL FINISH PANEL RH INFO

11. INSERT MAP DISC

Last Modified: 3-10-2010	6.4 L	**From:** 200901
Model Year: 2010	**Model:** Corolla	**Doc ID:** RM000002YLR017X
Title: NAVIGATION / MULTI INFO DISPLAY: NAVIGATION SYSTEM: PRECAUTION (2010 Corolla)		

PRECAUTION

1. EXPRESSIONS OF IGNITION SWITCH

(a) The type of ignition switch used on this model differs according to the specifications of the vehicle. The expressions listed in the table below are used in this section.

SWITCH TYPE		IGNITION SWITCH (POSITION)	ENGINE SWITCH (CONDITION)
Expression	Ignition switch off	LOCK	Off
	Ignition switch ON	ON	On (IG)
	Ignition switch ACC	ACC	On (ACC)
	Engine start	START	Start

Last Modified: 3-10-2010	6.4 R	**From:** 200901
Model Year: 2010	**Model:** Corolla	**Doc ID:** RM0000033SW00IX
Title: NAVIGATION / MULTI INFO DISPLAY: NAVIGATION SYSTEM: PARTS LOCATION (2010 Corolla)		

PARTS LOCATION

ILLUSTRATION

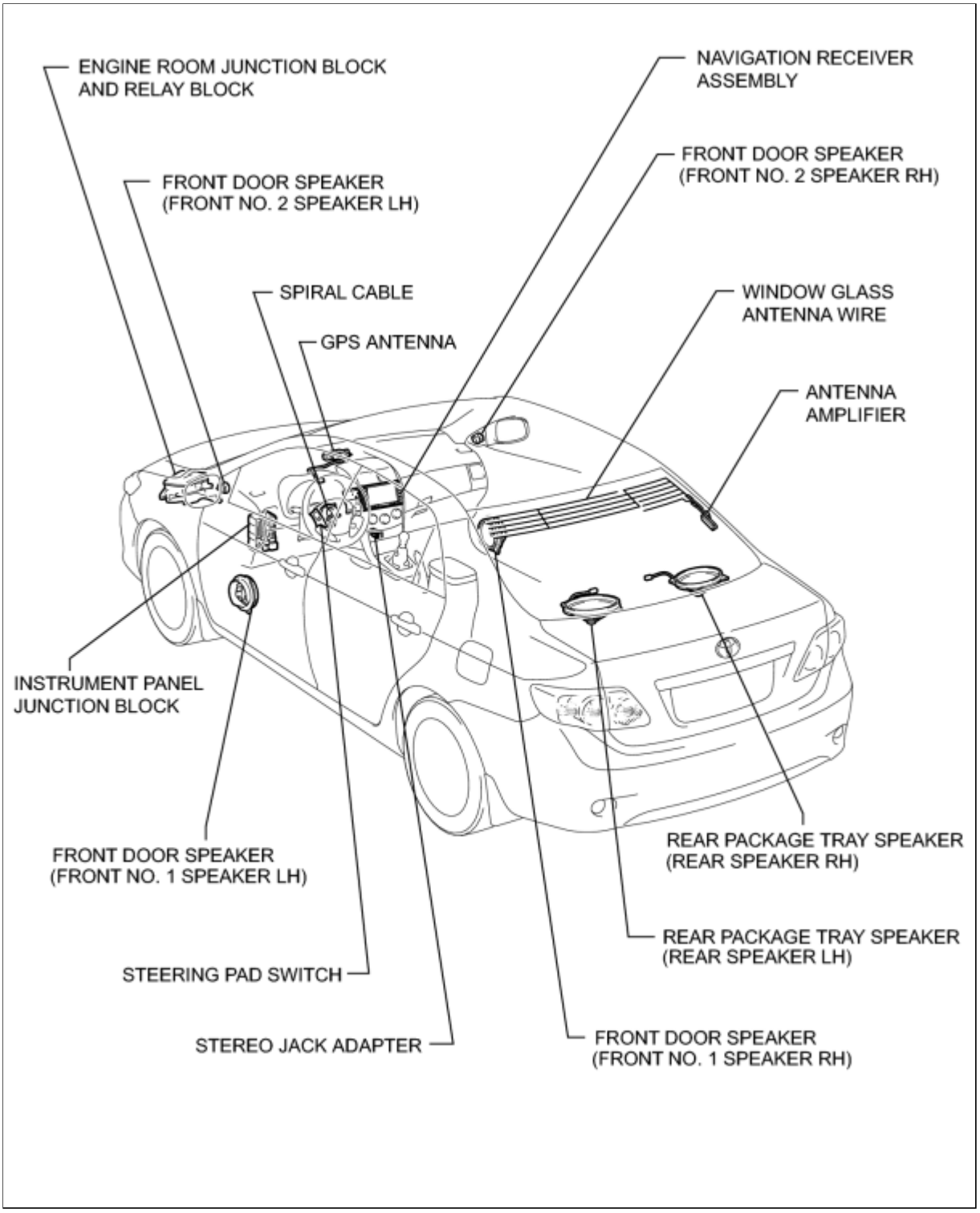
ENGINE ROOM JUNCTION BLOCK AND RELAY BLOCK
FRONT DOOR SPEAKER (FRONT NO. 2 SPEAKER LH)
SPIRAL CABLE
GPS ANTENNA
NAVIGATION RECEIVER ASSEMBLY
FRONT DOOR SPEAKER (FRONT NO. 2 SPEAKER RH)
WINDOW GLASS ANTENNA WIRE
ANTENNA AMPLIFIER
INSTRUMENT PANEL JUNCTION BLOCK
FRONT DOOR SPEAKER (FRONT NO. 1 SPEAKER LH)
STEERING PAD SWITCH
STEREO JACK ADAPTER
REAR PACKAGE TRAY SPEAKER (REAR SPEAKER RH)
REAR PACKAGE TRAY SPEAKER (REAR SPEAKER LH)
FRONT DOOR SPEAKER (FRONT NO. 1 SPEAKER RH)

Last Modified: 3-10-2010	6.4 U	**From:** 200901
Model Year: 2010	**Model:** Corolla	**Doc ID:** RM0000011BX02OX
Title: NAVIGATION / MULTI INFO DISPLAY: NAVIGATION SYSTEM: SYSTEM DIAGRAM (2010 Corolla)		

SYSTEM DIAGRAM

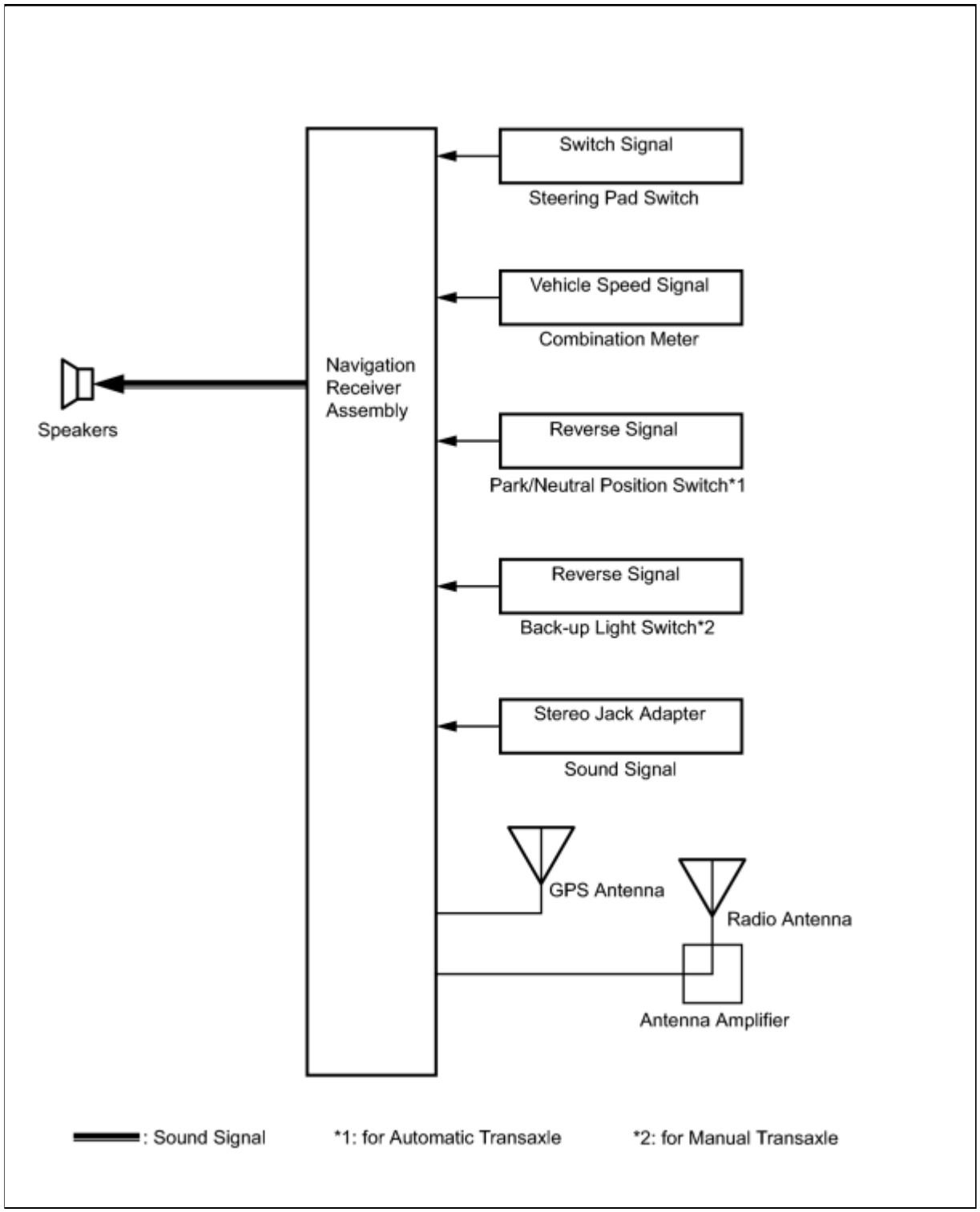

Last Modified: 3-10-2010	6.4 D	**From:** 200901
Model Year: 2010	**Model:** Corolla	**Doc ID:** RM000003A3N00PX
Title: NAVIGATION / MULTI INFO DISPLAY: NAVIGATION SYSTEM: OPERATION CHECK (2010 Corolla)		

OPERATION CHECK

1. CHECK SYSTEM NORMAL CONDITION

(a) If the cause of a symptom is any of the following, the corresponding symptom is normal, it is not a malfunction.

SYMPTOM	ANSWER
A longer route than expected is chosen.	Depending on the road conditions, the navigation receiver assembly may determine that a longer route is quicker.
Even when distance priority is high, the shortest route is not shown.	Some paths may not be advised due to safety concerns.
When the vehicle is put into motion immediately after the engine starts, the navigation system deviates from the actual position.	If the vehicle starts before the navigation system activates, the system may not react.
When running on certain types of roads, especially new roads, the vehicle position deviates from the actual position.	When the vehicle is driving on new roads not available on the map disc, the system attempts to match it to another nearby road, causing the position mark to deviate.

(b) The following symptoms are not a malfunction, but are caused by errors inherent in the GPS, gyro sensor, speed sensor, or navigation receiver assembly.

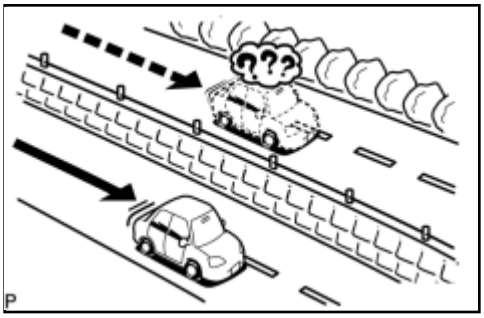

(1) The current position mark may be displayed on a nearby parallel road.

(2) Immediately after a fork in the road, the current vehicle position mark may be displayed on the wrong road.

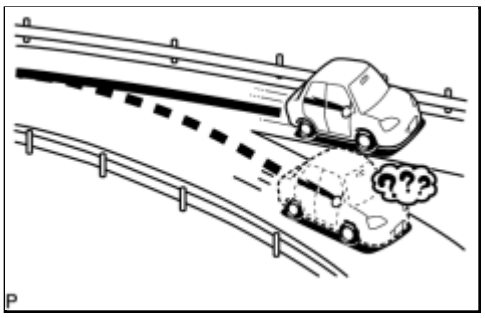

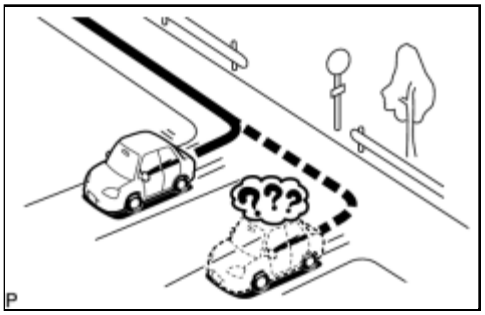

(3) When the vehicle turns right or left at an intersection, the current vehicle position mark may be displayed on a nearby parallel road.

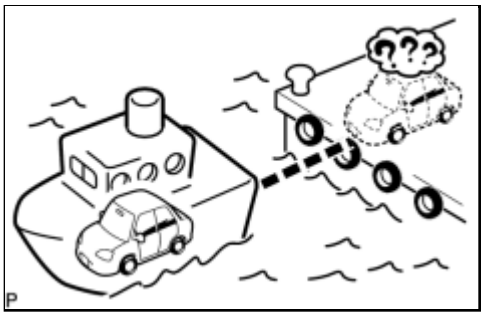

(4) When the vehicle is carried, such as on a ferry, and the vehicle itself is not running, the current vehicle position mark may be displayed in the position where the vehicle was until a measurement can be performed by GPS.

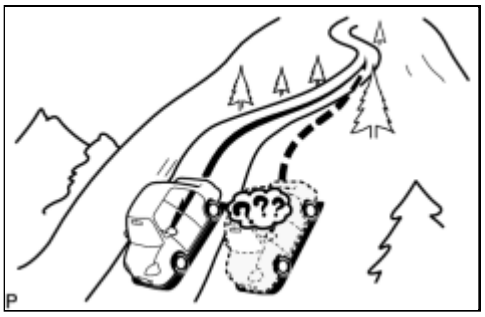

(5) When the vehicle is driven on a steep hill, the current vehicle position mark may deviate from the correct position.

(6) When the vehicle makes a continuous turn of 360°, 720°, 1080°, etc., the current vehicle position mark may deviate from the correct position.

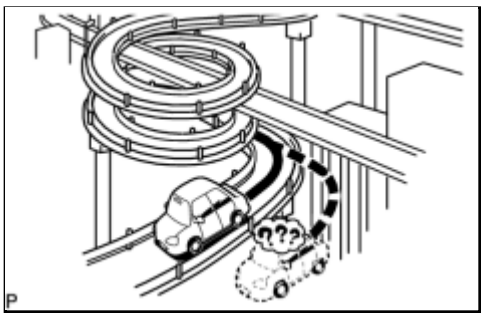

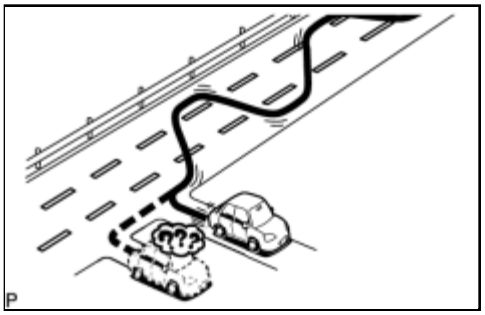

(7) When the vehicle moves erratically, such as constant lane changes, the current vehicle position mark may deviate from the correct position.

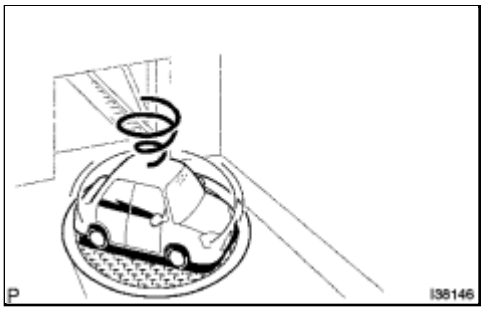

(8) When the ignition switch is turned to ACC or ON on a turntable while parking, the current vehicle position mark may not point in the correct direction. The same will occur when the vehicle starts to move.



(9) When the vehicle is driven on a snowy road or a mountain path with tire chains installed or using a spare tire, the current vehicle position mark may deviate from the correct position.

(10) When a tire is changed, the current vehicle position mark may deviate from the correct position.

HINT:

- The diameter of the tire may change, causing a speed sensor error.
- Performing the "tire change" in calibration mode will allow

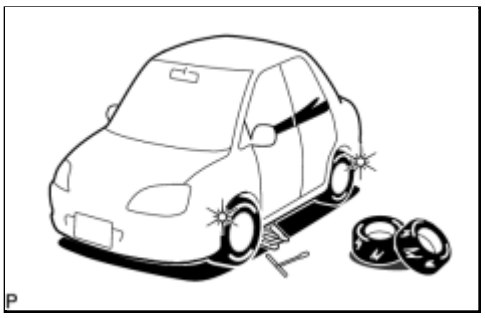

the system to correct the current vehicle position faster.

2. CHECK DISPLAY CHECK

HINT:

- This mode checks the color display on the multi-display.
- Illustrations may differ from the actual vehicle depending on the device settings and options. Therefore, some detailed areas may not be exactly the same as on the actual vehicle.

(a) Enter diagnostic mode INFO .

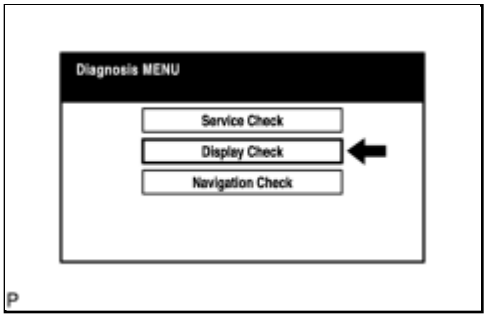

(b) Select "Display Check" from the "Diagnosis MENU" screen.

(c) Color Bar Check

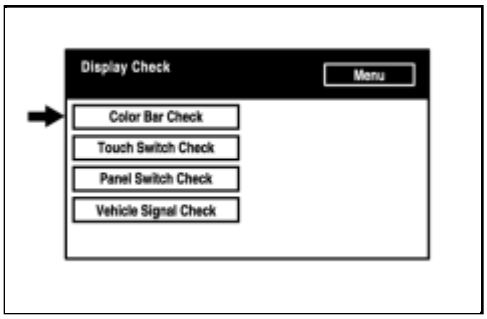

(1) Select "Color Bar Check" from the "Display Check" screen.

(2) Select a color bar from the "Color Bar Check Mode" screen.

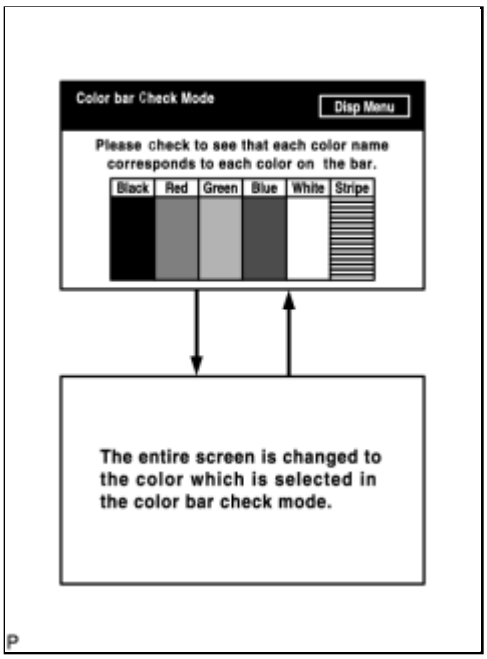

(3) Check the display color.

HINT:

- The entire screen turns to the color or stripe selected.
- Touch the display to return to the "Color Bar Check Mode" screen.

(d) Touch Switch Check

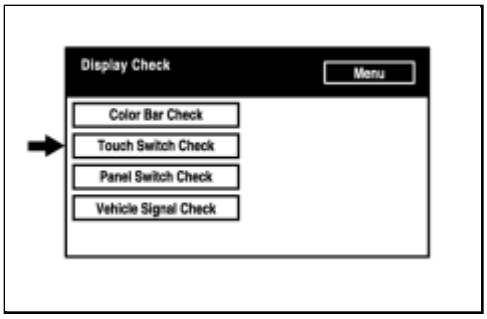

(1) Select "Touch Switch Check" from the "Display Check" screen.

(2) Touch the display anywhere in the open area to perform the check when the "Touch Switch Check" screen is displayed.

HINT:

A "+" mark is displayed where the display is touched.

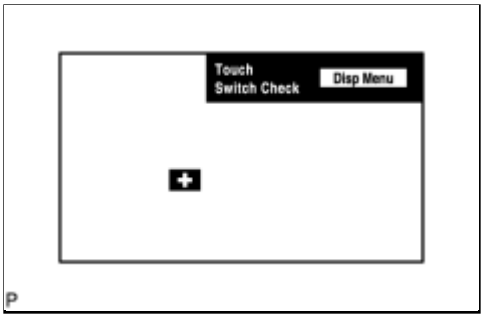

(e) Panel Switch Check

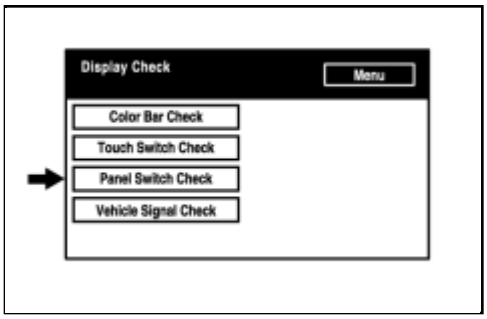

(1) Select "Panel Switch Check" from the "Display Check" screen.

(2) Operate each switch and check that the switch name and condition are correctly displayed.

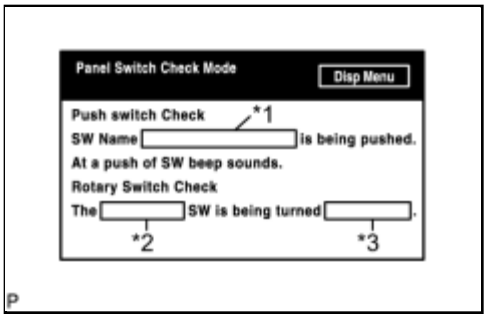

DISPLAY	CONTENT
*1: Pushed switch name	• Name of the pressed switch is displayed. • If more than one switch is pressed, "MULTIPLE" is displayed.
*2: Rotary switch name	Name of the rotary switch is displayed.
*3: Rotary switch direction	Direction of the rotary switch is displayed.

(f) Vehicle Signal Check

(1) Select "Vehicle Signal Check" from the "Display Check" screen.

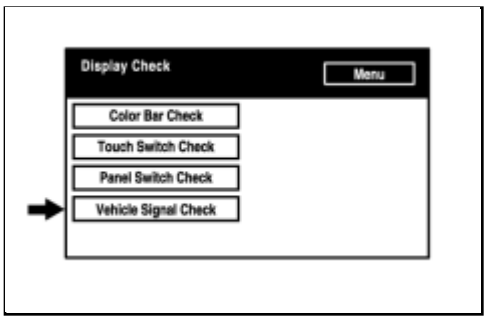

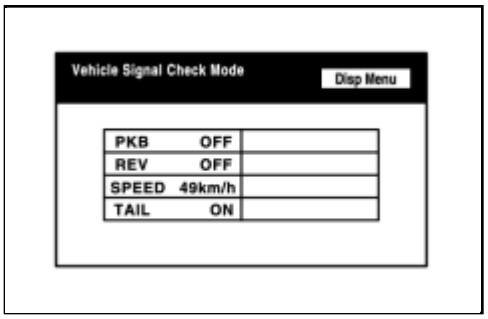

(2) When the "Vehicle Signal Check Mode" screen is displayed, check all the vehicle signal conditions.

HINT:

- Only conditions having inputs are displayed.
- This screen is updated once per second when input signals to the vehicle are changed.
- For details of this function, refer to Diagnosis Display Detailed Description in the System Description INFO .

3. CHECK NAVIGATION CHECK

HINT:

- This mode displays GPS satellite information.
- Illustrations may differ from the actual vehicle depending on the device settings and options. Therefore, some detailed areas may not be exactly the same as on the actual vehicle.

(a) Enter diagnostic mode INFO .

(b) Navigation Check

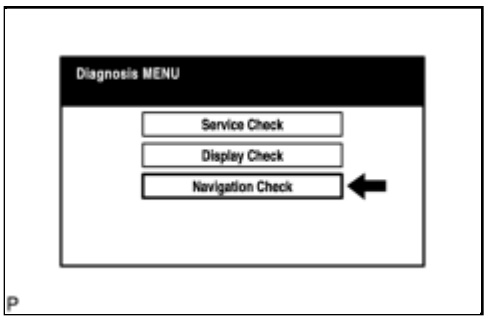

(1) Select "Navigation Check" from the "Diagnosis MENU" screen.

(c) GPS Information

(1) Select "GPS Information" from the "Navigation Check" screen.

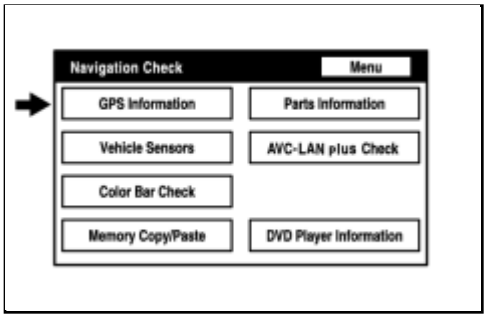

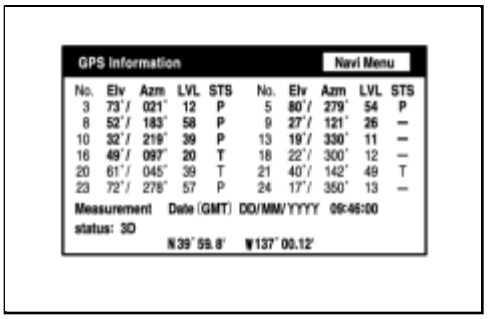

(2) When GPS information is displayed, check the GPS conditions.

HINT:

- This screen is updated once per second when input signals to the vehicle are changed.
- For details of this function, refer to Diagnosis Display Detailed Description in the System Description INFO .

(d) Vehicle Sensors

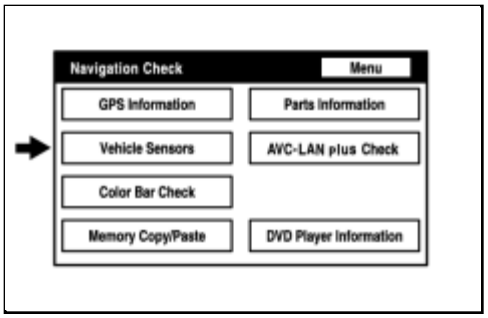

(1) Select "Vehicle Sensors" from the "Navigation Check" screen.

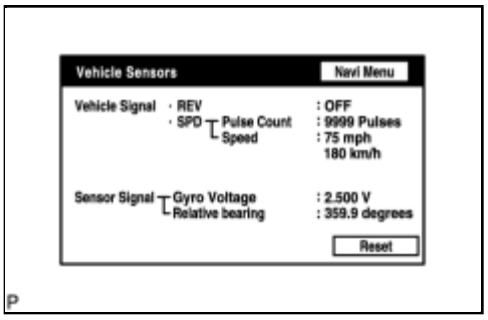

(2) Check all the signals and sensors when vehicle signal information is displayed.

HINT:

- This screen is updated once per second when input signals to the vehicle are changed.
- This screen displays vehicle signals input to the built-in navigation ECU.
- For details of this function, refer to Diagnosis Display Detailed Description in the System Description INFO .

(e) Color Bar Check

(1) Select "Color Bar Check" from the "Navigation Check" screen.

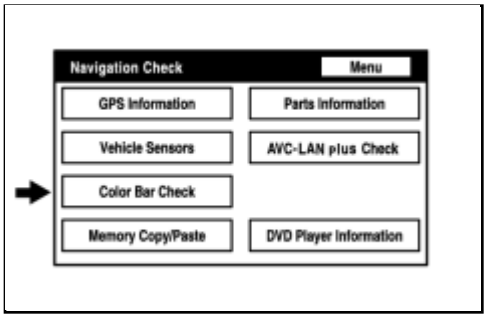

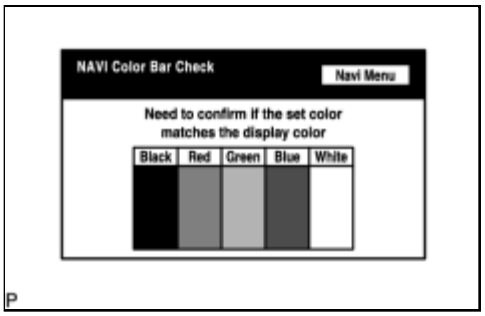

(2) Check each color of the color bar when the "NAVI Color Bar Check" screen is displayed.

HINT:

- Colors will not be displayed full-screen as in "Display Check Mode".
- This screen displays the built-in navigation ECU display color.

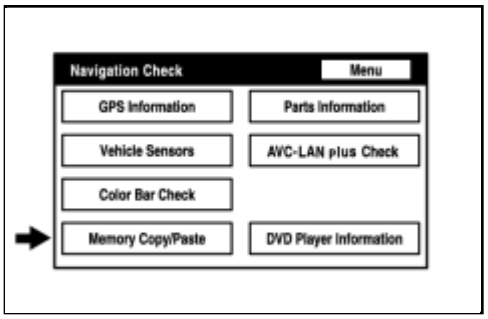

(f) Memory Copy/Paste

HINT:

This function cannot be used.

(g) Parts Information

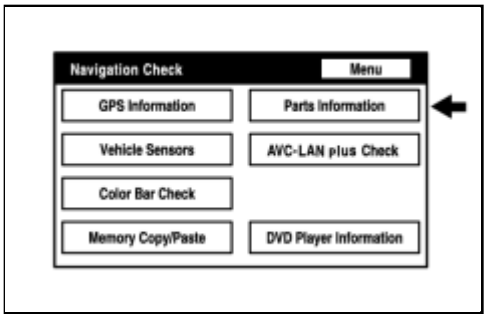

(1) Select "Parts Information" from the "Navigation Check" screen.

(2) Check the navigation and disc information when the "Parts Information" screen is displayed.

Screen Description

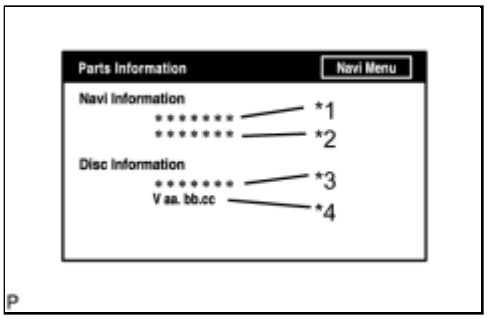

DISPLAY	CONTENT
*1: Navigation Manufacturer	Navigation receiver assembly manufacturer is displayed.
*2: Navigation Version	Navigation receiver assembly version is displayed.
*3: Disc Manufacturer	Map disc manufacturer is displayed.
*4: Disc Version	Map disc version is displayed.

(h) DVD Player Information

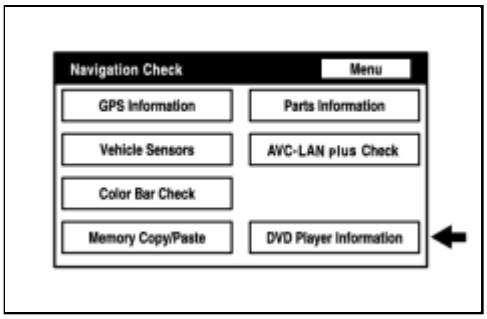

(1) Select "DVD Player Information" from the "Navigation Check" screen.

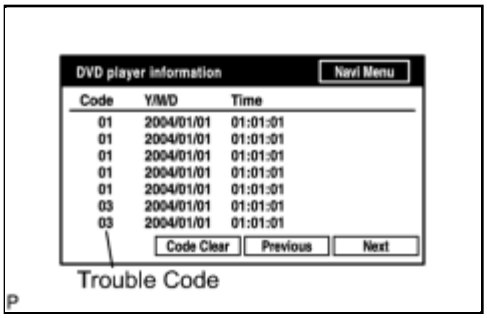

(2) Check for DTCs.

HINT:

- This is the DVD player check function in the navigation ECU.
- For details of this function, refer to Diagnosis Display Detailed Description in the System Description INFO .

Last Modified: 3-10-2010	6.4 D	**From:** 200901
Model Year: 2010	**Model:** Corolla	**Doc ID:** RM0000011BN035X
Title: NAVIGATION / MULTI INFO DISPLAY: NAVIGATION SYSTEM: HOW TO PROCEED WITH TROUBLESHOOTING (2010 Corolla)		

HOW TO PROCEED WITH TROUBLESHOOTING

1.	**VEHICLE BROUGHT TO WORKSHOP**

NEXT

2.	**DIAGNOSTIC QUESTIONING AND SYMPTOM CONFIRMATION**

(a) Ask the customer about symptoms and confirm malfunctions.

THE SCREEN DISPLAYS NOTHING (GO TO STEP 8, AND PROCEED TO "BLACK SCREEN")

OTHER SYMPTOMS (GO TO STEP 3)

3.	**CONFIRM THE SYSTEM NORMAL CONDITION**

APPLICABLE (THIS IS NOT A MALFUNCTION)

NOT APPLICABLE (GO TO STEP 4)

4.	**CHECK FOR DTC**

HINT:

If the system cannot enter diagnostic mode, replace the navigation receiver assembly.

A CODE IS OUTPUT (GO TO STEP 5)

▶ **A CODE IS NOT OUTPUT (GO TO STEP 8)**

5.	CLEAR DTC

(a) Clear the DTCs and finish diagnostic mode.

HINT:

The currently output DTCs may not indicate actual malfunctions depending on the vehicle condition.

NEXT
▼

6.	RECHECK FOR DTC

HINT:

- Even if the malfunction symptom is not confirmed, check for diagnostic trouble codes. This is because the system stores past diagnostic trouble codes.
- Refer to the detailed description on the diagnostic screen as necessary INFO .
- Check the diagnostic trouble code and inspect the area the code indicates.

▶ **A CODE IS OUTPUT (GO TO STEP 7)**

▶ **A CODE IS NOT OUTPUT (GO TO STEP 8)**

7.	DIAGNOSTIC TROUBLE CODE CHART

(a) Find the output code in the Diagnostic Trouble Code Chart INFO .

NEXT ▶ **GO TO STEP 10**

8.	PROBLEM SYMPTOMS TABLE

(a) Find the applicable symptom in the Problem Symptoms Table INFO .

HINT:

If the symptom does not recur and no code is output, perform the symptom reproduction method INFO .

▶ THERE IS AN APPLICABLE SYMPTOM IN THE TABLE (GO TO STEP 10)

▶ THERE IS NO APPLICABLE SYMPTOM IN THE TABLE (GO TO STEP 9)

9.	CHECK THE ECU TERMINAL ARRANGEMENT BASED ON THE MALFUNCTION SYMPTOM

NEXT ▼

10.	CHECK THE CIRCUIT

(a) Adjust, repair, or replace as necessary.

NEXT ▼

11.	RECHECK FOR DIAGNOSTIC TROUBLE CODE

HINT:

After deleting the DTCs, recheck for diagnostic trouble codes.

NEXT ▼

12.	PERFORM CONFIRMATION TEST

Last Modified: 3-10-2010	6.4 T	**From:** 200901
Model Year: 2010	**Model:** Corolla	**Doc ID:** RM0000011BR03TX
Title: NAVIGATION / MULTI INFO DISPLAY: NAVIGATION SYSTEM: PROBLEM SYMPTOMS TABLE (2010 Corolla)		

PROBLEM SYMPTOMS TABLE

HINT:

- Use the table below to help determine the cause of problem symptoms. If multiple suspected areas are listed, the potential causes of the symptoms are listed in order of probability in the "Suspected Area" column of the table. Check each symptom by checking the suspected areas in the order they are listed. Replace parts as necessary.
- Inspect the fuses and relays related to this system before inspecting the suspected areas below.

Display Function

SYMPTOM	SUSPECTED AREA	SEE PAGE
Pressing PWR switch does not turn on system.	Proceed to "Pressing Power Switch does not Turn on System"	INFO
	Navigation receiver assembly power source circuit	INFO
	Navigation receiver assembly	INFO
Black screen (No image appears on navigation/audio screen).	Proceed to "Black Screen"	INFO
	Illumination circuit	INFO
	Navigation receiver assembly	INFO
Illumination for panel switch does not come on with TAIL switch on.	Proceed to "Illumination for Panel Switch does not Come on with TAIL Switch ON"	INFO
	Illumination circuit	INFO
	Navigation receiver assembly	INFO
Display does not dim (Night Screen) with TAIL switch on.	Proceed to "Display does not Dim when Light Control Switch is Turned ON"	INFO
	Illumination circuit	INFO
	Navigation receiver assembly	INFO
Power does not turn off (The screen remains on).	Navigation receiver assembly power source circuit	INFO
	Navigation receiver assembly	INFO
Panel switches do not function.	Proceed to "Panel Switches do not Function"	INFO
	Steering pad switch circuit	INFO
	Navigation receiver assembly power source circuit	INFO

SYMPTOM	SUSPECTED AREA	SEE PAGE
	Navigation receiver assembly	INFO
Touch panel switch does not function.	Proceed to "Touch Panel Switch does not Function"	INFO
	Steering pad switch circuit	INFO
	Navigation receiver assembly power source circuit	INFO
	Navigation receiver assembly	INFO
Display panel does not open, tilt, or tilts improperly.	Proceed to "Display Panel does not Open, Tilt, or Tilts Improperly"	INFO
	Navigation receiver assembly power source circuit	INFO
	Navigation receiver assembly	INFO
Screen is distorted.	Navigation receiver assembly power source circuit	INFO
	Navigation receiver assembly	INFO
Screen flicker or color distortion.	Proceed to "Screen Flicker or Color Distortion"	INFO
	Navigation receiver assembly power source circuit	INFO
	Navigation receiver assembly	INFO
Navigation function switches can be operated while vehicle is running.	Proceed to "Vehicle Speed Signal Circuit between Navigation Receiver Assembly and Combination Meter"	INFO

Audio Function

SYMPTOM	SUSPECTED AREA	SEE PAGE
No sound can be heard from speakers (audio is mute).	Proceed to "No Sound can be Heard from Speakers"	INFO
	Speaker circuit	INFO
	Navigation receiver assembly	INFO
Radio broadcast cannot be received or poor reception.	Proceed to "Radio Broadcast cannot be Received or Poor Reception"	INFO
CD cannot be inserted/played or CD is ejected right after insertion.	Proceed to "CD cannot be Inserted / Played or CD is Ejected Right After Insertion"	INFO
CD cannot be ejected.	Proceed to "CD cannot be Ejected"	INFO
CD sound skips.	Proceed to "CD Sound Skips"	INFO
Abnormal noise occurs.	Proceed to "Noise Occurs"	INFO

SYMPTOM	SUSPECTED AREA	SEE PAGE
Poor sound quality in all modes (low volume).	Proceed to "Poor Sound Quality in All Modes (Low Volume)"	INFO
	Navigation receiver assembly power source circuit	INFO
	Navigation receiver assembly	INFO
External device sound cannot be heard or sound quality is bad (Stereo jack is used).	Navigation receiver assembly power source circuit	INFO
	Proceed to "Sound Signal Circuit between Navigation Receiver Assembly and Stereo Jack Adapter"	INFO
	Stereo jack adapter	INFO
	Navigation receiver assembly	INFO
ASL does not function.	Proceed to "Vehicle Speed Signal Circuit between Navigation Receiver Assembly and Combination Meter"	INFO

Navigation Function

SYMPTOM	SUSPECTED AREA	SEE PAGE
Map disc cannot be inserted.	Proceed to "Map Disc cannot be Inserted"	INFO
	Navigation receiver assembly power source circuit	INFO
	Navigation receiver assembly	INFO
Map disc cannot be ejected.	Navigation receiver assembly power source circuit	INFO
	Navigation receiver assembly	INFO
Vehicle position mark deviates.	Proceed to "Vehicle Position Mark Deviates Greatly"	INFO
	GPS antenna	INFO
	Navigation receiver assembly	INFO
Cursor or map rotates when vehicle is stopped.	Proceed to "Cursor or Map Rotates When Vehicle is Stopped"	INFO
	Navigation receiver assembly	INFO
Vehicle position mark is not updated.	Proceed to "Vehicle Position Mark is not Updated"	INFO
	Map disc	-
	Navigation receiver assembly	INFO

SYMPTOM	SUSPECTED AREA	SEE PAGE
Current position display does not appear.	Proceed to "Current Position Display does not Appear"	INFO
	Map disc	-
	GPS antenna	INFO
	Navigation receiver assembly	INFO
GPS mark is not displayed.	Proceed to "GPS Mark is not Displayed"	INFO
	GPS antenna	INFO
	Navigation receiver assembly	INFO
Voice guidance does not function.	Proceed to "Voice Guidance does not Function"	INFO
	Speaker circuit	INFO
	Map disc	-
	Navigation receiver assembly	INFO
Map display incomplete.	Proceed to "Map Display Incomplete"	INFO
	Map disc	-
	Navigation receiver assembly	INFO
Route cannot be calculated.	Proceed to "Route cannot be Calculated"	INFO
	Map disc	-
	Navigation receiver assembly	INFO
Speed signal does not change in the navigation check mode.	Proceed to "Vehicle Speed Signal Circuit between Navigation Receiver Assembly and Combination Meter"	INFO
Reverse signal does not change in the navigation check mode.	Reverse signal circuit	INFO

Steering Pad Switch Function

SYMPTOM	SUSPECTED AREA	SEE PAGE
The system cannot be operated by the steering pad switch.	Steering pad switch circuit	INFO
	Navigation receiver assembly	INFO
Illumination for steering pad switch does not come on with TAIL switch on.	Illumination circuit	INFO
	Navigation receiver assembly	INFO

Last Modified: 3-10-2010	6.4 D	**From:** 200901
Model Year: 2010	**Model:** Corolla	**Doc ID:** RM0000011BU05OX
Title: NAVIGATION / MULTI INFO DISPLAY: NAVIGATION SYSTEM: DTC CHECK / CLEAR (2010 Corolla)		

DTC CHECK / CLEAR

HINT:

- Illustrations may differ from the actual vehicle depending on the device settings and options. Therefore, some detailed areas may not be shown exactly the same as on the actual vehicle.
- After the ignition switch is turned to ON, check that the map is displayed before starting the diagnostic mode. Otherwise, some items cannot be checked.

1. START DIAGNOSTIC MODE

(a) There are 2 methods to start diagnostic mode. Start the mode by using one of them.

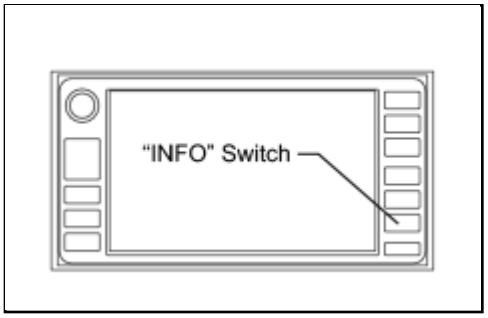

(b) Method 1

(1) Start the engine.

(2) While pressing and holding the "INFO" switch, operate the light control switch: OFF → Turn ON → Turn OFF → Turn ON → Turn OFF → Turn ON → Turn OFF.

(3) The diagnostic mode starts and the "System Check Mode" screen will be displayed. Service inspection starts automatically and the result will be displayed.

(c) Method 2

(1) Start the engine.

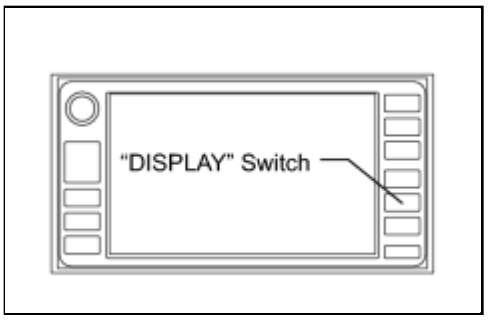

(2) Press the "DISPLAY" switch.

(3) From the display quality adjustment screen, touch the corners of the screen in the following order: upper left → lower left → upper left → lower left → upper left → lower left.

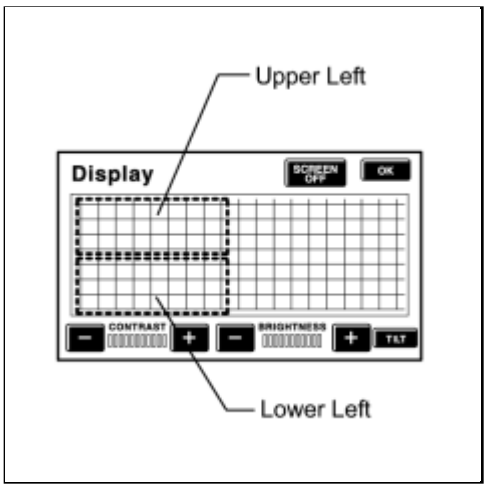

(4) The diagnostic mode starts and the "System Check Mode" screen will be displayed. Service inspection starts automatically and the result will be displayed.

2. FINISH DIAGNOSTIC MODE

(a) There are 2 methods to end diagnostic mode. Use one of them.

(1) Turn the ignition switch off.

(2) Press and hold the "DISP" switch for 3 seconds.

3. DIAGNOSIS MENU

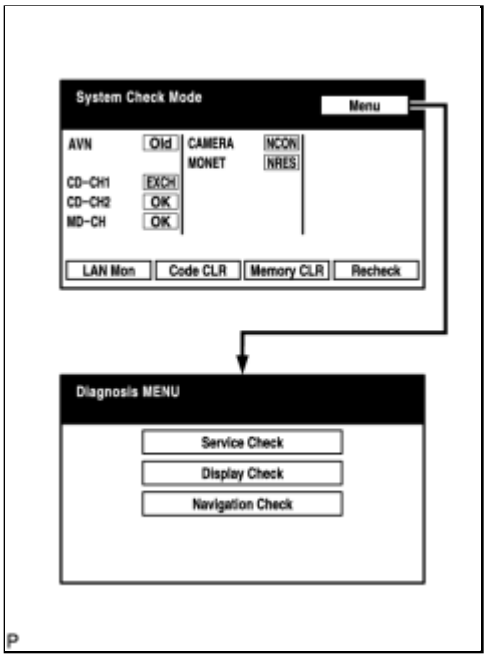

(a) The "Diagnosis MENU" screen will be displayed by pressing the "Menu" switch on the "System Check Mode" screen.

4. CHECK DTC

(a) Read the system check result.

(1) If the check result is "EXCH", "CHEK" or "Old", touch the displayed check result to view the results on the

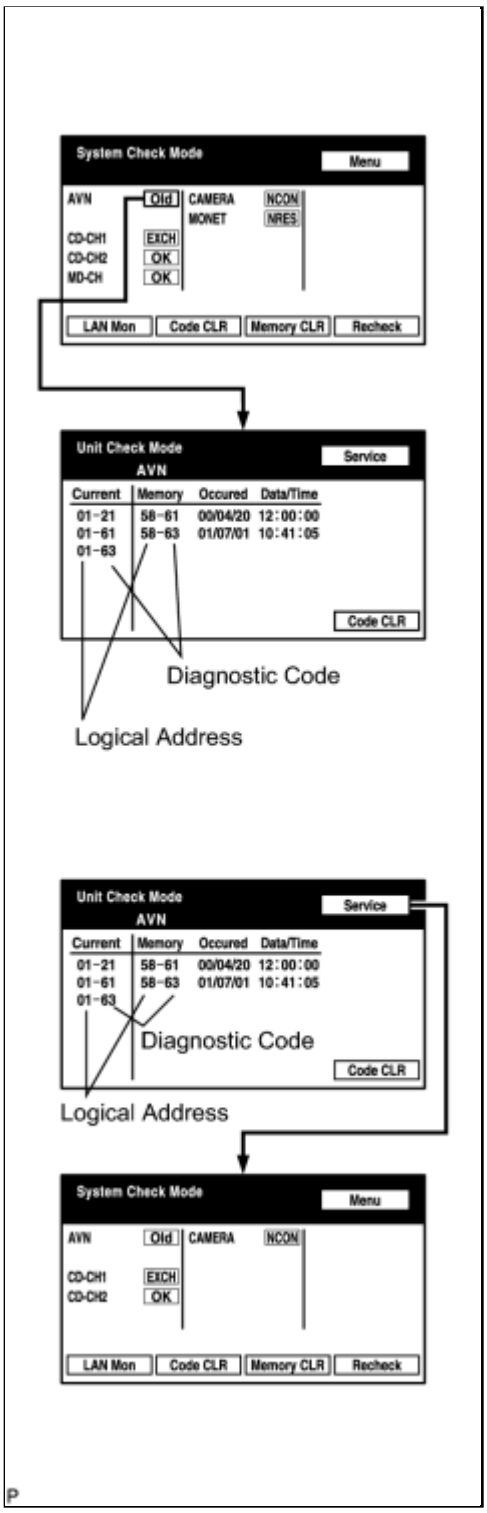

"Unit Check Mode" screen and record them.

HINT:

- If all check results are "OK", go to communication DTC check.
- If a device name is not known, its physical address is displayed.

HINT:

When proceeding to view the results of another device, press the "Service" switch to return to the "System Check Mode" screen. Repeat this step.

(b) Read the communication diagnostic check result.

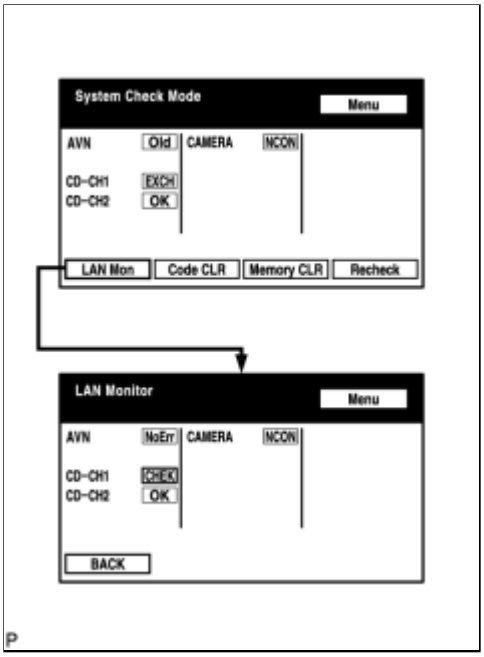

(1) Return to the "System Check Mode" screen, and press the "LAN Mon" switch to enter the "LAN Monitor" screen.

(2) If the check result is "CHEK" or "Old", touch the displayed check result to view the results on the individual communication diagnostic screen and record them.

HINT:

- If all check results are "No Err", the system judges that no DTC exists.
- The sub-code (relevant device) will be indicated by its physical address.
- When proceeding to view the results of another device, press the "Service" switch to return to the original "LAN Monitor" screen. Repeat this step.

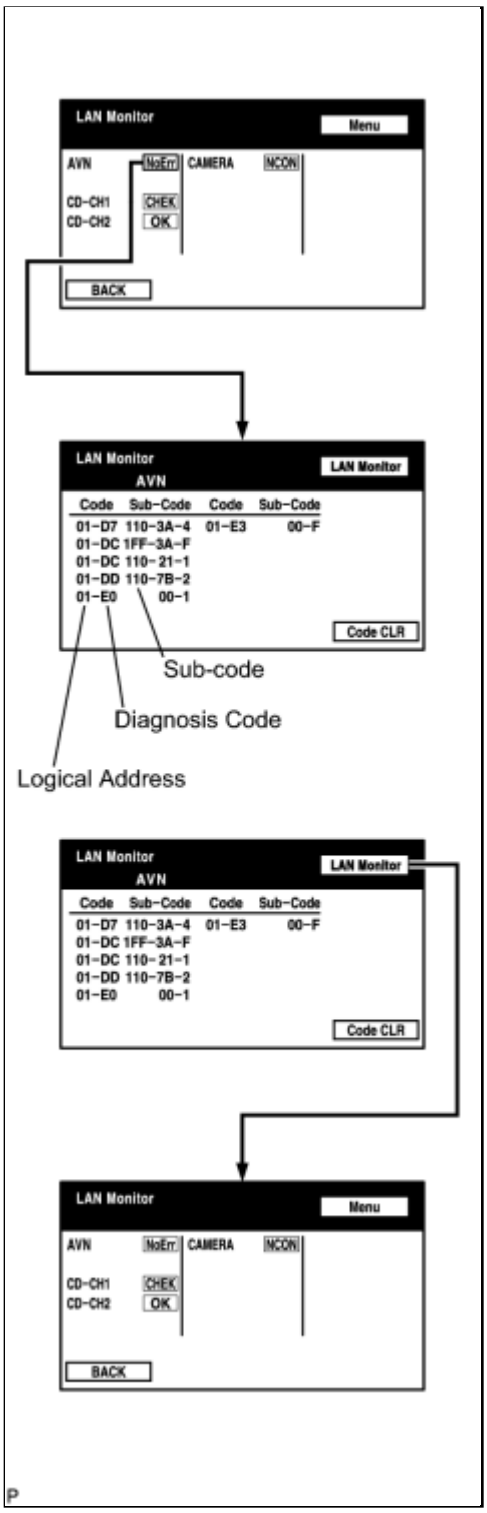

5. DTC CLEAR/RECHECK

(a) Clear DTC

(1) Press the "Code CLR" switch for 3 seconds.

(2) The check results are cleared.

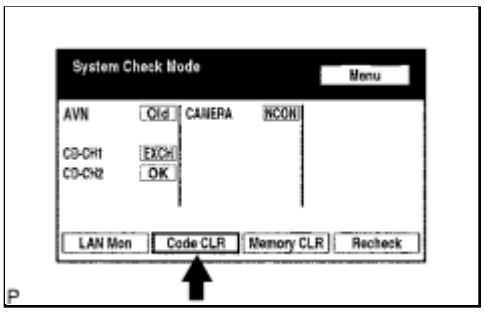

(b) Recheck

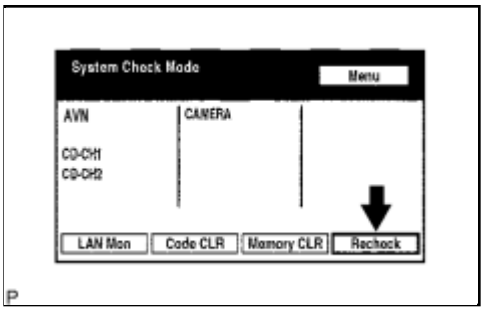

(1) Press the "Recheck" switch.

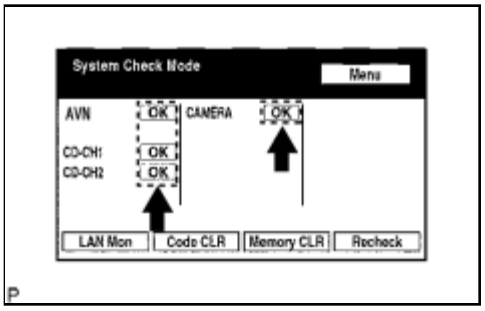

(2) Confirm that all diagnostic codes are "OK" when the check results are displayed. If a code other than "OK" is displayed, troubleshoot again.

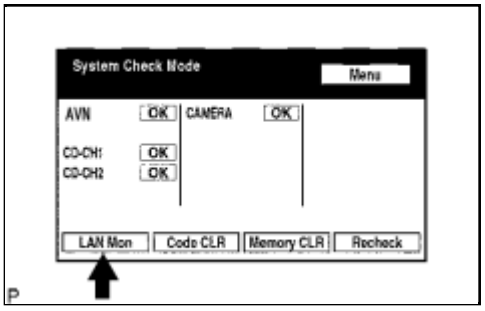

(3) Press the "LAN Mon" switch to change to the "LAN Monitor" screen.

(4) Confirm that all diagnostic codes are "No Err". If a code other than "No Err" is displayed, troubleshoot again.

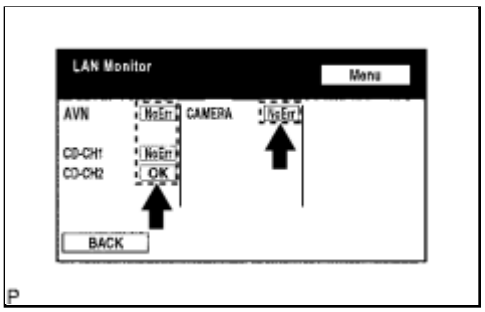
LAN Monitor
Menu
AVN
No Err
CAMERA
No Err
CD-CH1
No Err
CD-CH2
OK
BACK

P

Last Modified: 3-10-2010	6.4 U	**From:** 200901
Model Year: 2010	**Model:** Corolla	**Doc ID:** RM0000011BQ04UX
Title: NAVIGATION / MULTI INFO DISPLAY: NAVIGATION SYSTEM: TERMINALS OF ECU (2010 Corolla)		

TERMINALS OF ECU

1. NAVIGATION RECEIVER ASSEMBLY

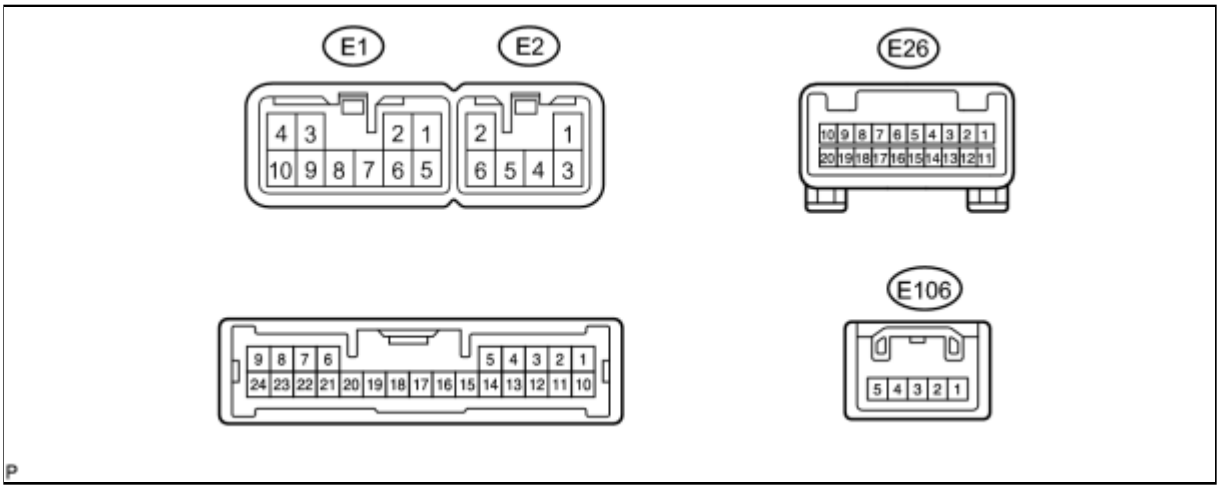

TERMINAL NO. (SYMBOL)	WIRING COLOR	TERMINAL DESCRIPTION	CONDITION	SPECIFICATION
E106-1 (PKB) - E1-7 (E)	BE - BR	Parking brake signal	See "Vehicle Signal Check" INFO	-
E106-3 (SPD) - E1-7 (E)	V - BR	Speed signal from combination meter	See "Vehicle Signal Check" INFO	-
E106-5 (REV) - E1-7 (E)	R - BR	Reverse signal	See "Vehicle Signal Check" INFO	-
E1-1 (FR+) - E1-7 (E)	LG - BR	Sound signal (Front Right)	Audio system is playing	A waveform synchronized with sounds is output
E1-2 (FL+) - E1-7 (E)	P - BR	Sound signal (Front Left)	Audio system is playing	A waveform synchronized with sounds is output
E1-3 (ACC) - E1-7 (E)	GR - BR	Accessory (ON)	Ignition switch off → ACC	Below 1 V → 11 to 14 V
E1-4 (B) - E1-7 (E)	SB - BR	Battery	Always	11 to 14 V
E1-5 (FR-) - E1-7 (E)	L - BR	Sound signal (Front Right)	Audio system is playing	A waveform synchronized with sounds is output
E1-6 (FL-) - E1-7 (E)	V - BR	Sound signal (Front Left)	Audio system is playing	A waveform synchronized with sounds is output

TERMINAL NO. (SYMBOL)	WIRING COLOR	TERMINAL DESCRIPTION	CONDITION	SPECIFICATION
E1-7 (E) - Body ground	BR - Body ground	Ground	Always	Below 1 V
E1-8 (ANT) - E1-7 (E)	BE - BR	Power source of antenna	Radio switch ON and AM or FM	11 to 14 V
E1-10 (ILL+) - E1-7 (E)	G - BR	Illumination signal	Light control switch OFF → TAIL or HEAD	Below 1 V → 11 to 14 V
E2-1 (RR+) - E1-7 (E)	R - BR	Sound signal (Rear Right)	Audio system is playing	A waveform synchronized with sounds is output
E2-2 (RL+) - E1-7 (E)	B - BR	Sound signal (Rear Left)	Audio system is playing	A waveform synchronized with sounds is output
E2-3 (RR-) - E1-7 (E)	W - BR	Sound signal (Rear Right)	Audio system is playing	A waveform synchronized with sounds is output
E2-5 (ILL-) - E1-7 (E)	W - BR	Illumination signal	Light control switch OFF → TAIL or HEAD	Pulse generation
E2-6 (RL-) - E1-7 (E)	Y - BR	Sound signal (Rear Left)	Audio system is playing	A waveform synchronized with sounds is output
E26-6 (SWG) - Body ground*1	SB - Body ground	Steering pad switch ground	Always	Below 1 V
E26-7 (SW1) - E26-6 (SWG)*1	BE - SB	Steering pad switch signal	No switch is pushed → SEEK+ switch pushed → SEEK- switch pushed → VOL+ switch pushed → VOL- switch pushed	4.5 to 5.5 V → Below 0.5 V → 0.86 to 0.95 V → 1.91 to 2.01 V 3.23 to 3.57 V
E26-8 (SW2) - E26-6 (SWG)*1	P - SB	Steering pad switch signal	No switch is pushed → MODE switch pushed	4.5 to 5.5 V → Below 0.5 V

HINT:

***1: w/ Steering Pad Switch**

Last Modified: 3-10-2010	6.4 S	**From:** 200901
Model Year: 2010	**Model:** Corolla	**Doc ID:** RM0000011BO03QX
Title: NAVIGATION / MULTI INFO DISPLAY: NAVIGATION SYSTEM: DIAGNOSTIC TROUBLE CODE CHART (2010 Corolla)		

DIAGNOSTIC TROUBLE CODE CHART

Communication Diagnosis

DTC CODE	DETECTION ITEM	TROUBLE AREA	SEE PAGE
01-21	ROM Error	Navigation receiver assembly	INFO
01-22	RAM Error	Navigation receiver assembly	INFO

SW

DTC CODE	DETECTION ITEM	TROUBLE AREA	SEE PAGE
21-10	Panel Switch Error	Navigation receiver assembly	INFO
21-11	Touch Switch Error	Navigation receiver assembly	INFO

SW with Name

DTC CODE	DETECTION ITEM	TROUBLE AREA	SEE PAGE
23-10	Panel Switch Error	Navigation receiver assembly	INFO
23-11	Touch Switch Error	Navigation receiver assembly	INFO

SW Converting

DTC CODE	DETECTION ITEM	TROUBLE AREA	SEE PAGE
24-10	Panel Switch Error	Navigation receiver assembly	INFO
24-11	Touch Switch Error	Navigation receiver assembly	INFO

Command SW

DTC CODE	DETECTION ITEM	TROUBLE AREA	SEE PAGE
25-10	Panel Switch Error	Navigation receiver assembly	INFO
25-11	Touch Switch Error	Navigation receiver assembly	INFO

Front Monitor

DTC CODE	DETECTION ITEM	TROUBLE AREA	SEE PAGE

DTC CODE	DETECTION ITEM	TROUBLE AREA	SEE PAGE
34-10	Error in Picture Circuit	Navigation receiver assembly	INFO
34-11	No Current in Back-light	Navigation receiver assembly	INFO
34-12	Excess Current in Back-light	Navigation receiver assembly	INFO

Navi

DTC CODE	DETECTION ITEM	TROUBLE AREA	SEE PAGE
58-10	Gyro Error	1. Gyro sensor 2. Navigation receiver assembly	INFO
58-11	GPS Receiver Error	Navigation receiver assembly	INFO
58-40	GPS Antenna Error	1. Wire harness 2. GPS antenna 3. Navigation receiver assembly	INFO
58-41	GPS Antenna Power Source Error	1. Wire harness 2. GPS antenna 3. Navigation receiver assembly	INFO
58-42	Map Disc Read Error	1. Map disc 2. Navigation receiver assembly	INFO
58-43	SPD Signal Error	1. Speed signal circuit 2. Navigation receiver assembly	INFO
58-44	Player Error	Navigation receiver assembly	INFO
58-45	High Temperature	Navigation receiver assembly	INFO

Radio Unit

DTC CODE	DETECTION ITEM	TROUBLE AREA	SEE PAGE
60-10	AM Tuner PLL does not Lock	Navigation receiver assembly	INFO
60-11	FM Tuner PLL does not Lock	Navigation receiver assembly	INFO
60-42	Tuner Power Source Error	Navigation receiver assembly	INFO
60-43	AM Tuner Error	Navigation receiver assembly	INFO
60-44	FM Tuner Error	Navigation receiver assembly	INFO
60-50	Malfunction in Internal IC	Navigation receiver assembly	INFO

CD Player

DTC CODE	DETECTION ITEM	TROUBLE AREA	SEE PAGE

DTC CODE	DETECTION ITEM	TROUBLE AREA	SEE PAGE
62-10	CD Player Mechanical Error	Navigation receiver assembly	INFO
62-11	CD Insertion and Ejection Error	Navigation receiver assembly	INFO
62-12	CD Reading Abnormal	Navigation receiver assembly	INFO
62-41	Wrong Disc	1. CD 2. Navigation receiver assembly	INFO
62-42	Disc cannot be Read	1. CD 2. Navigation receiver assembly	INFO
62-43	CD-ROM Abnormal	1. CD 2. Navigation receiver assembly	INFO
62-44	CD Abnormal	Navigation receiver assembly	INFO
62-45	Eject Error	Navigation receiver assembly	INFO
62-46	Scratched / Reversed Disc	1. CD 2. Navigation receiver assembly	INFO
62-47	High Temperature	Navigation receiver assembly	INFO
62-48	Excess Current	Navigation receiver assembly	INFO
62-50	Tray Insertion / Ejection Error	Navigation receiver assembly	INFO
62-51	Elevator Error	Navigation receiver assembly	INFO
62-52	Clamp Error	Navigation receiver assembly	INFO
62-78	DSP Error	Navigation receiver assembly	INFO
62-7D	Disc cannot be Played	1. CD 2. Navigation receiver assembly	INFO
62-7E	No Playable Files	1. CD 2. Navigation receiver assembly	INFO
62-7F	Copyright Protection Error	1. CD 2. Navigation receiver assembly	INFO

GPS

DTC CODE	DETECTION ITEM	TROUBLE AREA	SEE PAGE
80-10	Gyro Error	1. Gyro sensor 2. Navigation receiver assembly	INFO
80-11	GPS Receiver Error	Navigation receiver assembly	INFO
80-40	GPS Antenna Error	1. Wire harness 2. GPS antenna 3. Navigation receiver assembly	INFO

DTC CODE	DETECTION ITEM	TROUBLE AREA	SEE PAGE
80-41	GPS Antenna Power Source Error	1. Wire harness 2. GPS antenna 3. Navigation receiver assembly	INFO
80-42	Map Disc Read Error	1. Map disc 2. Navigation receiver assembly	INFO
80-43	SPD Signal Error	1. Speed signal circuit 2. Navigation receiver assembly	INFO
80-44	Player Error	Navigation receiver assembly	INFO
80-45	High Temperature	Navigation receiver assembly	INFO

Last Modified: 3-10-2010	6.4 C	**From:** 200901
Model Year: 2010	**Model:** Corolla	**Doc ID:** RM00000182H05DX
Title: NAVIGATION / MULTI INFO DISPLAY: NAVIGATION SYSTEM: 01-21,01-22: ROM Error (2010 Corolla)		

DTC	**01-21**	**ROM Error**

DTC	**01-22**	**RAM Error**

DESCRIPTION

DTC NO.	DTC DETECTION CONDITION	TROUBLE AREA
01-21	A malfunction exists in ROM.	Navigation receiver assembly
01-22	A malfunction exists in RAM.	

INSPECTION PROCEDURE

HINT:

After the inspection is completed, clear the DTCs.

PROCEDURE

1.	**REPLACE NAVIGATION RECEIVER ASSEMBLY**

HINT:

Removal INFO

Last Modified: 3-10-2010	6.4 C	**From:** 200901
Model Year: 2010	**Model:** Corolla	**Doc ID:** RM00000182P04VX
Title: NAVIGATION / MULTI INFO DISPLAY: NAVIGATION SYSTEM: 21-10,21-11,23-10,23-11,24-10,24-11,25-10,25-11: Panel Switch Error (2010 Corolla)		

DTC	**21-10**	**Panel Switch Error**

DTC	**21-11**	**Touch Switch Error**

DTC	**23-10**	**Panel Switch Error**

DTC	**23-11**	**Touch Switch Error**

DTC	**24-10**	**Panel Switch Error**

DTC	**24-11**	**Touch Switch Error**

DTC	**25-10**	**Panel Switch Error**

DTC	**25-11**	**Touch Switch Error**

DESCRIPTION

DTC NO.	DTC DETECTION CONDITION	TROUBLE AREA
21-10	The panel switch detection circuit has a problem.	Navigation receiver assembly
21-11	The touch panel switch has a problem.	
23-10	The panel switch detection circuit has a problem.	

DTC NO.	DTC DETECTION CONDITION	TROUBLE AREA
23-11	The touch panel switch has a problem.	
24-10	The panel switch detection circuit has a problem.	
24-11	The touch panel switch has a problem.	
25-10	The panel switch detection circuit has a problem.	
25-11	The touch panel switch has a problem.	

INSPECTION PROCEDURE

HINT:

After the inspection is completed, clear the DTCs.

PROCEDURE

1.	**REPLACE NAVIGATION RECEIVER ASSEMBLY**

HINT:

Removal INFO

NEXT **END**

Last Modified: 3-10-2010	6.4 C	**From:** 200901
Model Year: 2010	**Model:** Corolla	**Doc ID:** RM00000182Q04RX
Title: NAVIGATION / MULTI INFO DISPLAY: NAVIGATION SYSTEM: 34-10-34-12: Error in Picture Circuit (2010 Corolla)		

DTC	**34-10**	**Error in Picture Circuit**

DTC	**34-11**	**No Current in Back-light**

DTC	**34-12**	**Excess Current in Back-light**

DESCRIPTION

DTC NO.	DTC DETECTION CONDITION	TROUBLE AREA
34-10	Error in power supply system for picture circuit	Navigation receiver assembly
34-11	Decline in power output from inverter circuit for back-light	
34-12	Excess power output from inverter circuit for back-light	

INSPECTION PROCEDURE

HINT:

After the inspection is completed, clear the DTCs.

PROCEDURE

1.	**REPLACE NAVIGATION RECEIVER ASSEMBLY**

HINT:

Removal INFO

Last Modified: 3-10-2010	6.4 C	**From:** 200901
Model Year: 2010	**Model:** Corolla	**Doc ID:** RM00000182R04CX
Title: NAVIGATION / MULTI INFO DISPLAY: NAVIGATION SYSTEM: 58-10,80-10: Gyro Error (2010 Corolla)		

DTC	**58-10**	**Gyro Error**

DTC	**80-10**	**Gyro Error**

DESCRIPTION

DTC NO.	DTC DETECTION CONDITION	TROUBLE AREA
58-10	Ground short, power supply short, or open circuit in the gyro signal	• Gyro sensor • Navigation receiver assembly
80-10	Ground short, power supply short, or open circuit in the gyro signal	

INSPECTION PROCEDURE

HINT:

After the inspection is completed, clear the DTCs.

PROCEDURE

1.	**CHECK VEHICLE SENSOR (NAVIGATION CHECK MODE)**

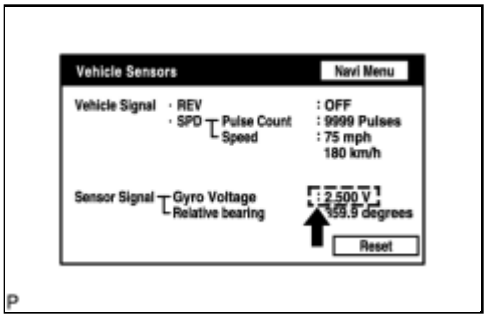

(a) Enter the "Navigation Check" mode (Vehicle Sensors) INFO .

(b) Check the gyro voltage.

Standard Voltage:
0.1 to 4.5 V

NG ▶ **REPLACE NAVIGATION RECEIVER ASSEMBLY**

OK
▼

2.	**CLEAR DTC**

(a) Clear the DTCs INFO .

NEXT
▼

3.	**RECHECK FOR DTC**

(a) Recheck for DTCs and check if the same trouble occurs again.

HINT:

If DTCs are detected frequently, replace the navigation receiver assembly.

OK:
Malfunction disappears.

NG ▶ **REPLACE NAVIGATION RECEIVER ASSEMBLY**

OK ▶ **END**

Last Modified: 3-10-2010	6.4 C	**From:** 200901
Model Year: 2010	**Model:** Corolla	**Doc ID:** RM00000182S046X
Title: NAVIGATION / MULTI INFO DISPLAY: NAVIGATION SYSTEM: 58-11,80-11: GPS Receiver Error (2010 Corolla)		

DTC	**58-11**	**GPS Receiver Error**

DTC	**80-11**	**GPS Receiver Error**

DESCRIPTION

DTC NO.	DTC DETECTION CONDITION	TROUBLE AREA
58-11	• RTC, ROM, and RAM of the GPS receiver and TCXO error • GPS receiver is failed.	Navigation receiver assembly
80-11	• RTC, ROM, and RAM of the GPS receiver and TCXO error • GPS receiver is failed.	

INSPECTION PROCEDURE

HINT:

After the inspection is completed, clear the DTCs.

PROCEDURE

1.	**REPLACE NAVIGATION RECEIVER ASSEMBLY**

HINT:

Removal INFO

Last Modified: 3-10-2010	6.4 C	**From:** 200901
Model Year: 2010	**Model:** Corolla	**Doc ID:** RM00000182T04LX
Title: NAVIGATION / MULTI INFO DISPLAY: NAVIGATION SYSTEM: 58-40,58-41,80-40,80-41: GPS Antenna Error (2010 Corolla)		

DTC	**58-40**	**GPS Antenna Error**

DTC	**58-41**	**GPS Antenna Power Source Error**

DTC	**80-40**	**GPS Antenna Error**

DTC	**80-41**	**GPS Antenna Power Source Error**

DESCRIPTION

DTC NO.	DTC DETECTION CONDITION	TROUBLE AREA
58-40	GPS antenna error	• Wire harness • GPS antenna • Navigation receiver assembly
58-41	Error of the power source to the GPS antenna	
80-40	GPS antenna error	
80-41	Error of the power source to the GPS antenna	

INSPECTION PROCEDURE

HINT:

After the inspection is completed, clear the DTCs.

PROCEDURE

1.	**CHECK HARNESS AND CONNECTOR (GPS ANTENNA - NAVIGATION RECEIVER ASSEMBLY)**

(a) Check that the GPS antenna cord is securely connected to the navigation receiver assembly connector.

OK:

The cord is securely connected.

NG ▶ **REPAIR OR REPLACE HARNESS OR CONNECTOR**

OK ▼

2.	**INSPECT GPS ANTENNA**

Component without harness connected:
(GPS Antenna)



(a) Disconnect the GPS antenna connector.

(b) Measure the resistance according to the value(s) in the table below.

Standard Resistance:

TESTER CONNECTION	CONDITION	SPECIFIED CONDITION
1 - 2	Always	50 to 500 Ω

NG ▶ **REPLACE GPS ANTENNA**

OK ▼

3.	**REPLACE NAVIGATION RECEIVER ASSEMBLY**

(a) Replace the navigation receiver assembly with a known good one and check if the same

problem occurs again.

(1) Clear the DTCs INFO .

(2) Recheck for DTCs and check if the same trouble occurs again.

OK:

Same problem does not occur.

NG ▶ **REPLACE GPS ANTENNA**

OK ▶ **END**

Last Modified: 3-10-2010	6.4 C	**From:** 200901
Model Year: 2010	**Model:** Corolla	**Doc ID:** RM00000182U04FX
Title: NAVIGATION / MULTI INFO DISPLAY: NAVIGATION SYSTEM: 58-42,80-42: Map Disc Read Error (2010 Corolla)		

DTC	**58-42**	**Map Disc Read Error**

DTC	**80-42**	**Map Disc Read Error**

DESCRIPTION

DTC NO.	DTC DETECTION CONDITION	TROUBLE AREA
58-42	• Player error • Scratches or dirt on the disc • Access to an invalid address due to software error	• Map disc • Navigation receiver assembly
80-42	• Player error • Scratches or dirt on the disc • Access to an invalid address due to software error	

INSPECTION PROCEDURE

HINT:

After the inspection is completed, clear the DTCs.

PROCEDURE

1.	**CHECK MAP DISC**

(a) Check that the map disc is not deformed or cracked.

OK:

No deformations or cracks on the map disc.

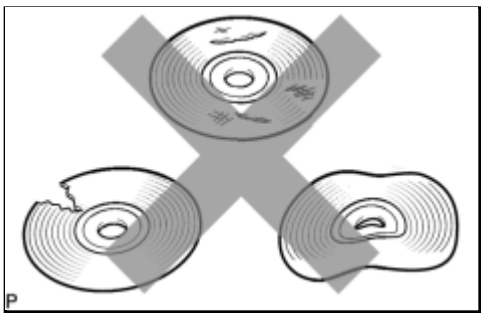

NG ▶ REPLACE MAP DISC

OK
▼

2.	DISC CLEANING

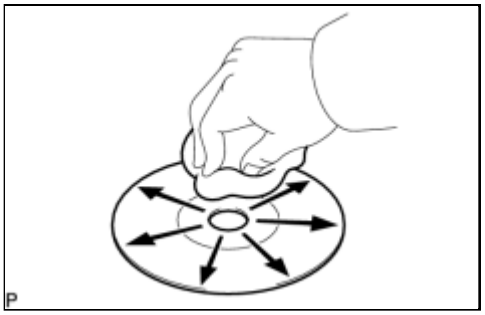

(a) Disc cleaning

(1) If dirt is on the disc surface, wipe it clean with a soft cloth from the inside to the outside in a radial direction.

NOTICE:

Do not use a conventional record cleaner or anti-static preservative.

NEXT
▼

3.	DTC CLEAR AND RECHECK

(a) Clear the DTCs INFO .

(b) Recheck for DTCs and check if the same trouble occurs again.

OK:

The same problem does not occur.

NG ▶ REPLACE MAP DISC

OK ▶ END

4.	**REPLACE MAP DISC**

(a) Replace the map disc.

(b) Clear the DTCs and recheck for DTCs.

(c) Check if the same trouble occurs again.

OK:
The same problem does not occur.

NG ▶ REPLACE NAVIGATION RECEIVER ASSEMBLY

OK ▶ END

Last Modified: 3-10-2010	6.4 C	**From:** 200901
Model Year: 2010	**Model:** Corolla	**Doc ID:** RM00000182V04LX
Title: NAVIGATION / MULTI INFO DISPLAY: NAVIGATION SYSTEM: 58-43,80-43: SPD Signal Error (2010 Corolla)		

DTC	**58-43**	**SPD Signal Error**

DTC	**80-43**	**SPD Signal Error**

DESCRIPTION

DTC NO.	DTC DETECTION CONDITION	TROUBLE AREA
58-43	A difference between the GPS speed and SPD pulse is detected.	• Speed signal circuit • Navigation receiver assembly
80-43	A difference between the GPS speed and SPD pulse is detected.	

INSPECTION PROCEDURE

HINT:

After the inspection is completed, clear the DTCs.

PROCEDURE

1.	**CHECK VEHICLE SENSOR (NAVIGATION CHECK MODE)**

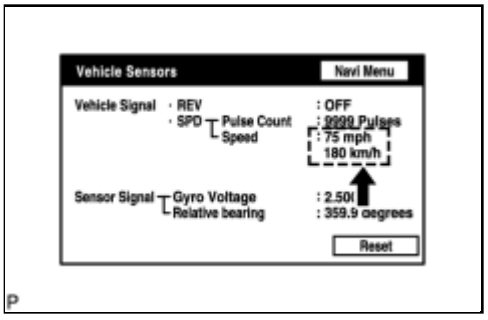

(a) Enter the "Navigation Check" mode (Vehicle Sensors) INFO .

(b) While driving the vehicle, compare the "SPD" indicator to the reading on the

speedometer. Check if these readings are almost equal.

OK:

The readings are almost equal.

NG ▶ **PROCEED TO NEXT CIRCUIT INSPECTION SHOWN IN PROBLEM SYMPTOMS TABLE**

OK ▶ **REPLACE NAVIGATION RECEIVER ASSEMBLY**

2.	**PROCEED TO NEXT CIRCUIT INSPECTION SHOWN IN PROBLEM SYMPTOMS TABLE**

Refer to "Speed signal does not change in the navigation check mode" in the Problem Symptoms Table INFO .

NEXT ▶ **END**

Last Modified: 3-10-2010	6.4 C	**From:** 200901
Model Year: 2010	**Model:** Corolla	**Doc ID:** RM00000182W04AX
Title: NAVIGATION / MULTI INFO DISPLAY: NAVIGATION SYSTEM: 58-44,80-44: Player Error (2010 Corolla)		

DTC	**58-44**	**Player Error**

DTC	**80-44**	**Player Error**

DESCRIPTION

DTC NO.	DTC DETECTION CONDITION	TROUBLE AREA
58-44	Map player error is detected.	Navigation receiver assembly
80-44	Map player error is detected.	

INSPECTION PROCEDURE

HINT:

After the inspection is completed, clear the DTCs.

PROCEDURE

1.	**CHECK NAVIGATION RECEIVER ASSEMBLY**

(a) Check if a disc can be inserted or ejected normally.

OK:

A disc can be inserted or ejected normally.

NG ▶ **REPLACE NAVIGATION RECEIVER ASSEMBLY**

OK ▼

2.	**DTC CLEAR AND RECHECK**

(a) Clear the DTCs INFO.

(b) Recheck for DTCs and check if the same trouble occurs again.

OK:

The same problem does not occur.

NG ▶ **REPLACE NAVIGATION RECEIVER ASSEMBLY**

OK ▶ **END**

Last Modified: 3-10-2010	6.4 C	**From:** 200901
Model Year: 2010	**Model:** Corolla	**Doc ID:** RM00000182X044X
Title: NAVIGATION / MULTI INFO DISPLAY: NAVIGATION SYSTEM: 58-45,80-45: High Temperature (2010 Corolla)		

DTC	**58-45**	**High Temperature**

DTC	**80-45**	**High Temperature**

DESCRIPTION

DTC NO.	DTC DETECTION CONDITION	TROUBLE AREA
58-45	Map disc player temperature is high (Over 80°C (176°F)).	Navigation receiver assembly
80-45	Map disc player temperature is high (Over 80°C (176°F)).	

INSPECTION PROCEDURE

HINT:

After the inspection is completed, clear the DTCs.

PROCEDURE

1.	**CHECK NAVIGATION RECEIVER ASSEMBLY**

(a) Park the vehicle in a cool place.

(b) Operate the navigation receiver assembly after it has sufficiently cooled down. Check if the malfunction occurs.

OK:

The same problem does not occur.

NG ▶ **REPLACE NAVIGATION RECEIVER ASSEMBLY**

OK ▶ **END**

Last Modified: 3-10-2010	6.4 C	**From:** 200901
Model Year: 2010	**Model:** Corolla	**Doc ID:** RM00000200N02IX
Title: NAVIGATION / MULTI INFO DISPLAY: NAVIGATION SYSTEM: 60-10,60-11: AM Tuner PLL does not Lock (2010 Corolla)		

DTC	**60-10**	**AM Tuner PLL does not Lock**

DTC	**60-11**	**FM Tuner PLL does not Lock**

DESCRIPTION

DTC NO.	DTC DETECTION CONDITION	TROUBLE AREA
60-10	AM tuner PLL (phase locked loop) synchronization is impossible.	Navigation receiver assembly
60-11	FM tuner PLL (phase locked loop) synchronization is impossible.	

INSPECTION PROCEDURE

HINT:

After the inspection is completed, clear the DTCs.

PROCEDURE

1.	**REPLACE NAVIGATION RECEIVER ASSEMBLY**

HINT:

Removal INFO

NEXT ▶ **END**

Last Modified: 3-10-2010	6.4 C	**From:** 200901
Model Year: 2010	**Model:** Corolla	**Doc ID:** RM00000200Q02OX
Title: NAVIGATION / MULTI INFO DISPLAY: NAVIGATION SYSTEM: 60-42-60-44,60-50: Tuner Power Source Error (2010 Corolla)		

DTC	**60-42**	**Tuner Power Source Error**

DTC	**60-43**	**AM Tuner Error**

DTC	**60-44**	**FM Tuner Error**

DTC	**60-50**	**Malfunction in Internal IC**

DESCRIPTION

DTC NO.	DTC DETECTION CONDITION	TROUBLE AREA
60-42	The power source of the tuner is abnormal.	Navigation receiver assembly
60-43	The AM tuner is abnormal.	
60-44	The FM tuner is abnormal.	
60-50	A problem occurs in the IC inside the tuner unit and radio reception is not normal.	

INSPECTION PROCEDURE

HINT:

After the inspection is completed, clear the DTCs.

PROCEDURE

1.	**CLEAR DTC**

(a) Clear the DTCs INFO .

NEXT

2.	**RECHECK FOR DTC**

(a) Recheck for DTCs and check if the same trouble occurs again.

HINT:

If DTCs are detected frequently, replace the navigation receiver assembly.

OK:
Malfunction disappears.

NG ▶ **REPLACE NAVIGATION RECEIVER ASSEMBLY**

OK ▶ **END**

Last Modified: 3-10-2010	6.4 C	**From:** 200901
Model Year: 2010	**Model:** Corolla	**Doc ID:** RM0000020NC01KX
Title: NAVIGATION / MULTI INFO DISPLAY: NAVIGATION SYSTEM: 62-10-62-12: CD Player Mechanical Error (2010 Corolla)		

DTC	**62-10**	**CD Player Mechanical Error**

DTC	**62-11**	**CD Insertion and Ejection Error**

DTC	**62-12**	**CD Reading Abnormal**

DESCRIPTION

DTC NO.	DTC DETECTION CONDITION	TROUBLE AREA
62-10	A mechanical error in the CD player is detected while the CD is not being inserted or ejected.	Navigation receiver assembly
62-11	CD insertion or ejection is failed.	
62-12	CD read problem occurs.	

INSPECTION PROCEDURE

HINT:

After the inspection is completed, clear the DTCs.

PROCEDURE

1.	**REPLACE NAVIGATION RECEIVER ASSEMBLY**

HINT:

Removal INFO

Last Modified: 3-10-2010	6.4 C	**From:** 200901
Model Year: 2010	**Model:** Corolla	**Doc ID:** RM0000020NE01SX
Title: NAVIGATION / MULTI INFO DISPLAY: NAVIGATION SYSTEM: 62-41,62-42: Wrong Disc (2010 Corolla)		

DTC	**62-41**	**Wrong Disc**

DTC	**62-42**	**Disc cannot be Read**

DESCRIPTION

DTC NO.	DTC DETECTION CONDITION	TROUBLE AREA
62-41	An unsuitable disc is inserted.	• CD • Navigation receiver assembly
62-42	The disc cannot be read.	

INSPECTION PROCEDURE

HINT:

After the inspection is completed, clear the DTCs.

PROCEDURE

1.	**CHECK DISC**

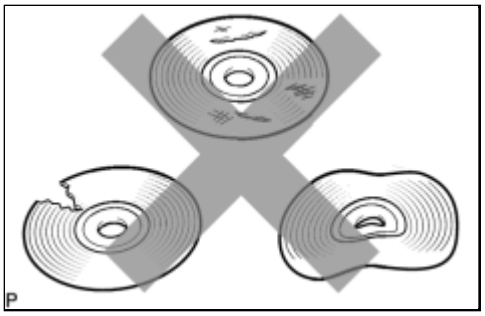

(a) Check that the disc is not deformed or cracked.

OK:

No deformation or cracks on the disc.

NG ▶ **CHANGE DISC**

OK

2.	DISC CLEANING

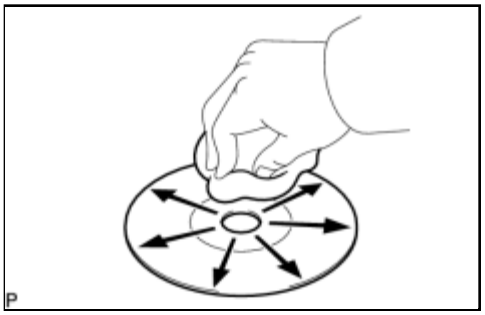

(a) Disc cleaning

(1) If dirt is on the disc surface, wipe it clean with a soft cloth from the inside to the outside in a radial direction.

NOTICE:

Do not use a conventional record cleaner or anti-static preservative.

NEXT

3.	CLEAR DTC

(a) Clear the DTCs INFO.

NEXT

4.	RECHECK FOR DTC

(a) Recheck for DTCs and check if the same trouble occurs again.

OK:

The same trouble does not occur.

NG ▶ **REPLACE DISC WITH ANOTHER AND RECHECK**

OK ▶ **END**

5.	**REPLACE DISC WITH ANOTHER AND RECHECK**

(a) Replace the disc with another and recheck.

(1) Replace the disc with another normal one.

(2) Clear the DTCs INFO .

(3) Recheck for DTCs and check if the same trouble occurs again.

OK:

The same trouble does not occur.

NG ▶ **REPLACE NAVIGATION RECEIVER ASSEMBLY**

OK ▶ **END**

Last Modified: 3-10-2010	6.4 C	**From:** 200901
Model Year: 2010	**Model:** Corolla	**Doc ID:** RM0000020NF01NX
Title: NAVIGATION / MULTI INFO DISPLAY: NAVIGATION SYSTEM: 62-43: CD-ROM Abnormal (2010 Corolla)		

DTC	**62-43**	**CD-ROM Abnormal**

DESCRIPTION

DTC NO.	DTC DETECTION CONDITION	TROUBLE AREA
62-43	CD-ROM operation is abnormal.	• CD • Navigation receiver assembly

INSPECTION PROCEDURE

HINT:

After the inspection is completed, clear the DTCs.

PROCEDURE

1.	**CHECK IF A PROPER CD IS INSERTED**

(a) Make sure that the CD is a audio CD or a CD with an MP3 file, and that it is not deformed, flawed, stained, deteriorated, or otherwise defective.

OK:

The CD is normal.

HINT:

- Translucent or uniquely-shaped CDs cannot be played.
- For details on playable CDs, refer to the Owner's Manual.

NG ▶ **DISC IS FAULTY**

OK ▼

2.	**CHANGE DISC**

(a) Replace the disc with another and recheck.

(1) Replace the disc with a known good one.

(2) Clear the DTCs INFO .

(3) Recheck for DTCs and check if the same trouble occurs again.

OK:

The same trouble does not occur.

NG ▶ **REPLACE NAVIGATION RECEIVER ASSEMBLY**

OK ▶ **END**

Last Modified: 3-10-2010	6.4 C	**From:** 200901
Model Year: 2010	**Model:** Corolla	**Doc ID:** RM0000020NA01NX
Title: NAVIGATION / MULTI INFO DISPLAY: NAVIGATION SYSTEM: 62-44,62-48,62-50: CD Abnormal (2010 Corolla)		

DTC	**62-44**	**CD Abnormal**

DTC	**62-48**	**Excess Current**

DTC	**62-50**	**Tray Insertion / Ejection Error**

DESCRIPTION

DTC NO.	DTC DETECTION CONDITION	TROUBLE AREA
62-44	Operation error in the CD mechanism	Navigation receiver assembly
62-48	Excess current is present in the CD player.	
62-50	Malfunction in insertion/ejection system	

INSPECTION PROCEDURE

HINT:

After the inspection is completed, clear the DTCs.

PROCEDURE

1.	**CLEAR DTC**

(a) Clear the DTCs INFO .

NEXT

2.	**RECHECK FOR DTC**

(a) Recheck for DTCs and check if the same trouble occurs again.

HINT:

If DTCs are detected frequently, replace the navigation receiver assembly.

OK:

The same trouble does not occur.

NG ▶ **REPLACE NAVIGATION RECEIVER ASSEMBLY**

OK ▶ **END**

Last Modified: 3-10-2010	6.4 C	**From:** 200901
Model Year: 2010	**Model:** Corolla	**Doc ID:** RM0000020EU028X
Title: NAVIGATION / MULTI INFO DISPLAY: NAVIGATION SYSTEM: 62-45,62-51,62-52: Eject Error (2010 Corolla)		

DTC	**62-45**	**Eject Error**

DTC	**62-51**	**Elevator Error**

DTC	**62-52**	**Clamp Error**

DESCRIPTION

DTC NO.	DTC DETECTING CONDITION	TROUBLE AREA
62-45	Disc cannot be ejected.	Navigation receiver assembly
62-51	A mechanical error occurs during elevator operation.	
62-52	An error occurs in CD player clamp.	

INSPECTION PROCEDURE

HINT:

After the inspection is completed, clear the DTCs.

PROCEDURE

1.	**CHECK NAVIGATION RECEIVER ASSEMBLY**

(a) Check if a disc can be changed, inserted or ejected normally.

OK:

The disc can be changed, inserted or ejected normally.

NG ▶ **REPLACE NAVIGATION RECEIVER ASSEMBLY**

OK ▶ **END**

Last Modified: 3-10-2010	6.4 C	**From:** 200901
Model Year: 2010	**Model:** Corolla	**Doc ID:** RM0000020S102CX
Title: NAVIGATION / MULTI INFO DISPLAY: NAVIGATION SYSTEM: 62-46: Scratched / Reversed Disc (2010 Corolla)		

DTC	**62-46**	**Scratched / Reversed Disc**

DESCRIPTION

DTC NO.	DTC DETECTING CONDITION	TROUBLE AREA
62-46	Scratches or dirt is found on CD surface or CD is inserted upside down.	• CD • Navigation receiver assembly

INSPECTION PROCEDURE

HINT:

After the inspection is completed, clear the DTCs.

PROCEDURE

1.	**CHECK THAT DISC IS INSERTED PROPERLY**

(a) Check whether or not the disc is inserted upside down.

OK:

The disc is properly inserted.

NG ▶ **REINSERT DISC**

OK ▼

2.	**CHECK DISC**

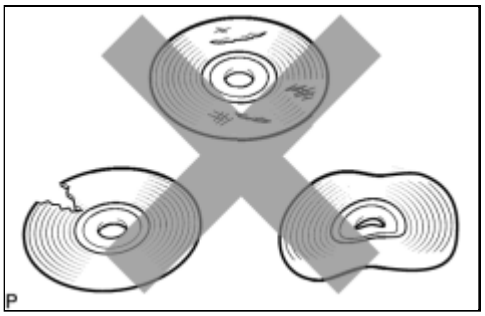

(a) Check that the disc is not deformed or cracked.

OK:

No deformation or cracks on the disc.

NG ▶ **CHANGE DISC**

OK

▼

3.	**DISC CLEANING**

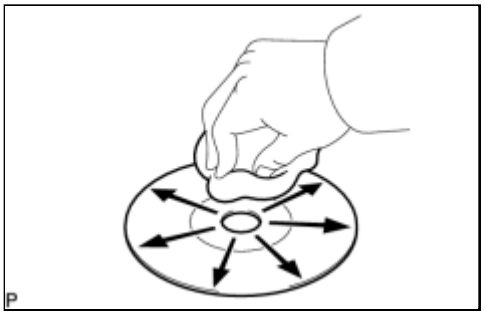

(a) Disc cleaning

(1) If dirt is on the disc surface, wipe it clean with a soft cloth from the inside to the outside in a radial direction.

NOTICE:

Do not use a conventional record cleaner or anti-static preservative.

NEXT

▼

4.	**CLEAR DTC**

(a) Clear the DTCs INFO .

NEXT

▼

5.	RECHECK FOR DTC

(a) Recheck for DTCs and check if the same trouble occurs again.

OK:
The same trouble does not occur.

NG ▶ **REPLACE DISC WITH ANOTHER AND RECHECK**

OK ▶ **END**

6.	REPLACE DISC WITH ANOTHER AND RECHECK

(a) Replace the disc with another and recheck.

(1) Replace the disc with another normal one.

(2) Clear the DTCs INFO .

(3) Recheck for DTCs and check if the same trouble occurs again.

OK:
The same trouble does not occur.

NG ▶ **REPLACE NAVIGATION RECEIVER ASSEMBLY**

OK ▶ **END**

Last Modified: 3-10-2010	6.4 C	**From:** 200901
Model Year: 2010	**Model:** Corolla	**Doc ID:** RM0000020NG01KX
Title: NAVIGATION / MULTI INFO DISPLAY: NAVIGATION SYSTEM: 62-47: High Temperature (2010 Corolla)		

DTC	**62-47**	**High Temperature**

DESCRIPTION

DTC NO.	DTC DETECTION CONDITION	TROUBLE AREA
62-47	Sensor detects that CD unit temperature is high (over 80°C (176°F)).	Navigation receiver assembly

INSPECTION PROCEDURE

HINT:

After the inspection is completed, clear the DTCs.

PROCEDURE

1.	**CHECK NAVIGATION RECEIVER ASSEMBLY**

(a) Park the vehicle in a cool place.

(b) Operate the navigation receiver assembly after it has sufficiently cooled down. Check that the malfunction does not recur.

OK:

The malfunction does not recur.

NG ▶ **REPLACE NAVIGATION RECEIVER ASSEMBLY**

OK ▶ **END**

Last Modified: 3-10-2010	6.4 C	**From:** 200901
Model Year: 2010	**Model:** Corolla	**Doc ID:** RM0000020NH01RX
Title: NAVIGATION / MULTI INFO DISPLAY: NAVIGATION SYSTEM: 62-78: DSP Error (2010 Corolla)		

DTC	**62-78**	**DSP Error**

DESCRIPTION

DTC NO.	DTC DETECTION CONDITION	TROUBLE AREA
62-78	An error occurs during the decode process (MP3/WMA).	Navigation receiver assembly

INSPECTION PROCEDURE

HINT:

After the inspection is completed, clear the DTCs.

NOTICE:

- This code may be output even if there is no malfunction.
- If this code is output frequently, replace the navigation receiver assembly.

PROCEDURE

1.	**CLEAR DTC**

(a) Clear the DTCs INFO .

NEXT

2.	**RECHECK FOR DTC**

(a) Recheck for DTCs and check if the same trouble occurs again.

OK:

The same trouble does not occur.

NG ▶ REPLACE NAVIGATION RECEIVER ASSEMBLY

OK ▶ END

Last Modified: 3-10-2010	6.4 C	**From:** 200901
Model Year: 2010	**Model:** Corolla	**Doc ID:** RM0000020S2025X
Title: NAVIGATION / MULTI INFO DISPLAY: NAVIGATION SYSTEM: 62-7D-62-7F: Disc cannot be Played (2010 Corolla)		

DTC	**62-7D**	**Disc cannot be Played**

DTC	**62-7E**	**No Playable Files**

DTC	**62-7F**	**Copyright Protection Error**

DESCRIPTION

DTC NO.	DTC DETECTION CONDITION	TROUBLE AREA
62-7D	• An incompatible MP3/WMA file is used. • Although the file has an extension of ".mp3" or ".wma", the header information cannot be read.	• CD • Navigation receiver assembly
62-7E	• A disc with no music data is used. • Playable files are not on the disc (MP3/WMA).	
62-7F	A copy-protected file, which cannot be played, is used.	

INSPECTION PROCEDURE

HINT:

After the inspection is completed, clear the DTCs.

PROCEDURE

1.	**CHANGE DISC**

(a) Insert a disc with a playable file and check if the disc can be played correctly.

HINT:

For details on playable files and discs, refer to the Owner's Manual.

OK:

The disc can be played correctly.

NG ▶ **REPLACE NAVIGATION RECEIVER ASSEMBLY**

OK ▶ **END**

Last Modified: 3-10-2010	6.4 J	**From:** 200901
Model Year: 2010	**Model:** Corolla	**Doc ID:** RM000000NL505PX
Title: NAVIGATION / MULTI INFO DISPLAY: NAVIGATION SYSTEM: Noise Occurs (2010 Corolla)		

Noise Occurs

INSPECTION PROCEDURE

PROCEDURE

1.	**NOISE CONDITION**

(a) Check from which direction the noise comes (front left or right, rear left or right).

(1) Check from which direction the noise comes.

OK:

The location of the noise source can be determined.

NG ▶ **CHECK NOISE CONDITIONS**

OK ▼

2.	**CHECK SPEAKERS**

(a) Check the installation conditions of the speaker units that are located near the noise source and that there are no cracks, scratches, deformation, or other malfunctions.

Result:

RESULT	PROCEED TO
A speaker is installed incorrectly	A
Foreign objects are in the speaker	B
A speaker cone paper is broken	C
No malfunction is found	D

C REPLACE SPEAKER

B REMOVE FOREIGN OBJECT

A REINSTALL SPEAKER

D

3.	**CHECK NOISE CONDITIONS**

(a) Check the noise condition.

HINT:

The radio has a noise prevention function to reduce noise when listening to the radio. If a loud noise occurs, check whether the ground at the antenna mounting base and the noise prevention unit are installed and wired correctly.

CONDITION UNDER WHICH NOISE OCCURS	NOISE SOURCE
Noise increases when the accelerator pedal is depressed, but stops when the engine is stopped.	Generator
Noise occurs during A/C or heater operation.	Blower motor
Noise occurs when the horn switch is pressed and released or when pressed and held.	Horn
Noise occurs synchronously with the blink of the turn signal.	Flasher
Noise occurs during window washer operation.	Washer
Noise occurs during wiper operation.	Wiper
Noise occurs when the brake pedal is depressed.	Stop light switch
Others	Static electricity

HINT:

- In the chart's left column, find the situation that matches the customer's complaint. Then, in the right column, find the part that is causing the noise. Check the noise filter on or for the part.
- To save time and avoid a misdiagnosis, first make sure that the noise is not coming from outside the vehicle.
- Noise should be removed in descending order of loudness.
- Setting the radio to a frequency where no signal is received may make recognition of the noise

problem easier.

OK:

The noise source cannot be determined.

NG ▶ **REPAIR OR REPLACE NOISE SOURCE**

OK ▶ **PROCEED TO NEXT CIRCUIT INSPECTION SHOWN IN PROBLEM SYMPTOMS TABLE**



Last Modified: 3-10-2010	6.4 J	**From:** 200901
Model Year: 2010	**Model:** Corolla	**Doc ID:** RM000001WU402FX
Title: NAVIGATION / MULTI INFO DISPLAY: NAVIGATION SYSTEM: Pressing Power Switch does not Turn on System (2010 Corolla)		

Pressing Power Switch does not Turn on System

INSPECTION PROCEDURE

PROCEDURE

1.	**CHECK CABIN**

(a) Check that conditions in the cabin are not likely to cause condensation.

HINT:

This problem occurs when the cabin is humid and the temperature rapidly changes. This condition may produce condensation, resulting in a short circuit.

OK:
Condensation is not likely to occur.

NG ▶ **DRY CABIN AND RECHECK CONDITIONS**

OK ▶ **PROCEED TO NEXT CIRCUIT INSPECTION SHOWN IN PROBLEM SYMPTOMS TABLE**

Last Modified: 3-10-2010	6.4 J	**From:** 200901
Model Year: 2010	**Model:** Corolla	**Doc ID:** RM0000020N801LX
Title: NAVIGATION / MULTI INFO DISPLAY: NAVIGATION SYSTEM: No Sound can be Heard from Speakers (2010 Corolla)		

No Sound can be Heard from Speakers

INSPECTION PROCEDURE

PROCEDURE

1.	**CHECK AUDIO SETTINGS**

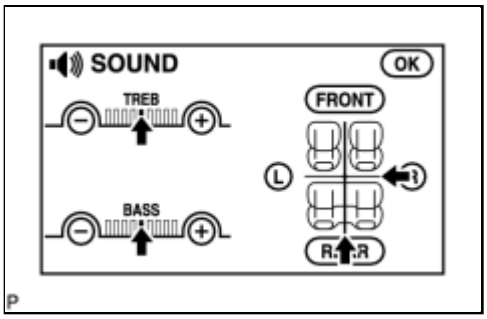

(a) Enter the sound adjustment screen by pressing the "SOUND" switch on the AUDIO display.

(b) Set volume, fader, and balance to the initial values and check that sound is normal.

OK:

Audio system returns to normal.

HINT:

Sound quality adjustment items vary depending on the type of the amplifier.

NG ▶ **PROCEED TO NEXT CIRCUIT INSPECTION SHOWN IN PROBLEM SYMPTOMS TABLE**

OK ▶ **END**

Last Modified: 3-10-2010	6.4 J	**From:** 200901
Model Year: 2010	**Model:** Corolla	**Doc ID:** RM0000020N501MX
Title: NAVIGATION / MULTI INFO DISPLAY: NAVIGATION SYSTEM: CD cannot be Ejected (2010 Corolla)		

CD cannot be Ejected

INSPECTION PROCEDURE

PROCEDURE

1.	**CHECK OPERATION**

(a) Press the disc eject switch of the radio receiver for 5 seconds or more and check that the CD is ejected.

OK:
The CD is ejected.

NG ▶ **REPLACE NAVIGATION RECEIVER ASSEMBLY**

OK ▼

2.	**REPLACE CD WITH ANOTHER AND RECHECK**

(a) Insert another CD and check if it can be ejected.

OK:
The CD can be ejected.

NG ▶ **REPLACE NAVIGATION RECEIVER ASSEMBLY**

OK ▶ **CD IS FAULTY**

Last Modified: 3-10-2010	6.4 J	**From:** 200901
Model Year: 2010	**Model:** Corolla	**Doc ID:** RM0000020N401PX
Title: NAVIGATION / MULTI INFO DISPLAY: NAVIGATION SYSTEM: CD cannot be Inserted / Played or CD is Ejected Right After Insertion (2010 Corolla)		

CD cannot be Inserted / Played or CD is Ejected Right After Insertion

INSPECTION PROCEDURE

PROCEDURE

1.	**CHECK IF A PROPER CD IS INSERTED**

(a) Make sure that the CD is an audio CD or a CD with an MP3 or WMA file, and that it is not deformed, flawed, stained, burred, or otherwise defective.

OK:

The CD is normal.

HINT:

- Translucent or uniquely-shaped CDs cannot be played.
- Commercial audio CDs can be played.
- CD-DA files on CD-ROMs, CD-Rs, and CD-RWs can be played.
- MP3 and WMA files on CD-ROMs, CD-Rs and CD-RWs can be played.
- For details on playable CDs, refer to the Owner's Manual.

NG ▶ **CD IS FAULTY**

OK ▼

2.	**CHECK THAT CD IS INSERTED PROPERLY**

(a) Check whether or not the CD is inserted upside down.

OK:

CD is properly inserted.

NG ▶ **SET CD PROPERLY**

OK

3.	**CHECK CD**

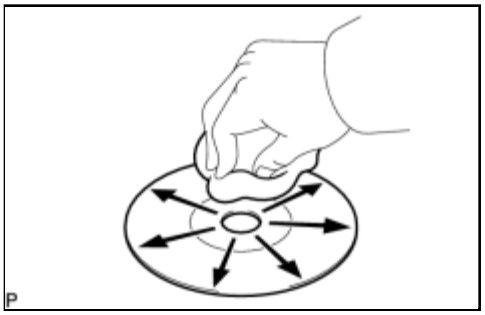

(a) Clean the disc by wiping it with a soft cloth from the inside to the outside in a radial direction.

NOTICE:

Do not use a conventional record cleaner or anti-static preservative.

NG ▶ **REPLACE CD WITH ANOTHER AND RECHECK**

OK ▶ **CD WAS DIRTY**

4.	**REPLACE CD WITH ANOTHER AND RECHECK**

(a) Replace the CD with a known good one and check that the same trouble does not occur.

OK:

The same trouble does not occur.

NG ▶ **REPLACE NAVIGATION RECEIVER ASSEMBLY**

OK ▶ **CD IS FAULTY**

Last Modified: 3-10-2010	6.4 J	**From:** 200901
Model Year: 2010	**Model:** Corolla	**Doc ID:** RM0000012CN04NX
Title: NAVIGATION / MULTI INFO DISPLAY: NAVIGATION SYSTEM: Radio Broadcast cannot be Received or Poor Reception (2010 Corolla)		

Radio Broadcast cannot be Received or Poor Reception

INSPECTION PROCEDURE

PROCEDURE

1.	**CHECK NAVIGATION RECEIVER ASSEMBLY**

(a) Check the radio automatic station search function.

(1) Check the radio automatic station search function by activating it.

OK:

The radio automatic station search function works properly.

NG ▶ **CHECK OPTIONAL COMPONENTS**

OK ▶ **REPLACE NAVIGATION RECEIVER ASSEMBLY**

2.	**CHECK OPTIONAL COMPONENTS**

(a) Check optional components (sun-shade film, telephone antenna, etc.).

(1) Check if any optional components that may decrease reception capacity, such as sunshade film or a telephone antenna, are installed.

OK:

Optional components are installed.

NOTICE:

Do not remove any optional components installed by the customer without his or her consent.

NG ▶ **CHECK NAVIGATION RECEIVER ASSEMBLY**

OK ▶ **REMOVE OPTIONAL COMPONENTS AND CHECK AGAIN (SEE NOTICE ABOVE)**

3.	CHECK NAVIGATION RECEIVER ASSEMBLY

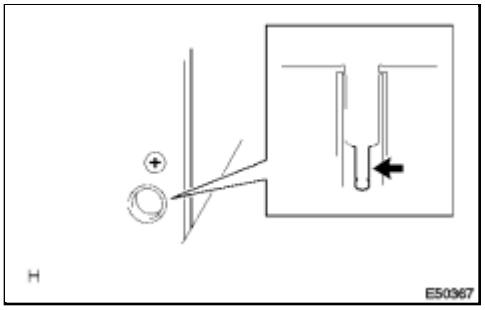

(a) Preparation for check

(1) Remove the antenna plug from the navigation receiver assembly.

(b) Check for noise

(1) Turn the ignition switch to ACC with the navigation receiver assembly connector connected.

(2) Turn the radio on and tune into AM mode.

(3) Place a screwdriver, thin wire, or other metal object on the navigation receiver assembly antenna jack and check that noise can be heard from the speaker.

OK:

Noise occurs.

NG ▶ **REPLACE NAVIGATION RECEIVER ASSEMBLY**

OK ▼

4.	CHECK GLASS ANTENNA

(a) Check for continuity of the antenna.

HINT:

Check for continuity at the center of each antenna wire as shown in the illustration.

NOTICE:

When cleaning the glass, wipe it in the direction of the wire with a soft dry cloth. Take care not to damage the wire. Do not use detergents or glass cleaners with abrasive ingredients. When measuring resistance, wrap a piece of tin foil around the tip of the negative probe and press the foil against the wire with your finger, as shown in the illustration.

OK:

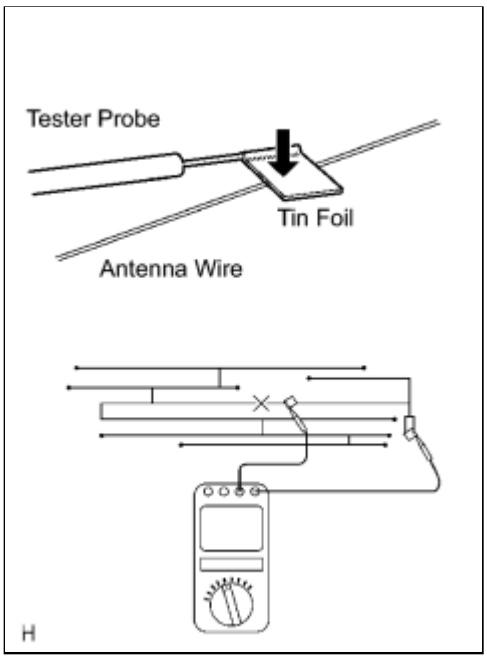

There is continuity in the antenna.

NG ▶ **REPAIR GLASS ANTENNA**

OK ▼

5.	**CHECK HARNESS AND CONNECTOR (NAVIGATION RECEIVER ASSEMBLY - ANTENNA AMPLIFIER)**

(a) Disconnect navigation receiver assembly connector.

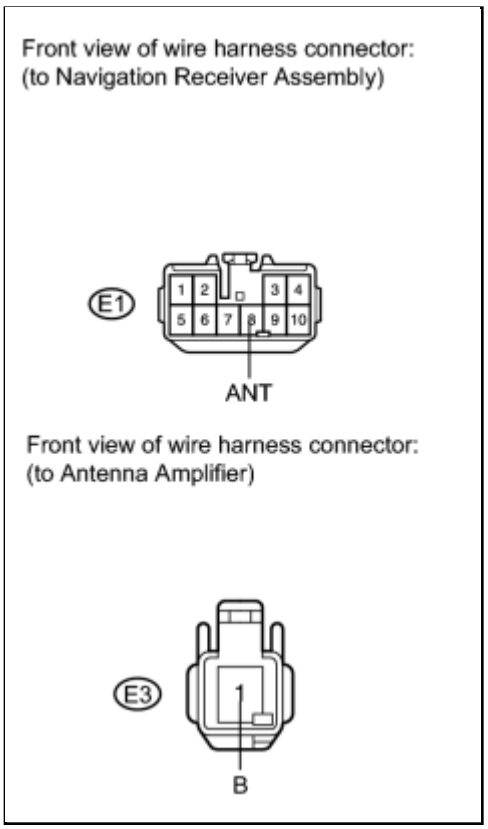

(b) Disconnect antenna amplifier connector.

(c) Measure the resistance according to the value(s) in the table below.

Standard Resistance:

TESTER CONNECTION	CONDITION	SPECIFIED CONDITION
E1-8 (ANT) - E3-1 (B)	Always	Below 1 Ω
E1-8 (ANT) - Body ground	Always	10 kΩ or higher

NG ▶ **REPAIR OR REPLACE HARNESS OR CONNECTOR**

OK ▼

6.	**INSPECT NAVIGATION RECEIVER ASSEMBLY**

(a) Reconnect navigation receiver assembly connector.

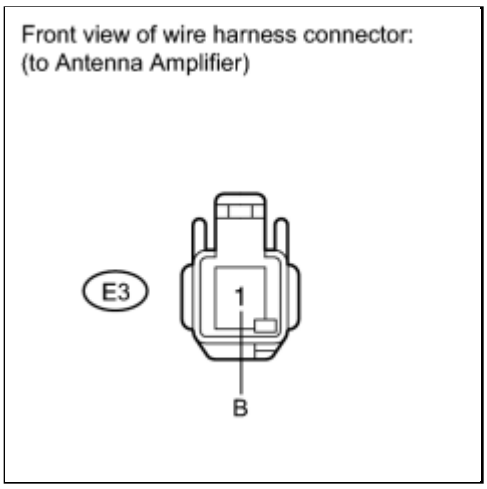

(b) Measure the voltage according to the value(s) in the table below.

Standard Voltage:

TESTER CONNECTION	CONDITION	SPECIFIED CONDITION
E3-1 (B) - Body ground	Ignition switch ON Radio switch ON	11 to 14 V

NG ▶ **REPLACE NAVIGATION RECEIVER ASSEMBLY**

OK ▼

7.	**CHECK ANTENNA CORD**

(a) Remove the antenna plug of the navigation receiver assembly and antenna.

(b) Measure the resistance between the antenna and navigation receiver assembly to check for an open circuit in the antenna cord.

Standard Resistance:

Below 1 Ω

(c) Measure the resistance between the antenna cord and body ground to check for a short circuit in the antenna cord.

Standard Resistance:

10 kΩ or higher

NG ▶ **REPLACE ANTENNA CORD**

OK

8.	**REPLACE ANTENNA AMPLIFIER**

(a) Replace the antenna amplifier and check if radio broadcasts can be received normally INFO .

OK:

Radio broadcasts can be received.

NG ▶ **REPLACE NAVIGATION RECEIVER ASSEMBLY**

OK ▶ **NORMAL OPERATION**

Last Modified: 3-10-2010	6.4 J	**From:** 200901
Model Year: 2010	**Model:** Corolla	**Doc ID:** RM0000020N301PX
Title: NAVIGATION / MULTI INFO DISPLAY: NAVIGATION SYSTEM: CD Sound Skips (2010 Corolla)		

CD Sound Skips

INSPECTION PROCEDURE

PROCEDURE

1.	**CHECK CD**

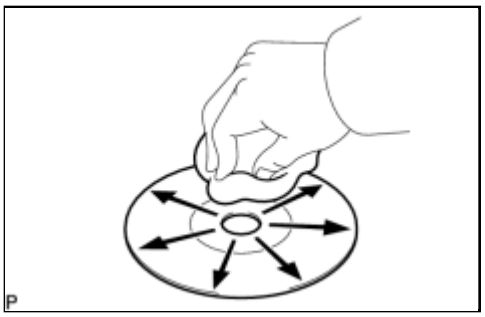

(a) Check the CD.

OK:

The CD is clean.

HINT:

If dirt is on the CD surface, wipe it clean with a soft cloth from the inside to the outside in a radial direction.

NOTICE:

Do not use a conventional record cleaner or anti-static preservative.

NG ▶ **CLEAN CD**

OK ▼

2.	**CHECK CD**

(a) Check that the CD is not deformed or cracked.

OK:

No deformation or cracks on the CD.

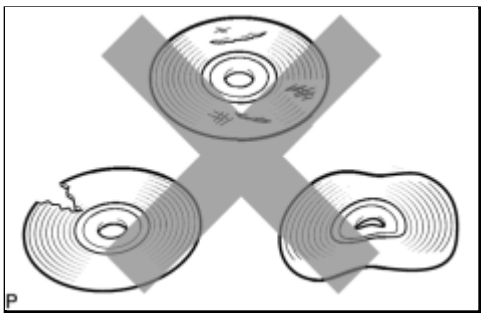

NG ▶ **CD IS FAULTY**

OK ▼

3.	CHECK OPERATION OF ANOTHER CD

(a) Check using another CD.

(1) Check if the problem recurs using another CD.

OK:

The problem does not occur.

NG ▶ **CHECK NAVIGATION RECEIVER ASSEMBLY**

OK ▶ **CD IS FAULTY**

4.	CHECK NAVIGATION RECEIVER ASSEMBLY

(a) Check the navigation receiver assembly installation condition.

(1) Check that the navigation receiver assembly is properly installed.

OK:

The navigation receiver assembly is properly installed.

NG ▶ **REINSTALL NAVIGATION RECEIVER ASSEMBLY**

OK ▶ **REPLACE NAVIGATION RECEIVER ASSEMBLY**

Last Modified: 3-10-2010	6.4 J	**From:** 200901
Model Year: 2010	**Model:** Corolla	**Doc ID:** RM000000PNJ031X
Title: NAVIGATION / MULTI INFO DISPLAY: NAVIGATION SYSTEM: Illumination for Panel Switch does not Come on with Tail Switch ON (2010 Corolla)		

Illumination for Panel Switch does not Come on with Tail Switch ON

INSPECTION PROCEDURE

PROCEDURE

1.	**CHECK VEHICLE SIGNAL (DISPLAY CHECK MODE)**

(a) Enter the "Display Check" mode (Vehicle Signal Check Mode) INFO .

(b) Check that the display changes between ON and OFF according to the light control switch operation.

OK:

LIGHT CONTROL SWITCH	DISPLAY
TAIL or ON	ON
OFF	OFF

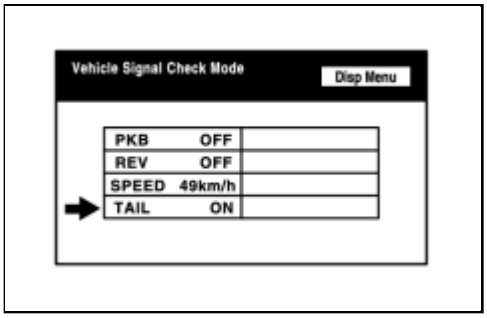

HINT:

This display is updated once per second. As a result, it is normal for the display to lag behind the actual switch operation.

NG ▶ **PROCEED TO NEXT CIRCUIT INSPECTION SHOWN IN PROBLEM SYMPTOMS TABLE**

OK ▶ **REPLACE NAVIGATION**

Last Modified: 3-10-2010	6.4 J	**From:** 200901
Model Year: 2010	**Model:** Corolla	**Doc ID:** RM000000PNK036X
Title: NAVIGATION / MULTI INFO DISPLAY: NAVIGATION SYSTEM: Display does not Dim when Light Control Switch is Turned ON (2010 Corolla)		

Display does not Dim when Light Control Switch is Turned ON

INSPECTION PROCEDURE

PROCEDURE

1.	**CHECK IMAGE QUALITY SETTING**

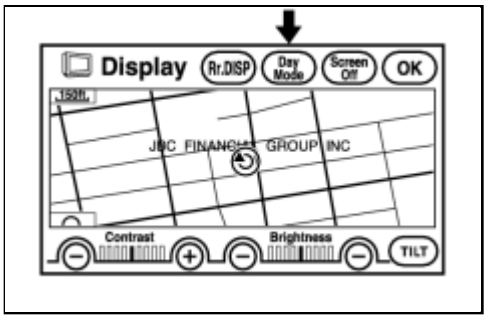

(a) Enter the display adjustment screen by pressing the "DISP" switch.

(b) Turn the light control switch to the TAIL position.

(c) Check if "DAY MODE" on the display adjustment is ON.

OK:

"DAY MODE" is ON.

NG ▶ **CHECK VEHICLE SIGNAL (DISPLAY CHECK MODE)**

OK ▶ **TURN "DAY MODE" SETTING OFF**

2.	**CHECK VEHICLE SIGNAL (DISPLAY CHECK MODE)**

(a) Enter the "Display Check" mode (Vehicle Signal Check) INFO .

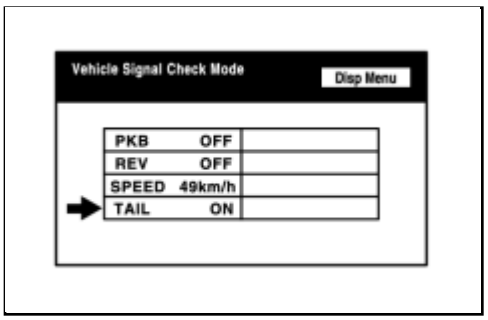

(b) Check that the display changes between ON and OFF according to the light control switch operation.

OK:

LIGHT CONTROL SWITCH	DISPLAY
TAIL or ON	ON
OFF	OFF

HINT:

The display is updated once per second. It is normal for the display to lag behind the actual switch operation.

NG ▶ **PROCEED TO NEXT CIRCUIT INSPECTION SHOWN IN PROBLEM SYMPTOMS TABLE**

OK ▶ **REPLACE NAVIGATION RECEIVER ASSEMBLY**

Last Modified: 3-10-2010	6.4 J	**From:** 200901
Model Year: 2010	**Model:** Corolla	**Doc ID:** RM000000PN8037X
Title: NAVIGATION / MULTI INFO DISPLAY: NAVIGATION SYSTEM: Panel Switches do not Function (2010 Corolla)		

Panel Switches do not Function

INSPECTION PROCEDURE

PROCEDURE

1.	**CHECK PANEL SWITCH**

(a) Check for foreign matter around the switches that might prevent operation.

OK:

No foreign matter is found.

NG ▶ **REMOVE ANY FOREIGN MATTER FOUND**

OK ▼

2.	**CHECK PANEL SWITCH (DISPLAY CHECK MODE)**

(a) Enter the "Display Check" mode (Panel Switch Check) INFO .

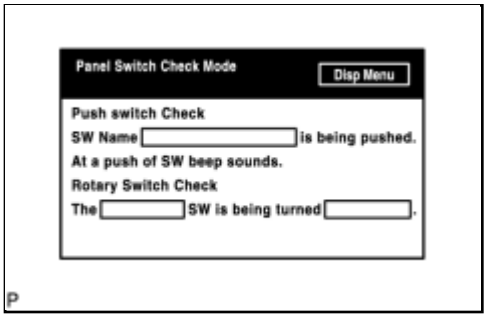

(b) Operate the abnormal switch and check if the switch name and status are correctly displayed.

OK:

The switch name and status are correctly displayed as operated.

NG ▶ **PROCEED TO NEXT CIRCUIT INSPECTION SHOWN IN**

PROBLEM SYMPTOMS TABLE

OK ▶ REPLACE NAVIGATION RECEIVER ASSEMBLY

Last Modified: 3-10-2010	6.4 J	**From:** 200901
Model Year: 2010	**Model:** Corolla	**Doc ID:** RM000000PNL031X
Title: NAVIGATION / MULTI INFO DISPLAY: NAVIGATION SYSTEM: Touch Panel Switch does not Function (2010 Corolla)		

Touch Panel Switch does not Function

INSPECTION PROCEDURE

PROCEDURE

1.	**CHECK TOUCH PANEL**

(a) Check for foreign matter on the display.

OK:

The display is clean.

NG ▶ **CLEAN DISPLAY AND RECHECK TOUCH PANEL**

OK

▼

2.	**CHECK TOUCH SWITCH (DISPLAY CHECK MODE)**

(a) Enter the "Display Check" mode (Touch Switch Check) INFO .

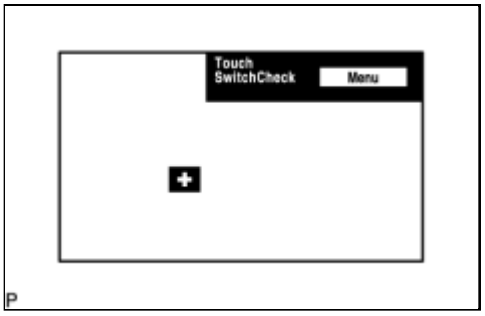

(b) Touch the display in the area where the switch malfunction occurs.

OK:

A "+" mark appears at the touched position.

NG ▶ **PROCEED TO NEXT CIRCUIT INSPECTION SHOWN IN PROBLEM**

SYMPTOMS TABLE

OK ▶ REPLACE NAVIGATION RECEIVER ASSEMBLY

Last Modified: 3-10-2010	6.4 J	**From:** 200901
Model Year: 2010	**Model:** Corolla	**Doc ID:** RM0000020N701WX
Title: NAVIGATION / MULTI INFO DISPLAY: NAVIGATION SYSTEM: Display Panel does not Open, Tilt or Tilts Improperly (2010 Corolla)		

Display Panel does not Open, Tilt or Tilts Improperly

INSPECTION PROCEDURE

PROCEDURE

1.	**CHECK NAVIGATION RECEIVER ASSEMBLY**

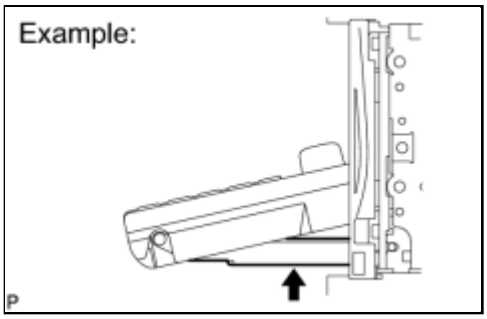

(a) Check for foreign matter or obstructions caught in the moving parts of the panel.

OK:

No obstruction or foreign matter found.

NG ▶ **REMOVE ANY OBSTRUCTION OR FOREIGN MATTER FOUND**

OK ▼

2.	**CHECK OPERATION**

(a) Check if the navigation and audio systems function properly.

OK:

Navigation and audio systems function properly.

NG ▶ **PROCEED TO NEXT CIRCUIT INSPECTION SHOWN IN PROBLEM SYMPTOMS TABLE**

OK ▶ **REPLACE NAVIGATION RECEIVER ASSEMBLY**

Last Modified: 3-10-2010	6.4 J	**From:** 200901
Model Year: 2010	**Model:** Corolla	**Doc ID:** RM000000POJ04IX
Title: NAVIGATION / MULTI INFO DISPLAY: NAVIGATION SYSTEM: Screen Flicker or Color Distortion (2010 Corolla)		

Screen Flicker or Color Distortion

INSPECTION PROCEDURE

PROCEDURE

1.	**CHECK DISPLAY SETTING**

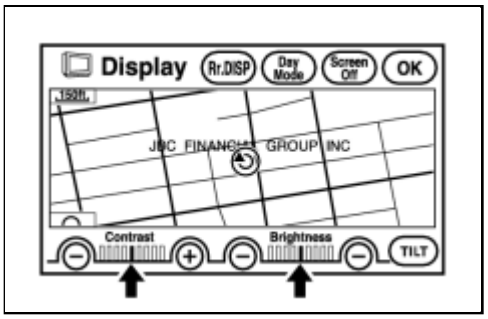

(a) Enter the display adjustment screen by pressing the "DISPLAY" switch.

(b) Reset display settings (contrast, brightness) and check that the screen appears normal.

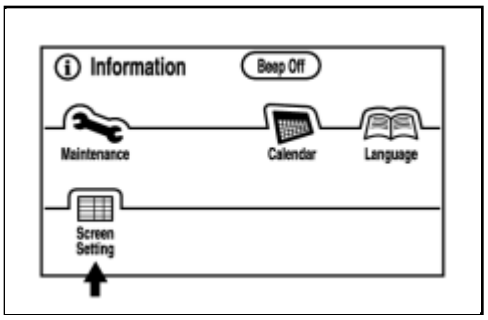

(c) Press the "INFO" switch and then select "Screen Setting."

(d) Set "Switch Color" to "Orange" (initial setting) and check if the display returns to normal.

OK:

The display returns to normal.

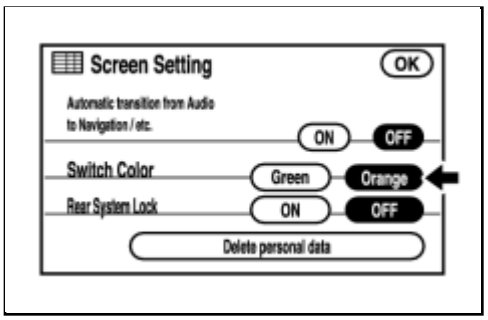

NG ▶ **CHECK CABIN**

OK ▶ **END**

2.	**CHECK CABIN**

(a) Check that the cabin temperature is higher than -20°C (-4°F).

OK:

The cabin temperature is higher than -20°C (-4°F).

NG ▶ **HEAT CABIN AND RECHECK TEMPERATURE**

OK ▼

3.	**CHECK COLOR BAR (DISPLAY CHECK MODE)**

(a) Enter the "Display Check" mode (Color Bar Check) INFO .

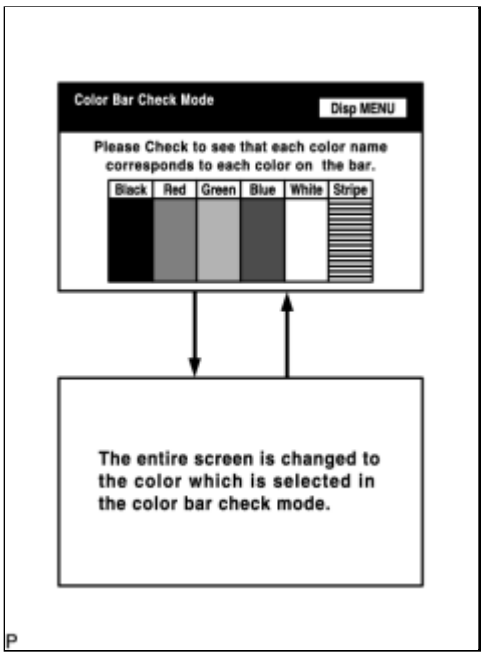

(b) Check that the color bars match the displayed names.

OK:

Color bars match the displayed names.

NG ▶ **REPLACE NAVIGATION RECEIVER ASSEMBLY**

OK ▼

4.	CHECK NAVI COLOR BAR (NAVIGATION CHECK MODE)

(a) Enter the "Navigation Check" mode (NAVI Color Bar Check) INFO .

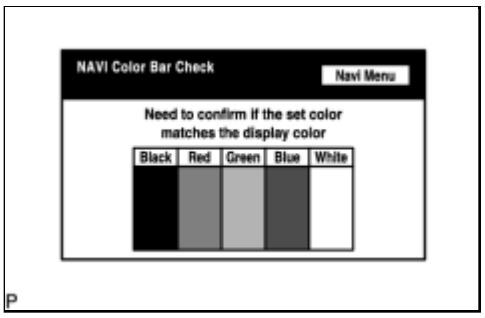

(b) Check that the color bars match the displayed names.

OK:

Color bars match the displayed names.

NG ▶ **REPLACE NAVIGATION RECEIVER ASSEMBLY**

OK ▶ **PROCEED TO**

NEXT
CIRCUIT
INSPECTION
SHOWN IN
PROBLEM
SYMPTOMS
TABLE

Last Modified: 3-10-2010	6.4 J	**From:** 200901
Model Year: 2010	**Model:** Corolla	**Doc ID:** RM0000020N901MX
Title: NAVIGATION / MULTI INFO DISPLAY: NAVIGATION SYSTEM: Poor Sound Quality in All Modes (Low Volume) (2010 Corolla)		

Poor Sound Quality in All Modes (Low Volume)

INSPECTION PROCEDURE

PROCEDURE

1.	**CHECK AUDIO SETTINGS**

(a) Set "BASS" and "TREB" to the initial values and check that sound is normal.

OK:

Malfunction disappears.

NG ▶ **COMPARE WITH ANOTHER VEHICLE OF SAME MODEL**

OK ▶ **END**

2.	**COMPARE WITH ANOTHER VEHICLE OF SAME MODEL**

(a) Compare with another vehicle of the same model.

(1) Compare with another vehicle of the same model which does not have trouble to see if there is any difference in the sound quality.

OK:

No difference is found.

NG ▶ **PROCEED TO NEXT CIRCUIT INSPECTION SHOWN IN PROBLEM SYMPTOMS TABLE**

OK ▶ **END**

Last Modified: 3-10-2010	6.4 J	**From:** 200901
Model Year: 2010	**Model:** Corolla	**Doc ID:** RM000000PN703ZX
Title: NAVIGATION / MULTI INFO DISPLAY: NAVIGATION SYSTEM: Map Disc cannot be Inserted (2010 Corolla)		

Map Disc cannot be Inserted

INSPECTION PROCEDURE

PROCEDURE

1.	**CHECK NAVIGATION RECEIVER ASSEMBLY**

(a) Check if a disc is inserted into the MAP disc slot.

(1) Check if "DISC IN" comes on.

OK:

"DISC IN" comes on.

NG ▶ **EJECT DISC**

OK ▼

2.	**CHECK MAP DISC**

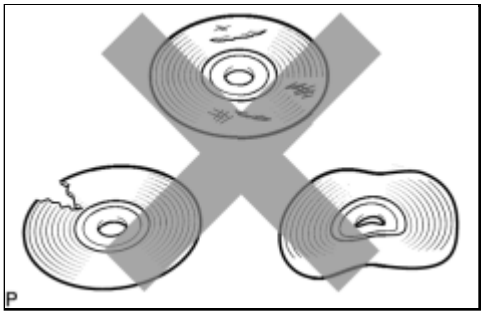

(a) Check that the map disc is not deformed or cracked.

OK:

No deformations or cracks on the map disc.

NG ▶ **REPLACE MAP DISC**

OK ▶ **PROCEED TO NEXT CIRCUIT INSPECTION SHOWN IN**

PROBLEM SYMPTOMS TABLE



Last Modified: 3-10-2010	6.4 J	**From:** 200901
Model Year: 2010	**Model:** Corolla	**Doc ID:** RM000000POE04EX
Title: NAVIGATION / MULTI INFO DISPLAY: NAVIGATION SYSTEM: Vehicle Position Mark Deviates Greatly (2010 Corolla)		

Vehicle Position Mark Deviates Greatly

INSPECTION PROCEDURE

PROCEDURE

1.	**CHECK GPS MARK**

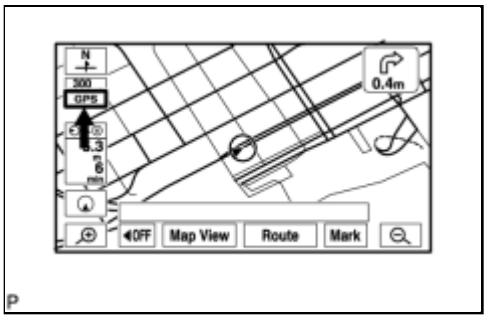

(a) Check that the GPS mark is displayed.

OK:
GPS mark is displayed.

NG ▶ **PROCEED TO "GPS MARK IS NOT DISPLAYED" IN PROBLEM SYMPTOMS TABLE**

OK ▼

2.	**CHECK VEHICLE SENSOR (NAVIGATION CHECK MODE)**

(a) Enter the "Navigation Check" mode (Vehicle Sensors) INFO .

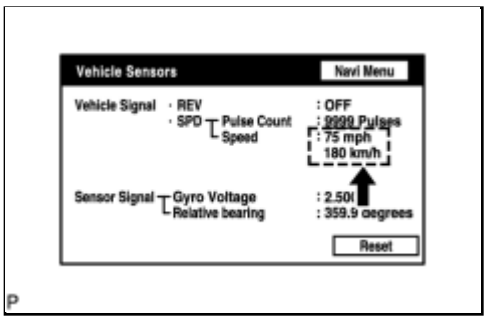

(b) While driving the vehicle, compare the "Speed" indicator to the reading on the speedometer. Check that these readings are almost equal.

OK:

The readings are almost equal.

NG ▶ **PROCEED TO "SPEED SIGNAL DOES NOT CHANGE IN NAVIGATION CHECK MODE" IN PROBLEM SYMPTOMS TABLE**

OK ▼

3.	CHECK VEHICLE SENSOR (NAVIGATION CHECK MODE)

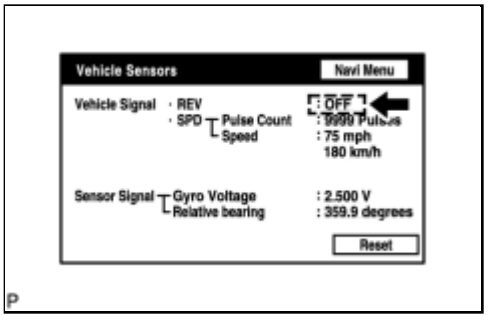

(a) Check that the display changes between ON and OFF according to the shift lever operation.

OK:

SHIFT LEVER POSITION	DISPLAY
Except Reverse	OFF
Reverse	ON

HINT:

The display is updated once per second. It is normal for the display to lag behind the actual switch operation.

NG ▶ **PROCEED TO "REVERSE SIGNAL DOES NOT CHANGE IN NAVIGATION CHECK MODE" IN PROBLEM SYMPTOMS TABLE**

OK ▶ **PROCEED TO NEXT CIRCUIT INSPECTION SHOWN IN PROBLEM SYMPTOMS TABLE**

Last Modified: 3-10-2010	6.4 J	**From:** 200901
Model Year: 2010	**Model:** Corolla	**Doc ID:** RM000000POD02ZX
Title: NAVIGATION / MULTI INFO DISPLAY: NAVIGATION SYSTEM: Cursor or Map Rotates when Vehicle Stopped (2010 Corolla)		

Cursor or Map Rotates when Vehicle Stopped

INSPECTION PROCEDURE

PROCEDURE

1.	**CHECK CONDITION**

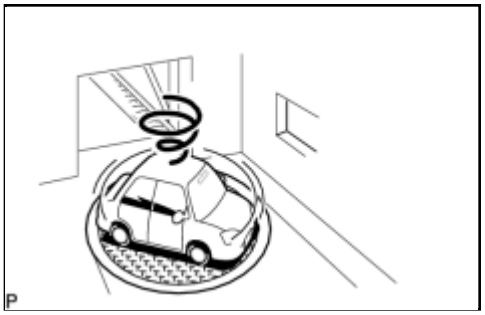

(a) Check with the customer if the vehicle has been turned by a turntable.

OK:

Vehicle has not been turned by turntable.

HINT:

If the vehicle is turned on a turntable with the ignition switch ON, the system may store the angular velocity. As a result, the vehicle position cursor may deviate.

NG ▶ **TURN IGNITION SWITCH TO ON WHEN VEHICLE IS COMPLETELY STOPPED**

OK ▶ **PROCEED TO NEXT CIRCUIT INSPECTION SHOWN IN PROBLEM SYMPTOMS TABLE**

Last Modified: 3-10-2010	6.4 J	**From:** 200901
Model Year: 2010	**Model:** Corolla	**Doc ID:** RM000000POC04CX
Title: NAVIGATION / MULTI INFO DISPLAY: NAVIGATION SYSTEM: Vehicle Position Mark is not Updated (2010 Corolla)		

Vehicle Position Mark is not Updated

INSPECTION PROCEDURE

PROCEDURE

1.	**CHECK MAP DISC**

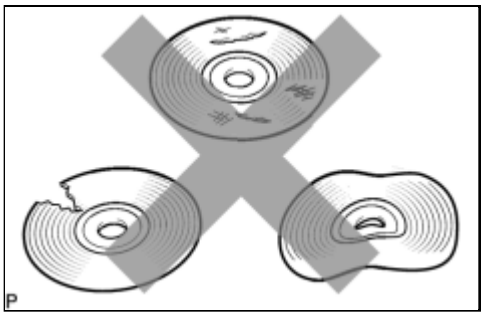

(a) Check that the map disc is not deformed or cracked.

OK:

No deformations or cracks on the map disc.

NG ▶ **REPLACE MAP DISC**

OK ▼

2.	**CHECK NAVIGATION DISPLAY**

(a) Check if touch scrolling can be performed on the map display.

OK:

Touch scrolling can be performed.

NG ▶ **PROCEED TO NEXT CIRCUIT INSPECTION SHOWN IN PROBLEM SYMPTOMS TABLE**

OK

3.	**CHECK VEHICLE SENSOR (NAVIGATION CHECK MODE)**

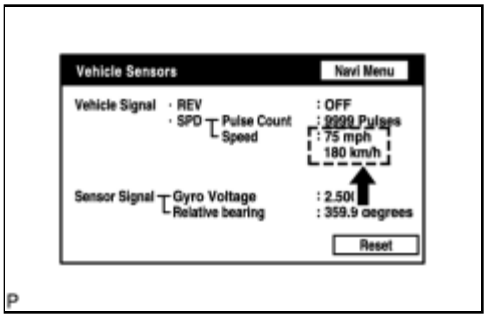

(a) Enter the "Navigation Check" mode (Vehicle Sensors) INFO .

(b) While driving the vehicle, compare the "Speed" indicator to the reading on the speedometer. Check if these readings are almost equal.

OK:

The readings are almost equal.

NG ▶ **PROCEED TO "SPEED SIGNAL DOES NOT CHANGE IN NAVIGATION CHECK MODE" IN PROBLEM SYMPTOMS TABLE**

OK ▶ **PROCEED TO NEXT CIRCUIT INSPECTION SHOWN IN PROBLEM SYMPTOMS TABLE**

Last Modified: 3-10-2010	6.4 J	**From:** 200901
Model Year: 2010	**Model:** Corolla	**Doc ID:** RM000000POF045X
Title: NAVIGATION / MULTI INFO DISPLAY: NAVIGATION SYSTEM: Current Position Display does not Appear (2010 Corolla)		

Current Position Display does not Appear

INSPECTION PROCEDURE

PROCEDURE

1.	**CHECK NAVIGATION RECEIVER ASSEMBLY**

(a) Check if a map disc is inserted into the map disc slot.

OK:

A map disc is inserted.

NG ▶ **INSERT MAP DISC IN MAP SIDE SLOT**

OK ▼

2.	**CHECK MAP DISC**

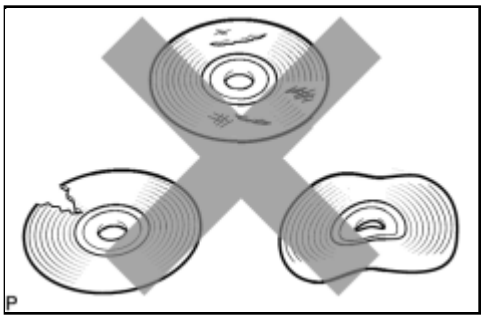

(a) Check that the map disc is not deformed or cracked.

OK:

No deformations or cracks on the map disc.

NG ▶ **REPLACE MAP DISC**

OK ▶ **PROCEED TO NEXT CIRCUIT INSPECTION SHOWN IN PROBLEM SYMPTOMS TABLE**

Last Modified: 3-10-2010	6.4 J	**From:** 200901
Model Year: 2010	**Model:** Corolla	**Doc ID:** RM000000PN604FX
Title: NAVIGATION / MULTI INFO DISPLAY: NAVIGATION SYSTEM: GPS Mark is not Displayed (2010 Corolla)		

GPS Mark is not Displayed

INSPECTION PROCEDURE

PROCEDURE

1.	**CHECK CABIN**

(a) Check the cabin for any object that might interrupt radio reception on the instrument panel. If such an object exists, remove it and check if the GPS mark reappears.

HINT:

The GPS uses extremely faint radio waves originating from satellites. If the signal is interrupted by obstructions or other radio waves, the GPS may not be able to properly receive the signal.

OK:
The mark appears.

NG ▶ **CHECK SURROUNDINGS**

OK ▶ **NORMAL OPERATION**

2.	**CHECK SURROUNDINGS**

(a) Check if the vehicle is in a location where GPS signal reception is poor. If the vehicle is in such a place, move the vehicle and check if the GPS mark reappears.

HINT:

The GPS uses 24 satellites in 6 orbits. At any point in time, 4 satellites should be able to pinpoint your vehicle's location. However, GPS signals may not reach the vehicle due to influence from the surroundings, vehicle direction, and time. For examples, see the illustration.

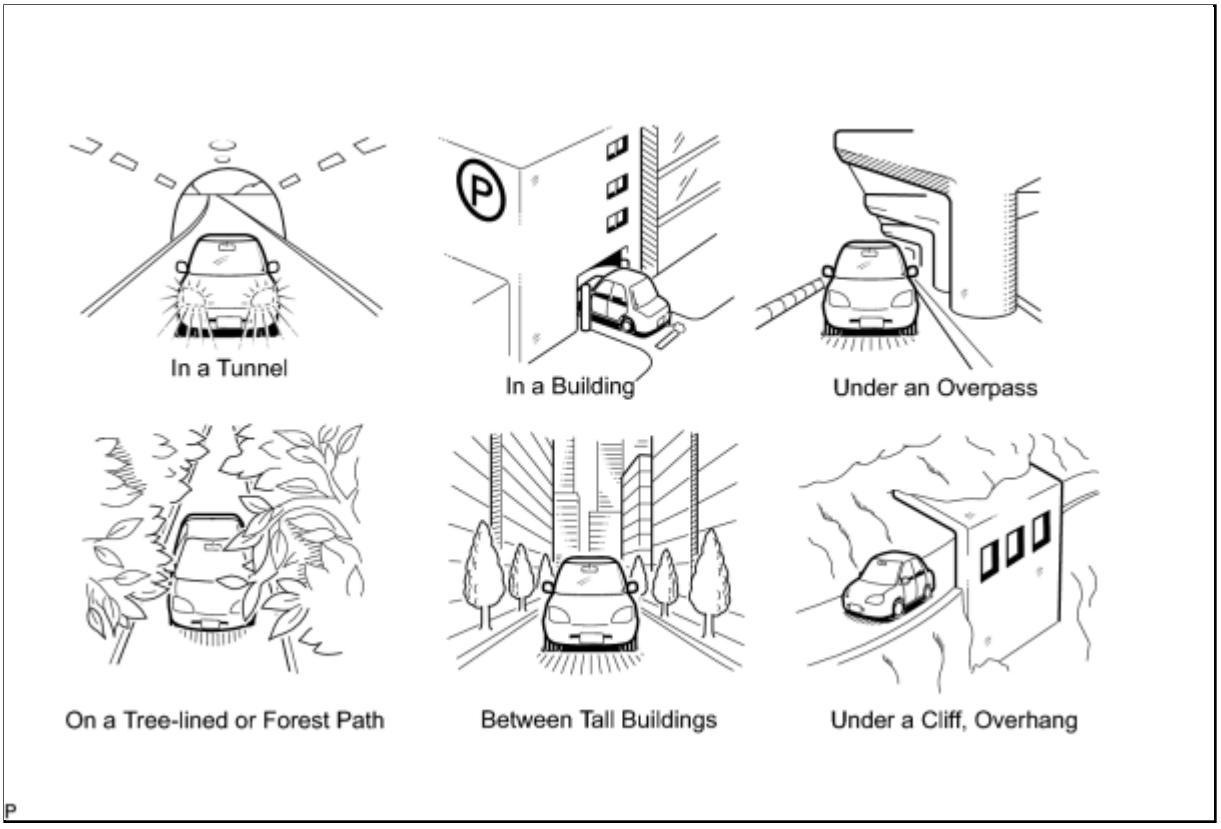

OK:

The GPS mark is displayed.

NG ▶ **CHECK GPS INFORMATION (NAVIGATION CHECK MODE)**

OK ▶ **SYSTEM RETURNS TO NORMAL**

3.	CHECK GPS INFORMATION (NAVIGATION CHECK MODE)

(a) Enter the "Navigation Check" mode (GPS Information) INFO .

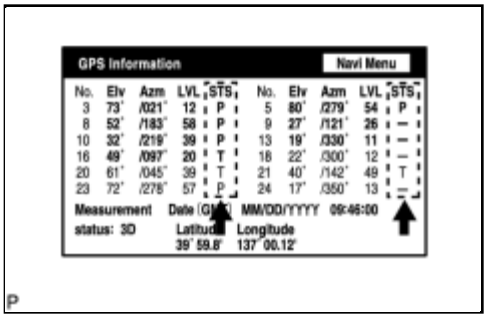

(b) Check how many of the following codes appear in the "STS" column.

For DENSO Made:

T, P

For AISIN AW Made:

08H, 04H

OK:

At least 3 codes appear.

NG ▶ **PROCEED TO**

NEXT
CIRCUIT
INSPECTION
SHOWN IN
PROBLEM
SYMPTOMS
TABLE

OK ▶ REPLACE
NAVIGATION
RECEIVER
ASSEMBLY

Last Modified: 3-10-2010	6.4 J	**From:** 200901
Model Year: 2010	**Model:** Corolla	**Doc ID:** RM000000PNM02XX
Title: NAVIGATION / MULTI INFO DISPLAY: NAVIGATION SYSTEM: Voice Guidance does not Function (2010 Corolla)		

Voice Guidance does not Function

INSPECTION PROCEDURE

PROCEDURE

1.	**CHECK NAVIGATION SETTING**

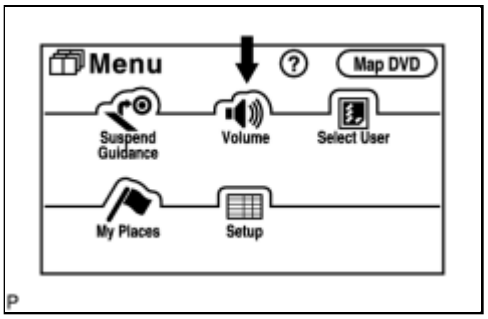

(a) Enter the "Menu" screen by pressing the "MENU" switch.

(b) Select "Volume".

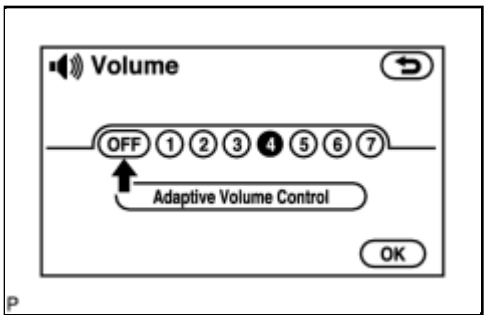

(c) Check that "OFF" is not selected.

OK:
"OFF" is not selected.

NG ▶ **TURN AUTO VOICE GUIDANCE "ON"**

OK ▼

2.	CHECK NAVIGATION SETTING

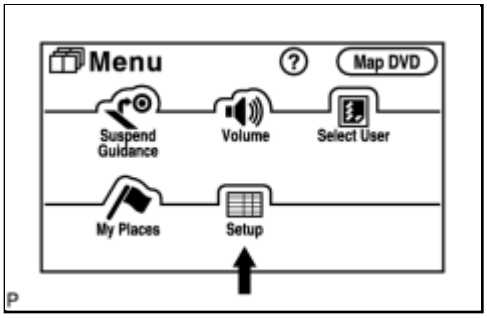

(a) Enter the "Menu" screen by pressing the "MENU" switch.

(b) Select "Set up".

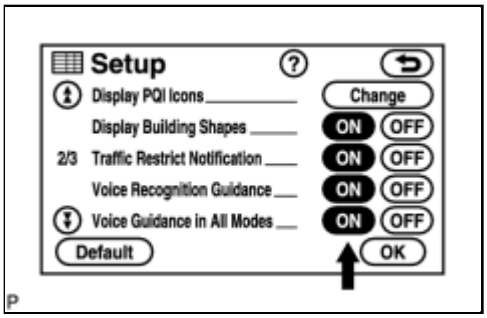

(c) Check that "Voice Guidance in All Modes" is not OFF.

OK:

Voice guidance in all modes is not OFF.

NG ▶ **TURN VOICE GUIDANCE IN ALL MODES "ON"**

OK ▼

3.	CHECK NAVIGATION SETTING

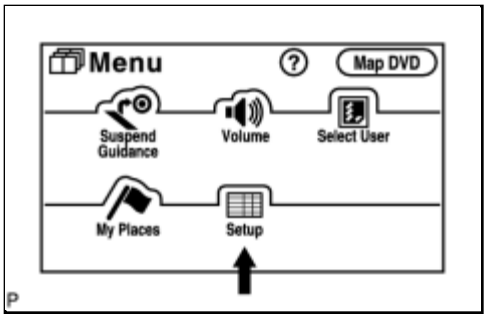

(a) Enter the "Menu" screen by pressing the "MENU" switch.

(b) Select "Setup".

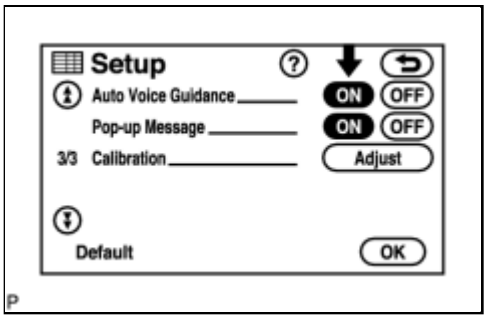

(c) Check that "Auto Voice Guidance" is not OFF.

OK:

Auto voice guidance is not OFF.

NG ▶ **REPLACE NAVIGATION RECEIVER ASSEMBLY**

OK ▼

4.	**CHECK MAP DISC**

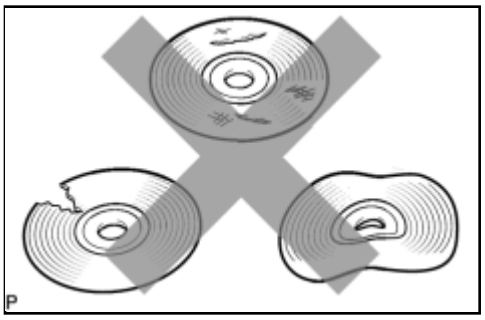

(a) Check that the map disc is not deformed or cracked.

OK:

No deformations or cracks on the map disc.

NG ▶ **REPLACE MAP DISC**

OK ▼

5.	**CHECK NAVIGATION RECEIVER ASSEMBLY**

(a) Check that audio sound can be heard from the driver side speaker.

OK:

Audio sound can be heard.

NG ▶ **PROCEED TO NEXT CIRCUIT INSPECTION SHOWN**

IN PROBLEM SYMPTOMS TABLE

OK ▶ REPLACE NAVIGATION RECEIVER ASSEMBLY

Last Modified: 3-10-2010	6.4 J	**From:** 200901
Model Year: 2010	**Model:** Corolla	**Doc ID:** RM000000POG048X
Title: NAVIGATION / MULTI INFO DISPLAY: NAVIGATION SYSTEM: Map Display Incomplete (2010 Corolla)		

Map Display Incomplete

INSPECTION PROCEDURE

PROCEDURE

1.	**CHECK MAP DISC**

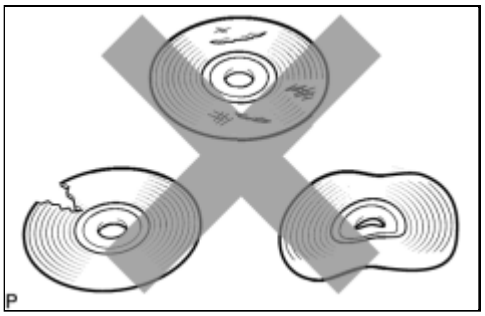

(a) Check that the map disc is not deformed or cracked.

OK:

No deformations or cracks on the map disc.

NG ▶ **REPLACE MAP DISC**

OK ▼

2.	**CHECK NAVIGATION DISPLAY**

(a) Check that displays other than the navigation display are complete.

OK:

No other incomplete displays are found.

NG ▶ **REPLACE NAVIGATION RECEIVER ASSEMBLY**

OK ▶ **PROCEED TO NEXT CIRCUIT INSPECTION SHOWN IN PROBLEM SYMPTOMS TABLE**

Last Modified: 3-10-2010	6.4 J	**From:** 200901
Model Year: 2010	**Model:** Corolla	**Doc ID:** RM000000PNN048X
Title: NAVIGATION / MULTI INFO DISPLAY: NAVIGATION SYSTEM: Route cannot be Calculated (2010 Corolla)		

Route cannot be Calculated

INSPECTION PROCEDURE

PROCEDURE

1.	**CHECK MAP DISC**

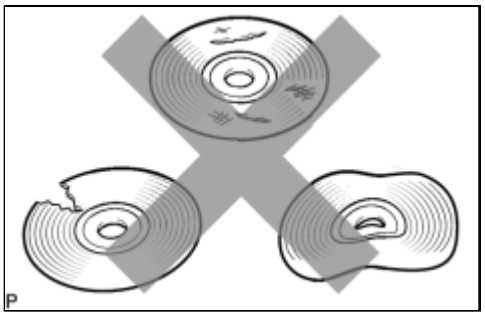

(a) Check that the map disc is not deformed or cracked.

OK:

No deformations or cracks on the map disc.

NG ▶ **REPLACE MAP DISC**

OK ▼

2.	**SET DESTINATION**

(a) Set another destination and check if the system can calculate the route correctly.

OK:

Route can be correctly calculated.

NG ▶ **PROCEED TO NEXT CIRCUIT INSPECTION SHOWN IN PROBLEM SYMPTOMS TABLE**

OK ▶ **NORMAL OPERATION**

Last Modified: 3-10-2010	6.4 J	**From:** 200901
Model Year: 2010	**Model:** Corolla	**Doc ID:** RM0000020RR01QX
Title: NAVIGATION / MULTI INFO DISPLAY: NAVIGATION SYSTEM: Black Screen (2010 Corolla)		

Black Screen

INSPECTION PROCEDURE

PROCEDURE

1.	**CHECK DISPLAY SETTING**

(a) Check that the display is not in "Screen OFF" mode.

OK:

The display setting is not in "Screen OFF" mode.

NG ▶ **CHANGE SCREEN TO "SCREEN ON" MODE**

OK ▼

2.	**CHECK IMAGE QUALITY SETTING**

(a) Check that the screen color quality can be set.

OK:

Setting is possible.

NG ▶ **CHECK CABIN**

OK ▶ **PRESS PANEL SWITCH "DISPLAY" AND SET SCREEN COLOR QUALITY TO NORMAL**

3.	**CHECK CABIN**

(a) Check that condensation is not likely to occur in the cabin, and that the temperature is not high or extremely low in the cabin.

HINT:

- A humid cabin and a rapid change in temperature may lead to condensation. Condensation in the cabin may cause a short circuit.
- The appropriate cabin temperature is 20 to 30°C (68 to 86°F).

OK:

Condensation is not likely and temperature is not high or extremely low.

NG ▶ **SET CABIN TO APPROPRIATE TEMPERATURE**

OK ▶ **PROCEED TO NEXT CIRCUIT INSPECTION SHOWN IN PROBLEM SYMPTOMS TABLE**

Last Modified: 3-10-2010	6.4 J	**From:** 200901
Model Year: 2010	**Model:** Corolla	**Doc ID:** RM000002NNE03FX
Title: NAVIGATION / MULTI INFO DISPLAY: NAVIGATION SYSTEM: Vehicle Speed Signal Circuit between Navigation Receiver Assembly and Combination Meter (2010 Corolla)		

Vehicle Speed Signal Circuit between Navigation Receiver Assembly and Combination Meter

DESCRIPTION

Navigation function:

The navigation receiver assembly receives a vehicle speed signal from the combination meter and information about the GPS antenna, and then adjusts vehicle position.

ASL function:

The circuit is necessary for the ASL (Automatic Sound Levelizer) built into the radio receiver. Speed signals are received from the combination meter and used for the ASL. The ASL function automatically adjusts the sound volume in order to maintain clear audio sound even when vehicle noise increases (as vehicle noise increases, the volume is turned up etc.).

HINT:

- A voltage of 12 V or 5 V is output from each ECU and then input to the combination meter. The signal is changed to a pulse signal at the transistor in the combination meter. Each ECU controls the respective system based on the pulse signal.
- If a short occurs in any of the ECUs or in the wire harness connected to an ECU, all systems in the diagram will not operate normally.

WIRING DIAGRAM

1. except TMC Made 2AZ-FE:

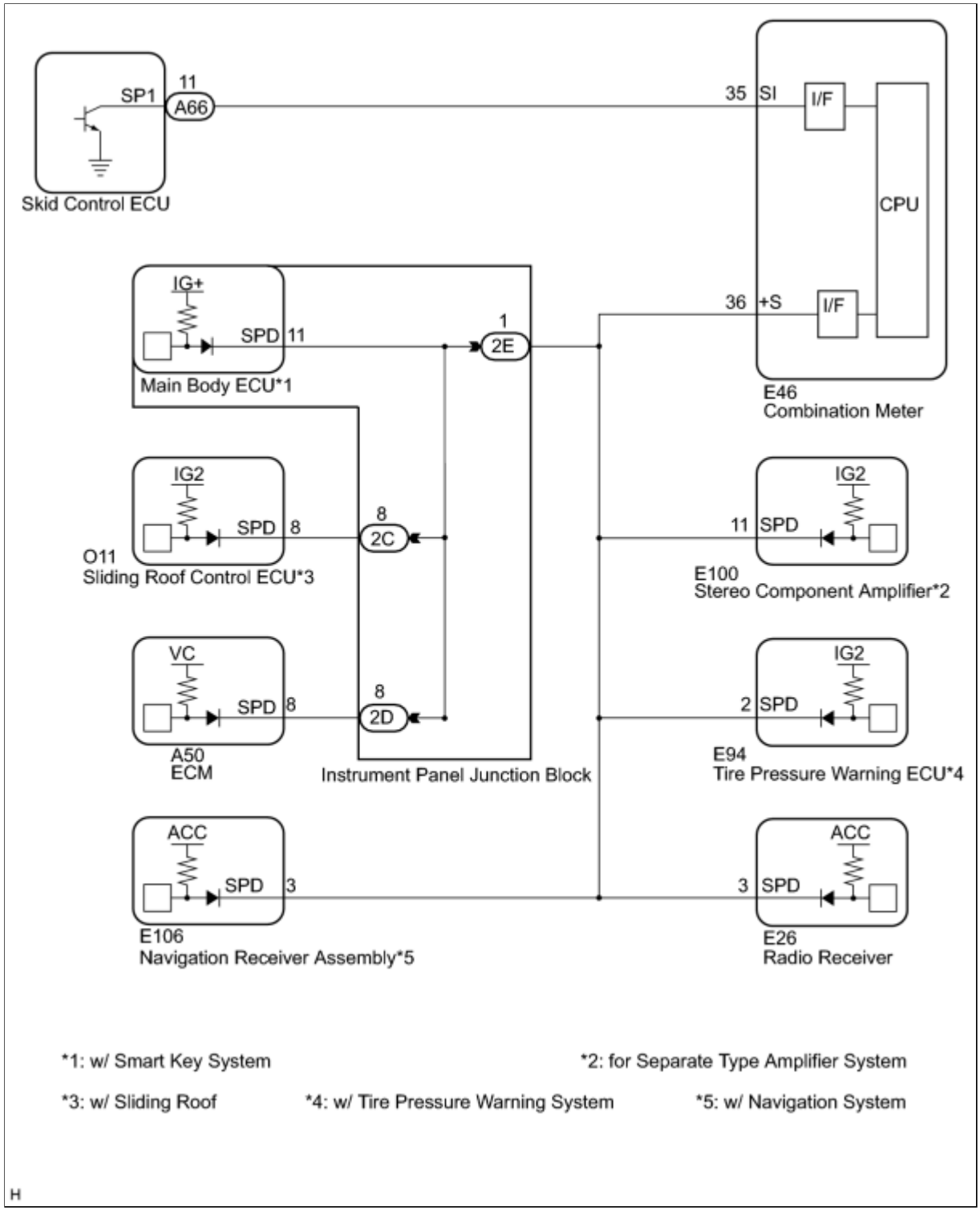

2. except TMC Made 2ZR-FE:

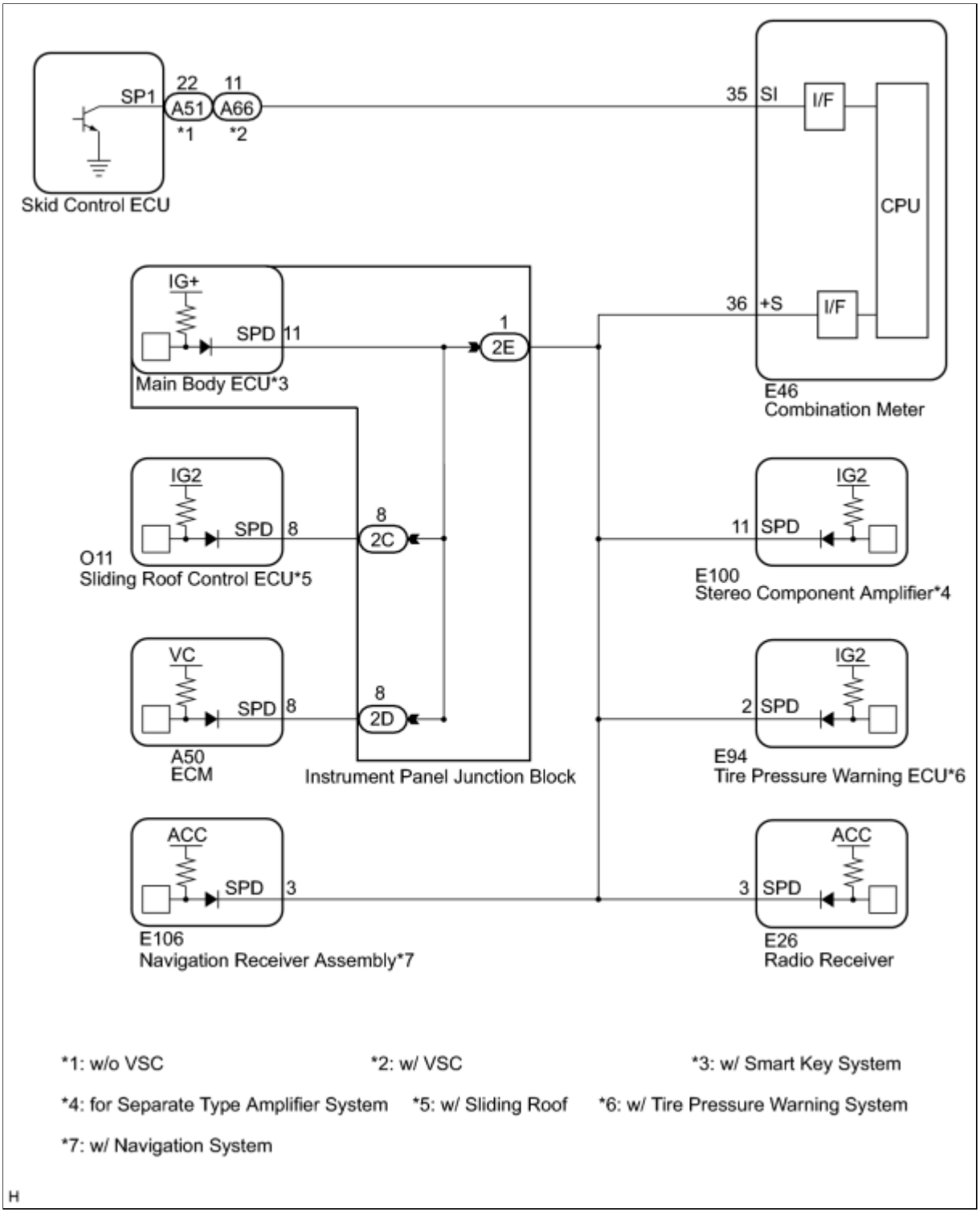

INSPECTION PROCEDURE

PROCEDURE

1.	**INSPECT COMBINATION METER (OUTPUT WAVEFORM)**

(a) Check the output waveform.

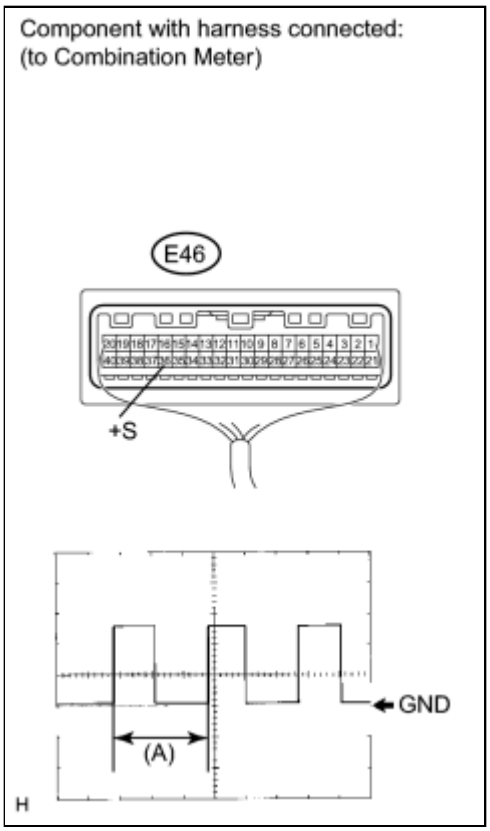

(1) Remove the combination meter with the connector still connected.

(2) Connect an oscilloscope to terminal E46-36 (+S) and body ground.

(3) Turn the ignition switch to ON.

(4) Turn a drive wheel slowly.

(5) Check the signal waveform according to the condition(s) in the table below.

ITEM	CONDITION
Tool setting	5 V/DIV., 20 ms./DIV.
Vehicle condition	Driving at approx. 20 km/h (12 mph)

OK:

The waveform is displayed as shown in the illustration.

HINT:

When the system is functioning normally, one wheel revolution generates 4 pulses. As the vehicle speed increases, the width indicated by (A) in the illustration narrows.

NG ▶ **GO TO METER / GAUGE SYSTEM**

OK ▼

2.	**CHECK HARNESS AND CONNECTOR (NAVIGATION RECEIVER ASSEMBLY - COMBINATION METER)**

(a) Disconnect the navigation receiver assembly connector and combination meter connector.

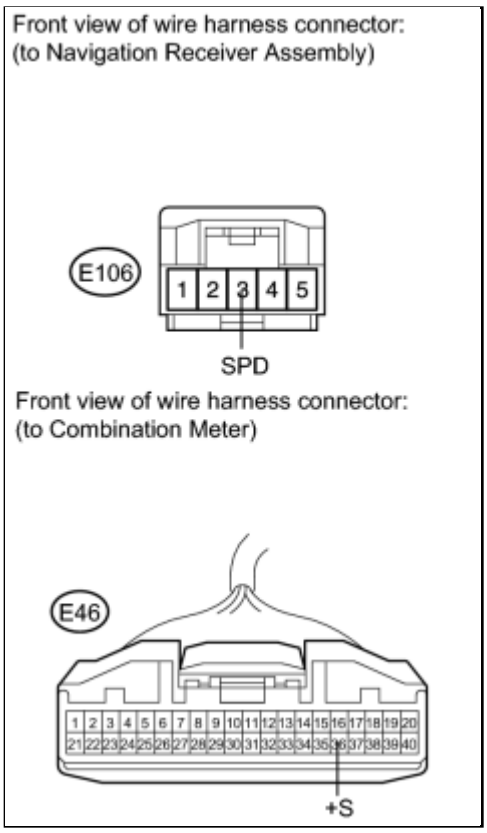

(b) Measure the resistance according to the value(s) in the table below.

Standard Resistance:

TESTER CONNECTION	CONDITION	SPECIFIED CONDITION
E106-3 (SPD) - E46-36 (+S)	Always	Below 1 Ω

NG ▶ **REPAIR OR REPLACE HARNESS OR CONNECTOR**

OK ▶ **REPLACE NAVIGATION RECEIVER ASSEMBLY**

Last Modified: 3-10-2010	6.4 J	**From:** 200901
Model Year: 2010	**Model:** Corolla	**Doc ID:** RM0000011FP05EX
Title: NAVIGATION / MULTI INFO DISPLAY: NAVIGATION SYSTEM: Steering Pad Switch Circuit (2010 Corolla)		

Steering Pad Switch Circuit

DESCRIPTION

This circuit sends an operation signal from the steering pad switch to the navigation receiver assembly.

If there is an open in the circuit, the navigation system cannot be operated using the steering pad switch.

If there is a short in the circuit, the resulting condition is the same as that when the switch were continuously pressed. Therefore, the navigation receiver assembly cannot be operated using the steering pad switch, and the navigation receiver assembly itself cannot function.

WIRING DIAGRAM

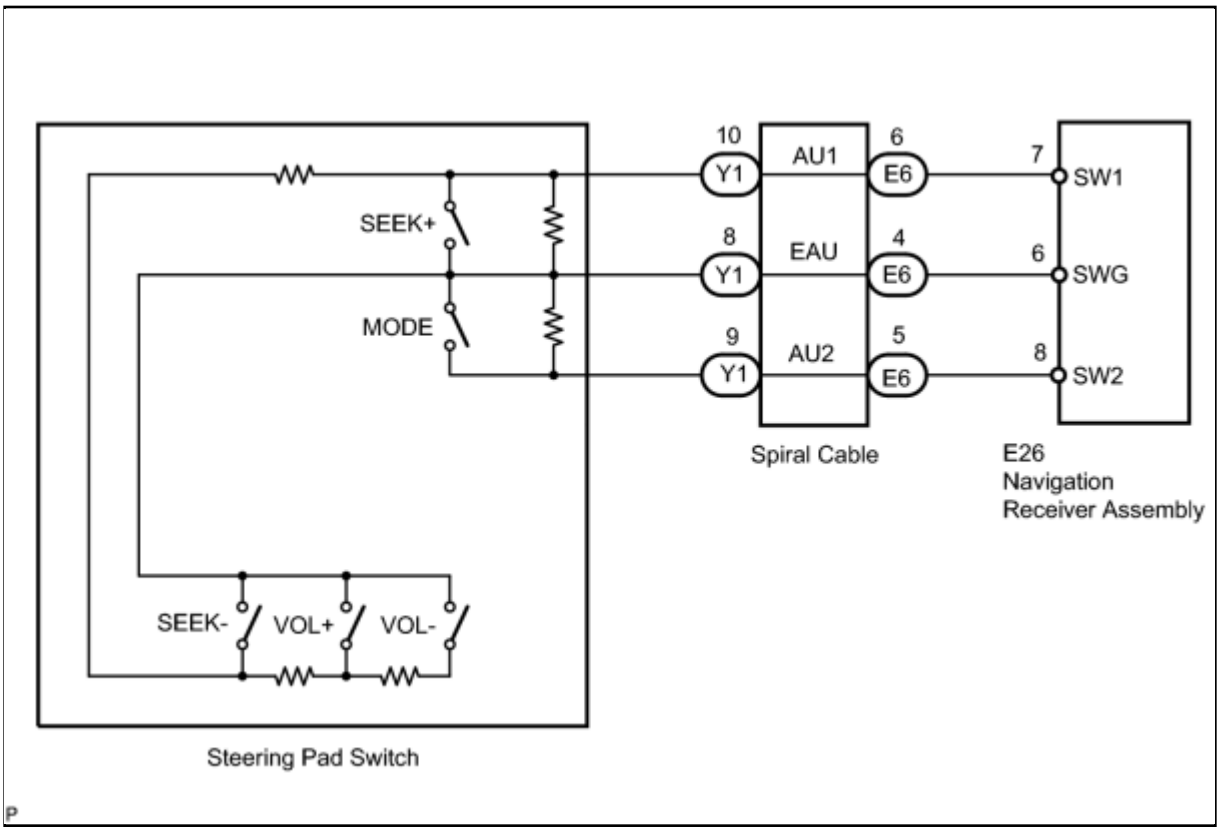

INSPECTION PROCEDURE

NOTICE:

The vehicle is equipped with an SRS (Supplemental Restraint System). Before servicing (including removal or installation of parts), be sure to read the precautionary notice for the Supplemental Restraint

System INFO .

PROCEDURE

1.	**INSPECT NAVIGATION RECEIVER ASSEMBLY**

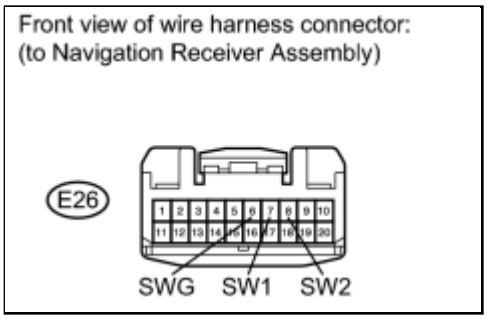

(a) Disconnect the navigation receiver assembly connector.

(b) Measure the resistance according to the value(s) in the table below.

Standard Resistance:

TESTER CONNECTION	SWITCH CONDITION	SPECIFIED CONDITION
E26-7 (SW1) - E26-6 (SWG)	No switch is pushed	95 to105 kΩ
E26-7 (SW1) - E26-6 (SWG)	SEEK+ switch: pushed	Below 2.5 Ω
E26-7 (SW1) - E26-6 (SWG)	SEEK- switch: pushed	313.5 to 346.5 Ω
E26-7 (SW1) - E26-6 (SWG)	VOL+ switch: pushed	959.5 to 1060.5 Ω
E26-7 (SW1) - E26-6 (SWG)	VOL- switch: pushed	3049.5 to 3370.5 Ω
E26-8 (SW2) - E26-6 (SWG)	No switch is pushed	95 to 105 kΩ
E26-8 (SW2) - E26-6 (SWG)	MODE switch: pushed	Below 2.5 Ω

NG ▶ **INSPECT SPIRAL CABLE**

OK ▶ **PROCEED TO NEXT CIRCUIT INSPECTION SHOWN IN PROBLEM SYMPTOMS TABLE**

2.	**INSPECT SPIRAL CABLE**

(a) Disconnect the steering pad switch assembly and spiral cable connectors.

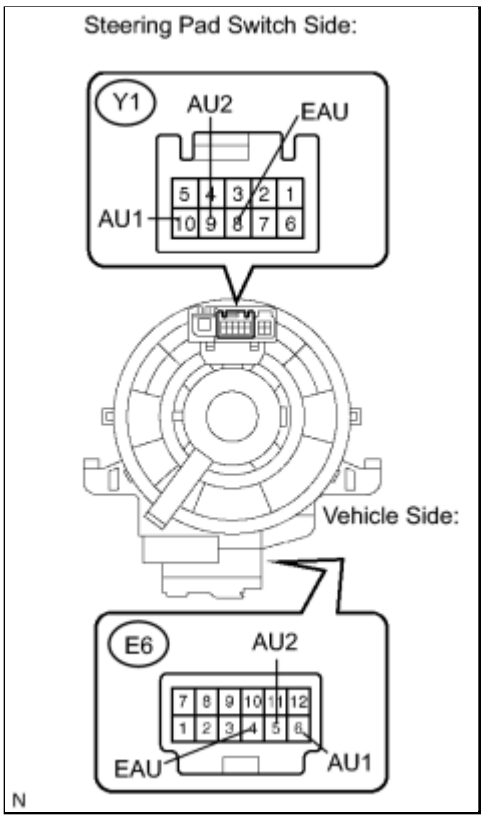

(b) Measure the resistance according to the value(s) in the table below.

Standard Resistance:

TESTER CONNECTION	CONDITION	SPECIFIED CONDITION
Y1-8 (EAU) - E6-4 (EAU)	Center	Below 1 Ω
	2.5 rotations to the left	
	2.5 rotations to the right	
Y1-10 (AU1) - E6-6 (AU1)	Center	Below 1 Ω
	2.5 rotations to the left	
	2.5 rotations to the right	
Y1-9 (AU2) - E6-5 (AU2)	Center	Below 1 Ω
	2.5 rotations to the left	
	2.5 rotations to the right	

NOTICE:

The spiral cable is an important part of the SRS airbag system. Incorrect removal or installation of the spiral cable may cause airbag deployment. Be sure to read the page shown in the brackets.

HINT:

- Removal INFO
- Installation INFO

NG ▶ REPLACE SPIRAL CABLE

OK ▼

3.	INSPECT STEERING PAD SWITCH ASSEMBLY

(a) Disconnect the steering pad switch assembly connector.

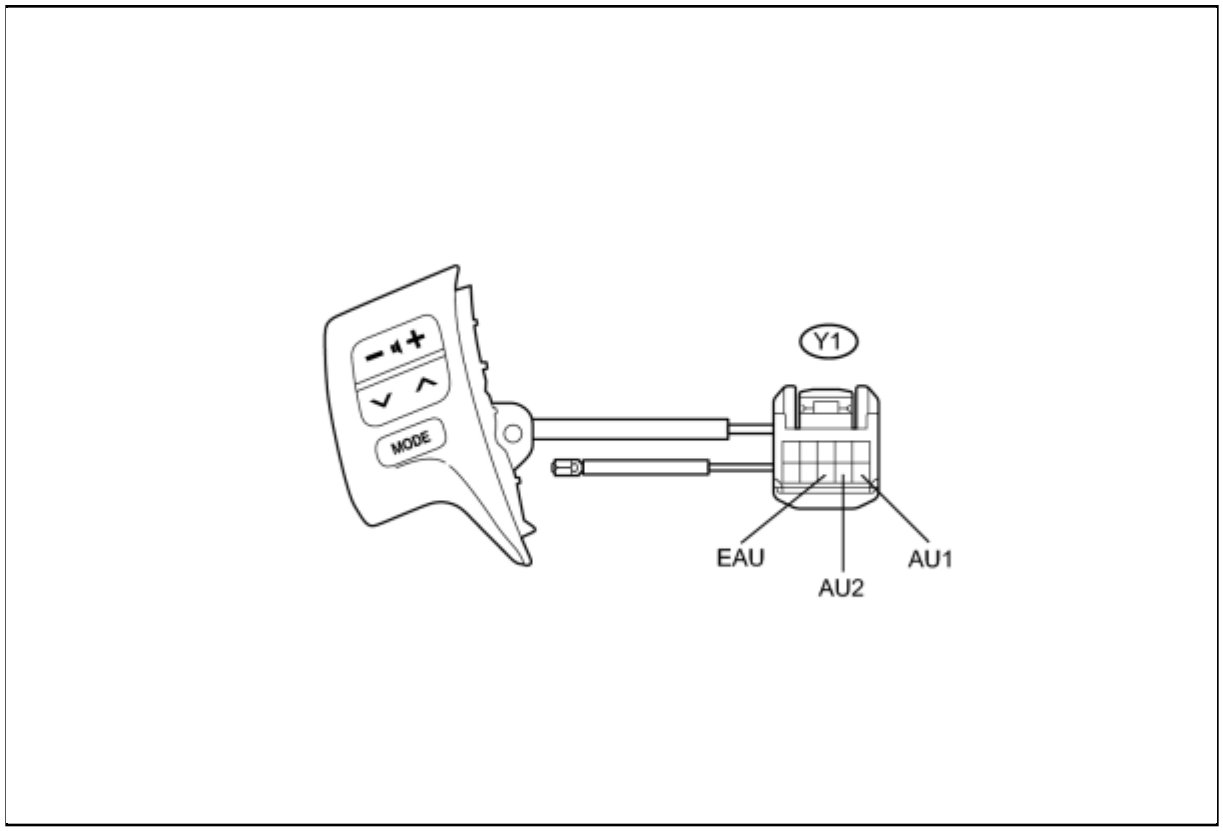

(b) Measure the resistance according to the value(s) in the table below.

Standard Resistance:

TESTER CONNECTION	SWITCH CONDITION	SPECIFIED CONDITION
Y1-10 (AU1) - Y1-8 (EAU)	No switch is pushed	95 to105 kΩ
Y1-10 (AU1) - Y1-8 (EAU)	SEEK+ switch: pushed	Below 2.5 Ω
Y1-10 (AU1) - Y1-8 (EAU)	SEEK- switch: pushed	313.5 to 346.5 Ω
Y1-10 (AU1) - Y1-8 (EAU)	VOL+ switch: pushed	959.5 to 1060.5 Ω

TESTER CONNECTION	SWITCH CONDITION	SPECIFIED CONDITION
Y1-10 (AU1) - Y1-8 (EAU)	VOL- switch: pushed	3049.5 to 3370.5 Ω
Y1-9 (AU2) - Y1-8 (EAU)	No switch is pushed	95 to 105 kΩ
Y1-9 (AU2) - Y1-8 (EAU)	MODE switch: pushed	Below 2.5 Ω

NG ▶ **REPLACE STEERING PAD SWITCH ASSEMBLY**

OK ▶ **REPAIR OR REPLACE HARNESS OR CONNECTOR (NAVIGATION RECEIVER ASSEMBLY - SPIRAL CABLE)**

Last Modified: 3-10-2010	6.4 J	**From:** 200901
Model Year: 2010	**Model:** Corolla	**Doc ID:** RM0000011EZ05NX
Title: NAVIGATION / MULTI INFO DISPLAY: NAVIGATION SYSTEM: Illumination Circuit (2010 Corolla)		

Illumination Circuit

DESCRIPTION

Power is supplied to the navigation receiver assembly and steering pad switch illumination when the light control switch is in the TAIL or HEAD position.

WIRING DIAGRAM

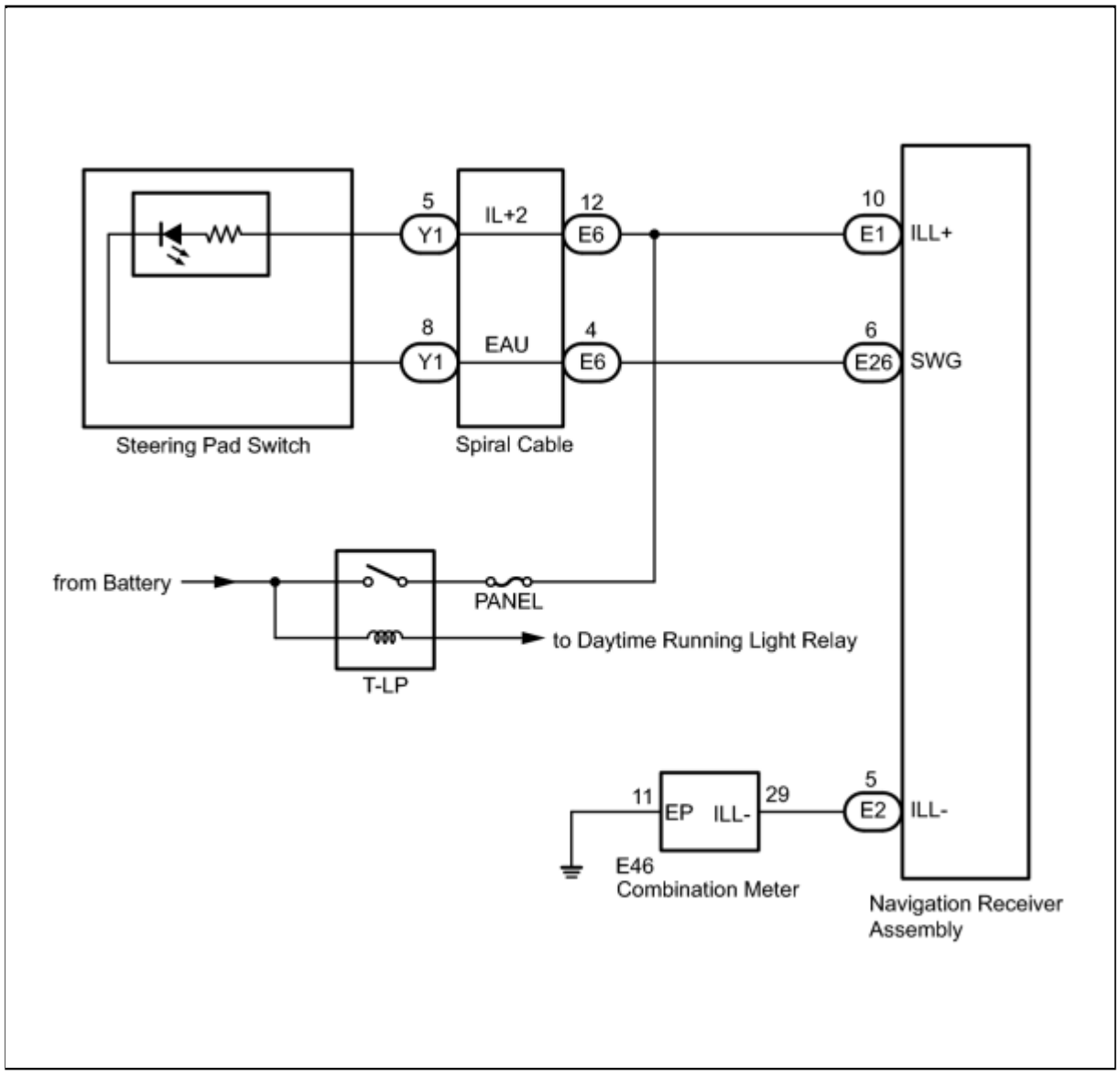

INSPECTION PROCEDURE

NOTICE:

The vehicle is equipped with an SRS (Supplemental Restraint System). Before servicing (including removal or installation of parts), be sure to read the precautionary notice for the Supplemental Restraint System INFO .

PROCEDURE

1.	**CHECK ILLUMINATION**

(a) Check if the illumination for the navigation receiver assembly, steering pad switch, glove box or others (hazard switch, transmission control switch, etc.) comes on when the light control switch is turned to the HEAD or TAIL position.

Result:

RESULT	PROCEED TO
Illumination comes on for all components except steering pad switch.	A
Illumination comes on for all components except navigation receiver assembly.	B
No illumination comes on (radio receiver, hazard switch, glove box, etc.).	C
Illumination comes on only for steering pad switch.	D

D ▶ **GO TO METER / GAUGE SYSTEM**

C ▶ **GO TO LIGHTING SYSTEM**

B ▶ **CHECK HARNESS AND CONNECTOR (BATTERY - NAVIGATION RECEIVER ASSEMBLY)**

A ▼

2.	**CHECK HARNESS AND CONNECTOR (BATTERY - SPIRAL CABLE)**

(a) Disconnect the spiral cable connector.

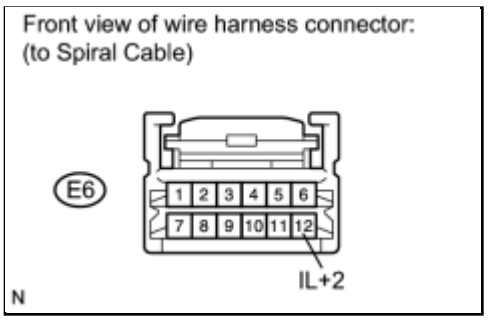

(b) Measure the voltage according to the value(s) in the table below.

Standard Voltage:

TESTER CONNECTION	CONDITION	SPECIFIED CONDITION
E6-12 (IL+2) - Body ground	Light control switch in TAIL or HEAD	11 to 14 V

NG ▶ **REPAIR OR REPLACE HARNESS OR CONNECTOR**

OK ▼

3.	**INSPECT SPIRAL CABLE**

(a) Disconnect the steering pad switch and spiral cable connectors.

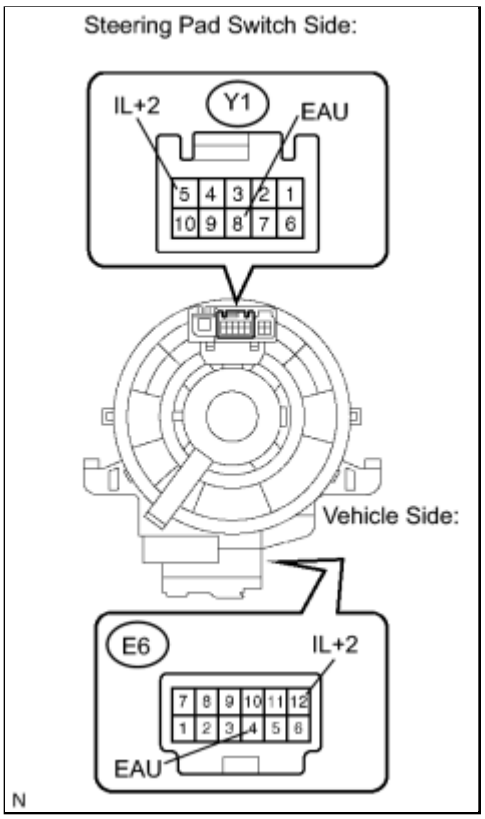

(b) Measure the resistance according to the value(s) in the table below.

Standard Resistance:

TESTER CONNECTION	CONDITION	SPECIFIED CONDITION
Y1-8 (EAU) - E6-4 (EAU)	Center	Below 1 Ω
	2.5 rotations to the left	
	2.5 rotations to the right	
Y1-5 (IL+2) - E6-12 (IL+2)	Center	Below 1 Ω
	2.5 rotations to the left	
	2.5 rotations to the right	

NOTICE:

The spiral cable is an important part of the SRS airbag system. Incorrect removal or installation of the spiral cable may cause airbag deployment. Be sure to read the page shown in the brackets.

HINT:

- Removal INFO
- Installation INFO

NG ▶ REPLACE SPIRAL CABLE

OK

4.	**CHECK HARNESS AND CONNECTOR (SPIRAL CABLE - NAVIGATION RECEIVER ASSEMBLY)**

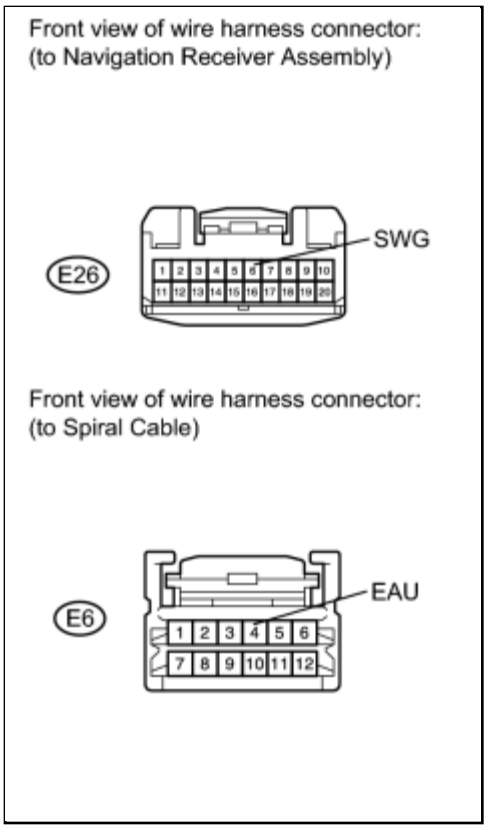

(a) Disconnect the connectors from the navigation receiver assembly and spiral cable.

(b) Measure the resistance according to the value(s) in the table below.

Standard Resistance:

TESTER CONNECTION	CONDITION	SPECIFIED CONDITION
E26-6 (SWG) - E6-4 (EAU)	Always	Below 1 Ω
E26-6 (SWG) - Body ground	Always	10 kΩ or higher

NG **REPAIR OR REPLACE HARNESS OR CONNECTOR**

OK

5.	**INSPECT STEERING PAD SWITCH ASSEMBLY**

(a) Disconnect the steering pad switch assembly connector.

(b) Connect a positive (+) lead to terminal IL+2 and a negative (-) lead to terminal EAU of the steering pad switch connector.

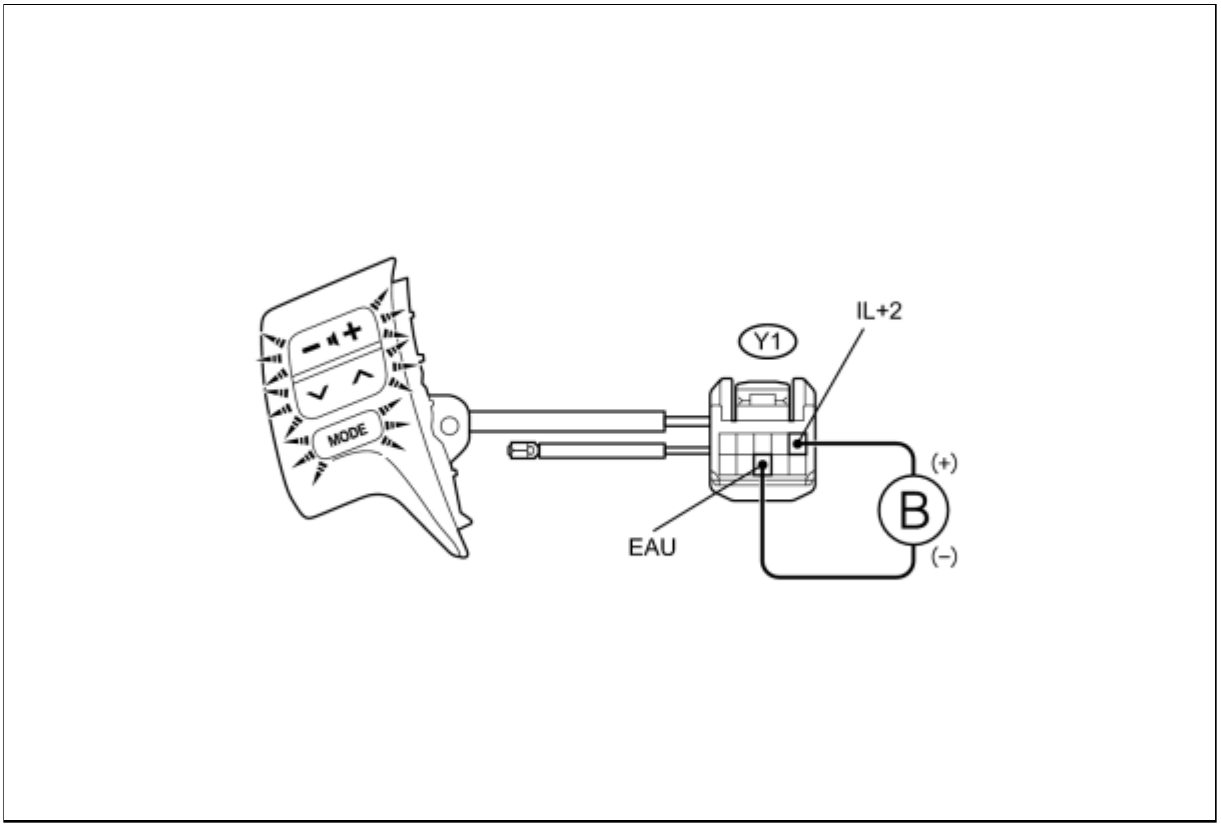

(c) Check if the illumination for the steering pad switch comes on.

OK:

Illumination for the steering pad switch assembly comes on.

NG ▶ **REPLACE STEERING PAD SWITCH ASSEMBLY**

OK ▶ **PROCEED TO NEXT CIRCUIT INSPECTION SHOWN IN PROBLEM SYMPTOMS TABLE**

6.	**CHECK HARNESS AND CONNECTOR (BATTERY - NAVIGATION RECEIVER ASSEMBLY)**

(a) Disconnect the navigation receiver assembly

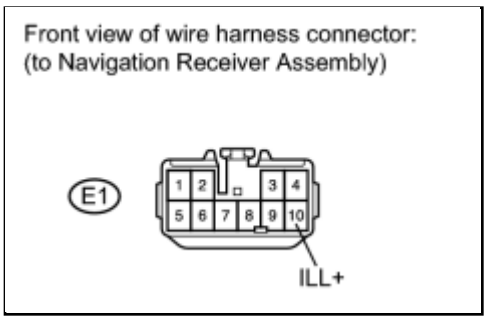

connector.

(b) Measure the voltage according to the value(s) in the table below.

Standard Voltage:

TESTER CONNECTION	CONDITION	SPECIFIED CONDITION
E1-10 (ILL+) - Body ground	Light control switch in TAIL or HEAD	11 to 14 V

NG ▶ **REPAIR OR REPLACE HARNESS OR CONNECTOR**

OK ▼

7.	**CHECK HARNESS AND CONNECTOR (NAVIGATION RECEIVER ASSEMBLY - COMBINATION METER)**

(a) Disconnect the navigation receiver assembly connector.

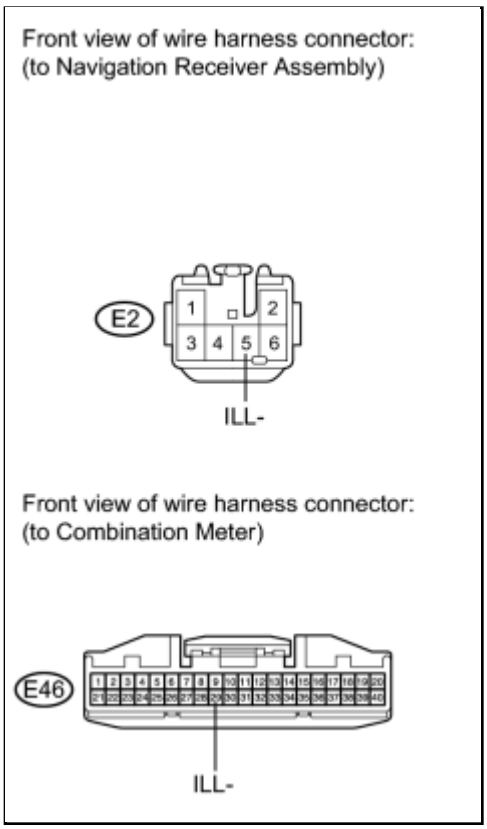

(b) Disconnect the combination meter connector.

(c) Measure the resistance according to the value(s) in the table below.

Standard Resistance:

TESTER CONNECTION	CONDITION	SPECIFIED CONDITION
E2-5 (ILL-) - E46-29 (ILL-)	Always	Below 1 Ω
E2-5 (ILL-) - Body ground	Always	10 kΩ or higher

NG ▶ **REPAIR OR REPLACE HARNESS OR CONNECTOR**

OK ▶ **PROCEED TO NEXT CIRCUIT INSPECTION SHOWN IN PROBLEM SYMPTOMS TABLE**

Last Modified: 3-10-2010	6.4 J	**From:** 200901
Model Year: 2010	**Model:** Corolla	**Doc ID:** RM0000012CL03ZX
Title: NAVIGATION / MULTI INFO DISPLAY: NAVIGATION SYSTEM: Speaker Circuit (2010 Corolla)		

Speaker Circuit

DESCRIPTION

When the vehicle has a built-in type amplifier, a sound signal is sent from the navigation receiver assembly to the speakers through this circuit.

WIRING DIAGRAM

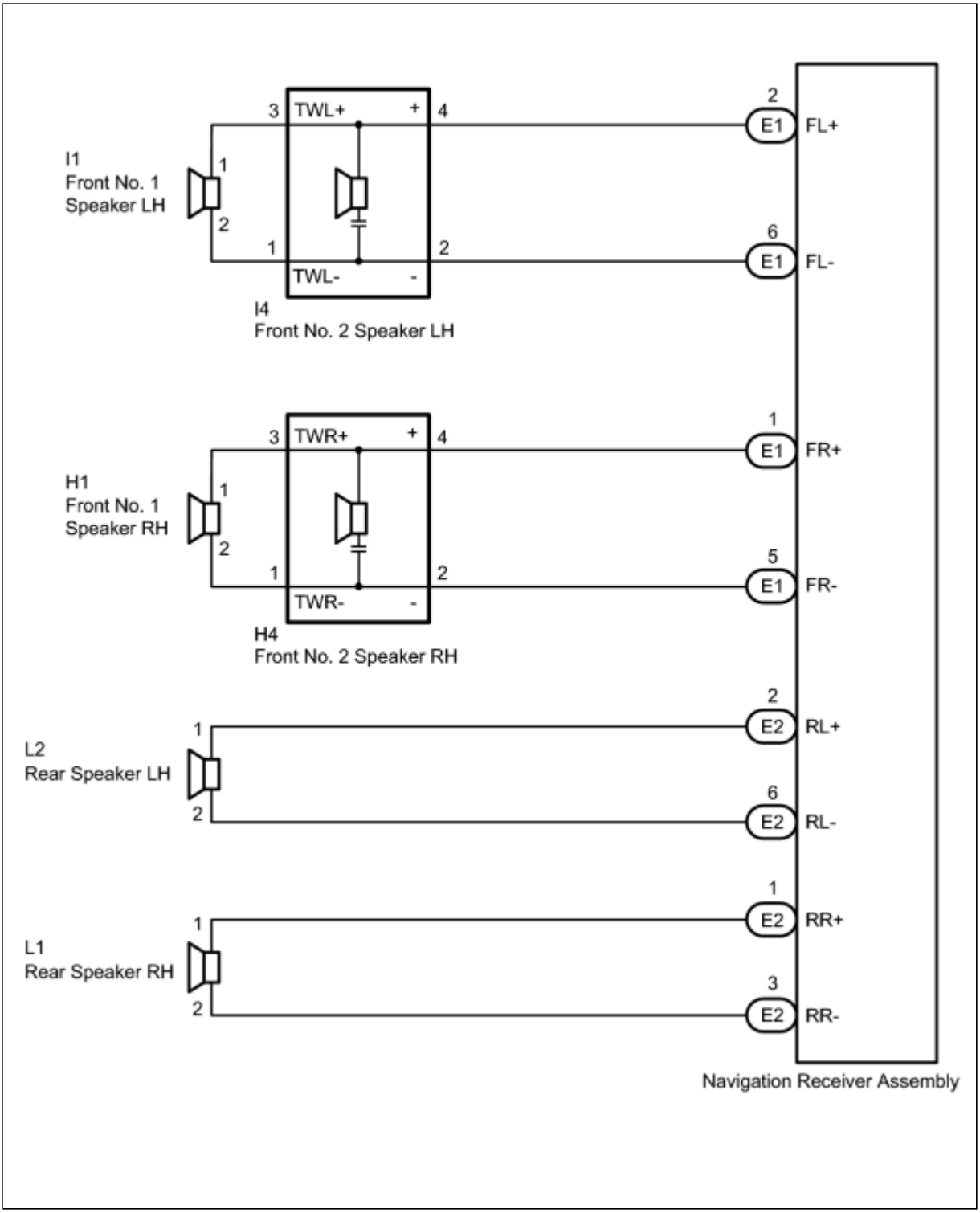

INSPECTION PROCEDURE

PROCEDURE

1.	**CHECK HARNESS AND CONNECTOR**

Front view of wire harness connector:
(to Navigation Receiver Assembly)

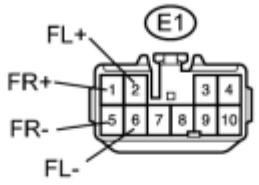

Front view of wire harness connector:
(to Navigation Receiver Assembly)

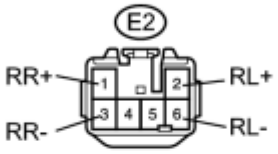

Front view of wire harness connector:
(to Front No. 2 Speaker)



Front view of wire harness connector:
(to Front No. 1 Speaker)

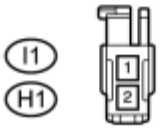

N

(a) Disconnect the connectors shown in the illustration from the navigation receiver assembly and speakers.

Front view of wire harness connector:
(to Rear Speaker)

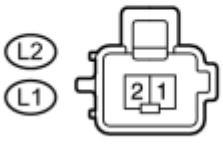

(b) Measure the resistance between each of the front No. 2 speakers and the navigation receiver assembly to check for an open circuit in the wire harness.

Standard Resistance:

TESTER CONNECTION	CONDITION	SPECIFIED CONDITION
E1-2 (FL+) - I4-4 (+)	Always	Below 1 Ω
E1-6 (FL-) - I4-2 (-)	Always	Below 1 Ω

E1-1 (FR+) - H4-4 (+)	Always	Below 1 Ω
E1-5 (FR-) - H4-2 (-)	Always	Below 1 Ω

(c) Measure the resistance between each of the front No. 2 speakers and each of the front No. 1 speakers to check for an open circuit in the wire harness.

Standard Resistance:

TESTER CONNECTION	CONDITION	SPECIFIED CONDITION
I1-1 - I4-3 (TWL+)	Always	Below 1 Ω
I1-2 - I4-1 (TWL-)	Always	Below 1 Ω
H1-1 - H4-3 (TWR+)	Always	Below 1 Ω
H1-2 - H4-1 (TWR-)	Always	Below 1 Ω

(d) Measure the resistance between each of the rear speakers and the navigation receiver assembly to check for an open circuit in the wire harness.

Standard Resistance:

TESTER CONNECTION	CONDITION	SPECIFIED CONDITION
E2-2 (RL+) - L2-1	Always	Below 1 Ω
E2-6 (RL-) - L2-2	Always	Below 1 Ω
E2-1 (RR+) - L1-1	Always	Below 1 Ω
E2-3 (RR-) - L1-1	Always	Below 1 Ω

(e) Measure the resistance between each speaker and body ground to check for a short circuit in the wire harness.

Standard Resistance:

TESTER CONNECTION	CONDITION	SPECIFIED CONDITION
E1-2 (FL+) - Body ground	Always	10 kΩ or higher
E1-6 (FL-) - Body ground	Always	10 kΩ or higher
E1-1 (FR+) - Body ground	Always	10 kΩ or higher
E1-5 (FR-) - Body ground	Always	10 kΩ or higher
E2-2 (RL+) - Body ground	Always	10 kΩ or higher
E2-6 (RL-) - Body ground	Always	10 kΩ or higher
E2-1 (RR+) - Body ground	Always	10 kΩ or higher
E2-3 (RR-) - Body ground	Always	10 kΩ or higher

TESTER CONNECTION	CONDITION	SPECIFIED CONDITION
I4-3 (TWL+) - Body ground	Always	10 kΩ or higher
I4-1 (TWL-) - Body ground	Always	10 kΩ or higher
H4-3 (TWR+) - Body ground	Always	10 kΩ or higher
H4-1 (TWR-) - Body ground	Always	10 kΩ or higher

NG ▶ **REPAIR OR REPLACE HARNESS OR CONNECTOR**

OK ▼

2.	**INSPECT FRONT NO. 1 SPEAKER**

(a) Resistance check

(1) Measure the resistance between the terminals of the speaker.

Standard Resistance:

TESTER CONNECTION	CONDITION	SPECIFIED CONDITION
I1-1 - I1-2	Always	3.2 to 4.8 Ω
H1-1 - H1-2	Always	3.2 to 4.8 Ω

NG ▶ **REPLACE FRONT NO. 1 SPEAKER**

OK ▼

3.	**INSPECT FRONT NO. 2 SPEAKER**

(a) Check that the malfunction disappears when another speaker in good condition is installed.

OK:

Malfunction disappears.

HINT:

- Connect all the connectors to the front No. 2 speaker.
- When there is a possibility that either the right or left front speaker is defective, inspect by interchanging the right one with the left one.
- Perform the above inspection on both LH and RH sides.

NG ▶ **REPLACE FRONT NO. 2 SPEAKER**

OK ▼

4.	**INSPECT REAR SPEAKER**

(a) Resistance check

(1) Measure the resistance between the terminals of the speaker.

Standard Resistance:

TESTER CONNECTION	CONDITION	SPECIFIED CONDITION
L2-1 - L2-2	Always	Approximately 4 Ω
L1-1 - L1-2	Always	Approximately 4 Ω

NG ▶ **REPLACE REAR SPEAKER**

OK ▶ **PROCEED TO NEXT CIRCUIT INSPECTION SHOWN IN PROBLEM SYMPTOMS TABLE**

Last Modified: 3-10-2010	6.4 J	**From:** 200901
Model Year: 2010	**Model:** Corolla	**Doc ID:** RM0000020O101TX
Title: NAVIGATION / MULTI INFO DISPLAY: NAVIGATION SYSTEM: Reverse Signal Circuit (2010 Corolla)		

Reverse Signal Circuit

DESCRIPTION

The navigation receiver assembly receives a reverse signal from the back-up light switch or the park/neutral position switch and information about the GPS antenna, and then adjusts the vehicle position.

WIRING DIAGRAM

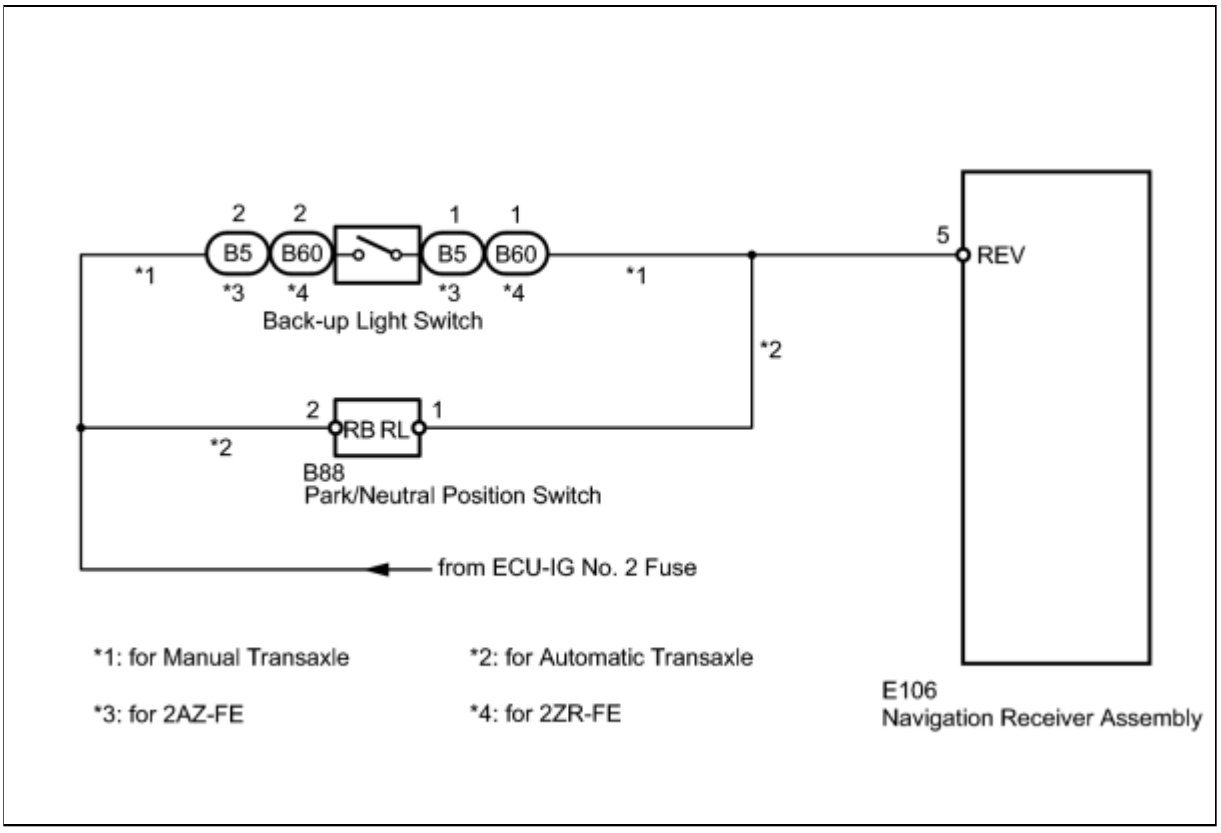

INSPECTION PROCEDURE

PROCEDURE

1.	**INSPECT NAVIGATION RECEIVER ASSEMBLY**

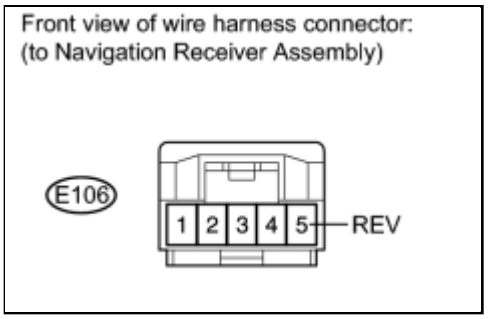

(a) Disconnect the navigation receiver assembly connector.

(b) Measure the voltage according to the value(s) in the table below.

Standard Voltage:

TESTER CONNECTION	CONDITION	SPECIFIED CONDITION
E106-5 (REV) - Body ground	Ignition switch ON Shift lever is in R	11 to 14 V
E106-5 (REV) - Body ground	Ignition switch ON Shift lever is in any position except R	Below 1 V

NG ▶ **CHECK HARNESS AND CONNECTOR (NAVIGATION RECEIVER - BACK-UP LIGHT SWITCH, PNP SWITCH)**

OK ▶ **REPLACE NAVIGATION RECEIVER ASSEMBLY**

2.	**CHECK HARNESS AND CONNECTOR (NAVIGATION RECEIVER - BACK-UP LIGHT SWITCH, PNP SWITCH)**

(a) Disconnect the navigation receiver assembly connector.

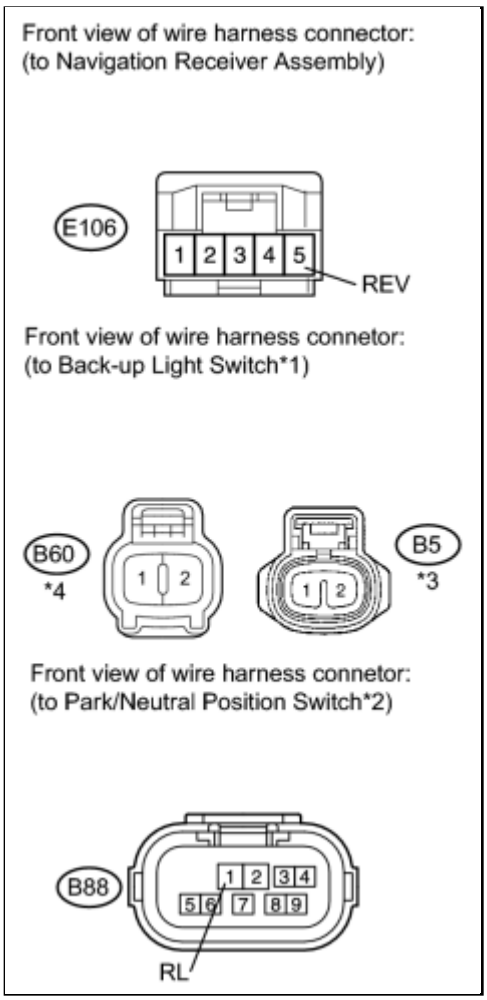

(b) Disconnect the back-up light switch*1 or the park/neutral position switch*2.

(c) Measure the resistance according to the value(s) in the table below.

Standard Resistance:

for Manual Transaxle

for Automatic Transaxle

TESTER CONNECTION	CONDITION	SPECIFIED CONDITION
E106-5 (REV) - B5-1*3	Always	Below 1 Ω
E106-5 (REV) - B60-1*4	Always	Below 1 Ω
E106-5 (REV) - Body ground	Always	10 kΩ or higher

TESTER CONNECTION	CONDITION	SPECIFIED CONDITION
E106-5 (REV) - B88-1 (RL)	Always	Below 1 Ω
E106-5 (REV) - Body ground	Always	10 kΩ or higher

HINT:

- *1: for Manual Transaxle
- *2: for Automatic Transaxle
- *3: for 2AZ-FE
- *4: for 2ZR-FE

NG ▶ **REPAIR OR REPLACE HARNESS OR CONNECTOR**

OK ▼

3.	**CHECK HARNESS AND CONNECTOR (BACK-UP LIGHT SWITCH, PNP SWITCH - BATTERY)**

(a) Measure the voltage according to the value(s) in the table below.

Standard Voltage:

for Manual Transaxle

for Automatic Transaxle

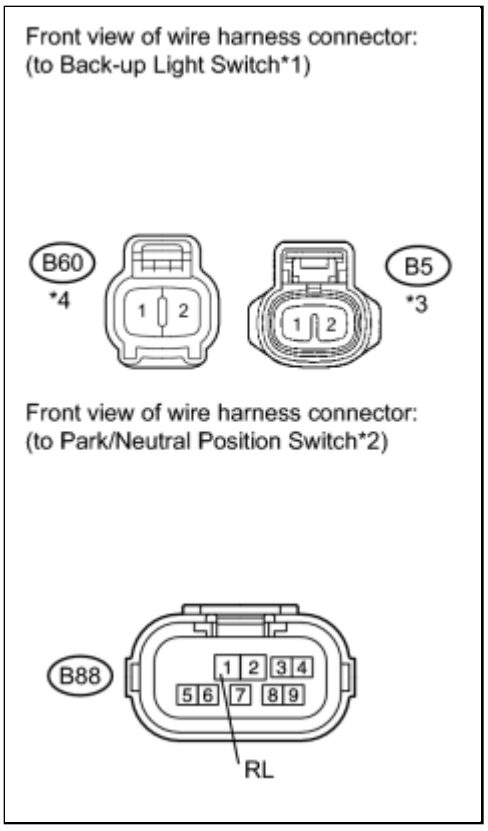

TESTER CONNECTION	CONDITION	SPECIFIED CONDITION
B5-2 - Body ground*3	Ignition switch ON	11 to 14 V
B60-2 - Body ground*4	Ignition switch ON	11 to 14 V

TESTER CONNECTION	CONDITION	SPECIFIED CONDITION
B88-2 - Body ground	Ignition switch ON	11 to 14 V

HINT:

- *1: for Manual Transaxle
- *2: for Automatic Transaxle
- *3: for 2AZ-FE
- *4: for 2ZR-FE

Result:

RESULT	PROCEED TO

NG	A
OK (for C59 Manual Transaxle)	B
OK (for E351 Manual Transaxle)	C
OK (for U250E Automatic Transaxle)	D
OK (for U341E Automatic Transaxle)	E

E ▶ **REPLACE PARK/NEUTRAL POSITION SWITCH (for U341E Automatic Transaxle)**

D ▶ **REPLACE PARK/NEUTRAL POSITION SWITCH (for U250E Automatic Transaxle)**

C ▶ **REPLACE BACK-UP LIGHT SWITCH (for E351 Manual Transaxle)**

B ▶ **REPLACE BACK-UP LIGHT SWITCH (for C59 Manual Transaxle)**

A ▶ **REPAIR OR REPLACE HARNESS OR CONNECTOR**



Last Modified: 3-10-2010	6.4 J	**From:** 200901
Model Year: 2010	**Model:** Corolla	**Doc ID:** RM0000020QE016X
Title: NAVIGATION / MULTI INFO DISPLAY: NAVIGATION SYSTEM: Sound Signal Circuit between Navigation Receiver Assembly and Stereo Jack Adapter (2010 Corolla)		

Sound Signal Circuit between Navigation Receiver Assembly and Stereo Jack Adapter

DESCRIPTION

The stereo jack adapter sends an external device sound signal to the navigation receiver assembly through this circuit.

The sound signal that has been sent is amplified by the stereo component amplifier and then is sent to the speakers.

If there is an open or short in the circuit, sound cannot be heard from the speakers even if there is no malfunction in the stereo component amplifier, navigation receiver assembly, or speakers.

WIRING DIAGRAM

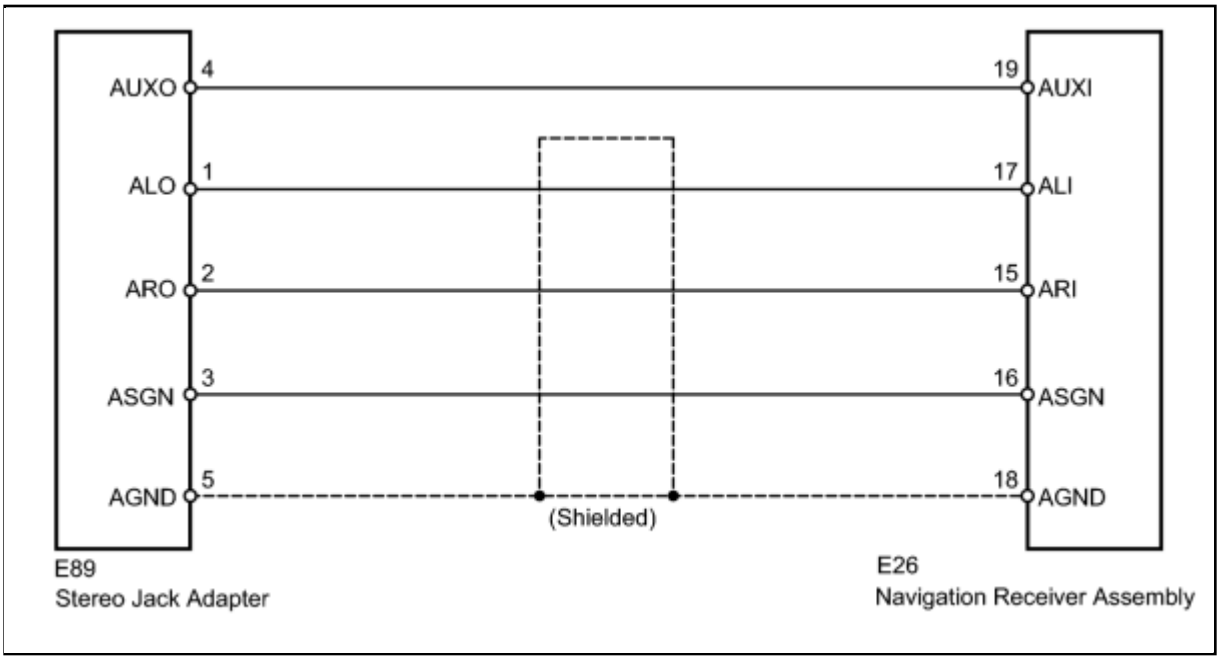

INSPECTION PROCEDURE

PROCEDURE

1.	**CHECK HARNESS AND CONNECTOR (NAVIGATION RECEIVER ASSEMBLY - STEREO JACK ADAPTER)**	(a) Disconnect the navigation receiver assembly connector.

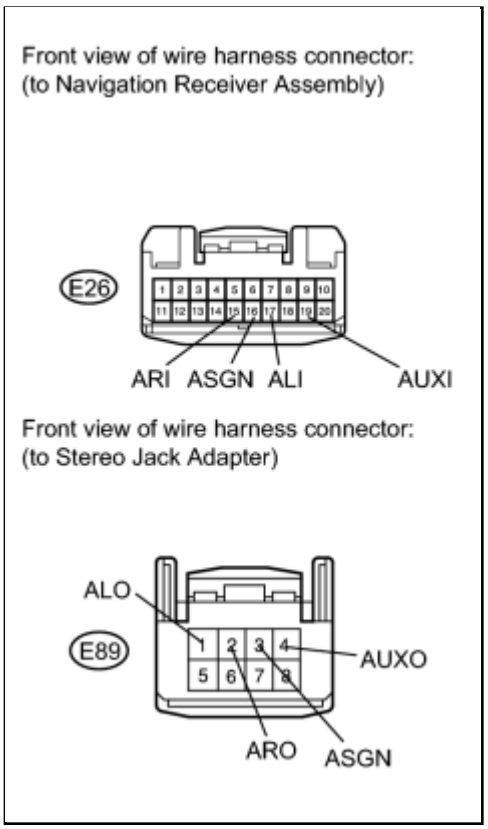

(b) Disconnect the stereo jack adapter connector.

(c) Measure the resistance according to the value(s) in the table below.

Standard Resistance:

TESTER CONNECTION	CONDITION	SPECIFIED CONDITION
E89-4 (AUXO) - E26-19 (AUXI)	Always	Below 1 Ω
E89-3 (ASGN) - E26-16 (ASGN)	Always	Below 1 Ω
E89-2 (ARO) - E26-15 (ARI)	Always	Below 1 Ω
E89-1 (ALO) - E26-17 (ALI)	Always	Below 1 Ω
E89-4 (AUXO) - Body ground	Always	10 kΩ or higher
E89-3 (ASGN) - Body ground	Always	10 kΩ or higher
E89-2 (ARO) - Body ground	Always	10 kΩ or higher
E89-1 (ALO) - Body ground	Always	10 kΩ or higher

NG ▶ **REPAIR OR REPLACE HARNESS OR CONNECTOR**

OK ▶ **PROCEED TO NEXT CIRCUIT INSPECTION SHOWN IN PROBLEM SYMPTOMS TABLE**

Last Modified: 3-10-2010	6.4 J	**From:** 200901
Model Year: 2010	**Model:** Corolla	**Doc ID:** RM000002NNF00WX
Title: NAVIGATION / MULTI INFO DISPLAY: NAVIGATION SYSTEM: Navigation Receiver Assembly Power Source Circuit (2010 Corolla)		

Navigation Receiver Assembly Power Source Circuit

DESCRIPTION

This is the power source circuit to operate the navigation receiver assembly.

WIRING DIAGRAM

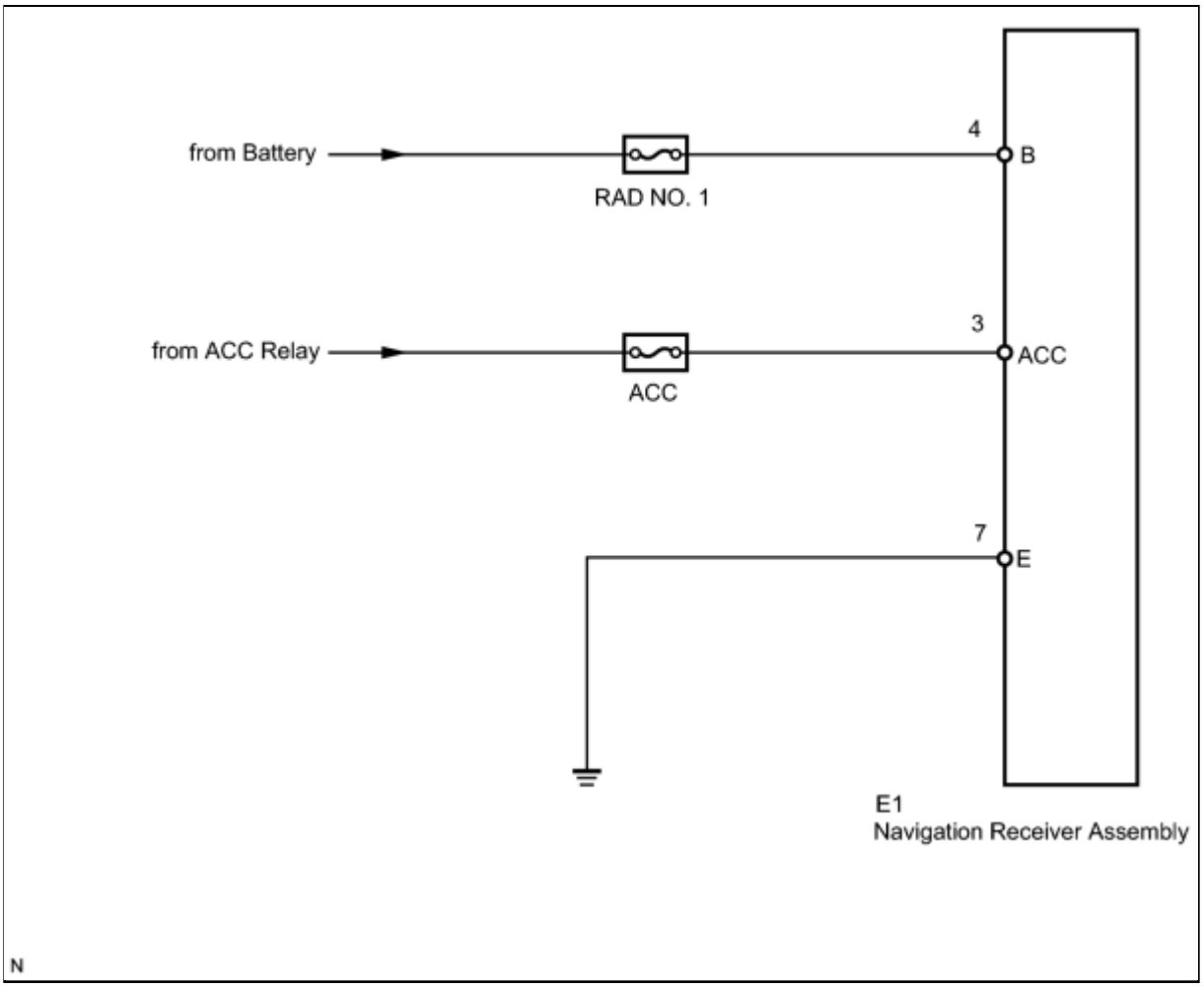

INSPECTION PROCEDURE

PROCEDURE

1.	**CHECK HARNESS AND CONNECTOR (NAVIGATION RECEIVER ASSEMBLY - BATTERY, BODY GROUND)**

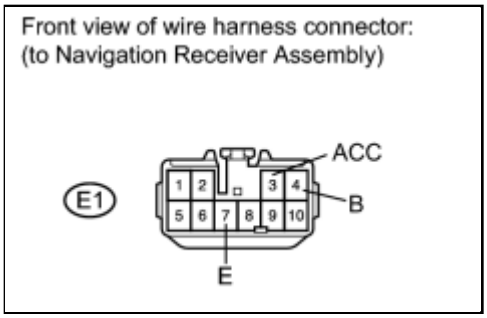

(a) Disconnect the navigation receiver assembly connector.

(b) Measure the resistance according to the value(s) in the table below.

Standard Resistance:

TESTER CONNECTION	CONDITION	SPECIFIED CONDITION
E1-7 (E) - Body ground	Always	Below 1 Ω

(c) Measure the voltage according to the value(s) in the table below.

Standard Voltage:

TESTER CONNECTION	CONDITION	SPECIFIED CONDITION
E1-4 (B) - E1-7 (E)	Always	11 to 14 V
E1-3 (ACC) - E1-7 (E)	Ignition switch ACC	11 to 14 V

NG ▶ **REPAIR OR REPLACE HARNESS OR CONNECTOR**

OK ▶ **PROCEED TO NEXT CIRCUIT INSPECTION SHOWN IN PROBLEM SYMPTOMS TABLE**

Last Modified: 3-10-2010	6.4 K	**From:** 200901
Model Year: 2010	**Model:** Corolla	**Doc ID:** RM000002W1400NX
Title: BRAKE (FRONT): FRONT BRAKE FLEXIBLE HOSE: COMPONENTS (2010 Corolla)		

COMPONENTS

ILLUSTRATION

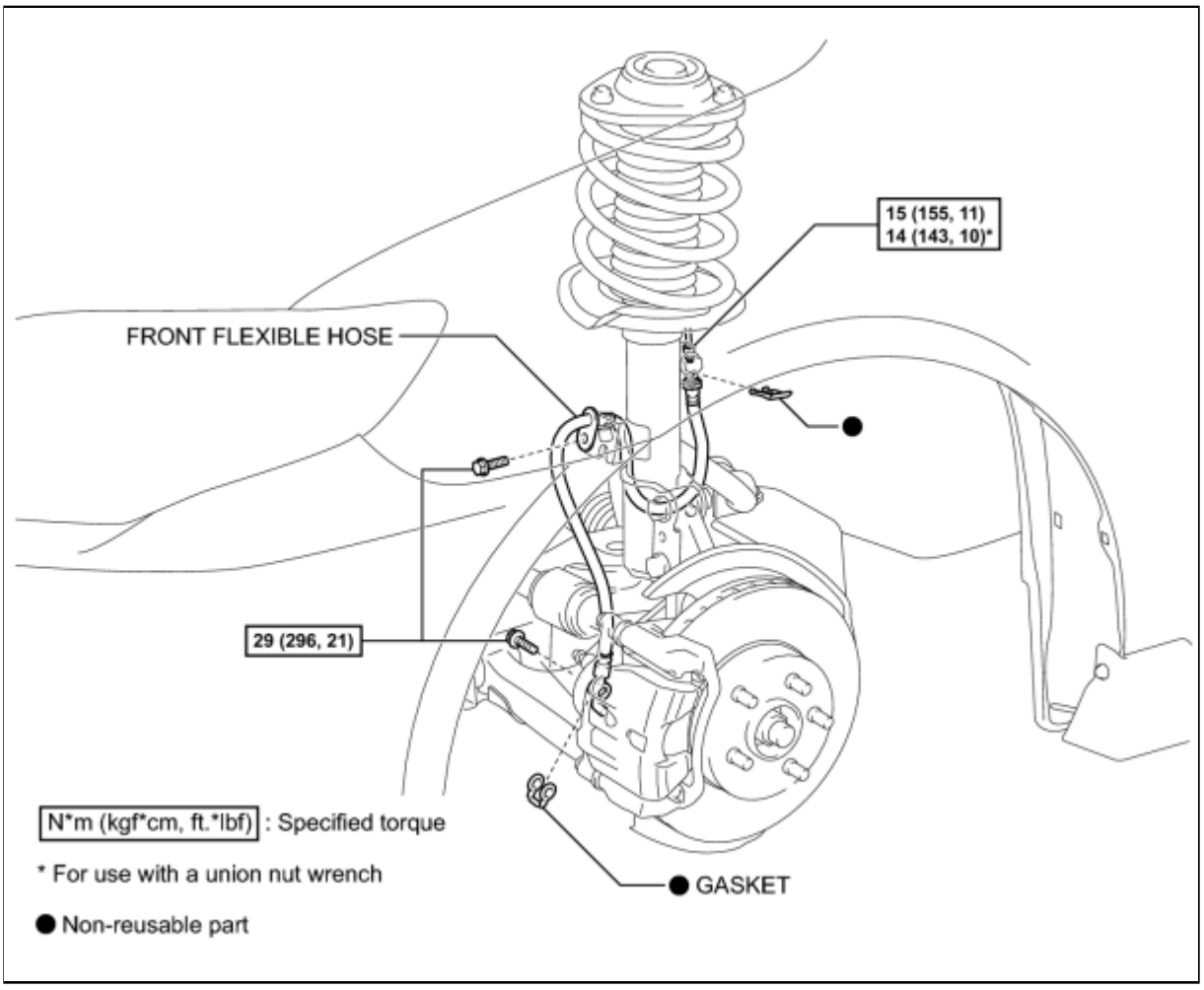

Last Modified: 3-10-2010	6.4 A	**From:** 200901
Model Year: 2010	**Model:** Corolla	**Doc ID:** RM000002W15015X
Title: BRAKE (FRONT): FRONT BRAKE FLEXIBLE HOSE: REMOVAL (2010 Corolla)		

REMOVAL

NOTICE:

If both RH side hose and LH side hose are disconnected at the same time, be sure to place identification marks indicating the position on each side.

HINT:

- Use the same procedure for the LH side and RH side.
- The following procedure listed is for the LH side.

1. DRAIN BRAKE FLUID

NOTICE:

Immediately wash off any brake fluid that comes into contact with any painted surfaces.

2. REMOVE FRONT WHEEL

3. REMOVE FRONT FLEXIBLE HOSE

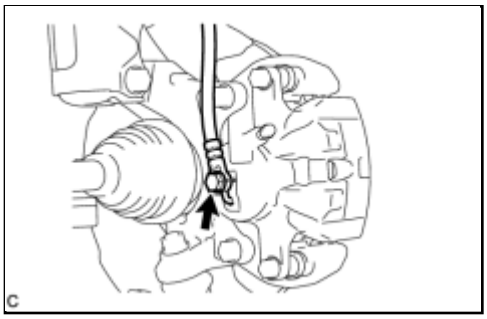

(a) Remove the union bolt and gasket, and separate the front flexible hose.

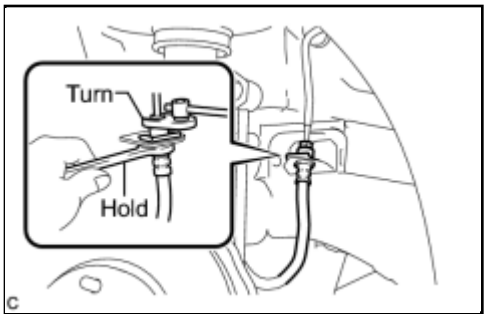

(b) Using a union nut wrench (10 mm), disconnect the brake line while holding the front flexible hose with a wrench.

NOTICE:

- Do not kink or damage the brake line.
- Do not allow any foreign matter such as dirt or dust to enter the brake line from the clip or bracket.

(c) Remove the clip.

(d) Remove the bolt and the front flexible hose from the absorber bracket.

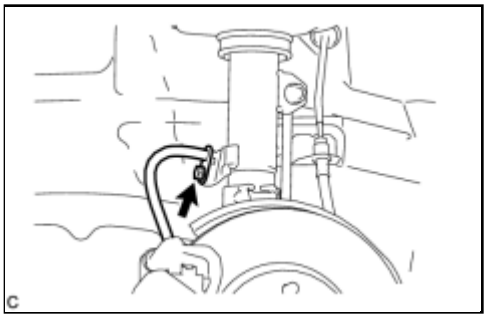
C

Last Modified: 3-10-2010	6.4 A	**From:** 200901
Model Year: 2010	**Model:** Corolla	**Doc ID:** RM000002W13011X
Title: BRAKE (FRONT): FRONT BRAKE FLEXIBLE HOSE: INSTALLATION (2010 Corolla)		

INSTALLATION

NOTICE:

- Because the left and right hoses are not interchangeable, verify the part number when installing the flexible hoses.
- If the hoses are to be reused, connect them after checking the identification marks placed when each hose was disconnected.

1. INSTALL FRONT FLEXIBLE HOSE

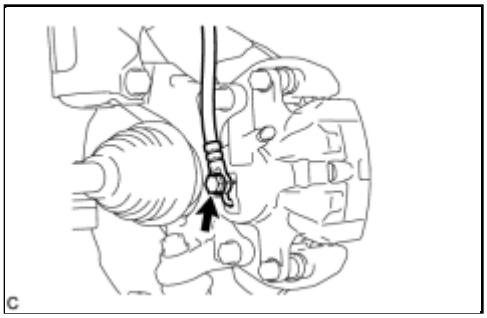

(a) Connect the front flexible hose to the disc brake cylinder assembly with the union bolt and a new gasket.

Torque: 29 N·m (296 kgf·cm, 21ft·lbf)

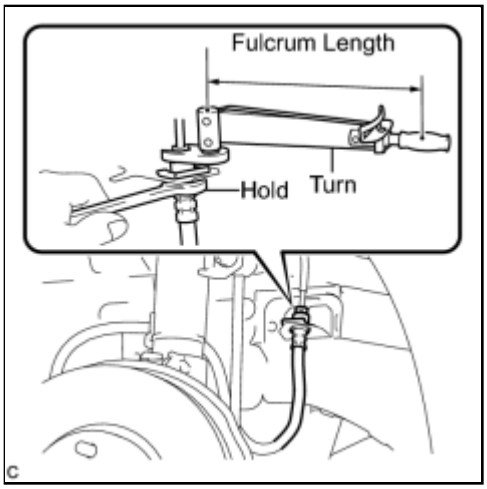

(b) Install a new clip to the front flexible hose.

NOTICE:

Install the clip as far as it will go.

(c) Using a union nut wrench (10 mm), connect the brake line to the front flexible hose while holding the flexible hose with a wrench.

without a union nut wrench - Torque: 15 N·m (155 kgf·cm, 11ft·lbf)

with a union nut wrench - Torque: 14 N·m (143 kgf·cm, 10ft·lbf)

NOTICE:

- Do not kink or damage the brake line.
- Do not allow any foreign matter such as dirt or dust to enter the brake line from the clip or

bracket.

- Use a torque wrench with a fulcrum length of 250 mm (9.84 in.).
- This torque value is effective when the union nut wrench is parallel to the torque wrench.

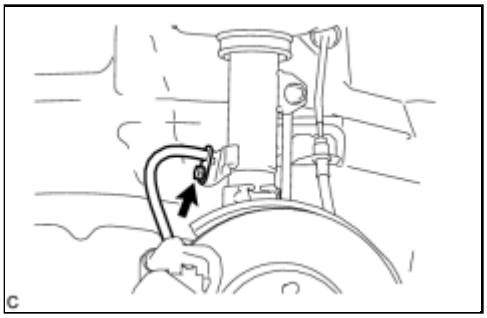

(d) Install the front flexible hose to the absorber bracket with the bolt.

Torque: 29 N·m (296 kgf·cm, 21ft·lbf)

HINT:

Install the speed sensor harness bracket first and then the front flexible hose.

2. FILL RESERVOIR WITH BRAKE FLUID INFO

3. BLEED BRAKE LINE INFO

4. INSPECT FOR BRAKE FLUID LEAK

5. INSPECT FLUID LEVEL INFO

6. INSTALL FRONT WHEEL

Torque: 103 N·m (1050 kgf·cm, 76ft·lbf)

Last Modified: 3-10-2010	6.4 K	**From:** 200901
Model Year: 2010	**Model:** Corolla	**Doc ID:** RM000002VIY00OX
Title: BRAKE (FRONT): FRONT BRAKE: COMPONENTS (2010 Corolla)		

COMPONENTS

ILLUSTRATION

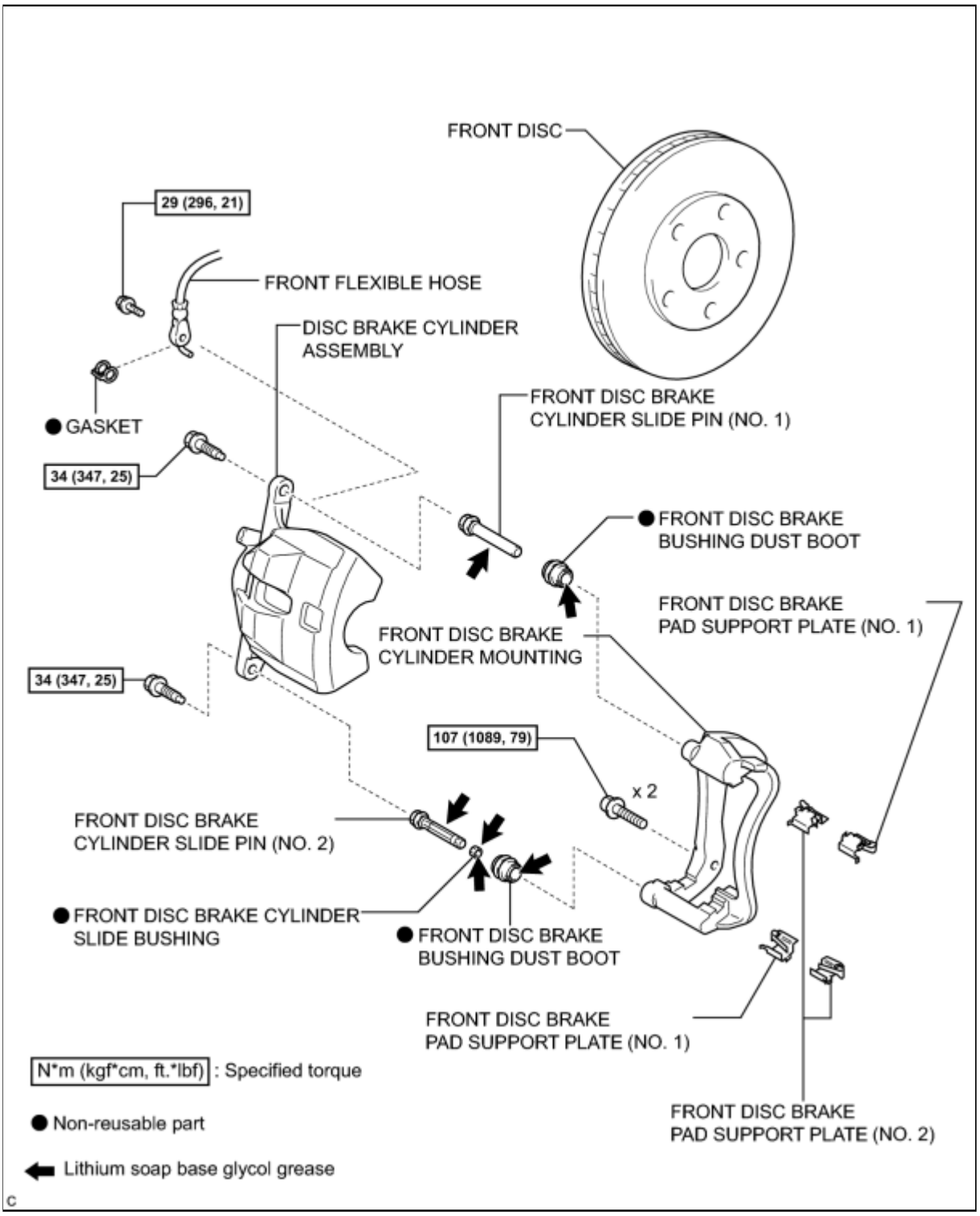

ILLUSTRATION

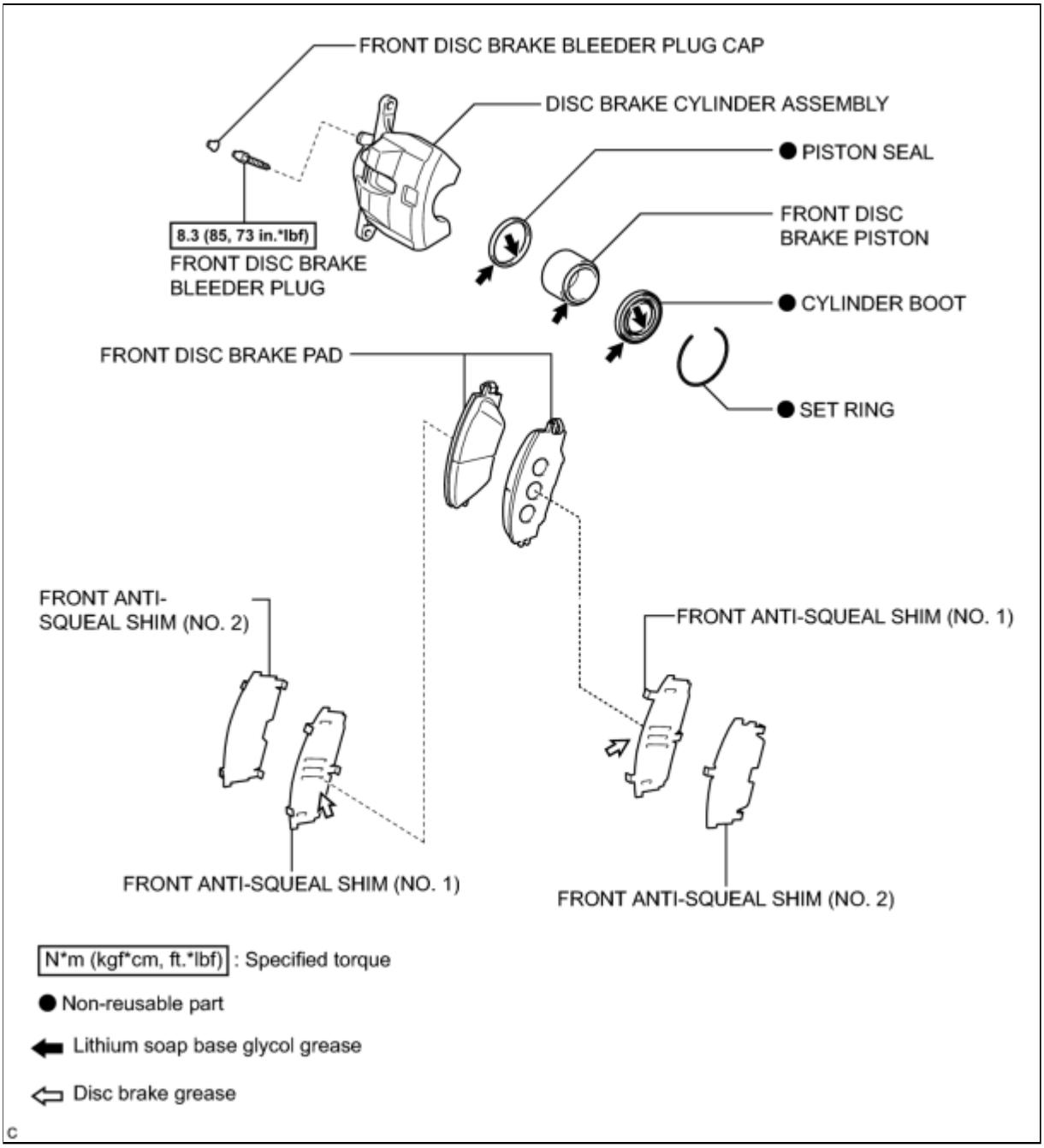

Last Modified: 3-10-2010	6.4 A	**From:** 200901
Model Year: 2010	**Model:** Corolla	**Doc ID:** RM000000P9Q021X
Title: BRAKE (FRONT): FRONT BRAKE: REMOVAL (2010 Corolla)		

REMOVAL

HINT:

- Use the same procedure for the LH side and RH side.
- The following procedure listed is for the LH side.

1. REMOVE FRONT WHEEL

2. DRAIN BRAKE FLUID

NOTICE:

Immediately wash off any brake fluid that comes into contact with any painted surfaces.

3. DISCONNECT FRONT FLEXIBLE HOSE

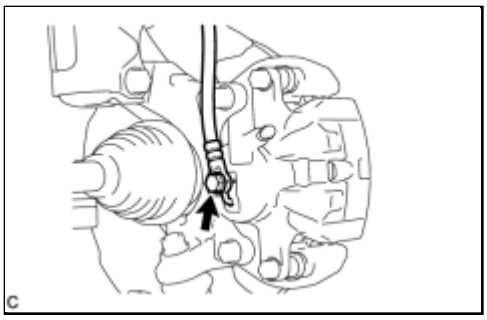

(a) Remove the union bolt and gasket, and separate the front flexible hose from the disc brake cylinder assembly.

4. REMOVE DISC BRAKE CYLINDER ASSEMBLY

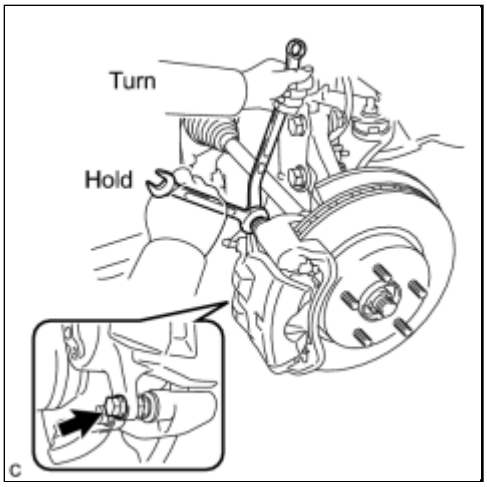

(a) Hold the front disc brake cylinder slide pin and remove the 2 bolts and disc brake cylinder assembly.

5. REMOVE FRONT DISC BRAKE PAD

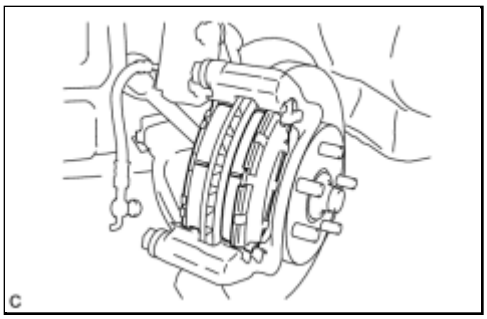

(a) Remove the 2 disc brake pads from the disc brake cylinder mounting.

6. REMOVE FRONT ANTI-SQUEAL SHIM

(a) Remove the 2 No. 1 anti-squeal shims and 2 No. 2 anti-squeal shims from the brake pads.

7. REMOVE FRONT DISC BRAKE PAD SUPPORT PLATE

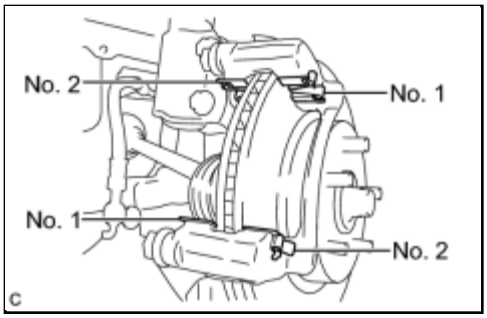

(a) Remove the 2 No. 1 disc brake pad support plates and 2 No. 2 disc brake pad support plates from the front disc brake cylinder mounting.

NOTICE:

Each front disc brake pad support plate has a different shape. Be sure to put an identification mark on each front disc brake pad support plate so that it can be reinstalled to its original position.

8. REMOVE FRONT DISC BRAKE CYLINDER SLIDE PIN

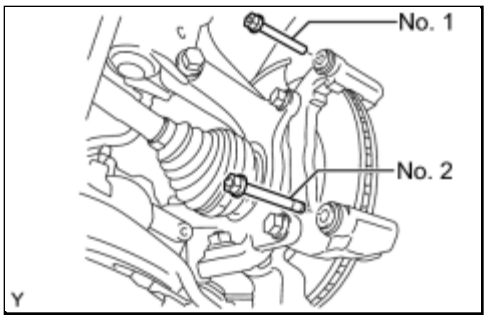

(a) Remove the No. 1 front disc brake cylinder slide pin and No. 2 front disc brake cylinder slide pin from the disc brake cylinder mounting.

9. REMOVE FRONT DISC BRAKE CYLINDER SLIDE BUSHING

(a) Using a screwdriver, remove the front disc brake cylinder slide bushing from the No. 2 front disc brake cylinder slide pin.

NOTICE:

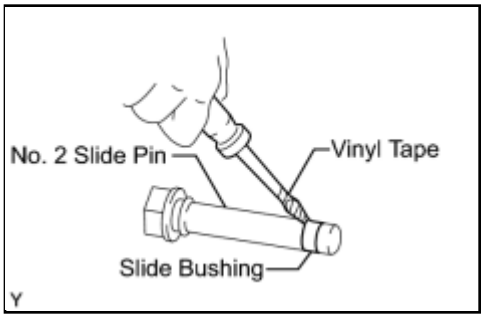

Do not damage the No. 2 front disc brake cylinder slide pin.

HINT:

Tape the screwdriver tip before use.

10. REMOVE FRONT DISC BRAKE BUSHING DUST BOOT

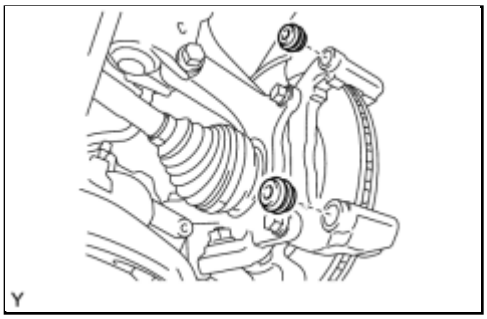

(a) Remove the 2 front disc brake bushing dust boots from the disc brake cylinder mounting.

11. REMOVE FRONT DISC BRAKE CYLINDER MOUNTING

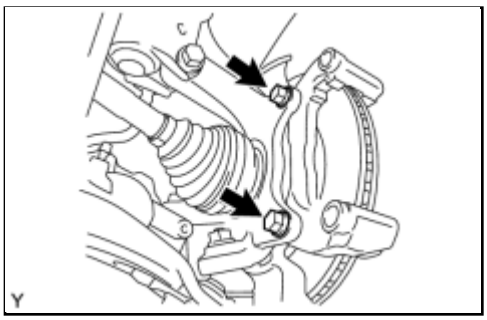

(a) Remove the 2 bolts and front disc brake cylinder mounting from the steering knuckle.

12. REMOVE FRONT DISC

(a) Put matchmarks on the disc and the axle hub, and remove the front disc.

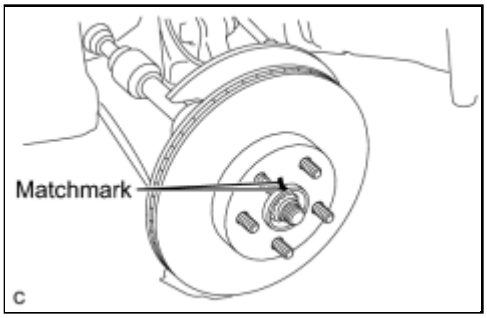
Matchmark
C

Last Modified: 3-10-2010	6.4 A	**From:** 200901
Model Year: 2010	**Model:** Corolla	**Doc ID:** RM000000ORP021X
Title: BRAKE (FRONT): FRONT BRAKE: DISASSEMBLY (2010 Corolla)		

DISASSEMBLY

1. REMOVE CYLINDER BOOT

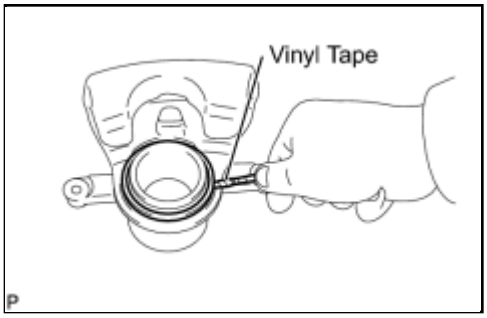

(a) Using a screwdriver, remove the cylinder boot set ring and cylinder boot from the disc brake cylinder.

NOTICE:

Be careful not to damage the brake piston or cylinder.

HINT:

Tape the screwdriver tip before use.

2. REMOVE FRONT DISC BRAKE PISTON

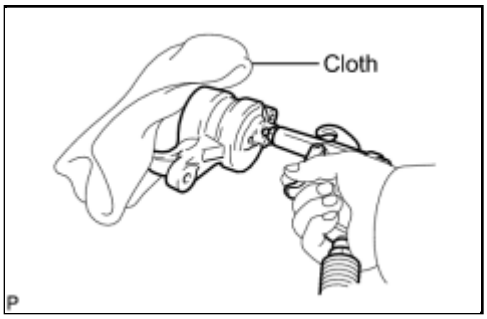

(a) Place a piece of cloth between the piston and disc brake cylinder.

(b) Apply compressed air to remove the piston from the disc brake cylinder.

CAUTION:

Do not place your fingers in front of the piston when using compressed air.

NOTICE:

Do not allow any brake fluid to spatter.

3. REMOVE PISTON SEAL

(a) Using a screwdriver, remove the piston seal from the disc brake cylinder.

NOTICE:

Do not damage the inner surface or piston seal groove of the cylinder.

HINT:

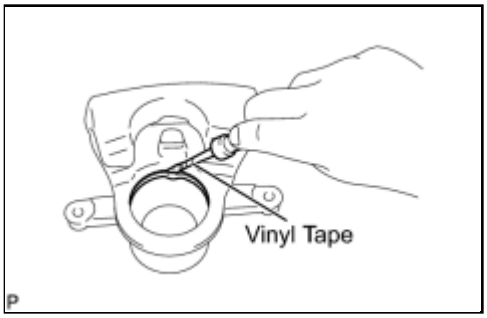

Tape the screwdriver tip before use.

4. REMOVE FRONT DISC BRAKE BLEEDER PLUG CAP

5. REMOVE FRONT DISC BRAKE BLEEDER PLUG

Last Modified: 3-10-2010	6.4 G	**From:** 200901
Model Year: 2010	**Model:** Corolla	**Doc ID:** RM000000ORN021X
Title: BRAKE (FRONT): FRONT BRAKE: INSPECTION (2010 Corolla)		

INSPECTION

1. INSPECT BRAKE CYLINDER AND PISTON

(a) Check the cylinder bore and piston for rust and scoring. If necessary, replace the disc brake cylinder and piston.

2. INSPECT PAD LINING THICKNESS

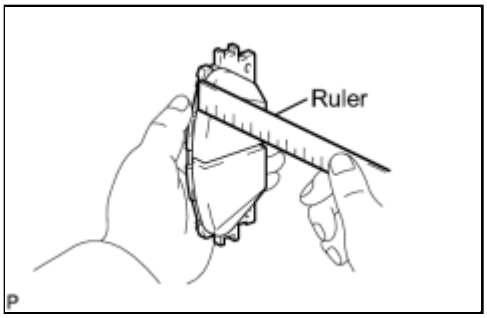

(a) Using a ruler, measure the pad lining thickness.

Standard thickness:
12.0 mm (0.472 in.)
Minimum thickness:
1.0 mm (0.0394 in.)

If the pad lining thickness is less than the minimum, replace the disc brake pads.

HINT:

Be sure to check the wear of the front disc after replacing the brake pads with new ones.

3. INSPECT FRONT DISC BRAKE PAD SUPPORT PLATE

(a) Make sure that the disc brake pad support has sufficient rebound, no deformation, cracks or wear, and that all rust and dirt are cleaned off. If necessary, replace the disc brake pad support plate.

4. INSPECT DISC THICKNESS

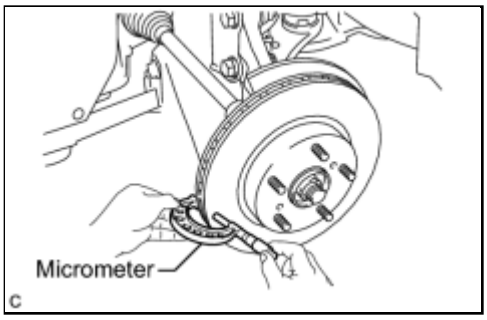

(a) Using a micrometer, measure the disc thickness.

Standard thickness:
22.0 mm (0.866 in.)
Minimum thickness:
19.0 mm (0.748 in.)

If the disc thickness is less than the minimum, replace the front disc.

5. INSPECT DISC RUNOUT

(a) Inspect the front axle hub bearing looseness and front axle hub runout INFO .

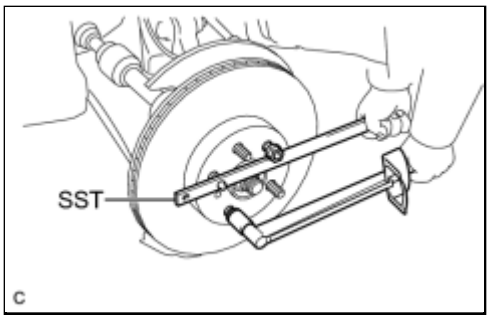

(b) Using SST to hold the disc, tighten the disc with the 5 nuts.

SST: 09330-00021

Torque: 103 N·m (1050 kgf·cm, 76ft·lbf)

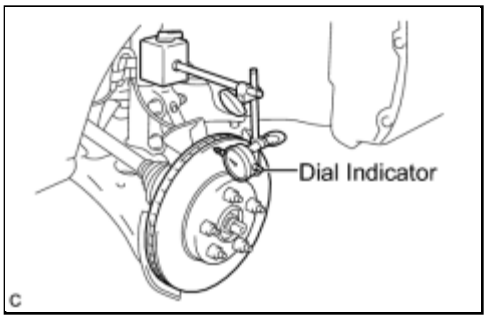

(c) Using a dial indicator, measure the disc runout 10 mm (0.394 in.) away from the outer edge of the front disc.

Maximum disc runout:
0.05 mm (0.00197 in.)

If the runout exceeds the maximum value, change the installation position of the disc to minimize the runout. If the runout exceeds the maximum even when the installation position is changed, grind the disc. If the disc thickness is less than the minimum, replace the front disc.

(d) Remove the 5 nuts and front disc.

Last Modified: 3-10-2010	6.4 A	**From:** 200901
Model Year: 2010	**Model:** Corolla	**Doc ID:** RM000000P9P021X
Title: BRAKE (FRONT): FRONT BRAKE: INSTALLATION (2010 Corolla)		

INSTALLATION

1. INSTALL FRONT DISC

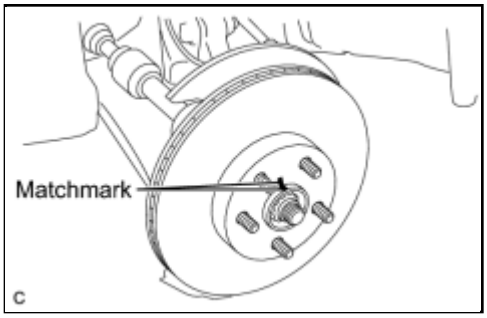

(a) Align the matchmarks of the disc and axle hub, and install the disc.

NOTICE:

When replacing the disc with a new one, select the installation position where the front disc has the minimal runout.

2. INSTALL FRONT DISC BRAKE CYLINDER MOUNTING

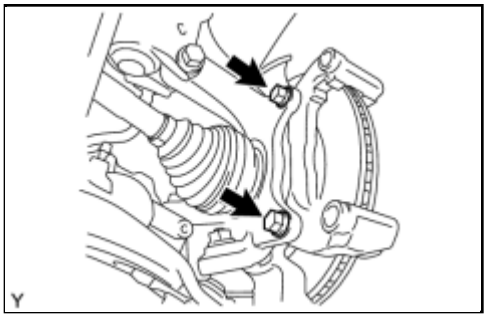

(a) Install the disc brake cylinder mounting to the steering knuckle with the 2 bolts.

Torque: 107 N·m (1089 kgf·cm, 79ft·lbf)

3. INSTALL FRONT DISC BRAKE BUSHING DUST BOOT

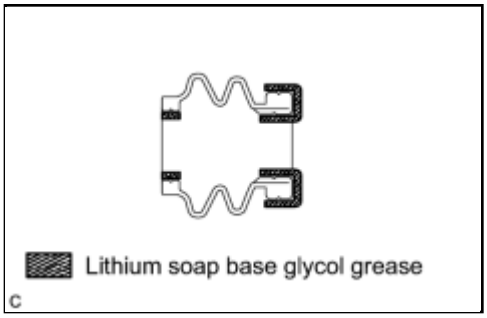

(a) Apply a light layer of lithium soap base glycol grease to the entire circumference of 2 new front disc brake bushing dust boots.

HINT:

Apply at least 0.3 g (0.01 oz.) of lithium soap base glycol grease to each front disc brake bushing dust boot.

(b) Install the 2 front disc brake bushing dust boots to the

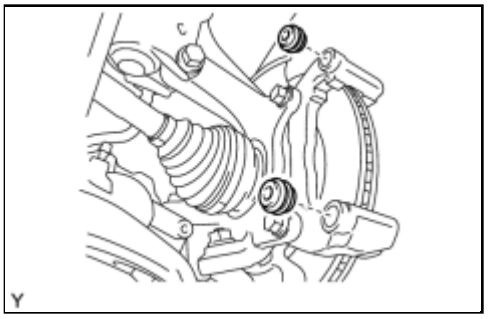

disc brake cylinder mounting.

4. INSTALL FRONT DISC BRAKE CYLINDER SLIDE BUSHING

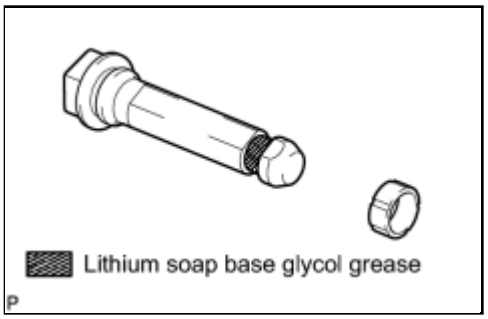

(a) Apply a light layer of lithium soap base glycol grease to the contact surface of the No. 2 front disc brake cylinder slide pin.

(b) Install a new front disc brake cylinder slide bushing to the No. 2 front disc brake cylinder slide pin.

5. INSTALL FRONT DISC BRAKE CYLINDER SLIDE PIN

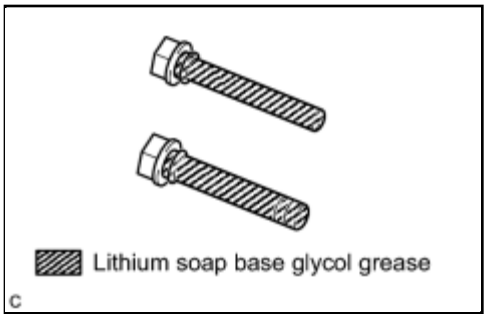

(a) Apply a light layer of lithium soap base glycol grease to the sliding and sealing surfaces of the No. 1 front disc brake cylinder slide pin and No. 2 front disc brake cylinder slide pin.

(b) Install the No. 1 front disc brake cylinder slide pin and No. 2 front disc brake cylinder slide pin to the cylinder mounting.

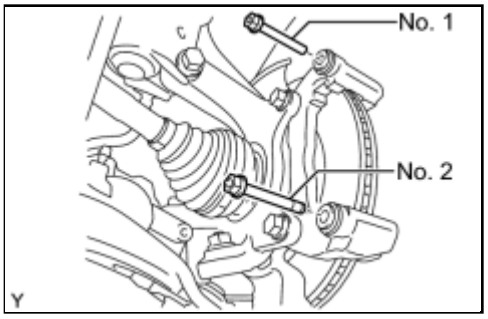

6. INSTALL FRONT DISC BRAKE PAD SUPPORT PLATE

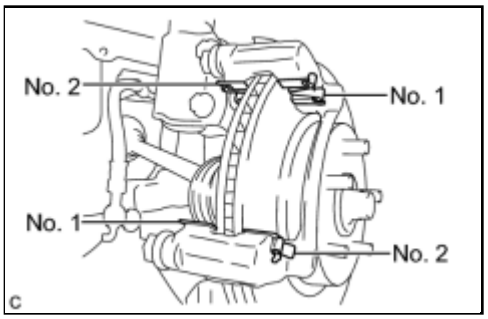

(a) Install the 2 No. 1 front disc brake pad support plates and 2 No. 2 front disc brake pad support plates to the front disc brake cylinder mounting.

NOTICE:

Be sure to install each front disc brake pad support plate in the correct position and direction.

7. INSTALL FRONT ANTI-SQUEAL SHIM

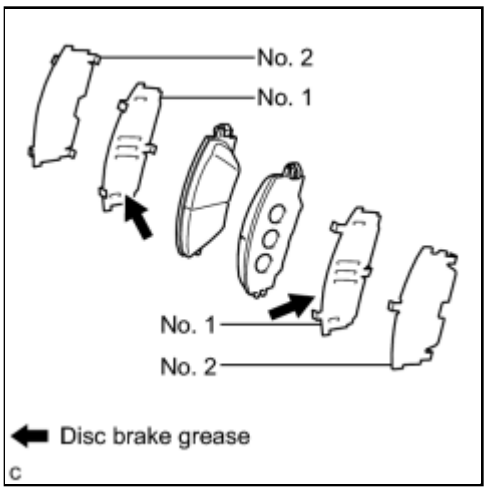

(a) Apply disc brake grease to both sides of each No. 1 anti-squeal shim.

NOTICE:

- When replacing worn pads, the anti-squeal shims must be replaced together with the pads.
- Install the shims in the correct positions and directions.
- Apply disc brake grease to the area that contacts the anti-squeal shims.
- Disc brake grease can seep out slightly from the area where the anti-squeal shim is installed.
- Make sure that disc brake grease is not applied onto the lining surface.

(b) Install the No. 1 anti-squeal shim and No. 2 anti-squeal shim to each brake pad.

8. INSTALL FRONT DISC BRAKE PAD

(a) Install the 2 disc brake pads to the disc brake cylinder mounting.

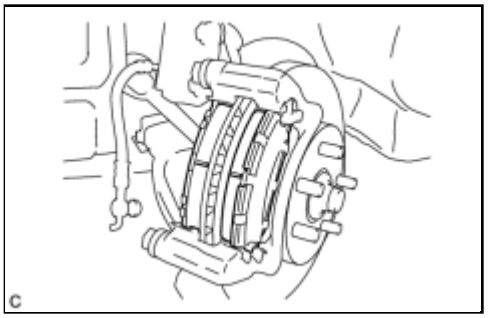

NOTICE:

There should be no oil or grease on the friction surfaces of the disc brake pads or the front disc.

9. INSTALL DISC BRAKE CYLINDER ASSEMBLY

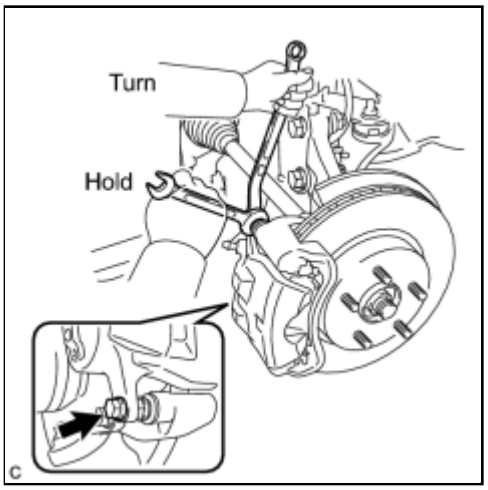

(a) Hold the front disc brake cylinder slide pin and install the disc brake cylinder assembly to the disc brake cylinder mounting with the 2 bolts.

Torque: 34 N·m (347 kgf·cm, 25ft·lbf)

10. CONNECT FRONT FLEXIBLE HOSE

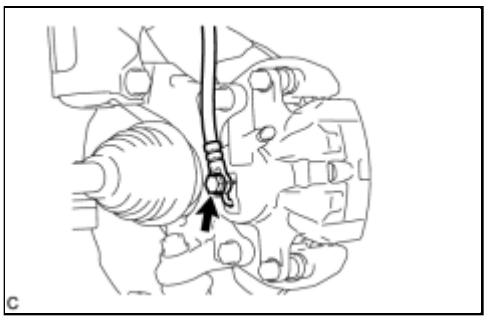

(a) Connect the front flexible hose to the disc brake cylinder assembly with the union bolt and a new gasket.

Torque: 29 N·m (296 kgf·cm, 21ft·lbf)

HINT:

Install the flexible hose lock securely into the lock hole in the disc brake cylinder.

11. FILL RESERVOIR WITH BRAKE FLUID INFO

12. BLEED BRAKE LINE INFO

13. INSPECT FOR BRAKE FLUID LEAK

14. INSPECT FLUID LEVEL INFO

15. INSTALL FRONT WHEEL

Torque: 103 N·m (1050 kgf·cm, 76ft·lbf)

Last Modified: 3-10-2010	6.4 A	**From:** 200901
Model Year: 2010	**Model:** Corolla	**Doc ID:** RM000000ORQ021X
Title: BRAKE (FRONT): FRONT BRAKE: REASSEMBLY (2010 Corolla)		

REASSEMBLY

1. TEMPORARILY TIGHTEN FRONT DISC BRAKE BLEEDER PLUG

HINT:

Fully tighten the front disc brake bleeder plug after bleeding any air left in the system.

2. INSTALL FRONT DISC BRAKE BLEEDER PLUG CAP

3. INSTALL PISTON SEAL

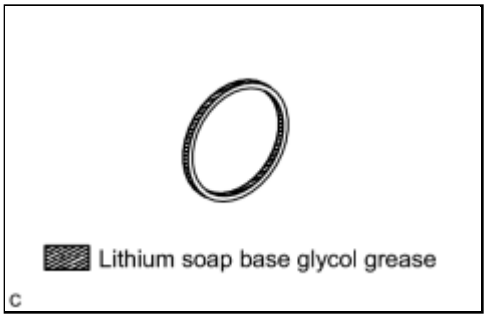

(a) Apply a light layer of lithium soap base glycol grease to the entire circumference of a new piston seal.

(b) Install the piston seal to the disc brake cylinder assembly.

NOTICE:

Securely install the piston seal into the groove of the disc brake cylinder.

4. INSTALL FRONT DISC BRAKE PISTON

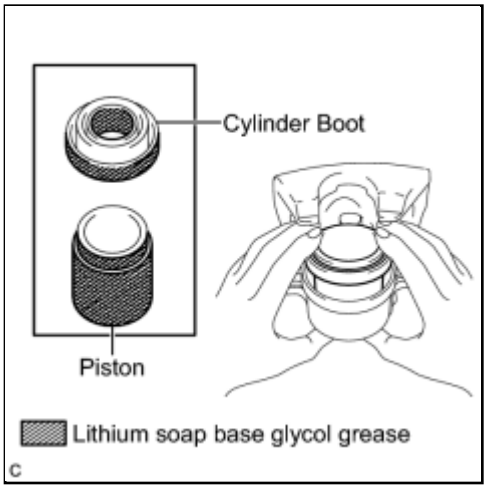

(a) Apply a light layer of lithium soap base glycol grease to the entire circumference of a new cylinder boot.

(b) Install the cylinder boot to the front disc brake piston.

(c) Apply a light layer of lithium soap base glycol grease to the contact surfaces of the front disc brake piston, and install it to the disc brake cylinder assembly.

NOTICE:

Do not install the front disc brake piston forcibly in the disc brake cylinder assembly.

5. INSTALL CYLINDER BOOT

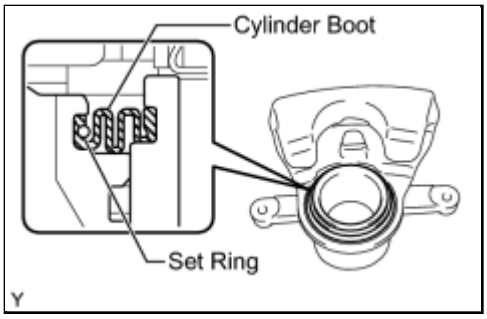

(a) Install the cylinder boot to the disc brake cylinder assembly.

NOTICE:

Securely install the cylinder boot to the groove of the disc brake cylinder and piston.

(b) Using a screwdriver, install a new set ring.

NOTICE:

- Securely install the set ring to the outer groove of the cylinder boot.
- Do not damage the cylinder boot.

HINT:

Tape the screwdriver tip before use.

Last Modified: 3-10-2010	6.4 K	**From:** 200901
Model Year: 2010	**Model:** Corolla	**Doc ID:** RM0000003L100RX
Title: BRAKE (REAR): REAR BRAKE FLEXIBLE HOSE: COMPONENTS (2010 Corolla)		

COMPONENTS

ILLUSTRATION

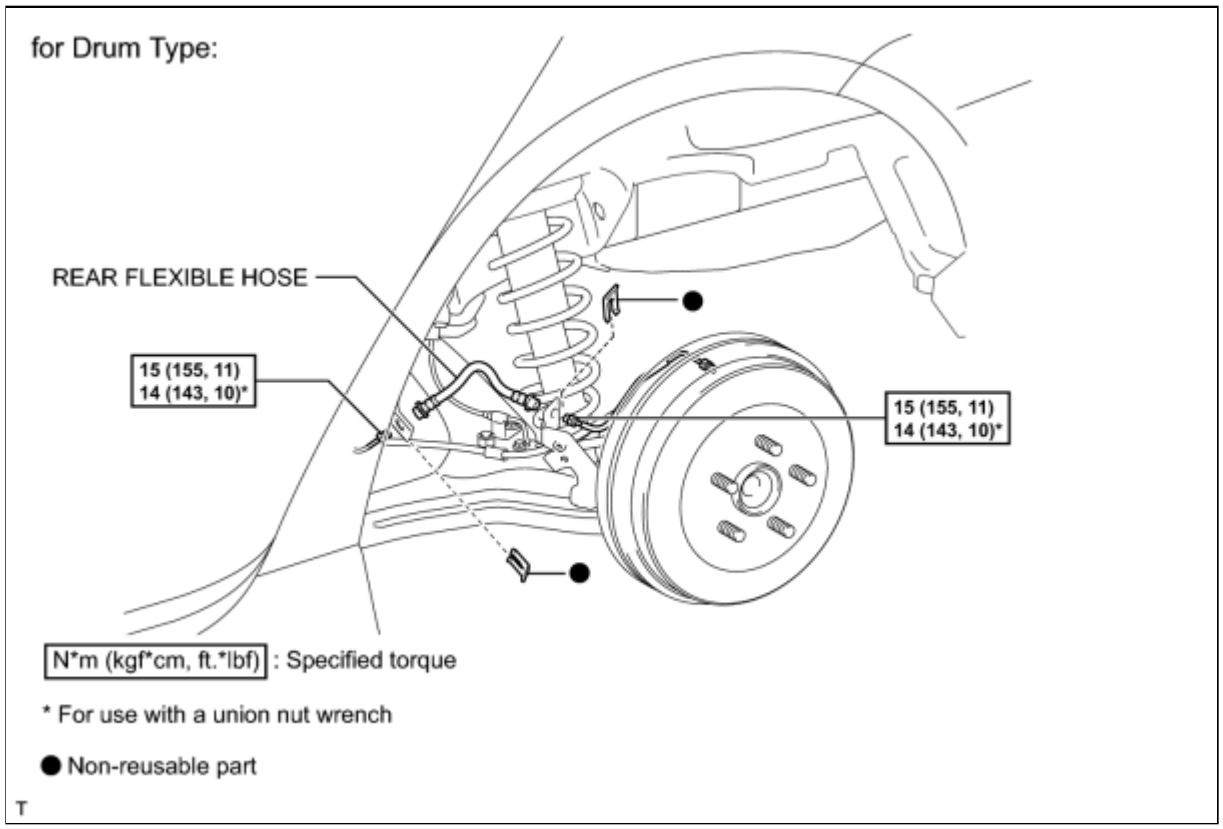

ILLUSTRATION

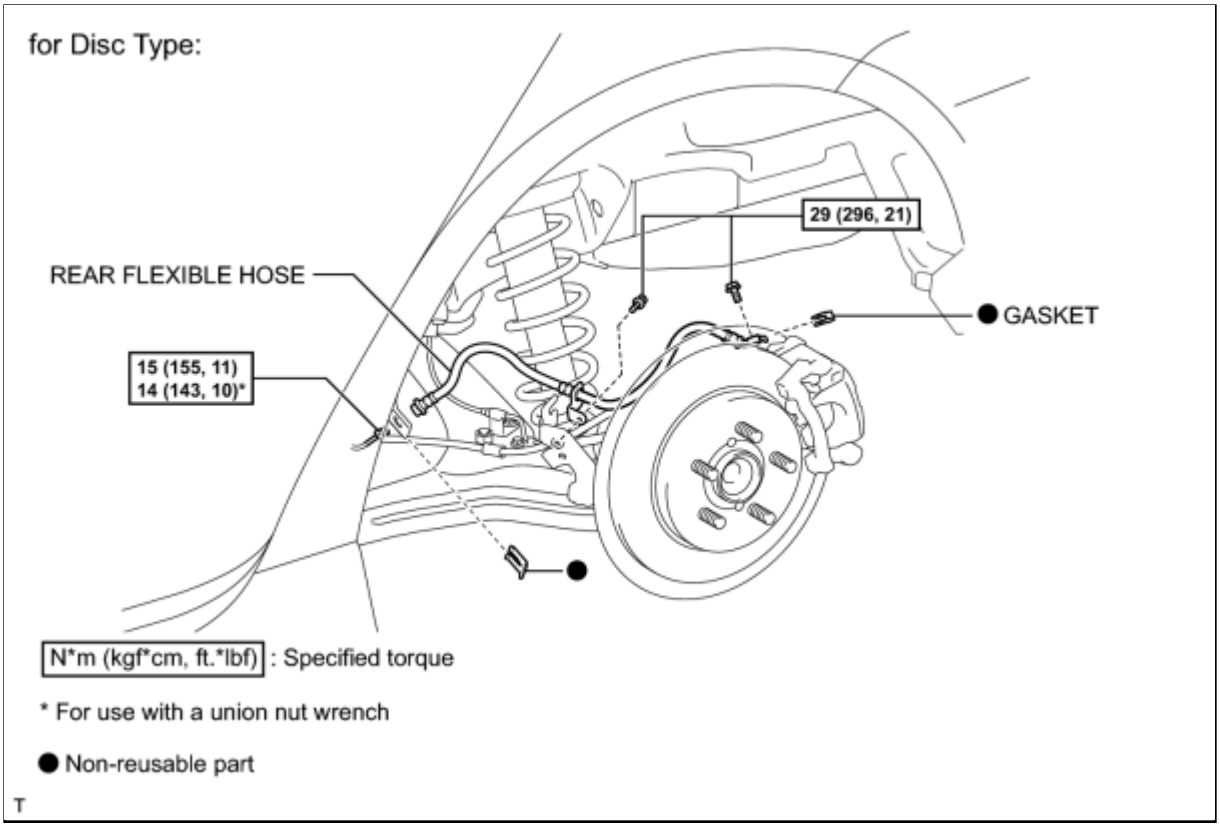
for Disc Type:
29 (296, 21)
REAR FLEXIBLE HOSE
GASKET
15 (155, 11)
14 (143, 10)*
N*m (kgf*cm, ft.*lbf) : Specified torque
* For use with a union nut wrench
Non-reusable part

T

Last Modified: 3-10-2010	6.4 A	**From:** 200901
Model Year: 2010	**Model:** Corolla	**Doc ID:** RM0000003L200RX
Title: BRAKE (REAR): REAR BRAKE FLEXIBLE HOSE: REMOVAL (2010 Corolla)		

REMOVAL

NOTICE:

If both the RH side hose and LH side hose are disconnected at the same time, be sure to place identification marks indicating the position on each side.

HINT:

- Use the same procedure for the LH side and RH side.
- The following procedure listed is for the LH side.

1. REMOVE REAR WHEEL

2. DRAIN BRAKE FLUID

NOTICE:

Immediately wash off any brake fluid that comes into contact with any painted surfaces.

3. REMOVE REAR FLEXIBLE HOSE (for Drum Type)

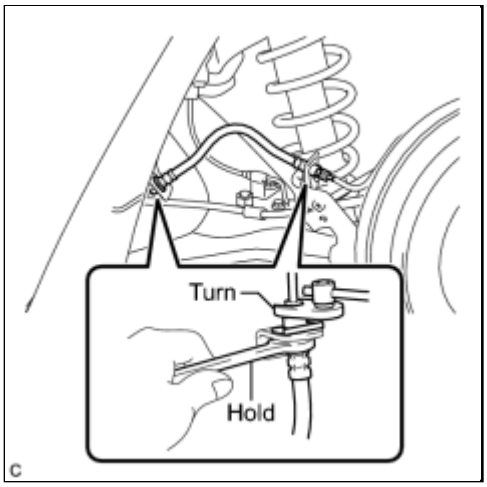

(a) Using a union nut wrench (10 mm), disconnect the 2 brake lines while holding the rear flexible hose with a wrench.

NOTICE:

- Do not kink or damage the brake line.
- Do not allow any foreign matter such as dirt and dust to enter the brake line.

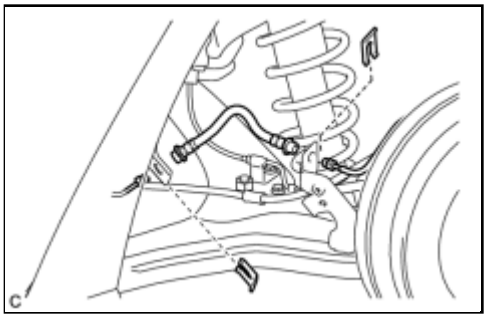

(b) Remove the 2 clips and rear flexible hose.

4. REMOVE REAR FLEXIBLE HOSE (for Disc Type)

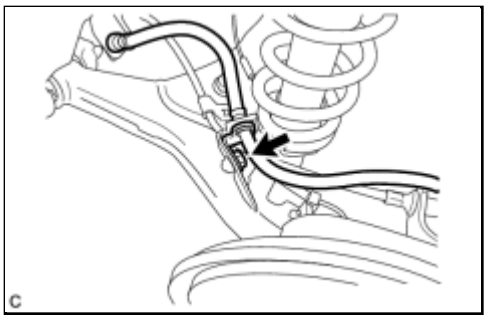

(a) Remove the bolt and separate the rear flexible hose from the rear axle beam.

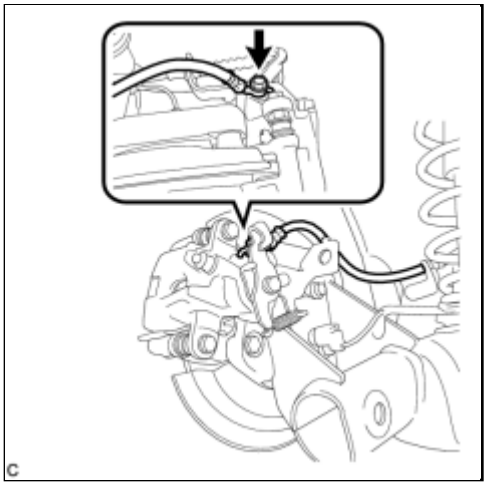

(b) Remove the union bolt and gasket, and separate the rear flexible hose from the rear disc brake cylinder assembly.

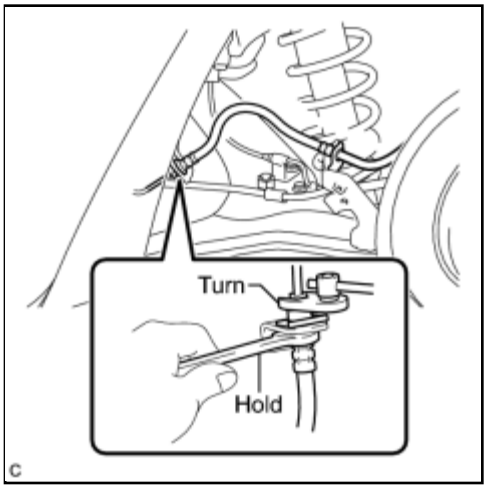

(c) Using a union nut wrench (10 mm), disconnect the brake line while holding the rear flexible hose with a wrench.

NOTICE:

- Do not kink or damage the brake line.
- Do not allow any foreign matter such as dirt and dust to enter the brake line.

(d) Remove the clip and rear flexible hose.

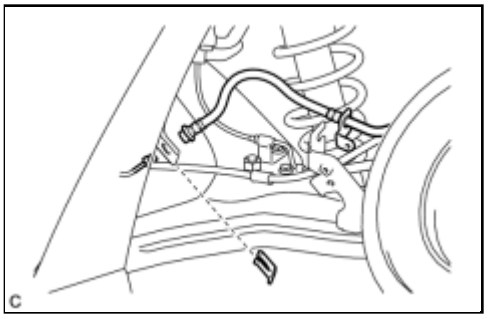
C

Last Modified: 3-10-2010	6.4 A	**From:** 200901
Model Year: 2010	**Model:** Corolla	**Doc ID:** RM0000003L000RX
Title: BRAKE (REAR): REAR BRAKE FLEXIBLE HOSE: INSTALLATION (2010 Corolla)		

INSTALLATION

NOTICE:

- Because the left and right rear flexible hoses are not interchangeable, verify the part number when installing the flexible hoses.
- If the hoses are to be reused, connect them after checking the identification marks placed when each hose was disconnected.

1. INSTALL REAR FLEXIBLE HOSE (for Drum Type)

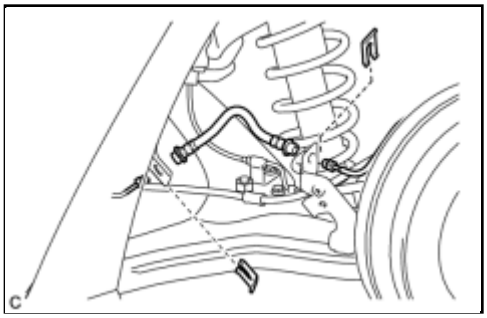

(a) Install the rear flexible hose with 2 new clips.

NOTICE:

Install the clip as far as it will go.

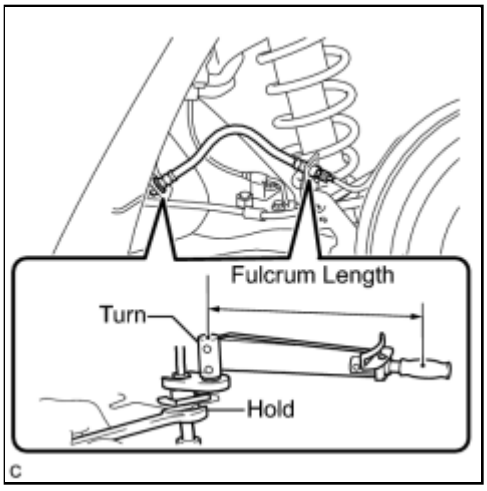

(b) Using a union nut wrench (10 mm), connect the 2 brake lines to the rear flexible hose while holding the rear flexible hose with a wrench.

without a union nut wrench - Torque: 15 N·m (155 kgf·cm, 11ft·lbf)

with a union nut wrench - Torque: 14 N·m (143 kgf·cm, 10ft·lbf)

NOTICE:

- Do not kink or damage the brake line.
- Do not allow any foreign matter such as dirt and dust to enter the brake line.
- Use a torque wrench with a fulcrum length of 250 mm (9.84 in.).
- This torque value is effective when the union nut wrench is parallel to the torque wrench.

2. INSTALL REAR FLEXIBLE HOSE (for Disc Type)

(a) Install the rear flexible hose with a new clip.

NOTICE:

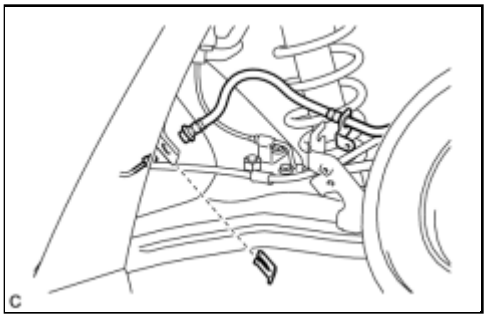

Install the clip as far as it will go.

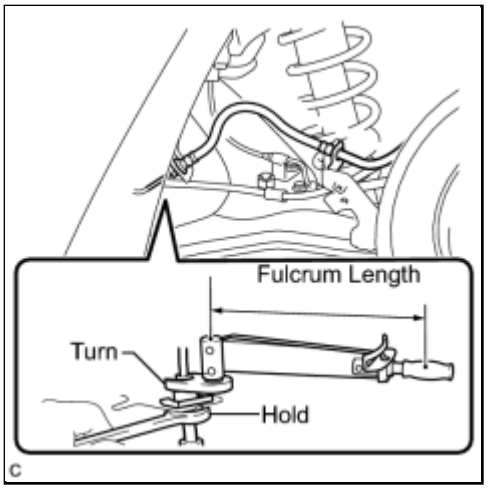

(b) Using a union nut wrench (10 mm), connect the brake line to the rear flexible hose while holding the rear flexible hose with a wrench.

without a union nut wrench - Torque: 15 N·m (155 kgf·cm, 11ft·lbf)

with a union nut wrench - Torque: 14 N·m (143 kgf·cm, 10ft·lbf)

NOTICE:

- Do not kink or damage the brake line.
- Do not allow any foreign matter such as dirt and dust to enter the brake line.
- Use a torque wrench with a fulcrum length of 250 mm (9.84 in.).
- This torque value is effective when the union nut wrench is parallel to the torque wrench.

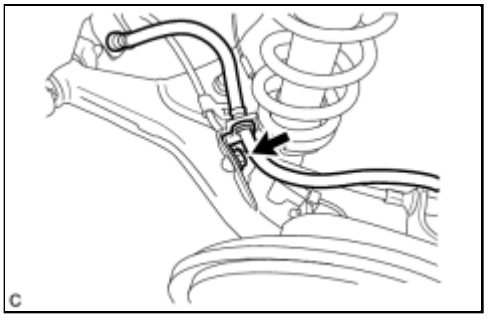

(c) Install the rear flexible hose to the rear axle beam with the bolt.

Torque: 29 N·m (296 kgf·cm, 21ft·lbf)

(d) Install the rear flexible hose to the rear disc brake cylinder assembly with a new gasket and the union bolt.

Torque: 29 N·m (296 kgf·cm, 21ft·lbf)

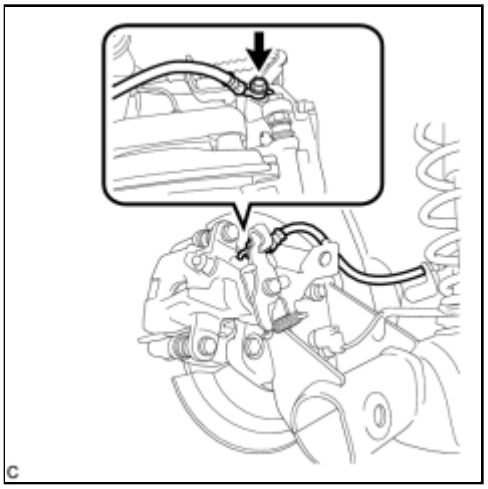

3. FILL RESERVOIR WITH BRAKE FLUID INFO

4. BLEED BRAKE LINE INFO

5. INSPECT FOR BRAKE FLUID LEAK

6. INSPECT FLUID LEVEL INFO

7. INSTALL REAR WHEEL

Torque: 103 N·m (1050 kgf·cm, 76ft·lbf)

Last Modified: 3-10-2010	6.4 A	**From:** 200901
Model Year: 2010	**Model:** Corolla	**Doc ID:** RM000001E9F01FX
Title: BRAKE (REAR): REAR BRAKE (for Disc Type): REMOVAL (2010 Corolla)		

REMOVAL

HINT:

- Use the same procedure for the LH side and RH side.
- The following procedure listed is for the LH side.

1. REMOVE LOWER INSTRUMENT PANEL FINISH PANEL LH INFO

2. REMOVE LOWER INSTRUMENT PANEL FINISH PANEL RH INFO

3. REMOVE SHIFT LEVER KNOB SUB-ASSEMBLY (for Manual Transaxle) INFO

4. REMOVE SHIFT LEVER KNOB SUB-ASSEMBLY (for Automatic Transaxle) INFO

5. REMOVE CENTER NO. 1 INSTRUMENT CLUSTER FINISH PANEL ASSEMBLY (for Manual Transaxle) INFO

6. REMOVE CENTER NO. 1 INSTRUMENT CLUSTER FINISH PANEL ASSEMBLY (for Automatic Transaxle) INFO

7. REMOVE UPPER CONSOLE PANEL SUB-ASSEMBLY INFO

8. REMOVE REAR WHEEL

9. DRAIN BRAKE FLUID

NOTICE:

Immediately wash off any brake fluid that comes into contact with any painted surfaces.

10. LOOSEN PARKING BRAKE CABLE

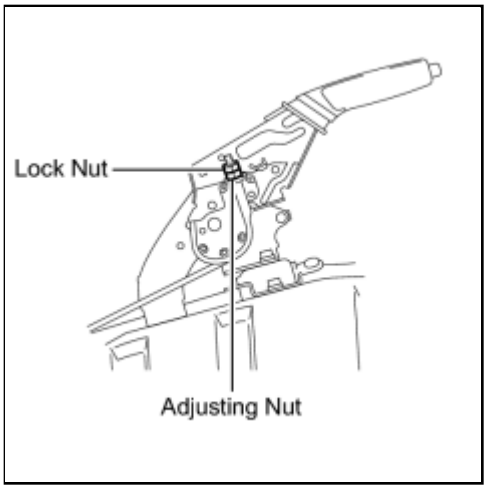

(a) Loosen the lock nut and adjusting nu to completely release the parking brake cable.

11. REMOVE PARKING BRAKE LEVER PROTECTOR INFO

12. DISCONNECT NO. 3 PARKING BRAKE CABLE ASSEMBLY

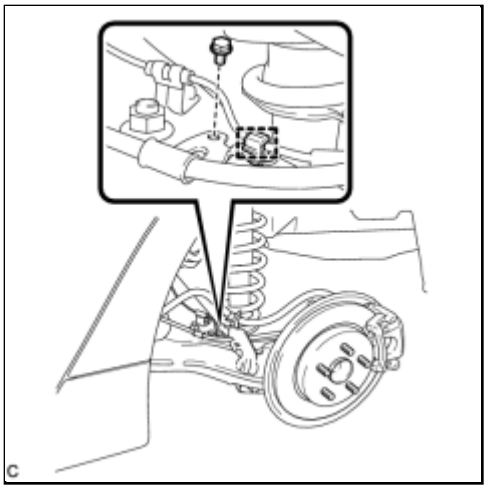

(a) Disengage the clamp from the No. 3 parking brake cable assembly.

(b) Remove the bolt.

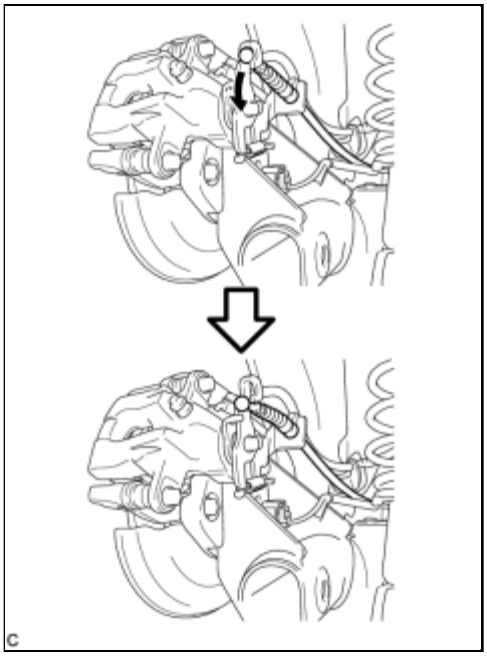

(c) Separate the No. 3 parking brake cable assembly from the rear disc brake cylinder assembly.

(d) Separate the No. 3 parking brake cable assembly from the rear disc brake cylinder assembly.

HINT:

Insert an offset wrench (14 mm) at the base of the No. 3 parking brake cable assembly as shown in the illustration to disengage the

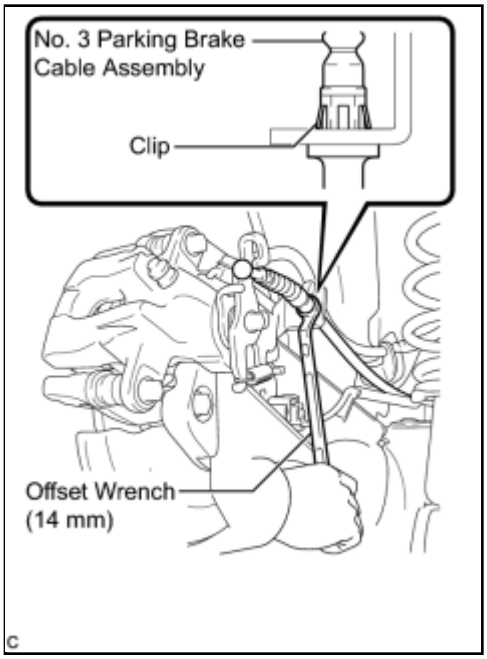

clip. Pull out the No. 3 parking brake cable assembly from the rear disc brake cylinder assembly.

13. SEPARATE REAR BRAKE FLEXIBLE HOSE

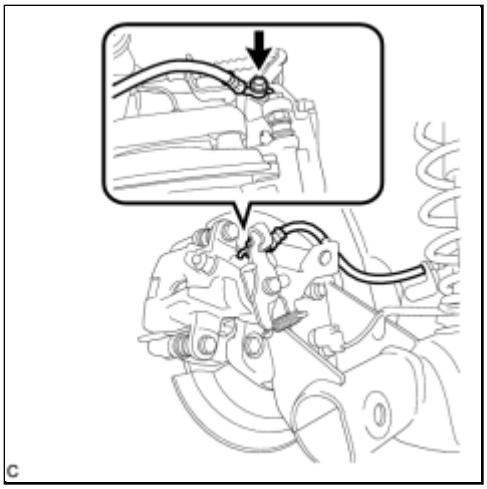

(a) Remove the union bolt and gasket, and separate the rear brake flexible hose from the rear disc brake cylinder assembly.

14. REMOVE REAR DISC BRAKE CYLINDER ASSEMBLY

(a) Hold the rear disc brake slide pin and remove the 2 bolts and rear disc brake cylinder assembly.

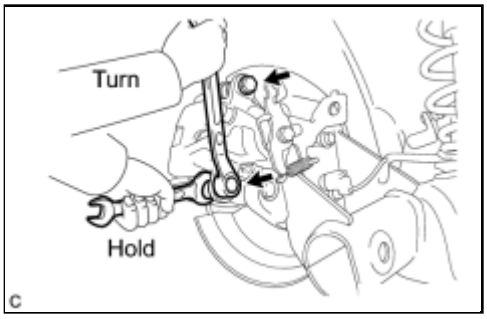

15. REMOVE REAR DISC BRAKE PAD

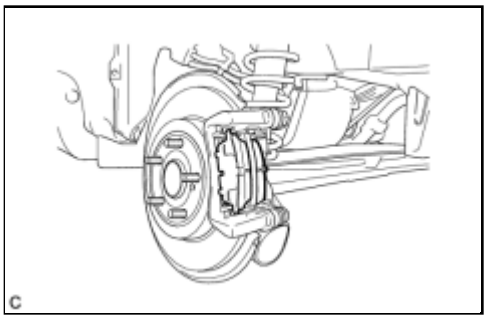

(a) Remove the 2 disc brake pads from the rear disc brake cylinder mounting.

16. REMOVE REAR DISC BRAKE ANTI-SQUEAL SHIM

(a) Remove the 4 anti-squeal shims from each brake pad.

17. REMOVE REAR DISC BRAKE PAD SUPPORT PLATE

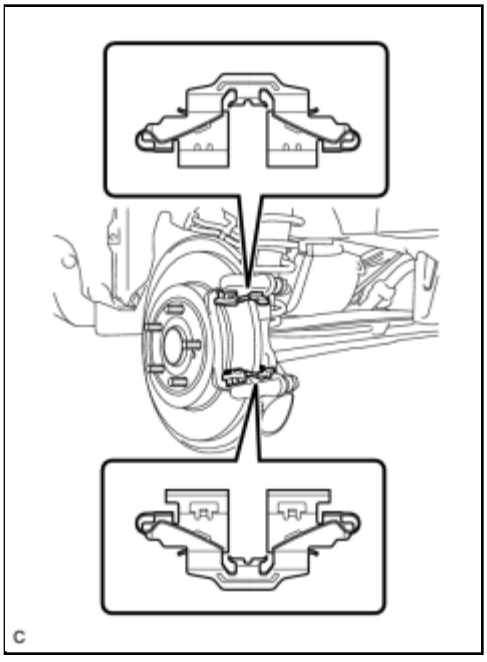

(a) Remove the rear disc brake pad support plate (upper) and rear disc brake pad support plate (lower) from the disc brake cylinder mounting.

NOTICE:

Each rear disc brake pad support plate has a different shape. Be sure to put an identification mark on each rear disc brake pad support plate so that it can be installed to its original position.

18. REMOVE REAR DISC BRAKE PAD GUIDE PIN

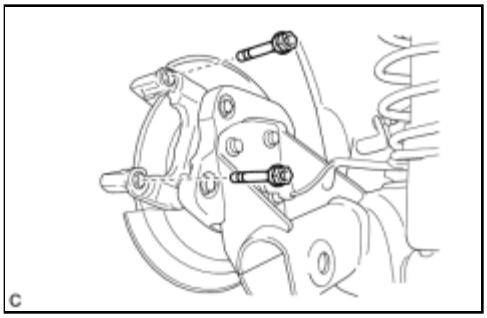

(a) Remove the 2 rear disc brake pad guide pins from the disc brake cylinder mounting.

19. REMOVE REAR DISC BRAKE BUSHING DUST BOOT

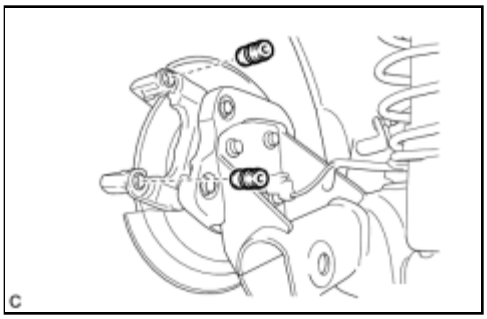

(a) Remove the 2 rear disc brake bushing dust boots from the rear disc brake cylinder mounting.

20. REMOVE REAR DISC BRAKE CYLINDER MOUNTING

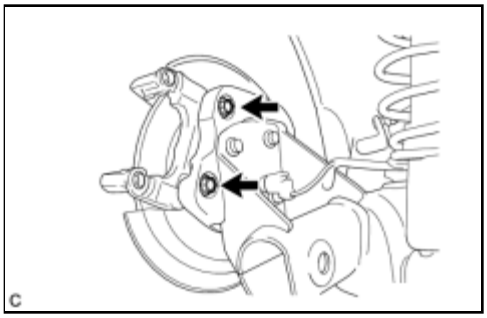

(a) Remove the 2 bolts and the rear disc brake cylinder mounting from the axle beam.

21. REMOVE REAR DISC

(a) Remove the rear disc.

HINT:

Place matchmarks on the disc and axle hub.

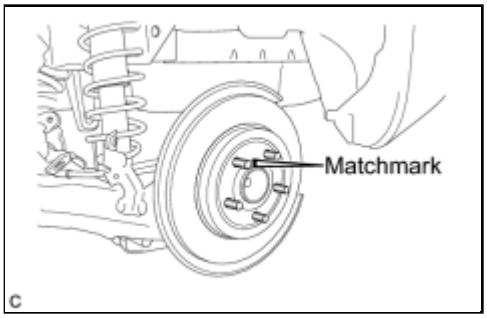
Matchmark
C

Last Modified: 3-10-2010	6.4 K	**From:** 200901
Model Year: 2010	**Model:** Corolla	**Doc ID:** RM000002VJ000JX
Title: BRAKE (REAR): REAR BRAKE (for Disc Type): COMPONENTS (2010 Corolla)		

COMPONENTS

ILLUSTRATION

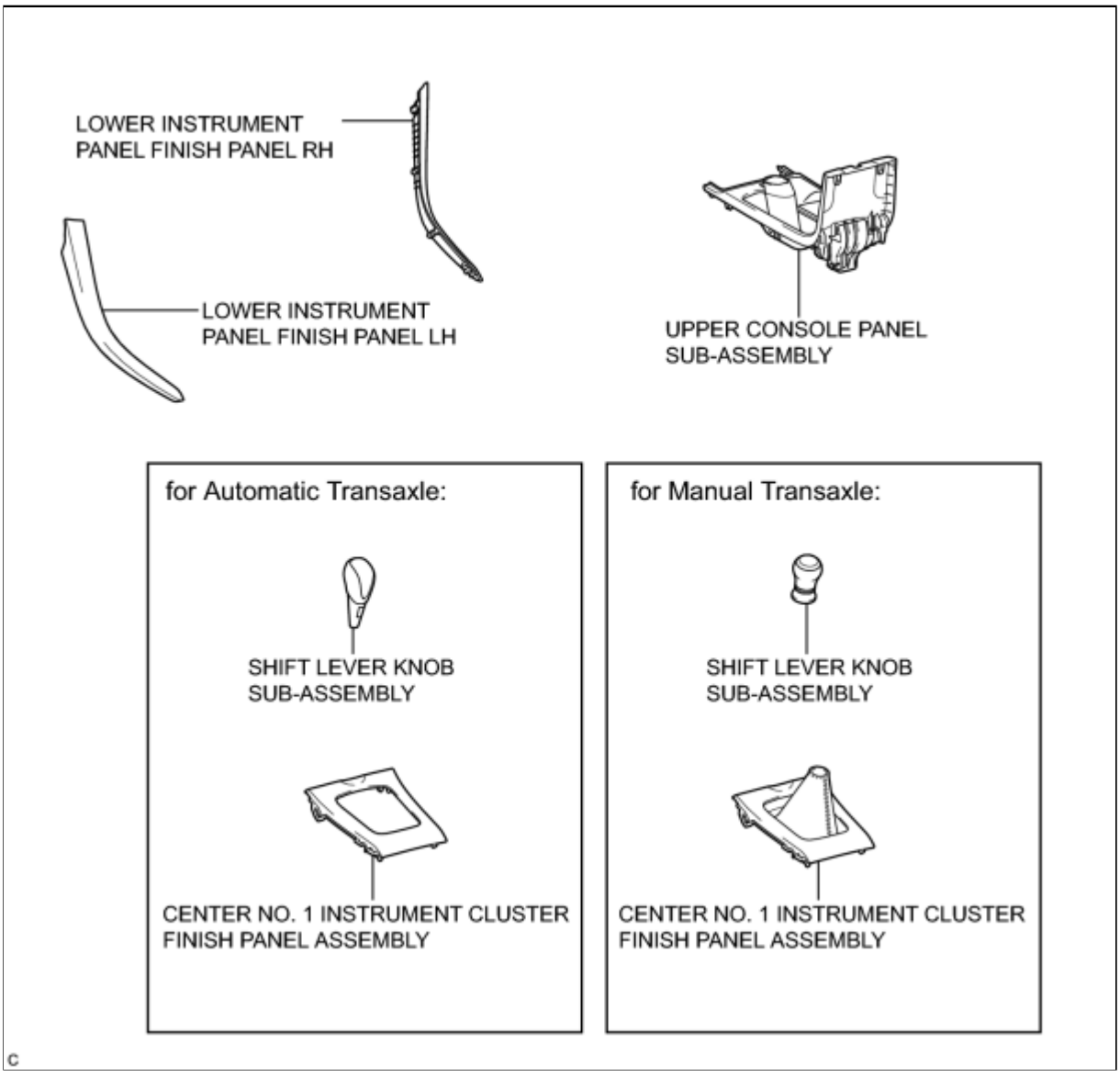

ILLUSTRATION

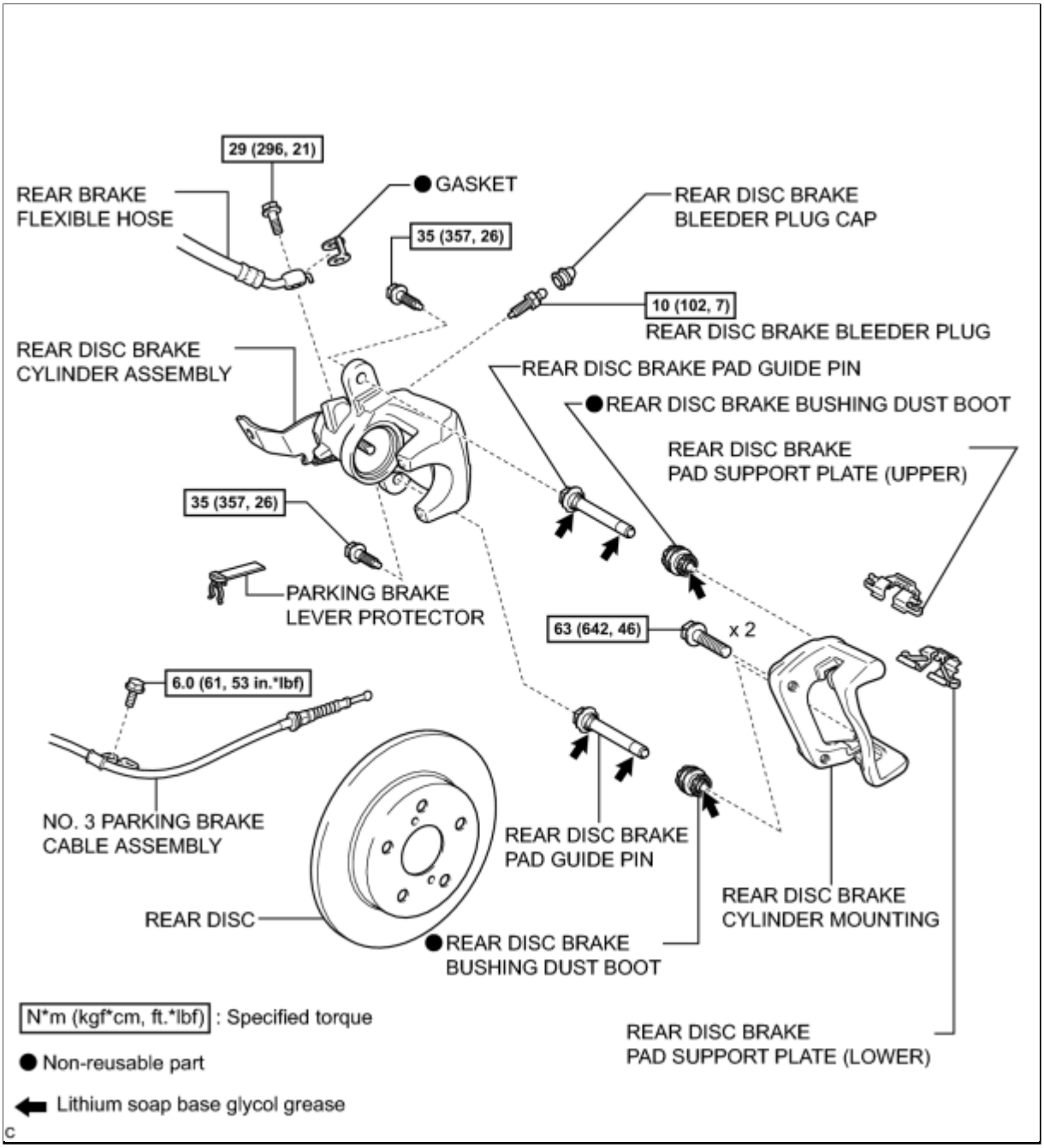

ILLUSTRATION

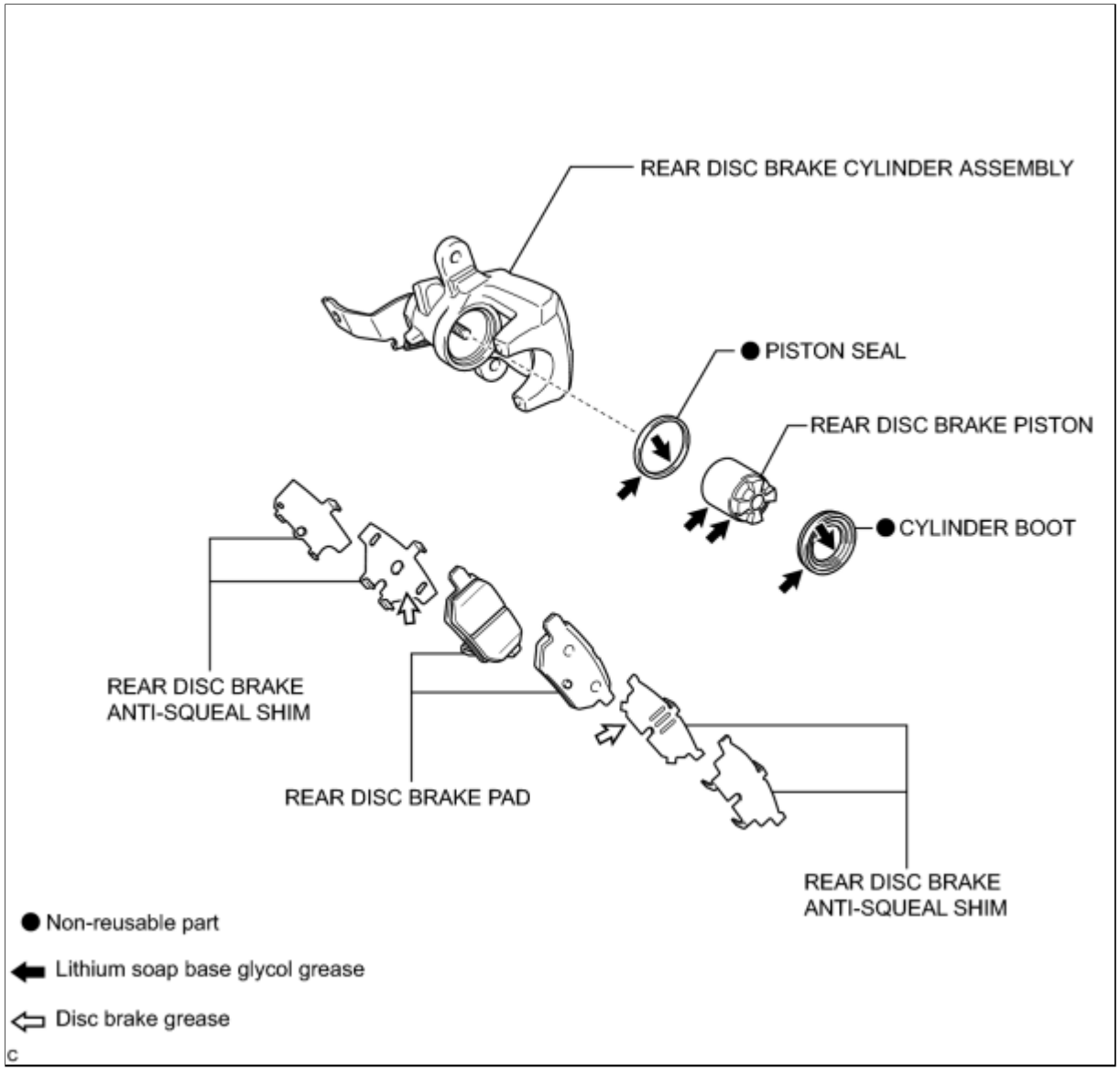
REAR DISC BRAKE CYLINDER ASSEMBLY
● PISTON SEAL
REAR DISC BRAKE PISTON
● CYLINDER BOOT
REAR DISC BRAKE
ANTI-SQUEAL SHIM
REAR DISC BRAKE PAD
REAR DISC BRAKE
ANTI-SQUEAL SHIM
● Non-reusable part
Lithium soap base glycol grease
Disc brake grease
C

Last Modified: 3-10-2010	6.4 A	**From:** 200901
Model Year: 2010	**Model:** Corolla	**Doc ID:** RM000001E9G017X
Title: BRAKE (REAR): REAR BRAKE (for Disc Type): DISASSEMBLY (2010 Corolla)		

DISASSEMBLY

1. REMOVE REAR DISC BRAKE PISTON

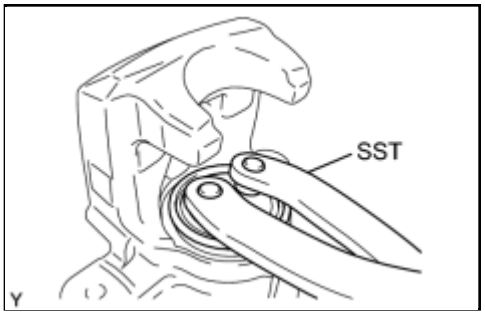

(a) Using SST, remove the piston by turning it counterclockwise.

SST: 09960-10010

09963-00400

NOTICE:

- Do not damage the piston.
- Do not allow any brake fluid to spatter.

2. REMOVE CYLINDER BOOT

(a) Remove the cylinder boot from the piston.

3. REMOVE PISTON SEAL

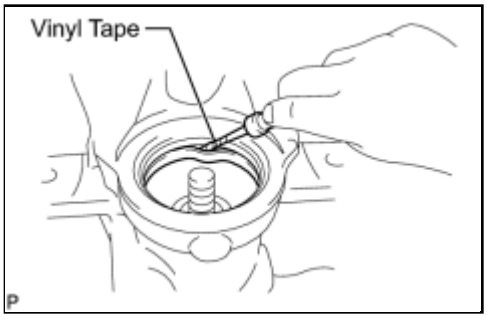

(a) Using a screwdriver, remove the piston seal from the rear disc brake cylinder.

NOTICE:

Do not damage the inner surface or piston seal groove of the cylinder.

HINT:

Tape the screwdriver tip before use.

4. REMOVE REAR DISC BRAKE BLEEDER PLUG CAP

5. REMOVE REAR DISC BRAKE BLEEDER PLUG

Last Modified: 3-10-2010	6.4 G	**From:** 200901
Model Year: 2010	**Model:** Corolla	**Doc ID:** RM000001E9L01GX
Title: BRAKE (REAR): REAR BRAKE (for Disc Type): INSPECTION (2010 Corolla)		

INSPECTION

1. INSPECT BRAKE CYLINDER AND PISTON

(a) Check the cylinder bore and piston for rust and scoring. If necessary, replace the disc brake cylinder and piston.

2. INSPECT PAD LINING THICKNESS

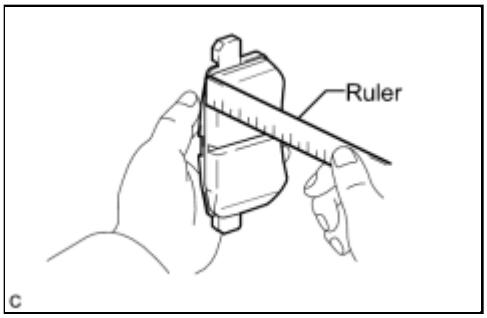

(a) Using a ruler, measure the pad lining thickness.

Standard thickness:
9.5 mm (0.374 in.)
Minimum thickness:
1.0 mm (0.0394 in.)

If the pad lining thickness is equal to the minimum or less, replace the brake pads with a disc brake pad kit.

HINT:

Be sure to check the wear of the rear disc after replacing the brake pads with new ones.

3. INSPECT REAR DISC BRAKE PAD SUPPORT PLATE

(a) Make sure that the rear disc brake pad support plates have sufficient rebound, no deformation, cracks or wear, and that all rust and dirt are removed. If necessary, replace the rear disc brake pad support plates.

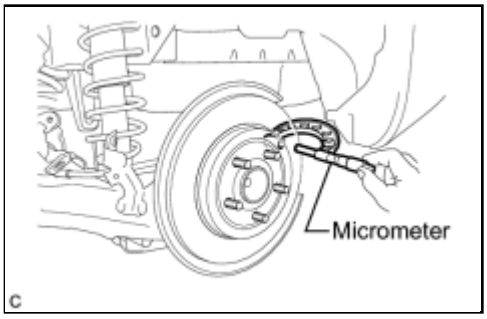

4. INSPECT DISC THICKNESS

(a) Using a micrometer, measure the disc thickness.

Standard Thickness:
9.0 mm (0.354 in.)
Minimum Thickness:
7.5 mm (0.295 in.)

If the disc thickness is less than the minimum, replace the rear disc.

5. INSPECT DISC RUNOUT

(a) Inspect the rear axle hub bearing looseness and axle hub runout INFO .

(b) While holding the disc using SST, tighten the disc with the

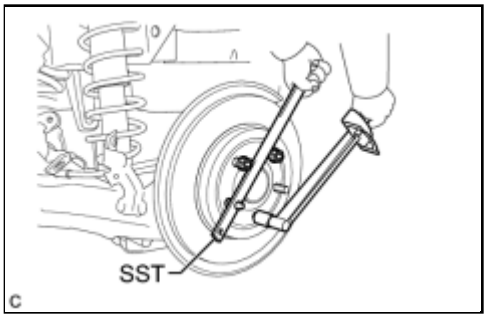

5 hub nuts.

SST: 09330-00021

Torque: 103 N·m (1050 kgf·cm, 76ft·lbf)

(c) Using a dial indicator, measure the disc runout 10 mm (0.394 in.) away from the outer edge of the rear disc.

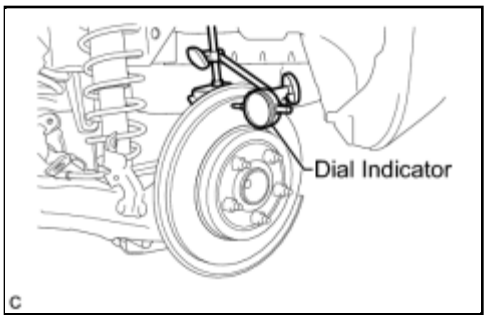

Maximum disc runout:
0.15 mm (0.00591 in.)

NOTICE:

Keep the magnet of the dial indicator away from the axle hub and speed sensor.

If the runout exceeds the maximum value, change the installation position of the disc to minimize the runout. If the runout exceeds the maximum even when the installation position is changed, grind the disc. If the disc thickness is less than the minimum, replace the rear disc.

(d) Remove the 5 nuts and rear disc.

Last Modified: 3-10-2010	6.4 A	**From:** 200901
Model Year: 2010	**Model:** Corolla	**Doc ID:** RM000001E9D01FX
Title: BRAKE (REAR): REAR BRAKE (for Disc Type): INSTALLATION (2010 Corolla)		

INSTALLATION

1. INSTALL REAR DISC

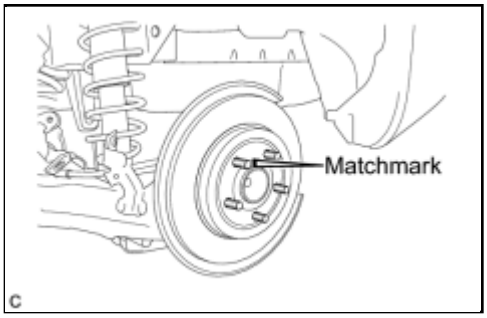

(a) Align the matchmarks of the disc and axle hub and install the disc.

NOTICE:

When replacing the disc with a new one, select the installation position where the rear disc has minimal runout.

2. INSTALL REAR DISC BRAKE CYLINDER MOUNTING

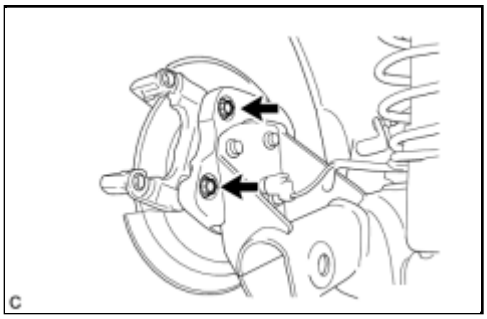

(a) Install the rear disc brake cylinder mounting to the axle beam with the 2 bolts.

Torque: 63 N·m (642 kgf·cm, 46ft·lbf)

3. INSTALL REAR DISC BRAKE BUSHING DUST BOOT

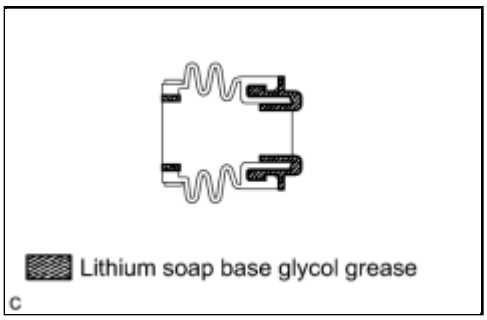

(a) Apply a light layer of lithium soap base glycol grease to the entire circumference of 2 new rear disc brake bushing dust boots.

HINT:

Apply at least 0.3 g (0.01 oz.) of lithium soap base glycol grease to each rear disc brake bushing dust boot.

(b) Install the 2 rear disc brake bushing dust boots to the rear

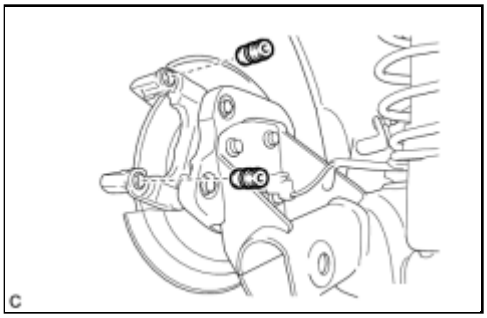

disc brake cylinder mounting.

4. INSTALL REAR DISC BRAKE PAD GUIDE PIN

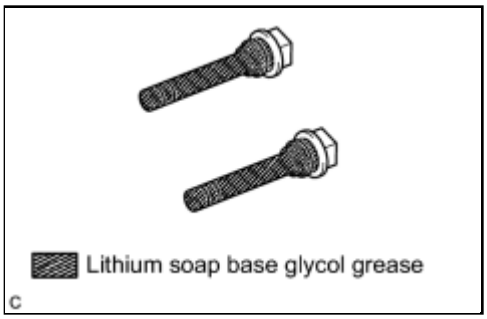

(a) Apply a light layer of lithium soap base glycol grease to the sliding and sealing surfaces of the 2 rear disc brake pad guide pins.

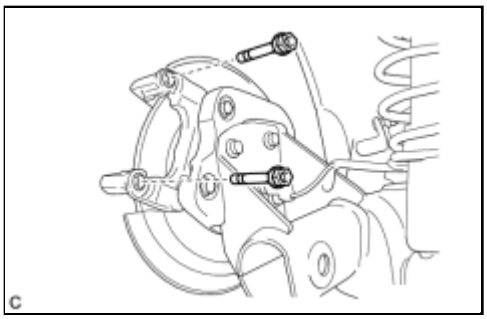

(b) Install the 2 rear disc brake pad guide pins to the rear disc brake cylinder mounting.

5. INSTALL REAR DISC BRAKE PAD SUPPORT PLATE

(a) Install the 2 rear disc brake pad support plates to the rear disc brake cylinder mounting.

NOTICE:

Be sure to install each rear disc brake pad support plate in the correct position and direction.

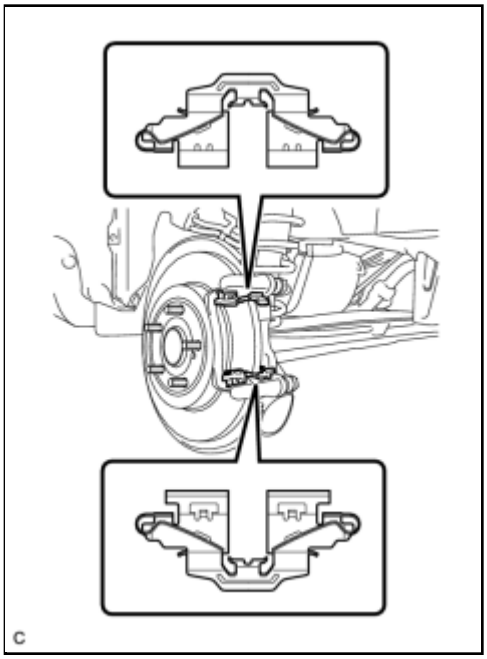

6. INSTALL REAR DISC BRAKE ANTI-SQUEAL SHIM

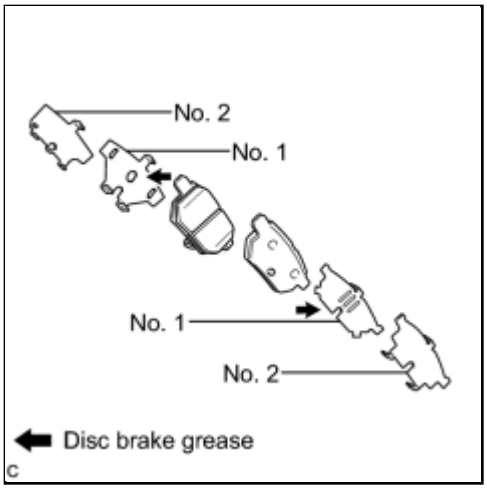

(a) Apply disc brake grease to the 2 No. 1 anti-squeal shims.

(b) Install the No. 1 anti-squeal shim and No. 2 anti-squeal shim to each brake pad.

NOTICE:

- When replacing worn pads, the anti-squeal shims must be replaced together with the pads.
- Apply disc brake grease to the area that contacts the anti-squeal shim.
- Disc brake grease may seep out slightly from the areas where the anti-squeal shims are installed.
- Make sure that disc brake grease is not applied onto the lining surface.

7. INSTALL REAR DISC BRAKE PAD

(a) Install the 2 rear disc brake pads to the rear disc brake

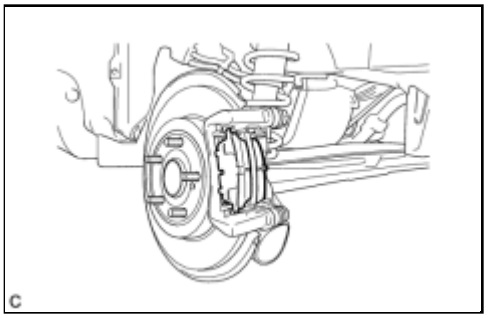

cylinder mounting.

NOTICE:

There should be no oil or grease on the friction surfaces of the disc brake pads or the rear disc.

8. INSTALL REAR DISC BRAKE CYLINDER ASSEMBLY

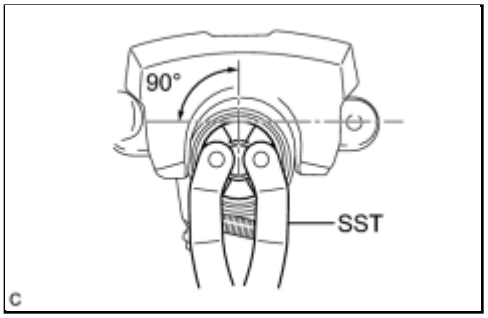

(a) To compensate for pad wear when reusing the pad, use SST to push and turn the piston (LH side: counterclockwise, RH side: clockwise) to the position where the protrusion on the pad lines up properly with the piston groove.

SST: 09960-10010

09963-00400

NOTICE:

Place the disc between the 2 brake pads and determine the piston return value.

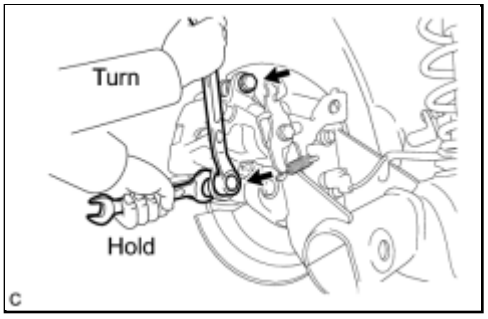

(b) Hold the rear disc brake cylinder slide pin, and install the rear disc brake cylinder assembly to the rear disc brake cylinder mounting with the 2 bolts.

Torque: 35 N·m (357 kgf·cm, 26ft·lbf)

9. CONNECT REAR BRAKE FLEXIBLE HOSE

(a) Connect the flexible hose to the rear disc brake cylinder assembly with the union bolt and a new gasket.

Torque: 29 N·m (296 kgf·cm, 21ft·lbf)

HINT:

Install the flexible hose lock securely into the lock hole in the disc brake cylinder.

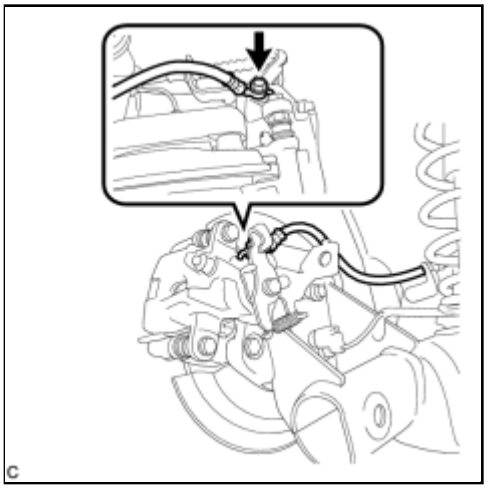

10. CONNECT NO. 3 PARKING BRAKE CABLE ASSEMBLY

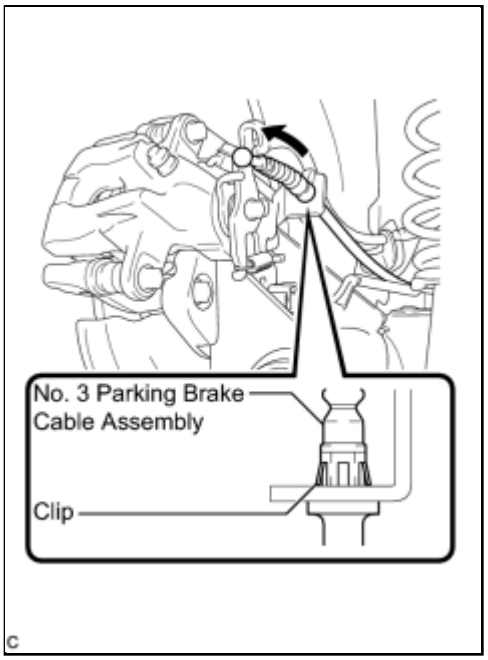

(a) Install the No. 3 parking brake cable assembly to the rear disc brake cylinder assembly LH.

HINT:

Be sure to engage the No. 3 parking brake cable assembly clip onto the rear disc brake cylinder assembly LH as shown in the illustration.

(b) Connect the No. 3 parking brake cable assembly to the rear disc brake cylinder assembly LH.

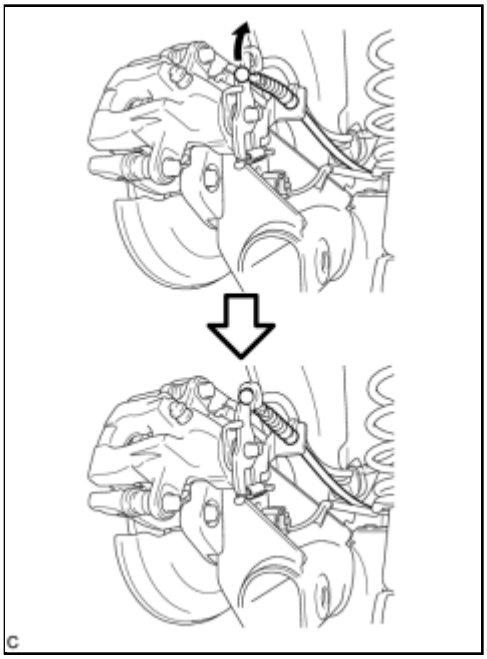

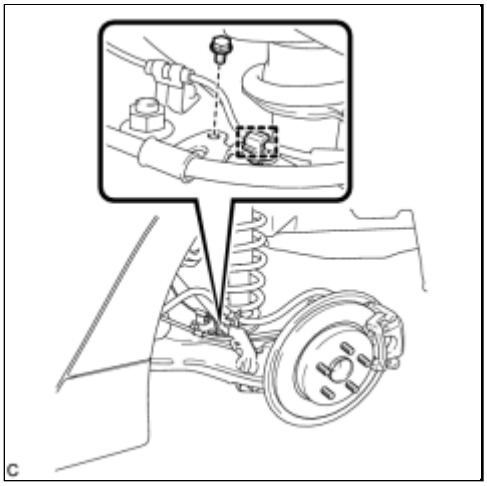

(c) Install the bolt.

Torque: 6.0 N·m (61 kgf·cm, 53in·lbf)

(d) Engage the clamp to the No. 3 parking brake cable assembly.

11. INSTALL PARKING BRAKE LEVER PROTECTOR INFO

12. FILL RESERVOIR WITH BRAKE FLUID INFO

13. BLEED BRAKE LINE INFO

14. INSPECT FOR BRAKE FLUID LEAK

15. INSPECT FLUID LEVEL INFO

16. ADJUST PARKING BRAKE LEVER TRAVEL INFO

17. INSPECT REAR DISC BRAKE CYLINDER OPERATION LEVER AND STOPPER CLEARANCE INFO

18. INSTALL REAR WHEEL

Torque: 103 N·m (1050 kgf·cm, 76ft·lbf)

19. INSTALL UPPER CONSOLE PANEL SUB-ASSEMBLY INFO

20. INSTALL CENTER NO. 1 INSTRUMENT CLUSTER FINISH PANEL ASSEMBLY (for Manual Transaxle) INFO

21. INSTALL CENTER NO. 1 INSTRUMENT CLUSTER FINISH PANEL ASSEMBLY (for Automatic Transaxle) INFO

22. INSTALL SHIFT LEVER KNOB SUB-ASSEMBLY (for Manual Transaxle) INFO

23. INSTALL SHIFT LEVER KNOB SUB-ASSEMBLY (for Automatic Transaxle) INFO

24. INSTALL LOWER INSTRUMENT PANEL FINISH PANEL LH INFO

25. INSTALL LOWER INSTRUMENT PANEL FINISH PANEL RH INFO

Last Modified: 3-10-2010	6.4 A	**From:** 200901
Model Year: 2010	**Model:** Corolla	**Doc ID:** RM000001E9H017X
Title: BRAKE (REAR): REAR BRAKE (for Disc Type): REASSEMBLY (2010 Corolla)		

REASSEMBLY

1. TEMPORARILY TIGHTEN REAR DISC BRAKE BLEEDER PLUG

HINT:

Fully tighten the rear disc brake bleeder plug after bleeding any air left in the system.

2. INSTALL REAR DISC BRAKE BLEEDER PLUG CAP

3. INSTALL PISTON SEAL

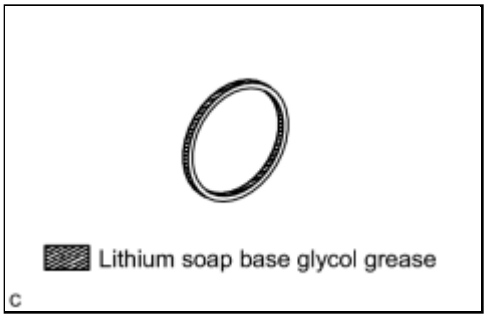

(a) Apply a light layer of lithium soap base glycol grease to the entire circumference of a new piston seal.

(b) Install the piston seal to the disc brake cylinder assembly.

NOTICE:

Securely install the piston seal to the groove of the disc brake cylinder.

4. INSTALL CYLINDER BOOT

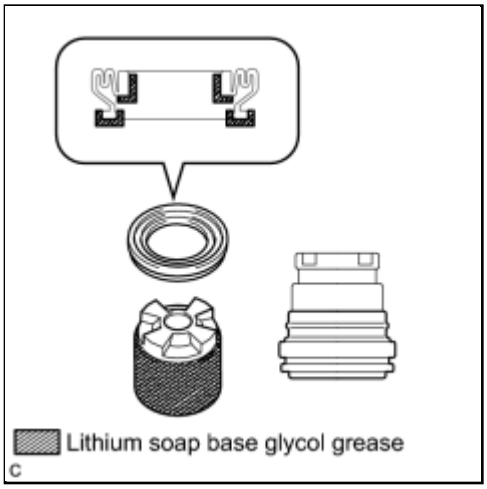

(a) Apply a light layer of lithium soap base glycol grease to the entire circumference of a new cylinder boot.

(b) Install the cylinder boot to the piston as shown in the illustration.

NOTICE:

Do not install the cylinder boot after installing the piston into the disc brake cylinder.

5. INSTALL REAR DISC BRAKE PISTON

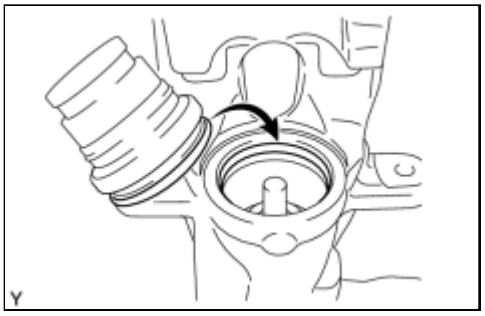

(a) Install the seal portion of the cylinder boot into the groove portion of the rear disc brake cylinder.

NOTICE:

Securely install the cylinder boot to the groove of the rear disc brake cylinder.

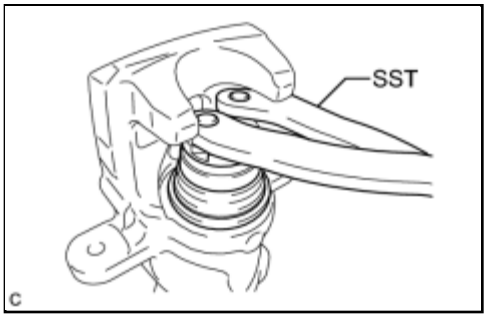

(b) Using SST, screw the piston to the end by turning it clockwise as far as possible.

SST: 09960-10010

09963-00400

NOTICE:

- Securely install the cylinder boot to the groove of the piston.
- Do not damage the piston or cylinder boot.

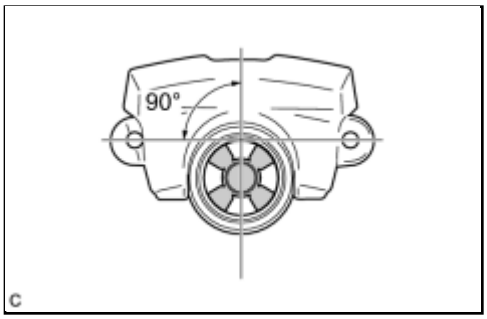

(c) Using SST, slowly turn the piston counterclockwise until the piston groove is positioned as shown in the illustration.

HINT:

When installing the disc brake cylinder to the disc cylinder mounting, align the piston groove with the protrusion on the brake pad.

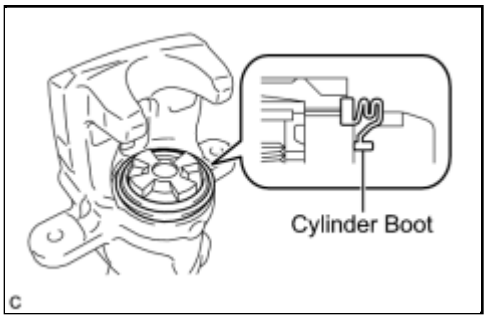

(d) Make sure that the cylinder boot is securely installed into the groove of the disc brake cylinder and disc brake piston.

Last Modified: 3-10-2010	6.4 K	**From:** 200901
Model Year: 2010	**Model:** Corolla	**Doc ID:** RM000002QVW00CX
Title: BRAKE (REAR): REAR BRAKE (for Drum Type): COMPONENTS (2010 Corolla)		

COMPONENTS

ILLUSTRATION

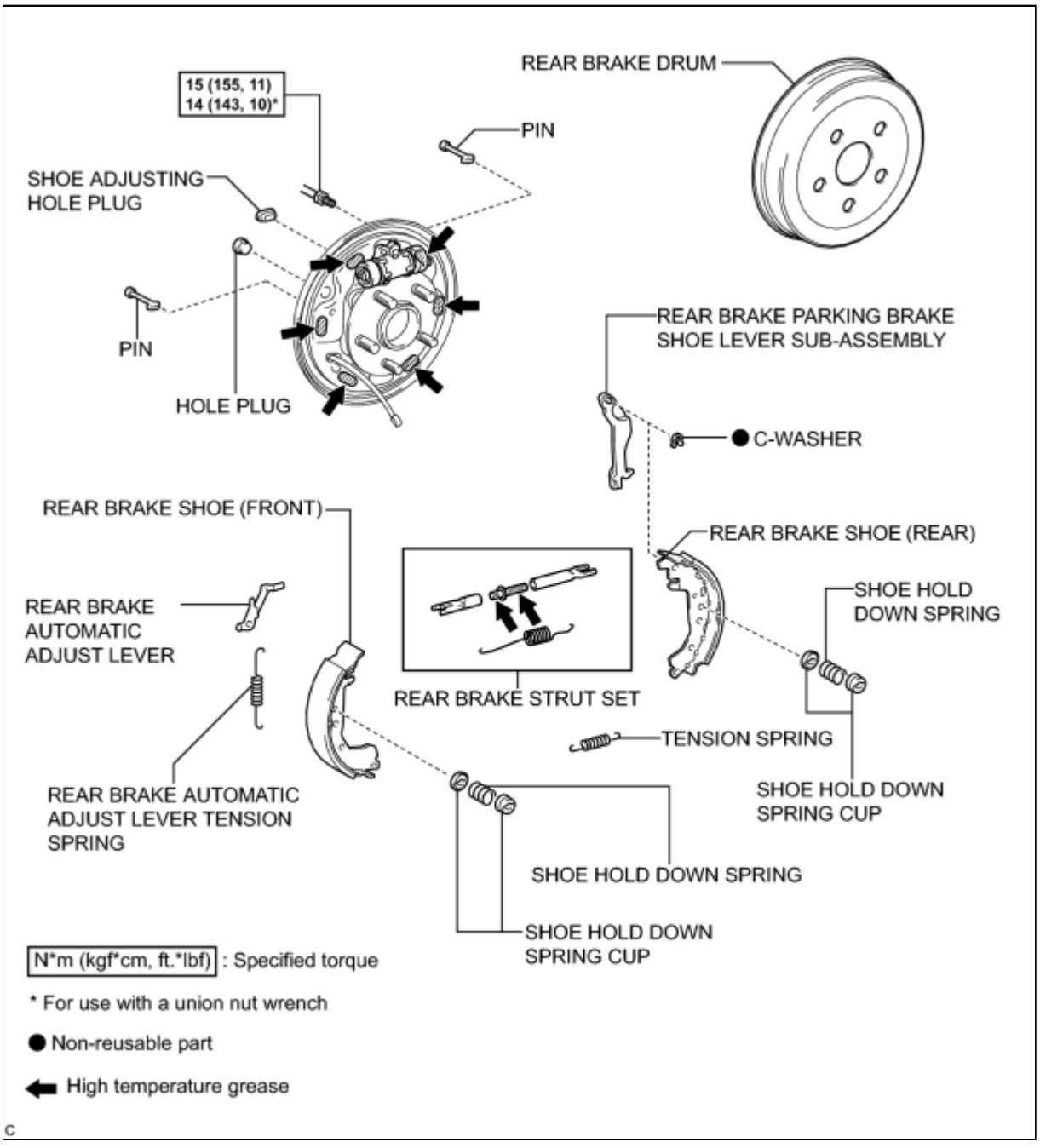

ILLUSTRATION

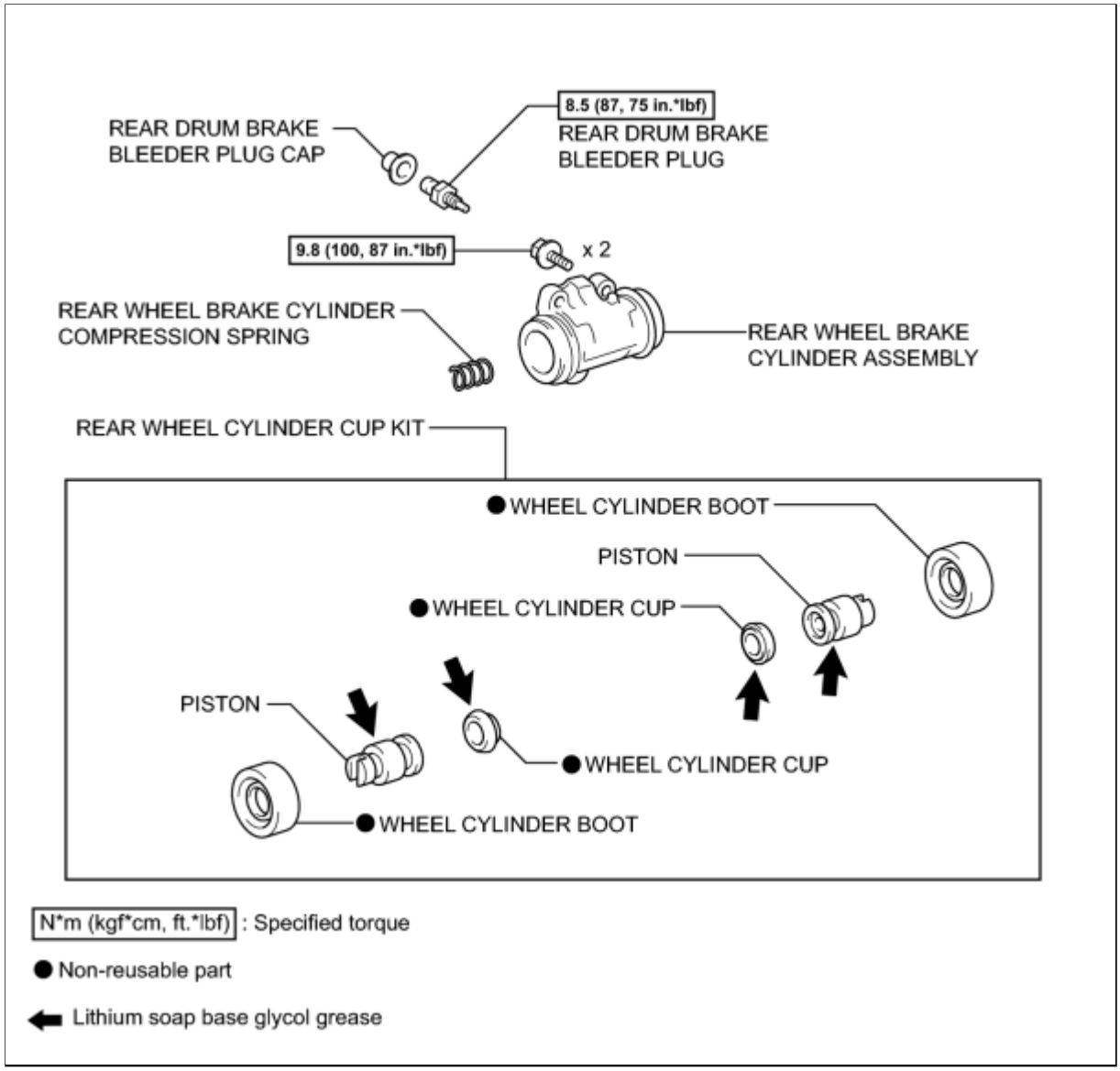
REAR DRUM BRAKE
BLEEDER PLUG CAP
8.5 (87, 75 in.*lbf)
REAR DRUM BRAKE
BLEEDER PLUG
9.8 (100, 87 in.*lbf)
x 2
REAR WHEEL BRAKE CYLINDER
COMPRESSION SPRING
REAR WHEEL BRAKE
CYLINDER ASSEMBLY
REAR WHEEL CYLINDER CUP KIT
WHEEL CYLINDER BOOT
PISTON
WHEEL CYLINDER CUP
PISTON
WHEEL CYLINDER CUP
WHEEL CYLINDER BOOT
N*m (kgf*cm, ft.*lbf) : Specified torque
Non-reusable part
Lithium soap base glycol grease

Last Modified: 3-10-2010	6.4 A	**From:** 200901
Model Year: 2010	**Model:** Corolla	**Doc ID:** RM000002QVX00DX
Title: BRAKE (REAR): REAR BRAKE (for Drum Type): REMOVAL (2010 Corolla)		

REMOVAL

HINT:

- Use the same procedure for the LH side and RH side.
- The following procedure listed is for the LH side.
- The rear wheel brake cylinder assemblies can be disassembled and inspected with the rear wheel brake cylinder assemblies installed to the backing plate. It is not necessary to remove the rear wheel brake cylinder assemblies from the backing plates except when the rear wheel brake cylinder assemblies should be replaced.

1. REMOVE REAR WHEEL

2. REMOVE REAR BRAKE DRUM

(a) Release the parking brake and remove the rear brake drum.

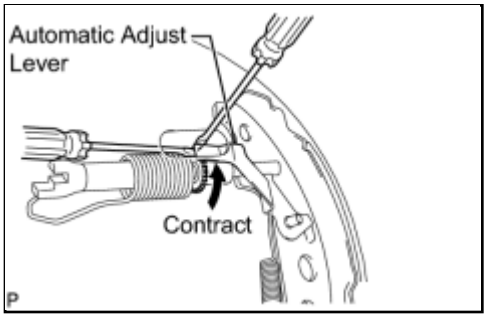

HINT:

If the rear brake drum cannot be removed easily, perform the following procedure.

(1) Remove the shoe adjusting hole plug and insert a screwdriver through the hole into the backing plate, and hold the automatic adjust lever away from the adjuster.

(2) Using another screwdriver, contract the brake shoe by turning the adjusting bolt.

3. REMOVE REAR BRAKE SHOE (for Front Side)

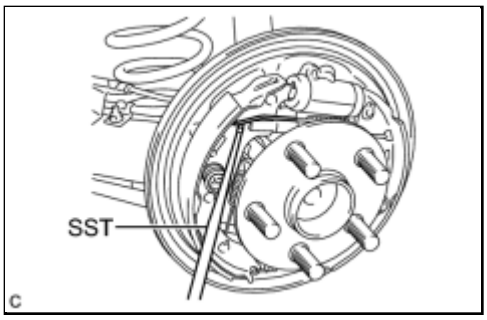

(a) Using SST, separate the shoe return spring from the rear brake shoe.

SST: 09921-00010

NOTICE:

Do not damage the wheel cylinder boot.

(b) Using SST, remove the 2 shoe hold down spring cups, shoe hold down spring, pin and rear brake shoe.

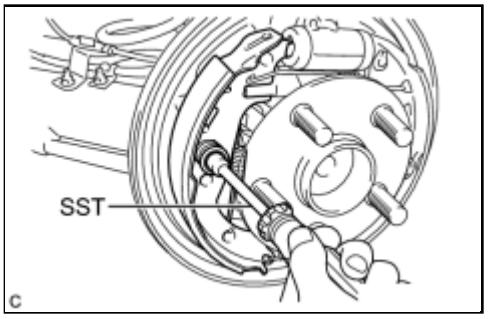

SST: 09718-00011

(c) Remove the tension spring.

4. REMOVE REAR BRAKE STRUT SET

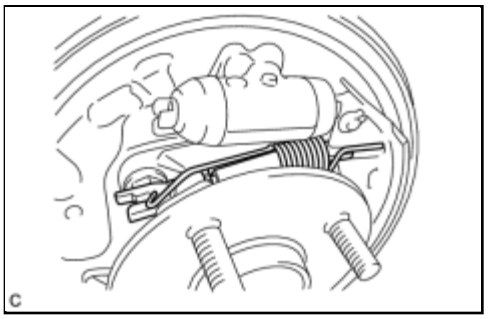

(a) Remove the shoe return spring from the rear brake shoe and remove the rear brake shoe strut set.

5. REMOVE REAR BRAKE SHOE (for Rear Side)

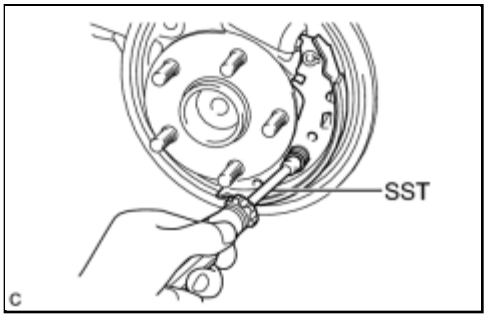

(a) Using SST, remove the 2 shoe hold down spring cups, shoe hold down spring, pin and rear brake shoe.

SST: 09718-00011

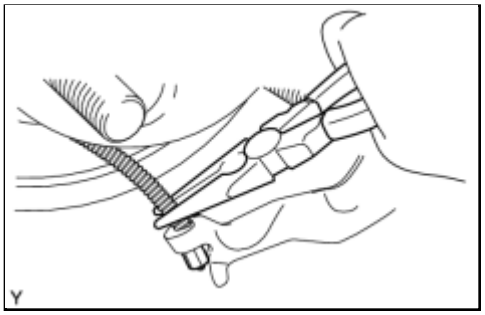

(b) Using needle-nose pliers, separate the parking brake cable.

6. REMOVE REAR BRAKE AUTOMATIC ADJUST LEVER

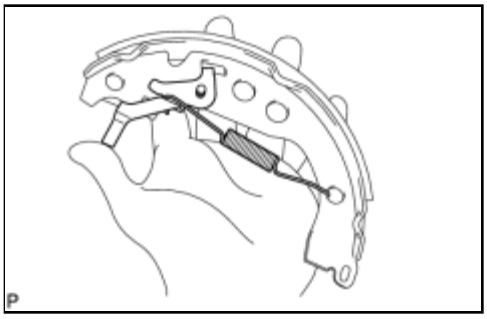

(a) Remove the rear brake automatic adjust lever tension spring and rear brake automatic adjust lever.

7. REMOVE REAR BRAKE PARKING BRAKE SHOE LEVER SUB-ASSEMBLY

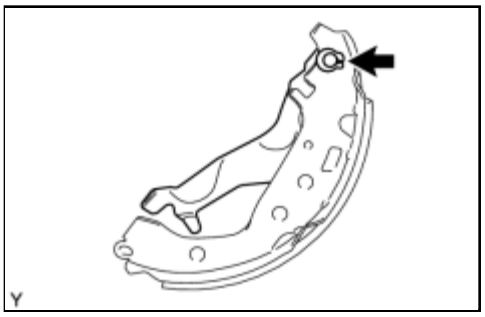

(a) Using a screwdriver, remove the C-washer and rear brake parking brake shoe lever sub-assembly.

8. DRAIN BRAKE FLUID

NOTICE:

Immediately wash off any brake fluid that comes into contact with any painted surfaces.

9. REMOVE REAR DRUM BRAKE BLEEDER PLUG CAP

10. REMOVE REAR DRUM BRAKE BLEEDER PLUG

11. REMOVE REAR WHEEL BRAKE CYLINDER ASSEMBLY

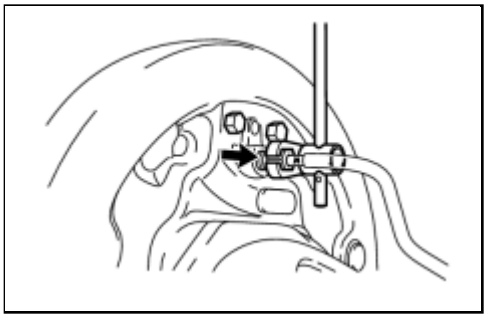

(a) Using a union nut wrench (10 mm), disconnect the brake line from the rear brake wheel cylinder assembly.

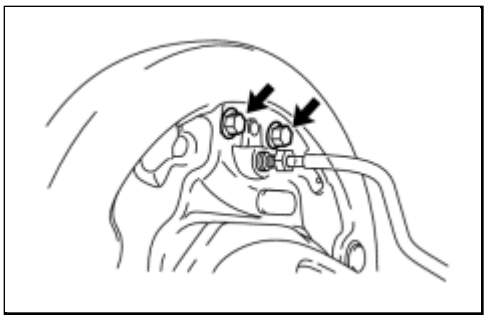

(b) Remove the 2 bolts and rear wheel brake cylinder assembly from the backing plate.

Last Modified: 3-10-2010	6.4 A	**From:** 200901
Model Year: 2010	**Model:** Corolla	**Doc ID:** RM000002QVY00CX
Title: BRAKE (REAR): REAR BRAKE (for Drum Type): DISASSEMBLY (2010 Corolla)		

DISASSEMBLY

1. REMOVE REAR WHEEL CYLINDER CUP KIT

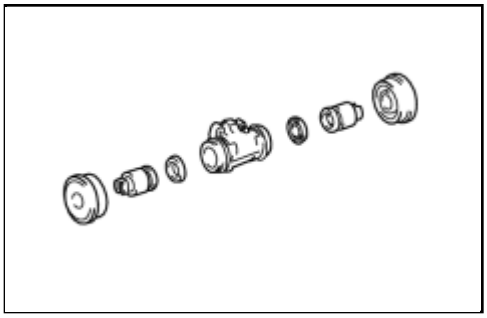

(a) Remove the 2 wheel cylinder boots from the rear wheel brake cylinder assembly.

(b) Remove the 2 pistons.

(c) Remove the wheel cylinder cup from each piston.

2. REMOVE REAR WHEEL BRAKE CYLINDER COMPRESSION SPRING

(a) Remove the rear wheel brake cylinder compression spring from the rear brake wheel cylinder assembly.

Last Modified: 3-10-2010	6.4 G	**From:** 200901
Model Year: 2010	**Model:** Corolla	**Doc ID:** RM000000V6G024X
Title: BRAKE (REAR): REAR BRAKE (for Drum Type): INSPECTION (2010 Corolla)		

INSPECTION

1. INSPECT BRAKE CYLINDER AND PISTON

(a) Check the cylinder bore and piston for rust and scoring. If necessary, replace the brake cylinder assembly or piston.

2. INSPECT BRAKE DRUM INSIDE DIAMETER

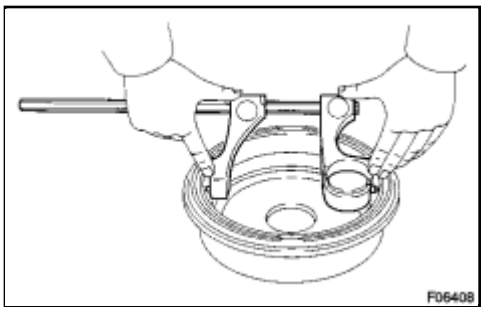

(a) Using a brake drum gauge or an equivalent tool, measure the inside diameter of the drum.

Standard inside diameter:
228.6 mm (9.00 in.)
Maximum inside diameter:
229.6 mm (9.04 in.)

If the inside diameter is more than the maximum, replace the drum.

3. INSPECT REAR BRAKE SHOE LINING THICKNESS

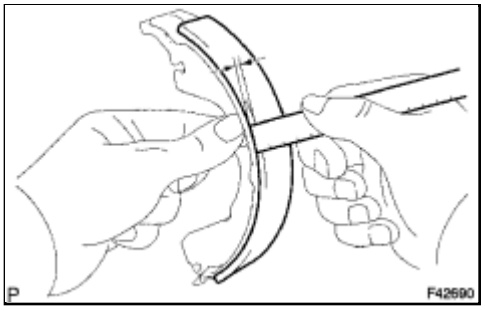

(a) Using a ruler, measure the thickness of the shoe lining.

Standard thickness:
5.0 mm (0.197 in.)
Minimum thickness:
1.0 mm (0.0394 in.)

If the lining thickness is less than the minimum, or if there is severe or uneven wear, replace the brake shoe.

NOTICE:

Always replace both the right and left drum brake shoes together.

4. INSPECT BRAKE DRUM AND DRUM BRAKE SHOE LINING FOR PROPER CONTACT

(a) Apply chalk to the inside surface of the drum, then grind down the brake shoe lining to fit the drum.

If the contact between the drum and the brake shoe lining is improper, repair it using a brake shoe grinder or replace the brake shoe.

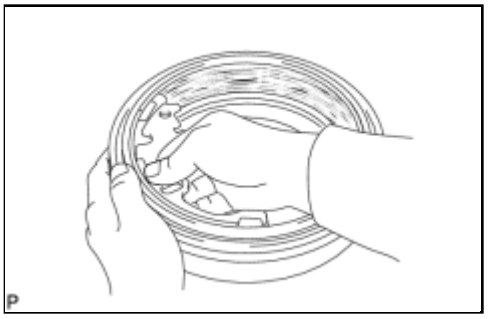
P

Last Modified: 3-10-2010	6.4 A	**From:** 200901
Model Year: 2010	**Model:** Corolla	**Doc ID:** RM000002QVV00GX
Title: BRAKE (REAR): REAR BRAKE (for Drum Type): INSTALLATION (2010 Corolla)		

INSTALLATION

1. INSTALL REAR WHEEL BRAKE CYLINDER ASSEMBLY

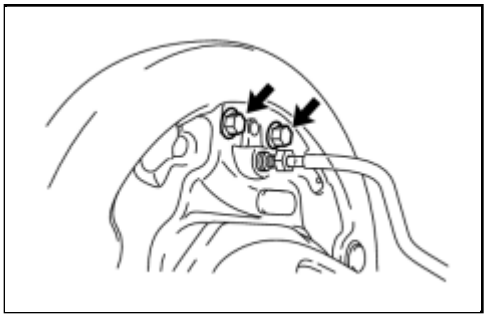

(a) Install the rear wheel brake cylinder assembly to the backing plate with the 2 bolts.

Torque: 9.8 N·m (100 kgf·cm, 87in·lbf)

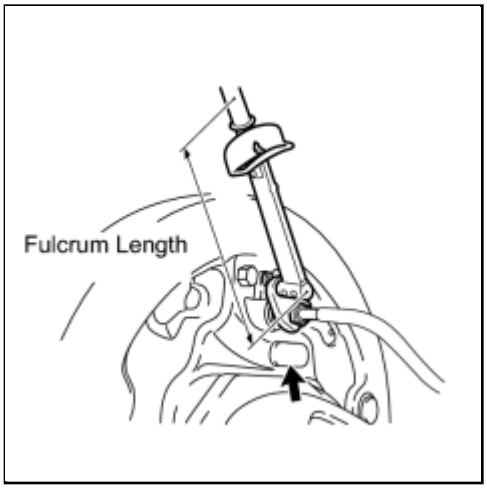

(b) Using a union nut wrench (10 mm), connect the brake line to the rear wheel brake cylinder assembly.

without a union nut wrench - Torque: 15 N·m (155 kgf·cm, 11ft·lbf)

with a union nut wrench - Torque: 14 N·m (143 kgf·cm, 10ft·lbf)

NOTICE:

- Use a torque wrench with a fulcrum length of 250 mm (9.84 in.).
- This torque value is effective when the union nut wrench is parallel to the torque wrench.

2. TEMPORARILY TIGHTEN REAR DRUM BRAKE BLEEDER PLUG

HINT:

Fully tighten the rear drum brake bleeder plug after bleeding any air left in the system.

3. INSTALL REAR DRUM BRAKE BLEEDER PLUG CAP

4. INSTALL REAR BRAKE PARKING BRAKE SHOE LEVER SUB-ASSEMBLY

(a) Using needle-nose pliers, install the rear brake parking brake shoe lever sub-assembly with a new C-washer.

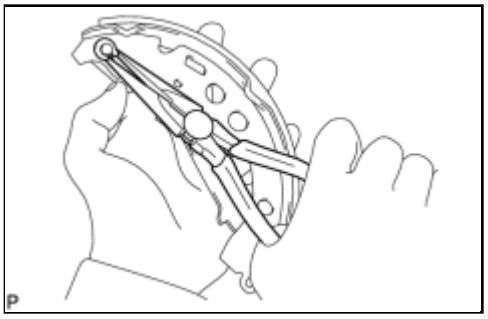

5. INSTALL REAR BRAKE AUTOMATIC ADJUST LEVER

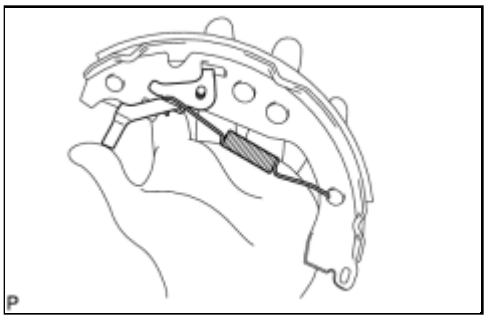

(a) Install the rear brake automatic adjust lever and automatic adjust lever tension spring to the rear brake shoe (front).

6. INSTALL REAR BRAKE SHOE (for Rear Side)

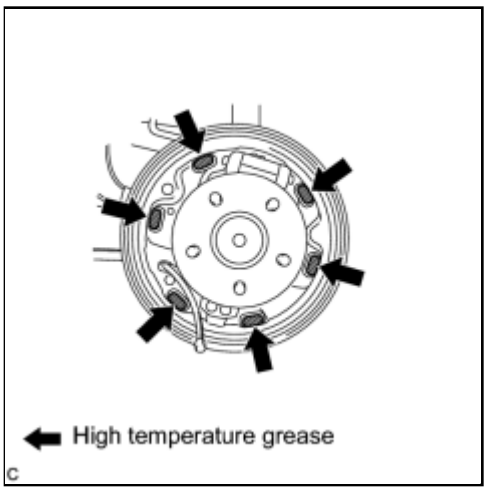

(a) Apply high temperature grease to the surface of the backing plate that contacts the shoes as shown in the illustration.

(b) Using needle-nose pliers, install the parking brake cable to the rear brake parking brake shoe lever sub-assembly.

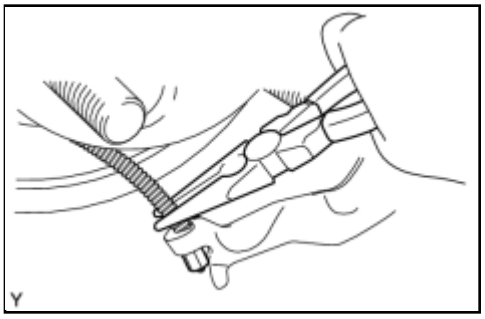

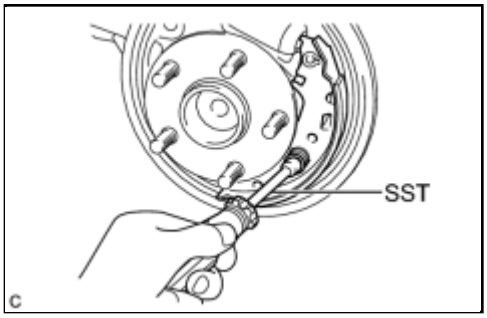

(c) Using SST, install the rear brake shoe, pin, shoe hold down spring and shoe hold down spring cup.

SST: 09718-00011

7. INSTALL REAR BRAKE STRUT SET

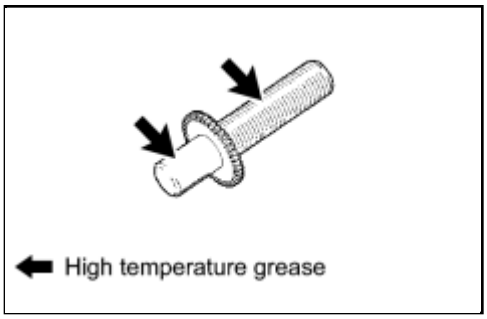

(a) Apply high temperature grease to the adjustment bolt.

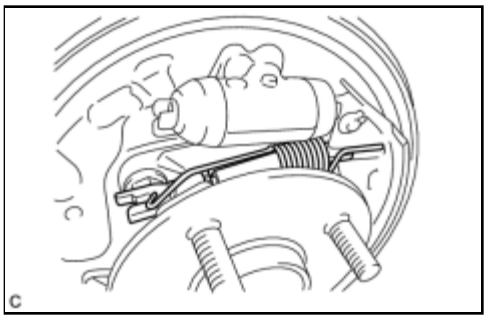

(b) Install the rear brake strut set to the rear brake shoe.

8. INSTALL REAR BRAKE SHOE (for Front Side)

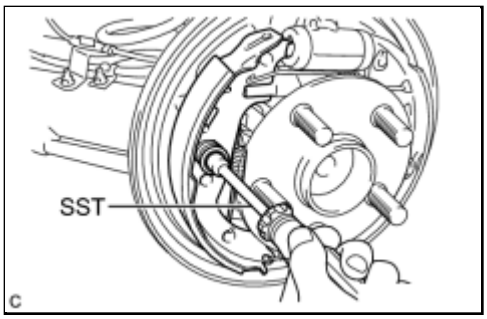

(a) Using SST, install the rear brake shoe, pin, shoe hold down spring and shoe hold down spring cup.

SST: 09718-00011

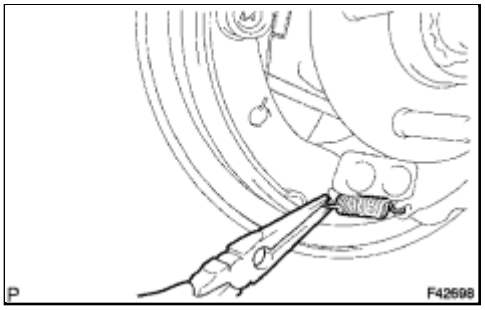

(b) Using needle-nose pliers, install the tension spring to the rear brake shoe.

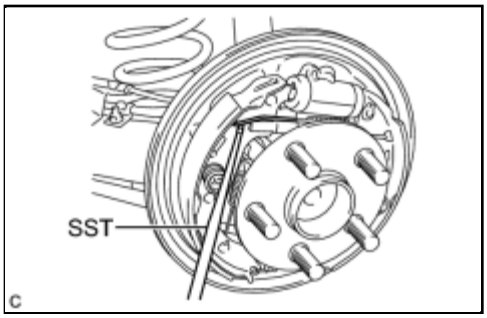

(c) Using SST, install the shoe return spring to the rear brake shoe.

SST: 09921-00010

NOTICE:

Do not damage the wheel cylinder boot.

9. INSPECT REAR DRUM BRAKE

(a) Inspect that each part is installed properly as shown in the illustration.

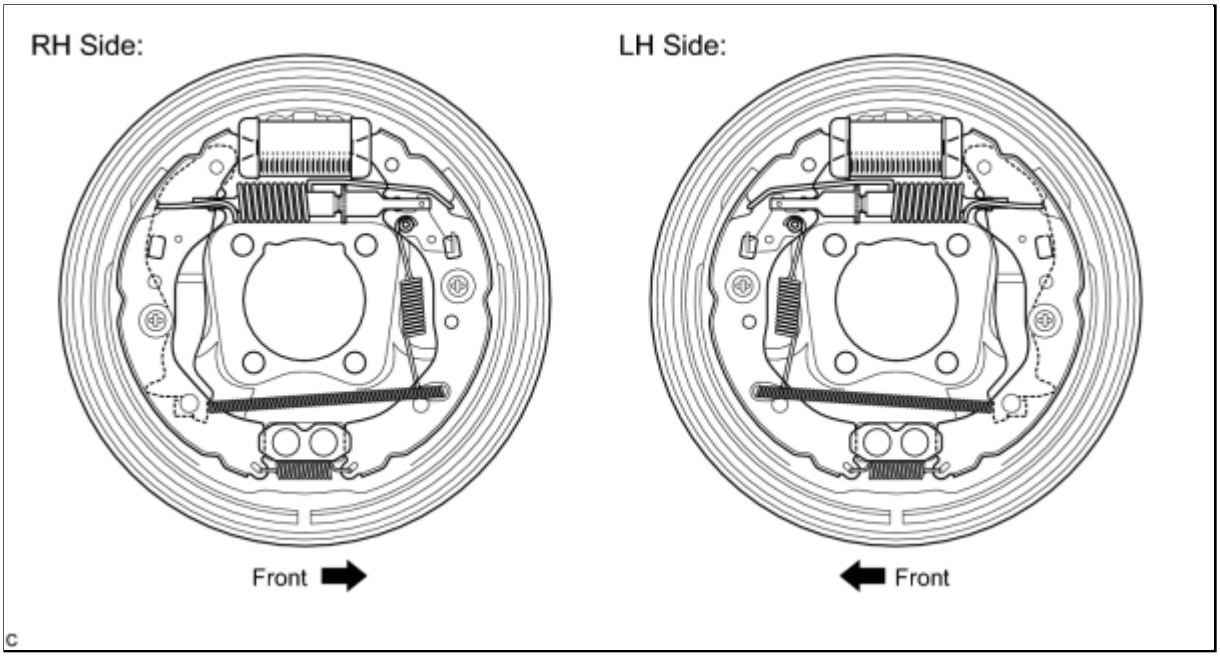

NOTICE:

There should be no oil or grease adhering to the friction surfaces of the shoe lining or the drum.

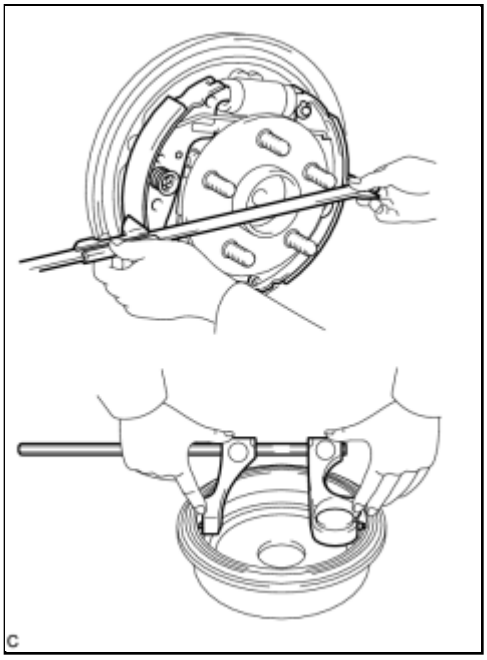

(b) Measure the brake drum inner diameter and the diameter of the brake shoes. Check that the difference between the diameters is equal to the specified shoe clearance.

Shoe clearance:
0.6 mm (0.0236 in.)

10. INSTALL REAR BRAKE DRUM

(a) Install the rear brake drum.

11. ADJUST REAR DRUM BRAKE SHOE CLEARANCE

(a) Temporarily install the 2 wheel nuts.

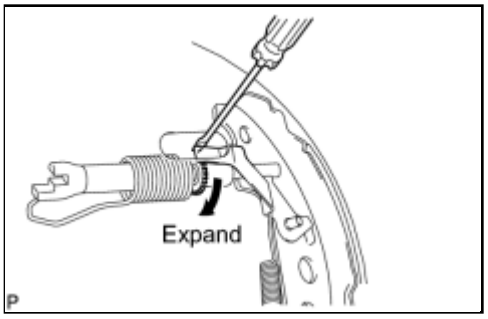

(b) Remove the shoe adjusting hole plug, and turn the adjuster to expand the shoe until the drum locks.

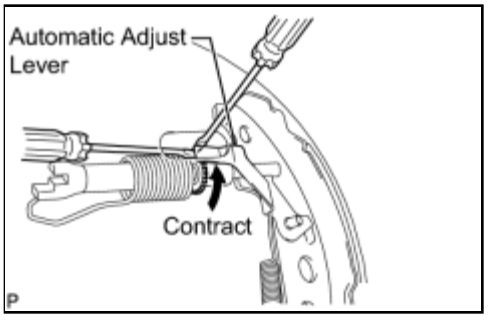

(c) Hold the automatic adjust lever away from the adjuster, and contract the brake shoe by turning the adjust bolt using another screwdriver until the drum can rotate smoothly.

Standard:

11 notches

(d) Install the hole plug.

12. INSTALL REAR WHEEL

Torque: 103 N·m (1050 kgf·cm, 76ft·lbf)

13. FILL RESERVOIR WITH BRAKE FLUID INFO

14. BLEED BRAKE LINE INFO

15. INSPECT FOR BRAKE FLUID LEAK

16. INSPECT FLUID LEVEL INFO

17. ADJUST PARKING BRAKE LEVER TRAVEL INFO

Last Modified: 3-10-2010	6.4 A	**From:** 200901
Model Year: 2010	**Model:** Corolla	**Doc ID:** RM000002QW000CX
Title: BRAKE (REAR): REAR BRAKE (for Drum Type): REASSEMBLY (2010 Corolla)		

REASSEMBLY

1. INSTALL REAR WHEEL BRAKE CYLINDER COMPRESSION SPRING

(a) Install the rear wheel brake cylinder compression spring to the rear wheel brake cylinder assembly.

2. INSTALL REAR WHEEL CYLINDER CUP KIT

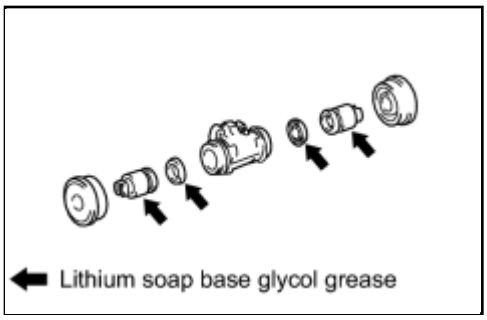

(a) Apply lithium soap base glycol grease to 2 new wheel cylinder cups and the 2 pistons.

(b) Install the 2 wheel cylinder cups to each piston.

(c) Install the 2 pistons to the wheel brake cylinder.

(d) Install 2 new wheel cylinder boots to the rear wheel brake cylinder assembly.

Last Modified: 3-10-2010	6.4 K	**From:** 200901
Model Year: 2010	**Model:** Corolla	**Doc ID:** RM000003FA5005X
Title: BRAKE CONTROL / DYNAMIC CONTROL SYSTEMS: STEERING ANGLE SENSOR (w/ VSC): COMPONENTS (2010 Corolla)		

COMPONENTS

ILLUSTRATION

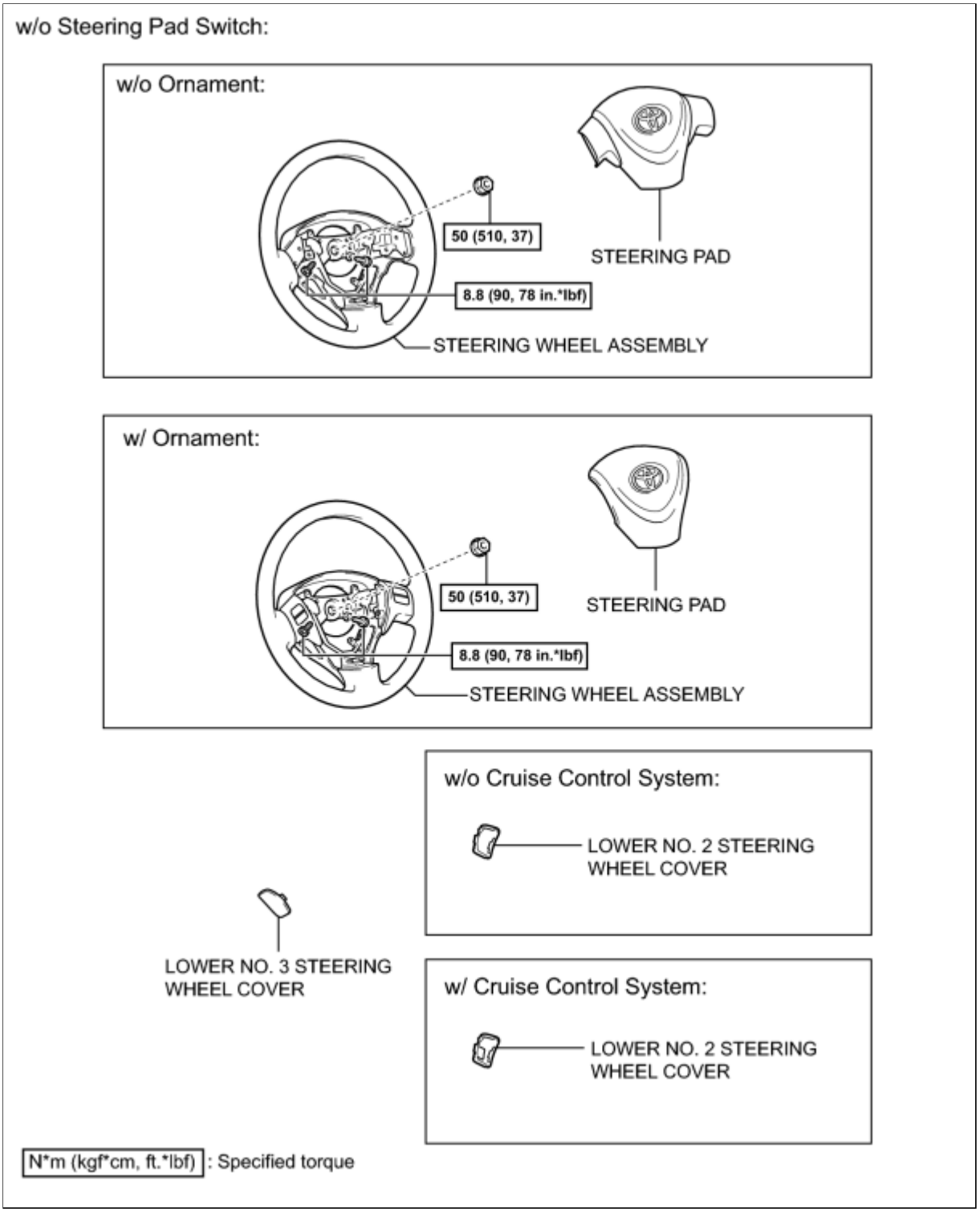

ILLUSTRATION

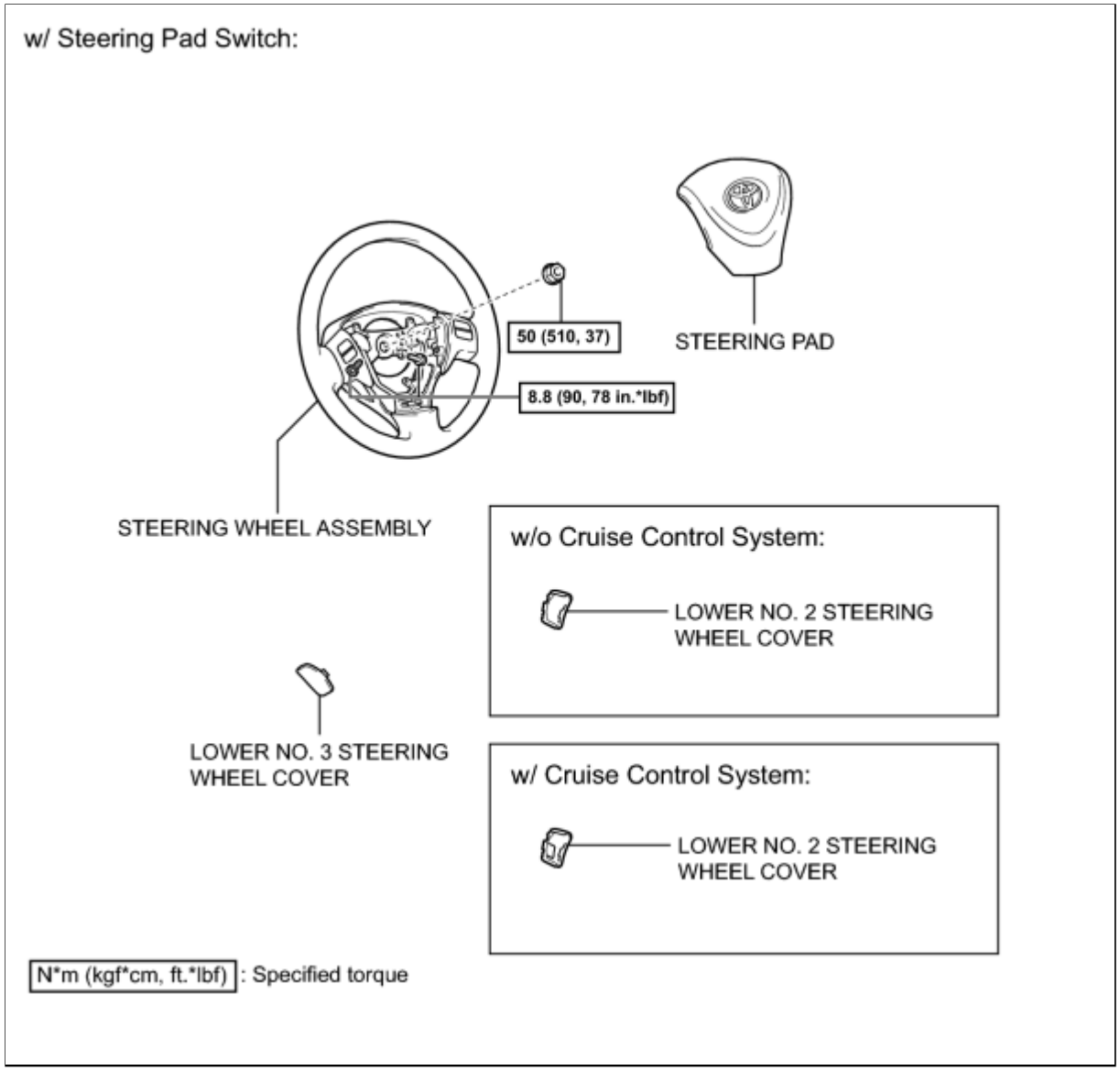

ILLUSTRATION

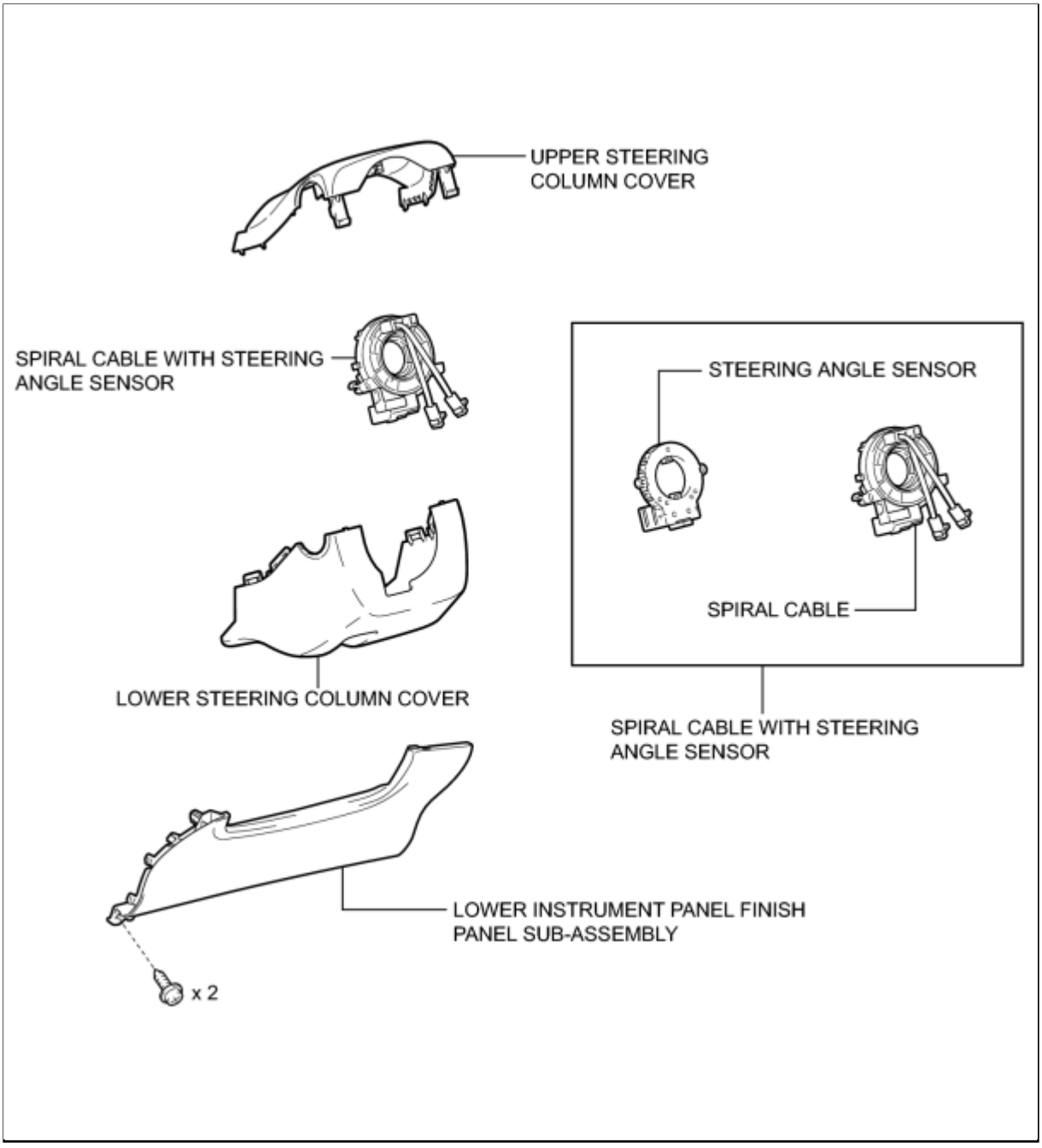
UPPER STEERING COLUMN COVER
SPIRAL CABLE WITH STEERING ANGLE SENSOR
STEERING ANGLE SENSOR
SPIRAL CABLE
LOWER STEERING COLUMN COVER
SPIRAL CABLE WITH STEERING ANGLE SENSOR
LOWER INSTRUMENT PANEL FINISH PANEL SUB-ASSEMBLY
x 2

Last Modified: 3-10-2010	6.4 A	**From:** 200901
Model Year: 2010	**Model:** Corolla	**Doc ID:** RM000002VP100GX
Title: BRAKE CONTROL / DYNAMIC CONTROL SYSTEMS: STEERING ANGLE SENSOR (w/ VSC): REMOVAL (2010 Corolla)		

REMOVAL

1. PRECAUTION

CAUTION:

Be sure to read Precaution throughly before servicing INFO

2. DISCONNECT CABLE FROM NEGATIVE BATTERY TERMINAL

CAUTION:

Wait at least 90 seconds after disconnecting the cable from the negative (-) battery terminal to disable the SRS system INFO **.**

3. ALIGN FRONT WHEELS FACING STRAIGHT AHEAD

4. REMOVE LOWER NO. 3 STEERING WHEEL COVER INFO

5. REMOVE LOWER NO. 2 STEERING WHEEL COVER INFO

6. REMOVE STEERING PAD INFO

7. REMOVE STEERING WHEEL ASSEMBLY INFO

8. REMOVE LOWER INSTRUMENT PANEL FINISH PANEL SUB-ASSEMBLY INFO

9. REMOVE LOWER STEERING COLUMN COVER INFO

10. REMOVE UPPER STEERING COLUMN COVER INFO

11. REMOVE SPIRAL CABLE WITH STEERING ANGLE SENSOR INFO

12. REMOVE STEERING ANGLE SENSOR

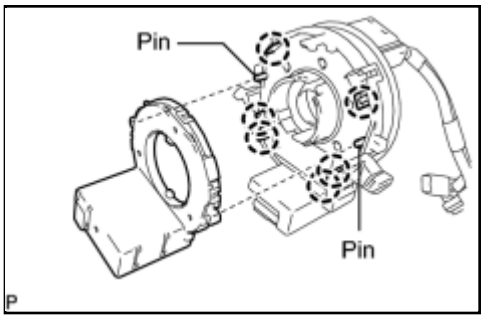

(a) Disengage the 6 claws and 2 pins, and remove the steering angle sensor from the spiral cable.

Last Modified: 3-10-2010	6.4 A	**From:** 200901
Model Year: 2010	**Model:** Corolla	**Doc ID:** RM000002VOY00GX
Title: BRAKE CONTROL / DYNAMIC CONTROL SYSTEMS: STEERING ANGLE SENSOR (w/ VSC): INSTALLATION (2010 Corolla)		

INSTALLATION

1. INSTALL STEERING ANGLE SENSOR

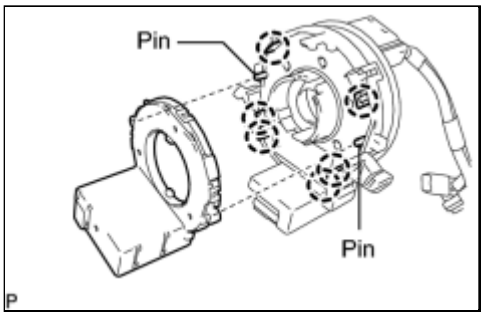

(a) Align the 2 locating pins, engage the 6 claws, and install the steering angle sensor to the spiral cable.

2. INSTALL SPIRAL CABLE WITH STEERING ANGLE SENSOR INFO

3. INSTALL UPPER STEERING COLUMN COVER INFO

4. INSTALL LOWER STEERING COLUMN COVER INFO

5. INSTALL LOWER INSTRUMENT PANEL FINISH PANEL SUB-ASSEMBLY INFO

6. ADJUST SPIRAL CABLE INFO

7. INSTALL STEERING WHEEL ASSEMBLY INFO

8. INSPECT STEERING WHEEL CENTER POINT

9. INSTALL STEERING PAD INFO

10. INSTALL LOWER NO. 3 STEERING WHEEL COVER INFO

11. INSTALL LOWER NO. 2 STEERING WHEEL COVER INFO

12. CONNECT CABLE TO NEGATIVE BATTERY TERMINAL

NOTICE:

When reconnecting the cable to the negative (-) battery terminal after installing the steering sensor, check that the front tires and steering wheel are kept aligned straight ahead before and after connecting the cable to the negative (-) battery terminal.

13. INSPECT STEERING PAD INFO

14. INSPECT SRS WARNING LIGHT

INFO

Last Modified: 3-10-2010	6.4 L	**From:** 200901
Model Year: 2010	**Model:** Corolla	**Doc ID:** RM000000XFT04LX
Title: BRAKE CONTROL / DYNAMIC CONTROL SYSTEMS: VEHICLE STABILITY CONTROL SYSTEM: PRECAUTION (2010 Corolla)		

PRECAUTION

1. EXPRESSIONS OF IGNITION SWITCH

The type of ignition switch used on this model differs according to the specifications of the vehicle.

The expressions listed in the table below are used in this section.

EXPRESSION	SWITCH TYPE	
	IGNITION SWITCH (POSITION)	ENGINE SWITCH (CONDITION)
Ignition switch off	LOCK	off
Ignition switch ON	ON	on (IG)
Ignition switch ACC	ACC	on (ACC)
Engine start	START	start

2. TROUBLESHOOTING PRECAUTIONS

(a) When there is a malfunction with terminal contact points or part installation problems, removal and installation of the suspected parts may return the system to normal either completely or temporarily.

(b) In order to determine the malfunctioning area, be sure to check the conditions at the time the malfunction occurred, such as DTC output and the Freeze Frame Data, and record it before disconnecting any connector or removing and installing parts.

(c) Since the system may be influenced by malfunctions in systems other than the VSC system, be sure to check for DTCs in other systems.

3. HANDLING PRECAUTIONS

(a) Do not remove or install VSC parts such as the steering angle sensor or yaw rate and acceleration sensor except when required, as they cannot be adjusted correctly after removal or installation.

(b) Be sure to perform preparation before work and confirmation after work is completed by following the directions in the repair manual when working on the VSC system.

(c) Be sure to remove and install the ECU, brake actuator and each sensor, etc. with the ignition switch off unless it is specified in the inspection procedure.

(d) If the ECU, brake actuator or a sensor has been removed and installed, it is necessary to check the system for problems after any parts have been reinstalled. Check for DTCs using the Techstream, and also check that system functions and signals received by the ECU are normal using Test Mode.

4. DTC PRECAUTION

(a) Warnings for some DTCs will not be cleared by just replacing the malfunctioning parts. If a

warning is still displayed after completing a repair, turn the ignition switch off before beginning the clear DTC procedure.

NOTICE:

If a DTC for a malfunctioning part reappears after it was cleared, then it has been stored again.

5. CHASSIS DYNAMOMETER PRECAUTION

(a) Enter Test Mode to disable TRAC and VSC control when using a chassis dynamometer INFO .

HINT:

- The vehicle may unexpectedly move off of the dynamometer because of TRAC and VSC operation.
- Pressing the VSC OFF switch does not disable TRAC and VSC operation completely.

NOTICE:

- Make sure that the VSC OFF indicator light is blinking (Test Mode is activated).
- Secure the vehicle with lock chains for safety.

6. CAN COMMUNICATION SYSTEM PRECAUTIONS

(a) The CAN communication system is used for data communication between the skid control ECU, the steering angle sensor, the yaw rate and acceleration sensor and other ECUs. If there are any problems in the CAN communication line, corresponding DTCs in the communication line are output.

(b) If any CAN communication line DTCs are output, repair the malfunction in the communication line and troubleshoot the VSC system while data communication is normal.

(c) In order to enable CAN communication, a specific type of wiring is used for the CAN communication lines. The wiring used for each communication line is a twisted pair of wires that have an equal length. A bypass wire should not be used because the data being transmitted will be corrupted.

Last Modified: 3-10-2010	6.4 R	**From:** 200901
Model Year: 2010	**Model:** Corolla	**Doc ID:** RM000001JB302NX
Title: BRAKE CONTROL / DYNAMIC CONTROL SYSTEMS: VEHICLE STABILITY CONTROL SYSTEM: PARTS LOCATION (2010 Corolla)		

PARTS LOCATION

ILLUSTRATION

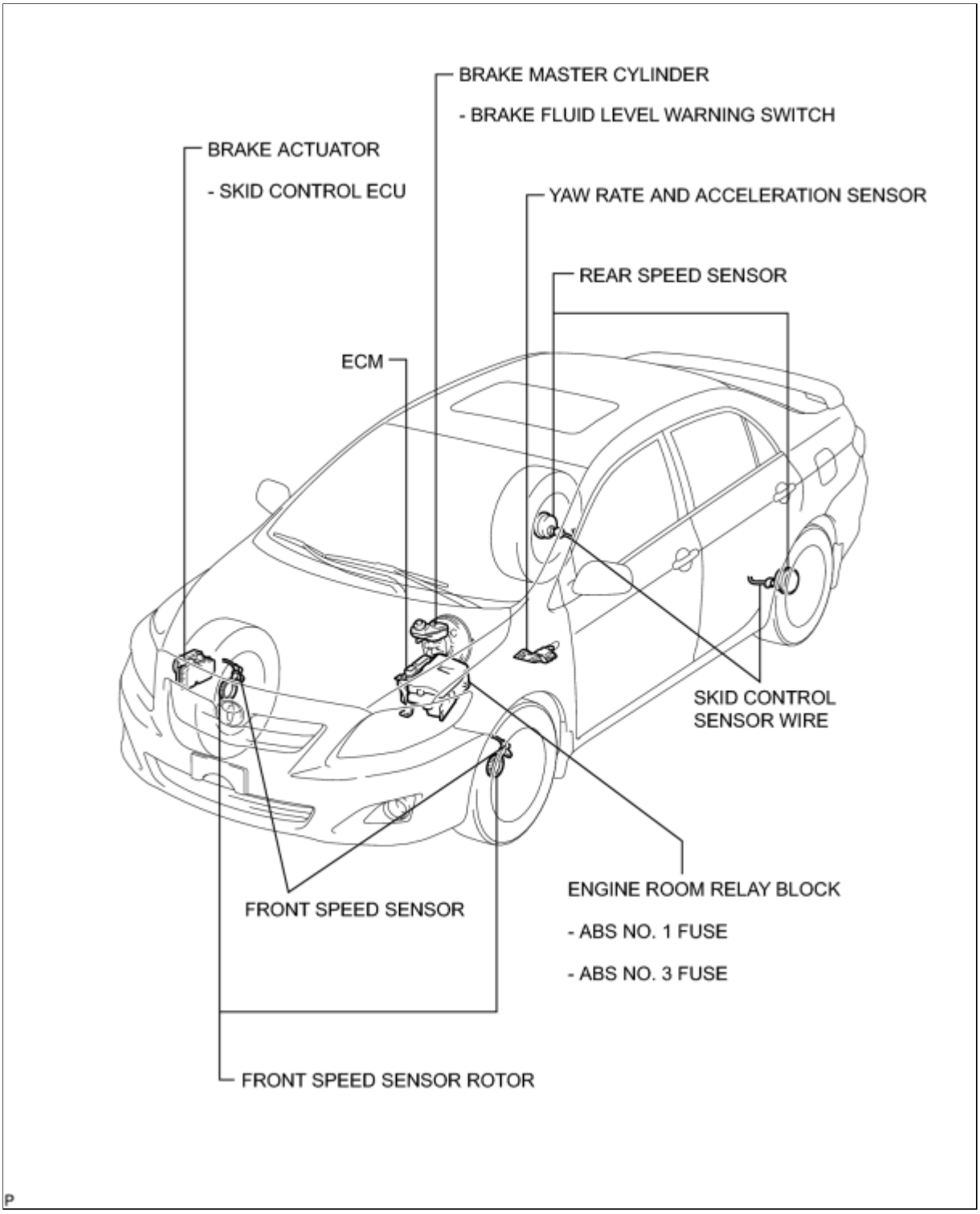

P

ILLUSTRATION

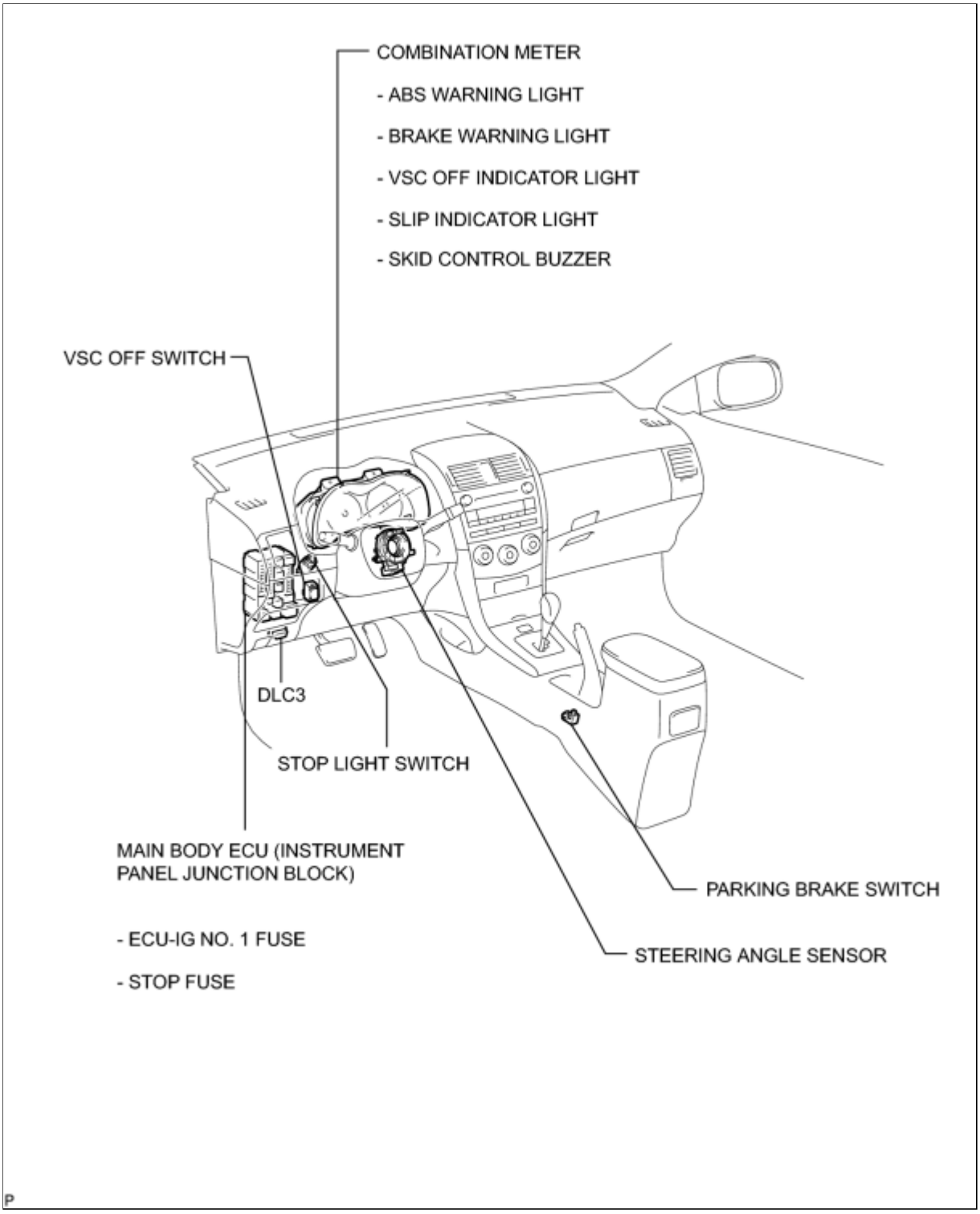
COMBINATION METER
- ABS WARNING LIGHT
- BRAKE WARNING LIGHT
- VSC OFF INDICATOR LIGHT
- SLIP INDICATOR LIGHT
- SKID CONTROL BUZZER
VSC OFF SWITCH
DLC3
STOP LIGHT SWITCH
MAIN BODY ECU (INSTRUMENT PANEL JUNCTION BLOCK)
- ECU-IG NO. 1 FUSE
- STOP FUSE
PARKING BRAKE SWITCH
STEERING ANGLE SENSOR

P

Last Modified: 3-10-2010	6.4 D	**From:** 200901
Model Year: 2010	**Model:** Corolla	**Doc ID:** RM000000XHO03GX
Title: BRAKE CONTROL / DYNAMIC CONTROL SYSTEMS: VEHICLE STABILITY CONTROL SYSTEM: SYSTEM DESCRIPTION (2010 Corolla)		

SYSTEM DESCRIPTION

1. FUNCTION DESCRIPTION

HINT:

- The skid control ECU is located within the brake actuator assembly.
- The yaw rate sensor and acceleration sensor are combined in a single unit. This unit communicates with the skid control ECU through CAN communication.

(a) ABS (Anti-lock Brake System)

The ABS helps prevent the wheels from locking when the brakes are applied firmly or when braking on a slippery surface.

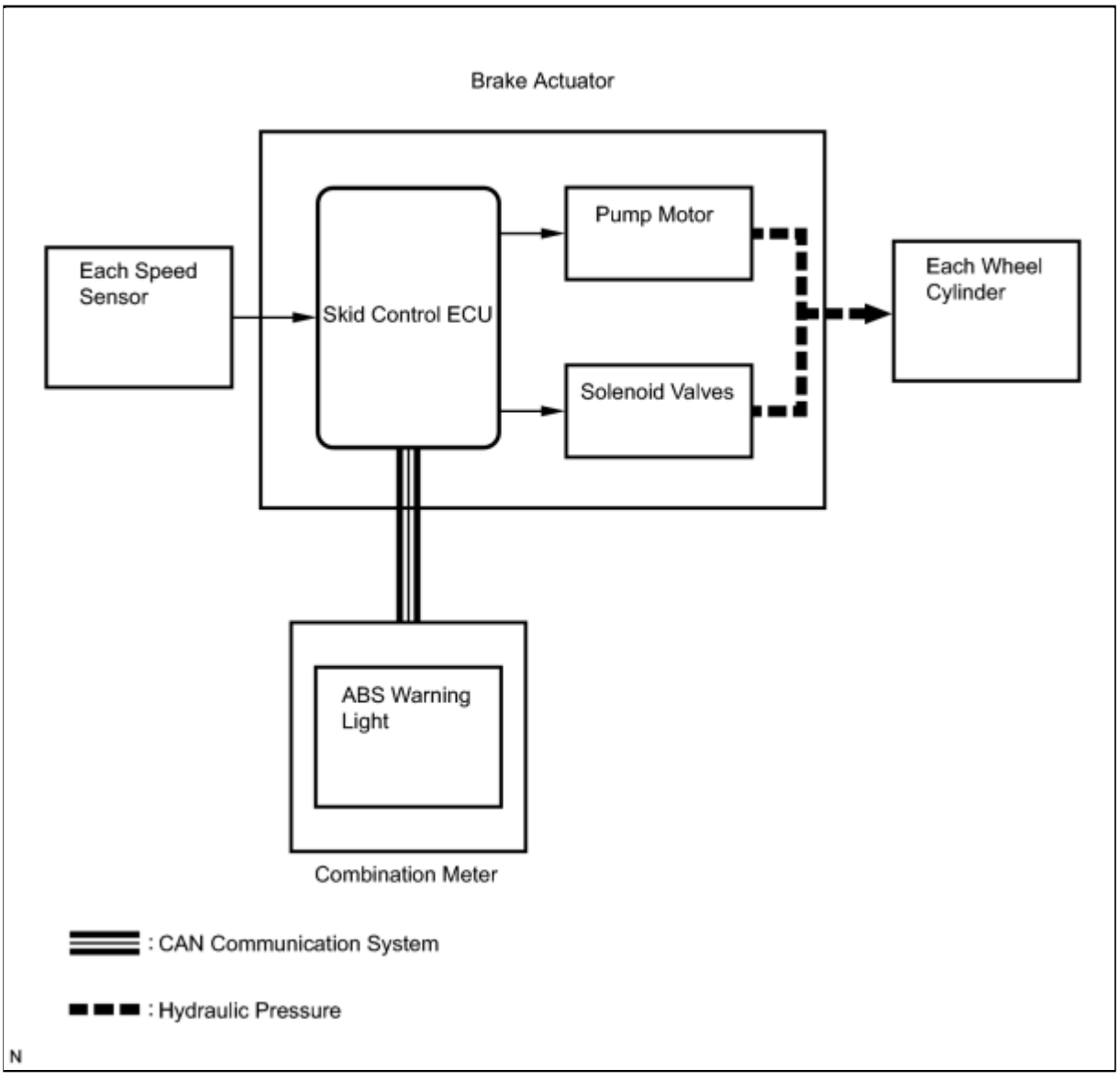

(1) Operation description

The skid control ECU detects wheel lock based on speed signals received from the wheel speed sensors. Based on this information, the skid control ECU controls the pump motor and solenoid valves. The pump motor and solenoid valves are used to prevent wheel lock by controlling the hydraulic pressure applied to the brakes at each wheel. The ABS warning light will come on when the system is malfunctioning.

(b) EBD (Electronic Brake force Distribution)

The EBD control utilizes the ABS to properly distribute brake force between the front and rear wheels in accordance with driving conditions.

When braking while cornering, it also controls the brake force distribution between the right and left wheels, helping to maintain vehicle behavior.

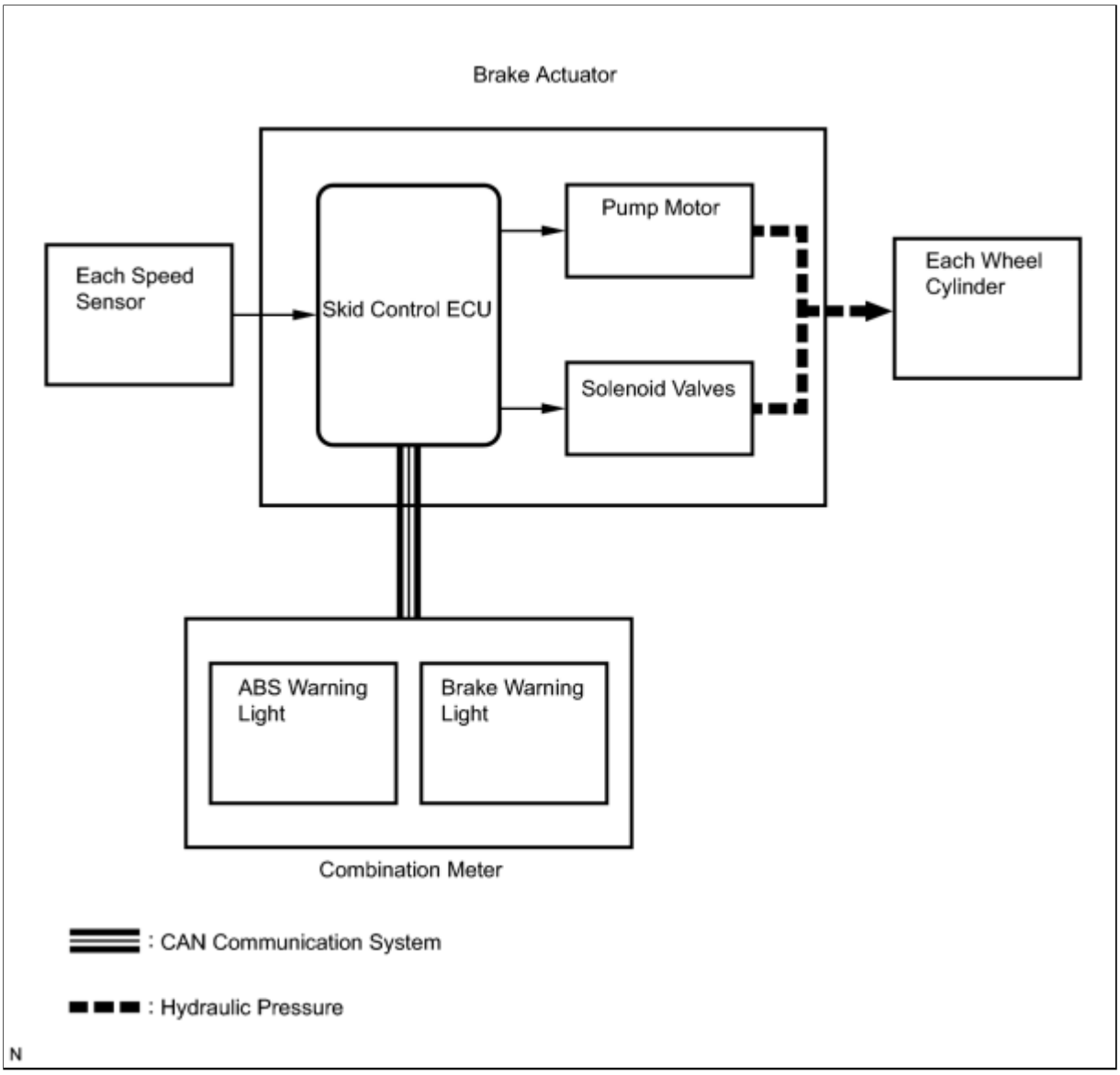

(1) Operation description

The skid control ECU receives a speed signal from each wheel speed sensor, and uses these signals to detect locking of the wheels. The ECU uses this information in order to determine appropriate control of the solenoid valves.

The solenoid valves control the hydraulic pressure applied to the brake cylinder at each wheel. In this way, the solenoid valves are used to control the brake power split between the front and rear, and left and right wheels. The ABS warning and brake warning lights will come on if there is a malfunction in the EBD system.

(c) BA (Brake Assist)

The primary purpose of the brake assist system is to provide auxiliary brake force to assist a driver who cannot generate a large enough brake force during emergency braking, thus helping to maximize the brake performance of the vehicle.

(1) Operation description

The skid control ECU receives a speed signal from each speed sensor and a fluid pressure signal from the master cylinder pressure sensor to determine whether brake assist is necessary. If brake assist is necessary, the skid control ECU sends control signals to the pump motor and solenoid valves. The pump motor and the solenoid valves then control the pressure applied to each wheel cylinder.

The ABS warning light will come on to indicate a malfunction in the BA system.

(d) TRAC (Traction Control)

The TRAC system helps prevent the drive wheels from slipping when the driver depresses the accelerator pedal excessively when starting off or accelerating on a slippery surface.

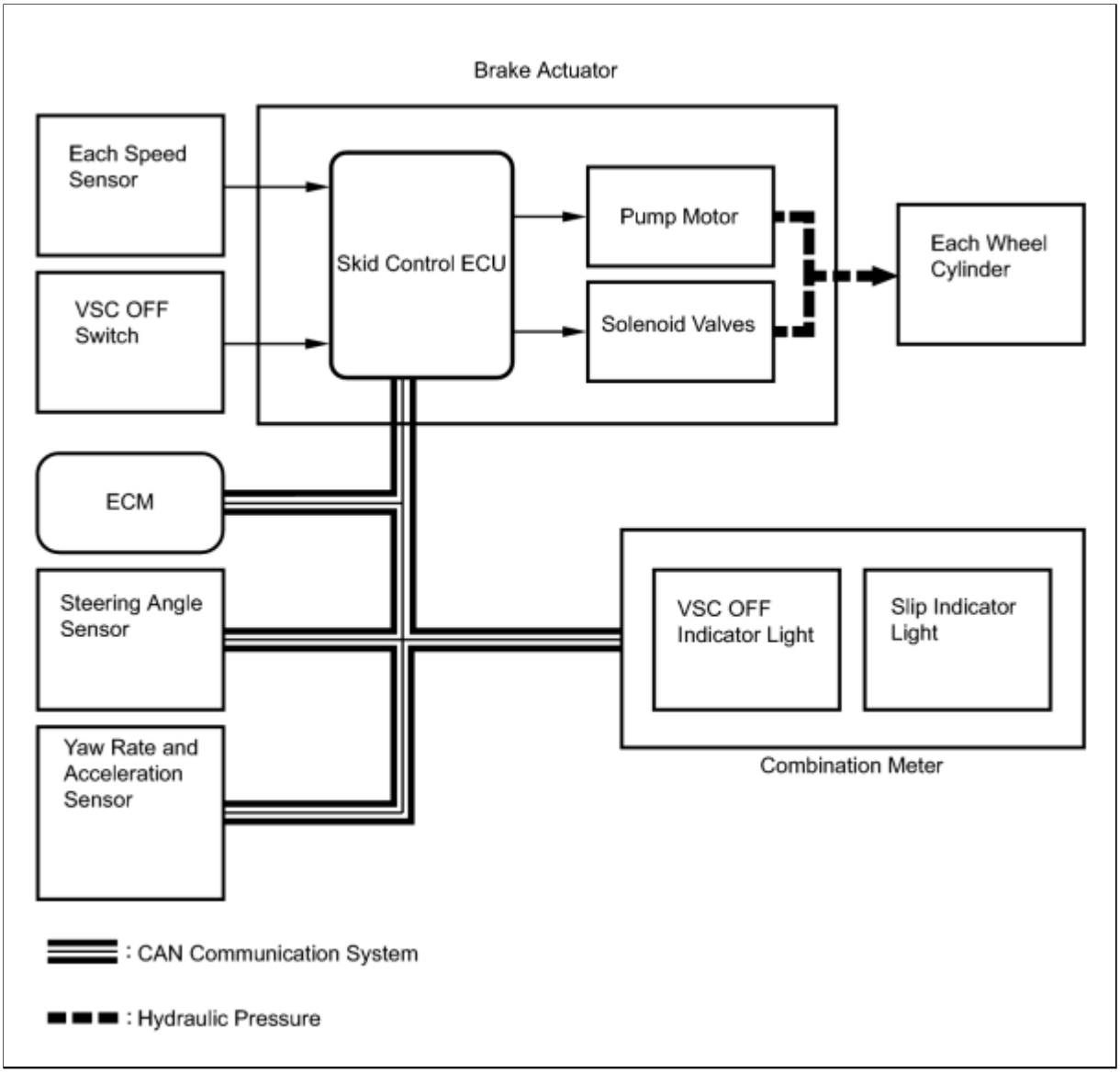

(1) Operation description

The skid control ECU detects wheelspin by receiving signals from each speed sensor and the ECM via CAN communication. The skid control ECU sends signals via CAN communication to the ECM in order to control engine torque. The skid control ECU controls brake hydraulic pressure using the pump motor and solenoid valves.

The slip indicator light blinks when the system is operating. When there is a malfunction in the TRAC system, the VSC OFF indicator light blinks and slip indicator light comes on.

The VSC OFF switch is used to disable traction control operation.

(e) VSC (Vehicle Stability Control)

The VSC system helps prevent the vehicle from slipping sideways as a result of strong front or rear wheel skid during cornering.

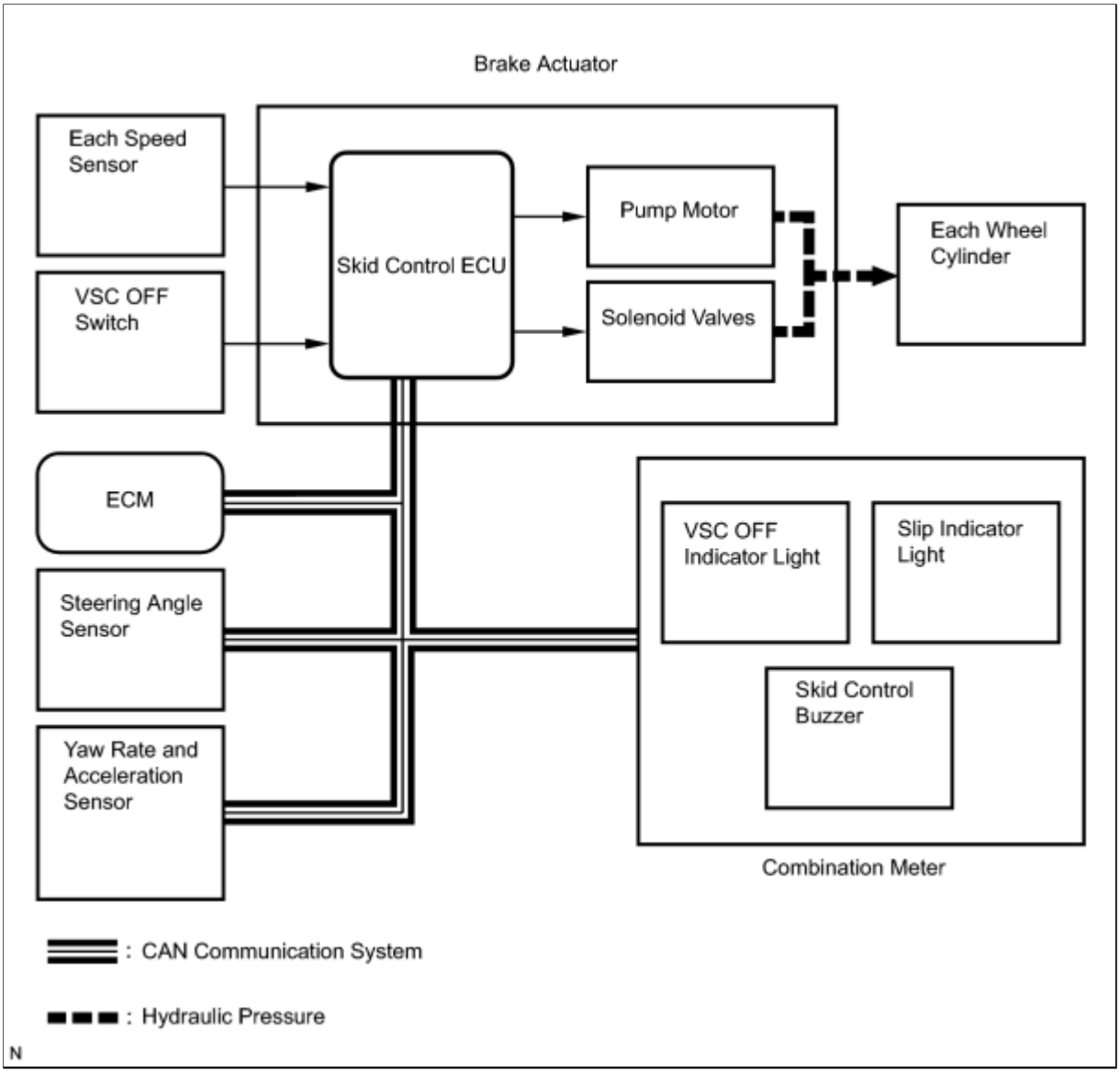

(1) Operation description

The skid control ECU determines the vehicle operating conditions based on signals received from the wheel speed sensors, yaw rate and acceleration sensor, and steering angle sensor. The skid control ECU sends signals via CAN communication to the ECM in order to control engine torque. The skid control ECU controls brake hydraulic pressure using the pump and solenoid valves.

The slip indicator light blinks, and the skid control buzzer sounds when the system is operating. If a malfunction occurs in the VSC system, the VSC OFF indicator light blinks and slip indicator light comes on.

The VSC OFF switch is used to disable VSC control operation.

2. ABS with EBD, BA, TRAC and VSC OPERATION

(a) The skid control ECU calculates vehicle stability based on signals from the speed sensor, yaw rate and acceleration sensor, and steering angle sensor. In addition, it evaluates the results to determine whether any control actions (control of the engine output torque using electronic throttle control or wheel brake pressure using the brake actuator assembly) should be implemented.

(b) The slip indicator light blinks and the skid control buzzer sounds to inform the driver that the VSC

system is operating. The slip indicator light also blinks when traction control is operating, and the operation being performed is displayed.

3. FAIL SAFE

(a) When a malfunction occurs in the ABS with BA, TRAC and VSC systems, the ABS warning and slip indicator lights come on and the VSC OFF indicator light blinks, and ABS with BA, TRAC and VSC operations are prohibited. In addition, when there is a malfunction that disables EBD operation, the brake warning light also comes on and EBD operation is prohibited.

(b) If control is prohibited due to a malfunction during operation, control will be disabled gradually.

This is to avoid sudden vehicle instability.

4. INITIAL CHECK

(a) When the vehicle speed first reaches approximately 6 km/h (4 mph) or more after the ignition switch is turned to ON, each solenoid valve and motor of the brake actuator are sequentially activated to perform an electrical check. During the initial check, the operating sound of the solenoid valves and motor can be heard from the engine compartment, but this is not a malfunction.

5. INSPECTION MODE

(a) TRAC and VSC operation can be disabled by operating the Techstream 

.

6. FUNCTION OF COMPONENTS

COMPONENT	FUNCTION
Speed sensor	Detects the wheel speed and sends the signal to the skid control ECU.
Yaw rate and acceleration sensor	• The acceleration sensor measures the capacity of the condenser that changes the distance between the electrodes depending on G force, which occurs when the vehicle is accelerated, and converts the measured value into electrical signals. • The yaw rate sensor detects the vehicle's angular velocity (yaw rate) in the vertical direction based on the amount and direction of the piezoelectric ceramics deflection. • Sends signals to the skid control ECU via CAN communication.
Steering angle sensor	• Installed in the combination switch. • Detects the steering amount and direction and sends the signals to the skid control ECU via CAN communication. • Has a magnetic resistance element which detects the rotation of the magnet housed in the detection gear in order to detect the changes of magnetic resistance and the steering amount and direction.
Stop light switch	Detects the brake operating conditions and inputs the result to the skid control ECU.
Main body ECU	Detects the parking brake operating conditions and inputs the result to the skid control ECU via CAN communication.
Master cylinder pressure sensor	• Detects the fluid pressure in the master cylinder. • Housed in the brake actuator assembly.

Last Modified: 3-10-2010	6.4 U	**From:** 200901
Model Year: 2010	**Model:** Corolla	**Doc ID:** RM000000XHQ02ZX
Title: BRAKE CONTROL / DYNAMIC CONTROL SYSTEMS: VEHICLE STABILITY CONTROL SYSTEM: SYSTEM DIAGRAM (2010 Corolla)		

SYSTEM DIAGRAM

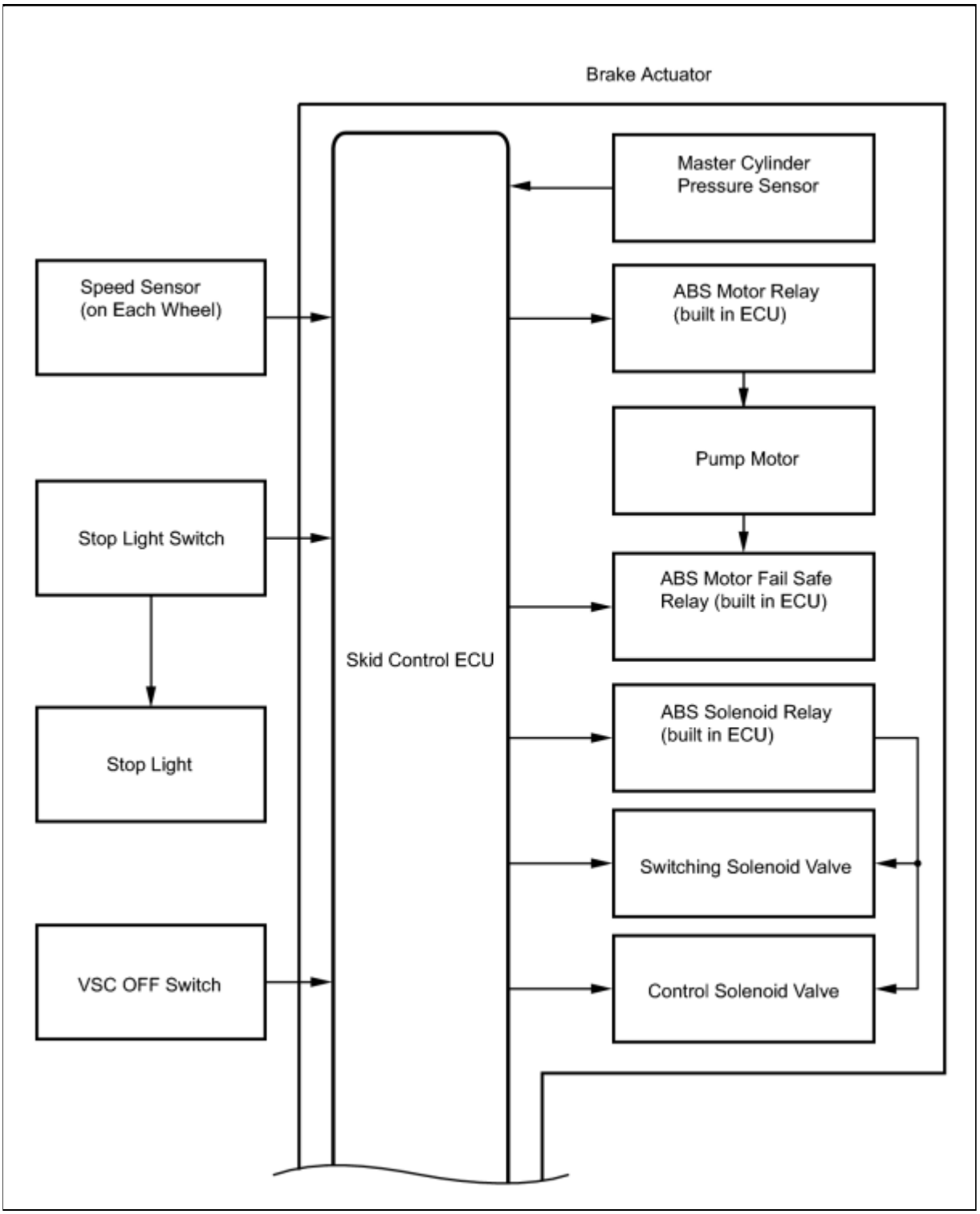

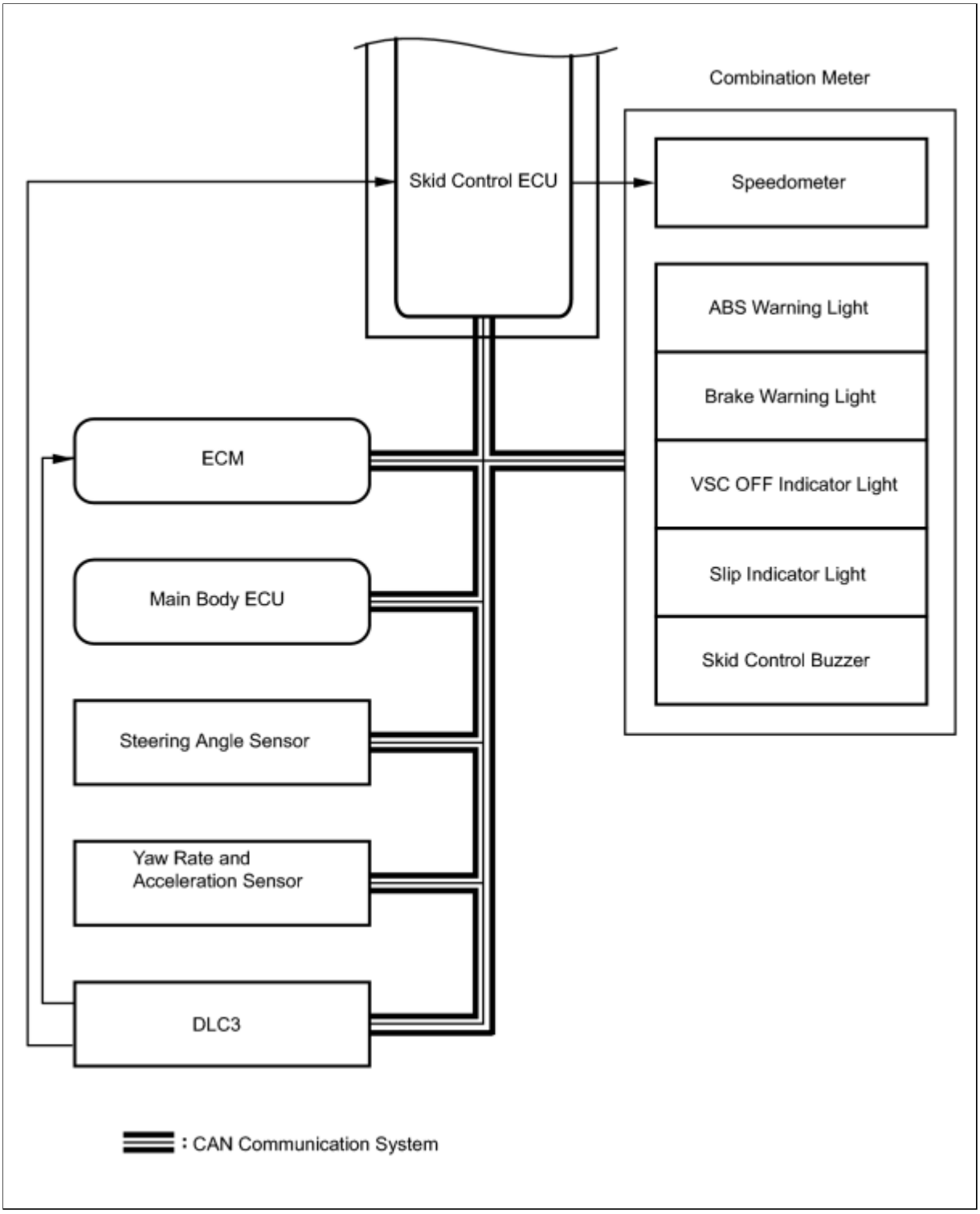

TRANSMITTING ECU (TRANSMITTER)	RECEIVING ECU	SIGNAL	COMMUNICATION METHOD
Skid control ECU	Steering angle sensor	Steering angle sensor request signal	CAN communication system
Skid control ECU	Yaw rate and acceleration sensor	Yaw rate and acceleration request signal	CAN communication system

TRANSMITTING ECU (TRANSMITTER)	RECEIVING ECU	SIGNAL	COMMUNICATION METHOD
Skid control ECU	ECM	• Wheel speed signal • VSC data signal	CAN communication system
ECM	Skid control ECU	• Shift position signal • Throttle position signal • Engine speed signal • Intake air temperature signal • Engine torque request signal • Accelerator pedal position signal	CAN communication system
Main body ECU	Skid control ECU	Parking brake switch signal	CAN communication system
Skid control ECU	Combination meter	• ABS warning light signal • Brake warning light signal • VSC OFF indicator light signal • Slip indicator light signal • Skid control buzzer signal • Wheel speed signal	CAN communication system

Last Modified: 3-10-2010	6.4 D	**From:** 200901
Model Year: 2010	**Model:** Corolla	**Doc ID:** RM000000XHK050X
Title: BRAKE CONTROL / DYNAMIC CONTROL SYSTEMS: VEHICLE STABILITY CONTROL SYSTEM: HOW TO PROCEED WITH TROUBLESHOOTING (2010 Corolla)		

HOW TO PROCEED WITH TROUBLESHOOTING

HINT:

***: Use the Techstream.**

1.	**VEHICLE BROUGHT TO WORKSHOP**

NEXT

2.	**CUSTOMER PROBLEM ANALYSIS**

(a) Interview the customer and confirm the problem INFO .

NEXT

3.	**CHECK DTC AND FREEZE FRAME DATA***

(a) Check and record DTCs and Freeze Frame Data.

(b) Clear the DTCs and Freeze Frame Data INFO for DTC Check/Clear, and INFO for Freeze Frame Data).

(c) Reconfirm the DTCs.

(1) Reconfirm the DTCs based on the recorded DTCs and Freeze Frame Data INFO for DTC Check/Clear, and INFO for Freeze Frame Data).

HINT:

- When DTCs indicating a CAN communication system malfunction are output, repair the CAN

communication system before repairing each corresponding sensor INFO .

- If any of the DTCs U0100/65, U0123/62, U0124/95, and U0126/63 is output together with a CAN communication DTC, first check the appropriate sensor for a momentary open circuit INFO .

Result:

RESULT	PROCEED TO
DTC is output	A
DTC is not output (Problem symptom does not occur)	B
DTC is not output (Problem symptom occurs)	C

B ▶ **GO TO STEP 5**

C ▶ **GO TO STEP 6**

A ▼

4.	DIAGNOSTIC TROUBLE CODE CHART

(a) Proceed to Diagnostic Trouble Code Chart INFO .

NEXT ▶ **GO TO STEP 7**

5.	SYMPTOM SIMULATION

(a) Proceed to Diagnosis System INFO .

NEXT ▼

6.	PROBLEM SYMPTOMS TABLE

(a) Proceed to Problem Symptoms Table INFO .

NEXT

7.	CIRCUIT INSPECTION*

NEXT

8.	IDENTIFICATION OF PROBLEM

NEXT

9.	REPAIR OR REPLACEMENT

NEXT

10.	CONFIRMATION TEST*

NEXT END

Last Modified: 3-10-2010	6.4 D	**From:** 200901
Model Year: 2010	**Model:** Corolla	**Doc ID:** RM000000XHT03LX
Title: BRAKE CONTROL / DYNAMIC CONTROL SYSTEMS: VEHICLE STABILITY CONTROL SYSTEM: TEST MODE PROCEDURE (2010 Corolla)		

TEST MODE PROCEDURE

1. WARNING LIGHT AND INDICATOR LIGHT INITIAL CHECK

(a) Release the parking brake.

NOTICE:

When releasing the parking brake, move the shift lever to P for safety (for automatic transaxle model) or set the chocks to hold the vehicle for safety (for manual transaxle model).

HINT:

When the parking brake is applied or the level of the brake fluid is low, the brake warning light will come on.

(b) When the ignition switch is turned to ON, check that the ABS warning, brake warning, VSC OFF indicator and slip indicator lights come on for approximately 3 seconds.

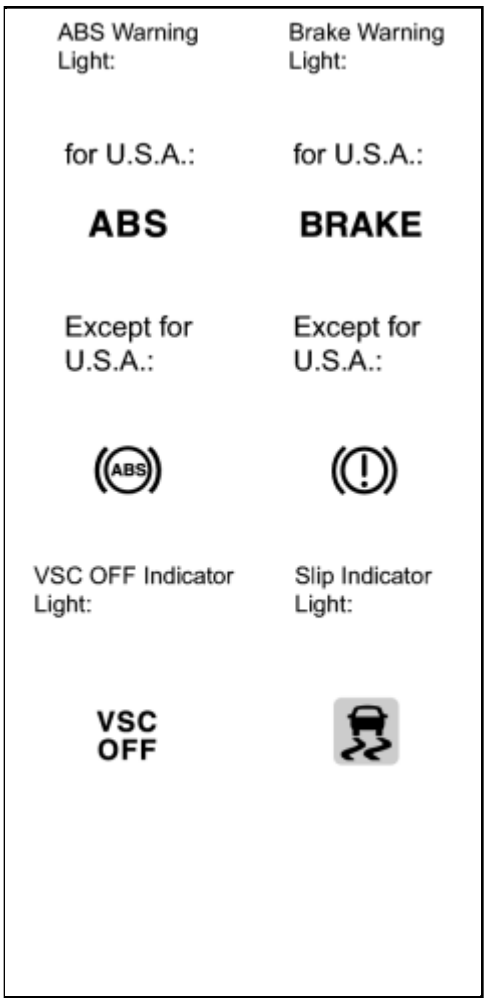

HINT:

- If the skid control ECU stores any DTCs, the ABS warning, brake warning and slip indicator lights will come on and the VSC OFF indicator light will blink.
- If any of the indicators remains on or does not come on, proceed to troubleshooting for the light circuits listed below.

TROUBLE AREA	SEE PROCEDURE
ABS warning light circuit (Remains on)	INFO
ABS warning light circuit (Does not come on)	INFO
Brake warning light circuit (Remains on)	INFO
Brake warning light circuit (Does not come on)	INFO
VSC OFF indicator light circuit (Remains on)	INFO
VSC OFF indicator light circuit (Does not come on)	INFO
Slip indicator light circuit (Remains on)	INFO
Slip indicator light circuit (Does not come on)	INFO

2. SENSOR CHECK USING TEST MODE (SIGNAL CHECK) (When Using the Techstream)

NOTICE:

After replacement of the brake actuator assembly and/or yaw rate and acceleration sensor, perform zero point calibration of the yaw rate and acceleration sensor.

HINT:

- If the ignition switch is turned from ON to ACC or off during Test Mode (signal check), DTCs recorded during the sensor check will be cleared.
- During Test Mode (signal check), the skid control ECU records all DTCs of the sensor check function. By performing Test Mode (signal check), the codes are cleared if a normal condition is confirmed. The remaining codes are the codes where a malfunction was found.

(a) Procedure to enter Test Mode.

(1) Turn the ignition switch off.

(2) Check that the steering wheel is centered.

(3) Check that the shift lever is in P (for automatic transaxle model) or the parking brake is applied (for manual transaxle model).

(4) Connect the Techstream to the DLC3.

(5) Turn the ignition switch to ON.

(6) Turn the Techstream on.

(7) Switch the skid control ECU to Test Mode using the Techstream. Enter the following menus: Chassis / ABS/VSC/TRAC / Utility / Signal Check.

(8) Check that the ABS warning and VSC OFF indicator lights come on for several seconds and then blink in Test Mode.

HINT:

- The slip indicator light remains on during Test Mode because traction control operation is prohibited (The slip indicator light goes off when the VSC OFF switch is on).
- If the ABS warning and VSC OFF indicator lights do not blink, inspect the TS and CG terminal circuit and ABS warning and VSC OFF indicator light circuits.

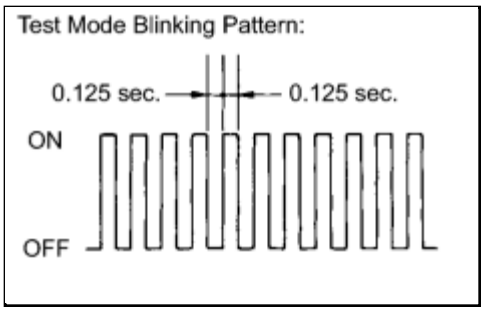

TROUBLE AREA	SEE PROCEDURE
TS and CG terminal circuit	INFO
ABS warning light circuit (Remains on)	INFO
ABS warning light circuit (Does not come on)	INFO
VSC OFF indicator light circuit (Remains on)	INFO

VSC OFF indicator light circuit (Does not come on)	INFO

(9) Check the ABS sensors.

HINT:

Check that the ABS warning light is blinking in the Test Mode blinking pattern before performing the ABS sensor check.

3. ACCELERATION SENSOR CHECK (When Using the Techstream)

(a) Keep the vehicle stationary on a level surface for 1 second or more.

HINT:

The acceleration sensor check can be performed with the master cylinder pressure sensor check below.

4. MASTER CYLINDER PRESSURE SENSOR CHECK (When Using the Techstream)

(a) Keep the vehicle stationary and release the brake pedal for 1 second or more, and quickly and continuously depress the brake pedal with a force of 98 N (10 kgf, 22 lbf) or more for 1 second.

(b) Check that the ABS warning light stays on for 3 seconds.

HINT:

- Confirm that the ABS warning light comes on.
- While the ABS warning light is illuminated, continue to depress the brake pedal with a force of 98 N (10 kgf, 22 lbf) or more.
- The ABS warning light comes on for 3 seconds every time brake pedal operation above is performed.
- If the master cylinder pressure sensor check is not completed, depressing the brake pedal causes further decreases in the vacuum in the brake booster, making the sensor check difficult to complete.
- If the vacuum remaining in the booster is insufficient, the master cylinder pressure sensor check may not be completed. In this case, run the engine at idle to obtain sufficient vacuum.
- If the brake pedal is strongly depressed when the vacuum in the booster is insufficient, the brake warning light may come on in accordance with the booster pressure control. In this case, run the engine at idle to obtain sufficient vacuum.

5. SPEED SENSOR CHECK (When Using the Techstream)

(a) Check the speed sensor signal.

(1) Drive the vehicle straight-ahead.

Accelerate the vehicle to a speed of 45 km/h (28 mph) or more for several seconds and check that the ABS warning light goes off.

HINT:

- The sensor check may not be completed if wheelspin occurs.
- The ABS warning light blinks when the sensor check has been completed and the brake pedal is depressed.
- The ABS warning light comes on immediately after a malfunction has been detected during the speed sensor check.

(b) Stop the vehicle.

NOTICE:

- Before performing the speed sensor check, complete the acceleration sensor and master cylinder pressure sensor checks.
- The speed sensor check may not be completed if the speed sensor check is started while turning the steering wheel or spinning the wheels.
- After the ABS warning light goes off, if the vehicle speed exceeds 80 km/h (50 mph), a sensor check code will be stored again. Decelerate or stop the vehicle before the speed reaches 80 km/h (50 mph).
- If the sensor check has not been completed, the ABS warning light will blink while driving and the ABS will not operate.

HINT:

When the sensor check has been completed, the ABS warning light goes off while driving and blinks in the Test Mode pattern while the vehicle is stationary.

(c) Check the VSC sensor.

HINT:

Check that the VSC OFF indicator light blinks before performing the VSC sensor check.

6. YAW RATE SENSOR CHECK (When Using the Techstream)

(a) Check the output of the yaw rate sensor.

(1) Keep the vehicle stationary on a level surface for 1 second or more.

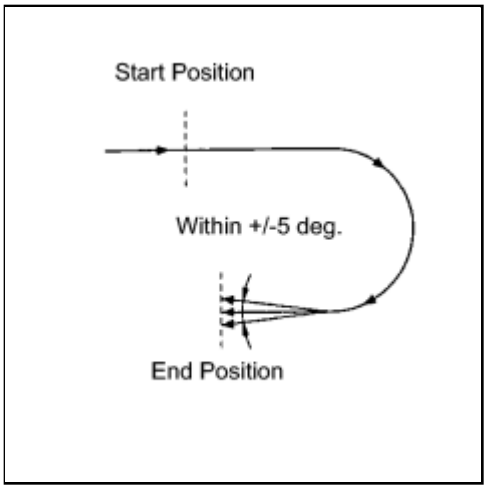

(2) Move the shift lever from P to D (for automatic transaxle model) or release the parking brake (for manual transaxle model) and drive the vehicle at a speed of approximately 5 km/h (3 mph), and turn the steering wheel either to the left or right 90° or more until the vehicle makes a 180° turn.

(3) Stop the vehicle and move the shift lever to P (for automatic transaxle model) or apply the parking brake (for manual transaxle model). Check that the skid control buzzer sounds for 3 seconds.

HINT:

- If the skid control buzzer sounds, the sensor check has completed normally.
- If the skid control buzzer does not sound, check the skid control buzzer circuit INFO , then perform the sensor check again.
- If the skid control buzzer still does not sound, the yaw rate sensor may be malfunctioning. Check

for DTCs.

- Make a 180° turn. At the end of the turn, the direction of the vehicle should be within 180° +/-5° of its start position.
- Do not spin the wheels.
- Do not turn the ignition switch off while turning.
- Do not move the shift lever to P (for automatic transaxle model) or do not apply the parking brake (for manual transaxle model) while turning, but changing the vehicle speed, stopping, or driving in reverse is acceptable.
- Complete the turn within 20 seconds.

7. END OF SENSOR CHECK (When Using the Techstream)

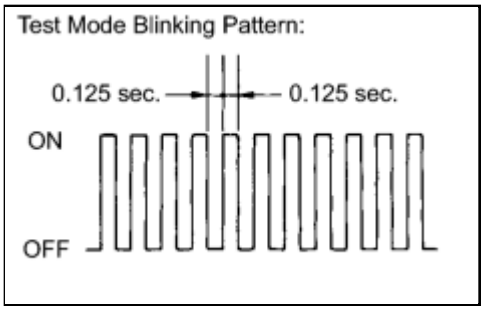

(a) If the sensor check is completed, the ABS warning light blinks (Test Mode) when the vehicle stops and the ABS warning light is off while the vehicle is driving.

NOTICE:

- When the yaw rate sensor, acceleration sensor, speed sensor, and master cylinder pressure sensor checks are completed, the sensor check is completed.
- If the sensor check has not been completed, the ABS warning light will blink while driving and the ABS will not operate.

8. READ DTC OF SENSOR CHECK FUNCTION (When Using the Techstream)

(a) Read the DTC(s) by following the Techstream screen.

NOTICE:

- If only DTCs other than the Test Mode sensor check DTCs are displayed, repair the malfunction and clear the DTCs.
- If the Test Mode sensor check DTCs and other DTCs are displayed or if only the Test Mode sensor check DTCs are displayed, repair the malfunction, clear the DTCs, and perform the Test Mode inspection again.

HINT:

See the list of DTCs (See procedure "A").

(b) Turn the ignition switch off and disconnect the Techstream.

9. SENSOR CHECK USING TEST MODE (SIGNAL CHECK) (When not Using the Techstream)

NOTICE:

After replacement of the brake actuator assembly and/or yaw rate and acceleration sensor, perform zero point calibration of the yaw rate and acceleration sensor.

HINT:

- If the ignition switch is turned from ON to ACC or off during Test Mode (signal check), DTCs recorded during the sensor check will be cleared.
- During Test Mode (signal check), the skid control ECU records all DTCs of the sensor check function. By performing Test Mode (signal check), the codes are cleared if a normal condition is confirmed. The remaining codes are the codes where a malfunction was found.

(a) Procedure to enter Test Mode.

(1) Turn the ignition switch off.

(2) Check that the steering wheel is centered.

(3) Check that the shift lever is in P (for automatic transaxle model) or the parking brake is applied (for manual transaxle model).

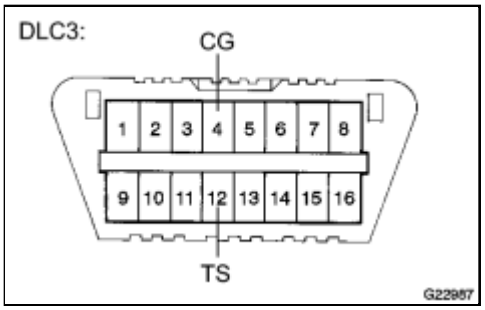

(4) Using SST, connect terminals TS and CG of the DLC3.

SST: 09843-18040

(5) Turn the ignition switch to ON.

(6) Check that the ABS warning and VSC OFF indicator lights come on for several seconds and then blink in Test Mode.

HINT:

- The slip indicator light remains on during Test Mode because traction control operation is prohibited (The slip indicator light goes off when the VSC OFF switch is on).
- If the ABS warning and VSC OFF indicator lights do not blink, inspect the TS and CG terminal circuit and ABS warning and VSC OFF indicator light circuits.

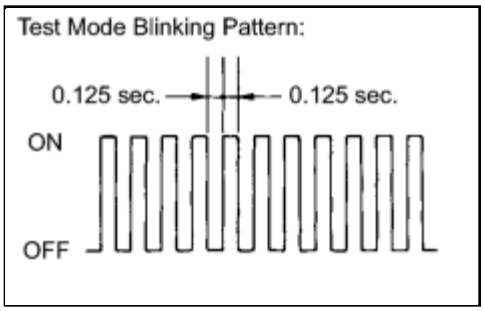

TROUBLE AREA	SEE PROCEDURE
TS and CG terminal circuit	INFO
ABS warning light circuit (Remains on)	INFO
ABS warning light circuit (Does not come on)	INFO
VSC OFF indicator light circuit (Remains on)	INFO
VSC OFF indicator light circuit (Does not come on)	INFO

(7) Check the ABS sensors.

HINT:

Check that the ABS warning light is blinking in the Test Mode blinking pattern before performing ABS sensor check.

10. ACCELERATION SENSOR CHECK (When not Using the Techstream)

(a) Keep the vehicle stationary on a level surface for 1 second or more.

HINT:

The acceleration sensor check can be performed with the master cylinder pressure sensor check below.

11. MASTER CYLINDER PRESSURE SENSOR CHECK (When not Using the Techstream)

(a) Keep the vehicle stationary and release the brake pedal for 1 second or more, and quickly and continuously depress the brake pedal with a force of 98 N (10 kgf, 22 lbf) or more for 1 second.

(b) Check that the ABS warning light stays on for 3 seconds.

HINT:

- Confirm that the ABS warning light comes on.
- While the ABS warning light is illuminated, continue to depress the brake pedal with a force of 98 N (10 kgf, 22 lbf) or more.
- The ABS warning light comes on for 3 seconds every time the brake pedal operation above is performed.
- If the master cylinder pressure sensor check is not completed, depressing the brake pedal causes further decreases in the vacuum in the brake booster, making the sensor check difficult to complete.
- If the vacuum remaining in the booster is insufficient, the master cylinder pressure sensor check may not be completed. In this case, run the engine at idle to obtain sufficient vacuum.
- If the brake pedal is strongly depressed when the vacuum in the booster is insufficient, the brake warning light may come on in accordance with the booster pressure control. In this case, run the engine at idle to obtain sufficient vacuum.

12. SPEED SENSOR CHECK (When not Using the Techstream)

(a) Check the speed sensor signal.

(1) Drive the vehicle straight-ahead.

Accelerate the vehicle to a speed of 45 km/h (28 mph) or more for several seconds and check that the ABS warning light goes off.

HINT:

- The sensor check may not be completed if wheelspin occurs.
- The ABS warning light blinks when the sensor check has been completed and the brake pedal is depressed.
- The ABS warning light comes on immediately after a malfunction has been detected during the speed sensor check.

(b) Stop the vehicle.

NOTICE:

- Before performing the speed sensor check, complete the acceleration sensor and master cylinder pressure sensor checks.
- The speed sensor check may not be completed if the speed sensor check is started while turning the steering wheel or spinning the wheels.
- After the ABS warning light goes off, if the vehicle speed exceeds 80 km/h (50 mph), a sensor check code will be stored again. Decelerate or stop the vehicle before the speed reaches 80 km/h (50 mph).
- If the sensor check has not been completed, the ABS warning light will blink while driving and the

ABS will not operate.

HINT:

When the sensor check has been completed, the ABS warning light goes off while driving and blinks in the Test Mode pattern while the vehicle is stationary.

(c) Check the VSC sensor.

HINT:

Check that the VSC OFF indicator light blinks before performing the VSC sensor check.

13. YAW RATE SENSOR CHECK (When not Using the Techstream)

(a) Check the output of the yaw rate sensor.

(1) Keep the vehicle stationary on a level surface for 1 second or more.

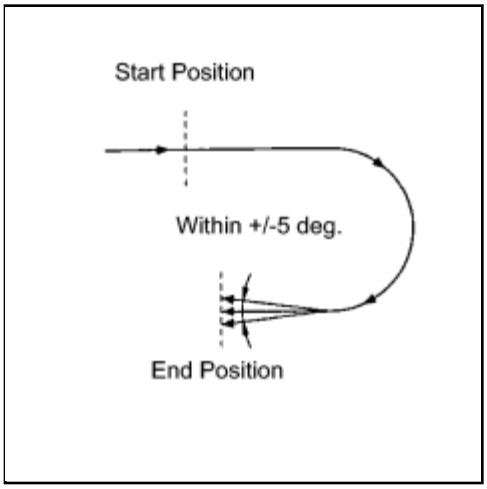

(2) Move the shift lever from P to D (for automatic transaxle model) or release the parking brake (for manual transaxle model) and drive the vehicle at a speed of approximately 5 km/h (3 mph), and turn the steering wheel either to the left or right 90° or more until the vehicle makes a 180° turn.

(3) Stop the vehicle and move the shift lever to P (for automatic transaxle model) or apply the parking brake (for manual transaxle model). Check that the skid control buzzer sounds for 3 seconds.

HINT:

- If the skid control buzzer sounds, the sensor check has completed normally.
- If the skid control buzzer does not sound, check the skid control buzzer circuit INFO , then perform the sensor check again.
- If the skid control buzzer still does not sound, the yaw rate sensor may be malfunctioning. Check for DTCs.
- Make a 180° turn. At the end of the turn, the direction of the vehicle should be within 180° +/-5° of its start position.
- Do not spin the wheels.
- Do not turn the ignition switch off while turning.
- Do not move the shift lever to P (for automatic transaxle model) or do not apply the parking brake (for manual transaxle model) while turning, but changing the vehicle speed, stopping, or driving in reverse is acceptable.
- Complete the turn within 20 seconds.

14. END OF SENSOR CHECK (When not Using the Techstream)

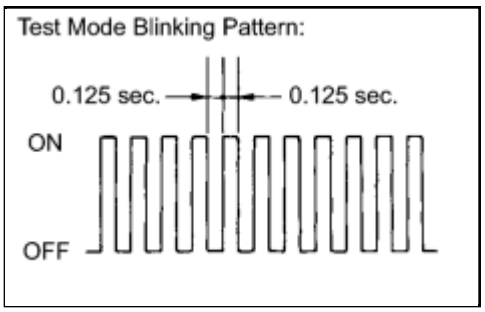

(a) If the sensor check is completed, the ABS warning light blinks (Test Mode) when the vehicle stops and the ABS warning light is off while the vehicle is driving.

NOTICE:

- When the yaw rate sensor, acceleration sensor, speed sensor, and master cylinder pressure sensor checks are completed, the sensor check is completed.
- If the sensor check is not completed, the ABS warning light blinks even while the vehicle is driving and the ABS will not operate.

15. READ DTC OF SENSOR CHECK FUNCTION (When not Using the Techstream)

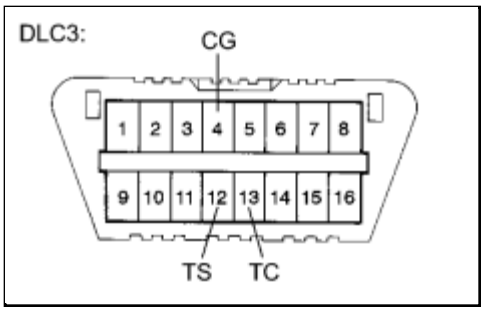

(a) Using SST, connect terminals TC and CG of the DLC3.

SST: 09843-18040

(b) Count the number of blinks of the ABS warning and VSC OFF indicator lights.

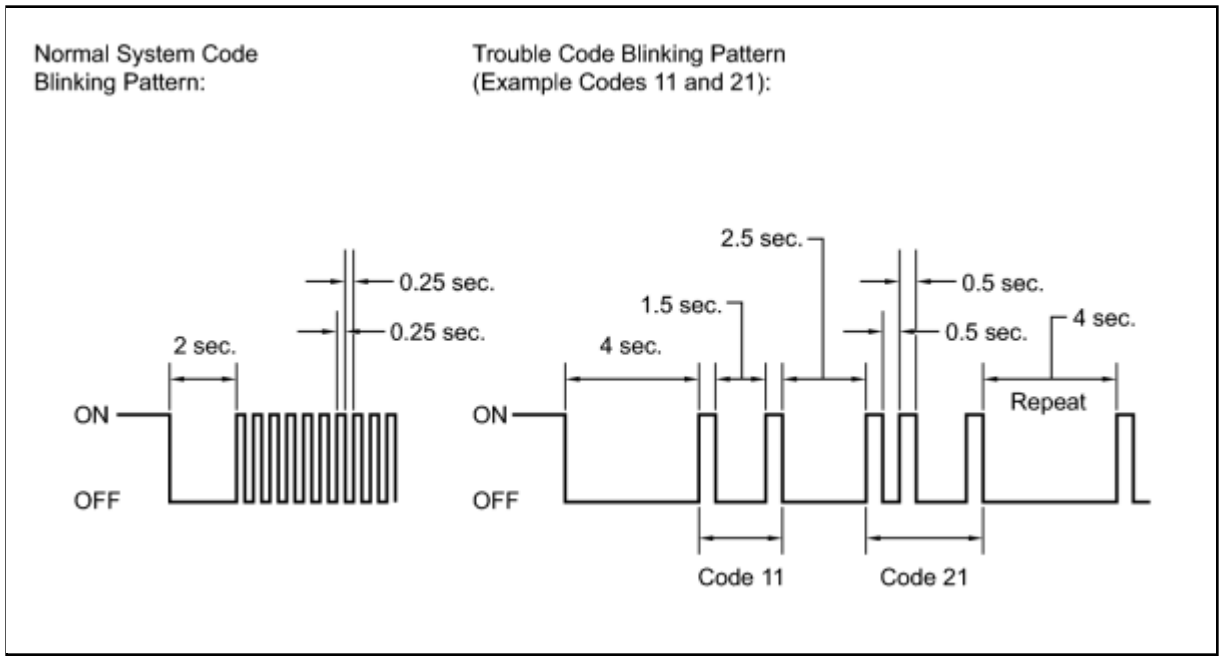

NOTICE:

- If only DTCs other than the Test Mode sensor check DTCs are displayed, repair the malfunction and clear the DTCs.
- If the Test Mode sensor check DTCs and other DTCs are displayed or if only the Test Mode

sensor check DTCs are displayed, repair the malfunction, clear the DTCs, and perform the Test Mode inspection again.

HINT:

- If more than 1 malfunction is detected at the same time, the lowest numbered code will be displayed first.
- See the list of DTCs (See procedure "A").

(c) After performing the check, disconnect SST from terminals TS and CG, and TC and CG of the DLC3 and turn the ignition switch off.

(d) Turn the ignition switch to ON.

HINT:

- If the ignition switch is not turned to ON after SST is removed from the DLC3, the previous Test Mode will continue.
- If the ignition switch is turned to ON with terminals TS and CG connected, the previous Test Mode will continue.

16. DTC OF SENSOR CHECK FUNCTION (Procedure "A")

ABS Sensor

DTC CODE	DETECTION ITEM	TROUBLE AREA
C1271/71	Low output signal of front speed sensor RH	• Front speed sensor RH • Sensor installation • Speed sensor rotor
C1272/72	Low output signal of front speed sensor LH	• Front speed sensor LH • Sensor installation • Speed sensor rotor
C1273/73	Low output signal of rear speed sensor RH	• Rear speed sensor RH • Sensor installation • Speed sensor rotor
C1274/74	Low output signal of rear speed sensor LH	• Rear speed sensor LH • Sensor installation • Speed sensor rotor
C1275/75	Abnormal change in output signal of front speed sensor RH	Speed sensor rotor
C1276/76	Abnormal change in output signal of front speed sensor LH	Speed sensor rotor
C1277/77	Abnormal change in output signal of rear speed sensor RH	Speed sensor rotor
C1278/78	Abnormal change in output signal of rear speed sensor LH	Speed sensor rotor

DTC CODE	DETECTION ITEM	TROUBLE AREA
C1279/79	Acceleration sensor output voltage malfunction	• Yaw rate and acceleration sensor • Sensor installation
C1281/81	Master cylinder pressure sensor output malfunction	• Stop light switch • Master cylinder pressure sensor

VSC Sensor

DTC CODE	DETECTION ITEM	TROUBLE AREA
C0371/71	Yaw rate sensor	Yaw rate and acceleration sensor

HINT:

The codes in this table are output only in Test Mode (signal check).

17. VSC OFF SWITCH CHECK

(a) Push the VSC OFF switch on.

(b) Check that the slip indicator light goes off.

Last Modified: 3-10-2010	6.4 D	**From:** 200901
Model Year: 2010	**Model:** Corolla	**Doc ID:** RM000000XHS05EX
Title: BRAKE CONTROL / DYNAMIC CONTROL SYSTEMS: VEHICLE STABILITY CONTROL SYSTEM: CHECK FOR INTERMITTENT PROBLEMS (2010 Corolla)		

CHECK FOR INTERMITTENT PROBLEMS

1. CHECK FOR INTERMITTENT PROBLEMS

HINT:

A momentary interruption (open circuit) in the connectors and/or wire harness between the sensors and ECUs can be detected using the ECU Data List function of the Techstream.

(a) Turn the ignition switch off.

(b) Connect the Techstream to the DLC3.

(c) Turn the ignition switch to ON.

(d) Turn the Techstream on.

(e) Follow the directions on the Techstream to display the Data List and select areas where momentary interruptions should be monitored.

HINT:

- A momentary interruption (open circuit) cannot be detected for 3 seconds after the ignition switch is turned to ON (initial check).
- If the status remains on (ERROR displayed), check for continuity between the ECU and the sensors, or between ECUs.
- The ERROR display on the Techstream remains on for 1 second after the harness signal changes from momentary interruptions (open circuit) to normal condition.

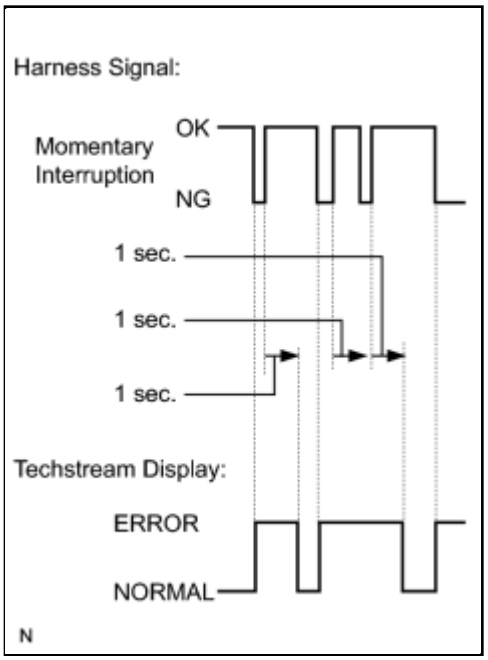

ABS/VSC/TRAC

TESTER DISPLAY	MEASUREMENT ITEM / RANGE	NORMAL CONDITION	DIAGNOSTIC NOTE
FR Speed Open	FR speed sensor open detection / ERROR or NORMAL	ERROR: Momentary interruption NORMAL: Normal	-
FL Speed Open	FL speed sensor open detection / ERROR or NORMAL	ERROR: Momentary interruption NORMAL:	-

		Normal	
RR Speed Open	RR speed sensor open detection / ERROR or NORMAL	ERROR: Momentary interruption NORMAL: Normal	-
RL Speed Open	RL speed sensor open detection / ERROR or NORMAL	ERROR: Momentary interruption NORMAL: Normal	-
EFI Communication Open	EFI communication open detection / ERROR or NORMAL	ERROR: Momentary interruption NORMAL: Normal	-
Yaw Rate Open	Yaw rate sensor open detection / ERROR or NORMAL	ERROR: Momentary interruption NORMAL: Normal	-
Deceleration Open	Acceleration sensor open detection / ERROR or NORMAL	ERROR: Momentary interruption NORMAL: Normal	-
Steering Open	Steering angle sensor open detection / ERROR or NORMAL	ERROR: Momentary interruption NORMAL: Normal	-

(f) While observing the screen, gently jiggle the connector or wire harness between the ECU and sensors, or between ECUs.

OK:

NORMAL display appears.

HINT:

The connector and/or wire harness has a momentary interruption (open circuit) if the display changes. Repair or replace the connector and/or wire harness as one of them is faulty.

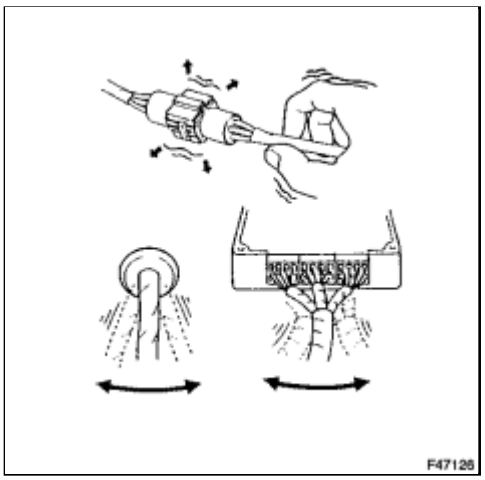
F47126

Last Modified: 3-10-2010	6.4 D	**From:** 200901
Model Year: 2010	**Model:** Corolla	**Doc ID:** RM000000XHR038X
Title: BRAKE CONTROL / DYNAMIC CONTROL SYSTEMS: VEHICLE STABILITY CONTROL SYSTEM: CALIBRATION (2010 Corolla)		

CALIBRATION

1. DESCRIPTION

- After replacing the VSC relevant components or performing front wheel alignment adjustment, clear and read the sensor calibration data.
- Follow the chart below to perform calibration.

REPLACING PARTS / OPERATION	NECESSARY OPERATION
Brake actuator assembly (Skid control ECU)	Yaw rate and acceleration sensor zero point calibration
Yaw rate and acceleration sensor	1. Clearing zero point calibration data 2. Yaw rate and acceleration sensor zero point calibration
Front wheel alignment adjustment	1. Clearing zero point calibration data 2. Yaw rate and acceleration sensor zero point calibration

2. OBTAIN ZERO POINT OF YAW RATE AND ACCELERATION SENSOR (When Using the Techstream)

NOTICE:

- While obtaining the zero point, keep the vehicle stationary and do not vibrate, tilt, move, or shake it. (Do not start the engine.)
- Be sure to perform this procedure on a level surface (with an inclination of less than 1 degree).

(a) Clear the zero point calibration data.

(1) Turn the ignition switch off.

(2) Check that the steering wheel is centered.

(3) Check that the shift lever is in P (for automatic transaxle model) or the parking brake is applied (for manual transaxle model).

(4) Connect the Techstream to the DLC3.

(5) Turn the ignition switch to ON.

(6) Turn the Techstream on.

(7) Select the skid control ECU to clear the zero point calibration data using the Techstream. Enter the following menus: Chassis / ABS/VSC/TRAC / Utility / Reset Memory.

(8) Turn the ignition switch off.

NOTICE:

If the ignition switch is turned to ON for more than 15 seconds with the shift lever in P (for automatic transaxle model) or the parking brake applied (for manual transaxle model) after zero point of the yaw

rate and acceleration sensor has been cleared, only the zero point of the yaw rate sensor will be stored. If the vehicle is driven under these conditions, the skid control ECU will store the zero point calibration for the acceleration sensor as not being completed. The skid control ECU will then also indicate this as a malfunction of the VSC system using the indicator lights.

(b) Perform zero point calibration of the yaw rate and acceleration sensor.

(1) Turn the ignition switch off.

(2) Check that the steering wheel is centered.

(3) Check that the shift lever is in P (for automatic transaxle model) or the parking brake is applied (for manual transaxle model).

NOTICE:

DTCs C1210/36 and C1336/39 will be recorded if the shift lever is not in P (for automatic transaxle model) or the parking brake is not applied (for manual transaxle model).

(4) Connect the Techstream to the DLC3.

(5) Turn the ignition switch to ON.

(6) Turn the Techstream on.

(7) Switch the skid control ECU to Test Mode using the Techstream. Enter the following menus: Chassis / ABS/VSC/TRAC / Utility / Test Mode.

(8) After the system enters Test Mode, keep the vehicle stationary on a level surface for 2 seconds or more.

(9) Check that the VSC OFF indicator light comes on for several seconds and then blinks in Test Mode.

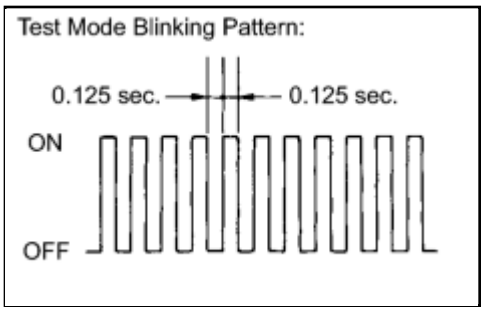

HINT:

- The slip indicator light remains on during Test Mode because traction control operation is prohibited (The slip indicator light goes off when the VSC OFF switch is on).
- If the VSC OFF indicator light does not blink, perform zero point calibration again.
- The zero point calibration is performed only once after the system enters Test Mode.
- Calibration cannot be performed again until the stored data is cleared.

(10) Turn the ignition switch off and disconnect the Techstream.

3. OBTAIN ZERO POINT OF YAW RATE AND ACCELERATION SENSOR (When not Using the Techstream)

NOTICE:

- While obtaining the zero point, keep the vehicle stationary and do not vibrate, tilt, move, or shake it. (Do not start the engine.)
- Be sure to perform this procedure on a level surface (with an inclination of less than 1 degree).

(a) Clear the zero point calibration data.

(1) Turn the ignition switch off.

(2) Check that the steering wheel is centered.

(3) Check that the shift lever is in P (for automatic transaxle model) or the parking brake is applied (for manual transaxle model).

(4) Turn the ignition switch to ON.

(5) The warning and indicator light come on for 3 seconds to indicate that the initial check is completed.

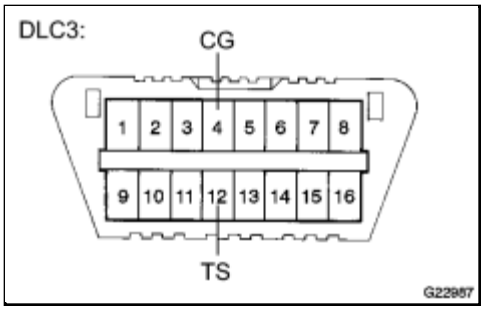

(6) Using SST, connect and disconnect terminals TS and CG of the DLC3 4 times or more within 8 seconds.

SST: 09843-18040

(7) Check that the VSC OFF indicator light comes on.

NOTICE:

If the ignition switch is turned to ON for more than 15 seconds with the shift lever in P (for automatic transaxle model) or the parking brake applied (for manual transaxle model) after zero point of the yaw rate and acceleration sensor has been cleared, only the zero point of the yaw rate sensor will be stored. If the vehicle is driven under these conditions, the skid control ECU will store the zero point calibration for the acceleration sensor as not being completed. The skid control ECU will then also indicate this as a malfunction of the VSC system using the indicator lights.

(b) Perform zero point calibration of the yaw rate and acceleration sensor.

(1) Turn the ignition switch off.

(2) Check that the steering wheel is centered.

(3) Check that the shift lever is in P (for automatic transaxle model) or the parking brake is applied (for manual transaxle model).

NOTICE:

DTCs C1210/36 and C1336/39 will be recorded if the shift lever is not in P (for automatic transaxle model) or the parking brake is not applied (for manual transaxle model).

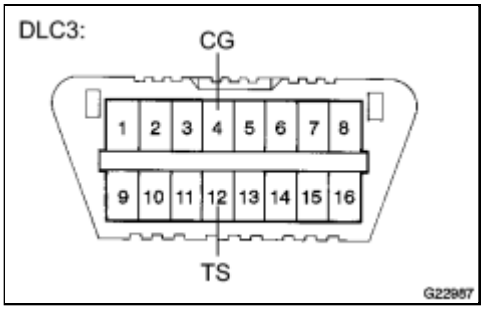

(4) Using SST, connect terminals TS and CG of the DLC3.

SST: 09843-18040

(5) Turn the ignition switch to ON.

(6) Keep the vehicle stationary on a level surface for 2 seconds or more.

(7) Check that the VSC OFF indicator light comes on for several seconds and then blinks in Test Mode.

HINT:

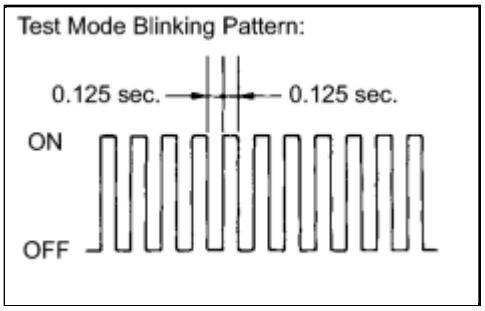

- The slip indicator light remains on during Test Mode because traction control operation is prohibited (The slip indicator light goes off when the VSC OFF switch is on).
- If the VSC OFF indicator light does not blink, perform zero point calibration again.
- The zero point calibration is performed only once after the system enters Test Mode.
- Calibration cannot be performed again until the stored data is cleared.

(8) Turn the ignition switch off and disconnect SST from the DLC3.

Last Modified: 3-10-2010	6.4 T	**From:** 200901
Model Year: 2010	**Model:** Corolla	**Doc ID:** RM000000XHN04PX
Title: BRAKE CONTROL / DYNAMIC CONTROL SYSTEMS: VEHICLE STABILITY CONTROL SYSTEM: PROBLEM SYMPTOMS TABLE (2010 Corolla)		

PROBLEM SYMPTOMS TABLE

If there are no DTCs output and the problem still occurs, check the circuits for each problem symptom in the order given in the table below and proceed to the relevant troubleshooting page.

NOTICE:

When replacing the brake actuator assembly, sensors, etc., turn the ignition switch off.

HINT:

- Use the table below to help determine the cause of problem symptoms. If multiple suspected areas are listed, the potential causes of the symptoms are listed in order of probability in the "Suspected Area" column of the table. Check each symptom by checking the suspected areas in the order they are listed. Replace parts as necessary.
- Inspect the fuses and relays related to this system before inspecting the suspected areas below.

Vehicle Stability Control System

SYMPTOM	SUSPECTED AREA	SEE PAGE
ABS, BA and/or EBD does not operate	Check for DTCs again and make sure that the normal system code is output.	INFO
	IG power source circuit (Low power supply voltage malfunction)	INFO
	IG power source circuit (High power supply voltage malfunction)	INFO
	Front speed sensor circuit (Output malfunction)	INFO
	Rear speed sensor circuit (Output malfunction)	INFO
	Front speed sensor circuit (Open or short malfunction)	INFO
	Rear speed sensor circuit (Open or short malfunction)	INFO
	Front speed sensor circuit (Comparison malfunction)	INFO
	Rear speed sensor circuit (Comparison malfunction)	INFO
	Check the brake actuator assembly using the Techstream. (Check brake actuator assembly operation using the Active Test function.) If abnormal, check the hydraulic circuit for leaks.	INFO
	If the symptom still occurs even after the circuits listed above have been inspected and proved to be normal, replace the brake actuator assembly (skid control ECU).	INFO
ABS, BA and/or EBD does not operate	Check for DTCs again and make sure that the normal system code is output.	INFO

SYMPTOM	SUSPECTED AREA	SEE PAGE
efficiently	Front speed sensor circuit (Output malfunction)	INFO
	Rear speed sensor circuit (Output malfunction)	INFO
	Front speed sensor circuit (Open or short malfunction)	INFO
	Rear speed sensor circuit (Open or short malfunction)	INFO
	Front speed sensor circuit (Comparison malfunction)	INFO
	Front speed sensor circuit (Comparison malfunction)	INFO
	Stop light switch circuit	INFO
	Check the brake actuator assembly using the Techstream. (Check brake actuator assembly operation using the Active Test function.) If abnormal, check the hydraulic circuit for leaks.	INFO
	If the symptom still occurs even after the circuits listed above have been inspected and proved to be normal, replace the brake actuator assembly (skid control ECU).	INFO
ABS sensor DTC check cannot be done	Check for DTCs again and make sure that the normal system code is output.	INFO
	TC and CG terminal circuit	INFO
	If the symptom still occurs even after the circuits listed above have been inspected and proved to be normal, replace the brake actuator assembly (skid control ECU).	INFO
ABS warning light abnormal (Remains on)	ABS warning light circuit	INFO
	Brake actuator assembly (Skid control ECU)	INFO
ABS warning light abnormal (Does not come on)	ABS warning light circuit	INFO
	Brake actuator assembly (Skid control ECU)	INFO
Brake warning light abnormal (Remains on)	Brake warning light circuit	INFO
	Brake actuator assembly (Skid control ECU)	INFO
Brake warning light abnormal (Does not come on)	Brake warning light circuit	INFO
	Brake actuator assembly (Skid control ECU)	INFO
VSC and/or TRAC does not operate	Check for DTCs again and make sure that the normal system code is output.	INFO
	IG power source circuit (Low power supply voltage malfunction)	INFO
	IG power source circuit (High power supply voltage malfunction)	INFO
	Check the hydraulic circuit for leaks.	-

SYMPTOM	SUSPECTED AREA	SEE PAGE
	Front speed sensor circuit (Output malfunction)	INFO
	Rear speed sensor circuit (Output malfunction)	INFO
	Front speed sensor circuit (Open or short malfunction)	INFO
	Rear speed sensor circuit (Open or short malfunction)	INFO
	Front speed sensor circuit (Comparison malfunction)	INFO
	Front speed sensor circuit (Comparison malfunction)	INFO
	Yaw rate and acceleration sensor circuit (Zero point malfunction)	INFO
	Yaw rate and acceleration sensor circuit (Power supply malfunction)	INFO
	Acceleration sensor circuit (Comparison malfunction)	INFO
	Yaw rate sensor circuit (Comparison malfunction)	INFO
	Yaw rate and acceleration sensor circuit (Stuck or output malfunction)	INFO
	Yaw rate and acceleration sensor circuit (Continuous invalidation malfunction)	INFO
	Yaw rate and acceleration sensor circuit (Internal malfunction)	INFO
	Steering angle sensor circuit (Zero point malfunction)	INFO
	Steering angle sensor circuit (Zero point initialization or calibration malfunction)	INFO
	Steering angle sensor circuit (Power supply malfunction)	INFO
	Steering angle sensor circuit (Output malfunction)	INFO
	Steering angle sensor circuit (Internal malfunction)	INFO
	If the symptom still occurs even after the circuits listed above have been inspected and proved to be normal, replace the brake actuator assembly (skid control ECU).	INFO
VSC sensor DTC check cannot be done	Check for DTCs again and make sure that the normal system code is output.	INFO
	TC and CG terminal circuit	INFO
	If the symptom still occurs even after the circuits listed above have been inspected and proved to be normal, replace the brake actuator assembly (skid control ECU).	INFO
VSC OFF indicator light abnormal (Remains on)	VSC OFF indicator light circuit	INFO
	Brake actuator assembly (Skid control ECU)	INFO

SYMPTOM	SUSPECTED AREA	SEE PAGE
VSC OFF indicator light abnormal (Does not come on)	VSC OFF indicator light circuit	INFO
	Brake actuator assembly (Skid control ECU)	INFO
Slip indicator light abnormal (Remains on)	Slip indicator light circuit	INFO
	Brake actuator assembly (Skid control ECU)	INFO
Slip indicator light abnormal (Does not come on)	Slip indicator light circuit	INFO
	Brake actuator assembly (Skid control ECU)	INFO
Sensor check cannot be done	TS and CG terminal circuit	INFO
	Brake actuator assembly (Skid control ECU)	INFO
Skid control buzzer abnormal	Skid control buzzer circuit	INFO
	Brake actuator assembly (Skid control ECU)	INFO

Last Modified: 3-10-2010	6.4 D	**From:** 200901
Model Year: 2010	**Model:** Corolla	**Doc ID:** RM000000XHP04VX
Title: BRAKE CONTROL / DYNAMIC CONTROL SYSTEMS: VEHICLE STABILITY CONTROL SYSTEM: DIAGNOSIS SYSTEM (2010 Corolla)		

DIAGNOSIS SYSTEM

1. DESCRIPTION

When troubleshooting a vehicle with a diagnosis system, the only difference from the usual troubleshooting procedure is connecting the Techstream to the vehicle and reading various data output from the vehicle's skid control ECU.

The skid control ECU records DTCs when it detects a malfunction in the ECU itself or in its circuits.

To check the DTCs, connect the Techstream to the DLC3 on the vehicle. The Techstream enables you to clear the DTCs, activate the various actuators, and check the Freeze Frame Data and Data List.

(a) Check the battery voltage.

Standard Voltage:
11 to 14 V

If the voltage is below 11 V, recharge the battery before proceeding to the next step.

(b) Check the DLC3 INFO .

2. DIAGNOSIS

(a) If the skid control ECU detects a malfunction, the ABS warning, brake warning, VSC OFF indicator and slip indicator lights will come on in order to warn the driver.

The table below indicates which lights will come on when there is a malfunction in a particular function.

ITEM / TROUBLE AREA	ABS	EBD	BA	TRAC	VSC	SKID CONTROL ECU
ABS warning light	○	○	○	-	-	○
Brake warning light	-	○	-	-	-	○
VSC OFF indicator light	● (VSC OFF switch OFF)	● (VSC OFF switch OFF)	● (VSC OFF switch OFF)	● (VSC OFF switch OFF)	● (VSC OFF switch OFF)	● (VSC OFF switch OFF)

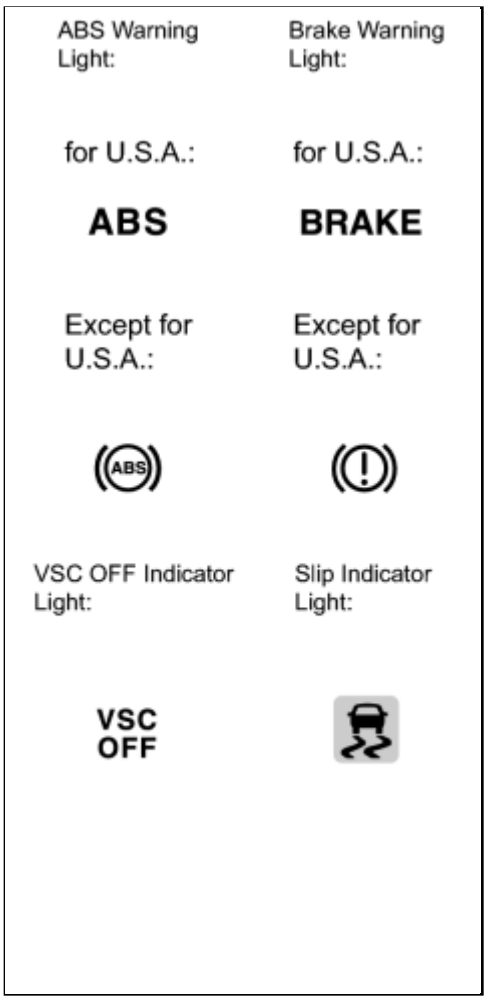

Slip indicator light	○	○	○	○	○	○

○: Light ON

●: Light ON (Blinking)

-: Light OFF

- The DTCs are simultaneously stored in the memory. The DTCs can be read by connecting SST between terminals TC and CG of the DLC3 and observing the blinking pattern of the ABS warning and VSC OFF indicator lights, or by connecting the Techstream.
- This system has a Test Mode (signal check) function INFO .

The DTCs can be read by connecting the Techstream and observing the blinking pattern of the ABS warning and VSC OFF indicator lights.

3. WARNING LIGHT AND INDICATOR LIGHT INITIAL CHECK

(a) Release the parking brake.

NOTICE:

When releasing the parking brake, move the shift lever to P for safety (for automatic transaxle model) or set the chocks to hold the vehicle for safety (for manual transaxle model).

HINT:

When the parking brake is applied or the brake fluid level is low, the brake warning light will come on.

(b) When the ignition switch is turned to ON, check that the ABS warning, brake warning, VSC OFF indicator and slip indicator lights come on for approximately 3 seconds.

HINT:

If the warning light and indicator light check result is not normal, proceed to troubleshooting for the ABS warning, brake warning, VSC OFF indicator and slip indicator light circuits.

If the indicator remains on or does not come on, proceed to troubleshooting for the light circuits listed below.

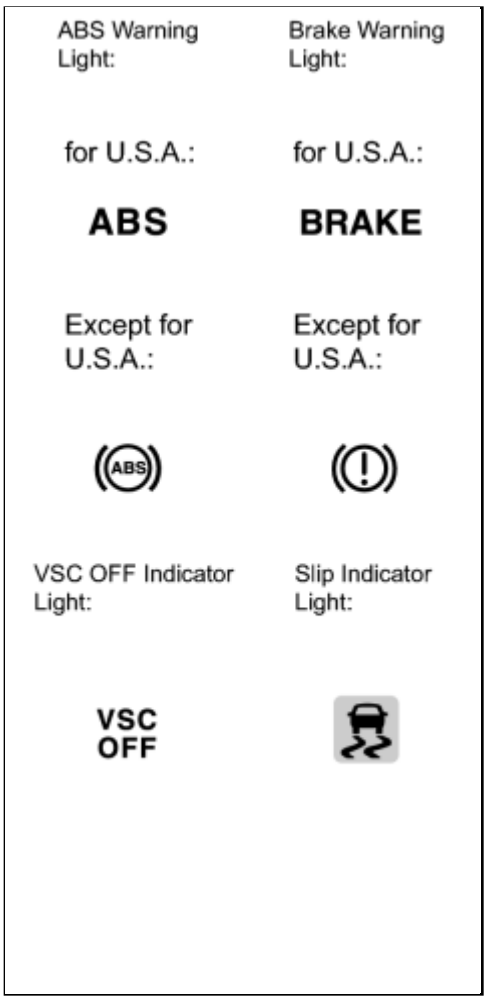

TROUBLE AREA	SEE PROCEDURE
ABS warning light circuit (Remains on)	INFO
ABS warning light circuit (Does not come on)	INFO
Brake warning light circuit (Remains on)	INFO
Brake warning light circuit (Does not come on)	INFO
VSC OFF indicator light circuit (Remains on)	INFO
VSC OFF indicator light circuit (Does not come on)	INFO
Slip indicator light circuit (Remains on)	INFO
Slip indicator light circuit (Does not come on)	INFO

4. SYMPTOM SIMULATION

HINT:

The most difficult case in troubleshooting is when no symptoms occur. In such cases, a thorough customer problem analysis must be carried out. Then the same or similar conditions and environment in which the problem occurred in the customer's vehicle should be reproduced. No matter how experienced or skilled a technician may be, if he/she proceeds to troubleshooting without confirming the problem symptoms, he/she will likely overlook something important and make a wrong guess at some points in the repair operation. This leads to a standstill in troubleshooting.

(a) Vibration method: When vibration seems to be the major cause.

HINT:

Perform the simulation method only during the primary check period (for approximately 6 seconds after the ignition switch is turned to ON).

(1) Slightly vibrate the part of the sensor considered to be the problem cause with your fingers and check whether the malfunction occurs.

(2) Slightly shake the connector vertically and

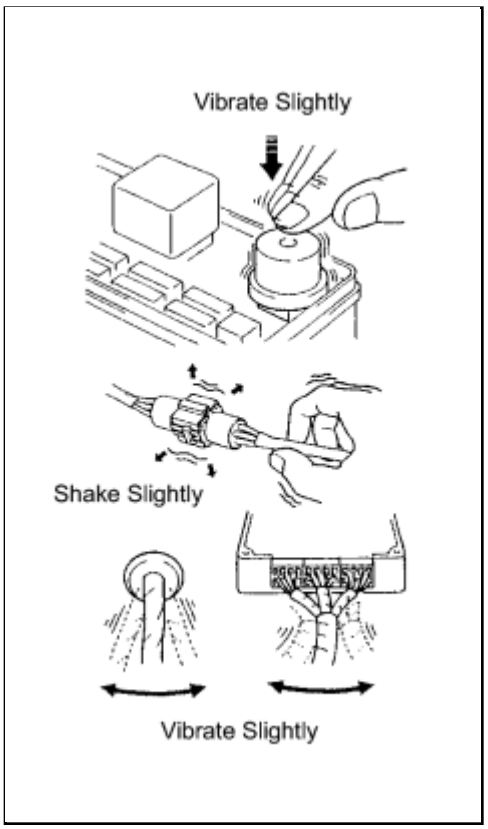

horizontally.

HINT:

Shaking the relays too strongly may result in open relays.

(3) Slightly shake the wire harness vertically and horizontally. The connector joint and fulcrum of the vibration are the major areas to be checked thoroughly.

Last Modified: 3-10-2010	6.4 U	**From:** 200901
Model Year: 2010	**Model:** Corolla	**Doc ID:** RM000001JB402GX
Title: BRAKE CONTROL / DYNAMIC CONTROL SYSTEMS: VEHICLE STABILITY CONTROL SYSTEM: TERMINALS OF ECU (2010 Corolla)		

TERMINALS OF ECU

1. TERMINALS OF ECU

Component without harness connected:
(Skid Control ECU)

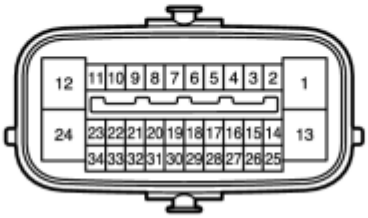

TERMINAL NO. (SYMBOL)	TERMINAL DESCRIPTION
1 (GND1)	Skid control ECU ground
2 (STP)	Stop light switch input
4 (RL-)	Rear wheel speed LH (-) signal input
5 (RL+)	Rear wheel speed LH (+) power supply output
6 (FR-)	Front wheel speed RH (-) signal input
7 (FR+)	Front wheel speed RH (+) power supply output
11 (SP1)	Speed signal output for speedometer
12 (+BS)	Solenoid relay power supply
13 (GND2)	Pump motor ground
14 (CANL)	CAN communication line L
16 (RR-)	Rear wheel speed RH (-) signal input
17 (RR+)	Rear wheel speed RH (+) power supply output
18 (FL-)	Front wheel speed LH (-) signal input
19 (FL+)	Front wheel speed LH (+) power supply output
24 (+BM)	Motor relay power supply
25 (CANH)	CAN communication line H

TERMINAL NO. (SYMBOL)	TERMINAL DESCRIPTION
30 (CSW)	VSC OFF switch input
33 (TS)	Sensor check input
34 (IG1)	ECU power supply

2. TERMINAL INSPECTION

(a) Disconnect the connector and measure the voltage or resistance on the wire harness side.

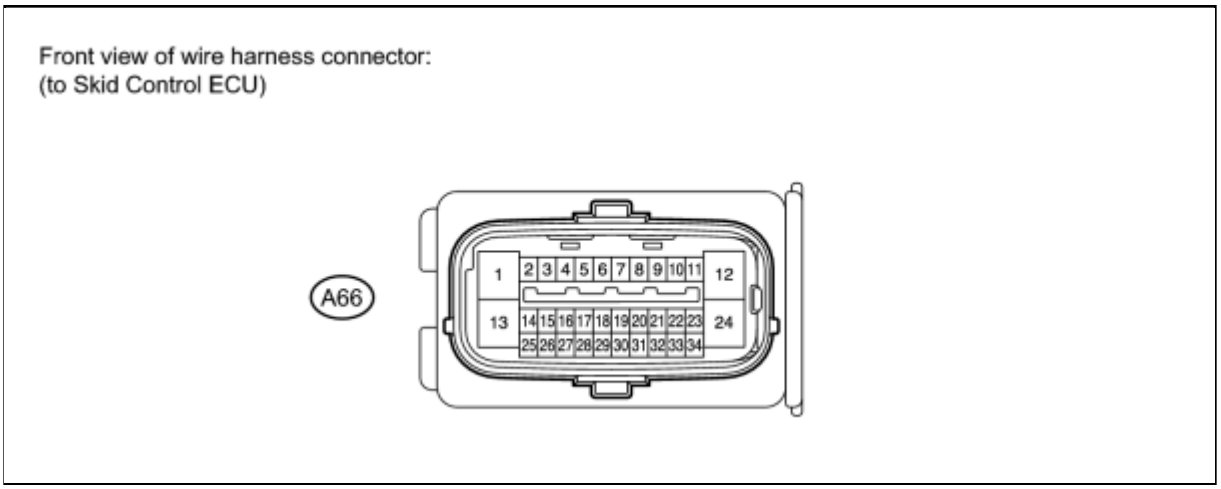

HINT:

Voltage cannot be measured with the connector connected to the skid control ECU as the connector is watertight.

Standard

TERMINAL NO. (SYMBOL)	WIRING COLOR	TERMINAL DESCRIPTION	CONDITION	SPECIFIED CONDITION
A66-1 (GND1) - Body ground	W-B - Body ground	Skid control ECU ground	Always	Below 1 Ω
A66-2 (STP) - Body ground	L-W - Body ground	Stop light switch input	Stop light switch ON → OFF (Brake pedal depressed → released)	8 to 14 V → Below 1.5 V
A66-12 (+BS) - Body ground	W - Body ground	Solenoid relay power supply	Always	11 to 14 V
A66-13 (GND2) - Body ground	W-B - Body ground	Pump motor ground	Always	Below 1 Ω
A66-24 (+BM) - Body ground	L - Body ground	Motor relay power supply	Always	11 to 14 V

TERMINAL NO. (SYMBOL)	WIRING COLOR	TERMINAL DESCRIPTION	CONDITION	SPECIFIED CONDITION
A66-30 (CSW) - Body ground	P - Body ground	VSC OFF switch input	VSC OFF switch held ON → OFF (Not pressed)	Below 25 Ω → 10 kΩ or higher
A66-34 (IG1) - Body ground	L-B - Body ground	ECU power supply	Ignition switch ON	11 to 14 V

Last Modified: 3-10-2010	6.4 D	**From:** 200901
Model Year: 2010	**Model:** Corolla	**Doc ID:** RM000000XHV04WX
Title: BRAKE CONTROL / DYNAMIC CONTROL SYSTEMS: VEHICLE STABILITY CONTROL SYSTEM: DTC CHECK / CLEAR (2010 Corolla)		

DTC CHECK / CLEAR

1. DTC CHECK/CLEAR (When Using the Techstream)

(a) Check for DTCs.

(1) Connect the Techstream to the DLC3.

(2) Turn the ignition switch to ON.

(3) Turn the Techstream on.

(4) Read the DTCs following the prompts on the Techstream screen. Enter the following menus: Chassis / ABS/VSC/TRAC / Trouble Codes.

(5) Check the details of the DTCs INFO .

(b) Clear the DTCs.

(1) Connect the Techstream to the DLC3.

(2) Turn the ignition switch to ON.

(3) Turn the Techstream on.

(4) Operate the Techstream to clear the codes. Enter the following menus: Chassis / ABS/VSC/TRAC / Trouble Codes.

(5) According to the Techstream display, select the trouble code data display with the clear button.

2. DTC CHECK/CLEAR (When not Using the Techstream)

(a) Check for DTCs.

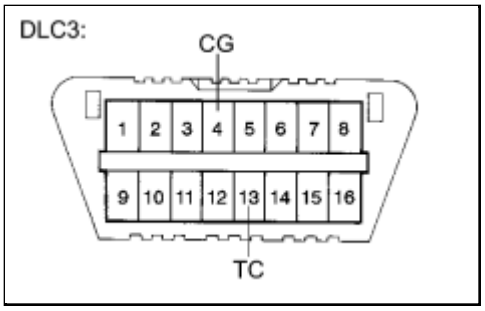

(1) Using SST, connect terminals TC and CG of the DLC3.

SST: 09843-18040

(2) Turn the ignition switch to ON.

(3) Observe the blinking pattern of the ABS warning and VSC OFF indicator lights in order to identify the DTC.

HINT:

If no code appears, inspect the TC and CG terminal circuit, and ABS warning and VSC OFF indicator light circuits.

TROUBLE AREA	SEE PROCEDURE
TC and CG terminal circuit	INFO
ABS warning light circuit (Remains on)	INFO
ABS warning light circuit (Does not come on)	INFO
VSC OFF indicator light circuit (Remains on)	INFO
VSC OFF indicator light circuit (Does not come on)	INFO

(4) As an example, the illustration below shows the blinking patterns of the normal system code and trouble codes 11 and 21 for the ABS warning and VSC OFF indicator lights.

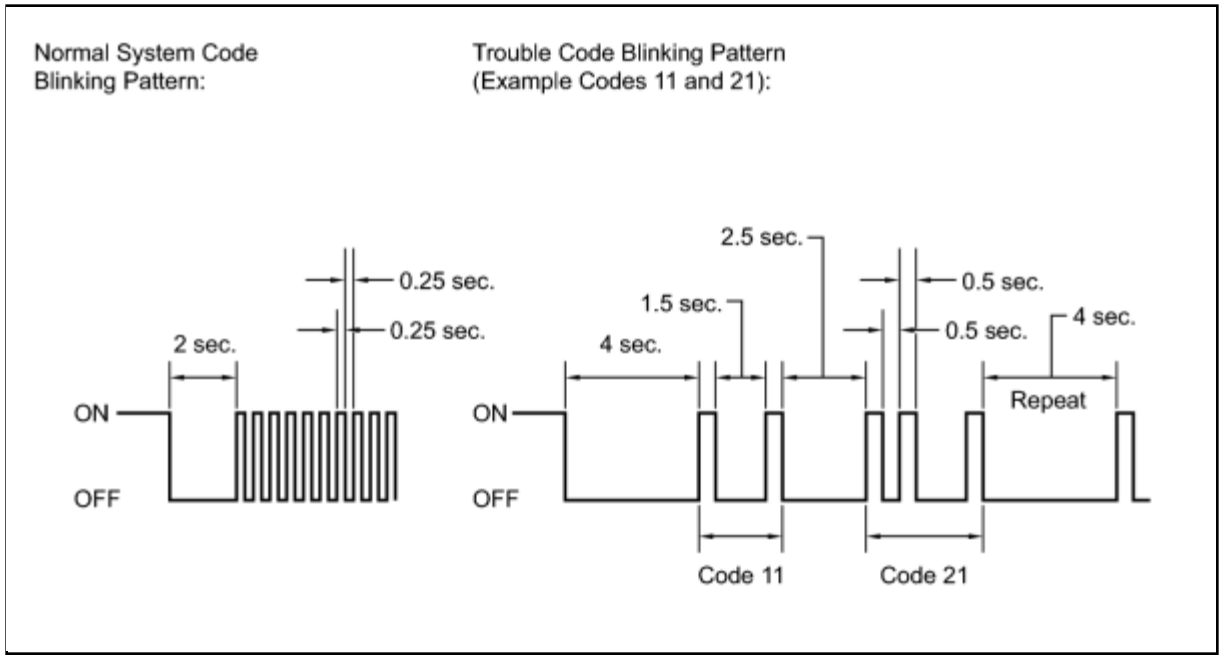

(5) Check the details of the DTCs.

ABS DTC

WARNING LIGHT DISPLAY	TECHSTREAM DISPLAY
11	C0278
12	C0279
13	C0273
14	C0274
21	C0226
22	C0236
23	C0246
24	C0256

WARNING LIGHT DISPLAY	TECHSTREAM DISPLAY
25	C1225
31	C1401
	C1405
32	C1402
	C1406
33	C1403
	C1407
34	C1404
	C1408
35	C1413
36	C1414
38	C1415
39	C1416
41	C1241
	C1417
43	C1243
44	C1419
	C1420
	C1442
45	C1245
46	C1421
	C1422
	C1423
	C1424
49	C1425
51	C1427
	C1428
91	C1361
94	U0073
95	U0124
97	C1381

VSC DTC

INDICATOR LIGHT DISPLAY	TECHSTREAM DISPLAY
31	C1432
	C1433
	C1434
32	C1232
34	C1435
	C1436
	C1443
36	C1210
39	C1336
43*1	-
51	C1201
53	C1203
62	U0123
63	U0126
65	C1437
	U0100
66	C1290
	C1439
	C1445
98	C1440

*1: This DTC is output when the VSC system detects a malfunction in the ABS.

(6) After completing the check, disconnect terminals TC and CG of the DLC3 to turn off the display.

If 2 or more DTCs are detected at the same time, the DTCs will be displayed in ascending order.

(b) Clear the DTCs.

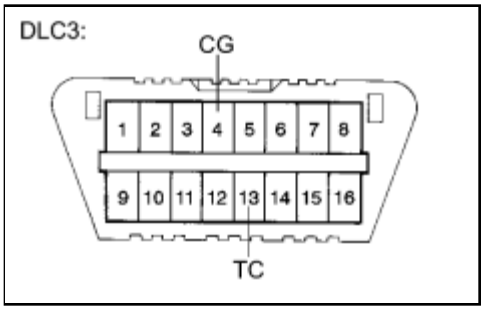

(1) Using SST, connect terminals TC and CG of the DLC3.

SST: 09843-18040

(2) Turn the ignition switch to ON.

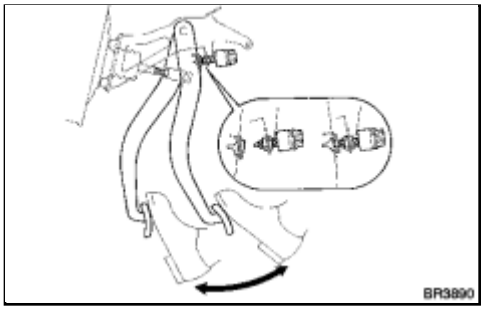

(3) Clear the DTCs stored in the ECU by depressing the brake pedal 8 times or more within 5 seconds.

(4) Check that the warning light indicates a normal system code.

(5) Remove SST from the terminals of the DLC3.

HINT:

The DTCs cannot be cleared by disconnecting the negative cable from the battery terminal or the ECU-IG NO. 1 fuse.

3. END OF DTC CHECK/CLEAR

(a) Turn the ignition switch to ON.

(b) Check that the ABS warning and VSC OFF indicator lights go off within approximately 3 seconds after turning the ignition switch to ON.

Last Modified: 3-10-2010	6.4 D	**From:** 200901
Model Year: 2010	**Model:** Corolla	**Doc ID:** RM000000XHY04NX
Title: BRAKE CONTROL / DYNAMIC CONTROL SYSTEMS: VEHICLE STABILITY CONTROL SYSTEM: FREEZE FRAME DATA (2010 Corolla)		

FREEZE FRAME DATA

1. FREEZE FRAME DATA

(a) Whenever an ABS DTC is detected, the skid control ECU stores the current vehicle (sensor) state as Freeze Frame Data.

(b) The skid control ECU stores the number of times (maximum: 31) the ignition switch has been turned from off to ON since the last time the ABS was activated.

HINT:

- If the vehicle is stopped, at a low speed (7 km/h (4.3 mph) or less), or if a DTC is detected, the skid control ECU will stop counting the number of times the ignition switch has been turned from off to ON.
- Freeze Frame Data at the time the ABS operates:

  The skid control ECU stores and updates data whenever the ABS system operates.

  When the ECU stores data at the time a DTC is detected, the data stored during ABS operation is cleared.
- Freeze Frame Data at the time a DTC is detected:

  When the skid control ECU stores data at the time a DTC is detected, no updates will be performed until the data is cleared.

2. CHECK FREEZE FRAME DATA

(a) Connect the Techstream to the DLC3.

(b) Turn the ignition switch to ON.

(c) Turn the Techstream on.

(d) Enter the following menus: Chassis / ABS/VSC/TRAC / Trouble Codes.

(e) According to the Techstream display, select the trouble code data display with Freeze Frame Data.

ABS/VSC/TRAC

TESTER DISPLAY	MEASUREMENT ITEM	REFERENCE VALUE
Elapsed Time after Freeze Trigger	Elapsed time after freeze frame trigger	Min.: 0 ms, Max.: 500 ms
Number of IG ON	Number of operations of ignition switch being turned to ON after storing Freeze Frame Data	0 to 31
Buzzer	Skid control buzzer signal	Skid control buzzer ON: ON, OFF: OFF

TESTER DISPLAY	MEASUREMENT ITEM	REFERENCE VALUE
Stop Light SW	Stop light switch signal	Stop light switch ON: ON, OFF: OFF
Parking Brake SW	Parking brake switch signal	Parking brake switch ON: ON, OFF: OFF
Gear Position	Gear position information	FAIL P, N R NOT R 1st 2nd 3rd 4th 5th
Shift Lever Position	Shift lever position information	FAIL P, N R D/M 1st 2nd 3rd 4th 5th
Operated System	Operated system status	ABS: ABS activated VSC: VSC activated TRC: TRAC activated BA: BA activated FAIL: Fail safe mode activated SYS: System prohibit activated NON: No operation activated
Master Cylinder Sensor	Master cylinder pressure sensor reading	Brake pedal released: 0.3 to 0.9 V Brake pedal depressed: 0.8 to 4.5 V
M/C Sensor Grade	Master cylinder pressure sensor change	Min.: -30 MPa/s, Max.: 225 MPa/s
Yaw Rate Sensor	Yaw rate sensor reading	Min.: -128 deg/s, Max.: 127 deg/s
Lateral G	Lateral G	Min.: -25.11 m/s^2, Max.: 24.91 m/s^2

TESTER DISPLAY	MEASUREMENT ITEM	REFERENCE VALUE
Forward and Rearward G	Forward and backward G	Min.: -25.11 m/s^2, Max.: 24.91 m/s^2
FR Wheel Speed	FR wheel speed	Min.: 0 km/h (0 mph), Max.: 326.4 km/h (202 mph)
FL Wheel Speed	FL wheel speed	Min.: 0 km/h (0 mph), Max.: 326.4 km/h (202 mph)
RR Wheel Speed	RR wheel speed	Min.: 0 km/h (0 mph), Max.: 326.4 km/h (202 mph)
RL Wheel Speed	RL wheel speed	Min.: 0 km/h (0 mph), Max.: 326.4 km/h (202 mph)
Vehicle Speed	Vehicle speed reading	Min.: 0 km/h (0 mph), Max.: 326.4 km/h (202 mph)
Vehicle Speed Grade	Vehicle speed grade	Min.: -25.11 m/s^2, Max.: 24.91 m/s^2
Real Engine Torque	Real engine torque	Min.: -1024 Nm, Max.: 1023 Nm
Accelerator Opening Angle %	Accelerator opening angle %	Min.: 0%, Max.: 128%
Inspection Mode	Inspection mode	OTHER: Normal mode INSPECT: Inspection mode
Steering Angle Sensor	Steering angle sensor reading	Left turn: Increase Right turn: Decrease
TRAC/VSC Off Mode	TRAC/VSC off mode	NORMAL: Normal mode TRC OFF: TRAC off mode VSC OFF: VSC off mode

3. CLEAR FREEZE FRAME DATA

NOTICE:

Clearing the DTCs will also clear the Freeze Frame Data.

(a) Connect the Techstream to the DLC3.

(b) Turn the ignition switch to ON.

(c) Clear the DTCs and Freeze Frame Data INFO .

Last Modified: 3-10-2010	6.4 U	**From:** 200901
Model Year: 2010	**Model:** Corolla	**Doc ID:** RM000000XHW04FX
Title: BRAKE CONTROL / DYNAMIC CONTROL SYSTEMS: VEHICLE STABILITY CONTROL SYSTEM: DATA LIST / ACTIVE TEST (2010 Corolla)		

DATA LIST / ACTIVE TEST

1. DATA LIST

HINT:

Using the Techstream to read the Data List allows the values or states of switches, sensors, actuators and other items to be read without removing any parts. This non-intrusive inspection can be very useful because intermittent conditions or signals may be discovered before parts or wiring is disturbed. Reading the Data List information early in troubleshooting is one way to save diagnostic time.

NOTICE:

In the table below, the values listed under "Normal Condition" are reference values. Do not depend solely on these reference values when deciding whether a part is faulty or not.

(a) Warm up the engine.

(b) Turn the ignition switch off.

(c) Connect the Techstream to the DLC3.

(d) Turn the ignition switch to ON.

(e) Turn the Techstream on.

(f) Enter the following menus: Chassis / ABS/VSC/TRAC / Data List.

(g) According to the Techstream display, read the Data List.

ABS/VSC/TRAC

TESTER DISPLAY	MEASUREMENT ITEM/RANGE	NORMAL CONDITION	DIAGNOSTIC NOTE
ABS Warning Light	ABS warning light / ON or OFF	ON: Warning light ON OFF: Warning light OFF	-
VSC Warning Light	VSC OFF indicator light / ON or OFF	ON: Indicator light ON OFF: Indicator light OFF	-
Brake Warning Light	Brake warning light / ON or OFF	ON: Warning light ON OFF: Warning light OFF	-
Slip Indicator Light	Slip indicator light / ON or OFF	ON: Indicator light ON OFF: Indicator light OFF	-

TESTER DISPLAY	MEASUREMENT ITEM/RANGE	NORMAL CONDITION	DIAGNOSTIC NOTE
Buzzer	Skid control buzzer / ON or OFF	ON: Buzzer ON OFF: Buzzer OFF	-
Stop Light SW	Stop light switch / ON or OFF	ON: Brake pedal depressed OFF: Brake pedal released	-
Parking Brake SW	Parking brake switch / ON or OFF	ON: Parking brake applied OFF: Parking brake released	-
Main Idle SW	Main idle switch / ON or OFF	ON: Accelerator pedal released OFF: Accelerator pedal depressed	-
Gear Position	Gear position information / P/N, R, 1st-5th, FAIL, NOT R	Actual gear position	-
Shift Lever Position	Shift lever position information / P/N, R, D/M, 1st-5th, FAIL	Actual shift lever position	-
Shift Information	Shift information / ON or OFF	ON: During gear change	-
Inspection Mode	Inspection mode / OTHER or INSPECT	OTHER: Normal mode INSPECT: Inspection mode	-
Number of IG ON(Inspection)	Number of times ignition switch turned ON after entering inspection mode / min.: 0, max.: 255	Min.: 0 Max.: 255	-
Master Cylinder Sensor	Master cylinder pressure sensor / min.: 0 V, max.: 5 V	When brake pedal is released: 0.3 to 0.9 V	Reading increases when brake pedal is depressed
Zero Point of M/C	Memorized zero value / min.: -12.5 MPa, max.: 12.4 MPa	Min.: -12.5 MPa Max.: 12.4 MPa	-
Deceleration Sensor	Acceleration sensor / min.: -18.52 m/s^2, max.: 18.39 m/s^2	Min.: -18.52 m/s^2 Max.: 18.39 m/s^2	Reading changes when vehicle is bounced
Zero Point of Decele	Memorized zero value / min.: -25.11 m/s^2, max.: 24.91 m/s^2	Min.: -25.11 m/s^2 Max.: 24.91 m/s^2	-
Deceleration Sensor2	Acceleration sensor 2 / min.: -18.52 m/s^2, max.: 18.39 m/s^2	Min.: -18.52 m/s^2 Max.: 18.39 m/s^2	Reading changes when vehicle is bounced

TESTER DISPLAY	MEASUREMENT ITEM/RANGE	NORMAL CONDITION	DIAGNOSTIC NOTE
Zero Point of Decele2	Memorized zero value / min.: -25.11 m/s^2, max.: 24.91 m/s^2	Min.: -25.11 m/s^2 Max.: 24.91 m/s^2	-
Yaw Rate Sensor	Yaw rate sensor / min.: -128 deg/s, max.: 127 deg/s	Vehicle stationary: 0 deg/s Right turn: -128 to 0 deg/s Left turn: 0 to 127 deg/s	-
Zero Point of Yaw Rate	Memorized zero value / min.: -128 deg/s, max.: 127 deg/s	Min.: -128 deg/s Max.: 127 deg/s	-
Yaw Rate Sensor2	Yaw rate sensor 2 / min.: -128 deg/s, max.: 127 deg/s	Vehicle stationary: 0 deg/s Right turn: -128 to 0 deg/s Left turn: 0 to 127 deg/s	-
Zero Point of Yaw Rate2	Memorized zero value / min.: -128 deg/s, max.: 127 deg/s	Min.: -128 deg/s Max.: 127 deg/s	-
Steering Angle Sensor	Steering angle sensor / min.: -3276.8 deg, max.: 3276.7 deg	Left turn: Increase Right turn: Decrease	-
Zero Point of Steering Angle	Memorized zero value / min.: -3276.8 deg, max.: 3276.7 deg	Min.: -3276.8 deg Max.: 3276.7 deg	-
Lateral G	Lateral G / min.: -25.11 m/s^2, max.: 24.91 m/s^2	Min.: -25.11 m/s^2 Max.: 24.91 m/s^2	-
Forward and Rearward G	Forward and backward G / min.: -25.11 m/s^2, max.: 24.91 m/s^2	Min.: -25.11 m/s^2 Max.: 24.91 m/s^2	-
Yaw Rate Value	Yaw rate value / min.: -128 deg/s, max.: 127 deg/s	Min.: -128 deg/s Max.: 127 deg/s	-
Steering Angle Value	Steering angle value / min.: -3276.8 deg, max.: 3276.7 deg	Min.: -3276.8 deg Max.: 3276.7 deg	-
FR Wheel Speed	FR wheel speed sensor reading / min.: 0 km/h (0 mph), max.: 326.4 km/h (202 mph)	Actual wheel speed	Similar speed as indicated on speedometer
FL Wheel Speed	FL wheel speed sensor reading / min.: 0 km/h (0 mph), max.: 326.4 km/h (202 mph)	Actual wheel speed	Similar speed as indicated on speedometer

TESTER DISPLAY	MEASUREMENT ITEM/RANGE	NORMAL CONDITION	DIAGNOSTIC NOTE
RR Wheel Speed	RR wheel speed sensor reading / min.: 0 km/h (0 mph), max.: 326.4 km/h (202 mph)	Actual wheel speed	Similar speed as indicated on speedometer
RL Wheel Speed	RL wheel speed sensor reading / min.: 0 km/h (0 mph), max.: 326.4 km/h (202 mph)	Actual wheel speed	Similar speed as indicated on speedometer
Vehicle Speed	Maximum wheel speed sensor reading / min.: 0 km/h (0 mph), max.: 326.4 km/h (202 mph)	Actual vehicle speed	Speed indicated on speedometer
FR Wheel Acceleration	FR wheel acceleration / min.: -200.84 m/s^2, max.: 199.27 m/s^2	0 m/s^2	-
FL Wheel Acceleration	FL wheel acceleration / min.: -200.84 m/s^2, max.: 199.27 m/s^2	0 m/s^2	-
RR Wheel Acceleration	RR wheel acceleration / min.: -200.84 m/s^2, max.: 199.27 m/s^2	0 m/s^2	-
RL Wheel Acceleration	RL wheel acceleration / min.: -200.84 m/s^2, max.: 199.27 m/s^2	0 m/s^2	-
FR Wheel ABS Ctrl Status	FR wheel ABS control status / ON or OFF	ON: During control	-
FL Wheel ABS Ctrl Status	FL wheel ABS control status / ON or OFF	ON: During control	-
RR Wheel ABS Ctrl Status	RR wheel ABS control status / ON or OFF	ON: During control	-
RL Wheel ABS Ctrl Status	RL wheel ABS control status / ON or OFF	ON: During control	-
RR Wheel EBD Ctrl Status	RR wheel EBD control status / ON or OFF	ON: During control	-
RL Wheel EBD Ctrl Status	RL wheel EBD control status / ON or OFF	ON: During control	-
BA Ctrl Status	BA control status / ON or OFF	ON: During control	-
TRC(TRAC) Ctrl Status	TRAC control status / ON or OFF	ON: During control	-
TRC(TRAC) Engine Ctrl Status	TRAC engine control status / ON or OFF	ON: During control	-

TESTER DISPLAY	MEASUREMENT ITEM/RANGE	NORMAL CONDITION	DIAGNOSTIC NOTE
TRC(TRAC) Brake Ctrl Status	TRAC brake control status / ON or OFF	ON: During control	-
FR Wheel VSC Ctrl Status	FR wheel VSC control status / ON or OFF	ON: During control	-
FL Wheel VSC Ctrl Status	FL wheel VSC control status / ON or OFF	ON: During control	-
RR Wheel VSC Ctrl Status	RR wheel VSC control status / ON or OFF	ON: During control	-
RL Wheel VSC Ctrl Status	RL wheel VSC control status / ON or OFF	ON: During control	-
Engine Revolutions	Engine speed / min.: 0 r/min, max.: 65535 r/min	Min..: 0 r/min Max.: 65535 r/min	-
Real Engine Torque	Real engine torque / min.: -1024 N*m, max.: 1023 N*m	Min.: -1024 N*m Max.: 1023 N*m	-
Accelerator Opening Angle %	The difference of a present accelerator / min.: 0%, max.: 128%	When the accelerator pedal is released: 0%,	During accelerator pedal operation: Changes in proportion with the pedal movement
Solenoid Relay	ABS solenoid relay / ON or OFF	ON: Solenoid relay ON OFF: Solenoid relay OFF	-
ABS Motor Relay	ABS motor relay / ON or OFF	ON: Motor relay ON OFF: Motor relay OFF	-
Fail Safe Motor Relay	ABS motor fail safe relay / ON or OFF	ON: Motor relay ON OFF: Motor relay OFF	-
TR(A)C/VSC Solenoid (SM2)	Master cut solenoid (SM2) / ON or OFF	ON: Operates	-
TR(A)C/VSC Solenoid (SM1)	Master cut solenoid (SM1) / ON or OFF	ON: Operates	-
ABS Solenoid (SFRH)	ABS solenoid (SFRH) / ON or OFF	ON: Operates	-
ABS Solenoid (SFRR)	ABS solenoid (SFRR) / ON or OFF	ON: Operates	-
ABS Solenoid (SFLH)	ABS solenoid (SFLH) / ON or OFF	ON: Operates	-

TESTER DISPLAY	MEASUREMENT ITEM/RANGE	NORMAL CONDITION	DIAGNOSTIC NOTE
ABS Solenoid (SFLR)	ABS solenoid (SFLR) / ON or OFF	ON: Operates	-
ABS Solenoid (SRRH)	ABS solenoid (SRRH) / ON or OFF	ON: Operates	-
ABS Solenoid (SRRR)	ABS solenoid (SRRR) / ON or OFF	ON: Operates	-
ABS Solenoid (SRLH)	ABS solenoid (SRLH) / ON or OFF	ON: Operates	-
ABS Solenoid (SRLR)	ABS solenoid (SRLR) / ON or OFF	ON: Operates	-
FR Speed Open	FR speed sensor open detection / ERROR or NORMAL	ERROR: Momentary interruption NORMAL: Normal	-
FL Speed Open	FL speed sensor open detection / ERROR or NORMAL	ERROR: Momentary interruption NORMAL: Normal	-
RR Speed Open	RR speed sensor open detection / ERROR or NORMAL	ERROR: Momentary interruption NORMAL: Normal	-
RL Speed Open	RL speed sensor open detection / ERROR or NORMAL	ERROR: Momentary interruption NORMAL: Normal	-
EFI Communication Open	EFI communication open detection / ERROR or NORMAL	ERROR: Momentary interruption NORMAL: Normal	-
Yaw Rate Open	Yaw rate sensor open detection / ERROR or NORMAL	ERROR: Momentary interruption NORMAL: Normal	-
Deceleration Open	Acceleration sensor open detection / ERROR or NORMAL	ERROR: Momentary interruption NORMAL: Normal	-
Steering Open	Steering angle sensor open detection / ERROR or NORMAL	ERROR: Momentary interruption	-

TESTER DISPLAY	MEASUREMENT ITEM/RANGE	NORMAL CONDITION	DIAGNOSTIC NOTE
		NORMAL: Normal	
MT Voltage Value	Motor driving monitor voltage / min.: 0 V, max.: 20 V	Min.: 0 V Max.: 20 V	-
TRAC/VSC Off Mode	TRAC/VSC off mode / NORMAL, TRC OFF or VSC OFF	NORMAL: Normal mode TRC OFF: TRAC off mode VSC OFF: VSC off mode	-
Number of DTC	Number of DTC recorded / min.: 0, max.: 255	Min.: 0 Max.: 255	-

2. ACTIVE TEST

HINT:

Using the Techstream to perform Active Tests allows relays, VSVs, actuators and other items to be operated without removing any parts to operate without removing any parts. This non-intrusive functional inspection can be very useful because intermittent operation may be discovered before parts or wiring is disturbed. Performing Active Tests early in troubleshooting is one way to save diagnostic time. Data List information can be displayed while performing Active Tests.

(a) Warm up the engine.

(b) Turn the ignition switch off.

(c) Connect the Techstream to the DLC3.

(d) Turn the ignition switch to ON.

(e) Turn the Techstream on.

(f) Enter the following menus: Chassis / ABS/VSC/TRAC / Active Test.

(g) According to the display on the Techstream, perform the Active Test.

ABS/VSC/TRAC

TESTER DISPLAY	TEST PART	CONTROL RANGE	DIAGNOSTIC NOTE
ABS Warning Light	ABS warning light	Warning light ON/OFF	Observe combination meter
VSC Warning Light	VSC OFF indicator light	Indicator light ON/OFF	Observe combination meter
Brake Warning Light	Brake warning light	Warning light ON/OFF	Observe combination meter
Slip Indicator Light	Slip indicator light	Indicator light ON/OFF	Observe combination meter

TESTER DISPLAY	TEST PART	CONTROL RANGE	DIAGNOSTIC NOTE
Buzzer	Skid control buzzer	Buzzer ON/OFF	Buzzer can be heard
Solenoid Relay	ABS solenoid relay	Relay ON/OFF	-
Motor Relay	ABS motor relay	Relay ON/OFF	Operating sound of motor can be heard
ABS Solenoid (SRLR)	ABS solenoid (SRLR)	Solenoid ON/OFF	Operating sound of solenoid (clicking sound) can be heard
ABS Solenoid (SRLH)	ABS solenoid (SRLH)	Solenoid ON/OFF	Operating sound of solenoid (clicking sound) can be heard
ABS Solenoid (SRRR)	ABS solenoid (SRRR)	Solenoid ON/OFF	Operating sound of solenoid (clicking sound) can be heard
ABS Solenoid (SRRH)	ABS solenoid (SRRH)	Solenoid ON/OFF	Operating sound of solenoid (clicking sound) can be heard
ABS Solenoid (SFLR)	ABS solenoid (SFLR)	Solenoid ON/OFF	Operating sound of solenoid (clicking sound) can be heard
ABS Solenoid (SFLH)	ABS solenoid (SFLH)	Solenoid ON/OFF	Operating sound of solenoid (clicking sound) can be heard
ABS Solenoid (SFRR)	ABS solenoid (SFRR)	Solenoid ON/OFF	Operating sound of solenoid (clicking sound) can be heard
ABS Solenoid (SFRH)	ABS solenoid (SFRH)	Solenoid ON/OFF	Operating sound of solenoid (clicking sound) can be heard
VSC/TRC Solenoid (SMR)	Master cut solenoid (SM2)	Solenoid ON/OFF	Operating sound of solenoid (clicking sound) can be heard
VSC/TRC Solenoid (SMF)	Master cut solenoid (SM1)	Solenoid ON/OFF	Operating sound of solenoid (clicking sound) can be heard

Last Modified: 3-10-2010	6.4 U	**From:** 200901
Model Year: 2010	**Model:** Corolla	**Doc ID:** RM000000XHX03UX
Title: BRAKE CONTROL / DYNAMIC CONTROL SYSTEMS: VEHICLE STABILITY CONTROL SYSTEM: FAIL-SAFE CHART (2010 Corolla)		

FAIL-SAFE CHART

1. FAIL SAFE OPERATION

- If there is a problem with sensor signals or the brake actuator system, the skid control ECU prohibits power supply to the brake actuator and informs the ECM of the VSC system malfunction.

  The brake actuator turns off the solenoids and the ECM stops its VSC control according to signals from the skid control ECU. The vehicle will operate in a manner similar to a vehicle that is not equipped with ABS, TRAC and VSC systems.

  ABS control will be prohibited, but EBD control will continue to the extent that EBD control is possible. If EBD control is impossible, the brake warning light will come on to warn the driver INFO .
- If a VSC system component malfunctions before VSC control begins, VSC control will be prohibited. If a system component malfunctions during VSC control, the system will gradually stop performing the control so as not to trigger a sudden change in vehicle operation.

  If it is impossible to control the systems, the warning light will come on to inform the driver of system control termination INFO .

ABS, EBD and BA System

MALFUNCTIONING AREA	CONTROL METHOD
ABS system	ABS, BA, TRAC and VSC control prohibited
BA system	ABS, BA, TRAC and VSC control prohibited
EBD system	ABS, EBD, BA, TRAC and VSC control prohibited

HINT:

A malfunction in either the ABS or BA system will result in identical operation with ABS, BA, TRAC and VSC system control being prohibited.

TRAC and VSC System

MALFUNCTIONING AREA	CONTROL METHOD
Engine control system (TRAC and VSC systems)	Before control: Disables control During control: Uses only the brakes to effect control
Brake control system (VSC system)	Before control: Disables control During control: Uses only the engine to effect control

MALFUNCTIONING AREA	CONTROL METHOD
Brake control system (TRAC system)	Before control: Disables control During control: Disables control (by gradually ending control)

HINT:

As for the TRAC and VSC systems, different systems prohibit different controls depending on the malfunctioning part.



Last Modified: 3-10-2010	6.4 S	**From:** 200901
Model Year: 2010	**Model:** Corolla	**Doc ID:** RM000000XHU03VX
Title: BRAKE CONTROL / DYNAMIC CONTROL SYSTEMS: VEHICLE STABILITY CONTROL SYSTEM: DIAGNOSTIC TROUBLE CODE CHART (2010 Corolla)		

DIAGNOSTIC TROUBLE CODE CHART

NOTICE:

Turn the ignition switch off before removing any parts.

HINT:

- If no malfunction is found when inspecting parts, inspect the skid control ECU and ground points for poor connect.
- If a trouble code is displayed during the DTC check, check the circuit indicated by the DTC. For details of each code, refer to the page for the respective DTC Code in the DTC chart.
- When 2 or more DTCs are detected, perform circuit inspection one by one until the problem is identified.
- For DTCs indicated by the warning light or indicator light, refer to the DTC charts in DTC Check/Clear.
- Inspect the fuses and relays before investigating the trouble areas as shown in the table below.

ABS DTC

DTC CODE	DETECTION ITEM	TROUBLE AREA	SEE PAGE
C0226	SFR Solenoid Circuit	1. SFRR or SFRH circuit 2. Brake actuator assembly	INFO
C0236	SFL Solenoid Circuit	1. SFLR or SFLH circuit 2. Brake actuator assembly	INFO
C0246	SRR Solenoid Circuit	1. SRRR or SRRH circuit 2. Brake actuator assembly	INFO
C0256	SRL Solenoid Circuit	1. SRLR or SRLH circuit 2. Brake actuator assembly	INFO
C0273*1	Open in ABS Motor Relay Circuit	1. ABS NO. 1 fuse 2. ABS motor relay circuit 3. Brake actuator assembly (ABS motor relay)	INFO
C0274	Short in ABS Motor Relay Circuit	1. ABS motor relay circuit 2. Brake actuator assembly (ABS motor relay)	INFO
C0278	Open in ABS Solenoid Relay Circuit	1. ABS NO. 3 fuse 2. ABS solenoid relay circuit 3. Brake actuator assembly (ABS solenoid relay)	INFO

DTC CODE	DETECTION ITEM	TROUBLE AREA	SEE PAGE
C0279	Short in ABS Solenoid Relay Circuit	1. ABS solenoid relay circuit 2. Brake actuator assembly (ABS solenoid relay)	INFO
C1225	SM Solenoid Circuit	1. SM1 or SM2 circuit 2. Brake actuator assembly	INFO
C1241	Low Power Supply Voltage Malfunction	1. ECU-IG NO. 1 fuse 2. Battery 3. Charging system 4. Power source circuit 5. Internal power supply circuit of the skid control ECU	INFO
C1243*1	Acceleration Sensor Stuck Malfunction	1. Sensor installation 2. Yaw rate and acceleration sensor	INFO
C1245*1	Acceleration Sensor Output Malfunction	1. Sensor installation 2. Yaw rate and acceleration sensor	INFO
C1361	Short in ABS Motor Fail Safe Relay Circuit	1. ABS NO. 1 fuse 2. ABS motor fail safe relay circuit 3. Brake actuator assembly (ABS motor fail safe relay)	INFO
C1381	Acceleration Sensor Power Supply Voltage Malfunction	1. Yaw rate and acceleration sensor power source circuit 2. Yaw rate and acceleration sensor	INFO
C1401*1	Front Speed Sensor RH Malfunction	1. Front speed sensor RH 2. Speed sensor rotor	INFO
C1402*1	Front Speed Sensor LH Malfunction	1. Front speed sensor LH 2. Speed sensor rotor	INFO
C1403*1	Rear Speed Sensor RH Malfunction	1. Rear speed sensor RH 2. Speed sensor rotor	INFO
C1404*1	Rear Speed Sensor LH Malfunction	1. Rear speed sensor LH 2. Speed sensor rotor	INFO
C1405*1	Open or Short in Front Speed Sensor RH Circuit	1. Front speed sensor RH 2. Speed sensor circuit 3. Brake actuator assembly (Skid control ECU)	INFO
C1406*1	Open or Short in Front Speed Sensor LH Circuit	1. Front speed sensor LH 2. Speed sensor circuit 3. Brake actuator assembly (Skid control ECU)	INFO

DTC CODE	DETECTION ITEM	TROUBLE AREA	SEE PAGE
C1407*1	Open or Short in Rear Speed Sensor RH Circuit	1. Rear speed sensor RH 2. Speed sensor circuit 3. Brake actuator assembly (Skid control ECU)	INFO
C1408*1	Open or Short in Rear Speed Sensor LH Circuit	1. Rear speed sensor LH 2. Speed sensor circuit 3. Brake actuator assembly (Skid control ECU)	INFO
C1413*1	Front Speed Sensor RH Output Malfunction	1. Front speed sensor RH 2. Speed sensor circuit 3. Speed sensor rotor 4. Brake actuator assembly (Skid control ECU)	INFO
C1414*1	Front Speed Sensor LH Output Malfunction	1. Front speed sensor LH 2. Speed sensor circuit 3. Speed sensor rotor 4. Brake actuator assembly (Skid control ECU)	INFO
C1415*1	Rear Speed Sensor RH Output Malfunction	1. Rear speed sensor RH 2. Speed sensor circuit 3. Speed sensor rotor 4. Brake actuator assembly (Skid control ECU)	INFO
C1416*1	Rear Speed Sensor LH Output Malfunction	1. Rear speed sensor LH 2. Speed sensor circuit 3. Speed sensor rotor 4. Brake actuator assembly (Skid control ECU)	INFO
C1417	High Power Supply Voltage Malfunction	1. ECU-IG NO. 1 fuse 2. Battery 3. Charging system 4. Power source circuit 5. Internal power supply circuit of the skid control ECU	INFO
C1419	Acceleration Sensor Internal Circuit	Yaw rate and acceleration sensor	INFO
C1420	Acceleration Sensor Malfunction	1. Sensor installation 2. Yaw rate and acceleration sensor	INFO
C1421*2	Open or Short in Master Cylinder Pressure Sensor	Brake actuator assembly (Master cylinder pressure sensor)	INFO

DTC CODE	DETECTION ITEM	TROUBLE AREA	SEE PAGE
C1422*2	Master Cylinder Pressure Sensor Zero Point High Malfunction	1. Stop light switch 2. Stop light switch circuit 3. Master cylinder pressure sensor circuit 4. Brake actuator assembly (Master cylinder pressure sensor)	INFO
C1423*2	Master Cylinder Pressure Sensor Zero Point Low Malfunction	Brake actuator assembly (Master cylinder pressure sensor)	INFO
C1424*2	Master Cylinder Pressure Sensor Output Malfunction	Brake actuator assembly (Master cylinder pressure sensor)	INFO
C1425*3	Open in Stop Light Switch Circuit	1. STOP fuse 2. Stop light switch 3. Stop light switch circuit 4. Brake actuator assembly (Skid control ECU)	INFO
C1427*1	Motor Malfunction	1. Brake actuator assembly (Ground circuit) 2. Brake actuator assembly (Motor circuit)	INFO
C1428*1	Motor Circuit Malfunction	Brake actuator assembly (Motor circuit)	INFO
C1442	Invalid Data Received from Acceleration Sensor	Yaw rate and acceleration sensor	INFO
U0073	Control Module Communication Bus OFF	CAN communication system	INFO
U0124	Lost Communication with Lateral Acceleration Sensor Module	CAN communication system (Skid control ECU to yaw rate and acceleration sensor)	INFO

*1 to *3:

Even after the trouble areas are repaired, the ABS warning light will not go off unless the following operations are performed:

- *1:
  a. Drive the vehicle at 20 km/h (12 mph) for 30 seconds or more and check that the ABS warning light goes off.
  b. Clear the DTCs.
- *2:
  a. Turn the ignition switch to ON.
  b. Keep the vehicle stationary for 5 seconds or more and depress the brake pedal lightly 2 or 3 times.
  c. Drive the vehicle at the vehicle speed of 50 km/h (31 mph) and depress and hold

the brake pedal firmly for approximately 3 seconds.

d. Repeat the above operation 3 times or more and check that the ABS warning light goes off.

e. Clear the DTCs.

- *3:

a. Turn the ignition switch to ON.

b. Depress the brake pedal.

c. Clear the DTCs.

HINT:

In some cases, the Techstream cannot be used when the ABS warning light remains on.

VSC DTC

DTC CODE	DETECTION ITEM	TROUBLE AREA	SEE PAGE
C1201	Engine Control System Malfunction	Engine control system	INFO
C1203	ECM Communication Circuit Malfunction	ECM	INFO
C1210	Zero Point Calibration of Yaw Rate Sensor Undone	Yaw rate and acceleration sensor	INFO
C1232	Acceleration Sensor Stuck Malfunction	1. Sensor installation 2. Yaw rate and acceleration sensor	INFO
C1290	Steering Angle Sensor Zero Point Malfunction	1. Yaw rate and acceleration sensor zero point calibration incomplete 2. Poor adjustment of the center position of the steering wheel 3. Poor adjustment of front wheel alignment	INFO
C1336	Zero Point Calibration of Acceleration Sensor Undone	Yaw rate and acceleration sensor	INFO
C1432	Steering Angle Sensor Power Source Voltage Malfunction	1. Steering angle sensor power supply 2. Steering angle sensor	INFO
C1433	Steering Angle Sensor Internal Circuit	Steering angle sensor	INFO
C1434	Steering Angle Sensor Output Malfunction	1. Steering angle sensor power supply 2. Steering angle sensor 3. Brake actuator assembly (Skid control ECU)	INFO
C1435	Yaw Rate Sensor Internal Circuit	Yaw rate and acceleration sensor	INFO
C1436	Yaw Rate Sensor Malfunction	Yaw rate and acceleration sensor	INFO
C1437	Lost Communication with ECM	1. CAN communication system (Skid control ECU to ECM)	INFO

DTC CODE	DETECTION ITEM	TROUBLE AREA	SEE PAGE
		2. Brake actuator assembly (Skid control ECU)	
C1439	Steering Angle Sensor Initialization Incomplete	1. Steering angle sensor 2. Yaw rate and acceleration sensor 3. Brake actuator assembly (Skid control ECU)	INFO
C1440	Unusual Bank Angle Detected	Yaw rate and acceleration sensor	INFO
C1443	Invalid Data Received from Yaw Rate Sensor	Yaw rate and acceleration sensor	INFO
C1445	Vehicle Driven with Steering Angle Sensor not Initialized	1. Steering angle sensor 2. Yaw rate and acceleration sensor 3. Brake actuator assembly (Skid control ECU)	INFO
U0100	Lost Communication with ECM / PCM	CAN communication system (Skid control ECU to ECM)	INFO
U0123	Lost Communication with Yaw Rate Sensor Module	CAN communication system (Skid control ECU to yaw rate and acceleration sensor)	INFO
U0126	Lost Communication with Steering Angle Sensor Module	CAN communication system (Skid control ECU to steering angle sensor)	INFO

HINT:

In some cases, the Techstream cannot be used when the VSC OFF indicator light remains on.

ABS Test Mode DTC

DTC CODE	DETECTION ITEM	TROUBLE AREA	SEE PAGE
C1271	Low Output Signal of Front Speed Sensor RH (Test Mode DTC)	1. Front speed sensor RH 2. Sensor installation 3. Speed sensor rotor	INFO
C1272	Low Output Signal of Front Speed Sensor LH (Test Mode DTC)	1. Front speed sensor LH 2. Sensor installation 3. Speed sensor rotor	INFO
C1273	Low Output Signal of Rear Speed Sensor RH (Test Mode DTC)	1. Rear speed sensor RH 2. Sensor installation 3. Speed sensor rotor	INFO

DTC CODE	DETECTION ITEM	TROUBLE AREA	SEE PAGE
C1274	Low Output Signal of Rear Speed Sensor LH (Test Mode DTC)	1. Rear speed sensor LH 2. Sensor installation 3. Speed sensor rotor	INFO
C1275	Abnormal Change in Output Signal of Front Speed Sensor RH (Test Mode DTC)	Speed sensor rotor	INFO
C1276	Abnormal Change in Output Signal of Front Speed Sensor LH (Test Mode DTC)	Speed sensor rotor	INFO
C1277	Abnormal Change in Output Signal of Rear Speed Sensor RH (Test Mode DTC)	Speed sensor rotor	INFO
C1278	Abnormal Change in Output Signal of Rear Speed Sensor LH (Test Mode DTC)	Speed sensor rotor	INFO
C1279	Acceleration Sensor Output Voltage Malfunction (Test Mode DTC)	1. Sensor installation 2. Yaw rate and acceleration sensor	INFO
C1281	Master Cylinder Pressure Sensor Output Malfunction (Test Mode DTC)	1. Stop light switch 2. Master cylinder pressure sensor	INFO

VSC Test Mode DTC

DTC CODE	DETECTION ITEM	TROUBLE AREA	SEE PAGE
C0371	Yaw Rate Sensor (Test Mode DTC)	Yaw rate and acceleration sensor	INFO

Last Modified: 3-10-2010	6.4 C	**From:** 200901
Model Year: 2010	**Model:** Corolla	**Doc ID:** RM000000XI804TX
Title: BRAKE CONTROL / DYNAMIC CONTROL SYSTEMS: VEHICLE STABILITY CONTROL SYSTEM: C0226,C0236,C0246,C0256,C1225: SFR Solenoid Circuit (2010 Corolla)		

DTC	**C0226**	**SFR Solenoid Circuit**

DTC	**C0236**	**SFL Solenoid Circuit**

DTC	**C0246**	**SRR Solenoid Circuit**

DTC	**C0256**	**SRL Solenoid Circuit**

DTC	**C1225**	**SM Solenoid Circuit**

DESCRIPTION

These solenoids turn on when signals are received from the skid control ECU and they control the pressure acting on the wheel cylinders to control the braking force.

DTC CODE	DTC DETECTION CONDITION	TROUBLE AREA
C0226 C0236 C0246 C0256	Open or short in the solenoid circuit continues for 0.05 seconds or more.	• Solenoid circuit • Brake actuator assembly
C1225	Any of the following is detected: 1. While switching solenoid (SM1 or SM2) is ON, overcurrent continues for 0.15 seconds or more. 2. While switching solenoid (SM1 or SM2) is OFF, an open circuit continues for 0.05 seconds or more. 3. While switching solenoid (SM1 or SM2) is ON, an open circuit continues for 0.05 seconds or more. 4. While switching solenoid (SM1 or SM2) is OFF, current continues to be applied for 0.05 seconds or more.	• SM1 or SM2 circuit • Brake actuator assembly

DTC CODE	DTC DETECTION CONDITION	TROUBLE AREA
	5. Either of the following conditions continues for 0.2 seconds or more: ○ SM1 output is 2 times more than SM2 output. ○ SM2 output is 2 times more than SM2 output.	

WIRING DIAGRAM

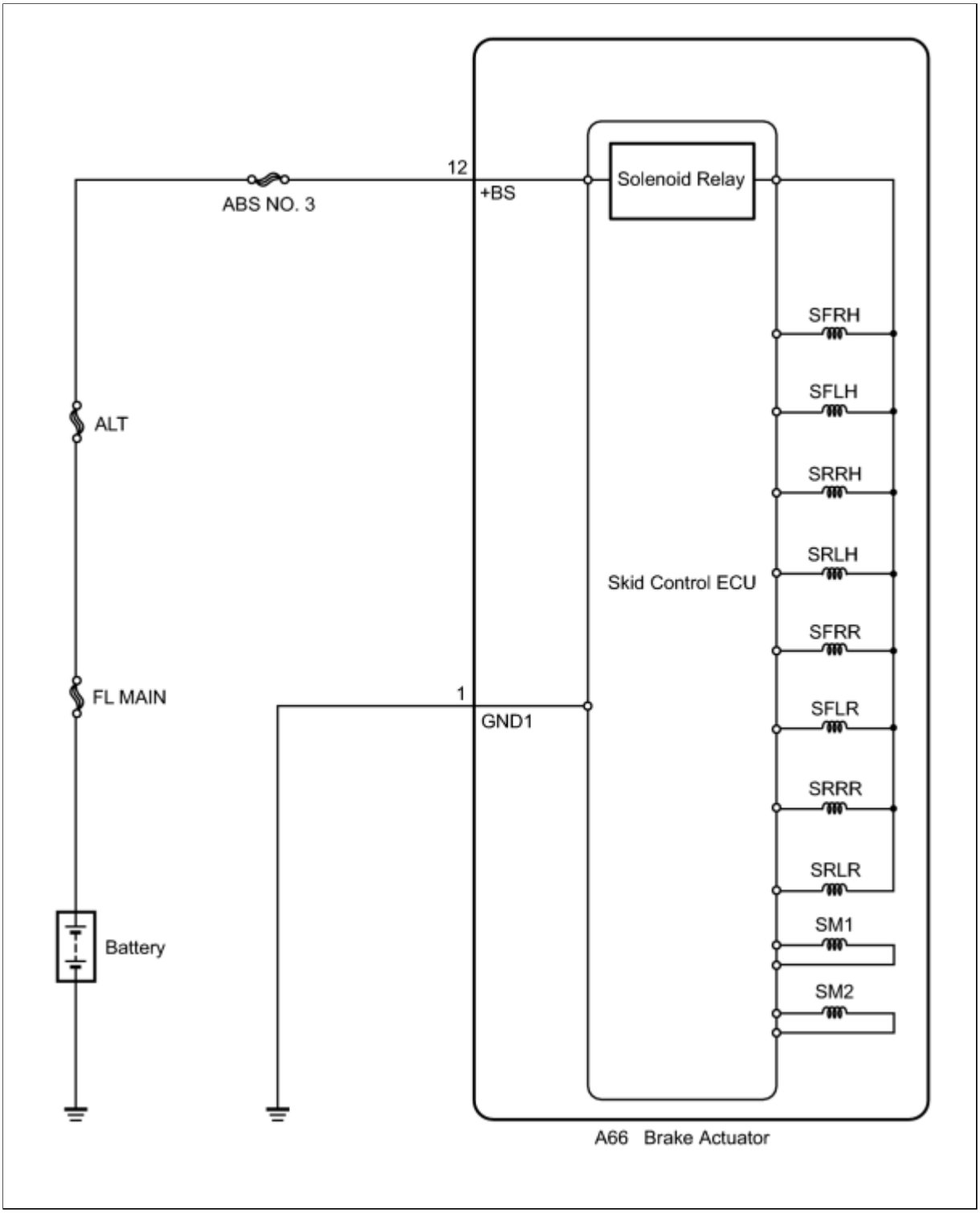

INSPECTION PROCEDURE

NOTICE:

When replacing the brake actuator assembly, perform zero point calibration INFO **.**

PROCEDURE

1.	**RECONFIRM DTC**

HINT:

These codes are detected when a problem is determined in the brake actuator assembly.

The solenoid circuits are in the brake actuator assembly.

Therefore, solenoid circuit inspection and solenoid unit inspection cannot be performed. Be sure to check if any DTCs are output before replacing the brake actuator assembly.

(a) Clear the DTCs INFO.

(b) Start the engine.

(c) Check if the same DTC is recorded INFO.

Result:

RESULT	PROCEED TO
DTCs (C0226, C0236, C0246, C0256 and C1225) are not output	A
DTCs (C0226, C0236, C0246, C0256 and/or C1225) are output	B

HINT:

- If a speed signal of 6 km/h (4 mph) or more is input to the skid control ECU with the ignition switch ON and the stop light switch off, the ECU performs self diagnosis of the motor and solenoid circuits.
- If the normal system code is output (no trouble codes are output), slightly jiggle the connectors, wire harness, and fuses of the brake actuator assembly. Make sure that no DTCs are output.
- If any DTCs are output while jiggling a connector or wire harness of the brake actuator assembly (skid control ECU), inspect and repair the connector or wire harness.
- It is suspected that the DTCs were output due to a bad connection of the connector terminal.

B ▶ **REPLACE BRAKE ACTUATOR ASSEMBLY**

A ▶ **CHECK FOR INTERMITTENT PROBLEMS (SYMPTOM SIMULATION)**

Last Modified: 3-10-2010	6.4 C	**From:** 200901
Model Year: 2010	**Model:** Corolla	**Doc ID:** RM000001JD603FX
Title: BRAKE CONTROL / DYNAMIC CONTROL SYSTEMS: VEHICLE STABILITY CONTROL SYSTEM: C0273,C0274,C1361: Open in ABS Motor Relay Circuit (2010 Corolla)		

DTC	**C0273**	**Open in ABS Motor Relay Circuit**

DTC	**C0274**	**Short in ABS Motor Relay Circuit**

DTC	**C1361**	**Short in ABS Motor Fail Safe Relay Circuit**

DESCRIPTION

The ABS motor relay supplies power to the ABS pump motor. While the ABS is activated, the ECU turns the motor relay on and operates the ABS pump motor.

If the voltage supplied to the motor relay (+BM) is below the DTCs detection threshold due to low voltage from the battery or alternator, these DTCs may be stored.

DTC CODE	DTC DETECTION CONDITION	TROUBLE AREA
C0273	Either of the following is detected: 1. All of the following conditions continue for 0.1 seconds or more. ○ The IG1 terminal voltage is between 9.5 and 17.2 V. ○ While initial check, or ABS, BA, TRAC or VSC is operating. ○ Relay contact remains open when the relay is ON. 2. Both of the following conditions continue for 0.1 seconds or more. ○ The IG1 terminal voltage is less than 9.5 V. ○ Relay contact remains open when the relay is ON.	• ABS NO. 1 fuse • ABS motor relay circuit • Brake actuator assembly (ABS motor relay)
C0274	When the motor relay is OFF, the motor relay remains closed for 4 seconds or more.	• ABS motor relay circuit

DTC CODE	DTC DETECTION CONDITION	TROUBLE AREA
		• Brake actuator assembly (ABS motor relay)
C1361	Immediately after the ignition switch is turned to ON, the relay contact is closed for 4 seconds when the motor fail safe relay is OFF.	• ABS NO. 1 fuse • ABS motor fail safe relay circuit • Brake actuator assembly (ABS motor fail safe relay)

WIRING DIAGRAM

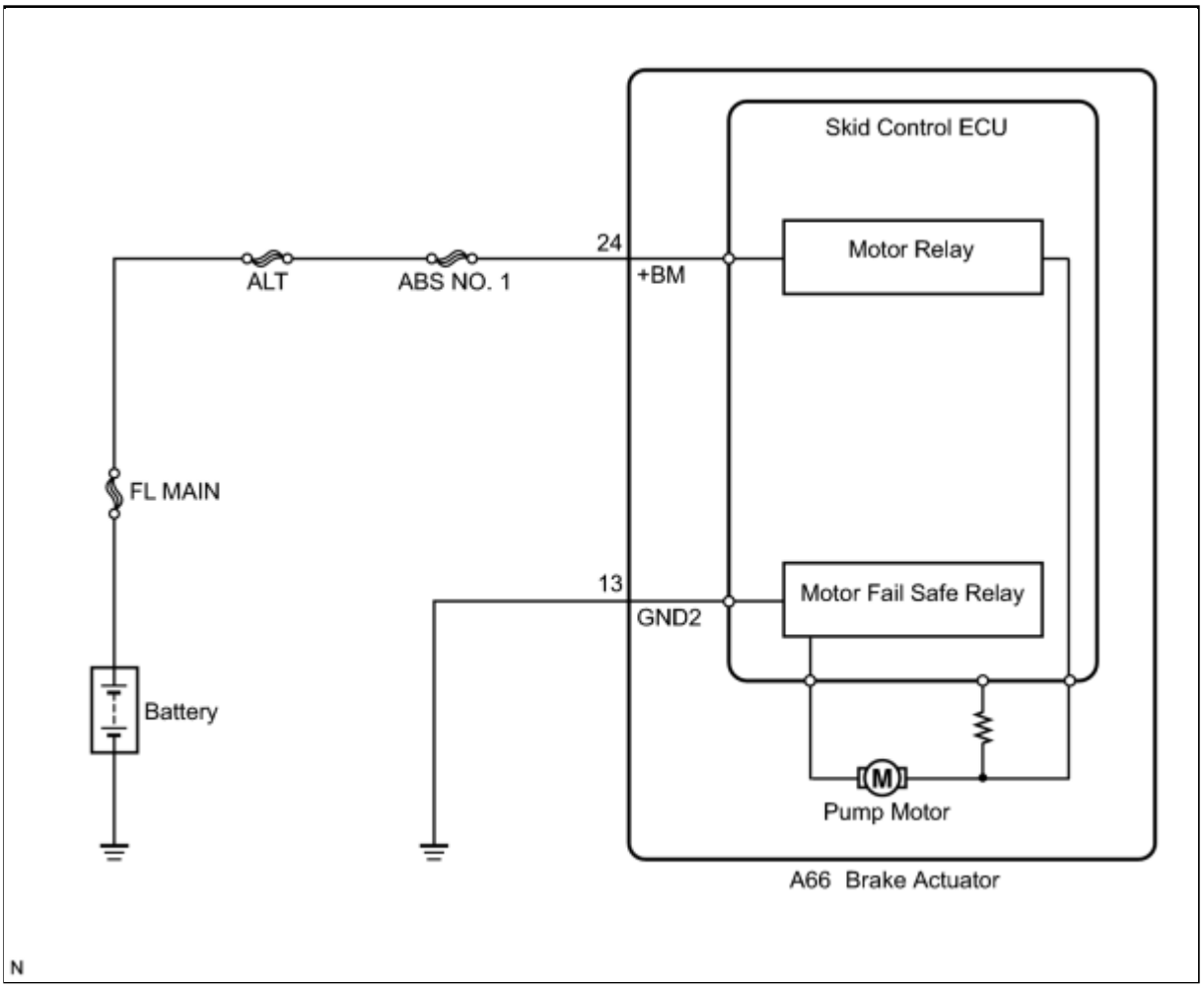

INSPECTION PROCEDURE

NOTICE:

When replacing the brake actuator assembly, perform zero point calibration INFO **.**

HINT:

When C1241 and/or C1417 is output together with C0273, C0274 and/or C1361, inspect and repair the trouble areas indicated by C1241 and/or C1417 first INFO , or INFO).

PROCEDURE

1.	**PERFORM ACTIVE TEST USING TECHSTREAM (ABS MOTOR RELAY)**

(a) Connect the Techstream to the DLC3.

(b) Start the engine.

(c) Select the Active Test on the Techstream INFO .

ABS/VSC/TRAC

TESTER DISPLAY	TEST PART	CONTROL RANGE	DIAGNOSTIC NOTE
Motor Relay	ABS motor relay	Relay ON/OFF	Operating sound of motor can be heard

(d) Check for operating sound of the ABS motor relay when operating it using the Techstream.

Result:

RESULT	PROCEED TO
Operating sound is not heard	A
Operating sound is heard	B

B ▶ **RECONFIRM DTC**

A ▼

2.	**INSPECT ABS NO. 1 FUSE**

(a) Turn the ignition switch off.

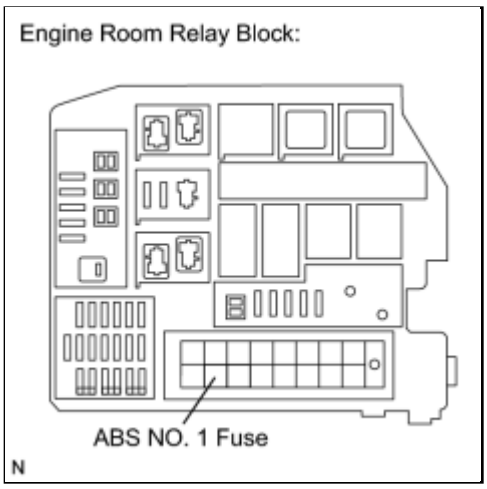

(b) Remove the ABS NO. 1 fuse from the engine room relay block.

(c) Measure the resistance according to the value(s) in the table below.

Standard Resistance:

TESTER CONNECTION	CONDITION	SPECIFIED CONDITION
ABS NO. 1 (50 A) fuse	Always	Below 1 Ω

NG ▶ **REPLACE ABS NO. 1 FUSE**

OK ▼

3.	**INSPECT SKID CONTROL ECU (+BM TERMINAL)**

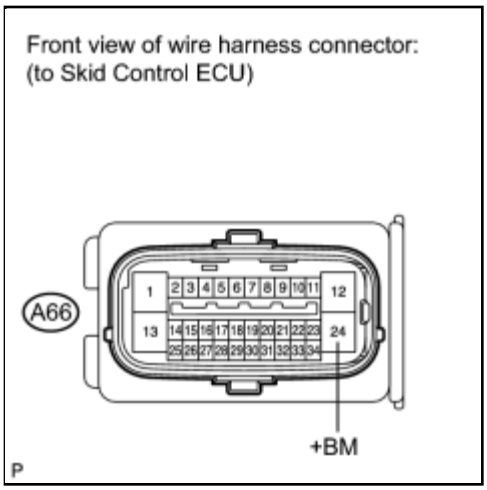

(a) Install the ABS NO. 1 fuse.

(b) Make sure that there is no looseness at the locking part and the connecting part of the connector.

(c) Disconnect the skid control ECU connector.

(d) Measure the voltage according to the value(s) in the table below.

Standard Voltage:

TESTER CONNECTION	CONDITION	SPECIFIED CONDITION
A66-24 (+BM) - Body ground	Always	11 to 14 V

NG ▶ **REPAIR OR REPLACE HARNESS OR CONNECTOR (+BM CIRCUIT)**

OK ▼

4.	INSPECT SKID CONTROL ECU (GND2 TERMINAL)

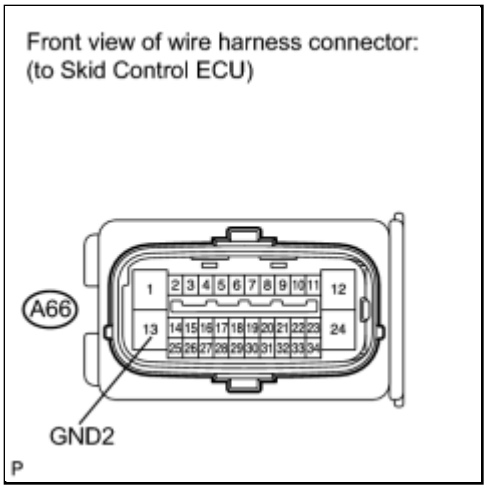

(a) Measure the resistance according to the value(s) in the table below.

Standard Resistance:

TESTER CONNECTION	CONDITION	SPECIFIED CONDITION
A66-13 (GND2) - Body ground	Always	Below 1 Ω

NG ▶ **REPAIR OR REPLACE HARNESS OR CONNECTOR (GND2 CIRCUIT)**

OK ▼

5.	RECONFIRM DTC

HINT:

This code is detected when a problem is identified in the brake actuator assembly.

The ABS motor relay is in the brake actuator assembly.

Therefore, ABS motor relay inspection and motor relay unit inspection cannot be performed. Be sure to check if the DTC is output before replacing the brake actuator assembly.

(a) Turn the ignition switch off.

(b) Reconnect the skid control ECU connector.

(c) Clear the DTCs INFO .

(d) Start the engine.

(e) Drive the vehicle at a speed of 20 km/h (12 mph) or more for 30 seconds or more.

(f) Check if the same DTC is recorded INFO .

Result:

RESULT	PROCEED TO
DTCs (C0273, C0274 and C1361) are not output	A
DTCs (C0273, C0274 and/or C1361) are output	B

HINT:

- If a speed signal of 6 km/h (4 mph) or more is input to the skid control ECU with the ignition switch ON and the stop light switch off, the ECU performs self diagnosis of the motor and solenoid circuits.
- If the normal system code is output (no trouble codes are output), slightly jiggle the connectors, wire harness, and fuses of the brake actuator assembly. Make sure that no DTCs are output.
- If any DTCs are output while jiggling a connector or wire harness of the brake actuator assembly (skid control ECU), inspect and repair the connector or wire harness.
- It is suspected that the DTCs were output due to a bad connection of the connector terminal.

B ▶ **REPLACE BRAKE ACTUATOR ASSEMBLY**

A ▶ **CHECK FOR INTERMITTENT PROBLEMS (SYMPTOM SIMULATION)**

Last Modified: 3-10-2010	6.4 C	**From:** 200901
Model Year: 2010	**Model:** Corolla	**Doc ID:** RM000000XI7044X
Title: BRAKE CONTROL / DYNAMIC CONTROL SYSTEMS: VEHICLE STABILITY CONTROL SYSTEM: C0278,C0279: Open in ABS Solenoid Relay Circuit (2010 Corolla)		

DTC	**C0278**	**Open in ABS Solenoid Relay Circuit**

DTC	**C0279**	**Short in ABS Solenoid Relay Circuit**

DESCRIPTION

The ABS solenoid relay supplies power to the ABS solenoid and TRAC solenoid.

The solenoid relay is turned on 1.5 seconds after the ignition switch is turned to ON, and is turned off if an open or short in the solenoid is detected by self diagnosis performed when the vehicle starts running.

The ABS solenoid relay is housed in the skid control ECU in the actuator assembly.

DTC CODE	DTC DETECTION CONDITION	TROUBLE AREA
C0278	Either of the following is detected: 1. Both of the following conditions continue for 0.2 seconds or more. ○ The IG1 terminal voltage is 9.5 V or more. ○ The solenoid relay contact is open when the relay is ON. 2. Both of the following conditions continue for 0.2 seconds or more. ○ The IG1 terminal voltage becomes lower than 9.5 V when the relay is turned on. ○ The relay contact remains open.	• ABS NO. 3 fuse • ABS solenoid relay circuit • Brake actuator assembly (ABS solenoid relay)
C0279	Immediately after the ignition switch is turned to ON, the solenoid relay contact is closed for 4 seconds when the relay is turned off.	• ABS solenoid relay circuit • Brake actuator assembly (ABS solenoid relay)

WIRING DIAGRAM

Refer to DTCs C0226, C0236, C0246, C0256 and C1225 INFO .

INSPECTION PROCEDURE

NOTICE:

When replacing the brake actuator assembly, perform zero point calibration INFO .

HINT:

When C1241 and/or C1417 is output together with C0278 and/or C0279, inspect and repair the trouble areas indicated by C1241 and/or C1417 first INFO , or INFO).

PROCEDURE

1.	**INSPECT ABS NO. 3 FUSE**

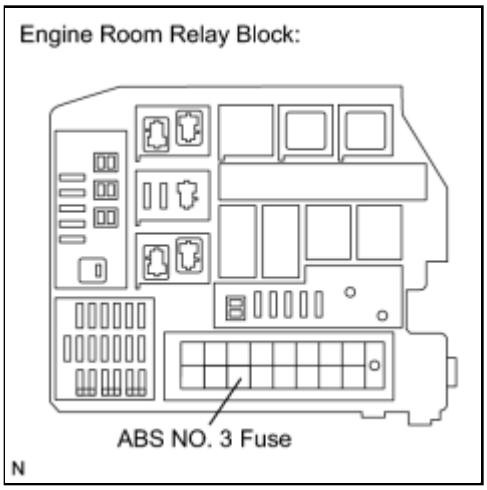

(a) Remove the ABS NO. 3 fuse from the engine room relay block.

(b) Measure the resistance according to the value(s) in the table below.

Standard Resistance:

TESTER CONNECTION	CONDITION	SPECIFIED CONDITION
ABS NO. 3 (30 A) fuse	Always	Below 1 Ω

NG ▶ **REPLACE ABS NO. 3 FUSE**

OK ▼

2.	**INSPECT SKID CONTROL ECU (+BS TERMINAL)**

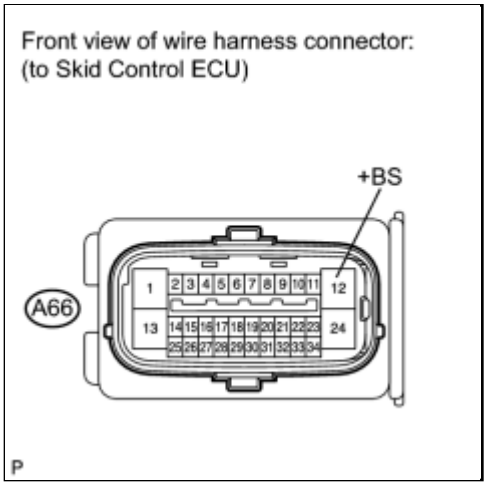

(a) Install the ABS NO. 3 fuse.

(b) Make sure that there is no looseness at the locking part and the connecting part of the connector.

(c) Disconnect the skid control ECU connector.

(d) Measure the voltage according to the value(s) in the table below.

Standard Voltage:

TESTER CONNECTION	CONDITION	SPECIFIED CONDITION
A66-12 (+BS) - Body ground	Always	11 to 14 V

NG ▶ **REPAIR OR REPLACE HARNESS OR CONNECTOR (+BS CIRCUIT)**

OK ▼

3.	**INSPECT SKID CONTROL ECU (GND1 TERMINAL)**

(a) Measure the resistance according to the value(s) in the table below.

Standard Resistance:

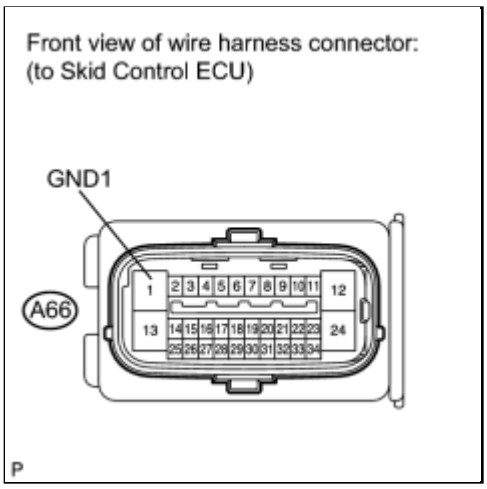

TESTER CONNECTION	CONDITION	SPECIFIED CONDITION
A66-1 (GND1) - Body ground	Always	Below 1 Ω

NG ▶ **REPAIR OR REPLACE HARNESS OR CONNECTOR (GND1 CIRCUIT)**

OK ▼

4.	**RECONFIRM DTC**

HINT:

This code is detected when a problem is identified in the brake actuator assembly.

The solenoid circuit is in the brake actuator assembly.

Therefore, solenoid circuit inspection and solenoid unit inspection cannot be performed. Be sure to check if the DTC is output before replacing the brake actuator assembly.

(a) Reconnect the skid control ECU connector.

(b) Clear the DTCs INFO.

(c) Start the engine.

(d) Drive the vehicle at a speed of 20 km/h (12 mph) or more for 30 seconds or more.

(e) Check if the same DTC is recorded INFO.

Result:

RESULT	PROCEED TO
DTCs (C0278 and C0279) are not output	A
DTCs (C0278 and/or C0279) are output	B

HINT:

- If a speed signal of 6 km/h (4 mph) or more is input to the skid control ECU with the ignition switch ON and the stop light switch off, the ECU performs self diagnosis of the motor and solenoid circuits.
- If the normal system code is output (no trouble codes are output), slightly jiggle the connectors, wire harnesses, and fuses of the brake actuator assembly. Make sure that no DTCs are output.
- If any DTCs are output while jiggling a connector or wire harness of the brake actuator assembly (skid control ECU), inspect and repair the connector or wire harness.
- It is suspected that the DTCs were output due to a bad connection of the connector terminal.

B ▶ **REPLACE BRAKE ACTUATOR ASSEMBLY**

A ▶ **CHECK FOR INTERMITTENT PROBLEMS (SYMPTOM SIMULATION)**

Last Modified: 3-10-2010	6.4 C	**From:** 200901
Model Year: 2010	**Model:** Corolla	**Doc ID:** RM000001RFV03FX
Title: BRAKE CONTROL / DYNAMIC CONTROL SYSTEMS: VEHICLE STABILITY CONTROL SYSTEM: C0371,C1279: Yaw Rate Sensor (Test Mode DTC) (2010 Corolla)		

DTC	**C0371**	**Yaw Rate Sensor (Test Mode DTC)**

DTC	**C1279**	**Acceleration Sensor Output Voltage Malfunction (Test Mode DTC)**

DESCRIPTION

DTCs C0371 and C1279 can be cleared when the yaw rate and acceleration sensor sends a yaw rate and/or acceleration signal or when Test Mode ends. DTCs C0371 and C1279 are output only in Test Mode.

DTC CODE	DTC DETECTION CONDITION	TROUBLE AREA
C0371	Detected only during Test Mode.	Yaw rate and acceleration sensor
C1279	Detected only during Test Mode.	• Sensor installation • Yaw rate and acceleration sensor

WIRING DIAGRAM

Refer to DTCs C1232, C1243 and C1245 INFO .

INSPECTION PROCEDURE

NOTICE:

When replacing the yaw rate and acceleration sensor, perform zero point calibration INFO .

PROCEDURE

1.	**CHECK YAW RATE AND ACCELERATION SENSOR INSTALLATION**

(a) Check that the yaw rate and acceleration sensor has been installed properly INFO .

OK:

The sensor should be tightened to the specified torque.

The sensor should not be installed in a tilted position.

NG ▶ **INSTALL YAW RATE AND ACCELERATION SENSOR CORRECTLY**

OK ▼

2.	**INSPECT YAW RATE AND ACCELERATION SENSOR (IG TERMINAL)**

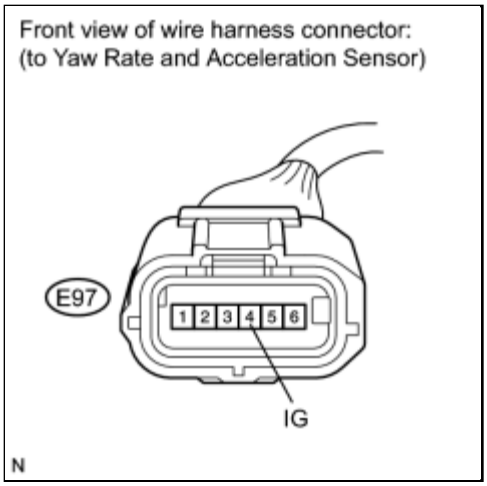

(a) Make sure that there is no looseness at the locking part and the connecting part of the connector.

(b) Disconnect the yaw rate and acceleration sensor connector.

(c) Turn the ignition switch to ON.

(d) Measure the voltage according to the value(s) in the table below.

Standard Voltage:

TESTER CONNECTION	SWITCH CONDITION	SPECIFIED CONDITION
E97-4 (IG) - Body ground	Ignition switch ON	11 to 14 V

NG ▶ **REPAIR OR REPLACE HARNESS OR CONNECTOR (IG CIRCUIT)**

OK ▼

3.	**INSPECT YAW RATE AND ACCELERATION SENSOR (GND TERMINAL)**

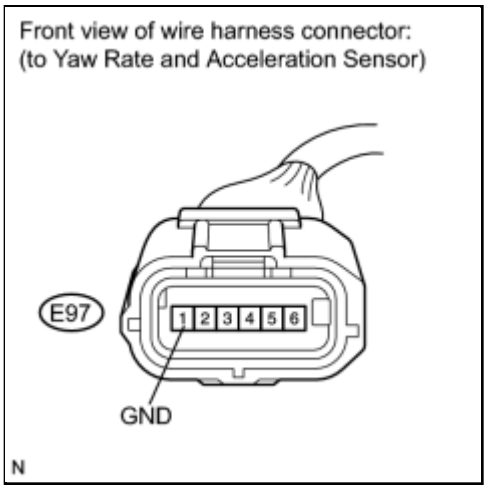

(a) Turn the ignition switch off.

(b) Measure the resistance according to the value(s) in the table below.

Standard Resistance:

TESTER CONNECTION	CONDITION	SPECIFIED CONDITION
E97-1 (GND) - Body ground	Always	Below 1 Ω

NOTICE:

Check the yaw rate and acceleration sensor signal after replacement INFO **.**

NG ▶ **REPAIR OR REPLACE HARNESS OR CONNECTOR (GND CIRCUIT)**

OK ▶ **REPLACE YAW RATE AND ACCELERATION SENSOR**

Last Modified: 3-10-2010	6.4 C	**From:** 200901
Model Year: 2010	**Model:** Corolla	**Doc ID:** RM000000XII03PX
Title: BRAKE CONTROL / DYNAMIC CONTROL SYSTEMS: VEHICLE STABILITY CONTROL SYSTEM: C1201: Engine Control System Malfunction (2010 Corolla)		

DTC	**C1201**	**Engine Control System Malfunction**

DESCRIPTION

If the engine control system is malfunctioning, VSC and TRAC operations are prohibited, as a fail safe function. If a normal signal is received from the engine control system, the fail safe function cancelled and the DTC will be cleared.

DTC CODE	DTC DETECTION CONDITION	TROUBLE AREA
C1201	Engine control system malfunction signal continues for 1 second or more.	Engine control system

INSPECTION PROCEDURE

PROCEDURE

1.	**CHECK ENGINE CONTROL SYSTEM**

(a) Check if any engine control system DTC is output INFO for 2AZ-FE, or INFO for 2ZR-FE).

Result:

RESULT	PROCEED TO
DTC is not output (for 2AZ-FE)	A
DTC is not output (for 2ZR-FE)	B
DTC is output (for 2AZ-FE)	C
DTC is output (for 2ZR-FE)	D

D ▶ **INSPECT ENGINE CONTROL SYSTEM (for 2ZR-FE)**

C ▶ **INSPECT ENGINE CONTROL SYSTEM (for 2AZ-FE)**

B ▶ **REPLACE ECM (for 2ZR-FE)**

A ▶ **REPLACE ECM (for 2AZ-FE)**

Last Modified: 3-10-2010	6.4 C	**From:** 200901
Model Year: 2010	**Model:** Corolla	**Doc ID:** RM000000XIJ02DX
Title: BRAKE CONTROL / DYNAMIC CONTROL SYSTEMS: VEHICLE STABILITY CONTROL SYSTEM: C1203: ECM Communication Circuit Malfunction (2010 Corolla)		

DTC	**C1203**	**ECM Communication Circuit Malfunction**

DESCRIPTION

The circuit is used to send TRAC and VSC control information from the skid control ECU to the ECM, and engine control information from the ECM to the skid control ECU through the CAN communication system.

DTC CODE	DTC DETECTION CONDITION	TROUBLE AREA
C1203	Engine, drive source and destination variations that are sent from the ECM do not match the ones of the skid control ECU.	ECM

INSPECTION PROCEDURE

PROCEDURE

1.	**CHECK PART NUMBER (ECM AND BRAKE ACTUATOR ASSEMBLY)**

(a) Check that the proper ECM and brake actuator assembly (skid control ECU) are installed.

OK:

Proper ECUs are installed.

Result:

RESULT	PROCEED TO
OK (for 2AZ-FE)	A
OK (for 2ZR-FE)	B
NG	C

C ▶ **REPLACE ECUS WITH PROPER ONES**

B ▶ **REPLACE ECM (for 2ZR-FE)**

A ▶ **REPLACE ECM (for 2AZ-FE)**

Last Modified: 3-10-2010	6.4 C	**From:** 200901
Model Year: 2010	**Model:** Corolla	**Doc ID:** RM000000XIK03GX
Title: BRAKE CONTROL / DYNAMIC CONTROL SYSTEMS: VEHICLE STABILITY CONTROL SYSTEM: C1210,C1336: Zero Point Calibration of Yaw Rate Sensor Undone (2010 Corolla)		

DTC	**C1210**	**Zero Point Calibration of Yaw Rate Sensor Undone**

DTC	**C1336**	**Zero Point Calibration of Acceleration Sensor Undone**

DESCRIPTION

The skid control ECU receives signals from the yaw rate and acceleration sensor via the CAN communication system.

The yaw rate sensor has a built-in acceleration sensor and detects the vehicle's condition using 2 circuits (GL1, GL2). If there is trouble in the bus lines between the yaw rate and acceleration sensor and the CAN communication system, DTCs U0123 (Lost Communication with Yaw Rate Sensor Module) and U0124 (Lost Communication with Lateral Acceleration Sensor Module) are output.

The DTCs are also output when the calibration has not been completed.

DTC CODE	DTC DETECTION CONDITION	TROUBLE AREA
C1210	Zero point calibration of yaw rate sensor undone.	Yaw rate and acceleration sensor
C1336	Zero point calibration of acceleration sensor undone.	Yaw rate and acceleration sensor

INSPECTION PROCEDURE

NOTICE:

When replacing the brake actuator assembly or yaw rate and acceleration sensor, perform zero point calibration INFO **.**

HINT:

When U0123, U0124 and/or U0126 is output together with C1210 and/or C1336, inspect and repair the trouble areas indicated by U0123, U0124 and/or U0126 first INFO **.**

PROCEDURE

1.	**PERFORM ZERO POINT CALIBRATION OF YAW RATE AND ACCELERATION SENSOR**

(a) Perform zero point calibration of the yaw rate and acceleration sensor INFO .

NEXT

2.	PERFORM TEST MODE (SIGNAL CHECK)

(a) Turn the ignition switch off.

(b) Perform the sensor check in the Test Mode procedure INFO .

OK:

All Test Mode DTCs are cleared.

HINT:

If troubleshooting has been carried out according to Problem Symptoms Table, refer back to the table and proceed to the next step INFO .

NG ▶ **CHECK YAW RATE AND ACCELERATION SENSOR INSTALLATION**

OK ▶ **END**

3.	CHECK YAW RATE AND ACCELERATION SENSOR INSTALLATION

(a) Turn the ignition switch off.

(b) Check that the yaw rate and acceleration sensor has been installed properly INFO .

OK:

The sensor should be tightened to the specified torque.

The sensor should not be installed in a tilted position.

NG ▶ **INSTALL YAW RATE AND ACCELERATION SENSOR CORRECTLY**

OK

4.	READ VALUE USING TECHSTREAM (YAW RATE AND ACCELERATION SENSOR)

(a) Connect the Techstream to the DLC3.

(b) Turn the ignition switch to ON.

(c) Select the Data List on the Techstream INFO .

ABS/VSC/TRAC

TESTER DISPLAY	MEASUREMENT ITEM/RANGE	NORMAL CONDITION	DIAGNOSTIC NOTE
Deceleration Sensor	Acceleration sensor / min.: -18.52 m/s^2, max.: 18.39 m/s^2	Min.: -18.52 m/s^2 Max.: 18.39 m/s^2	Reading changes when vehicle is bounced
Deceleration Sensor2	Acceleration sensor 2 / min.: -18.52 m/s^2, max.: 18.39 m/s^2	Min.: -18.52 m/s^2 Max.: 18.39 m/s^2	Reading changes when vehicle is bounced
Yaw Rate Sensor	Yaw rate sensor / min.: -128 deg/s, max.: 127 deg/s	Vehicle stationary: 0 deg/s Right turn: -128 to 0 deg/s Left turn: 0 to 127 deg/s	-
Yaw Rate Sensor2	Yaw rate sensor 2 / min.: -128 deg/s, max.: 127 deg/s	Vehicle stationary: 0 deg/s Right turn: -128 to 0 deg/s Left turn: 0 to 127 deg/s	-

(d) Check that the yaw rate and acceleration sensor output value displayed on the Techstream.

OK:

The yaw rate and acceleration sensor output value is normal.

NOTICE:

Check the yaw rate and acceleration sensor signal after replacement INFO .

HINT:

If troubleshooting has been carried out according to Problem Symptoms Table, refer back to the table and proceed to the next step INFO .

NG ▶ REPLACE YAW RATE AND ACCELERATION SENSOR

OK ▶ REPLACE BRAKE ACTUATOR ASSEMBLY

Last Modified: 3-10-2010	6.4 C	**From:** 200901
Model Year: 2010	**Model:** Corolla	**Doc ID:** RM000000XI906NX
Title: BRAKE CONTROL / DYNAMIC CONTROL SYSTEMS: VEHICLE STABILITY CONTROL SYSTEM: C1271,C1272,C1275,C1276: Low Output Signal of Front Speed Sensor RH (Test Mode DTC) (2010 Corolla)		

DTC	**C1271**	**Low Output Signal of Front Speed Sensor RH (Test Mode DTC)**

DTC	**C1272**	**Low Output Signal of Front Speed Sensor LH (Test Mode DTC)**

DTC	**C1275**	**Abnormal Change in Output Signal of Front Speed Sensor RH (Test Mode DTC)**

DTC	**C1276**	**Abnormal Change in Output Signal of Front Speed Sensor LH (Test Mode DTC)**

DESCRIPTION

DTCs C1271 to C1276 will be cleared when the speed sensor sends a vehicle speed signal or when Test Mode ends. DTCs from C1271 to C1276 are output only in Test Mode.

DTC CODE	DTC DETECTION CONDITION	TROUBLE AREA
C1271 C1272	Detected only during Test Mode.	• Front speed sensor RH/LH • Sensor installation • Speed sensor rotor
C1275 C1276	Detected only during Test Mode.	Speed sensor rotor

HINT:

- DTCs C1271 and C1275 are for the front speed sensor RH.
- DTCs C1272 and C1276 are for the front speed sensor LH.

WIRING DIAGRAM

Refer to DTCs C1401 and C1402 INFO .

INSPECTION PROCEDURE

NOTICE:

When replacing the brake actuator assembly, perform zero point calibration INFO .

PROCEDURE

1.	**CHECK HARNESS AND CONNECTOR (MOMENTARY INTERRUPTION)**

(a) Using the Techstream, check for any momentary interruption in the wire harness and connector corresponding to the DTC INFO .

ABS/VSC/TRAC

TESTER DISPLAY	MEASUREMENT ITEM/RANGE	NORMAL CONDITION	DIAGNOSTIC NOTE
FR Speed Open	FR speed sensor open detection / ERROR or NORMAL	ERROR: Momentary interruption NORMAL: Normal	-
FL Speed Open	FL speed sensor open detection / ERROR or NORMAL	ERROR: Momentary interruption NORMAL: Normal	-

Result:

RESULT	PROCEED TO
There are momentary interruptions	A
There are no momentary interruptions	B
There is a constant open circuit	C

HINT:

Perform the above inspection before removing the sensor and connector.

C ▶ **CHECK FRONT SPEED SENSOR INSTALLATION**

B ▶ **READ VALUE USING TECHSTREAM (FRONT SPEED SENSOR)**

A ▼

2.	**REPAIR OR REPLACE HARNESS OR CONNECTOR (SKID CONTROL ECU - FRONT SPEED SENSOR)**

(a) Turn the ignition switch off.

(b) Repair or replace the harness or connector.

(c) Check for any momentary interruption between the skid control ECU and the front speed sensor INFO .

(d) Check that there are no momentary interruptions.

NEXT

3.	**PERFORM TEST MODE (SIGNAL CHECK)**

(a) Turn the ignition switch off.

(b) Perform the sensor check in the Test Mode procedure INFO .

OK:
All Test Mode DTCs are cleared.

NG ▶ **READ VALUE USING TECHSTREAM (FRONT SPEED SENSOR)**

OK ▶ **END**

4.	**READ VALUE USING TECHSTREAM (FRONT SPEED SENSOR)**

(a) Turn the ignition switch off.

(b) Connect the Techstream to the DLC3.

(c) Start the engine.

(d) Select the Data List on the Techstream INFO .

ABS/VSC/TRAC

TESTER	MEASUREMENT ITEM/RANGE	NORMAL	DIAGNOSTIC NOTE

DISPLAY		CONDITION	
FR Wheel Speed	FR wheel speed sensor reading / min.: 0 km/h (0 mph), max.: 326.4 km/h (202 mph)	Actual wheel speed	Similar speed as indicated on speedometer
FL Wheel Speed	FL wheel speed sensor reading /min.: 0 km/h (0 mph), max.: 326.4 km/h (202 mph)	Actual wheel speed	Similar speed as indicated on speedometer

(e) Check that there is no difference between the speed value output from the speed sensor displayed on the Techstream and the speed value displayed on the speedometer when driving the vehicle.

HINT:

Factors that affect the indicated vehicle speed include tire size, tire inflation, and tire wear. The speed indicated on the speedometer has an allowable margin of error. This can be tested using a speedometer tester (calibrated chassis dynamometer). For details about testing and the margin of error, see the reference chart INFO **.**

OK:
The speed value output from the speed sensor displayed on the Techstream is the same as the actual vehicle speed measured using a speedometer tester (calibrated chassis dynamometer).

NG ▶ **CHECK FRONT SPEED SENSOR INSTALLATION**

OK ▼

5.	PERFORM TEST MODE (SIGNAL CHECK)

(a) Turn the ignition switch off.

(b) Perform the sensor check in the Test Mode procedure INFO .

OK:
All Test Mode DTCs are cleared.

NG ▶ **CHECK FRONT SPEED SENSOR INSTALLATION**

OK ▶ **CHECK FOR INTERMITTENT PROBLEMS (SYMPTOM SIMULATION)**

6.	CHECK FRONT SPEED SENSOR INSTALLATION

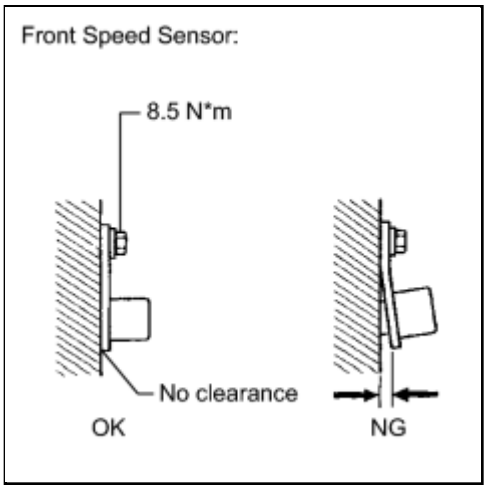

(a) Turn the ignition switch off.

(b) Check the speed sensor installation.

OK:

There is no clearance between the sensor and the front steering knuckle.

The installation nut is tightened properly.

Torque

8.5 N*m (87 kgf*cm, 75 in.*lbf)

NG ▶ **INSTALL FRONT SPEED SENSOR CORRECTLY**

OK ▼

7.	**CHECK FRONT SPEED SENSOR TIP**

(a) Remove the front speed sensor INFO .

(b) Check the speed sensor tip.

OK:

No scratches, oil, or foreign matter on the sensor tip.

NOTICE:

Check the speed sensor signal after cleaning or replacement INFO **.**

NG ▶ **CLEAN OR REPLACE FRONT SPEED SENSOR**

OK ▼

8.	CHECK FRONT SPEED SENSOR ROTOR

(a) Remove the front speed sensor rotor INFO for 2AZ-FE or INFO for 2ZR-FE).

(b) Check the speed sensor rotor.

OK:

No scratches, oil, or foreign matter on the rotors.

NOTICE:

Check the speed sensor signal after cleaning or replacement INFO .

HINT:

If the front speed sensor rotor needs to be replaced, replace it together with the front axle outboard joint shaft assembly.

NG ▶ **CLEAN OR REPLACE FRONT SPEED SENSOR ROTOR**

OK ▼

9.	CHECK HARNESS AND CONNECTOR (SKID CONTROL ECU - FRONT SPEED SENSOR)

(a) Install the front speed sensor and the front speed sensor rotor.

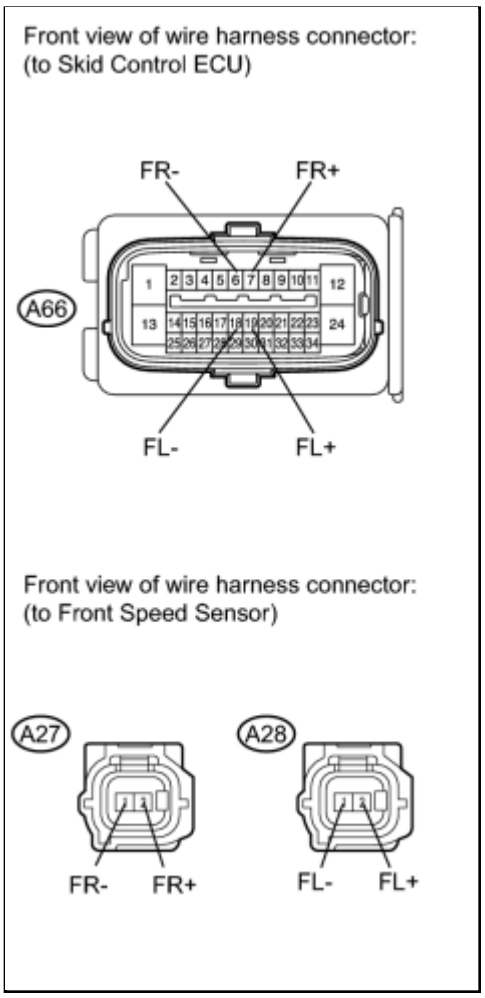

(b) Make sure that there is no looseness at the locking part and the connecting part of the connectors.

(c) Disconnect the skid control ECU connector and the front speed sensor connector.

(d) Measure the resistance according to the value(s) in the table below.

Standard Resistance:

for RH

for LH

TESTER CONNECTION	CONDITION	SPECIFIED CONDITION
A66-7 (FR+) - A27-2 (FR+)	Always	Below 1 Ω
A66-7 (FR+) - Body ground	Always	10 kΩ or higher
A66-6 (FR-) - A27-1 (FR-)	Always	Below 1 Ω
A66-6 (FR-) - Body ground	Always	10 kΩ or higher

TESTER CONNECTION	CONDITION	SPECIFIED CONDITION
A66-19 (FL+) - A28-2 (FL+)	Always	Below 1 Ω

TESTER CONNECTION	CONDITION	SPECIFIED CONDITION
A66-19 (FL+) - Body ground	Always	10 kΩ or higher
A66-18 (FL-) - A28-1 (FL-)	Always	Below 1 Ω
A66-18 (FL-) - Body ground	Always	10 kΩ or higher

NG ▶ **REPAIR OR REPLACE HARNESS OR CONNECTOR**

OK ▼

10.	INSPECT SKID CONTROL ECU (SENSOR INPUT)

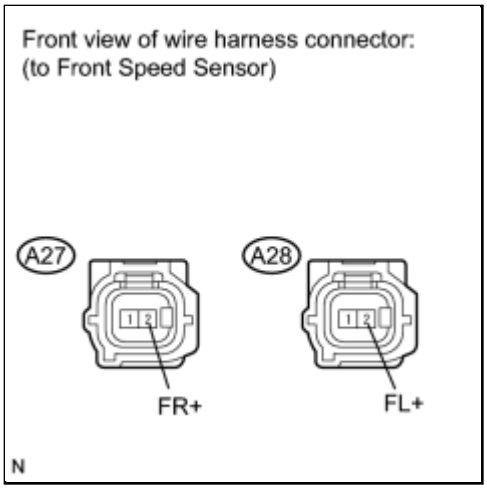

(a) Reconnect the skid control ECU connector.

(b) Turn the ignition switch to ON.

(c) Measure the voltage according to the value(s) in the table below.

Standard Voltage:

for RH

for LH

TESTER CONNECTION	SWITCH CONDITION	SPECIFIED CONDITION
A27-2 (FR+) - Body ground	Ignition switch ON	8 to 14 V

TESTER CONNECTION	SWITCH CONDITION	SPECIFIED CONDITION
A28-2 (FL+) - Body ground	Ignition switch ON	8 to 14 V

NG ▶ REPLACE BRAKE ACTUATOR ASSEMBLY

OK ▼

11.	PERFORM TEST MODE (SIGNAL CHECK)

(a) Turn the ignition switch off.

(b) Perform the sensor check in the Test Mode procedure INFO.

OK:
All Test Mode DTCs are cleared.

NG ▶ REPLACE FRONT SPEED SENSOR

OK ▶ CHECK FOR INTERMITTENT PROBLEMS (SYMPTOM SIMULATION)

12.	REPLACE FRONT SPEED SENSOR

(a) Turn the ignition switch off.

(b) Replace the front speed sensor INFO.

NOTICE:

Check the speed sensor signal after replacement INFO.

NEXT ▼

13.	PERFORM TEST MODE (SIGNAL CHECK)

(a) Perform the sensor check in the Test Mode procedure INFO.

OK:
All Test Mode DTCs are cleared.

NG ▶ REPLACE FRONT SPEED SENSOR ROTOR

OK ▶ END

14.	REPLACE FRONT SPEED SENSOR ROTOR

(a) Turn the ignition switch off.

(b) Remove the front drive shaft assembly INFO for 2AZ-FE or INFO for 2ZR-FE).

(c) Replace the front axle outboard joint shaft assembly (front speed sensor rotor) INFO for 2AZ-FE or INFO for 2ZR-FE).

HINT:

If the front speed sensor rotor needs to be replaced, replace it together with the front axle outboard joint shaft assembly.

NOTICE:

Check the speed sensor signal after replacement INFO .

NEXT

15.	PERFORM TEST MODE (SIGNAL CHECK)

(a) Install the front drive shaft assembly.

(b) Perform the sensor check in the Test Mode procedure INFO .

OK:

All Test Mode DTCs are cleared.

NG ▶ REPLACE BRAKE ACTUATOR ASSEMBLY

OK ▶ END

Last Modified: 3-10-2010	6.4 C	**From:** 200901
Model Year: 2010	**Model:** Corolla	**Doc ID:** RM000001RFV03GX
Title: BRAKE CONTROL / DYNAMIC CONTROL SYSTEMS: VEHICLE STABILITY CONTROL SYSTEM: C1232,C1243,C1245: Acceleration Sensor Stuck Malfunction (2010 Corolla)		

DTC	**C1232**	**Acceleration Sensor Stuck Malfunction**

DTC	**C1243**	**Acceleration Sensor Stuck Malfunction**

DTC	**C1245**	**Acceleration Sensor Output Malfunction**

DESCRIPTION

The skid control ECU receives signals from the yaw rate and acceleration sensor via the CAN communication system.

The yaw rate sensor has a built-in acceleration sensor and detects the vehicle's condition using 2 circuits (GL1, GL2).

If there is trouble in the bus lines between the yaw rate and acceleration sensor and the CAN communication system, DTCs U0123 (Lost Communication with Yaw Rate Sensor Module) and U0124 (Lost Communication with Lateral Acceleration Sensor Module) are set.

These DTCs are also output when calibration has not been completed.

DTC CODE	DTC DETECTION CONDITION	TROUBLE AREA
C1232	At a vehicle speed of 10 km/h (6 mph) or more, acceleration sensor output value does not change for 30 seconds or more.	• Sensor installation • Yaw rate and acceleration sensor
C1243	While the vehicle speed changes from 30 km/h (19 mph) to 0 km/h (0 mph), the condition that the value of acceleration sensor does not change by 0.0294 G or more occurs 16 times or more.	• Sensor installation • Yaw rate and acceleration sensor
C1245	At a vehicle speed of 30 km/h (19 mph) or more, the difference between the forward and backward G calculated from the	• Sensor installation

DTC CODE	DTC DETECTION CONDITION	TROUBLE AREA
	acceleration sensor value and that calculated from the vehicle speed sensor exceeds 0.35 G for 60 seconds or more.	• Yaw rate and acceleration sensor

WIRING DIAGRAM

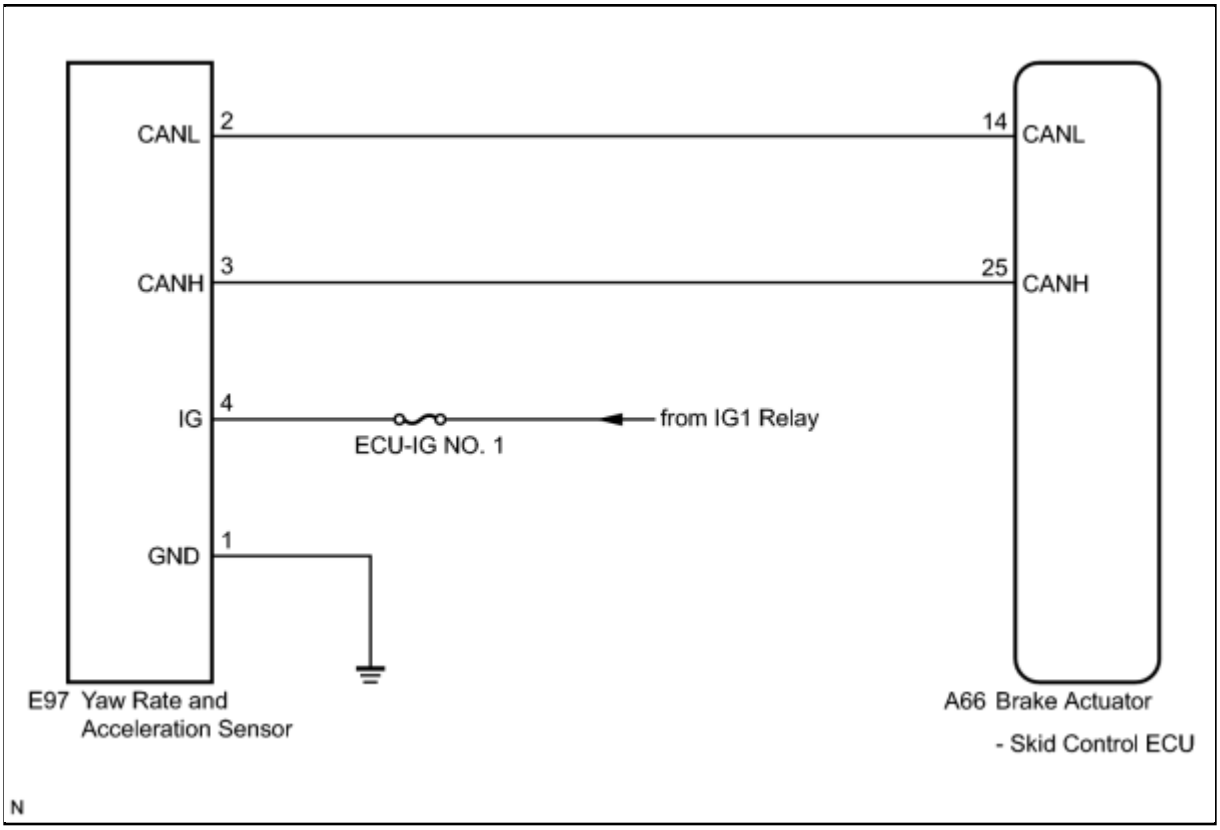

INSPECTION PROCEDURE

NOTICE:

When replacing the yaw rate and acceleration sensor, perform zero point calibration INFO **.**

HINT:

When U0123, U0124 and/or U0126 is output together with C1232, C1243, and/or C1245, inspect and repair the trouble areas indicated by U0123, U0124 and/or U0126 first INFO **.**

PROCEDURE

1.	**CHECK YAW RATE AND ACCELERATION SENSOR INSTALLATION**

(a) Check that the yaw rate and acceleration sensor has been installed properly INFO .

OK:

The sensor should be tightened to the specified torque.

The sensor should not be installed in a tilted position.

NOTICE:

Check the yaw rate and acceleration sensor signal after replacement INFO .

HINT:

If troubleshooting has been carried out according to Problem Symptoms Table, refer back to the table and proceed to the next step INFO .

NG ▶ **INSTALL YAW RATE AND ACCELERATION SENSOR CORRECTLY**

OK ▶ **REPLACE YAW RATE AND ACCELERATION SENSOR**

Last Modified: 3-10-2010	6.4 C	**From:** 200901
Model Year: 2010	**Model:** Corolla	**Doc ID:** RM000000XW604ZX
Title: BRAKE CONTROL / DYNAMIC CONTROL SYSTEMS: VEHICLE STABILITY CONTROL SYSTEM: C1241: Low Power Supply Voltage Malfunction (2010 Corolla)		

DTC	**C1241**	**Low Power Supply Voltage Malfunction**

DESCRIPTION

If a malfunction is detected in the power supply circuit, the skid control ECU (housed in the actuator assembly) stores this DTC and the fail safe function prohibits ABS operation.

This DTC is stored when the IG1 terminal voltage deviates from the DTC detection condition due to a malfunction in the power supply or charging circuit such as the battery or alternator circuit, etc.

The DTC is cancelled when the IG1 terminal voltage returns to normal.

DTC CODE	DTC DETECTION CONDITION	TROUBLE AREA
C1241	Any of the following is detected: 1. At a vehicle speed of 3 km/h (2 mph) or more, the IG1 terminal voltage is less than 9.5 V for 10 seconds or more. 2. When the solenoid relay remains ON and the IG1 terminal voltage is less than 9.5 V, the relay contact is open for 0.22 seconds or more. 3. With the IG1 terminal voltage 9.5 V or less, the vehicle speed sensor power supply decreases for 60 seconds or more. 4. When the motor fail safe relay is ON after the motor relay turns ON, the IG1 terminal voltage is 9.5 V or less and the actuator pump drive motor is OFF for 0.22 seconds or more.	• ECU-IG NO. 1 fuse • Battery • Charging system • Power source circuit • Internal power supply circuit of the skid control ECU

WIRING DIAGRAM

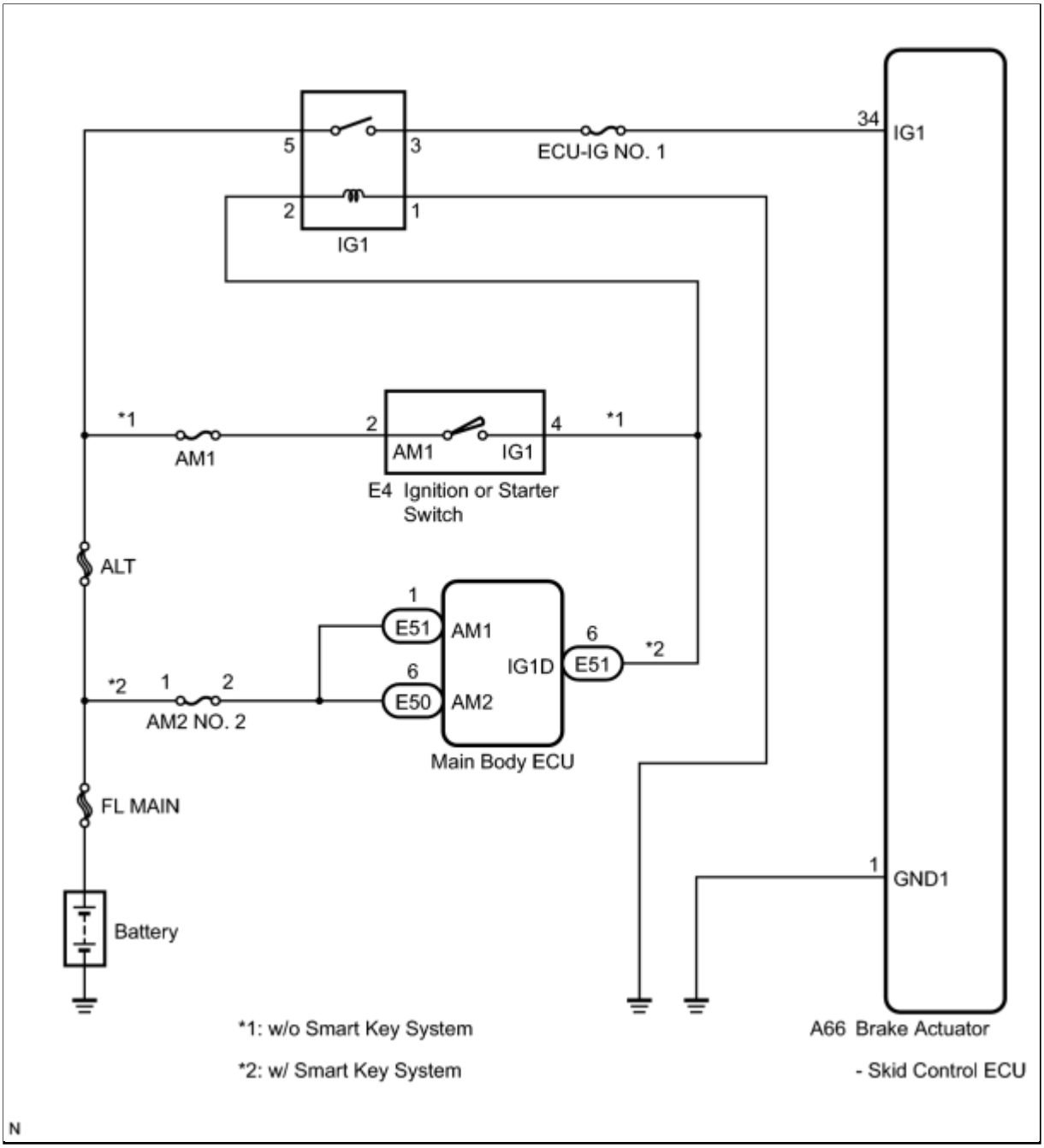

INSPECTION PROCEDURE

NOTICE:

When replacing the brake actuator assembly, perform zero point calibration INFO **.**

PROCEDURE

1.	**INSPECT ECU-IG NO. 1 FUSE**

(a) Remove the ECU-IG NO. 1 fuse from the main body

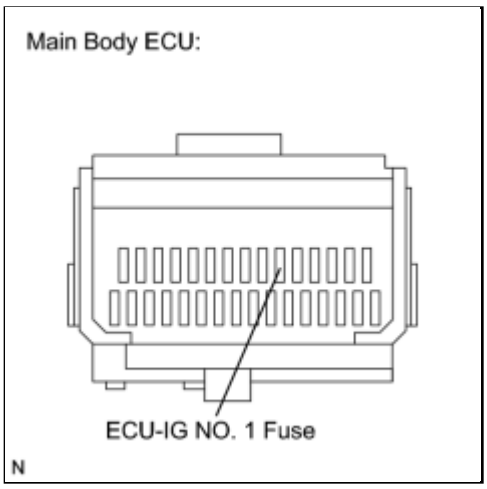

ECU (instrument panel junction block).

(b) Measure the resistance according to the value(s) in the table below.

Standard Resistance:

TESTER CONNECTION	CONDITION	SPECIFIED CONDITION
ECU-IG NO. 1 (10 A) fuse	Always	Below 1 Ω

NG ▶ **REPLACE ECU-IG NO. 1 FUSE**

OK ▼

2.	**CHECK BATTERY**

(a) Install the ECU-IG NO. 1 fuse.

(b) Check the battery voltage.

Standard Voltage:
11 to 14 V
Result:

RESULT	PROCEED TO
OK	A
NG (for 2AZ-FE)	B
NG (for 2ZR-FE)	C

C ▶ **CHECK OR REPLACE CHARGING SYSTEM OR BATTERY (for 2ZR-FE)**

B ▶ CHECK OR REPLACE CHARGING SYSTEM OR BATTERY (for 2AZ-FE)

A ▼

3.	INSPECT SKID CONTROL ECU (IG1 TERMINAL)

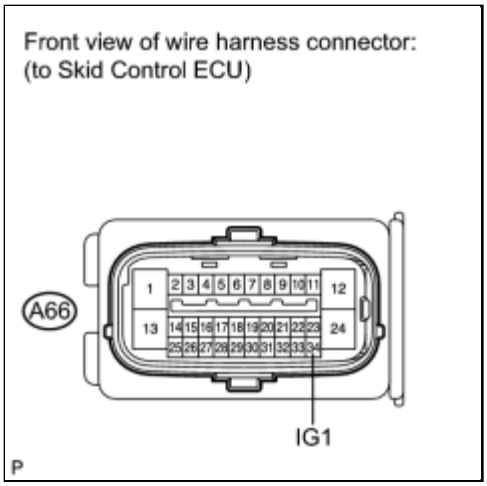

(a) Make sure that there is no looseness at the locking part and the connecting part of the connector.

(b) Disconnect the skid control ECU connector.

(c) Turn the ignition switch to ON.

(d) Measure the voltage according to the value(s) in the table below.

Standard Voltage:

TESTER CONNECTION	SWITCH CONDITION	SPECIFIED CONDITION
A66-34 (IG1) - Body ground	Ignition switch ON	11 to 14 V

NG ▶ REPAIR OR REPLACE HARNESS OR CONNECTOR (IG1 CIRCUIT)

OK ▼

4.	INSPECT SKID CONTROL ECU (GND1 TERMINAL)

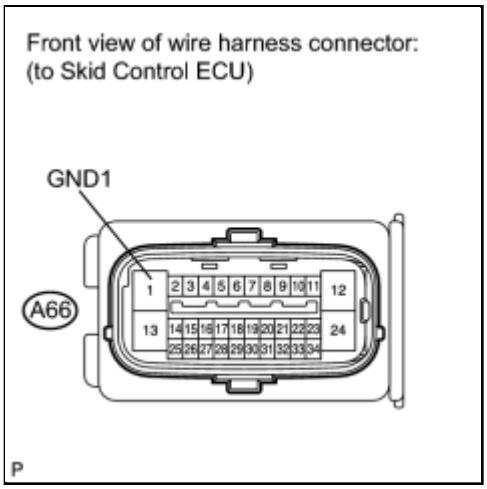

(a) Turn the ignition switch off.

(b) Measure the resistance according to the value(s) in the table below.

Standard Resistance:

TESTER CONNECTION	CONDITION	SPECIFIED CONDITION
A66-1 (GND1) - Body ground	Always	Below 1 Ω

NG ▶ **REPAIR OR REPLACE HARNESS OR CONNECTOR (GND1 CIRCUIT)**

OK ▼

5.	**RECONFIRM DTC**

(a) Reconnect the skid control ECU connector.

(b) Clear the DTCs INFO .

(c) Start the engine.

(d) Drive the vehicle at a speed of 20 km/h (12 mph) or more for 30 seconds or more.

(e) Check if the same DTC is recorded INFO .

Result:

RESULT	PROCEED TO
DTC (C1241) is not output	A

RESULT	PROCEED TO
DTC (C1241) is output	B

HINT:

If troubleshooting has been carried out according to Problem Symptoms Table, refer back to the table and proceed to the next step INFO **.**

B ▶ **REPLACE BRAKE ACTUATOR ASSEMBLY**

A ▶ **CHECK FOR INTERMITTENT PROBLEMS (SYMPTOM SIMULATION)**

Last Modified: 3-10-2010	6.4 C	**From:** 200901
Model Year: 2010	**Model:** Corolla	**Doc ID:** RM000000369500JX
Title: BRAKE CONTROL / DYNAMIC CONTROL SYSTEMS: VEHICLE STABILITY CONTROL SYSTEM: C1273,C1274,C1277,C1278: Low Output Signal of Rear Speed Sensor RH (Test Mode DTC) (2010 Corolla)		

DTC	**C1273**	**Low Output Signal of Rear Speed Sensor RH (Test Mode DTC)**

DTC	**C1274**	**Low Output Signal of Rear Speed Sensor LH (Test Mode DTC)**

DTC	**C1277**	**Abnormal Change in Output Signal of Rear Speed Sensor RH (Test Mode DTC)**

DTC	**C1278**	**Abnormal Change in Output Signal of Rear Speed Sensor LH (Test Mode DTC)**

DESCRIPTION

DTCs C1273 to C1278 will be cleared when the speed sensor sends a vehicle speed signal or when Test Mode ends. DTCs from C1273 to C1278 are output only in Test Mode.

DTC CODE	DTC DETECTION CONDITION	TROUBLE AREA
C1273 C1274	Detected only during Test Mode.	• Rear speed sensor RH/LH • Sensor installation • Speed sensor rotor
C1277 C1278	Detected only during Test Mode.	Speed sensor rotor

HINT:

- DTCs C1273 and C1277 are for the rear speed sensor RH.
- DTCs C1274 and C1278 are for the rear speed sensor LH.

WIRING DIAGRAM

Refer to DTCs C1403 and C1404 INFO .

INSPECTION PROCEDURE

NOTICE:

When replacing the brake actuator assembly, perform zero point calibration INFO .

PROCEDURE

1.	**CHECK HARNESS AND CONNECTOR (MOMENTARY INTERRUPTION)**

(a) Using the Techstream, check for any momentary interruption in the wire harness and connector corresponding to the DTC INFO .

ABS/VSC/TRAC

TESTER DISPLAY	MEASUREMENT ITEM/RANGE	NORMAL CONDITION	DIAGNOSTIC NOTE
RR Speed Open	RR speed sensor open detection / ERROR or NORMAL	ERROR: Momentary interruption NORMAL: Normal	-
RL Speed Open	RL speed sensor open detection / ERROR or NORMAL	ERROR: Momentary interruption NORMAL: Normal	-

Result:

RESULT	PROCEED TO
There are momentary interruptions	A
There are no momentary interruptions	B
There is a constant open circuit	C

HINT:

Perform the above inspection before removing the sensor and connector.

C ▶ **CHECK REAR SPEED SENSOR INSTALLATION**

B ▶ **READ VALUE USING TECHSTREAM (REAR SPEED SENSOR)**

A ▼

2.	**REPAIR OR REPLACE HARNESS OR CONNECTOR (SKID CONTROL ECU - REAR SPEED SENSOR)**

(a) Turn the ignition switch off.

(b) Repair or replace the harness or connector.

(c) Check for any momentary interruption between the skid control ECU and the rear speed sensor INFO .

(d) Check that there are no momentary interruptions.

NEXT

3.	**PERFORM TEST MODE (SIGNAL CHECK)**

(a) Turn the ignition switch off.

(b) Perform the sensor check in the Test Mode procedure INFO .

OK:
All Test Mode DTCs are cleared.

NG ▶ **READ VALUE USING TECHSTREAM (REAR SPEED SENSOR)**

OK ▶ **END**

4.	**READ VALUE USING TECHSTREAM (REAR SPEED SENSOR)**

(a) Turn the ignition switch off.

(b) Connect the Techstream to the DLC3.

(c) Start the engine.

(d) Select the Data List on the Techstream INFO .

ABS/VSC/TRAC

TESTER	MEASUREMENT ITEM/RANGE	NORMAL	DIAGNOSTIC NOTE

DISPLAY		CONDITION	
RR Wheel Speed	RR wheel speed sensor reading / min.: 0 km/h (0 mph), max.: 326.4 km/h (202 mph)	Actual wheel speed	Similar speed as indicated on speedometer
RL Wheel Speed	RL wheel speed sensor reading / min.: 0 km/h (0 mph), max.: 326.4 km/h (202 mph)	Actual wheel speed	Similar speed as indicated on speedometer

(e) Check that there is no difference between the speed value output from the speed sensor displayed on the Techstream and the speed value displayed on the speedometer when driving the vehicle.

HINT:

Factors that affect the indicated vehicle speed include tire size, tire inflation, and tire wear. The speed indicated on the speedometer has an allowable margin of error. This can be tested using a speedometer tester (calibrated chassis dynamometer). For details about testing and the margin of error, see the reference chart INFO **.**

OK:
The speed value output from the speed sensor displayed on the Techstream is the same as the actual vehicle speed measured using a speedometer tester (calibrated chassis dynamometer).

NG ▶ **CHECK REAR SPEED SENSOR INSTALLATION**

OK ▼

5.	PERFORM TEST MODE (SIGNAL CHECK)

(a) Turn the ignition switch off.

(b) Perform the sensor check in the Test Mode procedure INFO .

OK:
All Test Mode DTCs are cleared.

NG ▶ **CHECK REAR SPEED SENSOR INSTALLATION**

OK ▶ **CHECK FOR INTERMITTENT PROBLEMS (SYMPTOM SIMULATION)**

6.	CHECK REAR SPEED SENSOR INSTALLATION

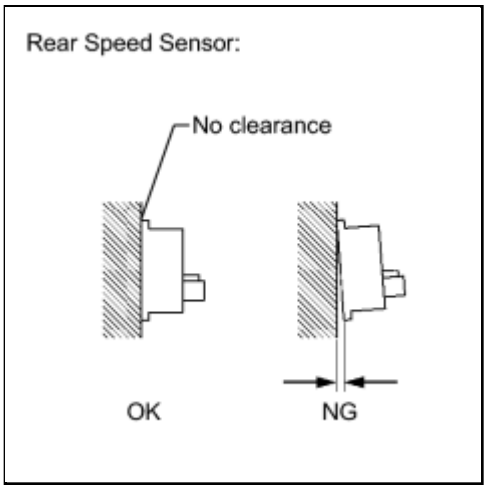

(a) Turn the ignition switch off.

(b) Check the speed sensor installation.

OK:

There is no clearance between the sensor and the rear axle carrier.

NG ▶ **INSTALL REAR SPEED SENSOR CORRECTLY**

OK ▼

7.	CHECK HARNESS AND CONNECTOR (SKID CONTROL SENSOR WIRE)

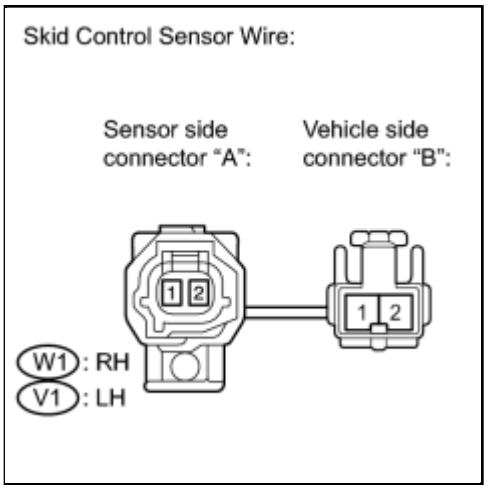

(a) Make sure that there is no looseness at the locking part and the connecting part of the connectors.

(b) Disconnect the skid control sensor wire.

(c) Measure the resistance according to the value(s) in the table below.

Standard Resistance:

for RH
for LH

TESTER CONNECTION	CONDITION	SPECIFIED CONDITION
W1 ("A"-2) - W1 ("B"-1)	Always	Below 1 Ω
W1 ("A"-2) - W1 ("B"-2)	Always	10 kΩ or higher
W1 ("A"-2) - Body ground	Always	10 kΩ or higher
W1 ("A"-1) - W1 ("B"-2)	Always	Below 1 Ω
W1 ("A"-1) - W1 ("B"-1)	Always	10 kΩ or higher
W1 ("A"-1) - Body ground	Always	10 kΩ or higher

TESTER CONNECTION	CONDITION	SPECIFIED CONDITION
V1 ("A"-2) - V1 ("B"-1)	Always	Below 1 Ω
V1 ("A"-2) - V1 ("B"-2)	Always	10 kΩ or higher
V1 ("A"-2) - Body ground	Always	10 kΩ or higher
V1 ("A"-1) - V1 ("B"-2)	Always	Below 1 Ω
V1 ("A"-1) - V1 ("B"-1)	Always	10 kΩ or higher
V1 ("A"-1) - Body ground	Always	10 kΩ or higher

NOTICE:

Check the speed sensor signal after replacement INFO **.**

NG ▶ **REPLACE SKID CONTROL SENSOR WIRE**

OK
▼

8.	**CHECK HARNESS AND CONNECTOR (SKID CONTROL ECU - REAR SPEED SENSOR)**

(a) Reconnect the skid control sensor wire.

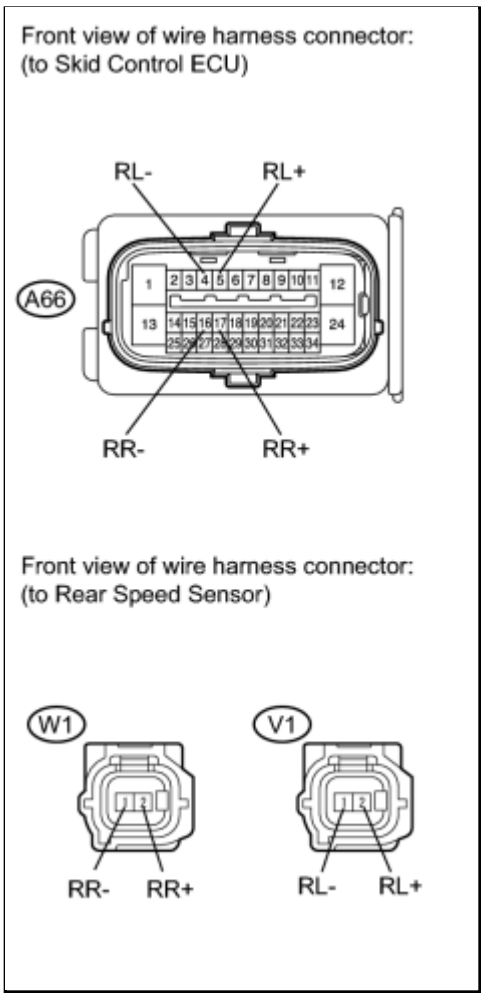

(b) Make sure that there is no looseness at the locking part and the connecting part of the connectors.

(c) Disconnect the skid control ECU connector and the rear speed sensor connector.

(d) Measure the resistance according to the value(s) in the table below.

Standard Resistance:

for RH

for LH

TESTER CONNECTION	CONDITION	SPECIFIED CONDITION
A66-17 (RR+) - W1-2 (RR+)	Always	Below 1 Ω
A66-17 (RR+) - Body ground	Always	10 kΩ or higher
A66-16 (RR-) - W1-1 (RR-)	Always	Below 1 Ω
A66-16 (RR-) - Body ground	Always	10 kΩ or higher

TESTER CONNECTION	CONDITION	SPECIFIED CONDITION
A66-5 (RL+) - V1-2 (RL+)	Always	Below 1 Ω

TESTER CONNECTION	CONDITION	SPECIFIED CONDITION
A66-5 (RL+) - Body ground	Always	10 kΩ or higher
A66-4 (RL-) - V1-1 (RL-)	Always	Below 1 Ω
A66-4 (RL-) - Body ground	Always	10 kΩ or higher

NG ▶ **REPAIR OR REPLACE HARNESS OR CONNECTOR**

OK ▼

9.	**INSPECT SKID CONTROL ECU (SENSOR INPUT)**

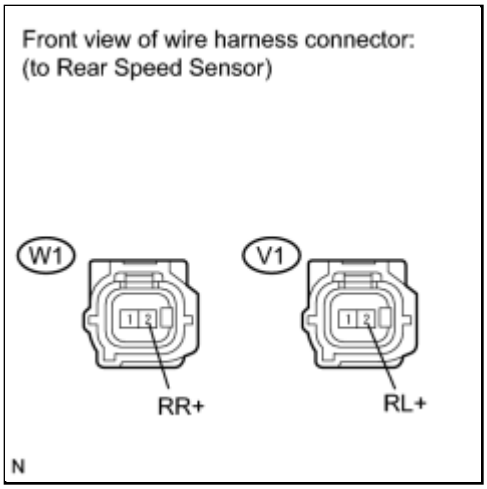

(a) Reconnect the skid control ECU connector.

(b) Turn the ignition switch to ON.

(c) Measure the voltage according to the value(s) in the table below.

Standard Voltage:

for RH

for LH

TESTER CONNECTION	SWITCH CONDITION	SPECIFIED CONDITION
W1-2 (RR+) - Body ground	Ignition switch ON	8 to 14 V

TESTER CONNECTION	SWITCH CONDITION	SPECIFIED CONDITION
V1-2 (RL+) - Body ground	Ignition switch ON	8 to 14 V

NG ▶ REPLACE BRAKE ACTUATOR ASSEMBLY

OK ▼

10.	PERFORM TEST MODE (SIGNAL CHECK)

(a) Turn the ignition switch off.

(b) Perform the sensor check in the Test Mode procedure INFO .

OK:

All Test Mode DTCs are cleared.

NG ▶ REPLACE REAR SPEED SENSOR AND REAR SPEED SENSOR ROTOR

OK ▶ CHECK FOR INTERMITTENT PROBLEMS (SYMPTOM SIMULATION)

11.	REPLACE REAR SPEED SENSOR AND REAR SPEED SENSOR ROTOR

(a) Turn the ignition switch off.

(b) Replace the rear speed sensor and the rear axle hub and bearing assembly (rear speed sensor rotor) INFO .

HINT:

The rear speed sensor rotor is incorporated into the rear axle hub and bearing assembly.

If the rear speed sensor rotor needs to be replaced, replace it together with the rear axle hub and bearing assembly with rear speed sensor.

NOTICE:

Check the speed sensor signal after replacement INFO .

NEXT ▼

12.	PERFORM TEST MODE (SIGNAL CHECK)

(a) Perform the sensor check in the Test Mode procedure INFO.

OK:

All Test Mode DTCs are cleared.

NG ▶ **REPLACE BRAKE ACTUATOR ASSEMBLY**

OK ▶ **END**

Last Modified: 3-10-2010	6.4 C	**From:** 200901
Model Year: 2010	**Model:** Corolla	**Doc ID:** RM000000XIG04SX
Title: BRAKE CONTROL / DYNAMIC CONTROL SYSTEMS: VEHICLE STABILITY CONTROL SYSTEM: C1281: Master Cylinder Pressure Sensor Output Malfunction (Test Mode DTC) (2010 Corolla)		

DTC	**C1281**	**Master Cylinder Pressure Sensor Output Malfunction (Test Mode DTC)**

DESCRIPTION

DTC C1281 will be cleared when the master cylinder pressure sensor sends a master cylinder pressure signal or when Test Mode ends. DTC C1281 is output only in Test Mode.

DTC CODE	DTC DETECTION CONDITION	TROUBLE AREA
C1281	Detected only during Test Mode.	• Stop light switch • Master cylinder pressure sensor

WIRING DIAGRAM

Refer to DTC C1425 INFO .

INSPECTION PROCEDURE

NOTICE:

When replacing the brake actuator assembly, perform zero point calibration INFO .

PROCEDURE

1.	**CHECK STOP LIGHT OPERATION**

(a) Check that the stop lights come on when the brake pedal is depressed, and go off when the brake pedal is released.

OK:

CONDITION	ILLUMINATION CONDITION
Brake pedal depressed	ON
Brake pedal released	OFF

NG ▶ **INSPECT STOP LIGHT CIRCUIT**

OK

2.	READ VALUE USING TECHSTREAM (STOP LIGHT SWITCH)

(a) Connect the Techstream to the DLC3.

(b) Turn the ignition switch to ON.

(c) Select the Data List on the Techstream INFO.

ABS/VSC/TRAC

TESTER DISPLAY	MEASUREMENT ITEM/RANGE	NORMAL CONDITION	DIAGNOSTIC NOTE
Stop Light SW	Stop light switch / ON or OFF	ON: Brake pedal depressed OFF: Brake pedal released	-

(d) Check that the stop light switch display observed on the Techstream changes according to brake pedal operation.

OK:

The Techstream displays ON or OFF according to brake pedal operation.

NG ▶ **INSPECT SKID CONTROL ECU (STP TERMINAL)**

OK

3.	READ VALUE USING TECHSTREAM (MASTER CYLINDER PRESSURE SENSOR)

(a) Select the Data List on the Techstream INFO.

ABS/VSC/TRAC

TESTER DISPLAY	MEASUREMENT ITEM/RANGE	NORMAL CONDITION	DIAGNOSTIC NOTE
Master	Master cylinder pressure	When brake pedal is	Reading increases when

TESTER DISPLAY	MEASUREMENT ITEM/RANGE	NORMAL CONDITION	DIAGNOSTIC NOTE
Cylinder Sensor	sensor / min.: 0 V, max.: 5 V	released: 0.3 to 0.9 V	brake pedal is depressed

(b) Check that the brake fluid pressure value of the master cylinder pressure sensor observed on the Techstream changes when the brake pedal is depressed.

OK:

When the pedal is depressed, voltage displayed on the Techstream increases.

NG ▶ **REPLACE BRAKE ACTUATOR ASSEMBLY**

OK ▼

4.	PERFORM TEST MODE (SIGNAL CHECK)

(a) Turn the ignition switch off.

(b) Perform the sensor check in the Test Mode procedure INFO.

OK:

All Test Mode DTCs are cleared.

NG ▶ **REPLACE BRAKE ACTUATOR ASSEMBLY**

OK ▶ **CHECK FOR INTERMITTENT PROBLEMS (SYMPTOM SIMULATION)**

5.	INSPECT SKID CONTROL ECU (STP TERMINAL)

(a) Turn the ignition switch off.

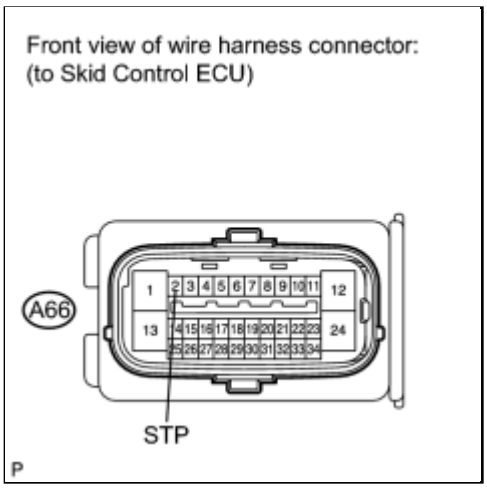

(b) Make sure that there is no looseness at the locking part and the connecting part of the connector.

(c) Disconnect the skid control ECU connector.

(d) Measure the voltage according to the value(s) in the table below.

Standard Voltage:

TESTER CONNECTION	SWITCH CONDITION	SPECIFIED CONDITION
A66-2 (STP) - Body ground	Stop light switch ON (Brake pedal depressed)	8 to 14 V
A66-2 (STP) - Body ground	Stop light switch OFF (Brake pedal released)	Below 1.5 V

NG ▶ **REPAIR OR REPLACE HARNESS OR CONNECTOR (STP CIRCUIT)**

OK ▶ **REPLACE BRAKE ACTUATOR ASSEMBLY**

Last Modified: 3-10-2010	6.4 C	**From:** 200901
Model Year: 2010	**Model:** Corolla	**Doc ID:** RM000000ZRR050X
Title: BRAKE CONTROL / DYNAMIC CONTROL SYSTEMS: VEHICLE STABILITY CONTROL SYSTEM: C1290: Steering Angle Sensor Zero Point Malfunction (2010 Corolla)		

DTC	**C1290**	**Steering Angle Sensor Zero Point Malfunction**

DESCRIPTION

The skid control ECU acquires steering angle sensor zero point every time the ignition switch is turned to ON and the vehicle is driven at 35 km/h (22 mph) or more for approximately 5 seconds. The ECU also stores the previous zero point.

If front wheel alignment or the steering wheel position is adjusted without disconnecting the cable from the negative (-) battery terminal, or if yaw rate and acceleration sensor zero point is not acquired after the adjustments have been completed, the skid control ECU detects the difference between the previous zero point and newly acquired zero point and outputs this DTC to indicate a poor adjustment.

Warning operation for the steering angle sensor zero point malfunction will be cancelled by turning the ignition switch off.

DTC CODE	DTC DETECTION CONDITION	TROUBLE AREA
C1290	The newly acquired steering angle sensor zero point vastly differs from the previous one.	• Yaw rate and acceleration sensor zero point calibration incomplete • Poor adjustment of the center position of the steering wheel • Poor adjustment of front wheel alignment

INSPECTION PROCEDURE

NOTICE:

When replacing the brake actuator assembly, perform zero point calibration INFO **.**

PROCEDURE

1.	**PERFORM ZERO POINT CALIBRATION OF YAW RATE AND ACCELERATION SENSOR**

(a) Perform zero point calibration of the yaw rate and acceleration sensor INFO .

HINT:

- When the stored zero point of the yaw rate and acceleration sensor is cleared, steering angle sensor zero point will also be cleared.
- If the zero point and output value of the yaw rate and acceleration sensor and the output value of the speed sensors are not normal, steering angle sensor zero point cannot be acquired normally even if the vehicle is driven straight ahead at 35 km/h (22 mph) or more.

NEXT

2.	**CHECK STEERING ANGLE SENSOR ZERO POINT CALIBRATION**

(a) Turn the ignition switch off.

(b) Start the engine.

(c) Drive the vehicle straight ahead at 35 km/h (22 mph) or more for at least 5 seconds.

(d) Check that the steering wheel is centered while driving straight ahead.

HINT:

If front wheel alignment and steering position are adjusted as a result of an abnormal center position of the steering wheel, acquire yaw rate and acceleration sensor zero point again after adjusting front wheel alignment and steering position again.

OK:
The steering wheel is centered.

NG ▶ **ADJUST FRONT WHEEL ALIGNMENT OR STEERING POSITION**

OK

3.	**RECONFIRM DTC**

(a) Turn the ignition switch off.

(b) Clear the DTCs INFO.

(c) Start the engine.

(d) Drive the vehicle and turn the steering wheel to the right and left at a speed of 35 km/h (22 mph) or more.

(e) Check if the same DTC is recorded INFO .

Result:

RESULT	PROCEED TO
DTC (C1290) is not output	A
DTC (C1290) is output	B

HINT:

If troubleshooting has been carried out according to Problem Symptoms Table, refer back to the table and proceed to the next step INFO .

B ▶ **REPLACE BRAKE ACTUATOR ASSEMBLY**

A ▶ **END**

Last Modified: 3-10-2010	6.4 C	**From:** 200901
Model Year: 2010	**Model:** Corolla	**Doc ID:** RM000001RFV03HX
Title: BRAKE CONTROL / DYNAMIC CONTROL SYSTEMS: VEHICLE STABILITY CONTROL SYSTEM: C1381: Acceleration Sensor Power Supply Voltage Malfunction (2010 Corolla)		

DTC	**C1381**	**Acceleration Sensor Power Supply Voltage Malfunction**

DESCRIPTION

The skid control ECU receives signals from the yaw rate and acceleration sensor via the CAN communication system.

The yaw rate sensor has a built-in acceleration sensor and detects the vehicle's condition using 2 circuits (GL1, GL2).

If there is trouble in the bus lines between the yaw rate and acceleration sensor and the CAN communication system, DTCs U0123 (Lost Communication with Yaw Rate Sensor Module) and U0124 (Lost Communication with Lateral Acceleration Sensor Module) are set.

These DTCs are also output when calibration has not been completed.

DTC CODE	DTC DETECTION CONDITION	TROUBLE AREA
C1381	At a vehicle speed of more than 3 km/h (2 mph), an acceleration sensor power source malfunction signal is received for 10 seconds or more.	• Yaw rate and acceleration sensor power source circuit • Yaw rate and acceleration sensor

WIRING DIAGRAM

Refer to DTCs C1232, C1243 and C1245 INFO .

INSPECTION PROCEDURE

NOTICE:

When replacing the yaw rate and acceleration sensor, perform zero point calibration INFO .

HINT:

When U0123, U0124 and/or U0126 is output together with C1381, inspect and repair the trouble areas indicated by U0123, U0124 and/or U0126 first INFO .

PROCEDURE

1.	**INSPECT YAW RATE AND ACCELERATION SENSOR (IG TERMINAL)**

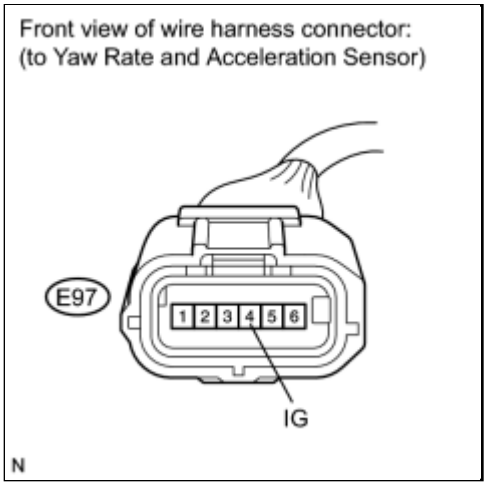

(a) Make sure that there is no looseness at the locking part and the connecting part of the connector.

(b) Disconnect the yaw rate and acceleration sensor connector.

(c) Turn the ignition switch to ON.

(d) Measure the voltage according to the value(s) in the table below.

Standard Voltage:

TESTER CONNECTION	SWITCH CONDITION	SPECIFIED CONDITION
E97-4 (IG) - Body ground	Ignition switch ON	11 to 14 V

NG ▶ **REPAIR OR REPLACE HARNESS OR CONNECTOR (IG CIRCUIT)**

OK ▼

2.	**INSPECT YAW RATE AND ACCELERATION SENSOR (GND TERMINAL)**

(a) Turn the ignition switch off.

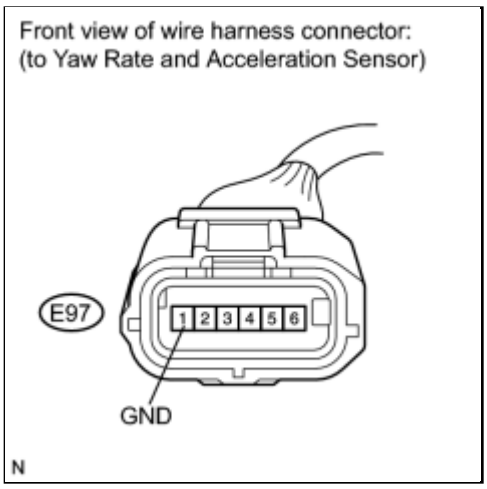

(b) Measure the resistance according to the value(s) in the table below.

Standard Resistance:

TESTER CONNECTION	CONDITION	SPECIFIED CONDITION
E97-1 (GND) - Body ground	Always	Below 1 Ω

NG ▶ **REPAIR OR REPLACE HARNESS OR CONNECTOR (GND CIRCUIT)**

OK ▼

3.	**RECONFIRM DTC**

(a) Reconnect the yaw rate and acceleration sensor connector.

(b) Clear the DTCs INFO.

(c) Start the engine.

(d) Drive the vehicle at a speed of 3 km/h (2 mph) or more for at least 10 seconds.

(e) Check if the same DTC is recorded INFO.

Result:

RESULT	PROCEED TO
DTC (C1381) is not output	A
DTC (C1381) is output	B

NOTICE:

Check the yaw rate and acceleration sensor signal after replacement INFO .

HINT:

If troubleshooting has been carried out according to Problem Symptoms Table, refer back to the table and proceed to the next step INFO .

B ▶ **REPLACE YAW RATE AND ACCELERATION SENSOR**

A ▶ **CHECK FOR INTERMITTENT PROBLEMS (SYMPTOM SIMULATION)**

Last Modified: 3-10-2010	6.4 C	**From:** 200901
Model Year: 2010	**Model:** Corolla	**Doc ID:** RM000000XI906OX
Title: BRAKE CONTROL / DYNAMIC CONTROL SYSTEMS: VEHICLE STABILITY CONTROL SYSTEM: C1401,C1402: Front Speed Sensor RH Malfunction (2010 Corolla)		

DTC	**C1401**	**Front Speed Sensor RH Malfunction**

DTC	**C1402**	**Front Speed Sensor LH Malfunction**

DESCRIPTION

The speed sensor detects the wheel speed and sends the appropriate signals to the skid control ECU. These signals are used for the ABS control system.

Speed sensor rotors have 48 serrations. The hall IC type speed sensor uses the frequency of output pulses to detect the vehicle speed. Because the sensor outputs digital pulses, it can detect vehicle speeds even when the vehicle is nearly stationary.

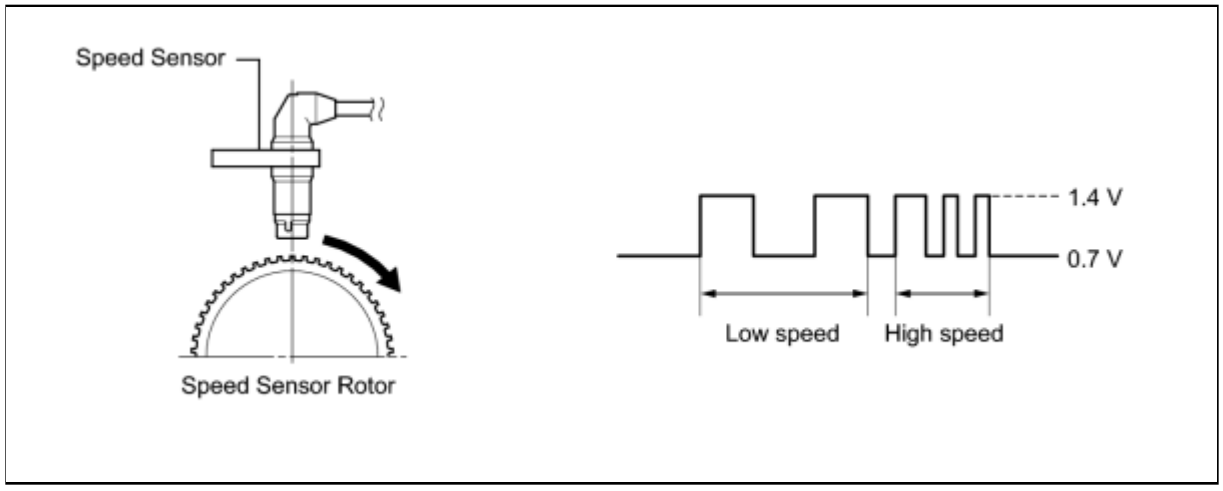

DTC CODE	DTC DETECTION CONDITION	TROUBLE AREA
C1401 C1402	Any of the following is detected: 1. At a vehicle speed 10 km/h (6 mph) or more, output voltage from one of the speed sensors is less than that from the other sensors for 15 seconds or more. 2. At a vehicle speed less than 10 km/h (6 mph), output from one of the speed sensors is 0 km/h (0 mph) for 1 second or more. 3. At a vehicle speed 10 km/h (6 mph) or more, outputs from both front speed sensors are 0 km/h (0 mph) for 15	• Front speed sensor RH/LH • Speed sensor rotor

DTC CODE	DTC DETECTION CONDITION	TROUBLE AREA
	seconds or more.	

HINT:

- DTC C1401 is for the front speed sensor RH.
- DTC C1402 is for the front speed sensor LH.

WIRING DIAGRAM

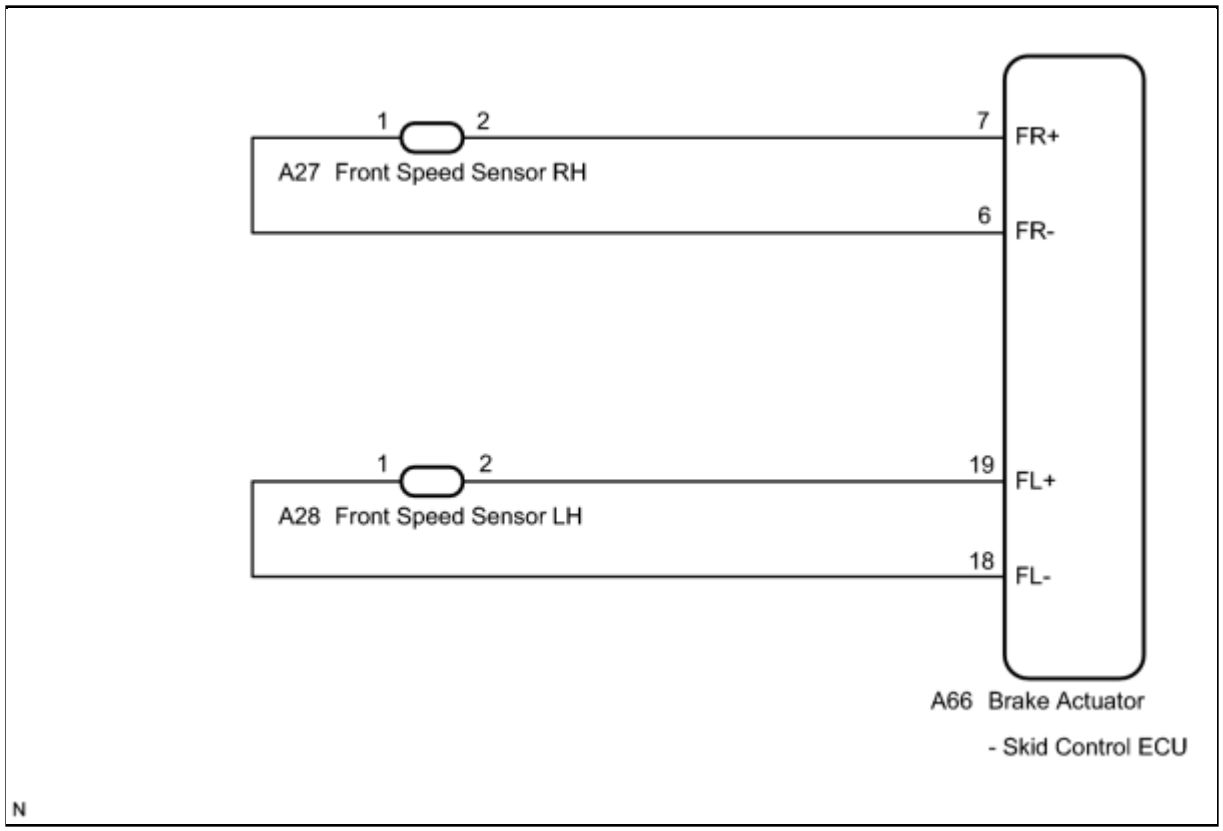

INSPECTION PROCEDURE

PROCEDURE

1.	**CHECK FRONT SPEED SENSOR INSTALLATION**

(a) Check the speed sensor installation.

OK:

There is no clearance between the sensor and the front steering knuckle.

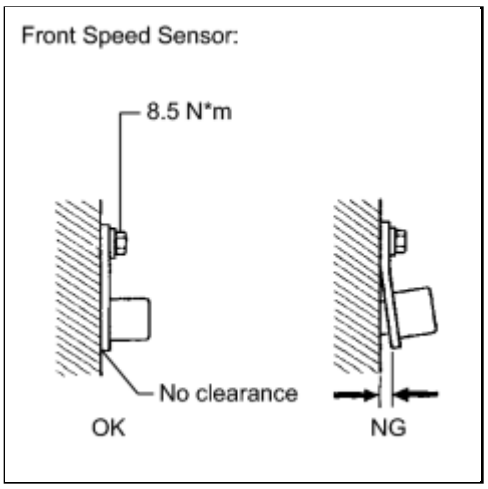

The installation nut is tightened properly.

Torque

8.5 N*m (87 kgf*cm, 75 in.*lbf)

NG ▶ **INSTALL FRONT SPEED SENSOR CORRECTLY**

OK ▼

2.	**CHECK FRONT SPEED SENSOR TIP**

(a) Remove the front speed sensor INFO .

(b) Check the speed sensor tip.

OK:

No scratches, oil, or foreign matter on the sensor tip.

NOTICE:

Check the speed sensor signal after cleaning or replacement INFO **.**

NG ▶ **CLEAN OR REPLACE FRONT SPEED SENSOR**

OK ▼

3.	**CHECK FRONT SPEED SENSOR ROTOR**

(a) Remove the front speed sensor rotor INFO for 2AZ-FE or INFO for 2ZR-FE).

(b) Check the speed sensor rotor.

OK:

No scratches, oil, or foreign matter on the rotors.

NOTICE:

Check the speed sensor signal after cleaning or replacement INFO **.**

HINT:

If the front speed sensor rotor needs to be replaced, replace it together with the front axle outboard joint shaft assembly.

NG ▶ **CLEAN OR REPLACE FRONT SPEED SENSOR ROTOR**

OK ▼

4.	READ VALUE USING TECHSTREAM (FRONT SPEED SENSOR)

(a) Install the front speed sensor and the front speed sensor rotor.

(b) Connect the Techstream to the DLC3.

(c) Start the engine.

(d) Select the Data List on the Techstream INFO .

ABS/VSC/TRAC

TESTER DISPLAY	MEASUREMENT ITEM/RANGE	NORMAL CONDITION	DIAGNOSTIC NOTE
FR Wheel Speed	FR wheel speed sensor reading / min.: 0 km/h (0 mph), max.: 326.4 km/h (202 mph)	Actual wheel speed	Similar speed as indicated on speedometer
FL Wheel Speed	FL wheel speed sensor reading /min.: 0 km/h (0 mph), max.: 326.4 km/h (202 mph)	Actual wheel speed	Similar speed as indicated on speedometer

(e) Check that there is no difference between the speed value output from the speed sensor displayed on the Techstream and the speed value displayed on the speedometer when driving the vehicle.

HINT:

Factors that affect the indicated vehicle speed include tire size, tire inflation, and tire wear. The speed indicated on the speedometer has an allowable margin of error. This can be tested using a speedometer tester (calibrated chassis dynamometer). For details about testing and the margin of error, see the reference chart INFO **.**

OK:

The speed value output from the speed sensor displayed on the Techstream is the same as the actual vehicle speed measured using a speedometer tester (calibrated chassis dynamometer).

HINT:

If troubleshooting has been carried out according to Problem Symptoms Table, refer back to the table and proceed to the next step INFO .

NG ▶ **REPLACE FRONT SPEED SENSOR**

OK ▶ **CHECK FOR INTERMITTENT PROBLEMS (SYMPTOM SIMULATION)**

5.	**REPLACE FRONT SPEED SENSOR**

(a) Turn the ignition switch off.

(b) Replace the front speed sensor INFO .

NOTICE:

Check the speed sensor signal after replacement INFO .

NEXT ▼

6.	**RECONFIRM DTC**

(a) Clear the DTCs INFO .

(b) Start the engine.

(c) Drive the vehicle at a speed of 40 km/h (25 mph) or more for at least 60 seconds.

(d) Check if the same DTC is recorded INFO .

Result:

RESULT	PROCEED TO
DTCs (C1401 and C1402) are not output	A
DTCs (C1401 and/or C1402) are output	B

NOTICE:

Check the speed sensor signal after replacement INFO .

HINT:

- If the front speed sensor rotor needs to be replaced, replace it together with the front axle outboard joint shaft assembly.
- If troubleshooting has been carried out according to Problem Symptoms Table, refer back to the table and proceed to the next step INFO .

B ▶ **REPLACE FRONT SPEED SENSOR ROTOR**

A ▶ **END**

Last Modified: 3-10-2010	6.4 C	**From:** 200901
Model Year: 2010	**Model:** Corolla	**Doc ID:** RM00000369R00JX
Title: BRAKE CONTROL / DYNAMIC CONTROL SYSTEMS: VEHICLE STABILITY CONTROL SYSTEM: C1403,C1404: Rear Speed Sensor RH Malfunction (2010 Corolla)		

DTC	**C1403**	**Rear Speed Sensor RH Malfunction**

DTC	**C1404**	**Rear Speed Sensor LH Malfunction**

DESCRIPTION

The speed sensor detects the wheel speed and sends the appropriate signals to the skid control ECU. These signals are used for the ABS control system.

Speed sensor rotors have rows of alternating N and S magnetic poles. The hall IC type speed sensor uses the frequency of output pulses to detect the vehicle speed. Because the sensor outputs digital pulses, it can detect vehicle speeds even when the vehicle is nearly stationary.

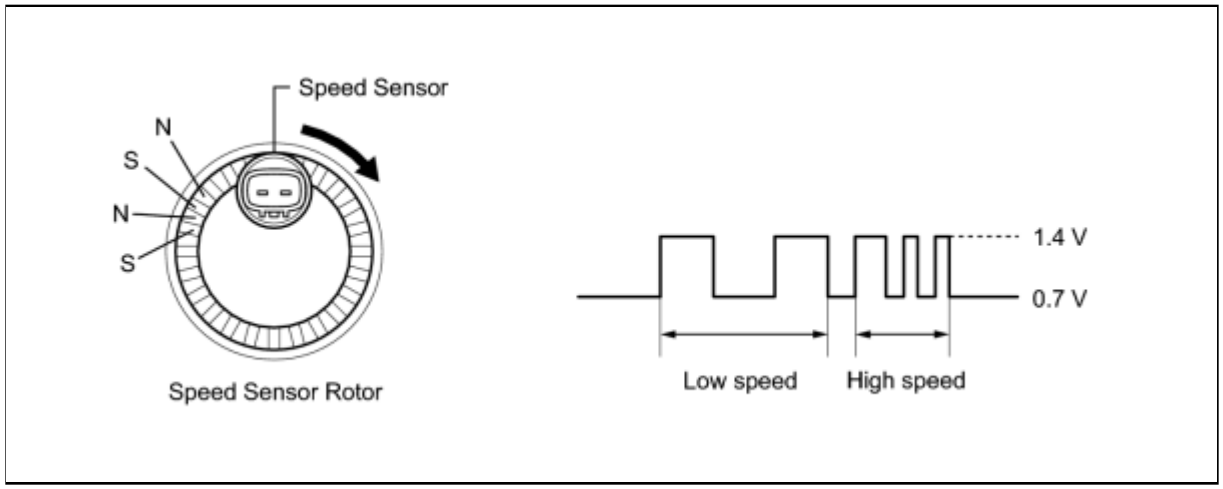

DTC CODE	DTC DETECTION CONDITION	TROUBLE AREA
C1403 C1404	Any of the following is detected: 1. At a vehicle speed 10 km/h (6 mph) or more, output voltage from one of the speed sensors is less than that from the other sensors for 15 seconds or more. 2. At a vehicle speed less than 10 km/h (6 mph), output from one of the speed sensors is 0 km/h (0 mph) for 1 second or more. 3. At a vehicle speed less than 10 km/h (6 mph), outputs from both rear speed sensors are 0 km/h (0 mph) for a	• Rear speed sensor RH/LH • Speed sensor rotor

DTC CODE	DTC DETECTION CONDITION	TROUBLE AREA
	cumulative time of 200 seconds.	

HINT:

- DTC C1403 is for the rear speed sensor RH.
- DTC C1404 is for the rear speed sensor LH.

WIRING DIAGRAM

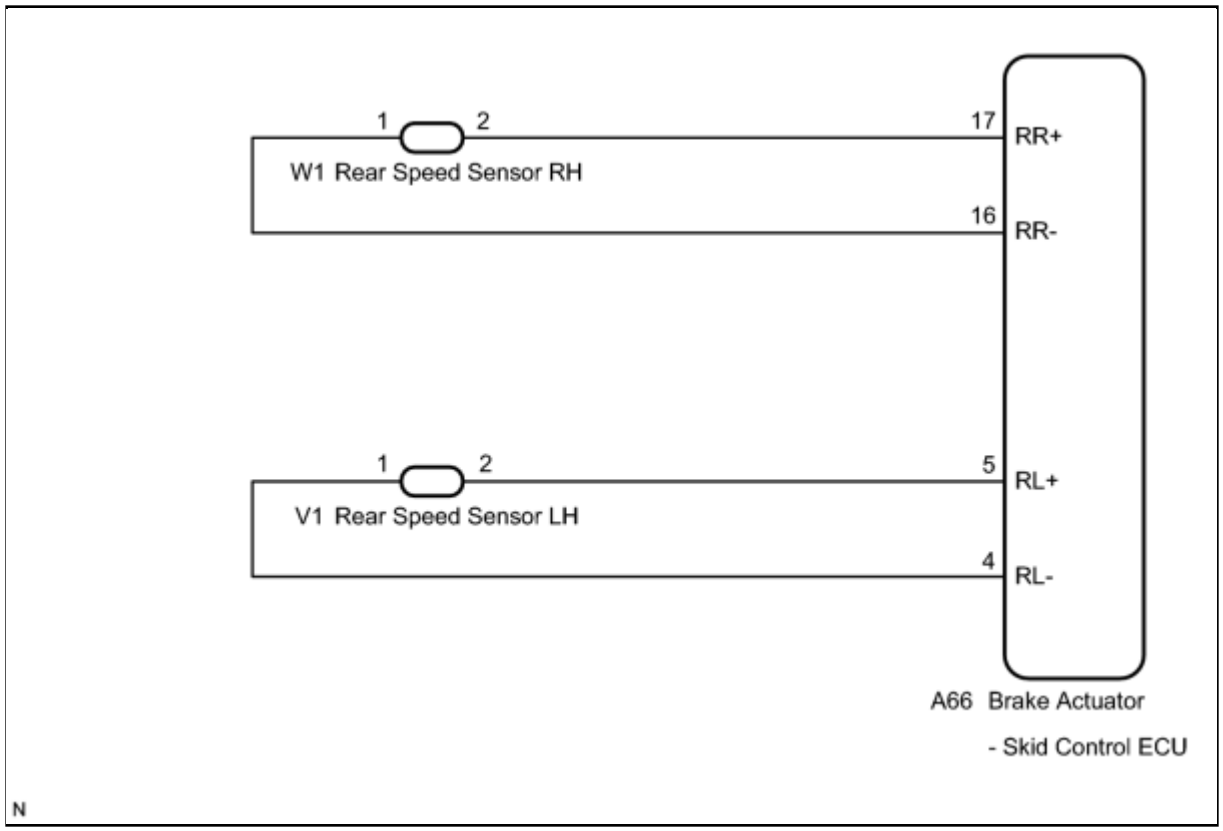

INSPECTION PROCEDURE

PROCEDURE

1.	**CHECK REAR SPEED SENSOR INSTALLATION**

(a) Check the speed sensor installation.

OK:

There is no clearance between the sensor and the rear axle carrier.

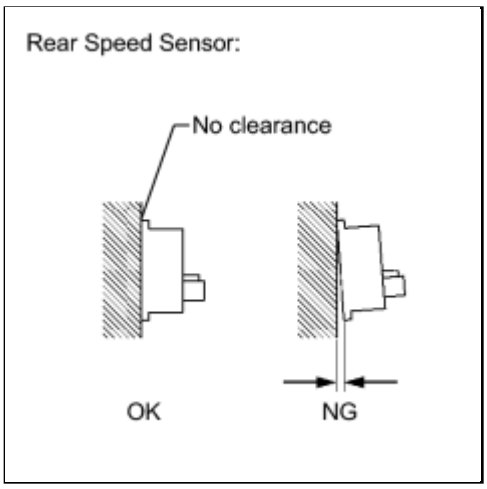

NG ▶ **INSTALL REAR SPEED SENSOR CORRECTLY**

OK ▼

2.	**READ VALUE USING TECHSTREAM (REAR SPEED SENSOR)**

(a) Connect the Techstream to the DLC3.

(b) Start the engine.

(c) Select the Data List on the Techstream INFO .

ABS/VSC/TRAC

TESTER DISPLAY	MEASUREMENT ITEM/RANGE	NORMAL CONDITION	DIAGNOSTIC NOTE
RR Wheel Speed	RR wheel speed sensor reading / min.: 0 km/h (0 mph), max.: 326.4 km/h (202 mph)	Actual wheel speed	Similar speed as indicated on speedometer
RL Wheel Speed	RL wheel speed sensor reading / min.: 0 km/h (0 mph), max.: 326.4 km/h (202 mph)	Actual wheel speed	Similar speed as indicated on speedometer

(d) Check that there is no difference between the speed value output from the speed sensor displayed on the Techstream and the speed value displayed on the speedometer when driving the vehicle.

HINT:

Factors that affect the indicated vehicle speed include tire size, tire inflation, and tire wear. The speed indicated

on the speedometer has an allowable margin of error. This can be tested using a speedometer tester (calibrated chassis dynamometer). For details about testing and the margin of error, see the reference chart INFO .

OK:

The speed value output from the speed sensor displayed on the Techstream is the same as the actual vehicle speed measured using a speedometer tester (calibrated chassis dynamometer).

NOTICE:

Check the speed sensor signal after replacement INFO .

HINT:

- The rear speed sensor rotor is incorporated into the rear axle hub and bearing assembly.

  If the rear speed sensor rotor needs to be replaced, replace it together with the rear axle hub and bearing assembly with rear speed sensor.
- If troubleshooting has been carried out according to Problem Symptoms Table, refer back to the table and proceed to the next step INFO .

NG ▶ **REPLACE REAR SPEED SENSOR AND REAR SPEED SENSOR ROTOR**

OK ▶ **CHECK FOR INTERMITTENT PROBLEMS (SYMPTOM SIMULATION)**

Last Modified: 3-10-2010	6.4 C	**From:** 200901
Model Year: 2010	**Model:** Corolla	**Doc ID:** RM000000XI906PX
Title: BRAKE CONTROL / DYNAMIC CONTROL SYSTEMS: VEHICLE STABILITY CONTROL SYSTEM: C1405,C1406: Open or Short in Front Speed Sensor RH Circuit (2010 Corolla)		

DTC	**C1405**	**Open or Short in Front Speed Sensor RH Circuit**

DTC	**C1406**	**Open or Short in Front Speed Sensor LH Circuit**

DESCRIPTION

The speed sensor detects the wheel speed and sends the appropriate signals to the skid control ECU. These signals are used for the ABS control system.

Speed sensor rotors have 48 serrations. The hall IC type speed sensor uses the frequency of output pulses to detect the vehicle speed. Because the sensor outputs digital pulses, it can detect vehicle speeds even when the vehicle is nearly stationary.

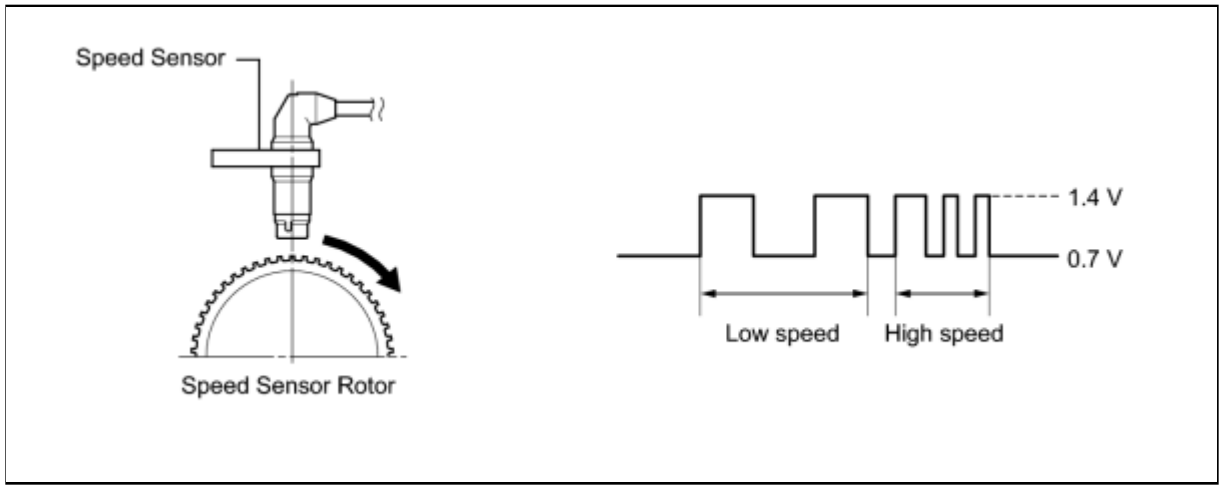

DTC CODE	DTC DETECTION CONDITION	TROUBLE AREA
C1405 C1406	Any of the following is detected: 1. An open in the speed sensor signal circuit continues for 0.5 seconds or more. 2. With the IG1 terminal voltage 9.5 V or more, the sensor power supply voltage decreases for 0.5 seconds or more. 3. With the IG1 terminal voltage 9.5 V or more, an invalid state of the sensor power supply voltage occurs for 60 seconds or more.	• Front speed sensor RH/LH • Speed sensor circuit • Brake actuator assembly (Skid control ECU)

HINT:

- DTC C1405 is for the front speed sensor RH.
- DTC C1406 is for the front speed sensor LH.

WIRING DIAGRAM

Refer to DTCs C1401 and C1402.

INSPECTION PROCEDURE

NOTICE:

When replacing the brake actuator assembly, perform zero point calibration INFO .

PROCEDURE

1.	**CHECK HARNESS AND CONNECTOR (MOMENTARY INTERRUPTION)**

(a) Using the Techstream, check for any momentary interruption in the wire harness and connector corresponding to the DTC INFO .

ABS/VSC/TRAC

TESTER DISPLAY	MEASUREMENT ITEM/RANGE	NORMAL CONDITION	DIAGNOSTIC NOTE
FR Speed Open	FR speed sensor open detection / ERROR or NORMAL	ERROR: Momentary interruption NORMAL: Normal	-
FL Speed Open	FL speed sensor open detection / ERROR or NORMAL	ERROR: Momentary interruption NORMAL: Normal	-

OK:

There are no momentary interruptions.

HINT:

Perform the above inspection before removing the sensor and connector.

NG ▶ **CHECK HARNESS AND CONNECTOR (SKID CONTROL ECU - FRONT SPEED SENSOR)**

OK
▼

2.	**READ VALUE USING TECHSTREAM (FRONT SPEED SENSOR)**

(a) Turn the ignition switch off.

(b) Connect the Techstream to the DLC3.

(c) Start the engine.

(d) Select the Data List on the Techstream INFO .

ABS/VSC/TRAC

TESTER DISPLAY	MEASUREMENT ITEM/RANGE	NORMAL CONDITION	DIAGNOSTIC NOTE
FR Wheel Speed	FR wheel speed sensor reading / min.: 0 km/h (0 mph), max.: 326.4 km/h (202 mph)	Actual wheel speed	Similar speed as indicated on speedometer
FL Wheel Speed	FL wheel speed sensor reading /min.: 0 km/h (0 mph), max.: 326.4 km/h (202 mph)	Actual wheel speed	Similar speed as indicated on speedometer

(e) Check that there is no difference between the speed value output from the speed sensor displayed on the Techstream and the speed value displayed on the speedometer when driving the vehicle.

HINT:

Factors that affect the indicated vehicle speed include tire size, tire inflation, and tire wear. The speed indicated on the speedometer has an allowable margin of error. This can be tested using a speedometer tester (calibrated chassis dynamometer). For details about testing and the margin of error, see the reference chart INFO .

OK:

The speed value output from the speed sensor displayed on the Techstream is the same as the actual vehicle speed measured using a speedometer tester (calibrated chassis dynamometer).

NG ▶ **CHECK HARNESS AND CONNECTOR (SKID CONTROL ECU - FRONT SPEED SENSOR)**

OK ▼

3.	**RECONFIRM DTC**

(a) Turn the ignition switch off.

(b) Clear the DTCs INFO .

(c) Start the engine.

(d) Drive the vehicle at a speed of 40 km/h (25 mph) or more for at least 60 seconds.

(e) Check if the same DTC is recorded INFO .

Result:

RESULT	PROCEED TO
DTCs (C1405 and C1406) are not output	A
DTCs (C1405 and/or C1406) are output	B

HINT:

If troubleshooting has been carried out according to Problem Symptoms Table, refer back to the table and proceed to the next step INFO **.**

B ▶ **REPLACE BRAKE ACTUATOR ASSEMBLY**

A ▶ **CHECK FOR INTERMITTENT PROBLEMS (SYMPTOM SIMULATION)**

4.	CHECK HARNESS AND CONNECTOR (SKID CONTROL ECU - FRONT SPEED SENSOR)

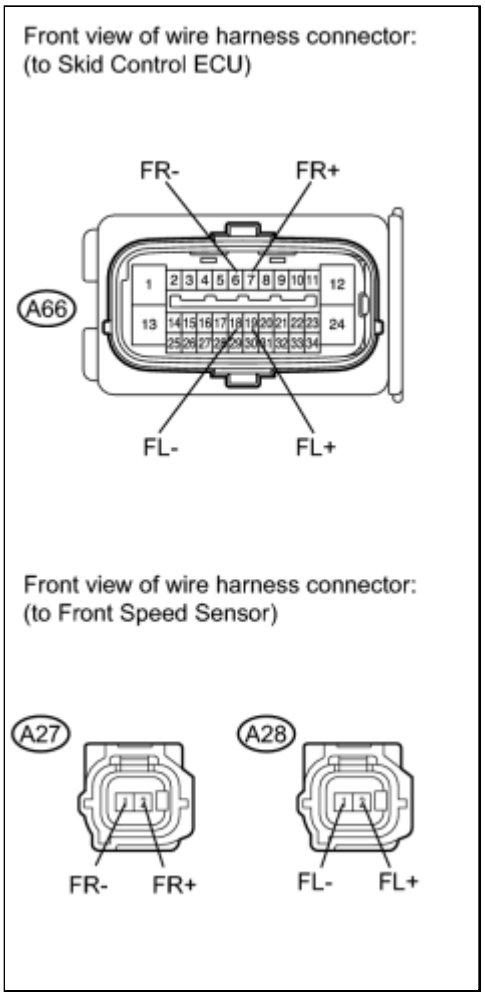

(a) Turn the ignition switch off.

(b) Make sure that there is no looseness at the locking part and the connecting part of the connectors.

(c) Disconnect the skid control ECU connector and the front speed sensor connector.

(d) Measure the resistance according to the value(s) in the table below.

Standard Resistance:

for RH

for LH

TESTER CONNECTION	CONDITION	SPECIFIED CONDITION
A66-7 (FR+) - A27-2 (FR+)	Always	Below 1 Ω
A66-7 (FR+) - Body ground	Always	10 kΩ or higher
A66-6 (FR-) - A27-1 (FR-)	Always	Below 1 Ω
A66-6 (FR-) - Body ground	Always	10 kΩ or higher

TESTER CONNECTION	CONDITION	SPECIFIED CONDITION
A66-19 (FL+) - A28-2 (FL+)	Always	Below 1 Ω
A66-19 (FL+) - Body ground	Always	10 kΩ or higher
A66-18 (FL-) - A28-1 (FL-)	Always	Below 1 Ω
A66-18 (FL-) - Body ground	Always	10 kΩ or higher

NG ▶ **REPAIR OR REPLACE HARNESS OR CONNECTOR**

OK ▼

5.	**INSPECT SKID CONTROL ECU (SENSOR INPUT)**

(a) Reconnect the skid control ECU connector.

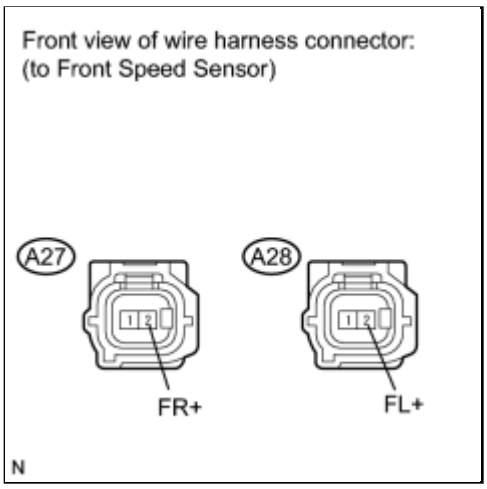

(b) Turn the ignition switch to ON.

(c) Measure the voltage according to the value(s) in the table below.

Standard Voltage:

for RH

for LH

TESTER CONNECTION	SWITCH CONDITION	SPECIFIED CONDITION
A27-2 (FR+) - Body ground	Ignition switch ON	8 to 14 V

TESTER CONNECTION	SWITCH CONDITION	SPECIFIED CONDITION
A28-2 (FL+) - Body ground	Ignition switch ON	8 to 14 V

NOTICE:

Check the speed sensor signal after replacement INFO **.**

HINT:

If troubleshooting has been carried out according to Problem Symptoms Table, refer back to the table and proceed to the next step INFO **.**

NG ▶ **REPLACE BRAKE ACTUATOR ASSEMBLY**

OK ▶ **REPLACE FRONT SPEED SENSOR**

Last Modified: 3-10-2010	6.4 C	**From:** 200901
Model Year: 2010	**Model:** Corolla	**Doc ID:** RM000003693 00JX
Title: BRAKE CONTROL / DYNAMIC CONTROL SYSTEMS: VEHICLE STABILITY CONTROL SYSTEM: C1407,C1408: Open or Short in Rear Speed Sensor RH Circuit (2010 Corolla)		

DTC	**C1407**	**Open or Short in Rear Speed Sensor RH Circuit**

DTC	**C1408**	**Open or Short in Rear Speed Sensor LH Circuit**

DESCRIPTION

The speed sensor detects the wheel speed and sends the appropriate signals to the skid control ECU. These signals are used for the ABS control system.

Speed sensor rotors have rows of alternating N and S magnetic poles. The hall IC type speed sensor uses the frequency of output pulses to detect the vehicle speed. Because the sensor outputs digital pulses, it can detect vehicle speeds even when the vehicle is nearly stationary.

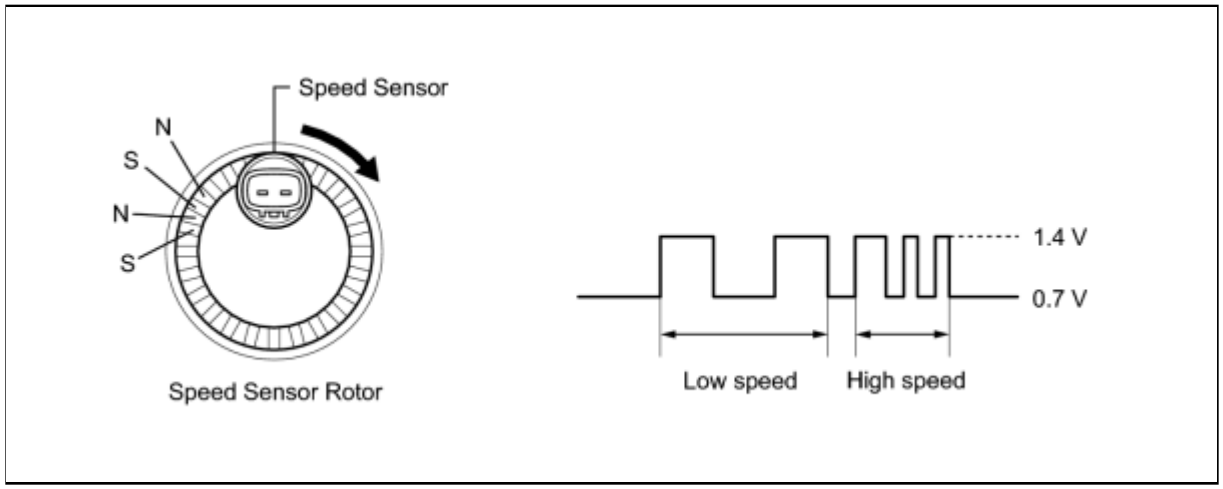

DTC CODE	DTC DETECTION CONDITION	TROUBLE AREA
C1407 C1408	Any of the following is detected: 1. An open in the speed sensor signal circuit continues for 0.5 seconds or more. 2. With the IG1 terminal voltage 9.5 V or more, the sensor power supply voltage decreases for 0.5 seconds or more. 3. With the IG1 terminal voltage 9.5 V or more, an invalid state of the sensor power supply voltage occurs for 60 seconds or more.	• Rear speed sensor RH/LH • Speed sensor circuit • Brake actuator assembly (Skid control ECU)

HINT:

- DTC C1407 is for the rear speed sensor RH.
- DTC C1408 is for the rear speed sensor LH.

WIRING DIAGRAM

Refer to DTCs C1403 and C1404 INFO

INSPECTION PROCEDURE

NOTICE:

When replacing the brake actuator assembly, perform zero point calibration INFO .

PROCEDURE

1.	**CHECK HARNESS AND CONNECTOR (MOMENTARY INTERRUPTION)**

(a) Using the Techstream, check for any momentary interruption in the wire harness and connector corresponding to the DTC INFO .

ABS/VSC/TRAC

TESTER DISPLAY	MEASUREMENT ITEM/RANGE	NORMAL CONDITION	DIAGNOSTIC NOTE
RR Speed Open	RR speed sensor open detection / ERROR or NORMAL	ERROR: Momentary interruption NORMAL: Normal	-
RL Speed Open	RL speed sensor open detection / ERROR or NORMAL	ERROR: Momentary interruption NORMAL: Normal	-

OK:

There are no momentary interruptions.

HINT:

Perform the above inspection before removing the sensor and connector.

NG ▶ **CHECK HARNESS AND CONNECTOR (SKID CONTROL SENSOR WIRE)**

OK ▼

2.	**READ VALUE USING TECHSTREAM (REAR SPEED SENSOR)**

(a) Turn the ignition switch off.

(b) Connect the Techstream to the DLC3.

(c) Start the engine.

(d) Select the Data List on the Techstream INFO .

ABS/VSC/TRAC

TESTER DISPLAY	MEASUREMENT ITEM/RANGE	NORMAL CONDITION	DIAGNOSTIC NOTE
RR Wheel Speed	RR wheel speed sensor reading / min.: 0 km/h (0 mph), max.: 326.4 km/h (202 mph)	Actual wheel speed	Similar speed as indicated on speedometer
RL Wheel Speed	RL wheel speed sensor reading /min.: 0 km/h (0 mph), max.: 326.4 km/h (202 mph)	Actual wheel speed	Similar speed as indicated on speedometer

(e) Check that there is no difference between the speed value output from the speed sensor displayed on the Techstream and the speed value displayed on the speedometer when driving the vehicle.

HINT:

Factors that affect the indicated vehicle speed include tire size, tire inflation, and tire wear. The speed indicated on the speedometer has an allowable margin of error. This can be tested using a speedometer tester (calibrated chassis dynamometer). For details about testing and the margin of error, see the reference chart INFO .

OK:

The speed value output from the speed sensor displayed on the Techstream is the same as the actual vehicle speed measured using a speedometer tester (calibrated chassis dynamometer).

NG ▶ **CHECK HARNESS AND CONNECTOR (SKID CONTROL SENSOR WIRE)**

OK ▼

3.	**RECONFIRM DTC**

(a) Turn the ignition switch off.

(b) Clear the DTCs INFO .

(c) Start the engine.

(d) Drive the vehicle at a speed of 40 km/h (25 mph) or more for at least 60 seconds.

(e) Check if the same DTC is recorded INFO .

Result:

RESULT	PROCEED TO
DTCs (C1407 and C1408) are not output	A
DTCs (C1407 and/or C1408) are output	B

HINT:

If troubleshooting has been carried out according to Problem Symptoms Table, refer back to the table and proceed to the next step INFO **.**

B ▶ **REPLACE BRAKE ACTUATOR ASSEMBLY**

A ▶ **CHECK FOR INTERMITTENT PROBLEMS (SYMPTOM SIMULATION)**

4.	CHECK HARNESS AND CONNECTOR (SKID CONTROL SENSOR WIRE)

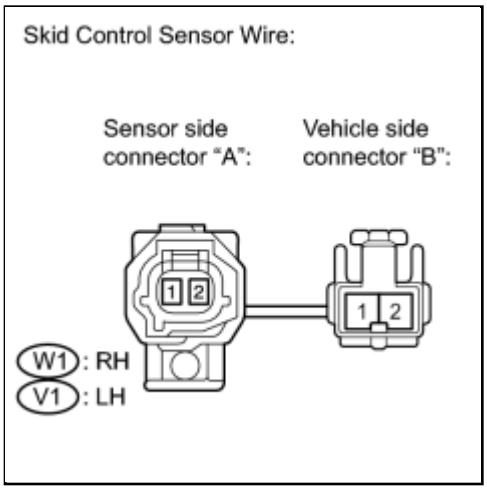

(a) Turn the ignition switch off.

(b) Make sure that there is no looseness at the locking part and the connecting part of the connectors.

(c) Disconnect the skid control sensor wire.

(d) Measure the resistance according to the value(s) in the table below.

Standard Resistance:

for RH

for LH

TESTER CONNECTION	CONDITION	SPECIFIED CONDITION

TESTER CONNECTION	CONDITION	SPECIFIED CONDITION
W1 ("A"-2) - W1 ("B"-1)	Always	Below 1 Ω
W1 ("A"-2) - W1 ("B"-2)	Always	10 kΩ or higher
W1 ("A"-2) - Body ground	Always	10 kΩ or higher
W1 ("A"-1) - W1 ("B"-2)	Always	Below 1 Ω
W1 ("A"-1) - W1 ("B"-1)	Always	10 kΩ or higher
W1 ("A"-1) - Body ground	Always	10 kΩ or higher

TESTER CONNECTION	CONDITION	SPECIFIED CONDITION
V1 ("A"-2) - V1 ("B"-1)	Always	Below 1 Ω
V1 ("A"-2) - V1 ("B"-2)	Always	10 kΩ or higher
V1 ("A"-2) - Body ground	Always	10 kΩ or higher
V1 ("A"-1) - V1 ("B"-2)	Always	Below 1 Ω
V1 ("A"-1) - V1 ("B"-1)	Always	10 kΩ or higher
V1 ("A"-1) - Body ground	Always	10 kΩ or higher

NOTICE:

Check the speed sensor signal after replacement INFO **.**

NG ▶ **REPLACE SKID CONTROL SENSOR WIRE**

OK ▼

5.	**CHECK HARNESS AND CONNECTOR (SKID CONTROL ECU - REAR SPEED SENSOR)**

(a) Reconnect the skid control sensor wire.

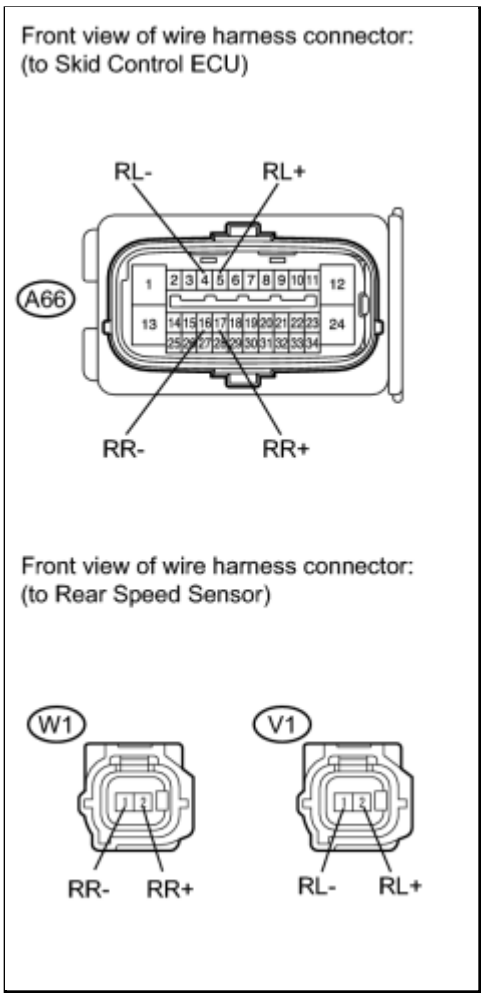

(b) Make sure that there is no looseness at the locking part and the connecting part of the connectors.

(c) Disconnect the skid control ECU connector and the rear speed sensor connector.

(d) Measure the resistance according to the value(s) in the table below.

Standard Resistance:

for RH

for LH

TESTER CONNECTION	CONDITION	SPECIFIED CONDITION
A66-17 (RR+) - W1-2 (RR+)	Always	Below 1 Ω
A66-17 (RR+) - Body ground	Always	10 kΩ or higher
A66-16 (RR-) - W1-1 (RR-)	Always	Below 1 Ω
A66-16 (RR-) - Body ground	Always	10 kΩ or higher

TESTER CONNECTION	CONDITION	SPECIFIED CONDITION
A66-5 (RL+) - V1-2 (RL+)	Always	Below 1 Ω

TESTER CONNECTION	CONDITION	SPECIFIED CONDITION
A66-5 (RL+) - Body ground	Always	10 kΩ or higher
A66-4 (RL-) - V1-1 (RL-)	Always	Below 1 Ω
A66-4 (RL-) - Body ground	Always	10 kΩ or higher

NG ▶ **REPAIR OR REPLACE HARNESS OR CONNECTOR**

OK ▼

6.	**INSPECT SKID CONTROL ECU (SENSOR INPUT)**

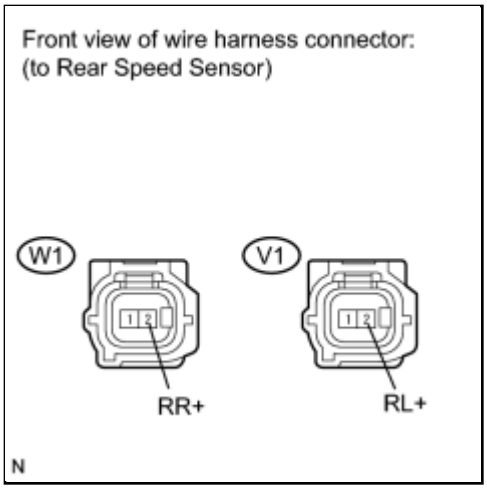

(a) Reconnect the skid control ECU connector.

(b) Turn the ignition switch to ON.

(c) Measure the voltage according to the value(s) in the table below.

Standard Voltage:

for RH

for LH

TESTER CONNECTION	SWITCH CONDITION	SPECIFIED CONDITION
W1-2 (RR+) - Body ground	Ignition switch ON	8 to 14 V

TESTER CONNECTION	SWITCH CONDITION	SPECIFIED CONDITION
V1-2 (RL+) - Body ground	Ignition switch ON	8 to 14 V

NOTICE:

Check the speed sensor signal after replacement INFO **.**

HINT:

If troubleshooting has been carried out according to Problem Symptoms Table, refer back to the table and proceed to the next step INFO **.**

NG ▶ **REPLACE BRAKE ACTUATOR ASSEMBLY**

OK ▶ **REPLACE REAR SPEED SENSOR**

Last Modified: 3-10-2010	6.4 C	**From:** 200901
Model Year: 2010	**Model:** Corolla	**Doc ID:** RM000000XIA05PX
Title: BRAKE CONTROL / DYNAMIC CONTROL SYSTEMS: VEHICLE STABILITY CONTROL SYSTEM: C1413,C1414: Front Speed Sensor RH Output Malfunction (2010 Corolla)		

DTC	**C1413**	**Front Speed Sensor RH Output Malfunction**

DTC	**C1414**	**Front Speed Sensor LH Output Malfunction**

DESCRIPTION

The speed sensor detects the wheel speed and sends the appropriate signals to the skid control ECU. These signals are used for the ABS control system.

Speed sensor rotors have 48 serrations. The hall IC type speed sensor uses the frequency of output pulses to detect the vehicle speed. Because the sensor outputs digital pulses, it can detect vehicle speeds even when the vehicle is nearly stationary.

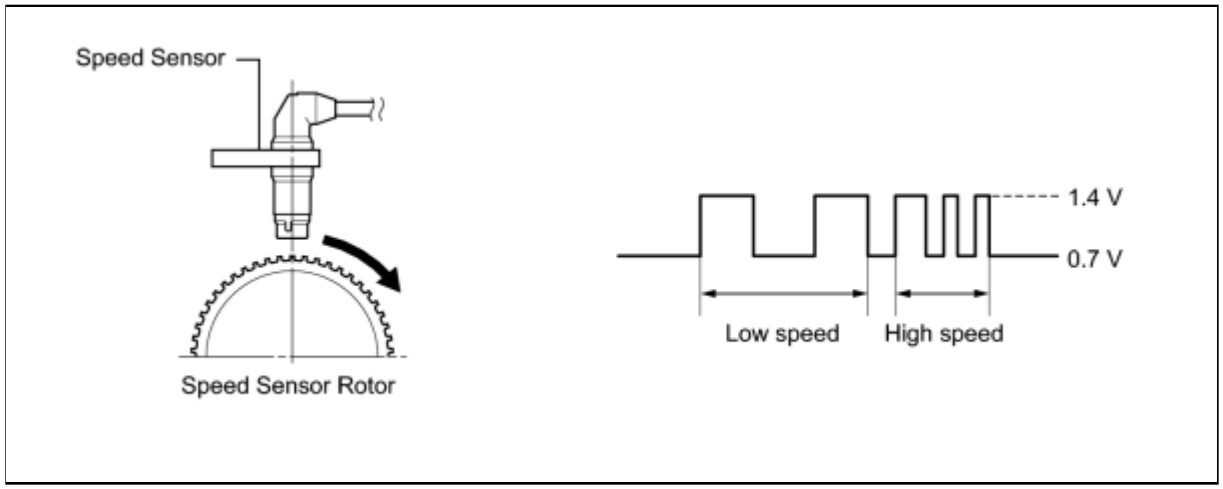

DTC CODE	DTC DETECTION CONDITION	TROUBLE AREA
C1413 C1414	Any of the following is detected: 1. An open in the sensor signal circuit of a malfunctioning area occurs 255 times or more. 2. At a vehicle speed 20 km/h (12 mph) or more, noise occurs in the sensor signals from the abnormal wheel for 5 seconds or more. 3. At a vehicle speed 10 km/h (6 mph) or more, noise occurs once per rotor rotation for 15 seconds or more.	• Front speed sensor RH/LH • Speed sensor circuit • Speed sensor rotor • Brake actuator assembly (Skid control ECU)

HINT:

- DTC C1413 is for the front speed sensor RH.
- DTC C1414 is for the front speed sensor LH.

WIRING DIAGRAM

Refer to DTCs C1401 and C1402 INFO .

INSPECTION PROCEDURE

NOTICE:

When replacing the brake actuator assembly, perform zero point calibration INFO **.**

PROCEDURE

1.	**CHECK HARNESS AND CONNECTOR (MOMENTARY INTERRUPTION)**

(a) Using the Techstream, check for any momentary interruption in the wire harness and connector corresponding to the DTC INFO .

ABS/VSC/TRAC

TESTER DISPLAY	MEASUREMENT ITEM/RANGE	NORMAL CONDITION	DIAGNOSTIC NOTE
FR Speed Open	FR speed sensor open detection / ERROR or NORMAL	ERROR: Momentary interruption NORMAL: Normal	-
FL Speed Open	FL speed sensor open detection / ERROR or NORMAL	ERROR: Momentary interruption NORMAL: Normal	-

OK:

There are no momentary interruptions.

HINT:

Perform the above inspection before removing the sensor and connector.

NG ▶ **CHECK FRONT SPEED SENSOR INSTALLATION**

OK
▼

2.	**READ VALUE USING TECHSTREAM (FRONT SPEED SENSOR)**

(a) Turn the ignition switch off.

(b) Connect the Techstream to the DLC3.

(c) Start the engine.

(d) Select the Data List on the Techstream INFO .

ABS/VSC/TRAC

TESTER DISPLAY	MEASUREMENT ITEM/RANGE	NORMAL CONDITION	DIAGNOSTIC NOTE
FR Wheel Speed	FR wheel speed sensor reading / min.: 0 km/h (0 mph), max.: 326.4 km/h (202 mph)	Actual wheel speed	Similar speed as indicated on speedometer
FL Wheel Speed	FL wheel speed sensor reading /min.: 0 km/h (0 mph), max.: 326.4 km/h (202 mph)	Actual wheel speed	Similar speed as indicated on speedometer

(e) Check that there is no difference between the speed value output from the speed sensor displayed on the Techstream and the speed value displayed on the speedometer when driving the vehicle.

HINT:

Factors that affect the indicated vehicle speed include tire size, tire inflation, and tire wear. The speed indicated on the speedometer has an allowable margin of error. This can be tested using a speedometer tester (calibrated chassis dynamometer). For details about testing and the margin of error, see the reference chart INFO .

OK:

The speed value output from the speed sensor displayed on the Techstream is the same as the actual vehicle speed measured using a speedometer tester (calibrated chassis dynamometer).

NG ▶ CHECK FRONT SPEED SENSOR INSTALLATION

OK
▼

3.	**RECONFIRM DTC**

(a) Turn the ignition switch off.

(b) Clear the DTCs INFO .

(c) Start the engine.

(d) Drive the vehicle at a speed of 40 km/h (25 mph) or more for at least 60 seconds.

(e) Check if the same DTC is recorded INFO .

Result:

RESULT	PROCEED TO
DTCs (C1413 and C1414) are not output	A
DTCs (C1413 and/or C1414) are output	B

HINT:

If troubleshooting has been carried out according to Problem Symptoms Table, refer back to the table and proceed to the next step INFO **.**

B ▶ **REPLACE BRAKE ACTUATOR ASSEMBLY**

A ▶ **CHECK FOR INTERMITTENT PROBLEMS (SYMPTOM SIMULATION)**

4.	CHECK FRONT SPEED SENSOR INSTALLATION

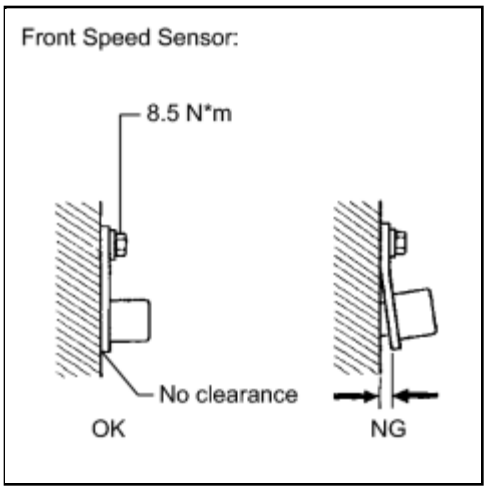

(a) Turn the ignition switch off.

(b) Check the speed sensor installation.

OK:

There is no clearance between the sensor and the front steering knuckle.

The installation nut is tightened properly.

Torque

8.5 N*m (87 kgf*cm, 75 in.*lbf)

NG ▶ **INSTALL FRONT SPEED SENSOR CORRECTLY**

OK

5.	CHECK FRONT SPEED SENSOR TIP

(a) Remove the front speed sensor INFO .

(b) Check the speed sensor tip.

OK:

No scratches, oil, or foreign matter on the sensor tip.

NOTICE:

Check the speed sensor signal after cleaning or replacement INFO .

NG ▶ **CLEAN OR REPLACE FRONT SPEED SENSOR**

OK

6.	CHECK FRONT SPEED SENSOR ROTOR

(a) Remove the front speed sensor rotor INFO for 2AZ-FE or INFO for 2ZR-FE).

(b) Check the speed sensor rotor.

OK:

No scratches, oil, or foreign matter on the rotors.

NOTICE:

Check the speed sensor signal after cleaning or replacement INFO .

HINT:

If the front speed sensor rotor needs to be replaced, replace it together with the front axle outboard joint shaft assembly.

NG ▶ **CLEAN OR REPLACE FRONT SPEED SENSOR ROTOR**

OK

7.	CHECK HARNESS AND CONNECTOR (SKID CONTROL ECU - FRONT SPEED SENSOR)

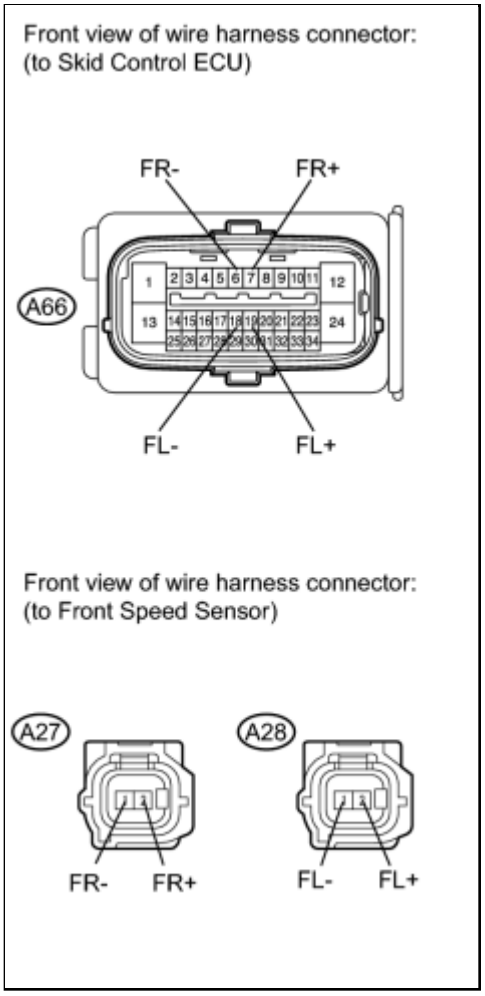

(a) Install the front speed sensor and the front speed sensor rotor.

(b) Make sure that there is no looseness at the locking part and the connecting part of the connectors.

(c) Disconnect the skid control ECU connector and the front speed sensor connector.

(d) Measure the resistance according to the value(s) in the table below.

Standard Resistance:

for RH

for LH

TESTER CONNECTION	CONDITION	SPECIFIED CONDITION
A66-7 (FR+) - A27-2 (FR+)	Always	Below 1 Ω
A66-7 (FR+) - Body ground	Always	10 kΩ or higher
A66-6 (FR-) - A27-1 (FR-)	Always	Below 1 Ω

TESTER CONNECTION	CONDITION	SPECIFIED CONDITION
A66-6 (FR-) - Body ground	Always	10 kΩ or higher

TESTER CONNECTION	CONDITION	SPECIFIED CONDITION
A66-19 (FL+) - A28-2 (FL+)	Always	Below 1 Ω
A66-19 (FL+) - Body ground	Always	10 kΩ or higher
A66-18 (FL-) - A28-1 (FL-)	Always	Below 1 Ω
A66-18 (FL-) - Body ground	Always	10 kΩ or higher

NG ▶ **REPAIR OR REPLACE HARNESS OR CONNECTOR**

OK ▼

8.	**INSPECT SKID CONTROL ECU (SENSOR INPUT)**

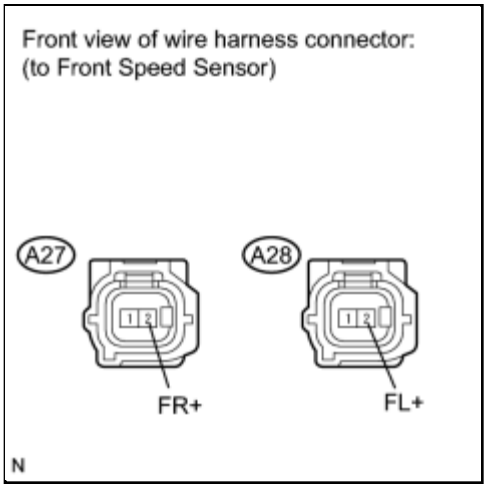

(a) Reconnect the skid control ECU connector.

(b) Turn the ignition switch to ON.

(c) Measure the voltage according to the value(s) in the table below.

Standard Voltage:

for RH

for LH

TESTER CONNECTION	SWITCH CONDITION	SPECIFIED CONDITION

TESTER CONNECTION	SWITCH CONDITION	SPECIFIED CONDITION
A27-2 (FR+) - Body ground	Ignition switch ON	8 to 14 V

TESTER CONNECTION	SWITCH CONDITION	SPECIFIED CONDITION
A28-2 (FL+) - Body ground	Ignition switch ON	8 to 14 V

NOTICE:

Check the speed sensor signal after replacement INFO **.**

HINT:

If troubleshooting has been carried out according to Problem Symptoms Table, refer back to the table and proceed to the next step INFO **.**

NG ▶ **REPLACE BRAKE ACTUATOR ASSEMBLY**

OK ▶ **REPLACE FRONT SPEED SENSOR**

Last Modified: 3-10-2010	6.4 C	**From:** 200901
Model Year: 2010	**Model:** Corolla	**Doc ID:** RM00000369S00JX
Title: BRAKE CONTROL / DYNAMIC CONTROL SYSTEMS: VEHICLE STABILITY CONTROL SYSTEM: C1415,C1416: Rear Speed Sensor RH Output Malfunction (2010 Corolla)		

DTC	**C1415**	**Rear Speed Sensor RH Output Malfunction**

DTC	**C1416**	**Rear Speed Sensor LH Output Malfunction**

DESCRIPTION

The speed sensor detects the wheel speed and sends the appropriate signals to the skid control ECU. These signals are used for the ABS control system.

Speed sensor rotors have rows of alternating N and S magnetic poles. The hall IC type speed sensor uses the frequency of output pulses to detect the vehicle speed. Because the sensor outputs digital pulses, it can detect vehicle speeds even when the vehicle is nearly stationary.

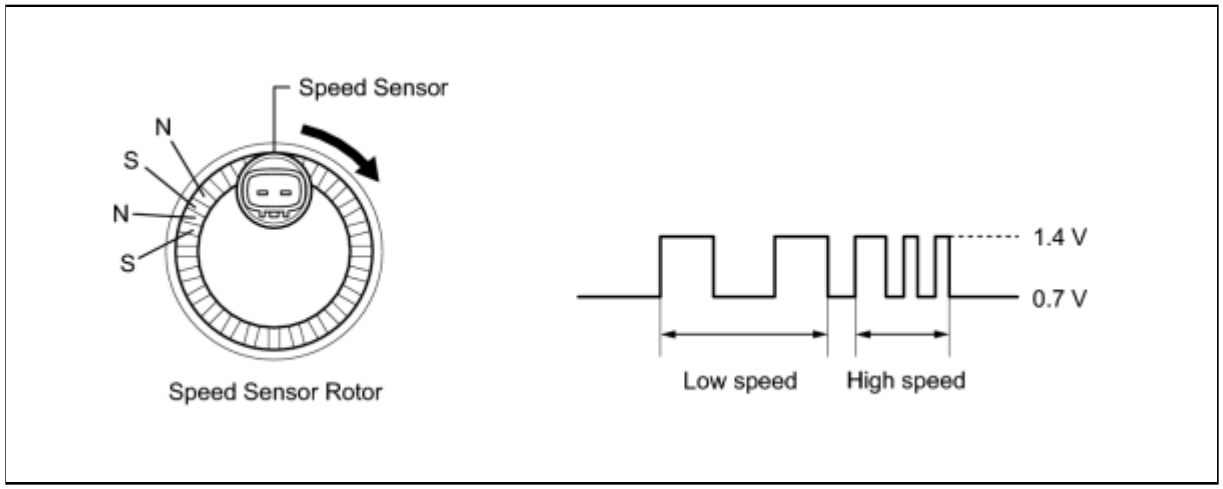

DTC CODE	DTC DETECTION CONDITION	TROUBLE AREA
C1415 C1416	Any of the following is detected: 1. An open in the sensor signal circuit of a malfunctioning area occurs 255 times or more. 2. At a vehicle speed 20 km/h (12 mph) or more, noise occurs in the sensor signals from the abnormal wheel for 5 seconds or more. 3. At a vehicle speed 10 km/h (6 mph) or more, noise occurs once per rotor rotation for 15 seconds or more.	• Rear speed sensor RH/LH • Speed sensor circuit • Speed sensor rotor • Brake actuator assembly (Skid control ECU)

HINT:

- DTC C1415 is for the rear speed sensor RH.
- DTC C1416 is for the rear speed sensor LH.

WIRING DIAGRAM

Refer to DTCs C1403 and C1404 (INFO).

INSPECTION PROCEDURE

NOTICE:

When replacing the brake actuator assembly, perform zero point calibration INFO **.**

PROCEDURE

1.	**CHECK HARNESS AND CONNECTOR (MOMENTARY INTERRUPTION)**

(a) Using the Techstream, check for any momentary interruption in the wire harness and connector corresponding to the DTC INFO .

ABS/VSC/TRAC

TESTER DISPLAY	MEASUREMENT ITEM/RANGE	NORMAL CONDITION	DIAGNOSTIC NOTE
RR Speed Open	RR speed sensor open detection / ERROR or NORMAL	ERROR: Momentary interruption NORMAL: Normal	-
RL Speed Open	RL speed sensor open detection / ERROR or NORMAL	ERROR: Momentary interruption NORMAL: Normal	-

OK:

There are no momentary interruptions.

HINT:

Perform the above inspection before removing the sensor and connector.

NG ▶ **CHECK REAR SPEED SENSOR INSTALLATION**

OK

▼

2.	**READ VALUE USING TECHSTREAM (REAR SPEED SENSOR)**

(a) Turn the ignition switch off.

(b) Connect the Techstream to the DLC3.

(c) Start the engine.

(d) Select the Data List on the Techstream INFO .

ABS/VSC/TRAC

TESTER DISPLAY	MEASUREMENT ITEM/RANGE	NORMAL CONDITION	DIAGNOSTIC NOTE
RR Wheel Speed	RR wheel speed sensor reading / min.: 0 km/h (0 mph), max.: 326.4 km/h (202 mph)	Actual wheel speed	Similar speed as indicated on speedometer
RL Wheel Speed	RL wheel speed sensor reading /min.: 0 km/h (0 mph), max.: 326.4 km/h (202 mph)	Actual wheel speed	Similar speed as indicated on speedometer

(e) Check that there is no difference between the speed value output from the speed sensor displayed on the Techstream and the speed value displayed on the speedometer when driving the vehicle.

HINT:

Factors that affect the indicated vehicle speed include tire size, tire inflation, and tire wear. The speed indicated on the speedometer has an allowable margin of error. This can be tested using a speedometer tester (calibrated chassis dynamometer). For details about testing and the margin of error, see the reference chart INFO .

OK:

The speed value output from the speed sensor displayed on the Techstream is the same as the actual vehicle speed measured using a speedometer tester (calibrated chassis dynamometer).

NG ▶ CHECK REAR SPEED SENSOR INSTALLATION

OK ▼

3.	**RECONFIRM DTC**

(a) Turn the ignition switch off.

(b) Clear the DTCs INFO .

(c) Start the engine.

(d) Drive the vehicle at a speed of 40 km/h (25 mph) or more for at least 60 seconds.

(e) Check if the same DTC is recorded INFO .

Result:

RESULT	PROCEED TO
DTCs (C1415 and C1416) are not output	A
DTCs (C1415 and/or C1416) are output	B

HINT:

If troubleshooting has been carried out according to Problem Symptoms Table, refer back to the table and proceed to the next step INFO **.**

B ▶ **REPLACE BRAKE ACTUATOR ASSEMBLY**

A ▶ **CHECK FOR INTERMITTENT PROBLEMS (SYMPTOM SIMULATION)**

4.	CHECK REAR SPEED SENSOR INSTALLATION

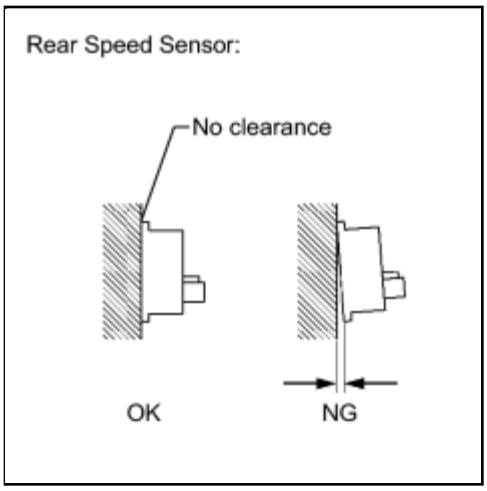

(a) Turn the ignition switch off.

(b) Check the speed sensor installation.

OK:

There is no clearance between the sensor and the rear axle carrier.

NG ▶ **INSTALL REAR SPEED SENSOR CORRECTLY**

OK ▼

5.	CHECK HARNESS AND CONNECTOR (SKID CONTROL SENSOR WIRE)

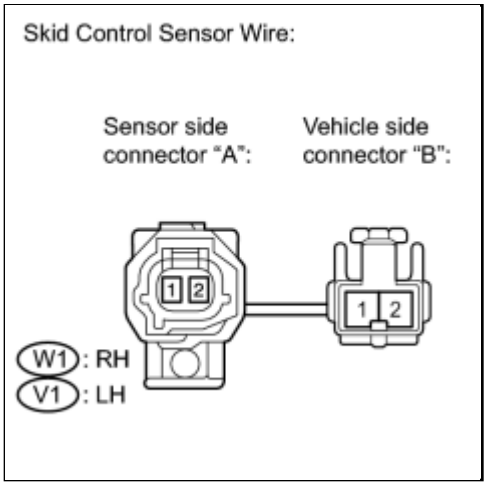

(a) Make sure that there is no looseness at the locking part and the connecting part of the connectors.

(b) Disconnect the skid control sensor wire.

(c) Measure the resistance according to the value(s) in the table below.

Standard Resistance:

for RH

for LH

TESTER CONNECTION	CONDITION	SPECIFIED CONDITION
W1 ("A"-2) - W1 ("B"-1)	Always	Below 1 Ω
W1 ("A"-2) - W1 ("B"-2)	Always	10 kΩ or higher
W1 ("A"-2) - Body ground	Always	10 kΩ or higher
W1 ("A"-1) - W1 ("B"-2)	Always	Below 1 Ω
W1 ("A"-1) - W1 ("B"-1)	Always	10 kΩ or higher
W1 ("A"-1) - Body ground	Always	10 kΩ or higher

TESTER CONNECTION	CONDITION	SPECIFIED CONDITION
V1 ("A"-2) - V1 ("B"-1)	Always	Below 1 Ω
V1 ("A"-2) - V1 ("B"-2)	Always	10 kΩ or higher
V1 ("A"-2) - Body ground	Always	10 kΩ or higher
V1 ("A"-1) - V1 ("B"-2)	Always	Below 1 Ω
V1 ("A"-1) - V1 ("B"-1)	Always	10 kΩ or higher
V1 ("A"-1) - Body ground	Always	10 kΩ or higher

NOTICE:

Check the speed sensor signal after replacement INFO .

NG ▶ **REPLACE SKID CONTROL SENSOR WIRE**

OK ▼

6.	**CHECK HARNESS AND CONNECTOR (SKID CONTROL ECU - REAR SPEED SENSOR)**

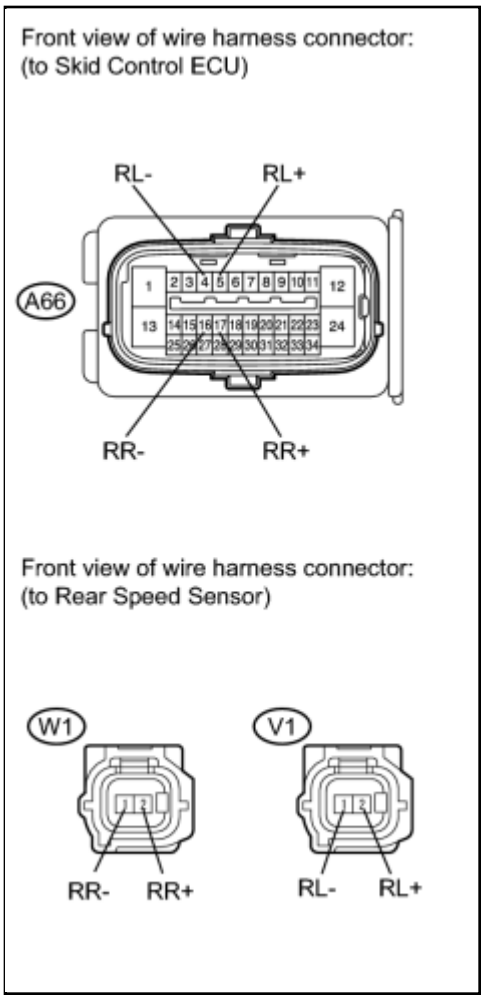

(a) Reconnect the skid control sensor wire.

(b) Make sure that there is no looseness at the locking part and the connecting part of the connectors.

(c) Disconnect the skid control ECU connector and the rear speed sensor connector.

(d) Measure the resistance according to the value(s) in the table below.

Standard Resistance:

for RH
for LH

TESTER CONNECTION	CONDITION	SPECIFIED CONDITION
A66-17 (RR+) - W1-2 (RR+)	Always	Below 1 Ω
A66-17 (RR+) - Body ground	Always	10 kΩ or higher
A66-16 (RR-) - W1-1 (RR-)	Always	Below 1 Ω
A66-16 (RR-) - Body ground	Always	10 kΩ or higher

TESTER CONNECTION	CONDITION	SPECIFIED CONDITION
A66-5 (RL+) - V1-2 (RL+)	Always	Below 1 Ω
A66-5 (RL+) - Body ground	Always	10 kΩ or higher
A66-4 (RL-) - V1-1 (RL-)	Always	Below 1 Ω
A66-4 (RL-) - Body ground	Always	10 kΩ or higher

NG ▶ **REPAIR OR REPLACE HARNESS OR CONNECTOR**

OK ▼

7.	**INSPECT SKID CONTROL ECU (SENSOR INPUT)**

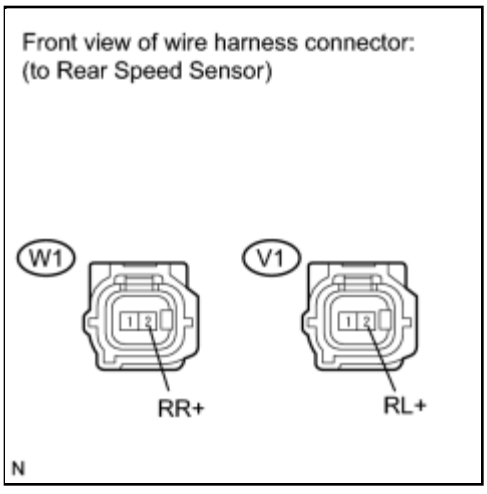

(a) Reconnect the skid control ECU connector.

(b) Turn the ignition switch to ON.

(c) Measure the voltage according to the value(s) in the table below.

Standard Voltage:

for RH

for LH

TESTER CONNECTION	SWITCH CONDITION	SPECIFIED CONDITION
W1-2 (RR+) - Body ground	Ignition switch ON	8 to 14 V

TESTER CONNECTION	SWITCH CONDITION	SPECIFIED CONDITION
V1-2 (RL+) - Body ground	Ignition switch ON	8 to 14 V

NOTICE:

Check the speed sensor signal after replacement INFO **.**

HINT:

If troubleshooting has been carried out according to Problem Symptoms Table, refer back to the table and proceed to the next step INFO **.**

NG ▶ **REPLACE BRAKE ACTUATOR ASSEMBLY**

OK ▶ **REPLACE REAR SPEED SENSOR**

Last Modified: 3-10-2010	6.4 C	**From:** 200901
Model Year: 2010	**Model:** Corolla	**Doc ID:** RM00000368W00IX
Title: BRAKE CONTROL / DYNAMIC CONTROL SYSTEMS: VEHICLE STABILITY CONTROL SYSTEM: C1417: High Power Supply Voltage Malfunction (2010 Corolla)		

DTC	**C1417**	**High Power Supply Voltage Malfunction**

DESCRIPTION

If a malfunction is detected in the power supply circuit, the skid control ECU (housed in the actuator assembly) stores this DTC and the fail safe function prohibits ABS operation.

This DTC is stored when the IG1 terminal voltage deviates from the DTC detection condition due to a malfunction in the power supply or charging circuit such as the battery or alternator circuit, etc.

The DTC is cleared when the IG1 terminal voltage returns to normal.

DTC CODE	DTC DETECTION CONDITION	TROUBLE AREA
C1417	The IG1 terminal voltage is 17.4 V or more for 1 second or more.	• ECU-IG NO. 1 fuse • Battery • Charging system • Power source circuit • Internal power supply circuit of the skid control ECU

WIRING DIAGRAM

Refer to DTC C1241 INFO .

INSPECTION PROCEDURE

NOTICE:

When replacing the brake actuator assembly, perform zero point calibration INFO .

PROCEDURE

1.	**INSPECT ECU-IG NO. 1 FUSE**

(a) Remove the ECU-IG NO. 1 fuse from the main body ECU (instrument panel junction block).

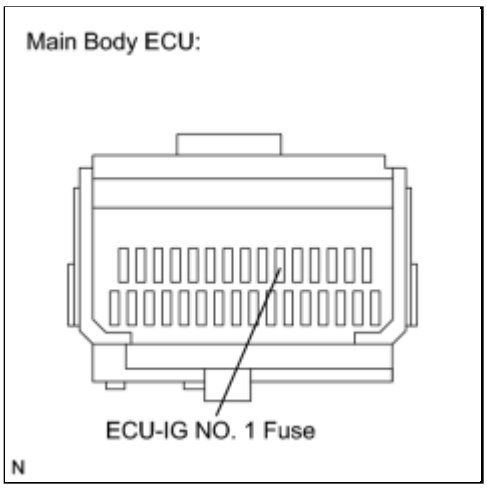

(b) Measure the resistance according to the value(s) in the table below.

Standard Resistance:

TESTER CONNECTION	CONDITION	SPECIFIED CONDITION
ECU-IG NO. 1 (10 A) fuse	Always	Below 1 Ω

NG ▶ **REPLACE ECU-IG NO. 1 FUSE**

OK ▼

2.	**CHECK BATTERY**

(a) Install the ECU-IG NO. 1 fuse.

(b) Check the battery voltage.

Standard Voltage:
11 to 14 V
Result:

RESULT	PROCEED TO
OK	A
NG (for 2AZ-FE)	B
NG (for 2ZR-FE)	C

C ▶ **CHECK OR REPLACE CHARGING SYSTEM OR BATTERY (for 2ZR-FE)**

B ▶ CHECK OR REPLACE CHARGING SYSTEM OR BATTERY (for 2AZ-FE)

A ▼

3.	INSPECT SKID CONTROL ECU (IG1 TERMINAL)

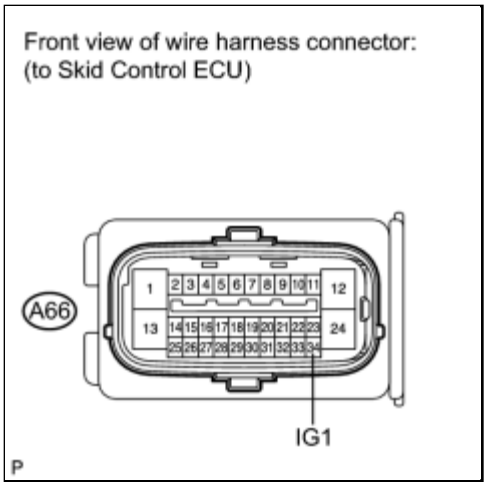

(a) Make sure that there is no looseness at the locking part and the connecting part of the connector.

(b) Disconnect the skid control ECU connector.

(c) Turn the ignition switch to ON.

(d) Measure the voltage according to the value(s) in the table below.

Standard Voltage:

TESTER CONNECTION	SWITCH CONDITION	SPECIFIED CONDITION
A66-34 (IG1) - Body ground	Ignition switch ON	11 to 14 V

HINT:

If troubleshooting has been carried out according to Problem Symptoms Table, refer back to the table and proceed to the next step INFO **.**

NG ▶ REPAIR OR REPLACE HARNESS OR CONNECTOR (IG1 CIRCUIT)

OK ▶ REPLACE BRAKE ACTUATOR ASSEMBLY

Last Modified: 3-10-2010	6.4 C	**From:** 200901
Model Year: 2010	**Model:** Corolla	**Doc ID:** RM0000035P400IX
Title: BRAKE CONTROL / DYNAMIC CONTROL SYSTEMS: VEHICLE STABILITY CONTROL SYSTEM: C1419,C1435: Acceleration Sensor Internal Circuit (2010 Corolla)		

DTC	**C1419**	**Acceleration Sensor Internal Circuit**

DTC	**C1435**	**Yaw Rate Sensor Internal Circuit**

DESCRIPTION

The skid control ECU receives signals from the yaw rate and acceleration sensor via the CAN communication system.

The yaw rate sensor has a built-in acceleration sensor and detects the vehicle's condition using 2 circuits (GL1, GL2).

If there is trouble in the bus lines between the yaw rate and acceleration sensor and the CAN communication system, DTCs U0123 (Lost Communication with Yaw Rate Sensor Module) and U0124 (Lost Communication with Lateral Acceleration Sensor Module) are set.

These DTCs are also output when calibration has not been completed.

DTC CODE	DTC DETECTION CONDITION	TROUBLE AREA
C1419	A data malfunction signal is received from the acceleration sensor.	Yaw rate and acceleration sensor
C1435	A data malfunction signal is received from the yaw rate sensor.	Yaw rate and acceleration sensor

INSPECTION PROCEDURE

NOTICE:

When replacing the yaw rate and acceleration sensor, perform zero point calibration INFO **.**

HINT:

When U0123, U0124 and/or U0126 is output together with C1419 and/or C1435, inspect and repair the trouble areas indicated by U0123, U0124 and/or U0126 first INFO **.**

PROCEDURE

1.	REPLACE YAW RATE AND ACCELERATION SENSOR

(a) Replace the yaw rate and acceleration sensor INFO .

NOTICE:

Check the yaw rate and acceleration sensor signal after replacement INFO .

HINT:

If troubleshooting has been carried out according to Problem Symptoms Table, refer back to the table and proceed to the next step INFO .

NEXT END

Last Modified: 3-10-2010	6.4 C	**From:** 200901
Model Year: 2010	**Model:** Corolla	**Doc ID:** RM0000035P600IX
Title: BRAKE CONTROL / DYNAMIC CONTROL SYSTEMS: VEHICLE STABILITY CONTROL SYSTEM: C1420: Acceleration Sensor Malfunction (2010 Corolla)		

DTC	**C1420**	**Acceleration Sensor Malfunction**

DESCRIPTION

The skid control ECU receives signals from the yaw rate and acceleration sensor via the CAN communication system.

The yaw rate sensor has a built-in acceleration sensor and detects the vehicle's condition using 2 circuits (GL1, GL2).

If there is trouble in the bus lines between the yaw rate and acceleration sensor and the CAN communication system, DTCs U0123 (Lost Communication with Yaw Rate Sensor Module) and U0124 (Lost Communication with Lateral Acceleration Sensor Module) are set.

These DTCs are also output when calibration has not been completed.

DTC CODE	DTC DETECTION CONDITION	TROUBLE AREA
C1420	After the difference between GL1 and GL2 becomes 0.6 G or more with the vehicle stationary, the difference remains 0.4 G or more for 60 seconds or more.	• Sensor installation • Yaw rate and acceleration sensor

INSPECTION PROCEDURE

NOTICE:

When replacing the yaw rate and acceleration sensor, perform zero point calibration INFO **.**

HINT:

When U0123, U0124 and/or U0126 is output together with C1420, inspect and repair the trouble areas indicated by U0123, U0124 and/or U0126 first INFO **.**

PROCEDURE

1.	**CHECK YAW RATE AND ACCELERATION SENSOR INSTALLATION**

(a) Check that the yaw rate and acceleration sensor has been installed properly INFO .

OK:

The sensor should be tightened to the specified torque.

The sensor should not be installed in a tilted position.

NOTICE:

Check the yaw rate and acceleration sensor signal after replacement INFO .

HINT:

If troubleshooting has been carried out according to Problem Symptoms Table, refer back to the table and proceed to the next step INFO .

NG ▶ **INSTALL YAW RATE AND ACCELERATION SENSOR CORRECTLY**

OK ▶ **REPLACE YAW RATE AND ACCELERATION SENSOR**

Last Modified: 3-10-2010	6.4 C	**From:** 200901
Model Year: 2010	**Model:** Corolla	**Doc ID:** RM000000XIE05SX
Title: BRAKE CONTROL / DYNAMIC CONTROL SYSTEMS: VEHICLE STABILITY CONTROL SYSTEM: C1425: Open in Stop Light Switch Circuit (2010 Corolla)		

DTC	**C1425**	**Open in Stop Light Switch Circuit**

DESCRIPTION

The skid control ECU (housed in the actuator assembly) inputs stop light switch signals and the condition of brake operation.

The skid control ECU has an open detection circuit, which outputs this DTC when detecting an open in the stop light input line or the ground line of the stop light circuit with the stop light switch off (brake pedal not depressed).

DTC CODE	DTC DETECTION CONDITION	TROUBLE AREA
C1425	When IG1 terminal voltage is between 9.5 and 17.4 V, an open stop light switch circuit continues for 0.3 seconds or more.	• STOP fuse • Stop light switch • Stop light switch circuit • Brake actuator assembly (Skid control ECU)

WIRING DIAGRAM

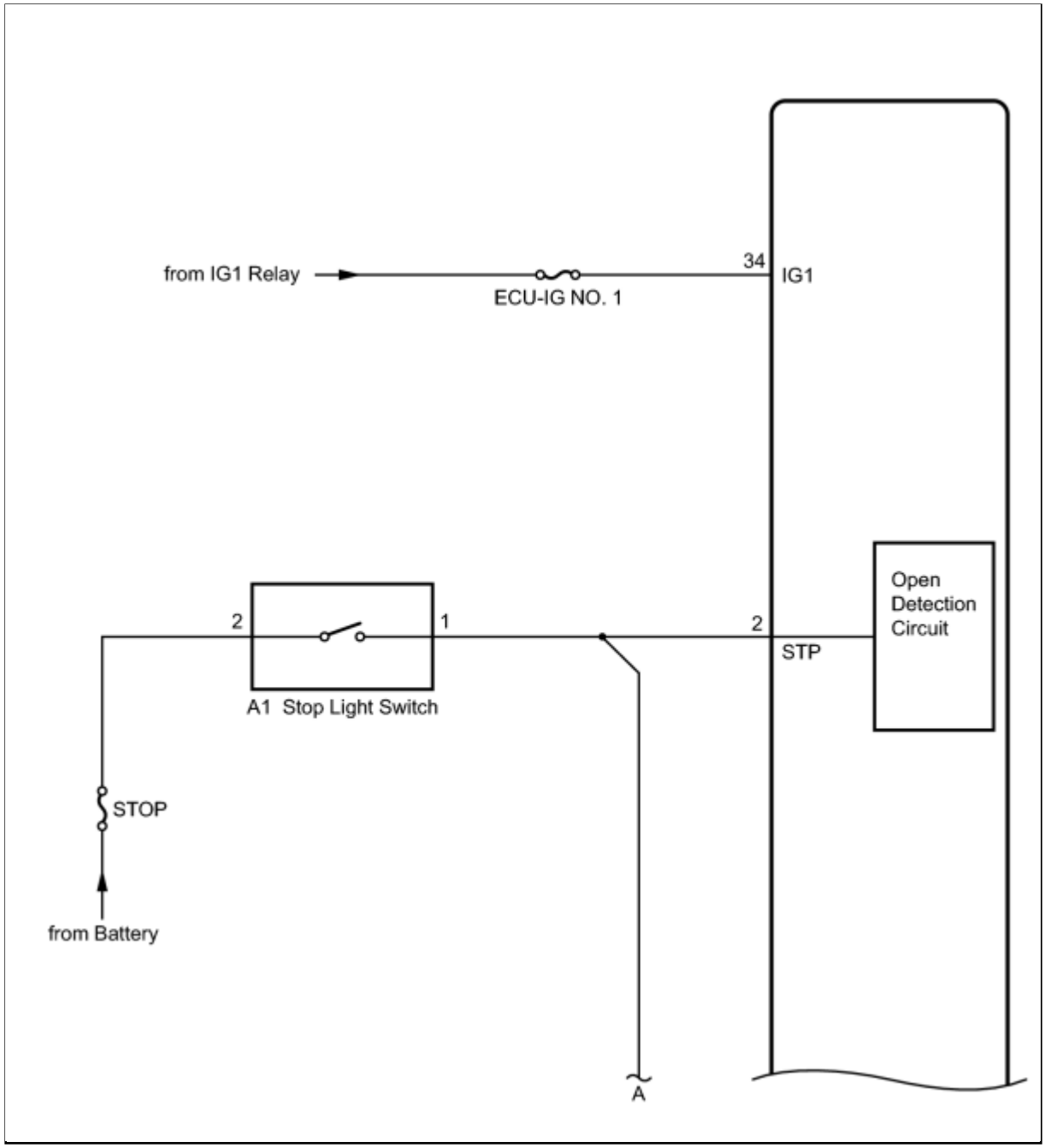
from IG1 Relay
ECU-IG NO. 1
34
IG1
Open
Detection
Circuit
2
1
2
STP
A1 Stop Light Switch
STOP
from Battery
A

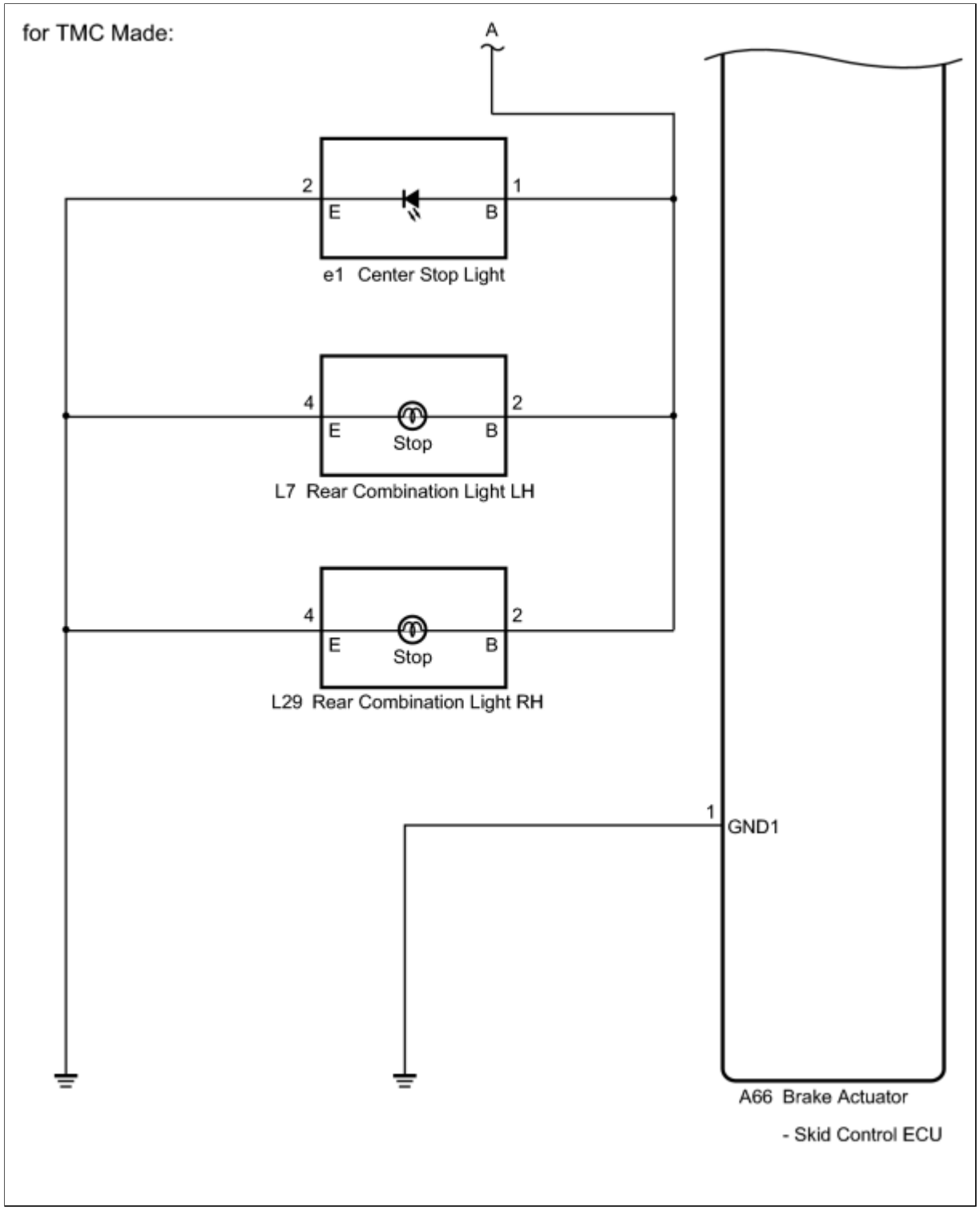
for TMC Made:
A
2
1
E
B
e1 Center Stop Light
4
2
E
Stop
B
L7 Rear Combination Light LH
4
2
E
Stop
B
L29 Rear Combination Light RH
1
GND1
A66 Brake Actuator
- Skid Control ECU

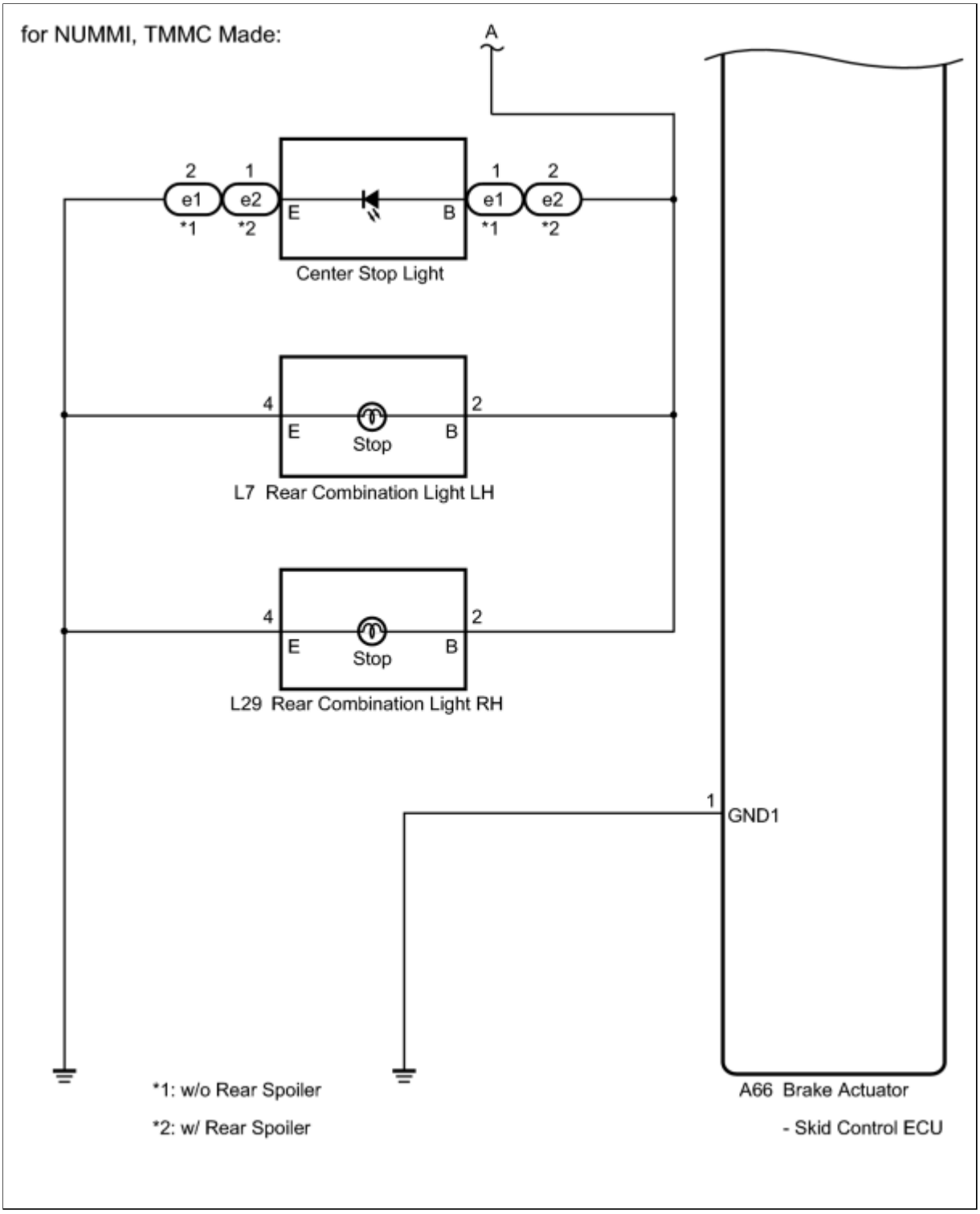

INSPECTION PROCEDURE

NOTICE:

When replacing the brake actuator assembly, perform zero point calibration INFO **.**

PROCEDURE

1.	CHECK STOP LIGHT OPERATION

(a) Check that the stop lights come on when the brake pedal is depressed, and go off when the brake pedal is released.

OK:

CONDITION	ILLUMINATION CONDITION
Brake pedal depressed	ON
Brake pedal released	OFF

NG ▶ **INSPECT STOP FUSE**

OK ▼

2.	READ VALUE USING TECHSTREAM (STOP LIGHT SWITCH)

(a) Connect the Techstream to the DLC3.

(b) Turn the ignition switch to ON.

(c) Select the Data List on the Techstream INFO.

ABS/VSC/TRAC

TESTER DISPLAY	MEASUREMENT ITEM/RANGE	NORMAL CONDITION	DIAGNOSTIC NOTE
Stop Light SW	Stop light switch / ON or OFF	ON: Brake pedal depressed OFF: Brake pedal released	-

(d) Check that the stop light switch display observed on the Techstream changes according to brake pedal operation.

OK:

The Techstream displays ON or OFF according to brake pedal operation.

NG ▶ **CHECK HARNESS AND CONNECTOR (SKID CONTROL ECU - STOP LIGHT SWITCH)**

OK

3.	RECONFIRM DTC

(a) Turn the ignition switch off.

(b) Clear the DTCs INFO .

(c) Start the engine.

(d) Depress the brake pedal several times to test the stop light circuit.

(e) Check if the same DTC is recorded INFO .

Result:

RESULT	PROCEED TO
DTC (C1425) is not output	A
DTC (C1425) is output	B

HINT:

If troubleshooting has been carried out according to Problem Symptoms Table, refer back to the table and proceed to the next step INFO .

B ▶ **REPLACE BRAKE ACTUATOR ASSEMBLY**

A ▶ **CHECK FOR INTERMITTENT PROBLEMS (SYMPTOM SIMULATION)**

4.	INSPECT STOP FUSE

(a) Remove the STOP fuse from the main body ECU (instrument panel junction block).

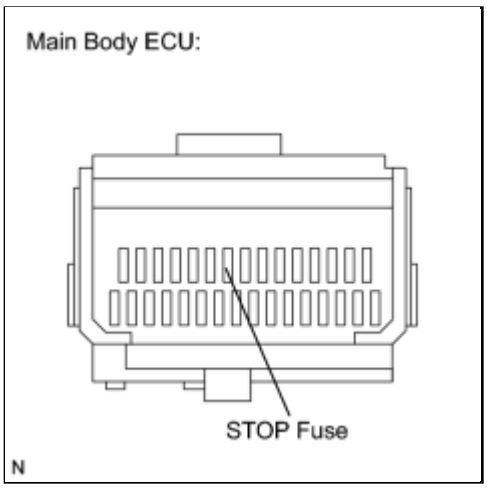

(b) Measure the resistance according to the value(s) in the table below.

Standard Resistance:

TESTER CONNECTION	CONDITION	SPECIFIED CONDITION
STOP (10 A) fuse	Always	Below 1 Ω

NG ▶ **REPLACE STOP FUSE**

OK ▼

5.	**INSPECT STOP LIGHT SWITCH (POWER SOURCE TERMINAL)**

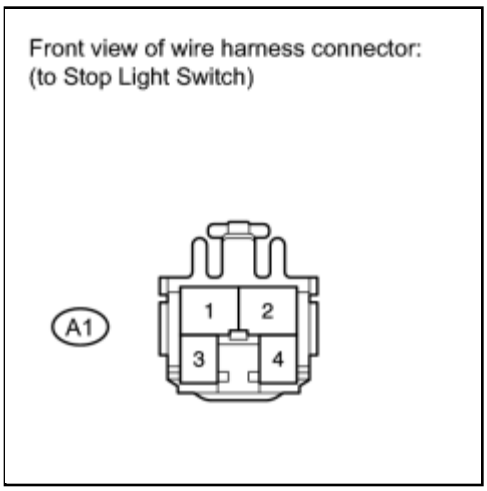

(a) Install the STOP fuse.

(b) Make sure that there is no looseness at the locking part and the connecting part of the connector.

(c) Disconnect the stop light switch connector.

(d) Measure the voltage according to the value(s) in the table below.

Standard Voltage:

TESTER CONNECTION	CONDITION	SPECIFIED CONDITION
A1-2 - Body ground	Always	11 to 14 V

NG ▶ **REPAIR OR REPLACE HARNESS OR CONNECTOR (POWER SOURCE CIRCUIT)**

OK ▼

6.	**INSPECT STOP LIGHT SWITCH**

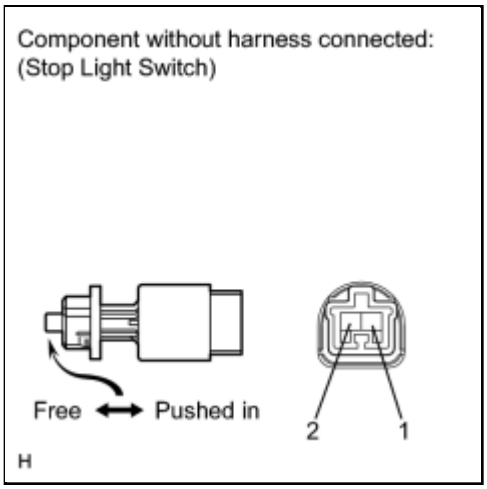

(a) Measure the resistance according to the value(s) in the table below.

Standard Resistance:

TESTER CONNECTION	SWITCH CONDITION	SPECIFIED CONDITION
1 - 2	Switch pin free	Below 1 Ω
1 - 2	Switch pin pushed in	10 kΩ or higher

NG ▶ **REPLACE STOP LIGHT SWITCH**

OK ▼

7.	**CHECK HARNESS AND CONNECTOR (SKID CONTROL ECU - STOP LIGHT SWITCH)**

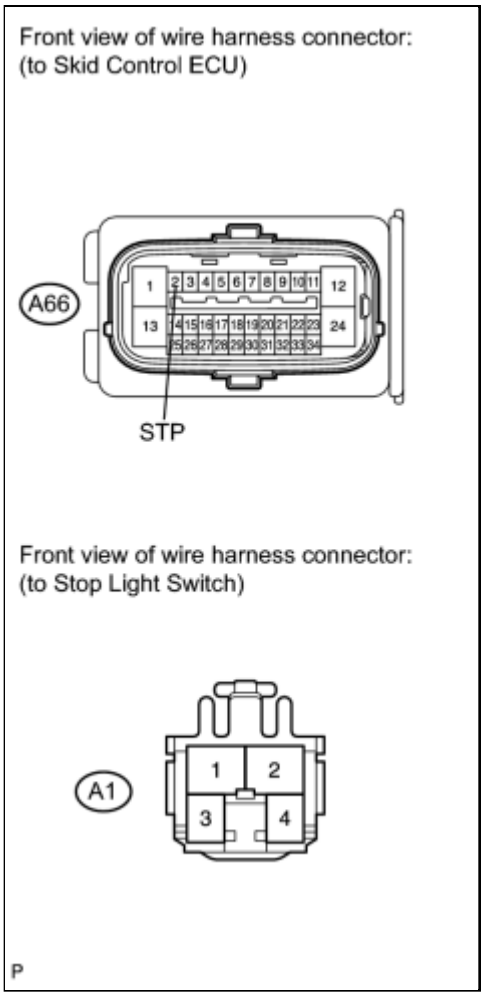

(a) Make sure that there is no looseness at the locking part and the connecting part of the connector.

(b) Disconnect the skid control ECU connector.

(c) Measure the resistance according to the value(s) in the table below.

Standard Resistance:

TESTER CONNECTION	CONDITION	SPECIFIED CONDITION
A66-2 (STP) - A1-1	Always	Below 1 Ω

NG ▶ **REPAIR OR REPLACE HARNESS OR CONNECTOR**

OK ▼

8.	**RECONFIRM DTC**

(a) Reconnect the skid control ECU connector and the stop light switch connector.

(b) Clear the DTCs INFO .

(c) Start the engine.

(d) Depress the brake pedal several times to test the stop light circuit.

(e) Check if the same DTC is recorded INFO .

Result:

RESULT	PROCEED TO
DTC (C1425) is not output	A
DTC (C1425) is output	B

HINT:

If troubleshooting has been carried out according to Problem Symptoms Table, refer back to the table and proceed to the next step INFO .

B ▶ REPLACE BRAKE ACTUATOR ASSEMBLY

A ▶ INSPECT LIGHTING SYSTEM (STOP LIGHT CIRCUIT)

9.	**CHECK HARNESS AND CONNECTOR (SKID CONTROL ECU - STOP LIGHT SWITCH)**

(a) Turn the ignition switch off.

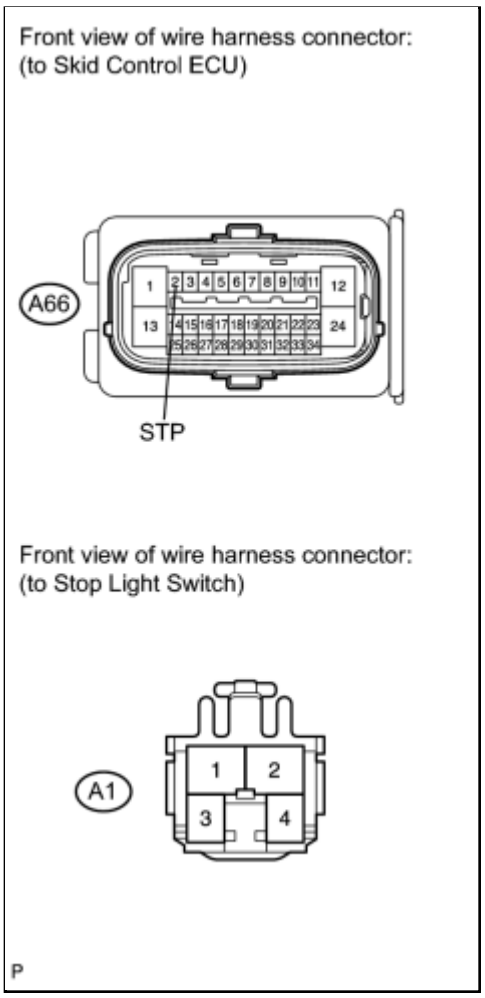

(b) Make sure that there is no looseness at the locking part and the connecting part of the connectors.

(c) Disconnect the skid control ECU connector and the stop light switch connector.

(d) Measure the resistance according to the value(s) in the table below.

Standard Resistance:

TESTER CONNECTION	CONDITION	SPECIFIED CONDITION
A66-2 (STP) - A1-1	Always	Below 1 Ω

HINT:

If troubleshooting has been carried out according to Problem Symptoms Table, refer back to the table and proceed to the next step INFO **.**

NG ▶ **REPAIR OR REPLACE HARNESS OR CONNECTOR**

OK ▶ **REPLACE BRAKE ACTUATOR ASSEMBLY**

Last Modified: 3-10-2010	6.4 C	**From:** 200901
Model Year: 2010	**Model:** Corolla	**Doc ID:** RM000000XIG04TX
Title: BRAKE CONTROL / DYNAMIC CONTROL SYSTEMS: VEHICLE STABILITY CONTROL SYSTEM: C1421,C1423,C1424: Open or Short in Master Cylinder Pressure Sensor (2010 Corolla)		

DTC	**C1421**	**Open or Short in Master Cylinder Pressure Sensor**

DTC	**C1423**	**Master Cylinder Pressure Sensor Zero Point Low Malfunction**

DTC	**C1424**	**Master Cylinder Pressure Sensor Output Malfunction**

DESCRIPTION

The master cylinder pressure sensor is connected to the skid control ECU in the brake actuator assembly.

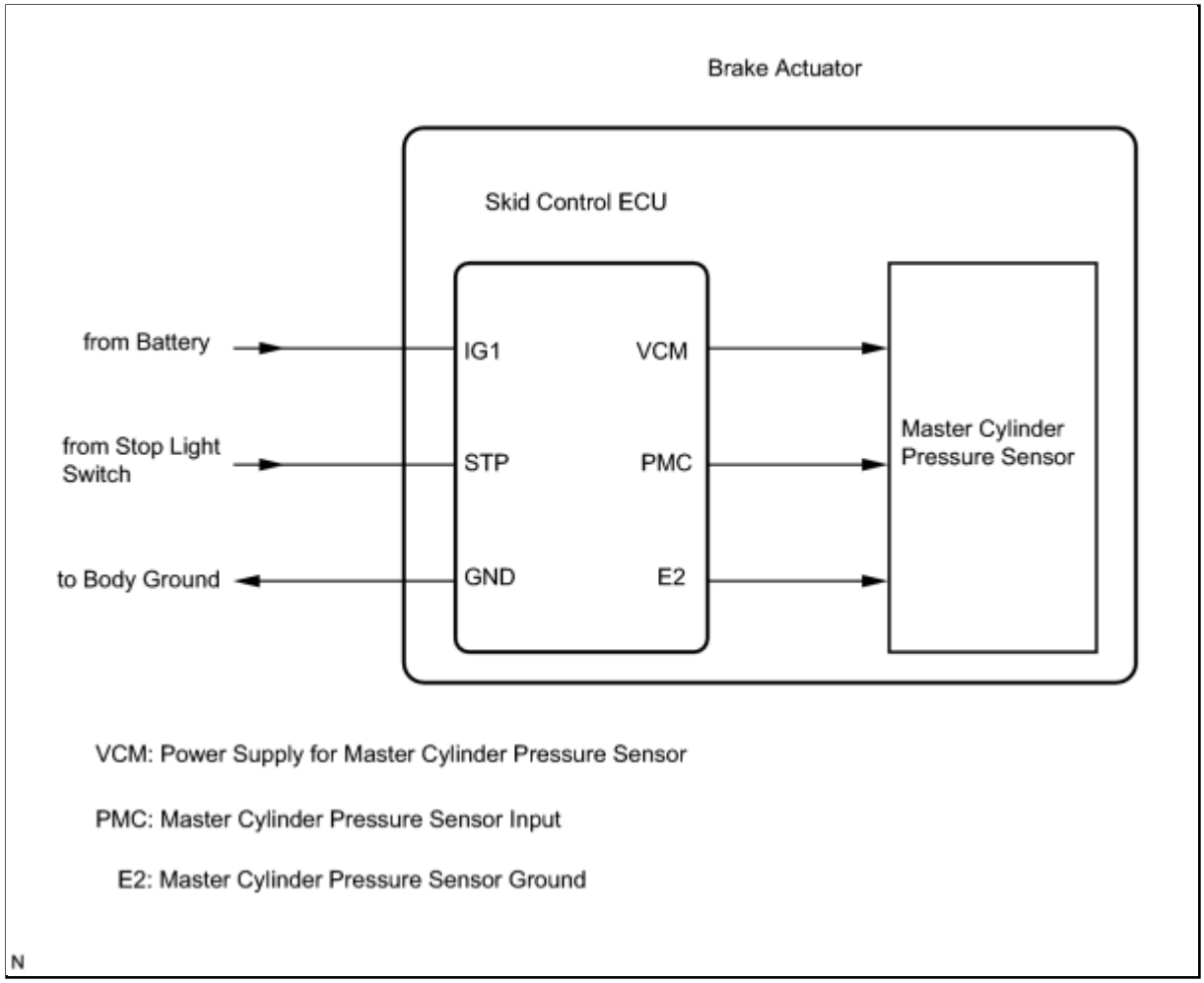

DTC CODE	DTC DETECTION CONDITION	TROUBLE AREA
C1421	Either of the following is detected: 1. With the IG1 terminal voltage between 9.5 and 17.4 V, the VCM terminal voltage is not between 4.4 and 5.6 V for 1.2 seconds or more. 2. When the VCM terminal voltage is between 4.4 and 5.6 V, the PMC terminal voltage is not between 0.19 and 4.57 V for 1.2 seconds or more.	Brake actuator assembly (Master cylinder pressure sensor)
C1423	The PMC terminal voltage is less than 0.27 V for 5 seconds or more.	Brake actuator assembly (Master cylinder pressure sensor)
C1424	Any of the following is detected: 1. Noise occurs in the PMC terminal 7 times or more within 5 seconds. 2. When the vehicle speed drops from 40 km/h (25 mph) to 0 km/h (0 mph), the master cylinder pressure does not change by at least 0.048 MPa. 3. At a vehicle speed of 7 km/h (4.3 mph) or more, the PMC	Brake actuator assembly (Master cylinder pressure sensor)

DTC CODE	DTC DETECTION CONDITION	TROUBLE AREA
	terminal voltage is between 0.86 and 1.0 V and does not change by at least 0.048 MPa for 60 seconds or more. 4. At a vehicle speed of 7 km/h (4.3 mph) or more, the PMC terminal voltage is 1.0 V or more and does not change by at least 0.048 MPa for 30 seconds or more. 5. All of the following are detected 8 times continuously each time the ignition switch is turned to ON. (8-trip) • Vehicle speed is 7 km/h (4.3 mph) or more • Stop light switch is on • Difference between the master cylinder pressure and the sensor input value is 20 MPa/s or less. • A condition where the sensor input value is apparently larger than the estimated master cylinder pressure based on the deceleration rate continues for 1 second or more, and repeats 5 times or more during each trip.	

INSPECTION PROCEDURE

NOTICE:

When replacing the brake actuator assembly, perform zero point calibration INFO .

PROCEDURE

1.	**REPLACE BRAKE ACTUATOR ASSEMBLY**

(a) Replace the brake actuator assembly (master cylinder pressure sensor) INFO .

NEXT **END**

Last Modified: 3-10-2010	6.4 C	**From:** 200901
Model Year: 2010	**Model:** Corolla	**Doc ID:** RM000000XIG04UX
Title: BRAKE CONTROL / DYNAMIC CONTROL SYSTEMS: VEHICLE STABILITY CONTROL SYSTEM: C1422: Master Cylinder Pressure Sensor Zero Point High Malfunction (2010 Corolla)		

DTC	**C1422**	**Master Cylinder Pressure Sensor Zero Point High Malfunction**

DESCRIPTION

The master cylinder pressure sensor is connected to the skid control ECU in the brake actuator assembly.

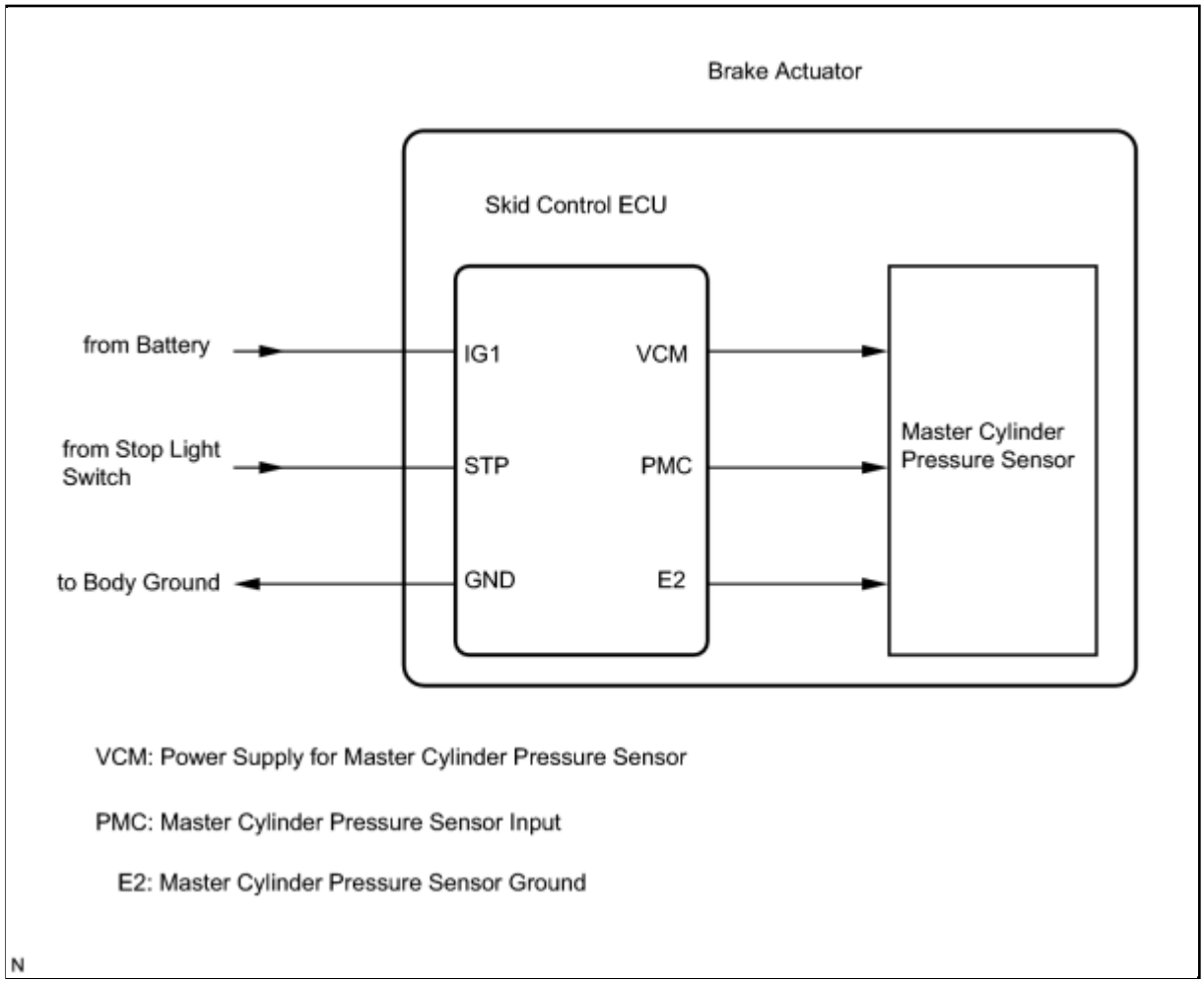

DTC CODE	DTC DETECTION CONDITION	TROUBLE AREA
C1422	When the stop light switch is OFF, the PMC terminal voltage is more than 0.86 V for 5 seconds or more.	• Stop light switch • Stop light switch circuit • Master cylinder pressure

DTC CODE	DTC DETECTION CONDITION	TROUBLE AREA
		sensor circuit • Brake actuator assembly (Master cylinder pressure sensor)

WIRING DIAGRAM

Refer to DTC C1425 INFO .

INSPECTION PROCEDURE

NOTICE:

When replacing the brake actuator assembly, perform zero point calibration INFO .

HINT:

When C1425 is output together with C1422, inspect and repair the trouble areas indicated by C1425 first INFO .

PROCEDURE

1.	**CHECK STOP LIGHT OPERATION**

(a) Check that the stop lights come on when the brake pedal is depressed, and go off when the brake pedal is released.

OK:

CONDITION	ILLUMINATION CONDITION
Brake pedal depressed	ON
Brake pedal released	OFF

NG ▶ **INSPECT STOP LIGHT CIRCUIT**

OK ▼

2.	READ VALUE USING TECHSTREAM (STOP LIGHT SWITCH)

(a) Connect the Techstream to the DLC3.

(b) Turn the ignition switch to ON.

(c) Select the Data List on the Techstream INFO.

ABS/VSC/TRAC

TESTER DISPLAY	MEASUREMENT ITEM/RANGE	NORMAL CONDITION	DIAGNOSTIC NOTE
Stop Light SW	Stop light switch / ON or OFF	ON: Brake pedal depressed OFF: Brake pedal released	-

(d) Check that the stop light condition observed on the Techstream changes according to brake pedal operation.

OK:

The Techstream displays ON or OFF according to brake pedal operation.

NG ▶ **INSPECT SKID CONTROL ECU (STP TERMINAL)**

OK ▼

3.	CHECK BRAKE PEDAL AND STOP LIGHT SWITCH INSTALLATION

(a) Turn the ignition switch off.

(b) Check the brake pedal height and stop light switch installation INFO.

OK:

The brake pedal height and stop light switch installation are normal.

NG ▶ **ADJUST BRAKE PEDAL OR STOP LIGHT SWITCH**

OK ▼

4.	RECONFIRM DTC

(a) Clear the DTCs INFO .

(b) Start the engine.

(c) Drive the vehicle at a speed of 40 km/h (25 mph) or more and perform braking test (decelerate the vehicle by depressing the brake pedal).

(d) Check if the same DTC is recorded INFO .

Result:

RESULT	PROCEED TO
DTC (C1422) is not output	A
DTC (C1422) is output	B

B ▶ REPLACE BRAKE ACTUATOR ASSEMBLY

A ▶ CHECK FOR INTERMITTENT PROBLEMS (SYMPTOM SIMULATION)

5.	INSPECT SKID CONTROL ECU (STP TERMINAL)

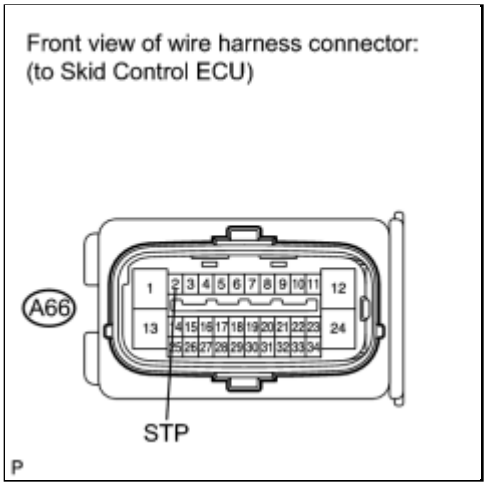

(a) Turn the ignition switch off.

(b) Make sure that there is no looseness at the locking part and the connecting part of the connector.

(c) Disconnect the skid control ECU connector.

(d) Measure the voltage according to the value(s) in the table below.

Standard Voltage:

TESTER CONNECTION	SWITCH CONDITION	SPECIFIED CONDITION
A66-2 (STP) - Body ground	Stop light switch ON (Brake pedal depressed)	8 to 14 V
A66-2 (STP) - Body ground	Stop light switch OFF (Brake pedal released)	Below 1.5 V

NG ▶ **REPAIR OR REPLACE HARNESS OR CONNECTOR (STP CIRCUIT)**

OK ▶ **REPLACE BRAKE ACTUATOR ASSEMBLY**

Last Modified: 3-10-2010	6.4 C	**From:** 200901
Model Year: 2010	**Model:** Corolla	**Doc ID:** RM000000XIF04BX
Title: BRAKE CONTROL / DYNAMIC CONTROL SYSTEMS: VEHICLE STABILITY CONTROL SYSTEM: C1427: Motor Malfunction (2010 Corolla)		

DTC	**C1427**	**Motor Malfunction**

DESCRIPTION

DTC CODE	DTC DETECTION CONDITION	TROUBLE AREA
C1427	Actuator pump motor does not operate properly.	• Brake actuator assembly (Ground circuit) • Brake actuator assembly (Motor circuit)

WIRING DIAGRAM

Refer to DTCs C0273, C0274 and C1361 INFO .

INSPECTION PROCEDURE

NOTICE:

When replacing the brake actuator assembly, perform zero point calibration INFO .

PROCEDURE

1.	**PERFORM ACTIVE TEST USING TECHSTREAM (ABS MOTOR RELAY)**

(a) Connect the Techstream to the DLC3.

(b) Start the engine.

(c) Select the Active Test on the Techstream INFO .

ABS/VSC/TRAC

TESTER DISPLAY	TEST PART	CONTROL RANGE	DIAGNOSTIC NOTE
Motor Relay	ABS motor relay	Relay ON/OFF	Operating sound of motor can be heard

(d) Check for operating sound of the ABS motor relay when operating it using the

Techstream.

Result:

RESULT	PROCEED TO
Operating sound is not heard	A
Operating sound is heard	B

B ▶ **RECONFIRM DTC**

A ▼

2.	**INSPECT SKID CONTROL ECU (GND2 TERMINAL)**

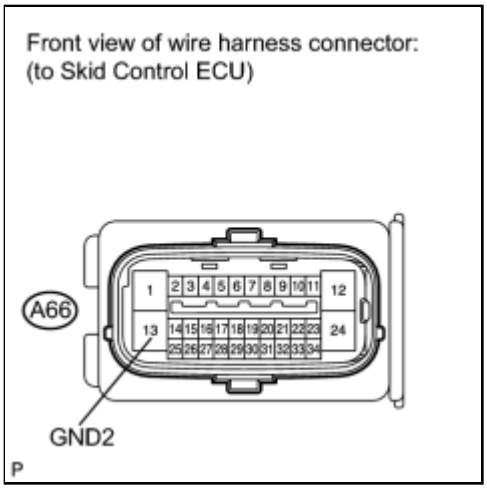

(a) Turn the ignition switch off.

(b) Make sure that there is no looseness at the locking part and the connecting part of the connector.

(c) Disconnect the skid control ECU connector.

(d) Measure the resistance according to the value(s) in the table below.

Standard Resistance:

TESTER CONNECTION	CONDITION	SPECIFIED CONDITION
A66-13 (GND2) - Body ground	Always	Below 1 Ω

NG ▶ **REPAIR OR REPLACE HARNESS OR CONNECTOR (GND2 CIRCUIT)**

OK

3.	RECONFIRM DTC

HINT:

This code is detected when a problem is identified in the brake actuator assembly.

The ABS motor relay is in the brake actuator assembly.

Therefore, ABS motor relay unit inspection cannot be performed. Be sure to check if the DTC is output before replacing the brake actuator assembly.

(a) Turn the ignition switch off.

(b) Reconnect the skid control ECU connector.

(c) Clear the DTCs INFO .

(d) Start the engine.

(e) Drive the vehicle at a speed of 20 km/h (12 mph) or more for 30 seconds or more.

(f) Check if the same DTC is recorded INFO .

Result:

RESULT	PROCEED TO
DTC (C1427) is not output	A
DTC (C1427) is output	B

HINT:

- If a speed signal of 6 km/h (4 mph) or more is input to the skid control ECU with the ignition switch ON and the stop light switch off, the ECU performs self diagnosis of the motor and solenoid circuits.
- If the normal system code is output (no trouble codes are output), slightly jiggle the connectors, wire harness, and fuses of the brake actuator assembly. Make sure that no DTCs are output.
- If any DTCs are output while jiggling a connector or wire harness of the brake actuator assembly (skid control ECU), inspect and repair the connector or wire harness.
- It is suspected that the DTCs were output due to a bad connection of the connector terminal.

B ▶ **REPLACE BRAKE ACTUATOR ASSEMBLY**

A ▶ **CHECK FOR INTERMITTENT PROBLEMS (SYMPTOM SIMULATION)**

Last Modified: 3-10-2010	6.4 C	**From:** 200901
Model Year: 2010	**Model:** Corolla	**Doc ID:** RM0000368U00IX
Title: BRAKE CONTROL / DYNAMIC CONTROL SYSTEMS: VEHICLE STABILITY CONTROL SYSTEM: C1428: Motor Circuit Malfunction (2010 Corolla)		

DTC	**C1428**	**Motor Circuit Malfunction**

DESCRIPTION

DTC CODE	DTC DETECTION CONDITION	TROUBLE AREA
C1428	With the ABS motor relay OFF and the ABS motor fail safe relay ON, an open in the motor circuit continues for 2 seconds or more.	Brake actuator assembly (Motor circuit)

INSPECTION PROCEDURE

NOTICE:

When replacing the brake actuator assembly, perform zero point calibration INFO .

PROCEDURE

1.	**REPLACE BRAKE ACTUATOR ASSEMBLY**

(a) Replace the brake actuator assembly INFO .

NEXT ▶ **END**

Last Modified: 3-10-2010	6.4 C	**From:** 200901
Model Year: 2010	**Model:** Corolla	**Doc ID:** RM000000XIM04ZX
Title: BRAKE CONTROL / DYNAMIC CONTROL SYSTEMS: VEHICLE STABILITY CONTROL SYSTEM: C1432: Steering Angle Sensor Power Source Voltage Malfunction (2010 Corolla)		

DTC	**C1432**	**Steering Angle Sensor Power Source Voltage Malfunction**

DESCRIPTION

Steering angle sensor signals are sent to the skid control ECU via the CAN communication system. When there is a malfunction in the CAN communication system, it will be detected by the steering angle sensor zero point malfunction diagnostic function.

DTC CODE	DTC DETECTION CONDITION	TROUBLE AREA
C1432	Steering angle sensor power supply malfunction signal is received from steering angle sensor.	• Steering angle sensor power supply • Steering angle sensor

WIRING DIAGRAM

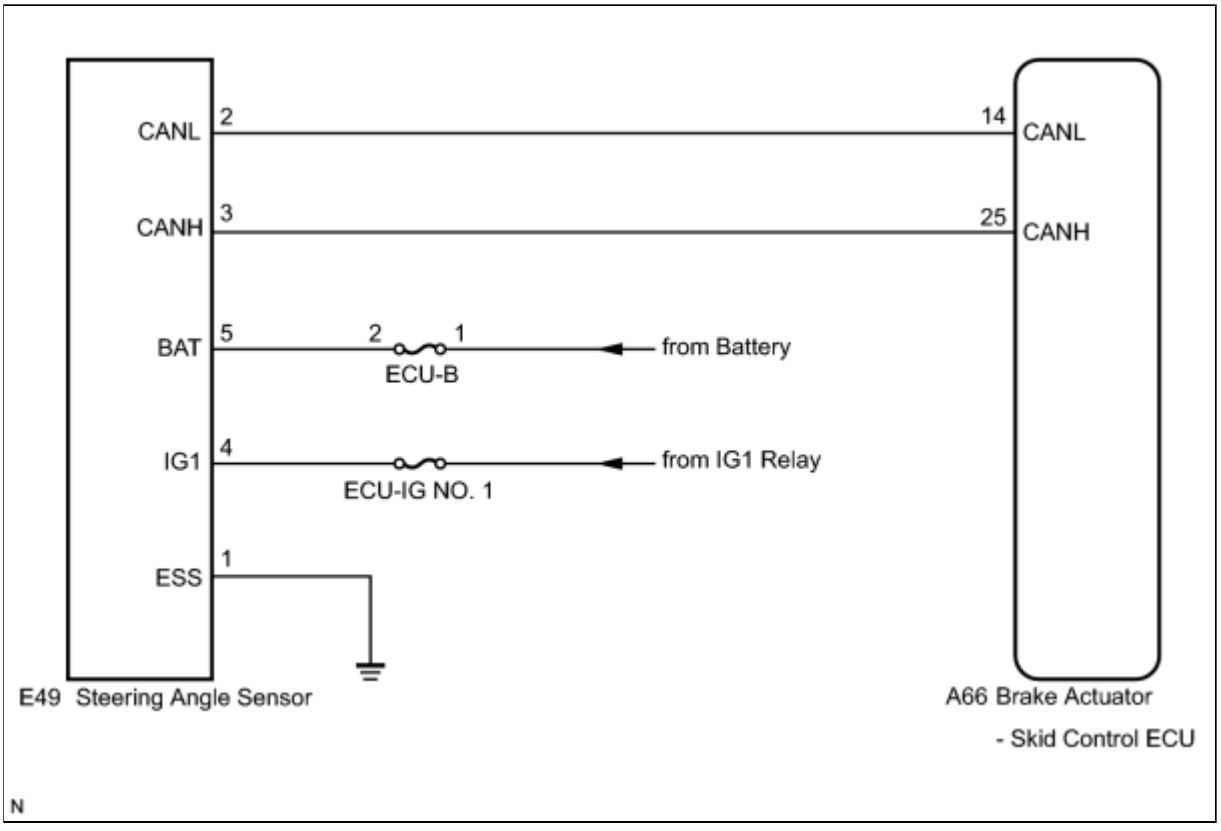

INSPECTION PROCEDURE

HINT:

- When U0073, U0123, U0124 and/or U0126 is output together with C1432, inspect and repair the trouble areas indicated by U0073, U0123, U0124 and/or U0126 first INFO .
- When the speed sensor or the yaw rate and acceleration sensor has trouble, DTCs for the steering angle sensor may be output even when the steering angle sensor is normal. When DTCs for the speed sensor or yaw rate and acceleration sensor are output together with DTCs for the steering angle sensor, inspect and repair the speed sensor and yaw rate and acceleration sensor first, and then inspect and repair the steering angle sensor.

PROCEDURE

1.	**INSPECT STEERING ANGLE SENSOR (POWER SOURCE TERMINAL)**

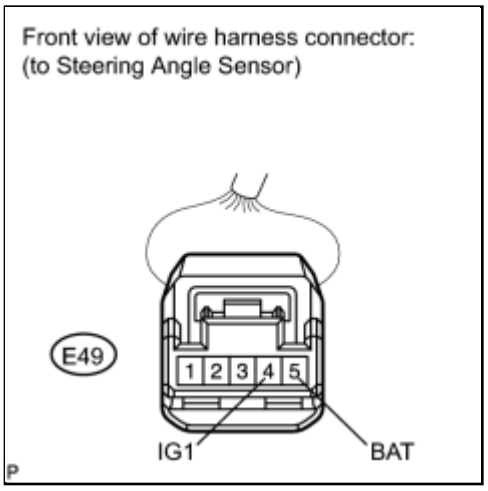

(a) Remove the steering wheel and the column cover.

(b) Make sure that there is no looseness at the locking part and the connecting part of the connector.

(c) Disconnect the steering angle sensor connector.

(d) Measure the voltage according to the value(s) in the table below.

Standard Voltage:

TESTER CONNECTION	CONDITION	SPECIFIED CONDITION
E49-4 (IG1) - Body ground	Ignition switch ON	11 to 14 V
E49-5 (BAT) - Body ground	Always	11 to 14 V

NG ▶ **REPAIR OR REPLACE HARNESS OR CONNECTOR (POWER SOURCE CIRCUIT)**

OK

2.	INSPECT STEERING ANGLE SENSOR (GROUND TERMINAL)

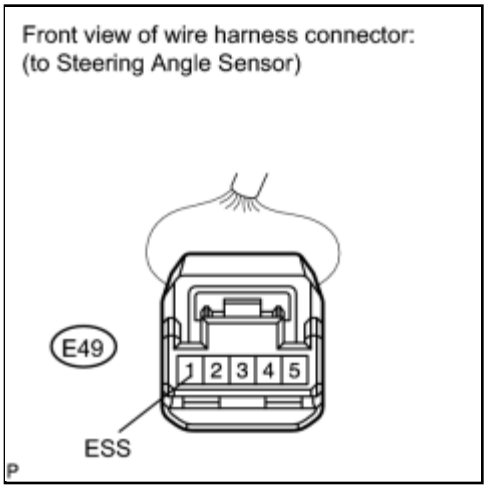

(a) Turn the ignition switch off.

(b) Measure the resistance according to the value(s) in the table below.

Standard Resistance:

TESTER CONNECTION	CONDITION	SPECIFIED CONDITION
E49-1 (ESS) - Body ground	Always	Below 1 Ω

HINT:

If troubleshooting has been carried out according to Problem Symptoms Table, refer back to the table and proceed to the next step INFO **.**

NG ▶ **REPAIR OR REPLACE HARNESS OR CONNECTOR (GROUND CIRCUIT)**

OK ▶ **REPLACE STEERING ANGLE SENSOR**

Last Modified: 3-10-2010	6.4 C	**From:** 200901
Model Year: 2010	**Model:** Corolla	**Doc ID:** RM000000XIM050X
Title: BRAKE CONTROL / DYNAMIC CONTROL SYSTEMS: VEHICLE STABILITY CONTROL SYSTEM: C1433: Steering Angle Sensor Internal Circuit (2010 Corolla)		

DTC	**C1433**	**Steering Angle Sensor Internal Circuit**

DESCRIPTION

Steering angle sensor signals are sent to the skid control ECU via the CAN communication system. When there is a malfunction in the CAN communication system, it will be detected by the steering angle sensor zero point malfunction diagnostic function.

DTC CODE	DTC DETECTION CONDITION	TROUBLE AREA
C1433	When the IG1 terminal voltage is between 10 and 17.4 V, a malfunction signal is received from the steering angle sensor.	Steering angle sensor

INSPECTION PROCEDURE

HINT:

- When U0073, U0123, U0124 and/or U0126 is output together with C1433, inspect and repair the trouble areas indicated by U0073, U0123, U0124 and/or U0126 first INFO .
- When any of the speed sensors or the yaw rate and acceleration sensor has trouble, DTCs for the steering angle sensor may be output even when the steering angle sensor is normal. When DTCs for the speed sensors or yaw rate and acceleration sensor are output together with DTCs for the steering angle sensor, inspect and repair the speed sensor and yaw rate and acceleration sensor first, and then inspect and repair the steering angle sensor.

PROCEDURE

1.	**REPLACE STEERING ANGLE SENSOR**

(a) Replace the steering angle sensor INFO .

HINT:

If troubleshooting has been carried out according to Problem Symptoms Table, refer back to the table and proceed to the next step INFO .

NEXT END

Last Modified: 3-10-2010	6.4 C	**From:** 200901
Model Year: 2010	**Model:** Corolla	**Doc ID:** RM000000XIM051X
Title: BRAKE CONTROL / DYNAMIC CONTROL SYSTEMS: VEHICLE STABILITY CONTROL SYSTEM: C1434: Steering Angle Sensor Output Malfunction (2010 Corolla)		

DTC	**C1434**	**Steering Angle Sensor Output Malfunction**

DESCRIPTION

Steering angle sensor signals are sent to the skid control ECU via the CAN communication system. When there is a malfunction in the CAN communication system, it will be detected by the steering angle sensor zero point malfunction diagnostic function.

DTC CODE	DTC DETECTION CONDITION	TROUBLE AREA
C1434	Error in communication between the skid control ECU and the steering angle sensor, or abnormal steering angle sensor zero point.	• Steering angle sensor power supply • Steering angle sensor • Brake actuator assembly (Skid control ECU)

WIRING DIAGRAM

Refer to DTC C1432 INFO .

INSPECTION PROCEDURE

HINT:

- When U0073, U0123, U0124 and/or U0126 is output together with C1434, inspect and repair the trouble areas indicated by U0073, U0123, U01245 and/or U0126 first INFO .
- When any of the speed sensors or the yaw rate and acceleration sensor has trouble, DTCs for the steering angle sensor may be output even when the steering angle sensor is normal. When DTCs for the speed sensors or yaw rate and acceleration sensor are output together with DTCs for the steering angle sensor, inspect and repair the speed sensor and yaw rate and acceleration sensor first, and then inspect and repair the steering angle sensor.

PROCEDURE

1.	**CHECK DTC**

(a) Clear the DTCs INFO .

(b) Turn the ignition switch off.

(c) Turn the ignition switch to ON again and check that no CAN communication system DTC is output INFO .

(d) Start the engine.

(e) Drive the vehicle and turn the steering wheel to the right and left at a speed of 35 km/h (22 mph) and check that no speed sensor or yaw rate and acceleration sensor DTCs are output INFO .

Result:

RESULT	PROCEED TO
No CAN communication system, speed sensor, or yaw rate and acceleration sensor DTCs are output	A
CAN communication system DTC is output	B
Speed sensor or yaw rate and acceleration sensor DTC is output	C

HINT:

- If there is a malfunction in any of the speed sensors or the yaw rate and acceleration sensor, an abnormal value may be output although the steering angle sensor is normal.
- If speed sensor and yaw rate and acceleration sensor DTCs are output simultaneously, repair these two sensors first and inspect the steering angle sensor.

C ▶ **REPAIR CIRCUIT INDICATED BY OUTPUT DTC**

B ▶ **INSPECT CAN COMMUNICATION SYSTEM**

A ▼

2.	**INSPECT STEERING ANGLE SENSOR (POWER SOURCE TERMINAL)**

(a) Turn the ignition switch off.

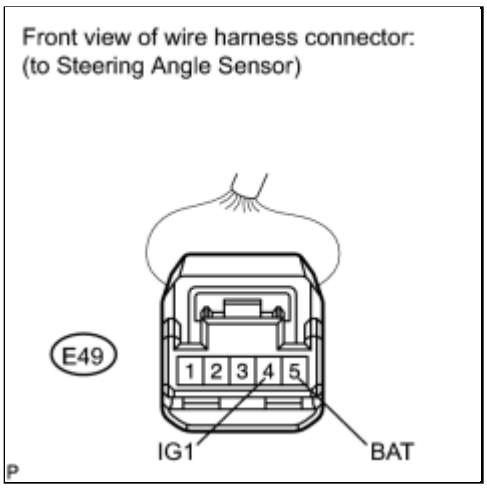

(b) Remove the steering wheel and the column cover.

(c) Make sure that there is no looseness at the locking part and the connecting part of the connector.

(d) Disconnect the steering angle sensor connector.

(e) Measure the voltage according to the value(s) in the table below.

Standard Voltage:

TESTER CONNECTION	CONDITION	SPECIFIED CONDITION
E49-4 (IG1) - Body ground	Ignition switch ON	11 to 14 V
E49-5 (BAT) - Body ground	Always	11 to 14 V

NG ▶ **REPAIR OR REPLACE HARNESS OR CONNECTOR (POWER SOURCE CIRCUIT)**

OK ▼

3.	**INSPECT STEERING ANGLE SENSOR (GROUND TERMINAL)**

(a) Turn the ignition switch off.

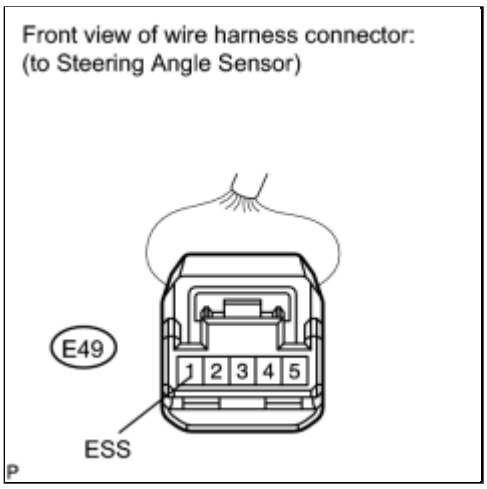

(b) Measure the resistance according to the value(s) in the table below.

Standard Resistance:

TESTER CONNECTION	CONDITION	SPECIFIED CONDITION
E49-1 (ESS) - Body ground	Always	Below 1 Ω

HINT:

If troubleshooting has been carried out according to Problem Symptoms Table, refer back to the table and proceed to the next step INFO **.**

NG ▶ **REPAIR OR REPLACE HARNESS OR CONNECTOR (GROUND CIRCUIT)**

OK ▶ **REPLACE STEERING ANGLE SENSOR**

Last Modified: 3-10-2010	6.4 C	**From:** 200901
Model Year: 2010	**Model:** Corolla	**Doc ID:** RM0000035P500IX
Title: BRAKE CONTROL / DYNAMIC CONTROL SYSTEMS: VEHICLE STABILITY CONTROL SYSTEM: C1436: Yaw Rate Sensor Malfunction (2010 Corolla)		

DTC	**C1436**	**Yaw Rate Sensor Malfunction**

DESCRIPTION

The skid control ECU receives signals from the yaw rate and acceleration sensor via the CAN communication system.

The yaw rate sensor has a built-in acceleration sensor and detects the vehicle's condition using 2 circuits (GL1, GL2).

If there is trouble in the bus lines between the yaw rate and acceleration sensor and the CAN communication system, DTCs U0123 (Lost Communication with Yaw Rate Sensor Module) and U0124 (Lost Communication with Lateral Acceleration Sensor Module) are set.

These DTCs are also output when calibration has not been completed.

DTC CODE	DTC DETECTION CONDITION	TROUBLE AREA
C1436	Either of the following is detected: 1. With the vehicle stationary, the yaw rate and acceleration sensor output value is not 0 deg/s. 2. Abnormal comparison value.	Yaw rate and acceleration sensor

INSPECTION PROCEDURE

NOTICE:

When replacing the yaw rate and acceleration sensor, perform zero point calibration INFO **.**

HINT:

When U0123, U0124 and/or U0126 is output together with C1436, inspect and repair the trouble areas indicated by U0123, U0124 and/or U0126 first INFO **.**

PROCEDURE

1.	**READ VALUE USING TECHSTREAM (YAW RATE AND ACCELERATION SENSOR)**

(a) Connect the Techstream to the DLC3.

(b) Turn the ignition switch to ON.

(c) Select the Data List on the Techstream INFO .

ABS/VSC/TRAC

TESTER DISPLAY	MEASUREMENT ITEM/RANGE	NORMAL CONDITION	DIAGNOSTIC NOTE
Yaw Rate Sensor	Yaw rate sensor / min.: -128 deg/s, max.: 127 deg/s	Vehicle stationary: 0 deg/s Right turn: -128 to 0 deg/s Left turn: 0 to 127 deg/s	-
Yaw Rate Sensor2	Yaw rate sensor 2 / min.: -128 deg/s, max.: 127 deg/s	Vehicle stationary: 0 deg/s Right turn: -128 to 0 deg/s Left turn: 0 to 127 deg/s	-

(d) Check that the yaw rate and acceleration sensor output value displayed on the Techstream.

Result:

RESULT	PROCEED TO
NG (The yaw rate and acceleration sensor output value is 0 deg/s when the vehicle is stationary, but the value fluctuates when turning)	A
NG (The yaw rate and acceleration sensor output value is not 0 deg/s when the vehicle is stationary)	B
OK	C

NOTICE:

Check the yaw rate and acceleration sensor signal after replacement INFO .

HINT:

If troubleshooting has been carried out according to Problem Symptoms Table, refer back to the table and proceed to the next step INFO .

C ▶ CHECK FOR INTERMITTENT PROBLEMS (SYMPTOM SIMULATION)

B ▶ REPLACE YAW RATE AND ACCELERATION SENSOR

A

2.	CHECK YAW RATE AND ACCELERATION SENSOR INSTALLATION

(a) Turn the ignition switch off.

(b) Check that the yaw rate and acceleration sensor has been installed properly INFO .

OK:

The sensor should be tightened to the specified torque.

The sensor should not be installed in a tilted position.

NOTICE:

Check the yaw rate and acceleration sensor signal after replacement INFO .

HINT:

If troubleshooting has been carried out according to Problem Symptoms Table, refer back to the table and proceed to the next step INFO .

NG ▶ **INSTALL YAW RATE AND ACCELERATION SENSOR CORRECTLY**

OK ▶ **REPLACE YAW RATE AND ACCELERATION SENSOR**

Last Modified: 3-10-2010	6.4 C	**From:** 200901
Model Year: 2010	**Model:** Corolla	**Doc ID:** RM000000YUO050X
Title: BRAKE CONTROL / DYNAMIC CONTROL SYSTEMS: VEHICLE STABILITY CONTROL SYSTEM: C1437: Lost Communication with ECM (2010 Corolla)		

DTC	**C1437**	**Lost Communication with ECM**

DESCRIPTION

The skid control ECU receives signals from the ECM via the CAN communication system.

DTC CODE	DTC DETECTION CONDITION	TROUBLE AREA
C1437	When the IG1 terminal voltage is 10 V or more and the vehicle speed is 15 km/h (9 mph) or more, data cannot be sent to the ECM for 2 seconds or more.	• CAN communication system (Skid control ECU to ECM) • Brake actuator assembly (Skid control ECU)

INSPECTION PROCEDURE

PROCEDURE

1.	**CHECK HARNESS AND CONNECTOR (MOMENTARY INTERRUPTION)**

(a) Using the Techstream, check for any momentary interruption in the wire harness and connector corresponding to the DTC INFO.

ABS/VSC/TRAC

TESTER DISPLAY	MEASUREMENT ITEM/RANGE	NORMAL CONDITION	DIAGNOSTIC NOTE
EFI Communication Open	EFI communication open detection / ERROR or NORMAL	ERROR: Momentary interruption NORMAL: Normal	-

OK:

There are no momentary interruptions.

HINT:

Perform the above inspection before removing the sensor and connector.

NG ▶ REPAIR OR REPLACE HARNESS OR CONNECTOR (SKID CONTROL ECU - ECM)

OK ▼

2.	RECONFIRM DTC

(a) Turn the ignition switch off.

(b) Clear the DTCs INFO .

(c) Start the engine.

(d) Drive the vehicle at a speed of 15 km/h (9 mph) or more for 10 seconds or more.

(e) Check that no CAN communication system DTC is output INFO .

(f) Check if the same DTC is recorded INFO .

Result:

RESULT	PROCEED TO
DTC (C1437) is not output	A
DTC (C1437) is output	B
DTC (CAN communication system DTC) is output	C

C ▶ INSPECT CAN COMMUNICATION SYSTEM

B ▶ REPLACE BRAKE ACTUATOR ASSEMBLY

A ▶ CHECK FOR INTERMITTENT PROBLEMS (SYMPTOM SIMULATION)

3.	REPAIR OR REPLACE HARNESS OR CONNECTOR (SKID CONTROL ECU - ECM)

(a) Turn the ignition switch off.

(b) Repair or replace the harness or connector.

(c) Check for any momentary interruption between the skid control ECU and the ECM INFO .

(d) Check that there is no momentary interruption.

NEXT

4.	RECONFIRM DTC

(a) Turn the ignition switch off.

(b) Clear the DTCs INFO .

(c) Start the engine.

(d) Drive the vehicle at a speed of 15 km/h (9 mph) or more for 10 seconds or more.

(e) Check that no CAN communication system DTC is output INFO .

(f) Check if the same DTC is recorded INFO .

Result:

RESULT	PROCEED TO
DTC (C1437) is not output	A
DTC (C1437) is output	B
DTC (CAN communication system DTC) is output	C

C ▶ **INSPECT CAN COMMUNICATION SYSTEM**

B ▶ **REPLACE BRAKE ACTUATOR ASSEMBLY**

A ▶ **END**

Last Modified: 3-10-2010	6.4 C	**From:** 200901
Model Year: 2010	**Model:** Corolla	**Doc ID:** RM000003NJL019X
Title: BRAKE CONTROL / DYNAMIC CONTROL SYSTEMS: VEHICLE STABILITY CONTROL SYSTEM: C1439,C1445: Steering Angle Sensor Initialization Incomplete (2010 Corolla)		

DTC	**C1439**	**Steering Angle Sensor Initialization Incomplete**

DTC	**C1445**	**Vehicle Driven with Steering Angle Sensor not Initialized**

DESCRIPTION

The skid control ECU acquires the steering angle sensor zero point every time the ignition switch is turned to ON and the vehicle is driven at 35 km/h (22 mph) or more for approximately 5 seconds. The ECU also stores previous zero points.

Warning of the steering angle sensor zero point malfunction will be cancelled by turning the ignition switch off.

DTC CODE	DTC DETECTION CONDITION	TROUBLE AREA
C1439	After the steering angle sensor zero point calibration is cleared due to, for example, fluctuations in the power source, the steering angle sensor zero point calibration cannot be obtained for 60 seconds of continuous driving.	• Steering angle sensor • Yaw rate and acceleration sensor • Brake actuator assembly (Skid control ECU)
C1445	Steering angle sensor zero point calibration cannot be obtained when the vehicle is driven without a record of steering angle sensor zero point calibration at a speed of 35 km/h (22 mph) or more for 30 seconds or more without the brake pedal being depressed.	• Steering angle sensor • Yaw rate and acceleration sensor • Brake actuator assembly (Skid control ECU)

INSPECTION PROCEDURE

NOTICE:

- When replacing the brake actuator assembly, perform zero point calibration INFO .

- Before proceeding with the inspection, explain to the customer that the output DTC is related to temporary loss of the steering angle zero point calibration, such as when the power source voltage drops when the battery is removed, and confirm that this condition occurred.

HINT:

- When U0073, U0123, U0124 and/or U0126 is output together with C1439 and/or C1445, inspect and repair the trouble areas indicated by U0073, U0123, U0124 and/or U0126 first INFO .
- When the speed sensor or the yaw rate and acceleration sensor has trouble, DTCs for the steering angle sensor may be output even when the steering angle sensor is normal. When DTCs for the speed sensor or yaw rate and acceleration sensor are output together with other DTCs for the steering angle sensor, inspect and repair the speed sensor and yaw rate and acceleration sensor first, and then inspect and repair the steering angle sensor.

PROCEDURE

1.	**CHECK DTC**

(a) Clear the DTCs INFO .

(b) Turn the ignition switch off.

(c) Turn the ignition switch to ON again and check that no CAN communication system DTCs are output INFO .

(d) Drive the vehicle and turn the steering wheel to the right and left at a speed of 35 km/h (22 mph) and check that no speed sensor and yaw rate and acceleration sensor DTCs are output INFO .

Result:

RESULT	PROCEED TO
DTCs (C1439 and/or C1445) are output	A
CAN communication system DTC is output	B
Speed sensor and/or yaw rate and acceleration sensor DTC is output	C
DTCs (C1439 and C1445) are not output	D

HINT:

- If there is a malfunction in the speed sensor or the yaw rate and acceleration sensor, an abnormal value may be output although the steering angle sensor is normal.
- If the speed sensor and the yaw rate and acceleration sensor DTCs are output simultaneously, repair the sensors and inspect the steering angle sensor.
- If the same DTC C1439 and/or C1445 is not output again, the DTC may have been stored due to a temporary loss of the steering angle zero point calibration, such as when the power source voltage drops.

D ▶ CHECK FOR INTERMITTENT PROBLEMS (SYMPTOM SIMULATION)

C ▶ REPAIR CIRCUIT INDICATED BY OUTPUT DTC

B ▶ INSPECT CAN COMMUNICATION SYSTEM

A ▼

2.	CHECK STEERING ANGLE SENSOR ZERO POINT CALIBRATION

(a) Drive the vehicle straight ahead at 35 km/h (22 mph) or more for at least 5 seconds.

(b) Check that the steering wheel is centered while driving straight ahead.

HINT:

If front wheel alignment and steering position are adjusted as a result of an off-centered position of the steering wheel, acquire yaw rate and acceleration sensor zero point again after the adjustments are completed.

OK:
The steering wheel is centered.

NG ▶ ADJUST FRONT WHEEL ALIGNMENT OR STEERING POSITION

OK ▼

3.	RECONFIRM DTC

(a) Turn the ignition switch off.

(b) Clear the DTCs INFO .

(c) Start the engine.

(d) Drive the vehicle and turn the steering wheel to the right and left at the speed of 35 km/h (22 mph) or more.

(e) Check if the same DTC is recorded INFO .

Result:

RESULT	PROCEED TO
DTCs (C1439 and/or C1445) are output	A
DTCs (C1439 and C1445) are not output	B

HINT:

- If the same DTC C1439 and/or C1445 is not output again, the DTC may have been stored due to a temporary loss of the steering angle zero point calibration, such as when the power source voltage drops.
- If troubleshooting has been carried out according to Problem Symptoms Table, refer back to the table and proceed to the next step INFO .

B ▶ **END**

A ▶ **REPLACE BRAKE ACTUATOR ASSEMBLY**

Last Modified: 3-10-2010	6.4 C	**From:** 200901
Model Year: 2010	**Model:** Corolla	**Doc ID:** RM000003NL2010X
Title: BRAKE CONTROL / DYNAMIC CONTROL SYSTEMS: VEHICLE STABILITY CONTROL SYSTEM: C1440: Unusual Bank Angle Detected (2010 Corolla)		

DTC	**C1440**	**Unusual Bank Angle Detected**

DESCRIPTION

If the skid control ECU determines that the vehicle is being driven at a steep bank angle, the skid control ECU stores DTC C1440 while VSC operation is temporarily disabled.

It is not a malfunction if the system and sensor circuits are normal and if the normal VSC operation resumes, which automatically clears DTC 1440, after the vehicle is returned to a normal position.

DTC CODE	DTC DETECTION CONDITION	TROUBLE AREA
C1440	Driving at a steep bank angle.	Yaw rate and acceleration sensor

INSPECTION PROCEDURE

PROCEDURE

1.	**CHECK DTC**

(a) Clear the DTCs INFO .

(b) Perform a road test.

(c) Check if the same DTC is recorded INFO .

Result:

RESULT	PROCEED TO
DTC (C1440) is output	A
DTC (C1440) is not output	B
Yaw rate and acceleration sensor DTC is output	C

C ▶ **REPAIR CIRCUIT INDICATED BY OUTPUT DTC**

B ▶ **END**

A

2.	**CLEAR DTC**

(a) Clear the DTCs INFO .

HINT:

- If the skid control ECU determines that the vehicle is being driven at a steep bank angle, the skid control ECU stores DTC C1440 while VSC operation is temporarily disabled.
- It is not a malfunction if the system and sensor circuits are normal and if the normal VSC operation resumes, which automatically clears DTC 1440, after the vehicle is returned to a normal position.

NEXT END

Last Modified: 3-10-2010	6.4 C	**From:** 200901
Model Year: 2010	**Model:** Corolla	**Doc ID:** RM000003NL3016X
Title: BRAKE CONTROL / DYNAMIC CONTROL SYSTEMS: VEHICLE STABILITY CONTROL SYSTEM: C1442,C1443: Invalid Data Received from Acceleration Sensor (2010 Corolla)		

DTC	**C1442**	**Invalid Data Received from Acceleration Sensor**

DTC	**C1443**	**Invalid Data Received from Yaw Rate Sensor**

DESCRIPTION

The skid control ECU receives signals from the yaw rate and acceleration sensor via the CAN communication system.

The yaw rate sensor has a built-in acceleration sensor and detects the vehicle condition.

DTC CODE	DTC DETECTION CONDITION	TROUBLE AREA
C1442	With terminal IG1 voltage between 9.5 and 17.4 V, an invalid data signal is received from the acceleration sensor for 10 seconds or more.	Yaw rate and acceleration sensor
C1443	With terminal IG1 voltage between 9.5 and 17.4 V, an invalid data signal is received from the yaw rate sensor for 10 seconds or more.	Yaw rate and acceleration sensor

INSPECTION PROCEDURE

NOTICE:

When replacing the yaw rate and acceleration sensor, perform zero point calibration INFO .

PROCEDURE

1.	**CHECK DTC**

(a) Clear the DTCs INFO .

(b) Start and idle the engine for 60 seconds, and then stop the engine.

(c) Check if the same DTC is recorded INFO .

Result:

RESULT	PROCEED TO
DTCs (C1442 and/or C1443) are output	A
DTCs (C1442 and C1443) are not output	B

HINT:

If troubleshooting has been carried out according to Problem Symptoms Table, refer back to the table and proceed to the next step INFO **.**

B ▶ **CHECK FOR INTERMITTENT PROBLEMS (SYMPTOM SIMULATION)**

A ▶ **REPLACE YAW RATE AND ACCELERATION SENSOR**

Last Modified: 3-10-2010	6.4 C	**From:** 200901
Model Year: 2010	**Model:** Corolla	**Doc ID:** RM000000YUO051X
Title: BRAKE CONTROL / DYNAMIC CONTROL SYSTEMS: VEHICLE STABILITY CONTROL SYSTEM: U0073,U0100,U0123,U0124,U0126: Control Module Communication Bus OFF (2010 Corolla)		

DTC	**U0073**	**Control Module Communication Bus OFF**

DTC	**U0100**	**Lost Communication with ECM / PCM**

DTC	**U0123**	**Lost Communication with Yaw Rate Sensor Module**

DTC	**U0124**	**Lost Communication with Lateral Acceleration Sensor Module**

DTC	**U0126**	**Lost Communication with Steering Angle Sensor Module**

DESCRIPTION

The skid control ECU receives signals from the ECM, steering angle sensor, and yaw rate and acceleration sensor via the CAN communication system.

DTC CODE	DTC DETECTION CONDITION	TROUBLE AREA
U0073	Any of the following is detected: 1. When the IG1 terminal voltage is between 10 and 17.4 V, after the output of data from the skid control ECU is completed, the signals cannot be sent for 5 seconds or more. 2. The condition that bus OFF state occurs once or more within 0.1 seconds occurs 10 times in succession. (Sent signals cannot be received.) 3. When the IG1 terminal voltage is between 10 and 17.4 V, a delay in receiving data from the yaw rate and acceleration sensor and steering angle sensor continues for 1 second or more. 4. When the IG1 terminal voltage is between 10 and 17.4	CAN communication system

DTC CODE	DTC DETECTION CONDITION	TROUBLE AREA
	V, the following occurs 10 times in succession. ○ The condition that a delay in receiving data from the yaw rate and acceleration sensor and steering angle sensor occurs more than once within 5 seconds.	
U0100	The IG1 terminal voltage is between 10 and 17.4 V and the vehicle speed is 15 km/h (9 mph) or more, data cannot be received from the ECM for 2 seconds or more.	CAN communication system (Skid control ECU to ECM)
U0123	Either of the following is detected: 1. When the IG1 terminal voltage is between 10 and 17.4 V, data from the yaw rate sensor cannot be received for 1 second or more. 2. When the IG1 terminal voltage is between 10 and 17.4 V, the following occurs 10 times in succession. ○ The condition that data from the yaw rate sensor cannot be received occurs once or more within 5 seconds.	CAN communication system (Skid control ECU to yaw rate and acceleration sensor)
U0124	Either of the following is detected: 1. When the IG1 terminal voltage is between 10 and 17.4 V, data from the acceleration sensor cannot be received for 1 second or more. 2. When the IG1 terminal voltage is between 10 and 17.4 V, the following occurs 10 times in succession. ○ The condition that data from the acceleration sensor cannot be received occurs once or more within 5 seconds.	CAN communication system (Skid control ECU to yaw rate and acceleration sensor)
U0126	Either of the following is detected: 1. When the IG1 terminal voltage is between 10 and 17.4 V, data from the steering angle sensor cannot be received for 1 second or more. 2. When the IG1 terminal voltage is between 10 and 17.4 V, the following occurs 10 times in succession. ○ The condition that data from the steering angle sensor cannot be received occurs once or more within 5 seconds.	CAN communication system (Skid control ECU to steering angle sensor)

WIRING DIAGRAM

for TMC Made:

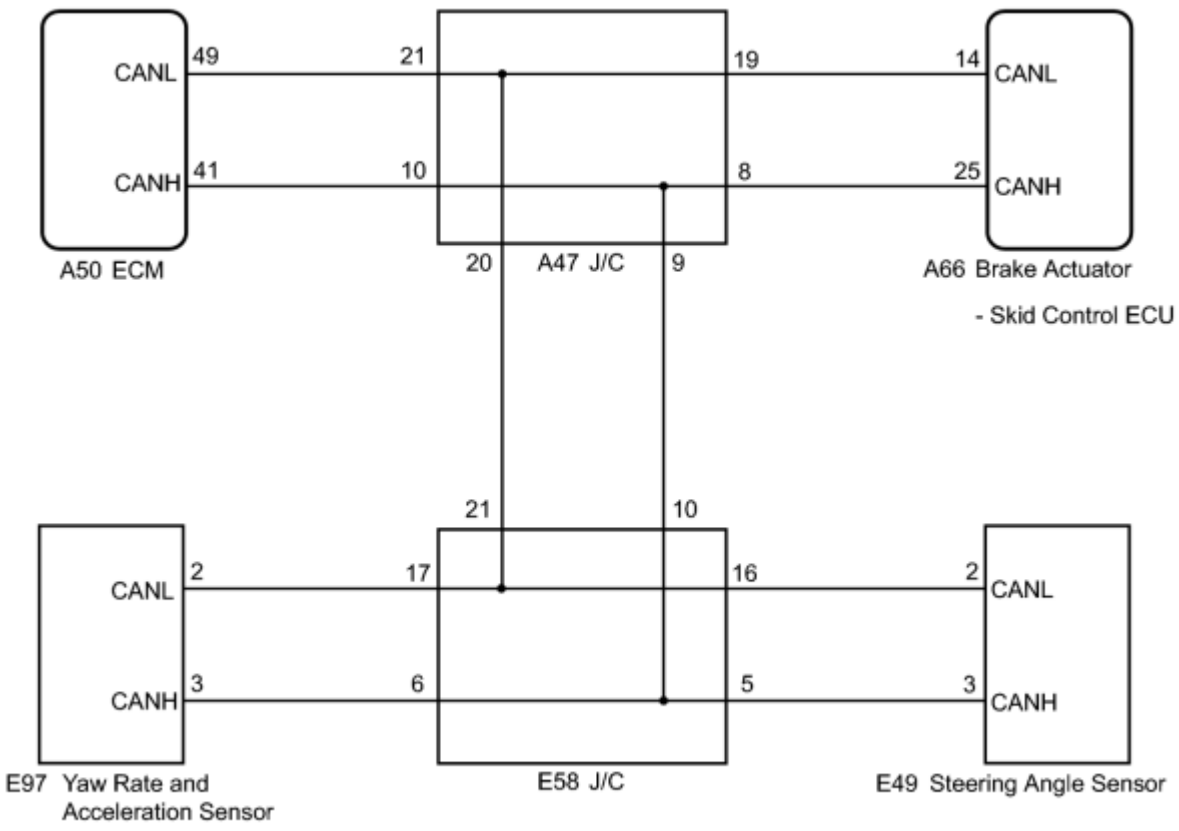
CANL
49
21
19
14
CANL
CANH
41
10
8
25
CANH
A50 ECM
20
A47 J/C
9
A66 Brake Actuator
- Skid Control ECU
21
10
CANL
2
17
16
2
CANL
CANH
3
6
5
3
CANH
E97 Yaw Rate and Acceleration Sensor
E58 J/C
E49 Steering Angle Sensor

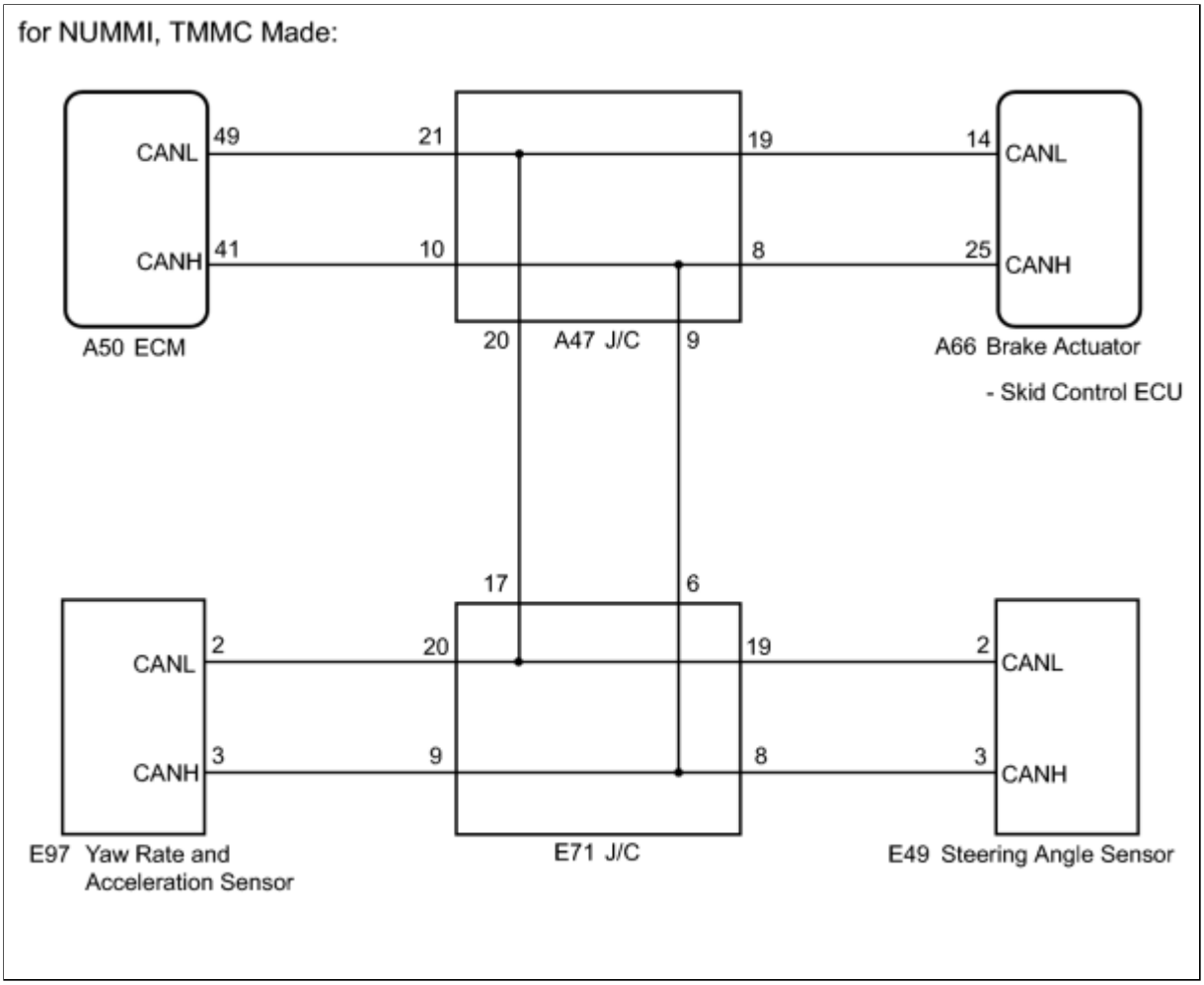

INSPECTION PROCEDURE

PROCEDURE

1.	**CHECK HARNESS AND CONNECTOR (MOMENTARY INTERRUPTION)**

(a) Using the Techstream, check for any momentary interruption in the wire harness and connector corresponding to the DTC INFO .

ABS/VSC/TRAC

TESTER DISPLAY	MEASUREMENT ITEM/RANGE	NORMAL CONDITION	DIAGNOSTIC NOTE
EFI Communication Open	EFI communication open detection / ERROR or NORMAL	ERROR: Momentary interruption NORMAL: Normal	-
Yaw Rate Open	Yaw rate sensor open detection / ERROR or NORMAL	ERROR: Momentary interruption	-

TESTER DISPLAY	MEASUREMENT ITEM/RANGE	NORMAL CONDITION	DIAGNOSTIC NOTE
		NORMAL: Normal	
Steering Open	Steering angle sensor open detection / ERROR or NORMAL	ERROR: Momentary interruption NORMAL: Normal	-

Result:

RESULT	PROCEED TO
There is a constant open circuit	A
There are no momentary interruptions	B
There are momentary interruptions	C

HINT:

Perform the above inspection before removing the sensor and connector.

C ▶ **REPAIR OR REPLACE HARNESS OR CONNECTOR**

B ▶ **RECONFIRM DTC**

A
▼

2.	**CHECK IF EACH SENSOR AND ECM CONNECTOR IS SECURELY CONNECTED**

(a) Turn the ignition switch off.

(b) Check if each sensor or ECM connector is securely connected.

OK:
Each connector is securely connected.

NG ▶ **CONNECT CONNECTOR TO EACH SENSOR OR ECM CORRECTLY**

OK
▼

3.	RECONFIRM DTC

(a) Turn the ignition switch off.

(b) Record the output DTCs (for ABS, VSC system and/or CAN communication system) INFO for ABS and VSC system, or INFO for CAN communication system).

HINT:

If CAN communication system DTCs and the relevant sensor DTCs are output simultaneously, troubleshoot the relevant sensor DTCs (for ABS and/or VSC system) after the CAN communication system returns to normal.

Result:

RESULT	PROCEED TO
DTC is not output	A
DTC (ABS and/or VSC system DTC) is output	B
DTC (CAN communication system DTC) is output	C

C ▶ **INSPECT CAN COMMUNICATION SYSTEM**

B ▶ **REPAIR CIRCUIT INDICATED BY OUTPUT DTC**

A ▶ **CHECK FOR INTERMITTENT PROBLEMS (SYMPTOM SIMULATION)**

4.	REPAIR OR REPLACE HARNESS OR CONNECTOR

(a) Turn the ignition switch off.

(b) Repair or replace the harness or connector.

(c) Check for any momentary interruption between the skid control ECU and each sensor or ECM INFO .

(d) Check that there are no momentary interruptions.

NEXT ▼

5.	RECONFIRM DTC

(a) Turn the ignition switch off.

(b) Clear the DTCs INFO.

(c) Start the engine.

(d) Drive the vehicle and turn the steering wheel to the right and left at a speed of 15 km/h (9 mph) or more.

(e) Check that no CAN communication system DTC is output INFO.

(f) If ABS and/or VSC system DTCs are output, record them INFO.

Result:

RESULT	PROCEED TO
DTC is not output	A
DTC (ABS and/or VSC system DTC) is output	B
DTC (CAN communication system DTC) is output	C

HINT:

The CAN communication system must be normal when performing troubleshooting for each sensor DTC (for ABS and/or VSC system).

C ▶ **INSPECT CAN COMMUNICATION SYSTEM**

B ▶ **REPAIR CIRCUIT INDICATED BY OUTPUT DTC**

A ▶ **END**

Last Modified: 3-10-2010	6.4 J	**From:** 200901
Model Year: 2010	**Model:** Corolla	**Doc ID:** RM000000XIH053X
Title: BRAKE CONTROL / DYNAMIC CONTROL SYSTEMS: VEHICLE STABILITY CONTROL SYSTEM: ABS Warning Light Remains ON (2010 Corolla)		

ABS Warning Light Remains ON

DESCRIPTION

The skid control ECU is connected to the combination meter via CAN communication.

If any of the following is detected, the ABS warning light remains on:

- The skid control ECU connector is disconnected from the skid control ECU.
- There is a malfunction in the skid control ECU internal circuit.
- There is an open circuit malfunctioning in the harness between the combination meter and the skid control ECU.
- The ABS control system is malfunctioning.

HINT:

In some cases, the Techstream cannot be used when the skid control ECU is abnormal.

WIRING DIAGRAM

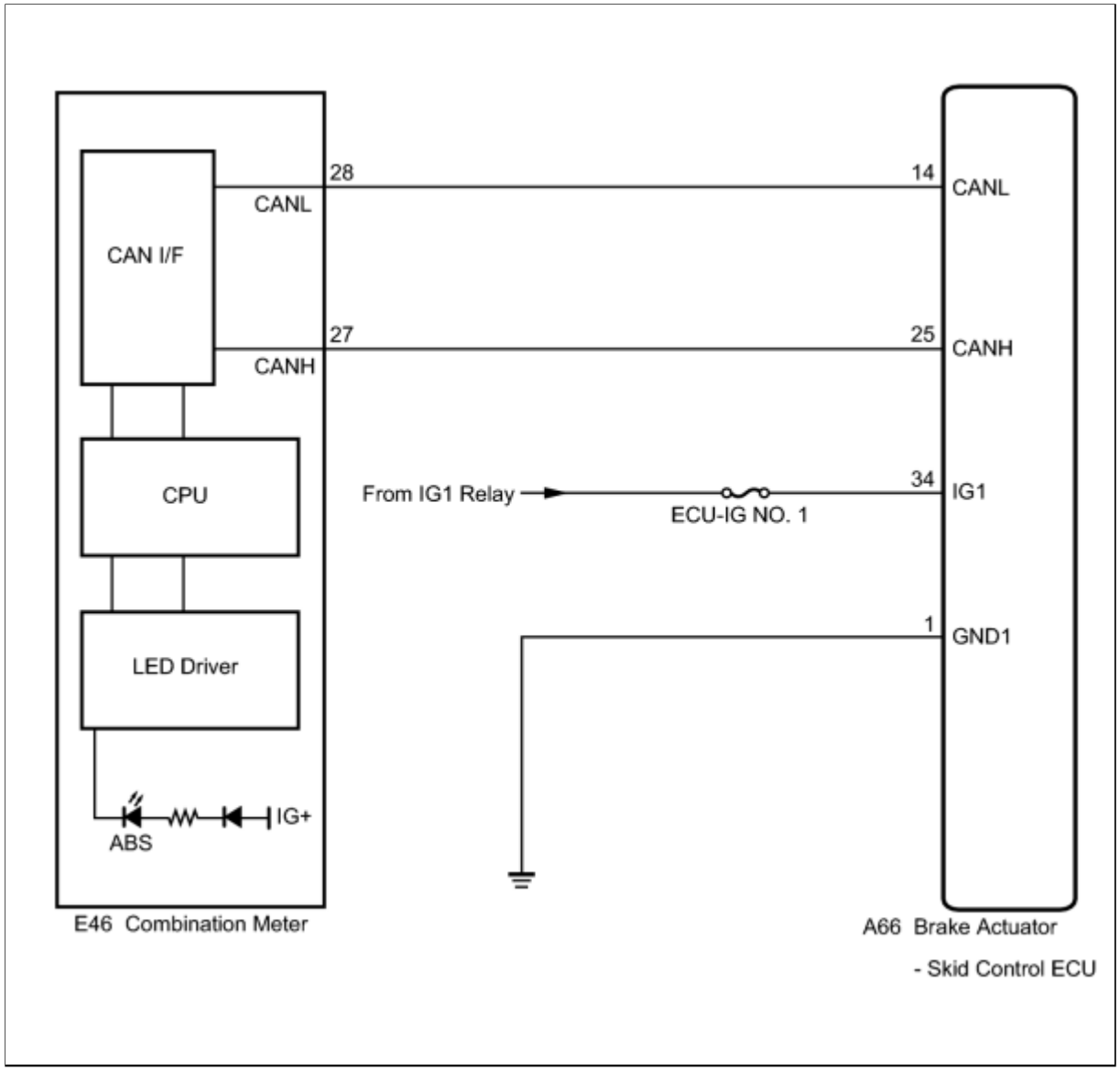

INSPECTION PROCEDURE

NOTICE:

When replacing the brake actuator assembly, perform zero point calibration INFO .

PROCEDURE

1.	**CHECK CAN COMMUNICATION SYSTEM**

(a) Check if a CAN communication system DTC is output INFO .

Result:

RESULT	PROCEED TO

RESULT	PROCEED TO
DTC is not output	A
DTC is output	B

B ▶ **INSPECT CAN COMMUNICATION SYSTEM**

A ▼

2.	CHECK IF SKID CONTROL ECU CONNECTOR IS SECURELY CONNECTED

(a) Check if the skid control ECU connector is securely connected.

OK:
The connector is securely connected.

NG ▶ **CONNECT CONNECTOR TO ECU CORRECTLY**

OK ▼

3.	CHECK BATTERY

(a) Check the battery voltage.

Standard Voltage:
11 to 14 V
Result:

RESULT	PROCEED TO
OK	A
NG (for 2AZ-FE)	B
NG (for 2ZR-FE)	C

C ▶ **CHECK OR REPLACE CHARGING SYSTEM OR BATTERY (for 2ZR-FE)**

B ▶ CHECK OR REPLACE CHARGING SYSTEM OR BATTERY (for 2AZ-FE)

A ▼

4.	INSPECT SKID CONTROL ECU (IG1 TERMINAL)

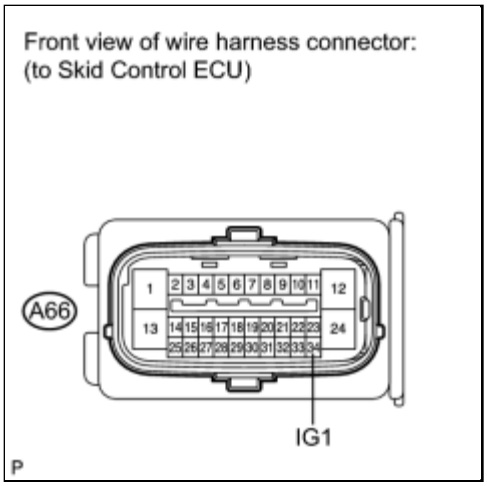

(a) Disconnect the skid control ECU connector.

(b) Turn the ignition switch to ON.

(c) Measure the voltage according to the value(s) in the table below.

Standard Voltage:

TESTER CONNECTION	SWITCH CONDITION	SPECIFIED CONDITION
A66-34 (IG1) - Body ground	Ignition switch ON	11 to 14 V

NG ▶ REPAIR OR REPLACE HARNESS OR CONNECTOR (IG1 CIRCUIT)

OK ▼

5.	INSPECT SKID CONTROL ECU (GND1 TERMINAL)

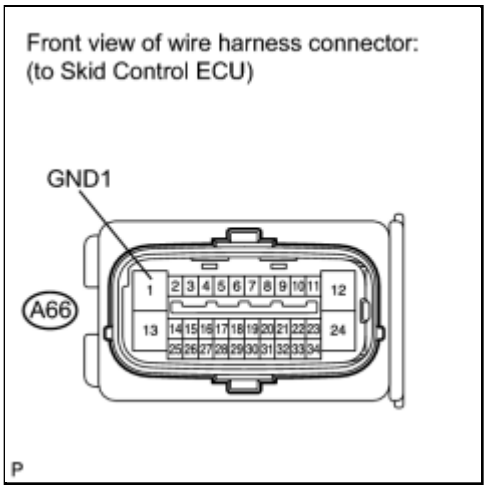

(a) Turn the ignition switch off.

(b) Measure the resistance according to the value(s) in the table below.

Standard Resistance:

TESTER CONNECTION	CONDITION	SPECIFIED CONDITION
A66-1 (GND1) - Body ground	Always	Below 1 Ω

NG ▶ **REPAIR OR REPLACE HARNESS OR CONNECTOR (GND1 CIRCUIT)**

OK ▼

6.	INSPECT COMBINATION METER ASSEMBLY

(a) Reconnect the skid control ECU connector.

(b) Perform the Active Test of the combination meter (meter CPU) using the Techstream INFO .

(c) Check the combination meter.

OK:

The ABS warning light turns on or off in accordance with the Techstream operation.

HINT:

If troubleshooting has been carried out according to the Problem Symptoms Table, refer back to the table and proceed to the next step before replacing the part INFO .

NG ▶ **REPLACE COMBINATION METER ASSEMBLY**

OK ▶ REPLACE BRAKE ACTUATOR ASSEMBLY

Last Modified: 3-10-2010	6.4 J	**From:** 200901
Model Year: 2010	**Model:** Corolla	**Doc ID:** RM000000YHG051X
Title: BRAKE CONTROL / DYNAMIC CONTROL SYSTEMS: VEHICLE STABILITY CONTROL SYSTEM: Brake Warning Light Remains ON (2010 Corolla)		

Brake Warning Light Remains ON

DESCRIPTION

The skid control ECU is connected to the combination meter via CAN communication.

If any of the following is detected, the brake warning light remains on:

- The skid control ECU connector is disconnected from the skid control ECU.
- The brake fluid level is insufficient.
- The parking brake is applied.
- EBD operation has been disabled.

WIRING DIAGRAM

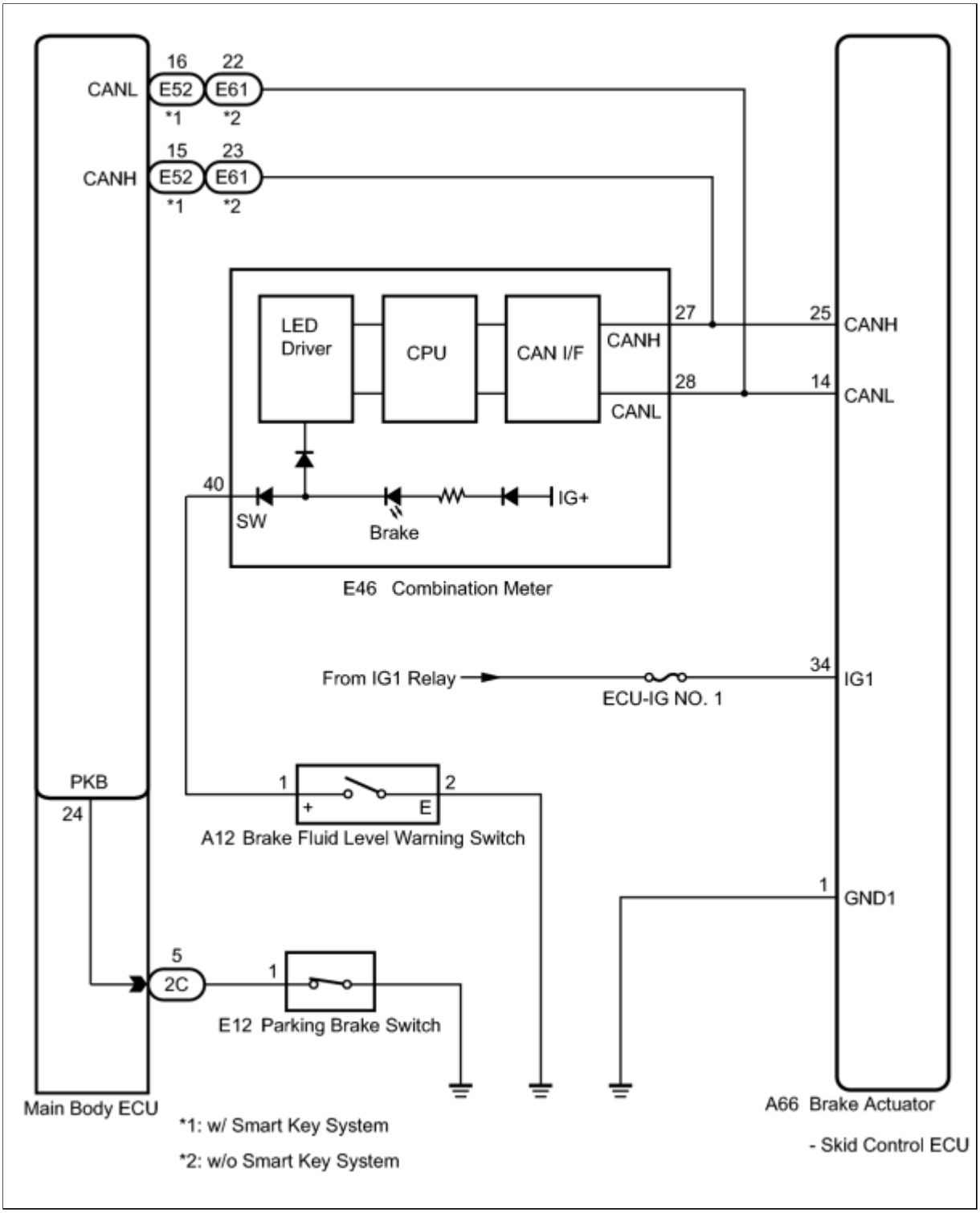

INSPECTION PROCEDURE

NOTICE:

When replacing the brake actuator assembly, perform zero point calibration INFO **.**

PROCEDURE

1.	**CHECK CAN COMMUNICATION SYSTEM**

(a) Check if a CAN communication system DTC is output INFO.

Result:

RESULT	PROCEED TO
DTC is not output	A
DTC is output	B

B ▶ **INSPECT CAN COMMUNICATION SYSTEM**

A ▼

2.	**CHECK IF SKID CONTROL ECU CONNECTOR IS SECURELY CONNECTED**

(a) Check if the skid control ECU connector is securely connected.

OK:

The connector is securely connected.

NG ▶ **CONNECT CONNECTOR TO ECU CORRECTLY**

OK ▼

3.	**CHECK BATTERY**

(a) Check the battery voltage.

Standard Voltage:

11 to 14 V

Result:

RESULT	PROCEED TO

RESULT	PROCEED TO
OK	A
NG (for 2AZ-FE)	B
NG (for 2ZR-FE)	C

C ▶ **CHECK OR REPLACE CHARGING SYSTEM OR BATTERY (for 2ZR-FE)**

B ▶ **CHECK OR REPLACE CHARGING SYSTEM OR BATTERY (for 2AZ-FE)**

A

▼

4.	**INSPECT SKID CONTROL ECU (IG1 TERMINAL)**

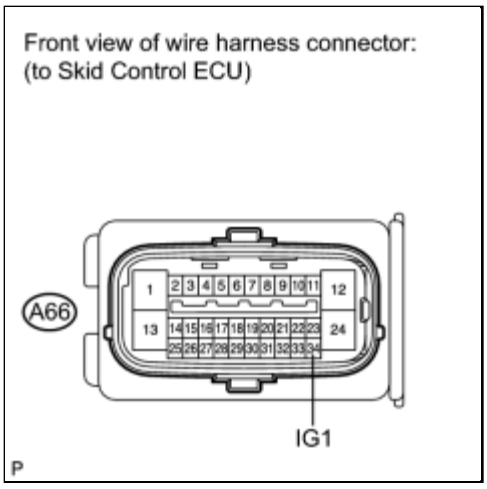

(a) Disconnect the skid control ECU connector.

(b) Turn the ignition switch to ON.

(c) Measure the voltage according to the value(s) in the table below.

Standard Voltage:

TESTER CONNECTION	SWITCH CONDITION	SPECIFIED CONDITION
A66-34 (IG1) - Body ground	Ignition switch ON	11 to 14 V

NG ▶ **REPAIR OR REPLACE HARNESS OR CONNECTOR (IG1 CIRCUIT)**

OK

5.	INSPECT SKID CONTROL ECU (GND1 TERMINAL)

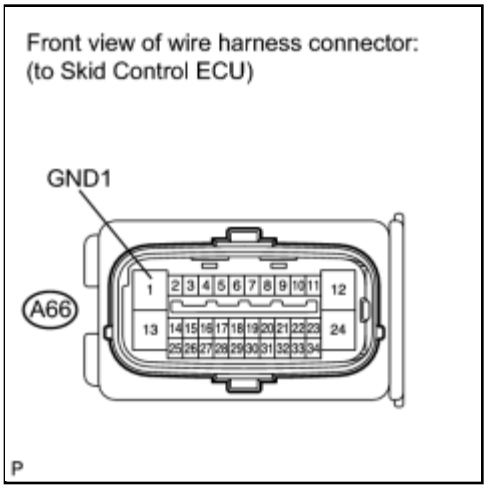

(a) Turn the ignition switch off.

(b) Measure the resistance according to the value(s) in the table below.

Standard Resistance:

TESTER CONNECTION	CONDITION	SPECIFIED CONDITION
A66-1 (GND1) - Body ground	Always	Below 1 Ω

NG ▶ **REPAIR OR REPLACE HARNESS OR CONNECTOR (GND1 CIRCUIT)**

OK

6.	READ VALUE USING TECHSTREAM (PARKING BRAKE SWITCH)

(a) Reconnect the skid control ECU connector.

(b) Connect the Techstream to the DLC3.

(c) Turn the ignition switch to ON.

(d) Select Data List mode on the Techstream INFO .

ABS/VSC/TRAC

TESTER DISPLAY	MEASUREMENT ITEM / RANGE	NORMAL CONDITION	DIAGNOSTIC NOTE
Parking Brake SW	Parking brake switch / ON or OFF	ON: Parking brake applied OFF: Parking brake released	-

(e) Using the Techstream, check the switch operation when the parking brake is applied.

OK:

The Techstream displays ON or OFF according to parking brake operation.

NG ▶ **INSPECT PARKING BRAKE SWITCH**

OK ▼

7.	INSPECT BRAKE FLUID LEVEL WARNING SWITCH

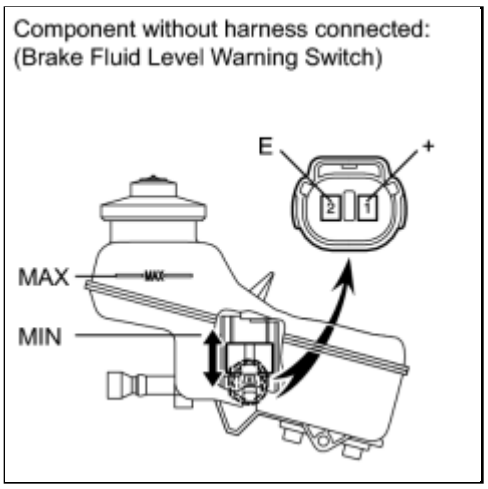

(a) Turn the ignition switch off.

(b) Remove the reservoir filler cap and strainer.

(c) Disconnect the brake fluid level warning switch connector.

(d) Measure the resistance according to the value(s) in the table below.

HINT:

A float is located inside the reservoir. Its position can be changed by increasing or decreasing the level of

brake fluid.

Standard Resistance:

TESTER CONNECTION	SWITCH CONDITION	SPECIFIED CONDITION
1 (+) - 2 (E)	Switch OFF (Float up)	1.9 to 2.1 kΩ
1 (+) - 2 (E)	Switch ON (Float down)	Below 1 Ω

HINT:

If there are no problems after finishing the check above, adjust the brake fluid level to the MAX level.

NG ▶ **REPLACE BRAKE MASTER CYLINDER RESERVOIR ASSEMBLY (BRAKE FLUID LEVEL WARNING SWITCH)**

OK ▼

8.	**CHECK HARNESS AND CONNECTOR (COMBINATION METER - BRAKE FLUID LEVEL WARNING SWITCH)**

(a) Disconnect the combination meter connector.

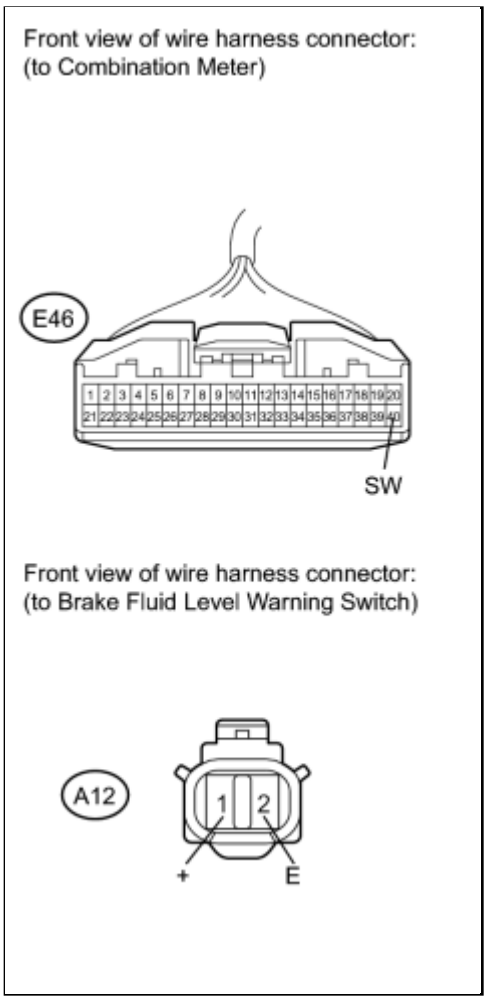

(b) Measure the resistance according to the value(s) in the table below.

Standard Resistance:

TESTER CONNECTION	CONDITION	SPECIFIED CONDITION
E46-40 (SW) - A12-1 (+)	Always	Below 1 Ω
E46-40 (SW) - Body ground	Always	10 kΩ or higher
A12-2 (E) - Body ground	Always	Below 1 Ω

NG ▶ **REPAIR OR REPLACE HARNESS OR CONNECTOR**

OK ▼

9.	**INSPECT COMBINATION METER ASSEMBLY**

(a) Perform the Active Test of the combination meter (meter CPU) using the Techstream INFO .

(b) Check the combination meter.

HINT:

Reinstall the connectors and restore the vehicle to its prior condition before checking the combination meter.

OK:

The brake warning light turns on or off in accordance with the Techstream operation.

HINT:

If troubleshooting has been carried out according to the Problem Symptoms Table, refer back to the table and proceed to the next step before replacing the part INFO .

NG ▶ **REPLACE COMBINATION METER ASSEMBLY**

OK ▶ **REPLACE BRAKE ACTUATOR ASSEMBLY**

10.	INSPECT PARKING BRAKE SWITCH

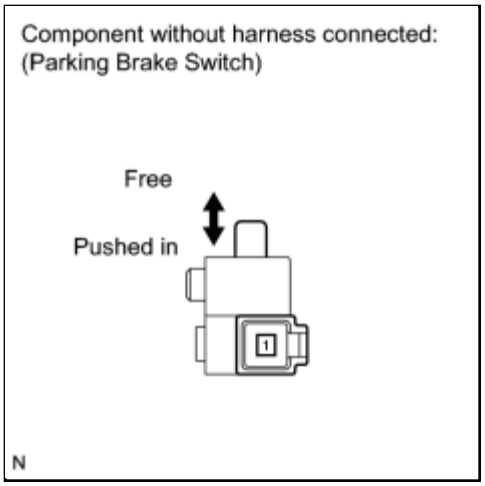

(a) Turn the ignition switch off.

(b) Disconnect the parking brake switch connector.

(c) Measure the resistance according to the value(s) in the table below.

Standard Resistance:

TESTER CONNECTION	SWITCH CONDITION	SPECIFIED CONDITION
1 - Body ground	Parking brake switch ON (Switch pin free)	Below 1 Ω

TESTER CONNECTION	SWITCH CONDITION	SPECIFIED CONDITION
1 - Body ground	Parking brake switch OFF (Switch pin pushed in)	10 kΩ or higher

NG ▶ **REPLACE PARKING BRAKE SWITCH**

OK
▼

11.	CHECK HARNESS AND CONNECTOR (MAIN BODY ECU - PARKING BRAKE SWITCH)

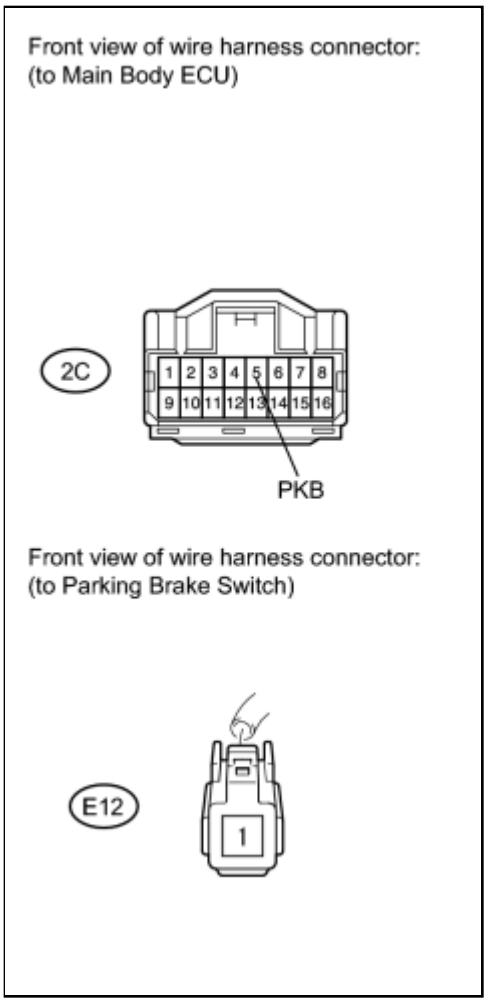

(a) Disconnect the main body ECU connector.

(b) Measure the resistance according to the value(s) in the table below.

Standard Resistance:

TESTER CONNECTION	CONDITION	SPECIFIED CONDITION
2C-5 (PKB) - E12-1	Always	Below 1 Ω
2C-5 (PKB) - Body ground	Always	10 kΩ or higher

HINT:

If troubleshooting has been carried out according to the Problem Symptoms Table, refer back to the table and proceed to the next step before replacing the part INFO **.**

NG ▶ **REPAIR OR REPLACE HARNESS OR CONNECTOR**

OK ▶ **REPLACE MAIN BODY ECU (INSTRUMENT PANEL JUNCTION BLOCK)**

Last Modified: 3-10-2010	6.4 J	**From:** 200901
Model Year: 2010	**Model:** Corolla	**Doc ID:** RM000000XIQ052X
Title: BRAKE CONTROL / DYNAMIC CONTROL SYSTEMS: VEHICLE STABILITY CONTROL SYSTEM: ABS Warning Light does not Come ON (2010 Corolla)		

ABS Warning Light does not Come ON

DESCRIPTION

The skid control ECU is connected to the combination meter via CAN communication.

WIRING DIAGRAM

Refer to ABS Warning Light Remains ON INFO .

INSPECTION PROCEDURE

NOTICE:

When replacing the brake actuator assembly, perform zero point calibration INFO .

PROCEDURE

1.	**CHECK CAN COMMUNICATION SYSTEM**

(a) Check if a CAN communication system DTC is output INFO .

Result:

RESULT	PROCEED TO
DTC is not output	A
DTC is output	B

B ▶ **INSPECT CAN COMMUNICATION SYSTEM**

A ▼

2.	**CHECK ABS WARNING LIGHT**

(a) Disconnect the skid control ECU connector.

(b) Turn the ignition switch to ON.

(c) Check that the ABS warning light comes on.

OK:

The ABS warning light comes on.

HINT:

If troubleshooting has been carried out according to the Problem Symptoms Table, refer back to the table and proceed to the next step before replacing the part INFO **.**

NG ▶ **INSPECT COMBINATION METER ASSEMBLY**

OK ▶ **REPLACE BRAKE ACTUATOR ASSEMBLY**

3.	INSPECT COMBINATION METER ASSEMBLY

(a) Turn the ignition switch off.

(b) Reconnect the skid control ECU connector.

(c) Perform the Active Test of the combination meter (meter CPU) using the Techstream INFO .

(d) Check the combination meter.

OK:

The ABS warning light turns on or off in accordance with the Techstream operation.

HINT:

If troubleshooting has been carried out according to the Problem Symptoms Table, refer back to the table and proceed to the next step INFO **.**

NG ▶ **REPLACE COMBINATION METER ASSEMBLY**

OK ▶ **REPLACE BRAKE ACTUATOR ASSEMBLY**

Last Modified: 3-10-2010	6.4 J	**From:** 200901
Model Year: 2010	**Model:** Corolla	**Doc ID:** RM000001FQO03KX
Title: BRAKE CONTROL / DYNAMIC CONTROL SYSTEMS: VEHICLE STABILITY CONTROL SYSTEM: VSC OFF Indicator Light Remains ON (2010 Corolla)		

VSC OFF Indicator Light Remains ON

DESCRIPTION

The skid control ECU is connected to the combination meter via CAN communication.

If the skid control ECU stores a DTC, the VSC OFF indicator light blinks in the combination meter.

Pressing the VSC OFF switch turns off traction control and pressing and holding this switch turns off traction and VSC controls. If VSC control turns off, the VSC OFF indicator light will come on.

WIRING DIAGRAM

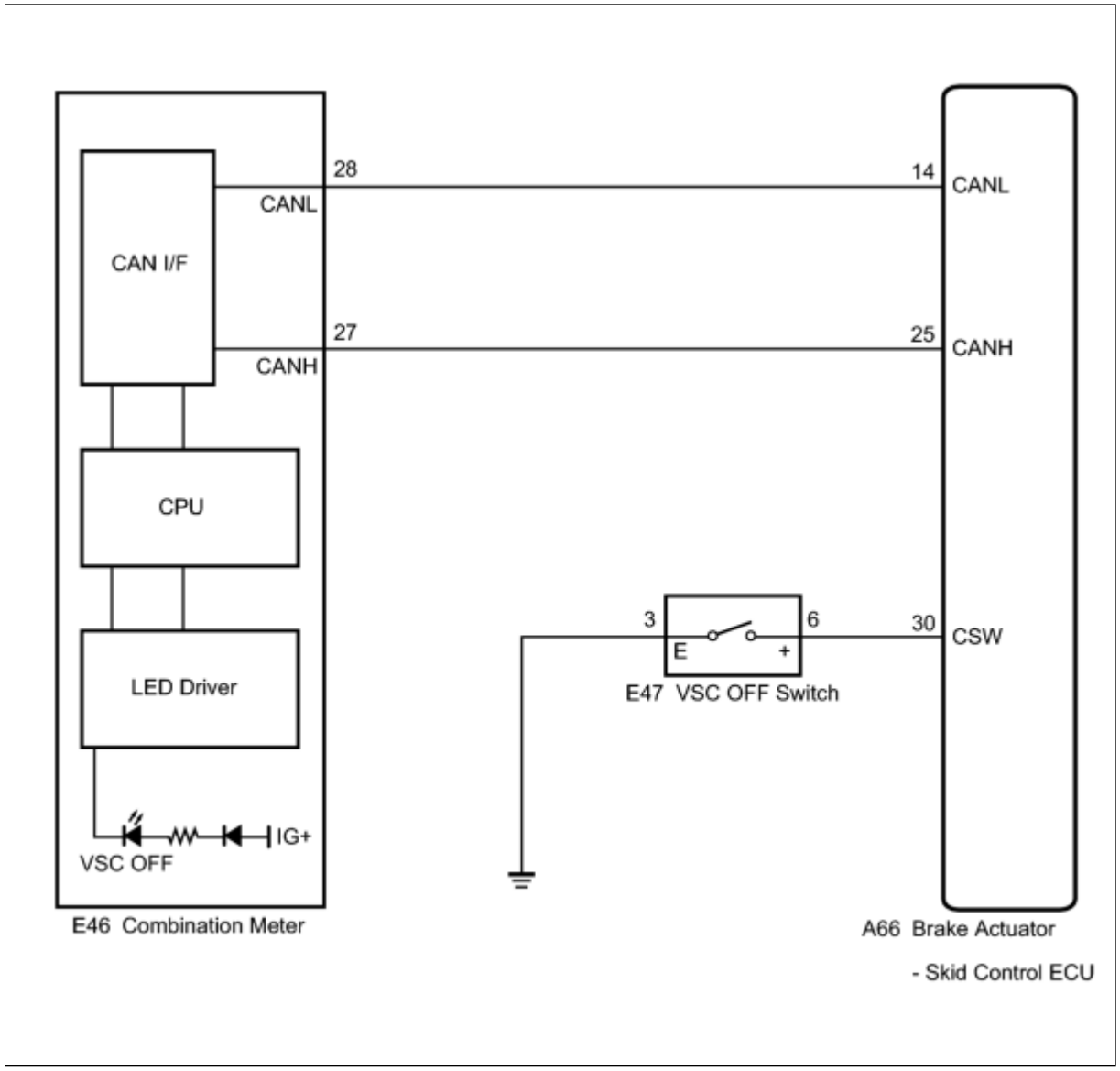

INSPECTION PROCEDURE

NOTICE:

When replacing the brake actuator assembly, perform zero point calibration INFO .

PROCEDURE

1.	**CHECK CAN COMMUNICATION SYSTEM**

(a) Check if a CAN communication system DTC is output INFO .

Result:

RESULT	PROCEED TO

RESULT	PROCEED TO
DTC is not output	A
DTC is output	B

B ▶ **INSPECT CAN COMMUNICATION SYSTEM**

A ▼

2.	CHECK IF SKID CONTROL ECU CONNECTOR IS SECURELY CONNECTED

(a) Check if the skid control ECU connector is securely connected.

OK:
The connector is securely connected.

NG ▶ **CONNECT CONNECTOR TO ECU CORRECTLY**

OK ▼

3.	CHECK BATTERY

(a) Check the battery voltage.

Standard Voltage:
11 to 14 V
Result:

RESULT	PROCEED TO
OK	A
NG (for 2AZ-FE)	B
NG (for 2ZR-FE)	C

C ▶ **CHECK OR REPLACE CHARGING SYSTEM OR BATTERY (for 2ZR-FE)**

B ▶ CHECK OR REPLACE CHARGING SYSTEM OR BATTERY (for 2AZ-FE)

A ▼

4.	INSPECT SKID CONTROL ECU (CSW TERMINAL)

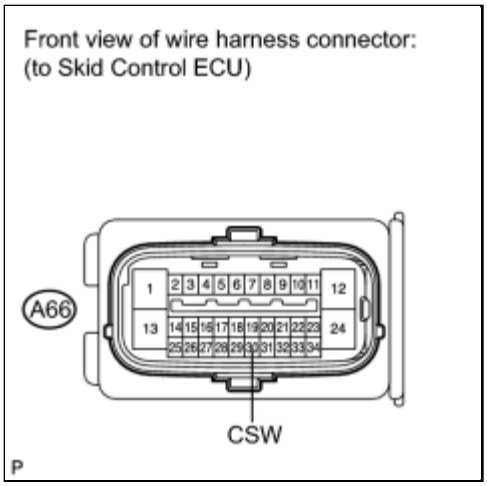

(a) Disconnect the skid control ECU connector.

(b) Measure the resistance according to the value(s) in the table below.

Standard Resistance:

TESTER CONDITION	SWITCH CONDITION	SPECIFIED CONDITION
A66-30 (CSW) - Body ground	VSC OFF switch OFF (Not pressed)	10 kΩ or higher

NG ▶ INSPECT VSC OFF SWITCH

OK ▼

5.	INSPECT COMBINATION METER ASSEMBLY

(a) Reconnect the skid control ECU connector.

(b) Perform the Active Test of the combination meter (meter CPU) using the Techstream INFO .

(c) Check the combination meter.

OK:

The VSC OFF indicator light turns on or off in accordance with the Techstream operation.

HINT:

If troubleshooting has been carried out according to the Problem Symptoms Table, refer back to the table and proceed to the next step before replacing the part INFO .

NG ▶ REPLACE COMBINATION METER ASSEMBLY

OK ▶ REPLACE BRAKE ACTUATOR ASSEMBLY

6.	**INSPECT VSC OFF SWITCH**

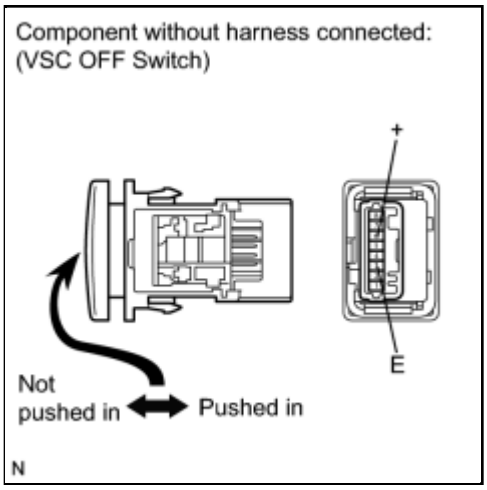

(a) Disconnect the VSC OFF switch connector.

(b) Measure the resistance according to the value(s) in the table below.

Standard Resistance:

TESTER CONNECTION	SWITCH CONDITION	SPECIFIED CONDITION
6 (+) - 3 (E)	Switch is pushed in	Below 25 Ω
6 (+) - 3 (E)	Switch is not pushed in	10 kΩ or higher

NG ▶ REPLACE VSC OFF SWITCH

OK

7.	CHECK HARNESS AND CONNECTOR (SKID CONTROL ECU - VSC OFF SWITCH)

Front view of wire harness connector:
(to Skid Control ECU)

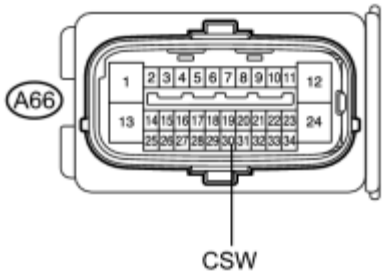

Front view of wire harness connector:
(to VSC OFF Switch)

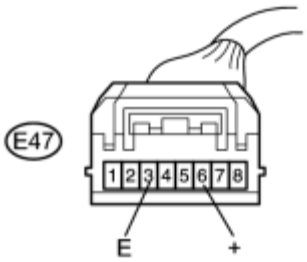

N

(a) Measure the resistance according to the value(s) in the table below.

Standard Resistance:

TESTER CONNECTION	CONDITION	SPECIFIED CONDITION
A66-30 (CSW) - E47-6 (+)	Always	Below 1 Ω
A66-30 (CSW) - Body ground	Always	10 kΩ or higher
E47-3 (E) - Body ground	Always	Below 1 Ω

HINT:

If troubleshooting has been carried out according to the Problem Symptoms Table, refer back to the table and proceed to the next step INFO .

NG ▶ **REPAIR OR REPLACE HARNESS OR CONNECTOR**

OK ▶ **REPLACE BRAKE ACTUATOR ASSEMBLY**

Last Modified: 3-10-2010	6.4 J	**From:** 200901
Model Year: 2010	**Model:** Corolla	**Doc ID:** RM000000YHH051X
Title: BRAKE CONTROL / DYNAMIC CONTROL SYSTEMS: VEHICLE STABILITY CONTROL SYSTEM: Brake Warning Light does not Come ON (2010 Corolla)		

Brake Warning Light does not Come ON

DESCRIPTION

The skid control ECU is connected to the combination meter via CAN communication.

WIRING DIAGRAM

Refer to Brake Warning Light Remains ON INFO .

INSPECTION PROCEDURE

NOTICE:

When replacing the brake actuator assembly, perform zero point calibration INFO .

PROCEDURE

1.	**CHECK CAN COMMUNICATION SYSTEM**

(a) Check if a CAN communication system DTC is output INFO .

Result:

RESULT	PROCEED TO
DTC is not output	A
DTC is output	B

B ▶ **INSPECT CAN COMMUNICATION SYSTEM**

A ▼

2.	**CHECK BRAKE WARNING LIGHT**

(a) Disconnect the skid control ECU connector.

(b) Turn the ignition switch to ON.

(c) Check that the brake warning light comes on.

OK:

The brake warning light comes on.

HINT:

If troubleshooting has been carried out according to the Problem Symptoms Table, refer back to the table and proceed to the next step before replacing the part INFO **.**

NG ▶ **INSPECT COMBINATION METER ASSEMBLY**

OK ▶ **REPLACE BRAKE ACTUATOR ASSEMBLY**

3.	**INSPECT COMBINATION METER ASSEMBLY**

(a) Turn the ignition switch off.

(b) Reconnect the skid control ECU connector.

(c) Perform the Active Test of the combination meter (meter CPU) using the Techstream INFO .

(d) Check the combination meter.

OK:

The brake warning light turns on or off in accordance with the Techstream operation.

HINT:

If troubleshooting has been carried out according to the Problem Symptoms Table, refer back to the table and proceed to the next step INFO **.**

NG ▶ **REPLACE COMBINATION METER ASSEMBLY**

OK ▶ **REPLACE BRAKE ACTUATOR ASSEMBLY**

Last Modified: 3-10-2010	6.4 J	**From:** 200901
Model Year: 2010	**Model:** Corolla	**Doc ID:** RM000000YHI040X
Title: BRAKE CONTROL / DYNAMIC CONTROL SYSTEMS: VEHICLE STABILITY CONTROL SYSTEM: Slip Indicator Light Remains ON (2010 Corolla)		

Slip Indicator Light Remains ON

DESCRIPTION

The skid control ECU is connected to the combination meter via CAN communication.

The slip indicator light blinks during VSC and/or TRAC operation.

When the system fails, the slip indicator light comes on to warn the driver INFO .

WIRING DIAGRAM

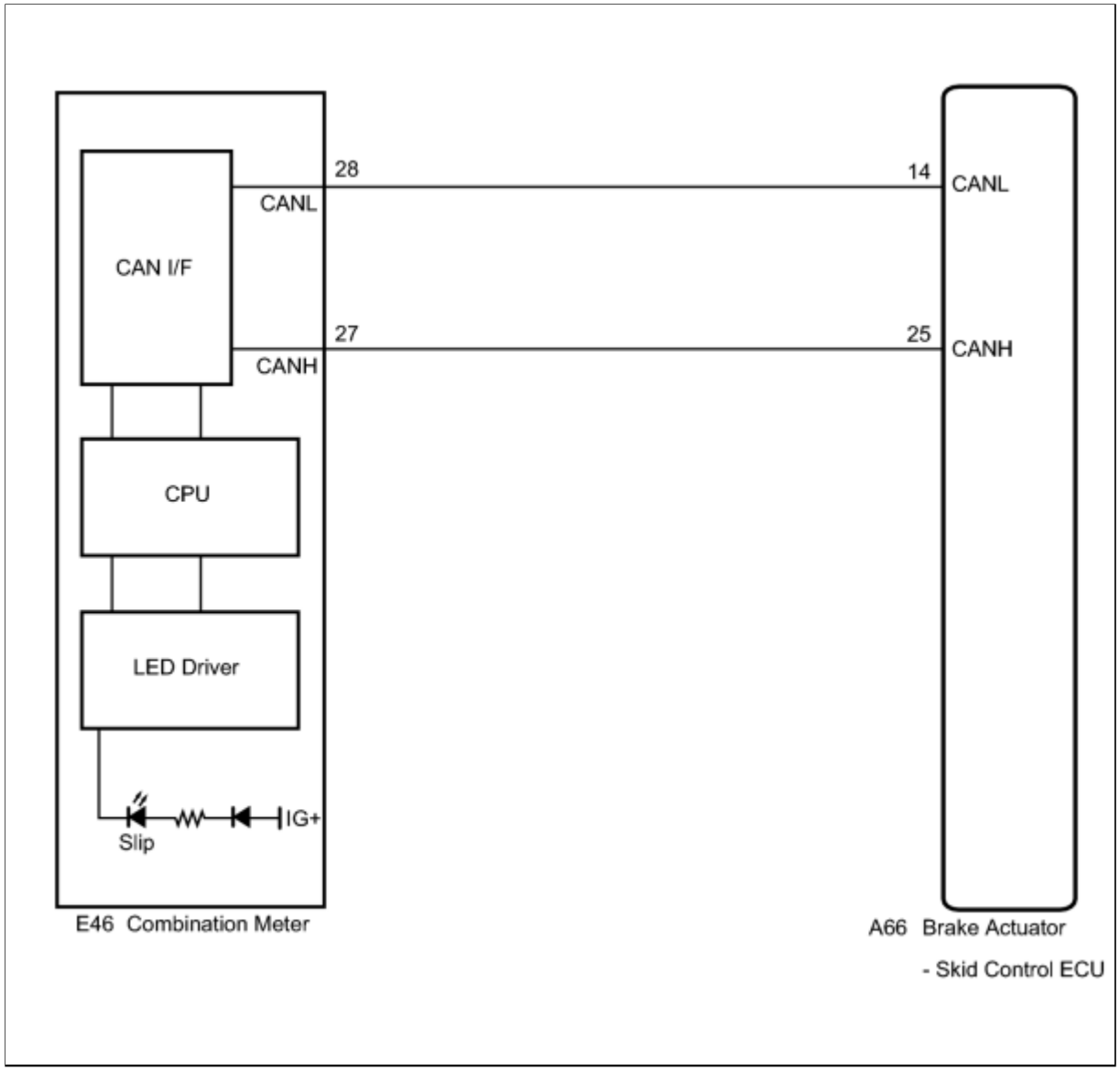

INSPECTION PROCEDURE

NOTICE:

When replacing the brake actuator assembly, perform zero point calibration INFO .

PROCEDURE

1.	**CHECK CAN COMMUNICATION SYSTEM**

(a) Check if a CAN communication system DTC is output INFO .

Result:

RESULT	PROCEED TO

RESULT	PROCEED TO
DTC is not output	A
DTC is output	B

B ▶ **INSPECT CAN COMMUNICATION SYSTEM**

A ▼

2.	CHECK IF SKID CONTROL ECU CONNECTOR IS SECURELY CONNECTED

(a) Check if the skid control ECU connector is securely connected.

OK:
The connector is securely connected.

NG ▶ **CONNECT CONNECTOR TO ECU CORRECTLY**

OK ▼

3.	CHECK BATTERY

(a) Check the battery voltage.

Standard Voltage:
11 to 14 V
Result:

RESULT	PROCEED TO
OK	A
NG (for 2AZ-FE)	B
NG (for 2ZR-FE)	C

C ▶ **CHECK OR REPLACE CHARGING SYSTEM OR BATTERY (for 2ZR-FE)**

B ▶ CHECK OR REPLACE CHARGING SYSTEM OR BATTERY (for 2AZ-FE)

A ▼

4.	INSPECT COMBINATION METER ASSEMBLY

(a) Perform the Active Test of the combination meter (meter CPU) using the Techstream INFO .

(b) Check the combination meter.

OK:

The slip indicator light turns on or off in accordance with the Techstream operation.

HINT:

If troubleshooting has been carried out according to the Problem Symptoms Table, refer back to the table and proceed to the next step before replacing the part INFO .

NG ▶ REPLACE COMBINATION METER ASSEMBLY

OK ▶ REPLACE BRAKE ACTUATOR ASSEMBLY

Last Modified: 3-10-2010	6.4 J	**From:** 200901
Model Year: 2010	**Model:** Corolla	**Doc ID:** RM000001FQP03HX
Title: BRAKE CONTROL / DYNAMIC CONTROL SYSTEMS: VEHICLE STABILITY CONTROL SYSTEM: VSC OFF Indicator Light does not Come ON (2010 Corolla)		

VSC OFF Indicator Light does not Come ON

DESCRIPTION

The skid control ECU is connected to the combination meter via CAN communication.

If the skid control ECU stores a DTC, the VSC OFF indicator light blinks in the combination meter.

Pressing the VSC OFF switch turns off traction control and pressing and holding this switch turns off traction and VSC controls. If VSC control turns off, the VSC OFF indicator light will come on.

WIRING DIAGRAM

Refer to VSC OFF Indicator Light Remains ON INFO .

INSPECTION PROCEDURE

NOTICE:

When replacing the brake actuator assembly, perform zero point calibration INFO .

PROCEDURE

1.	**CHECK CAN COMMUNICATION SYSTEM**

(a) Check if a CAN communication system DTC is output INFO .

Result:

RESULT	PROCEED TO
DTC is not output	A
DTC is output	B

B ▶ **INSPECT CAN COMMUNICATION SYSTEM**

A ▼

2.	PERFORM ACTIVE TEST USING TECHSTREAM (VSC OFF INDICATOR LIGHT)

(a) Connect the Techstream to the DLC3.

(b) Turn the ignition switch to ON.

(c) Select Active Test mode on the Techstream INFO .

ABS/VSC/TRAC

TESTER DISPLAY	TEST PART	CONTROL RANGE	DIAGNOSTIC NOTE
VSC warning Light	VSC OFF indicator light	Indicator light ON/OFF	Observe combination meter

(d) Check that the VSC OFF indicator light turns on or off in accordance with the Techstream operation.

OK:

The VSC OFF indicator light turns on or off in accordance with the Techstream operation.

HINT:

If troubleshooting has been carried out according to the Problem Symptoms Table, refer back to the table and proceed to the next step before replacing the part INFO .

NG ▶ INSPECT COMBINATION METER ASSEMBLY

OK ▶ REPLACE BRAKE ACTUATOR ASSEMBLY

3.	INSPECT COMBINATION METER ASSEMBLY

(a) Turn the ignition switch off.

(b) Perform the Active Test of the combination meter (meter CPU) using the Techstream INFO .

(c) Check the combination meter.

OK:

The VSC OFF indicator light turns on or off in accordance with the Techstream operation.

HINT:

If troubleshooting has been carried out according to the Problem Symptoms Table, refer back to the table and proceed to the next step INFO .

NG ▶ REPLACE COMBINATION METER ASSEMBLY

OK ▶ REPLACE BRAKE ACTUATOR ASSEMBLY

Last Modified: 3-10-2010	6.4 J	**From:** 200901
Model Year: 2010	**Model:** Corolla	**Doc ID:** RM000000XIS041X
Title: BRAKE CONTROL / DYNAMIC CONTROL SYSTEMS: VEHICLE STABILITY CONTROL SYSTEM: Skid Control Buzzer Circuit (2010 Corolla)		

Skid Control Buzzer Circuit

DESCRIPTION

The skid control ECU is connected to the combination meter via CAN communication.

The combination meter has a built-in skid control buzzer. The skid control buzzer sounds during VSC operation.

WIRING DIAGRAM

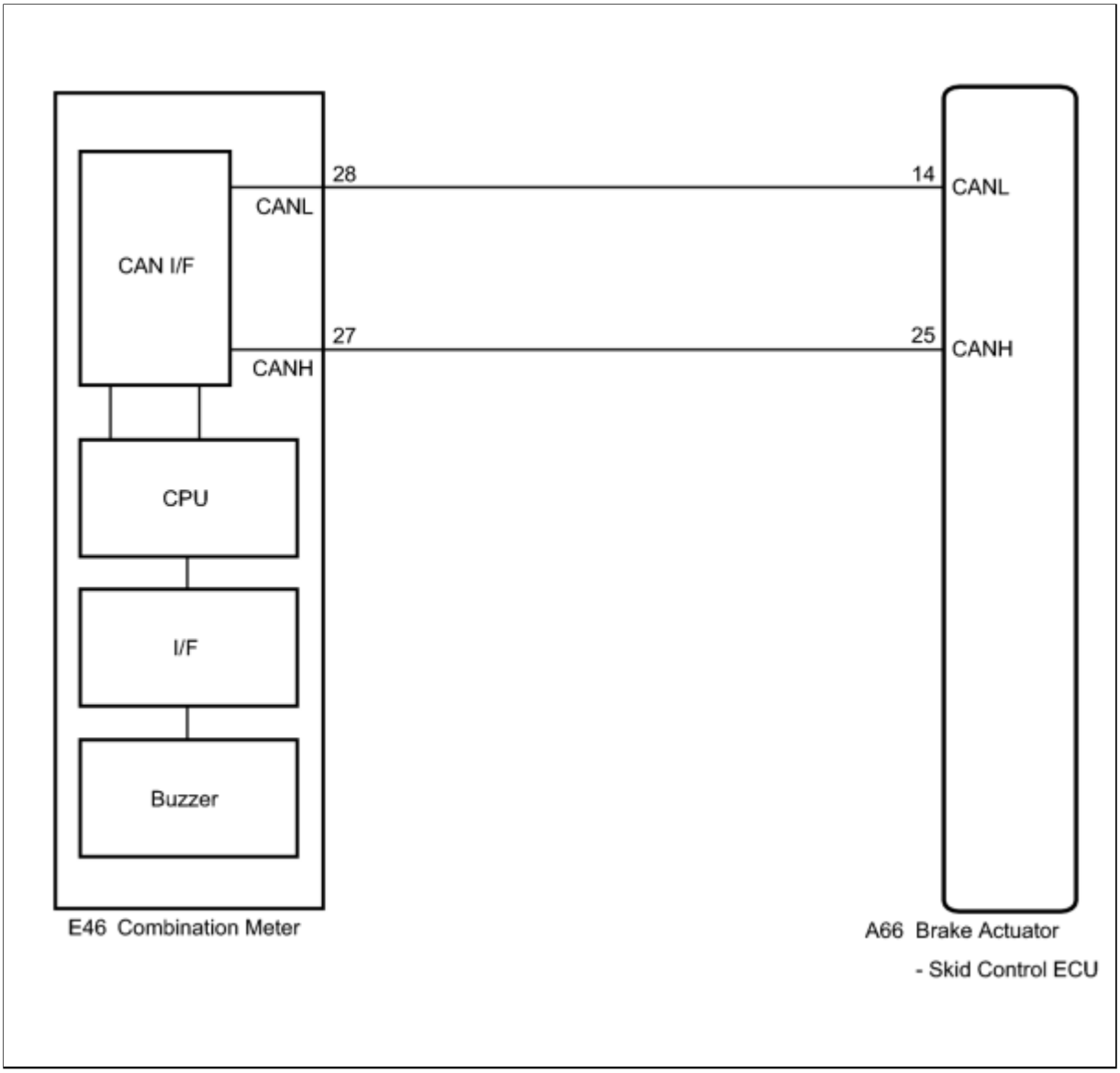

INSPECTION PROCEDURE

NOTICE:

When replacing the brake actuator assembly, perform zero point calibration INFO **.**

PROCEDURE

1.	**CHECK CAN COMMUNICATION SYSTEM**

(a) Check if a CAN communication system DTC is output INFO .

Result:

RESULT	PROCEED TO

RESULT	PROCEED TO
DTC is not output	A
DTC is output	B

B ▶ **INSPECT CAN COMMUNICATION SYSTEM**

A

▼

2.	**PERFORM ACTIVE TEST USING TECHSTREAM (SKID CONTROL BUZZER)**

(a) Connect the Techstream to the DLC3.

(b) Turn the ignition switch to ON.

(c) Select Active Test mode on the Techstream INFO .

ABS/VSC/TRAC

TESTER DISPLAY	TEST PART	CONTROL RANGE	DIAGNOSTIC NOTE
Buzzer	Skid control buzzer	Buzzer ON/OFF	Buzzer can be heard

(d) Check that the buzzer sounds/stops when turning the skid control buzzer on/off using the Techstream.

Result:

RESULT	PROCEED TO
Buzzer does not sound or sounds constantly	A
Buzzer sounds/stops	B

HINT:

If troubleshooting has been carried out according to the Problem Symptoms Table, refer back to the table and proceed to the next step INFO **.**

B ▶ **END**

A

3.	**INSPECT COMBINATION METER ASSEMBLY**

(a) Turn the ignition switch off.

(b) Check the combination meter INFO .

OK:

The combination meter is normal.

HINT:

If troubleshooting has been carried out according to the Problem Symptoms Table, refer back to the table and proceed to the next step INFO .

NG ▶ **REPLACE COMBINATION METER ASSEMBLY**

OK ▶ **REPLACE BRAKE ACTUATOR ASSEMBLY**

Last Modified: 3-10-2010	6.4 J	**From:** 200901
Model Year: 2010	**Model:** Corolla	**Doc ID:** RM000000YHJ040X
Title: BRAKE CONTROL / DYNAMIC CONTROL SYSTEMS: VEHICLE STABILITY CONTROL SYSTEM: Slip Indicator Light does not Come ON (2010 Corolla)		

Slip Indicator Light does not Come ON

DESCRIPTION

The skid control ECU is connected to the combination meter via CAN communication.

The slip indicator light blinks during VSC and/or TRAC operation.

When the system fails, the slip indicator light comes on to warn the driver INFO .

WIRING DIAGRAM

Refer to Slip Indicator Light Remains ON INFO .

INSPECTION PROCEDURE

NOTICE:

When replacing the brake actuator assembly, perform zero point calibration INFO .

PROCEDURE

1.	**CHECK CAN COMMUNICATION SYSTEM**

(a) Check if a CAN communication system DTC is output INFO .

Result:

RESULT	PROCEED TO
DTC is not output	A
DTC is output	B

B ▶ **INSPECT CAN COMMUNICATION SYSTEM**

A ▼

2.	PERFORM ACTIVE TEST USING TECHSTREAM (SLIP INDICATOR LIGHT)

(a) Connect the Techstream to the DLC3.

(b) Turn the ignition switch to ON.

(c) Select Active Test mode on the Techstream INFO .

ABS/VSC/TRAC

TESTER DISPLAY	TEST PART	CONTROL RANGE	DIAGNOSTIC NOTE
Slip Indicator Light	Slip indicator light	Indicator light ON/OFF	Observe combination meter

(d) Check that the slip indicator light turns on or off in accordance with the Techstream operation.

OK:

The slip indicator light turns on or off in accordance with the Techstream operation.

HINT:

If troubleshooting has been carried out according to the Problem Symptoms Table, refer back to the table and proceed to the next step before replacing the part INFO .

NG ▶ INSPECT COMBINATION METER ASSEMBLY

OK ▶ REPLACE BRAKE ACTUATOR ASSEMBLY

3.	INSPECT COMBINATION METER ASSEMBLY

(a) Turn the ignition switch off.

(b) Perform the Active Test of the combination meter (meter CPU) using the Techstream INFO .

(c) Check the combination meter.

OK:

The slip indicator light turns on or off in accordance with the Techstream operation.

HINT:

If troubleshooting has been carried out according to the Problem Symptoms Table, refer back to the table and proceed to the next step INFO .

NG ▶ REPLACE COMBINATION METER ASSEMBLY

OK ▶ REPLACE BRAKE ACTUATOR ASSEMBLY

Last Modified: 3-10-2010	6.4 J	**From:** 200901
Model Year: 2010	**Model:** Corolla	**Doc ID:** RM000000XIU05JX
Title: BRAKE CONTROL / DYNAMIC CONTROL SYSTEMS: VEHICLE STABILITY CONTROL SYSTEM: TC and CG Terminal Circuit (2010 Corolla)		

TC and CG Terminal Circuit

DESCRIPTION

Connecting terminals TC and CG of the DLC3 causes the ECU to display the DTC by blinking the ABS warning light.

WIRING DIAGRAM

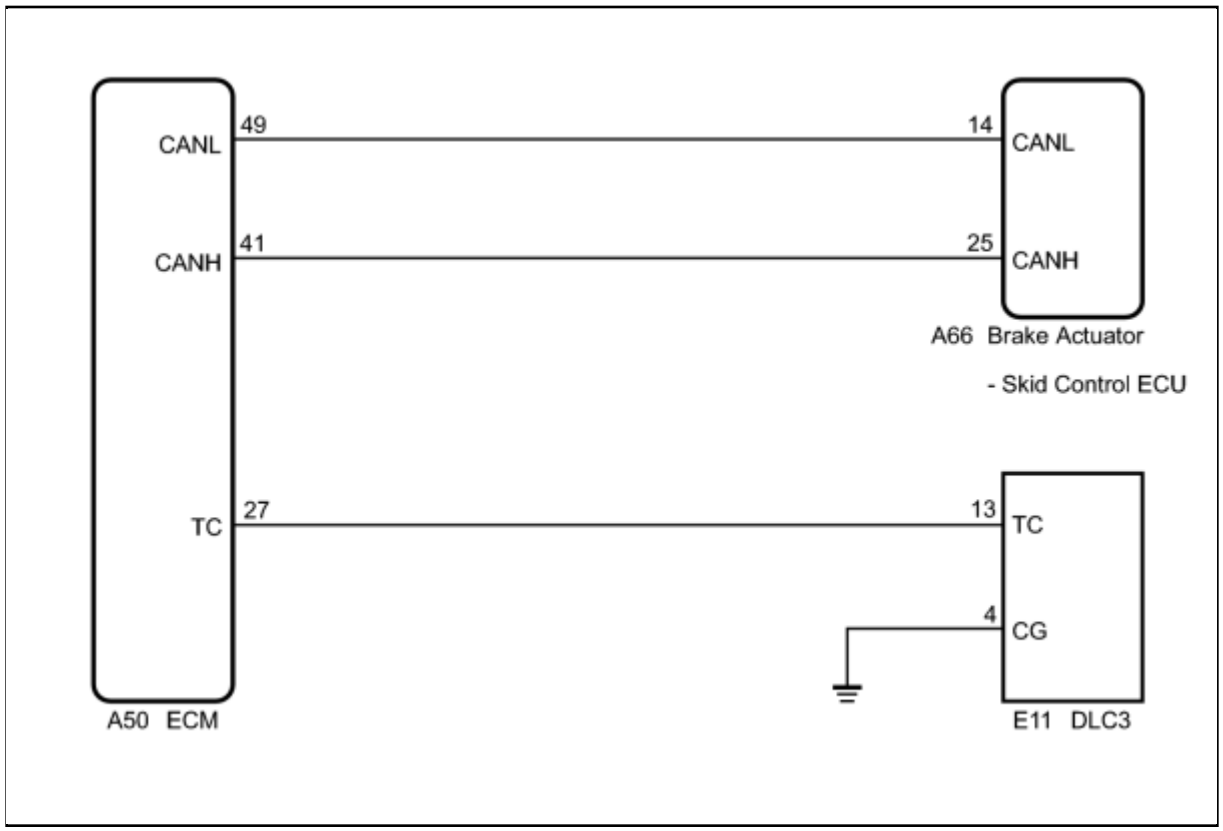

HINT:

When the warning lights continue to blink, a ground short in the wiring of terminal TC of the DLC3 or an internal ground short in one or more ECUs is suspected.

INSPECTION PROCEDURE

NOTICE:

When replacing the brake actuator assembly, perform zero point calibration INFO **.**

PROCEDURE

1.	**CHECK CAN COMMUNICATION SYSTEM**

(a) Check if a CAN communication system DTC is output INFO.

Result:

RESULT	PROCEED TO
DTC is not output	A
DTC is output	B

B ▶ **INSPECT CAN COMMUNICATION SYSTEM**

A ▼

2.	**INSPECT DLC3**

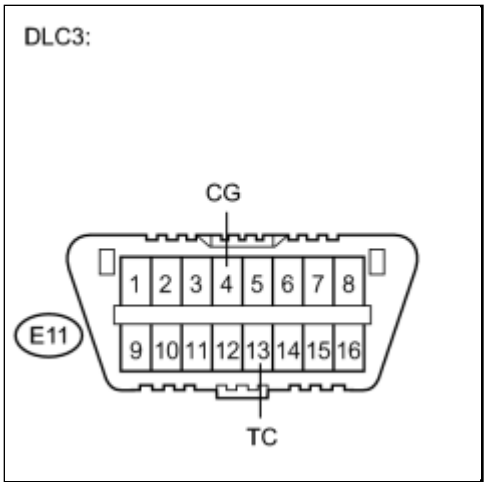

(a) Turn the ignition switch to ON.

(b) Measure the voltage according to the value(s) in the table below.

Standard Voltage:

TESTER CONNECTION	SWITCH CONDITION	SPECIFIED CONDITION

TESTER CONNECTION	SWITCH CONDITION	SPECIFIED CONDITION
E11-13 (TC) - E11-4 (CG)	Ignition switch ON	11 to 14 V

Result:

RESULT	PROCEED TO
NG	A
OK	B

B ▶ **CHECK ECM (TC of DLC3 INPUT)**

A

▼

3.	**CHECK HARNESS AND CONNECTOR (TC of DLC3 - ECM)**

(a) Turn the ignition switch off.

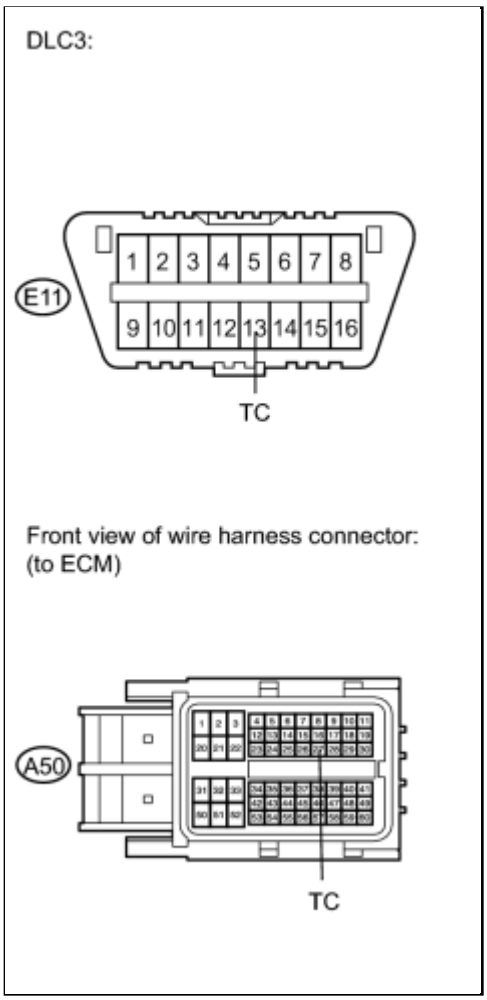

(b) Disconnect the ECM connector.

(c) Measure the resistance according to the value(s) in the table below.

Standard Resistance:

TESTER CONNECTION	CONDITION	SPECIFIED CONDITION
E11-13 (TC) - A50-27 (TC)	Always	Below 1 Ω
E11-13 (TC) - Body ground	Always	10 kΩ or higher

NG ▶ **REPAIR OR REPLACE HARNESS OR CONNECTOR**

OK ▼

4.	**CHECK HARNESS AND CONNECTOR (CG of DLC3 - BODY GROUND)**

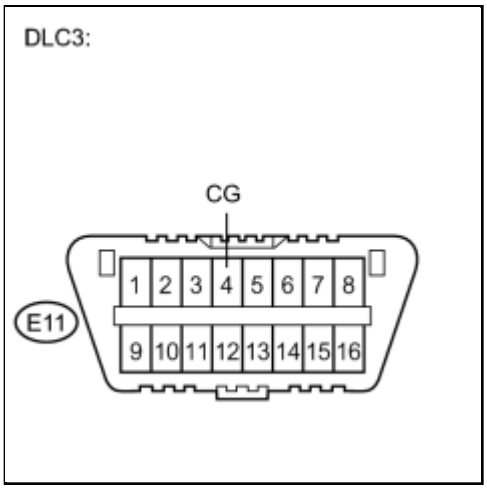

(a) Measure the resistance according to the value(s) in the table below.

Standard Resistance:

TESTER CONNECTION	CONDITION	SPECIFIED CONDITION
E11-4 (CG) - Body ground	Always	Below 1 Ω

NG ▶ **REPAIR OR REPLACE HARNESS OR CONNECTOR**

OK ▼

5.	**CHECK ECM (TC of DLC3 INPUT)**

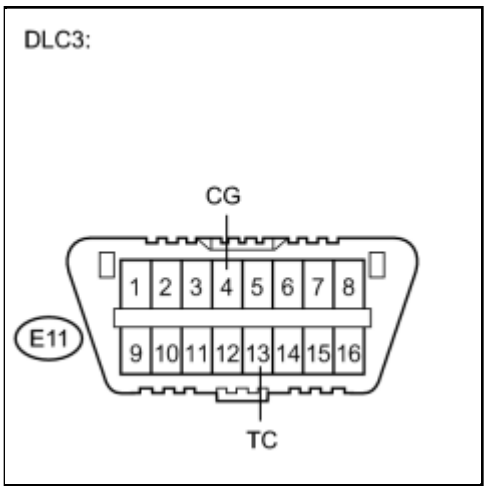

(a) Turn the ignition switch off.

(b) Reconnect the ECM connector.

(c) Using SST, connect terminals TC and CG of the DLC3.

SST: 09843-18040

(d) Turn the ignition switch to ON.

(e) Check that the check engine warning light is blinking.

Result:

RESULT	PROCEED TO
Check engine warning light is blinking	A
Check engine warning light is not blinking	B

HINT:

If troubleshooting has been carried out according to the Problem Symptoms Table, refer back to the table and proceed to the next step before replacing the part INFO **.**

B ▶ **REPAIR OR REPLACE WIRE HARNESS OR ECM (TC of ECM CIRCUIT)**

A ▶ **REPLACE BRAKE ACTUATOR ASSEMBLY**

Last Modified: 3-10-2010	6.4 J	**From:** 200901
Model Year: 2010	**Model:** Corolla	**Doc ID:** RM000000XIV04YX
Title: BRAKE CONTROL / DYNAMIC CONTROL SYSTEMS: VEHICLE STABILITY CONTROL SYSTEM: TS and CG Terminal Circuit (2010 Corolla)		

TS and CG Terminal Circuit

DESCRIPTION

In Test Mode (signal check), a malfunction in a speed sensor that cannot be detected when the vehicle is stopped can be detected while driving.

Sensor check mode can be entered by connecting terminals TS and CG of the DLC3 and turning the ignition switch from off to ON.

WIRING DIAGRAM

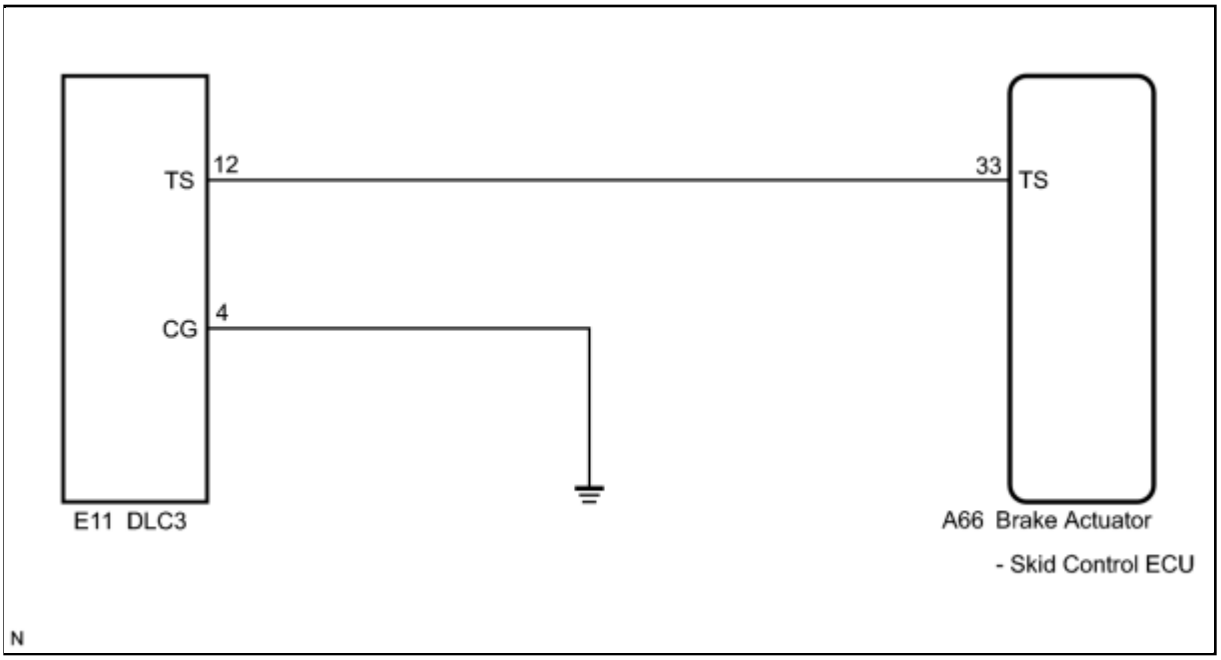

INSPECTION PROCEDURE

NOTICE:

When replacing the brake actuator assembly, perform zero point calibration INFO **.**

PROCEDURE

1.	**CHECK HARNESS AND CONNECTOR (SKID CONTROL ECU - TS of DLC3)**

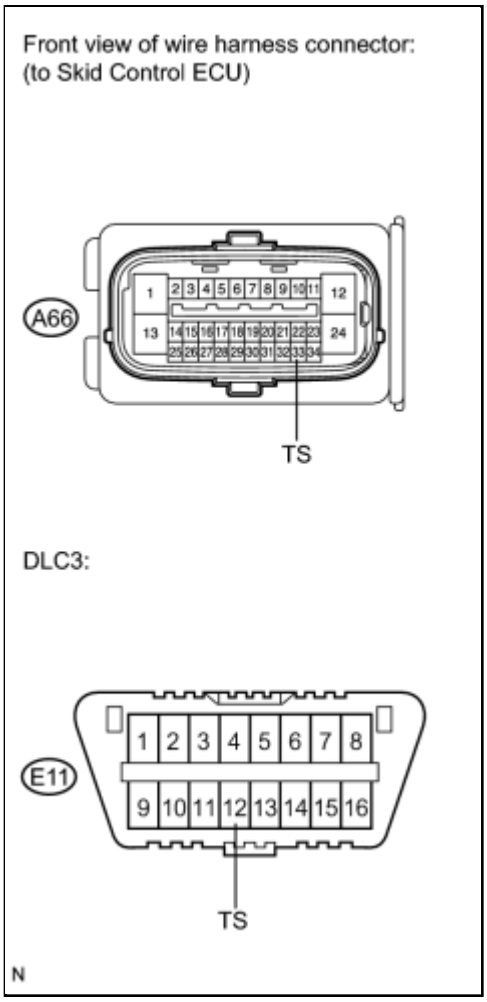

(a) Disconnect the skid control ECU connector.

(b) Measure the resistance according to the value(s) in the table below.

Standard Resistance:

TESTER CONNECTION	CONDITION	SPECIFIED CONDITION
A66-33 (TS) - E11-12 (TS)	Always	Below 1 Ω

NG ▶ **REPAIR OR REPLACE HARNESS OR CONNECTOR**

OK ▼

2.	**CHECK HARNESS AND CONNECTOR (CG of DLC3 - BODY GROUND)**

(a) Measure the resistance according to the value(s) in the table below.

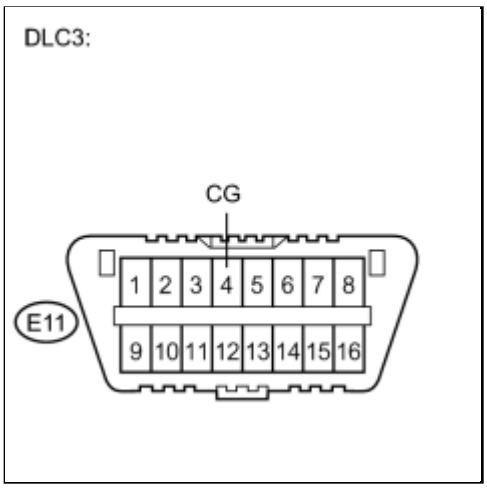

Standard Resistance:

TESTER CONNECTION	CONDITION	SPECIFIED CONDITION
E11-4 (CG) - Body ground	Always	Below 1 Ω

NG ▶ **REPAIR OR REPLACE HARNESS OR CONNECTOR**

OK ▼

3.	CHECK HARNESS AND CONNECTOR (TS of DLC3 - BODY GROUND)

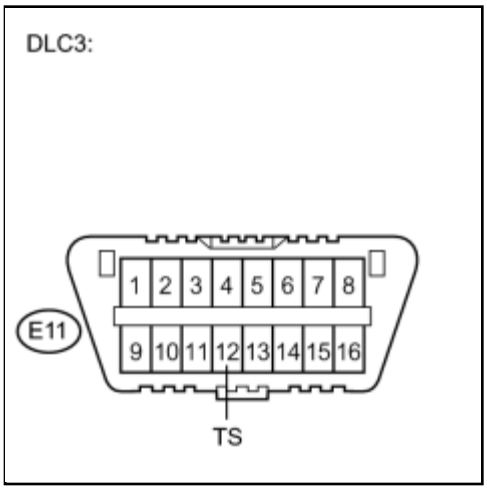

(a) Measure the resistance according to the value(s) in the table below.

Standard Resistance:

TESTER CONNECTION	CONDITION	SPECIFIED CONDITION
E11-12 (TS) - Body ground	Always	10 kΩ or higher

HINT:

If troubleshooting has been carried out according to the Problem Symptoms Table, refer back to the table and proceed to the next step before replacing the part INFO **.**

NG ▶ **REPAIR OR REPLACE HARNESS OR CONNECTOR**

OK ▶ **REPLACE BRAKE ACTUATOR ASSEMBLY**

Last Modified: 3-10-2010	6.4 K	**From:** 200901
Model Year: 2010	**Model:** Corolla	**Doc ID:** RM000003FA6005X
Title: BRAKE CONTROL / DYNAMIC CONTROL SYSTEMS: VSC OFF SWITCH (w/ VSC): COMPONENTS (2010 Corolla)		

COMPONENTS

ILLUSTRATION

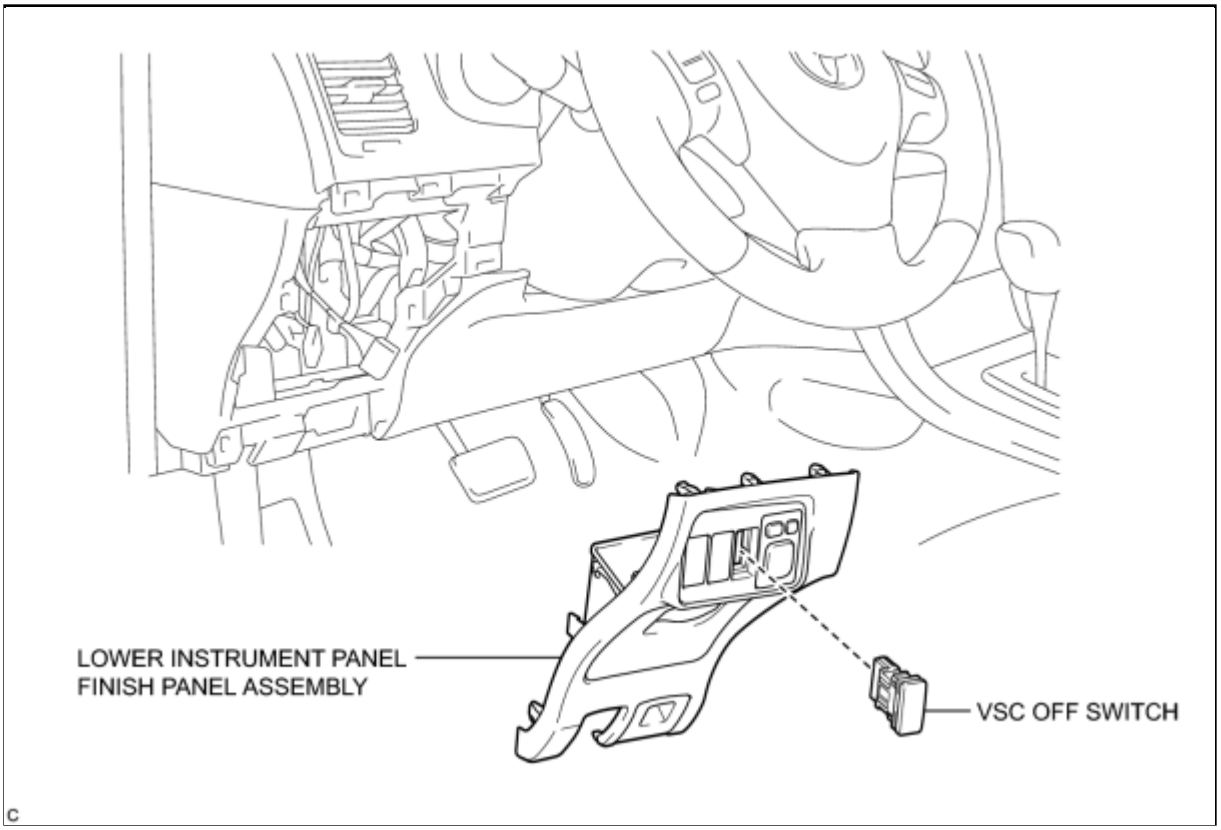

Last Modified: 3-10-2010	6.4 A	**From:** 200901
Model Year: 2010	**Model:** Corolla	**Doc ID:** RM0000033RX00DX
Title: BRAKE CONTROL / DYNAMIC CONTROL SYSTEMS: VSC OFF SWITCH (w/ VSC): REMOVAL (2010 Corolla)		

REMOVAL

1. DISCONNECT CABLE FROM NEGATIVE BATTERY TERMINAL

2. REMOVE LOWER INSTRUMENT PANEL FINISH PANEL ASSEMBLY INFO

3. REMOVE VSC OFF SWITCH

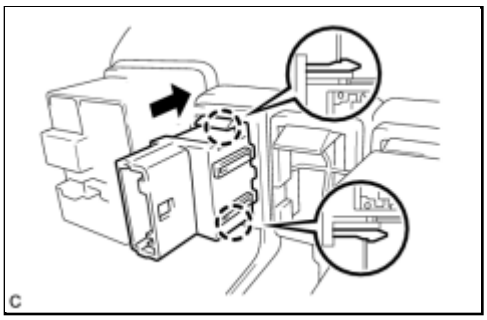

(a) Disengage the 2 claws and remove the VSC off switch.

Last Modified: 3-10-2010	6.4 G	**From:** 200901
Model Year: 2010	**Model:** Corolla	**Doc ID:** RM000002VOV00LX
Title: BRAKE CONTROL / DYNAMIC CONTROL SYSTEMS: VSC OFF SWITCH (w/ VSC): INSPECTION (2010 Corolla)		

INSPECTION

1. INSPECT VSC OFF SWITCH

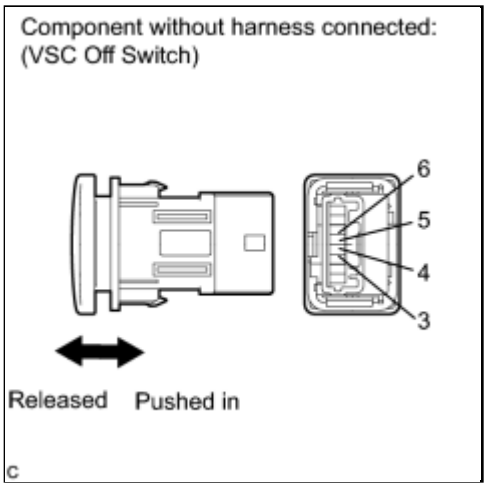

(a) Measure the resistance according to the value(s) in the table below.

Standard Resistance:

TESTER CONNECTION	SWITCH CONDITION	SPECIFIED CONDITION
3 - 6	Released	10 kΩ or higher
3 - 6	Pushed in	Below 25 Ω

If the result is not as specified, replace the switch.

(b) Check illumination operation.

Standard Resistance:

TESTER CONNECTION	CONDITION	SPECIFIED CONDITION
4 - 5	Battery positive (+) lead connected to terminal 5 and negative (-) lead to terminal 4	LED illuminates

If the result is not as specified, replace the VSC off switch.

Last Modified: 3-10-2010	6.4 K	**From:** 200901
Model Year: 2010	**Model:** Corolla	**Doc ID:** RM000003FA4005X
Title: BRAKE CONTROL / DYNAMIC CONTROL SYSTEMS: YAW RATE AND ACCELERATION SENSOR (w/ VSC): COMPONENTS (2010 Corolla)		

COMPONENTS

ILLUSTRATION

for Power Seat:

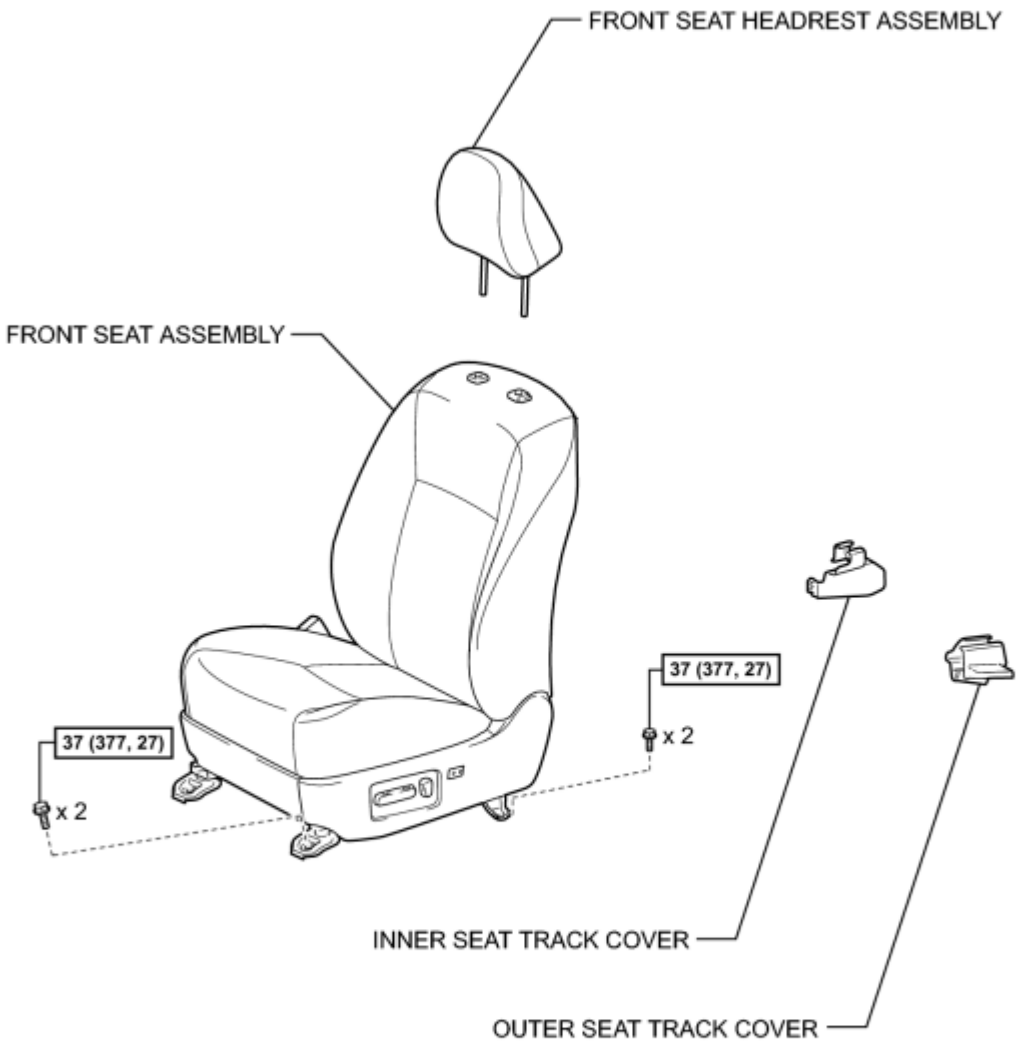

N*m (kgf*cm, ft.*lbf): Specified torque

P

ILLUSTRATION

for Manual Seat:

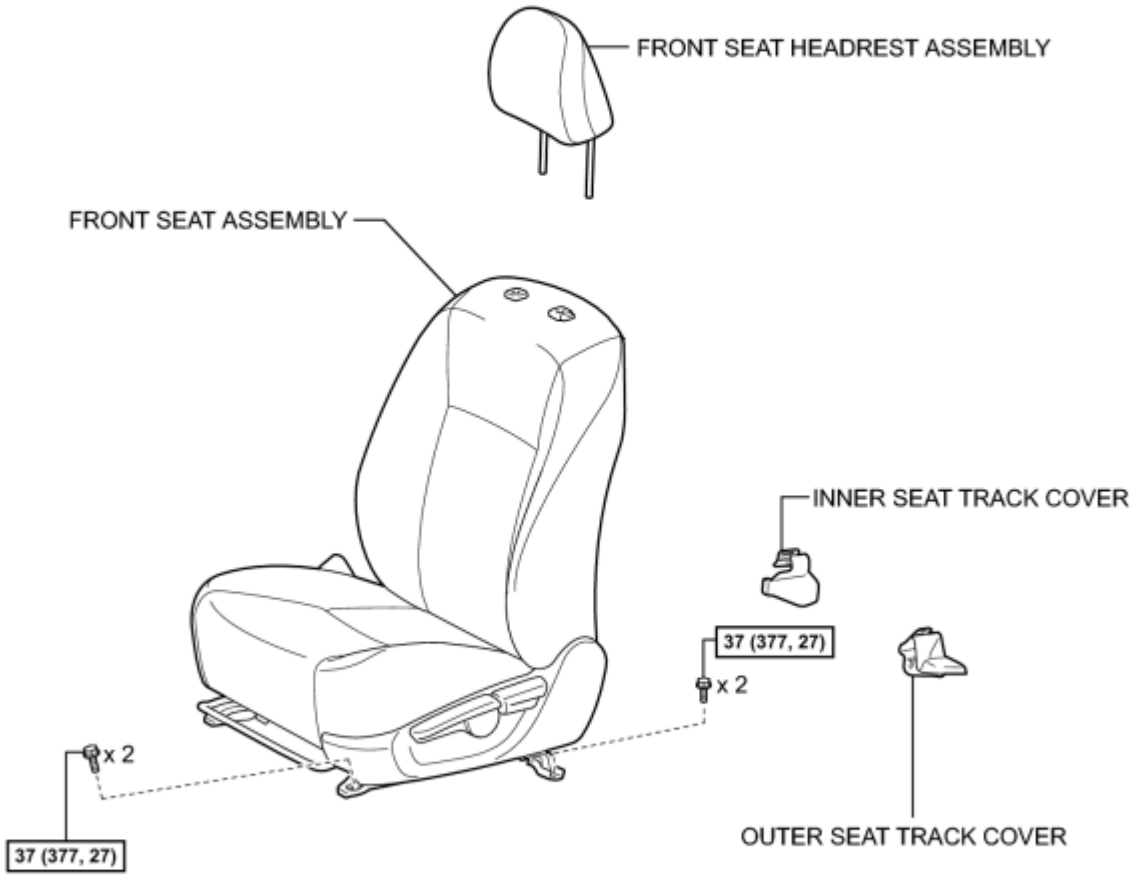

N*m (kgf*cm, ft.*lbf): Specified torque

P

ILLUSTRATION

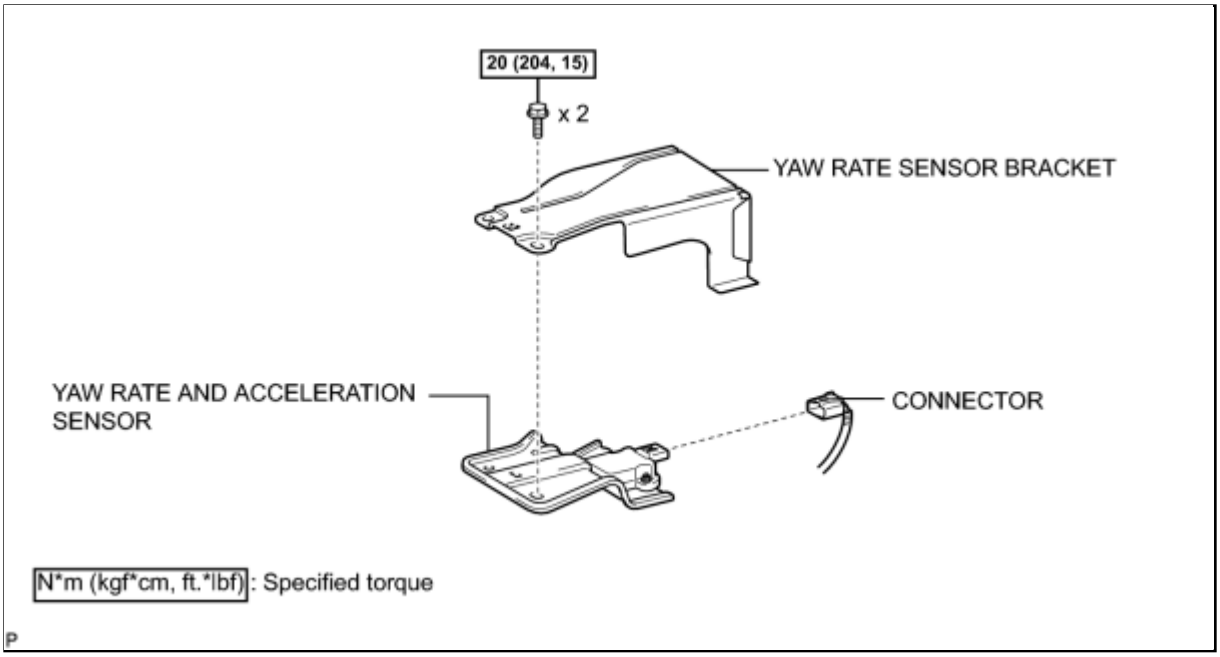
20 (204, 15)
x 2
YAW RATE SENSOR BRACKET
YAW RATE AND ACCELERATION SENSOR
CONNECTOR
N*m (kgf*cm, ft.*lbf): Specified torque
P

Last Modified: 3-10-2010	6.4 A	**From:** 200901
Model Year: 2010	**Model:** Corolla	**Doc ID:** RM0000033RW00DX
Title: BRAKE CONTROL / DYNAMIC CONTROL SYSTEMS: VSC OFF SWITCH (w/ VSC): INSTALLATION (2010 Corolla)		

INSTALLATION

1. INSTALL VSC OFF SWITCH

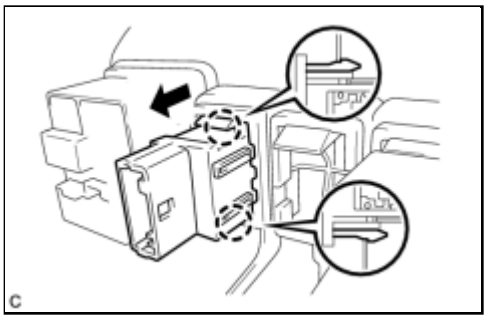

(a) Engage the 2 claws to install the VSC off switch.

2. INSTALL LOWER INSTRUMENT PANEL FINISH PANEL ASSEMBLY INFO

3. CONNECT CABLE TO NEGATIVE BATTERY TERMINAL

4. CHECK VSC WARNING LIGHT AND VSC OFF INDICATOR LIGHT

INFO

Last Modified: 3-10-2010	6.4 A	**From:** 200901
Model Year: 2010	**Model:** Corolla	**Doc ID:** RM000003D8S008X
Title: BRAKE CONTROL / DYNAMIC CONTROL SYSTEMS: YAW RATE AND ACCELERATION SENSOR (w/ VSC): REMOVAL (2010 Corolla)		

REMOVAL

1. DISCONNECT CABLE FROM NEGATIVE BATTERY TERMINAL

CAUTION:

Wait at least 90 seconds after disconnecting the cable from the negative (-) battery terminal to disable the SRS system INFO

2. REMOVE FRONT SEAT HEADREST ASSEMBLY

3. REMOVE OUTER SEAT TRACK COVER (for Power Seat) INFO

4. REMOVE OUTER SEAT TRACK COVER (for Manual Seat) INFO

5. REMOVE INNER SEAT TRACK COVER (for Power Seat) INFO

6. REMOVE INNER SEAT TRACK COVER (for Manual Seat) INFO

7. REMOVE FRONT SEAT ASSEMBLY (for Power Seat) INFO

8. REMOVE FRONT SEAT ASSEMBLY (for Manual Seat) INFO

9. REMOVE YAW RATE AND ACCELERATION SENSOR

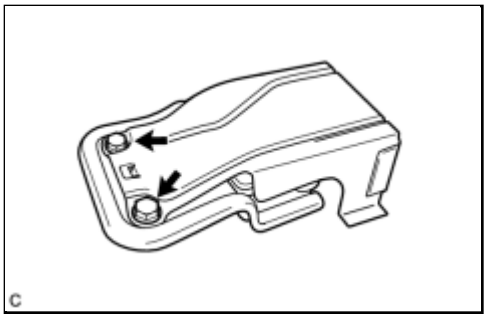

(a) Remove the 2 bolts and yaw rate and acceleration sensor bracket.

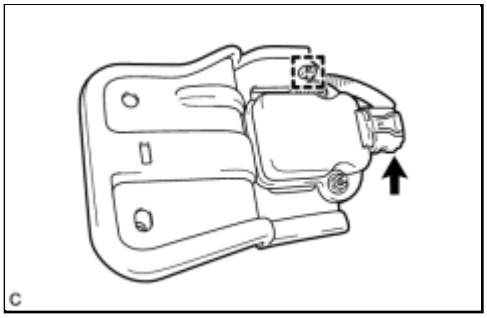

(b) Disconnect the connector and clamp from the yaw rate and acceleration sensor.

NOTICE:

Do not remove the installation nuts.

Last Modified: 3-10-2010	6.4 A	**From:** 200901
Model Year: 2010	**Model:** Corolla	**Doc ID:** RM000003D8Q00AX
Title: BRAKE CONTROL / DYNAMIC CONTROL SYSTEMS: YAW RATE AND ACCELERATION SENSOR (w/ VSC): INSTALLATION (2010 Corolla)		

INSTALLATION

1. INSTALL YAW RATE AND ACCELERATION SENSOR

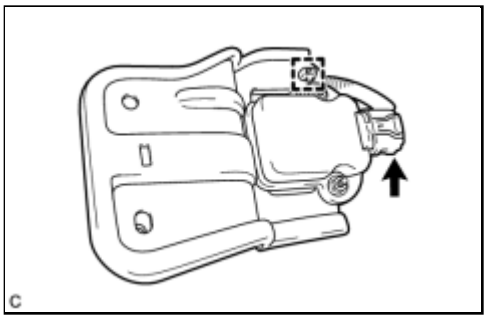

(a) Connect the connector and clamp to the yaw rate and acceleration sensor.

NOTICE:

Make sure that the yaw rate and acceleration sensor connector is connected securely.

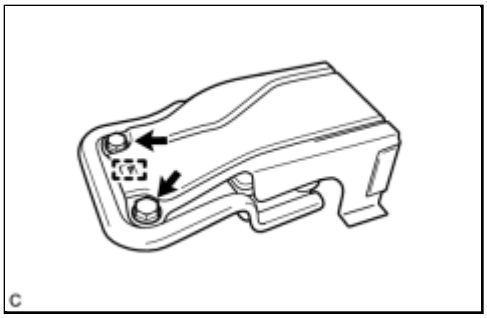

(b) Insert the claw on the yaw rate and acceleration sensor bracket into the yaw rate and acceleration sensor and install the sensor with the 2 bolts.

Torque: 20 N·m (204 kgf·cm, 15ft·lbf)

NOTICE:

- Keep foreign matter from adhering to the area between the yaw rate and acceleration sensor bracket and body.
- Do not damage the yaw rate and acceleration sensor.
- Make sure that the yaw rate and acceleration sensor is installed securely.

2. INSTALL FRONT SEAT ASSEMBLY LH (for Power Seat) INFO

3. INSTALL FRONT SEAT ASSEMBLY LH (for Manual Seat) INFO

4. INSPECT FRONT SEAT SLIDE ADJUSTER LOCK INFO

5. INSTALL INNER SEAT TRACK COVER (for Power Seat) INFO

6. INSTALL INNER SEAT TRACK COVER (for Manual Seat) INFO

7. INSTALL OUTER SEAT TRACK COVER (for Power Seat) INFO

8. INSTALL OUTER SEAT TRACK COVER (for Manual Seat) INFO

9. REMOVE FRONT SEAT HEADREST ASSEMBLY

10. CONNECT CABLE TO NEGATIVE BATTERY TERMINAL

11. INSPECT FRONT SEAT ASSEMBLY (for Power Seat) INFO

12. INITIALIZE ZERO POINT CALIBRATION (for Manual Seat) INFO

13. INSPECT AND ADJUST YAW RATE AND ACCELERATION SENSOR ZERO POINT CALIBRATION

INFO

14. INSPECT SRS WARNING LIGHT (w/ Front Seat Side Airbag)

INFO

Last Modified: 3-10-2010	6.4 L	**From:** 200901
Model Year: 2010	**Model:** Corolla	**Doc ID:** RM000001JB0013X
Title: BRAKE CONTROL / DYNAMIC CONTROL SYSTEMS: ANTI-LOCK BRAKE SYSTEM: PRECAUTION (2010 Corolla)		

PRECAUTION

1. EXPRESSIONS OF IGNITION SWITCH

The type of ignition switch used on this model differs according to the specifications of the vehicle.

The expressions listed in the table below are used in this section.

EXPRESSION	SWITCH TYPE	
	IGNITION SWITCH (POSITION)	ENGINE SWITCH (CONDITION)
Ignition switch off	LOCK	off
Ignition switch ON	ON	on (IG)
Ignition switch ACC	ACC	on (ACC)
Engine start	START	start

2. TROUBLESHOOTING PRECAUTIONS

(a) When there is a malfunction in the terminal contact points or part installation problems, removal and installation of the suspected parts may return the system to normal either completely or temporarily.

(b) In order to determine the malfunctioning area, be sure to check the conditions at the time the malfunction occurred, such as DTC output and the Freeze Frame Data, and record it before disconnecting any connector or removing and installing parts.

(c) Since the system may be influenced by malfunctions in systems other than the ABS system, be sure to check for DTCs in other systems.

3. HANDLING PRECAUTIONS

(a) Be sure to remove and install the ECU, brake actuator and each sensor, etc. with the ignition switch off unless it is specified in the inspection procedure.

(b) If the ECU, brake actuator or a sensor has been removed and installed, it is necessary to check the system for problems after any parts have been reinstalled. Check for DTCs using the Techstream, and also check that system functions and signals received by the ECU are normal using Test Mode.

4. DTC PRECAUTION

(a) Warnings for some DTCs will not be cleared by just replacing the malfunctioning parts. If a warning is still displayed after completing a repair, turn the ignition switch off before beginning the clear DTC procedure.

NOTICE:

If a DTC for a malfunctioning part reappears after it was cleared, then it has been stored again.

5. CAN COMMUNICATION SYSTEM PRECAUTIONS

(a) The CAN communication system is used for data communication between the skid control ECU and other ECUs. If there are any problems in the CAN communication line, corresponding DTCs in the communication line are output.

(b) If any CAN communication line DTCs are output, repair the malfunction in the communication line and troubleshoot the ABS system while data communication is normal.

(c) In order to enable CAN communication, a specific type of wiring is used for the CAN communication lines. The wiring used for each communication line is a twisted pair of wires that have an equal length. A bypass wire should not be used because the data being transmitted will be corrupted.

Last Modified: 3-10-2010	6.4 R	**From:** 200901
Model Year: 2010	**Model:** Corolla	**Doc ID:** RM000001JB302OX
Title: BRAKE CONTROL / DYNAMIC CONTROL SYSTEMS: ANTI-LOCK BRAKE SYSTEM: PARTS LOCATION (2010 Corolla)		

PARTS LOCATION

ILLUSTRATION

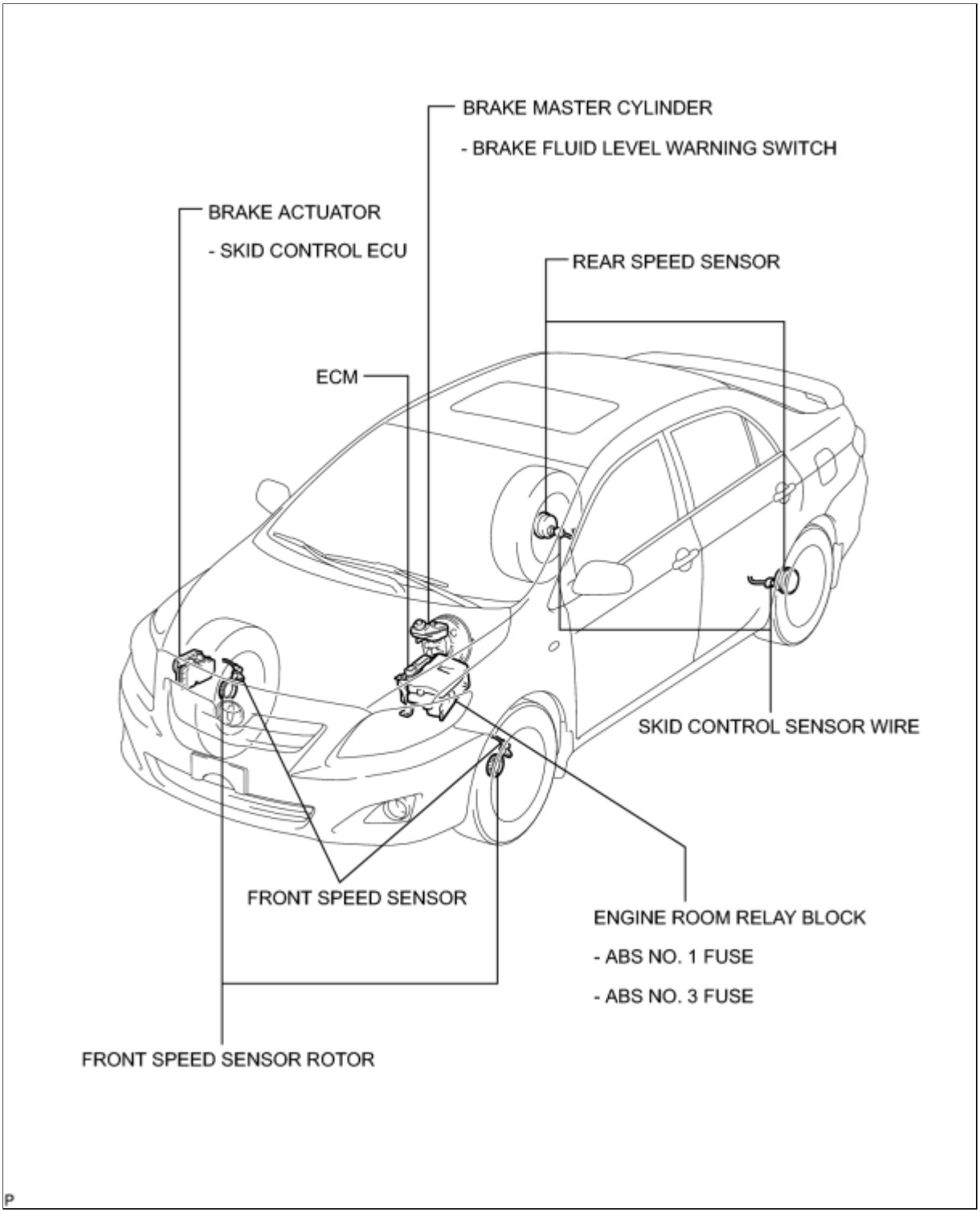

P

ILLUSTRATION

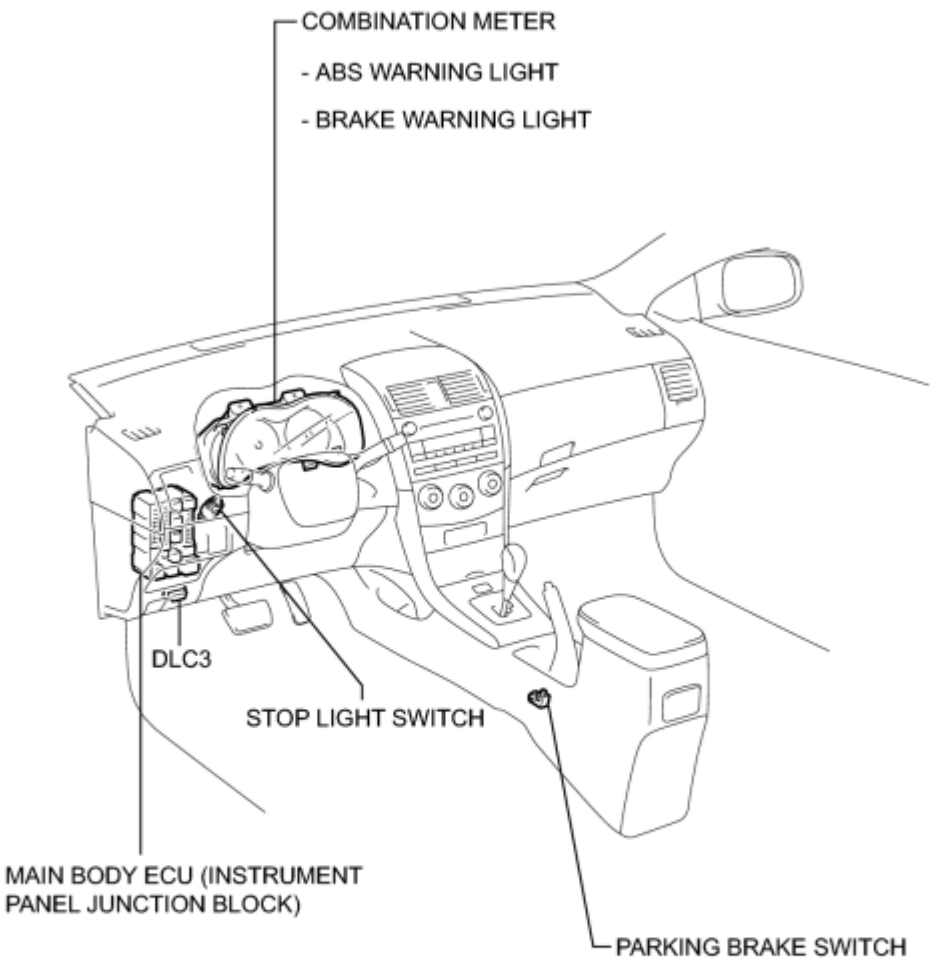
COMBINATION METER
- ABS WARNING LIGHT
- BRAKE WARNING LIGHT
DLC3
STOP LIGHT SWITCH
MAIN BODY ECU (INSTRUMENT PANEL JUNCTION BLOCK)
- ECU-IG NO. 1 FUSE
- STOP FUSE
PARKING BRAKE SWITCH

P

Last Modified: 3-10-2010	6.4 U	**From:** 200901
Model Year: 2010	**Model:** Corolla	**Doc ID:** RM000001JB9017X
Title: BRAKE CONTROL / DYNAMIC CONTROL SYSTEMS: ANTI-LOCK BRAKE SYSTEM: SYSTEM DIAGRAM (2010 Corolla)		

SYSTEM DIAGRAM

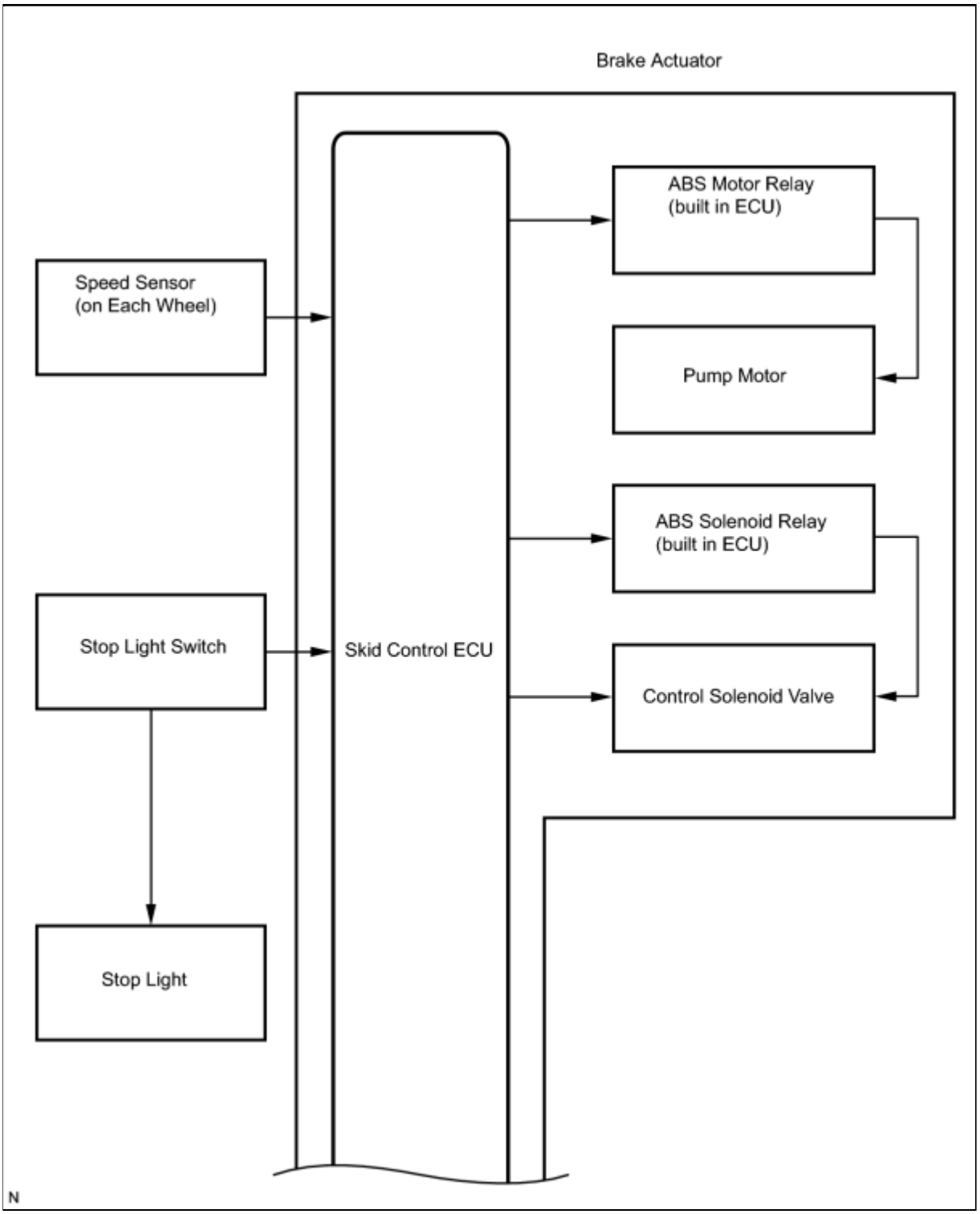

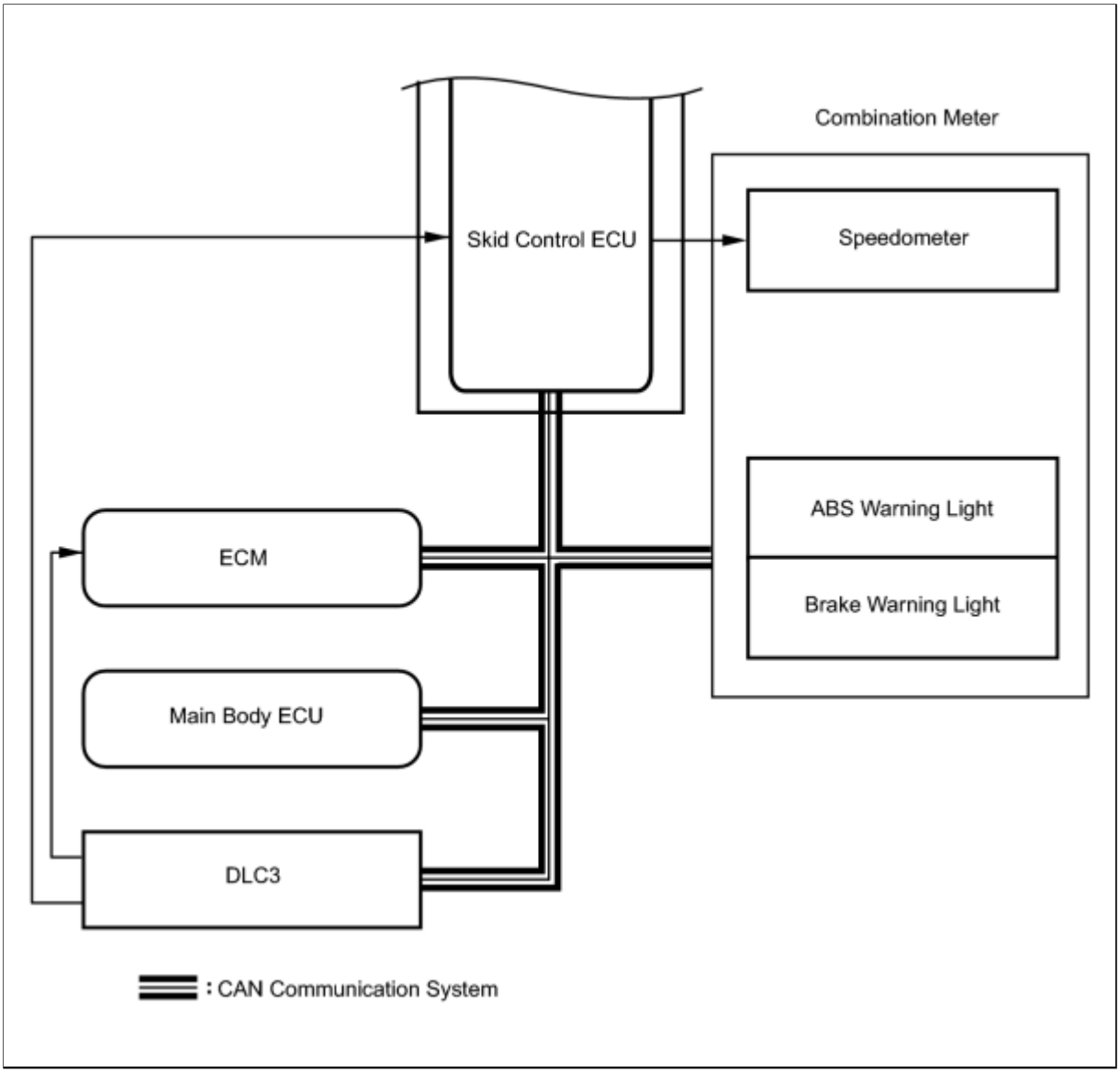

TRANSMITTING ECU (TRANSMITTER)	RECEIVING ECU	SIGNAL	COMMUNICATION METHOD
ECM	Skid control ECU	• Shift position signal • Throttle position signal • Engine speed signal • Diagnosis switch (TC) signal	CAN communication system
Main body ECU	Skid control ECU	Parking brake switch signal	CAN communication system
Skid control ECU	Combination meter	• ABS warning light signal	CAN communication system

TRANSMITTING ECU (TRANSMITTER)	RECEIVING ECU	SIGNAL	COMMUNICATION METHOD
		• Brake warning light signal • Wheel speed signal	

Last Modified: 3-10-2010	6.4 D	**From:** 200901
Model Year: 2010	**Model:** Corolla	**Doc ID:** RM000001JB601DX
Title: BRAKE CONTROL / DYNAMIC CONTROL SYSTEMS: ANTI-LOCK BRAKE SYSTEM: SYSTEM DESCRIPTION (2010 Corolla)		

SYSTEM DESCRIPTION

1. FUNCTION DESCRIPTION

HINT:

The skid control ECU is located within the brake actuator assembly.

(a) ABS (Anti-lock Brake System)

The ABS helps prevent the wheels from locking when the brakes are applied firmly or when braking on a slippery surface.

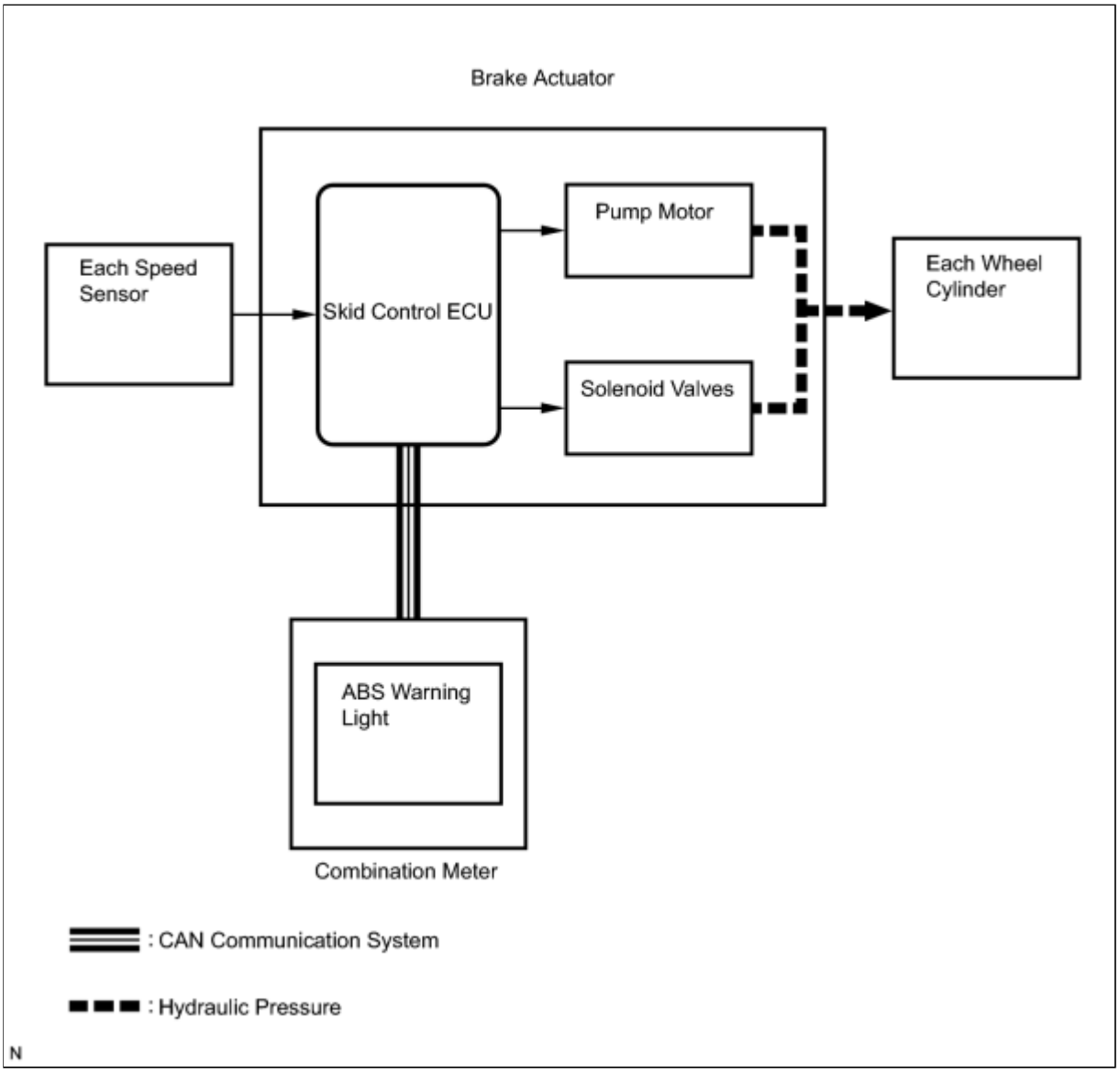

(1) Operation description

The skid control ECU detects wheel lock based on speed signals received from the wheel speed sensors. Based on this information, the skid control ECU controls the pump motor and solenoid valves. The pump motor and solenoid valves are used to prevent wheel lock by controlling the hydraulic pressure applied to the brakes at each wheel. The ABS warning light will come on when the system is malfunctioning.

(b) EBD (Electronic Brake force Distribution)

The EBD control utilizes the ABS to properly distribute brake force between the front and rear wheels in accordance with driving conditions.

In addition, when braking while cornering, it also controls the brake force distribution between the right and left wheels, helping to maintain vehicle behavior.

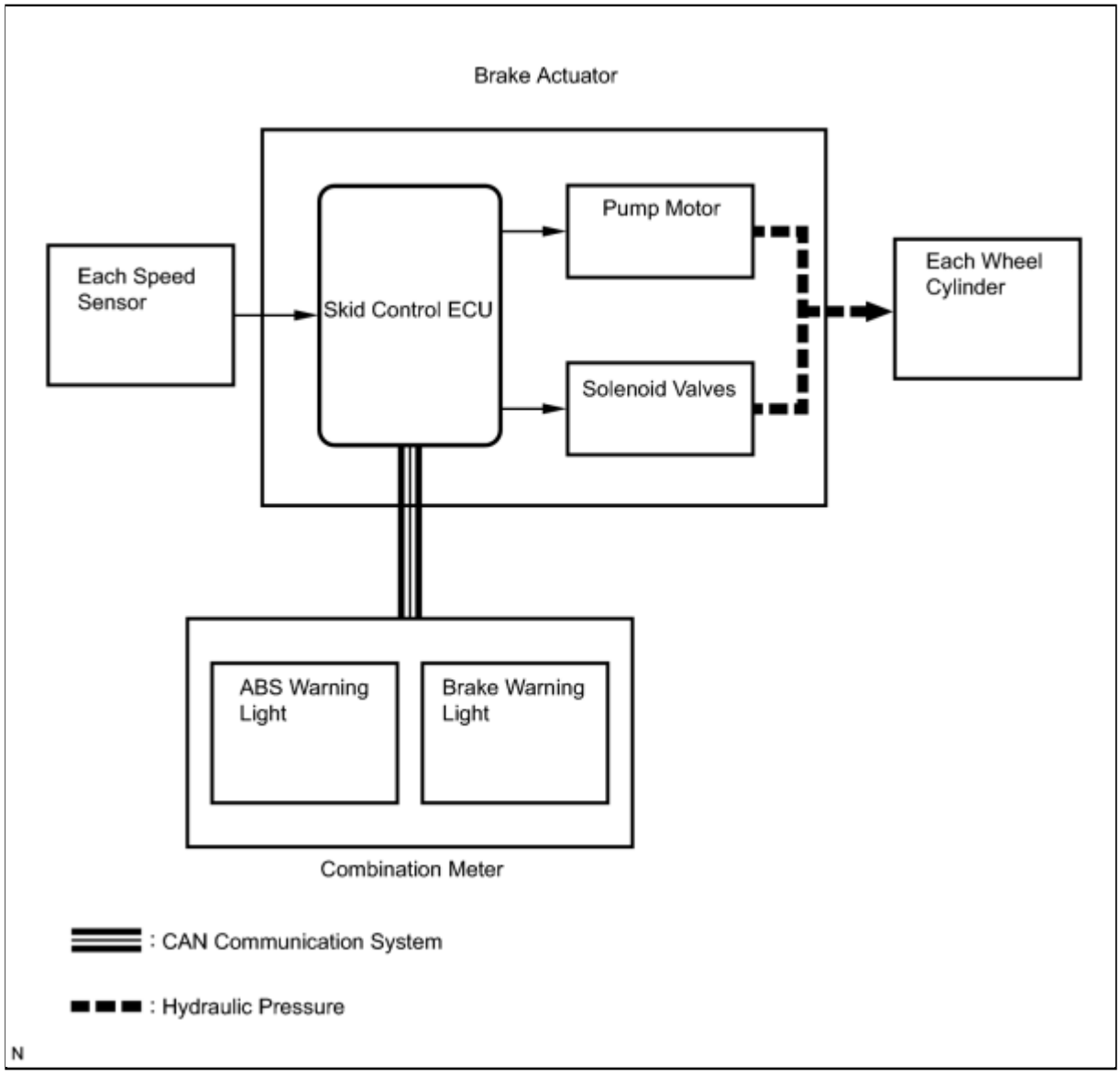

(1) Operation description

The skid control ECU receives a speed signal from each wheel speed sensor, and uses these signals to detect locking of the wheels. The ECU uses this information in order to determine appropriate control of the solenoid valves. The solenoid valves control the hydraulic pressure applied to the brake cylinder at each wheel. In this way, the solenoid valves are used to control the brake power split between the front and rear, and left and right wheels. The ABS

warning and brake warning lights will come on if there is a malfunction in the EBD system.

(c) BA (Brake Assist)

The primary purpose of the brake assist system is to provide auxiliary brake force to assist a driver who cannot generate a large enough brake force during emergency braking, thus helping to maximize the brake performance of the vehicle.

(1) Operation description

The brake assist mechanism installed on the control valve of the brake booster determines an emergency brake application based on the speed and the amount the brake pedal is depressed. This mechanism generates a stronger braking force as needed.

2. ABS with EBD and BA OPERATION

(a) Based on the signals received from the 4 wheel speed sensors, the skid control ECU calculates the deceleration and speed of each wheel, while monitoring for wheel lock. If wheel lock is occurring, the ECU controls the solenoid valves in the brake actuator in order to adjust the hydraulic pressure applied to the brakes at each wheel.

3. FAIL SAFE

(a) When a malfunction occurs in the ABS system, the ABS warning light comes on, and operation is prohibited. In addition, when a malfunction which disables EBD operation occurs, the brake warning light also comes on, and operation is prohibited.

4. INITIAL CHECK

(a) When the vehicle speed first reaches approximately 6 km/h (4 mph) or more after the ignition switch is turned to ON, each solenoid valve and motor of the brake actuator assembly are sequentially activated to perform an electrical check. During the initial check, the operating sound of the solenoid valves and motor can be heard from the engine compartment, but this is not a malfunction.

5. FUNCTION OF COMPONENTS

COMPONENT	FUNCTION
Speed sensor	Detects speed of each wheel and inputs the data into the skid control ECU.
Stop light switch	Detects the brake operating conditions and inputs the result to the skid control ECU.
Main body ECU	Detects the parking brake operating conditions and inputs the result to the skid control ECU via CAN communication.
Skid control ECU	• Housed in the brake actuator assembly. • Processes the signals sent from each sensor to control the ABS, EBD and BA.
ABS motor relay	• Supplies power to the pump motor. • Housed in the skid control ECU.
ABS solenoid relay	• Supplies power to each solenoid. • Housed in the skid control ECU.

COMPONENT	FUNCTION
Brake actuator assembly	• Composed of the holding solenoid valves, pressure reduction solenoid valves, pump motor, reservoir, etc., and adjusts the hydraulic pressure applied to each wheel cylinder. • Houses the skid control ECU.
ABS warning light	• Comes on to inform the driver that a malfunction in the ABS and/or EBD system has occurred. • Blinks to output DTCs.
Brake warning light	• Comes on to inform the driver that the parking brake is on when the system is normal or the brake fluid level has decreased. • Comes on to inform the driver that a malfunction in the EBD system has occurred.
ECM	Detects the engine information and inputs the result to the skid control ECU via CAN communication.

Last Modified: 3-10-2010	6.4 D	**From:** 200901
Model Year: 2010	**Model:** Corolla	**Doc ID:** RM000000XHK051X
Title: BRAKE CONTROL / DYNAMIC CONTROL SYSTEMS: ANTI-LOCK BRAKE SYSTEM: HOW TO PROCEED WITH TROUBLESHOOTING (2010 Corolla)		

HOW TO PROCEED WITH TROUBLESHOOTING

HINT:

- The anti-lock brake system troubleshooting procedures are based on the premise that the CAN communication system is normally functioning. Check the CAN communication system first before troubleshooting the anti-lock brake system INFO .
- *: Use the Techstream.

1.	**VEHICLE BROUGHT TO WORKSHOP**

NEXT

2.	**CUSTOMER PROBLEM ANALYSIS**

(a) Interview the customer and confirm the problem INFO .

NEXT

3.	**CHECK DTC AND FREEZE FRAME DATA***

(a) Check and record DTCs and Freeze Frame Data.

(b) Clear the DTCs and Freeze Frame Data INFO for DTC Check/Clear, and INFO for Freeze Frame Data).

(c) Reconfirm the DTCs.

(1) Reconfirm the DTCs based on the recorded DTCs and Freeze Frame Data INFO for DTC Check/Clear, and INFO for Freeze Frame Data).

Result:

RESULT	PROCEED TO
DTC is output	A
DTC is not output (Problem symptom does not occur)	B
DTC is not output (Problem symptom occurs)	C

B ▶ **GO TO STEP 5**

C ▶ **GO TO STEP 6**

A
▼

4.	DIAGNOSTIC TROUBLE CODE CHART

(a) Proceed to Diagnostic Trouble Code Chart INFO .

NEXT ▶ **GO TO STEP 7**

5.	SYMPTOM SIMULATION

(a) Proceed to Diagnosis System INFO .

NEXT
▼

6.	PROBLEM SYMPTOMS TABLE

(a) Proceed to Problem Symptoms Table INFO .

NEXT

7.	CIRCUIT INSPECTION*

NEXT

8.	IDENTIFICATION OF PROBLEM

NEXT

9.	REPAIR OR REPLACEMENT

NEXT

10.	CONFIRMATION TEST*

NEXT END

Last Modified: 3-10-2010	6.4 D	**From:** 200901
Model Year: 2010	**Model:** Corolla	**Doc ID:** RM000001JBD01WX
Title: BRAKE CONTROL / DYNAMIC CONTROL SYSTEMS: ANTI-LOCK BRAKE SYSTEM: TEST MODE PROCEDURE (2010 Corolla)		

TEST MODE PROCEDURE

1. WARNING LIGHT INITIAL CHECK

(a) Release the parking brake.

NOTICE:

Before releasing the parking brake, move the shift lever to P for safety (for automatic transaxle model) or set the chocks to hold the vehicle for safety (for manual transaxle model).

HINT:

When the parking brake is applied or the level of the brake fluid is low, the brake warning light comes on.

(b) When the ignition switch is turned to ON, check that the ABS warning and brake warning lights come on for approximately 3 seconds.

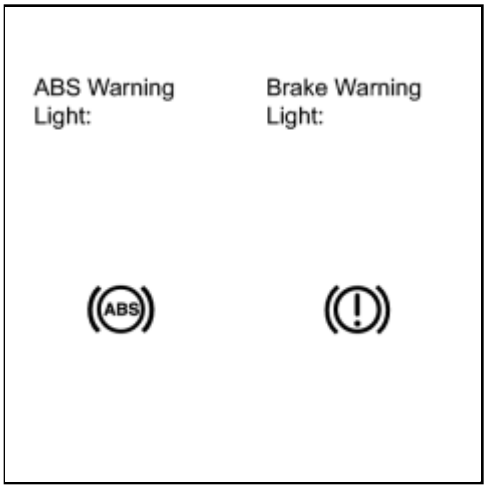

HINT:

- If the skid control ECU stores any DTCs, the ABS warning and brake warning lights will come on.
- If the indicator remains on or does not come on, proceed to troubleshooting for the light circuits listed below.

TROUBLE AREA	SEE PROCEDURE
ABS warning light circuit (Remains on)	INFO
ABS warning light circuit (Does not come on)	INFO
Brake warning light circuit (Remains on)	INFO
Brake warning light circuit (Does not come on)	INFO

2. SENSOR CHECK USING TEST MODE (SIGNAL CHECK) (When Using the Techstream)

HINT:

- If the ignition switch is turned from ON to ACC or off during Test Mode (signal check), DTCs recorded during the sensor check will be cleared.
- During Test Mode (signal check), the skid control ECU records all DTCs of the sensor check function. By performing Test Mode (signal check), the codes are cleared if a normal condition is confirmed. The remaining codes are the codes where a malfunction was found.

(a) Procedure to enter Test Mode.

(1) Turn the ignition switch off.

(2) Check that the steering wheel is centered.

(3) Check that the shift lever is in P (for automatic transaxle model) or the parking brake is applied (for manual transaxle model).

(4) Connect the Techstream to the DLC3.

(5) Turn the ignition switch to ON.

(6) Turn the Techstream on.

(7) Switch the skid control ECU to Test Mode using the Techstream. Enter the following menus: Chassis / ABS/VSC/TRAC / Utility / Signal Check.

(8) Check that the ABS warning light comes on for several seconds and then blinks in Test Mode.

HINT:

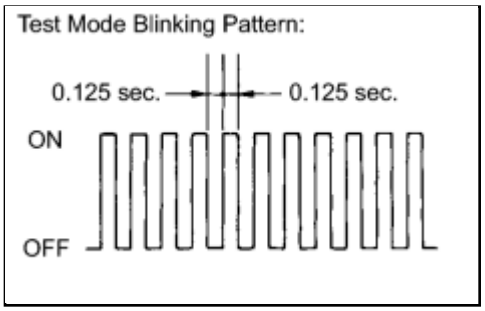

If the ABS warning light does not blink, inspect the TS and CG terminal circuit and ABS warning light circuit.

TROUBLE AREA	SEE PROCEDURE
TS and CG terminal circuit	INFO
ABS warning light circuit (Remains on)	INFO
ABS warning light circuit (Does not come on)	INFO

(9) Check the ABS sensors.

HINT:

Check that the ABS warning light is blinking in Test Mode and perform the check.

3. SPEED SENSOR CHECK (When Using the Techstream)

(a) Drive the vehicle straight-ahead.

Accelerate the vehicle to a speed of 45 km/h (28 mph) or more for several seconds and check that the ABS warning light goes off.

HINT:

- The sensor check may not be completed if wheel spin occurs.
- The ABS warning light blinks when the sensor check has been completed and the brake pedal is depressed.
- The ABS warning light comes on immediately after a malfunction has been detected during the speed sensor check.

(b) Stop the vehicle.

NOTICE:

- The speed sensor check may not be completed if the speed sensor check is started while turning

the steering wheel or spinning the wheels.

- After the ABS warning light goes off, if the vehicle speed exceeds 80 km/h (50 mph), a sensor check code will be stored again. Decelerate or stop the vehicle before the speed reaches 80 km/h (50 mph).
- If the sensor check has not been completed, the ABS warning light will blink while driving and the ABS will not operate.

HINT:

When the sensor check has been completed, the ABS warning light goes off while driving and blinks in the Test Mode pattern while the vehicle is stationary.

4. END OF SENSOR CHECK (When Using the Techstream)

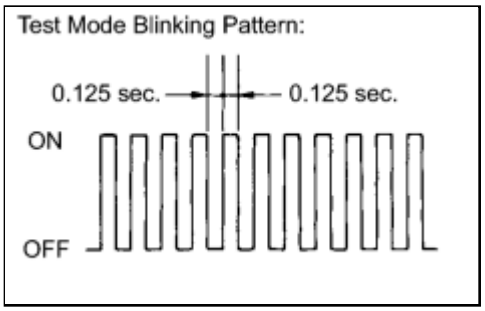

(a) If the sensor check is completed, the ABS warning light blinks (Test Mode) when the vehicle stops and the ABS warning light is off while the vehicle is driving.

NOTICE:

If the sensor check has not been completed, the ABS warning light will blink while driving and the ABS will not operate.

5. READ DTC OF SENSOR CHECK FUNCTION (When Using the Techstream)

(a) Read the DTC(s) by following the Techstream screen.

NOTICE:

- If only DTCs other than the Test Mode sensor check DTCs are displayed, repair the malfunction and clear the DTCs.
- If the Test Mode sensor check DTCs and other DTCs are displayed or if only the Test Mode sensor check DTCs are displayed, repair the malfunction, clear the DTCs, and perform the Test Mode inspection again.

HINT:

See the list of DTC (See procedure "A").

(b) Turn the ignition switch off and disconnect the Techstream.

6. SENSOR CHECK USING TEST MODE (SIGNAL CHECK) (When not Using the Techstream)

HINT:

- If the ignition switch is turned from ON to ACC or off during Test Mode (signal check), DTCs recorded during the sensor check will be cleared.
- During Test Mode (signal check), the skid control ECU records all DTCs of the sensor check function. By performing Test Mode (signal check), the codes are cleared if a normal condition is confirmed. The remaining codes are the codes where a malfunction was found.

(a) Procedure to enter Test Mode.

(1) Turn the ignition switch off.

(2) Check that the steering wheel is centered.

(3) Check that the shift lever is in P (for automatic transaxle model) or the parking brake is

applied (for manual transaxle model).

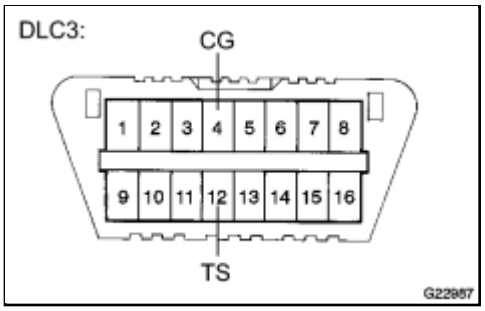

(4) Using SST, connect terminals TS and CG of the DLC3.

SST: 09843-18040

(5) Turn the ignition switch to ON.

(6) Check that the ABS warning light comes on for several seconds and then blinks in Test Mode.

HINT:

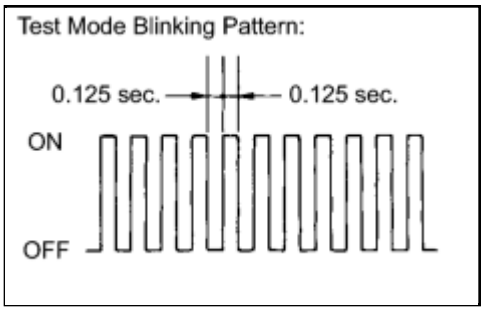

If the ABS warning light does not blink, inspect the TS and CG terminal circuit, and ABS warning light circuit.

TROUBLE AREA	SEE PROCEDURE
TS and CG terminal circuit	INFO
ABS warning light circuit (Remains on)	INFO
ABS warning light circuit (Does not come on)	INFO

(7) Check the ABS sensors.

HINT:

Check that the ABS warning light is blinking in Test Mode and perform the check.

7. SPEED SENSOR CHECK (When not Using the Techstream)

(a) Drive the vehicle straight-ahead.

Accelerate the vehicle to a speed of 45 km/h (28 mph) or more for several seconds and check that the ABS warning light goes off.

HINT:

- The sensor check may not be completed if wheel spin occurs.
- The ABS warning light blinks when the sensor check has been completed and the brake pedal is depressed.
- The ABS warning light comes on immediately after a malfunction has been detected during the speed sensor check.

(b) Stop the vehicle.

NOTICE:

- The speed sensor check may not be completed if the speed sensor check is started while turning the steering wheel or spinning the wheels.
- After the ABS warning light goes off, if the vehicle speed exceeds 80 km/h (50 mph), a sensor check code will be stored again. Decelerate or stop the vehicle before the speed reaches 80 km/h (50 mph).
- If the sensor check has not been completed, the ABS warning light will blink while driving and the ABS will not operate.

HINT:

When the sensor check has been completed, the ABS warning light goes off while driving and blinks in the Test Mode pattern while the vehicle is stationary.

8. END OF SENSOR CHECK (When not Using the Techstream)

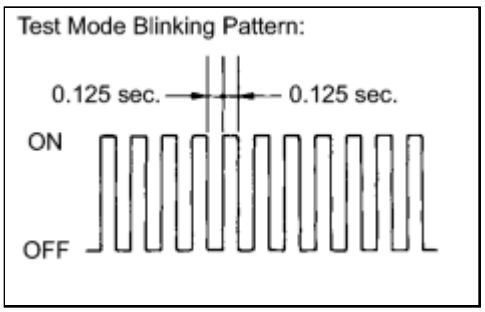

(a) If the sensor check is completed, the ABS warning light blinks (Test Mode) when the vehicle stops and the ABS warning light is off while the vehicle is driving.

NOTICE:

If the sensor check has not been completed, the ABS warning light will blink while driving and the ABS will not operate.

9. READ DTC OF SENSOR CHECK FUNCTION (When not Using the Techstream)

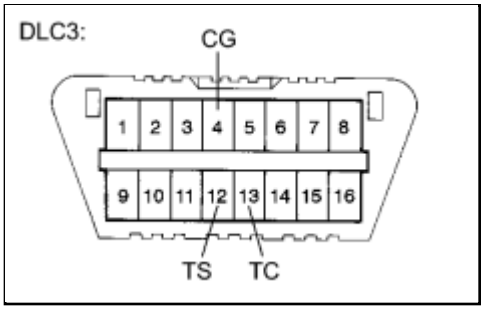

(a) Using SST, connect terminals TC and CG of the DLC3.

SST: 09843-18040

(b) Count the number of blinks of the ABS warning light.

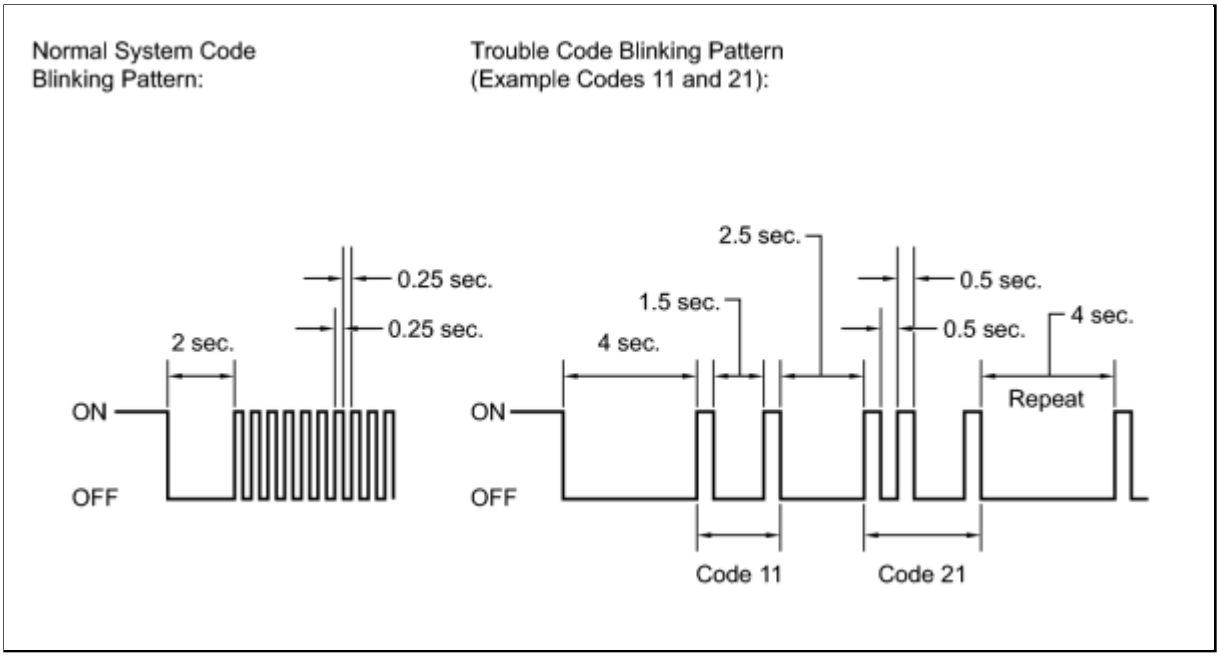

NOTICE:

- If only DTCs other than the Test Mode sensor check DTCs are displayed, repair the malfunction and clear the DTCs.
- If the Test Mode sensor check DTCs and other DTCs are displayed or if only the Test Mode sensor check DTCs are displayed, repair the malfunction, clear the DTCs, and perform the Test Mode inspection again.

HINT:

- If more than 1 malfunction is detected at the same time, the lowest numbered code will be displayed first.
- See the list of DTCs (See procedure "A").

(c) After performing the check, disconnect SST from terminals TS and CG, and TC and CG of the DLC3, and turn the ignition switch off.

(d) Turn the ignition switch to ON to cancel Test Mode.

HINT:

- If the ignition switch is not turned to ON after SST is removed from the DLC3, the previous Test Mode will continue.
- If the ignition switch is turned to ON with terminals TS and CG connected, the previous Test Mode will continue.

10. DTC OF SENSOR CHECK FUNCTION (Procedure "A")

ABS Sensor

DTC CODE	DETECTION ITEM	TROUBLE AREA
C1271/71	Low output signal of front speed sensor RH	• Front speed sensor RH • Sensor installation

DTC CODE	DETECTION ITEM	TROUBLE AREA
		• Speed sensor rotor
C1272/72	Low output signal of front speed sensor LH	• Front speed sensor LH • Sensor installation • Speed sensor rotor
C1273/73	Low output signal of rear speed sensor RH	• Rear speed sensor RH • Sensor installation • Speed sensor rotor
C1274/74	Low output signal of rear speed sensor LH	• Rear speed sensor LH • Sensor installation • Speed sensor rotor
C1275/75	Abnormal change in output signal of front speed sensor RH	Speed sensor rotor
C1276/76	Abnormal change in output signal of front speed sensor LH	Speed sensor rotor
C1277/77	Abnormal change in output signal of rear speed sensor RH	Speed sensor rotor
C1278/78	Abnormal change in output signal of rear speed sensor LH	Speed sensor rotor

HINT:

The codes in this table are output only in Test Mode (signal check).

Last Modified: 3-10-2010	6.4 D	**From:** 200901
Model Year: 2010	**Model:** Corolla	**Doc ID:** RM000000XHS05FX
Title: BRAKE CONTROL / DYNAMIC CONTROL SYSTEMS: ANTI-LOCK BRAKE SYSTEM: CHECK FOR INTERMITTENT PROBLEMS (2010 Corolla)		

CHECK FOR INTERMITTENT PROBLEMS

1. CHECK FOR INTERMITTENT PROBLEMS

HINT:

A momentary interruption (open circuit) in the connectors and/or wire harness between the sensors and ECUs can be detected using the ECU Data List function of the Techstream.

(a) Turn the ignition switch off.

(b) Connect the Techstream to the DLC3.

(c) Turn the ignition switch to ON.

(d) Turn the Techstream on.

(e) Follow the directions on the Techstream to display the Data List and select areas where momentary interruption should be monitored.

HINT:

- A momentary interruption (open circuit) cannot be detected for 3 seconds after the ignition switch is turned to ON (initial check).
- If the status remains on (ERROR displayed), check for continuity between the ECU and the sensors, or between ECUs.
- The ERROR display on the Techstream remains on for 1 second after the harness signal changed from momentary interruption (open circuit) to normal condition.

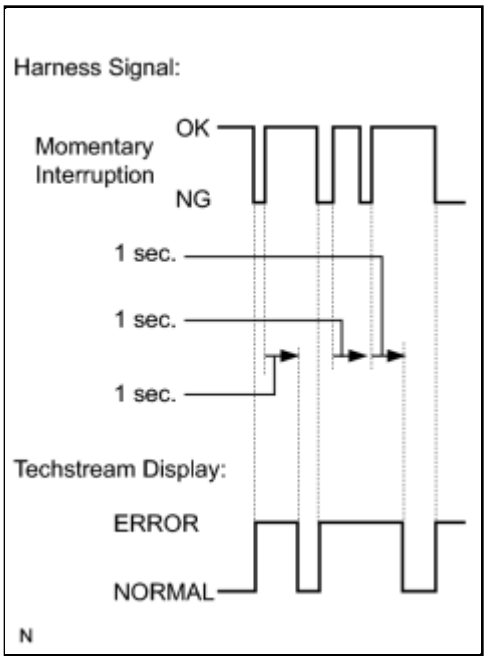

ABS/VSC/TRAC

TESTER DISPLAY	MEASUREMENT ITEM / RANGE	NORMAL CONDITION	DIAGNOSTIC NOTE
FR Speed Open	FR speed sensor open detection / ERROR or NORMAL	ERROR: Momentary interruption NORMAL: Normal	-
FL Speed Open	FL speed sensor open detection / ERROR or NORMAL	ERROR: Momentary interruption NORMAL:	-

		Normal	
RR Speed Open	RR speed sensor open detection / ERROR or NORMAL	ERROR: Momentary interruption NORMAL: Normal	-
RL Speed Open	RL speed sensor open detection / ERROR or NORMAL	ERROR: Momentary interruption NORMAL: Normal	-

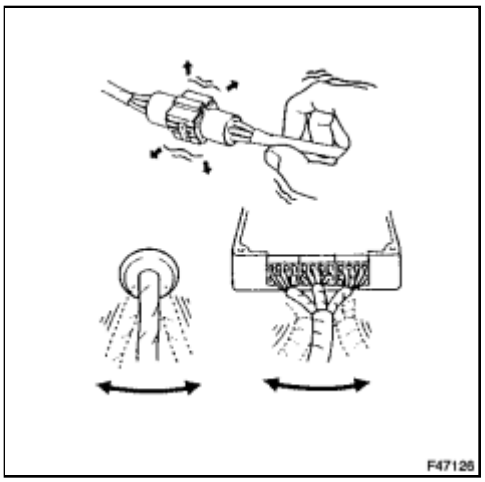

(f) While observing the screen, gently jiggle the connector or wire harness between the ECU and sensors, or between ECUs.

OK:

NORMAL display appears.

HINT:

The connector and/or wire harness has a momentary interruption (open circuit) if the display changes. Repair or replace the connector and/or wire harness as one of them is faulty.

Last Modified: 3-10-2010	6.4 T	**From:** 200901
Model Year: 2010	**Model:** Corolla	**Doc ID:** RM000000XHN04OX
Title: BRAKE CONTROL / DYNAMIC CONTROL SYSTEMS: ANTI-LOCK BRAKE SYSTEM: PROBLEM SYMPTOMS TABLE (2010 Corolla)		

PROBLEM SYMPTOMS TABLE

If there are no DTCs output and the problem still occurs, check the circuits for each problem symptom in the order given in the table below and proceed to the relevant troubleshooting page.

NOTICE:

When replacing the brake actuator assembly, sensors, etc., turn the ignition switch off.

HINT:

- Use the table below to help determine the cause of problem symptoms. If multiple suspected areas are listed, the potential causes of the symptoms are listed in order of probability in the "Suspected Area" column of the table. Check each symptom by checking the suspected areas in the order they are listed. Replace parts as necessary.
- Inspect the fuses and relays related to this system before inspecting the suspected areas below.

Anti-lock Brake System

SYMPTOM	SUSPECTED AREA	SEE PAGE
ABS and/or EBD does not operate	Check for DTCs again and make sure that the normal system code is output.	INFO
	IG power source circuit	INFO
	Front speed sensor circuit	INFO
	Rear speed sensor circuit	INFO
	Check the brake actuator assembly using the Techstream. (Check brake actuator assembly operation using the Active Test function.) If abnormal, check the hydraulic circuit for leaks.	INFO
	If the symptoms still occur even after the above circuits in suspected areas have been inspected and proved to be normal, replace the brake actuator assembly (skid control ECU).	INFO
ABS and/or EBD does not operate efficiently	Check for DTCs again and make sure that the normal system code is output.	INFO
	Front speed sensor circuit	INFO
	Rear speed sensor circuit	INFO
	Stop light switch circuit	INFO
	Check the brake actuator assembly using the Techstream. (Check brake actuator assembly operation using the Active Test function.) If abnormal, check the hydraulic circuit for leaks.	INFO

SYMPTOM	SUSPECTED AREA	SEE PAGE
	If the symptoms still occur even after the above circuits in suspected areas have been inspected and proved to be normal, replace the brake actuator assembly (skid control ECU).	INFO
ABS sensor DTC check cannot be done	Check for DTCs again and make sure that the normal system code is output.	INFO
	TC and CG terminal circuit	INFO
	If the symptoms still occur even after the above circuit in suspected areas has been inspected and proved to be normal, replace the brake actuator assembly (skid control ECU).	INFO
ABS warning light abnormal (Remains on)	ABS warning light circuit	INFO
	Brake actuator assembly (Skid control ECU)	INFO
ABS warning light abnormal (Does not come on)	ABS warning light circuit	INFO
	Brake actuator assembly (Skid control ECU)	INFO
Brake warning light abnormal (Remains on)	Brake warning light circuit	INFO
	Brake actuator assembly (Skid control ECU)	INFO
Brake warning light abnormal (Does not come on)	Brake warning light circuit	INFO
	Brake actuator assembly (Skid control ECU)	INFO
Sensor check cannot be done	TS and CG terminal circuit	INFO
	Brake actuator assembly (Skid control ECU)	INFO

Last Modified: 3-10-2010	6.4 U	**From:** 200901
Model Year: 2010	**Model:** Corolla	**Doc ID:** RM000001JB402HX
Title: BRAKE CONTROL / DYNAMIC CONTROL SYSTEMS: ANTI-LOCK BRAKE SYSTEM: TERMINALS OF ECU (2010 Corolla)		

TERMINALS OF ECU

1. TERMINALS OF ECU

Component without harness connected:
(Skid Control ECU)



TERMINAL NO. (SYMBOL)	TERMINAL DESCRIPTION
1 (GND1)	Skid control ECU ground
4 (RL-)	Rear wheel speed LH (-) signal input
5 (RL+)	Rear wheel speed LH (+) signal input
6 (FR-)	Front wheel speed RH (-) signal input
7 (FR+)	Front wheel speed RH (+) signal input
12 (+BS)	Solenoid relay power supply
13 (GND2)	Pump motor ground
14 (CANL)	CAN communication line L
16 (RR-)	Rear wheel speed RH (-) signal input
17 (RR+)	Rear wheel speed RH (+) signal input
18 (FL-)	Front wheel speed LH (-) signal input
19 (FL+)	Front wheel speed LH (+) signal input
22 (SP1)	Speed signal output for speedometer
24 (+BM)	Motor relay power supply
25 (CANH)	CAN communication line H
28 (STP)	Stop light switch input

TERMINAL NO. (SYMBOL)	TERMINAL DESCRIPTION
32 (TS)	Sensor check input
34 (IG1)	ECU power supply

2. TERMINAL INSPECTION

(a) Disconnect the connector and measure the voltage or resistance on the wire harness side.

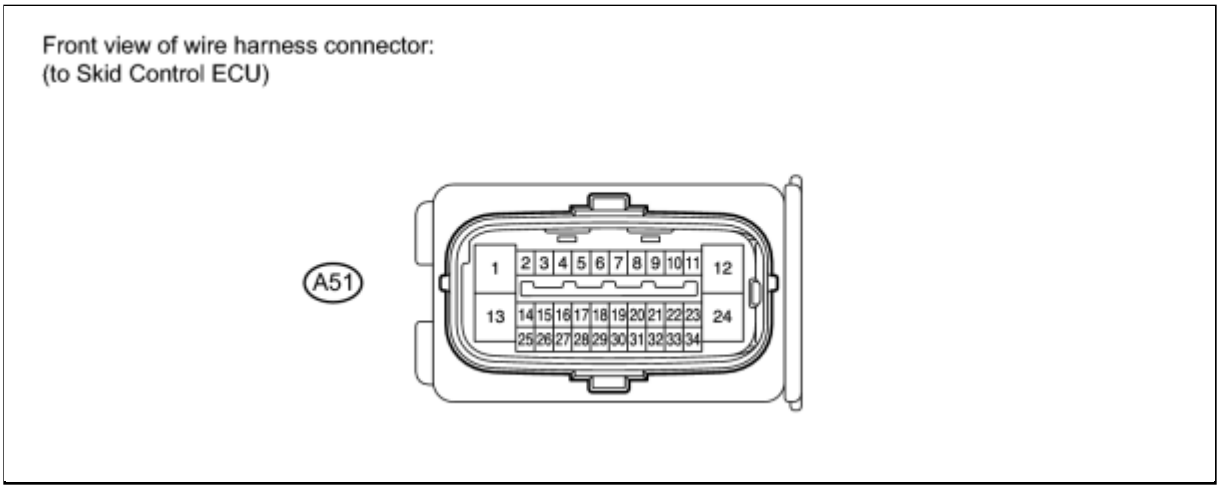

HINT:

Voltage cannot be measured with the connector connected to the skid control ECU as the connector is watertight.

Standard

TERMINAL NO. (SYMBOL)	WIRING COLOR	TERMINAL DESCRIPTION	CONDITION	SPECIFIED CONDITION
A51-1 (GND1) - Body ground	W-B - Body ground	Skid control ECU ground	Always	Below 1 Ω
A51-12 (+BS) - Body ground	W - Body ground	Solenoid relay power supply	Always	11 to 14 V
A51-13 (GND2) - Body ground	W-B - Body ground	Pump motor ground	Always	Below 1 Ω
A51-24 (+BM) - Body ground	L - Body ground	Motor relay power supply	Always	11 to 14 V
A51-28 (STP) - Body ground	L-W - Body ground	Stop light switch input	Stop light switch ON → OFF (Brake pedal depressed → released)	8 to 14 V → Below 1.5 V
A51-34 (IG1) - Body ground	L-B - Body ground	ECU power supply	Ignition switch ON	11 to 14 V

Last Modified: 3-10-2010	6.4 D	**From:** 200901
Model Year: 2010	**Model:** Corolla	**Doc ID:** RM000000XHP04WX
Title: BRAKE CONTROL / DYNAMIC CONTROL SYSTEMS: ANTI-LOCK BRAKE SYSTEM: DIAGNOSIS SYSTEM (2010 Corolla)		

DIAGNOSIS SYSTEM

1. DESCRIPTION

When troubleshooting a vehicle with a diagnosis system, the only difference from the usual troubleshooting procedure is connecting the Techstream to the vehicle and reading various data output from the vehicle's skid control ECU.

The skid control ECU records DTCs when it detects a malfunction in the ECU itself or in its circuits.

To check the DTCs, connect the Techstream to the DLC3 on the vehicle. The Techstream enables you to clear the DTCs, activate the various actuators, and check the Freeze Frame Data and Data List.

(a) Check the battery voltage.

Standard Voltage:
11 to 14 V

If the voltage is below 11 V, recharge the battery before proceeding to the next step.

(b) Check the DLC3 INFO .

2. DIAGNOSIS

(a) If the skid control ECU detects a malfunction, the ABS warning and brake warning lights will come on in order to warn the driver.

The table below indicates which lights will come on when there is a malfunction in a particular function.

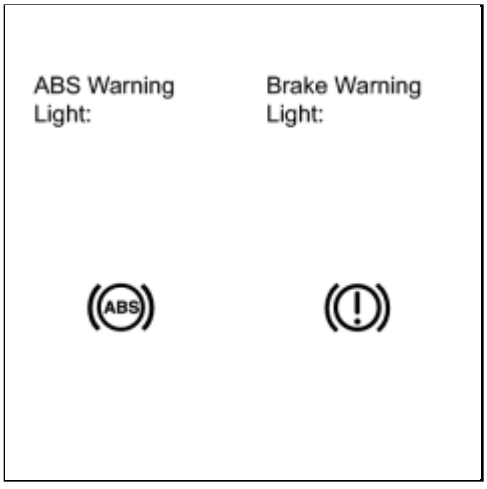

ITEM / TROUBLE AREA	ABS	EBD	BA	SKID CONTROL ECU
ABS warning light	○	○	-	○
Brake warning light	-	○	-	○

○: Light ON

-: Light OFF

- The DTCs are simultaneously stored in the memory. The DTCs can be read by connecting SST between terminals TC and CG of the DLC3 and observing the blinking pattern of the ABS warning light or by connecting the Techstream.
- This system has a Test Mode (signal check) function INFO .

The DTCs can be read by connecting the Techstream and observing the blinking pattern of the ABS warning light.

3. WARNING LIGHT INITIAL CHECK

(a) Release the parking brake.

NOTICE:

When releasing the parking brake, move the shift lever to P for safety (for automatic transaxle model) or set the chocks to hold the vehicle for safety (for manual transaxle model).

HINT:

When the parking brake is applied or the brake fluid level is low, the brake warning light comes on.

(b) When the ignition switch is turned to ON, check that the ABS warning and brake warning lights come on for approximately 3 seconds.

HINT:

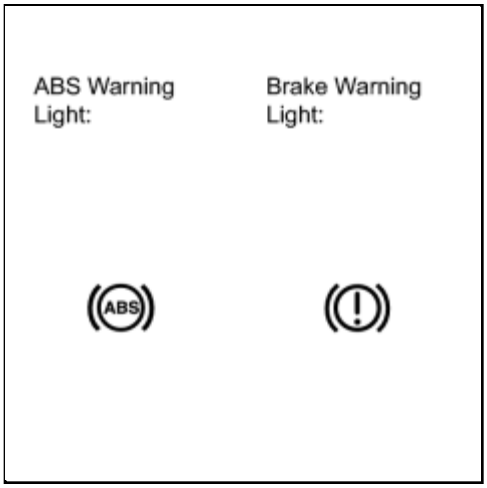

If the warning light check result is not normal, proceed to troubleshooting for the ABS warning and brake warning light circuits.

If the indicator remains on or does not come on, proceed to troubleshooting for the light circuits listed below.

TROUBLE AREA	SEE PROCEDURE
ABS warning light circuit (Remains on)	INFO
ABS warning light circuit (Does not come on)	INFO
Brake warning light circuit (Remains on)	INFO
Brake warning light circuit (Does not come on)	INFO

4. SYMPTOM SIMULATION

HINT:

The most difficult case in troubleshooting is when no symptoms occur. In such cases, a thorough customer problem analysis must be carried out. Then the same or similar conditions and environment in which the problem occurred in the customer's vehicle should be reproduced. No matter how experienced or skilled a technician may be, if he/she proceeds to troubleshooting without confirming the problem symptoms, he/she will likely overlook something important and make a wrong guess at some points in the repair operation. This leads to a standstill in troubleshooting.

(a) Vibration method: When vibration seems to be the major cause.

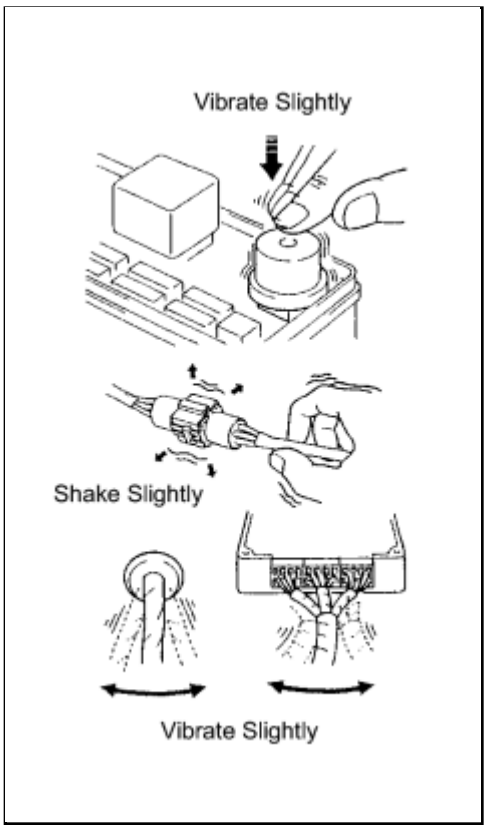

HINT:

Perform the simulation method only during the primary check period (for approximately 6 seconds after the ignition switch is turned to ON).

(1) Slightly vibrate the part of the sensor considered to be the problem cause with your fingers and check whether the malfunction occurs.

(2) Slightly shake the connector vertically and horizontally.

HINT:

Shaking the relays too strongly may result in open relays.

(3) Slightly shake the wire harness vertically and horizontally. The connector joint and fulcrum of the vibration are the major areas to be checked thoroughly.

Last Modified: 3-10-2010	6.4 D	**From:** 200901
Model Year: 2010	**Model:** Corolla	**Doc ID:** RM000000XHV04VX
Title: BRAKE CONTROL / DYNAMIC CONTROL SYSTEMS: ANTI-LOCK BRAKE SYSTEM: DTC CHECK / CLEAR (2010 Corolla)		

DTC CHECK / CLEAR

1. DTC CHECK/CLEAR (When Using the Techstream)

(a) Check for DTCs.

(1) Connect the Techstream to the DLC3.

(2) Turn the ignition switch to ON.

(3) Turn the Techstream on.

(4) Read the DTCs following the prompts on the Techstream screen. Enter the following menus: Chassis / ABS/VSC/TRAC / Trouble Codes.

(5) Check the details of the DTCs INFO.

(b) Clear the DTCs.

(1) Connect the Techstream to the DLC3.

(2) Turn the ignition switch to ON.

(3) Turn the Techstream on.

(4) Operate the Techstream to clear the codes. Enter the following menus: Chassis / ABS/VSC/TRAC / Trouble Codes.

(5) According to the Techstream display, select the trouble code data display with the clear button.

2. DTC CHECK/CLEAR (When not Using the Techstream)

(a) Check for DTCs.

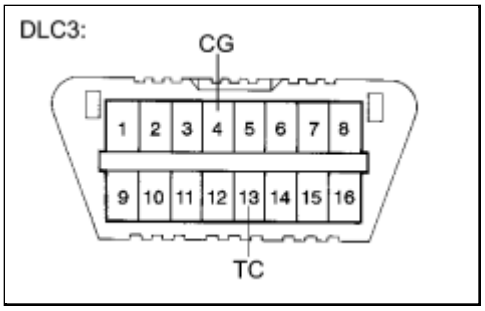

(1) Using SST, connect terminals TC and CG of the DLC3.

SST: 09843-18040

(2) Turn the ignition switch to ON.

(3) Observe the blinking pattern of the ABS warning light in order to identify the DTC.

HINT:

If no code appears, inspect the TC and CG terminal circuit, and ABS warning light circuit.

TROUBLE AREA	SEE PROCEDURE
TC and CG terminal circuit	INFO
ABS warning light circuit (Remains on)	INFO
ABS warning light circuit (Does not come on)	INFO

(4) As an example, the illustration below shows the blinking patterns of the normal system code and trouble codes 11 and 21 for the ABS warning light.

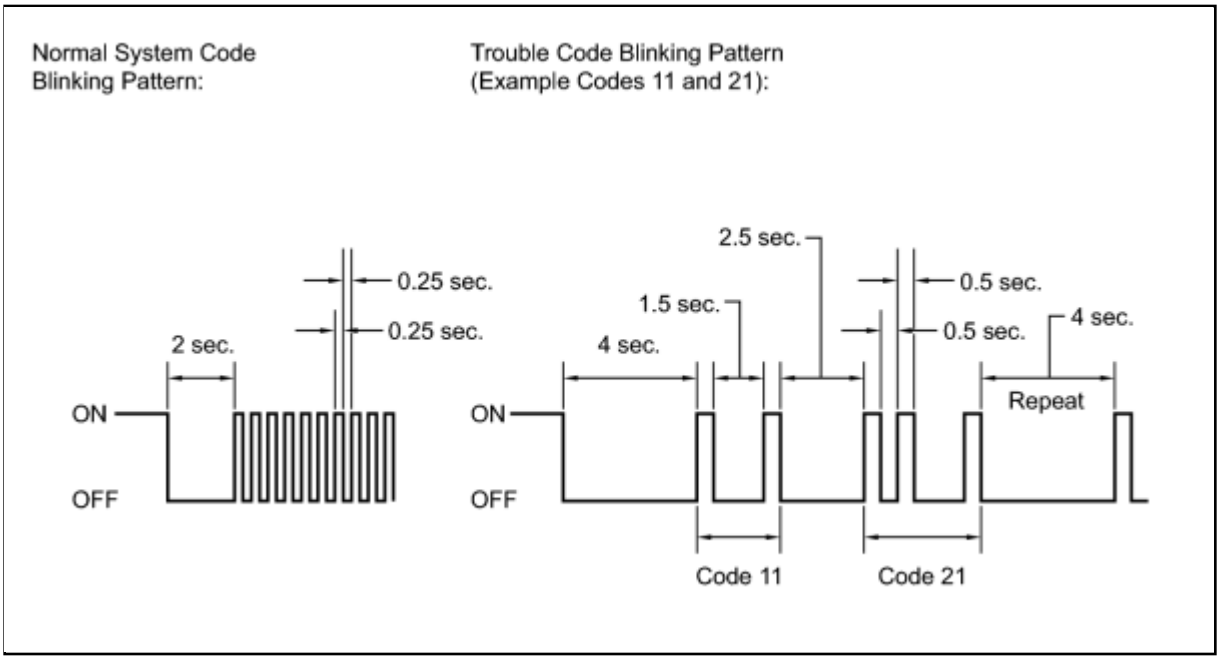

(5) The codes are explained in the code table INFO .

(6) After completing the check, disconnect terminals TC and CG of the DLC3 to turn off the display.

If 2 or more DTCs are detected at the same time, the DTCs will be displayed in ascending order.

(b) Clear the DTCs.

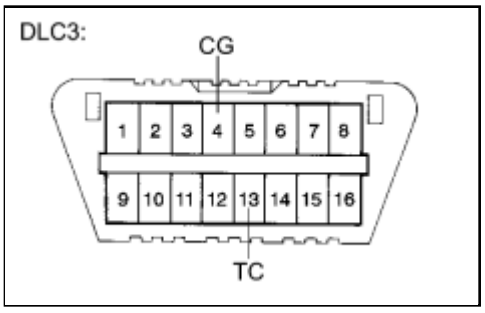

(1) Using SST, connect terminals TC and CG of the DLC3.

SST: 09843-18040

(2) Turn the ignition switch to ON.

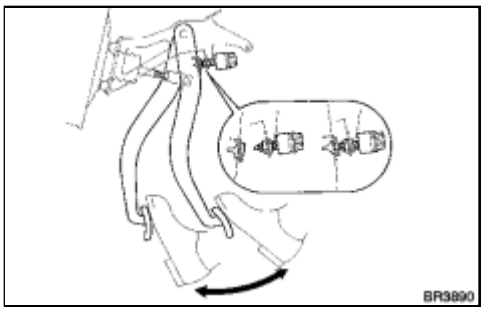

(3) Clear the DTCs stored in the ECU by depressing the brake pedal 8 times or more within 5 seconds.

(4) Check that the warning light indicates a normal system code.

(5) Remove SST from the terminals of the DLC3.

HINT:

The DTCs cannot be cleared by disconnecting the negative cable from the battery terminal or the ECU-IG NO. 1 fuse.

3. END OF DTC CHECK/CLEAR

(a) Turn the ignition switch to ON.

(b) Check that the ABS warning light goes off within approximately 3 seconds.

Last Modified: 3-10-2010	6.4 C	**From:** 200901
Model Year: 2010	**Model:** Corolla	**Doc ID:** RM000000XI906MX
Title: BRAKE CONTROL / DYNAMIC CONTROL SYSTEMS: ANTI-LOCK BRAKE SYSTEM: C0200/31,C0205/32,C1271/71,C1272/72: Front Speed Sensor RH Circuit (2010 Corolla)		

DTC	**C0200/31**	**Front Speed Sensor RH Circuit**

DTC	**C0205/32**	**Front Speed Sensor LH Circuit**

DTC	**C1271/71**	**Low Output Signal of Front Speed Sensor RH (Test Mode DTC)**

DTC	**C1272/72**	**Low Output Signal of Front Speed Sensor LH (Test Mode DTC)**

DESCRIPTION

The speed sensor detects the wheel speed and sends the appropriate signals to the skid control ECU. These signals are used for the ABS control system.

Speed sensor rotors have 48 serrations. The hall IC type speed sensor use the frequency of output pulses to detect the vehicle speed. Because the sensor outputs digital pulses, it can detect vehicle speeds even when the vehicle is nearly stationary.

DTCs C1271/71 and C1272/72 will be deleted when the speed sensor sends a vehicle speed signal or when Test Mode ends. DTCs C1271/71 and C1272/72 are output only in Test Mode.

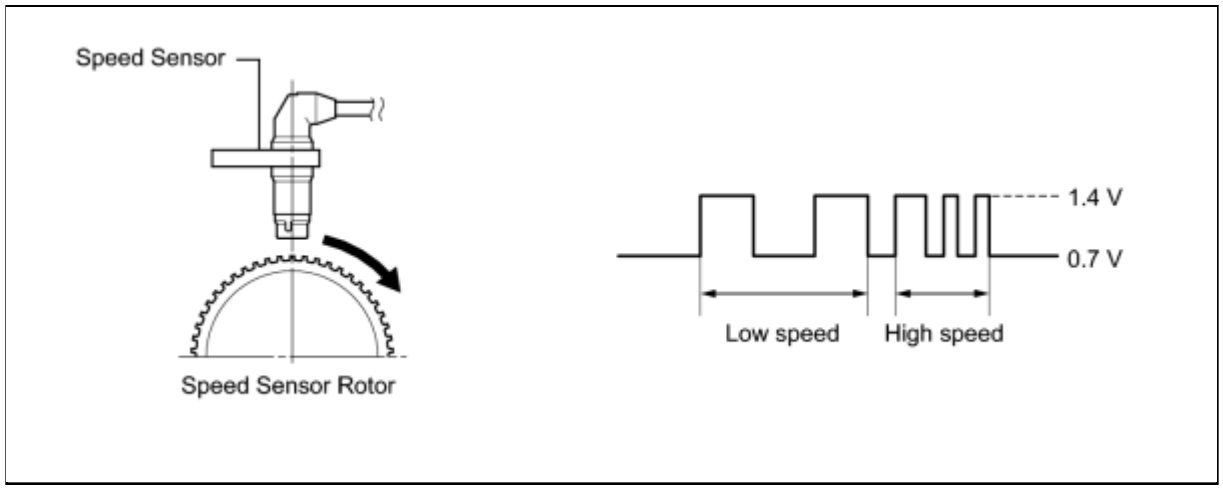

DTC CODE	DTC DETECTION CONDITION	TROUBLE AREA
C0200/31 C0205/32	Any of the following is detected: 1. At a vehicle speed of 10 km/h (6 mph) or more, an open or short in the sensor signal circuit continues for 1 second or more. 2. Momentary interruptions of the sensor signal from the abnormal wheel occurs 255 times or more. 3. An open in the speed sensor signal circuit continues for 0.5 seconds or more. 4. With the IG1 terminal voltage 9.5 V or more, the sensor power supply voltage decreases for 0.5 seconds or more.	• Front speed sensor RH/LH • Speed sensor circuit • Speed sensor rotor • Sensor installation • Brake actuator assembly (Skid control ECU)
C1271/71 C1272/72	Detected only during Test Mode.	• Front speed sensor RH/LH • Sensor installation • Speed sensor rotor

HINT:

- DTCs C0200/31 and C1271/71 are for the front speed sensor RH.
- DTCs C0205/32 and C1272/72 are for the front speed sensor LH.

WIRING DIAGRAM

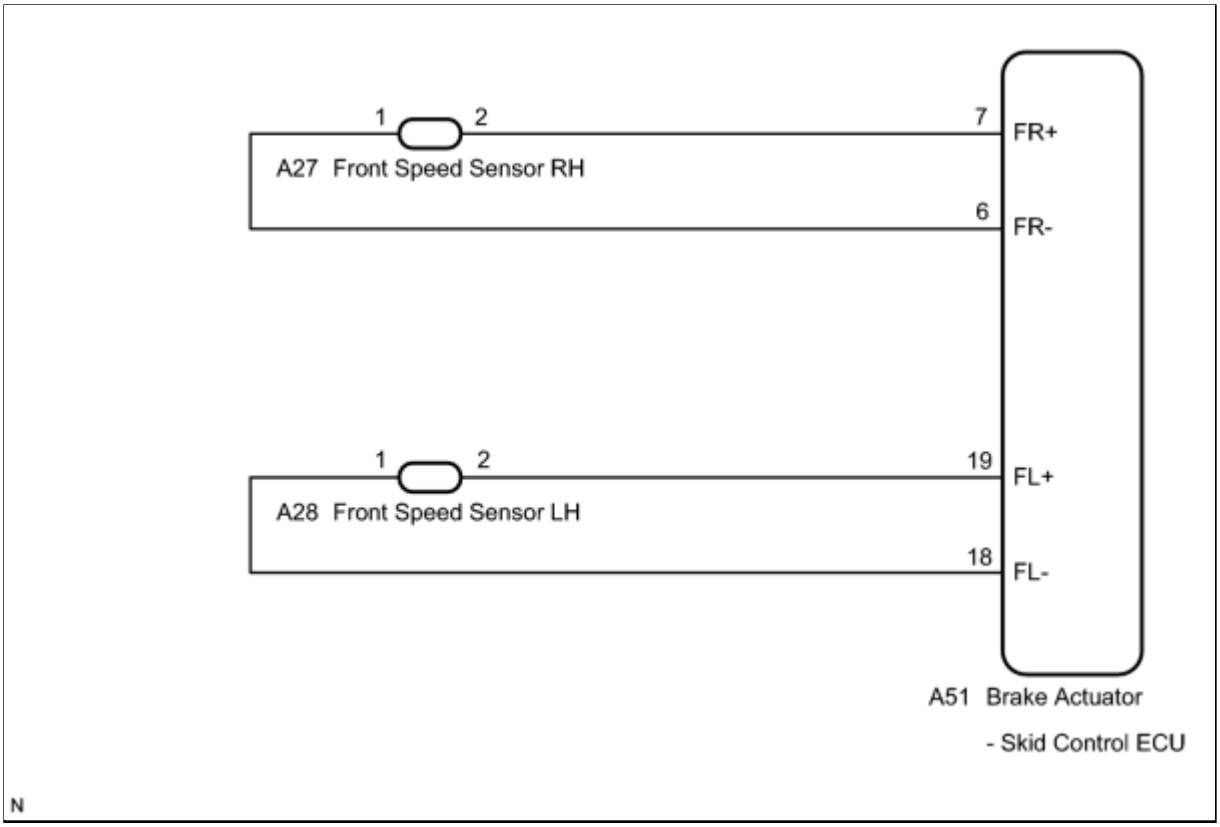

INSPECTION PROCEDURE

PROCEDURE

1.	**CHECK HARNESS AND CONNECTOR (MOMENTARY INTERRUPTION)**

(a) Using the Techstream, check for any momentary interruptions in the wire harness and connector corresponding to a DTC INFO .

ABS/VSC/TRAC

TESTER DISPLAY	MEASUREMENT ITEM / RANGE	NORMAL CONDITION	DIAGNOSTIC NOTE
FR Speed Open	FR speed sensor open detection / ERROR or NORMAL	ERROR: Momentary interruption NORMAL: Normal	-
FL Speed Open	FL speed sensor open detection / ERROR or NORMAL	ERROR: Momentary interruption NORMAL: Normal	-

Result:

RESULT	PROCEED TO
There are momentary interruptions	A
There are no momentary interruptions	B
There is a constant open circuit	C

HINT:

Perform the above inspection before removing the sensor and connector.

C ▶ **CHECK FRONT SPEED SENSOR INSTALLATION**

B ▶ **READ VALUE USING TECHSTREAM (FRONT SPEED SENSOR)**

A
▼

2.	**REPAIR OR REPLACE HARNESS OR CONNECTOR (SKID CONTROL ECU - FRONT SPEED SENSOR)**

(a) Turn the ignition switch off.

(b) Repair or replace the harness or connector.

(c) Check for any momentary interruptions between the skid control ECU and front speed sensor INFO .

(d) Check that there are no momentary interruptions.

NEXT
▼

3.	**RECONFIRM DTC**

(a) Turn the ignition switch off.

(b) Clear the DTCs INFO .

(c) Start the engine.

(d) Drive the vehicle at a speed of 40 km/h (25 mph) or more for at least 60 seconds.

(e) Check if the same DTC is recorded INFO .

Result:

RESULT	PROCEED TO
DTCs (C0200/31 and/or C0205/32) are output	A
DTCs (C0200/31 and C0205/32) are not output	B

HINT:

If troubleshooting has been carried out according to the Problem Symptoms Table, refer back to the table and proceed to the next step INFO .

B ▶ END

A ▼

4.	READ VALUE USING TECHSTREAM (FRONT SPEED SENSOR)

(a) Turn the ignition switch off.

(b) Connect the Techstream to the DLC3.

(c) Start the engine.

(d) Select Data List mode on the Techstream INFO .

ABS/VSC/TRAC

TESTER DISPLAY	MEASUREMENT ITEM / RANGE	NORMAL CONDITION	DIAGNOSTIC NOTE
FR Wheel Speed	FR wheel speed sensor reading / min.: 0 km/h (0 mph), max.: 326.4 km/h (202 mph)	Actual wheel speed	Similar speed as indicated on speedometer
FL Wheel Speed	FL wheel speed sensor reading /min.: 0 km/h (0 mph), max.: 326.4 km/h (202 mph)	Actual wheel speed	Similar speed as indicated on speedometer

(e) Check that there is no difference between the speed value output from the speed sensor

displayed on the Techstream and the speed value displayed on the speedometer when driving the vehicle.

HINT:

Factors that affect the indicated vehicle speed include tire size, tire inflation, and tire wear. The speed indicated on the speedometer has an allowable margin of error. This can be tested using a speedometer tester (calibrated chassis dynamometer). For details about testing and the margin of error, see the reference chart INFO .

OK:

The speed value output from the speed sensor displayed on the Techstream is the same as the actual vehicle speed measured using a speedometer tester (calibrated chassis dynamometer).

NG ▶ **CHECK FRONT SPEED SENSOR INSTALLATION**

OK ▼

5.	**PERFORM TEST MODE (SIGNAL CHECK)**

(a) Turn the ignition switch off.

(b) Perform the sensor check in the Test Mode procedure INFO .

OK:

All Test Mode DTCs are cleared.

NG ▶ **CHECK FRONT SPEED SENSOR INSTALLATION**

OK ▼

6.	**RECONFIRM DTC**

(a) Turn the ignition switch off.

(b) Clear the DTCs INFO .

(c) Start the engine.

(d) Drive the vehicle at a speed of 40 km/h (25 mph) or more for at least 60 seconds.

(e) Check if the same DTC is recorded INFO .

Result:

RESULT	PROCEED TO
DTCs (C0200/31 and C0205/32) are not output	A
DTCs (C0200/31 and/or C0205/32) are output	B

HINT:

If troubleshooting has been carried out according to the Problem Symptoms Table, refer back to the table and proceed to the next step INFO **.**

B ▶ **REPLACE FRONT SPEED SENSOR**

A ▶ **CHECK FOR INTERMITTENT PROBLEMS (SYMPTOM SIMULATION)**

7.	CHECK FRONT SPEED SENSOR INSTALLATION

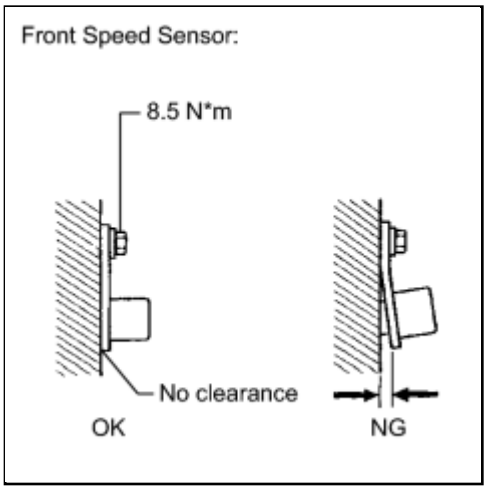

(a) Turn the ignition switch off.

(b) Check the speed sensor installation.

OK:

There is no clearance between the sensor and the front steering knuckle.

The installation nut is tightened properly.

Torque

8.5 N*m (87 kgf*cm, 75 in.*lbf)

NG ▶ **INSTALL FRONT SPEED SENSOR CORRECTLY**

OK

8.	CHECK FRONT SPEED SENSOR TIP

(a) Remove the front speed sensor INFO .

(b) Check the speed sensor tip.

OK:

No scratches or foreign matter on the sensor tip.

NOTICE:

Check the speed sensor signal after cleaning or replacement INFO .

NG ▶ **CLEAN OR REPLACE FRONT SPEED SENSOR**

OK

9.	INSPECT FRONT SPEED SENSOR

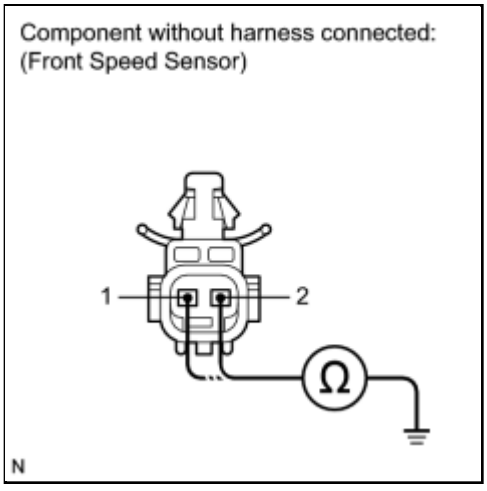

(a) Install the front speed sensor.

(b) Make sure that there is no looseness at the locking part and the connecting part of the connectors.

(c) Disconnect the front speed sensor connector.

(d) Measure the resistance according to the value(s) in the table below.

Standard Resistance:

for RH

for LH

TESTER CONNECTION	CONDITION	SPECIFIED CONDITION
2 (FR+) - Body ground	Always	10 kΩ or higher
1 (FR-) - Body ground	Always	10 kΩ or higher

TESTER CONNECTION	CONDITION	SPECIFIED CONDITION
2 (FL+) - Body ground	Always	10 kΩ or higher
1 (FL-) - Body ground	Always	10 kΩ or higher

NOTICE:

Check the speed sensor signal after replacement INFO **.**

NG ▶ **REPLACE FRONT SPEED SENSOR**

OK
▼

10.	**CHECK HARNESS AND CONNECTOR (SKID CONTROL ECU - FRONT SPEED SENSOR)**

(a) Disconnect the skid control ECU connector.

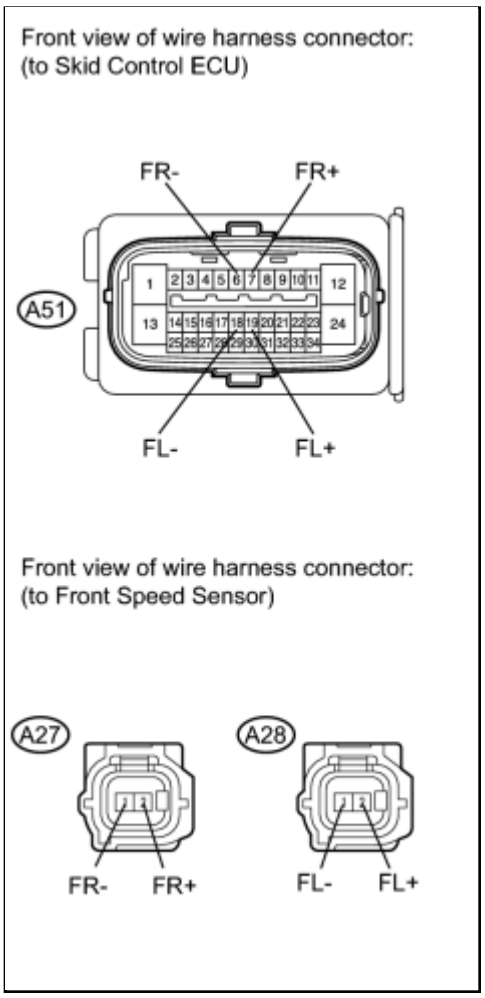

(b) Measure the resistance according to the value(s) in the table below.

Standard Resistance:

for RH

for LH

TESTER CONNECTION	CONDITION	SPECIFIED CONDITION
A51-7 (FR+) - A27-2 (FR+)	Always	Below 1 Ω
A51-7 (FR+) - Body ground	Always	10 kΩ or higher
A51-6 (FR-) - A27-1 (FR-)	Always	Below 1 Ω
A51-6 (FR-) - Body ground	Always	10 kΩ or higher

TESTER CONNECTION	CONDITION	SPECIFIED CONDITION
A51-19 (FL+) - A28-2 (FL+)	Always	Below 1 Ω
A51-19 (FL+) - Body ground	Always	10 kΩ or higher
A51-18 (FL-) - A28-1 (FL-)	Always	Below 1 Ω
A51-18 (FL-) - Body ground	Always	10 kΩ or higher

NG ▶ **REPAIR OR REPLACE HARNESS OR CONNECTOR**

OK ▼

11.	**INSPECT SKID CONTROL ECU (SENSOR INPUT)**

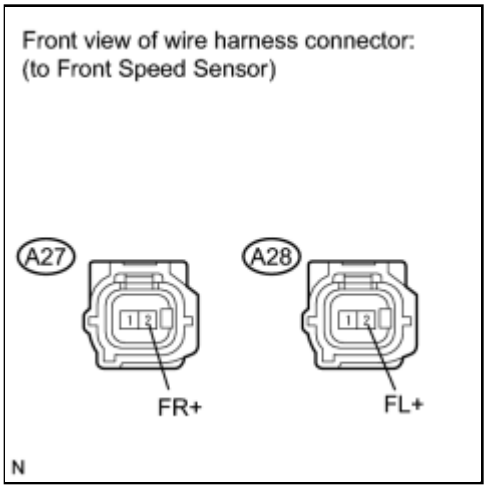

(a) Reconnect the skid control ECU connector.

(b) Turn the ignition switch to ON.

(c) Measure the voltage according to the value(s) in the table below.

Standard Voltage:

for RH

for LH

TESTER CONNECTION	SWITCH CONDITION	SPECIFIED CONDITION
A27-2 (FR+) - Body ground	Ignition switch ON	8 to 14 V

TESTER CONNECTION	SWITCH CONDITION	SPECIFIED CONDITION
A28-2 (FL+) - Body ground	Ignition switch ON	8 to 14 V

NG ▶ **REPLACE BRAKE ACTUATOR ASSEMBLY**

OK ▼

12.	RECONFIRM DTC

(a) Turn the ignition switch off.

(b) Reconnect the front speed sensor connector.

(c) Clear the DTCs INFO .

(d) Start the engine.

(e) Drive the vehicle at a speed of 40 km/h (25 mph) or more for at least 60 seconds.

(f) Check if the same DTC is recorded INFO .

Result:

RESULT	PROCEED TO
DTCs (C0200/31 and/or C0205/32) are output	A
DTCs (C0200/31 and C0205/32) are not output	B

HINT:

If troubleshooting has been carried out according to the Problem Symptoms Table, refer back to the table and proceed to the next step INFO .

B ▶ **CHECK FOR INTERMITTENT PROBLEMS (SYMPTOM SIMULATION)**

A ▼

13.	REPLACE FRONT SPEED SENSOR

(a) Turn the ignition switch off.

(b) Replace the front speed sensor INFO .

NOTICE:

Check the speed sensor signal after replacement INFO .

NEXT

14.	RECONFIRM DTC

(a) Clear the DTCs INFO .

(b) Start the engine.

(c) Drive the vehicle at a speed of 40 km/h (25 mph) or more for at least 60 seconds.

(d) Check if the same DTC is recorded INFO .

Result:

RESULT	PROCEED TO
DTCs (C0200/31 and/or C0205/32) are output	A
DTCs (C0200/31 and C0205/32) are not output	B

HINT:

If troubleshooting has been carried out according to the Problem Symptoms Table, refer back to the table and proceed to the next step INFO .

B END

A

15.	REPLACE FRONT SPEED SENSOR ROTOR

(a) Turn the ignition switch off.

(b) Remove the front drive shaft assembly INFO .

(c) Replace the front axle outboard joint shaft assembly (front speed sensor rotor) INFO .

HINT:

If the front speed sensor rotor needs to be replaced, replace it together with the front axle outboard joint shaft assembly.

NOTICE:

Check the speed sensor signal after replacement INFO .

NEXT

16.	RECONFIRM DTC

(a) Install the front drive shaft assembly.

(b) Clear the DTCs INFO .

(c) Start the engine.

(d) Drive the vehicle at a speed of 40 km/h (25 mph) or more for at least 60 seconds.

(e) Check if the same DTC is recorded INFO .

Result:

RESULT	PROCEED TO
DTCs (C0200/31 and C0205/32) are not output	A
DTCs (C0200/31 and/or C0205/32) are output	B

HINT:

If troubleshooting has been carried out according to the Problem Symptoms Table, refer back to the table and proceed to the next step INFO .

B REPLACE BRAKE ACTUATOR ASSEMBLY

A END

Last Modified: 3-10-2010	6.4 D	**From:** 200901
Model Year: 2010	**Model:** Corolla	**Doc ID:** RM000000XHY04OX
Title: BRAKE CONTROL / DYNAMIC CONTROL SYSTEMS: ANTI-LOCK BRAKE SYSTEM: FREEZE FRAME DATA (2010 Corolla)		

FREEZE FRAME DATA

1. FREEZE FRAME DATA

(a) Whenever an ABS DTC is detected, the skid control ECU stores the current vehicle (sensor) state as Freeze Frame Data.

(b) The skid control ECU stores the number of times (maximum: 31) the ignition switch has been turned from off to ON since the last time the ABS was activated.

HINT:

- If the vehicle is stopped, at a low speed (7 km/h (4.3 mph) or less), or if a DTC is detected, the skid control ECU will stop counting the number of times the ignition switch has been turned from off to ON.
- Freeze Frame Data at the time the ABS operates:

  The skid control ECU stores and updates data whenever the ABS system operates.

  When the ECU stores data at the time a DTC is detected, the data stored during ABS operation is cleared.
- Freeze Frame Data at the time a DTC is detected:

  When the skid control ECU stores data at the time a DTC is detected, no updates will be performed until the data is cleared.

2. CHECK FREEZE FRAME DATA

(a) Connect the Techstream to the DLC3.

(b) Turn the ignition switch to ON.

(c) Turn the Techstream on.

(d) Enter the following menus: Chassis / ABS/VSC/TRAC / Trouble Codes.

(e) According to the Techstream display, select the trouble code data display with Freeze Frame Data.

ABS/VSC/TRAC

TESTER DISPLAY	MEASUREMENT ITEM	REFERENCE VALUE
Elapsed Time after Freeze Trigger	Elapsed time after freeze frame trigger	Min.: 0 ms, Max.: 500 ms
Number of IG ON	Number of operations of ignition switch being turned to ON after storing Freeze Frame Data	0 to 31
Stop Light SW	Stop light switch signal	Stop light switch ON: ON, OFF: OFF

TESTER DISPLAY	MEASUREMENT ITEM	REFERENCE VALUE
Parking Brake SW	Parking brake switch signal	Parking brake switch ON: ON, OFF: OFF
Operated System	Operated system status	ABS: ABS activated FAIL: Fail safe mode activated SYS: System prohibit activated NON: No operation activated
FR Wheel Speed	FR wheel speed reading	Min.: 0 km/h (0 mph), Max.: 326.4 km/h (202 mph)
FL Wheel Speed	FL wheel speed reading	Min.: 0 km/h (0 mph), Max.: 326.4 km/h (202 mph)
RR Wheel Speed	RR wheel speed reading	Min.: 0 km/h (0 mph), Max.: 326.4 km/h (202 mph)
RL Wheel Speed	RL wheel speed reading	Min.: 0 km/h (0 mph), Max.: 326.4 km/h (202 mph)
Vehicle Speed	Vehicle speed reading	Min.: 0 km/h (0 mph), Max.: 326.4 km/h (202 mph)
Vehicle Speed Grade	Vehicle speed grade	Min.: -25.11 m/s^2, Max.: 24.91 m/s^2

3. CLEAR FREEZE FRAME DATA

NOTICE:

Clearing the DTC will also clear the Freeze Frame Data.

(a) Connect the Techstream to the DLC3.

(b) Turn the ignition switch to ON.

(c) Clear the DTC and Freeze Frame Data INFO .

Last Modified: 3-10-2010	6.4 U	**From:** 200901
Model Year: 2010	**Model:** Corolla	**Doc ID:** RM000000XHW04GX
Title: BRAKE CONTROL / DYNAMIC CONTROL SYSTEMS: ANTI-LOCK BRAKE SYSTEM: DATA LIST / ACTIVE TEST (2010 Corolla)		

DATA LIST / ACTIVE TEST

1. DATA LIST

HINT:

Using the Techstream to read the Data List allows the values or states of switches, sensors, actuators and other items to be read without removing any parts. This non-intrusive inspection can be very useful because intermittent conditions or signals may be discovered before parts or wiring is disturbed. Reading the Data List information early in troubleshooting is one way to save diagnostic time.

NOTICE:

In the table below, the values listed under "Normal Condition" are reference values. Do not depend solely on these reference values when deciding whether a part is faulty or not.

(a) Warm up the engine.

(b) Turn the ignition switch off.

(c) Connect the Techstream to the DLC3.

(d) Turn the ignition switch to ON.

(e) Turn the Techstream on.

(f) Enter the following menus: Chassis / ABS/VSC/TRAC / Data List.

(g) According to the Techstream display, read the Data List.

ABS/VSC/TRAC

TESTER DISPLAY	MEASUREMENT ITEM/RANGE	NORMAL CONDITION	DIAGNOSTIC NOTE
ABS Warning Light	ABS warning light / ON or OFF	ON: Warning light ON OFF: Warning light OFF	-
Brake Warning Light	Brake warning light / ON or OFF	ON: Warning light ON OFF: Warning light OFF	-
Stop Light SW	Stop light switch / ON or OFF	ON: Brake pedal depressed OFF: Brake pedal released	-
Parking Brake SW	Parking brake switch / ON or OFF	ON: Parking brake applied OFF: Parking brake released	-

TESTER DISPLAY	MEASUREMENT ITEM/RANGE	NORMAL CONDITION	DIAGNOSTIC NOTE
FR Wheel Speed	FR wheel speed sensor reading / min.: 0 km/h (0 mph), max.: 326.4 km/h (202 mph)	Actual wheel speed	Similar speed as indicated on speedometer
FL Wheel Speed	FL wheel speed sensor reading / min.: 0 km/h (0 mph), max.: 326.4 km/h (202 mph)	Actual wheel speed	Similar speed as indicated on speedometer
RR Wheel Speed	RR wheel speed sensor reading / min.: 0 km/h (0 mph), max.: 326.4 km/h (202 mph)	Actual wheel speed	Similar speed as indicated on speedometer
RL Wheel Speed	RL wheel speed sensor reading / min.: 0 km/h (0 mph), max.: 326.4 km/h (202 mph)	Actual wheel speed	Similar speed as indicated on speedometer
Vehicle Speed	Maximum wheel speed sensor reading / min.: 0 km/h (0 mph), max.: 326.4 km/h (202 mph)	Actual vehicle speed	Speed indicated on speedometer
FR Wheel Acceleration	FR wheel acceleration / min.: -200.84 m/s^2, max.: 199.27 m/s^2	0 m/s^2	-
FL Wheel Acceleration	FL wheel acceleration / min.: -200.84 m/s^2, max.: 199.27 m/s^2	0 m/s^2	-
RR Wheel Acceleration	RR wheel acceleration / min.: -200.84 m/s^2, max.: 199.27 m/s^2	0 m/s^2	-
RL Wheel Acceleration	RL wheel acceleration / min.: -200.84 m/s^2, max.: 199.27 m/s^2	0 m/s^2	-
FR Wheel ABS Ctrl Status	FR ABS control status / ON or OFF	ON: During ABS control OFF: Not ABS control	-
FL Wheel ABS Ctrl Status	FL ABS control status / ON or OFF	ON: During ABS control OFF: Not ABS control	-
RR Wheel ABS Ctrl Status	RR ABS control status / ON or OFF	ON: During ABS control OFF: Not ABS control	-
RL Wheel ABS Ctrl Status	RL ABS control status / ON or OFF	ON: During ABS control OFF: Not ABS control	-

TESTER DISPLAY	MEASUREMENT ITEM/RANGE	NORMAL CONDITION	DIAGNOSTIC NOTE
RR Wheel EBD Ctrl Status	RR EBD control status / ON or OFF	ON: During EBD control OFF: Not EBD control	-
RL Wheel EBD Ctrl Status	RL EBD control status / ON or OFF	ON: During EBD control OFF: Not EBD control	-
Solenoid Relay	ABS solenoid relay / ON or OFF	ON: Solenoid relay ON OFF: Solenoid relay OFF	-
ABS Motor Relay	ABS motor relay / ON or OFF	ON: Motor relay ON OFF: Motor relay OFF	-
ABS Solenoid (SFRH)	ABS solenoid (SFRH) / ON or OFF	ON: Operates	-
ABS Solenoid (SFRR)	ABS solenoid (SFRR) / ON or OFF	ON: Operates	-
ABS Solenoid (SFLH)	ABS solenoid (SFLH) / ON or OFF	ON: Operates	-
ABS Solenoid (SFLR)	ABS solenoid (SFLR) / ON or OFF	ON: Operates	-
ABS Solenoid (SRRH)	ABS solenoid (SRRH) / ON or OFF	ON: Operates	-
ABS Solenoid (SRRR)	ABS solenoid (SRRR) / ON or OFF	ON: Operates	-
ABS Solenoid (SRLH)	ABS solenoid (SRLH) / ON or OFF	ON: Operates	-
ABS Solenoid (SRLR)	ABS solenoid (SRLR) / ON or OFF	ON: Operates	-
FR Speed Open	FR speed sensor open detection / ERROR or NORMAL	ERROR: Momentary interruption NORMAL: Normal	-
FL Speed Open	FL speed sensor open detection / ERROR or NORMAL	ERROR: Momentary interruption NORMAL: Normal	-

TESTER DISPLAY	MEASUREMENT ITEM/RANGE	NORMAL CONDITION	DIAGNOSTIC NOTE
RR Speed Open	RR speed sensor open detection / ERROR or NORMAL	ERROR: Momentary interruption NORMAL: Normal	-
RL Speed Open	RL speed sensor open detection / ERROR or NORMAL	ERROR: Momentary interruption NORMAL: Normal	-
Number of DTC	Number of DTC recorded / min.: 0, max.: 255	Min.: 0 Max.: 255	-

2. ACTIVE TEST

HINT:

Using the Techstream to perform Active Tests allows relays, VSVs, actuators and other items to be operated without removing any parts. This non-intrusive functional inspection can be very useful because intermittent operation may be discovered before parts or wiring is disturbed. Performing Active Tests early in troubleshooting is one way to save diagnostic time. Data List information can be displayed while performing Active Tests.

(a) Warm up the engine.

(b) Turn the ignition switch off.

(c) Connect the Techstream to the DLC3.

(d) Turn the ignition switch to ON.

(e) Turn the Techstream on.

(f) Enter the following menus: Chassis / ABS/VSC/TRAC / Active Test.

(g) According to the Techstream display, perform the Active Test.

ABS/VSC/TRAC

TESTER DISPLAY	TEST PART	CONTROL RANGE	DIAGNOSTIC NOTE
ABS Warning Light	ABS warning light	Warning light ON/OFF	Observe combination meter
Brake Warning Light	Brake warning light	Warning light ON/OFF	Observe combination meter
Solenoid Relay	ABS solenoid relay	Relay ON/OFF	-
Motor Relay	ABS motor relay	Relay ON/OFF	Operating sound of motor can be heard
ABS Solenoid (SRLR)	ABS solenoid (SRLR)	Solenoid ON/OFF	Operating sound of solenoid (clicking sound) can be heard

TESTER DISPLAY	TEST PART	CONTROL RANGE	DIAGNOSTIC NOTE
ABS Solenoid (SRLH)	ABS solenoid (SRLH)	Solenoid ON/OFF	Operating sound of solenoid (clicking sound) can be heard
ABS Solenoid (SRRR)	ABS solenoid (SRRR)	Solenoid ON/OFF	Operating sound of solenoid (clicking sound) can be heard
ABS Solenoid (SRRH)	ABS solenoid (SRRH)	Solenoid ON/OFF	Operating sound of solenoid (clicking sound) can be heard
ABS Solenoid (SFLR)	ABS solenoid (SFLR)	Solenoid ON/OFF	Operating sound of solenoid (clicking sound) can be heard
ABS Solenoid (SFLH)	ABS solenoid (SFLH)	Solenoid ON/OFF	Operating sound of solenoid (clicking sound) can be heard
ABS Solenoid (SFRR)	ABS solenoid (SFRR)	Solenoid ON/OFF	Operating sound of solenoid (clicking sound) can be heard
ABS Solenoid (SFRH)	ABS solenoid (SFRH)	Solenoid ON/OFF	Operating sound of solenoid (clicking sound) can be heard



Last Modified: 3-10-2010	6.4 U	**From:** 200901
Model Year: 2010	**Model:** Corolla	**Doc ID:** RM000001JBB01IX
Title: BRAKE CONTROL / DYNAMIC CONTROL SYSTEMS: ANTI-LOCK BRAKE SYSTEM: FAIL-SAFE CHART (2010 Corolla)		

FAIL-SAFE CHART

1. FAIL SAFE OPERATION

- If there is a problem with sensor signals or the brake actuator system, the skid control ECU will prohibit power supply to the brake actuator and terminate ABS control.

  ABS control will be prohibited, but EBD control will continue to the extent that EBD control is possible. If EBD control is impossible, the brake warning light will come on to warn the driver INFO .
- If an ABS system component malfunctions before ABS control begins, ABS control will be prohibited. If an ABS system component malfunctions during ABS control, the system will gradually stop performing the control so as not to trigger a sudden change in vehicle operation.

  If it is impossible to control the systems, the warning light will come on to inform the driver of system control termination INFO .

MALFUNCTIONING AREA	CONTROL METHOD
ABS system	ABS control prohibited
EBD system	ABS and EBD control prohibited

Last Modified: 3-10-2010	6.4 C	**From:** 200901
Model Year: 2010	**Model:** Corolla	**Doc ID:** RM000000XIA05OX
Title: BRAKE CONTROL / DYNAMIC CONTROL SYSTEMS: ANTI-LOCK BRAKE SYSTEM: C0210/33,C0215/34,C1273/73,C1274/74: Rear Speed Sensor RH Circuit (2010 Corolla)		

DTC	**C0210/33**	**Rear Speed Sensor RH Circuit**

DTC	**C0215/34**	**Rear Speed Sensor LH Circuit**

DTC	**C1273/73**	**Low Output Signal of Rear Speed Sensor RH (Test Mode DTC)**

DTC	**C1274/74**	**Low Output Signal of Rear Speed Sensor LH (Test Mode DTC)**

DESCRIPTION

The speed sensor detects the wheel speed and sends the appropriate signals to the skid control ECU. These signals are used for the ABS control system.

Speed sensor rotors have rows of alternating N and S magnetic poles. The hall IC type speed sensor use the frequency of output pulses to detect the vehicle speed. Because the sensor outputs digital pulses, it can detect vehicle speeds even when the vehicle is nearly stationary..

DTCs C1273/73 and C1274/74 will be deleted when the speed sensor sends a vehicle speed signal or when Test Mode ends. DTCs C1273/73 and C1274/74 are output only in Test Mode.

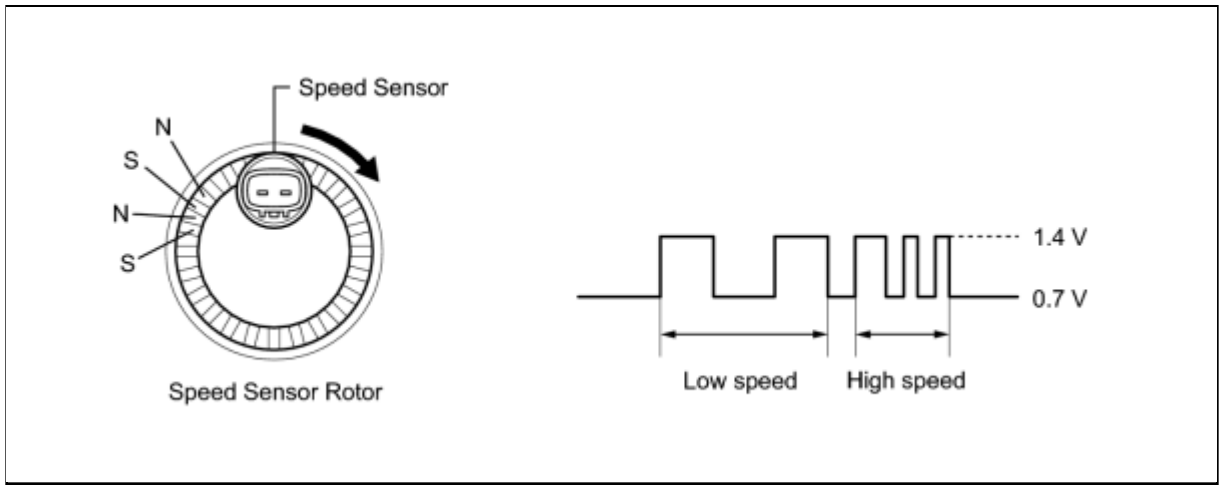

DTC CODE	DTC DETECTION CONDITION	TROUBLE AREA
C0210/33 C0215/34	Any of the following is detected: 1. At a vehicle speed of 10 km/h (6 mph) or more, an open or short in the sensor signal circuit continues for 1 second or more. 2. Momentary interruptions of the sensor signal from the abnormal wheel occurs 255 times or more. 3. An open in the speed sensor signal circuit continues for 0.5 seconds or more. 4. With the IG1 terminal voltage 9.5 V or more, the sensor power supply voltage decreases for 0.5 seconds or more.	• Rear speed sensor RH/LH • Speed sensor circuit • Speed sensor rotor • Sensor installation • Brake actuator assembly (Skid control ECU)
C1273/73 C1274/74	Detected only during Test Mode.	• Rear speed sensor RH/LH • Sensor installation • Speed sensor rotor

HINT:

- DTCs C0210/33 and C1273/73 are for the rear speed sensor RH.
- DTCs C0215/34 and C1274/74 are for the rear speed sensor LH.

WIRING DIAGRAM

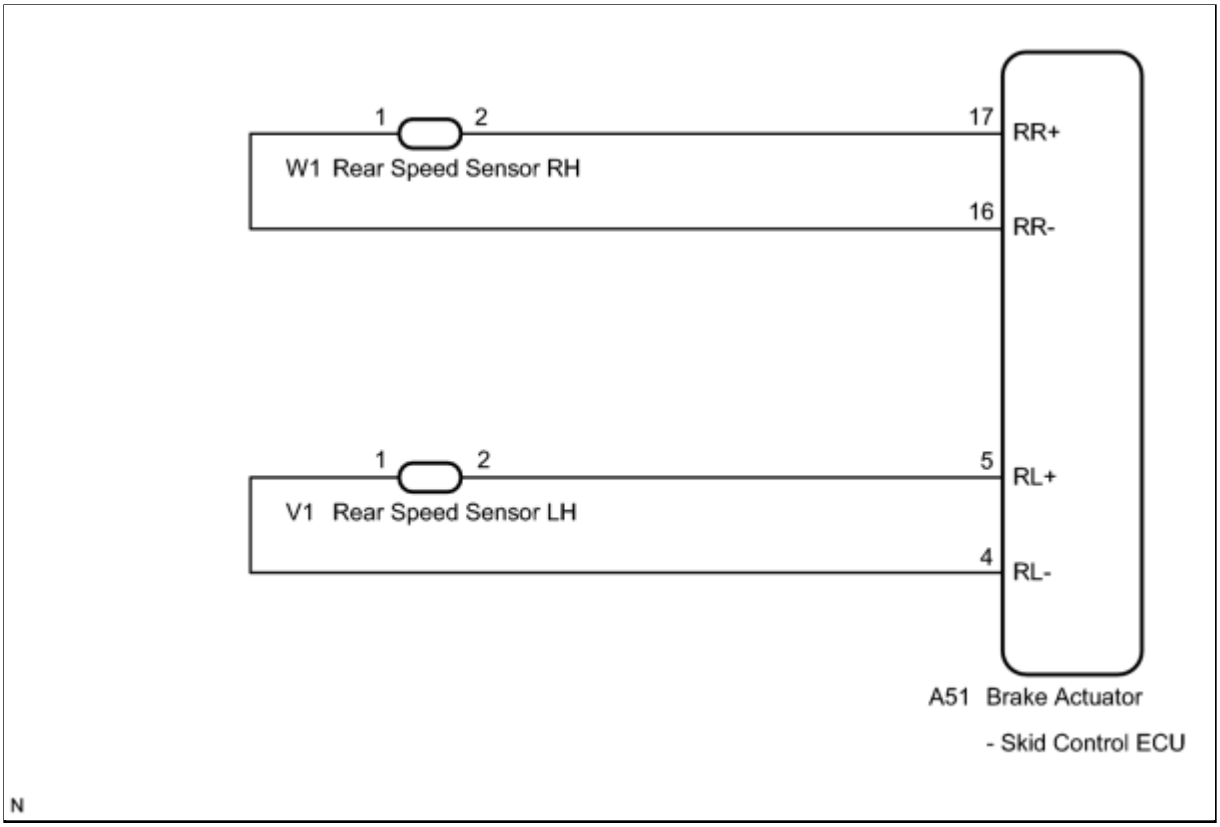

INSPECTION PROCEDURE

PROCEDURE

1.	**CHECK HARNESS AND CONNECTOR (MOMENTARY INTERRUPTION)**

(a) Using the Techstream, check for any momentary interruptions in the wire harness and connector corresponding to a DTC INFO .

ABS/VSC/TRAC

TESTER DISPLAY	MEASUREMENT ITEM / RANGE	NORMAL CONDITION	DIAGNOSTIC NOTE
RR Speed Open	RR speed sensor open detection / ERROR or NORMAL	ERROR: Momentary interruption NORMAL: Normal	-
RL Speed Open	RL speed sensor open detection / ERROR or NORMAL	ERROR: Momentary interruption NORMAL: Normal	-

Result:

RESULT	PROCEED TO
There are momentary interruptions	A
There are no momentary interruptions	B
There is a constant open circuit	C

HINT:

Perform the above inspection before removing the sensor and connector.

C ▶ **CHECK REAR SPEED SENSOR INSTALLATION**

B ▶ **READ VALUE USING TECHSTREAM (REAR SPEED SENSOR)**

A
▼

2.	**REPAIR OR REPLACE HARNESS OR CONNECTOR (SKID CONTROL ECU - REAR SPEED SENSOR)**

(a) Turn the ignition switch off.

(b) Repair or replace the harness or connector.

(c) Check for any momentary interruptions between the skid control ECU and rear speed sensor INFO .

(d) Check that there are no momentary interruptions.

NEXT
▼

3.	**RECONFIRM DTC**

(a) Turn the ignition switch off.

(b) Clear the DTCs INFO .

(c) Start the engine.

(d) Drive the vehicle at a speed of 40 km/h (25 mph) or more for at least 60 seconds.

(e) Check if the same DTC is recorded INFO .

Result:

RESULT	PROCEED TO
DTCs (C0210/33 and/or C0215/34) are output	A
DTCs (C0210/33 and C0215/34) are not output	B

HINT:

If troubleshooting has been carried out according to the Problem Symptoms Table, refer back to the table and proceed to the next step INFO .

B ▶ **END**

A ▼

4.	READ VALUE USING TECHSTREAM (REAR SPEED SENSOR)

(a) Turn the ignition switch off.

(b) Connect the Techstream to the DLC3.

(c) Start the engine.

(d) Select Data List mode on the Techstream INFO .

ABS/VSC/TRAC

TESTER DISPLAY	MEASUREMENT ITEM / RANGE	NORMAL CONDITION	DIAGNOSTIC NOTE
RR Wheel Speed	RR wheel speed sensor reading / min.: 0 km/h (0 mph), max.: 326.4 km/h (202 mph)	Actual wheel speed	Similar speed as indicated on speedometer
RL Wheel Speed	RL wheel speed sensor reading / min.: 0 km/h (0 mph), max.: 326.4 km/h (202 mph)	Actual wheel speed	Similar speed as indicated on speedometer

(e) Check that there is no difference between the speed value output from the speed sensor

displayed on the Techstream and the speed value displayed on the speedometer when driving the vehicle.

HINT:

Factors that affect the indicated vehicle speed include tire size, tire inflation, and tire wear. The speed indicated on the speedometer has an allowable margin of error. This can be tested using a speedometer tester (calibrated chassis dynamometer). For details about testing and the margin of error, see the reference chart INFO .

OK:

The speed value output from the speed sensor displayed on the Techstream is the same as the actual vehicle speed measured using a speedometer tester (calibrated chassis dynamometer).

NG ▶ **CHECK REAR SPEED SENSOR INSTALLATION**

OK ▼

5.	**PERFORM TEST MODE (SIGNAL CHECK)**

(a) Turn the ignition switch off.

(b) Perform the sensor check in the Test Mode procedure INFO .

OK:

All Test Mode DTCs are cleared.

NG ▶ **CHECK REAR SPEED SENSOR INSTALLATION**

OK ▼

6.	**RECONFIRM DTC**

(a) Turn the ignition switch off.

(b) Clear the DTCs INFO .

(c) Start the engine.

(d) Drive the vehicle at a speed of 40 km/h (25 mph) or more for at least 60 seconds.

(e) Check if the same DTC is recorded INFO .

Result:

RESULT	PROCEED TO
DTCs (C0210/33 and C0215/34) are not output	A
DTCs (C0210/33 and/or C0215/34) are output	B

HINT:

If troubleshooting has been carried out according to the Problem Symptoms Table, refer back to the table and proceed to the next step INFO **.**

B ▶ **REPLACE REAR SPEED SENSOR AND REAR SPEED SENSOR ROTOR**

A ▶ **CHECK FOR INTERMITTENT PROBLEMS (SYMPTOM SIMULATION)**

7.	CHECK REAR SPEED SENSOR INSTALLATION

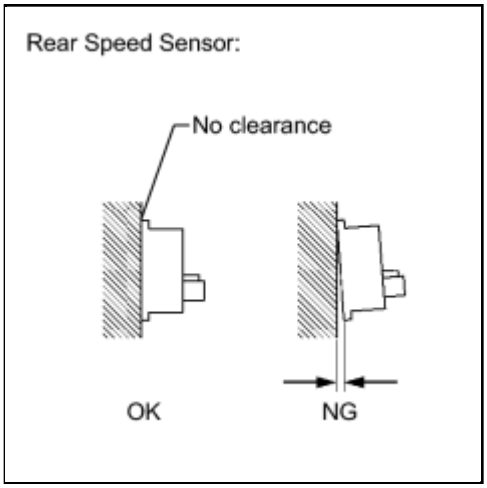

(a) Turn the ignition switch off.

(b) Check the speed sensor installation.

OK:

There is no clearance between the sensor and rear axle carrier.

NG ▶ **INSTALL REAR SPEED SENSOR CORRECTLY**

OK ▼

8.	INSPECT REAR SPEED SENSOR

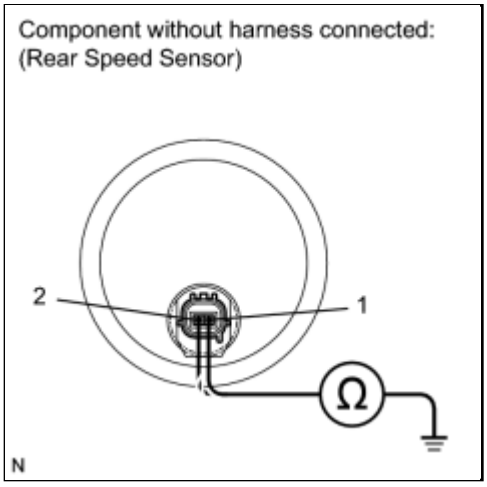

(a) Make sure that there is no looseness at the locking part and the connecting part of the connectors.

(b) Disconnect the rear speed sensor connector.

(c) Measure the resistance according to the value(s) in the table below.

Standard Resistance:

for RH

for LH

TESTER CONNECTION	CONDITION	SPECIFIED CONDITION
2 (RR+) - Body ground	Always	10 kΩ or higher
1 (RR-) - Body ground	Always	10 kΩ or higher

TESTER CONNECTION	CONDITION	SPECIFIED CONDITION
2 (RL+) - Body ground	Always	10 kΩ or higher
1 (RL-) - Body ground	Always	10 kΩ or higher

NOTICE:

Check the speed sensor signal after replacement INFO **.**

NG ▶ **REPLACE REAR SPEED SENSOR**

OK

▼

9.	CHECK HARNESS AND CONNECTOR (SKID CONTROL SENSOR WIRE)

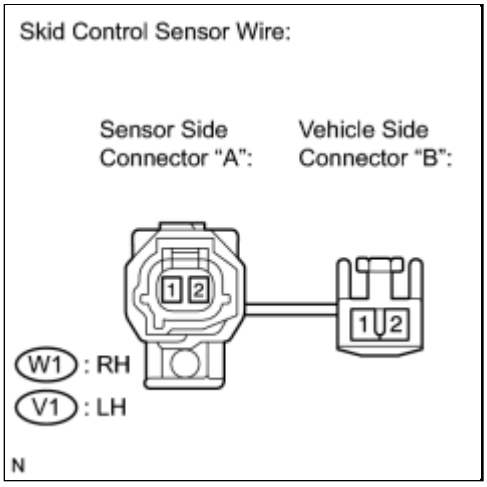

(a) Disconnect the skid control sensor wire.

(b) Measure the resistance according to the value(s) in the table below.

Standard Resistance:

for RH

for LH

TESTER CONNECTION	CONDITION	SPECIFIED CONDITION
W1 ("A"-2) - W1 ("B"-1)	Always	Below 1 Ω
W1 ("A"-2) - W1 ("B"-2)	Always	10 kΩ or higher
W1 ("A"-2) - Body ground	Always	10 kΩ or higher
W1 ("A"-1) - W1 ("B"-2)	Always	Below 1 Ω
W1 ("A"-1) - W1 ("B"-1)	Always	10 kΩ or higher
W1 ("A"-1) - Body ground	Always	10 kΩ or higher

TESTER CONNECTION	CONDITION	SPECIFIED CONDITION
V1 ("A"-2) - V1 ("B"-1)	Always	Below 1 Ω
V1 ("A"-2) - V1 ("B"-2)	Always	10 kΩ or higher
V1 ("A"-2) - Body ground	Always	10 kΩ or higher
V1 ("A"-1) - V1 ("B"-2)	Always	Below 1 Ω
V1 ("A"-1) - V1 ("B"-1)	Always	10 kΩ or higher
V1 ("A"-1) - Body ground	Always	10 kΩ or higher

NOTICE:

Check the speed sensor signal after replacement INFO .

NG ▶ REPLACE SKID CONTROL SENSOR WIRE

OK ▼

10.	CHECK HARNESS AND CONNECTOR (SKID CONTROL ECU - REAR SPEED SENSOR)

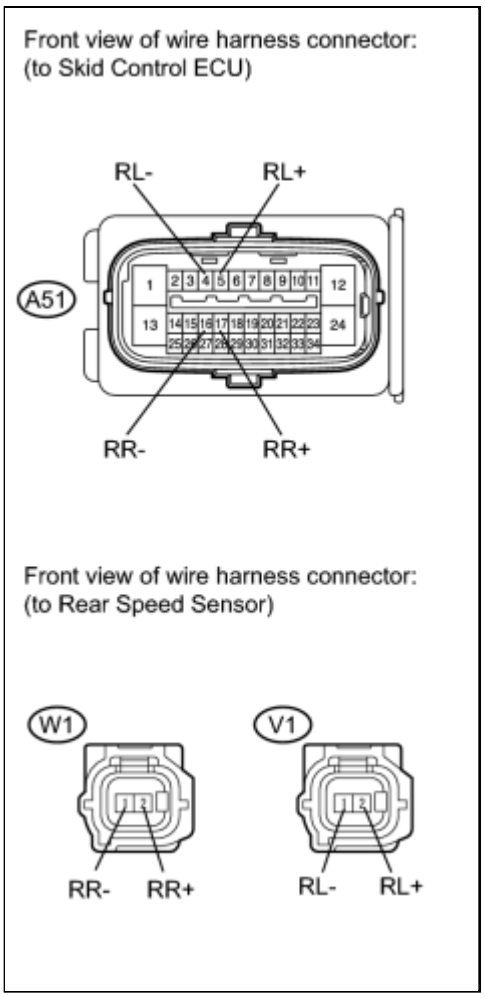

(a) Reconnect the skid control sensor wire.

(b) Disconnect the skid control ECU connector.

(c) Measure the resistance according to the value(s) in the table below.

Standard Resistance:

for RH

for LH

TESTER CONNECTION	CONDITION	SPECIFIED CONDITION
A51-17 (RR+) - W1-2 (RR+)	Always	Below 1 Ω
A51-17 (RR+) - Body ground	Always	10 kΩ or higher
A51-16 (RR-) - W1-1 (RR-)	Always	Below 1 Ω
A51-16 (RR-) - Body ground	Always	10 kΩ or higher

TESTER CONNECTION	CONDITION	SPECIFIED CONDITION
A51-5 (RL+) - V1-2 (RL+)	Always	Below 1 Ω
A51-5 (RL+) - Body ground	Always	10 kΩ or higher
A51-4 (RL-) - V1-1 (RL-)	Always	Below 1 Ω
A51-4 (RL-) - Body ground	Always	10 kΩ or higher

NG ▶ **REPAIR OR REPLACE HARNESS OR CONNECTOR**

OK ▼

11.	**INSPECT SKID CONTROL ECU (SENSOR INPUT)**

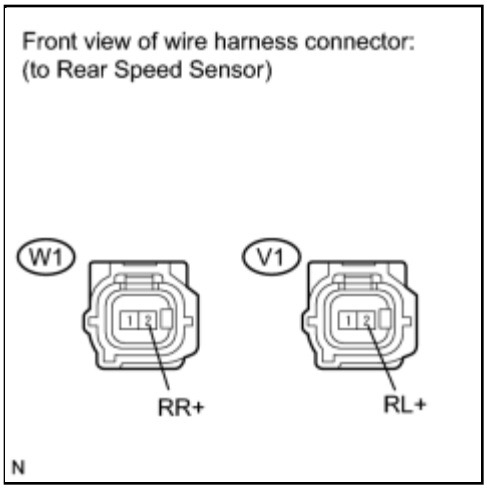

(a) Reconnect the skid control ECU connector.

(b) Turn the ignition switch to ON.

(c) Measure the voltage according to the value(s) in the table below.

Standard Voltage:

for RH

for LH

TESTER CONNECTION	SWITCH CONDITION	SPECIFIED CONDITION
W1-2 (RR+) - Body ground	Ignition switch ON	8 to 14 V

TESTER CONNECTION	SWITCH CONDITION	SPECIFIED CONDITION
V1-2 (RL+) - Body ground	Ignition switch ON	8 to 14 V

NG ▶ **REPLACE BRAKE ACTUATOR ASSEMBLY**

OK ▼

12.	**RECONFIRM DTC**

(a) Turn the ignition switch off.

(b) Reconnect the rear speed sensor connector.

(c) Clear the DTCs INFO .

(d) Start the engine.

(e) Drive the vehicle at a speed of 40 km/h (25 mph) or more for at least 60 seconds.

(f) Check if the same DTC is recorded INFO .

Result:

RESULT	PROCEED TO
DTCs (C0210/33 and/or C0215/34) are output	A
DTCs (C0210/33 and C0215/34) are not output	B

HINT:

If troubleshooting has been carried out according to the Problem Symptoms Table, refer back to the table and proceed to the next step INFO .

B ▶ **CHECK FOR INTERMITTENT PROBLEMS (SYMPTOM SIMULATION)**

A

13.	REPLACE REAR SPEED SENSOR AND REAR SPEED SENSOR ROTOR

(a) Turn the ignition switch off.

(b) Replace the rear speed sensor INFO .

(c) Replace the rear axle hub and bearing assembly (rear speed sensor rotor) INFO .

HINT:

The rear speed sensor rotor is incorporated into the rear axle hub and bearing assembly.

If the rear speed sensor rotor needs to be replaced, replace it together with the rear axle hub and bearing assembly with rear speed sensor.

NOTICE:

Check the speed sensor signal after replacement INFO .

NEXT

14.	RECONFIRM DTC

(a) Clear the DTCs INFO .

(b) Start the engine.

(c) Drive the vehicle at a speed of 40 km/h (25 mph) or more for at least 60 seconds.

(d) Check if the same DTC is recorded INFO .

Result:

RESULT	PROCEED TO
DTCs (C0210/33 and C0215/34) are not output	A
DTCs (C0210/33 and/or C0215/34) are output	B

HINT:

If troubleshooting has been carried out according to the Problem Symptoms Table, refer back to the table and proceed to the next step INFO .

B ▶ REPLACE BRAKE ACTUATOR ASSEMBLY

A ▶ END

Last Modified: 3-10-2010	6.4 S	**From:** 200901
Model Year: 2010	**Model:** Corolla	**Doc ID:** RM000000XHU03UX
Title: BRAKE CONTROL / DYNAMIC CONTROL SYSTEMS: ANTI-LOCK BRAKE SYSTEM: DIAGNOSTIC TROUBLE CODE CHART (2010 Corolla)		

DIAGNOSTIC TROUBLE CODE CHART

NOTICE:

Turn the ignition switch off before removing parts.

HINT:

- If no malfunction is found when inspecting parts, inspect the skid control ECU and ground points for poor contact.
- If a trouble code is displayed during the DTC check, check the circuit indicated by the DTC. For details of each code, refer to the page for the respective DTC Code in the DTC chart.
- When 2 or more DTCs are detected, perform circuit inspection one by one until the problem is identified.
- Inspect the fuses and relays before investigating the trouble areas as shown in the table below.

ABS DTC

DTC CODE	DETECTION ITEM	TROUBLE AREA	SEE PAGE
C0200/31*1	Front Speed Sensor RH Circuit	1. Front speed sensor RH 2. Speed sensor circuit 3. Speed sensor rotor 4. Sensor installation 5. Brake actuator assembly (Skid control ECU)	INFO
C0205/32*1	Front Speed Sensor LH Circuit	1. Front speed sensor LH 2. Speed sensor circuit 3. Speed sensor rotor 4. Sensor installation 5. Brake actuator assembly (Skid control ECU)	INFO
C0210/33*1	Rear Speed Sensor RH Circuit	1. Rear speed sensor RH 2. Speed sensor circuit 3. Speed sensor rotor 4. Sensor installation 5. Brake actuator assembly (Skid control ECU)	INFO
C0215/34*1	Rear Speed Sensor LH Circuit	1. Rear speed sensor LH 2. Speed sensor circuit 3. Speed sensor rotor 4. Sensor installation 5. Brake actuator assembly (Skid control ECU)	INFO

DTC CODE	DETECTION ITEM	TROUBLE AREA	SEE PAGE
C0226/21	SFR Solenoid Circuit	1. SFRR or SFRH circuit 2. Brake actuator assembly	INFO
C0236/22	SFL Solenoid Circuit	1. SFLR or SFLH circuit 2. Brake actuator assembly	INFO
C0246/23	SRR Solenoid Circuit	1. SRRR or SRRH circuit 2. Brake actuator assembly	INFO
C0256/24	SRL Solenoid Circuit	1. SRLR or SRLH circuit 2. Brake actuator assembly	INFO
C0273/13*1	Open in ABS Motor Relay Circuit	1. ABS NO. 1 fuse 2. ABS motor relay circuit 3. Brake actuator assembly (ABS motor relay)	INFO
C0274/14	Short to B+ in ABS Motor Relay Circuit	1. ABS motor relay circuit 2. Brake actuator assembly (ABS motor relay)	INFO
C0278/11	Open in ABS Solenoid Relay Circuit	1. ABS NO. 3 fuse 2. ABS solenoid relay circuit 3. Brake actuator assembly (ABS solenoid relay)	INFO
C0279/12	Short to B+ in ABS Solenoid Relay Circuit	1. ABS solenoid relay circuit 2. Brake actuator assembly (ABS solenoid relay)	INFO
C1235/35*1	Foreign Object is Attached on Tip of Front Speed Sensor RH	1. Front speed sensor RH 2. Speed sensor rotor 3. Sensor installation 4. Brake actuator assembly (Skid control ECU)	INFO
C1236/36*1	Foreign Object is Attached on Tip of Front Speed Sensor LH	1. Front speed sensor LH 2. Speed sensor rotor 3. Sensor installation 4. Brake actuator assembly (Skid control ECU)	INFO
C1238/38*1	Foreign Object is Attached on Tip of Rear Speed Sensor RH	1. Rear speed sensor RH 2. Speed sensor rotor 3. Sensor installation 4. Brake actuator assembly (Skid control ECU)	INFO
C1239/39*1	Foreign Object is Attached on Tip of Rear Speed Sensor LH	1. Rear speed sensor LH 2. Speed sensor rotor 3. Sensor installation 4. Brake actuator assembly (Skid	INFO

DTC CODE	DETECTION ITEM	TROUBLE AREA	SEE PAGE
		control ECU)	
C1241/41	Low Battery Positive Voltage or Abnormally High Battery Positive Voltage	1. ECU-IG NO. 1 fuse 2. Battery 3. Charging system 4. Power source circuit 5. Internal power supply circuit of the skid control ECU	INFO
C1249/49	Open in Stop Light Switch Circuit	1. STOP fuse 2. Stop light switch 3. Stop light switch circuit 4. Brake actuator assembly (Skid control ECU)	INFO
C1251/51*1	Open in Pump Motor Circuit	1. Brake actuator assembly (Ground circuit) 2. Brake actuator assembly (Motor circuit)	INFO
U0073/94	Control Module Communication Bus OFF	CAN communication system	INFO

*1: Even after the trouble areas are repaired, the ABS warning light will not go off unless the following operations are performed:

1. Drive the vehicle at 20 km/h (12 mph) for 30 seconds or more and check that the ABS warning light goes off.
2. Clear the DTCs.

HINT:

In some cases, the Techstream cannot be used when the ABS warning light remains on.

ABS Test Mode DTC

DTC CODE	DETECTION ITEM	TROUBLE AREA	SEE PAGE
C1271/71	Low Output Signal of Front Speed Sensor RH (Test Mode DTC)	1. Front speed sensor RH 2. Sensor installation 3. Speed sensor rotor	INFO
C1272/72	Low Output Signal of Front Speed Sensor LH (Test Mode DTC)	1. Front speed sensor LH 2. Sensor installation 3. Speed sensor	INFO

DTC CODE	DETECTION ITEM	TROUBLE AREA	SEE PAGE
		rotor	
C1273/73	Low Output Signal of Rear Speed Sensor RH (Test Mode DTC)	1. Rear speed sensor RH 2. Sensor installation 3. Speed sensor rotor	INFO
C1274/74	Low Output Signal of Rear Speed Sensor LH (Test Mode DTC)	1. Rear speed sensor LH 2. Sensor installation 3. Speed sensor rotor	INFO
C1275/75	Abnormal Change in Output Signal of Front Speed Sensor RH (Test Mode DTC)	Speed sensor rotor	INFO
C1276/76	Abnormal Change in Output Signal of Front Speed Sensor LH (Test Mode DTC)	Speed sensor rotor	INFO
C1277/77	Abnormal Change in Output Signal of Rear Speed Sensor RH (Test Mode DTC)	Speed sensor rotor	INFO
C1278/78	Abnormal Change in Output Signal of Rear Speed Sensor LH (Test Mode DTC)	Speed sensor rotor	INFO

Last Modified: 3-10-2010	6.4 C	**From:** 200901
Model Year: 2010	**Model:** Corolla	**Doc ID:** RM000000XI804SX
Title: BRAKE CONTROL / DYNAMIC CONTROL SYSTEMS: ANTI-LOCK BRAKE SYSTEM: C0226/21,C0236/22,C0246/23,C0256/24: SFR Solenoid Circuit (2010 Corolla)		

DTC	**C0226/21**	**SFR Solenoid Circuit**

DTC	**C0236/22**	**SFL Solenoid Circuit**

DTC	**C0246/23**	**SRR Solenoid Circuit**

DTC	**C0256/24**	**SRL Solenoid Circuit**

DESCRIPTION

These solenoids turn on when signals are received from the skid control ECU and they control the pressure acting on the wheel cylinders to control the braking force.

DTC CODE	DTC DETECTION CONDITION	TROUBLE AREA
C0226/21 C0236/22 C0246/23 C0256/24	When a solenoid relay is ON and the IG1 terminal voltage is 17.4 V or less, open or short in the solenoid circuit continues for 0.05 seconds or more.	• Solenoid circuit • Brake actuator assembly

WIRING DIAGRAM

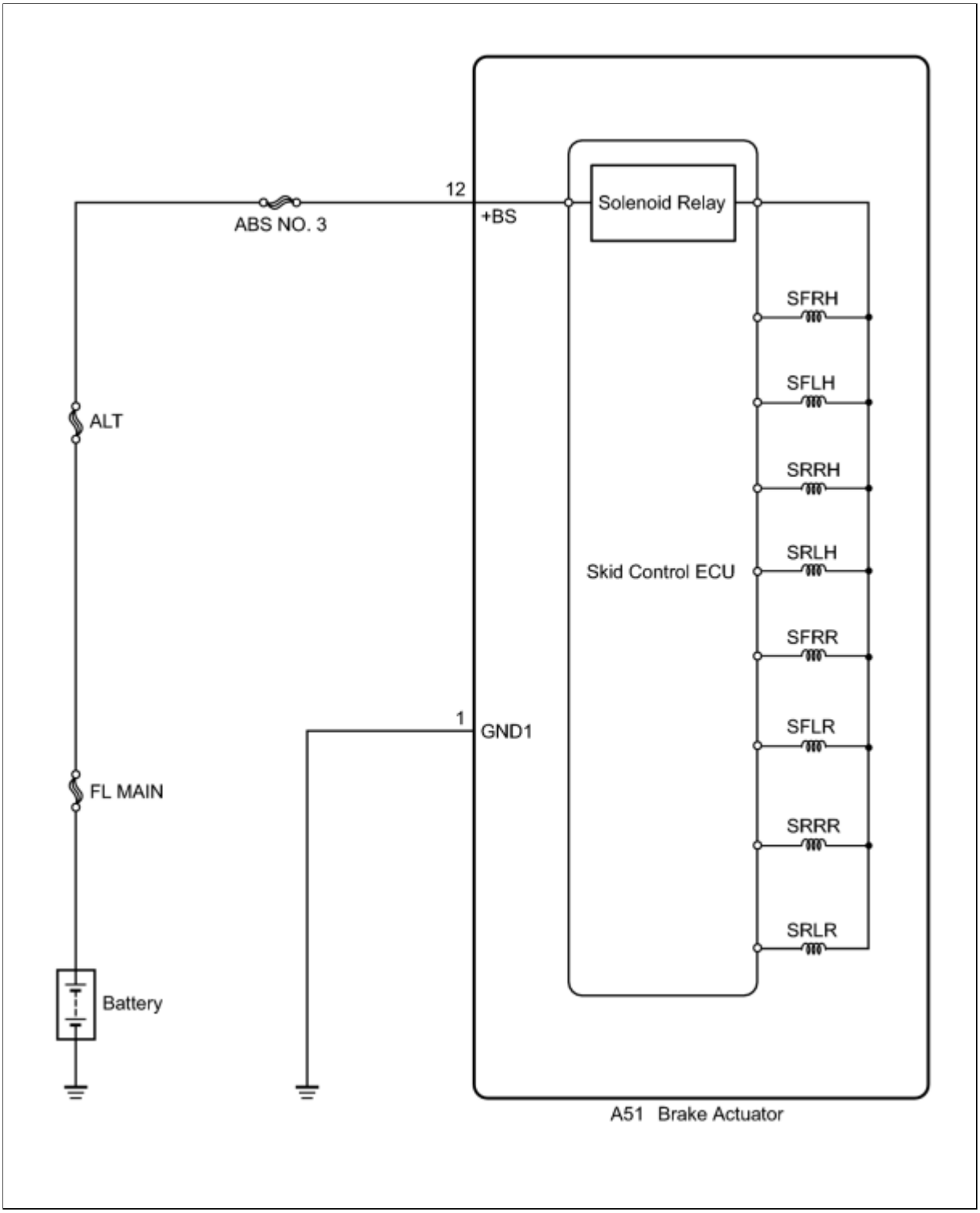

INSPECTION PROCEDURE

PROCEDURE

1.	**RECONFIRM DTC**

HINT:

These codes are detected when a problem is determined in the brake actuator assembly.

The solenoid circuits are in the brake actuator assembly.

Therefore, solenoid circuit inspection and solenoid unit inspection cannot be performed. Be sure to check if any DTCs are output before replacing the brake actuator assembly.

(a) Clear the DTCs INFO.

(b) Start the engine.

(c) Drive the vehicle at a speed of 20 km/h (12 mph) or more.

(d) Check if the same DTC is recorded INFO.

Result:

RESULT	PROCEED TO
DTCs (C0226/21, C0236/22, C0246/23 and C0256/24) are not output	A
DTCs (C0226/21, C0236/22, C0246/23 and/or C0256/24) are output	B

HINT:

- If a speed signal of 6 km/h (4 mph) or more is input to the skid control ECU with the ignition switch ON and the stop light switch off, the ECU performs self diagnosis of the motor and solenoid circuits.
- If the normal system code is output (no trouble codes are output), slightly jiggle the connectors, wire harness, and fuses of the brake actuator assembly. Make sure that no DTCs are output.
- If any DTCs are output while jiggling a connector or wire harness of the brake actuator assembly (skid control ECU), inspect and repair the connector or wire harness.
- It is suspected that the DTCs were output due to a bad connection of the connector terminal.

B ▶ **REPLACE BRAKE ACTUATOR ASSEMBLY**

A ▶ **CHECK FOR INTERMITTENT PROBLEMS (SYMPTOM SIMULATION)**

Last Modified: 3-10-2010	6.4 C	**From:** 200901
Model Year: 2010	**Model:** Corolla	**Doc ID:** RM000000XIC04EX
Title: BRAKE CONTROL / DYNAMIC CONTROL SYSTEMS: ANTI-LOCK BRAKE SYSTEM: C1235/35,C1236/36,C1238/38,C1239/39,C1275/75-C1278/78: Foreign Object is Attached on Tip of Front Speed Sensor RH (2010 Corolla)		

DTC	**C1235/35**	**Foreign Object is Attached on Tip of Front Speed Sensor RH**

DTC	**C1236/36**	**Foreign Object is Attached on Tip of Front Speed Sensor LH**

DTC	**C1238/38**	**Foreign Object is Attached on Tip of Rear Speed Sensor RH**

DTC	**C1239/39**	**Foreign Object is Attached on Tip of Rear Speed Sensor LH**

DTC	**C1275/75**	**Abnormal Change in Output Signal of Front Speed Sensor RH (Test Mode DTC)**

DTC	**C1276/76**	**Abnormal Change in Output Signal of Front Speed Sensor LH (Test Mode DTC)**

DTC	**C1277/77**	**Abnormal Change in Output Signal of Rear Speed Sensor RH (Test Mode DTC)**

DTC	**C1278/78**	**Abnormal Change in Output Signal of Rear Speed Sensor LH (Test Mode DTC)**

DESCRIPTION

The speed sensor detects the wheel speed and sends the appropriate signals to the skid control ECU. These signals are used for the ABS control system.

Speed sensor rotors have 48 serrations (for front) or rows of alternating N and S magnetic poles (for rear). The hall IC type speed sensor use the frequency of output pulses to detect the vehicle speed. Because the sensor outputs digital pulses, it can detect vehicle speeds even when the vehicle is nearly stationary.

When foreign matter or oil adheres to the speed sensor tip or speed sensor rotor, these DTCs are output. An abnormal waveform input from the sensor determines these conditions.

These DTCs may be detected when a malfunction occurs in the connector terminals or wire harness of the speed sensor circuit.

DTCs C1275/75 to C1278/78 will be deleted when the speed sensor sends a vehicle speed signal or when Test Mode ends. DTCs C1275/75 to C1278/78 are output only in Test Mode.

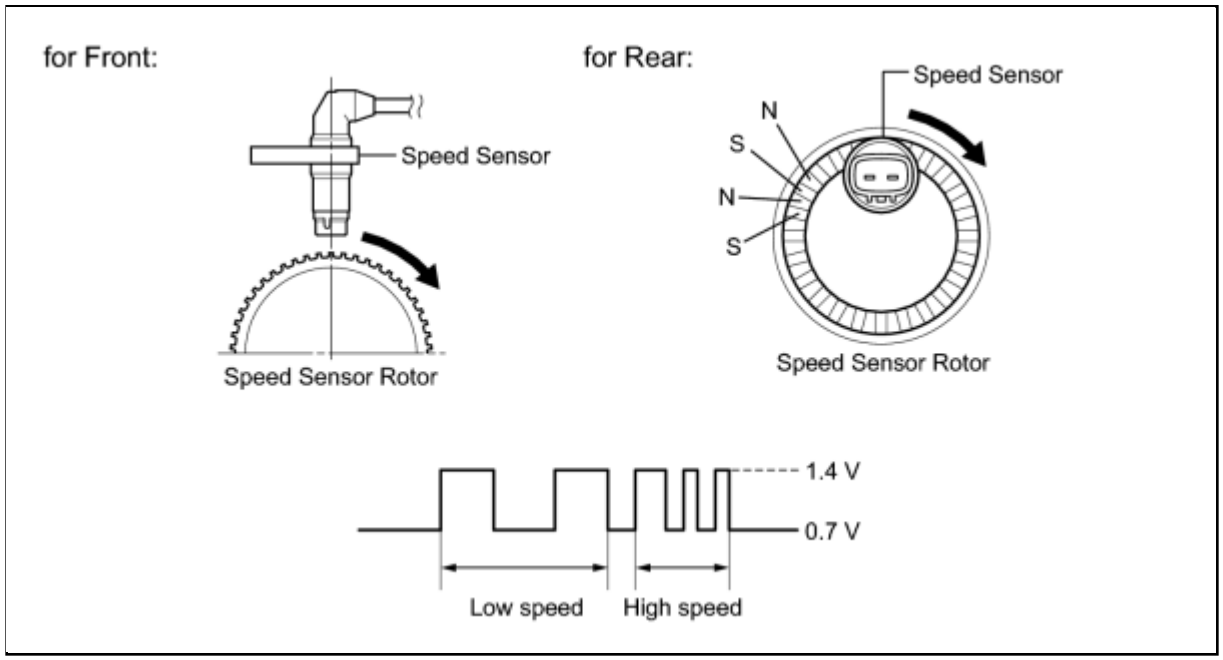

DTC CODE	DTC DETECTION CONDITION	TROUBLE AREA
C1235/35 C1236/36 C1238/38 C1239/39	Either of the following is detected: 1. At a vehicle speed of 20 km/h (12 mph) or more, the IG1 terminal voltage is 17.4 V or less, and noise occurs in the sensor signal from the abnormal wheel for 5 seconds or more. 2. At a vehicle speed of 10 km/h (6 mph) or more, the IG1 terminal voltage is 17.4 V or less, and noise is input once per rotor rotation for 15 seconds or more.	• Speed sensor • Speed sensor rotor • Sensor installation • Brake actuator assembly (Skid control ECU)
C1275/75 C1276/76 C1277/77 C1278/78	Detected only during Test Mode.	Speed sensor rotor

HINT:

- DTCs C1235/35 and C1275/75 are for the front speed sensor RH.
- DTCs C1236/36 and C1276/76 are for the front speed sensor LH.
- DTCs C1238/38 and C1277/77 are for the rear speed sensor RH.

- DTCs C1239/39 and C1278/78 are for the rear speed sensor LH.

WIRING DIAGRAM

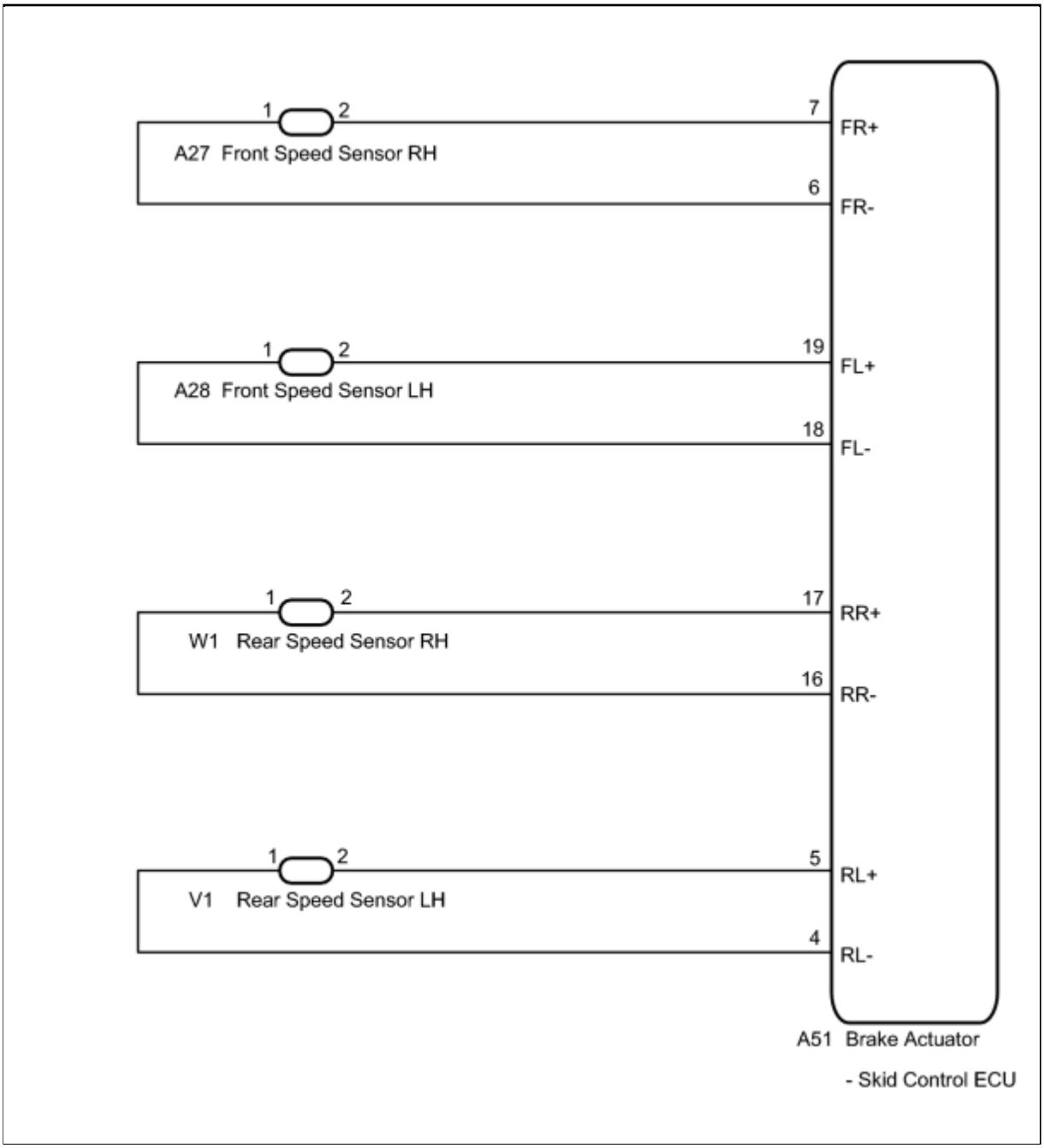

INSPECTION PROCEDURE

HINT:

When C0200/31, C0205/32, C0210/33 and/or C0215/34 is output together with C1235/35, C1236/36, C1238/38, or C1239/39, inspect and repair the trouble areas indicated by C0200/31, C0205/32, C0210/33 and/or C0215/34 first INFO for front, or INFO for rear).

PROCEDURE

1.	INSPECT SPEED SENSOR

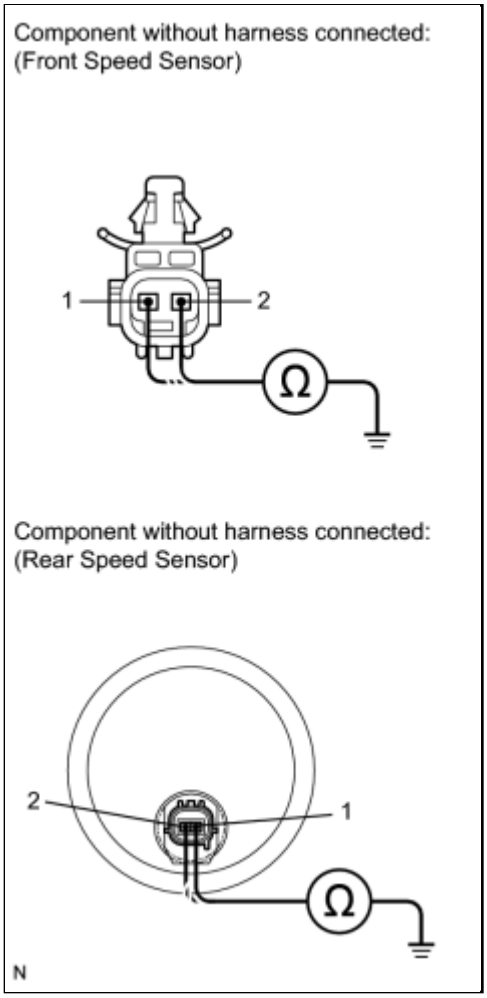

(a) Make sure that there is no looseness at the locking part and the connecting part of the connectors.

(b) Disconnect each speed sensor connector.

(c) Measure the resistance according to the value(s) in the table below.

Standard Resistance:

for RH

for LH

TESTER CONNECTION	CONDITION	SPECIFIED CONDITION
2 (FR+) - Body ground	Always	10 kΩ or higher
1 (FR-) - Body ground	Always	10 kΩ or higher
2 (RR+) - Body ground	Always	10 kΩ or higher
1 (RR-) - Body ground	Always	10 kΩ or higher

TESTER CONNECTION	CONDITION	SPECIFIED CONDITION
2 (FL+) - Body ground	Always	10 kΩ or higher
1 (FL-) - Body ground	Always	10 kΩ or higher
2 (RL+) - Body ground	Always	10 kΩ or higher
1 (RL-) - Body ground	Always	10 kΩ or higher

Result:

RESULT	PROCEED TO
OK (for rear)	A
OK (for front)	B
NG	C

NOTICE:

Check the speed sensor signal after replacement INFO **.**

C ▶ **REPLACE SPEED SENSOR**

B ▶ **CHECK HARNESS AND CONNECTOR (SKID CONTROL ECU - SPEED SENSOR)**

A ▼

2.	CHECK HARNESS AND CONNECTOR (SKID CONTROL SENSOR WIRE)

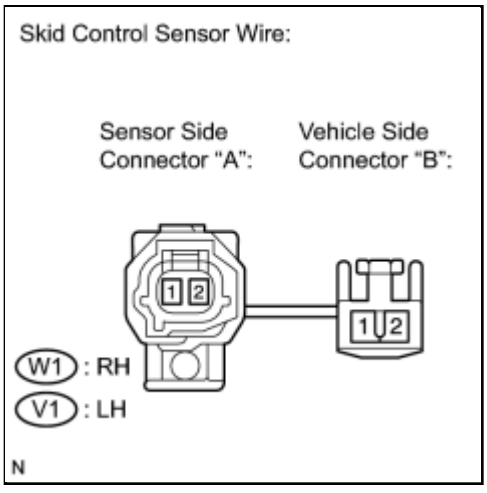

(a) Disconnect the skid control sensor wire.

(b) Measure the resistance according to the value(s) in the table below.

Standard Resistance:

for RH

for LH

TESTER CONNECTION	CONDITION	SPECIFIED CONDITION
W1 ("A"-2) - W1 ("B"-1)	Always	Below 1 Ω
W1 ("A"-2) - W1 ("B"-2)	Always	10 kΩ or higher
W1 ("A"-2) - Body ground	Always	10 kΩ or higher
W1 ("A"-1) - W1 ("B"-2)	Always	Below 1 Ω
W1 ("A"-1) - W1 ("B"-1)	Always	10 kΩ or higher
W1 ("A"-1) - Body ground	Always	10 kΩ or higher

TESTER CONNECTION	CONDITION	SPECIFIED CONDITION
V1 ("A"-2) - V1 ("B"-1)	Always	Below 1 Ω
V1 ("A"-2) - V1 ("B"-2)	Always	10 kΩ or higher
V1 ("A"-2) - Body ground	Always	10 kΩ or higher
V1 ("A"-1) - V1 ("B"-2)	Always	Below 1 Ω
V1 ("A"-1) - V1 ("B"-1)	Always	10 kΩ or higher
V1 ("A"-1) - Body ground	Always	10 kΩ or higher

NOTICE:

Check the speed sensor signal after replacement INFO **.**

NG ▶ **REPLACE SKID CONTROL SENSOR WIRE**

OK

▼

3.	**CHECK HARNESS AND CONNECTOR (SKID CONTROL ECU - SPEED SENSOR)**

(a) Reconnect the skid control sensor wire.

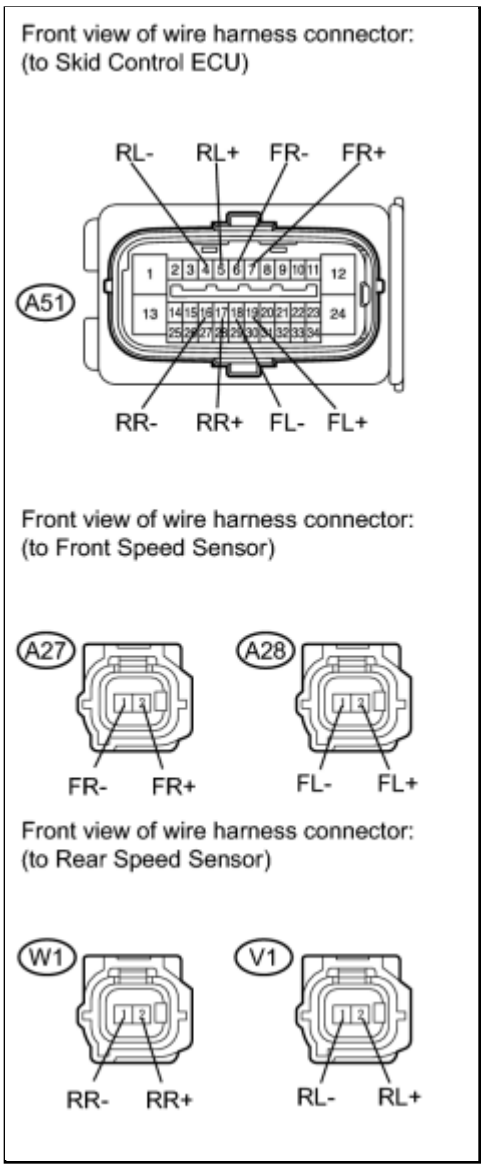

(b) Disconnect the skid control ECU connector.

(c) Measure the resistance according to the value(s) in the table below.

Standard Resistance:

for RH

for LH

TESTER CONNECTION	CONDITION	SPECIFIED CONDITION
A51-7 (FR+) - A27-2 (FR+)	Always	Below 1 Ω
A51-7 (FR+) - Body ground	Always	10 kΩ or higher
A51-6 (FR-) - A27-1 (FR-)	Always	Below 1 Ω
A51-6 (FR-) - Body ground	Always	10 kΩ or higher
A51-17 (RR+) - W1-2 (RR+)	Always	Below 1 Ω
A51-17 (RR+) - Body ground	Always	10 kΩ or higher

TESTER CONNECTION	CONDITION	SPECIFIED CONDITION
A51-16 (RR-) - W1-1 (RR-)	Always	Below 1 Ω
A51-16 (RR-) - Body ground	Always	10 kΩ or higher

TESTER CONNECTION	CONDITION	SPECIFIED CONDITION
A51-19 (FL+) - A28-2 (FL+)	Always	Below 1 Ω
A51-19 (FL+) - Body ground	Always	10 kΩ or higher
A51-18 (FL-) - A28-1 (FL-)	Always	Below 1 Ω
A51-18 (FL-) - Body ground	Always	10 kΩ or higher
A51-5 (RL+) - V1-2 (RL+)	Always	Below 1 Ω
A51-5 (RL+) - Body ground	Always	10 kΩ or higher
A51-4 (RL-) - V1-1 (RL-)	Always	Below 1 Ω
A51-4 (RL-) - Body ground	Always	10 kΩ or higher

NG ▶ **REPAIR OR REPLACE HARNESS OR CONNECTOR**

OK ▼

4.	**INSPECT SKID CONTROL ECU (SENSOR INPUT)**

(a) Reconnect the skid control ECU connector.

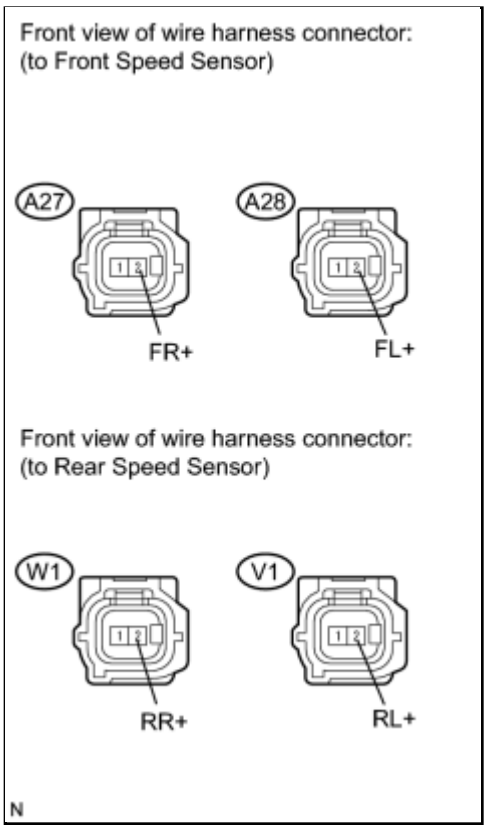

(b) Turn the ignition switch to ON.

(c) Measure the voltage according to the value(s) in the table below.

Standard Voltage:

for RH

for LH

TESTER CONNECTION	SWITCH CONDITION	SPECIFIED CONDITION
A27-2 (FR+) - Body ground	Ignition switch ON	8 to 14 V
W1-2 (RR+) - Body ground	Ignition switch ON	8 to 14 V

TESTER CONNECTION	SWITCH CONDITION	SPECIFIED CONDITION
A28-2 (FL+) - Body ground	Ignition switch ON	8 to 14 V
V1-2 (RL+) - Body ground	Ignition switch ON	8 to 14 V

NG ▶ **REPLACE BRAKE ACTUATOR ASSEMBLY**

OK ▼

5.	RECONFIRM DTC

(a) Turn the ignition switch off.

(b) Reconnect the speed sensor connector.

(c) Clear the DTCs INFO .

(d) Start the engine.

(e) Drive the vehicle at a speed of 20 km/h (12 mph) or more for at least 60 seconds.

(f) Check if the same DTC is recorded INFO .

Result:

RESULT	PROCEED TO
DTCs (C1235/35, C1236/36, C1238/38 and/or C1239/39) are output (for front)	A
DTCs (C1235/35, C1236/36, C1238/38 and/or C1239/39) are output (for rear)	B
DTCs (C1235/35, C1236/36, C1238/38 and C1239/39) are not output	C

C ▶ **CHECK FOR INTERMITTENT PROBLEMS (SYMPTOM SIMULATION)**

B ▶ **REPLACE REAR SPEED SENSOR AND REAR SPEED SENSOR ROTOR**

A ▼

6.	CHECK FRONT SPEED SENSOR TIP

(a) Turn the ignition switch off.

(b) Remove the front speed sensor INFO .

(c) Check the speed sensor tip.

OK:

No scratches or foreign matter on the sensor tip.

NOTICE:

Check the speed sensor signal after cleaning or replacement INFO .

NG ▶ CLEAN OR REPLACE FRONT SPEED SENSOR

OK ▼

7.	CHECK FRONT SPEED SENSOR ROTOR

(a) Remove the front speed sensor rotor INFO .

(b) Check the speed sensor rotors.

OK:

No scratches, oil, or foreign matter on the rotors.

NOTICE:

Check the speed sensor signal after cleaning or replacement INFO .

HINT:

If the front speed sensor rotor needs to be replaced, replace it together with the front axle outboard joint shaft assembly.

NG ▶ CLEAN OR REPLACE FRONT SPEED SENSOR ROTOR

OK ▼

8.	RECONFIRM DTC

(a) Install the front speed sensor and the front speed sensor rotor.

(b) Clear the DTCs INFO .

(c) Start the engine.

(d) Drive the vehicle at a speed of 20 km/h (12 mph) or more for at least 60 seconds.

(e) Check if the same DTC is recorded INFO .

Result:

RESULT	PROCEED TO

RESULT	PROCEED TO
DTCs (C1235/35, C1236/36, C1238/38 and/or C1239/39) are output	A
DTCs (C1235/35, C1236/36, C1238/38 and C1239/39) are not output	B

B ▶ **CHECK FOR INTERMITTENT PROBLEMS (SYMPTOM SIMULATION)**

A

▼

9.	REPLACE FRONT SPEED SENSOR

(a) Turn the ignition switch off.

(b) Replace the front speed sensor INFO .

NOTICE:

Check the speed sensor signal after replacement INFO .

NEXT

▼

10.	RECONFIRM DTC

(a) Clear the DTCs INFO .

(b) Start the engine.

(c) Drive the vehicle at a speed of 20 km/h (12 mph) or more for at least 60 seconds.

(d) Check if the same DTC is recorded INFO .

Result:

RESULT	PROCEED TO
DTCs (C1235/35, C1236/36, C1238/38 and/or C1239/39) are output	A
DTCs (C1235/35, C1236/36, C1238/38 and C1239/39) are not output	B

B END

A

11.	REPLACE FRONT SPEED SENSOR ROTOR

(a) Turn the ignition switch off.

(b) Remove the front drive shaft assembly INFO .

(c) Replace the front axle outboard joint shaft assembly (front speed sensor rotor) INFO .

HINT:

If the front speed sensor rotor needs to be replaced, replace it together with the front axle outboard joint shaft assembly.

NOTICE:

Check the speed sensor signal after replacement INFO .

NEXT

12.	RECONFIRM DTC

(a) Install the front drive shaft assembly.

(b) Clear the DTCs INFO .

(c) Start the engine.

(d) Drive the vehicle at a speed of 20 km/h (12 mph) or more for at least 60 seconds.

(e) Check if the same DTC is recorded INFO .

Result:

RESULT	PROCEED TO
DTCs (C1235/35, C1236/36, C1238/38 and/or C1239/39) are output	A
DTCs (C1235/35, C1236/36, C1238/38 and C1239/39) are not output	B

B ▶ END

A ▶ REPLACE BRAKE ACTUATOR ASSEMBLY

13.	REPLACE REAR SPEED SENSOR AND REAR SPEED SENSOR ROTOR

(a) Turn the ignition switch off.

(b) Replace the rear speed sensor INFO .

(c) Replace the rear axle hub and bearing assembly (rear speed sensor rotor) INFO .

HINT:

The rear speed sensor rotor is incorporated into the rear axle hub and bearing assembly.

If the rear speed sensor rotor needs to be replaced, replace it together with the rear axle hub and bearing assembly with rear speed sensor.

NOTICE:

Check the speed sensor signal after replacement INFO .

NEXT

14.	RECONFIRM DTC

(a) Clear the DTCs INFO .

(b) Start the engine.

(c) Drive the vehicle at a speed of 20 km/h (12 mph) or more for at least 60 seconds.

(d) Check if the same DTC is recorded INFO .

Result:

RESULT	PROCEED TO
DTCs (C1235/35, C1236/36, C1238/38 and/or C1239/39) are output	A
DTCs (C1235/35, C1236/36, C1238/38 and C1239/39) are not output	B

B ▶ END

A ▶ REPLACE BRAKE ACTUATOR ASSEMBLY

Last Modified: 3-10-2010	6.4 C	**From:** 200901
Model Year: 2010	**Model:** Corolla	**Doc ID:** RM000001JD603EX
Title: BRAKE CONTROL / DYNAMIC CONTROL SYSTEMS: ANTI-LOCK BRAKE SYSTEM: C0273/13,C0274/14: Open in ABS Motor Relay Circuit (2010 Corolla)		

DTC	**C0273/13**	**Open in ABS Motor Relay Circuit**

DTC	**C0274/14**	**Short to B+ in ABS Motor Relay Circuit**

DESCRIPTION

The ABS motor relay supplies power to the ABS pump motor. While the ABS is activated, the ECU turns the motor relay on and operates the ABS pump motor.

If the voltage supplied to the motor relay (+BM) is below the DTCs detection threshold due to low voltage from the battery or alternator, these DTCs may be stored.

DTC CODE	DTC DETECTION CONDITION	TROUBLE AREA
C0273/13	Either of the following is detected: 1. All of the following conditions continue for 0.1 seconds or more. - The IG1 terminal voltage is 9.5 V or more. - While initial check, or ABS or BA is operating. - Relay contact is open when the relay is ON. 2. Both of the following conditions continue for 0.1 seconds. - The IG1 terminal voltage is less than 9.5 V. - Relay contact remains open when the relay is ON.	• ABS NO. 1 fuse • ABS motor relay circuit • Brake actuator assembly (ABS motor relay)
C0274/14	When the motor relay is OFF, the motor relay remains closed for 4 seconds or more.	• ABS motor relay circuit • Brake actuator assembly (ABS motor relay)

WIRING DIAGRAM

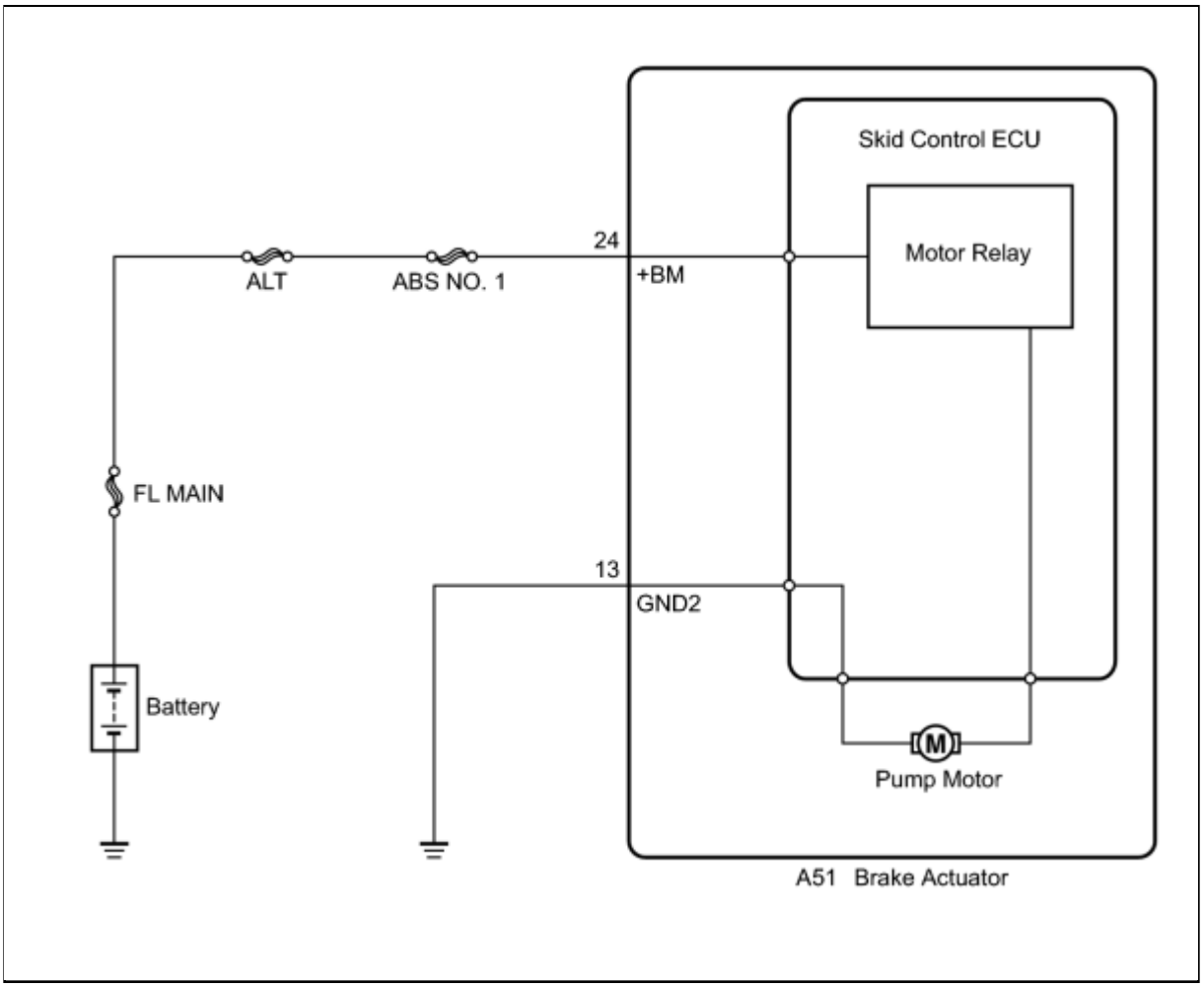

INSPECTION PROCEDURE

HINT:

When C1241/41 is output together with C0273/13 and/or C0274/13, inspect and repair the trouble areas indicated by C1241/41 first INFO **.**

PROCEDURE

1.	**INSPECT ABS NO. 1 FUSE**

(a) Remove the ABS NO. 1 fuse from the engine room relay block.

(b) Measure the resistance according to the value(s) in the table below.

Standard Resistance:

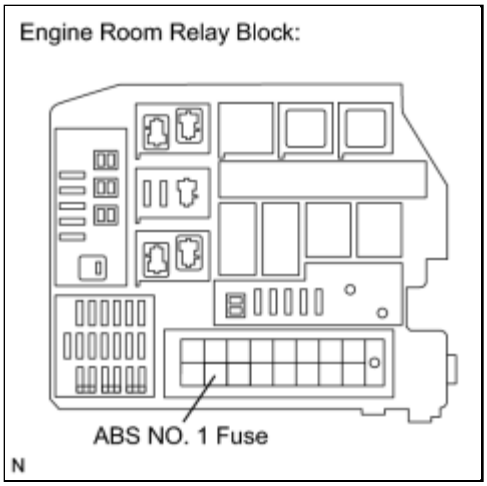

TESTER CONNECTION	CONDITION	SPECIFIED CONDITION
ABS NO. 1 (50 A) fuse	Always	Below 1 Ω

NG ▶ **REPLACE ABS NO. 1 FUSE**

OK ▼

2.	PERFORM ACTIVE TEST USING TECHSTREAM (ABS MOTOR RELAY)

(a) Install the ABS NO. 1 fuse.

(b) Connect the Techstream to the DLC3.

(c) Start the engine.

(d) Select Active Test mode on the Techstream INFO.

ABS/VSC/TRAC

TESTER DISPLAY	TEST PART	CONTROL RANGE	DIAGNOSTIC NOTE
Motor Relay	ABS motor relay	Relay ON/OFF	Operating sound of motor can be heard

(e) Check the operating sound of the ABS motor relay when operating it with the Techstream.

Result:

RESULT	PROCEED TO
The operating sound is not heard	A
The operating sound is heard	B

B ▶ **RECONFIRM DTC**

A

3.	**INSPECT SKID CONTROL ECU (+BM TERMINAL)**

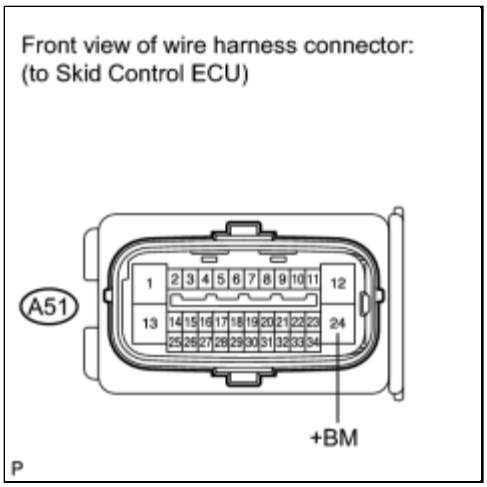

(a) Turn the ignition switch off.

(b) Disconnect the skid control ECU connector.

(c) Measure the voltage according to the value(s) in the table below.

Standard Voltage:

TESTER CONNECTION	CONDITION	SPECIFIED CONDITION
A51-24 (+BM) - Body ground	Always	11 to 14 V

NG ▶ **REPAIR OR REPLACE HARNESS OR CONNECTOR (+BM CIRCUIT)**

OK

4.	**INSPECT SKID CONTROL ECU (GND2 TERMINAL)**

(a) Measure the resistance according to the value(s) in the table below.

Standard Resistance:

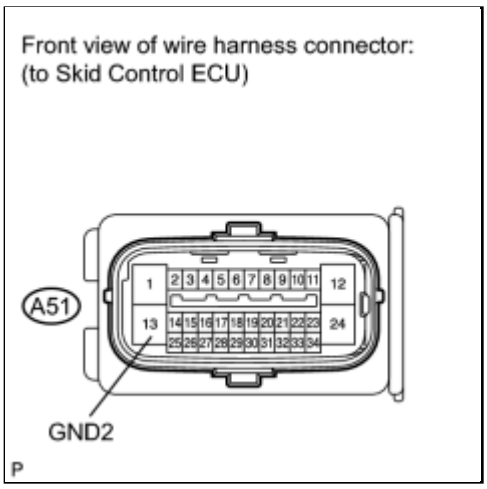

TESTER CONNECTION	CONDITION	SPECIFIED CONDITION
A51-13 (GND2) - Body ground	Always	Below 1 Ω

NG ▶ **REPAIR OR REPLACE HARNESS OR CONNECTOR (GND2 CIRCUIT)**

OK ▼

5.	**RECONFIRM DTC**

HINT:

This code is detected when a problem is identified in the brake actuator assembly.

The ABS motor relay is in the brake actuator assembly.

Therefore, ABS motor relay inspection and motor relay unit inspection cannot be performed. Be sure to check if the DTC is output before replacing the brake actuator assembly.

(a) Turn the ignition switch off.

(b) Reconnect the skid control ECU connector.

(c) Clear the DTCs INFO .

(d) Start the engine.

(e) Drive the vehicle at a speed of 20 km/h (12 mph) or more for 30 seconds or more.

(f) Check if the same DTC is recorded INFO .

Result:

RESULT	PROCEED TO
DTCs (C0273/13 and C0274/14) are not output	A

RESULT	PROCEED TO
DTCs (C0273/13 and/or C0274/14) are output	B

HINT:

- If a speed signal of 6 km/h (4 mph) or more is input to the skid control ECU with the ignition switch ON and the stop light switch off, the ECU performs self diagnosis of the motor and solenoid circuits.
- If the normal system code is output (no trouble codes are output), slightly jiggle the connectors, wire harness, and fuses of the brake actuator assembly. Make sure that no DTCs are output.
- If any DTCs are output while jiggling a connector or wire harness of the brake actuator assembly (skid control ECU), inspect and repair the connector or wire harness.
- It is suspected that the DTCs were output due to a bad connection of the connector terminal.

B ▶ **REPLACE BRAKE ACTUATOR ASSEMBLY**

A ▶ **CHECK FOR INTERMITTENT PROBLEMS (SYMPTOM SIMULATION)**

Last Modified: 3-10-2010	6.4 C	**From:** 200901
Model Year: 2010	**Model:** Corolla	**Doc ID:** RM000000XI7043X
Title: BRAKE CONTROL / DYNAMIC CONTROL SYSTEMS: ANTI-LOCK BRAKE SYSTEM: C0278/11,C0279/12: Open in ABS Solenoid Relay Circuit (2010 Corolla)		

DTC	**C0278/11**	**Open in ABS Solenoid Relay Circuit**

DTC	**C0279/12**	**Short to B+ in ABS Solenoid Relay Circuit**

DESCRIPTION

The ABS solenoid relay supplies power to the ABS solenoid.

The solenoid relay is turned on 1.5 seconds after the ignition switch is turned to ON, and is turned off if an open or short in the solenoid is detected by self diagnosis performed when the vehicle starts running.

The ABS solenoid relay is housed in the skid control ECU in the actuator assembly.

DTC CODE	DTC DETECTION CONDITION	TROUBLE AREA
C0278/11	Either of the following is detected: 1. Both of the following conditions continue for 0.2 seconds or more. ○ The IG1 terminal voltage is 9.5 V or more. ○ The solenoid relay contact is open when the relay is ON. 2. Both of the following conditions continue for 0.2 seconds or more. ○ The IG1 terminal voltage becomes lower than 9.5 V when the relay is turned on. ○ The relay contact remains open.	• ABS NO. 3 fuse • ABS solenoid relay circuit • Brake actuator assembly (ABS solenoid relay)
C0279/12	Immediately after the ignition switch is turned to ON, the solenoid relay contact is closed for 4.5 seconds when the relay is turned off.	• ABS solenoid relay circuit • Brake actuator assembly (ABS solenoid relay)

WIRING DIAGRAM

Refer to DTCs C0226/21, C0236/22, C0246/23 and C0256/24 INFO .

INSPECTION PROCEDURE

HINT:

When C1241/41 is output together with C0278/11 and/or C0279/12, inspect and repair the trouble areas indicated by C1241/41 first INFO .

PROCEDURE

1.	**INSPECT ABS NO. 3 FUSE**

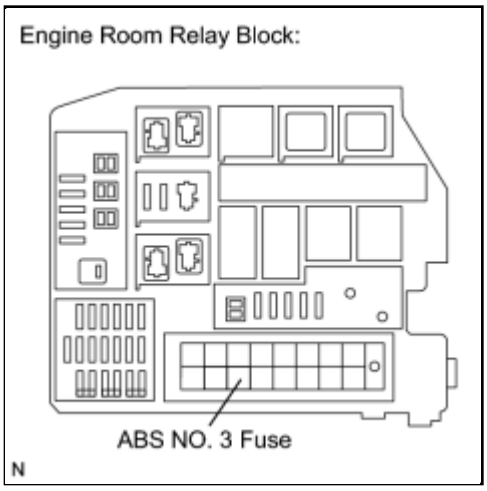

(a) Remove the ABS NO. 3 fuse from the engine room relay block.

(b) Measure the resistance according to the value(s) in the table below.

Standard Resistance:

TESTER CONNECTION	CONDITION	SPECIFIED CONDITION
ABS NO. 3 (30 A) fuse	Always	Below 1 Ω

NG ▶ **REPLACE ABS NO. 3 FUSE**

OK ▼

2.	**INSPECT SKID CONTROL ECU (+BS TERMINAL)**

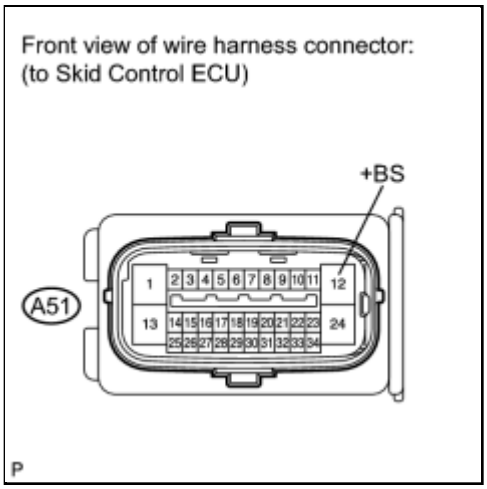

(a) Install the ABS NO. 3 fuse.

(b) Disconnect the skid control ECU connector.

(c) Measure the voltage according to the value(s) in the table below.

Standard Voltage:

TESTER CONNECTION	CONDITION	SPECIFIED CONDITION
A51-12 (+BS) - Body ground	Always	11 to 14 V

NG ▶ **REPAIR OR REPLACE HARNESS OR CONNECTOR (+BS CIRCUIT)**

OK ▼

3.	**INSPECT SKID CONTROL ECU (GND1 TERMINAL)**

(a) Measure the resistance according to the value(s) in the table below.

Standard Resistance:

TESTER CONNECTION	CONDITION	SPECIFIED CONDITION
A51-1 (GND1) - Body ground	Always	Below 1 Ω

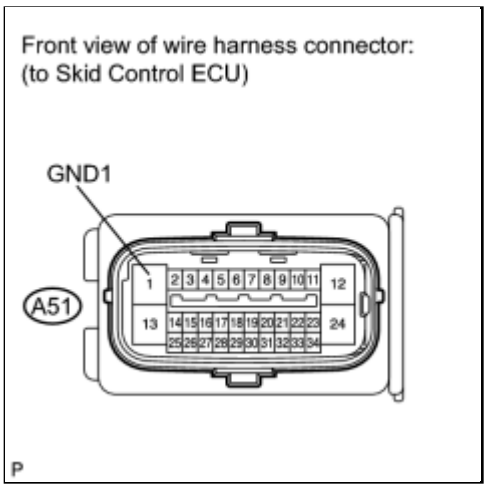

NG ▶ **REPAIR OR REPLACE HARNESS OR CONNECTOR (GND1 CIRCUIT)**

OK ▼

4.	**RECONFIRM DTC**

HINT:

This code is detected when a problem is identified in the brake actuator assembly.

The solenoid circuit is in the brake actuator assembly.

Therefore, solenoid circuit inspection and solenoid unit inspection cannot be performed. Be sure to check if the DTC is output before replacing the brake actuator assembly.

(a) Reconnect the skid control ECU connector.

(b) Clear the DTCs INFO .

(c) Start the engine.

(d) Drive the vehicle at a speed of 20 km/h (12 mph) or more for 30 seconds or more.

(e) Check if the same DTC is recorded INFO .

Result:

RESULT	PROCEED TO
DTCs (C0278/11 and C0279/12) are not output	A
DTCs (C0278/11 and/or C0279/12) are output	B

HINT:

- If a speed signal of 6 km/h (4 mph) or more is input to the skid control ECU, with the ignition switch ON and the stop light switch off, the ECU performs self diagnosis of the motor and solenoid circuits.
- If the normal system code is output (no trouble codes are output), slightly jiggle the connectors, wire harnesses, and fuses of the brake actuator assembly. Make sure that no DTCs are output.
- If any DTCs are output while jiggling a connector or wire harness of the brake actuator assembly (skid control ECU), inspect and repair the connector or wire harness.
- It is suspected that the DTCs were output due to a bad connection of the connector terminal.

B ▶ **REPLACE BRAKE ACTUATOR ASSEMBLY**

A ▶ **CHECK FOR INTERMITTENT PROBLEMS (SYMPTOM SIMULATION)**

Last Modified: 3-10-2010	6.4 C	**From:** 200901
Model Year: 2010	**Model:** Corolla	**Doc ID:** RM000000XW604YX
Title: BRAKE CONTROL / DYNAMIC CONTROL SYSTEMS: ANTI-LOCK BRAKE SYSTEM: C1241/41: Low Battery Positive Voltage or Abnormally High Battery Positive Voltage (2010 Corolla)		

DTC	**C1241/41**	**Low Battery Positive Voltage or Abnormally High Battery Positive Voltage**

DESCRIPTION

If a malfunction is detected in the power supply circuit, the skid control ECU (housed in the actuator assembly) stores this DTC and the fail safe function prohibits ABS operation.

This DTC is stored when the IG1 terminal voltage deviates from the DTC detection condition due to a malfunction in the power supply or charging circuit such as the battery or alternator circuit, etc.

The DTC is cancelled when the IG1 terminal voltage returns to normal.

DTC CODE	DTC DETECTION CONDITION	TROUBLE AREA
C1241/41	Any of the following is detected: 1. At a vehicle speed of 3 km/h (2 mph) or more, the IG1 terminal voltage is less than 9.5 V for 10 seconds or more. 2. When the solenoid relay remains ON and the IG1 terminal voltage is less than 9.5 V, the relay contact is open for 0.2 seconds or more. 3. When the motor relay remains on and the IG1 terminal voltage is less than 9.5 V, the relay contact is open for 0.2 seconds or more. 4. The IG1 terminal voltage is more than 17.4 V for 0.8 seconds or more.	• ECU-IG NO. 1 fuse • Battery • Charging system • Power source circuit • Internal power supply circuit of the skid control ECU

WIRING DIAGRAM

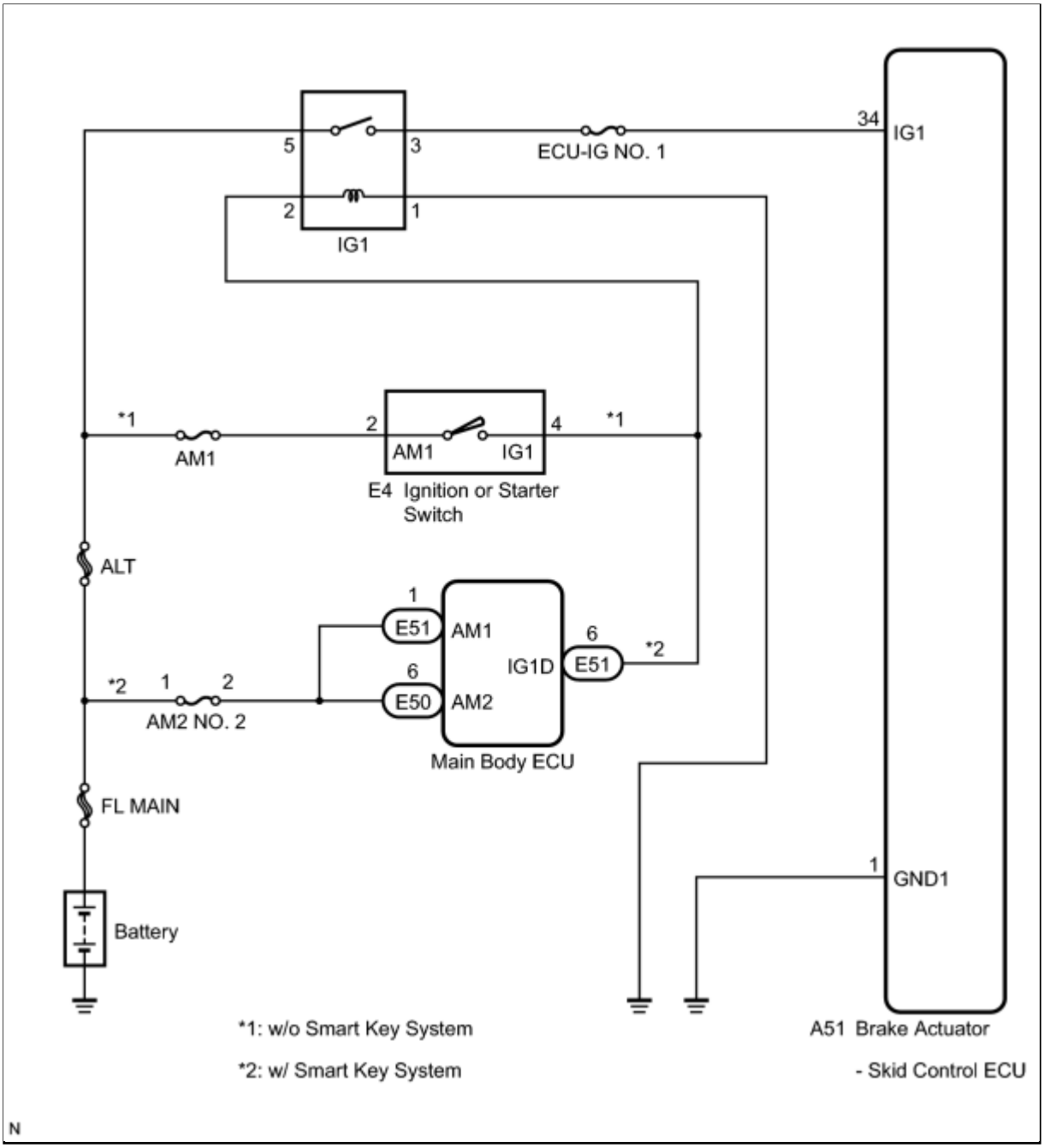

INSPECTION PROCEDURE

PROCEDURE

1.	**INSPECT ECU-IG NO. 1 FUSE**

(a) Remove the ECU-IG NO. 1 fuse from the main body ECU (instrument panel junction block).

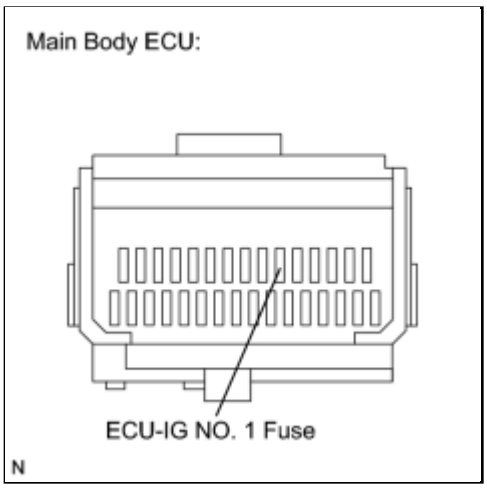

(b) Measure the resistance according to the value(s) in the table below.

Standard Resistance:

TESTER CONNECTION	CONDITION	SPECIFIED CONDITION
ECU-IG NO. 1 (10 A) fuse	Always	Below 1 Ω

NG ▶ **REPLACE ECU-IG NO. 1 FUSE**

OK ▼

2.	**CHECK BATTERY**

(a) Install the ECU-IG NO. 1 fuse.

(b) Check the battery voltage.

Standard Voltage:
11 to 14 V

NG ▶ **CHECK OR REPLACE CHARGING SYSTEM OR BATTERY (for 2ZR-FE)**

OK ▼

3.	INSPECT SKID CONTROL ECU (IG1 TERMINAL)

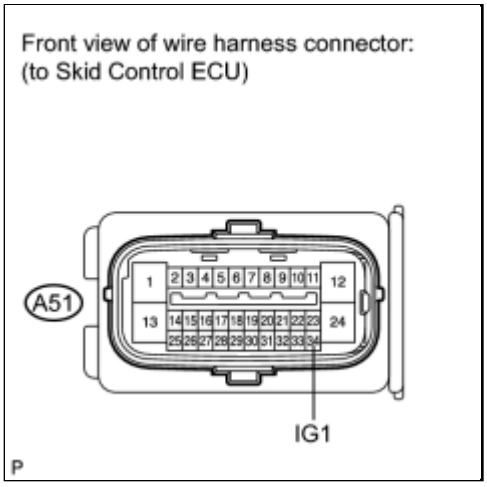

(a) Disconnect the skid control ECU connector.

(b) Turn the ignition switch to ON.

(c) Measure the voltage according to the value(s) in the table below.

Standard Voltage:

TESTER CONNECTION	SWITCH CONDITION	SPECIFIED CONDITION
A51-34 (IG1) - Body ground	Ignition switch ON	11 to 14 V

NG ▶ **REPAIR OR REPLACE HARNESS OR CONNECTOR (IG1 CIRCUIT)**

OK ▼

4.	INSPECT SKID CONTROL ECU (GND1 TERMINAL)

(a) Turn the ignition switch off.

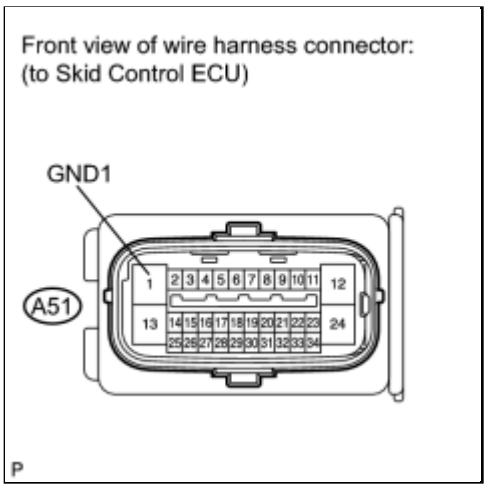

(b) Measure the resistance according to the value(s) in the table below.

Standard Resistance:

TESTER CONNECTION	CONDITION	SPECIFIED CONDITION
A51-1 (GND1) - Body ground	Always	Below 1 Ω

NG ▶ **REPAIR OR REPLACE HARNESS OR CONNECTOR (GND1 CIRCUIT)**

OK ▼

5.	**RECONFIRM DTC**

(a) Reconnect the skid control ECU connector.

(b) Clear the DTCs INFO.

(c) Start the engine.

(d) Drive the vehicle at a speed of 6 km/h (4 mph) or more.

(e) Check if the same DTC is recorded INFO.

Result:

RESULT	PROCEED TO
DTC (C1241/41) is not output	A
DTC (C1241/41) is output	B

HINT:

If troubleshooting has been carried out according to the Problem Symptoms Table, refer back to the table and proceed to the next step INFO **.**

B ▶ **REPLACE BRAKE ACTUATOR ASSEMBLY**

A ▶ **CHECK FOR INTERMITTENT PROBLEMS (SYMPTOM SIMULATION)**

Last Modified: 3-10-2010	6.4 C	**From:** 200901
Model Year: 2010	**Model:** Corolla	**Doc ID:** RM000000XIE05RX
Title: BRAKE CONTROL / DYNAMIC CONTROL SYSTEMS: ANTI-LOCK BRAKE SYSTEM: C1249/49: Open in Stop Light Switch Circuit (2010 Corolla)		

DTC	**C1249/49**	**Open in Stop Light Switch Circuit**

DESCRIPTION

The skid control ECU (housed in the actuator assembly) inputs the stop light switch signal and the condition of brake operation.

The skid control ECU has an open detection circuit, which outputs this DTC when detecting an open in the stop light input line or the ground line of the stop light circuit with the stop light switch off (brake pedal not depressed).

DTC CODE	DTC DETECTION CONDITION	TROUBLE AREA
C1249/49	When IG1 terminal voltage is 9.5 V or more, an open stop light switch circuit continues for 0.3 seconds or more.	• STOP fuse • Stop light switch • Stop light switch circuit • Brake actuator assembly (Skid control ECU)

WIRING DIAGRAM

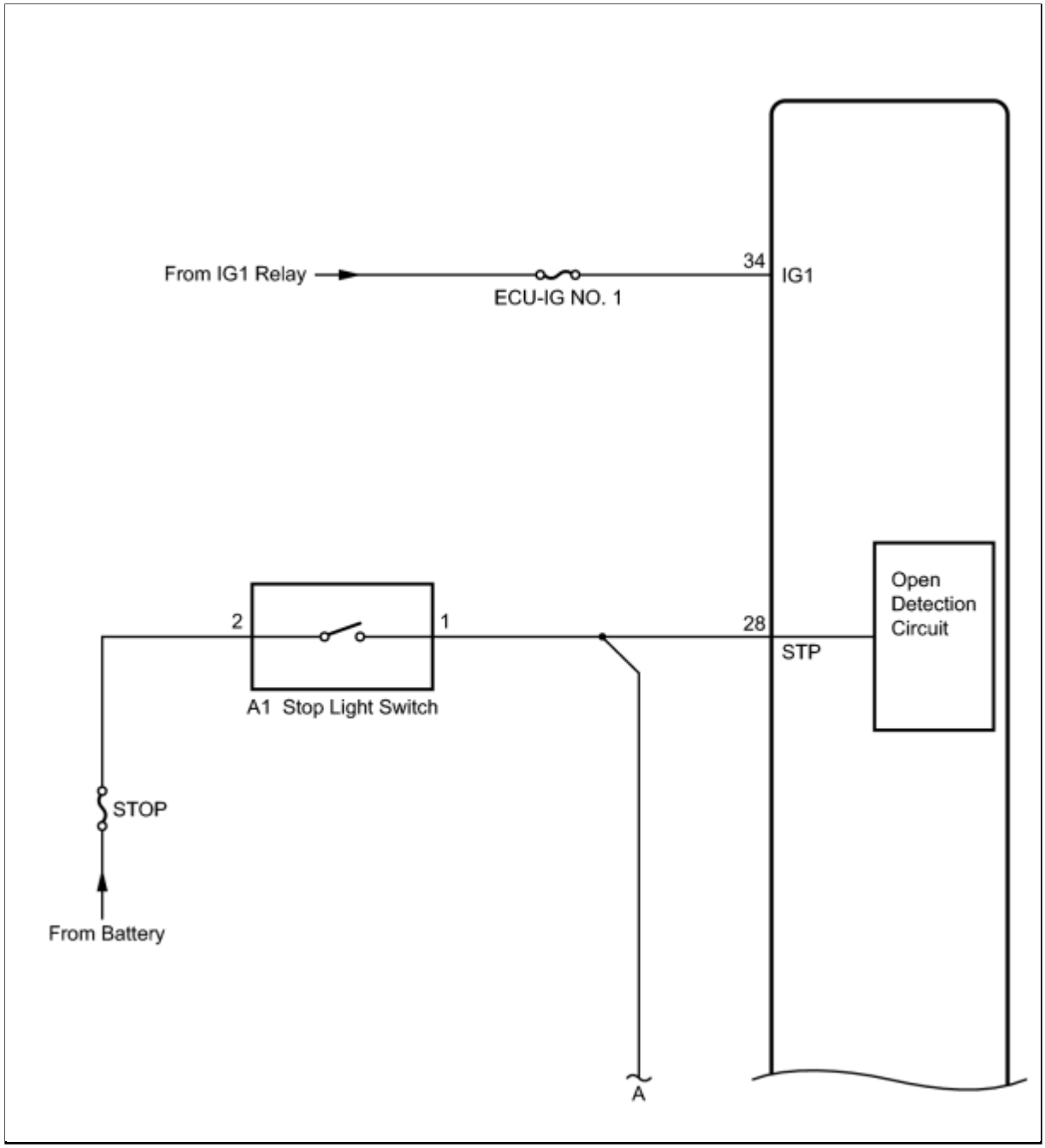
From IG1 Relay
ECU-IG NO. 1
34
IG1
Open
Detection
Circuit
2
1
28
STP
A1 Stop Light Switch
STOP
From Battery
A

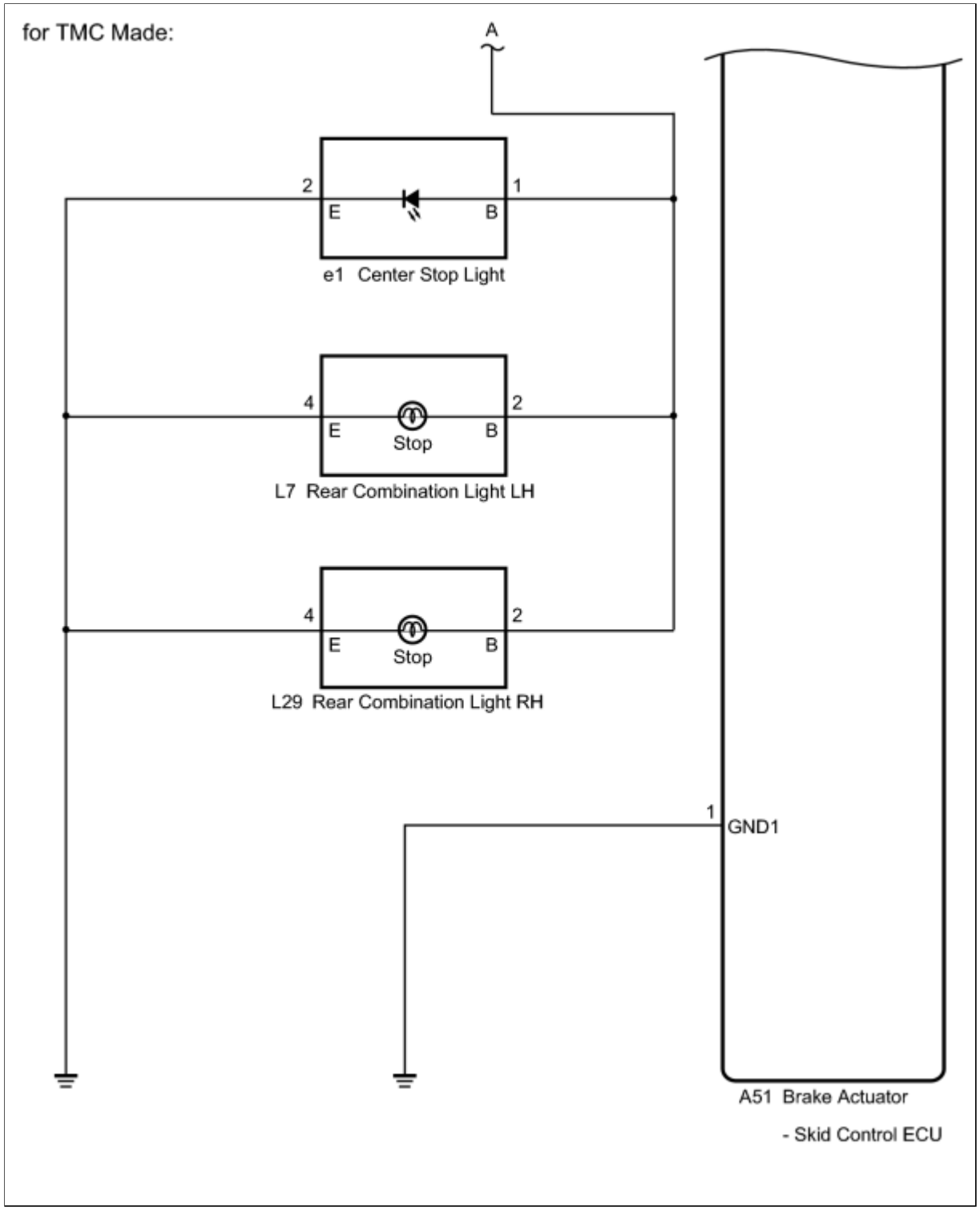
for TMC Made:
A
2
1
E
B
e1 Center Stop Light
4
2
E
Stop
B
L7 Rear Combination Light LH
4
2
E
Stop
B
L29 Rear Combination Light RH
1
GND1
A51 Brake Actuator
- Skid Control ECU

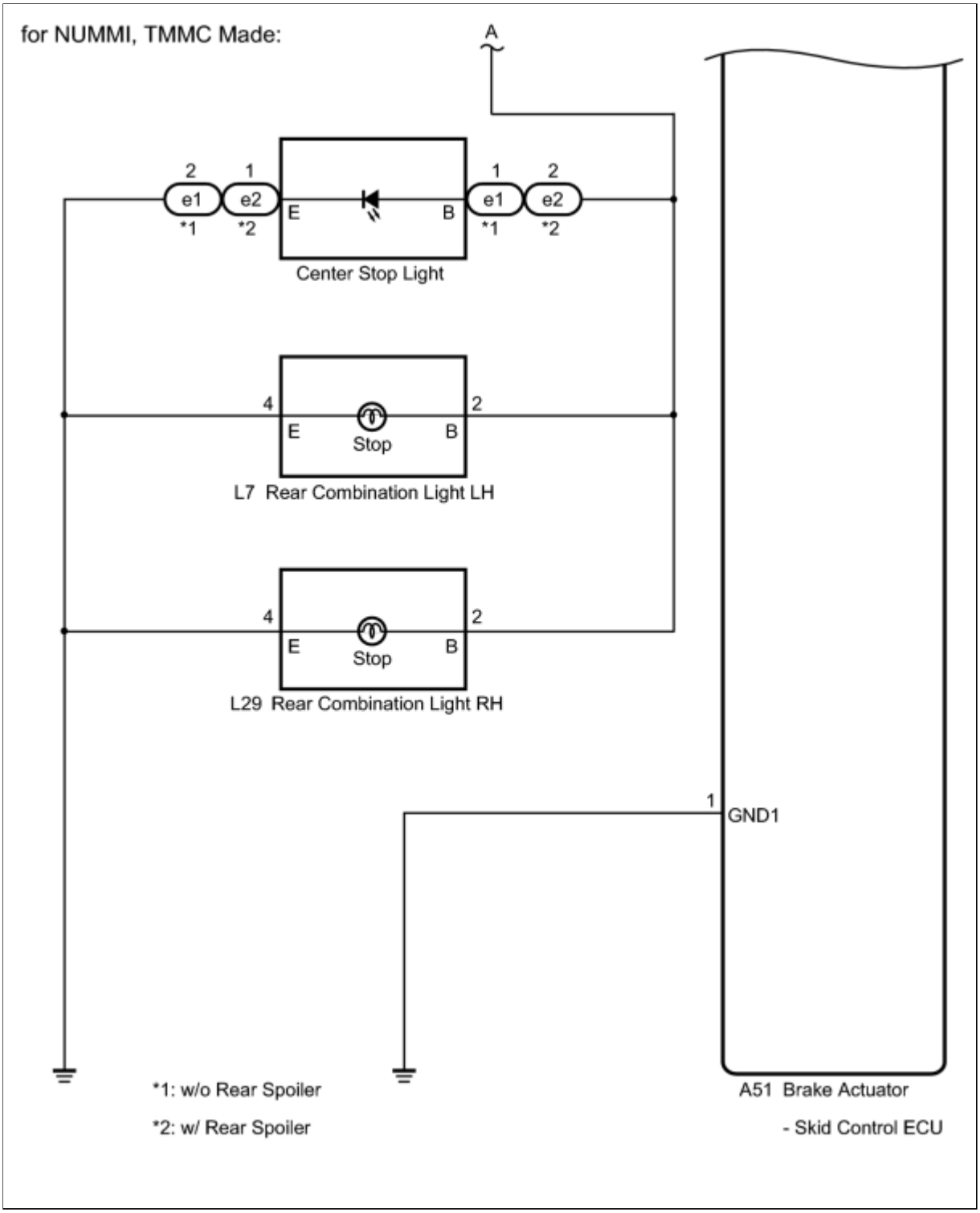

INSPECTION PROCEDURE

PROCEDURE

1.	**INSPECT STOP FUSE**

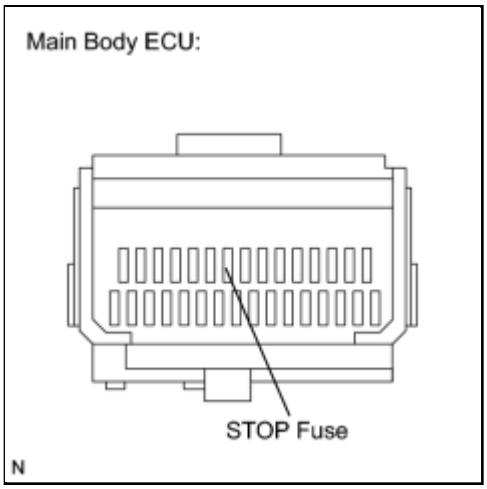

(a) Remove the STOP fuse from the main body ECU (instrument panel junction block).

(b) Measure the resistance according to the value(s) in the table below.

Standard Resistance:

TESTER CONNECTION	CONDITION	SPECIFIED CONDITION
STOP (10 A) fuse	Always	Below 1 Ω

NG ▶ **REPLACE STOP FUSE**

OK ▼

2.	**CHECK STOP LIGHT OPERATION**

(a) Install the STOP fuse.

(b) Check that the stop lights come on when the brake pedal is depressed, and go off when the brake pedal is released.

OK:

CONDITION	ILLUMINATION CONDITION
Brake pedal depressed	ON
Brake pedal released	OFF

NG ▶ **INSPECT STOP LIGHT SWITCH (POWER SOURCE TERMINAL)**

OK

3.	**INSPECT SKID CONTROL ECU (STP TERMINAL)**

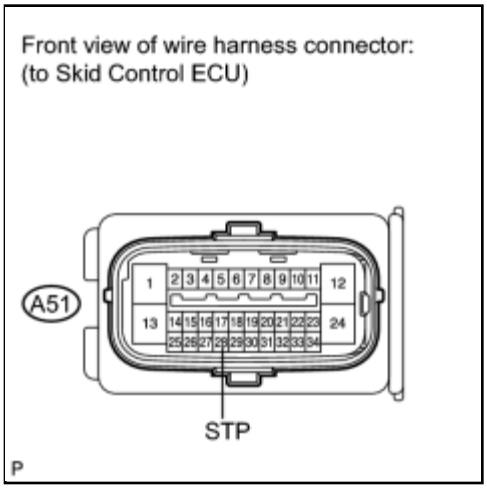

(a) Disconnect the skid control ECU connector.

(b) Measure the voltage according to the value(s) in the table below.

Standard Voltage:

TESTER CONNECTION	SWITCH CONDITION	SPECIFIED CONDITION
A51-28 (STP) - Body ground	Stop light switch ON (Brake pedal depressed)	8 to 14 V
A51-28 (STP) - Body ground	Stop light switch OFF (Brake pedal released)	Below 1.5 V

NG ▶ **REPAIR OR REPLACE HARNESS OR CONNECTOR (STP CIRCUIT)**

OK

4.	**INSPECT SKID CONTROL ECU (IG1 TERMINAL)**

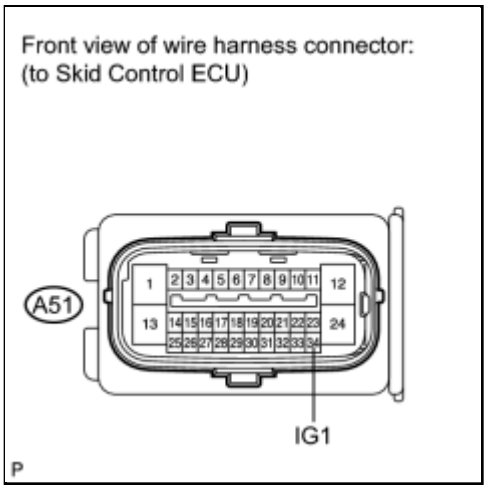

(a) Turn the ignition switch to ON.

(b) Measure the voltage according to the value(s) in the table below.

Standard Voltage:

TESTER CONNECTION	SWITCH CONDITION	SPECIFIED CONDITION
A51-34 (IG1) - Body ground	Ignition switch ON	11 to 14 V

NG ▶ **REPAIR OR REPLACE HARNESS OR CONNECTOR (IG1 CIRCUIT)**

OK ▼

5.	**INSPECT SKID CONTROL ECU (GND1 TERMINAL)**

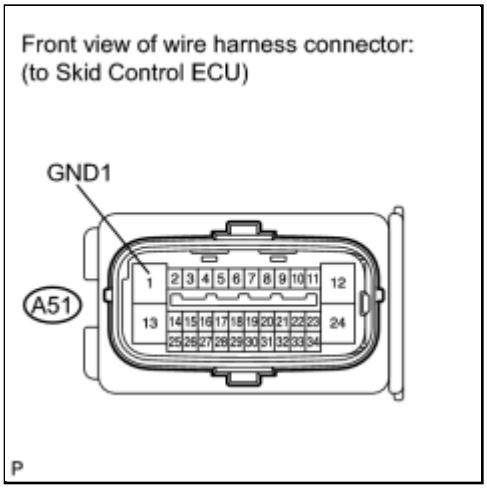

(a) Turn the ignition switch off.

(b) Measure the resistance according to the value(s) in the table below.

Standard Resistance:

TESTER CONNECTION	CONDITION	SPECIFIED CONDITION
A51-1 (GND1) - Body ground	Always	Below 1 Ω

NG ▶ **REPAIR OR REPLACE HARNESS OR CONNECTOR (GND1 CIRCUIT)**

OK ▼

6.	RECONFIRM DTC

(a) Reconnect the skid control ECU connector.

(b) Clear the DTCs INFO.

(c) Start the engine.

(d) Depress the brake pedal several times to test the stop light circuit.

(e) Check if the same DTC is recorded INFO.

Result:

RESULT	PROCEED TO
DTC (C1249/49) is not output	A
DTC (C1249/49) is output	B

HINT:

If troubleshooting has been carried out according to the Problem Symptoms Table, refer back to the table and proceed to the next step INFO.

B ▶ **REPLACE BRAKE ACTUATOR ASSEMBLY**

A ▶ **CHECK FOR INTERMITTENT PROBLEMS (SYMPTOM SIMULATION)**

7.	INSPECT STOP LIGHT SWITCH (POWER SOURCE TERMINAL)

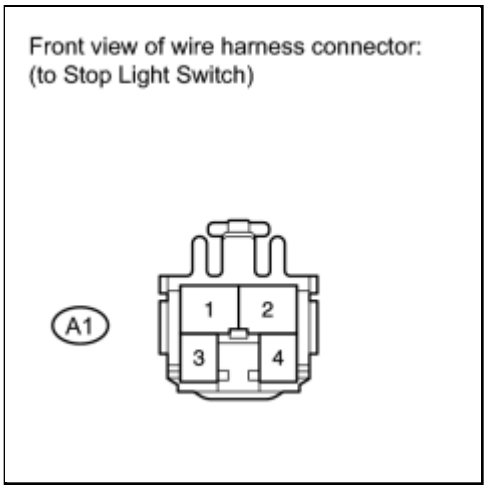

(a) Disconnect the stop light switch connector.

(b) Measure the voltage according to the value(s) in the table below.

Standard Voltage:

TESTER CONNECTION	CONDITION	SPECIFIED CONDITION
A1-2 - Body ground	Always	11 to 14 V

NG ▶ **REPAIR OR REPLACE HARNESS OR CONNECTOR (POWER SOURCE CIRCUIT)**

OK ▼

8.	**INSPECT STOP LIGHT SWITCH**

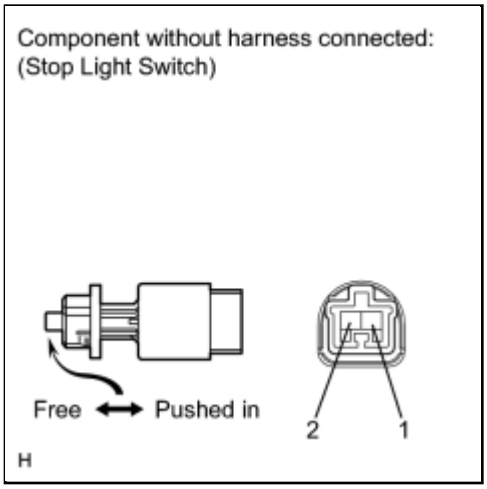

(a) Measure the resistance according to the value(s) in the table below.

Standard Resistance:

TESTER CONNECTION	SWITCH CONDITION	SPECIFIED CONDITION
1 - 2	Switch pin free	Below 1 Ω
1 - 2	Switch pin pushed in	10 kΩ or higher

NG ▶ REPLACE STOP LIGHT SWITCH

OK ▼

9.	CHECK HARNESS AND CONNECTOR (SKID CONTROL ECU - STOP LIGHT SWITCH)

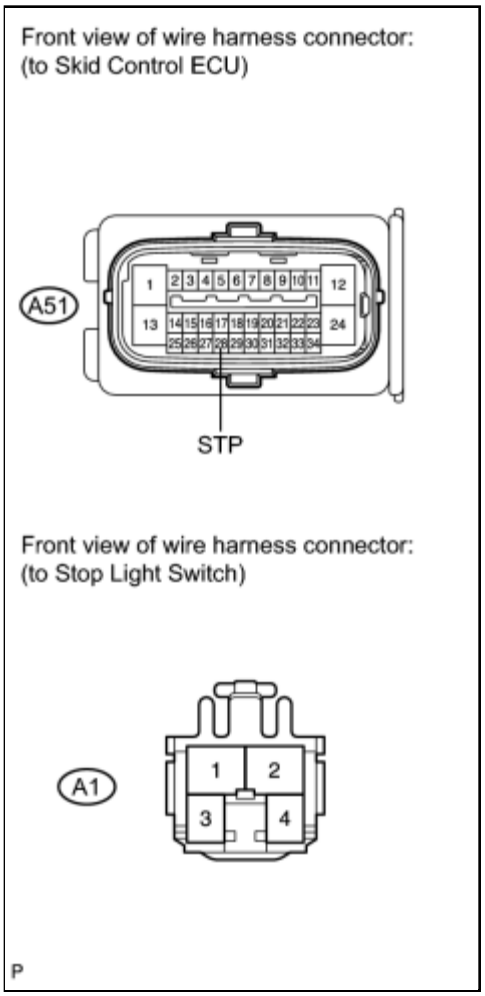

(a) Disconnect the skid control ECU connector.

(b) Measure the resistance according to the value(s) in the table below.

Standard Resistance:

TESTER CONNECTION	CONDITION	SPECIFIED CONDITION
A51-28 (STP) - A1-1	Always	Below 1 Ω

NG ▶ REPAIR OR REPLACE HARNESS OR CONNECTOR

OK

10.	RECONFIRM DTC

(a) Reconnect the skid control ECU connector and the stop light switch connector.

(b) Clear the DTCs INFO .

(c) Start the engine.

(d) Depress the brake pedal several times to test the stop light circuit.

(e) Check if the same DTC is recorded INFO .

Result:

RESULT	PROCEED TO
DTC (C1249/49) is not output	A
DTC (C1249/49) is output	B

HINT:

If troubleshooting has been carried out according to the Problem Symptoms Table, refer back to the table and proceed to the next step INFO .

B ▶ REPLACE BRAKE ACTUATOR ASSEMBLY

A ▶ INSPECT LIGHTING SYSTEM (STOP LIGHT CIRCUIT)

Last Modified: 3-10-2010	6.4 C	**From:** 200901
Model Year: 2010	**Model:** Corolla	**Doc ID:** RM000000XIF04AX
Title: BRAKE CONTROL / DYNAMIC CONTROL SYSTEMS: ANTI-LOCK BRAKE SYSTEM: C1251/51: Open in Pump Motor Circuit (2010 Corolla)		

DTC	**C1251/51**	**Open in Pump Motor Circuit**

DESCRIPTION

DTC CODE	DTC DETECTION CONDITION	TROUBLE AREA
C1251/51	Either of the following is detected: 1. Actuator pump motor does not operate properly. 2. Open in actuator pump motor circuit continues for at least 2 seconds.	• Brake actuator assembly (Ground circuit) • Brake actuator assembly (Motor circuit)

WIRING DIAGRAM

Refer to DTCs C0273/13 and C0274/14 INFO .

INSPECTION PROCEDURE

PROCEDURE

1.	**PERFORM ACTIVE TEST USING TECHSTREAM (ABS MOTOR RELAY)**

(a) Connect the Techstream to the DLC3.

(b) Start the engine.

(c) Select Active Test mode on the Techstream INFO .

ABS/VSC/TRAC

TESTER DISPLAY	TEST PART	CONTROL RANGE	DIAGNOSTIC NOTE
Motor Relay	ABS motor relay	Relay ON/OFF	Operating sound of motor can be heard

(d) Check the operating sound of the ABS motor relay when operating it with the Techstream.

Result:

RESULT	PROCEED TO
The operating sound is not heard	A
The operating sound is heard	B

B ▶ **RECONFIRM DTC**

A ▼

2.	**INSPECT SKID CONTROL ECU (GND2 TERMINAL)**

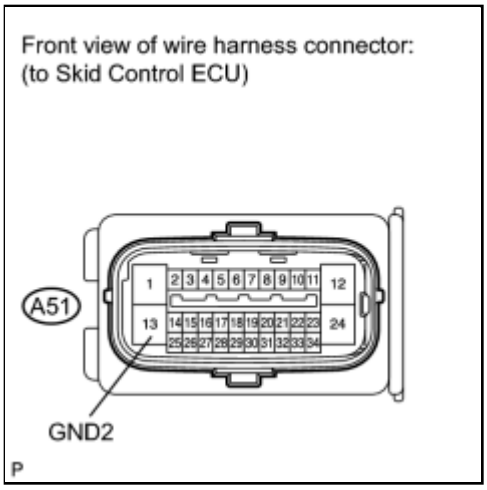

(a) Turn the ignition switch off.

(b) Disconnect the skid control ECU connector.

(c) Measure the resistance according to the value(s) in the table below.

Standard Resistance:

TESTER CONNECTION	CONDITION	SPECIFIED CONDITION
A51-13 (GND2) - Body ground	Always	Below 1 Ω

NG ▶ **REPAIR OR REPLACE HARNESS OR CONNECTOR (GND2 CIRCUIT)**

OK ▼

3.	RECONFIRM DTC

HINT:

This code is detected when a problem is identified in the brake actuator assembly.

The ABS motor relay is in the brake actuator assembly.

Therefore, ABS motor relay inspection and motor relay unit inspection cannot be performed. Be sure to check if the DTC is output before replacing the brake actuator assembly.

(a) Turn the ignition switch off.

(b) Reconnect the skid control ECU connector.

(c) Clear the DTCs INFO .

(d) Start the engine.

(e) Drive the vehicle at a speed of 20 km/h (12 mph) or more for 30 seconds or more.

(f) Check if the same DTC is recorded INFO .

Result:

RESULT	PROCEED TO
DTC (C1251/51) is not output	A
DTC (C1251/51) is output	B

HINT:

- If a speed signal of 6 km/h (4 mph) or more is input to the skid control ECU, with the ignition switch ON and the stop light switch off, the ECU performs self diagnosis of the motor and solenoid circuits.
- If the normal system code is output (no trouble codes are output), slightly jiggle the connectors, wire harness, and fuses of the brake actuator assembly. Make sure that no DTCs are output.
- If any DTCs are output while jiggling a connector or wire harness of the brake actuator assembly (skid control ECU), inspect and repair the connector or wire harness.
- It is suspected that the DTCs were output due to a bad connection of the connector terminal.

B ▶ **REPLACE BRAKE ACTUATOR ASSEMBLY**

A ▶ **CHECK FOR INTERMITTENT PROBLEMS (SYMPTOM SIMULATION)**

Last Modified: 3-10-2010	6.4 J	**From:** 200901
Model Year: 2010	**Model:** Corolla	**Doc ID:** RM000000XIH054X
Title: BRAKE CONTROL / DYNAMIC CONTROL SYSTEMS: ANTI-LOCK BRAKE SYSTEM: ABS Warning Light Remains ON (2010 Corolla)		

ABS Warning Light Remains ON

DESCRIPTION

The skid control ECU is connected to the combination meter via CAN communication.

If any of the following is detected, the ABS warning light remains on:

- The skid control ECU connectors are disconnected from the skid control ECU.
- There is a malfunction in the skid control ECU internal circuit.
- There is an open in the harness between the combination meter and the skid control ECU.
- The ABS control system is defective.

HINT:

In some cases, the Techstream cannot be used when the skid control ECU is abnormal.

WIRING DIAGRAM

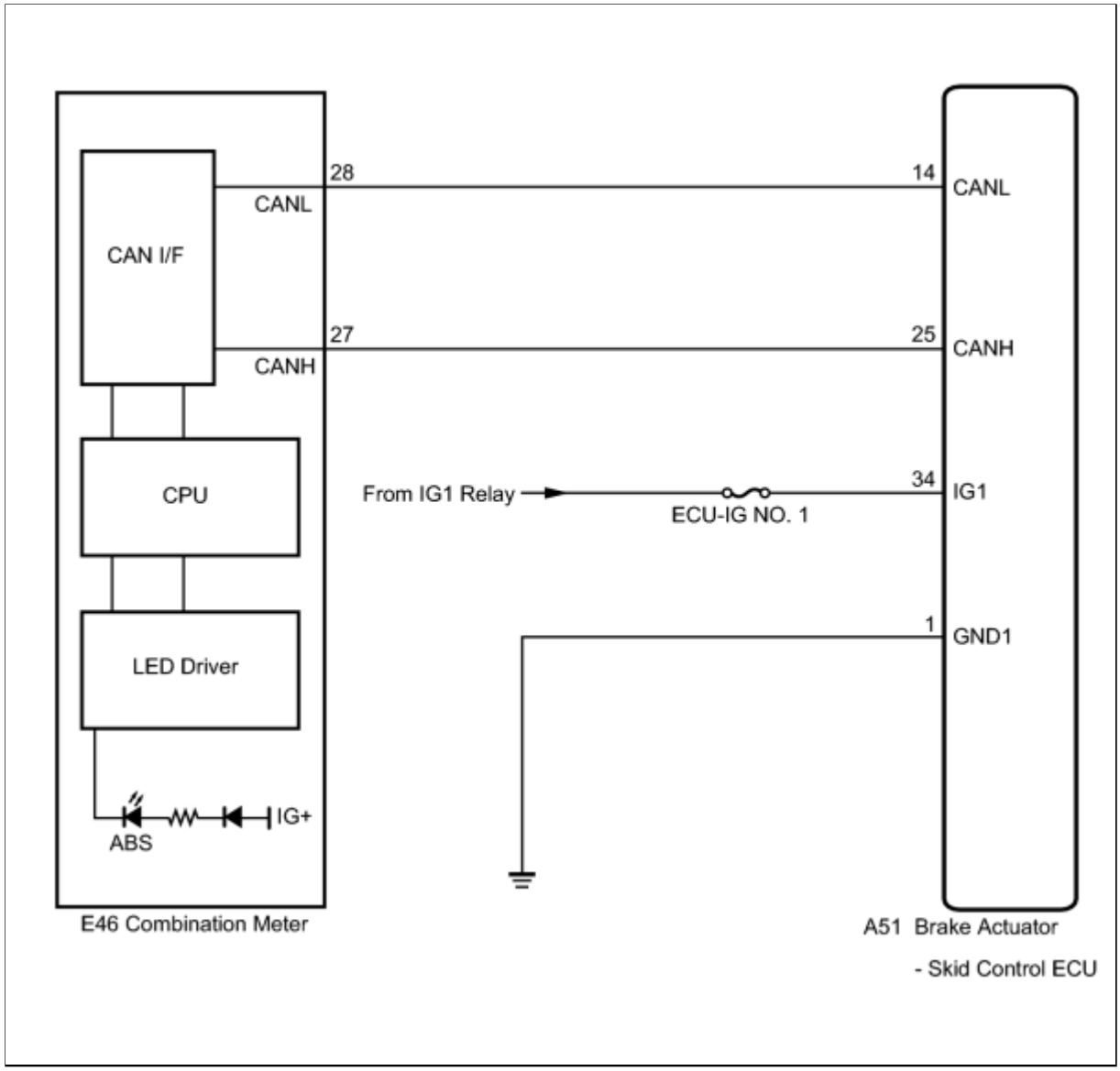

INSPECTION PROCEDURE

PROCEDURE

1.	**CHECK CAN COMMUNICATION SYSTEM**

(a) Check if a CAN communication system DTC is output INFO.

Result:

RESULT	PROCEED TO
DTC is not output	A
DTC is output	B

B ▶ INSPECT CAN COMMUNICATION SYSTEM

A ▼

2.	CHECK IF SKID CONTROL ECU CONNECTOR IS SECURELY CONNECTED

(a) Check if the skid control ECU connector is securely connected.

OK:
The connector is securely connected.

NG ▶ CONNECT CONNECTOR TO ECU CORRECTLY

OK ▼

3.	CHECK BATTERY

(a) Check the battery voltage.

Standard Voltage:
11 to 14 V

NG ▶ CHECK OR REPLACE CHARGING SYSTEM OR BATTERY (for 2ZR-FE)

OK ▼

4.	INSPECT SKID CONTROL ECU (IG1 TERMINAL)

(a) Disconnect the skid control ECU connector.

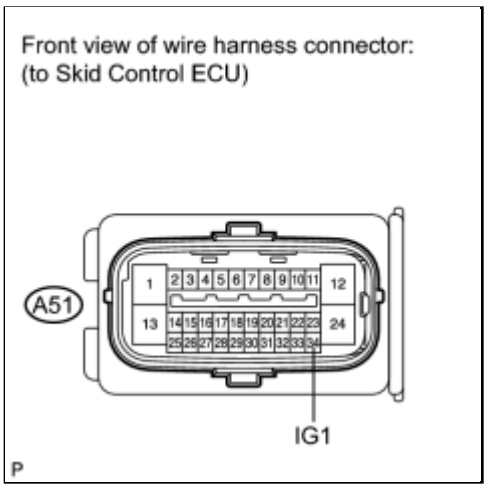

(b) Turn the ignition switch to ON.

(c) Measure the voltage according to the value(s) in the table below.

Standard Voltage:

TESTER CONNECTION	SWITCH CONDITION	SPECIFIED CONDITION
A51-34 (IG1) - Body ground	Ignition switch ON	11 to 14 V

NG ▶ **REPAIR OR REPLACE HARNESS OR CONNECTOR (IG1 CIRCUIT)**

OK ▼

5.	**INSPECT SKID CONTROL ECU (GND1 TERMINAL)**

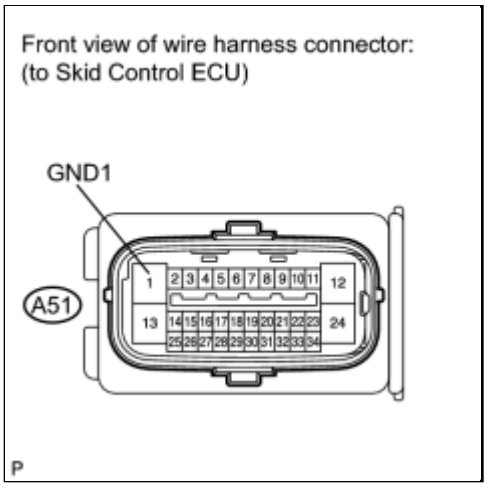

(a) Turn the ignition switch off.

(b) Measure the resistance according to the value(s) in the table below.

Standard Resistance:

TESTER CONNECTION	CONDITION	SPECIFIED CONDITION
A51-1 (GND1) - Body ground	Always	Below 1 Ω

NG ▶ **REPAIR OR REPLACE HARNESS OR CONNECTOR (GND1 CIRCUIT)**

OK ▼

6.	INSPECT COMBINATION METER ASSEMBLY

(a) Reconnect the skid control ECU connector.

(b) Perform the Active Test of the combination meter (meter CPU) using the Techstream INFO .

(c) Check the combination meter.

OK:

The ABS warning light turns on or off in accordance with the Techstream.

HINT:

If troubleshooting has been carried out according to the Problem Symptoms Table, refer back to the table and proceed to the next step before replacing the part INFO .

NG ▶ **REPLACE COMBINATION METER ASSEMBLY**

OK ▶ **REPLACE BRAKE ACTUATOR ASSEMBLY**

Last Modified: 3-10-2010	6.4 J	**From:** 200901
Model Year: 2010	**Model:** Corolla	**Doc ID:** RM000000YHG052X
Title: BRAKE CONTROL / DYNAMIC CONTROL SYSTEMS: ANTI-LOCK BRAKE SYSTEM: Brake Warning Light Remains ON (2010 Corolla)		

Brake Warning Light Remains ON

DESCRIPTION

The skid control ECU is connected to the combination meter via CAN communication.

If any of the following is detected, the brake warning light remains on:

- The skid control ECU connector is disconnected from the skid control ECU.
- The brake fluid level is insufficient.
- The parking brake is applied.
- EBD operation has been disabled.

WIRING DIAGRAM

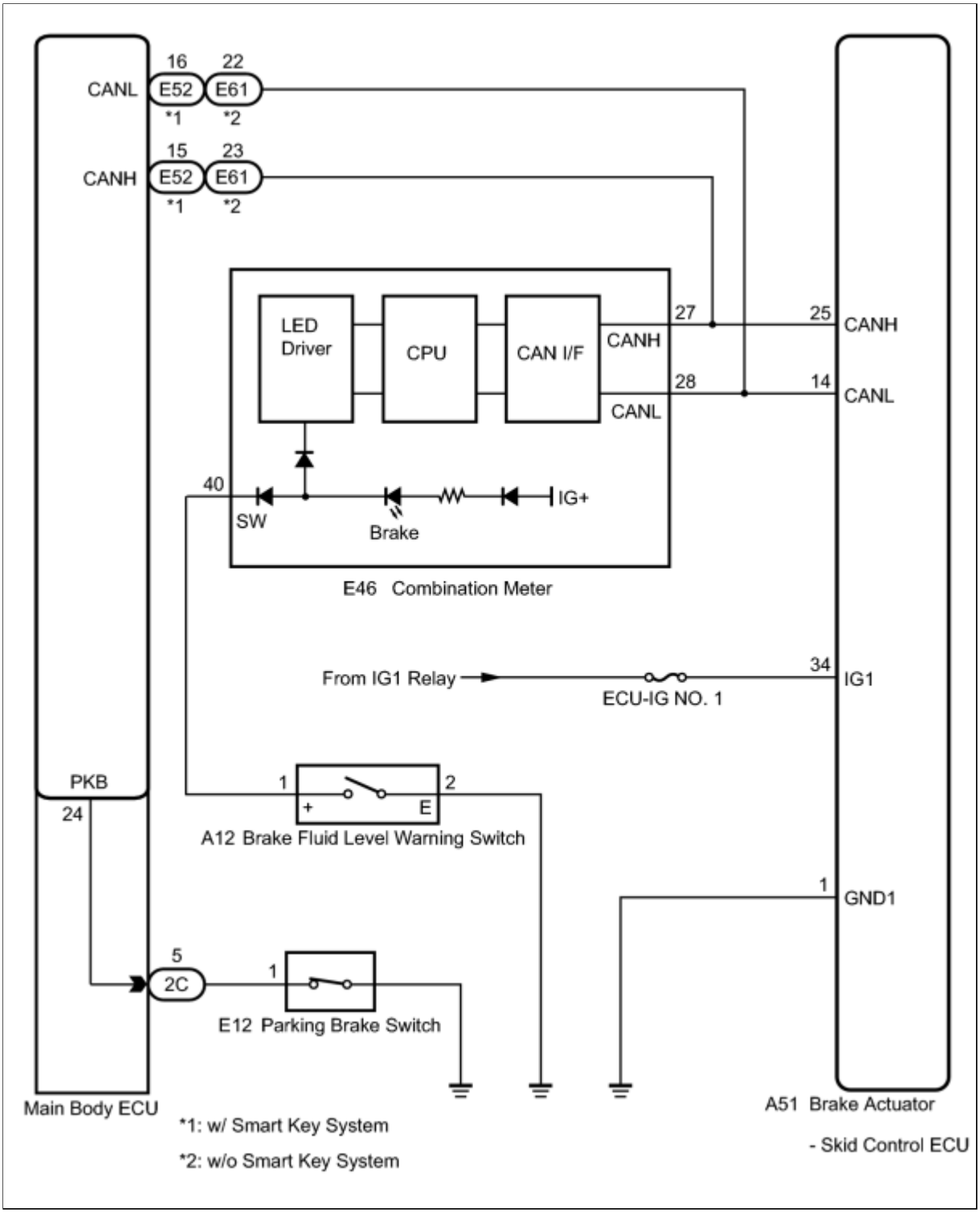

INSPECTION PROCEDURE

PROCEDURE

1.	**CHECK CAN COMMUNICATION SYSTEM**

(a) Check if a CAN communication system DTC is output INFO.

Result:

RESULT	PROCEED TO
DTC is not output	A
DTC is output	B

B ▶ **INSPECT CAN COMMUNICATION SYSTEM**

A ▼

2.	CHECK IF SKID CONTROL ECU CONNECTOR IS SECURELY CONNECTED

(a) Check if the skid control ECU connector is securely connected.

OK:

The connector is securely connected.

NG ▶ **CONNECT CONNECTOR TO ECU CORRECTLY**

OK ▼

3.	CHECK BATTERY

(a) Check the battery voltage.

Standard Voltage:

11 to 14 V

NG ▶ **CHECK OR REPLACE CHARGING SYSTEM OR BATTERY (for 2ZR-FE)**

OK ▼

4.	INSPECT SKID CONTROL ECU (IG1 TERMINAL)

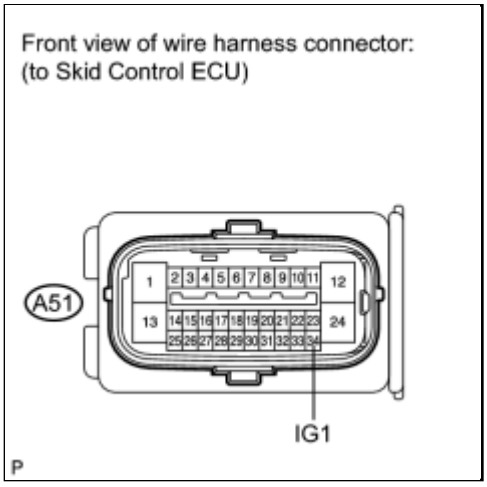

(a) Disconnect the skid control ECU connector.

(b) Turn the ignition switch to ON.

(c) Measure the voltage according to the value(s) in the table below.

Standard Voltage:

TESTER CONNECTION	SWITCH CONDITION	SPECIFIED CONDITION
A51-34 (IG1) - Body ground	Ignition switch ON	11 to 14 V

NG ▶ **REPAIR OR REPLACE HARNESS OR CONNECTOR (IG1 CIRCUIT)**

OK ▼

5.	INSPECT SKID CONTROL ECU (GND1 TERMINAL)

(a) Turn the ignition switch off.

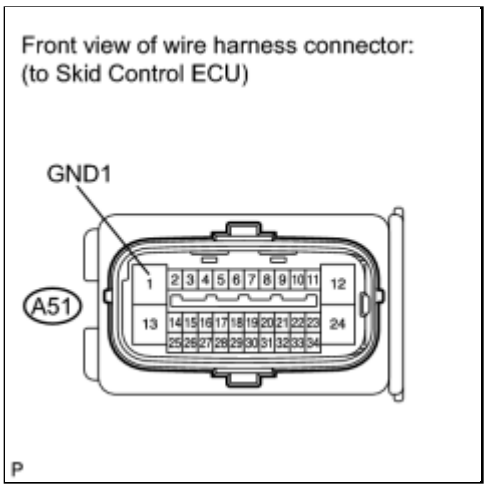

(b) Measure the resistance according to the value(s) in the table below.

Standard Resistance:

TESTER CONNECTION	CONDITION	SPECIFIED CONDITION
A51-1 (GND1) - Body ground	Always	Below 1 Ω

NG ▶ **REPAIR OR REPLACE HARNESS OR CONNECTOR (GND1 CIRCUIT)**

OK ▼

6.	READ VALUE USING TECHSTREAM (PARKING BRAKE SWITCH)

(a) Reconnect the skid control ECU connector.

(b) Connect the Techstream to the DLC3.

(c) Turn the ignition switch to ON.

(d) Select Data List mode on the Techstream INFO.

ABS/VSC/TRAC

TESTER DISPLAY	MEASUREMENT ITEM / RANGE	NORMAL CONDITION	DIAGNOSTIC NOTE
Parking Brake SW	Parking brake switch / ON or OFF	ON: Parking brake applied OFF: Parking brake released	-

(e) Using the Techstream, check the switch operation when the parking brake is operated.

OK:

When the parking brake is operated, the display changes as shown above.

NG ▶ **INSPECT PARKING BRAKE SWITCH**

OK ▼

7.	INSPECT BRAKE FLUID LEVEL WARNING SWITCH

(a) Turn the ignition switch off.

(b) Remove the reservoir filler cap and strainer.

(c) Disconnect the brake fluid level warning switch connector.

(d) Measure the resistance according to the value(s) in the table below.

HINT:

A float is located inside the reservoir. Its position can be changed by increasing or decreasing the level of brake fluid.

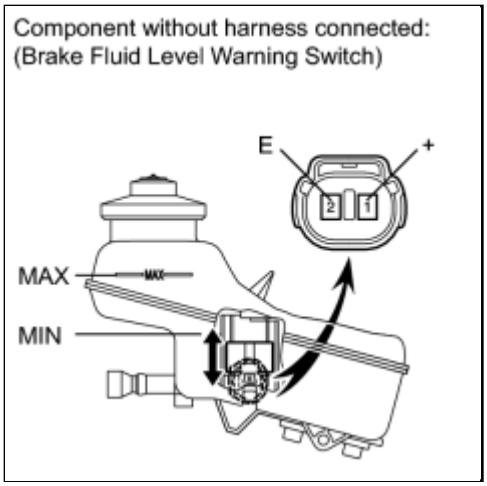

Standard Resistance:

TESTER CONNECTION	SWITCH CONDITION	SPECIFIED CONDITION
1 (+) - 2 (E)	Switch OFF (Float up)	1.9 to 2.1 kΩ
1 (+) - 2 (E)	Switch ON (Float down)	Below 1 Ω

HINT:

If there is no problem after finishing the above check, adjust the brake fluid level to the MAX level.

NG ▶ **REPLACE BRAKE MASTER CYLINDER**

RESERVOIR ASSEMBLY (BRAKE FLUID LEVEL WARNING SWITCH)

OK

8.	**CHECK HARNESS AND CONNECTOR (COMBINATION METER - BRAKE FLUID LEVEL WARNING SWITCH)**

Front view of wire harness connector:
(to Combination Meter)

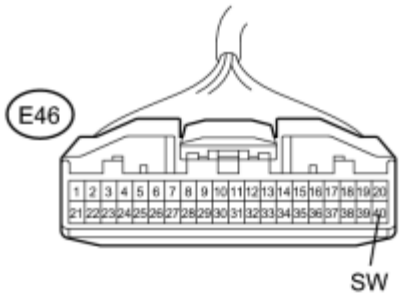

Front view of wire harness connector:
(to Brake Fluid Level Warning Switch)

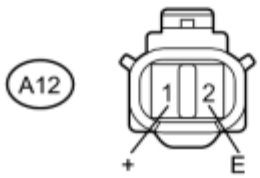

(a) Disconnect the combination meter connector.

(b) Measure the resistance according to the value(s) in the table below.

Standard Resistance:

TESTER CONNECTION	CONDITION	SPECIFIED CONDITION
E46-40 (SW) - A12-1 (+)	Always	Below 1 Ω
E46-40 (SW) - Body ground	Always	10 kΩ or higher
A12-2 (E) - Body ground	Always	Below 1 Ω

NG ▶ **REPAIR OR REPLACE HARNESS OR CONNECTOR**

OK ▼

9.	INSPECT COMBINATION METER ASSEMBLY

(a) Perform the Active Test of the combination meter (meter CPU) using the Techstream INFO .

(b) Check the combination meter.

HINT:

Reinstall the connectors and restore the vehicle to its prior condition before checking the combination meter.

OK:
The brake warning light turns on or off in accordance with the Techstream.

HINT:

If troubleshooting has been carried out according to the Problem Symptoms Table, refer back to the table and proceed to the next step before replacing the part INFO **.**

NG ▶ **REPLACE COMBINATION METER ASSEMBLY**

OK ▶ **REPLACE BRAKE ACTUATOR ASSEMBLY**

10.	INSPECT PARKING BRAKE SWITCH

(a) Turn the ignition switch off.

(b) Disconnect the parking brake switch connector.

(c) Measure the resistance according to the value(s) in

the table below.

Standard Resistance:

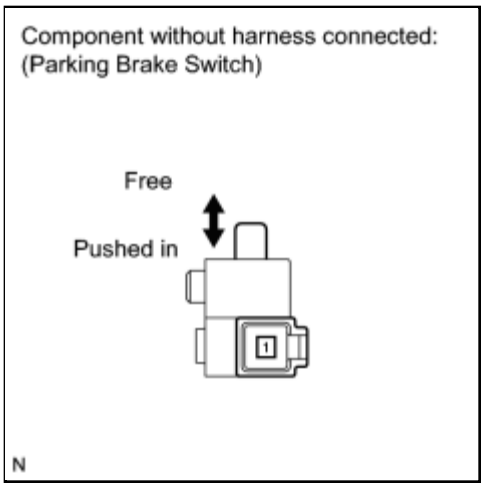

TESTER CONNECTION	SWITCH CONDITION	SPECIFIED CONDITION
1 - Body ground	Parking brake switch ON (Switch pin free)	Below 1 Ω
1 - Body ground	Parking brake switch OFF (Switch pin pushed in)	10 kΩ or higher

NG ▶ **REPLACE PARKING BRAKE SWITCH**

OK ▼

11.	**CHECK HARNESS AND CONNECTOR (MAIN BODY ECU - PARKING BRAKE SWITCH)**

(a) Disconnect the main body ECU connector.

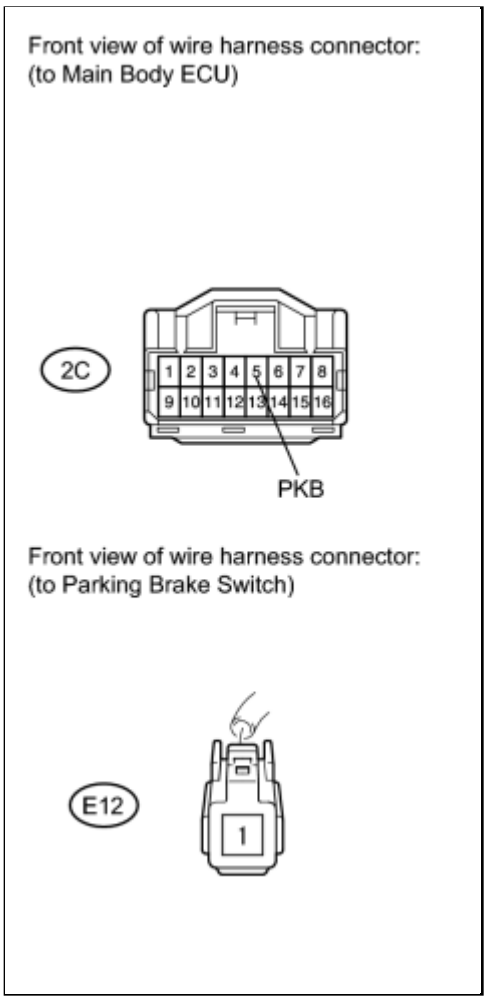

(b) Measure the resistance according to the value(s) in the table below.

Standard Resistance:

TESTER CONNECTION	CONDITION	SPECIFIED CONDITION
2C-5 (PKB) - E12-1	Always	Below 1 Ω
2C-5 (PKB) - Body ground	Always	10 kΩ or higher

HINT:

If troubleshooting has been carried out according to the Problem Symptoms Table, refer back to the table and proceed to the next step before replacing the part INFO **.**

NG ▶ **REPAIR OR REPLACE HARNESS OR CONNECTOR**

OK ▶ **REPLACE MAIN BODY ECU (INSTRUMENT PANEL JUNCTION BLOCK)**

Last Modified: 3-10-2010	6.4 C	**From:** 200901
Model Year: 2010	**Model:** Corolla	**Doc ID:** RM0000024PB01NX
Title: BRAKE CONTROL / DYNAMIC CONTROL SYSTEMS: ANTI-LOCK BRAKE SYSTEM: U0073/94: Control Module Communication Bus OFF (2010 Corolla)		

DTC	**U0073/94**	**Control Module Communication Bus OFF**

DESCRIPTION

The skid control ECU receives signals sent from the ECM via the CAN communication system.

When DTCs indicating a CAN communication system malfunction are output, repair the CAN communication system before repairing each corresponding sensor.

DTC CODE	DTC DETECTION CONDITION	TROUBLE AREA
U0073/94	Either of the following is detected: 1. When the IG1 terminal voltage is between 10 and 17.4 V, after the output of data from the skid control ECU is completed, the sending continues for 5 seconds or more. 2. When the IG1 terminal voltage is between 10 and 17.4 V, the condition that bus OFF state occurs once or more within 0.1 seconds occurs 10 times in succession. (Sent signals cannot be received.)	CAN communication system

INSPECTION PROCEDURE

Proceed to CAN communication system INFO .

HINT:

When DTCs indicating a CAN communication system malfunction are output, repair the CAN communication system before performing troubleshooting for each corresponding sensor.

Last Modified: 3-10-2010	6.4 J	**From:** 200901
Model Year: 2010	**Model:** Corolla	**Doc ID:** RM000000XIQ053X
Title: BRAKE CONTROL / DYNAMIC CONTROL SYSTEMS: ANTI-LOCK BRAKE SYSTEM: ABS Warning Light does not Come ON (2010 Corolla)		

ABS Warning Light does not Come ON

DESCRIPTION

The skid control ECU is connected to the combination meter via CAN communication.

WIRING DIAGRAM

Refer to ABS Warning Light Remains ON INFO .

INSPECTION PROCEDURE

PROCEDURE

1.	**CHECK CAN COMMUNICATION SYSTEM**

(a) Check if a CAN communication system DTC is output INFO .

Result:

RESULT	PROCEED TO
DTC is not output	A
DTC is output	B

B ▶ **INSPECT CAN COMMUNICATION SYSTEM**

A ▼

2.	**CHECK ABS WARNING LIGHT**

(a) Disconnect the skid control ECU connector.

(b) Turn the ignition switch to ON.

(c) Check that the ABS warning light comes on.

OK:

The ABS warning light comes on.

HINT:

If troubleshooting has been carried out according to the Problem Symptoms Table, refer back to the table and proceed to the next step before replacing the part INFO **.**

NG ▶ **INSPECT COMBINATION METER ASSEMBLY**

OK ▶ **REPLACE BRAKE ACTUATOR ASSEMBLY**

3.	**INSPECT COMBINATION METER ASSEMBLY**

(a) Turn the ignition switch off.

(b) Reconnect the skid control ECU connector.

(c) Perform the Active Test of the combination meter (meter CPU) using the Techstream INFO .

(d) Check the combination meter.

OK:

The ABS warning light turns on or off in accordance with the Techstream.

HINT:

If troubleshooting has been carried out according to the Problem Symptoms Table, refer back to the table and proceed to the next step INFO **.**

NG ▶ **REPLACE COMBINATION METER ASSEMBLY**

OK ▶ **REPLACE BRAKE ACTUATOR ASSEMBLY**

Last Modified: 3-10-2010	6.4 J	**From:** 200901
Model Year: 2010	**Model:** Corolla	**Doc ID:** RM000000XIU05KX
Title: BRAKE CONTROL / DYNAMIC CONTROL SYSTEMS: ANTI-LOCK BRAKE SYSTEM: TC and CG Terminal Circuit (2010 Corolla)		

TC and CG Terminal Circuit

DESCRIPTION

Connecting terminals TC and CG of the DLC3 causes the ECU to display the DTC by blinking the ABS warning light.

WIRING DIAGRAM

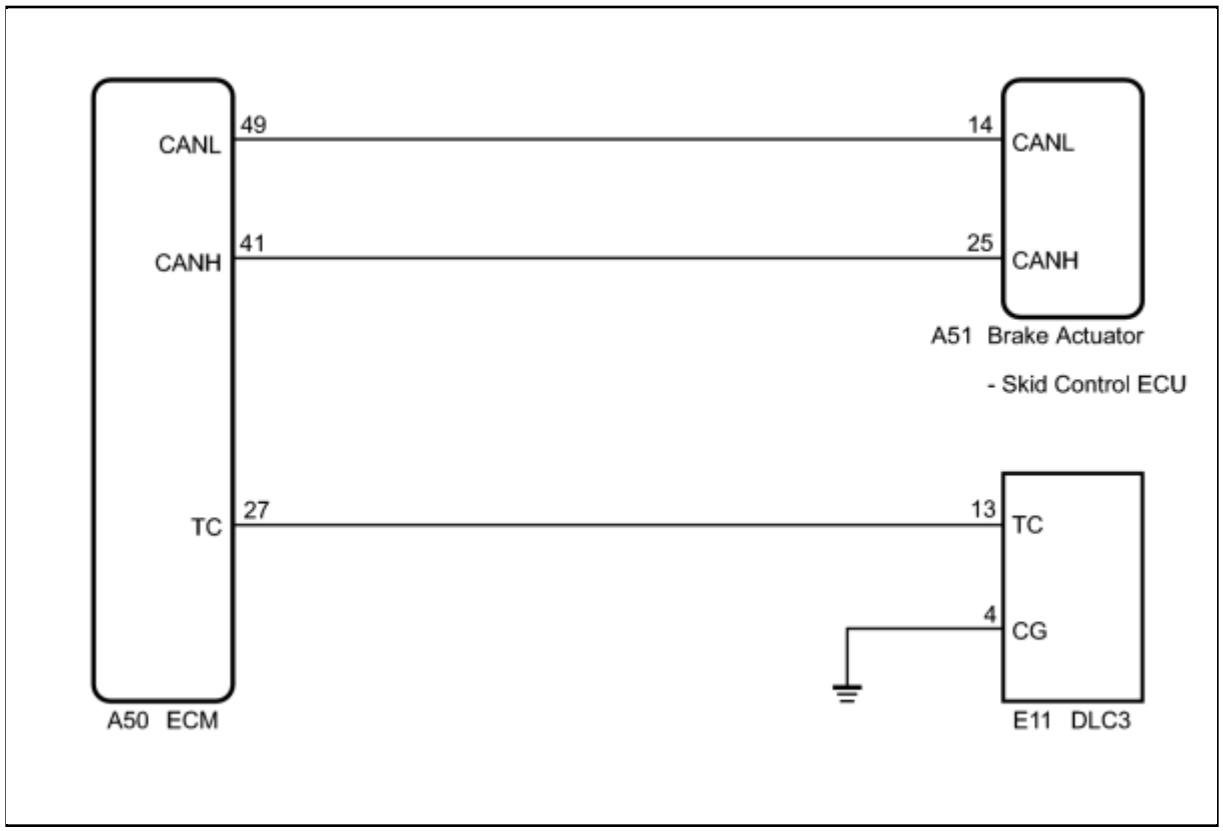

HINT:

When the warning lights continue to blink, a ground short in the wiring of terminal TC of the DLC3 or an internal ground short in one or more ECUs is suspected.

INSPECTION PROCEDURE

PROCEDURE

1.	CHECK CAN COMMUNICATION SYSTEM

(a) Check if the CAN communication system DTC is output INFO.

Result:

RESULT	PROCEED TO
DTC is not output	A
DTC is output	B

B ▶ INSPECT CAN COMMUNICATION SYSTEM

A ▼

2.	INSPECT DLC3

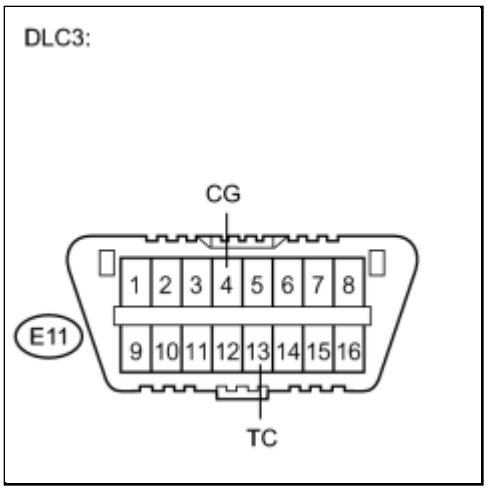

(a) Turn the ignition switch to ON.

(b) Measure the voltage according to the value(s) in the table below.

Standard Voltage:

TESTER CONNECTION	SWITCH CONDITION	SPECIFIED CONDITION
E11-13 (TC) - E11-4 (CG)	Ignition switch ON	11 to 14 V

Result:

RESULT	PROCEED TO
NG	A
OK	B

B ▶ CHECK ECM (TC of DLC3 INPUT)

A ▼

3.	CHECK HARNESS AND CONNECTOR (TC of DLC3 - ECM)

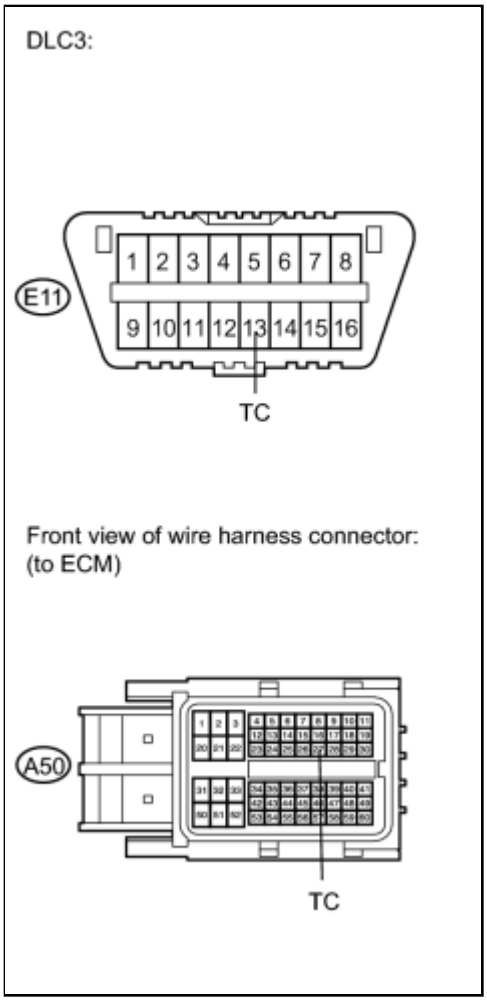

(a) Turn the ignition switch off.

(b) Disconnect the ECM connector.

(c) Measure the resistance according to the value(s) in the table below.

Standard Resistance:

TESTER CONNECTION	CONDITION	SPECIFIED CONDITION
E11-13 (TC) - A50-27 (TC)	Always	Below 1 Ω
E11-13 (TC) - Body ground	Always	10 kΩ or higher

NG ▶ **REPAIR OR REPLACE HARNESS OR CONNECTOR**

OK ▼

4.	**CHECK HARNESS AND CONNECTOR (CG of DLC3 - BODY GROUND)**

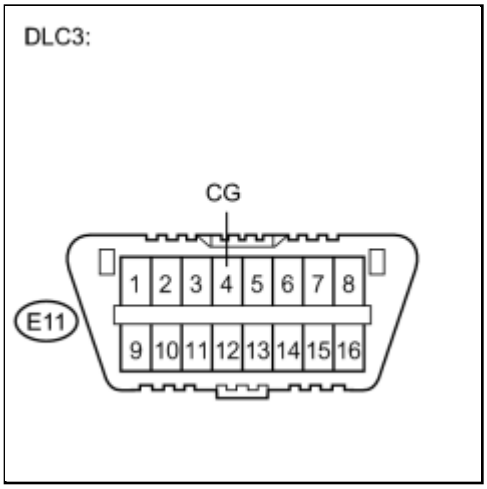

(a) Measure the resistance according to the value(s) in the table below.

Standard Resistance:

TESTER CONNECTION	CONDITION	SPECIFIED CONDITION
E11-4 (CG) - Body ground	Always	Below 1 Ω

NG ▶ **REPAIR OR REPLACE HARNESS OR CONNECTOR**

OK ▼

5.	**CHECK ECM (TC of DLC3 INPUT)**

(a) Turn the ignition switch off.

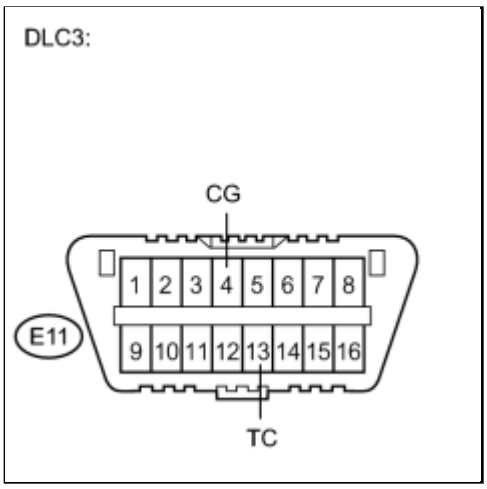

(b) Reconnect the ECM connector.

(c) Using SST, connect terminals TC and CG of the DLC3.

SST: 09843-18040

(d) Turn the ignition switch to ON.

(e) Check that the check engine warning light is blinking.

Result:

RESULT	PROCEED TO
Check engine warning light is blinking	A
Check engine warning light is not blinking	B

HINT:

If troubleshooting has been carried out according to the Problem Symptoms Table, refer back to the table and proceed to the next step before replacing the part INFO **.**

B ▶ **REPAIR OR REPLACE WIRE HARNESS OR ECM (TC of ECM CIRCUIT)**

A ▶ **REPLACE BRAKE ACTUATOR ASSEMBLY**

Last Modified: 3-10-2010	6.4 J	**From:** 200901
Model Year: 2010	**Model:** Corolla	**Doc ID:** RM000000YHH052X
Title: BRAKE CONTROL / DYNAMIC CONTROL SYSTEMS: ANTI-LOCK BRAKE SYSTEM: Brake Warning Light does not Come ON (2010 Corolla)		

Brake Warning Light does not Come ON

DESCRIPTION

The skid control ECU is connected to the combination meter via CAN communication.

WIRING DIAGRAM

Refer to Brake Warning Light Remains ON INFO .

INSPECTION PROCEDURE

PROCEDURE

1.	**CHECK CAN COMMUNICATION SYSTEM**

(a) Check if a CAN communication system DTC is output INFO .

Result:

RESULT	PROCEED TO
DTC is not output	A
DTC is output	B

B ▶ **INSPECT CAN COMMUNICATION SYSTEM**

A ▼

2.	**CHECK BRAKE WARNING LIGHT**

(a) Disconnect the skid control ECU connector.

(b) Turn the ignition switch to ON.

(c) Check that the brake warning light comes on.

OK:

The brake warning light comes on.

HINT:

If troubleshooting has been carried out according to the Problem Symptoms Table, refer back to the table and proceed to the next step before replacing the part INFO **.**

NG ▶ **INSPECT COMBINATION METER ASSEMBLY**

OK ▶ **REPLACE BRAKE ACTUATOR ASSEMBLY**

3.	**INSPECT COMBINATION METER ASSEMBLY**

(a) Turn the ignition switch off.

(b) Reconnect the skid control ECU connector.

(c) Perform the Active Test of the combination meter (meter CPU) using the Techstream INFO .

(d) Check the combination meter.

OK:

The brake warning light turns on or off in accordance with the Techstream.

HINT:

If troubleshooting has been carried out according to the Problem Symptoms Table, refer back to the table and proceed to the next step INFO **.**

NG ▶ **REPLACE COMBINATION METER ASSEMBLY**

OK ▶ **REPLACE BRAKE ACTUATOR ASSEMBLY**

Last Modified: 3-10-2010	6.4 J	**From:** 200901
Model Year: 2010	**Model:** Corolla	**Doc ID:** RM000000XIV04ZX
Title: BRAKE CONTROL / DYNAMIC CONTROL SYSTEMS: ANTI-LOCK BRAKE SYSTEM: TS and CG Terminal Circuit (2010 Corolla)		

TS and CG Terminal Circuit

DESCRIPTION

In Test Mode (signal check), a malfunction in a speed sensor that cannot be detected when the vehicle is stopped can be detected while driving.

Sensor check mode can be entered by connecting terminals TS and CG of the DLC3 and turning the ignition switch from off to ON.

WIRING DIAGRAM

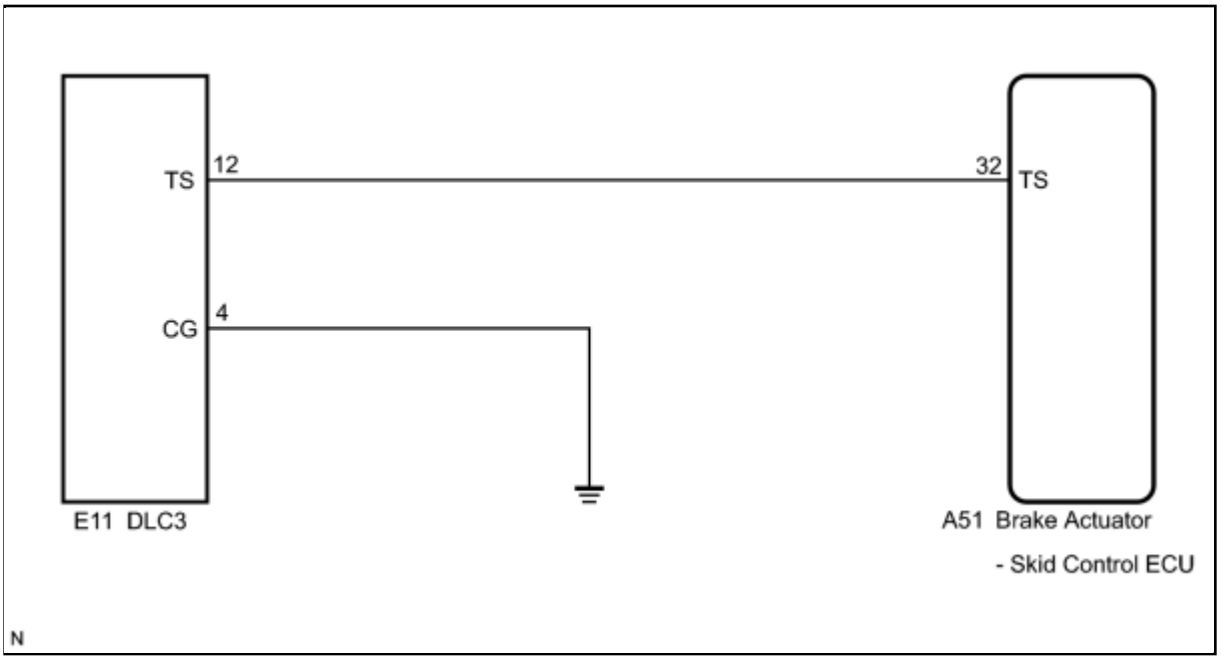

INSPECTION PROCEDURE

PROCEDURE

1.	**CHECK HARNESS AND CONNECTOR (SKID CONTROL ECU - TS of DLC3)**

(a) Disconnect the skid control ECU connector.

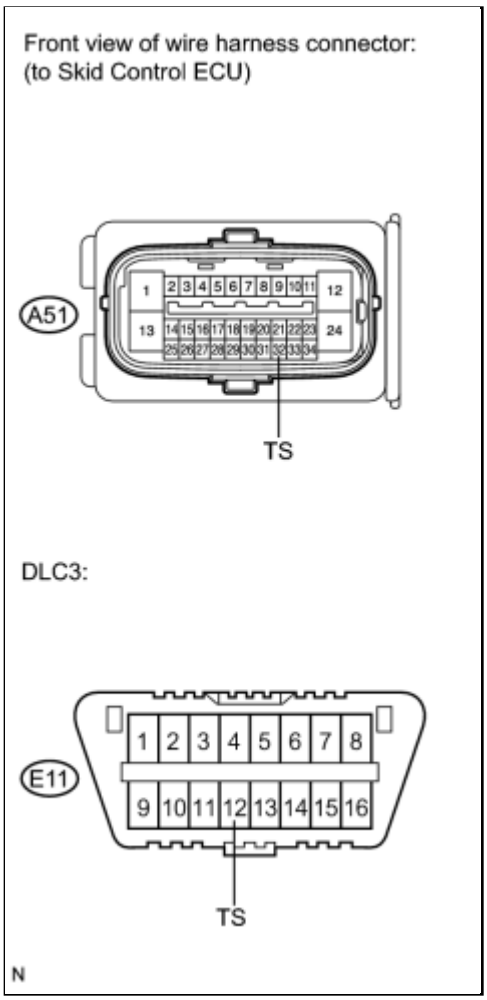

(b) Measure the resistance according to the value(s) in the table below.

Standard Resistance:

TESTER CONNECTION	CONDITION	SPECIFIED CONDITION
A51-32 (TS) - E11-12 (TS)	Always	Below 1 Ω

NG ▶ **REPAIR OR REPLACE HARNESS OR CONNECTOR**

OK ▼

2.	**CHECK HARNESS AND CONNECTOR (CG of DLC3 - BODY GROUND)**

(a) Measure the resistance according to the value(s) in the table below.

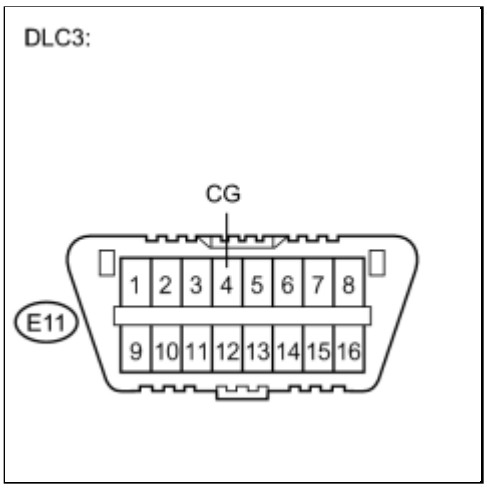

Standard Resistance:

TESTER CONNECTION	CONDITION	SPECIFIED CONDITION
E11-4 (CG) - Body ground	Always	Below 1 Ω

NG ▶ **REPAIR OR REPLACE HARNESS OR CONNECTOR**

OK ▼

3.	CHECK HARNESS AND CONNECTOR (TS of DLC3 - BODY GROUND)

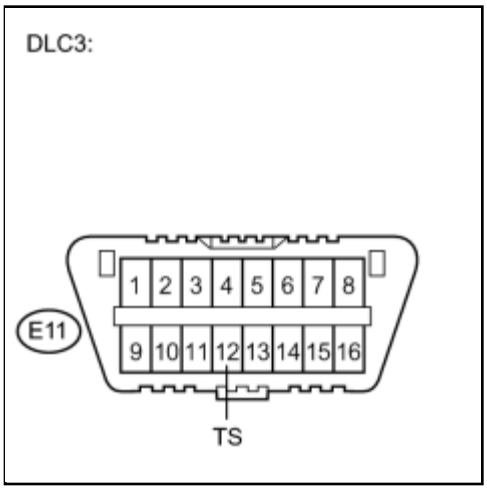

(a) Measure the resistance according to the value(s) in the table below.

Standard Resistance:

TESTER CONNECTION	CONDITION	SPECIFIED CONDITION
E11-12 (TS) - Body ground	Always	10 kΩ or higher

HINT:

If troubleshooting has been carried out according to the Problem Symptoms Table, refer back to the table and proceed to the next step before replacing the part INFO **.**

NG ▶ **REPAIR OR REPLACE HARNESS OR CONNECTOR**

OK ▶ **REPLACE BRAKE ACTUATOR ASSEMBLY**

Last Modified: 3-10-2010	6.4 K	**From:** 200901
Model Year: 2010	**Model:** Corolla	**Doc ID:** RM000003FA3005X
Title: BRAKE CONTROL / DYNAMIC CONTROL SYSTEMS: BRAKE ACTUATOR (w/ VSC): COMPONENTS (2010 Corolla)		

COMPONENTS

ILLUSTRATION

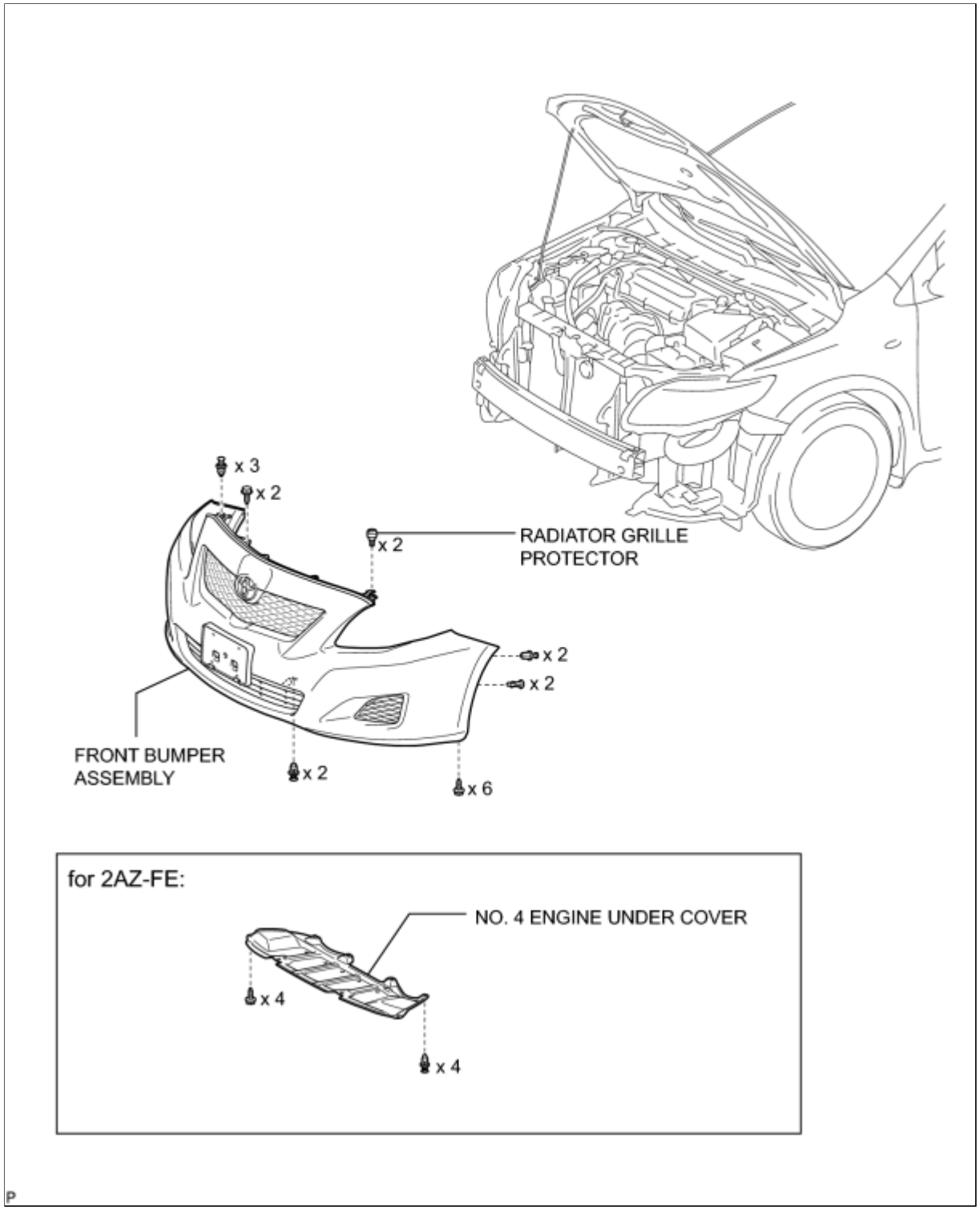

ILLUSTRATION

2AZ-FE:

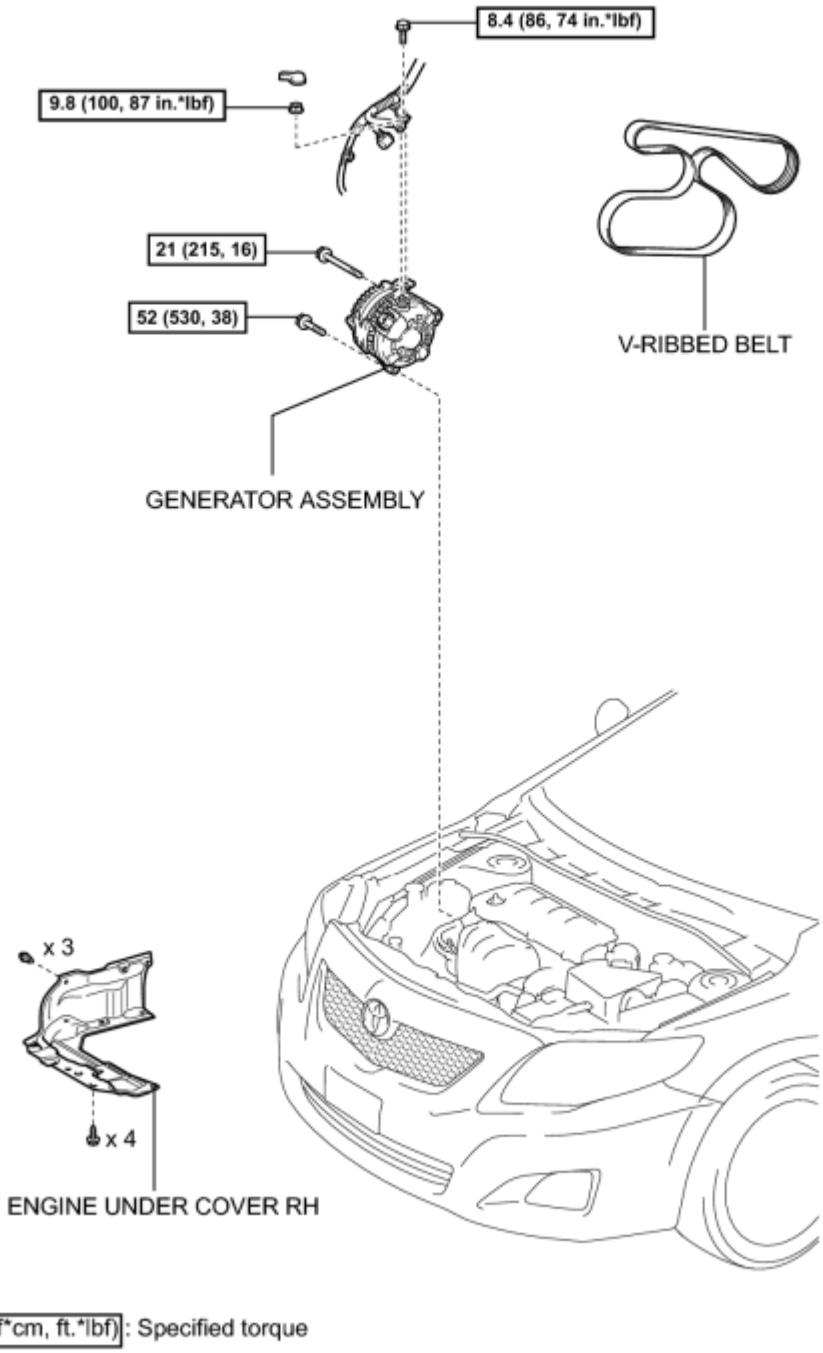

N*m (kgf*cm, ft.*lbf): Specified torque

c

ILLUSTRATION

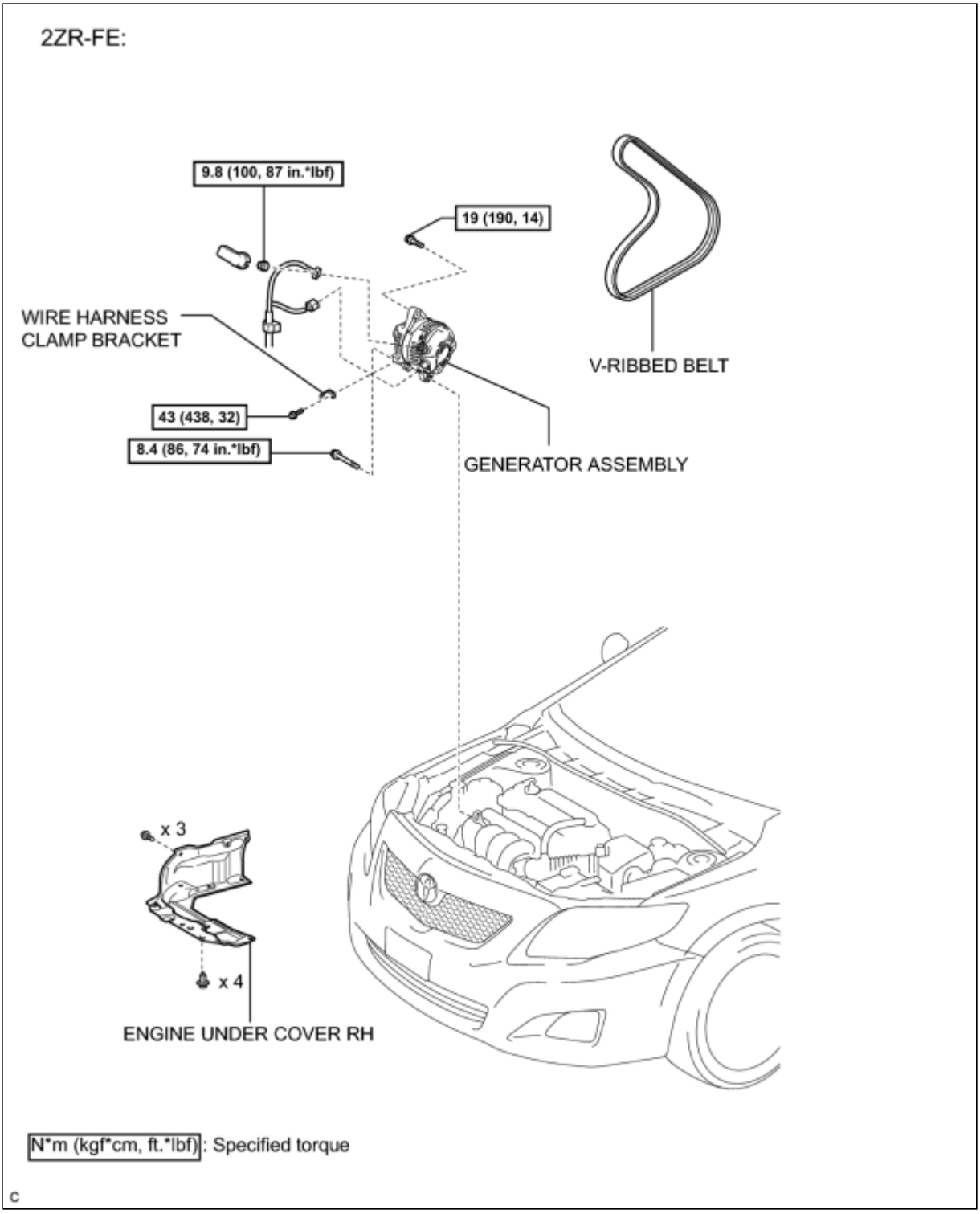

ILLUSTRATION

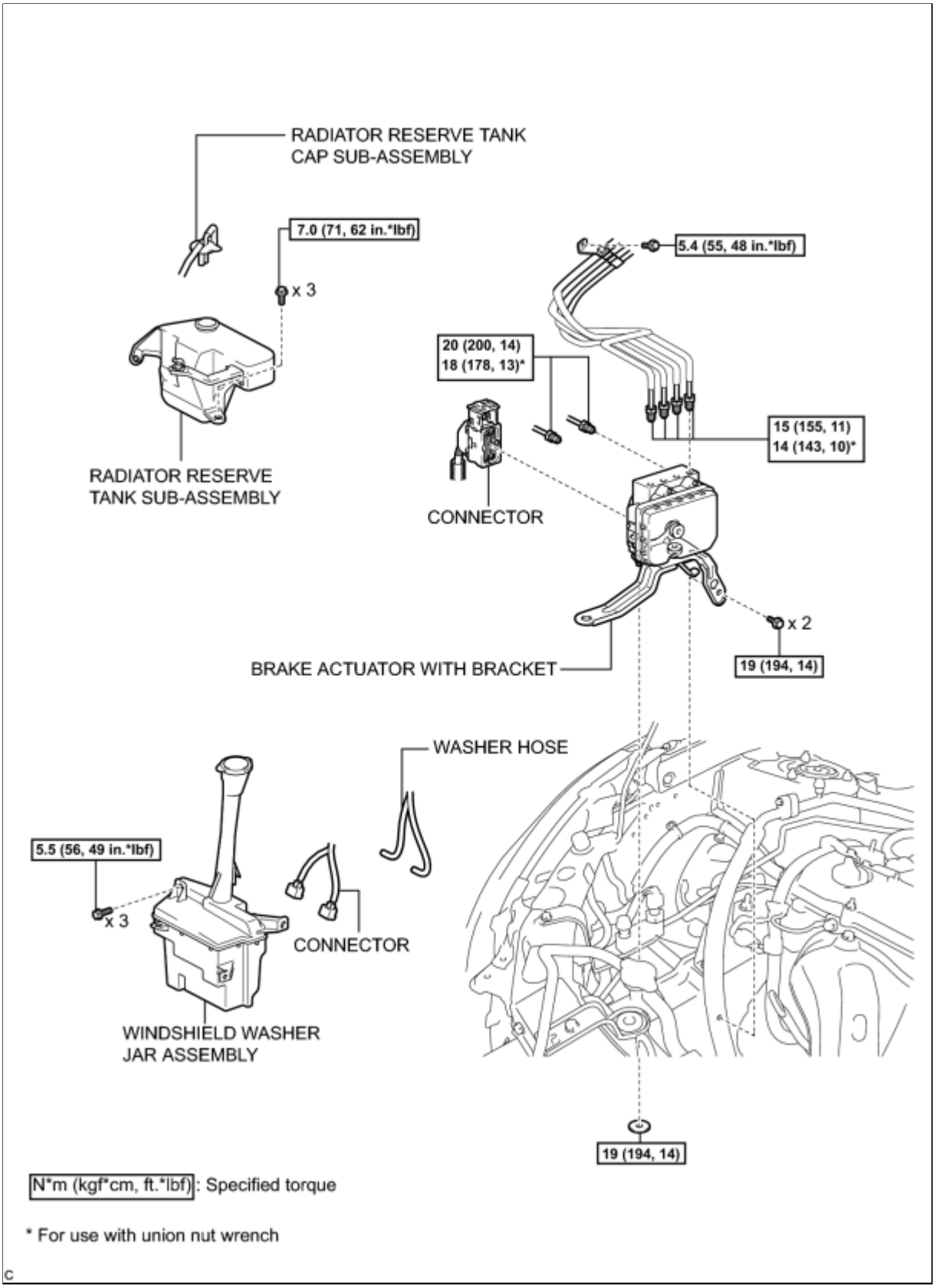

ILLUSTRATION

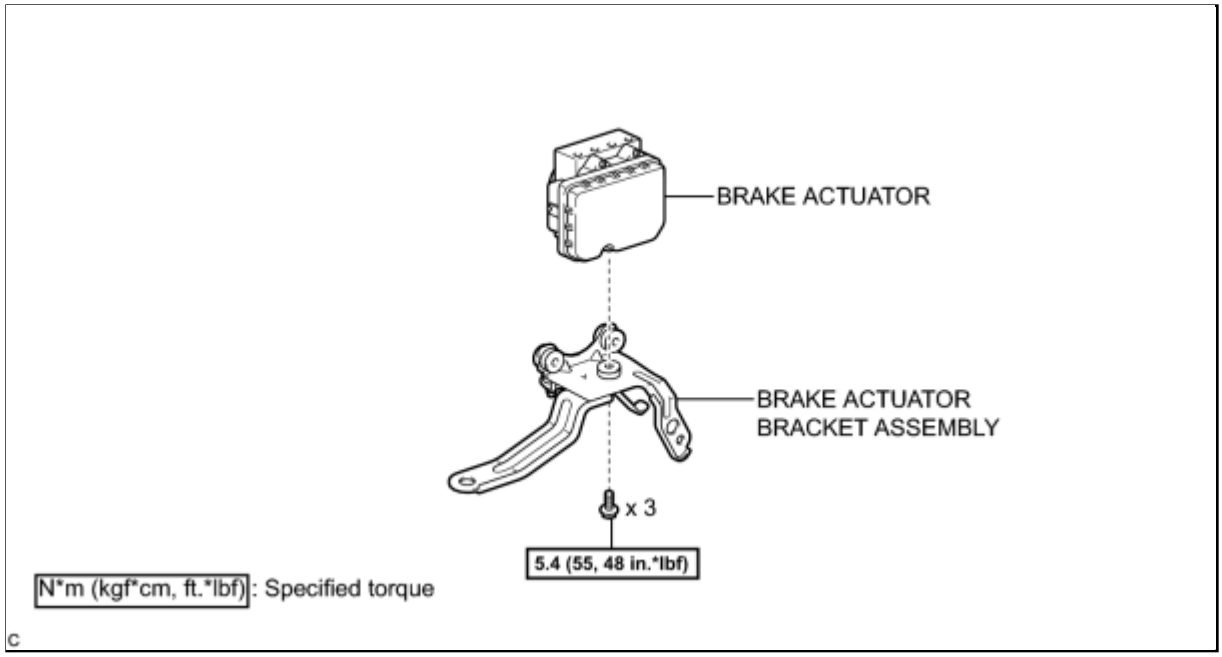
BRAKE ACTUATOR
BRAKE ACTUATOR
BRACKET ASSEMBLY
x 3
5.4 (55, 48 in.*lbf)
N*m (kgf*cm, ft.*lbf): Specified torque

c

Last Modified: 3-10-2010	6.4 G	**From:** 200901
Model Year: 2010	**Model:** Corolla	**Doc ID:** RM000002VQ700LX
Title: BRAKE CONTROL / DYNAMIC CONTROL SYSTEMS: BRAKE ACTUATOR (w/ VSC): ON-VEHICLE INSPECTION (2010 Corolla)		

ON-VEHICLE INSPECTION

1. CONNECT TECHSTREAM

(a) Warm up the engine.

(b) Turn the ignition switch off.

(c) Connect the Techstream to the DLC3.

(d) Turn the ignition switch to ON.

(e) Turn the Techstream on.

(f) Enter the following menus: Chassis / ABS/VSC/ TRAC / Active Test.

HINT:

Refer to the Techstream Operator's Manual for further details.

2. INSPECT ACTUATOR MOTOR OPERATION

NOTICE:

Do not keep the motor relay on continuously for more than 5 seconds. If it needs to be operated repeatedly, set an interval of more than 20 seconds between operations.

(a) Enter the following menus: Active Test / Motor Relay.

(b) Turn the motor relay on and check for the actuator motor operation sound.

(c) Turn the motor relay off.

(d) Fully depress the brake pedal and hold it for approximately 15 seconds. Check that the pedal's initial depth is maintained for the entire 15 seconds.

(e) With the pedal still depressed turn the motor relay on and check that the pedal does not pulsate.

(f) Turn the motor relay off and release the brake pedal.

3. INSPECT FRONT RIGHT WHEEL OPERATION

NOTICE:

Do not turn on a solenoid in a manner different than that shown in the following steps.

(a) Enter the following menus: Active Test / ABS Solenoid (SFRH) and ABS Solenoid (SFRR).

(b) Depress the brake pedal and hold it.

(c) Turn the SFRH and SFRR solenoids on simultaneously and check that the pedal cannot be depressed.

NOTICE:

Each solenoid operates for 2 seconds and turns off automatically. If it needs to be operated repeatedly, set an interval of more than 20 seconds between operations.

(d) Turn the SFRH and SFRR solenoids off simultaneously and check that the pedal can be depressed.

(e) Turn the motor relay on and check that the pedal returns.

NOTICE:

Do not keep the motor relay on continuously for more than 5 seconds. If it needs to be operated repeatedly, set an interval of more than 20 seconds between operations.

(f) Turn the motor relay off and release the brake pedal.

4. INSPECT OTHER WHEEL OPERATION

(a) Using the same procedure, check the solenoids of the other wheels.

HINT:

- Front left wheel: SFLH, SFLR
- Rear right wheel: SRRH, SRRR
- Rear left wheel: SRLH, SRLR

Last Modified: 3-10-2010	6.4 A	**From:** 200901
Model Year: 2010	**Model:** Corolla	**Doc ID:** RM000003CZU00BX
Title: BRAKE CONTROL / DYNAMIC CONTROL SYSTEMS: BRAKE ACTUATOR (w/ VSC): REMOVAL (2010 Corolla)		

REMOVAL

1. DISCONNECT CABLE FROM NEGATIVE BATTERY TERMINAL

2. REMOVE FRONT WHEEL RH

3. REMOVE ENGINE UNDER COVER RH

4. REMOVE V-RIBBED BELT (for 2ZR-FE) INFO

5. REMOVE V-RIBBED BELT (for 2AZ-FE) INFO

6. REMOVE GENERATOR ASSEMBLY (for 2AZ-FE) INFO

7. REMOVE GENERATOR ASSEMBLY (for 2ZR-FE) INFO

8. DRAIN BRAKE FLUID

NOTICE:

If brake fluid leaks onto any painted surface, immediately clean it off completely.

9. REMOVE RADIATOR RESERVE TANK SUB-ASSEMBLY

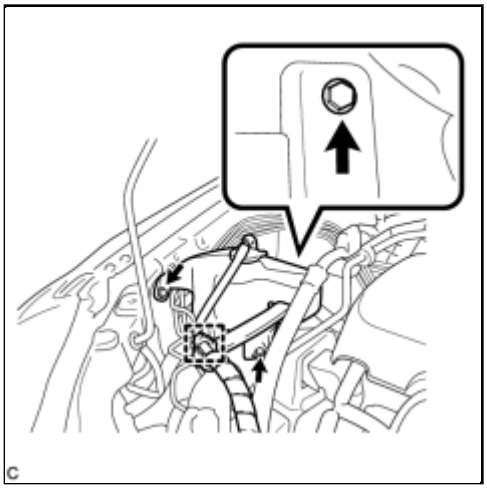

(a) Remove the 3 bolts and radiator reserve tank sub-assembly.

10. REMOVE RADIATOR GRILLE PROTECTOR INFO

11. REMOVE NO. 4 ENGINE UNDER COVER (for 2AZ-FE) INFO

12. REMOVE FRONT BUMPER ASSEMBLY INFO

13. REMOVE WINDSHIELD WASHER JAR ASSEMBLY

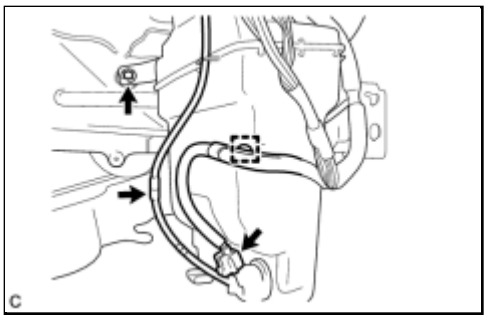

(a) Remove the bolt and disconnect the motor connectors.

(b) Separate the washer hoses from the windshield washer jar assembly.

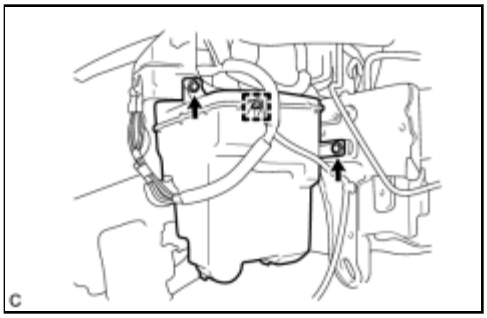

(c) Remove the 2 bolts, clamp and windshield washer jar assembly from the body.

14. REMOVE BRAKE ACTUATOR WITH BRACKET

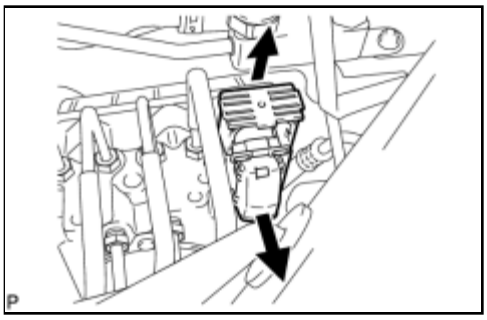

(a) Release the lock lever and disconnect the brake actuator connector.

NOTICE:

Be careful not to allow brake fluid to enter the removed connector.

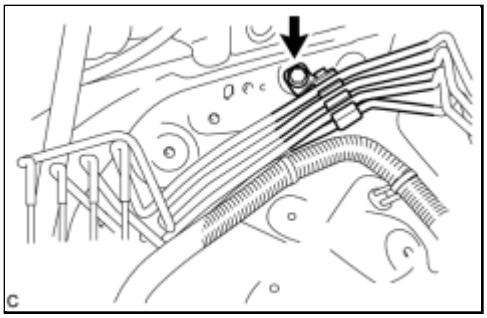

(b) Remove the bolt.

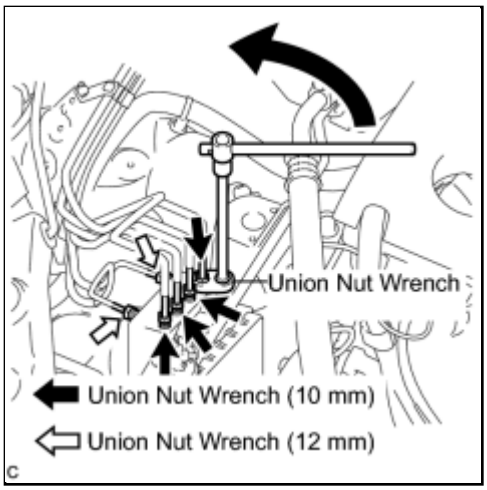

(c) Using a union nut wrench (10 mm), disconnect the 6 brake lines from the actuator assembly.

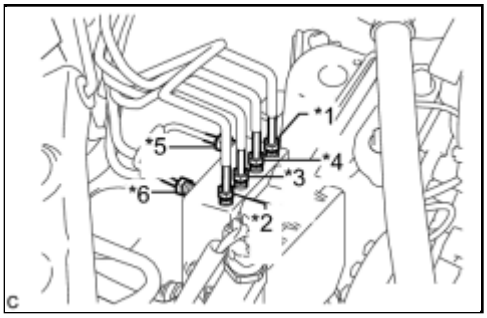

(d) Use tags or make a memo to identify the places to reconnect.

HINT:

- *1: To front wheel cylinder RH
- *2: To front wheel cylinder LH
- *3: To rear wheel cylinder RH
- *4: To rear wheel cylinder LH
- *5: From 1st master cylinder chamber
- *6: From 2nd master cylinder chamber

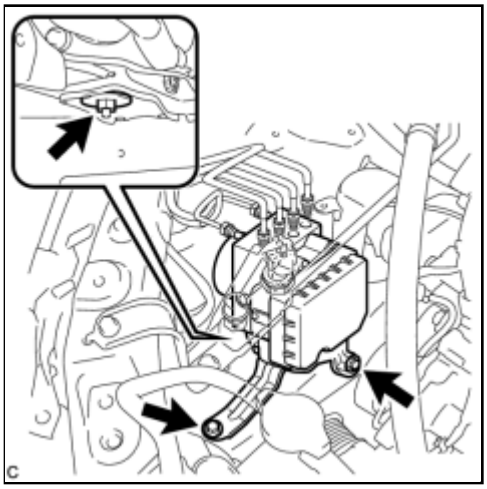

(e) Remove the 2 bolts, nut and the brake actuator with bracket from the body.

NOTICE:

- Do not damage the brake lines or wire harness.
- Do not carry the brake actuator assembly by the connector.

15. REMOVE BRAKE ACTUATOR

(a) Remove the 3 bolts and brake actuator from the brake actuator bracket assembly.

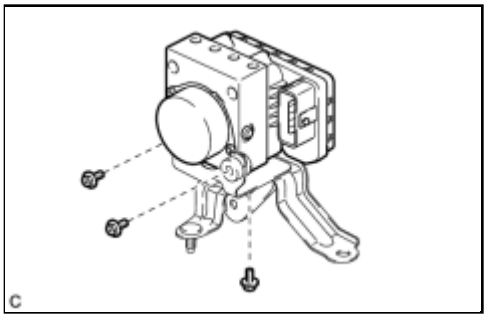
C

Last Modified: 3-10-2010	6.4 A	**From:** 200901
Model Year: 2010	**Model:** Corolla	**Doc ID:** RM000003CZT00BX
Title: BRAKE CONTROL / DYNAMIC CONTROL SYSTEMS: BRAKE ACTUATOR (w/ VSC): INSTALLATION (2010 Corolla)		

INSTALLATION

1. INSTALL BRAKE ACTUATOR

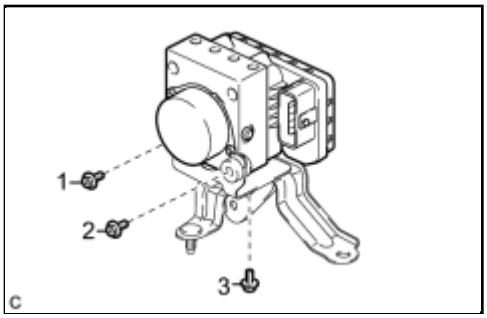

(a) Install the brake actuator to the brake actuator bracket assembly with the 3 bolts.

Torque: 5.4 N·m (55 kgf·cm, 48in·lbf)

NOTICE:

- If installing a new brake actuator, do not remove the hole plugs before connecting the brake lines because the new brake actuator is filled with brake fluid.
- Do not carry the brake actuator by the connector.
- Tighten the 3 bolts in the order shown in the illustration.

2. INSTALL BRAKE ACTUATOR WITH BRACKET

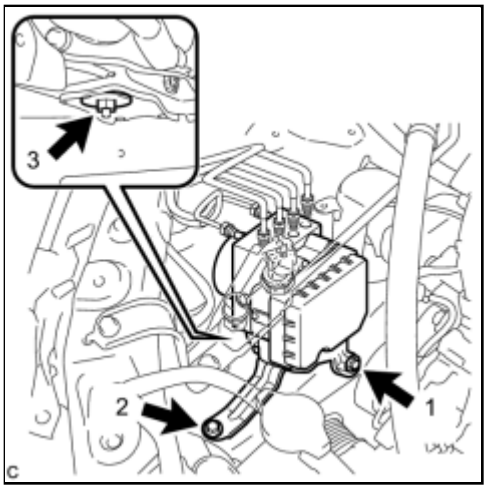

(a) Install the brake actuator with bracket to the body with the 2 bolts and nut.

Torque: 19 N·m (194 kgf·cm, 14ft·lbf)

NOTICE:

- Do not damage the brake lines or wire harness.
- Tighten the 2 bolts and nut in the order shown in the illustration.

(b) Temporarily tighten each brake line to the correct positions of the brake actuator with bracket as shown in the illustration.

HINT:

- *1: To front wheel cylinder RH
- *2: To front wheel cylinder LH
- *3: To rear wheel cylinder RH

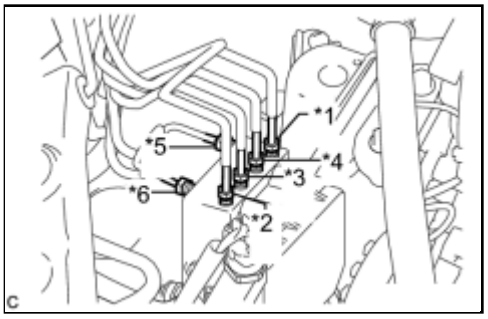

- *4: To rear wheel cylinder LH
- *5: From 1st master cylinder chamber
- *6: From 2nd master cylinder chamber

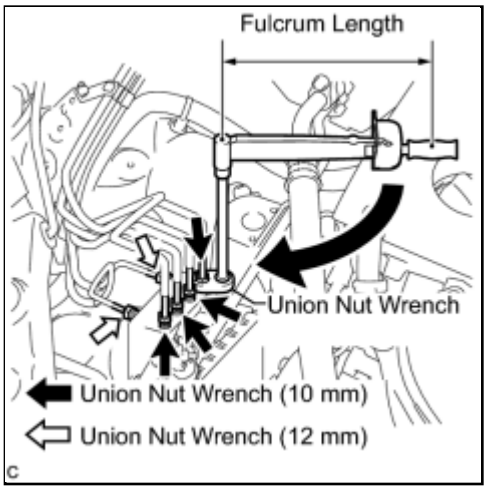

(c) Using a union nut wrench (10 mm) and union nut wrench (12 mm), fully tighten each brake line.

without a union nut wrench (10 mm) - Torque: 15 N·m (155 kgf·cm, 11ft·lbf)

with a union nut wrench (10 mm) - Torque: 14 N·m (143 kgf·cm, 10ft·lbf)

without a union nut wrench (12 mm) - Torque: 20 N·m (200 kgf·cm, 14ft·lbf)

with a union nut wrench (12 mm) - Torque: 18 N·m (178 kgf·cm, 13ft·lbf)

NOTICE:

- Use a torque wrench with a fulcrum length of 250 mm (9.84 in.).
- This torque value is effective when the union nut wrench is parallel to the torque wrench.

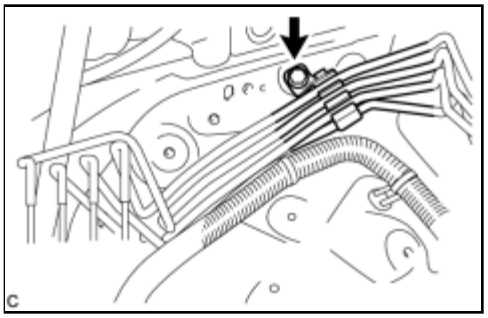

(d) Install the brake line clamp with the bolt.

Torque: 5.4 N·m (55 kgf·cm, 48in·lbf)

(e) Connect the actuator connector.

NOTICE:

Make sure that the connector is locked securely.

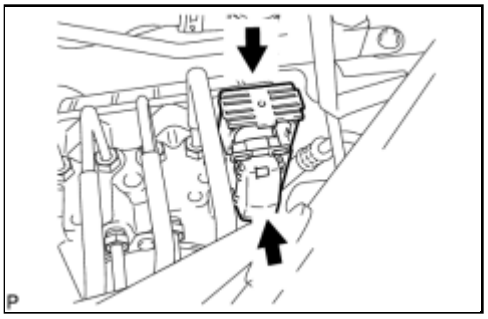

3. INSTALL WINDSHIELD WASHER JAR ASSEMBLY

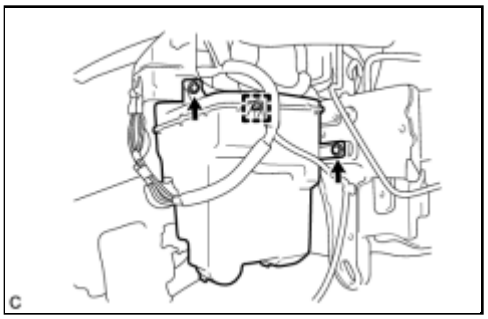

(a) Install the windshield washer jar assembly and clamp to the body with the 2 bolts.

Torque: 5.5 N·m (56 kgf·cm, 49in·lbf)

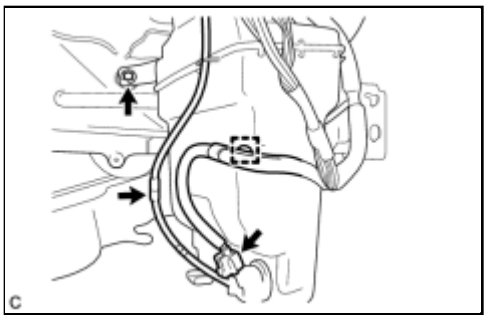

(b) Install the bolt and connect the washer hoses and motor connectors.

Torque: 5.5 N·m (56 kgf·cm, 49in·lbf)

4. INSTALL RADIATOR RESERVE TANK SUB-ASSEMBLY

(a) Install the radiator reserve tank sub-assembly with the 3 bolts.

Torque: 7.0 N·m (71 kgf·cm, 62in·lbf)

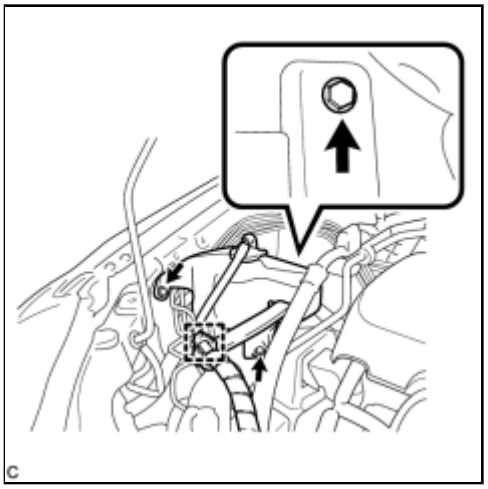

5. INSTALL FRONT BUMPER ASSEMBLY INFO

6. INSTALL RADIATOR GRILLE PROTECTOR INFO

7. INSTALL NO. 4 ENGINE UNDER COVER INFO

8. INSTALL FRONT WHEEL RH

9. INSTALL GENERATOR ASSEMBLY (for 2ZR-FE) INFO

10. INSTALL GENERATOR ASSEMBLY (for 2AZ-FE) INFO

11. INSTALL V-RIBBED BELT (for 2ZR-FE) INFO

12. ADJUST V-RIBBED BELT (for 2ZR-FE) INFO

13. INSPECT V-RIBBED BELT (for 2ZR-FE) INFO

14. INSTALL V-RIBBED BELT (for 2AZ-FE) INFO

15. INSTALL ENGINE UNDER COVER RH

16. CONNECT CABLE TO NEGATIVE BATTERY TERMINAL

17. REMOVE CENTER COWL TOP VENTILATOR LOUVER INFO

18. FILL UP BRAKE FLUID RESERVOIR INFO

19. BLEED BRAKE MASTER CYLINDER INFO

20. BLEED BRAKE LINE INFO

21. BLEED BRAKE ACTUATOR INFO

22. INSPECT BRAKE FLUID LEVEL INFO

23. INSPECT FOR BRAKE FLUID LEAK

24. INSTALL CENTER COWL TOP VENTILATOR LOUVER INFO

25. INSPECT ACTUATOR WITH TECHSTREAM

INFO

Last Modified: 3-10-2010	6.4 K	**From:** 200901
Model Year: 2010	**Model:** Corolla	**Doc ID:** RM000003F9Z004X
Title: BRAKE CONTROL / DYNAMIC CONTROL SYSTEMS: BRAKE ACTUATOR (w/o VSC): COMPONENTS (2010 Corolla)		

COMPONENTS

ILLUSTRATION

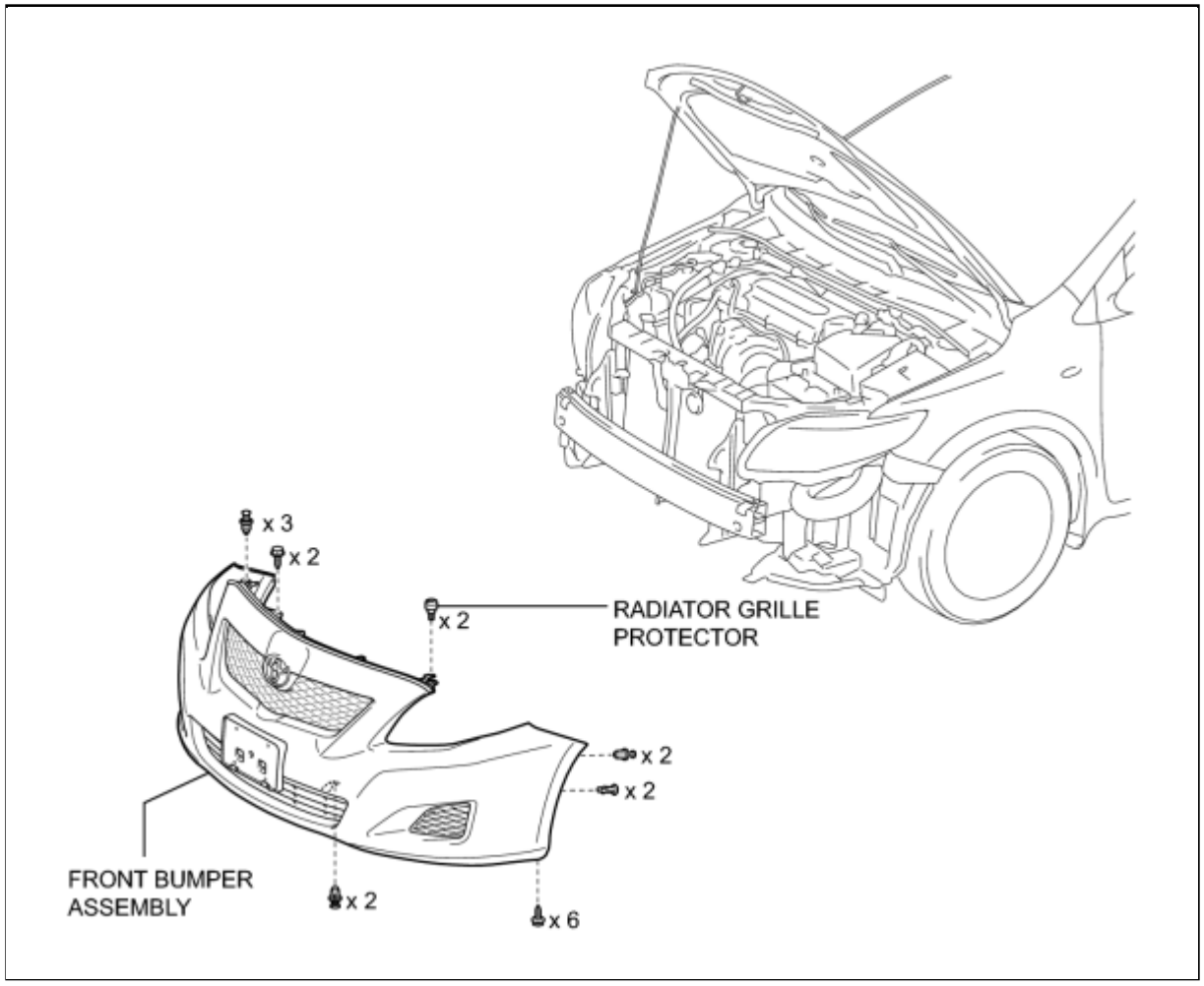

ILLUSTRATION

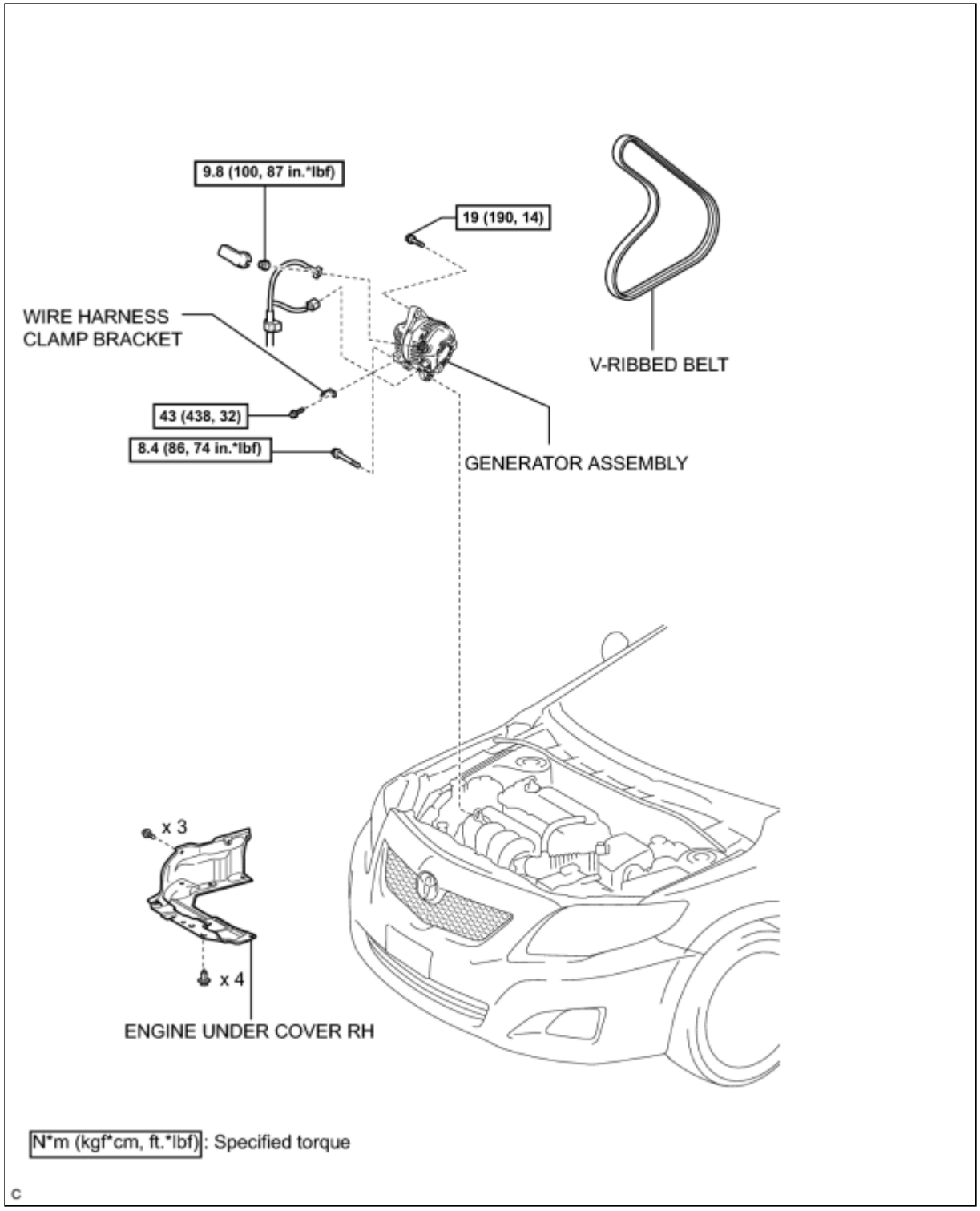

ILLUSTRATION

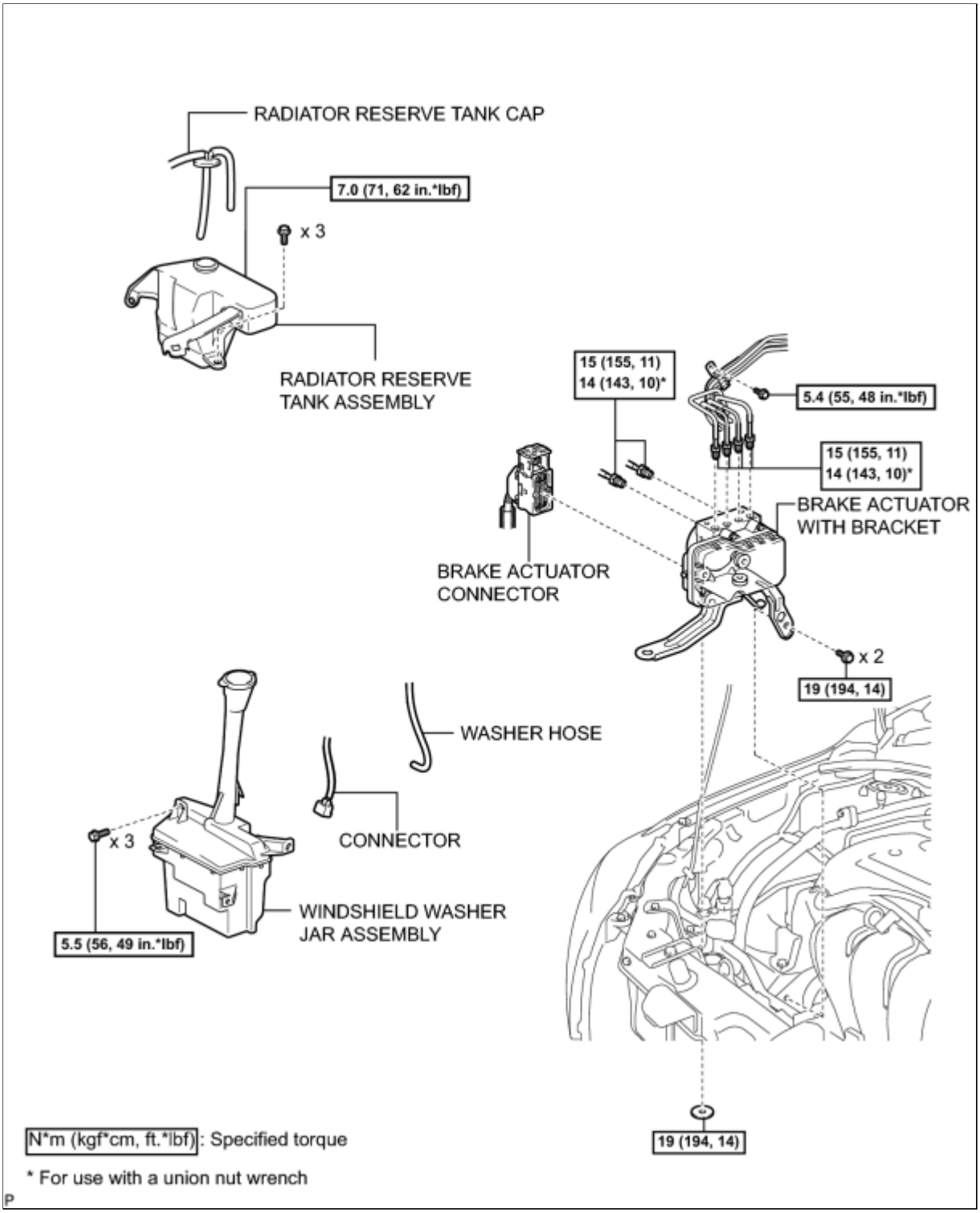

ILLUSTRATION

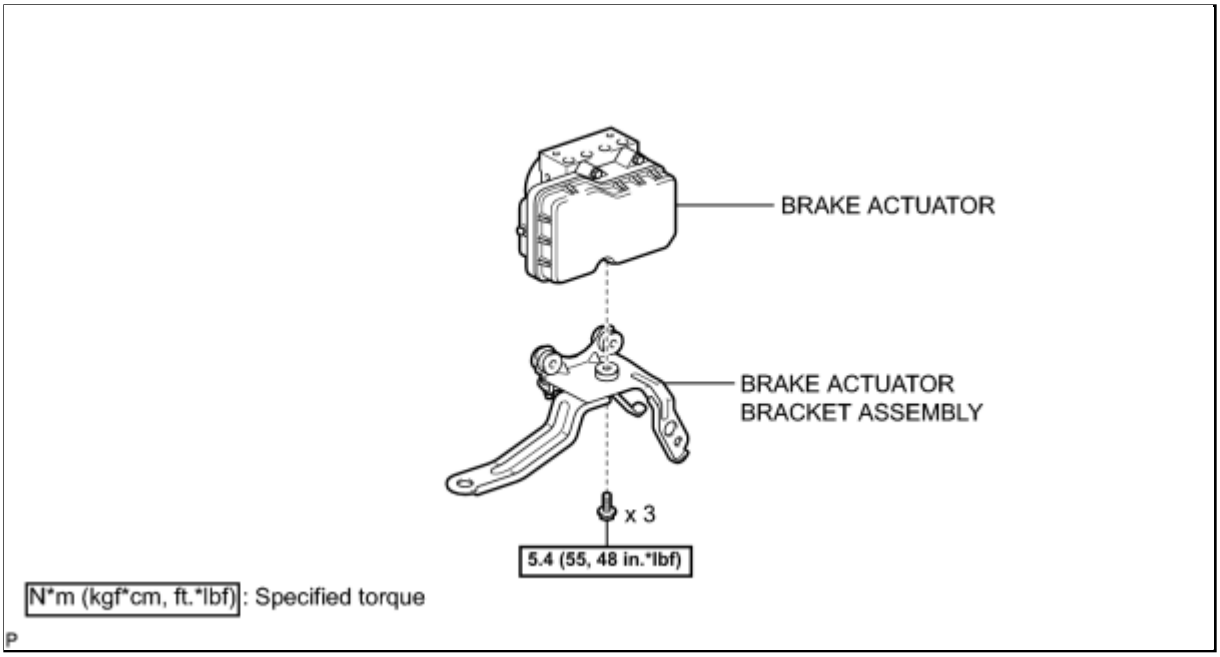

N*m (kgf*cm, ft.*lbf): Specified torque

P

Last Modified: 3-10-2010	6.4 G	**From:** 200901
Model Year: 2010	**Model:** Corolla	**Doc ID:** RM000002VQP00GX
Title: BRAKE CONTROL / DYNAMIC CONTROL SYSTEMS: BRAKE ACTUATOR (w/o VSC): ON-VEHICLE INSPECTION (2010 Corolla)		

ON-VEHICLE INSPECTION

1. CONNECT TECHSTREAM

(a) Connect the Techstream to the DLC3.

(b) Start the engine and run it at idle.

(c) Enter the following menus: Chassis / ABS/VSC/ TRAC / Active Test.

HINT:

Refer to the Techstream Operator's Manual for further details.

2. INSPECT ACTUATOR MOTOR OPERATION

NOTICE:

Do not keep the motor relay on continuously for more than 5 seconds. If it needs to be operated repeatedly, set an interval of more than 20 seconds between operations.

(a) Enter the following menus: Active Test / Motor Relay.

(b) Turn the motor relay on and check for the actuator motor operation sound.

(c) Turn the motor relay off.

(d) Fully depress the brake pedal and hold it for approximately 15 seconds. Check that the pedal's initial depth is maintained for the entire 15 seconds.

(e) Turn the motor relay on and check that the pedal does not pulsate.

(f) Turn the motor relay off and release the brake pedal.

3. INSPECT FRONT RIGHT WHEEL OPERATION

NOTICE:

Do not turn on a solenoid in a manner different than that shown in the following steps.

(a) Depress the brake pedal and hold it.

(b) Turn the SFRH and SFRR solenoids on simultaneously and check that the pedal cannot be depressed.

NOTICE:

Each solenoid operates for 2 seconds and turns off automatically. If it needs to be operated repeatedly, set an interval of more than 20 seconds between operations.

(c) Turn the SFRH and SFRR solenoids off simultaneously and check that the pedal can be depressed.

(d) Turn the motor relay on and check that the pedal returns.

NOTICE:

Do not keep the motor relay on continuously for more than 5 seconds. If it needs to be operated repeatedly, set an interval of more than 20 seconds between operations.

(e) Turn the motor relay off and release the brake pedal.

4. INSPECT OTHER WHEEL OPERATION

(a) Using the same procedure, check the solenoids of the other wheels.

- Left front wheel: SFLH, SFLR
- Right rear wheel: SRRH, SRRR
- Left rear wheel: SRLH, SRLR

Last Modified: 3-10-2010	6.4 A	**From:** 200901
Model Year: 2010	**Model:** Corolla	**Doc ID:** RM0000013P6018X
Title: BRAKE CONTROL / DYNAMIC CONTROL SYSTEMS: BRAKE ACTUATOR (w/o VSC): REMOVAL (2010 Corolla)		

REMOVAL

1. DISCONNECT CABLE FROM NEGATIVE BATTERY TERMINAL

2. REMOVE ENGINE UNDER COVER RH

3. REMOVE RADIATOR GRILLE PROTECTOR INFO

4. REMOVE FRONT BUMPER ASSEMBLY INFO

5. REMOVE V-RIBBED BELT INFO

6. REMOVE GENERATOR ASSEMBLY INFO

7. DRAIN BRAKE FLUID

NOTICE:

If brake fluid leaks onto any painted surface, immediately clean it off completely.

8. REMOVE FRONT WHEEL RH

9. REMOVE RADIATOR RESERVE TANK ASSEMBLY

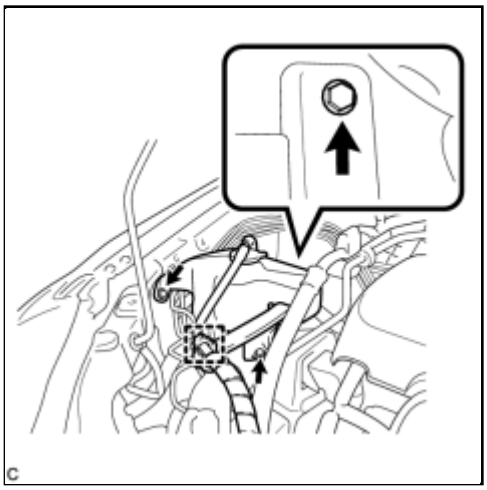

(a) Remove the 3 bolts and radiator reserve tank assembly.

10. REMOVE WINDSHIELD WASHER JAR ASSEMBLY

(a) Remove the bolt and disconnect the motor connectors.

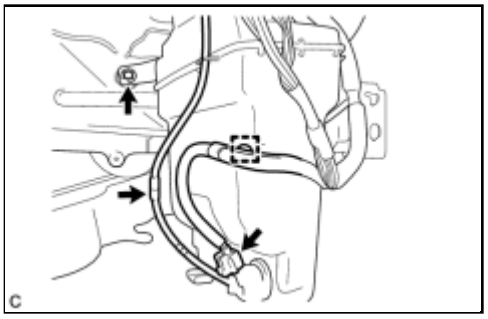

(b) Separate the washer hoses from the windshield washer jar assembly.

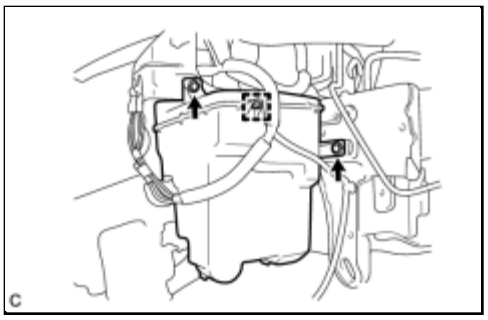

(c) Remove the 2 bolts, clamp and the windshield washer jar assembly from the body.

11. REMOVE BRAKE ACTUATOR WITH BRACKET

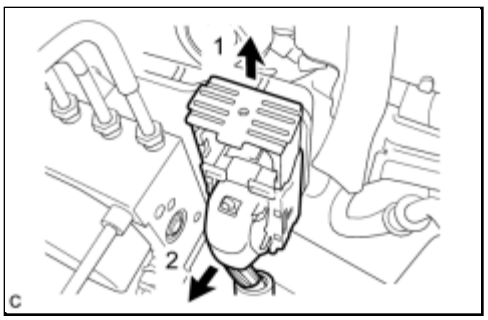

(a) Release the lock lever and disconnect the brake actuator connector.

NOTICE:

Be careful not to allow brake fluid to enter the removed connector.

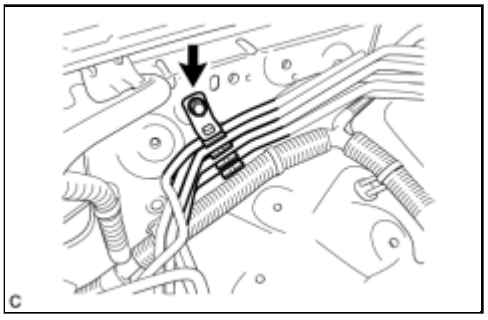

(b) Remove the bolt.

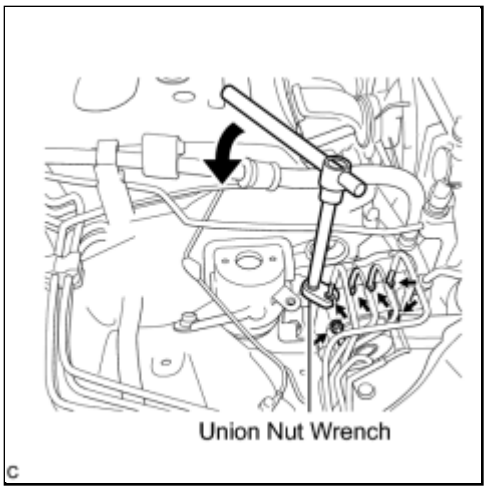

(c) Using a union nut wrench (10 mm), disconnect the 6 brake lines from the actuator assembly.

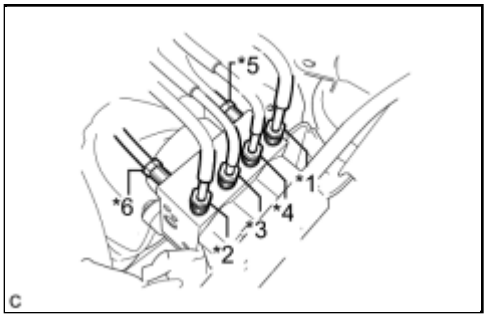

(d) Use tags or make a memo to identify the places to reconnect.

HINT:

- *1: To front wheel cylinder RH
- *2: To front wheel cylinder LH
- *3: To rear wheel cylinder RH
- *4: To rear wheel cylinder LH
- *5: From 1st of master cylinder
- *6: From 2nd of master cylinder

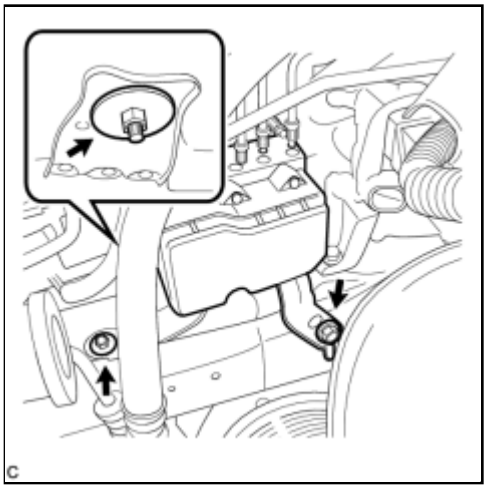

(e) Remove the 2 bolts, nut and the brake actuator with bracket from the body.

NOTICE:

- Do not damage the brake lines or wire harness.
- Do not carry the brake actuator assembly by the connector.

12. REMOVE BRAKE ACTUATOR

(a) Remove the 3 bolts and brake actuator assembly from the brake actuator bracket assembly.

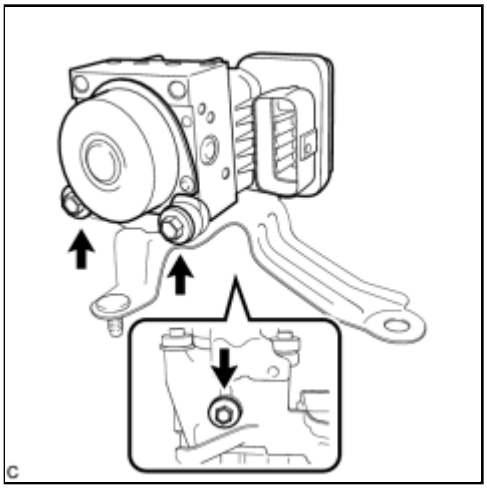
C

Last Modified: 3-10-2010	6.4 A	**From:** 200901
Model Year: 2010	**Model:** Corolla	**Doc ID:** RM0000013P401MX
Title: BRAKE CONTROL / DYNAMIC CONTROL SYSTEMS: BRAKE ACTUATOR (w/o VSC): INSTALLATION (2010 Corolla)		

INSTALLATION

1. INSTALL BRAKE ACTUATOR

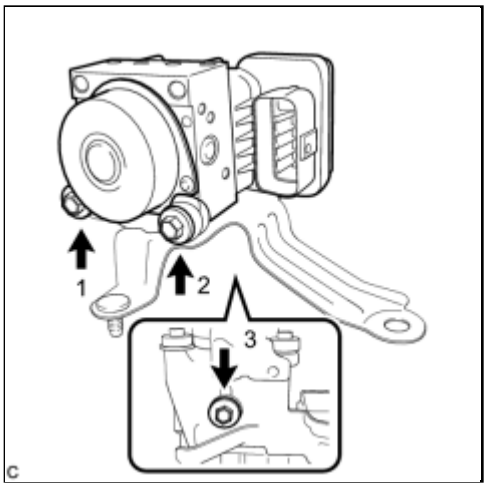

(a) Install the brake actuator assembly to the brake actuator bracket assembly with the 3 bolts.

Torque: 5.4 N·m (55 kgf·cm, 48in·lbf)

NOTICE:

- Do not remove the hole plugs before installing a new brake actuator because the brake actuator is filled with brake fluid.
- Do not carry the brake actuator assembly by the connector.
- Tighten the 3 bolts in the order shown in the illustration.

2. INSTALL BRAKE ACTUATOR WITH BRACKET

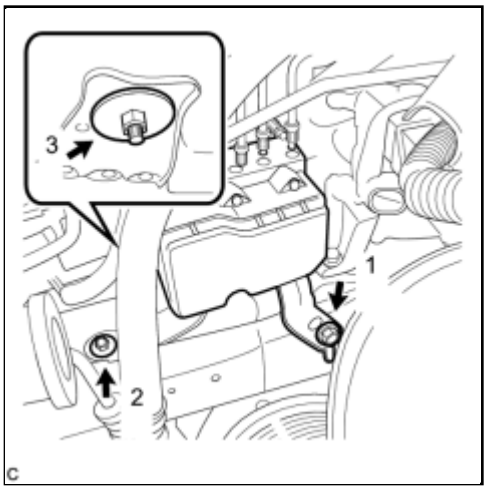

(a) Install the brake actuator with bracket to the body with the 2 bolts and nut.

Torque: 19 N·m (194 kgf·cm, 14ft·lbf)

NOTICE:

- Do not damage the brake lines or wire harness.
- Tighten the 2 bolts and nut in the order shown in the illustration.

(b) Temporarily tighten each brake line to the correct positions of the brake actuator assembly with bracket as shown in the illustration.

HINT:

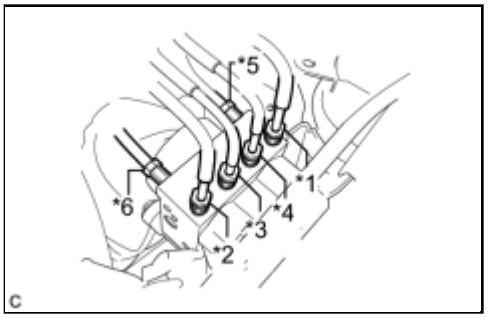

- *1: To front wheel cylinder RH
- *2: To front wheel cylinder LH
- *3: To rear wheel cylinder RH
- *4: To rear wheel cylinder LH
- *5: From 1st of master cylinder
- *6: From 2nd of master cylinder

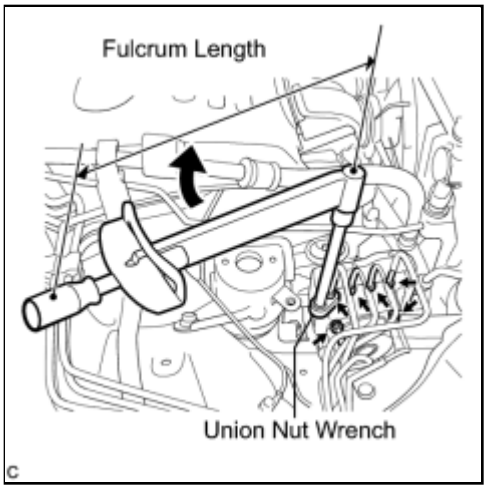

(c) Using a union nut wrench (10 mm), fully tighten each brake line.

without a union nut wrench - Torque: 15 N·m (155 kgf·cm, 11ft·lbf)

with a union nut wrench - Torque: 14 N·m (143 kgf·cm, 10ft·lbf)

NOTICE:

- Use a torque wrench with a fulcrum length of 250 mm (9.84 in.).
- This torque value is effective when the union nut wrench is parallel to the torque wrench.

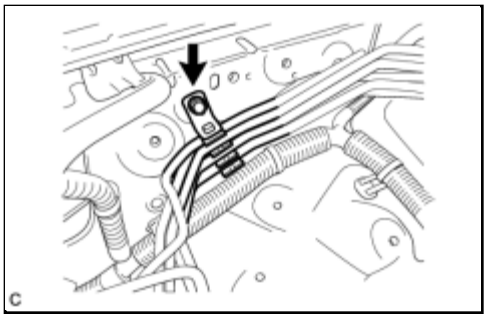

(d) Install the brake line clamp with the bolt.

Torque: 5.4 N·m (55 kgf·cm, 48in·lbf)

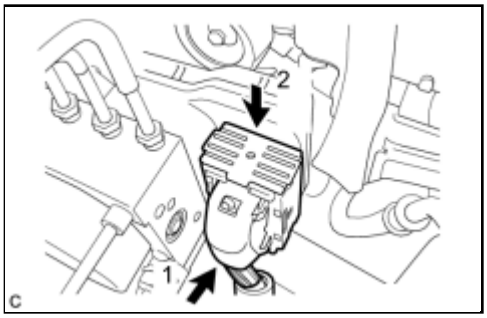

(e) Connect the actuator connector.

NOTICE:

Make sure that the connector is locked securely.

3. INSTALL RADIATOR RESERVE TANK ASSEMBLY

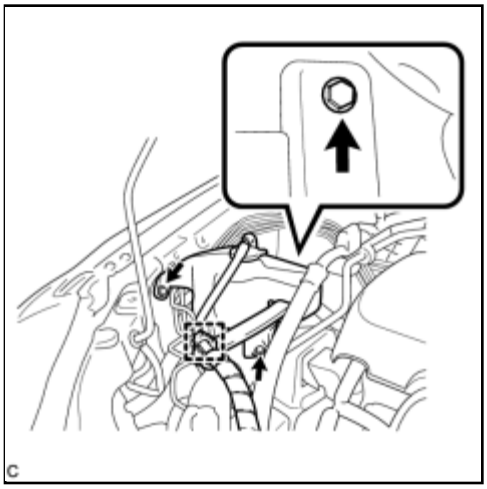

(a) Install the radiator reserve tank assembly with the 3 bolts.

Torque: 7.0 N·m (71 kgf·cm, 62in·lbf)

4. INSTALL WINDSHIELD WASHER JAR ASSEMBLY

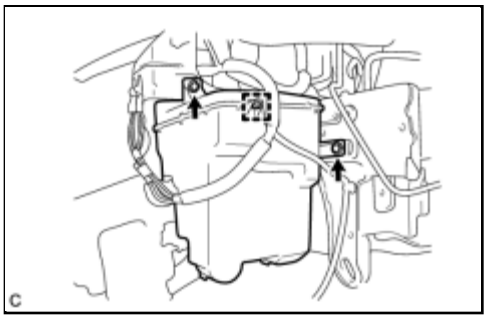

(a) Install the windshield washer jar assembly and clamp to the body with the 2 bolts.

Torque: 5.5 N·m (56 kgf·cm, 49in·lbf)

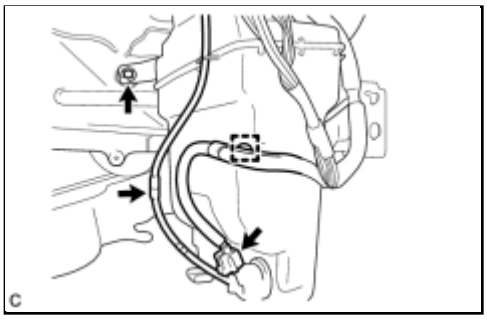

(b) Install the bolt and connect the washer hoses and 2 connectors.

Torque: 5.5 N·m (56 kgf·cm, 49in·lbf)

5. INSTALL FRONT BUMPER ASSEMBLY INFO

6. INSTALL RADIATOR GRILLE PROTECTOR INFO

7. INSTALL GENERATOR ASSEMBLY INFO

8. INSTALL V-RIBBED BELT INFO

9. ADJUST V-RIBBED BELT INFO

10. INSPECT V-RIBBED BELT INFO

11. INSTALL ENGINE UNDER COVER RH

12. CONNECT CABLE TO NEGATIVE BATTERY TERMINAL

13. REMOVE CENTER COWL TOP VENTILATOR LOUVER INFO

14. FILL BRAKE FLUID RESERVOIR INFO

15. BLEED BRAKE MASTER CYLINDER INFO

16. BLEED BRAKE LINE INFO

17. INSPECT BRAKE FLUID LEVEL INFO

18. INSPECT FOR FLUID LEAK

19. INSTALL CENTER COWL TOP VENTILATOR LOUVER INFO

20. INSPECT ACTUATOR WITH TECHSTREAM

INFO



Last Modified: 3-10-2010	6.4 K	**From:** 200901
Model Year: 2010	**Model:** Corolla	**Doc ID:** RM000003FA0004X
Title: BRAKE CONTROL / DYNAMIC CONTROL SYSTEMS: FRONT SPEED SENSOR: COMPONENTS (2010 Corolla)		

COMPONENTS

ILLUSTRATION

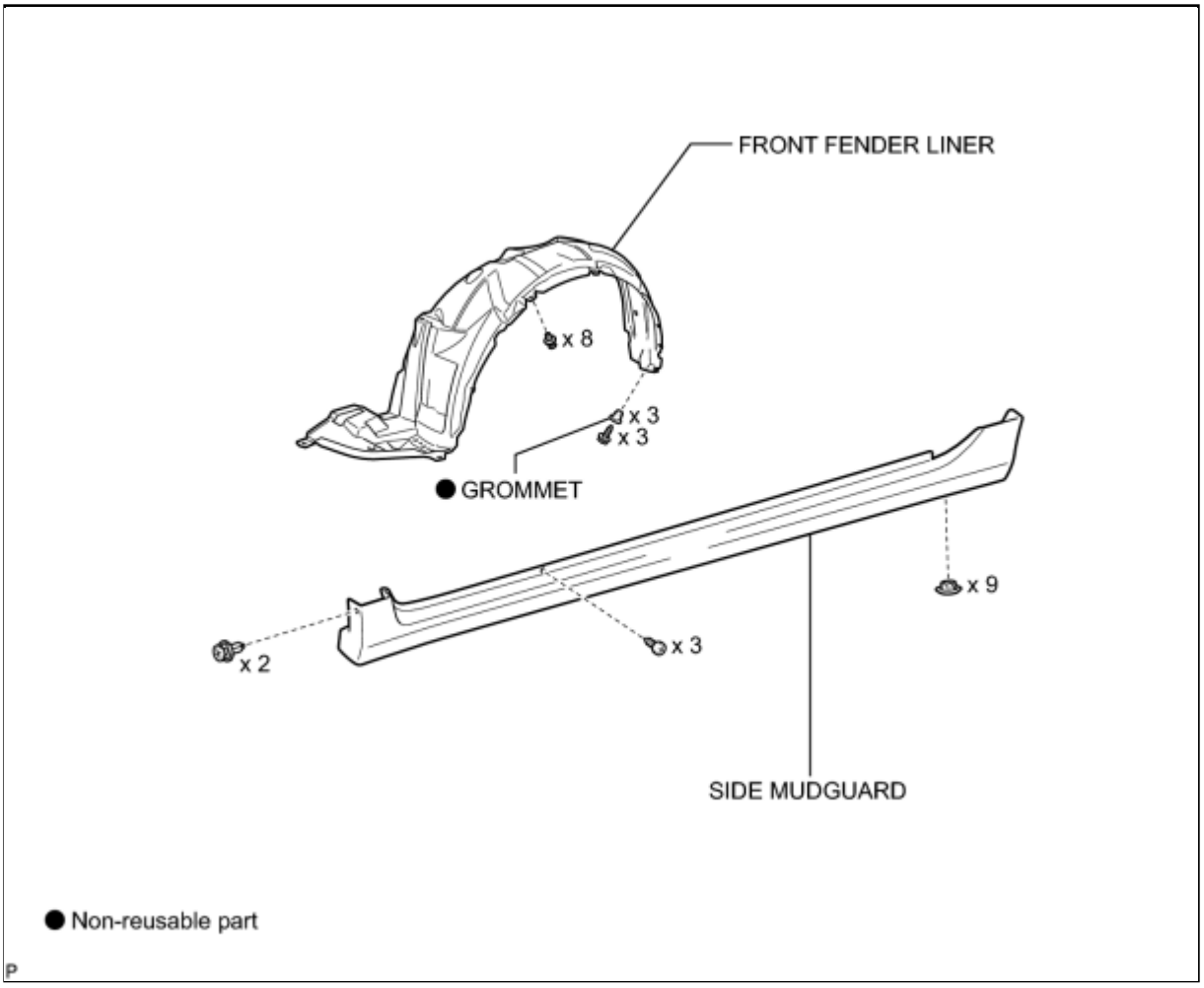

ILLUSTRATION

for TMC Made:

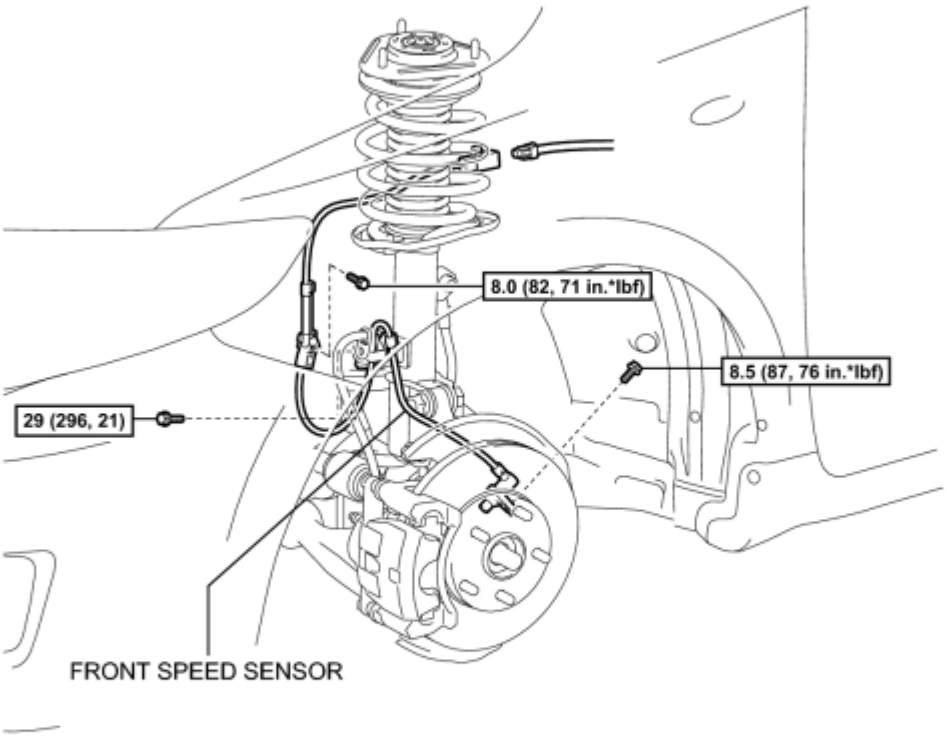

N*m (kgf*cm, ft.*lbf): Specified torque

P

ILLUSTRATION

for NUMMI, TMMC Made:

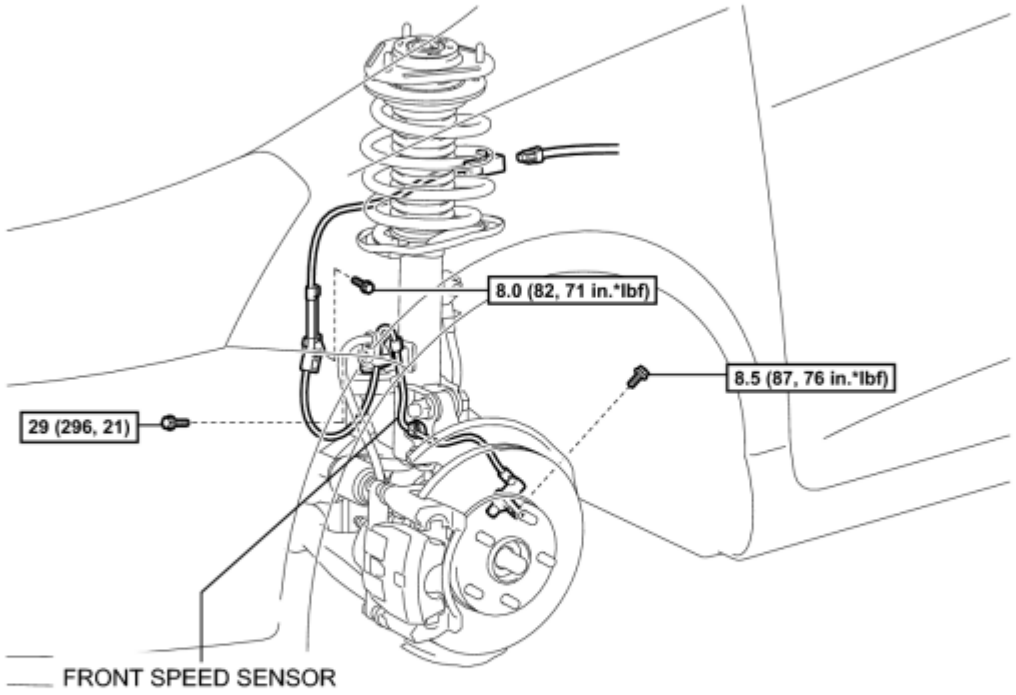

N*m (kgf*cm, ft.*lbf): Specified torque

P

Last Modified: 3-10-2010	6.4 A	**From:** 200901
Model Year: 2010	**Model:** Corolla	**Doc ID:** RM000002VPG00NX
Title: BRAKE CONTROL / DYNAMIC CONTROL SYSTEMS: FRONT SPEED SENSOR: REMOVAL (2010 Corolla)		

REMOVAL

HINT:

- Use the same procedure for the RH side and LH side.
- The following procedure is for the LH side.
- If the sensor rotor needs to be replaced, replace it together with the front drive outboard joint shaft assembly. (for TMC Made)
- If the sensor rotor needs to be replaced, replace it together with the front drive shaft assembly. (for TMMC, NUMMI Made)

1. DISCONNECT CABLE FROM NEGATIVE BATTERY TERMINAL

2. REMOVE FRONT WHEEL

3. REMOVE SIDE MUDGUARD INFO

4. REMOVE FRONT FENDER LINER INFO

5. REMOVE FRONT SPEED SENSOR (for TMMC, NUMMI Made)

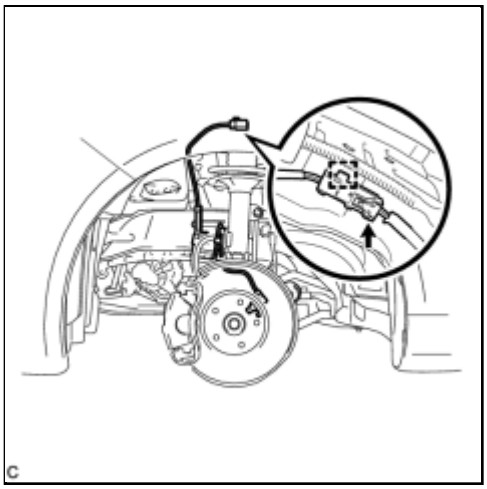

(a) Disconnect the front speed sensor connector.

(b) Remove the front speed sensor wire harness clamp from the body.

(c) Remove the bolt and the No. 2 sensor clamp from the body.

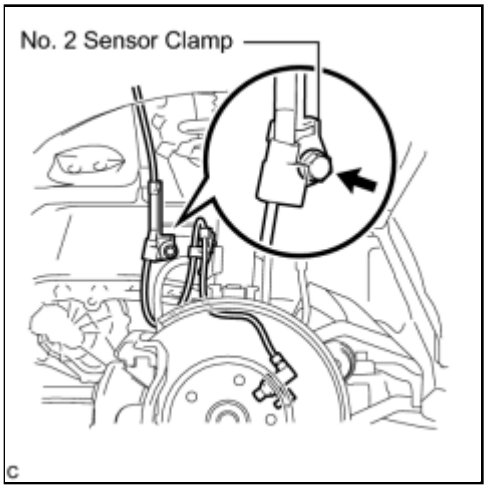

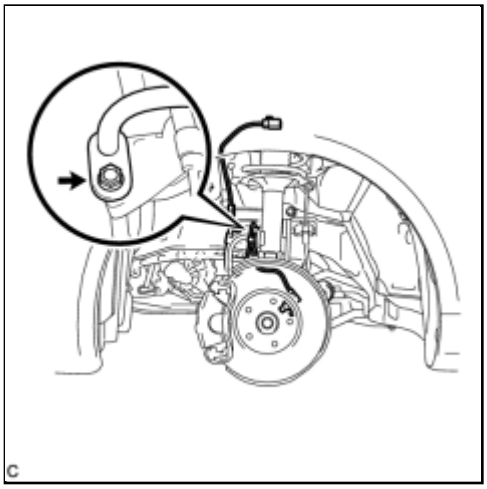

(d) Remove the bolt and separate the brake flexible hose.

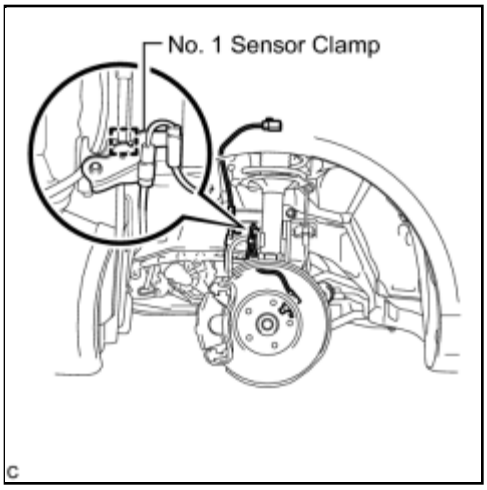

(e) Remove the No. 1 sensor clamp from the shock absorber.

(f) Remove the clamp from the shock absorber.

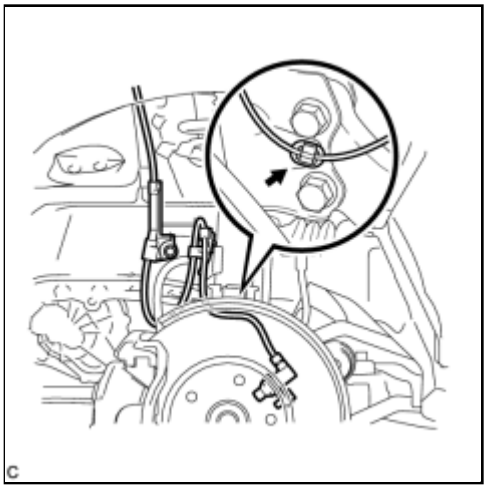

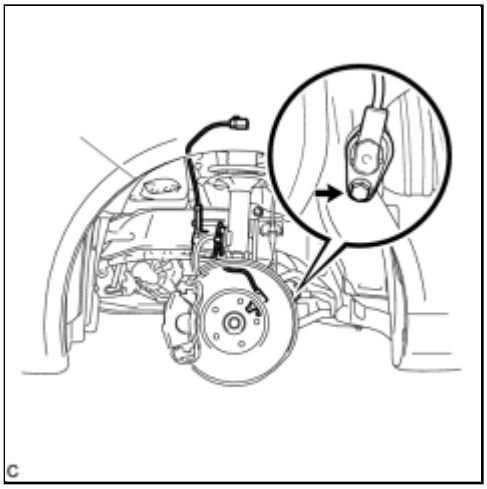

(g) Remove the bolt and the front speed sensor.

NOTICE:

- Prevent foreign matter from attaching to the sensor tip.
- Clean the installation hole and the surface for the front speed sensor every time the front speed sensor is removed.

6. REMOVE FRONT SPEED SENSOR (for TMC Made)

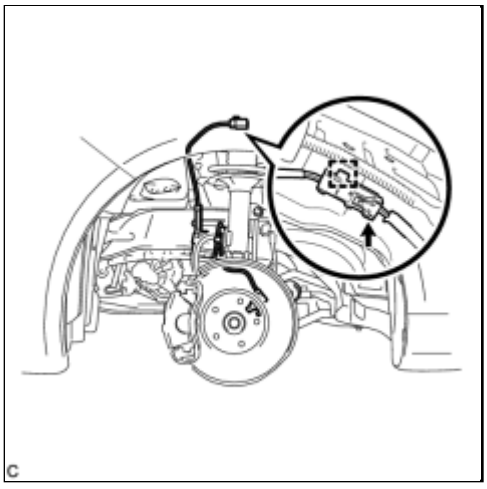

(a) Disconnect the front speed sensor connector.

(b) Remove the front speed sensor wire harness clamp from the body.

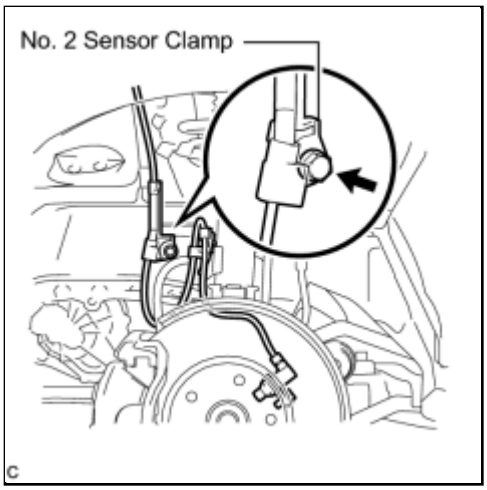

(c) Remove the bolt and the No. 2 sensor clamp from the body.

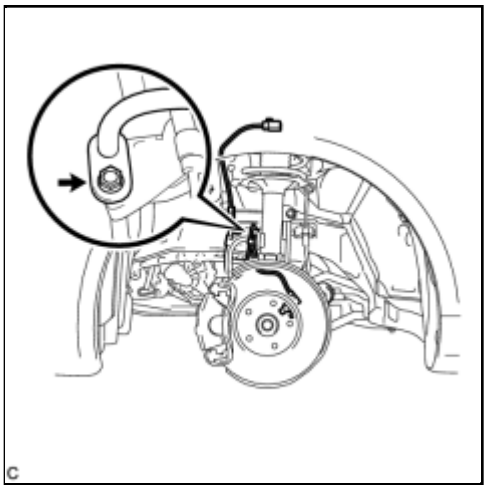

(d) Remove the bolt and separate the brake flexible hose.

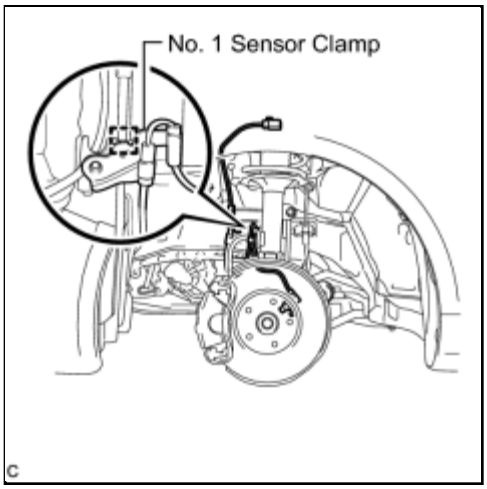

(e) Remove the No. 1 sensor clamp from the shock absorber.

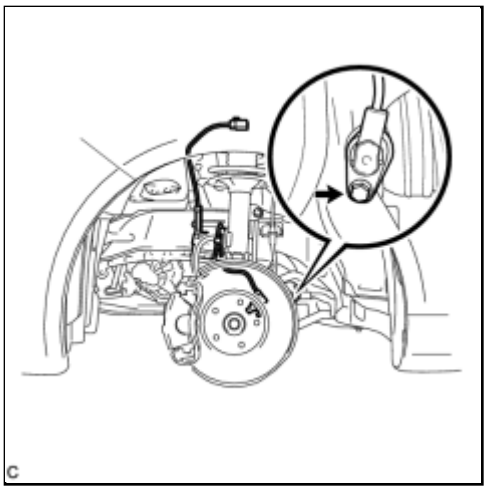

(f) Remove the bolt and the front speed sensor.

NOTICE:

- Prevent foreign matter from attaching to the sensor tip.
- Clean the installation hole and the surface for the front speed sensor every time the front speed sensor is removed.

Last Modified: 3-10-2010	6.4 A	**From:** 200901
Model Year: 2010	**Model:** Corolla	**Doc ID:** RM000002VPD00PX
Title: BRAKE CONTROL / DYNAMIC CONTROL SYSTEMS: FRONT SPEED SENSOR: INSTALLATION (2010 Corolla)		

INSTALLATION

HINT:

- Use the same procedure for the LH side and RH side.
- The following procedure is for the LH side.
- If the sensor rotor needs to be replaced, replace it together with the front drive outboard joint shaft assembly. (for TMC Made)
- If the sensor rotor needs to be replaced, replace it together with the front drive shaft assembly. (for TMMC, NUMMI Made)

1. INSTALL FRONT SPEED SENSOR (for TMC Made)

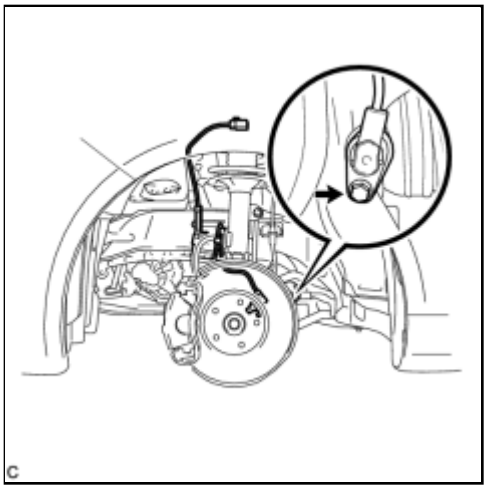

(a) Install the front speed sensor with the bolt.

Torque: 8.5 N·m (87 kgf·cm, 76in·lbf)

NOTICE:

- Prevent foreign matter from attaching to the sensor tip.
- Do not file the sensor installation hole or surface because the gap between the magnet rotor and front speed sensor is important.

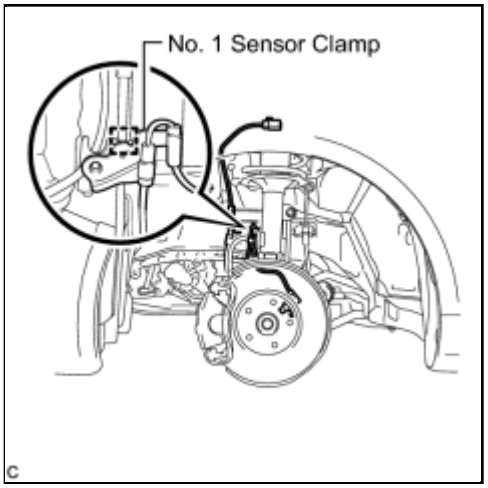

(b) Temporarily install the No. 1 sensor clamp to the shock absorber.

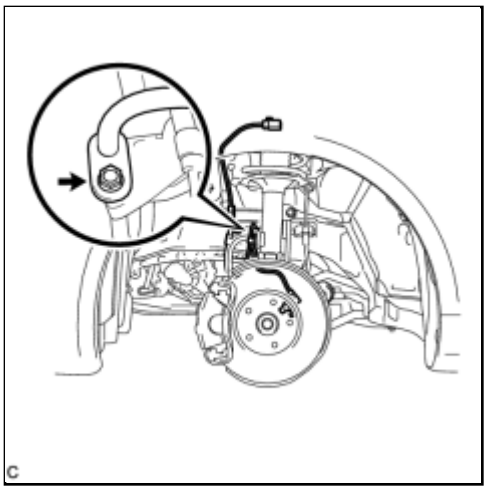

(c) Install the brake flexible hose with the bolt.

Torque: 29 N·m (296 kgf·cm, 21ft·lbf)

NOTICE:

- Do not twist the front speed sensor wire harness during installation.
- Tighten the brake flexible hose and front speed sensor together with the bolt. Make sure that the front speed sensor is positioned over the flexible hose.

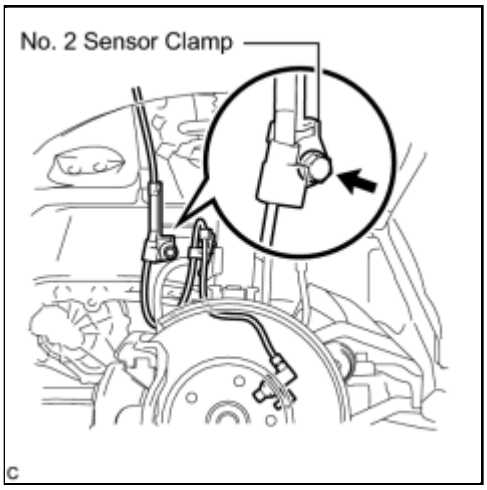

(d) Install the No. 2 sensor clamp to the body with the bolt.

Torque: 8.0 N·m (82 kgf·cm, 71in·lbf)

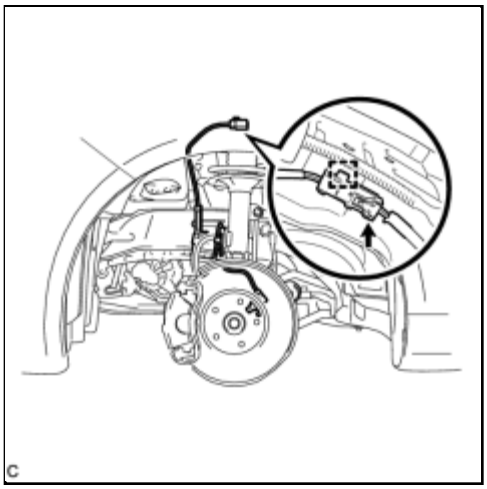

(e) Install the front speed sensor wire harness clamp.

(f) Connect the speed sensor connector.

2. INSTALL FRONT SPEED SENSOR (for TMMC, NUMMI Made)

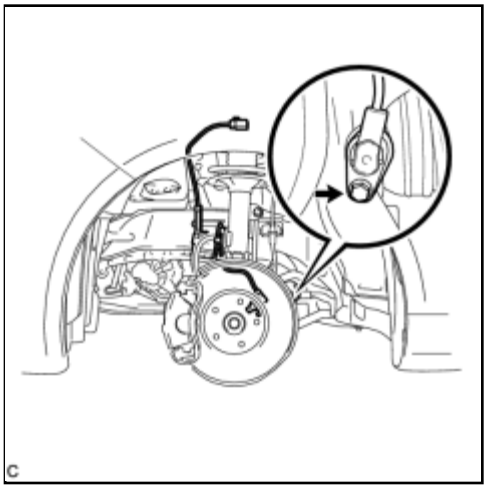

(a) Install the front speed sensor with the bolt.

Torque: 8.5 N·m (87 kgf·cm, 76in·lbf)

NOTICE:

- Prevent foreign matter from attaching to the sensor tip.
- Do not file the sensor installation hole or surface because the gap between the magnet rotor and front speed sensor is important.

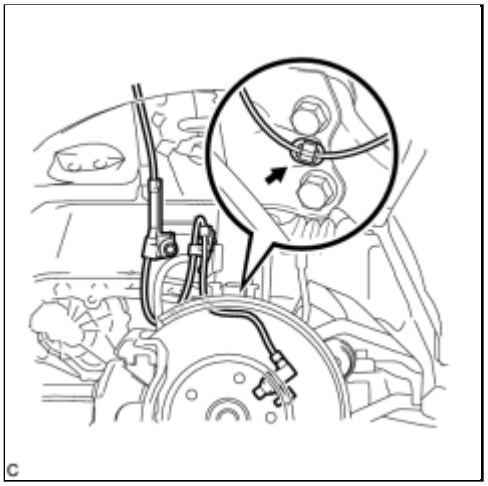

(b) Install with the clamp to the shock absorber.

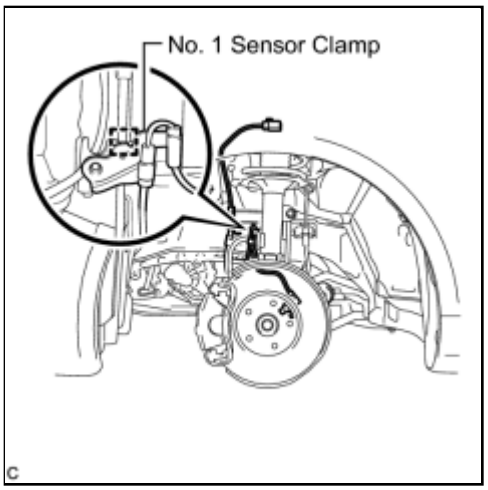

(c) Temporarily install the No. 1 sensor clamp to the shock absorber.

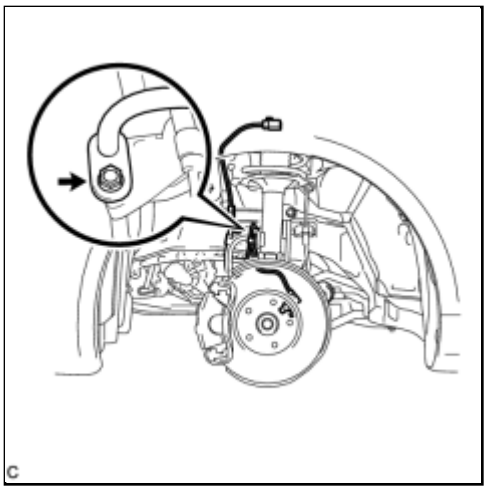

(d) Install the brake flexible hose with the bolt.

Torque: 29 N·m (296 kgf·cm, 21ft·lbf)

NOTICE:

- Do not twist the front speed sensor wire harness during installation.
- Tighten the brake flexible hose and front speed sensor together with the bolt. Make sure that the front speed sensor is positioned over the flexible hose.

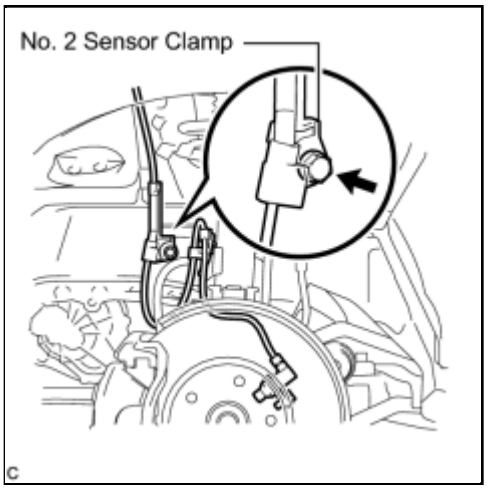

(e) Install the No. 2 sensor clamp to the body with the bolt.

Torque: 8.0 N·m (82 kgf·cm, 71in·lbf)

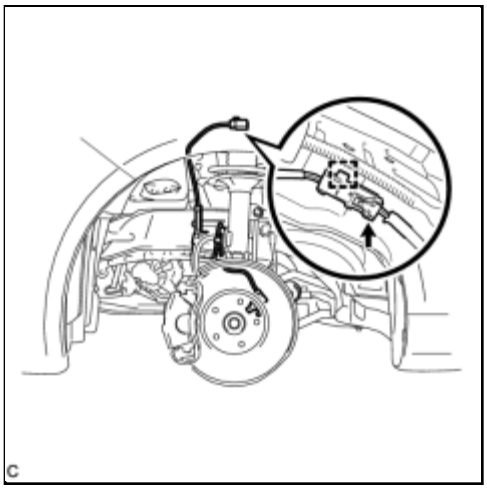

(f) Install the front speed sensor wire harness clamp.

(g) Connect the speed sensor connector.

3. INSTALL FRONT FENDER LINER INFO

4. INSTALL SIDE MUDGUARD INFO

5. INSTALL FRONT WHEEL

Torque: 103 N·m (1050 kgf·cm, 76ft·lbf)

6. CONNECT CABLE TO NEGATIVE BATTERY TERMINAL

7. CHECK FOR SPEED SENSOR SIGNAL

HINT:

- without VSC INFO
- with VSC INFO

Last Modified: 3-10-2010	6.4 K	**From:** 200901
Model Year: 2010	**Model:** Corolla	**Doc ID:** RM000003FA1004X
Title: BRAKE CONTROL / DYNAMIC CONTROL SYSTEMS: REAR SPEED SENSOR: COMPONENTS (2010 Corolla)		

COMPONENTS

ILLUSTRATION

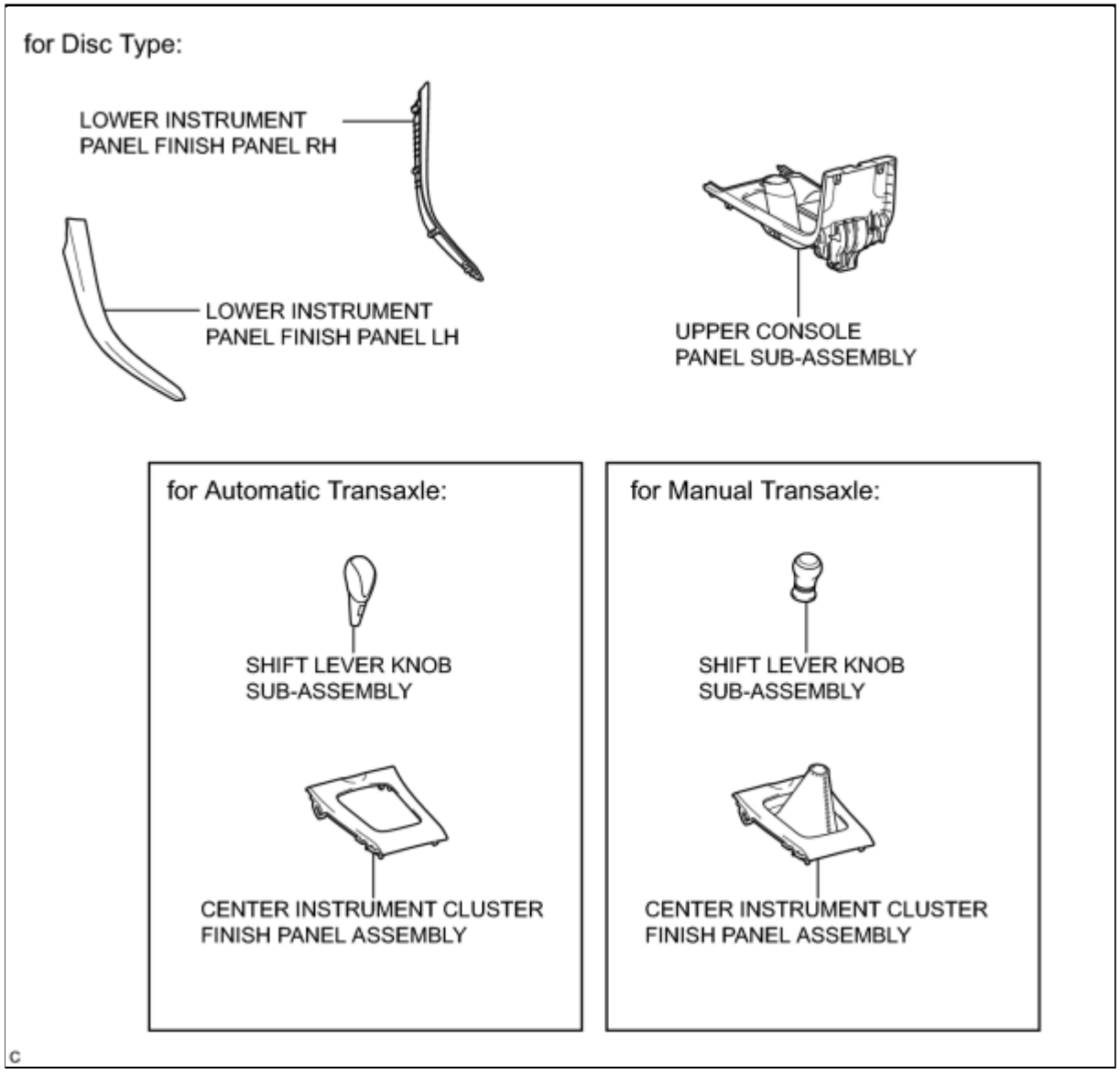

ILLUSTRATION

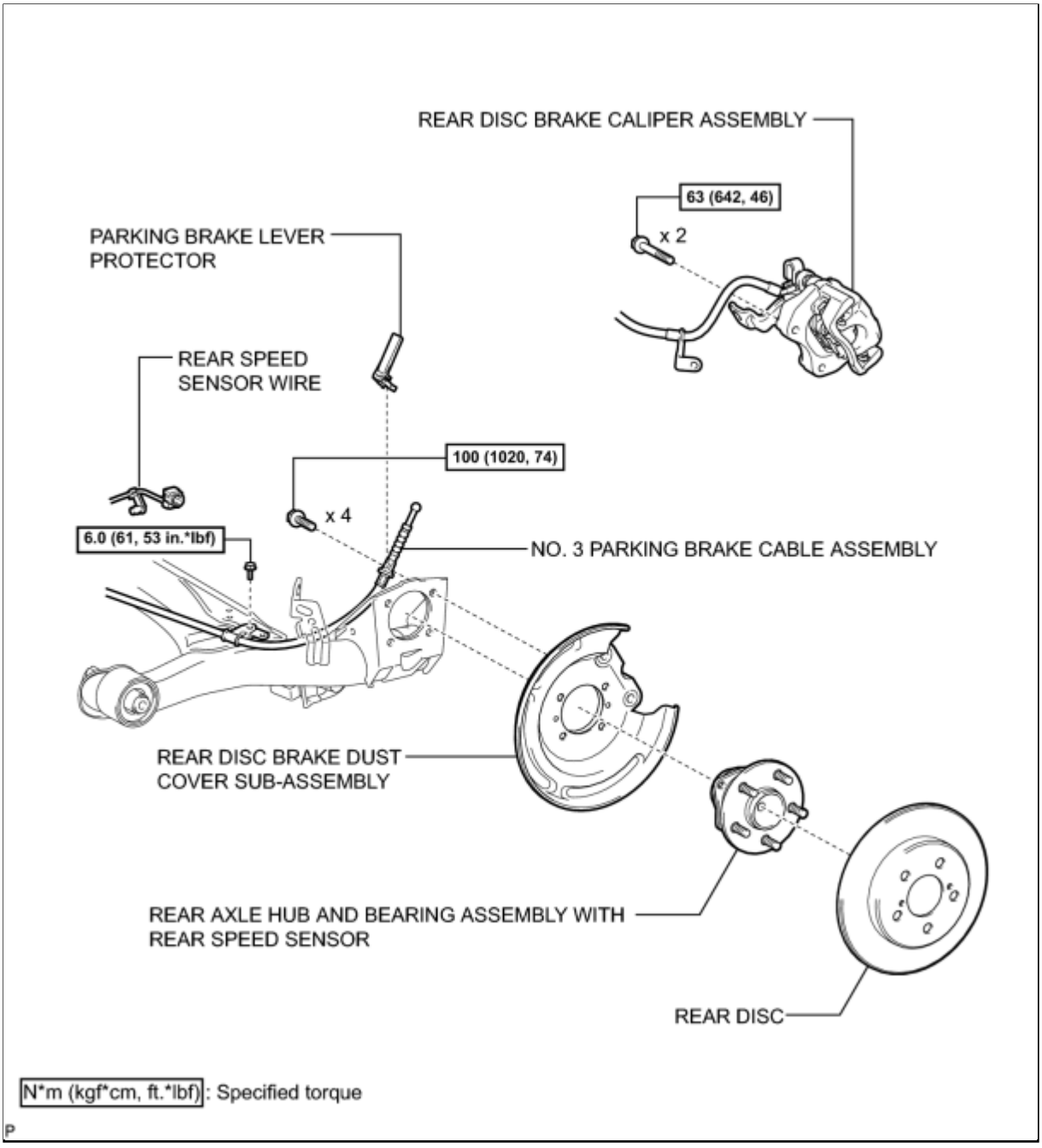

ILLUSTRATION

for Drum Type:

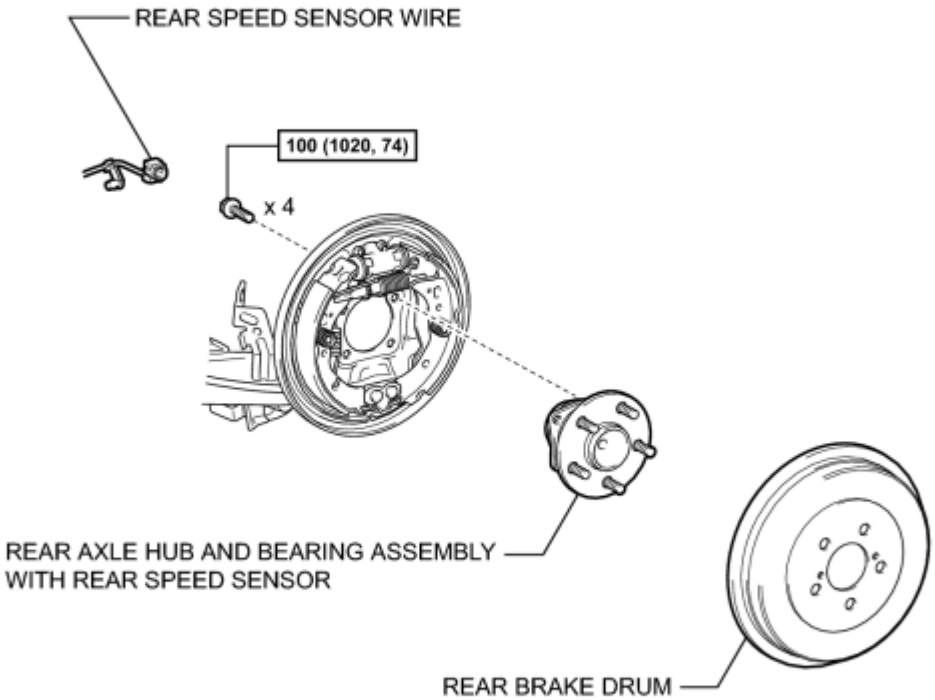

N*m (kgf*cm, ft.*lbf): Specified torque

Last Modified: 3-10-2010	6.4 A	**From:** 200901
Model Year: 2010	**Model:** Corolla	**Doc ID:** RM000002VPC00UX
Title: BRAKE CONTROL / DYNAMIC CONTROL SYSTEMS: REAR SPEED SENSOR: REMOVAL (2010 Corolla)		

REMOVAL

HINT:

- Use the same procedure for the RH side and LH side.
- The procedure listed below is for the LH side.
- If the sensor rotor needs to be replaced, replace it together with the rear axle hub and bearing assembly with rear speed sensor.
- The rear speed sensor is a component of the rear axle hub and bearing assembly with rear speed sensor. If the sensor needs to be replaced, replace the rear axle hub and bearing assembly with rear speed sensor.

1. DISCONNECT CABLE FROM NEGATIVE BATTERY TERMINAL

2. REMOVE LOWER INSTRUMENT PANEL FINISH PANEL LH (for Disc Type) INFO

3. REMOVE LOWER INSTRUMENT PANEL FINISH PANEL RH (for Disc Type) INFO

4. REMOVE SHIFT LEVER KNOB SUB-ASSEMBLY (for Disc Type) INFO

5. REMOVE CENTER INSTRUMENT CLUSTER FINISH PANEL ASSEMBLY (for Disc Type) INFO

6. REMOVE UPPER CONSOLE PANEL SUB-ASSEMBLY (for Disc Type) INFO

7. REMOVE REAR WHEEL

8. LOOSEN PARKING BRAKE CABLE (for Disc Type) INFO

9. DISCONNECT REAR SPEED SENSOR WIRE (for Drum Type)

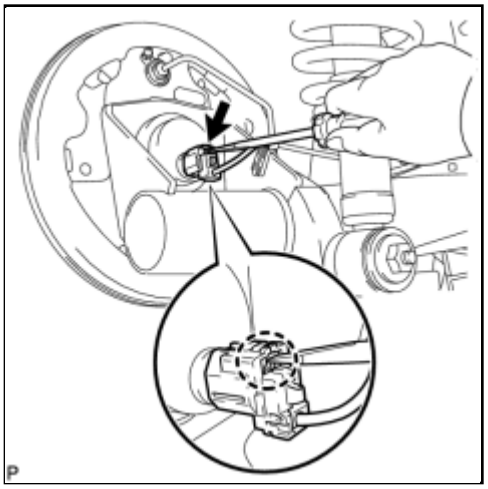

(a) Using a screwdriver, disconnect the connector from the rear speed sensor.

NOTICE:

Be careful not to damage the rear speed sensor.

10. DISCONNECT REAR SPEED SENSOR WIRE (for Disc Type)

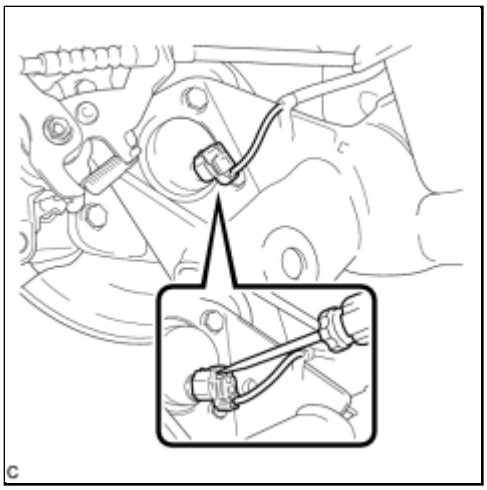

(a) Using a screwdriver, disconnect the connector from the rear speed sensor.

NOTICE:

Be careful not to damage the rear speed sensor.

11. REMOVE PARKING BRAKE LEVER PROTECTOR INFO

12. SEPARATE NO. 3 PARKING BRAKE CABLE ASSEMBLY (for Disc Type) INFO

13. SEPARATE REAR DISC BRAKE CALIPER ASSEMBLY (for Disc Type) INFO

14. REMOVE REAR DISC (for Disc Type) INFO

15. REMOVE REAR BRAKE DRUM (for Drum Type) INFO

16. REMOVE REAR AXLE HUB AND BEARING ASSEMBLY WITH REAR SPEED SENSOR (for Drum Type)

(a) Remove the rear axle hub and bearing assembly with rear speed sensor INFO .

HINT:

- The rear speed sensor is a component of the rear axle hub and bearing assembly with rear speed sensor. If the sensor needs to be replaced, replace the rear axle hub and bearing assembly with rear speed sensor.
- If the sensor rotor needs to be replaced, replace it together with the rear axle hub and bearing assembly with rear speed sensor.

17. REMOVE REAR AXLE HUB AND BEARING ASSEMBLY WITH REAR SPEED SENSOR (for Disc Type)

(a) Remove the rear axle hub and bearing assembly with rear speed sensor INFO .

HINT:

- The rear speed sensor is a component of the rear axle hub and bearing assembly with rear speed sensor. If the sensor needs to be replaced, replace the rear axle hub and bearing assembly with rear speed sensor.
- If the sensor rotor needs to be replaced, replace it together with the rear axle hub and bearing assembly with rear speed sensor.

Last Modified: 3-10-2010	6.4 A	**From:** 200901
Model Year: 2010	**Model:** Corolla	**Doc ID:** RM000002VP900UX
Title: BRAKE CONTROL / DYNAMIC CONTROL SYSTEMS: REAR SPEED SENSOR: INSTALLATION (2010 Corolla)		

INSTALLATION

HINT:

- Use the same procedure for the RH side and LH side.
- The procedure listed below is for the LH side.
- If the sensor rotor needs to be replaced, replace it together with the rear axle hub and bearing assembly with rear speed sensor.
- The rear speed sensor is a component of the rear axle hub and bearing assembly with rear speed sensor. If the sensor needs to be replaced, replace the rear axle hub and bearing assembly with rear speed sensor.

1. INSTALL REAR AXLE HUB AND BEARING ASSEMBLY WITH REAR SPEED SENSOR (for Drum Type)

(a) Install the rear axle hub and bearing assembly with rear speed sensor INFO .

HINT:

- The rear speed sensor is a component of the rear axle hub and bearing assembly with rear speed sensor. If the sensor needs to be replaced, replace the rear axle hub and bearing assembly with rear speed sensor.
- If the sensor rotor needs to be replaced, replace it together with the rear axle hub and bearing assembly with rear speed sensor.

2. INSTALL REAR AXLE HUB AND BEARING ASSEMBLY WITH REAR SPEED SENSOR (for Disc Type)

(a) Install the rear axle hub and bearing assembly with rear speed sensor INFO .

HINT:

- The rear speed sensor is a component of the rear axle hub and bearing assembly with rear speed sensor. If the sensor needs to be replaced, replace the rear axle hub and bearing assembly with rear speed sensor.
- If the sensor rotor needs to be replaced, replace it together with the rear axle hub and bearing assembly with rear speed sensor.

3. INSPECT REAR AXLE HUB BEARING LOOSENESS (for Disc Type) INFO

4. INSPECT REAR AXLE HUB RUNOUT (for Disc Type) INFO

5. INSPECT REAR AXLE HUB BEARING LOOSENESS (for Drum Type) INFO

6. INSPECT REAR AXLE HUB RUNOUT (for Drum Type) INFO

7. INSTALL REAR BRAKE DRUM (for Drum Type) INFO

8. ADJUST REAR BRAKE SHOE INFO

9. INSTALL REAR DISC (for Disc Type) INFO

10. INSTALL REAR DISC BRAKE CALIPER ASSEMBLY (for Disc Type) INFO

11. CONNECT NO. 3 PARKING BRAKE CABLE ASSEMBLY (for Disc Type) INFO

12. INSTALL PARKING BRAKE LEVER PROTECTOR (for Disc Type) INFO

13. CONNECT REAR SPEED SENSOR WIRE (for Disc Type)

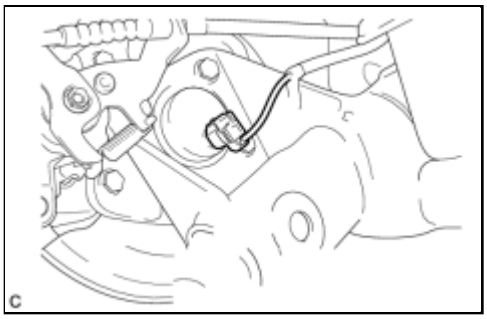

(a) Connect the rear speed sensor wire connector to the rear speed sensor.

14. CONNECT REAR SPEED SENSOR WIRE (for Drum Type)

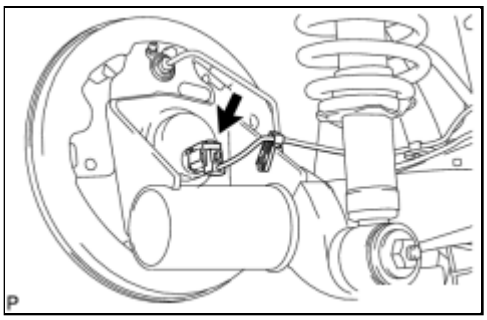

(a) Connect the rear speed sensor wire connector to the rear speed sensor.

15. ADJUST PARKING BRAKE LEVER TRAVEL (for Disc Type) INFO

16. INSPECT REAR DISC BRAKE CYLINDER OPERATION LEVER AND STOPPER CLEARANCE (for Disc Type) INFO

17. INSTALL UPPER CONSOLE PANEL SUB-ASSEMBLY (for Disc Type) INFO

18. INSTALL CENTER INSTRUMENT CLUSTER FINISH PANEL ASSEMBLY (for Disc Type) INFO

19. INSTALL SHIFT LEVER KNOB SUB-ASSEMBLY (for Disc Type) INFO

20. INSTALL LOWER INSTRUMENT PANEL FINISH PANEL LH (for Disc Type) INFO

21. INSTALL LOWER INSTRUMENT PANEL FINISH PANEL RH (for Disc Type) INFO

22. INSTALL REAR WHEEL

Torque: 103 N·m (1050 kgf·cm, 76ft·lbf)

23. CONNECT CABLE TO NEGATIVE BATTERY TERMINAL

24. INSPECT REAR WHEEL ALIGNMENT

INFO

25. CHECK FOR SPEED SENSOR SIGNAL

without VSC INFO

with VSC INFO

Last Modified: 3-10-2010	6.4 K	**From:** 200901
Model Year: 2010	**Model:** Corolla	**Doc ID:** RM000002WLR00LX
Title: BRAKE SYSTEM (OTHER): BRAKE BOOSTER: COMPONENTS (2010 Corolla)		

COMPONENTS

ILLUSTRATION

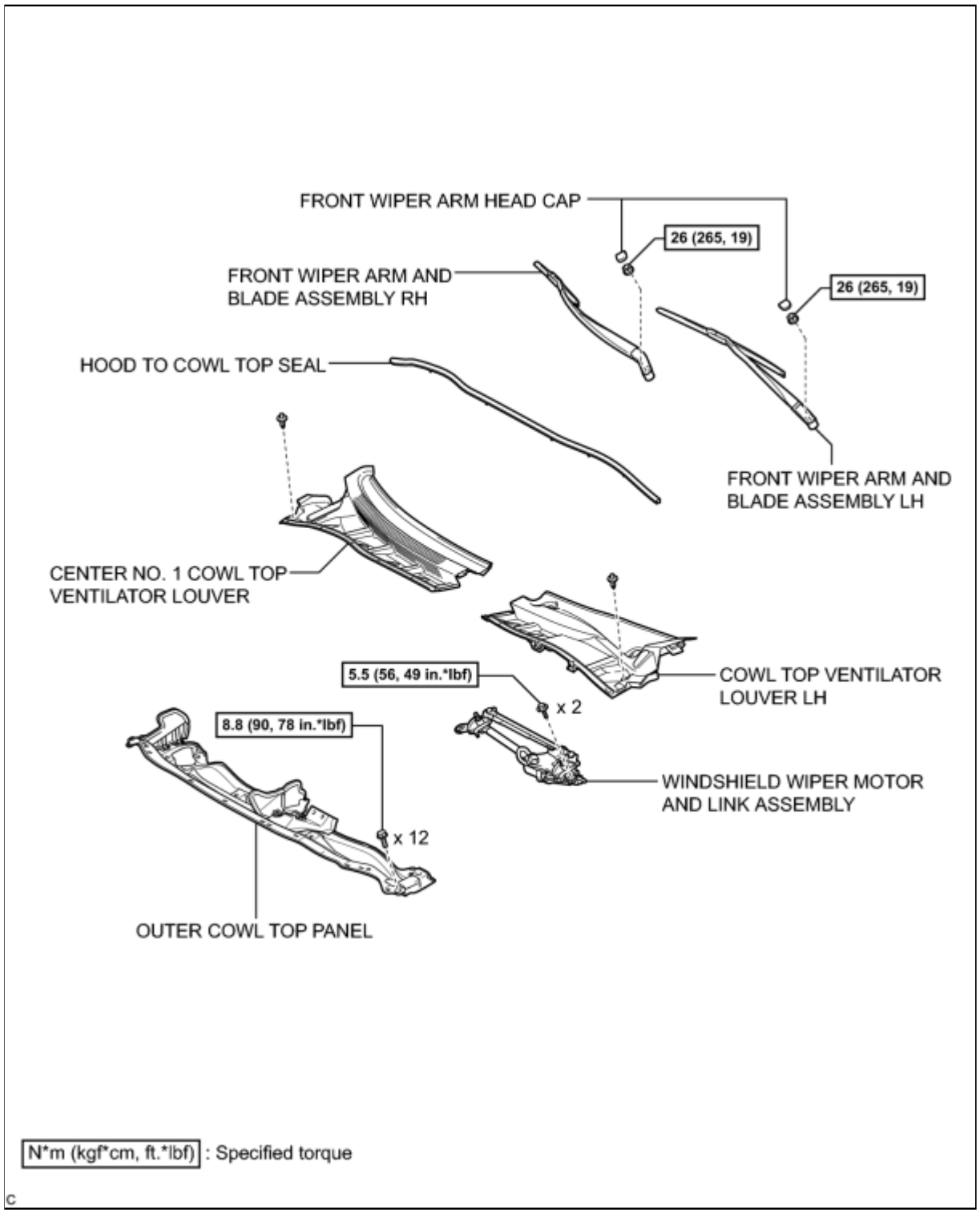

ILLUSTRATION

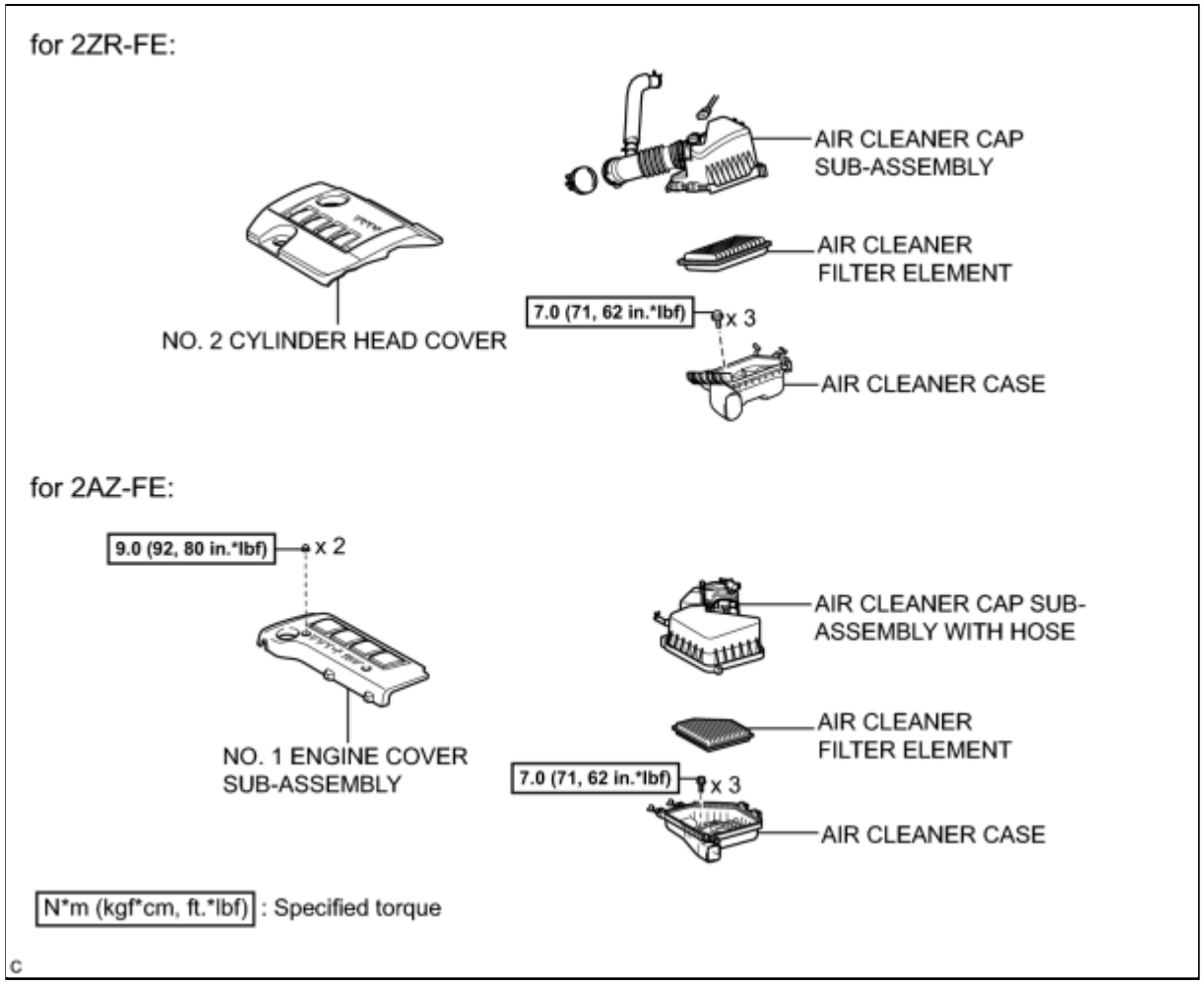

ILLUSTRATION

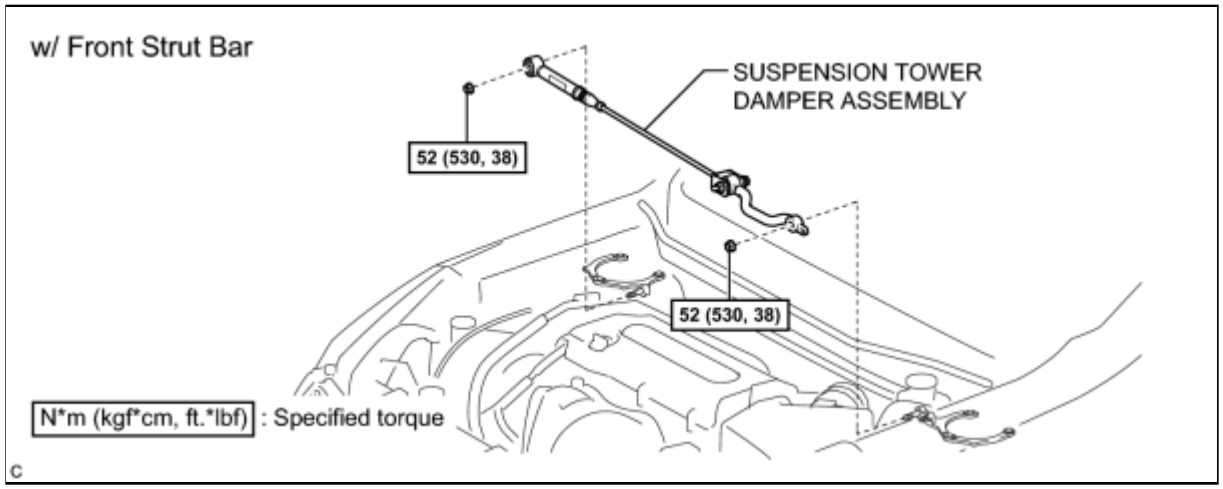

ILLUSTRATION

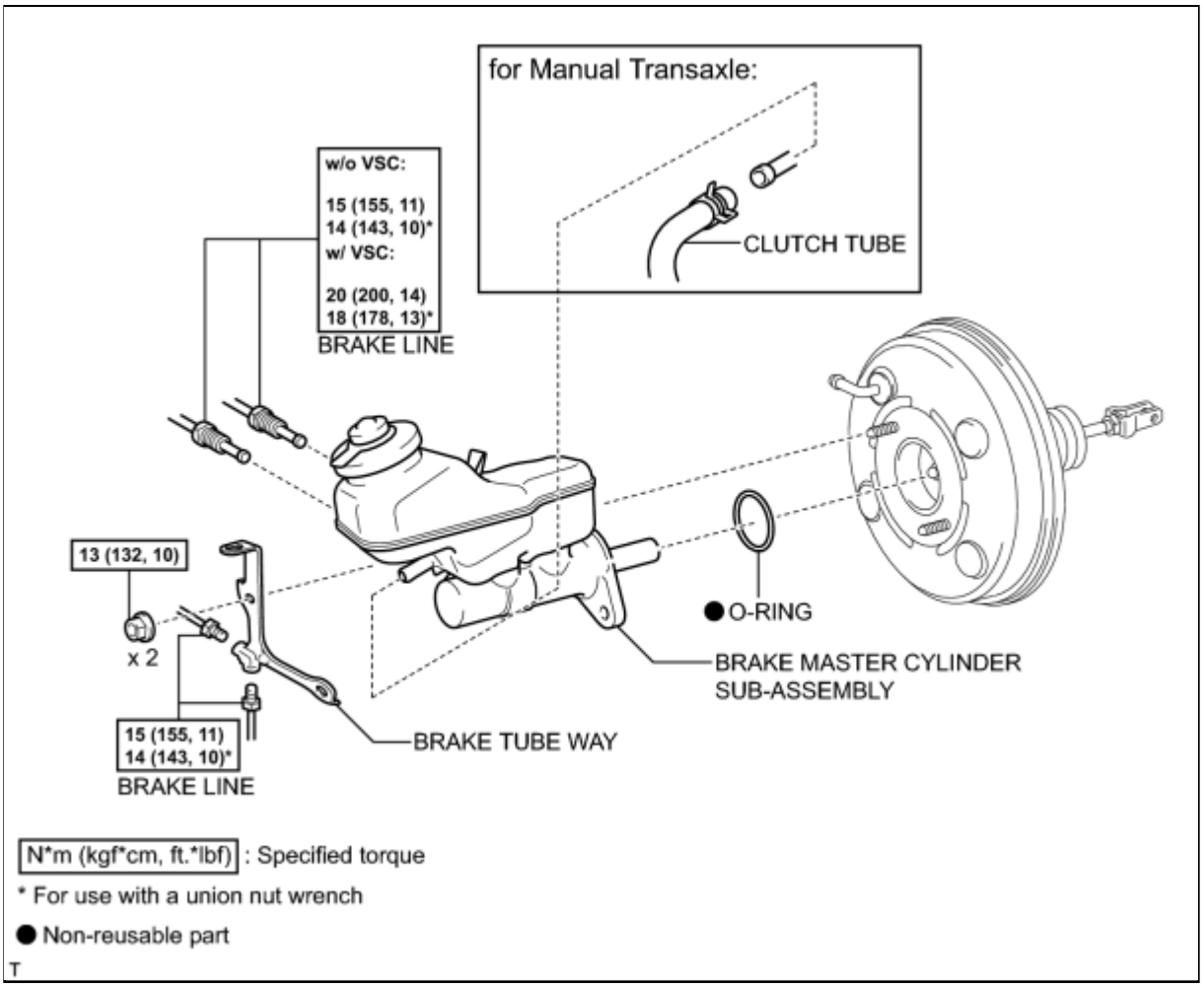

ILLUSTRATION

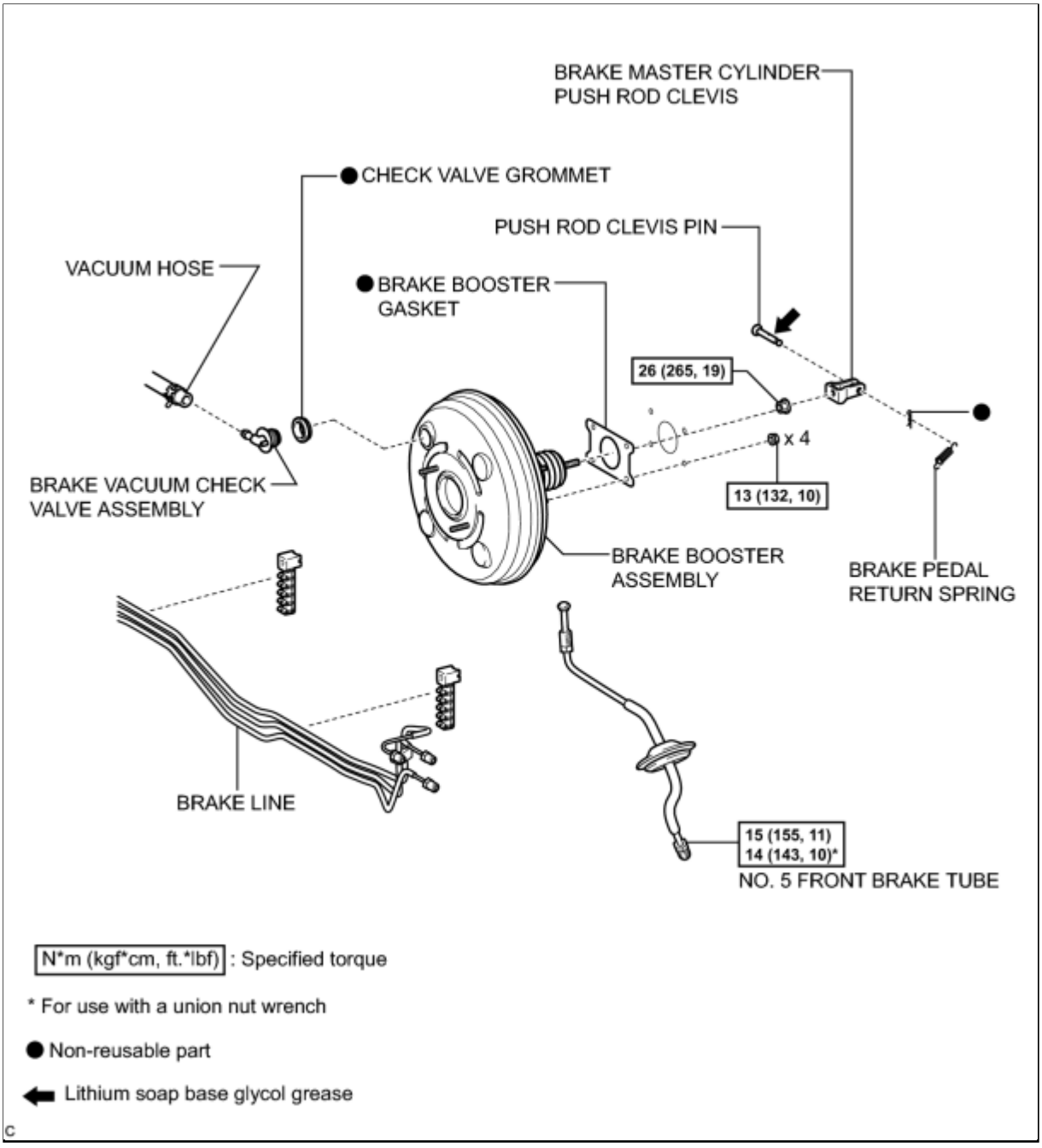
BRAKE MASTER CYLINDER
PUSH ROD CLEVIS
CHECK VALVE GROMMET
PUSH ROD CLEVIS PIN
VACUUM HOSE
BRAKE BOOSTER
GASKET
26 (265, 19)
x 4
13 (132, 10)
BRAKE VACUUM CHECK
VALVE ASSEMBLY
BRAKE BOOSTER
ASSEMBLY
BRAKE PEDAL
RETURN SPRING
BRAKE LINE
15 (155, 11)
14 (143, 10)*
NO. 5 FRONT BRAKE TUBE
N*m (kgf*cm, ft.*lbf) : Specified torque
* For use with a union nut wrench
Non-reusable part
Lithium soap base glycol grease

C

Last Modified: 3-10-2010	6.4 G	**From:** 200901
Model Year: 2010	**Model:** Corolla	**Doc ID:** RM000002WLT013X
Title: BRAKE SYSTEM (OTHER): BRAKE BOOSTER: ON-VEHICLE INSPECTION (2010 Corolla)		

ON-VEHICLE INSPECTION

1. INSPECT BRAKE BOOSTER ASSEMBLY

(a) Airtightness check

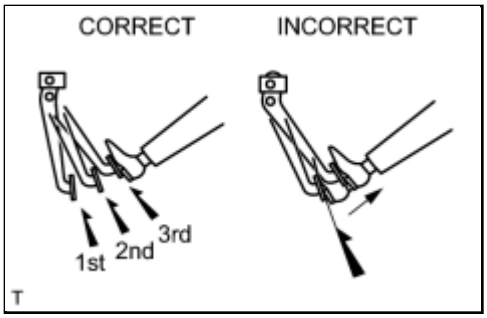

(1) Start the engine and stop it after 1 or 2 minutes. Slowly depress the brake pedal several times.

HINT:

If the pedal can be depressed to the floor the first time, but on the 2nd and 3rd times cannot be depressed as far, the booster is airtight.

(2) Depress the brake pedal while the engine is running, and stop the engine with the brake pedal depressed.

HINT:

If there is no change in the pedal reserve distance while holding the pedal for 30 seconds, the booster is airtight.

(b) Operation check

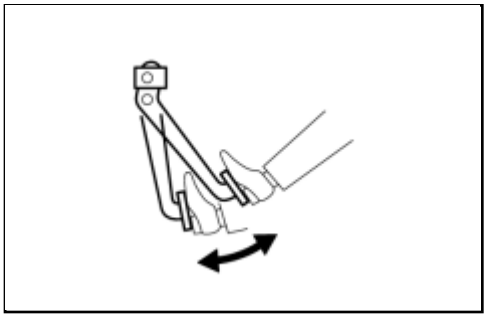

(1) Depress the brake pedal several times with the ignition switch off and check that there is no change in the pedal reserve distance when the pedal is depressed.

(2) Depress and hold down the pedal, and start the engine.

HINT:

If the pedal goes down slightly, operation is normal.

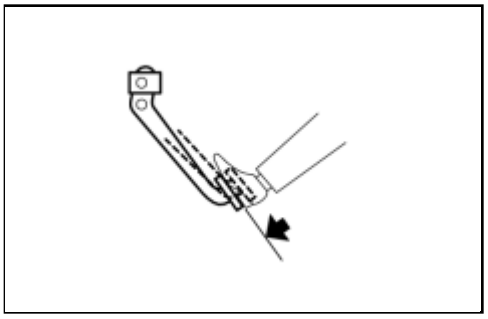

Last Modified: 3-10-2010	6.4 A	**From:** 200901
Model Year: 2010	**Model:** Corolla	**Doc ID:** RM000002WLS012X
Title: BRAKE SYSTEM (OTHER): BRAKE BOOSTER: REMOVAL (2010 Corolla)		

REMOVAL

NOTICE:

Make sure to release the vacuum from the brake booster before removing the master cylinder from the brake booster.

1. REMOVE NO. 2 CYLINDER HEAD COVER (for 2ZR-FE) INFO

2. REMOVE AIR CLEANER CAP SUB-ASSEMBLY (for 2ZR-FE) INFO

3. REMOVE AIR CLEANER CASE (for 2ZR-FE) INFO

4. REMOVE NO. 1 ENGINE COVER SUB-ASSEMBLY (for 2AZ-FE) INFO

5. REMOVE AIR CLEANER CAP SUB-ASSEMBLY WITH HOSE (for 2AZ-FE) INFO

6. REMOVE AIR CLEANER CASE (for 2AZ-FE) INFO

7. REMOVE FRONT WIPER ARM HEAD CAP INFO

8. REMOVE FRONT WIPER ARM AND BLADE ASSEMBLY LH INFO

9. REMOVE FRONT WIPER ARM AND BLADE ASSEMBLY RH INFO

10. REMOVE HOOD TO COWL TOP SEAL INFO

11. REMOVE CENTER NO. 1 COWL TOP VENTILATOR LOUVER INFO

12. REMOVE COWL TOP VENTILATOR LOUVER LH INFO

13. REMOVE WINDSHIELD WIPER MOTOR AND LINK ASSEMBLY INFO

14. REMOVE OUTER COWL TOP PANEL (for TMC Made) INFO

15. REMOVE OUTER COWL TOP PANEL (except TMC Made) INFO

16. REMOVE SUSPENSION TOWER DAMPER ASSEMBLY (w/ Front Strut Bar) INFO

17. DRAIN BRAKE FLUID

18. DISCONNECT CLUTCH TUBE (for Manual Transaxle) INFO

19. REMOVE BRAKE MASTER CYLINDER SUB-ASSEMBLY INFO

20. REMOVE BRAKE PEDAL RETURN SPRING INFO

21. SEPARATE BRAKE MASTER CYLINDER PUSH ROD CLEVIS INFO

22. DISCONNECT VACUUM HOSE

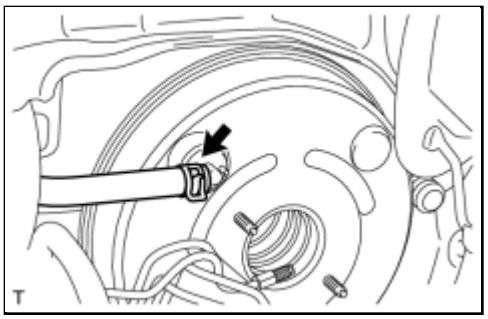

(a) Slide the clip and disconnect the vacuum hose.

23. REMOVE BRAKE VACUUM CHECK VALVE ASSEMBLY

(a) Remove the vacuum check valve assembly from the brake booster assembly.

24. REMOVE CHECK VALVE GROMMET

(a) Remove the check valve grommet from the brake booster assembly.

25. REMOVE NO. 5 FRONT BRAKE TUBE

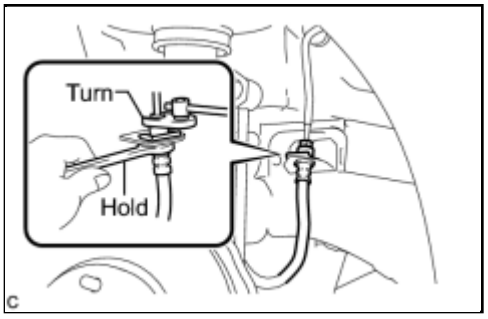

(a) Using a union nut wrench (10 mm), disconnect the No. 5 front brake tube from the front brake flexible hose LH.

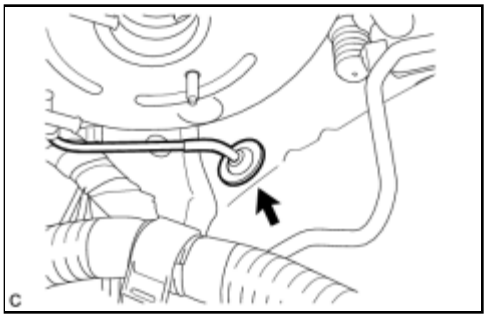

(b) Remove the grommet and No. 5 front brake tube from the body.

26. REMOVE BRAKE BOOSTER ASSEMBLY

(a) Disengage the 2 clamps and separate the brake lines from the body.

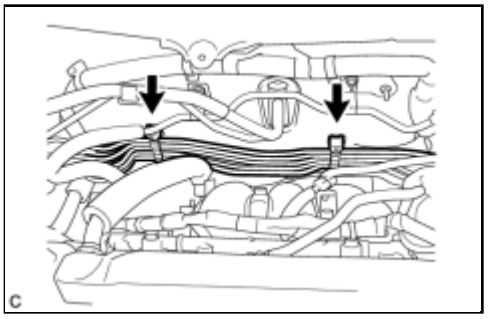

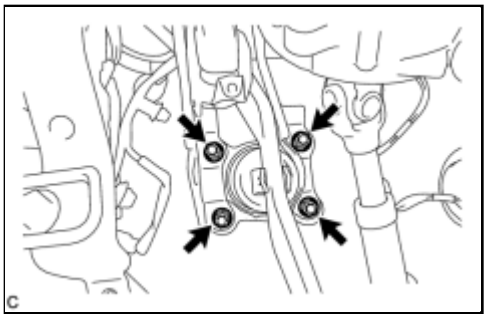

(b) Remove the 4 nuts and brake booster assembly from the body.

NOTICE:

Do not damage the brake lines or fuel lines.

27. REMOVE BRAKE BOOSTER GASKET

(a) Remove the brake booster gasket from the brake booster assembly.

28. REMOVE BRAKE MASTER CYLINDER PUSH ROD CLEVIS

(a) Loosen the lock nut and remove the brake master cylinder push rod clevis and lock nut from the brake booster assembly.

Last Modified: 3-10-2010	6.4 A	**From:** 200901
Model Year: 2010	**Model:** Corolla	**Doc ID:** RM000002WLP012X
Title: BRAKE SYSTEM (OTHER): BRAKE BOOSTER: INSTALLATION (2010 Corolla)		

INSTALLATION

1. TEMPORARILY TIGHTEN BRAKE MASTER CYLINDER PUSH ROD CLEVIS

(a) Install the lock nut and brake master cylinder push rod clevis to the brake booster assembly.

HINT:

Fully tighten the lock nut after adjusting the brake pedal height.

2. INSTALL BRAKE BOOSTER GASKET

(a) Install a new brake booster gasket to the brake booster assembly.

3. INSTALL BRAKE BOOSTER ASSEMBLY

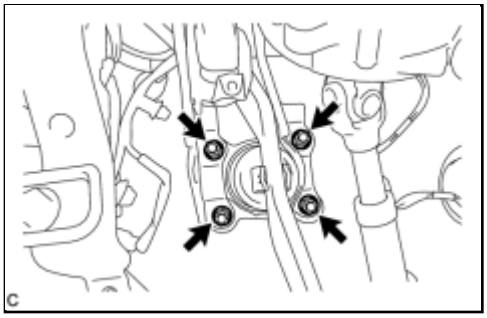

(a) Install the brake booster assembly to the body with the 4 nuts.

Torque: 13 N·m (132 kgf·cm, 10ft·lbf)

NOTICE:

Do not damage the brake lines or fuel lines.

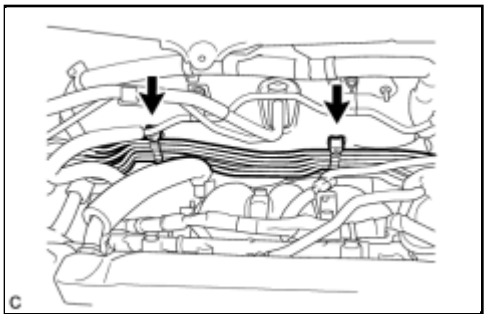

(b) Engage the 2 clamps to install the brake lines to the body.

4. INSTALL NO. 5 FRONT BRAKE TUBE

(a) Install the No. 5 front brake tube to the body and engage the grommet.

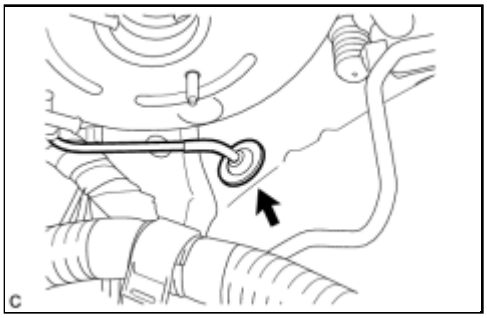

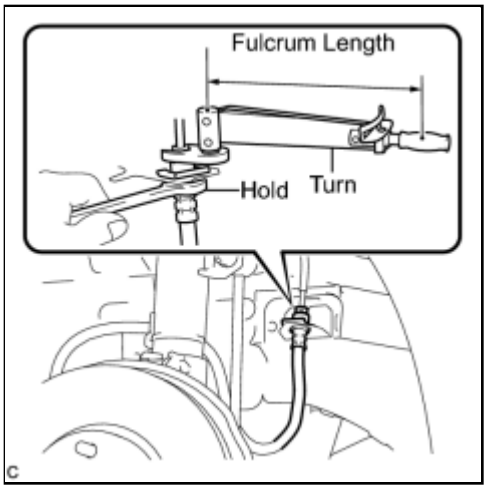

(b) Using a union nut wrench (10 mm), connect the No. 5 front brake tube to the front brake flexible hose LH.

without a union nut wrench - Torque: 15 N·m (155 kgf·cm, 11ft·lbf)

with a union nut wrench - Torque: 14 N·m (143 kgf·cm, 10ft·lbf)

NOTICE:

- Use a torque wrench with a fulcrum length of 250 mm (9.84 in.).
- This torque value is effective when the union nut wrench is parallel to the torque wrench.

5. INSTALL CHECK VALVE GROMMET

(a) Install a new check valve grommet to the brake booster assembly.

6. INSTALL BRAKE VACUUM CHECK VALVE ASSEMBLY

(a) Install the vacuum check valve assembly to the brake booster assembly.

7. CONNECT VACUUM HOSE

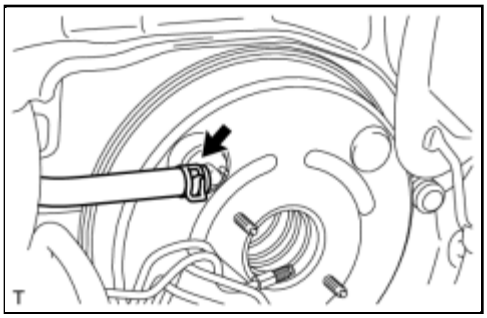

(a) Connect the vacuum hose and slide the clip.

8. CONNECT BRAKE MASTER CYLINDER PUSH ROD CLEVIS INFO

9. INSTALL BRAKE PEDAL RETURN SPRING INFO

10. INSTALL FRONT WHEEL LH

Torque: 103 N·m (1050 kgf·cm, 76ft·lbf)

11. INSTALL BRAKE MASTER CYLINDER SUB-ASSEMBLY INFO

12. CONNECT CLUTCH TUBE (for Manual Transaxle) INFO

13. FILL RESERVOIR WITH BRAKE FLUID INFO

14. BLEED CLUTCH LINE

15. BLEED BRAKE MASTER CYLINDER INFO

16. BLEED BRAKE LINE INFO

17. BLEED BRAKE ACTUATOR (w/ VSC) INFO

18. INSPECT FOR BRAKE FLUID LEAK

19. INSPECT FLUID LEVEL INFO

20. INSPECT AND ADJUST BRAKE PEDAL HEIGHT INFO

21. INSPECT BRAKE PEDAL FREE PLAY INFO

22. INSPECT BRAKE PEDAL RESERVE DISTANCE INFO

23. INSTALL SUSPENSION TOWER DAMPER ASSEMBLY (w/ Front Strut Bar) INFO

24. INSTALL OUTER COWL TOP PANEL (for TMC Made) INFO

25. INSTALL OUTER COWL TOP PANEL (except TMC Made) INFO

26. INSTALL WINDSHIELD WIPER MOTOR AND LINK ASSEMBLY INFO

27. INSTALL COWL TOP VENTILATOR LOUVER LH INFO

28. INSTALL CENTER NO. 1 COWL TOP VENTILATOR LOUVER INFO

29. INSTALL HOOD TO COWL TOP SEAL INFO

30. INSTALL FRONT WIPER ARM AND BLADE ASSEMBLY RH INFO

31. INSTALL FRONT WIPER ARM AND BLADE ASSEMBLY LH INFO

32. INSTALL FRONT WIPER ARM HEAD CAP INFO

33. INSTALL AIR CLEANER CASE (for 2ZR-FE) INFO

34. INSTALL AIR CLEANER CAP SUB-ASSEMBLY (for 2ZR-FE) INFO

35. INSTALL NO. 2 CYLINDER HEAD COVER (for 2ZR-FE) INFO

36. INSTALL AIR CLEANER CASE (for 2AZ-FE) INFO

37. INSTALL AIR CLEANER CAP SUB-ASSEMBLY WITH HOSE (for 2AZ-FE) INFO

38. INSTALL NO. 1 ENGINE COVER SUB-ASSEMBLY (for 2AZ-FE) INFO

Last Modified: 3-10-2010	6.4 G	**From:** 200901
Model Year: 2010	**Model:** Corolla	**Doc ID:** RM000002WLQ01IX
Title: BRAKE SYSTEM (OTHER): BRAKE BOOSTER: INSPECTION (2010 Corolla)		

INSPECTION

1. INSPECT BRAKE VACUUM CHECK VALVE ASSEMBLY

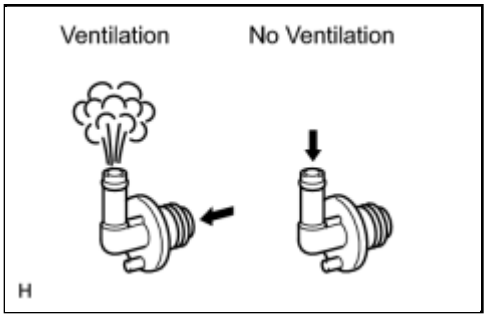

(a) Check that there is ventilation from the booster to the engine, and no ventilation from the engine to the booster. If the results are not as specified, replace the brake vacuum check valve assembly.

Last Modified: 3-10-2010	6.4 G	**From:** 200901
Model Year: 2010	**Model:** Corolla	**Doc ID:** RM000000SRG01OX
Title: BRAKE SYSTEM (OTHER): BRAKE FLUID: ON-VEHICLE INSPECTION (2010 Corolla)		

ON-VEHICLE INSPECTION

1. INSPECT FLUID LEVEL

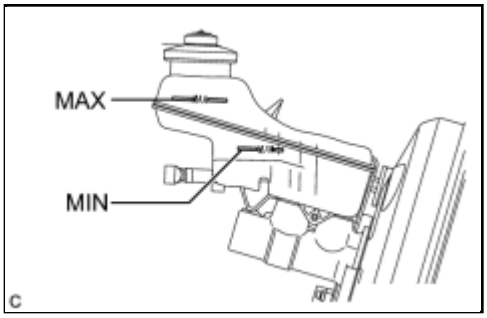

(a) Check the fluid level.

If brake fluid level is lower than the MIN line, check for leaks and inspect the disc brake pads. If necessary, refill the reservoir with brake fluid to the MAX line after repair or replacement.

Brake Fluid:
SAE J1703 or FMVSS No. 116 DOT 3

Last Modified: 3-10-2010	6.4 N	**From:** 200901
Model Year: 2010	**Model:** Corolla	**Doc ID:** RM000000SRF01EX
Title: BRAKE SYSTEM (OTHER): BRAKE FLUID: BLEEDING (2010 Corolla)		

BLEEDING

HINT:

If any work is performed on the brake system or if air in the brake lines is suspected, bleed air from the brake system.

NOTICE:

- Move the shift lever to P and apply the parking brake before bleeding the brakes.
- Add brake fluid to keep the level between the MIN and MAX lines of the reservoir while bleeding the brakes.
- If brake fluid leaks onto any painted surface, immediately wash it off.

1. REMOVE CENTER COWL TOP VENTILATOR LOUVER INFO

2. FILL RESERVOIR WITH BRAKE FLUID INFO

3. BLEED BRAKE MASTER CYLINDER

NOTICE:

- If the master cylinder is reinstalled or if the reservoir becomes empty, bleed the master cylinder.
- To prevent brake fluid from damaging painted surface, cover any surrounding parts with a piece of cloth.

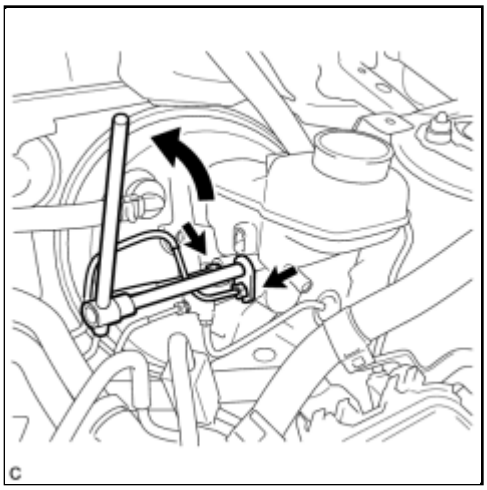

(a) Using a union nut wrench (10 mm or 12 mm), disconnect the 2 brake lines from the master cylinder.

(b) Slowly depress the brake pedal and hold it*1.

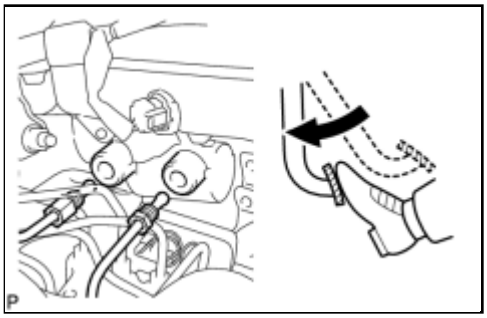

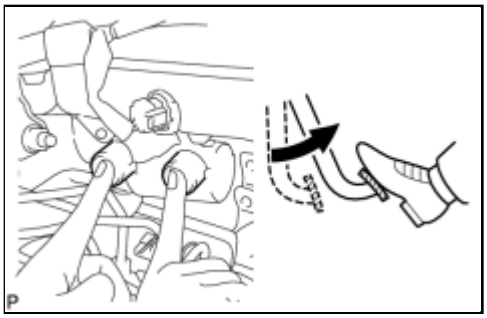

(c) Cover the 2 outer holes with fingers, and release the brake pedal*2.

(d) Repeat *1 and *2 3 or 4 times.

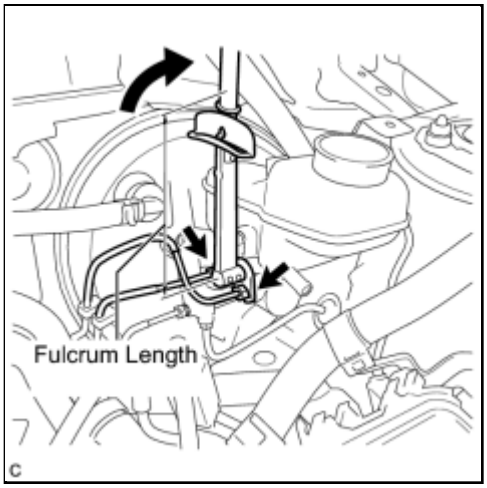

(e) Using a union nut wrench (10 mm or 12 mm), connect the 2 brake lines to the master cylinder.

w/o VSC without a union nut wrench - Torque: 15 N·m (155 kgf·cm, 11ft·lbf)

w/o VSC with a union nut wrench - Torque: 14 N·m (143 kgf·cm, 10ft·lbf)

w/ VSC without a union nut wrench - Torque: 20 N·m (200 kgf·cm, 14ft·lbf)

w/ VSC with a union nut wrench - Torque: 18 N·m (178 kgf·cm, 13ft·lbf)

NOTICE:

- Use a torque wrench with a fulcrum length of 250 mm (9.84 in.).
- This torque value is effective when the union nut wrench is parallel to the torque wrench.

4. BLEED BRAKE LINE INFO

5. BLEED BRAKE ACTUATOR (w/ VSC)

NOTICE:

After bleeding the brake system, if the specified height or feel of the brake pedal cannot be obtained, bleed the brake actuator assembly with the Techstream by following the procedure below.

(a) Depress the brake pedal more than 20 times with the ignition switch off.

(b) Connect the Techstream to the DLC3, and then turn the ignition switch to ON.

NOTICE:

Do not start the engine.

(c) Turn the Techstream on and select "Air Bleeding" on the screen.

NOTICE:

- Refer to the Techstream operator's manual for further details.
- Bleed air by following the steps displayed on the Techstream.

(d) Bleed air according to "Step 1: Increase Line" on the Techstream display.

NOTICE:

- Make sure that the master cylinder reservoir tank does not run out of brake fluid.
- Add brake fluid to keep the level between the MIN and MAX lines of the reservoir while bleeding the brakes.

(1) Connect a vinyl tube to either one of the bleeder plugs.

(2) Depress the brake pedal several times, and then loosen the bleeder plug connected to the vinyl tube with the pedal depressed*3.

(3) When fluid stops coming out, tighten the bleeder plug, and then release the brake pedal*4.

(4) Repeat *3 and *4 until all the air in the fluid is completely bled out.

(5) Tighten the bleeder plug completely.

Front bleeder plug - Torque: 8.3 N·m (85 kgf·cm, 73in·lbf)
Rear bleeder plug (for Drum Brake) - Torque: 8.5 N·m (87 kgf·cm, 75in·lbf)
Rear bleeder plug (for Disc Brake) - Torque: 10 N·m (102 kgf·cm, 7ft·lbf)

(6) Repeat the above procedure for the rest of the wheels to bleed the brake lines.

(e) Bleed the suction line according to "Step 2: Inhalation Line" on the Techstream display.

NOTICE:

- Bleed the suction line by following the steps displayed on the Techstream.
- Add brake fluid to keep the level between the MIN and MAX lines of the reservoir while bleeding the brakes.

(1) Connect a vinyl tube to the bleeder plug at the right front wheel or the right rear wheel and loosen the bleeder plug.

(2) Operate the brake actuator assembly to bleed air using the Techstream*5.

NOTICE:

- During this step, be sure to release the brake pedal.
- The actuator operation stops automatically in 4 seconds.

(3) Check that the actuator operation has stopped by referring to the Techstream display, and tighten the bleeder plug*6.

(4) Repeat *5 and *6 until all the air in the fluid is completely bled out.

(5) Tighten the bleeder plug completely.

Front bleeder plug - Torque: 8.3 N·m (85 kgf·cm, 73in·lbf)
Rear bleeder plug (for Drum Brake) - Torque: 8.5 N·m (87 kgf·cm, 75in·lbf)
Rear bleeder plug (for Disc Brake) - Torque: 10 N·m (102 kgf·cm, 7ft·lbf)

(6) For the rest of the wheels, bleed air in the same way as stated in the above procedure.

(f) Bleed the pressure reduction line according to "Step 3: Decrease Line" on the Techstream display.

NOTICE:

- Bleed the pressure reduction line by following the steps displayed on the Techstream.
- Add brake fluid to keep the level between the MIN and MAX lines of the reservoir while bleeding the brakes.

(1) Connect a vinyl tube to either one of the bleeder plugs.

(2) Loosen the bleeder plug*7.

(3) While keeping the brake pedal fully depressed, operate the brake actuator assembly using the Techstream.

NOTICE:

- The actuator operation stops automatically in 4 seconds. When performing this procedure continuously, an interval of at least 20 seconds is required.
- After the operation is completed, the brake pedal goes down slightly. This is a normal phenomenon when the solenoid opens.
- During this procedure, the pedal seems heavy, but completely depress it so that the brake fluid comes out from the bleeder plug.
- Be sure to keep the brake pedal depressed. Never depress and release the pedal repeatedly.

(4) Tighten the bleeder plug, and then release the brake pedal*8.

(5) Repeat steps *7 to *8 until all the air in the fluid is completely bled out.

(6) Tighten the bleeder plug completely.

Front bleeder plug - Torque: 8.3 N·m (85 kgf·cm, 73in·lbf)
Rear bleeder plug (for Drum Brake) - Torque: 8.5 N·m (87 kgf·cm, 75in·lbf)
Rear bleeder plug (for Disc Brake) - Torque: 10 N·m (102 kgf·cm, 7ft·lbf)

(7) Repeat the above procedure for the rest of the brakes to bleed the brake lines.

(g) Bleed the brake lines again according to "Step 4: Increase Line" on the Techstream display.

NOTICE:

- Bleed air by following the steps displayed on the Techstream.
- Add brake fluid to keep the level between the MIN and MAX lines of the reservoir while bleeding the brakes.

(1) Connect a vinyl tube to either one of the bleeder plugs.

(2) Depress the brake pedal several times, and then loosen the bleeder plug connected to the vinyl tube with the pedal depressed*9.

(3) When fluid stops coming out, tighten the bleeder plug, and then release the brake pedal*10.

(4) Repeat *9 and *10 until all the air in the fluid is completely bled out.

(5) Tighten the bleeder plug completely.

Front bleeder plug - Torque: 8.3 N·m (85 kgf·cm, 73in·lbf)
Rear bleeder plug (for Drum Brake) - Torque: 8.5 N·m (87 kgf·cm, 75in·lbf)
Rear bleeder plug (for Disc Brake) - Torque: 10 N·m (102 kgf·cm, 7ft·lbf)

(6) Repeat the above procedure for each brake to bleed the brake lines.

(h) Finish "Air Bleeding" on the Techstream, and then turn the Techstream off.

(i) Disconnect the Techstream from the DLC3.

(j) Turn the ignition switch off.

6. INSPECT FOR BRAKE FLUID LEAK

7. INSPECT FLUID LEVEL INFO

8. INSTALL CENTER COWL TOP VENTILATOR LOUVER INFO

Last Modified: 3-10-2010	6.4 A	**From:** 200901
Model Year: 2010	**Model:** Corolla	**Doc ID:** RM000002XY200VX
Title: BRAKE SYSTEM (OTHER): BRAKE FLUID: REPLACEMENT (2010 Corolla)		

REPLACEMENT

HINT:

If any work is performed on the brake system or if air in the brake lines is suspected, bleed the brake system.

NOTICE:

- Move the shift lever to P and apply the parking brake before bleeding the brakes.
- Add brake fluid to keep the level between the MIN and MAX lines of the reservoir while bleeding the brakes.
- If brake fluid leaks onto any painted surface, immediately wash it off.

1. REMOVE CENTER COWL TOP VENTILATOR LOUVER

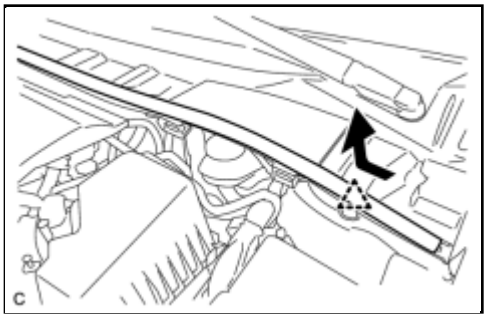

(a) Slide the hood to cowl top seal and disengage the clip as shown in the illustration.

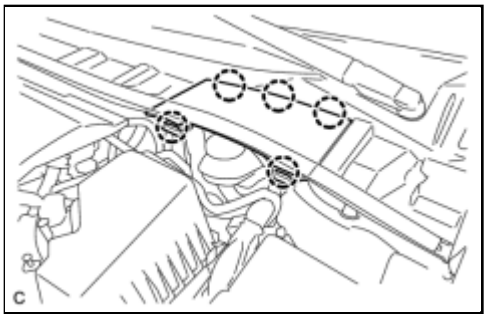

(b) Disengage the 5 claws and remove the center cowl top ventilator louver.

2. FILL RESERVOIR WITH BRAKE FLUID

(a) Fill the reservoir with brake fluid.

Brake Fluid:

SAE J1703 or FMVSS No. 116 DOT 3

NOTICE:

Add brake fluid to keep the level between the MIN and MAX lines of the reservoir while bleeding the brakes.

3. BLEED BRAKE LINE

NOTICE:

- Bleed the brake line of the wheel farthest from the master cylinder first.
- Add brake fluid to keep the level between the MIN and MAX lines of the reservoir while bleeding the brakes.

(a) Connect a vinyl tube to the bleeder plug.

(b) Depress the brake pedal several times, and then loosen the bleeder plug with the pedal depressed*1.

(c) When fluid stops coming out, tighten the bleeder plug, and then release the brake pedal*2.

(d) Repeat *1 and *2 until all the air in the fluid is completely bled out.

(e) Tighten the bleeder plug completely.

Front bleeder plug - Torque: 8.3 N·m (85 kgf·cm, 73in·lbf)
Rear bleeder plug (for Drum Brake) - Torque: 8.5 N·m (87 kgf·cm, 75in·lbf)
Rear bleeder plug (for Disc Brake) - Torque: 10 N·m (102 kgf·cm, 7ft·lbf)

(f) Repeat the above procedure for each wheel to bleed the brake line.

4. INSPECT FLUID LEVEL INFO

5. INSPECT FOR BRAKE FLUID LEAK

6. INSTALL CENTER COWL TOP VENTILATOR LOUVER

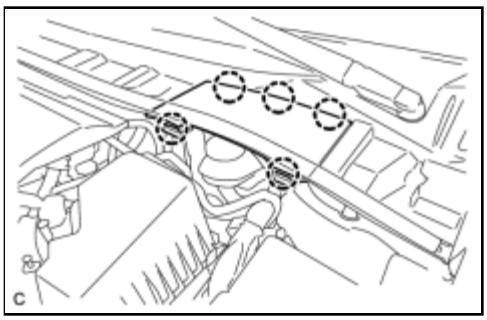

(a) Engage the 5 claws to install the center cowl top ventilator louver.

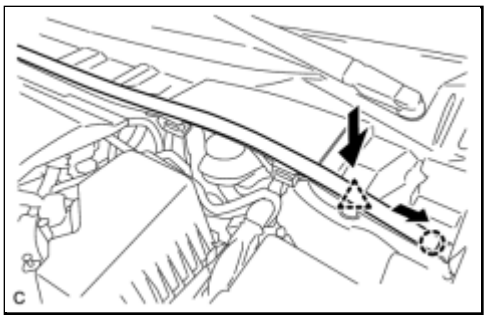

(b) Push and engage the clip, and slide and engage the claw of the hood to cowl top seal as shown in the illustration.

Last Modified: 3-10-2010	6.4 L	**From:** 200901
Model Year: 2010	**Model:** Corolla	**Doc ID:** RM000000SRD02RX
Title: BRAKE SYSTEM (OTHER): BRAKE LINE: PRECAUTION (2010 Corolla)		

PRECAUTION

1. TROUBLESHOOTING PRECAUTION

NOTICE:

- Since the brake lines are classified as critical safety related parts, be sure to disassemble and inspect the components if a brake fluid leak is found. If any abnormality is found, replace the component with a new one.
- When removing brake components, cover the brake line connections to prevent foreign matter such as dust or dirt from entering the lines.
- Do not damage or deform the brake lines when removing or installing them.
- When installing a grommet to the body, ensure that the brake line passes through the center of the grommet.
- When installing a brake line or flexible hose, ensure that they are free from twists or bends.
- If the cap of a flexible hose does not match the groove on the bracket, twist the hose slightly to insert it.
- Flexible hoses must be free from shock absorber oil, grease, etc.
- When installing a brake line to a plastic clamp, ensure that the brake line is not loose or pinched.
- Do not reuse any clips or plastic clamps removed from a flexible hose.
- After installing a brake line or flexible hose, ensure that they do not interfere with any other components.
- When disconnecting and connecting a flexible hose and brake line:

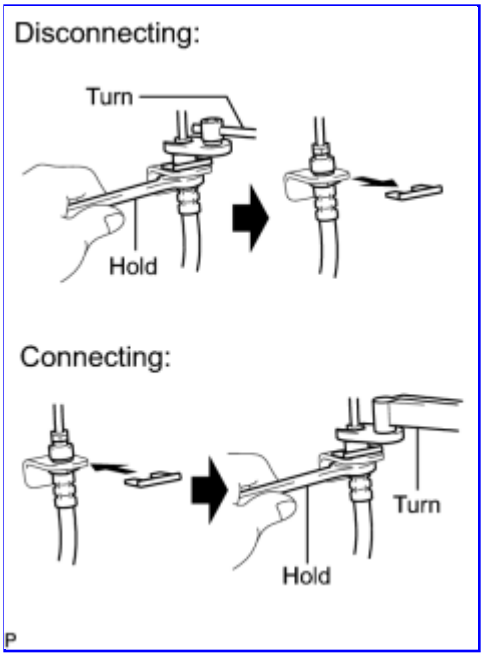

  a. Hold the flexible hose with a wrench and disconnect the brake line with a union nut wrench without deforming the line.
  b. Remove the clip.
  c. Install a new clip.
  d. Connect the brake line with a union nut wrench without deforming the line.

- When connecting a brake line and way:

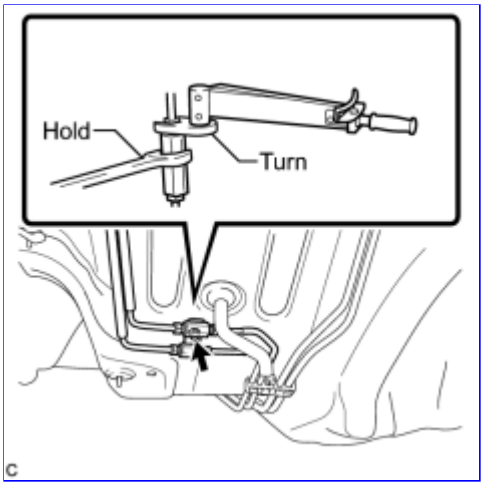

a. Support the way to prevent deformation of the brake line and connect the brake line to the way with a union nut wrench.
b. Support the way to prevent deformation of the brake line and install the bolt to secure the way to the body.

Last Modified: 3-10-2010	6.4 U	**From:** 200901
Model Year: 2010	**Model:** Corolla	**Doc ID:** RM000003D8B00EX
Title: BRAKE SYSTEM (OTHER): BRAKE LINE: SYSTEM DIAGRAM (2010 Corolla)		

SYSTEM DIAGRAM

for Rear Drum Brake:

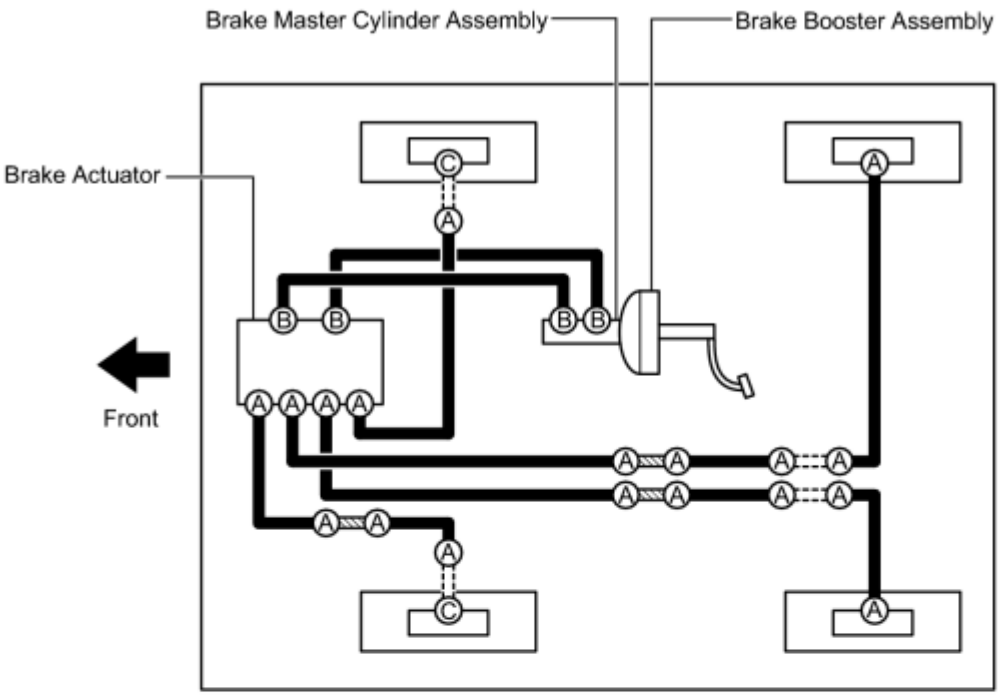

: Brake Line

: Flexible Hose

: Brake Tube Way

Ⓐ : Union Nut

15 N*m (155 kgf*cm, 11 ft.*lbf)

14 N*m (143 kgf*cm, 10 ft.*lbf)*

Ⓒ : Union Bolt

29 N*m (296 kgf*cm, 21 ft.*lbf)

Ⓑ : Union Nut

w/o VSC: 15 N*m (155 kgf*cm, 11 ft.*lbf)

14 N*m (143 kgf*cm, 10 ft.*lbf)*

w/ VSC: 20 N*m (200 kgf*cm, 14 ft.*lbf)

18 N*m (178 kgf*cm, 13 ft.*lbf)*

* For use with a union nut wrench

for Rear Disc Brake:

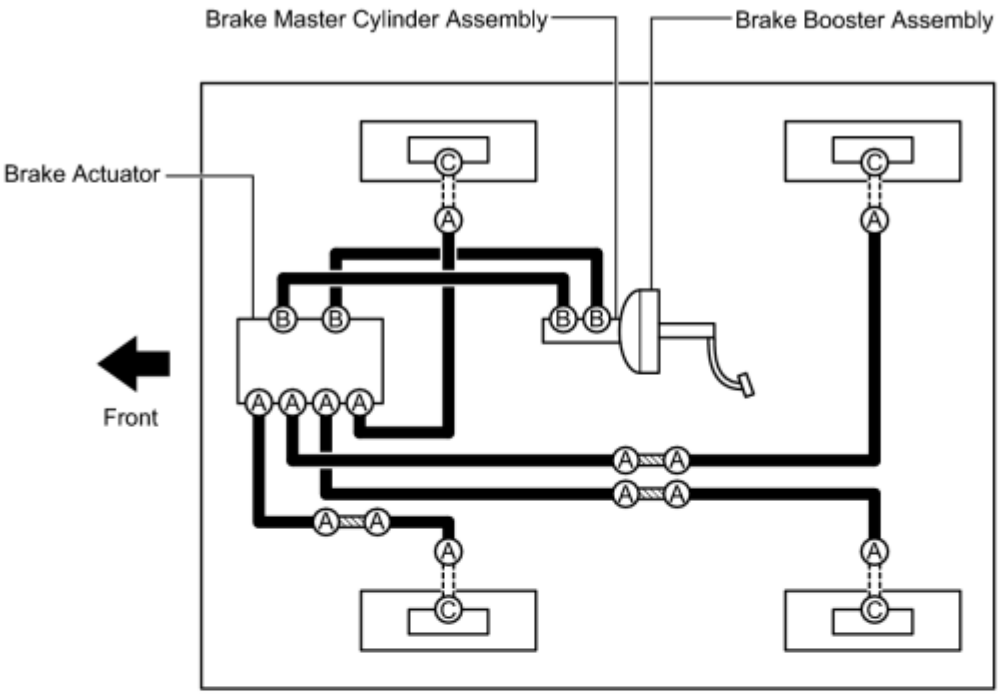

: Brake Line

: Flexible Hose

: Brake Tube Way

Ⓐ : Union Nut

15 N*m (155 kgf*cm, 11 ft.*lbf)

14 N*m (143 kgf*cm, 10 ft.*lbf)*

Ⓒ : Union Bolt

29 N*m (296 kgf*cm, 21 ft.*lbf)

Ⓑ : Union Nut

w/o VSC: 15 N*m (155 kgf*cm, 11 ft.*lbf)

14 N*m (143 kgf*cm, 10 ft.*lbf)*

w/ VSC: 20 N*m (200 kgf*cm, 14 ft.*lbf)

18 N*m (178 kgf*cm, 13 ft.*lbf)*

* For use with a union nut wrench

c

Last Modified: 3-10-2010	6.4 K	**From:** 200901
Model Year: 2010	**Model:** Corolla	**Doc ID:** RM000002WF000KX
Title: BRAKE SYSTEM (OTHER): BRAKE MASTER CYLINDER: COMPONENTS (2010 Corolla)		

COMPONENTS

ILLUSTRATION

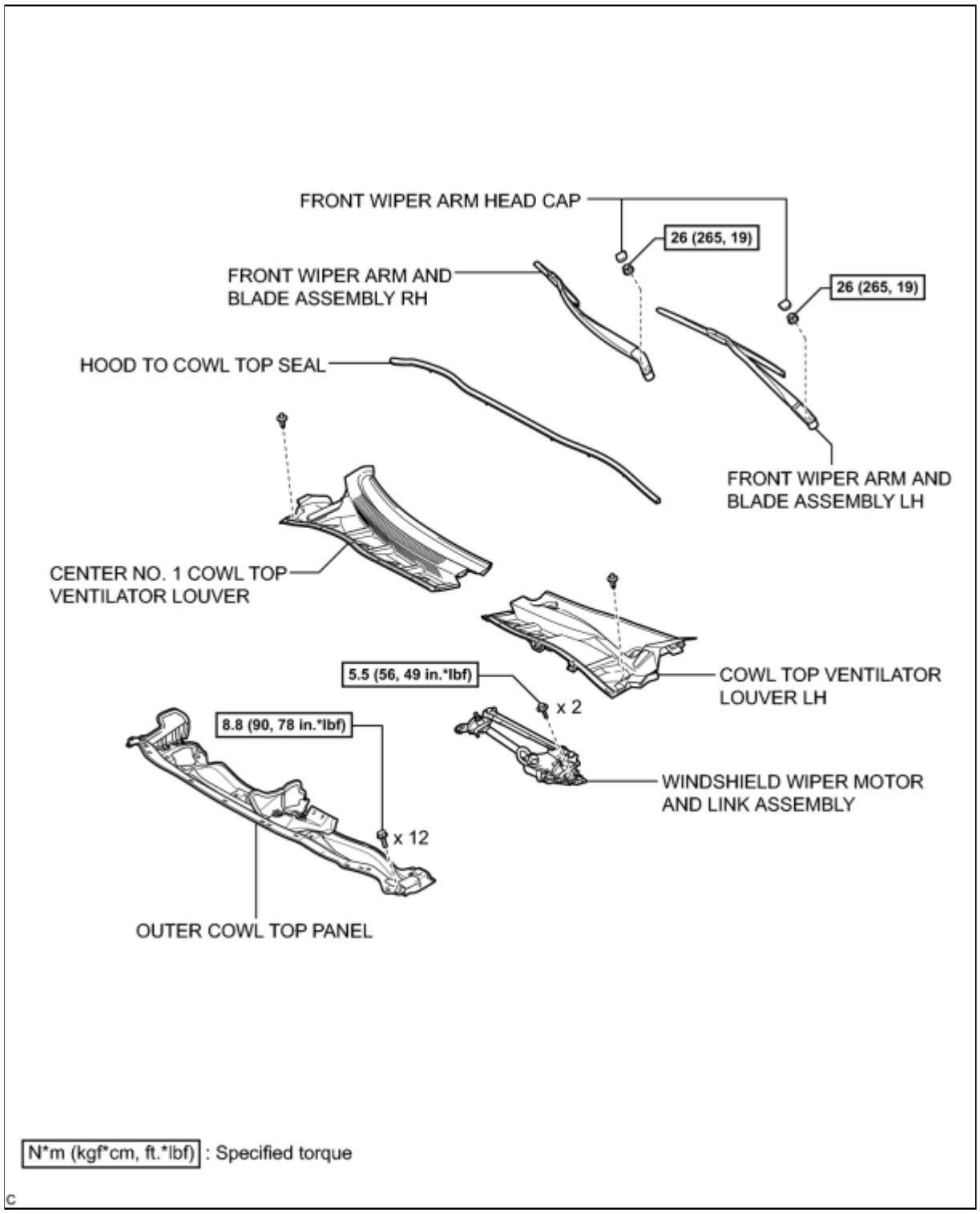

ILLUSTRATION

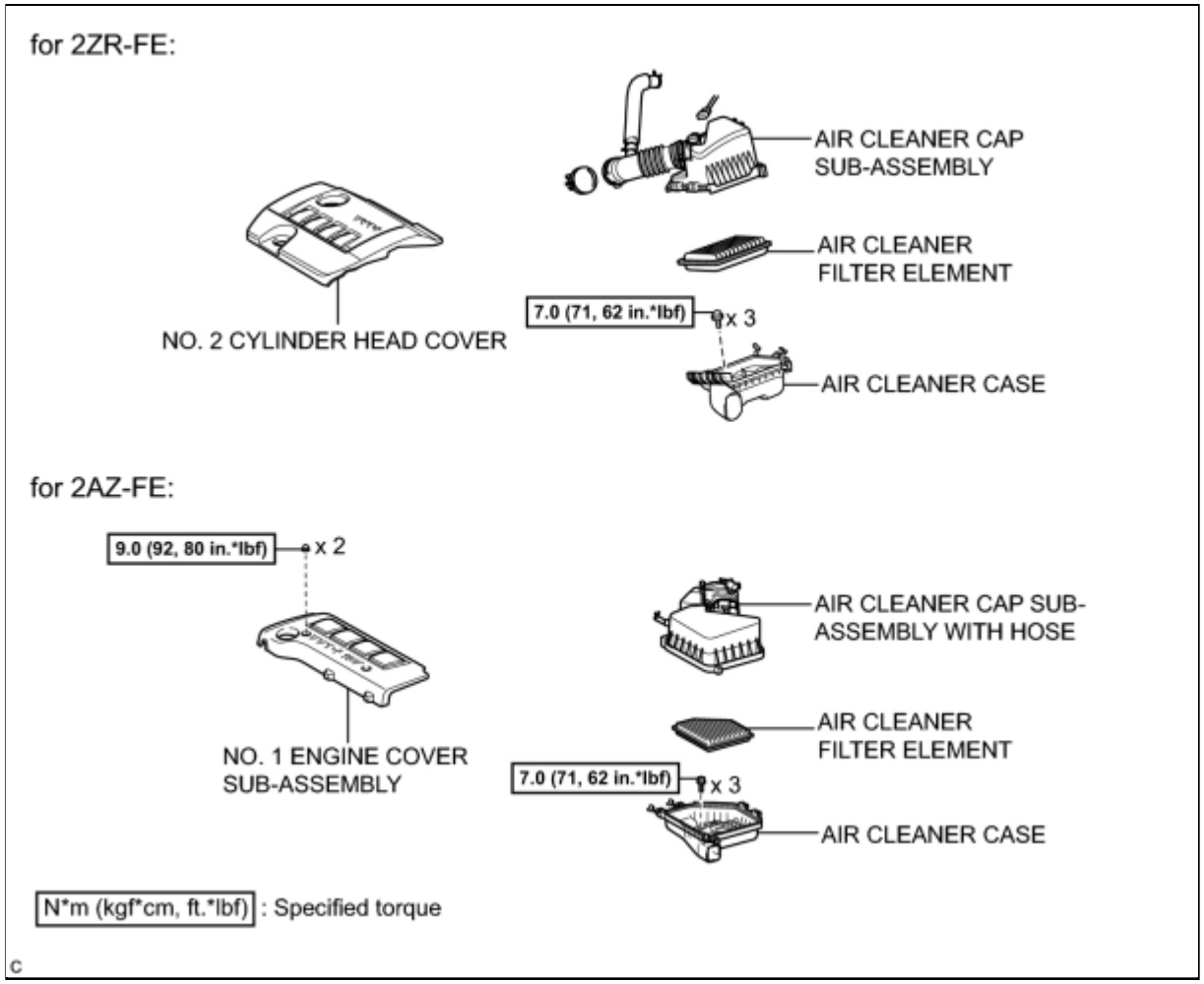

ILLUSTRATION

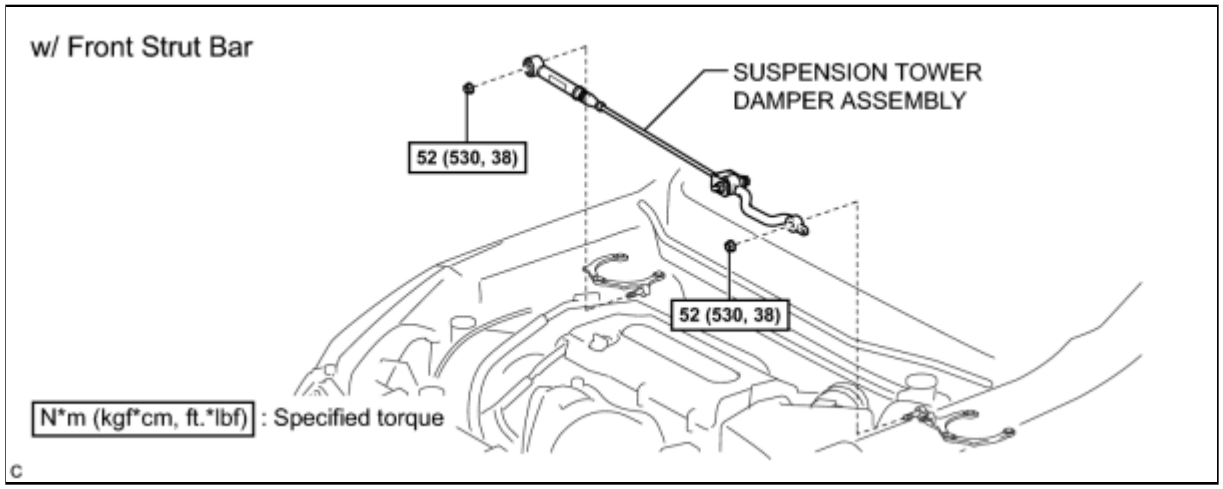

ILLUSTRATION

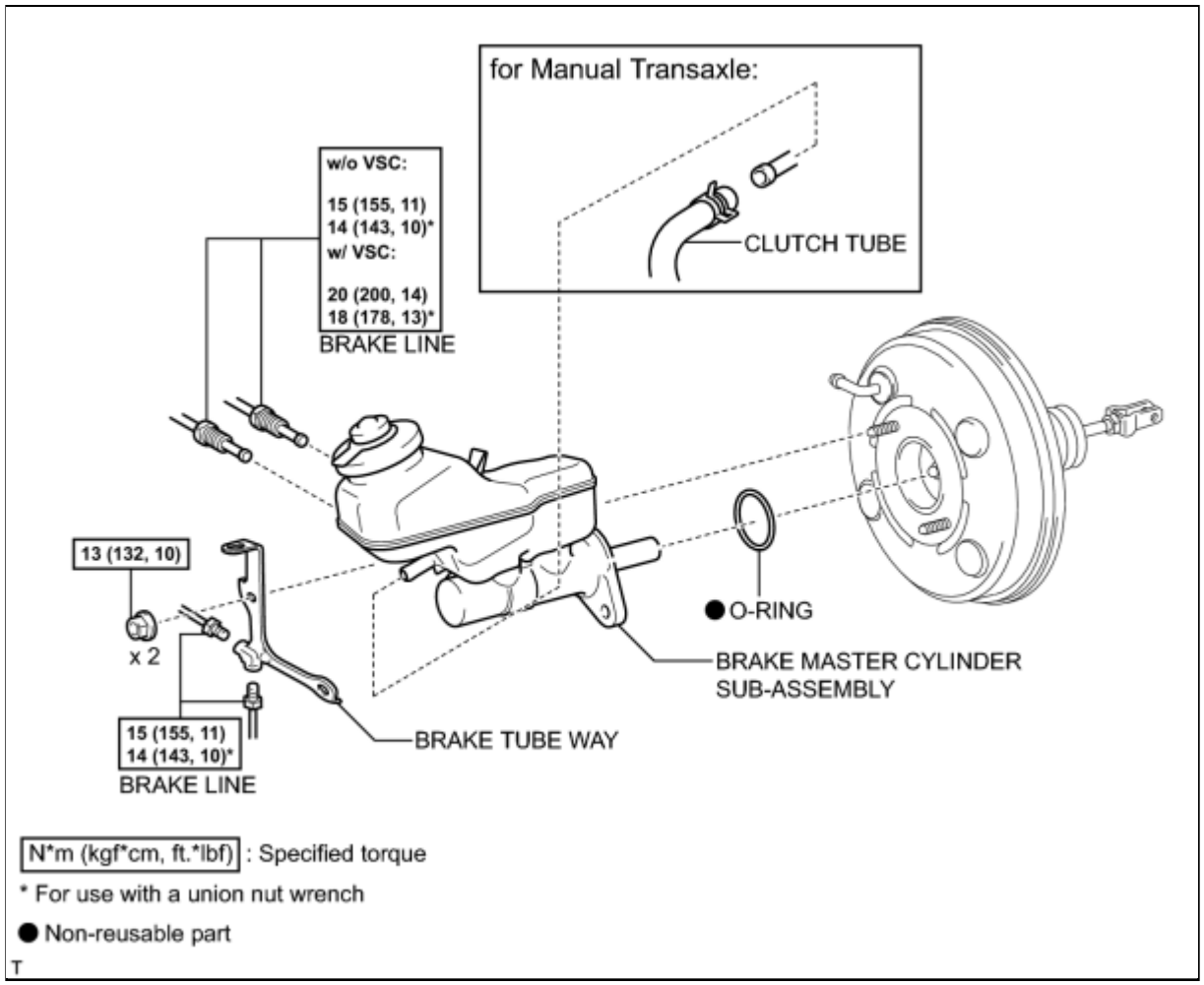

ILLUSTRATION

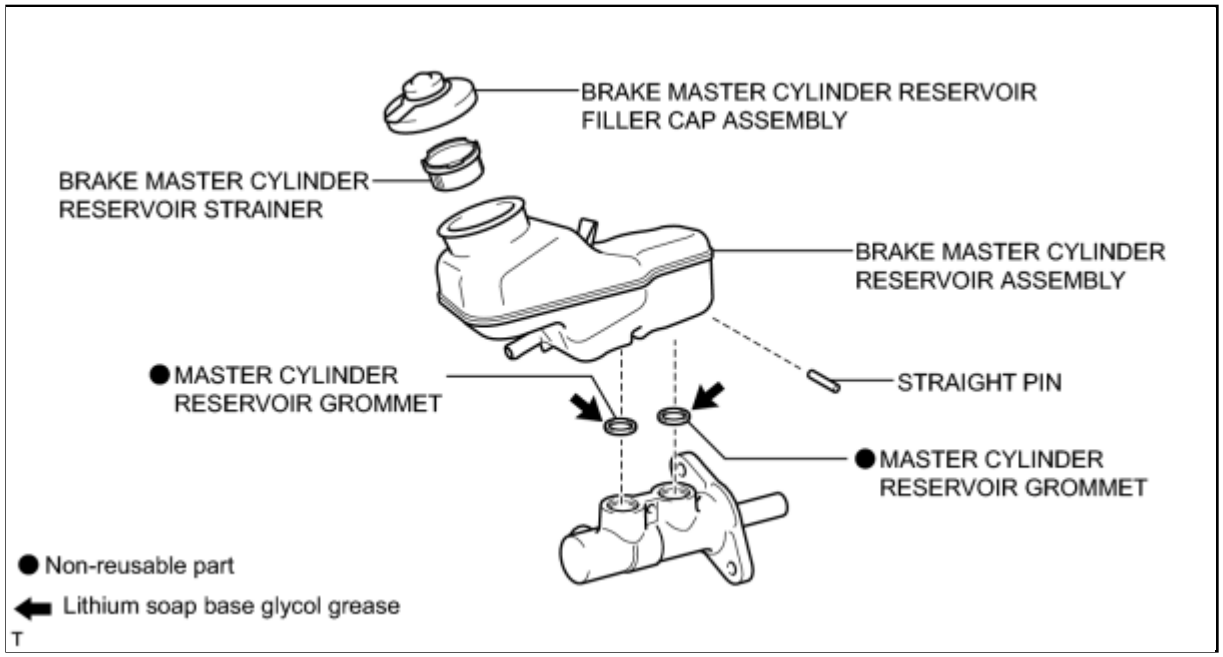

Last Modified: 3-10-2010	6.4 A	**From:** 200901
Model Year: 2010	**Model:** Corolla	**Doc ID:** RM000002WF100YX
Title: BRAKE SYSTEM (OTHER): BRAKE MASTER CYLINDER: REMOVAL (2010 Corolla)		

REMOVAL

NOTICE:

Make sure to release the vacuum from the brake booster before removing the master cylinder from the brake booster.

1. REMOVE NO. 2 CYLINDER HEAD COVER (for 2ZR-FE) INFO

2. REMOVE AIR CLEANER CAP SUB-ASSEMBLY (for 2ZR-FE) INFO

3. REMOVE AIR CLEANER CASE (for 2ZR-FE) INFO

4. REMOVE NO. 1 ENGINE COVER SUB-ASSEMBLY (for 2AZ-FE) INFO

5. REMOVE AIR CLEANER CAP SUB-ASSEMBLY WITH HOSE (for 2AZ-FE) INFO

6. REMOVE AIR CLEANER CASE (for 2AZ-FE) INFO

7. REMOVE FRONT WIPER ARM HEAD CAP INFO

8. REMOVE FRONT WIPER ARM AND BLADE ASSEMBLY LH INFO

9. REMOVE FRONT WIPER ARM AND BLADE ASSEMBLY RH INFO

10. REMOVE HOOD TO COWL TOP SEAL INFO

11. REMOVE CENTER NO. 1 COWL TOP VENTILATOR LOUVER INFO

12. REMOVE COWL TOP VENTILATOR LOUVER LH INFO

13. REMOVE WINDSHIELD WIPER MOTOR AND LINK ASSEMBLY INFO

14. REMOVE OUTER COWL TOP PANEL (for TMC Made)

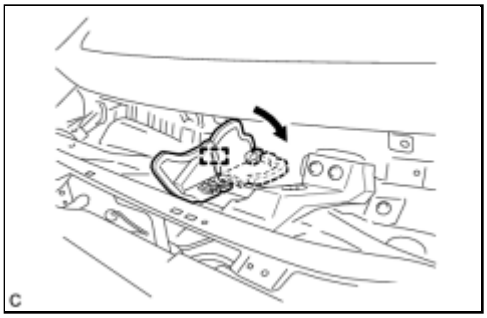

(a) Disengage the clamp and bend the water guard plate RH as shown in the illustration.

(b) Disengage the clamp.

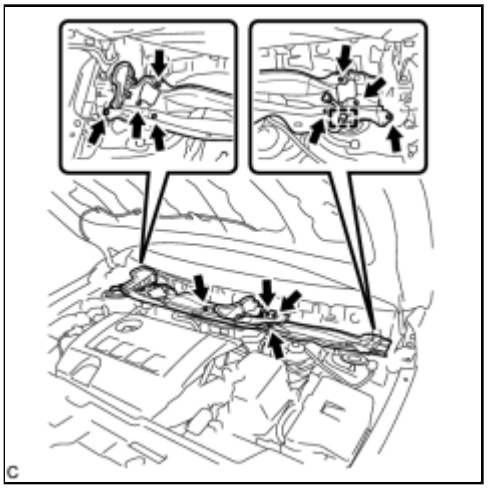

(c) Remove the 12 bolts and outer cowl top panel.

15. REMOVE OUTER COWL TOP PANEL (except TMC Made)

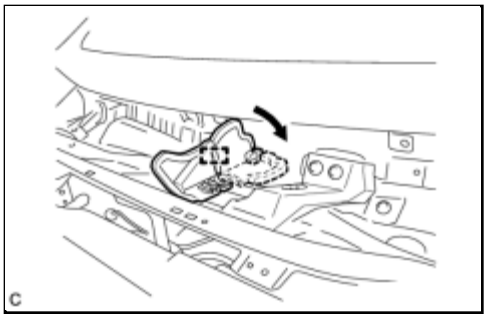

(a) Disengage the clamp and bend the water guard plate RH as shown in the illustration.

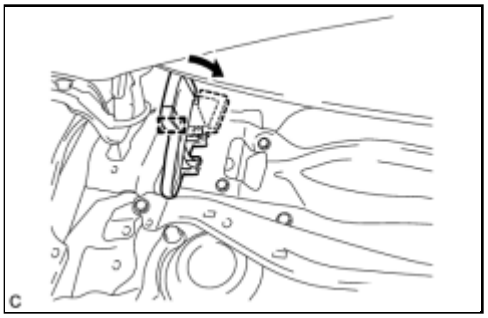

(b) Disengage the clamp and bend the No. 1 heater air duct splash shield seal.

(c) Disengage the clamp.

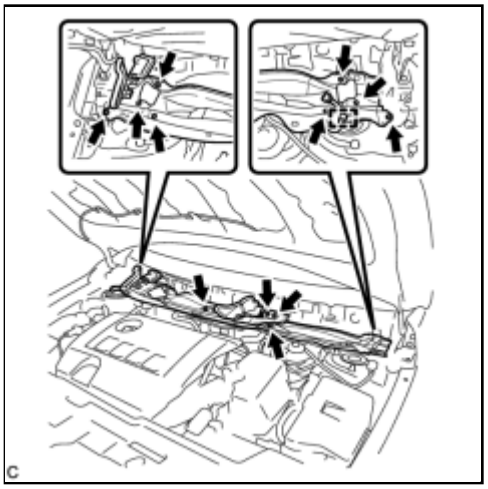

(d) Remove the 12 bolts and outer cowl top panel.

16. REMOVE SUSPENSION TOWER DAMPER ASSEMBLY (w/ Front Strut Bar) INFO

17. DRAIN BRAKE FLUID

18. DISCONNECT CLUTCH TUBE (for Manual Transaxle)

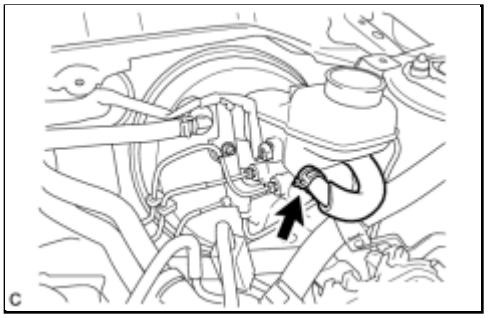

(a) Move the clip and disconnect the clutch tube.

19. REMOVE BRAKE MASTER CYLINDER SUB-ASSEMBLY

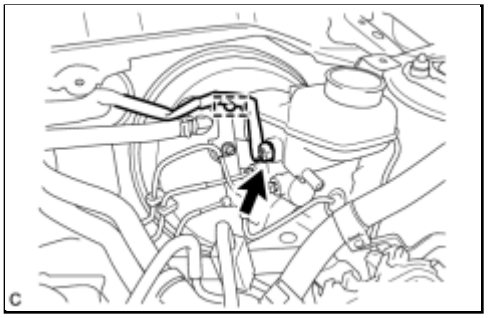

(a) Disconnect the connector and disengage the clamp.

(b) Using a union nut wrench (10 mm or 12 mm), disconnect

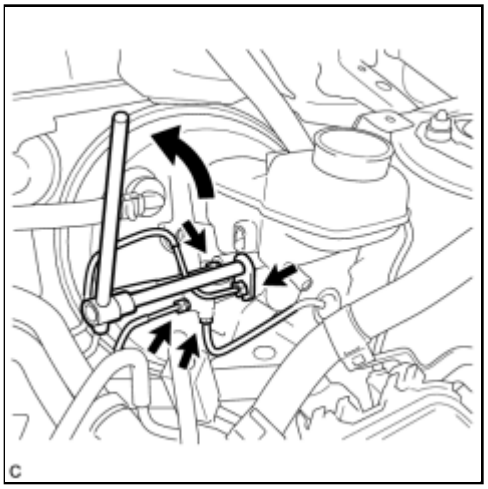

the 4 brake lines from the brake master cylinder sub-assembly.

(c) Remove the 2 nuts, brake tube way and brake master cylinder sub-assembly.

NOTICE:

- The master cylinder requires careful handling. Do not allow the master cylinder to receive any impact, such as from being dropped. Do not reuse a master cylinder that has been dropped.
- Do not strike or pinch the master cylinder piston, and do not cause any damage to the master cylinder piston by any other means.
- Make sure to release the vacuum from the brake booster before removing the master cylinder from the brake booster.
- When installing the master cylinder to the brake booster, or when removing the master cylinder from the brake booster, make sure that the master cylinder is kept horizontal or its tip faces downward (the piston faces upward) to prevent the master cylinder piston from falling off.
- Do not allow any foreign objects to contaminate the master cylinder piston. If a foreign object gets on the piston, remove it by using a piece of cloth and then apply an even layer of lithium soap base glycol grease around the circumference (sliding part) of the piston.
- Do not use any other type of grease or fluid.



(d) Remove the O-ring from the brake master cylinder sub-assembly.

Last Modified: 3-10-2010	6.4 A	**From:** 200901
Model Year: 2010	**Model:** Corolla	**Doc ID:** RM000002WF201CX
Title: BRAKE SYSTEM (OTHER): BRAKE MASTER CYLINDER: DISASSEMBLY (2010 Corolla)		

DISASSEMBLY

1. REMOVE BRAKE MASTER CYLINDER RESERVOIR FILLER CAP ASSEMBLY

(a) Remove the brake master cylinder reservoir filler cap assembly from the brake master cylinder reservoir assembly.

2. REMOVE BRAKE MASTER CYLINDER RESERVOIR STRAINER

(a) Remove the brake master cylinder reservoir strainer from the brake master cylinder reservoir assembly.

3. REMOVE BRAKE MASTER CYLINDER RESERVOIR ASSEMBLY

(a) Mount the brake master cylinder sub-assembly in a vise.

NOTICE:

Place aluminum plates on the vise to prevent damage to the brake master cylinder sub-assembly.

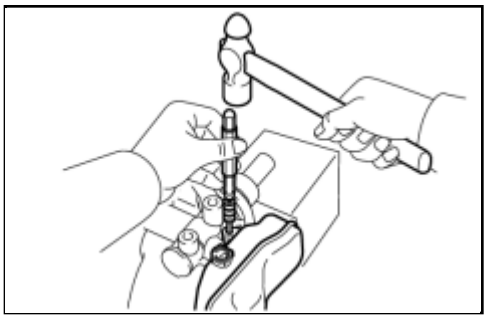

(b) Using a pin punch and a hammer, tap out the straight pin and remove the brake master cylinder reservoir assembly.

4. REMOVE MASTER CYLINDER RESERVOIR GROMMET

(a) Remove the 2 master cylinder reservoir grommets from the brake master cylinder reservoir assembly.

Last Modified: 3-10-2010	6.4 G	**From:** 200901
Model Year: 2010	**Model:** Corolla	**Doc ID:** RM000000V3301RX
Title: BRAKE SYSTEM (OTHER): BRAKE MASTER CYLINDER: INSPECTION (2010 Corolla)		

INSPECTION

1. INSPECT AND ADJUST BRAKE BOOSTER PUSH ROD

NOTICE:

Make an adjustment with no vacuum in the brake booster assembly. (Depress the brake pedal several times with the engine stopped.)

HINT:

- Adjustment of the brake booster push rod is required when the brake master cylinder sub-assembly is replaced with a new one.
- Adjustment is not necessary when the removed brake master cylinder sub-assembly is reused and the brake booster assembly is replaced with a new one.

(a) Apply chalk to the tip of the accessory tool.

HINT:

An accessory tool is enclosed with a new brake master cylinder sub-assembly.

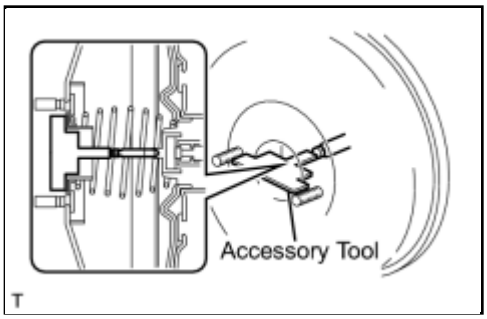

(b) Place the accessory tool on the brake booster assembly.

(c) Measure the clearance between the brake booster push rod and accessory tool.

Standard clearance:
0 mm (0 in.)

HINT:

Adjust the clearance in the following cases:

- If there is a clearance between the accessory tool and the shell of the brake booster (floating accessory tool), the push rod is protruding too far.
- If the chalk does not stick on the tip of the brake booster push rod, the push rod protrusion is insufficient.

(d) If the clearance is not as specified, adjust the push rod length by holding the rod using SST and turning the tip of

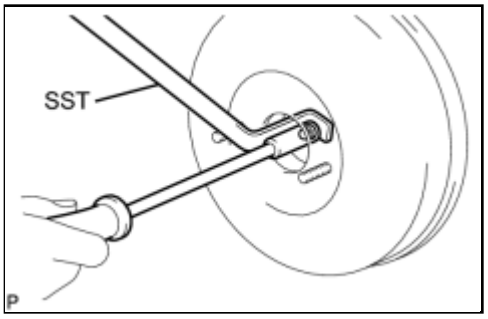

the rod using a socket driver (7 mm).

SST: 09737-00020

HINT:

Check the push rod clearance again after adjustment.

Last Modified: 3-10-2010	6.4 A	**From:** 200901
Model Year: 2010	**Model:** Corolla	**Doc ID:** RM000002WEZ00YX
Title: BRAKE SYSTEM (OTHER): BRAKE MASTER CYLINDER: INSTALLATION (2010 Corolla)		

INSTALLATION

1. INSPECT AND ADJUST BRAKE BOOSTER PUSH ROD INFO

2. INSTALL BRAKE MASTER CYLINDER SUB-ASSEMBLY

(a) Install a new O-ring to the brake master cylinder sub-assembly.



(b) Install the brake master cylinder sub-assembly and brake tube way to the brake booster assembly with the 2 nuts.

Torque: 13 N·m (132 kgf·cm, 10ft·lbf)

NOTICE:

- The master cylinder requires careful handling. Do not allow the master cylinder to receive any impact, such as from being dropped. Do not reuse a master cylinder that has been dropped.
- Do not strike or pinch the master cylinder piston, and do not cause any damage to the master cylinder piston by any other means.
- When installing the master cylinder to the brake booster, or when removing the master cylinder from the brake booster, make sure that the master cylinder is kept horizontal or its tip faces downward (the piston faces upward) to prevent the master cylinder piston from falling off.
- Do not allow any foreign objects to contaminate the master cylinder piston. If a foreign object gets on the piston, remove it by using a piece of cloth and then apply an even layer of lithium soap base glycol grease around the circumference (sliding part) of the piston.
- Do not use any other type of grease or fluid.

(c) Using a union nut wrench (10 mm or 12 mm), connect the 4 brake lines to the brake master cylinder sub-assembly.

w/o VSC without a union nut wrench - Torque: 15 N·m (155 kgf·cm, 11ft·lbf)

w/o VSC with a union nut wrench - Torque: 14 N·m (143 kgf·cm, 10ft·lbf)

w/ VSC without a union nut wrench - Torque: 20 N·m (200 kgf·cm, 14ft·lbf)

w/ VSC with a union nut wrench - Torque: 18 N·m (178 kgf·cm, 13ft·lbf)

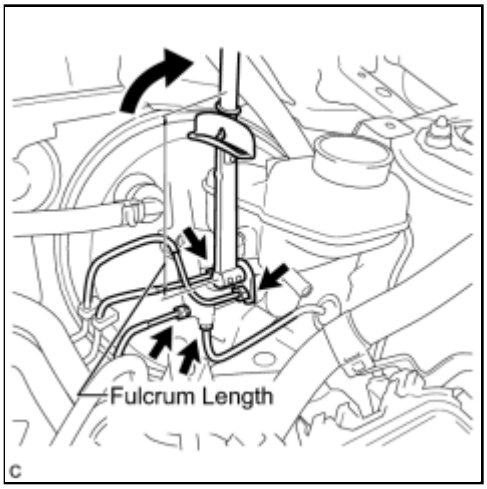

NOTICE:

- Use a torque wrench with a fulcrum length of 250 mm (9.84 in.).
- This torque value is effective when the union nut wrench is parallel to the torque wrench.

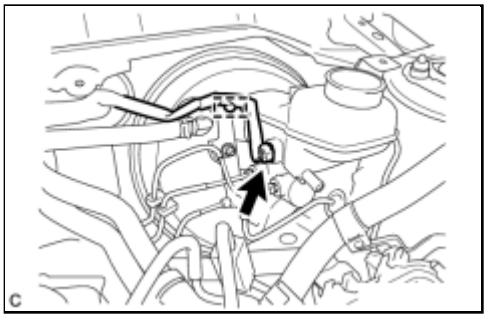

(d) Engage the clamp and connect the connector.

3. CONNECT CLUTCH TUBE (for Manual Transaxle)

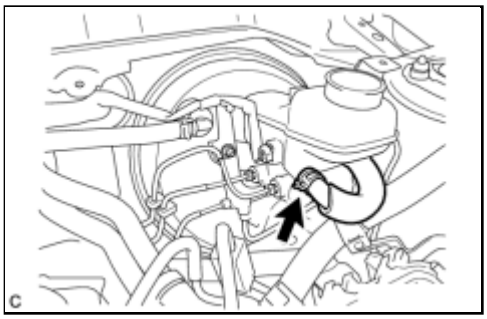

(a) Connect the clutch tube to the brake master cylinder reservoir assembly with the clip.

4. FILL RESERVOIR WITH BRAKE FLUID INFO

5. BLEED CLUTCH LINE (for C59) INFO

6. BLEED CLUTCH LINE (for E351) INFO

7. BLEED BRAKE MASTER CYLINDER INFO

8. BLEED BRAKE LINE INFO

9. BLEED BRAKE ACTUATOR (w/ VSC) INFO

10. INSPECT FOR BRAKE FLUID LEAK

11. INSPECT FLUID LEVEL INFO

12. INSTALL SUSPENSION TOWER DAMPER ASSEMBLY (w/ Front Strut Bar) INFO

13. INSTALL OUTER COWL TOP PANEL (for TMC Made)

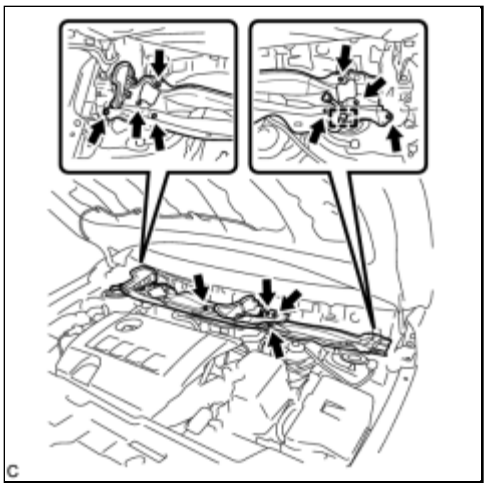

(a) Install the outer cowl top panel with the 12 bolts.

Torque: 8.8 N·m (90 kgf·cm, 78in·lbf)

(b) Engage the clamp.

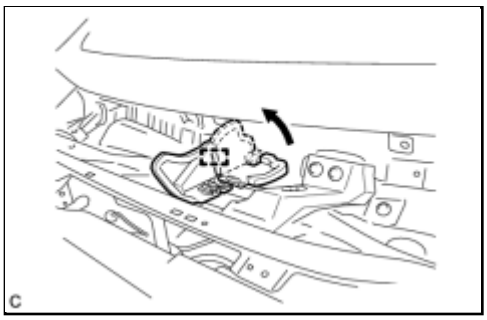

(c) Bend the water guard plate RH as shown in the illustration and engage the clamp.

14. INSTALL OUTER COWL TOP PANEL (except TMC Made)

(a) Install the outer cowl top panel with the 12 bolts.

Torque: 8.8 N·m (90 kgf·cm, 78in·lbf)

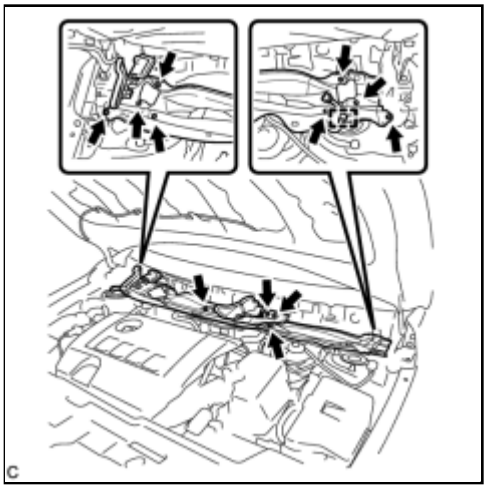

(b) Engage the clamp.

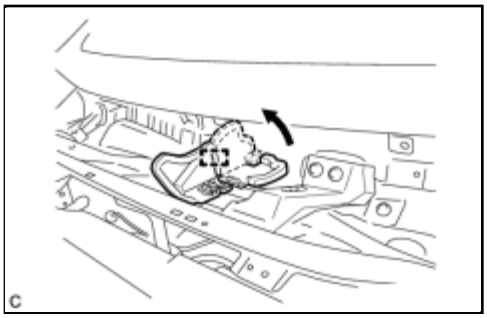

(c) Bend the water guard plate RH as shown in the illustration, and engage the clamp.

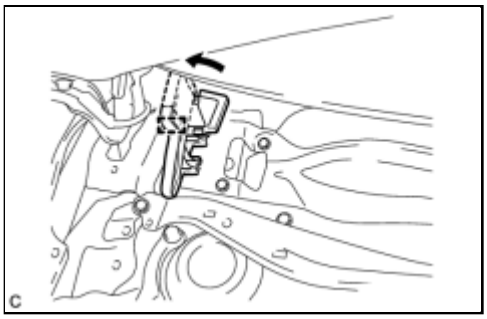

(d) Bend the No. 1 heater air duct splash shield seal as shown in the illustration, and engage the clamp.

15. INSTALL WINDSHIELD WIPER MOTOR AND LINK ASSEMBLY INFO

16. INSTALL COWL TOP VENTILATOR LOUVER LH INFO

17. INSTALL CENTER NO. 1 COWL TOP VENTILATOR LOUVER INFO

18. INSTALL HOOD TO COWL TOP SEAL INFO

19. INSTALL FRONT WIPER ARM AND BLADE ASSEMBLY RH INFO

20. INSTALL FRONT WIPER ARM AND BLADE ASSEMBLY LH INFO

21. INSTALL FRONT WIPER ARM HEAD CAP INFO

22. INSTALL AIR CLEANER CASE (for 2ZR-FE) INFO

23. INSTALL AIR CLEANER CAP SUB-ASSEMBLY (for 2ZR-FE) INFO

24. INSTALL NO. 2 CYLINDER HEAD COVER (for 2ZR-FE) INFO

25. INSTALL AIR CLEANER CASE (for 2AZ-FE) INFO

26. INSTALL AIR CLEANER CAP SUB-ASSEMBLY WITH HOSE (for 2AZ-FE) INFO

27. INSTALL NO. 1 ENGINE COVER SUB-ASSEMBLY (for 2AZ-FE) INFO

Last Modified: 3-10-2010	6.4 A	**From:** 200901
Model Year: 2010	**Model:** Corolla	**Doc ID:** RM000002WF301CX
Title: BRAKE SYSTEM (OTHER): BRAKE MASTER CYLINDER: REASSEMBLY (2010 Corolla)		

REASSEMBLY

1. INSTALL MASTER CYLINDER RESERVOIR GROMMET

(a) Apply lithium soap base glycol grease to 2 new master cylinder reservoir grommets.

(b) Install the 2 master cylinder reservoir grommets to the brake master cylinder reservoir assembly.

2. INSTALL BRAKE MASTER CYLINDER RESERVOIR ASSEMBLY

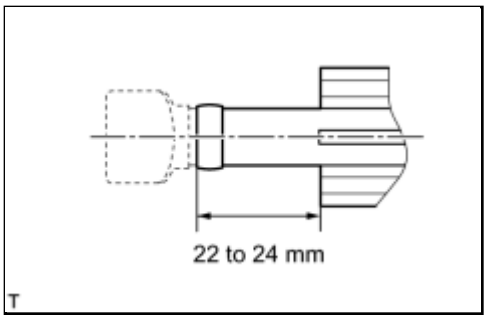

(a) When installing a new brake master cylinder reservoir assembly, cut off the clutch tube tip of the brake master cylinder reservoir assembly as shown in the illustration (for Manual Transaxle).

Length of clutch tube tip:
22 to 24 mm (0.866 to 0.945 in.)

NOTICE:

- Do not allow any foreign matter to enter the brake master cylinder reservoir assembly.
- Make sure that fluid supply is not hindered after cutting the tube.

(b) Install the brake master cylinder reservoir assembly to the master cylinder body.

(c) Mount the brake master cylinder sub-assembly in a vise.

NOTICE:

Place aluminum plates on the vise to prevent damage to the brake master cylinder sub-assembly.

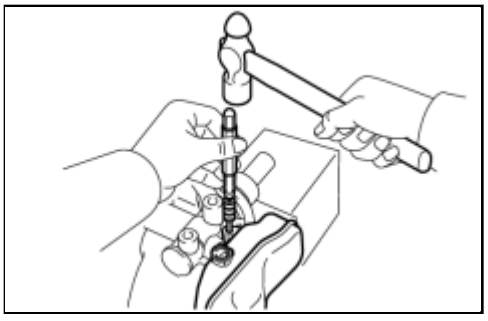

(d) Using a pin punch and a hammer, tap in the straight pin.

3. INSTALL BRAKE MASTER CYLINDER RESERVOIR STRAINER

4. INSTALL BRAKE MASTER CYLINDER RESERVOIR FILLER CAP ASSEMBLY

Last Modified: 3-10-2010	6.4 K	**From:** 200901
Model Year: 2010	**Model:** Corolla	**Doc ID:** RM000002W8Z00HX
Title: BRAKE SYSTEM (OTHER): BRAKE PEDAL: COMPONENTS (2010 Corolla)		

COMPONENTS

ILLUSTRATION

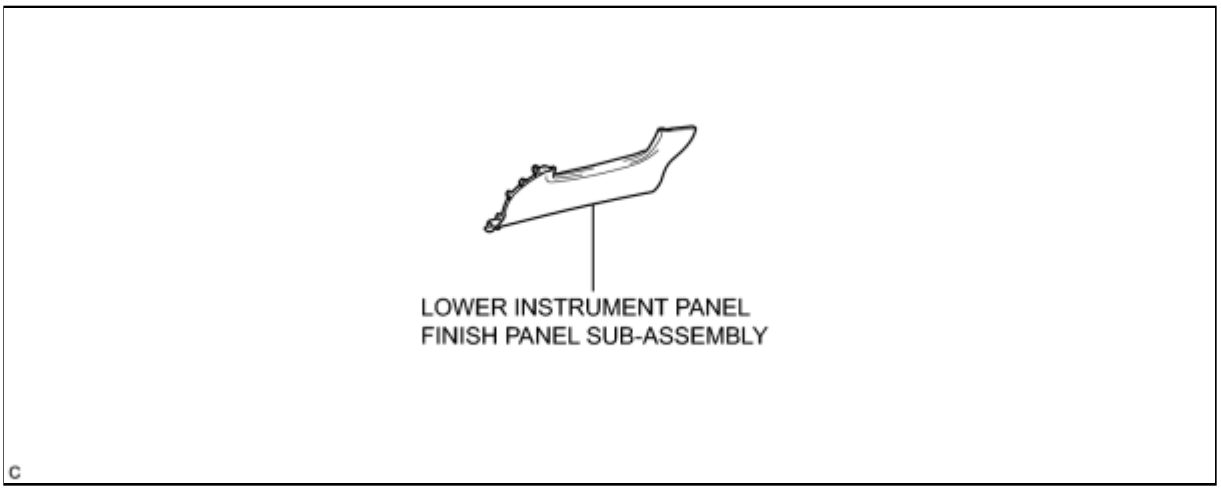

ILLUSTRATION

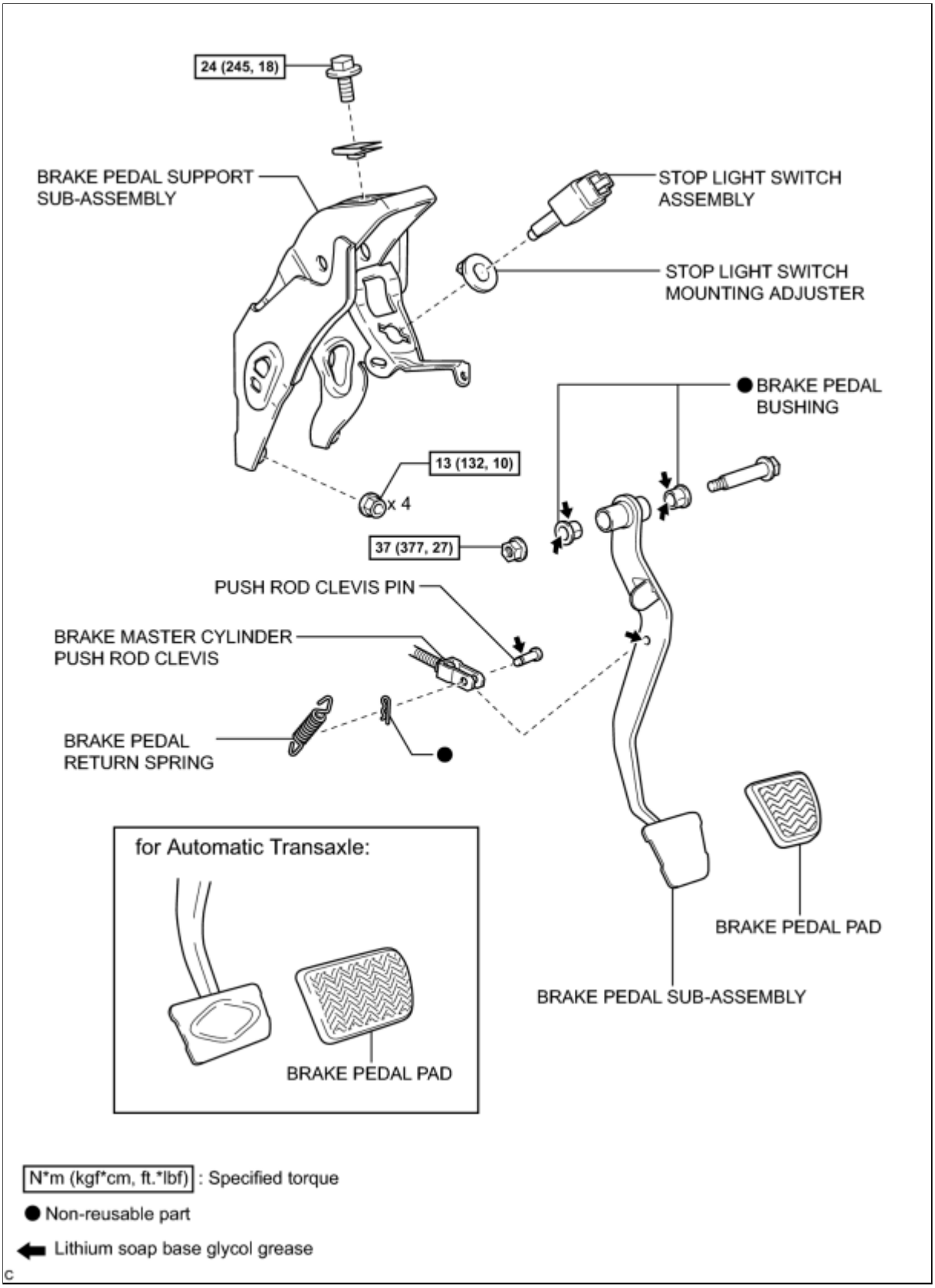
24 (245, 18)
BRAKE PEDAL SUPPORT SUB-ASSEMBLY
STOP LIGHT SWITCH ASSEMBLY
STOP LIGHT SWITCH MOUNTING ADJUSTER
● BRAKE PEDAL BUSHING
13 (132, 10)
x 4
37 (377, 27)
PUSH ROD CLEVIS PIN
BRAKE MASTER CYLINDER PUSH ROD CLEVIS
BRAKE PEDAL RETURN SPRING
BRAKE PEDAL PAD
BRAKE PEDAL SUB-ASSEMBLY
for Automatic Transaxle:
BRAKE PEDAL PAD
N*m (kgf*cm, ft.*lbf) : Specified torque
● Non-reusable part
Lithium soap base glycol grease

C

Last Modified: 3-10-2010	6.4 A	**From:** 200901
Model Year: 2010	**Model:** Corolla	**Doc ID:** RM000002W9000YX
Title: BRAKE SYSTEM (OTHER): BRAKE PEDAL: REMOVAL (2010 Corolla)		

REMOVAL

1. REMOVE UPPER INSTRUMENT PANEL SUB-ASSEMBLY

HINT:

Refer to the instructions for Removal of the upper instrument panel sub-assembly INFO **.**

2. REMOVE LOWER INSTRUMENT PANEL FINISH PANEL SUB-ASSEMBLY INFO

3. REMOVE BRAKE PEDAL RETURN SPRING

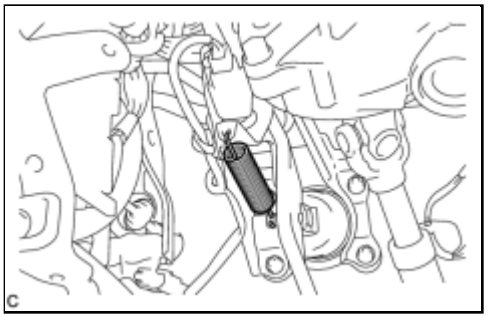

(a) Remove the brake pedal return spring from the brake pedal support sub-assembly.

4. SEPARATE BRAKE MASTER CYLINDER PUSH ROD CLEVIS

(a) Remove the clip and clevis pin and separate the brake master cylinder push rod clevis from the brake pedal sub-assembly.

5. REMOVE STOP LIGHT SWITCH ASSEMBLY INFO

6. REMOVE STOP LIGHT SWITCH MOUNTING ADJUSTER

(a) Remove the stop light switch mounting adjuster from the brake pedal support sub-assembly.

7. REMOVE BRAKE PEDAL SUPPORT SUB-ASSEMBLY

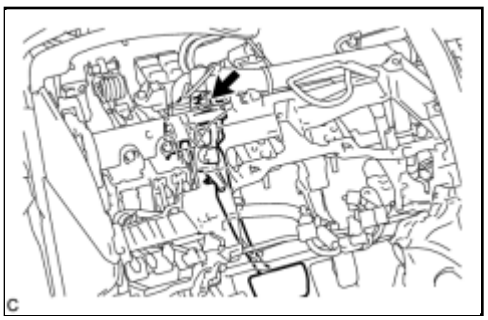

(a) Remove the bolt and separate the brake pedal support sub-assembly from the instrument panel reinforcement.

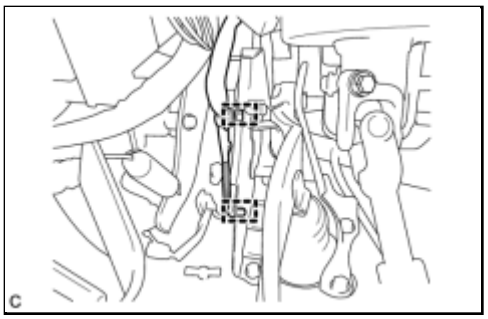

(b) Disengage the 2 clamps from the brake pedal support sub-assembly.

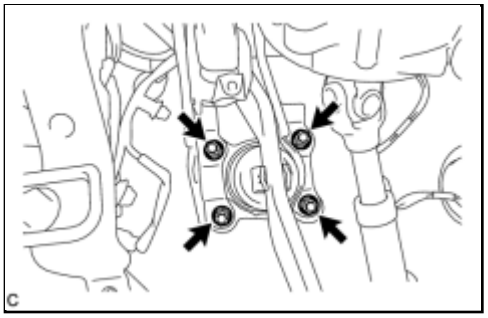

(c) Remove the 4 nuts and brake pedal support sub-assembly.

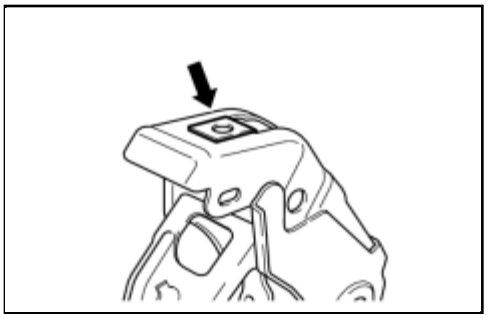

(d) Remove the nut from the brake pedal support sub-assembly.

Last Modified: 3-10-2010	6.4 A	**From:** 200901
Model Year: 2010	**Model:** Corolla	**Doc ID:** RM000002W9100YX
Title: BRAKE SYSTEM (OTHER): BRAKE PEDAL: DISASSEMBLY (2010 Corolla)		

DISASSEMBLY

1. REMOVE BRAKE PEDAL SUB-ASSEMBLY

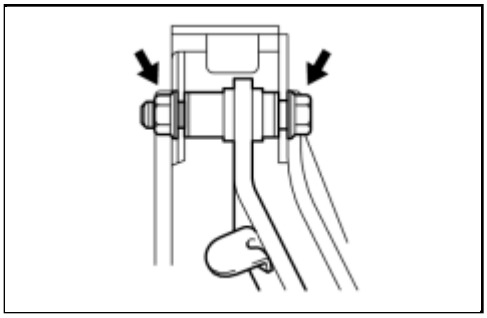

(a) Remove the bolt, nut and brake pedal sub-assembly from the brake pedal support sub-assembly.

2. REMOVE BRAKE PEDAL BUSHING

(a) Remove the 2 brake pedal bushings from the brake pedal sub-assembly.

3. REMOVE BRAKE PEDAL PAD

(a) Remove the brake pedal pad.

Last Modified: 3-10-2010	6.4 N	**From:** 200901
Model Year: 2010	**Model:** Corolla	**Doc ID:** RM000002W8X00YX
Title: BRAKE SYSTEM (OTHER): BRAKE PEDAL: ADJUSTMENT (2010 Corolla)		

ADJUSTMENT

1. INSPECT AND ADJUST BRAKE PEDAL HEIGHT

(a) Check the brake pedal height.

(1) Turn back the carpet.

(2) Turn back the dash silencer from the slit provided on the dash silencer.

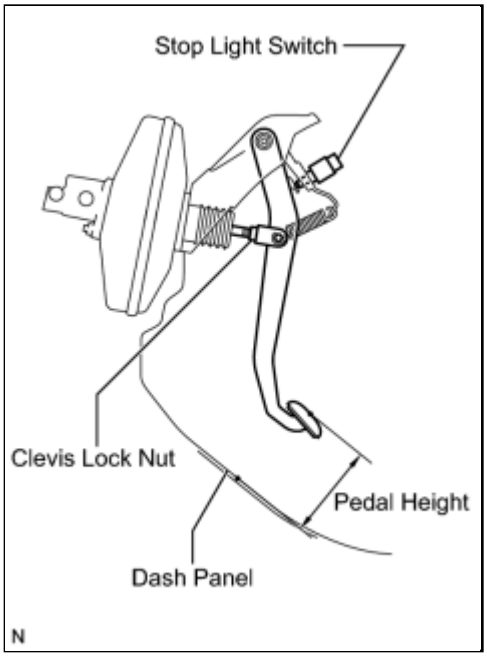

(3) Measure the shortest distance between the brake pedal surface and dash panel.

Pedal height from floor panel:
141.4 to 151.4 mm (5.57 to 5.96 in.)

(b) Adjust the brake pedal height.

(1) Disconnect the stop light switch connector.

(2) Remove the stop light switch assembly.

(3) Loosen the push rod clevis lock nut.

(4) Adjust the brake pedal height by turning the push rod.

(5) Tighten the push rod clevis lock nut.

Torque: 26 N·m (265 kgf·cm, 19ft·lbf)

(6) Insert the stop light switch into the adjuster mounting until the switch body touches the brake pedal.

NOTICE:

Do not depress the brake pedal.

(7) Adjust the stop light switch INFO .

(8) Connect the stop light switch connector.

2. INSPECT BRAKE PEDAL FREE PLAY

(a) Stop the engine. Depress the brake pedal several times until no vacuum is left in the brake booster. Release the brake pedal.

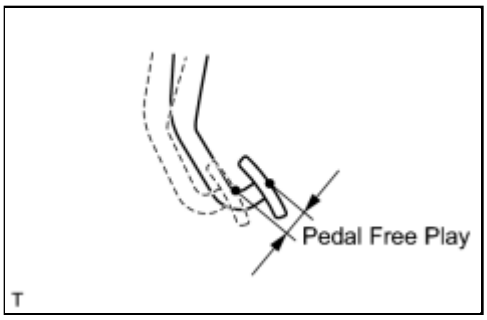

(b) Depress the pedal until a slight resistance is felt. Measure the distance as shown in the illustration.

Pedal free play:

1.0 to 6.0 mm (0.0394 to 0.236 in.)

If the pedal free play is not as specified, check the stop light switch clearance INFO . If the pedal free play is as specified, proceed to the Inspect brake pedal reserve distance procedure.

3. INSPECT BRAKE PEDAL RESERVE DISTANCE

HINT:

Measure the distance at the same point used for the brake pedal height inspection.

(a) Release the parking brake lever.

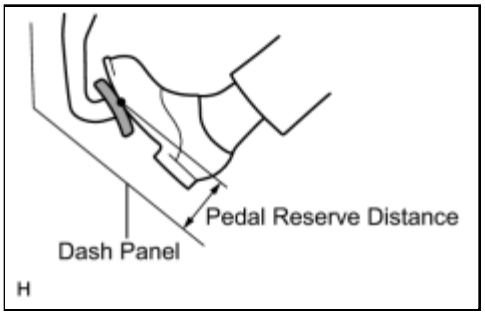

(b) With the engine running, depress the brake pedal and measure the pedal reserve distance as shown in the illustration.

Pedal Reserve Distance from the Dash Panel at 294 N (30 kgf, 66 lbf):

	SPECIFIED CONDITION
w/ ABS	81 mm (3.19 in.)
w/ VSC	87 mm (3.43 in.)

If the distance is not as specified, troubleshoot the brake system INFO .

Last Modified: 3-10-2010	6.4 A	**From:** 200901
Model Year: 2010	**Model:** Corolla	**Doc ID:** RM000002W9200ZX
Title: BRAKE SYSTEM (OTHER): BRAKE PEDAL: REASSEMBLY (2010 Corolla)		

REASSEMBLY

1. INSTALL BRAKE PEDAL PAD

(a) Install the brake pedal pad.

2. INSTALL BRAKE PEDAL BUSHING

(a) Apply lithium soap base glycol grease to 2 new brake pedal bushings, and install them to the brake pedal sub-assembly.

3. INSTALL BRAKE PEDAL SUB-ASSEMBLY

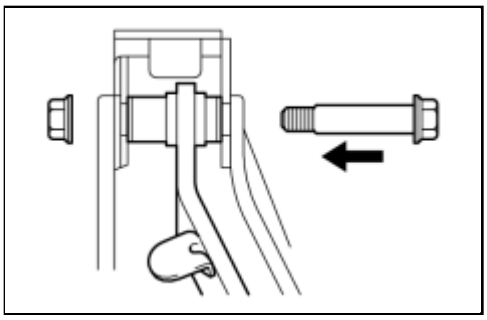

(a) Install the brake pedal sub-assembly to the brake pedal support sub-assembly with the bolt and nut as shown in the illustration.

Torque: 37 N·m (377 kgf·cm, 27ft·lbf)

Last Modified: 3-10-2010	6.4 A	**From:** 200901
Model Year: 2010	**Model:** Corolla	**Doc ID:** RM000002W8Y00XX
Title: BRAKE SYSTEM (OTHER): BRAKE PEDAL: INSTALLATION (2010 Corolla)		

INSTALLATION

1. INSTALL BRAKE PEDAL SUPPORT SUB-ASSEMBLY

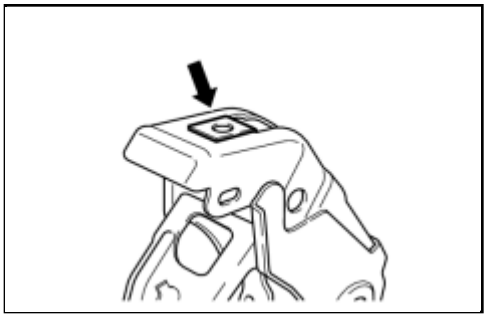

(a) Install the nut to the brake pedal support sub-assembly.

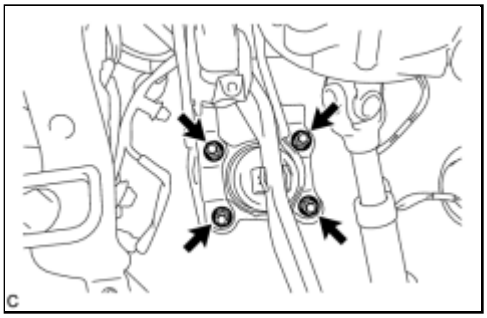

(b) Install the brake pedal support sub-assembly with the 4 nuts.

Torque: 13 N·m (132 kgf·cm, 10ft·lbf)

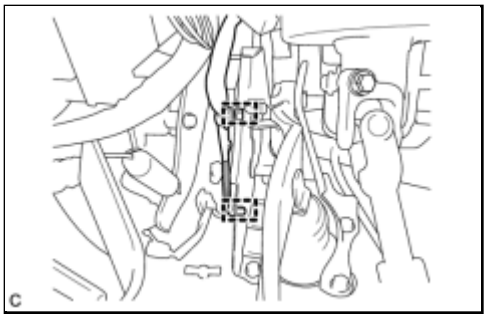

(c) Engage the 2 clamps to the brake pedal support sub-assembly.

(d) Install the brake pedal support sub-assembly to the instrument panel reinforcement with the bolt.

Torque: 24 N·m (245 kgf·cm, 18ft·lbf)

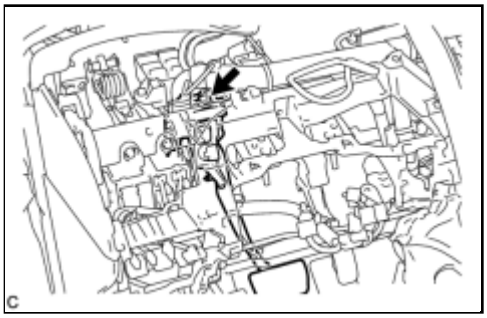

2. INSTALL STOP LIGHT SWITCH MOUNTING ADJUSTER

(a) Install the stop light switch mounting adjuster to the brake pedal support sub-assembly.

3. INSTALL STOP LIGHT SWITCH ASSEMBLY INFO

4. CONNECT BRAKE MASTER CYLINDER PUSH ROD CLEVIS

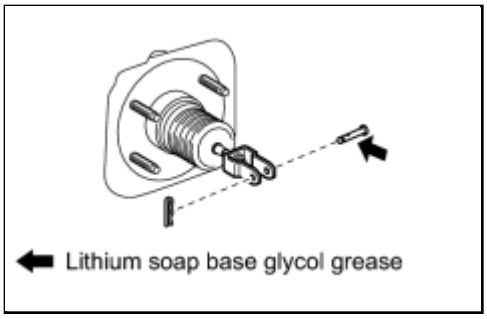

(a) Apply lithium soap base glycol grease to the push rod pin.

(b) Connect the brake master cylinder push rod clevis to the brake pedal with the push rod clevis pin, and install a new clip as shown in the illustration.

5. INSTALL BRAKE PEDAL RETURN SPRING

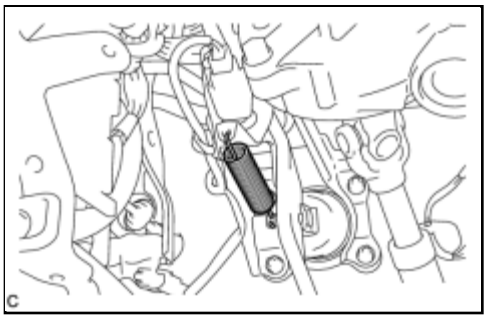

(a) Install the brake pedal return spring between the brake pedal support sub-assembly and brake master cylinder push rod clevis.

6. INSPECT AND ADJUST BRAKE PEDAL HEIGHT INFO

7. INSPECT BRAKE PEDAL FREE PLAY INFO

8. INSPECT BRAKE PEDAL RESERVE DISTANCE INFO

9. INSTALL LOWER INSTRUMENT PANEL FINISH PANEL SUB-ASSEMBLY INFO

10. INSTALL UPPER INSTRUMENT PANEL SUB-ASSEMBLY

HINT:

Refer to the instructions for Installation of the upper instrument panel sub-assembly INFO .



Last Modified: 3-10-2010	6.4 T	**From:** 200901
Model Year: 2010	**Model:** Corolla	**Doc ID:** RM000001JQM01MX
Title: BRAKE SYSTEM (OTHER): BRAKE SYSTEM: PROBLEM SYMPTOMS TABLE (2010 Corolla)		

PROBLEM SYMPTOMS TABLE

HINT:

Use the table below to help determine the cause of the problem symptoms. If multiple suspected areas are listed, the potential causes of the symptoms are listed in order of probability in the "Suspected Area" column of the table. Check each symptom by checking the suspected areas in the order they are listed. Replace parts as necessary.

Brake System

SYMPTOM	SUSPECTED AREA	SEE PAGE
Low pedal or spongy pedal	Fluid leaks in brake system	-
	Air in brake system	INFO
	Piston seal (Worn or damaged) (Front disc brake)	INFO
	Piston seal (Worn or damaged) (Rear disc brake)	INFO
	Wheel cylinder cup (Damaged) (Rear drum brake)	INFO
	Brake master cylinder (Faulty)	INFO
Brake drag	Brake pedal free play (Minimum)	INFO
	Parking brake lever travel (Out of adjustment)	INFO
	Rear drum brake shoe clearance (Out of adjustment) (Rear drum brake)	INFO
	Pad (Cracked or distorted) (Front disc brake)	INFO
	Pad (Cracked or distorted) (Rear disc brake)	INFO
	Brake shoe (Cracked or distorted) (Rear drum brake)	INFO
	Front disc brake piston (Stuck) (Front disc brake)	INFO
	Rear disc brake piston (Stuck) (Rear disc brake)	INFO
	Piston (Stuck) (Rear drum brake)	INFO
	Front disc brake piston (Frozen) (Front disc brake)	INFO
	Rear disc brake piston (Frozen) (Rear disc brake)	INFO
	Piston (Frozen) (Rear drum brake)	INFO
	Tension or return spring (Faulty) (Rear drum brake)	INFO

SYMPTOM	SUSPECTED AREA	SEE PAGE
	Booster system (Vacuum leaks)	INFO
	Brake master cylinder (Faulty)	INFO
Brake pull	Front disc brake piston (Stuck) (Front disc brake)	INFO
	Rear disc brake piston (Stuck) (Rear disc brake)	INFO
	Piston (Stuck) (Rear drum brake)	INFO
	Pad (Oily) (Front disc brake)	INFO
	Pad (Oily) (Rear disc brake)	INFO
	Brake shoe (Oily) (Rear drum brake)	INFO
	Front disc brake piston (Frozen) (Front disc brake)	INFO
	Rear disc brake piston (Frozen) (Rear disc brake)	INFO
	Piston (Frozen) (Rear drum brake)	INFO
	Front disc (Scored) (Front disc brake)	INFO
	Rear disc (Scored) (Rear disc brake)	INFO
	Rear brake drum (Scored) (Rear drum brake)	INFO
	Pad (Cracked or distorted) (Front disc brake)	INFO
	Pad (Cracked or distorted) (Rear disc brake)	INFO
	Brake shoe (Cracked or distorted) (Rear drum brake)	INFO
Hard pedal but braking inefficient	Fluid leaks in brake system	-
	Air in brake system	INFO
	Front disc brake piston (Stuck) (Front disc brake)	INFO
	Rear disc brake piston (Stuck) (Rear disc brake)	INFO
	Piston (Stuck) (Rear drum brake)	INFO
	Pad (Cracked or distorted) (Front disc brake)	INFO
	Pad (Cracked or distorted) (Rear disc brake)	INFO
	Brake shoe (Cracked or distorted) (Rear drum brake)	INFO
	Pad (Oily) (Front disc brake)	INFO
	Pad (Oily) (Rear disc brake)	INFO
	Brake shoe (Oily) (Rear drum brake)	INFO

SYMPTOM	SUSPECTED AREA	SEE PAGE
	Pad (Glazed) (Front disc brake)	INFO
	Pad (Glazed) (Rear disc brake)	INFO
	Brake shoe (Glazed) (Rear drum brake)	INFO
	Front disc (Scored) (Front disc brake)	INFO
	Rear disc (Scored) (Rear disc brake)	INFO
	Rear brake drum (Scored) (Rear drum brake)	INFO
	Booster system (Vacuum leaks)	INFO
Noise from brakes	Pad (Cracked or distorted) (Front disc brake)	INFO
	Pad (Cracked or distorted) (Rear disc brake)	INFO
	Brake shoe (Cracked or distorted) (Rear drum brake)	INFO
	Installation bolt (Loose) (Front disc brake)	INFO
	Installation bolt (Loose) (Rear disc brake)	INFO
	Front disc (Scored) (Front disc brake)	INFO
	Rear disc (Scored) (Rear disc brake)	INFO
	Rear brake drum (Scored) (Rear drum brake)	INFO
	Pad support plate (Loose) (Front disc brake)	INFO
	Pad support plate (Loose) (Rear disc brake)	INFO
	Sliding pin (Worn) (Front disc brake)	INFO
	Sliding pin (Worn) (Rear disc brake)	INFO
	Pad (Dirty) (Front disc brake)	INFO
	Pad (Dirty) (Rear disc brake)	INFO
	Brake shoe (Dirty) (Rear drum brake)	INFO
	Pad (Glazed) (Front disc brake)	INFO
	Pad (Glazed) (Rear disc brake)	INFO
	Brake shoe (Glazed) (Rear drum brake)	INFO
	Tension or return spring (Faulty) (Rear drum brake)	INFO
	Anti-squeal shim (Damaged) (Front disc brake)	INFO
	Anti-squeal shim (Damaged) (Rear disc brake)	INFO

SYMPTOM	SUSPECTED AREA	SEE PAGE
	Shoe hold down spring (Damaged) (Rear drum brake)	INFO

Last Modified: 3-10-2010	6.4 L	**From:** 200901
Model Year: 2010	**Model:** Corolla	**Doc ID:** RM000000SRD02QX
Title: BRAKE SYSTEM (OTHER): BRAKE SYSTEM: PRECAUTION (2010 Corolla)		

PRECAUTION

1. TROUBLESHOOTING PRECAUTION

NOTICE:

- Care must be taken to replace each part properly as it could affect the performance of the brake system and result in a driving hazard. Replace the parts with those having the same part number or equivalent.
- It is very important to keep parts and the area clean when repairing the brake system.
- If the vehicle is equipped with a mobile communication system, refer to the Precaution in the introduction section INFO .
- Care must be taken when using magnets as they could affect the performance of the speed sensors.
- Since the brake lines are classified as critical safety related parts, be sure to disassemble and inspect the components if a brake fluid leak is found. If any abnormality is found, replace the component with a new one.
- When removing brake components, cover the brake line connections to prevent foreign matter such as dust or dirt from entering the lines.
- Do not damage or deform the brake lines during the removal and installation procedures.
- Do not allow brake fluid to adhere to any painted surface such as the vehicle body. If brake fluid leaks onto any painted surface, immediately wash it off.

Last Modified: 3-10-2010	6.4 K	**From:** 200901
Model Year: 2010	**Model:** Corolla	**Doc ID:** RM000002X64016X
Title: PARKING BRAKE: PARKING BRAKE CABLE (for Rear Disc Brake): COMPONENTS (2010 Corolla)		

COMPONENTS

ILLUSTRATION

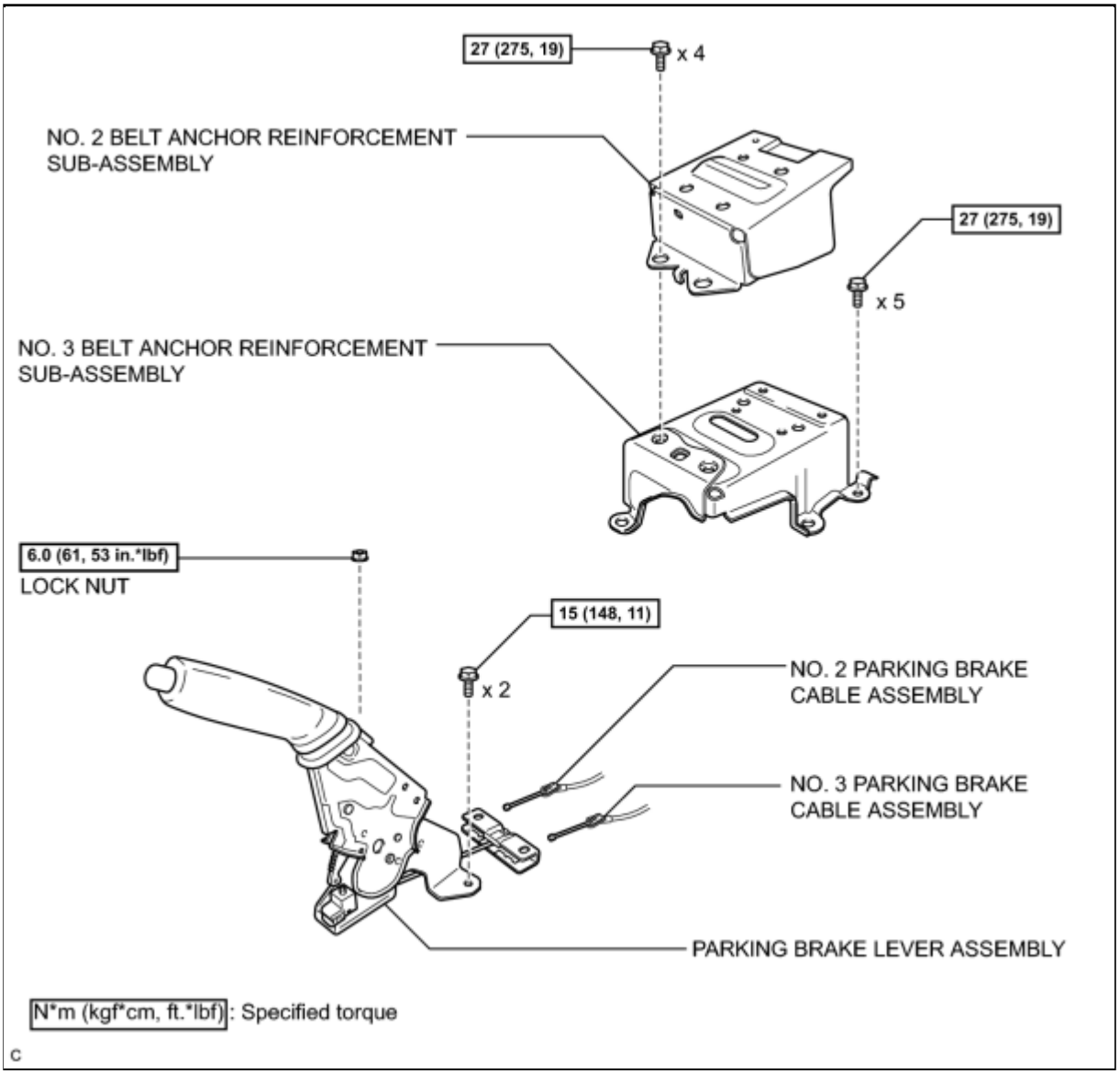

ILLUSTRATION

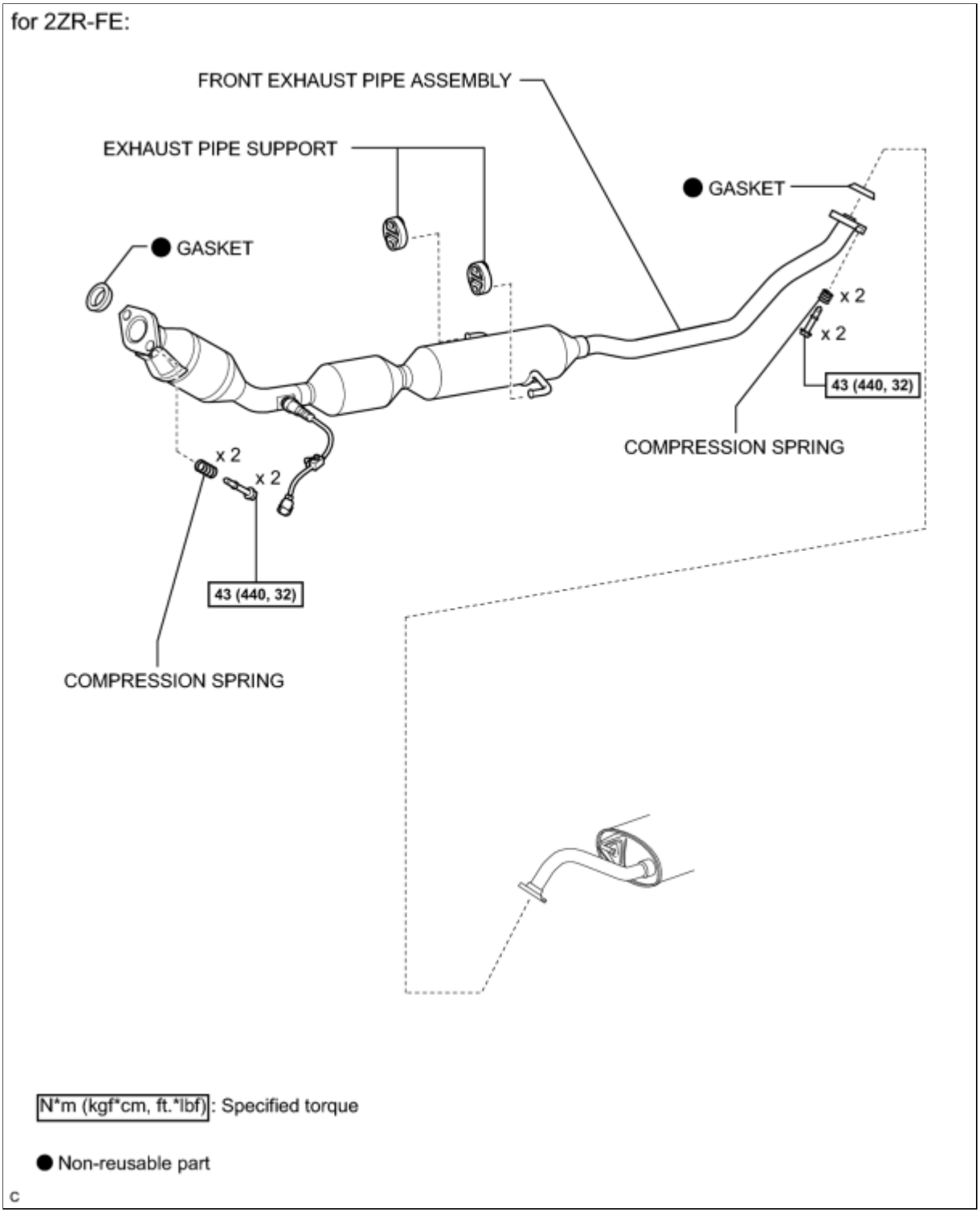

ILLUSTRATION

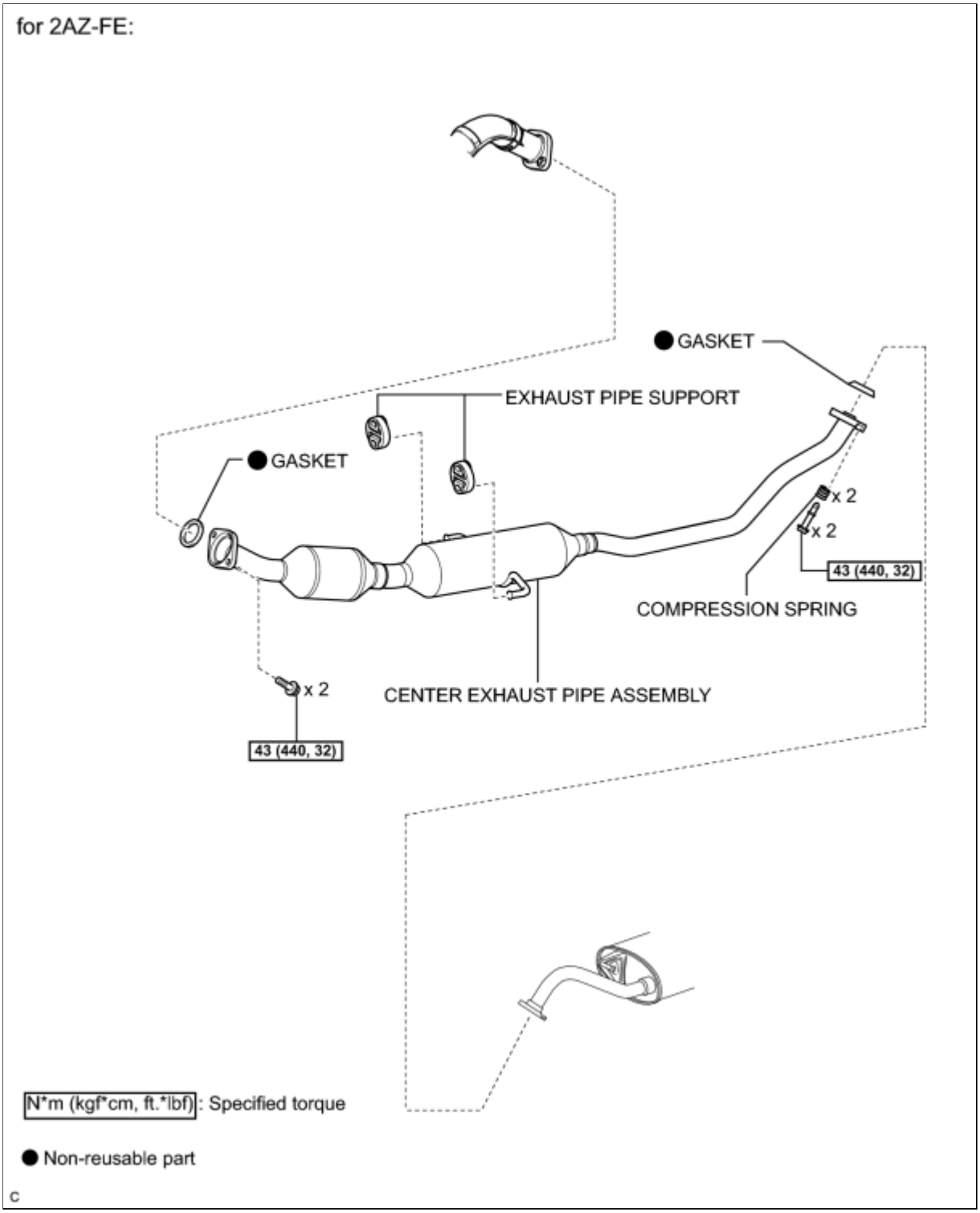

ILLUSTRATION

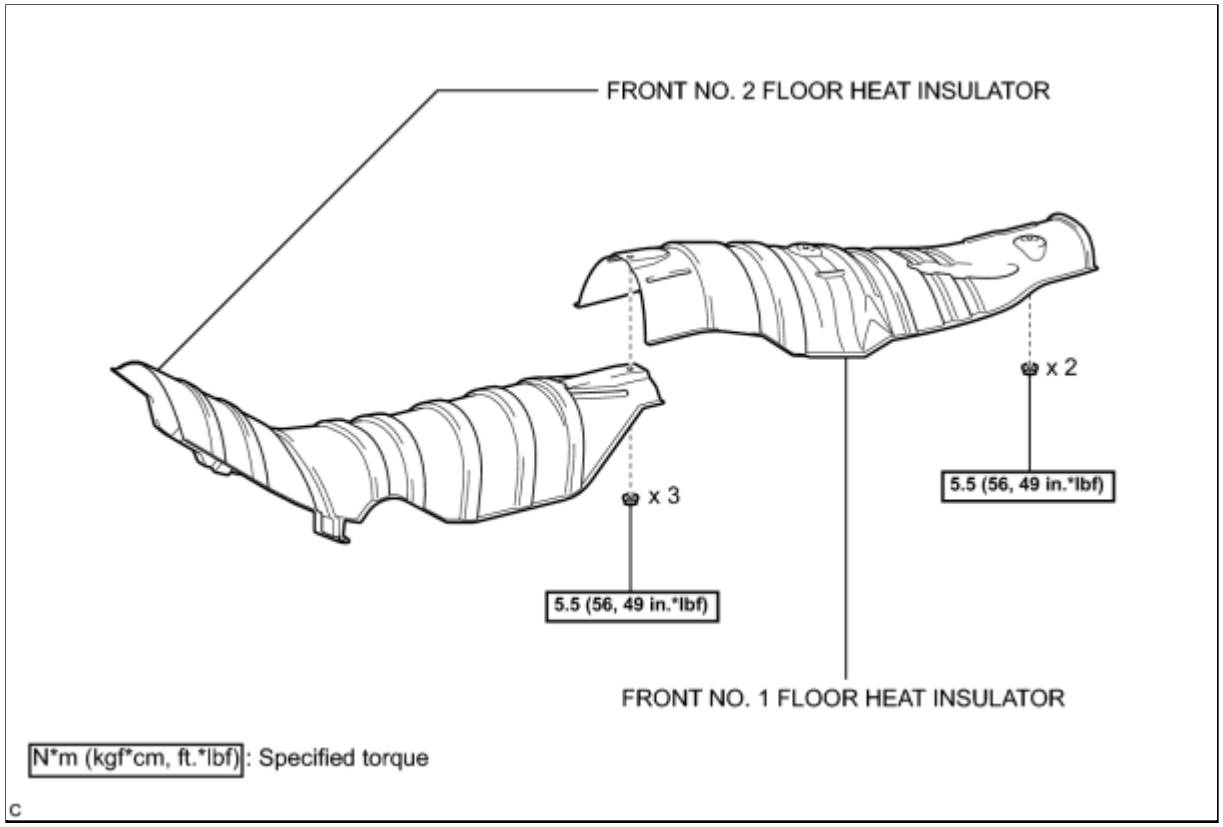

ILLUSTRATION

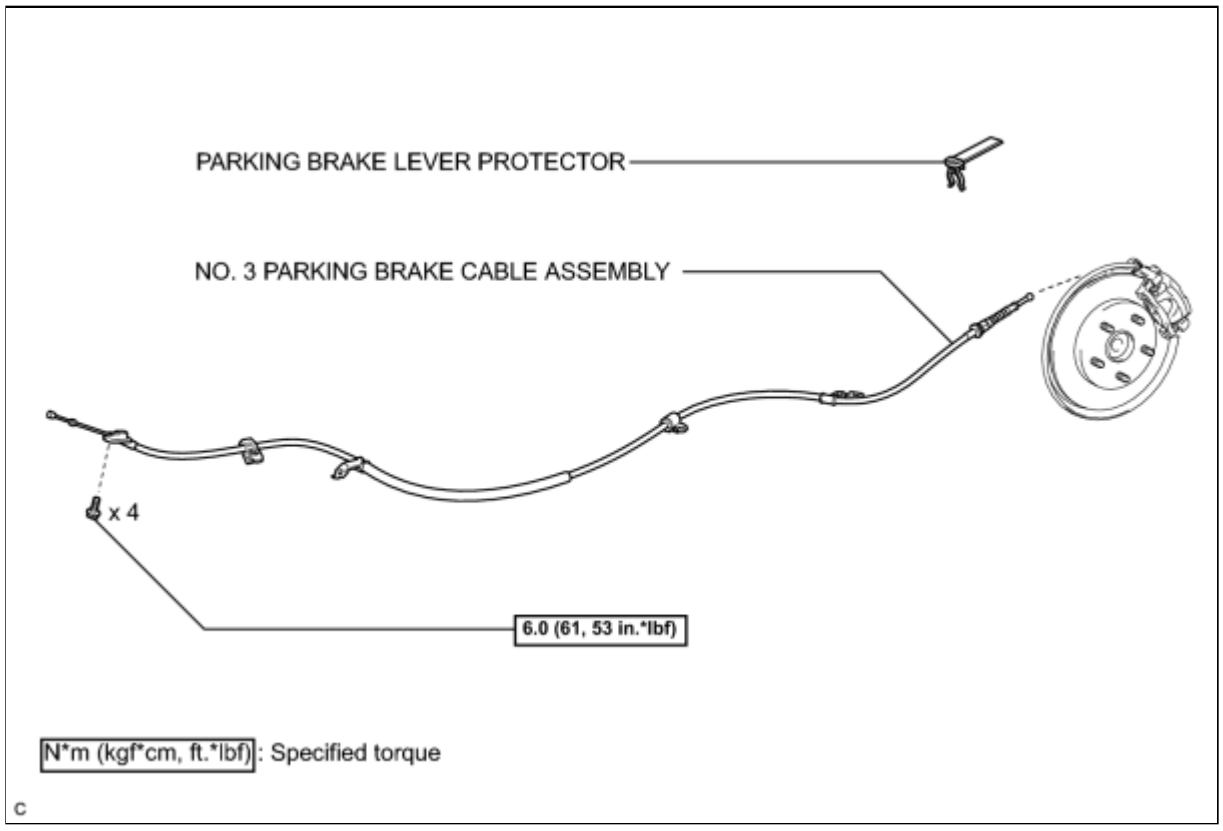

ILLUSTRATION

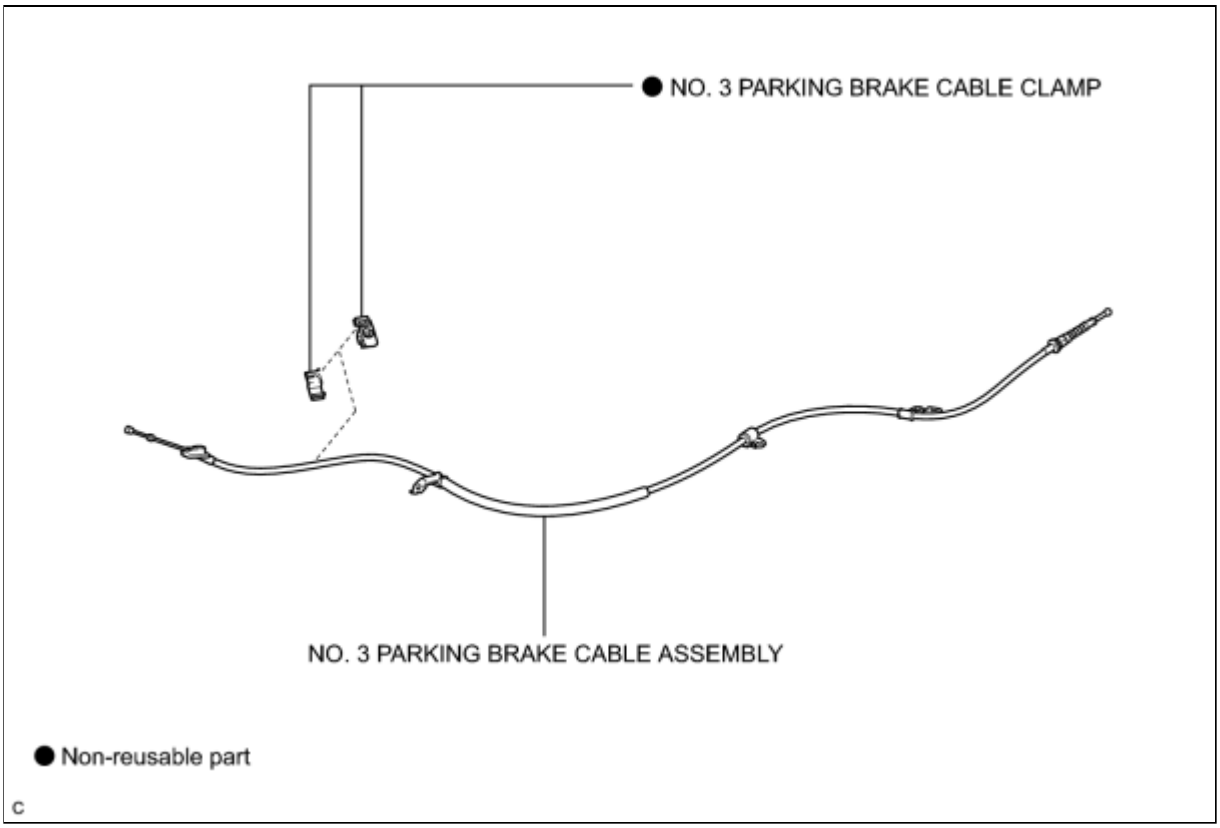
● NO. 3 PARKING BRAKE CABLE CLAMP
NO. 3 PARKING BRAKE CABLE ASSEMBLY
● Non-reusable part
C

Last Modified: 3-10-2010	6.4 A	**From:** 200901
Model Year: 2010	**Model:** Corolla	**Doc ID:** RM000002X6301BX
Title: PARKING BRAKE: PARKING BRAKE CABLE (for Rear Disc Brake): REMOVAL (2010 Corolla)		

REMOVAL

CAUTION:

Some of these service operations affect the SRS airbag system. Read the precautionary notices concerning the SRS airbag system before servicing INFO .

HINT:

- Use the same procedure for the No. 2 parking brake cable assembly and No. 3 parking brake cable assembly.
- The procedure listed below is for the No. 3 parking brake cable assembly.

1. DISCONNECT CABLE FROM NEGATIVE BATTERY TERMINAL (w/ Front Seat Side Airbag)

CAUTION:

Wait at least 90 seconds after disconnecting the cable from the negative (-) battery terminal to disable the SRS system.

2. REMOVE REAR WHEELS

3. REMOVE FRONT SEAT ASSEMBLY LH (for Manual Seat)

HINT:

Refer to the instructions for Removal of the front seat assembly INFO .

4. REMOVE FRONT SEAT ASSEMBLY LH (for Power Seat)

HINT:

Refer to the instructions for Removal of the front seat assembly INFO .

5. REMOVE FRONT SEAT ASSEMBLY RH

HINT:

Perform the same procedure for the LH side.

6. REMOVE CONSOLE BOX ASSEMBLY

HINT:

Refer to the instructions for Removal of the front console box INFO .

7. REMOVE NO. 2 BELT ANCHOR REINFORCEMENT SUB-ASSEMBLY INFO

8. REMOVE NO. 3 BELT ANCHOR REINFORCEMENT SUB-ASSEMBLY INFO

9. SEPARATE PARKING BRAKE EQUALIZER INFO

10. REMOVE PARKING BRAKE LEVER ASSEMBLY INFO

11. REMOVE PARKING BRAKE EQUALIZER INFO

12. REMOVE PARKING BRAKE CABLE END STOPPER INFO

13. REMOVE NO. 1 PARKING BRAKE CABLE ASSEMBLY INFO

14. REMOVE FRONT EXHAUST PIPE ASSEMBLY (for 2ZR-FE) INFO

15. REMOVE CENTER EXHAUST PIPE ASSEMBLY (for 2AZ-FE) INFO

16. REMOVE FRONT NO. 1 FLOOR HEAT INSULATOR

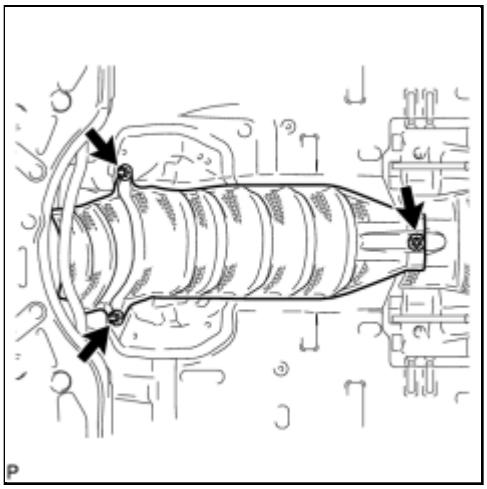

(a) Remove the 3 nuts and front No. 1 floor heat insulator.

17. REMOVE FRONT NO. 2 FLOOR HEAT INSULATOR

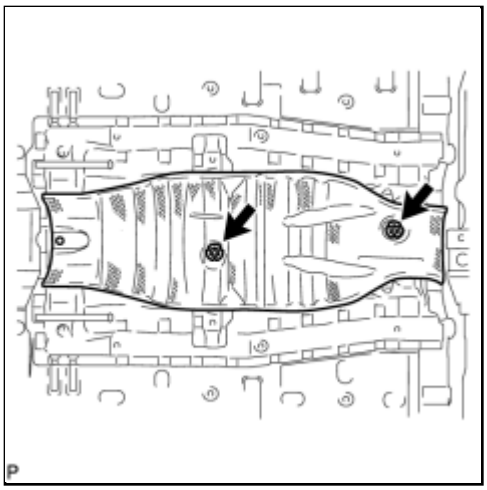

(a) Remove the 2 nuts and front No. 2 floor heat insulator.

18. REMOVE PARKING BRAKE LEVER PROTECTOR

(a) Remove the parking brake lever protector from the No. 3 parking brake cable assembly.

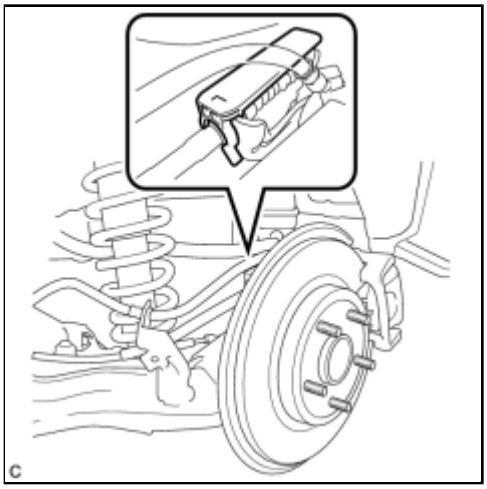

19. REMOVE NO. 3 PARKING BRAKE CABLE ASSEMBLY

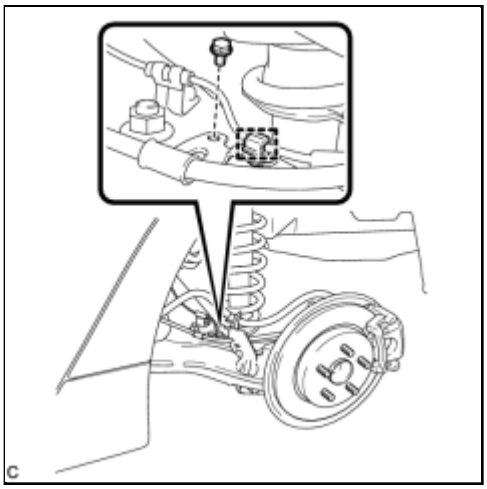

(a) Disengage the clamp from the No. 3 parking brake cable assembly.

(b) Remove the bolt.

(c) Separate the No. 3 parking brake cable assembly from the rear disc brake cylinder assembly.

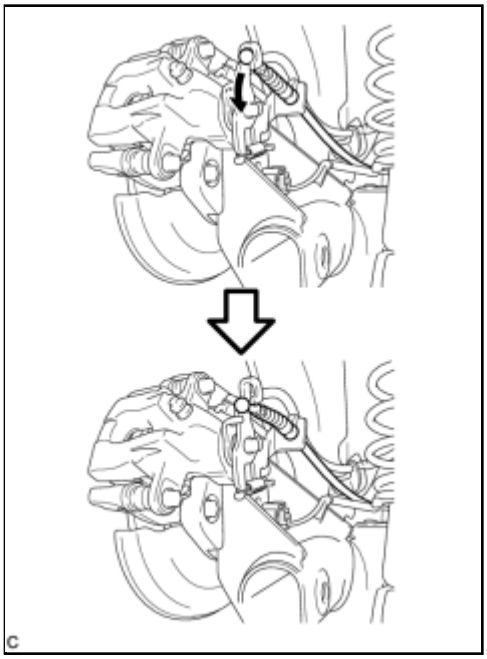

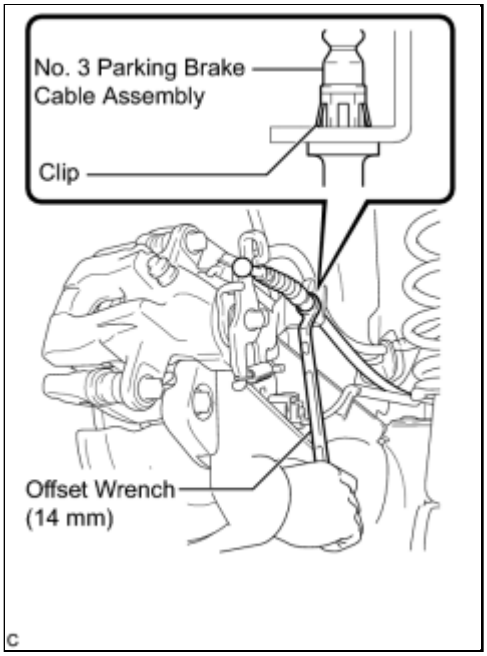

(d) Remove the No. 3 parking brake cable assembly.

HINT:

Insert an offset wrench (14 mm) at the base of the No. 3 parking brake cable assembly as shown in the illustration to disengage the clip. Pull out the No. 3 parking brake cable assembly from the rear disc brake cylinder assembly.

(e) Separate the No. 3 parking brake cable clamp.

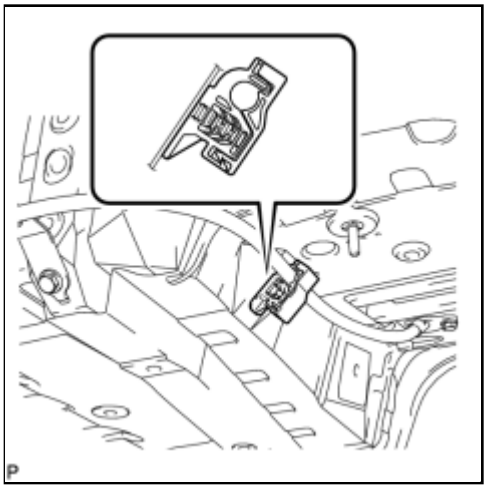

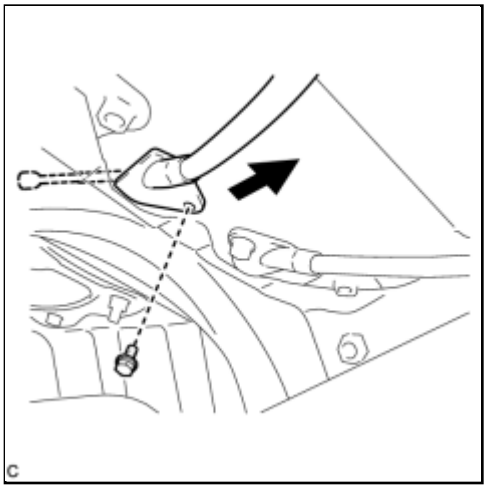

(f) Remove the bolt and pull out the No. 3 parking brake cable assembly to the outside of the body.

(g) Remove the 2 bolts and the No. 3 parking brake cable assembly.

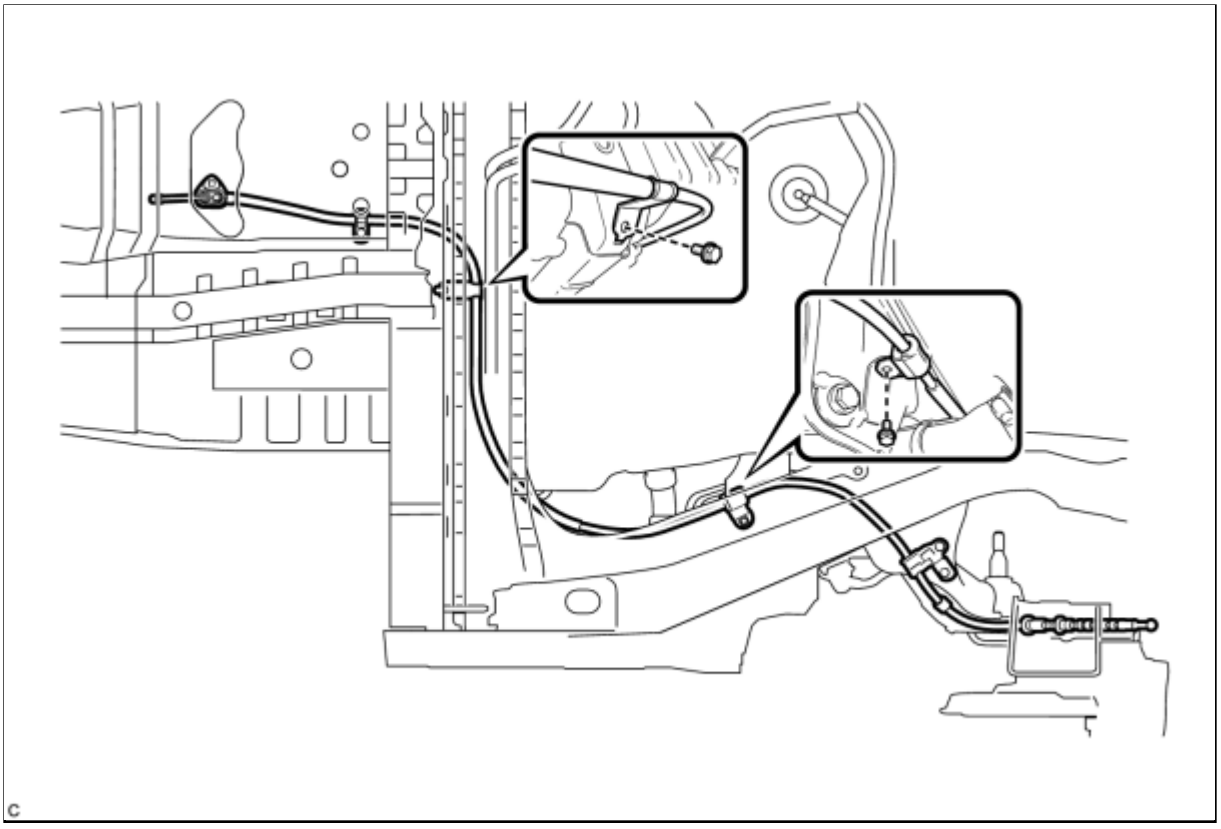

20. REMOVE NO. 3 PARKING BRAKE CABLE CLAMP

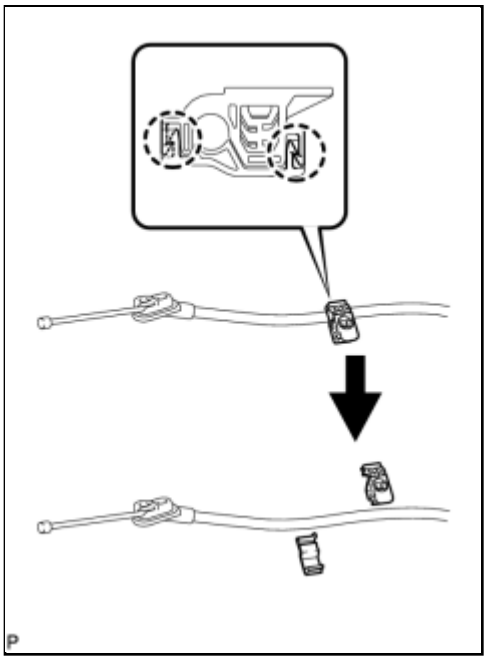

(a) Disengage the 2 claws to remove the No. 3 parking brake cable clamp from the No. 3 parking brake cable assembly.

Last Modified: 3-10-2010	6.4 A	**From:** 200901
Model Year: 2010	**Model:** Corolla	**Doc ID:** RM000002X6201BX
Title: PARKING BRAKE: PARKING BRAKE CABLE (for Rear Disc Brake): INSTALLATION (2010 Corolla)		

INSTALLATION

1. INSTALL NO. 3 PARKING BRAKE CABLE CLAMP

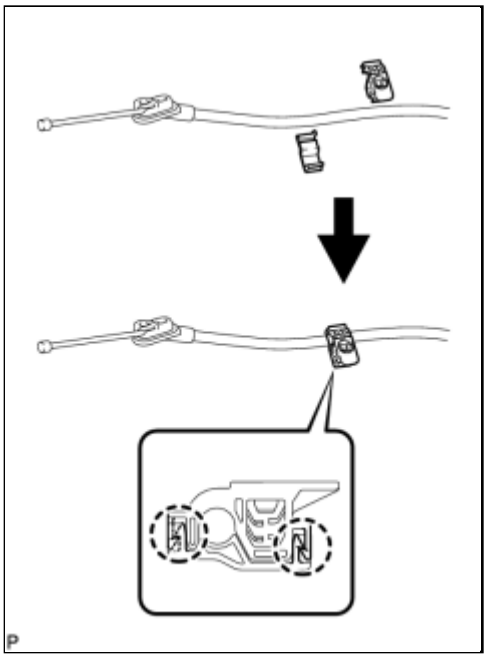

(a) Engage the 2 claws together to install a new No. 3 parking brake cable clamp to the No. 3 parking brake cable assembly.

2. INSTALL NO. 3 PARKING BRAKE CABLE ASSEMBLY

(a) Install the No. 3 parking brake cable assembly with the 2 bolts.

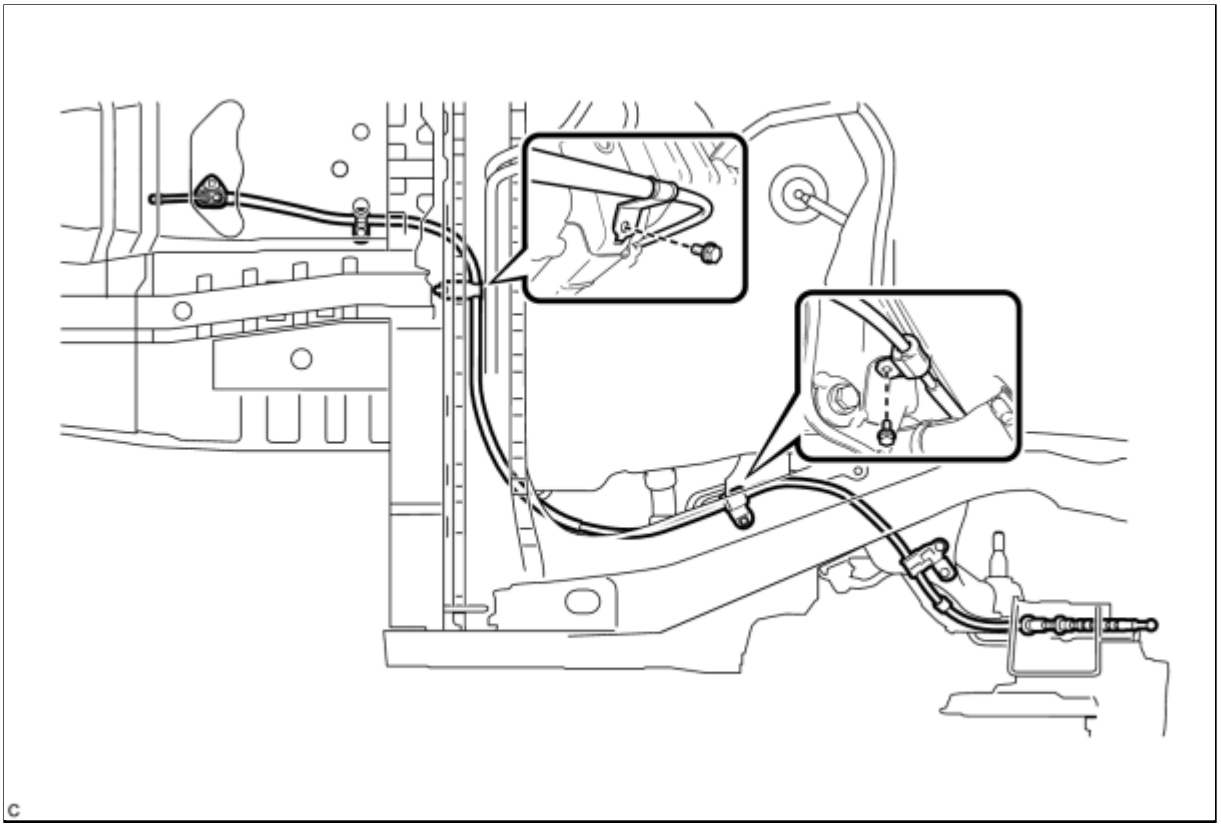

Torque: 6.0 N·m (61 kgf·cm, 53in·lbf)

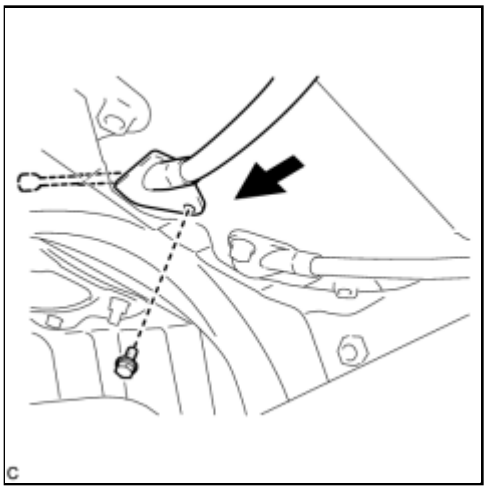

(b) Insert the No. 3 parking brake cable assembly into the body.

(c) Install the bolt.

Torque: 6.0 N·m (61 kgf·cm, 53in·lbf)

(d) Install the No. 3 parking brake cable clamp.

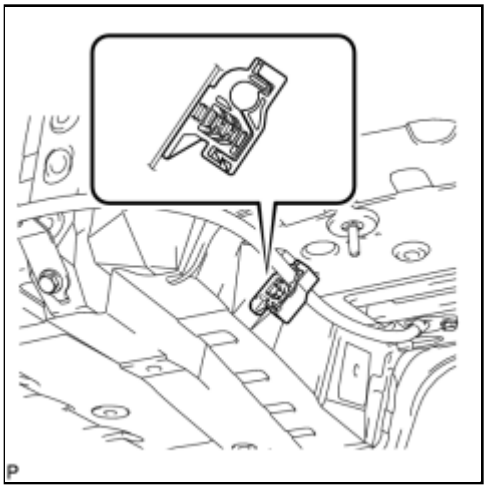

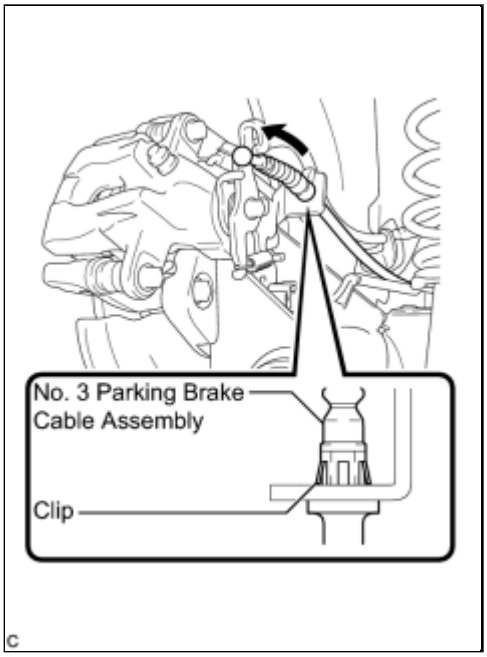

(e) Install the No. 3 parking brake cable assembly to the rear disc brake cylinder assembly LH.

HINT:

Be sure to engage the No. 3 parking brake cable assembly clip onto the rear disc brake cylinder assembly LH as shown in the illustration.

(f) Connect the No. 3 parking brake cable assembly to the rear disc brake cylinder assembly LH.

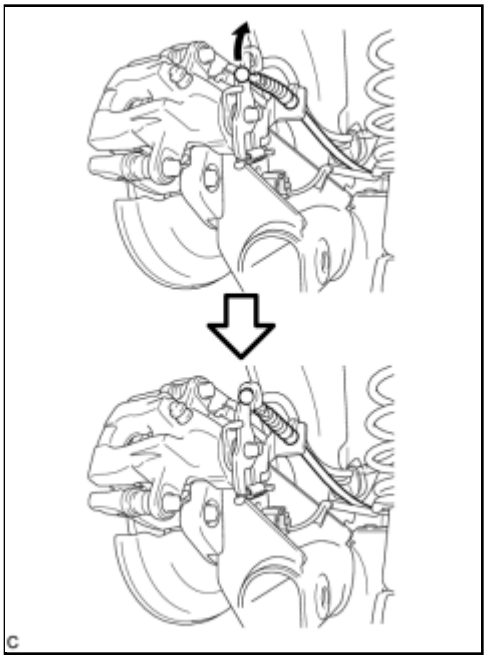

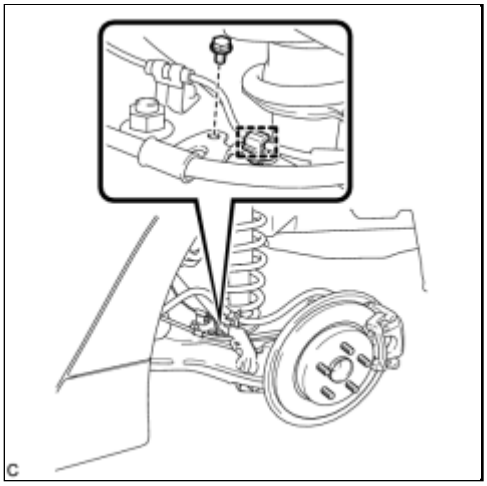

(g) Install the bolt.

Torque: 6.0 N·m (61 kgf·cm, 53in·lbf)

(h) Engage the clamp to the No. 3 parking brake cable assembly.

3. INSTALL PARKING BRAKE LEVER PROTECTOR

(a) Install the parking brake lever protector to the No. 3 parking brake cable assembly.

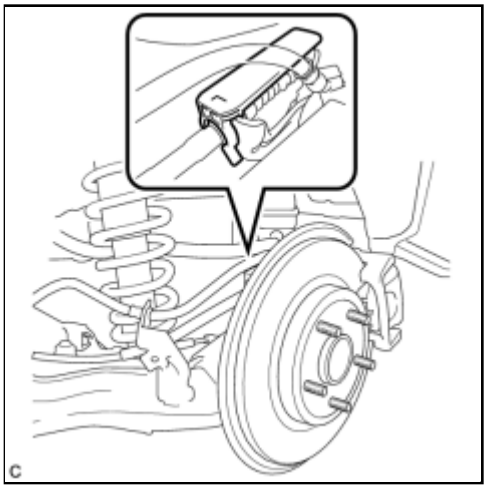

4. INSTALL FRONT NO. 2 FLOOR HEAT INSULATOR

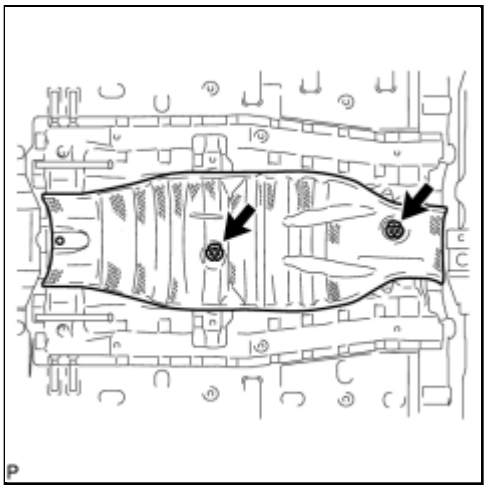

(a) Install the front No. 2 floor heat insulator with the 2 nuts.

Torque: 5.5 N·m (56 kgf·cm, 49in·lbf)

5. INSTALL FRONT NO. 1 FLOOR HEAT INSULATOR

(a) Install the front No. 1 floor heat insulator with the 3 nuts.

Torque: 5.5 N·m (56 kgf·cm, 49in·lbf)

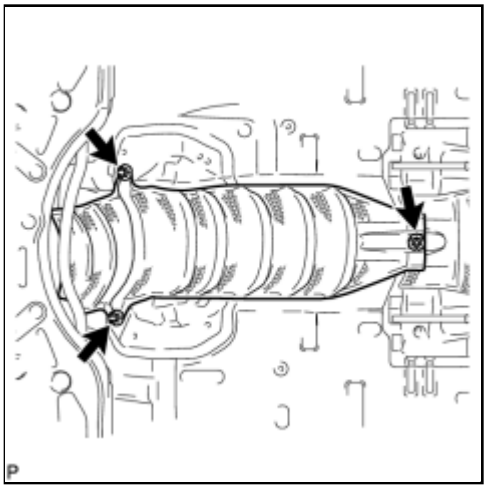

6. INSTALL FRONT EXHAUST PIPE ASSEMBLY (for 2ZR-FE) INFO

7. INSTALL CENTER EXHAUST PIPE ASSEMBLY (for 2AZ-FE) INFO

8. INSTALL NO. 1 PARKING BRAKE CABLE ASSEMBLY INFO

9. INSTALL PARKING BRAKE CABLE END STOPPER INFO

10. INSTALL PARKING BRAKE EQUALIZER INFO

11. INSTALL PARKING BRAKE LEVER ASSEMBLY INFO

12. CONNECT PARKING BRAKE EQUALIZER INFO

13. INSTALL NO. 3 BELT ANCHOR REINFORCEMENT SUB-ASSEMBLY INFO

14. INSTALL NO. 2 BELT ANCHOR REINFORCEMENT SUB-ASSEMBLY INFO

15. ADJUST PARKING BRAKE TRAVEL INFO

16. INSTALL CONSOLE BOX ASSEMBLY

HINT:

Refer to the instructions for Installation of the front console box INFO .

17. INSTALL FRONT SEAT ASSEMBLY LH (for Manual Seat)

HINT:

Refer to the instructions for Installation of the front seat assembly INFO .

18. INSTALL FRONT SEAT ASSEMBLY LH (for Power Seat)

HINT:

Refer to the instructions for Installation of the front seat assembly INFO .

19. INSTALL FRONT SEAT ASSEMBLY RH

HINT:

Perform the same procedure for the LH side.

20. CONNECT CABLE TO NEGATIVE BATTERY TERMINAL (w/ Front Seat Side Airbag)

21. INSPECT SRS WARNING LIGHT (w/ Front Seat Side Airbag)

HINT: INFO .

22. INSPECT FOR EXHAUST GAS LEAK

23. INSTALL REAR WHEELS

Torque: 103 N·m (1050 kgf·cm, 76ft·lbf)

Last Modified: 3-10-2010	6.4 K	**From:** 200901
Model Year: 2010	**Model:** Corolla	**Doc ID:** RM000002X64017X
Title: PARKING BRAKE: PARKING BRAKE CABLE (for Rear Drum Brake): COMPONENTS (2010 Corolla)		

COMPONENTS

ILLUSTRATION

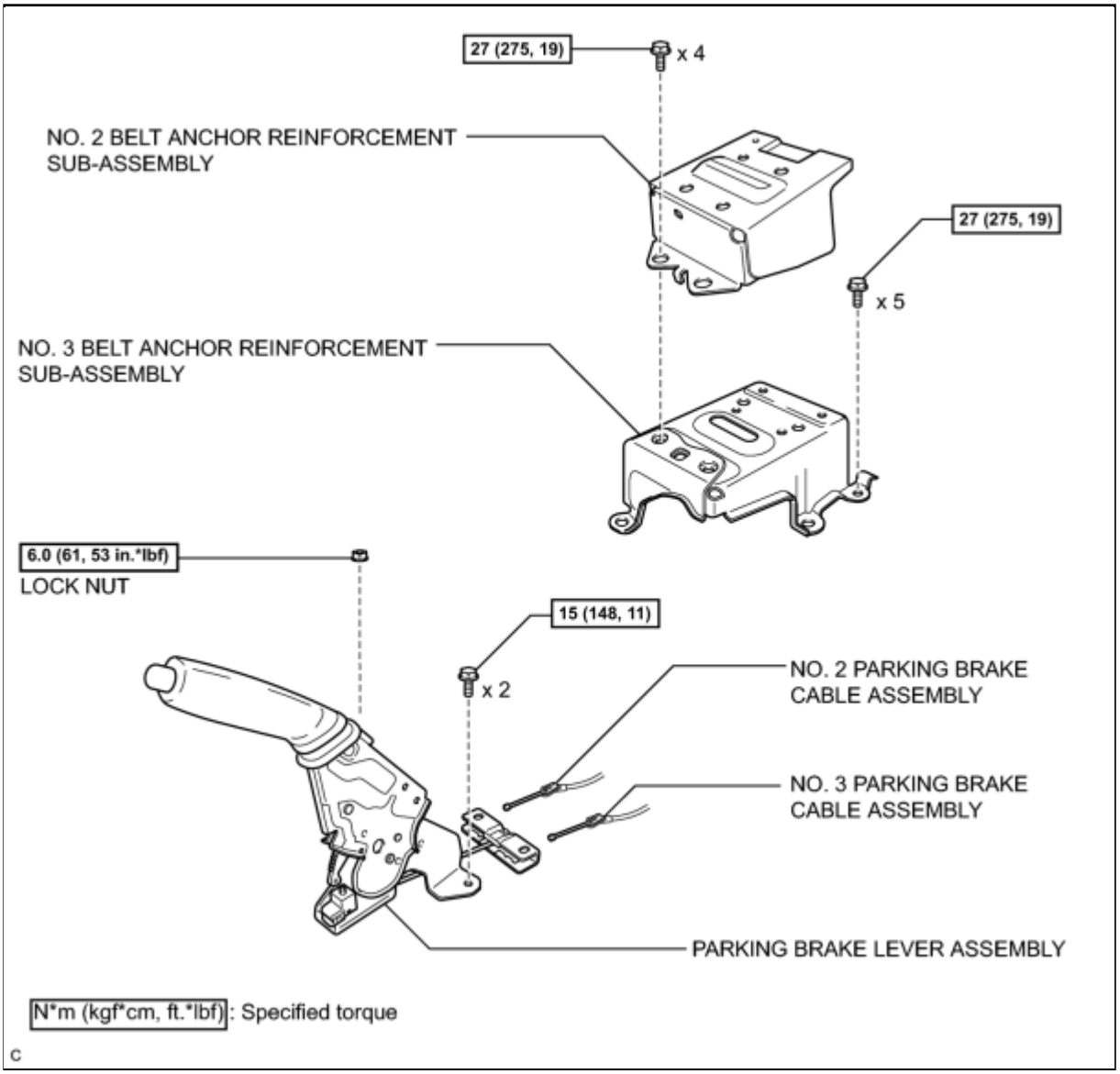

ILLUSTRATION

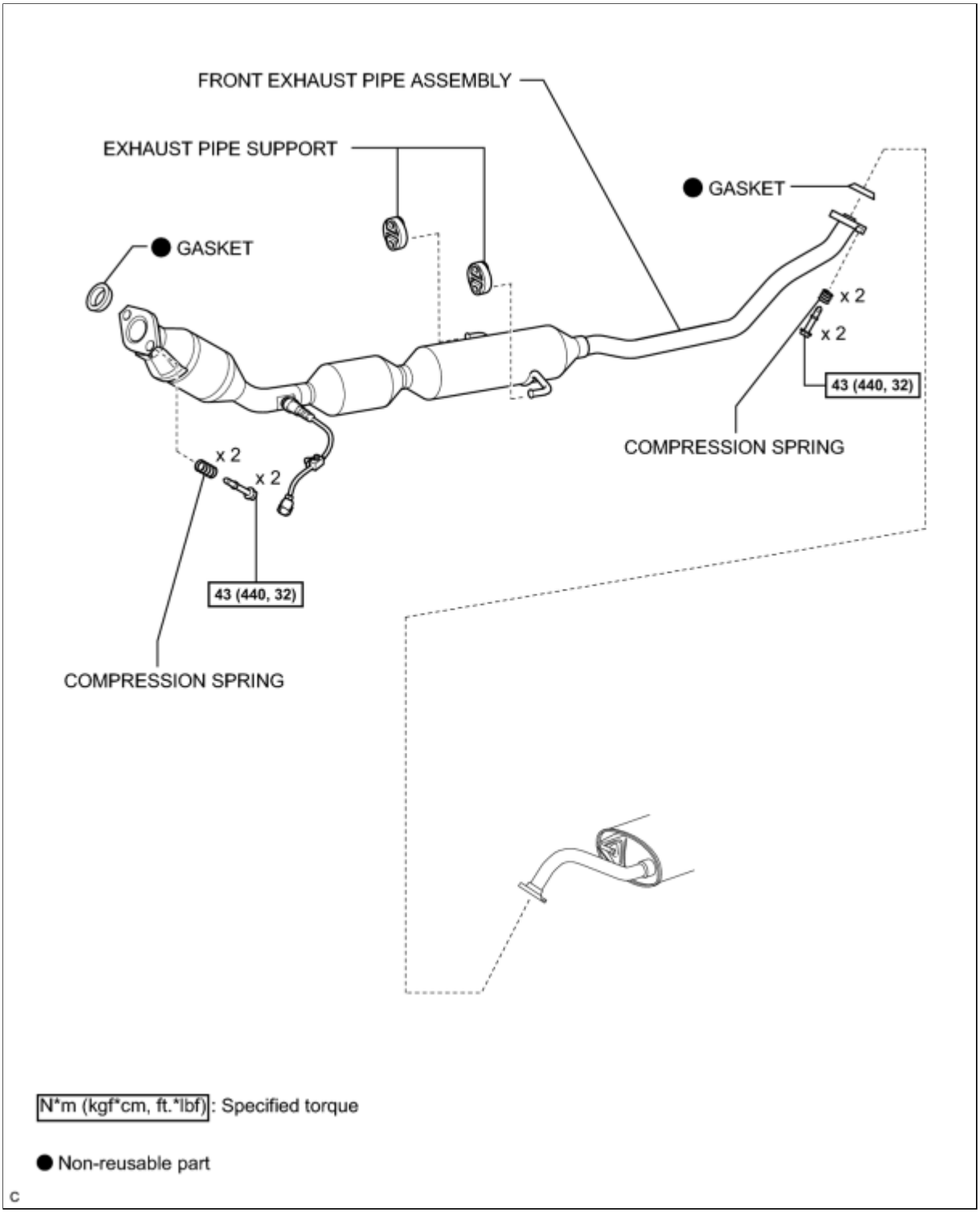

ILLUSTRATION

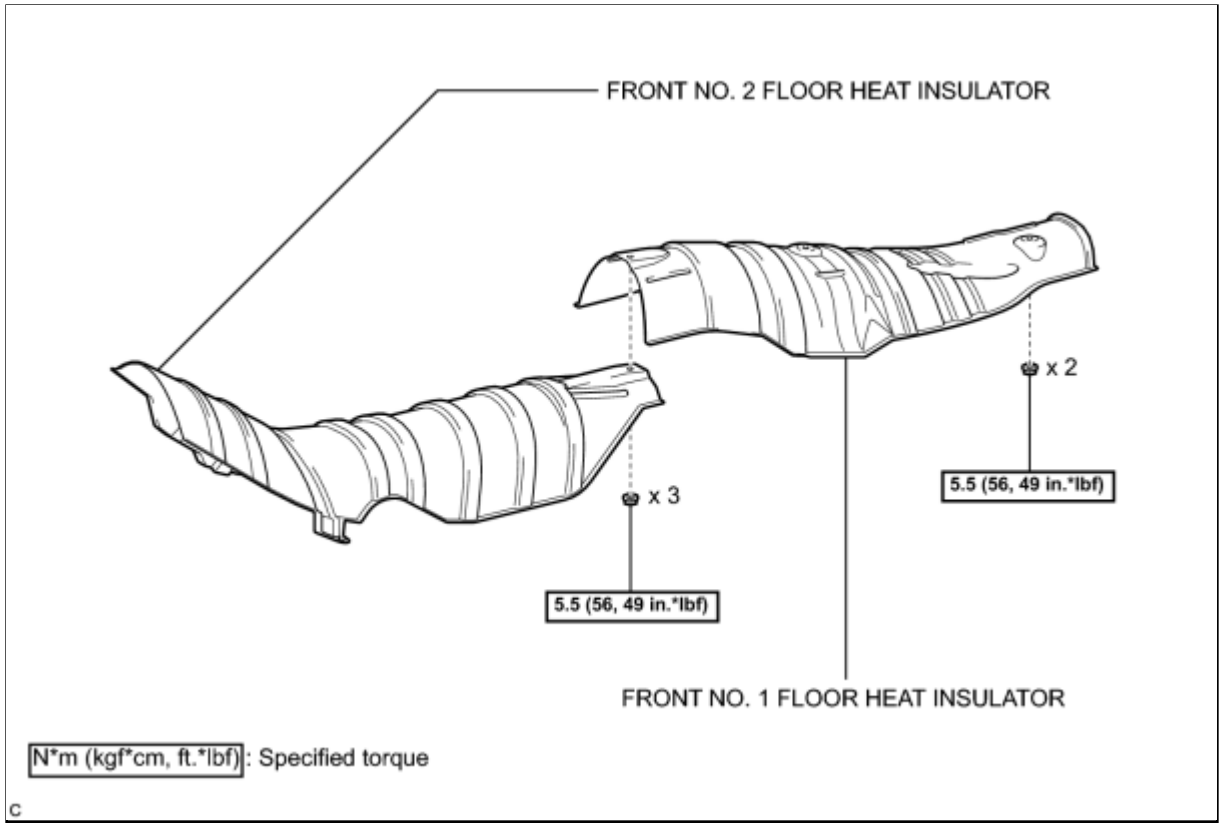

ILLUSTRATION

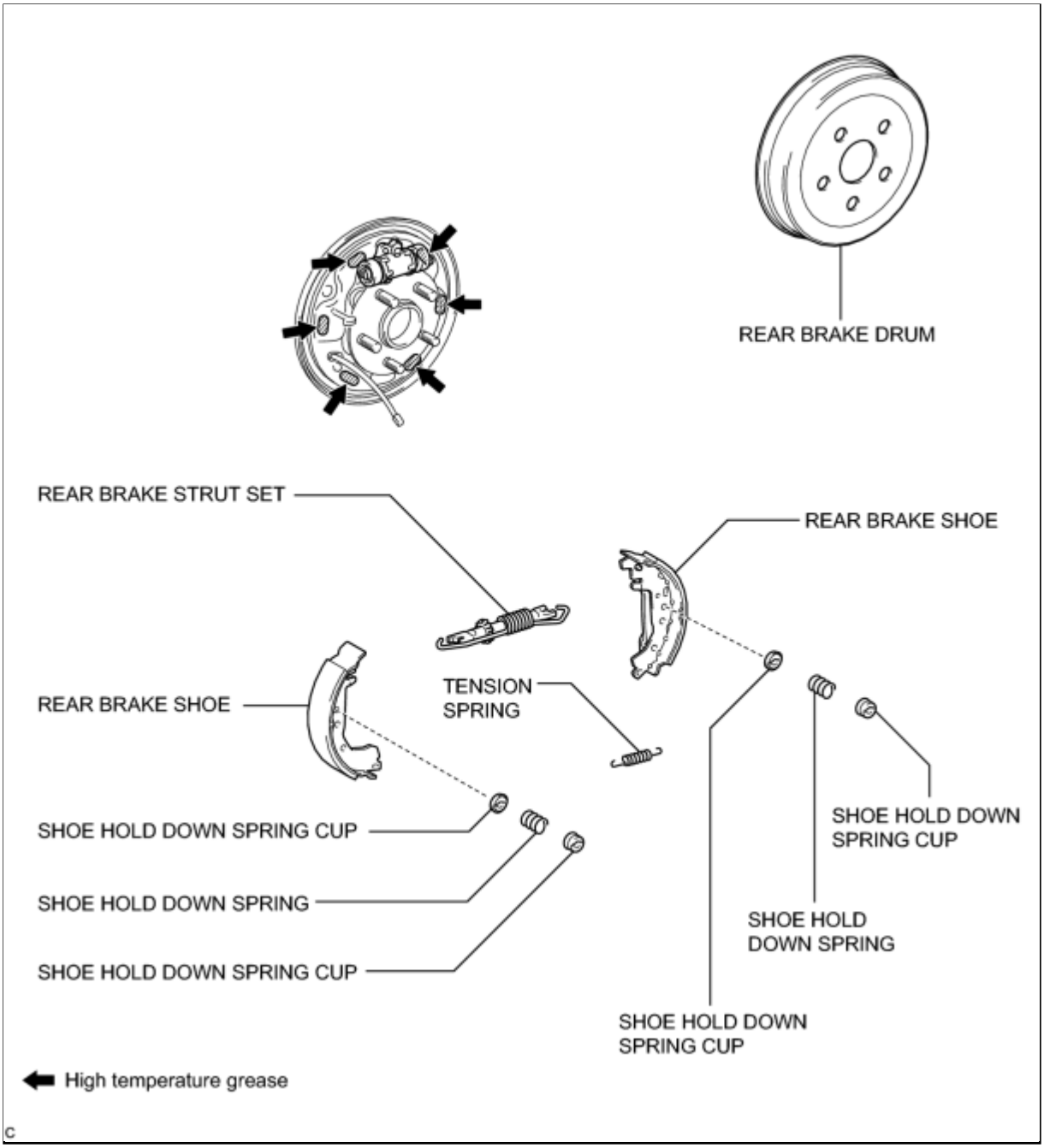

ILLUSTRATION

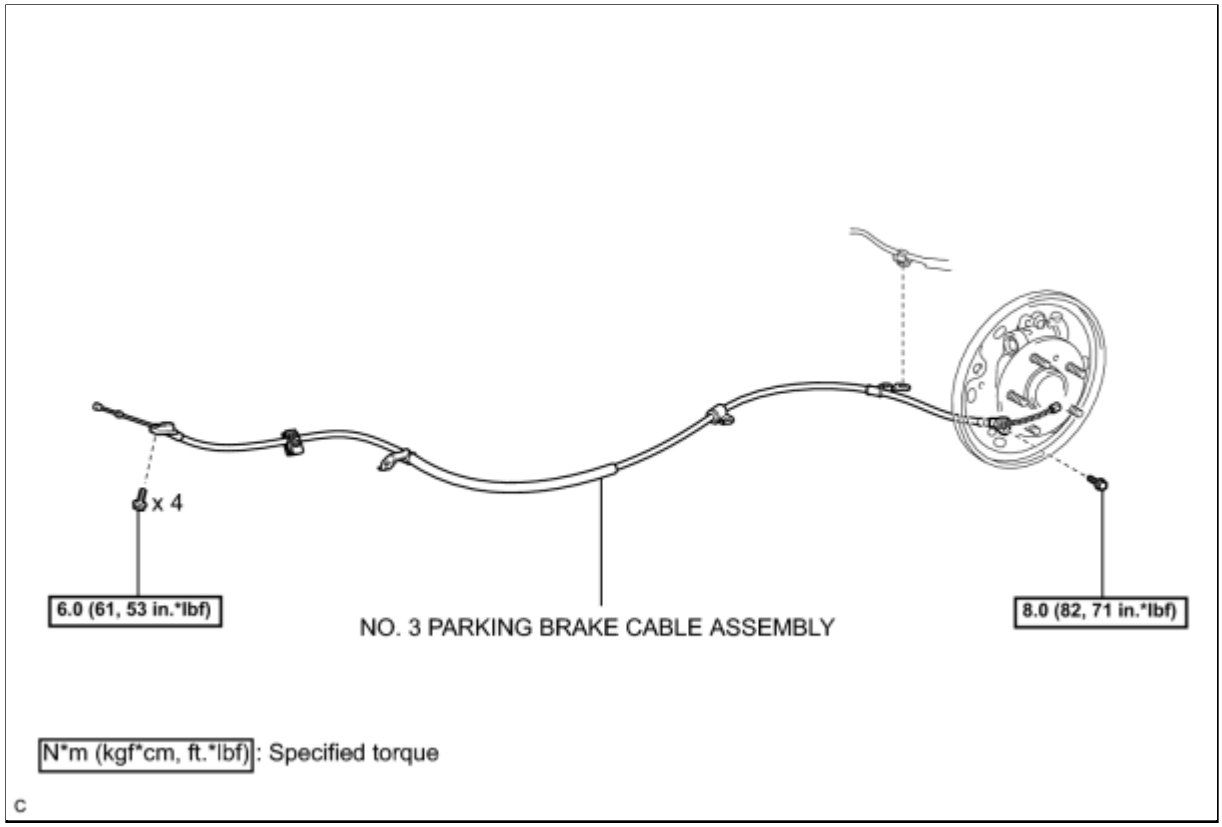

ILLUSTRATION

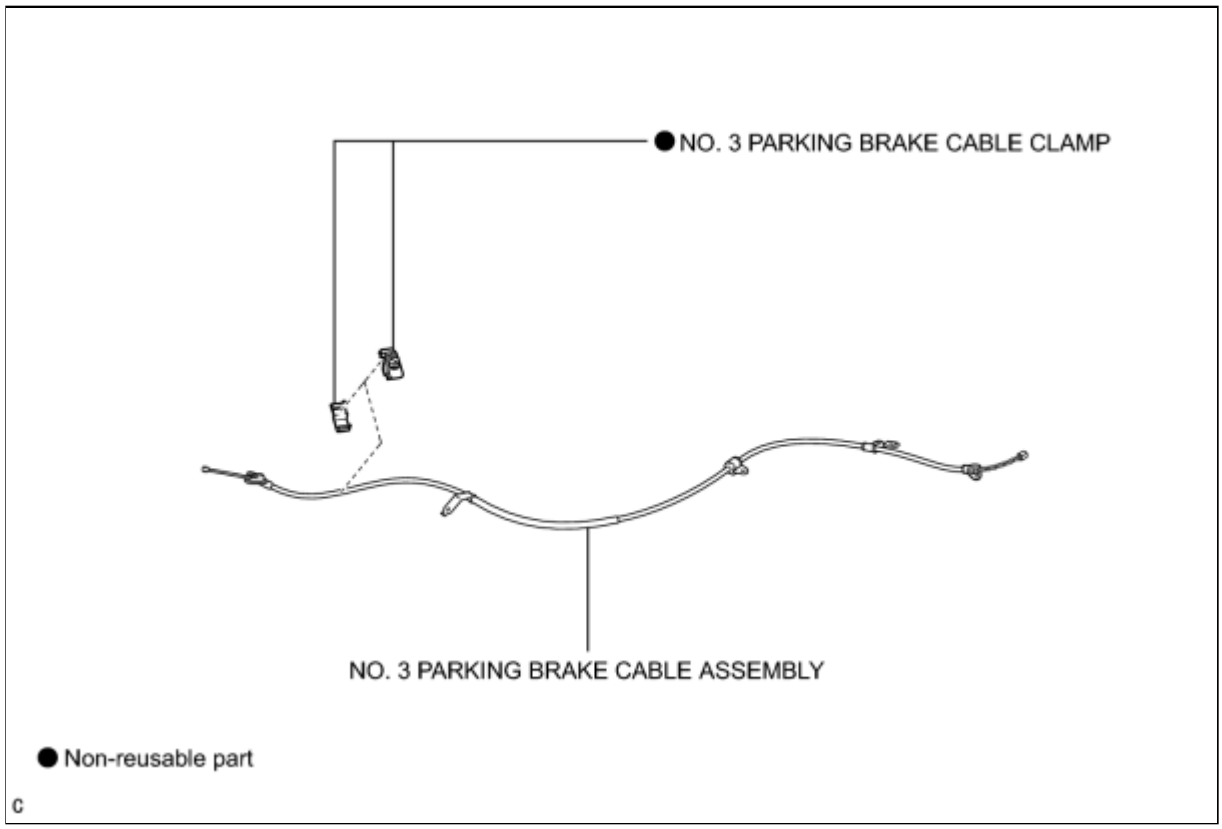

Last Modified: 3-10-2010	6.4 A	**From:** 200901
Model Year: 2010	**Model:** Corolla	**Doc ID:** RM000002X6301CX
Title: PARKING BRAKE: PARKING BRAKE CABLE (for Rear Drum Brake): REMOVAL (2010 Corolla)		

REMOVAL

CAUTION:

Some of these service operations affect the SRS airbag system. Read the precautionary notices concerning the SRS airbag system before servicing INFO .

HINT:

- Use the same procedure for the No. 2 parking brake cable assembly and No. 3 parking brake cable assembly.
- The procedure listed below is for the No. 3 parking brake cable assembly.

1. DISCONNECT CABLE FROM NEGATIVE BATTERY TERMINAL (w/ Front Seat Side Airbag)

CAUTION:

Wait at least 90 seconds after disconnecting the cable from the negative (-) battery terminal to disable the SRS system.

2. REMOVE REAR WHEELS

3. REMOVE FRONT SEAT ASSEMBLY LH (for Manual Seat)

HINT:

Refer to the instructions for Removal of the front seat assembly INFO .

4. REMOVE FRONT SEAT ASSEMBLY LH (for Power Seat)

HINT:

Refer to the instructions for Removal of the front seat assembly INFO .

5. REMOVE FRONT SEAT ASSEMBLY RH

HINT:

Perform the same procedure for the LH side.

6. REMOVE CONSOLE BOX ASSEMBLY

HINT:

Refer to the instructions for Removal of the front console box INFO .

7. REMOVE NO. 2 BELT ANCHOR REINFORCEMENT SUB-ASSEMBLY INFO

8. REMOVE NO. 3 BELT ANCHOR REINFORCEMENT SUB-ASSEMBLY INFO

9. SEPARATE PARKING BRAKE EQUALIZER INFO

10. REMOVE PARKING BRAKE LEVER ASSEMBLY INFO

11. REMOVE PARKING BRAKE EQUALIZER INFO

12. REMOVE PARKING BRAKE CABLE END STOPPER INFO

13. REMOVE NO. 1 PARKING BRAKE CABLE ASSEMBLY INFO

14. REMOVE FRONT EXHAUST PIPE ASSEMBLY INFO

15. REMOVE FRONT NO. 1 FLOOR HEAT INSULATOR

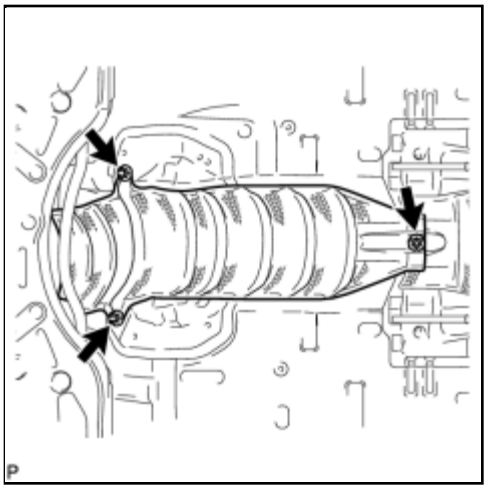

(a) Remove the 3 nuts and front No. 1 floor heat insulator.

16. REMOVE FRONT NO. 2 FLOOR HEAT INSULATOR

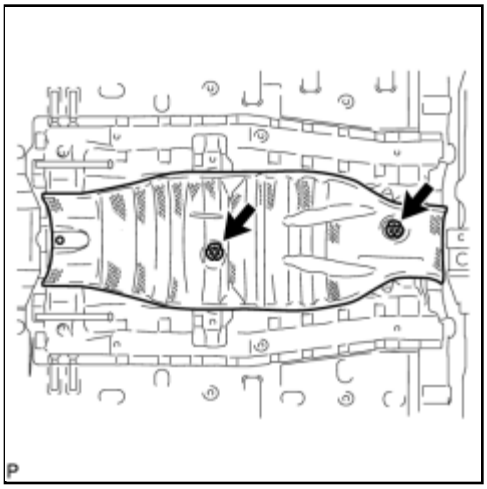

(a) Remove the 2 nuts and front No. 2 floor heat insulator.

17. REMOVE REAR BRAKE DRUM INFO

18. REMOVE REAR BRAKE SHOE (for Front Side) INFO

19. REMOVE REAR BRAKE STRUT SET INFO

20. REMOVE REAR BRAKE SHOE (for Rear Side) INFO

21. REMOVE NO. 3 PARKING BRAKE CABLE ASSEMBLY

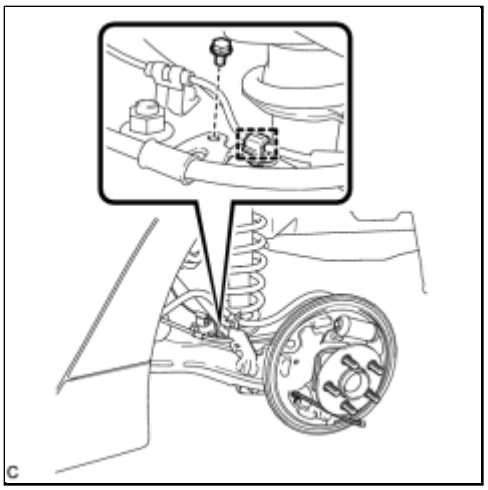

(a) Disengage the clamp from the No. 3 parking brake cable assembly.

(b) Remove the bolt.

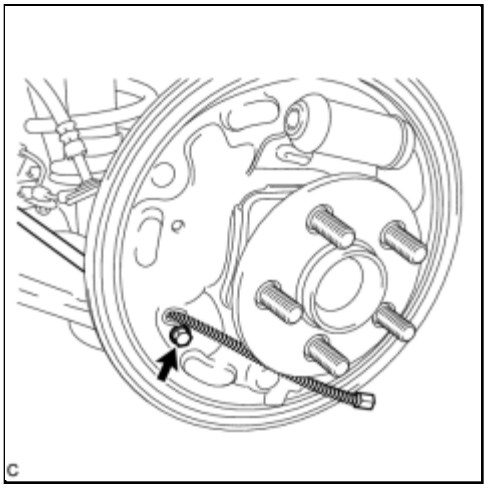

(c) Remove the bolt and separate the No. 3 parking brake cable assembly from the backing plate.

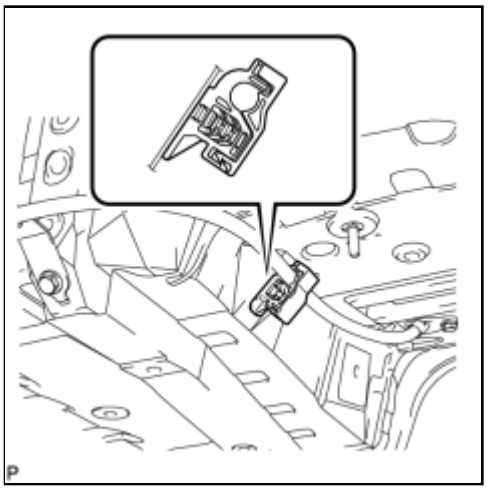

(d) Separate the No. 3 parking brake cable clamp.

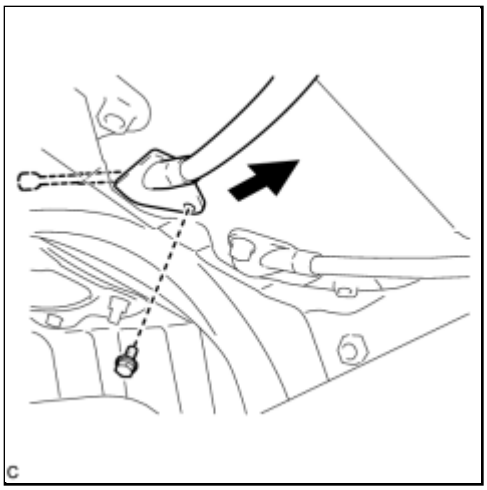

(e) Remove the bolt and pull out the No. 3 parking brake cable assembly to the outside of the body.

(f) Remove the 2 bolts and the No. 3 parking brake cable assembly.

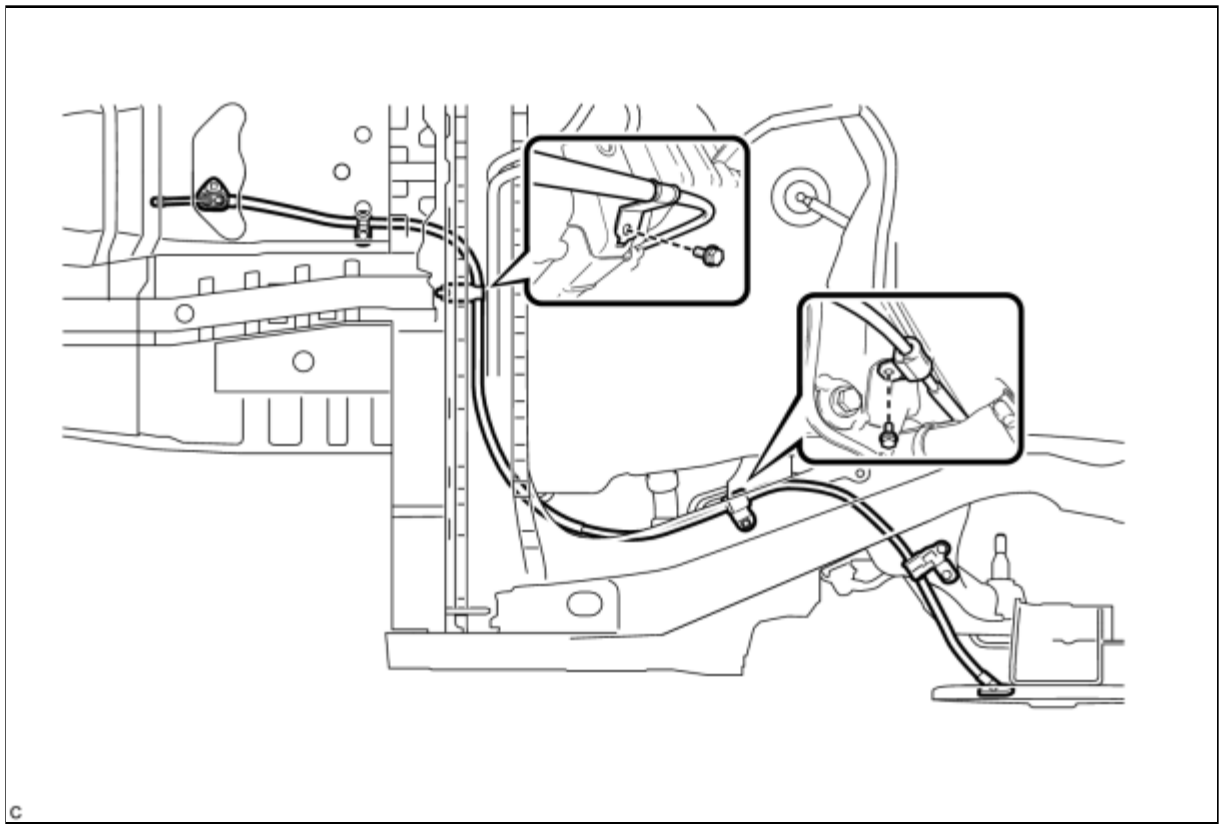

22. REMOVE NO. 3 PARKING BRAKE CABLE CLAMP

(a) Disengage the 2 claws to remove the No. 3 parking brake cable clamp from the No. 3 parking brake cable assembly.

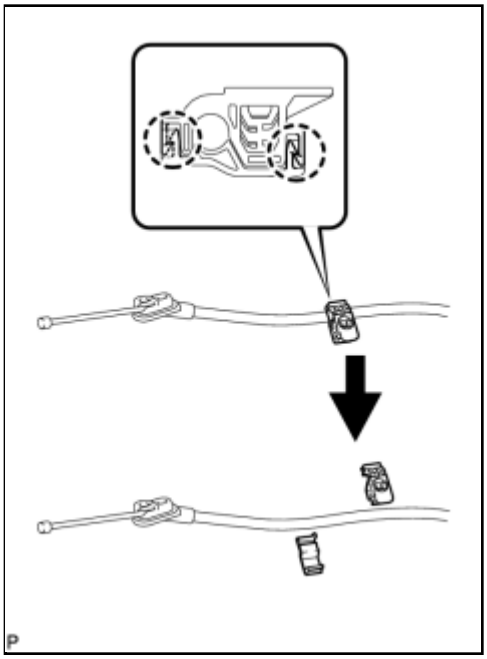
P

Last Modified: 3-10-2010	6.4 A	**From:** 200901
Model Year: 2010	**Model:** Corolla	**Doc ID:** RM000002X6201CX
Title: PARKING BRAKE: PARKING BRAKE CABLE (for Rear Drum Brake): INSTALLATION (2010 Corolla)		

INSTALLATION

1. INSTALL NO. 3 PARKING BRAKE CABLE CLAMP

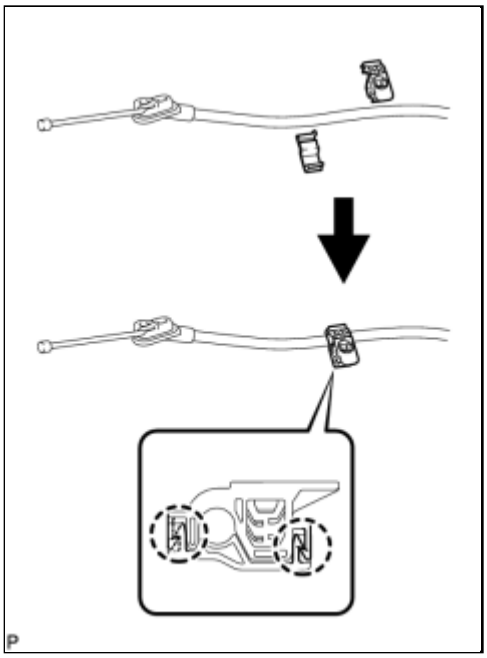

(a) Engage the 2 claws together to install a new No. 3 parking brake cable clamp to the No. 3 parking brake cable assembly.

2. INSTALL NO. 3 PARKING BRAKE CABLE ASSEMBLY

(a) Install the No. 3 parking brake cable assembly with the 2 bolts.

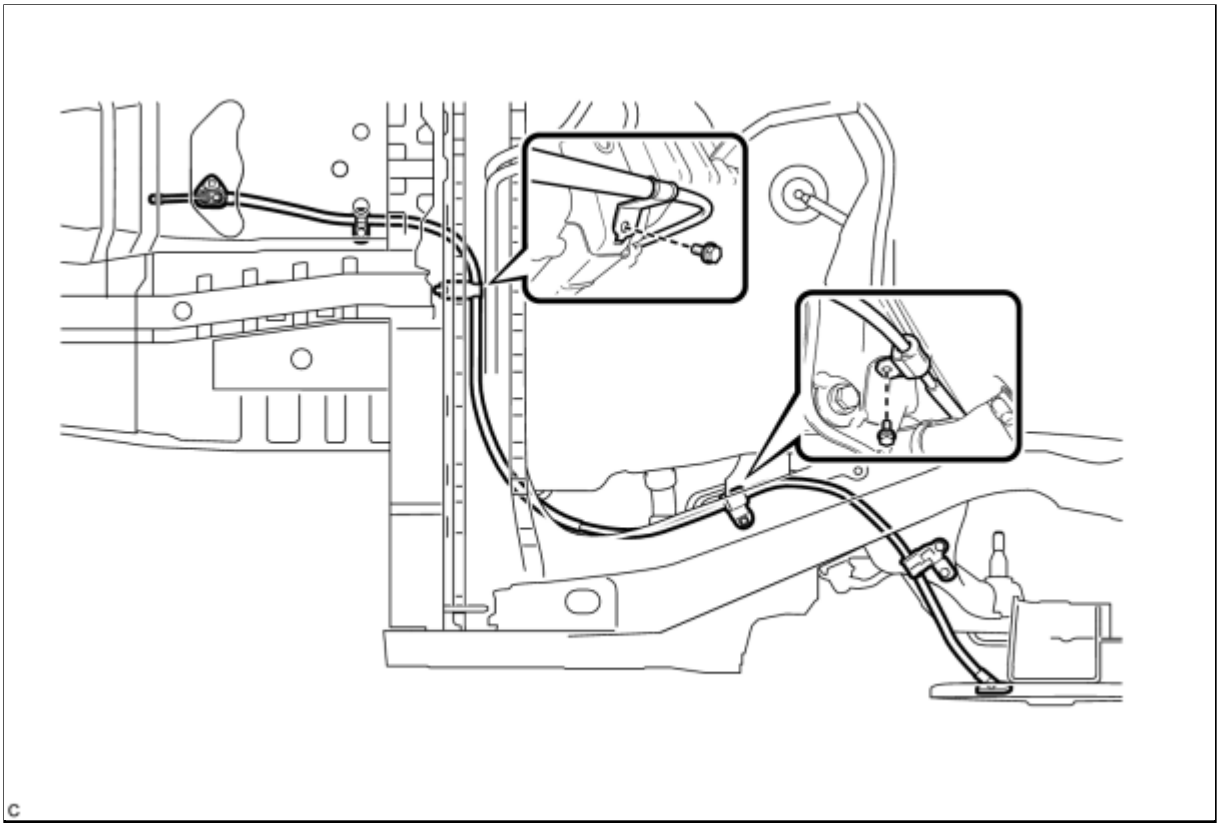

Torque: 6.0 N·m (61 kgf·cm, 53in·lbf)

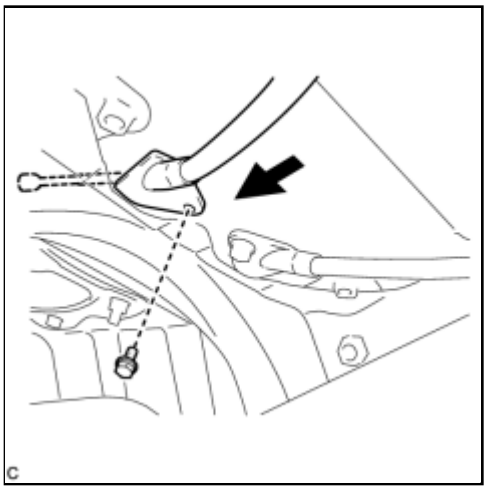

(b) Insert the No. 3 parking brake cable assembly into the body.

(c) Install the bolt.

Torque: 6.0 N·m (61 kgf·cm, 53in·lbf)

(d) Install the No. 3 parking brake cable assembly to the backing plate with the bolt.

Torque: 8.0 N·m (82 kgf·cm, 71in·lbf)

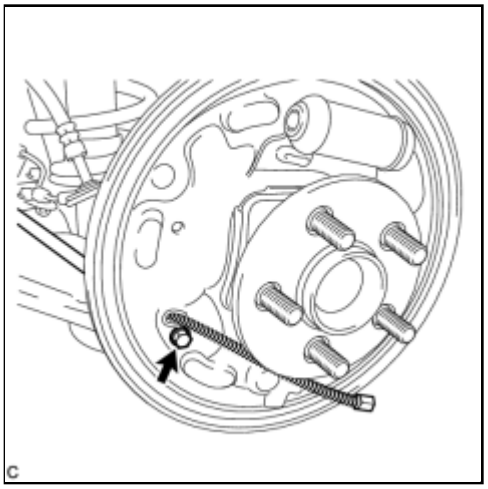

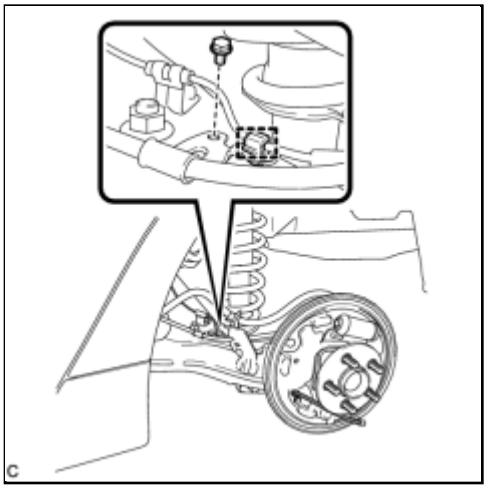

(e) Install the bolt.

Torque: 6.0 N·m (61 kgf·cm, 53in·lbf)

(f) Engage the clamp to the No. 3 parking brake cable assembly.

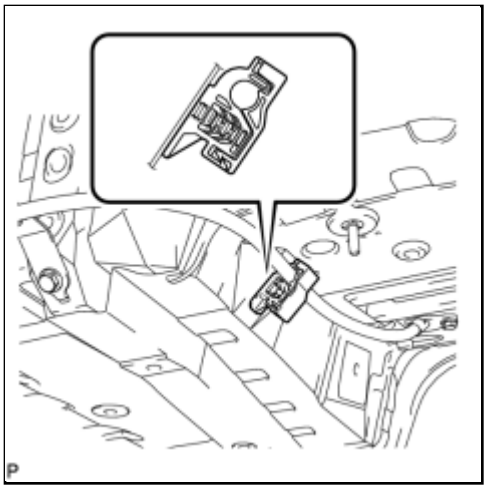

(g) Install the No. 3 parking brake cable clamp.

3. INSTALL REAR BRAKE SHOE (for Rear Side) INFO

4. INSTALL REAR BRAKE STRUT SET INFO

5. INSTALL REAR BRAKE SHOE (for Front Side) INFO

6. INSPECT REAR DRUM BRAKE INFO

7. INSTALL REAR BRAKE DRUM INFO

8. INSTALL FRONT NO. 2 FLOOR HEAT INSULATOR

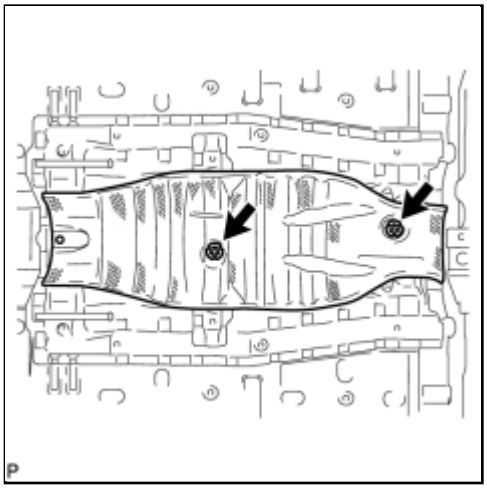

(a) Install the front No. 2 floor heat insulator with the 2 nuts.

Torque: 5.5 N·m (56 kgf·cm, 49in·lbf)

9. INSTALL FRONT NO. 1 FLOOR HEAT INSULATOR

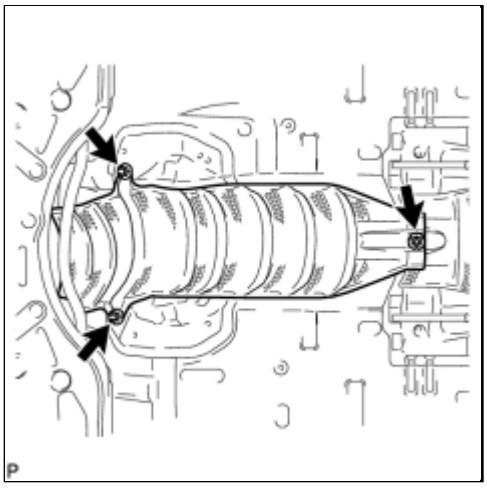

(a) Install the front No. 1 floor heat insulator with the 3 nuts.

Torque: 5.5 N·m (56 kgf·cm, 49in·lbf)

10. INSTALL FRONT EXHAUST PIPE ASSEMBLY INFO

11. INSTALL NO. 1 PARKING BRAKE CABLE ASSEMBLY INFO

12. INSTALL PARKING BRAKE CABLE END STOPPER INFO

13. INSTALL PARKING BRAKE EQUALIZER INFO

14. INSTALL PARKING BRAKE LEVER ASSEMBLY INFO

15. CONNECT PARKING BRAKE EQUALIZER INFO

16. INSTALL NO. 3 BELT ANCHOR REINFORCEMENT SUB-ASSEMBLY INFO

17. INSTALL NO. 2 BELT ANCHOR REINFORCEMENT SUB-ASSEMBLY INFO

18. ADJUST REAR DRUM BRAKE SHOE CLEARANCE INFO

19. ADJUST PARKING BRAKE TRAVEL INFO

20. INSTALL CONSOLE BOX ASSEMBLY

HINT:

Refer to the instructions for Installation of the front console box INFO .

21. INSTALL FRONT SEAT ASSEMBLY LH (for Manual Seat)

HINT:

Refer to the instructions for Installation of the front seat assembly INFO .

22. INSTALL FRONT SEAT ASSEMBLY LH (for Power Seat)

HINT:

Refer to the instructions for Installation of the front seat assembly INFO .

23. INSTALL FRONT SEAT ASSEMBLY RH

HINT:

Perform the same procedure for the LH side.

24. CONNECT CABLE TO NEGATIVE BATTERY TERMINAL (w/ Front Seat Side Airbag)

25. INSPECT SRS WARNING LIGHT (w/ Front Seat Side Airbag)

HINT: INFO .

26. INSPECT FOR EXHAUST GAS LEAK

27. INSTALL REAR WHEELS

Torque: 103 N·m (1050 kgf·cm, 76ft·lbf)

Last Modified: 3-10-2010	6.4 A	**From:** 200901
Model Year: 2010	**Model:** Corolla	**Doc ID:** RM000002VHK00QX
Title: PARKING BRAKE: PARKING BRAKE LEVER: REMOVAL (2010 Corolla)		

REMOVAL

CAUTION:

Some of these service operations affect the SRS airbag system. Read the precautionary notices concerning the SRS airbag system before servicing INFO .

1. DISCONNECT CABLE FROM NEGATIVE BATTERY TERMINAL (w/ Front Seat Side Airbag)

CAUTION:

Wait at least 90 seconds after disconnecting the cable from the negative (-) battery terminal to disable the SRS system.

2. REMOVE FRONT SEAT ASSEMBLY LH (for Manual Seat)

HINT:

Refer to the instructions for Removal of the front seat assembly INFO .

3. REMOVE FRONT SEAT ASSEMBLY LH (for Power Seat)

HINT:

Refer to the instructions for Removal of the front seat assembly INFO .

4. REMOVE FRONT SEAT ASSEMBLY RH

HINT:

Perform the same procedure for the LH side.

5. REMOVE CONSOLE BOX ASSEMBLY

HINT:

Refer to the instructions for Removal of the front console box INFO .

6. REMOVE NO. 2 BELT ANCHOR REINFORCEMENT SUB-ASSEMBLY

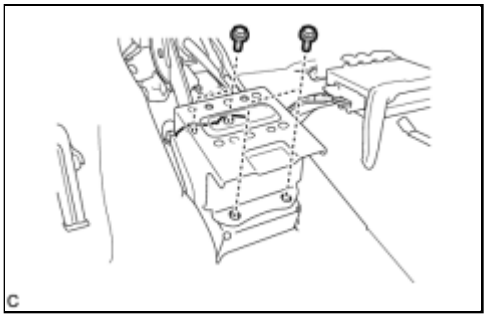

(a) Remove the 4 bolts and No. 2 belt anchor reinforcement sub-assembly.

7. REMOVE NO. 3 BELT ANCHOR REINFORCEMENT SUB-ASSEMBLY

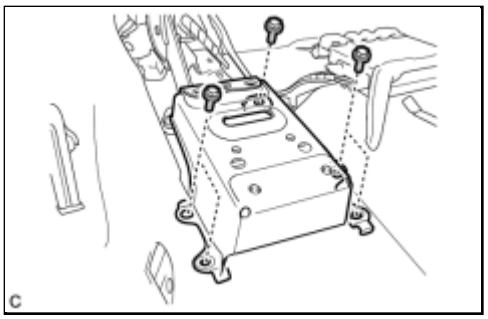

(a) Turn back the floor carpet, and remove the 5 bolts and No. 3 belt anchor reinforcement sub-assembly.

8. SEPARATE PARKING BRAKE EQUALIZER

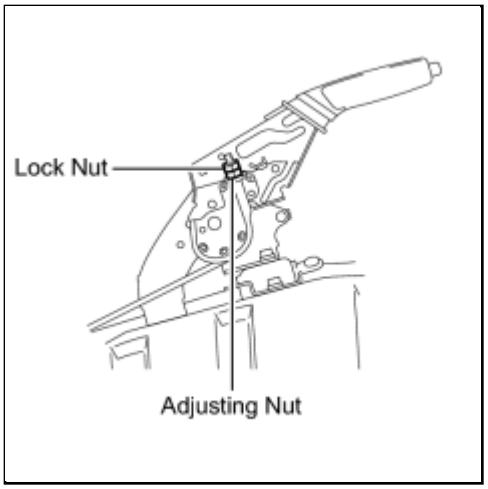

(a) Remove the lock nut and loosen the adjusting nut.

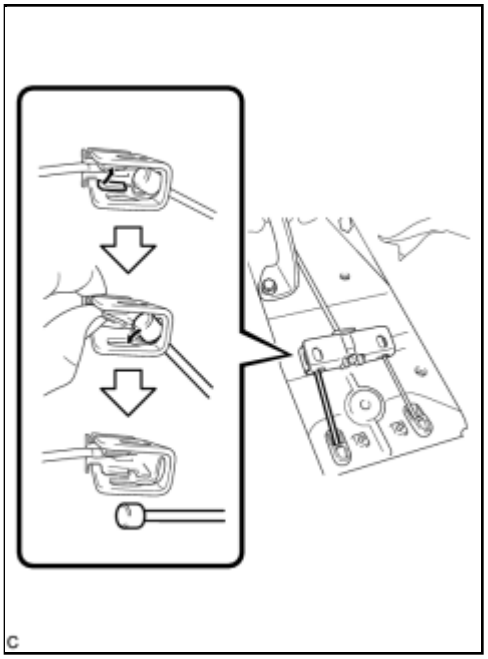

(b) Separate the parking brake equalizer from the No. 3 parking brake cable assembly as shown in the illustration.

(c) Separate the parking brake equalizer from the No. 2 parking brake cable assembly.

HINT:

Perform the same procedure for the No. 3 parking brake cable assembly.

9. REMOVE PARKING BRAKE LEVER ASSEMBLY

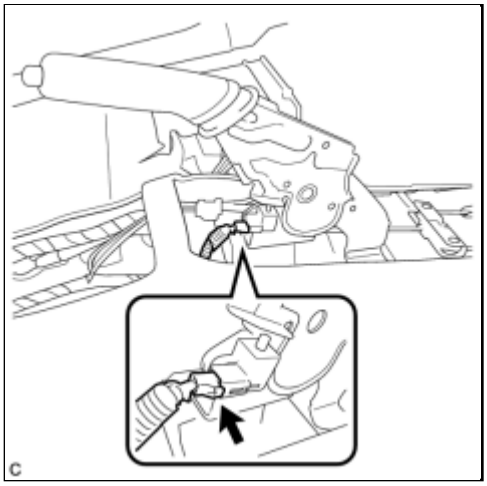

(a) Disconnect the parking brake switch connector.

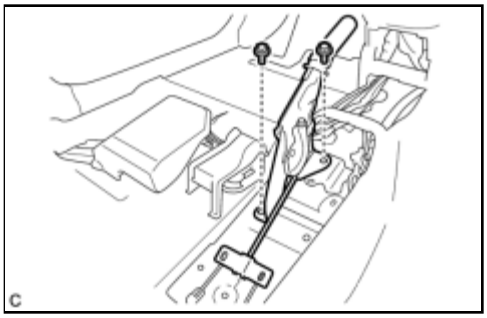

(b) Remove the 2 bolts and parking brake lever assembly.

10. REMOVE PARKING BRAKE EQUALIZER

(a) Disengage the 2 claws to separate the parking brake cable end stopper from the No. 1 parking brake cable assembly.

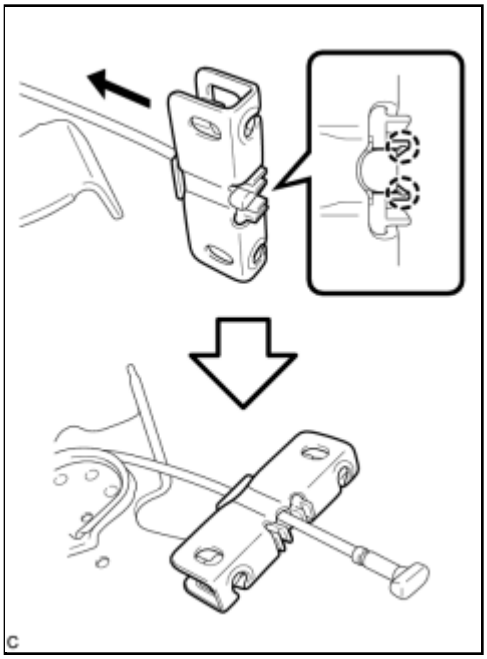

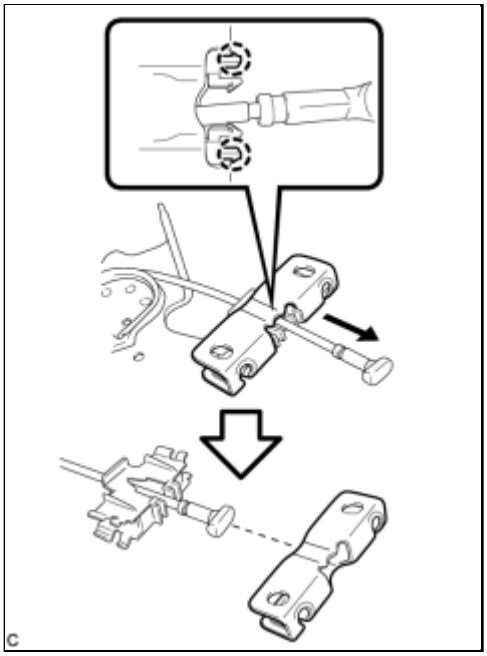

(b) Disengage the 2 claws to remove the parking brake equalizer from the parking brake cable end stopper.

11. REMOVE PARKING BRAKE CABLE END STOPPER

(a) Remove the parking brake cable end stopper from the No. 1 parking brake cable assembly.

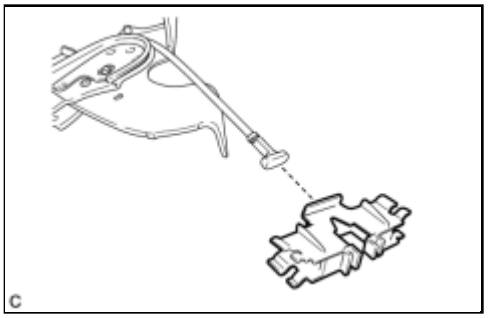

12. REMOVE NO. 1 PARKING BRAKE CABLE ASSEMBLY

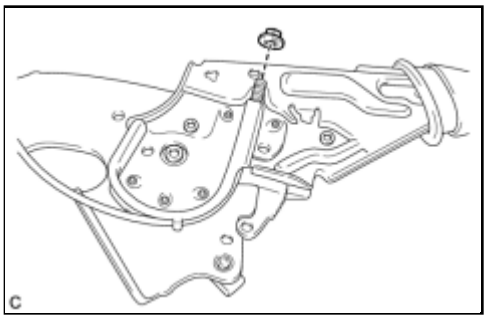

(a) Remove the adjusting nut.

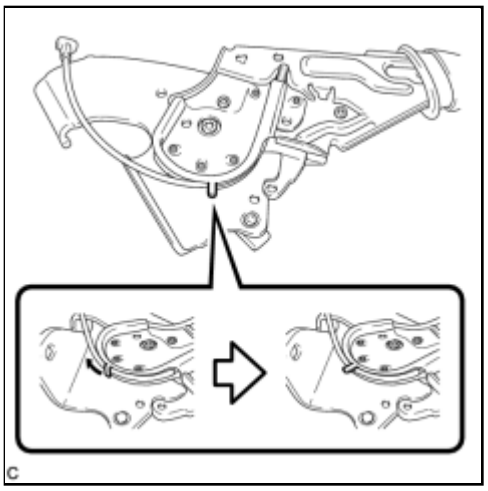

(b) Pull up the parking brake lever claw.

(c) Remove the No. 1 parking brake cable assembly.

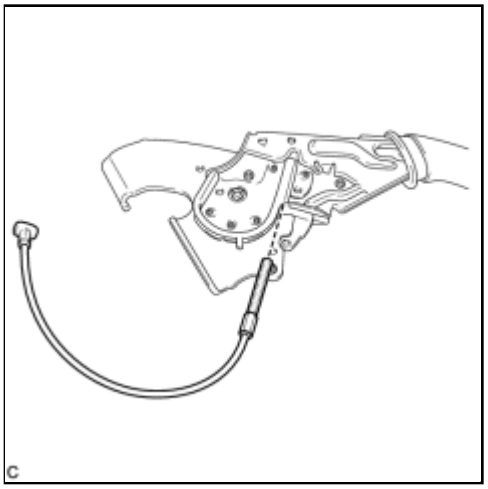

13. REMOVE PARKING BRAKE SWITCH ASSEMBLY

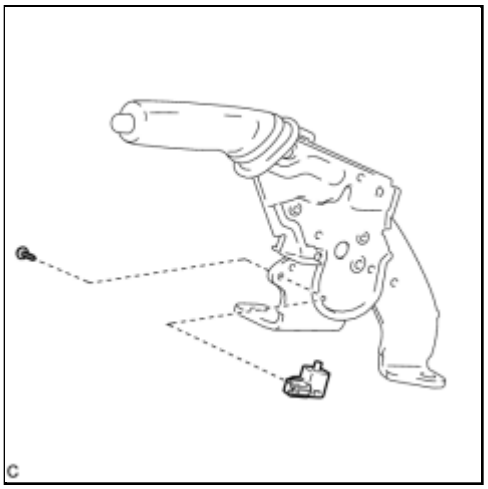

(a) Remove the screw and parking brake switch assembly from the parking brake lever sub-assembly.

Last Modified: 3-10-2010	6.4 K	**From:** 200901
Model Year: 2010	**Model:** Corolla	**Doc ID:** RM000002VHJ00NX
Title: PARKING BRAKE: PARKING BRAKE LEVER: COMPONENTS (2010 Corolla)		

COMPONENTS

ILLUSTRATION

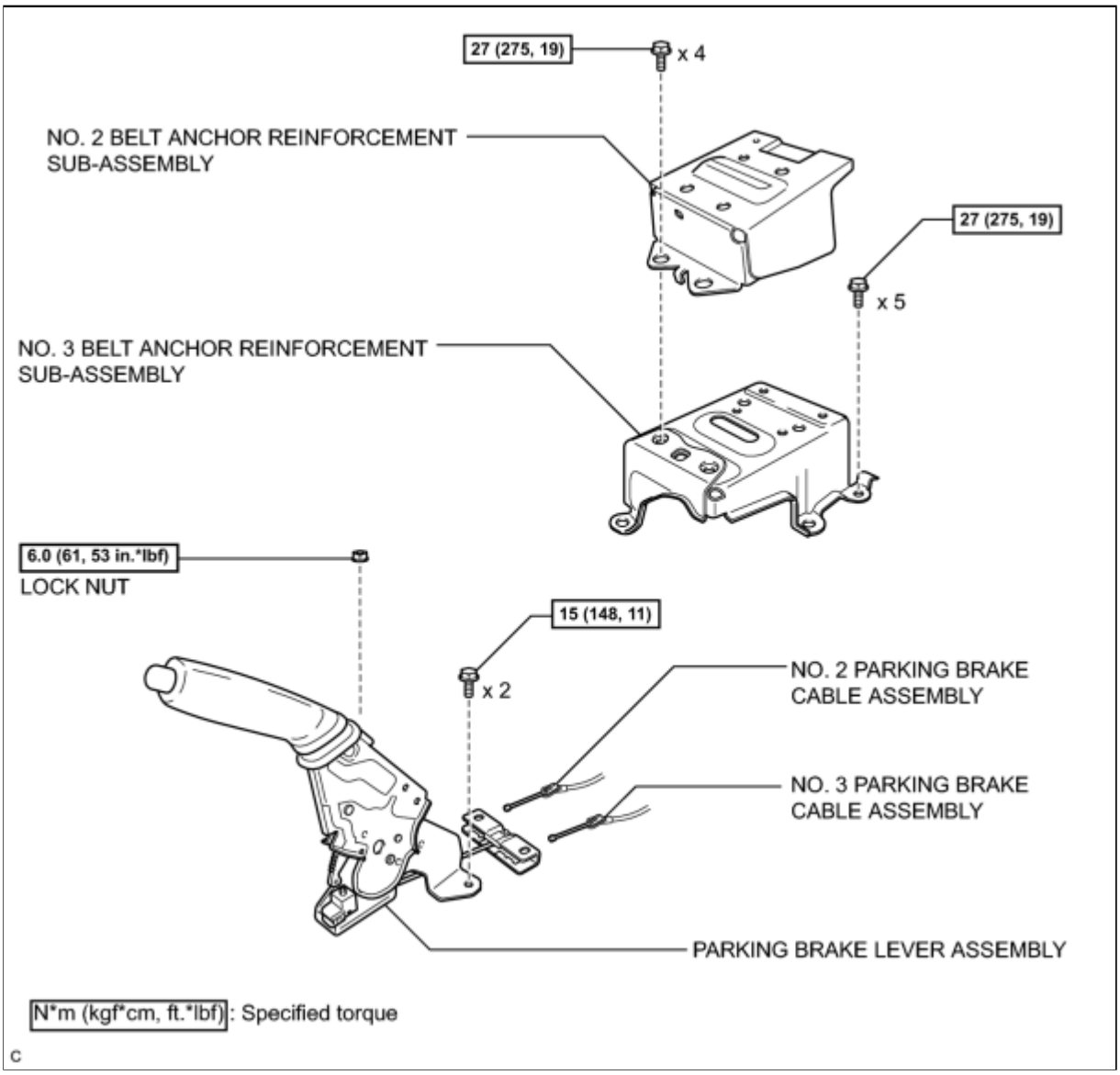

ILLUSTRATION

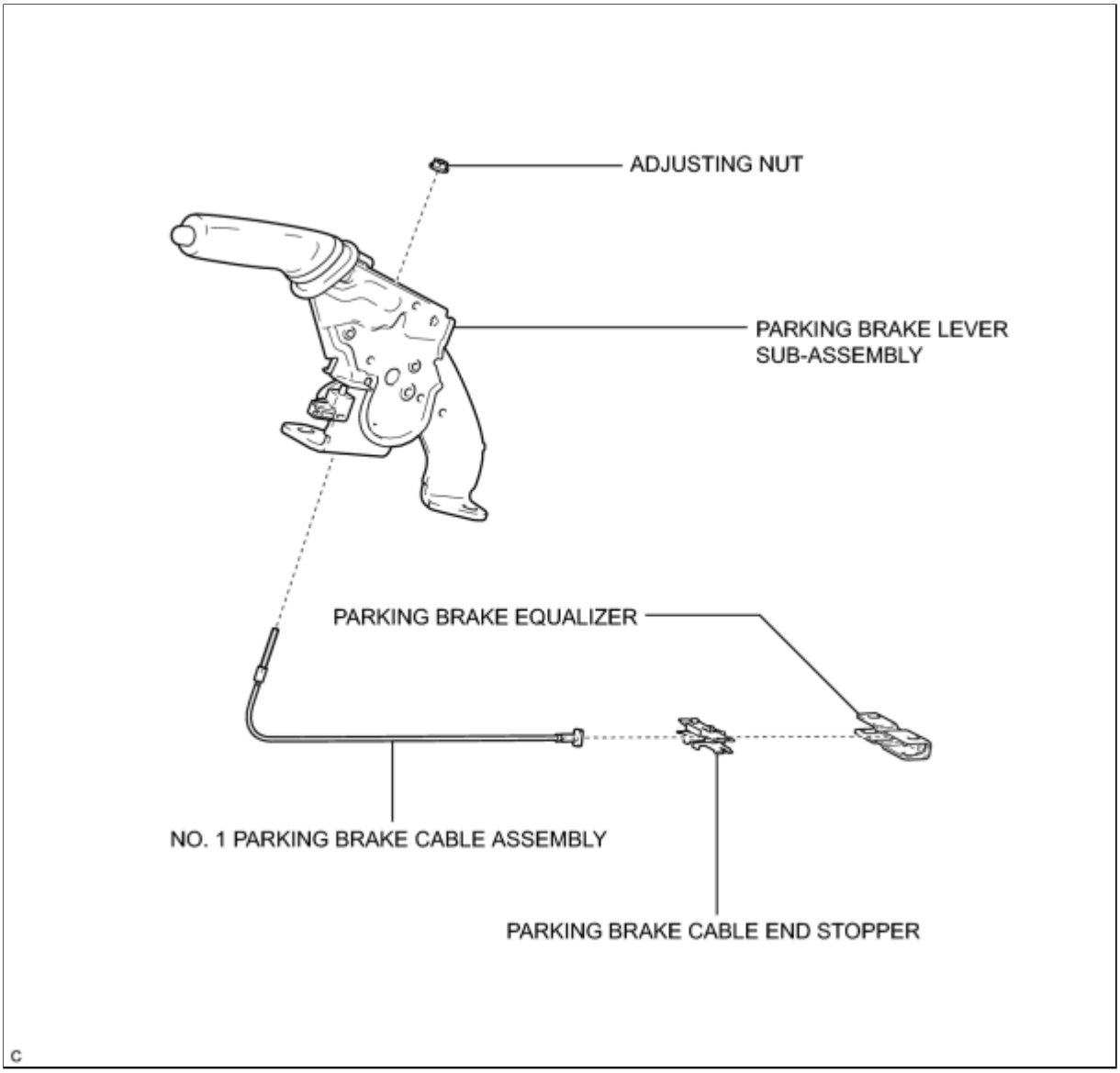

ILLUSTRATION

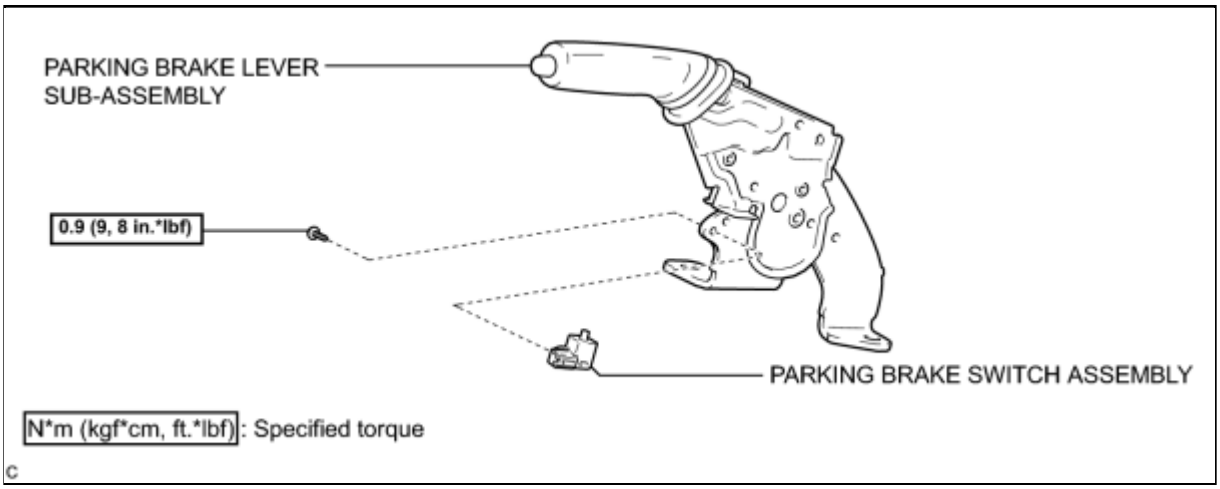

Last Modified: 3-10-2010	6.4 A	**From:** 200901
Model Year: 2010	**Model:** Corolla	**Doc ID:** RM000002VHI00NX
Title: PARKING BRAKE: PARKING BRAKE LEVER: INSTALLATION (2010 Corolla)		

INSTALLATION

1. INSTALL PARKING BRAKE SWITCH ASSEMBLY

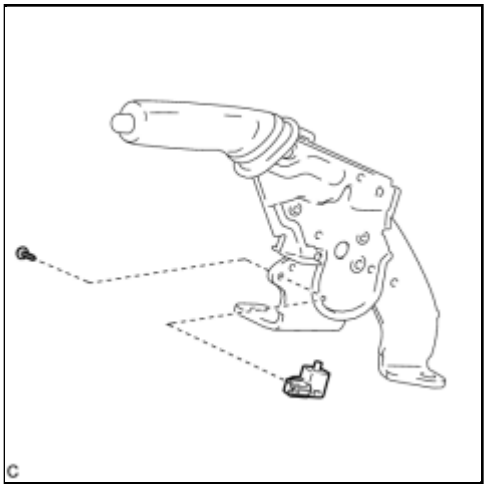

(a) Install the parking brake switch assembly to the parking brake lever sub-assembly with the screw.

Torque: 0.9 N·m (9 kgf·cm, 8in·lbf)

2. INSTALL NO. 1 PARKING BRAKE CABLE ASSEMBLY

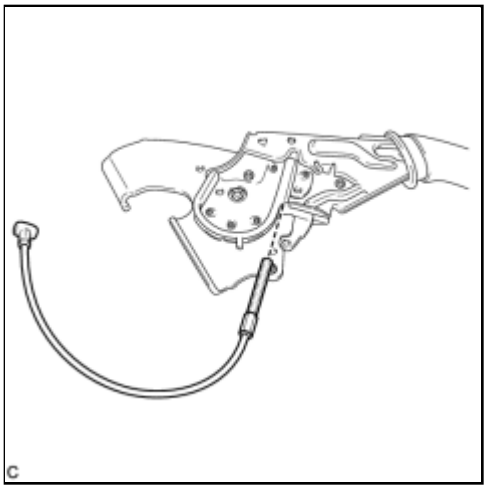

(a) Pass the No. 1 parking brake cable assembly through the parking brake lever sub-assembly.

(b) Bend the parking brake lever claw.

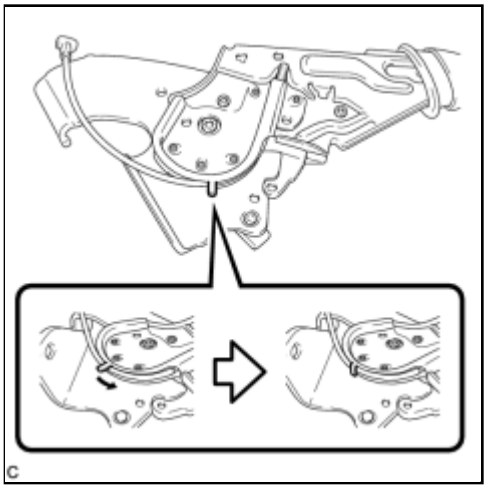

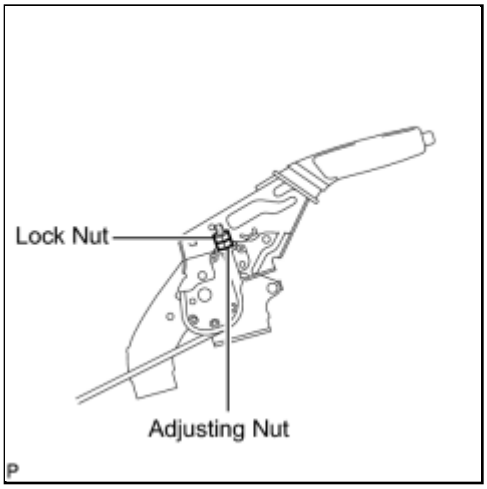

(c) Temporarily install the adjusting nut and the lock nut to the No. 1 parking brake cable assembly.

3. INSTALL PARKING BRAKE CABLE END STOPPER

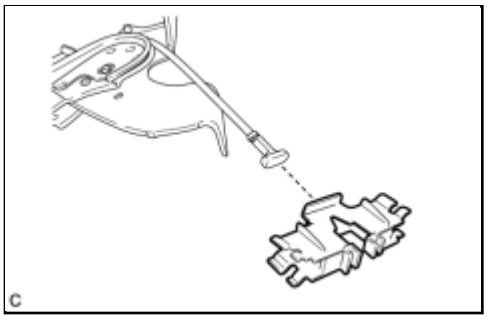

(a) Install the parking brake cable end stopper to the No. 1 parking brake cable assembly.

4. INSTALL PARKING BRAKE EQUALIZER

(a) Engage the 2 claws to install the parking brake equalizer

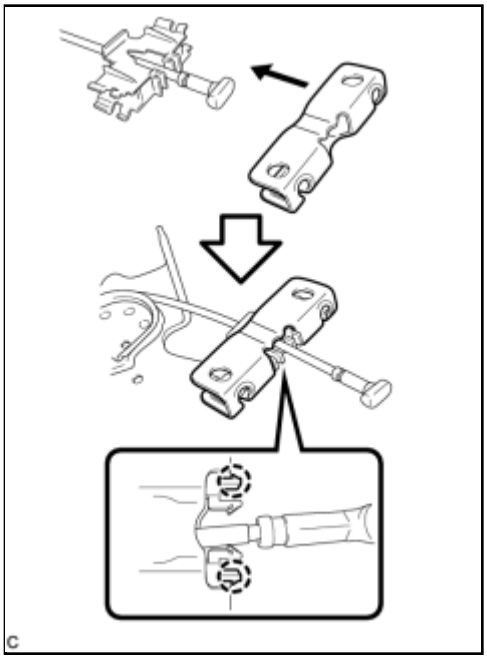

to the parking brake cable end stopper.

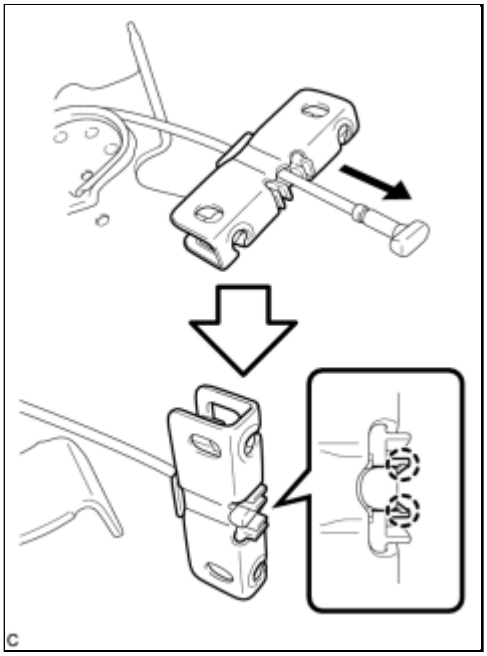

(b) Engage the 2 claws to install the parking brake cable end stopper to the No. 1 parking brake cable assembly.

5. INSTALL PARKING BRAKE LEVER ASSEMBLY

(a) Install the parking brake lever assembly with the 2 bolts.

Torque: 15 N·m (148 kgf·cm, 11ft·lbf)

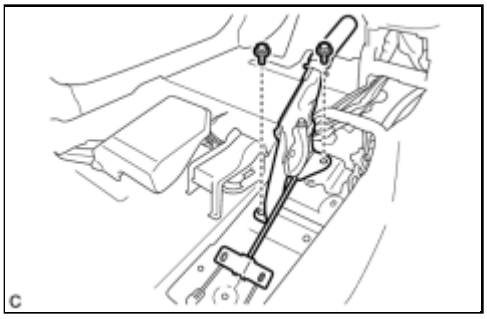

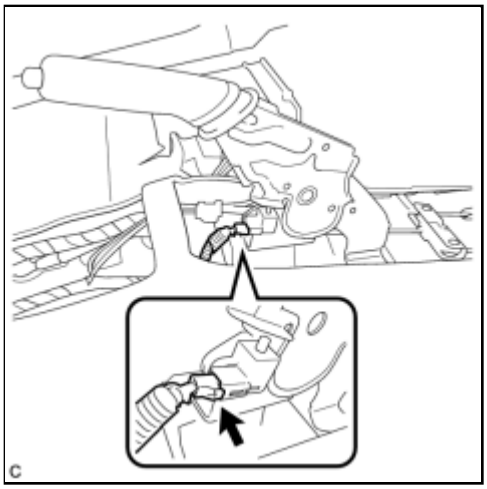

(b) Connect the parking brake switch connector.

6. CONNECT PARKING BRAKE EQUALIZER

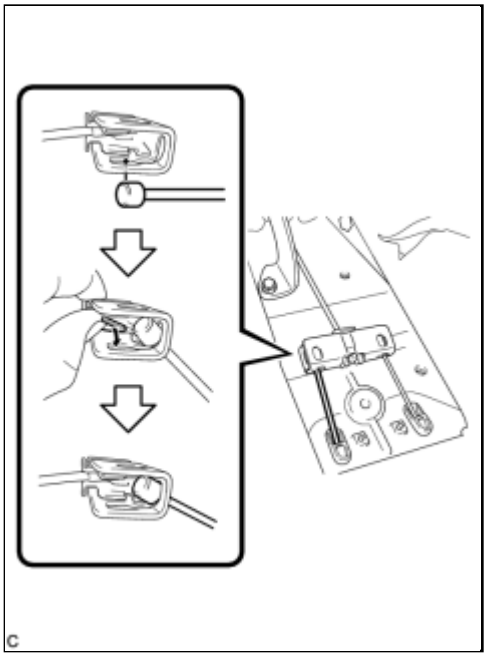

(a) Connect the parking brake equalizer to the No. 3 parking brake cable assembly as shown in the illustration.

(b) Connect the parking brake equalizer to the No. 2 parking brake cable assembly.

HINT:

Perform the same procedure for the No. 3 parking brake cable assembly.

7. INSTALL NO. 3 BELT ANCHOR REINFORCEMENT SUB-ASSEMBLY

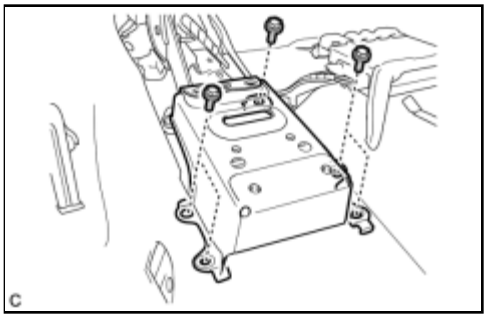

(a) Install the No. 3 belt anchor reinforcement sub-assembly with the 5 bolts.

Torque: 27 N·m (275 kgf·cm, 19ft·lbf)

(b) Install the floor carpet.

8. INSTALL NO. 2 BELT ANCHOR REINFORCEMENT SUB-ASSEMBLY

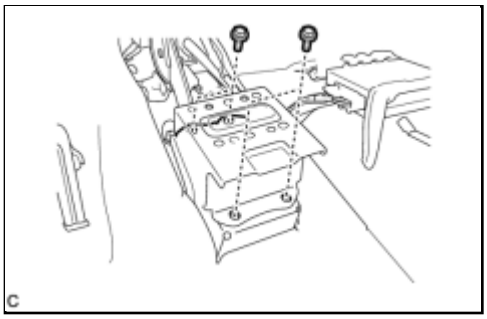

(a) Install the No. 2 belt anchor reinforcement sub-assembly with the 4 bolts.

Torque: 27 N·m (275 kgf·cm, 19ft·lbf)

9. ADJUST PARKING BRAKE LEVER TRAVEL INFO

10. INSPECT BRAKE WARNING LIGHT INFO

11. INSTALL CONSOLE BOX ASSEMBLY

HINT:

Refer to the instructions for Installation of the front console box INFO .

12. INSTALL FRONT SEAT ASSEMBLY LH (for Manual Seat)

HINT:

Refer to the instructions for Installation of the front seat assembly INFO .

13. INSTALL FRONT SEAT ASSEMBLY LH (for Power Seat)

HINT:

Refer to the instructions for Installation of the front seat assembly INFO .

14. INSTALL FRONT SEAT ASSEMBLY RH

HINT:

Perform the same procedure for the LH side.

15. CONNECT CABLE TO NEGATIVE BATTERY TERMINAL (w/ Front Seat Side Airbag)

16. INSPECT SRS WARNING LIGHT (w/ Front Seat Side Airbag)

HINT: INFO .

Last Modified: 3-10-2010	6.4 K	**From:** 200901
Model Year: 2010	**Model:** Corolla	**Doc ID:** RM000003D74004X
Title: PARKING BRAKE: PARKING BRAKE SWITCH: COMPONENTS (2010 Corolla)		

COMPONENTS

ILLUSTRATION

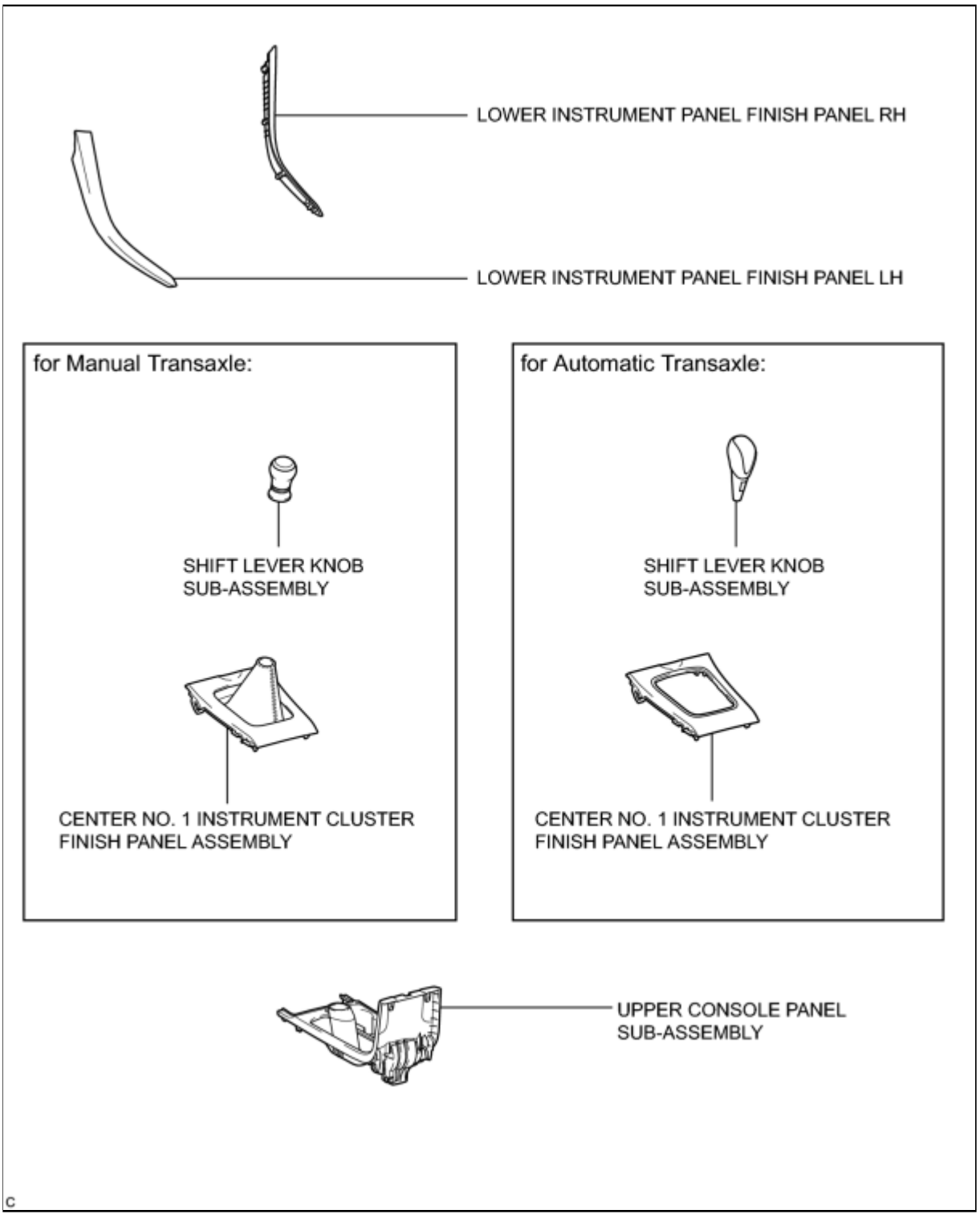

ILLUSTRATION

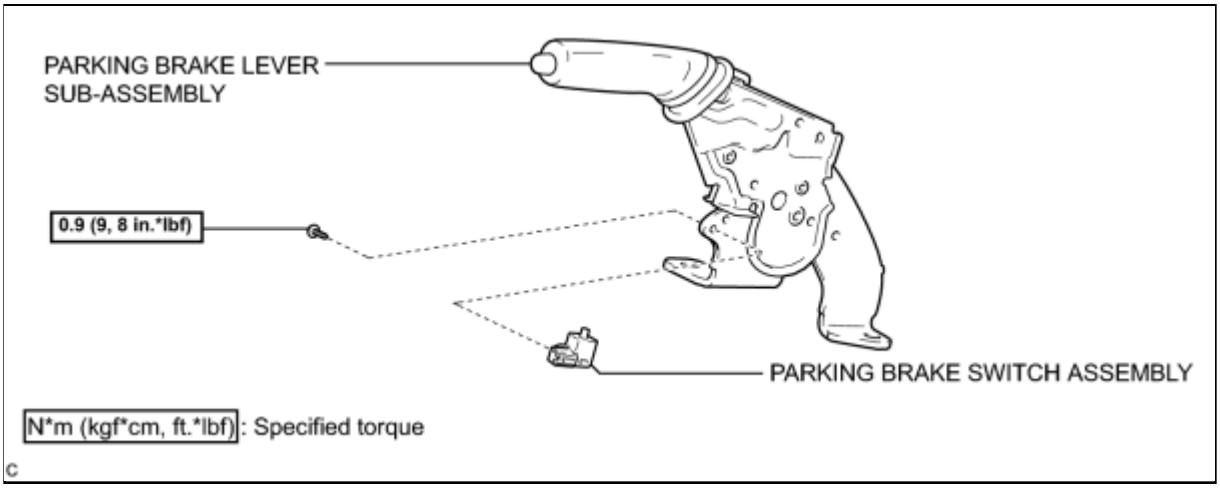

Last Modified: 3-10-2010	6.4 A	**From:** 200901
Model Year: 2010	**Model:** Corolla	**Doc ID:** RM000003D75004X
Title: PARKING BRAKE: PARKING BRAKE SWITCH: REMOVAL (2010 Corolla)		

REMOVAL

1. **REMOVE LOWER INSTRUMENT PANEL FINISH PANEL LH** INFO
2. **REMOVE LOWER INSTRUMENT PANEL FINISH PANEL RH** INFO
3. **REMOVE SHIFT LEVER KNOB SUB-ASSEMBLY (for Manual Transaxle)** INFO
4. **REMOVE SHIFT LEVER KNOB SUB-ASSEMBLY (for Automatic Transaxle)** INFO
5. **REMOVE CENTER NO. 1 INSTRUMENT CLUSTER FINISH PANEL ASSEMBLY (for Manual Transaxle)** INFO
6. **REMOVE CENTER NO. 1 INSTRUMENT CLUSTER FINISH PANEL ASSEMBLY (for Automatic Transaxle)** INFO
7. **REMOVE UPPER CONSOLE PANEL SUB-ASSEMBLY** INFO
8. **REMOVE PARKING BRAKE SWITCH ASSEMBLY**

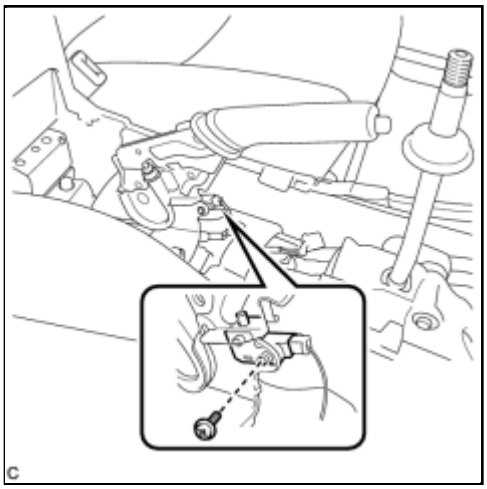

(a) Remove the screw and parking brake switch assembly from the parking brake lever assembly.

(b) Disconnect the connector and remove the parking brake switch assembly.

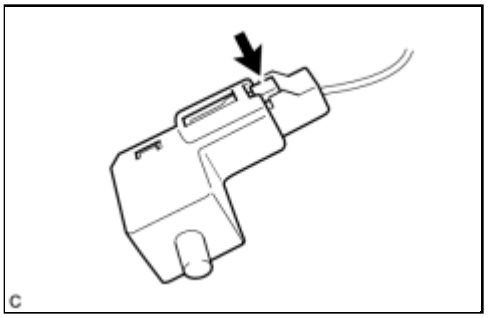
C

Last Modified: 3-10-2010	6.4 G	**From:** 200901
Model Year: 2010	**Model:** Corolla	**Doc ID:** RM000003D73004X
Title: PARKING BRAKE: PARKING BRAKE SWITCH: INSPECTION (2010 Corolla)		

INSPECTION

1. INSPECT PARKING BRAKE SWITCH ASSEMBLY

(a) Measure the resistance according to the value(s) in the table below.

Standard Resistance:

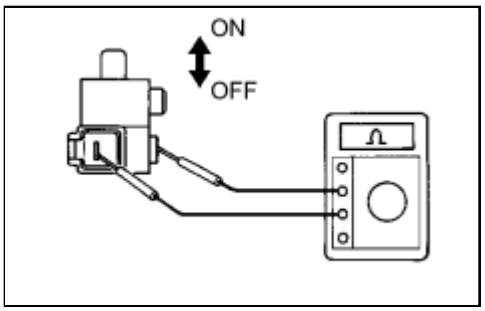

TESTER CONNECTION	SWITCH CONDITION	SPECIFIED CONDITION
Switch connector - Switch body	ON (When shaft is not pressed)	Below 1 Ω
Switch connector - Switch body	OFF (When shaft is pressed)	10 kΩ or higher

If the resistance is not as specified, replace the parking brake switch assembly.

Last Modified: 3-10-2010	6.4 A	**From:** 200901
Model Year: 2010	**Model:** Corolla	**Doc ID:** RM000003D72004X
Title: PARKING BRAKE: PARKING BRAKE SWITCH: INSTALLATION (2010 Corolla)		

INSTALLATION

1. INSTALL PARKING BRAKE SWITCH ASSEMBLY

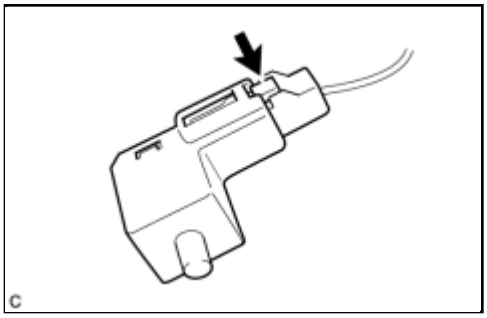

(a) Connect the connector to the parking brake switch assembly.

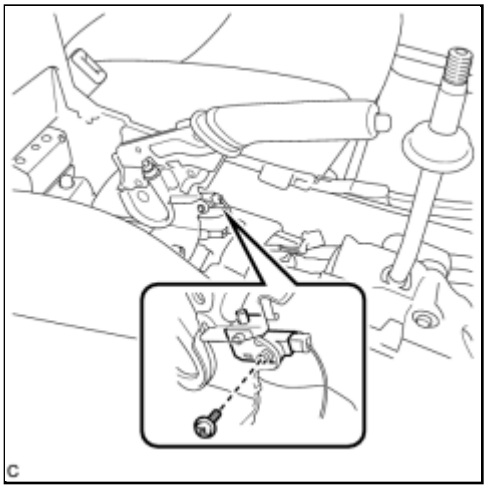

(b) Install the parking brake switch assembly to the parking brake lever assembly with the screw.

Torque: 0.9 N·m (9 kgf·cm, 8in·lbf)

2. INSPECT BRAKE WARNING LIGHT INFO

3. INSTALL UPPER CONSOLE PANEL SUB-ASSEMBLY INFO

4. INSTALL CENTER NO. 1 INSTRUMENT CLUSTER FINISH PANEL ASSEMBLY (for Automatic Transaxle) INFO

5. INSTALL CENTER NO. 1 INSTRUMENT CLUSTER FINISH PANEL ASSEMBLY (for Manual Transaxle) INFO

6. INSTALL SHIFT LEVER KNOB SUB-ASSEMBLY (for Automatic Transaxle) INFO

7. INSTALL SHIFT LEVER KNOB SUB-ASSEMBLY (for Manual Transaxle) INFO

8. INSTALL LOWER INSTRUMENT PANEL FINISH PANEL LH INFO

9. INSTALL LOWER INSTRUMENT PANEL FINISH PANEL RH INFO

Last Modified: 3-10-2010	6.4 T	**From:** 200901
Model Year: 2010	**Model:** Corolla	**Doc ID:** RM000002FKZ00FX
Title: PARKING BRAKE: PARKING BRAKE SYSTEM: PROBLEM SYMPTOMS TABLE (2010 Corolla)		

PROBLEM SYMPTOMS TABLE

HINT:

Use the table below to help determine the cause of problem symptoms. If multiple suspected areas are listed, the potential causes of the symptoms are listed in order of probability in the "Suspected Area" column of the table. Check each symptom by checking the suspected areas in the order they are listed. Replace parts as necessary.

Parking Brake System

SYMPTOM	SUSPECTED AREA	SEE PAGE
Brake drag	Parking brake lever travel (Out of adjustment)	INFO
	No. 1 parking brake cable assembly (Sticking) (for Rear Disc Brake)	INFO
	No. 1 parking brake cable assembly (Sticking) (for Rear Drum Brake)	INFO
	No. 3 parking brake cable assembly (Sticking) (for Rear Disc Brake)	INFO
	No. 3 parking brake cable assembly (Sticking) (for Rear Drum Brake)	INFO
	Rear disc brake piston (Stuck)	INFO
	Rear drum brake piston (Stuck)	INFO
	Parking brake shoe clearance (Out of adjustment)	INFO
	Parking brake shoe lining (Cracked or distorted)	INFO
	Tension or return spring (Damaged)	INFO

Last Modified: 3-10-2010	6.4 N	**From:** 200901
Model Year: 2010	**Model:** Corolla	**Doc ID:** RM000000UVR01UX
Title: PARKING BRAKE: PARKING BRAKE SYSTEM: ADJUSTMENT (2010 Corolla)		

ADJUSTMENT

1. INSPECT PARKING BRAKE LEVER TRAVEL

(a) Pull the parking brake lever firmly.

(b) Release the parking brake lock, and return the parking brake lever to its off position.

(c) Slowly pull the parking brake lever all the way up, and count the number of clicks.

Parking brake lever travel:
6 to 9 notches at 200 N (20 kgf, 45.0 lbf)

2. ADJUST PARKING BRAKE LEVER TRAVEL

(a) Remove the upper console box assembly INFO .

(b) Completely release the parking brake lever.

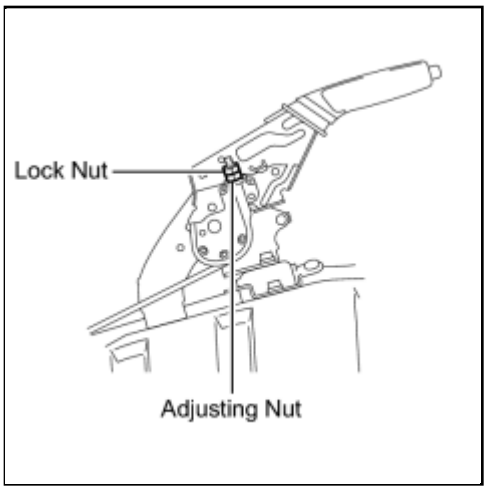

(c) Loosen the lock nut and the adjusting nut to completely release the parking brake cable.

(d) Fully depress the brake lever 3 to 5 times with the engine stopped.

(e) Turn the adjusting nut until the parking brake lever travel is corrected to within the specified range.

Parking brake lever travel:
6 to 9 notches at 200 N (20 kgf, 45.0 lbf)

(f) Using a wrench or an equivalent tool, hold the adjusting nut and tighten the lock nut.

Torque: 6.0 N·m (61 kgf·cm, 53in·lbf)

(g) Operate the parking brake lever 3 to 4 times, and check the parking brake lever travel.

(h) Check whether the parking brake drags or not.

(i) Install the upper console box assembly INFO .

3. INSPECT REAR DISC BRAKE CYLINDER OPERATION LEVER AND STOPPER CLEARANCE (for Rear Disc Brake)

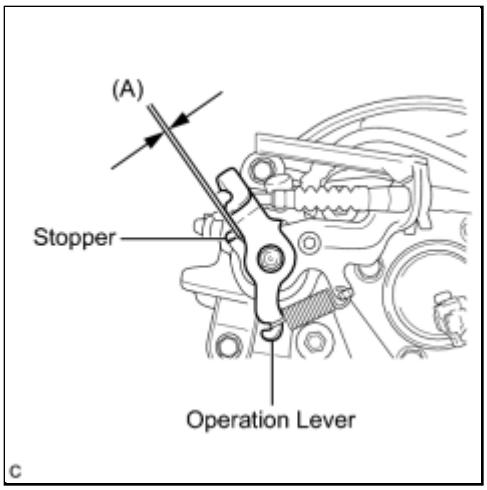

(a) Release the parking brake lever and check that the clearance measurement between the rear disc brake cylinder operation lever and the stopper is within the specified range.

Clearance (A):
0.5 mm (0.0197 in.) or less

If the clearance is not within the specified range, replace the rear disc brake caliper assembly.

4. INSPECT BRAKE WARNING LIGHT

(a) When operating the parking brake lever, check that the brake warning light illuminates.

Standard:
The brake warning light always illuminates at the first click.

Last Modified: 3-10-2010	6.4 A	**From:** 200901
Model Year: 2010	**Model:** Corolla	**Doc ID:** RM000000YXA025X
Title: U250E AUTOMATIC TRANSMISSION / TRANSAXLE: AUTOMATIC TRANSAXLE UNIT: REASSEMBLY (2010 Corolla)		

REASSEMBLY

1. BEARING POSITION

Check each bearing position and installation direction.

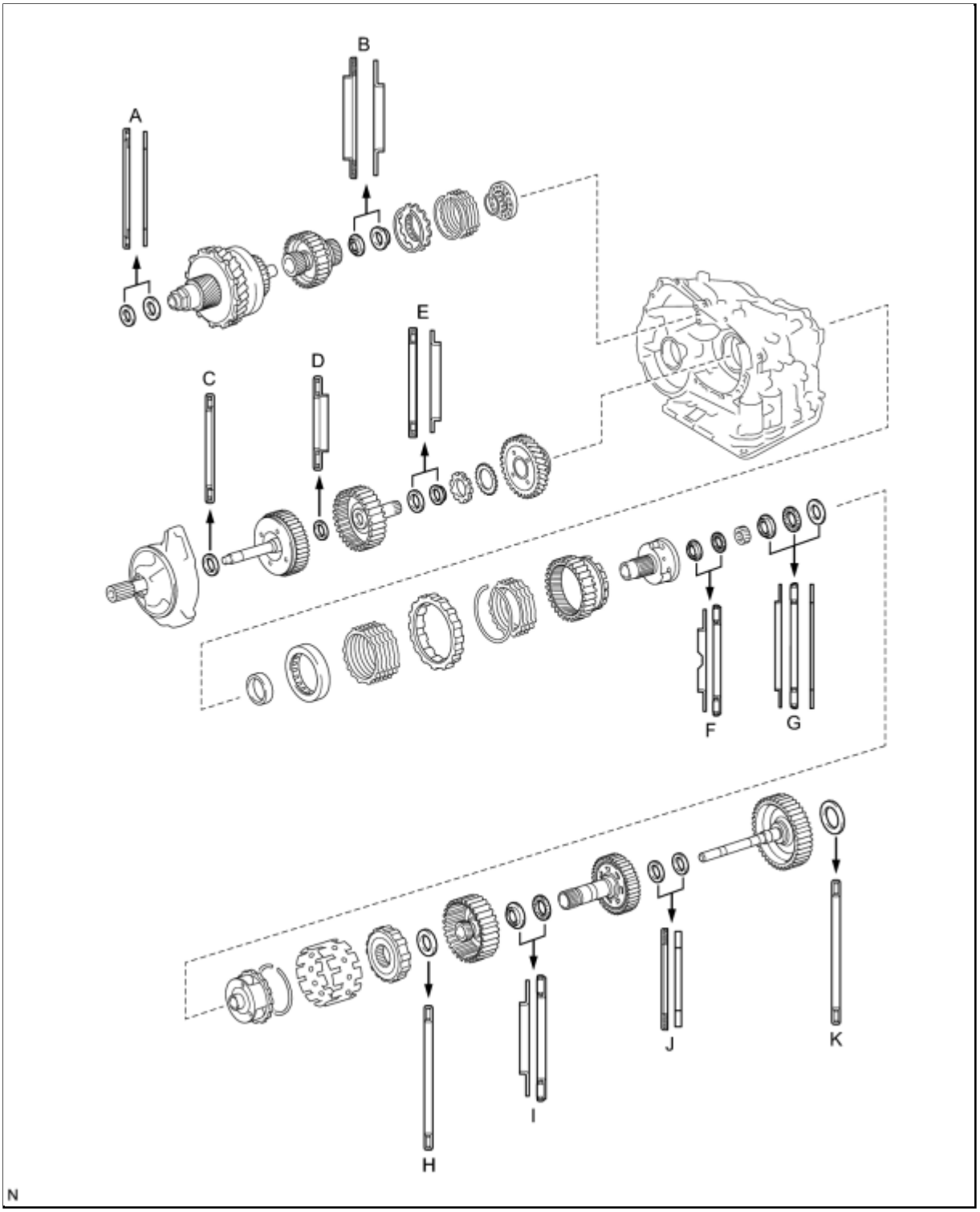

MARK	FRONT RACE DIAMETER INSIDE / OUTSIDE (MM (IN.))	THRUST BEARING DIAMETER INSIDE / OUTSIDE (MM (IN.))	REAR RACE DIAMETER INSIDE / OUTSIDE (MM (IN.))
A	-	53.0 (2.087) / 78.2 (3.079)	52.1 (2.051) / 75.5 (2.972)
B	-	37.73 (1.4854) / 58.0 (2.284)	29.9 (1.177) / 55.5 (2.185)

MARK	FRONT RACE DIAMETER INSIDE / OUTSIDE (MM (IN.))	THRUST BEARING DIAMETER INSIDE / OUTSIDE (MM (IN.))	REAR RACE DIAMETER INSIDE / OUTSIDE (MM (IN.))
C	-	33.85 (1.3327) / 52.2 (2.055)	-
D	-	23.5 (0.925) / 44.0 (1.732)	-
E	-	36.3 (1.429) / 52.2 (2.055)	34.5 (1.358) / 48.5 (1.909)
F	34.5 (1.358) / 56.82 (2.2370)	32.4 (1.276) / 56.62 (2.2291)	-
G	40.3 (1.587) / 58.0 (2.284)	38.6 (1.520) / 60.0 (2.362)	38.6 (1.520) / 58.0 (2.284)
H	-	53.6 (2.110) / 69.6 (2.740)	-
I	33.1 (1.303) / 45.4 (1.787)	31.85 (1.2539) / 45.2 (1.780)	-
J	-	25.0 (0.984) / 39.5 (1.555)	23.6 (0.929) / 37.0 (1.457)
K	-	55.9 (2.201) / 76.0 (2.992) or 76.6 (3.016)	-

2. INSTALL DIFFERENTIAL GEAR LUBE APPLY TUBE

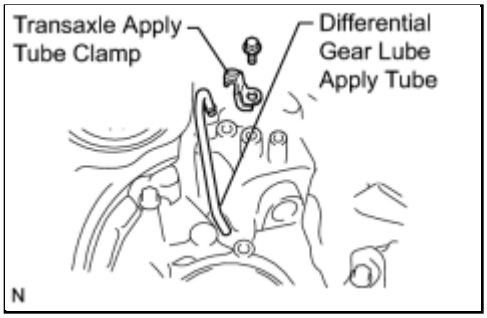

(a) Install the differential gear lube apply tube and transaxle apply tube clamp to the transaxle housing with the bolt.

Torque: 9.8 N·m (100 kgf·cm, 87in·lbf)

NOTICE:

Make sure to insert the pipe to the stopper.

3. INSTALL NO. 1 TRANSAXLE CASE PLUG

(a) Install a new O-ring to each No. 1 transaxle case plugs.

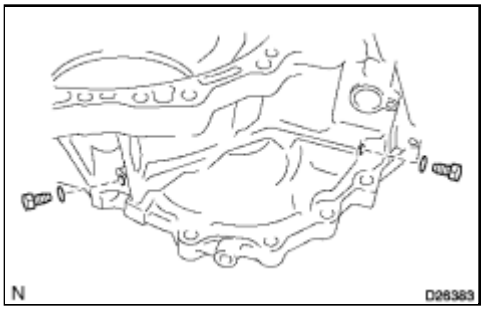

(b) Install the 2 No. 1 transaxle case plugs to the transaxle rear housing.

Torque: 7.4 N·m (75 kgf·cm, 65in·lbf)

4. INSTALL UNDERDRIVE OUTPUT SHAFT OIL SEAL RING

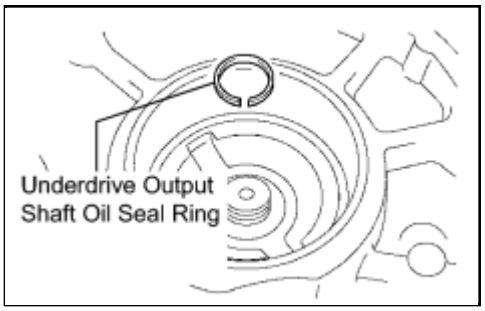

(a) Coat a new oil seal ring with ATF and install it to the transaxle housing.

5. INSTALL UNDERDRIVE CYLINDRICAL ROLLER BEARING

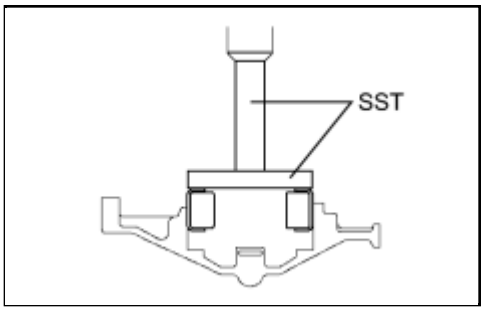

(a) Coat the underdrive cylindrical roller bearing with ATF.

(b) Using SST and a press, install the underdrive cylindrical roller bearing.

SST: 09950-60020
SST: 09950-70010
09951-00780
09951-07100

NOTICE:
Do not apply excessive pressure to it.

6. INSTALL UNDERDRIVE CLUTCH DRUM OIL SEAL RING

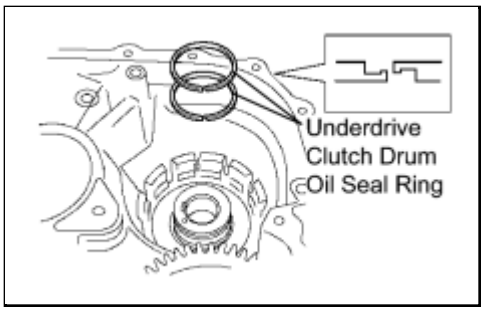

(a) Coat 2 new oil seal rings with ATF, and install them to the transaxle rear cover.

NOTICE:

- Do not expand the gap of the oil seal ring excessively.
- Securely engage the hooks. Confirm that the rings rotate smoothly.

7. INSTALL NEEDLE ROLLER BEARING

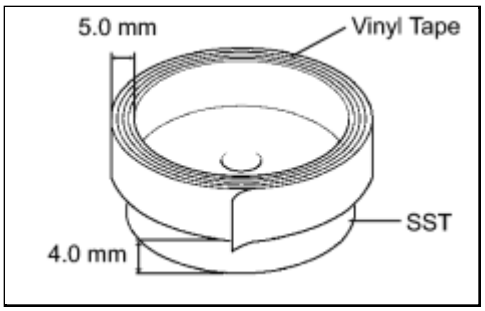

(a) Wrap vinyl tape around SST 4.0 mm (0.157 in.) above the bottom end until the thickness of the wrapped tape is about 5.0 mm (0.197 in.).

NOTICE:

Clean SST to remove deposited oil before wrapping the vinyl tape.

(b) Coat a new needle roller bearing with ATF.

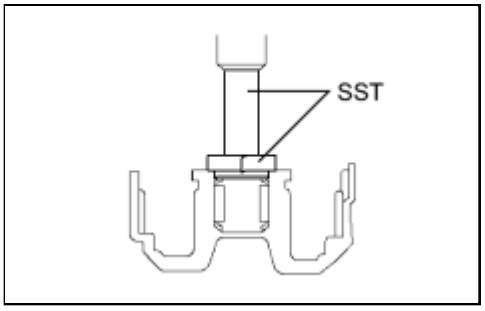

(c) Using SST and a press, install the needle roller bearing to the transaxle case.

SST: 09950-60010

09951-00320

SST: 09950-70010

09951-07100

NOTICE:

When the wrapped vinyl tape contacts the transaxle case, stop the press.

8. INSTALL UNDERDRIVE BRAKE PISTON

(a) Coat 2 new O-rings with ATF, and install them to the underdrive brake piston.

NOTICE:

- Install the O-rings carefully so that they are not twisted or pinched.
- Apply sufficient ATF to the O-rings prior to installation.

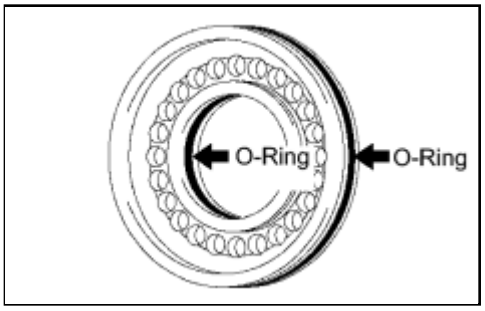

(b) Coat the underdrive brake piston with ATF.

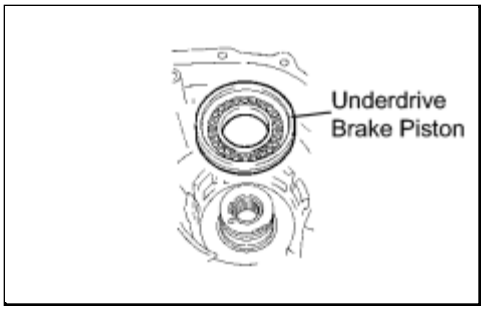

(c) Install the underdrive brake piston to the transaxle case.

NOTICE:

Be careful not to damage the O-rings.

9. INSTALL UNDERDRIVE BRAKE RETURN SPRING SUB-ASSEMBLY

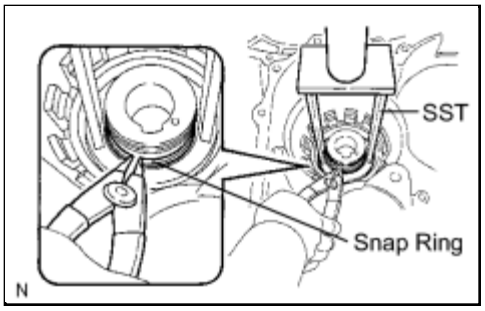

(a) Place SST on the return spring and compress the return spring with a press.

SST: 09387-00020

(b) Using a snap ring expander, install the snap ring to the transaxle case.

NOTICE:

- Stop the press when the spring seat is lowered 1 to 2 mm (0.0393 to 0.0787 in.) from the snap ring groove to prevent the spring seat from being deformed.
- Do not expand the snap ring excessively.
- After installing the spring sub-assembly, check all of the springs are fitted in the piston correctly.
- The snap ring should be securely engaged in the groove of the transaxle case.

10. INSTALL COUNTER DRIVE GEAR BEARING

(a) Install the snap ring to the transaxle case.

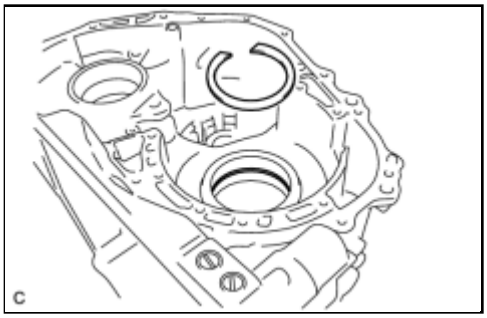

(b) Using SST and a press, install the bearing outer race (rear side) to the transaxle case.

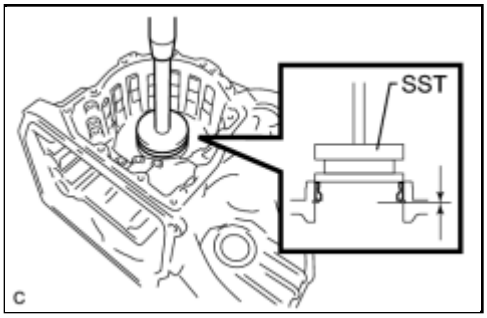

SST: 09316-12010
SST: 09950-60020
09951-00810
SST: 09950-70010
09951-07150

NOTICE:

- Ensure that the snap ring is securely installed.
- Do not apply excessive pressure to the bearing outer race.

(c) Using SST and a press, install the bearing outer race (front side) to the transaxle case.

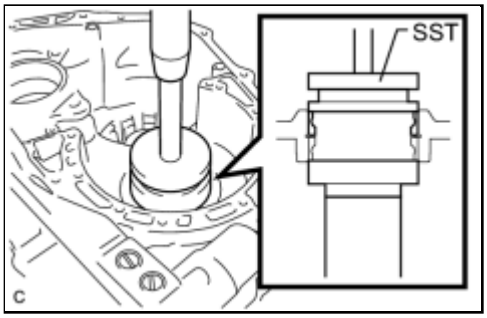

SST: 09316-12010
SST: 09502-24010
SST: 09523-36010
SST: 09950-60020
09951-00810
SST: 09950-70010
09951-07150

NOTICE:

- Do not apply excessive pressure to the bearing outer race.
- Install the bearing outer race with a press while holding the bearing outer race with SST (09502-24010, 09523-36010).

(d) Install the 2 angular balls to the transaxle case.

11. INSTALL COUNTER DRIVE GEAR

(a) Coat the counter drive gear with ATF.

(b) Using SST and a press, install the tapered roller bearing

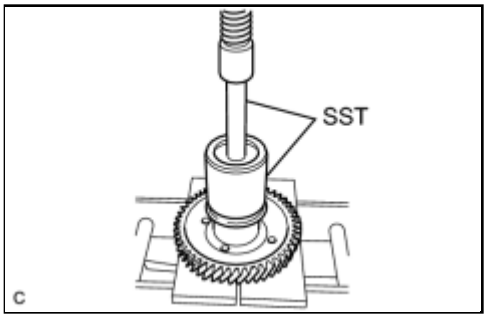

inner race (front side) to the counter drive gear.

SST: 09649-17010

SST: 09950-70010

09951-07150

NOTICE:

Do not apply excessive pressure to the bearing inner race.

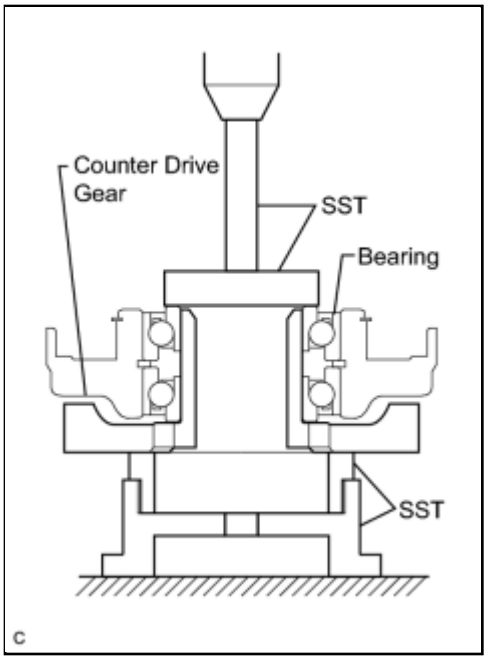

(c) Using SST and a press, install the counter drive gear and bearing inner race (rear side) to the transaxle case.

SST: 09223-15030

SST: 09527-17011

SST: 09950-60020

09951-00720

SST: 09950-70010

09951-07150

NOTICE:

Do not apply excessive pressure to the counter drive gear and bearing inner race.

12. INSTALL 1ST AND REVERSE BRAKE PISTON

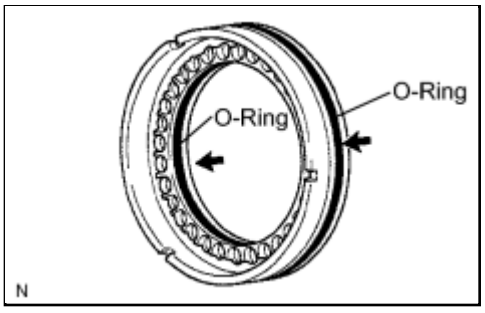

(a) Coat 2 new O-rings with ATF.

(b) Install the 2 O-rings to the 1st and reverse brake piston.

NOTICE:

- Install the O-rings carefully so that they are not twisted or pinched.
- Apply sufficient ATF to the O-rings prior to installation.

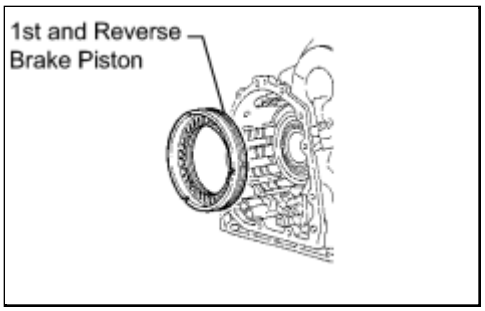

(c) Coat the 1st and reverse brake piston with ATF, and install it to the transaxle case.

NOTICE:

Be careful not to damage the O-rings.

13. INSTALL 1ST AND REVERSE BRAKE RETURN SPRING SUB-ASSEMBLY

(a) Install the return spring.

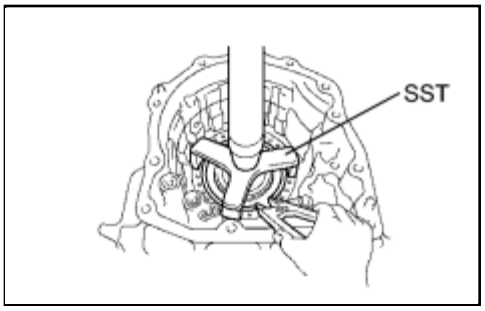

(b) Place SST on the return spring and compress the return spring with a press.

SST: 09387-00070

(c) Using a snap ring expander, install the snap ring to the transaxle case.

NOTICE:

- Stop the press when the spring seat is lowered 1 to 2 mm (0.0393 to 0.0787 in.) from the snap ring groove to prevent the spring seat from being deformed.
- Do not expand the snap ring excessively.
- After installing the spring sub-assembly, check all of the springs are fitted in the piston correctly.
- The snap ring should be securely engaged in the groove of the cylinder.

14. INSTALL FRONT PLANETARY RING GEAR

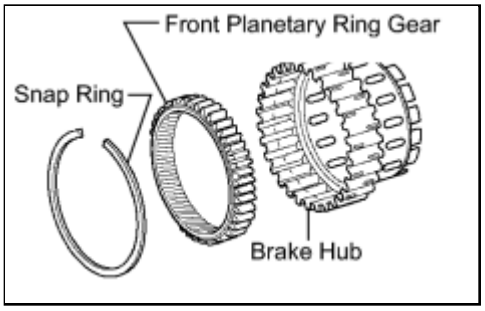

(a) Using a screwdriver, install the front planetary ring gear and snap ring to the brake hub.

NOTICE:

Confirm that the snap ring is engaged in the groove of the brake hub correctly.

15. INSTALL FRONT PLANETARY GEAR ASSEMBLY

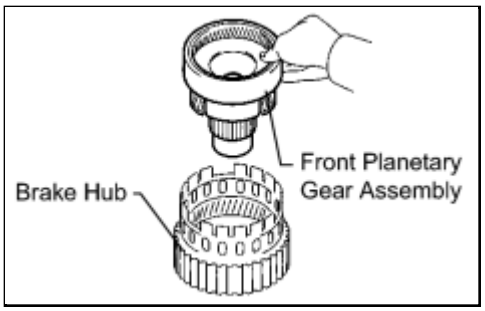

(a) Install the front planetary gear assembly to the brake hub.

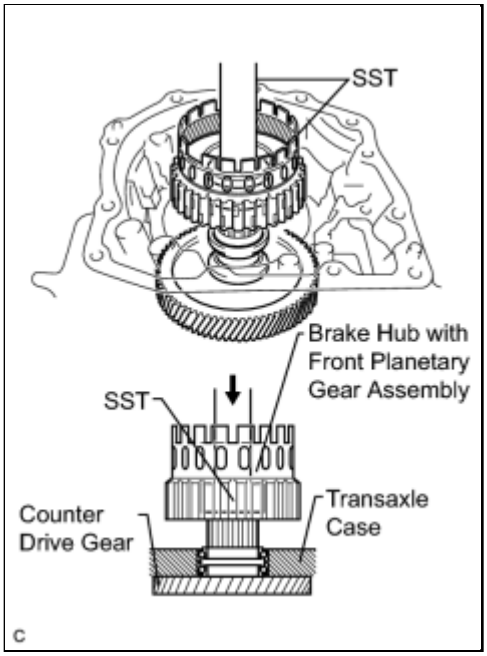

(b) Using SST and a press, press-fit the front planetary gear assembly.

SST: 09950-60010

09951-00500

SST: 09950-70010

09951-07100

NOTICE:

- Do not apply excessive pressure to the front planetary gear assembly.
- Press the inner race of the counter drive angular ball bearing (front side), counter drive gear, and front planetary gear assembly to the position where no pre-load is applied to each tapered roller bearing (left and right).

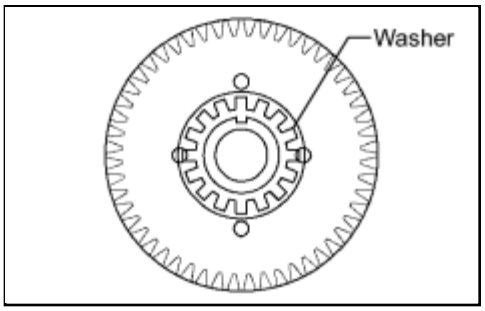

(c) Install a new washer as shown in the illustration.

(d) Using SST, install the nut.

SST: 09387-00030

SST: 09387-00080

Torque: 185 N·m (1886 kgf·cm, 136ft·lbf)

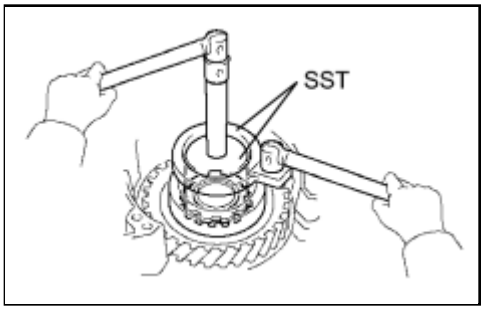

(e) Using SST and a torque wrench, measure the turning torque of the bearing while rotating SST at 60 rpm. If the measured value is not within the specified range, gradually tighten the nut until the turning torque falls within the specified range.

SST: 09387-00080

Torque: 350 N·m (3569 kgf·cm, 258ft·lbf)(a limit)

Bearing Turning Torque:

0.19 to 0.4 N*m (1.9 to 4.1 kgf*cm, 1.7 to 3.5 in.*lbf)

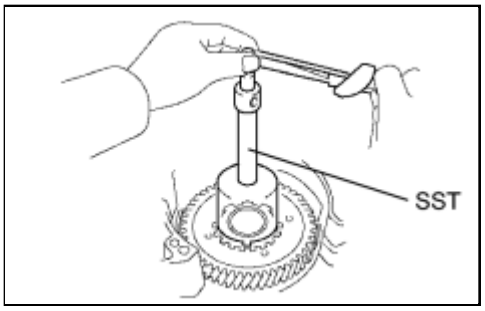

HINT:

Use a torque wrench with a fulcrum length of 160 mm (6.30 in.) to measure the turning torque.

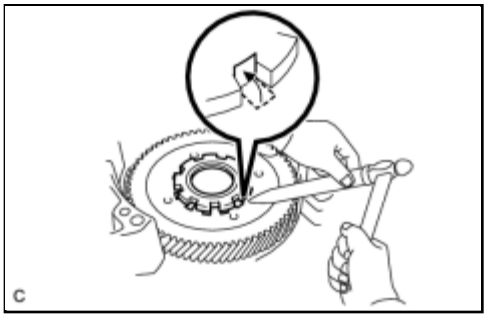

(f) Using a chisel and hammer, stake the front lock washer.

16. INSTALL INPUT SUN GEAR

(a) Coat the 2 thrust bearings with ATF.

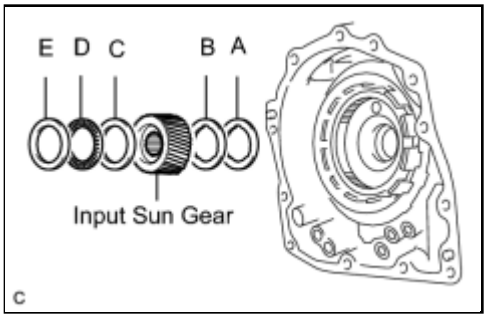

(b) Install the input sun gear, 2 thrust needle roller bearings, 2 No. 2 thrust bearing races, and No. 3 thrust bearings to the transaxle case.

NOTICE:

Ensure that the parts are installed in the correct order and direction.

Thrust Bearing and Bearing Race Diameter

	INSIDE (MM (IN.))	OUTSIDE (MM (IN.))
Bearing Race, A	34.5 (1.358)	56.82 (2.2370)
Thrust Bearing, B	32.4 (1.276)	56.62 (2.2291)
Bearing Race, C	40.3 (1.587)	58.0 (2.284)
Thrust Bearing, D	38.6 (1.520)	60.0 (2.362)
Bearing Race, E	38.6 (1.520)	58.0 (2.284)

17. INSTALL REAR PLANETARY GEAR ASSEMBLY

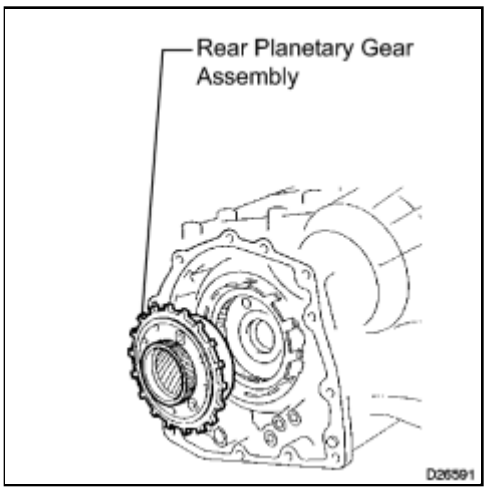

(a) Install the rear planetary gear assembly to the brake hub.

(b) Using a screwdriver, install the snap ring.

NOTICE:

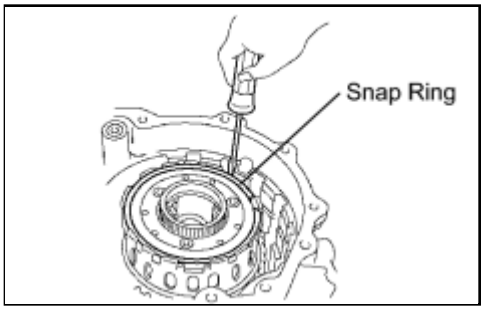

Confirm that the snap ring is engaged in the groove of the 1st and reverse brake hub correctly.

18. INSTALL 1ST AND REVERSE BRAKE DISC

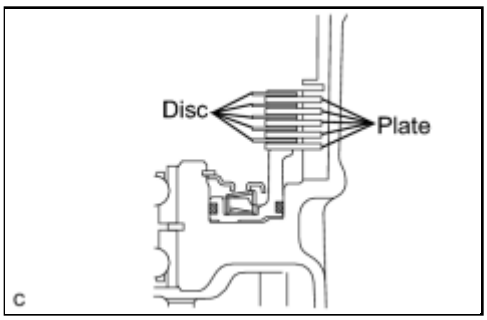

(a) Coat the 5 discs with ATF.

(b) Install the 5 plates and 5 discs.

NOTICE:

Be sure to install the plates and disks in the correct order.

19. INSPECT PACK CLEARANCE OF 1ST AND REVERSE BRAKE INFO

20. INSTALL 2ND BRAKE PISTON

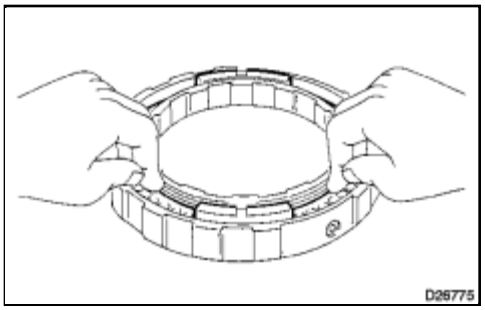

(a) Coat the 2nd brake piston with ATF, and install it to the 2nd brake cylinder.

21. INSTALL 2ND BRAKE PISTON RETURN SPRING SUB-ASSEMBLY

(a) Install the 2nd brake piston return spring sub-assembly.

NOTICE:

Ensure that all springs are fitted in the piston correctly.

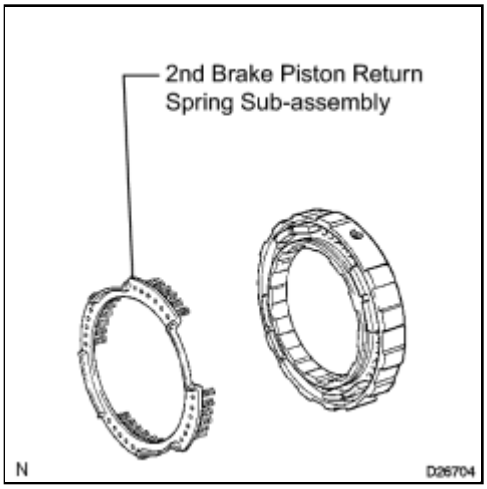

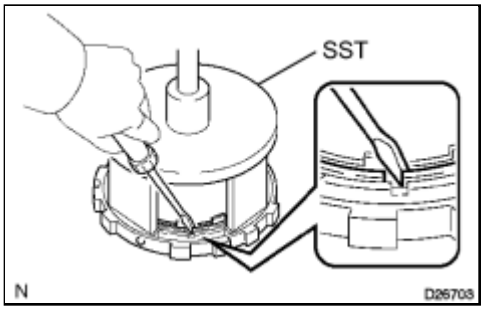

(b) Place SST on the piston return spring, and compress it with a press.

SST: 09387-00060

(c) Using a screwdriver, install the snap ring.

NOTICE:

Stop the press when the spring seat is lowered 1 to 2 mm (0.0393 to 0.0787 in.) from the snap ring groove. This prevents the spring seat from being deformed.

22. INSTALL 2ND BRAKE PISTON ASSEMBLY

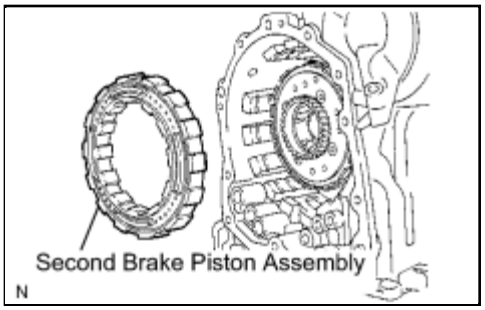

(a) Install the 2nd brake piston assembly to the transaxle case.

(b) Install the snap ring and measure the inside diameter.

Inside diameter:
More than 172 mm (6.77 in.)

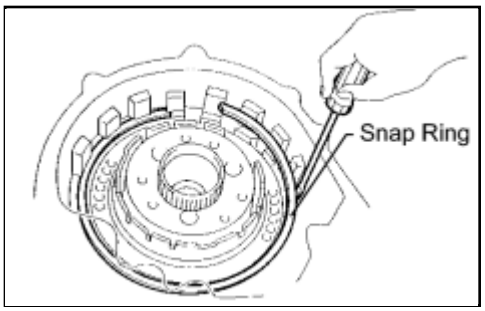

NOTICE:

- Make sure to install the tapered snap ring in the correct direction.
- If the diameter does not meet the specified value, replace the snap ring with a new one.
- After installing the snap ring, confirm that there is no clearance between the 2nd brake cylinder and the contact surface of the cylinder in the transaxle case.

23. INSTALL ONE-WAY CLUTCH SLEEVE

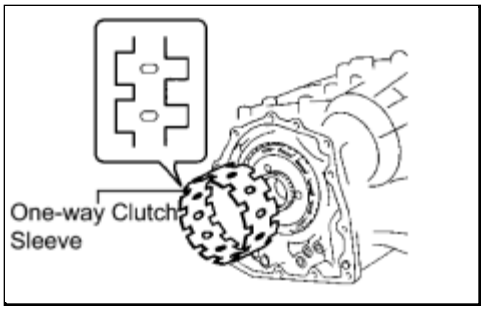

(a) Install the one-way clutch sleeve to the 2nd brake cylinder assembly.

NOTICE:

Check the positioning direction of the outer sleeve.

24. INSTALL NO. 1 PLANETARY CARRIER THRUST WASHER

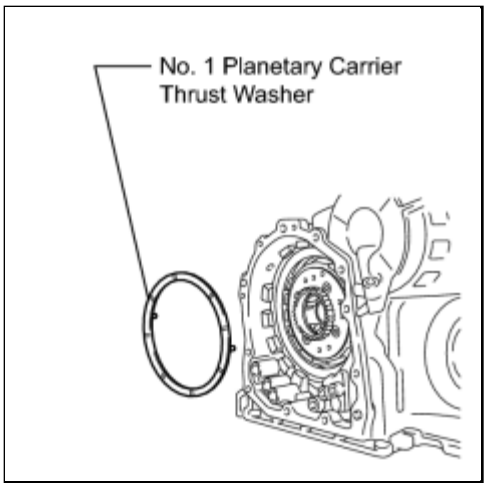

(a) Coat the No. 1 planetary carrier thrust washer with ATF, and install it onto the planetary sun gear assembly.

NOTICE:

After installing the washer, confirm that the projections on the washer are securely fitted in the holes of the planetary sun gear assembly.

25. INSTALL ONE-WAY CLUTCH ASSEMBLY

(a) Install the one-way clutch inner race to the one-way clutch.

NOTICE:

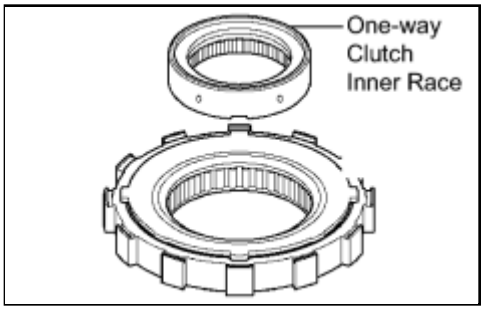

- Check the direction of the inner race.
- Confirm that the identification mark can be seen.

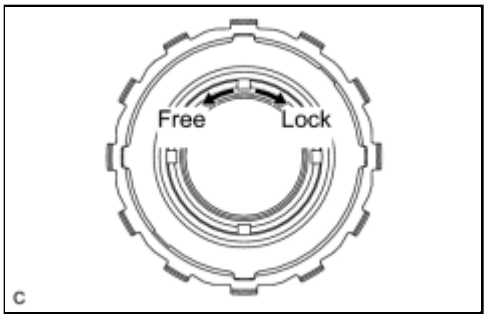

(b) Make sure that the one way clutch turns freely counterclockwise and locks when turned clockwise.

(c) Install the one-way clutch and thrust needle roller bearing to the one-way clutch sleeve outer.

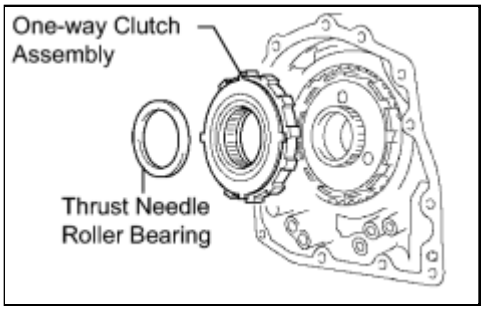

Bearing Diameter

	INSIDE (MM (IN.))	OUTSIDE (MM (IN.))
Bearing	53.6 (2.110)	69.6 (2.740)

NOTICE:

Install the thrust bearing properly so that uncolored race will be visible.

26. INSTALL REAR PLANETARY SUN GEAR ASSEMBLY

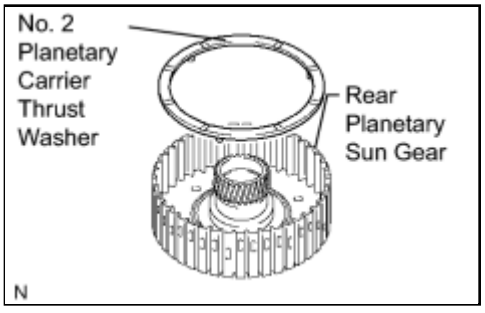

(a) Coat the No. 2 planetary carrier thrust washer with ATF, and install it onto the rear planetary sun gear.

(b) Coat the bearing with petroleum jelly, and install it onto the rear planetary sun gear.

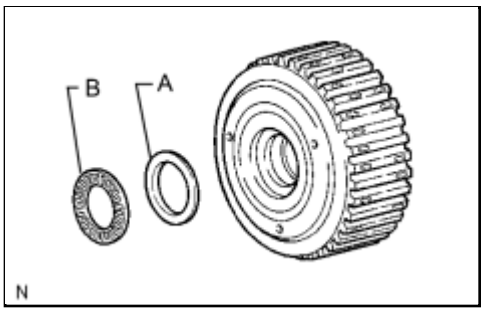

Bearing Diameter

	INSIDE (MM (IN.))	OUTSIDE (MM (IN.))
Race, A	33.1 (1.303)	45.4 (1.787)
Bearing, B	31.85 (1.254)	45.2 (1.78)

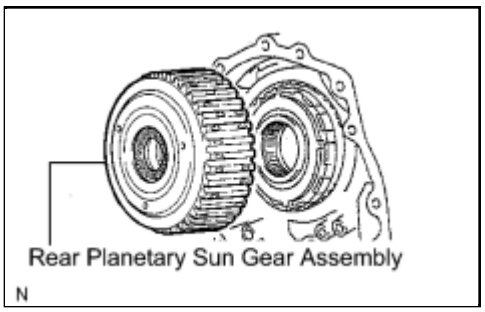

(c) Install the rear planetary sun gear assembly to the rear planetary gear.

NOTICE:

After installing the rear planetary sun gear assembly, confirm that the B1 discs engage.

27. INSTALL 2ND BRAKE CLUTCH DISC

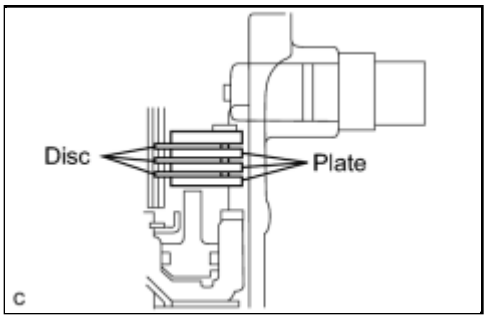

(a) Coat the 3 discs with ATF.

(b) Install the 3 discs and 3 plates to the transaxle case.

(c) Install the snap ring.

28. INSPECT PACK CLEARANCE OF 2ND BRAKE INFO

29. INSTALL OVERDRIVE DIRECT CLUTCH HUB SUB-ASSEMBLY

(a) Install the direct clutch hub to the planetary gear assembly.

NOTICE:

Be careful not to damage the bushing inside the overdrive

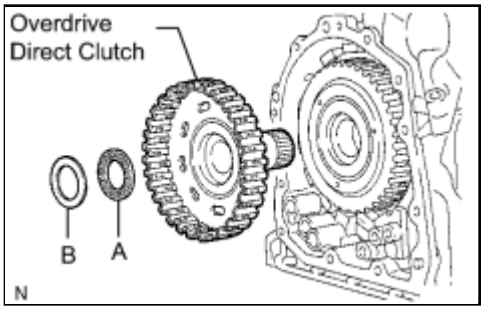

clutch hub during installation.

(b) Coat the thrust bearing with ATF.

(c) Install the bearing race and the thrust bearing to the direct clutch hub.

NOTICE:

When installing the bearing, hold the side of the overdrive clutch hub.

Bearing and Race Diameter

	INSIDE (MM (IN.))	OUTSIDE (MM (IN.))
Bearing, A	25.0 (0.984)	39.5 (1.555)
Race, B	23.6 (0.929)	37.0 (1.457)

30. INSTALL OVERDRIVE DIRECT CLUTCH O-RING

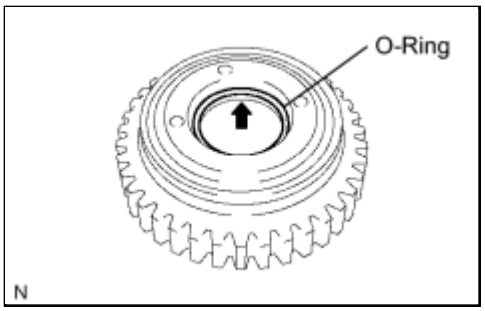

(a) Coat a new O-ring with ATF, and install it to the direct clutch drum.

NOTICE:

Ensure that the O-ring is not twisted or pinched.

31. INSTALL OVERDRIVE DIRECT CLUTCH DRUM SUB-ASSEMBLY

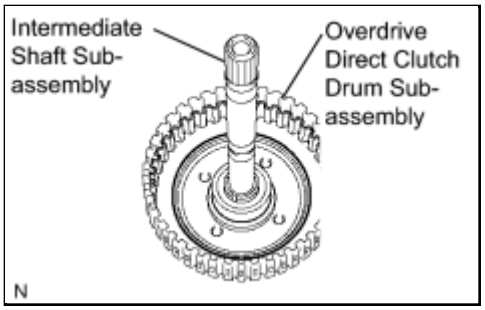

(a) Coat the direct clutch drum with ATF, and install it to the intermediate shaft.

NOTICE:

- Be careful not to damage the O-ring.
- Be careful not to damage the lip seal of the direct clutch drum.

32. INSTALL OVERDRIVE DIRECT CLUTCH PISTON

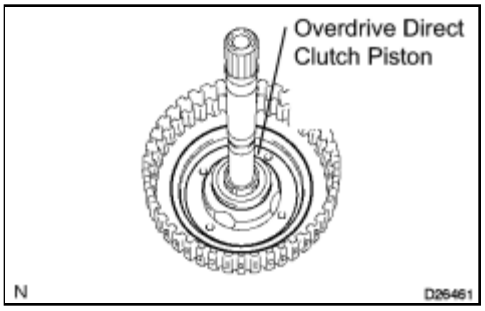

(a) Coat the overdrive direct clutch piston with ATF, and install it to the overdrive direct clutch drum sub-assembly.

NOTICE:

Be careful not to damage the lip seal of the direct clutch piston.

33. INSTALL OVERDRIVE CLUTCH RETURN SPRING SUB-ASSEMBLY

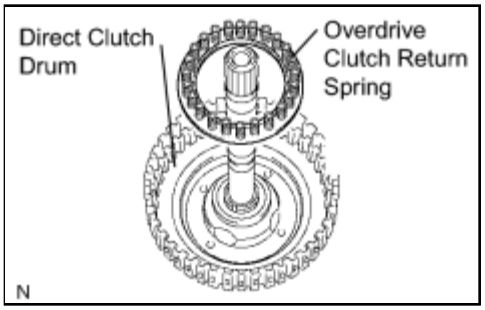

(a) Install the overdrive clutch return spring sub-assembly to the overdrive direct clutch drum sub-assembly.

NOTICE:

When installing the spring sub-assembly, ensure that all springs are fitted in the piston correctly.

(b) Coat the clutch balancer with ATF.

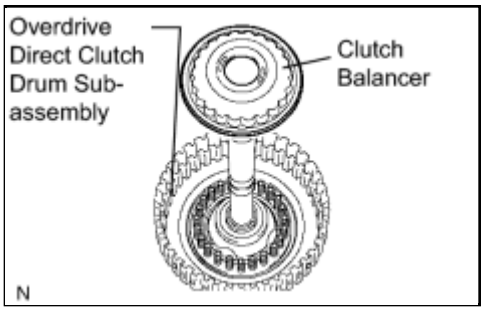

(c) Install the clutch balancer to the overdrive direct clutch drum sub-assembly.

NOTICE:

- Be careful not to damage the lip seal of the direct clutch balancer.
- Ensure that the clutch balancer is not pinched and there are no other defects at the sealing lip.
- Apply enough ATF to the sealing lip prior to installation.

(d) Place SST on the clutch balancer and compress the piston return spring with a press.

SST: 09387-00020

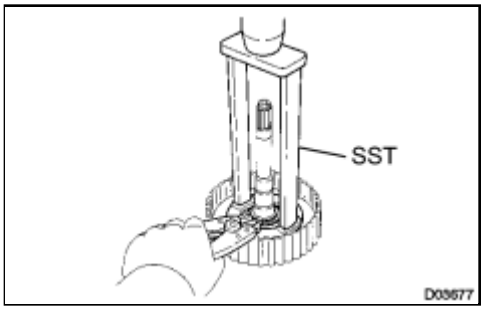

(e) Using a snap ring expander, install the snap ring to the direct clutch drum.

NOTICE:

- Stop the press when the spring seat is lowered to the place 1 to 2 mm (0.0393 to 0.0787 in.) from the snap ring groove. This prevents the spring seat from being deformed.
- Do not expand the snap ring excessively.

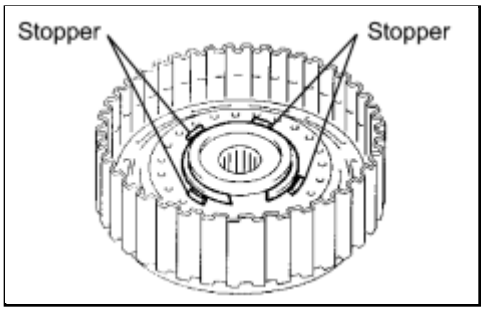

(f) Position the end gap of the snap ring in the piston as shown in the illustration.

NOTICE:

Ensure that the end gap of the snap ring is not aligned with any of the stoppers.

34. INSTALL OVERDRIVE DIRECT CLUTCH DISC

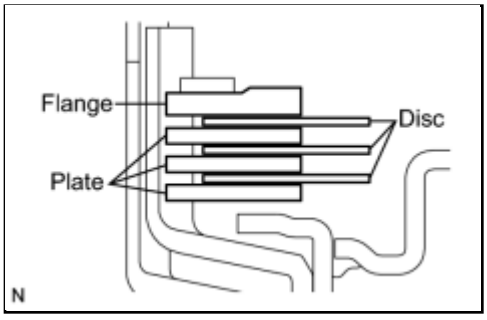

(a) Coat the 3 discs with ATF.

(b) Install the 3 plates, 3 discs and flange to the intermediate shaft.

NOTICE:

Be sure to install the plates, disks and flange in the correct order.

(c) Using a screwdriver, install the snap ring.

NOTICE:

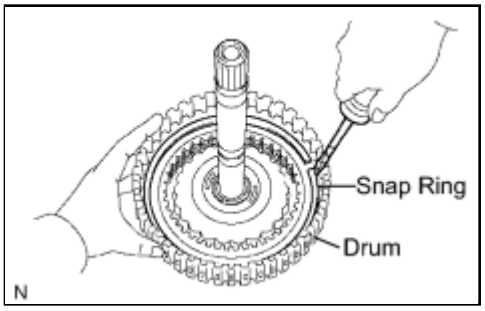

The snap ring should be securely engaged in the groove of the drum.

35. INSTALL DIRECT MULTIPLE DISC CLUTCH DISC

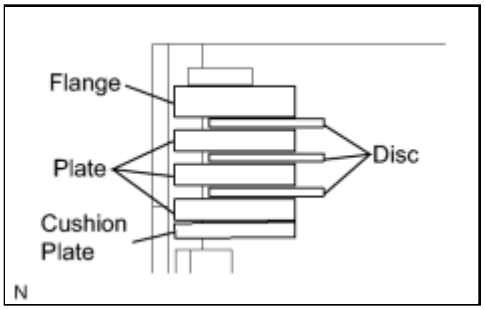

(a) Coat the 3 discs with ATF.

(b) Install the cushion plate, 3 plates, 3 discs and flange to the intermediate shaft.

NOTICE:

- Install the cushion plate with the mark on the white surface facing the plate.
- Be sure to install the cushion plate, plates, disks and flange in the correct order.

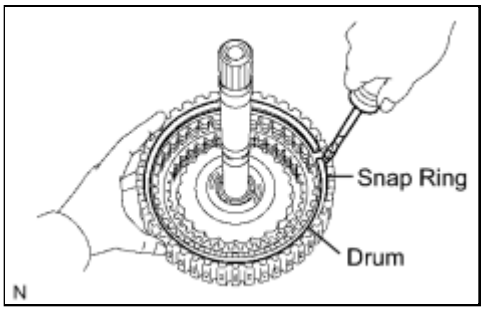

(c) Using a screwdriver, install the snap ring.

NOTICE:

The snap ring should be securely engaged in the groove of the drum.

36. INSPECT PACK CLEARANCE OF DIRECT CLUTCH INFO

37. INSPECT PACK CLEARANCE OF OVERDRIVE CLUTCH INFO

38. INSTALL DIRECT CLUTCH ASSEMBLY

(a) Coat the thrust bearing with ATF.

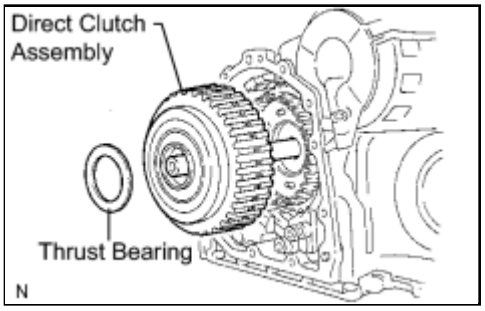

(b) Install the direct clutch assembly and thrust bearing to the rear planetary sun gear assembly.

NOTICE:

The disc in the direct clutch should be completely matched with the hub attached outside the rear planetary sun gear. Otherwise, the rear cover cannot be installed.

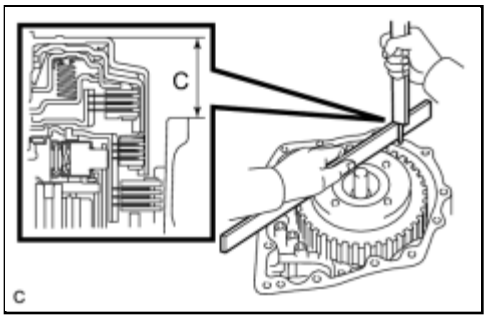

(c) Clean the contact surfaces of the transaxle case and the rear cover.

(d) As shown in the illustration, place a straightedge on the direct clutch drum and measure the distance between the transaxle case and the straightedge using a vernier caliper (Dimension C).

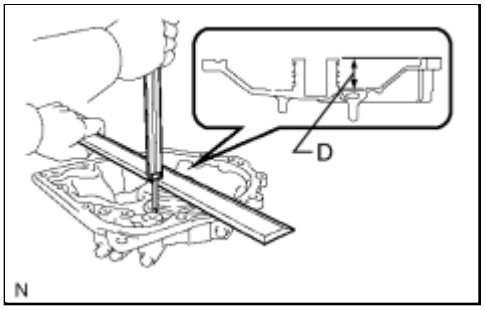

(e) Using a vernier caliper and a simple straightedge, measure the dimension shown in the illustration.

(f) Calculate the end play value using the following formula. Select a thrust bearing which satisfies the specified end play value and install it.

End play:

0.199 to 0.970 mm (0.00783 to 0.0382 in.)

NOTICE:

Make sure that the uncolored race side is facing the direct clutch assembly.

HINT:

End play = Dimension D - Dimension C

Bearing Thickness and Diameter

THICKNESS	INSIDE (MM (IN.))	OUTSIDE (MM (IN.))
3.6 (0.142)	55.9 (2.201)	76.0 (2.992)
3.9 (0.154)	55.9 (2.201)	76.6 (3.016)

39. INSTALL NO. 1 GOVERNOR APPLY GASKET

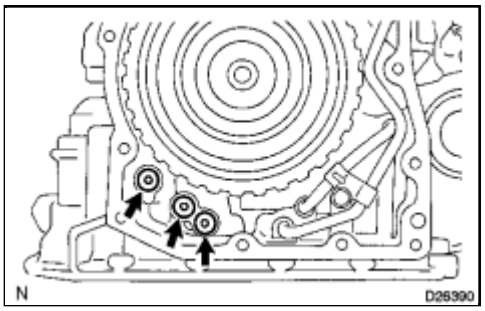

(a) Install 3 new No. 1 governor apply gaskets to the transaxle case.

40. INSTALL BRAKE APPLY TUBE

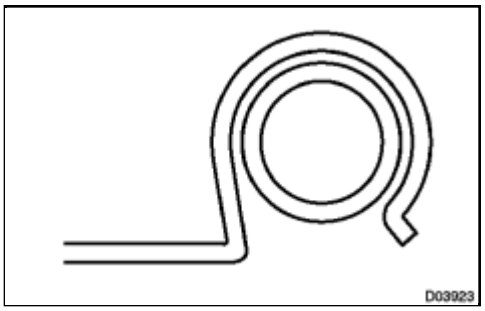

(a) Install the clamp to the brake apply tube.

NOTICE:

Make sure to install the clamp to the apply tube before installing the apply tube to the transaxle case. This prevents the apply tube from being deformed or damaged.

(b) Install the clutch apply tube.

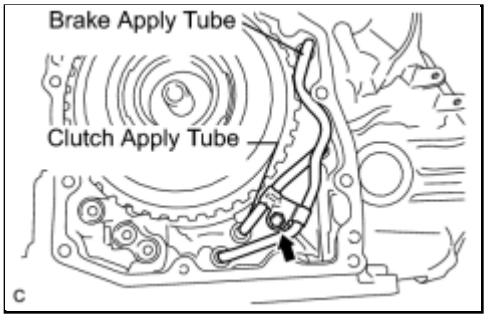

(c) Install the brake apply tube to the transaxle case with the bolt.

Torque: 5.4 N·m (55 kgf·cm, 48in·lbf)

NOTICE:

Each pipe should be securely inserted until it reaches the stopper.

41. INSTALL NEEDLE ROLLER BEARING

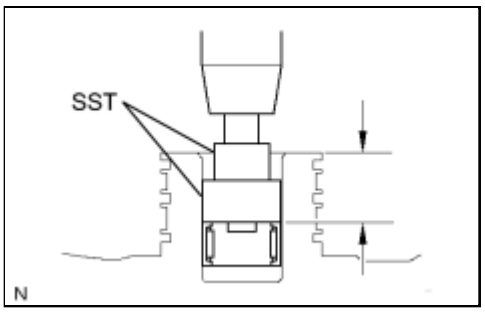

(a) Using SST and a press, install the needle roller bearing to the transaxle rear cover.

SST: 09950-60010

09951-00230

09952-06010

09951-00360

Press fit depth:

20.55 to 21.25 mm (0.8091 to 0.8366 in.)

NOTICE:

- Face the inscribed side of the bearing race up.
- Keep pressing until the specified value is obtained.

(b) Coat the needle roller bearing with ATF.

42. INSTALL REAR CLUTCH OIL SEAL RING

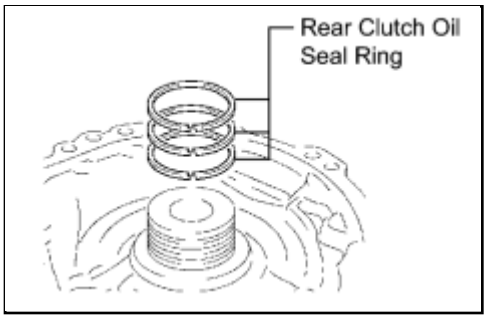

(a) Coat 3 new rear clutch oil seal rings with ATF, and install them to the transaxle rear cover.

NOTICE:

The rear clutch oil seal rings should be securely engaged in the grooves of the drum.

43. INSTALL NO. 1 TRANSAXLE CASE PLUG

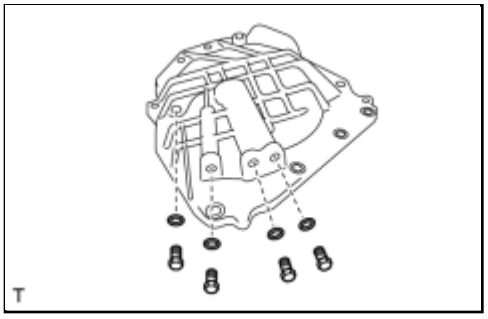

(a) Install a new O-ring to each No. 1 transaxle case plug.

(b) Install the 4 No. 1 transaxle case plugs to the transaxle rear cover.

Torque: 7.4 N·m (75 kgf·cm, 65in·lbf)

44. INSTALL TRANSAXLE REAR COVER SUB-ASSEMBLY

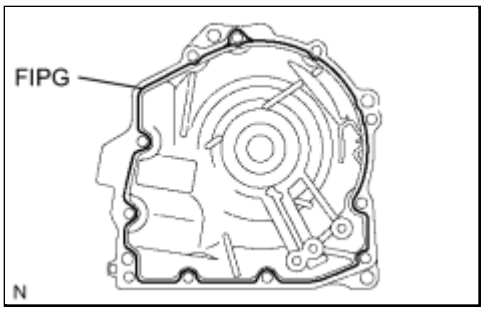

(a) Remove any packing material and keep the contact surfaces of the transaxle rear cover and the transaxle case away from oil.

(b) Apply FIPG to the cover.

FIPG:
Toyota Genuine Seal Packing 1281, Three Bond 1281 or Equivalent

NOTICE:

Apply FIPG in a continuous bead (width 1.2 mm (0.0472 in.)) along the sealing surface.

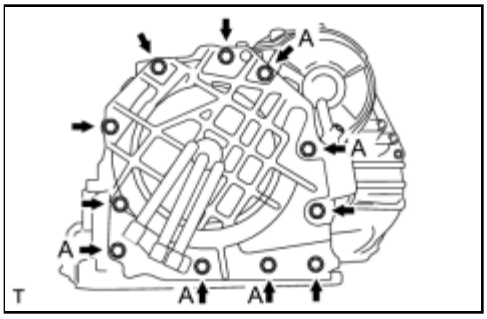

(c) Apply adhesive to the threads of bolt A.

Sealant:
Toyota Genuine Adhesive 1344, Three Bond 1344 or Equivalent

(d) Install the 11 bolts.

Bolt A - Torque: 19 N·m (190 kgf·cm, 14ft·lbf)
Other bolts - Torque: 25 N·m (250 kgf·cm, 18ft·lbf)

45. INSTALL NO. 2 UNDERDRIVE CLUTCH DISC

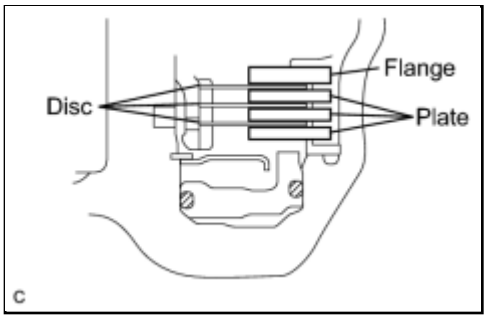

(a) Coat the 3 discs with ATF.

(b) Install the 3 discs, 3 plates and flange to the transaxle case.

NOTICE:

Be sure to install the disks, plates and flange in the correct order.

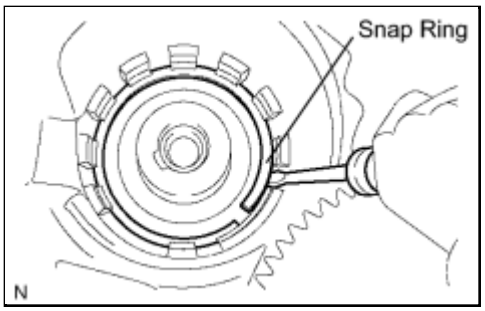

(c) Using a screwdriver, install the snap ring.

NOTICE:

The snap ring should be securely engaged in the groove of the drum.

46. INSPECT PACK CLEARANCE OF UNDERDRIVE BRAKE INFO

47. INSPECT UNDERDRIVE ONE-WAY CLUTCH ASSEMBLY INFO

48. INSTALL UNDERDRIVE ONE-WAY CLUTCH ASSEMBLY

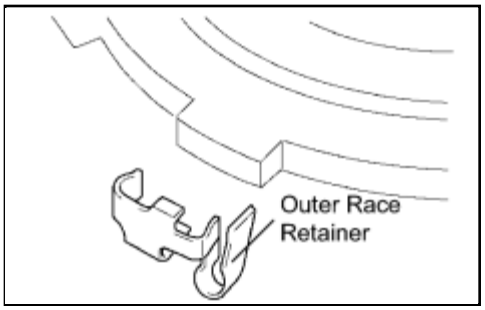

(a) Install the outer race retainer to the one-way clutch.

NOTICE:

Securely install the outer race retainer onto the tooth of the one-way clutch.

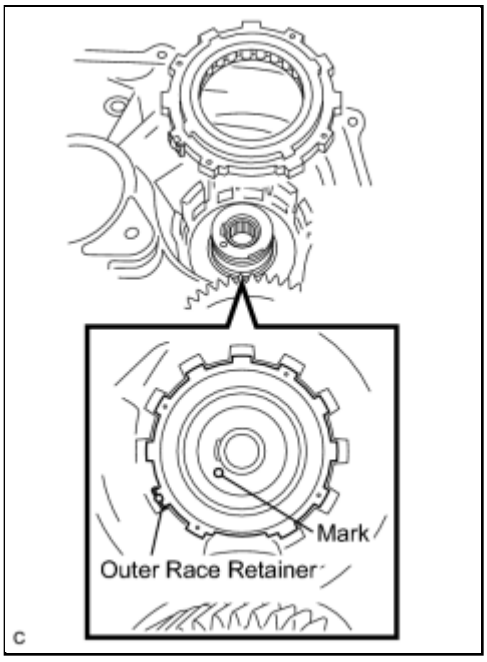

(b) Install the one-way clutch to the transaxle case.

NOTICE:

Ensure that the outer race retainer and the mark on the transaxle case are aligned.

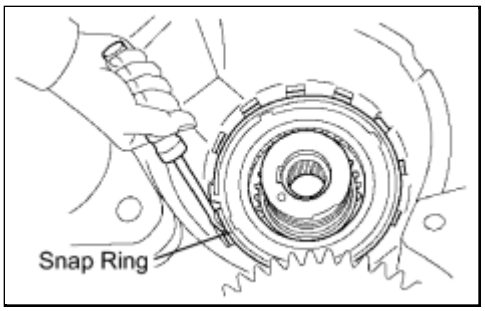

(c) Using a screwdriver, install the snap ring to the transaxle case.

NOTICE:

The snap ring should be securely engaged in the groove of the transaxle case.

49. INSTALL UNDERDRIVE CLUTCH DRUM O-RING

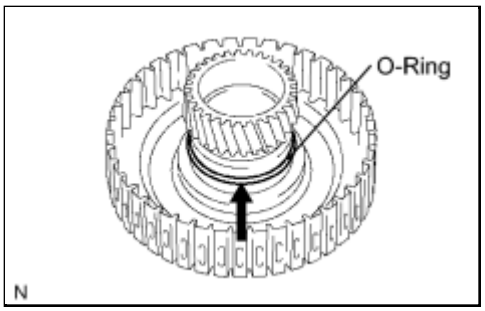

(a) Coat a new O-ring with ATF, and install it to the underdrive clutch drum.

NOTICE:

Install the O-ring carefully so that it is not twisted or pinched.

50. INSTALL UNDERDRIVE CLUTCH PISTON SET

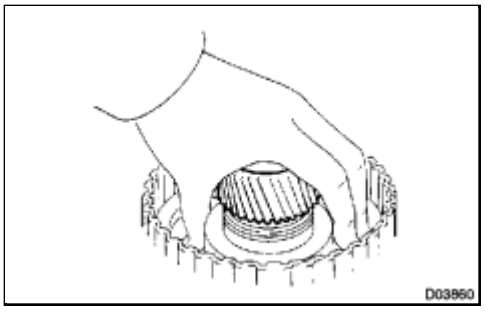

(a) Coat the underdrive clutch piston with ATF, and install it to the underdrive clutch piston drum.

NOTICE:

- Be careful not to damage the O-ring.
- Be careful not to damage the lip seal of the piston.

51. INSTALL UNDERDRIVE CLUTCH RETURN SPRING SUB-ASSEMBLY

(a) Install the return spring to the underdrive clutch drum.

NOTICE:

After installing the spring sub-assembly, check all of the springs are fitted in the piston correctly.

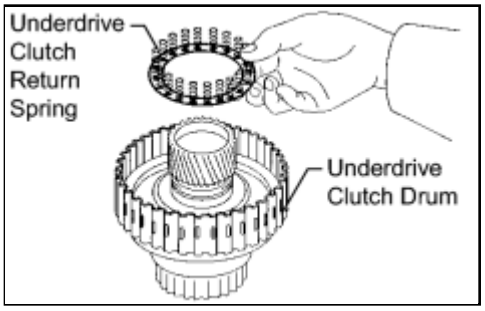

(b) Coat the clutch balancer with ATF.

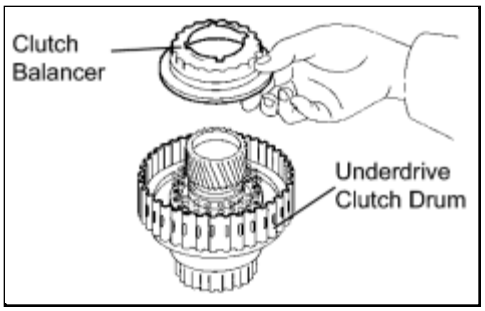

(c) Install the clutch balancer to the underdrive clutch drum.

NOTICE:

Be careful not to damage the lip seal of the clutch balancer.

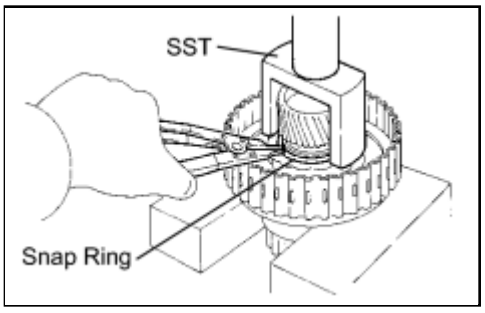

(d) Place SST on the clutch balancer and compress the piston return spring with a press.

SST: 09350-32014

09351-32070

(e) Using a snap ring expander, install the snap ring to the underdrive clutch drum.

NOTICE:

- Stop the press when the spring seat is lowered 1 to 2 mm (0.0393 to 0.0787 in.) from the snap ring groove. This prevents the spring seat from being deformed.
- Do not expand the snap ring excessively.

(f) Position the end gap of the snap ring in the underdrive clutch drum as shown in the illustration.

NOTICE:

The end gap of the snap ring should not be aligned with any of the stoppers.

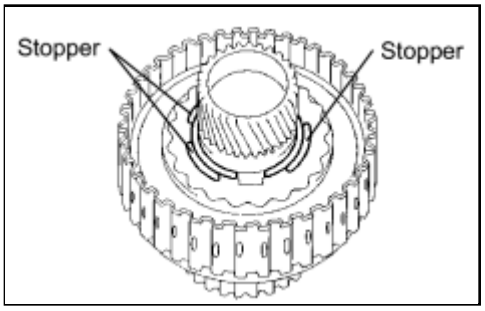

52. INSTALL NO. 1 UNDERDRIVE CLUTCH DISC

(a) Coat the 3 discs with ATF.

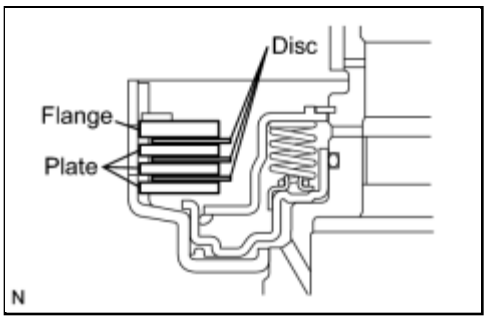

(b) Install the 3 plates, 3 discs, and flange to the underdrive clutch drum.

NOTICE:

Be careful about the order of discs, plates, and flange.

53. INSTALL NO. 2 UNDERDRIVE CLUTCH FLANGE HOLE SNAP RING

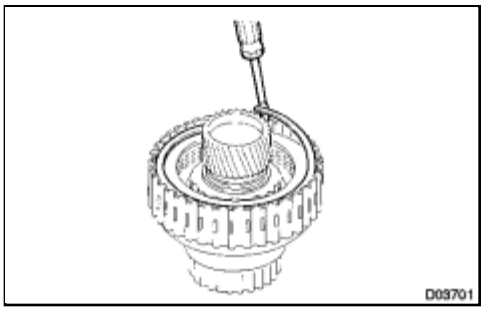

(a) Using a screwdriver, install the No. 2 underdrive clutch flange hole snap ring.

(b) Check that the end gap of the snap ring is not aligned with one of the cutouts.

NOTICE:

The snap ring should be securely engaged in the groove of the drum.

54. INSTALL UNDERDRIVE CLUTCH ASSEMBLY

(a) Coat the bearing and bearing race with ATF, and install them onto the underdrive clutch.

Bearing and Bearing Race Diameter

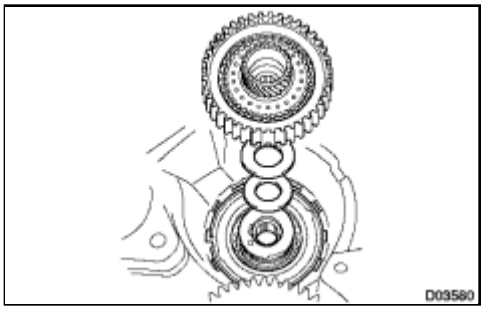

	INSIDE (MM (IN.))	OUTSIDE (MM (IN.))
Bearing	37.73 (1.4854)	58.0 (2.284)
Race	29.9 (1.177)	55.5 (2.185)

(b) Install the underdrive clutch assembly to the transaxle case.

NOTICE:

When installing the underdrive clutch drum sub-assembly, do not damage the oil seal ring.

55. INSTALL PARKING LOCK PAWL

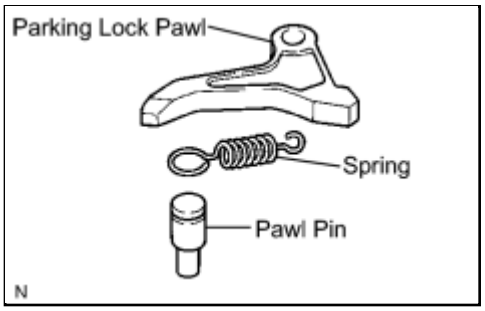

(a) Install the pawl pin and spring to the parking lock pawl.

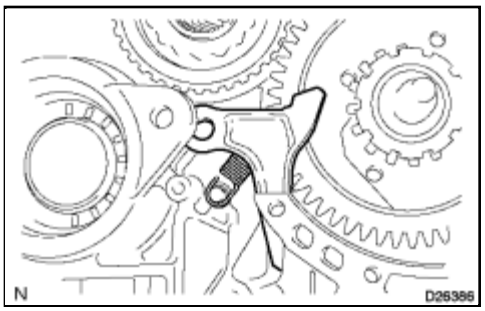

(b) Temporarily install the parking lock pawl, pin and spring to the transaxle case as shown in the illustration.

56. INSTALL UNDERDRIVE PLANETARY RING GEAR

(a) Install a new snap ring to the outer race of the tapered roller bearing.

HINT:

If replacing the bearing, also replace the counter driven gear with a new one.

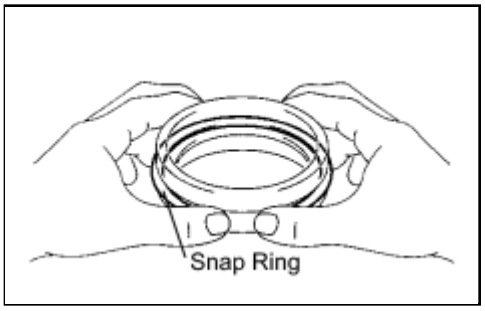

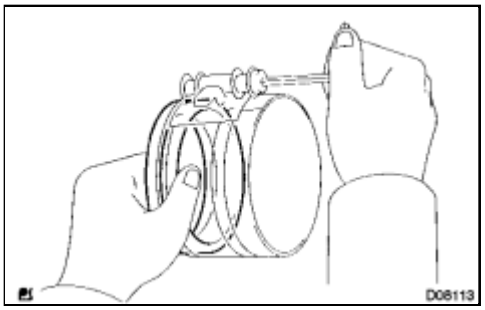

(b) Using a piston ring compressor, squeeze the snap ring.

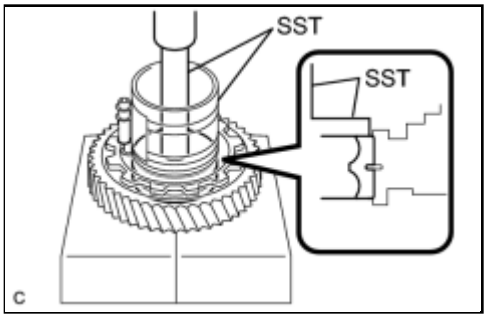

(c) Using SST and a press, press in the outer race of the angular ball bearing.

SST: 09950-60020

09951-00890

SST: 09950-70010

09951-07100

NOTICE:

Do not damage the snap ring during installation of the outer race.

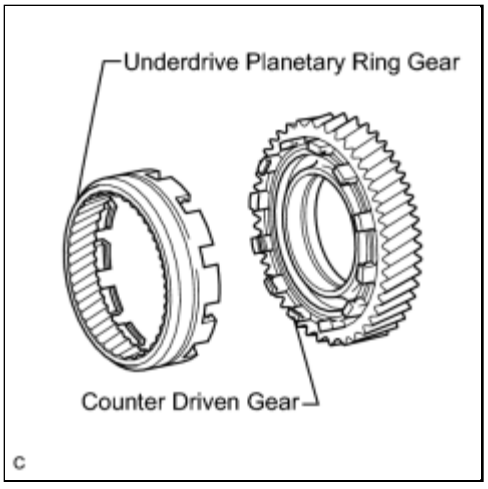

(d) Install the underdrive planetary ring gear to the counter driven gear.

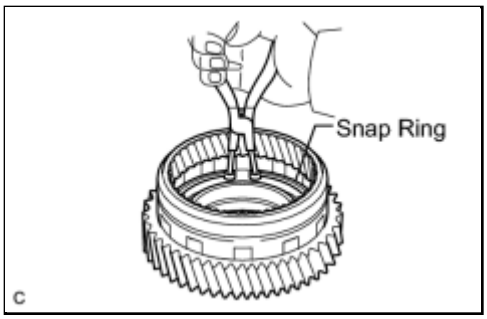

(e) Using snap ring pliers, install the snap ring.

57. INSTALL UNDERDRIVE PLANETARY GEAR ASSEMBLY

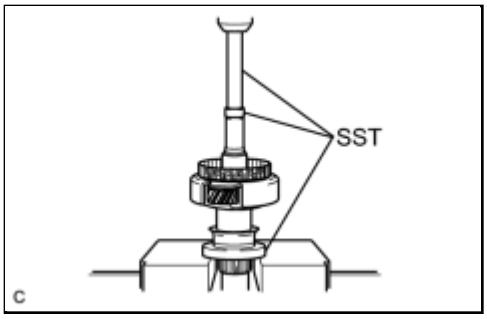

(a) Using a press, press the angular ball bearing inner race (rear side) into the underdrive planetary gear.

SST: 09726-40010
SST: 09950-60010
09951-00260
SST: 09950-70010
09951-07100

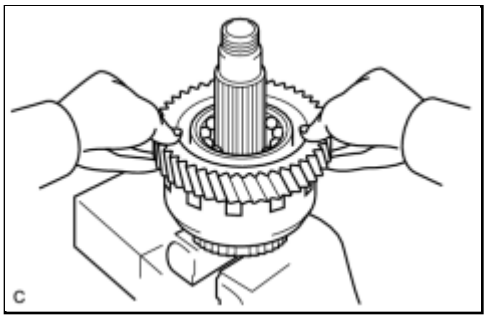

(b) Install the counter driven gear with planetary ring gear to the underdrive planetary gear.

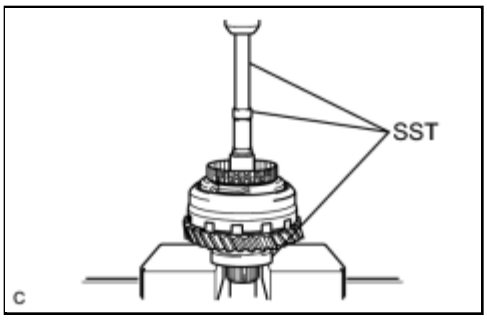

(c) Using SST and a press, press in the angular ball bearing inner race (front side).

SST: 09726-40010
SST: 09950-60010
09951-00260
SST: 09950-70010
09951-07100

NOTICE:
Press the counter driven gear while rotating it.

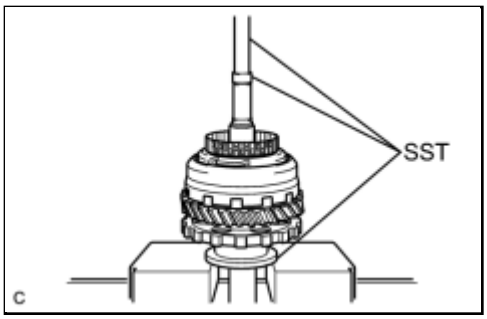

(d) Using a press, press in the parking lock gear.

SST: 09316-20011

SST: 09950-60010

09951-00260

SST: 09950-70010

09951-07100

NOTICE:

Press the counter driven gear while rotating it.

58. INSTALL DIFFERENTIAL DRIVE PINION

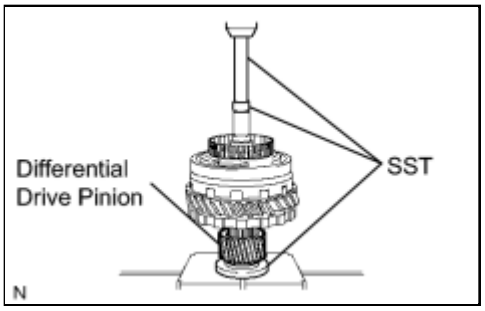

(a) Using a press, press in the differential drive pinion.

SST: 09726-40010

SST: 09950-60010

09951-00260

SST: 09950-70010

09951-07100

NOTICE:

Press the counter driven gear while rotating it.

59. INSTALL CYLINDRICAL ROLLER BEARING RACE INNER

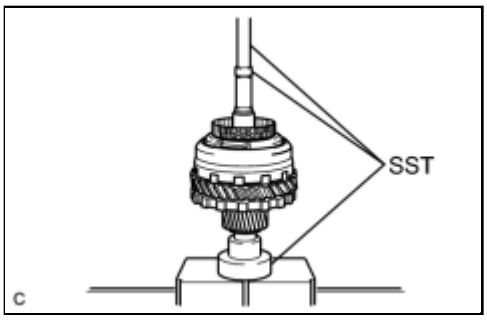

(a) Using a press, press in the cylindrical roller bearing race inner.

SST: 09515-21010

SST: 09950-60010

09951-00260

SST: 09950-70010

09951-07100

NOTICE:

Press the counter driven gear while rotating it.

60. INSTALL FRONT PLANETARY GEAR NUT

(a) Clamp the underdrive planetary gear in a soft jaw vise.

NOTICE:

Be careful not to damage the differential drive pinion.

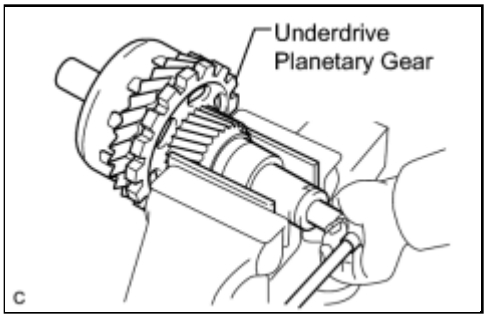

(b) Using a socket wrench, install a new gear nut.

Torque: 280 N·m (2855 kgf·cm, 207ft·lbf)

HINT:

Use a torque wrench with a fulcrum length of 750 mm (29.53 in.).

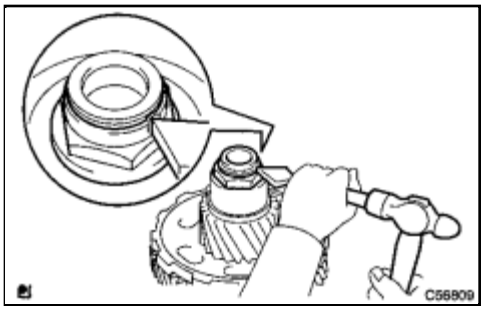

(c) Using a chisel and hammer, stake the gear nut.

CAUTION:

Be sure that there are no cracks on the nut.

61. INSTALL UNDERDRIVE PLANETARY GEAR ASSEMBLY

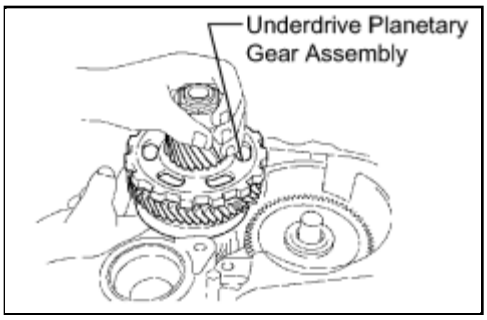

(a) Install the underdrive planetary gear assembly to the transaxle case.

NOTICE:

Firmly engage all the discs of the underdrive clutch with the hub splines of the underdrive planetary gear assembly and securely assemble them.

(b) Install the parking lock pawl shaft.

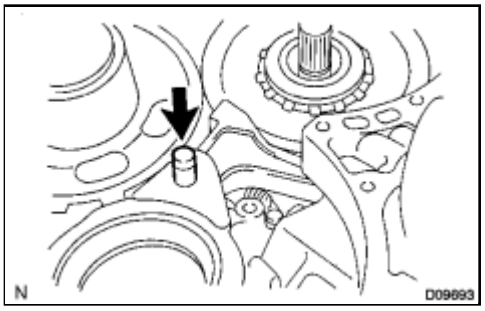

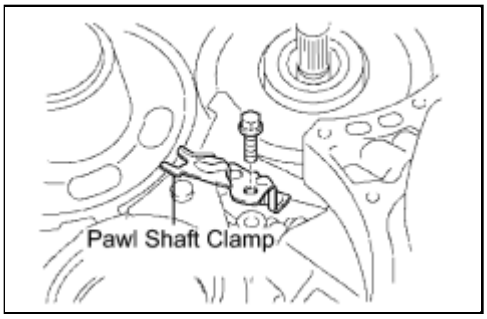

(c) Install the pawl shaft clamp with the bolt.

Torque: 9.8 N·m (100 kgf·cm, 87in·lbf)

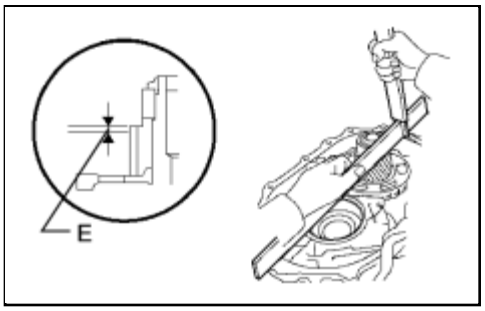

(d) Using a straightedge and a vernier caliper as shown in the illustration, measure the gap between the top of the differential drive pinion in the underdrive planetary gear and contact surface of the transaxle case and housing (Dimension E).

NOTICE:

Take a note of dimension E because it is necessary for the following process.

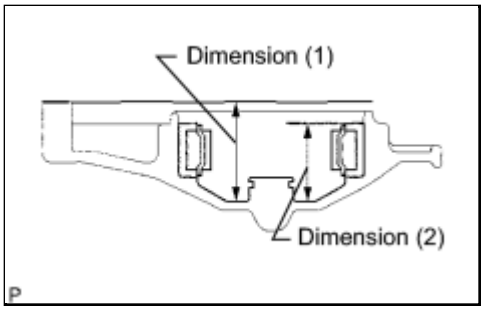

(e) As shown in the illustration, measure the 2 places of the transaxle housing, and calculate dimension F using the following formula.

NOTICE:

Take a note of dimension F because it is necessary for the following process.

HINT:

Dimension F = Dimension (1) - Dimension (2)

62. INSTALL MULTIPLE DISC CLUTCH HUB

(a) Install the No. 1 thrust bearing race to the transaxle case

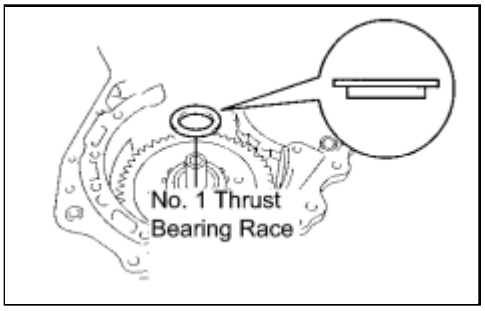

while checking its direction.

Bearing Race Diameter

	INSIDE (MM (IN.))	OUTSIDE (MM (IN.))
Bearing Race	34.5 (1.359)	48.5 (1.909)

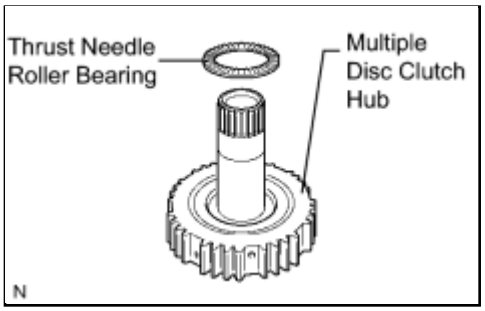

(b) Coat the thrust needle roller bearing and race with ATF, and install them onto the multiple disc clutch hub.

Thrust Bearing and Race Diameter

	INSIDE (MM (IN.))	OUTSIDE (MM (IN.))
Thrust Bearing	36.3 (1.429)	52.2 (2.055)

(c) Coat the needle roller bearing with ATF.

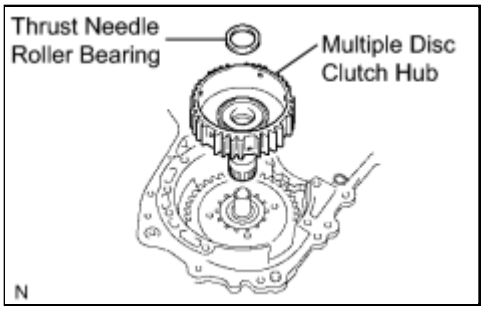

(d) Install the needle roller bearing to the multiple disc clutch hub.

Bearing Diameter

	INSIDE (MM (IN.))	OUTSIDE (MM (IN.))
Bearing	23.5 (0.925)	44.0 (1.732)

(e) Install the multiple disc clutch hub to the transaxle case.

63. INSTALL INPUT SHAFT OIL SEAL RING

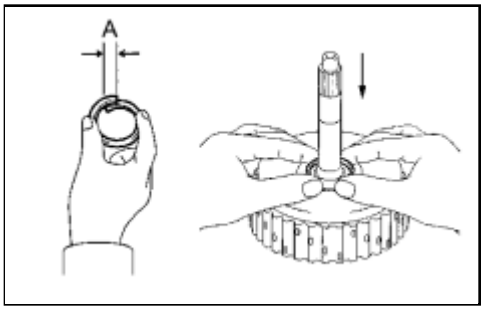

(a) Compress a new input shaft oil seal ring from both sides to adjust dimension A.

Dimension A:
5 mm (0.197 in.)

(b) Coat the oil seal ring with ATF and install it to the input shaft.

NOTICE:

Do not expand the gap of the oil seal ring too much. Securely engage the hooks.

64. INSTALL FORWARD CLUTCH PISTON SUB-ASSEMBLY

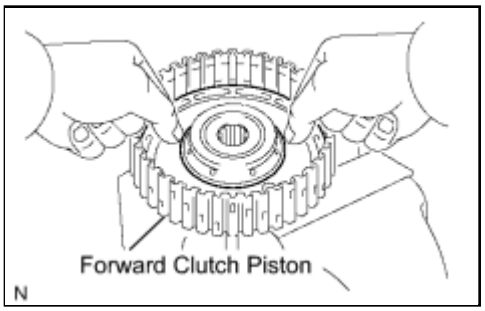

(a) Coat the forward clutch piston with ATF, and install it to the input shaft.

NOTICE:

Be careful not to damage the lip seal of the forward clutch piston.

65. INSTALL FORWARD CLUTCH RETURN SPRING SUB-ASSEMBLY

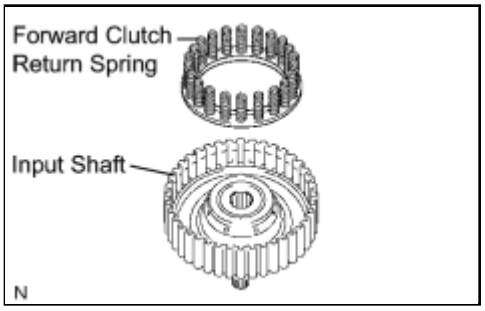

(a) Install the return spring to the input shaft.

NOTICE:

After installing the spring sub-assembly, check that all of the springs are fitted to piston correctly.

(b) Coat the clutch balancer with ATF.

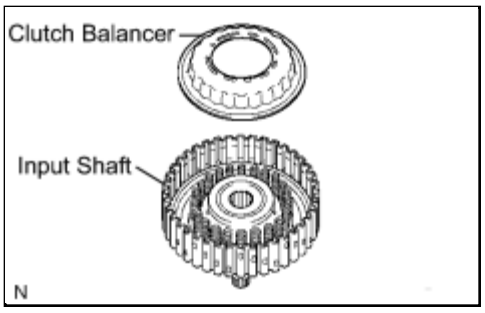

(c) Install the clutch balancer to the input shaft.

NOTICE:

- Be careful not to damage the lip seal of the forward clutch balancer.
- Install the clutch balancer carefully not to pinch or damage at the sealing lip.
- Apply sufficient ATF to the sealing lip prior to installation.

(d) Place SST on the clutch balancer, and compress the clutch balancer with a press.

SST: 09387-00020

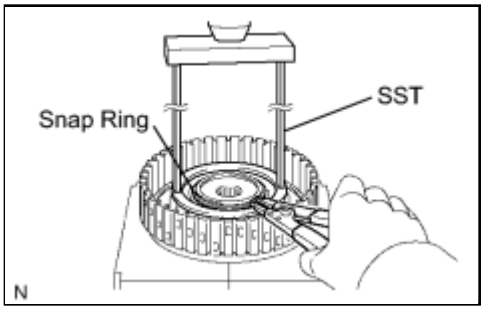

(e) Install the snap ring with a snap ring expander.

NOTICE:

- Stop the press when the spring seat is lowered 1 to 2 mm (0.0393 to 0.0787 in.) from the snap ring groove. This prevents the spring seat from being deformed.
- Do not expand the snap ring excessively.

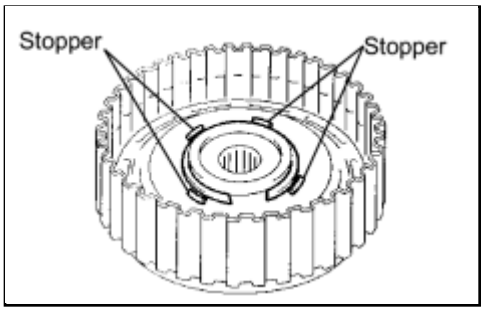

(f) Position the end gap of the snap ring in the piston as shown in the illustration.

NOTICE:

The end gap of the snap ring should not be aligned with any of the stoppers.

66. INSTALL FORWARD MULTIPLE DISC CLUTCH DISC

(a) Coat the 5 discs with ATF.

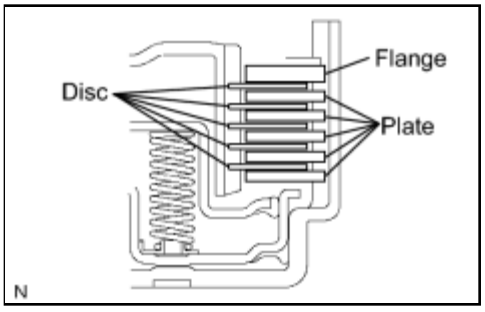

(b) Install the 5 plates, 5 discs, and flange to the input shaft.

NOTICE:

Be careful about the order of discs, plates, and flange.

(c) Using a screwdriver, install the snap ring.

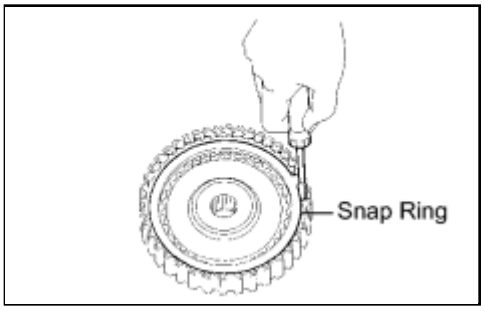

(d) Check that the end gap of the snap ring is not aligned with one of the cutouts.

NOTICE:

The snap ring should be securely engaged in the groove of the drum.

67. INSPECT PACK CLEARANCE OF FORWARD CLUTCH INFO

68. INSPECT FORWARD MULTIPLE DISC CLUTCH DISC INFO

69. INSTALL FORWARD CLUTCH ASSEMBLY

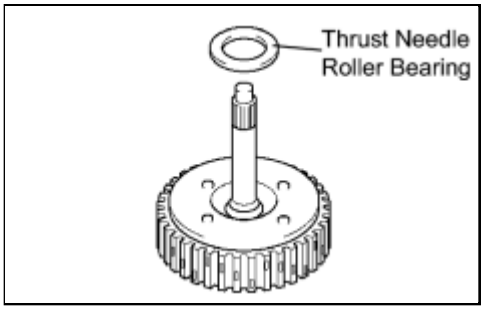

(a) Coat the thrust needle roller bearing with ATF.

(b) Install the thrust needle roller bearing to the forward clutch.

Thrust Bearing Diameter

	INSIDE (MM (IN.))	OUTSIDE (MM (IN.))
Thrust Bearing	33.85 (1.3327)	52.2 (2.0551)

NOTICE:

Install the thrust bearing properly so that the tempered side of the race will be visible.

(c) Install the forward clutch to the forward clutch assembly.

NOTICE:

- Align the splines of all discs in the forward clutch with those of the multiple clutch hub to assemble them securely.
- Be careful not to damage the bush inside the forward clutch

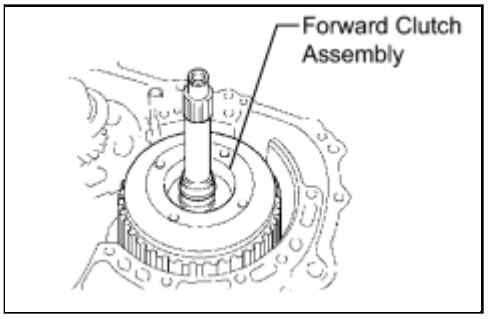

hub during installation.

70. INSTALL OVERDRIVE BRAKE GASKET

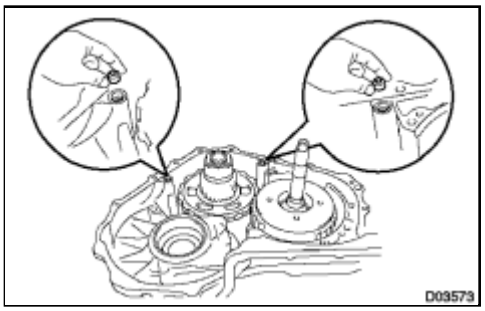

(a) Install 2 new overdrive brake gaskets.

71. INSTALL DIFFERENTIAL GEAR ASSEMBLY

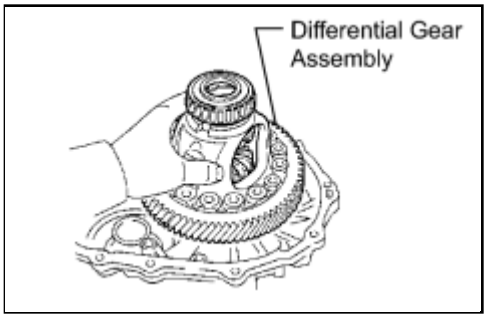

(a) Install the differential gear assembly to the transaxle case.

72. INSTALL NO. 2 THRUST BEARING UNDERDRIVE RACE

(a) Install the No. 2 thrust bearing underdrive race to the underdrive planetary gear assembly.

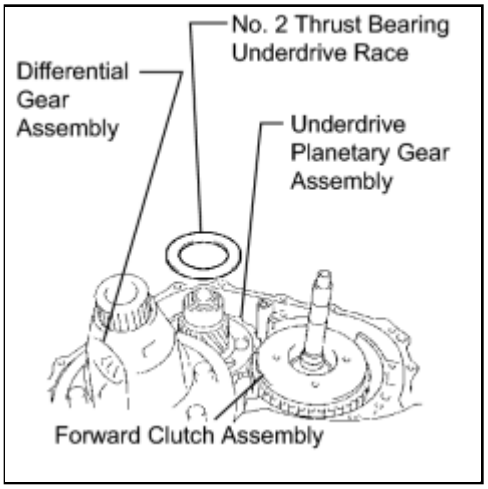

73. INSTALL THRUST NEEDLE ROLLER BEARING

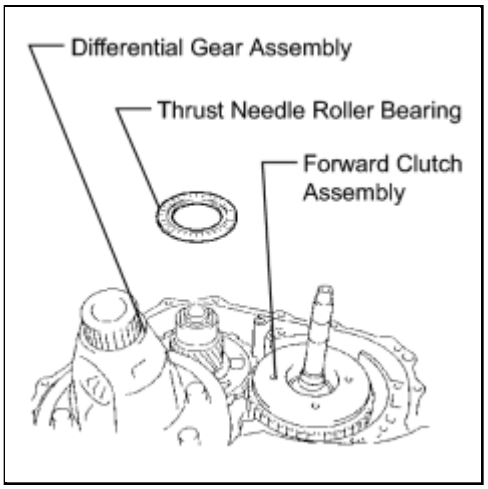

(a) Coat the thrust needle roller bearing with ATF.

(b) Calculate the end play value using the following formula and values of Dimensions E and F that ware measured when installing the cylindrical roller bearing and underdrive planetary gear. Select an appropriate No. 2 underdrive planetary gear thrust bearing race which satisfies the specified end play value, and install it.

End play:
0.198 to 0.693 mm (0.00779 to 0.02728 in.)

HINT:

End play = Dimension F - Dimension E - Thrust bearing thickness 2.5 mm (0.0984 in.) - No. 2 underdrive thrust bearing race thickness.

Race Thickness: mm (in.)

F - E (MM (IN.))	THICKNESS (MM (IN.))
Less than 7.339 (0.28894)	3.5 (0.138)

F - E (MM (IN.))	THICKNESS (MM (IN.))
7.339 (0.28894) or more	3.9 (0.154)

Bearing and Bearing Race Diameter

	INSIDE (MM (IN.))	OUTSIDE (MM (IN.))
Bearing	53.0 (2.087)	78.2 (3.079)
Bearing race	52.1 (2.051)	75.5 (2.972)

74. INSTALL OIL PUMP ASSEMBLY

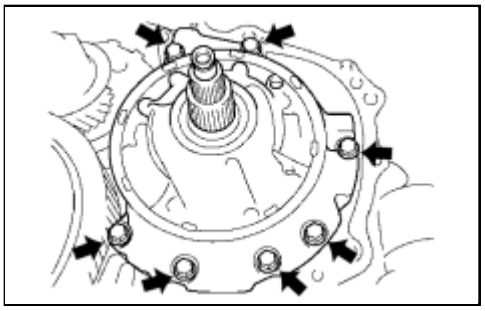

(a) Install the oil pump to the transaxle case with the 7 bolts.

Torque: 22 N·m (225 kgf·cm, 16ft·lbf)

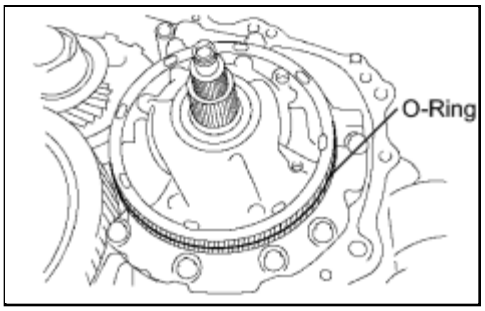

(b) Coat the O-ring of the oil pump with ATF.

NOTICE:

Confirm that the input shaft rotates smoothly by hand after installing the oil pump.

75. INSTALL TRANSAXLE HOUSING

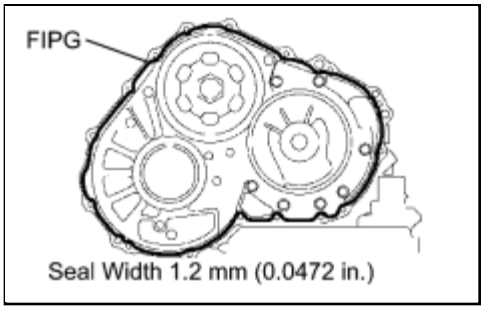

(a) Remove any FIPG material and keep the contact surfaces of the transaxle case and transaxle housing away from oil.

(b) Apply FIPG to the transaxle case.

FIPG:

Toyota Genuine Seal Packing 1281, Three Bond 1281 or equivalent

(c) Install the transaxle housing to the transaxle case with the 18 bolts.

Bolt A - Torque: 29 N·m (296 kgf·cm, 21ft·lbf)

Bolt B - Torque: 29 N·m (296 kgf·cm, 21ft·lbf)

Bolt C - Torque: 22 N·m (225 kgf·cm, 16ft·lbf)

Bolt D - Torque: 10 N·m (102 kgf·cm, 7ft·lbf)

Bolt E - Torque: 33 N·m (336 kgf·cm, 24ft·lbf)

Bolt F - Torque: 25 N·m (255 kgf·cm, 18ft·lbf)

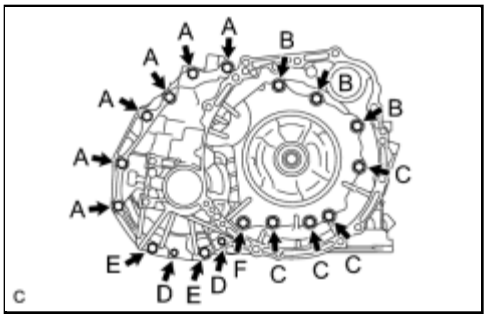

HINT:

Apply seal packing or equivalent to bolts C and F.

Seal packing:

Toyota Genuine Seal Packing 1344, Three Bond 1344 or equivalent

Bolt length

Bolt B, C, D, F

50 mm (1.969 in.)

Bolt A, E

42 mm (1.654 in.)

NOTICE:

Apply seal packing to new bolts and tighten them within 10 minutes of application.

76. INSPECT INPUT SHAFT END PLAY

INFO

77. SECURE AUTOMATIC TRANSAXLE ASSEMBLY

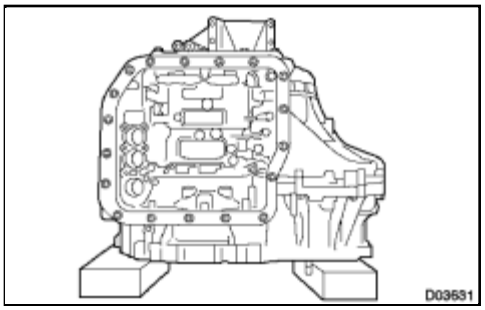

(a) Secure the transaxle assembly onto wooden blocks.

78. INSTALL MANUAL VALVE LEVER SHAFT OIL SEAL

(a) Coat a new oil seal with MP grease.

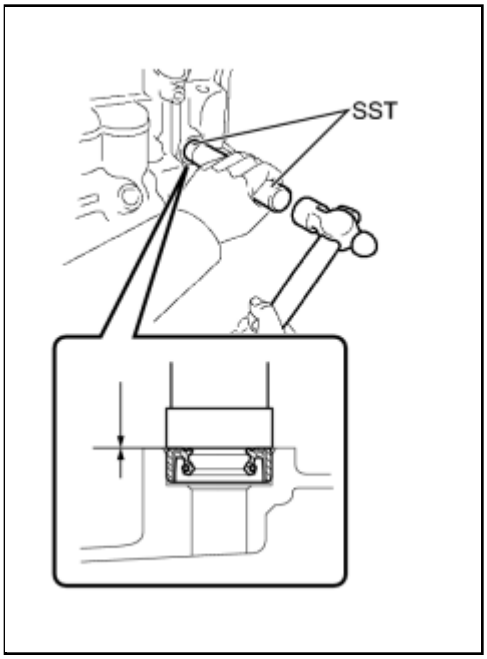

(b) Using SST and hammer, install the oil seal to the transaxle case.

SST: 09950-60010

09951-00230

SST: 09950-70010

09951-07100

Oil seal drive in depth:

-0.5 to 0.5 mm (-0.0197 to 0.0197 in.)

79. INSTALL PARKING LOCK ROD SUB-ASSEMBLY

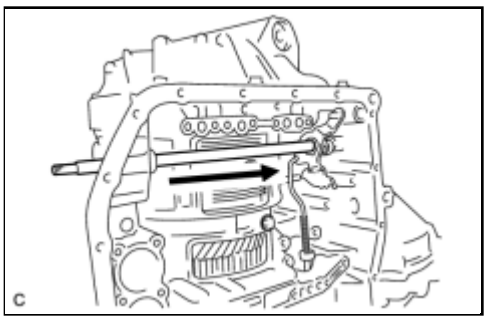

(a) Install the parking lock rod to the manual valve lever.

HINT:

Align the dial with the notches on the manual valve lever and turn the dial 90° to install the parking lock rod.

80. INSTALL MANUAL VALVE LEVER SUB-ASSEMBLY

(a) Install a new spacer and the manual valve lever shaft to the transaxle case.

NOTICE:

Do not damage the oil seal while installing the shaft to the transaxle case.

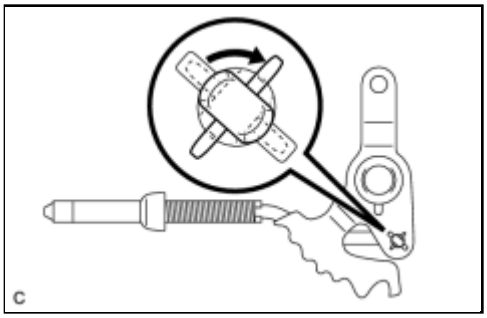

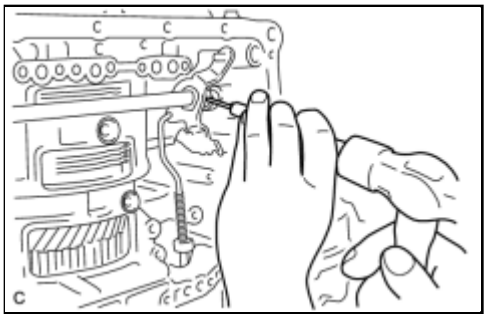

(b) Using a pin punch and hammer, drive in a new pin.

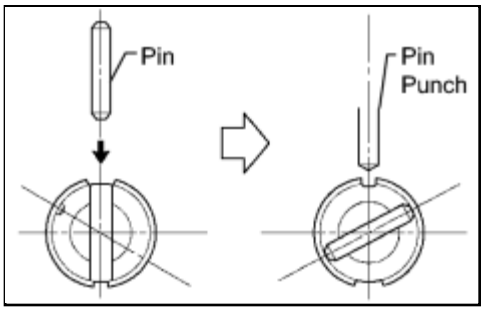

(c) Turn the spacer and the lever shaft to align the smaller hole of the spacer with the staking position mark on the lever shaft.

(d) Using a pin punch, stake the spacer through the small hole.

(e) Check that the spacer does not turn.

81. INSTALL MANUAL VALVE LEVER SHAFT RETAINER SPRING

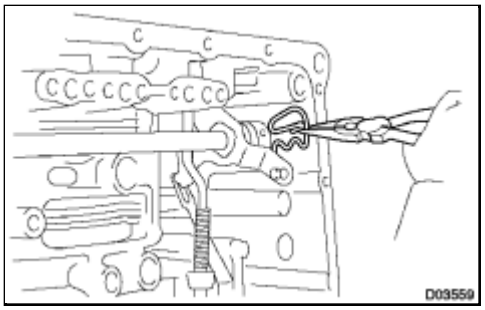

(a) Using needle-nose pliers, install the retainer spring.

NOTICE:

Securely attach the spring onto the shaft.

82. INSTALL PARKING LOCK PAWL BRACKET

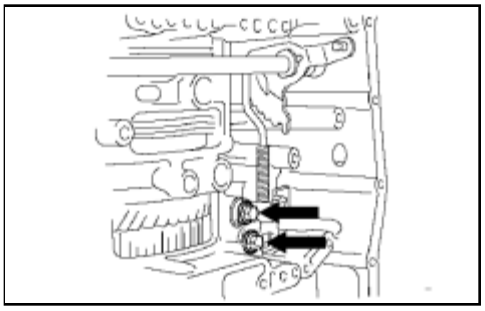

(a) Install the parking lock pawl bracket with the 2 bolts.

Torque: 20 N·m (205 kgf·cm, 15ft·lbf)

Bolt length:

25 mm (0.984 in.)

NOTICE:

Be sure the parking rod is placed between the parking pawl and the guide of the parking bracket after the parking bracket is installed.

83. INSTALL MANUAL DETENT SPRING SUB-ASSEMBLY

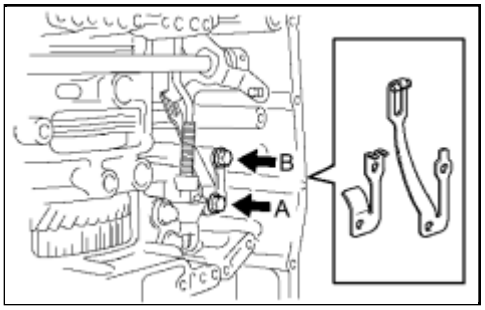

(a) Install the manual detent spring sub-assembly with the 2 bolts.

NOTICE:

Make sure to install the manual detent spring and cover in this order.

HINT:

Tighten bolt A first, then B.

Bolt A - Torque: 20 N·m (205 kgf·cm, 15ft·lbf)

Bolt B - Torque: 12 N·m (120 kgf·cm, 9ft·lbf)

Bolt length:

Bolt A

27 mm (1.06 in.)

Bolt B

16 mm (0.630 in.)

84. INSTALL B-3 ACCUMULATOR PISTON

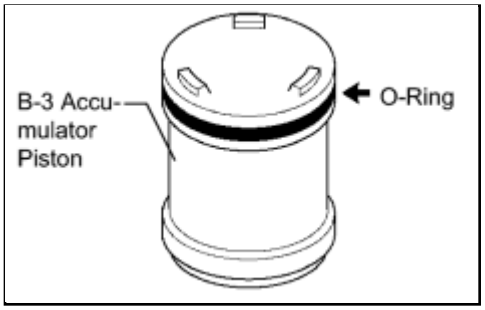

(a) Coat a new O-ring with ATF, and install it to the B-3 accumulator piston.

NOTICE:

Install the O-ring to the accumulator piston, being careful not to twist or pinch it. Apply enough ATF to the O-ring prior to installation. Be sure to confirm the installation position.

(b) Coat the piston and springs with ATF, and install them to the transaxle case.

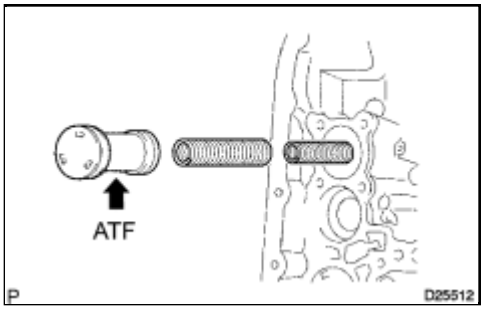

NOTICE:

Install the correct springs to the B-3 accumulator piston after confirming the color and dimension of the springs.

Accumulator Spring

FREE LENGTH / OUTER DIAMETER (MM (IN.))	COLOR
Inner: 62.00 (2.4409) / 15.50 (0.610)	Purple
Outer: 74.23 (2.9224) / 21.70 (0.854)	Purple

85. INSTALL REVERSE CLUTCH ACCUMULATOR PISTON

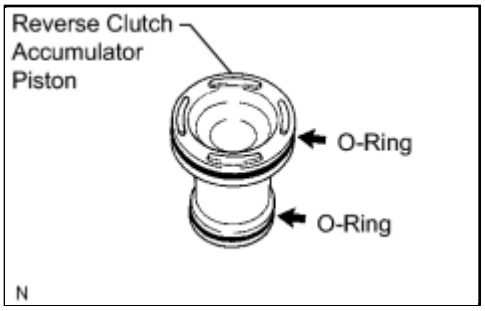

(a) Coat 2 new O-rings with ATF, and install them to the reverse clutch accumulator piston.

NOTICE:

Install the O-rings to the accumulator piston, being careful not to twist or pinch it. Apply enough ATF to the O-rings prior to installation. Be sure to confirm the installation positions.

(b) Coat the piston and spring with ATF, and install them to the transaxle case.

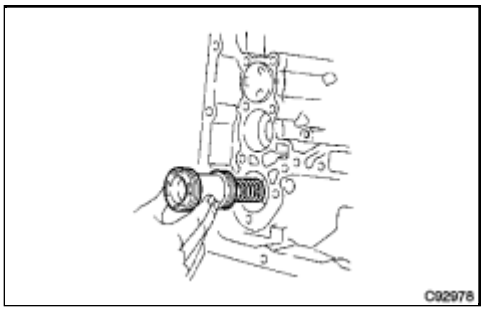

NOTICE:

Install the correct spring to the reverse clutch accumulator piston after confirming the color or dimension of the spring.

Accumulator Spring

FREE LENGTH / OUTER DIAMETER (MM (IN.))	COLOR
60.96 (2.3999) / 14.10 (0.555)	Yellow

86. INSTALL C-3 ACCUMULATOR PISTON

(a) Coat a new O-ring with ATF, and install it to the C-3 accumulator piston.

NOTICE:

Install the O-ring to the accumulator piston, being careful not to twist or pinch it. Apply enough ATF to the O-ring prior to

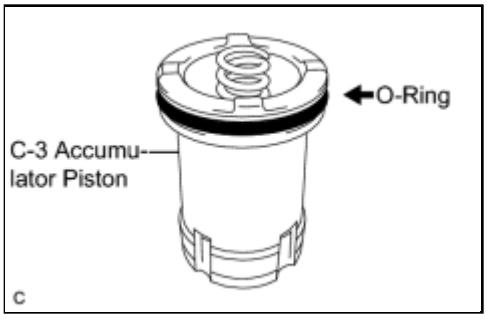

installation. Be sure to confirm the installation position.

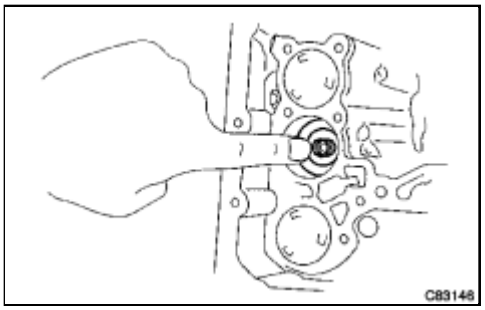

(b) Coat the piston with ATF, and install it to the transaxle case.

(c) Install the spring to the C-3 accumulator piston.

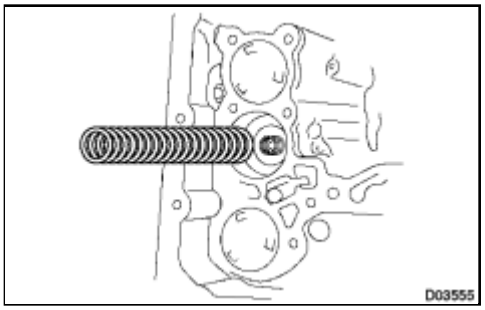

NOTICE:

Install the correct spring to the C-3 accumulator piston after confirming the color and dimension of the spring.

Accumulator Spring

FREE LENGTH / OUTER DIAMETER (MM (IN.))	COLOR
72.20 (2.8425) / 19.0 (0.748)	No color

87. INSTALL CHECK BALL BODY

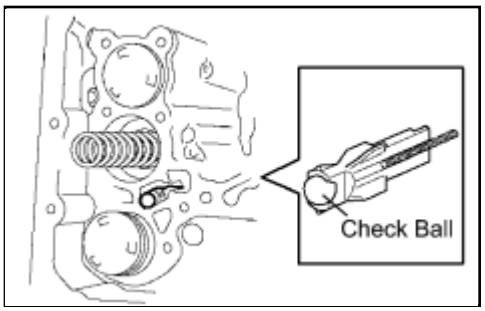

(a) Coat the check ball body with ATF.

(b) Install the check ball body and spring.

NOTICE:

Regarding the installation of the spring and the check ball body, be sure to place the spring into ball body. Be sure to install the parts in the correct direction.

88. INSTALL BRAKE DRUM GASKET

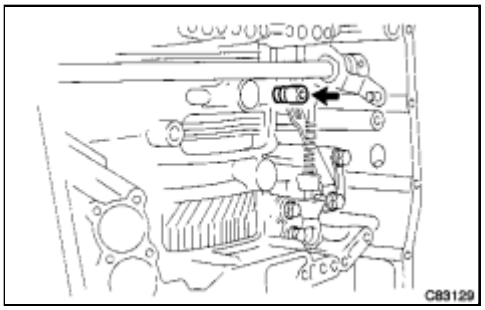

(a) Coat a new brake drum gasket with ATF, and install it to the transaxle case.

NOTICE:

Do not damage the lip portion of the brake drum gasket when inserting the gasket to the case. Apply sufficient ATF to the gasket prior to installation. Be sure to install the parts in the correct direction.

89. INSTALL TRANSAXLE CASE 2ND BRAKE GASKET

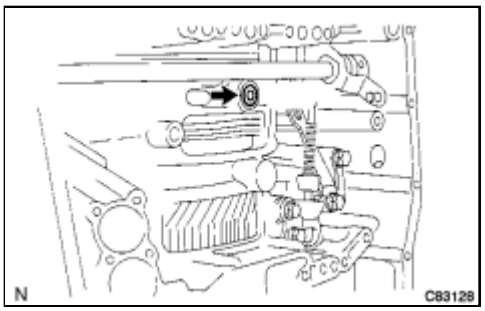

(a) Coat a new transaxle case 2nd brake gasket with ATF, and install it to the transaxle case.

NOTICE:

Do not damage the lip portion of the transaxle case 2nd brake gasket when inserting the gasket to the case. Apply sufficient ATF to the gasket prior to installation. Be sure to install the parts in the correct direction.

90. INSTALL NO. 1 GOVERNOR APPLY GASKET

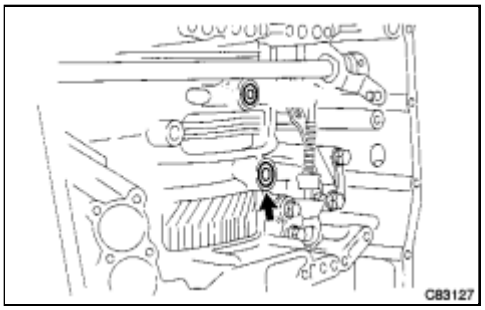

(a) Coat a new No. 1 governor apply gasket with ATF, and install it to the transaxle case.

NOTICE:

Do not damage the lip portion of the No. 1 governor apply gasket when inserting the gasket to the case. Apply sufficient ATF to the gasket prior to installation. Be sure to install the parts in the correct direction.

91. INSTALL TRANSMISSION VALVE BODY ASSEMBLY

(a) Check the manual valve lever position. Install the valve body to the transaxle case with the 17 bolts.

Torque: 11 N·m (110 kgf·cm, 8ft·lbf)

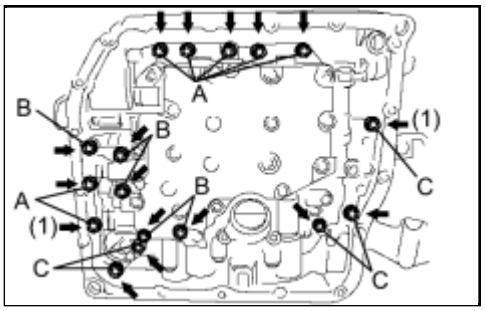

Bolt length:

Bolt A

25 mm (0.984 in.)

Bolt B

57 mm (2.244 in.)

Bolt C

41 mm (1.614 in.)

NOTICE:

- Push the valve body against the accumulator piston spring and the check ball body to install it.
- When installing the valve body to the transaxle case, do not hold the solenoids.
- Temporarily tighten the bolts marked by (1) in the illustration first because they are positioning bolts.

92. INSTALL VALVE BODY OIL STRAINER ASSEMBLY

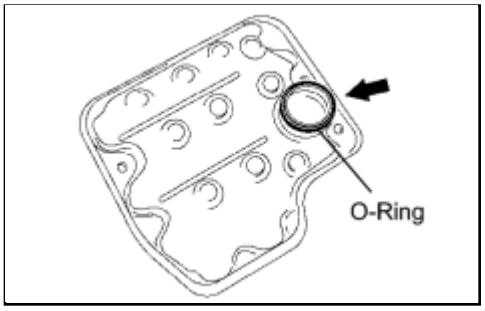

(a) Coat a new O-ring with ATF, and install it to the oil strainer.

NOTICE:

Install the O-ring carefully to avoid twists or pinches. Apply sufficient ATF to the O-ring prior to installation.

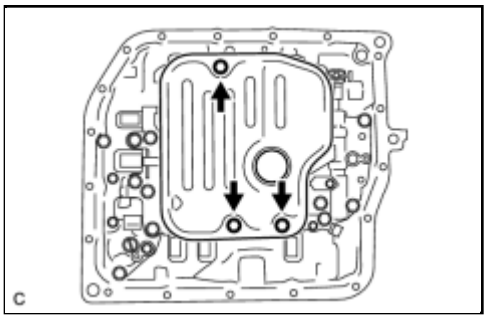

(b) Install the oil strainer to the valve body with the 3 bolts.

Torque: 11 N·m (110 kgf·cm, 8ft·lbf)

NOTICE:

Apply ATF to the bolts prior to installation.

93. INSTALL TRANSMISSION WIRE

(a) Coat a new O-ring with ATF, and install it to the transmission wire.

NOTICE:

Install the O-ring carefully to avoid twists or pinches. Apply

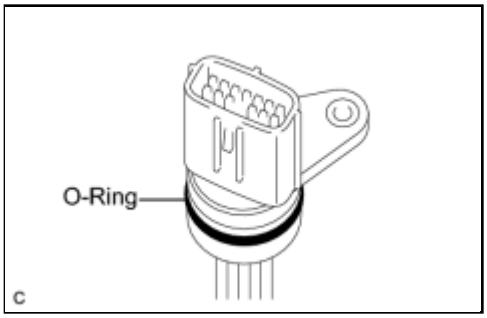

enough ATF to the O-ring prior to installation.

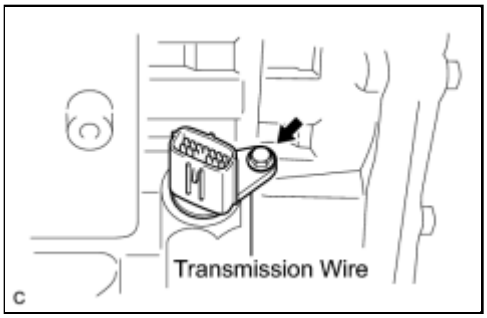

(b) Install the transmission wire retaining bolt.

Torque: 5.4 N·m (55 kgf·cm, 48in·lbf)

94. CONNECT TRANSMISSION WIRE

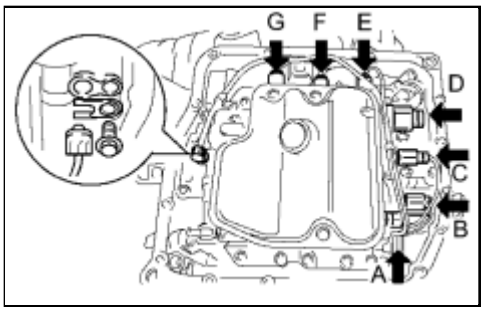

(a) Coat the ATF temperature sensor O-ring with ATF.

(b) Install the ATF temperature sensor with the lock plate and bolt.

Torque: 6.6 N·m (67 kgf·cm, 58in·lbf)

(c) Connect the 7 solenoid connectors.

NOTICE:

- Connect the connectors to A, B, C, D, E, F and G, starting with shorter connectors first.
- Apply ATF to the bolt prior to installation.

95. INSTALL AUTOMATIC TRANSAXLE OIL PAN SUB-ASSEMBLY

(a) Install the 2 magnets to the oil pan.

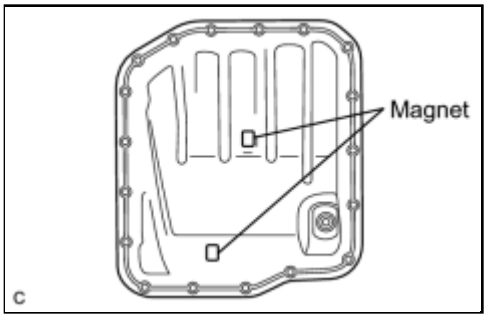

(b) Apply seal packing or equivalent to the 18 bolts.

Seal packing:
Toyota Genuine Seal Packing 1344, Three Bond 1344 or Equivalent

NOTICE:

- Apply seal packing to new bolts and tighten them within 10 minutes of application.
- Completely remove any oil or grease from the gasket contact surface of the transaxle case and the oil pan before installing the oil pan to the case.

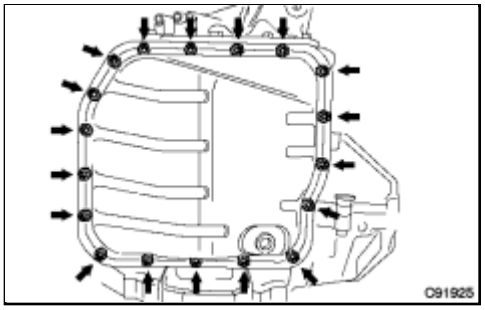

(c) Install a new oil pan gasket and the oil pan to the transaxle case with the 18 bolts.

Torque: 7.8 N·m (80 kgf·cm, 69in·lbf)

NOTICE:

- Apply seal packing to new bolts and tighten them within 10 minutes of application.
- Completely remove any oil or grease from the gasket contact surface of the transaxle case and the oil pan before installing the oil pan to the case.

(d) Install a new gasket to the drain plug.

(e) Install the drain plug.

Torque: 49 N·m (500 kgf·cm, 36ft·lbf)

96. INSTALL NO. 1 TRANSAXLE CASE PLUG

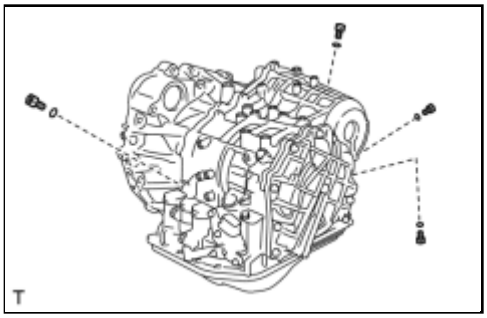

(a) Coat 4 new O-rings with ATF, and install them to the 4 No. 1 transaxle case plugs.

(b) Install the 4 No. 1 transaxle case plugs to the transaxle case.

Torque: 7.4 N·m (75 kgf·cm, 65in·lbf)

97. INSTALL SPEED SENSOR

(a) Coat 2 new O-rings with ATF, and install them to the 2 speed sensors.

(b) Apply adhesive to the bolts threads.

Sealant:
Toyota Genuine Adhesive 1344, Three Bond 1344 or Equivalent

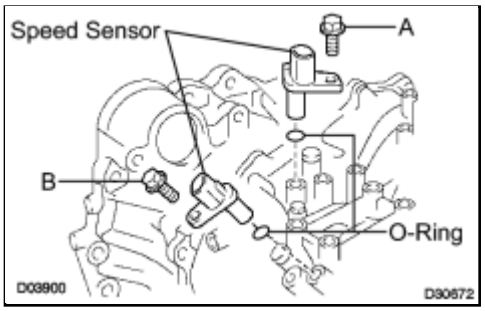

(c) Install the 2 speed sensors to the transaxle case with the 2 bolts.

Bolt A - Torque: 8.8 N·m (90 kgf·cm, 78in·lbf)
Bolt B - Torque: 11 N·m (112 kgf·cm, 8ft·lbf)

98. INSTALL OIL COOLER TUBE UNION (OUTLET OIL COOLER UNION)

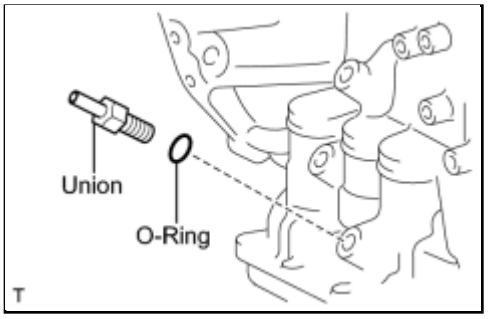

(a) Coat a new O-ring with ATF, and install it to the union.

(b) Install the union to the transaxle case.

Torque: 27 N·m (275 kgf·cm, 20ft·lbf)

99. INSTALL OIL COOLER TUBE ELBOW (INLET OIL COOLER ELBOW)

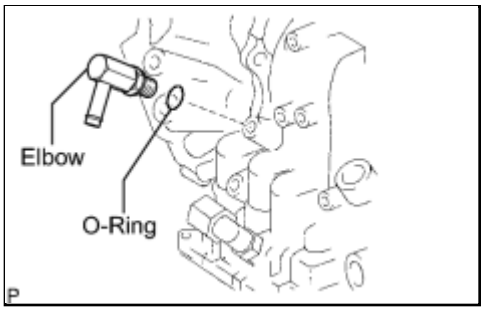

(a) Coat a new O-ring with ATF, and install it to the elbow.

(b) Install the elbow to the transaxle case.

Torque: 27 N·m (275 kgf·cm, 20ft·lbf)

100. INSTALL NO. 2 BREATHER PLUG

(a) Coat a new O-ring with ATF.

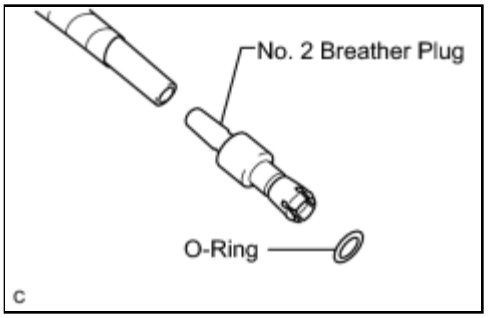

(b) Install the hose and the O-ring to the breather plug.

(c) Install the No. 2 breather plug hose to the transaxle case.

101. INSTALL PARK/NEUTRAL POSITION SWITCH ASSEMBLY

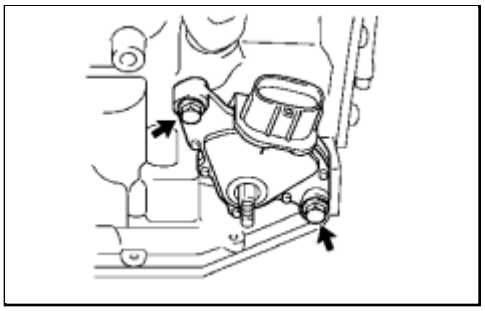

(a) Install the park/neutral position switch onto the manual valve lever shaft and temporarily install the 2 adjusting bolts.

(b) Install a new nut stopper and nut.

Torque: 6.9 N·m (70 kgf·cm, 61in·lbf)

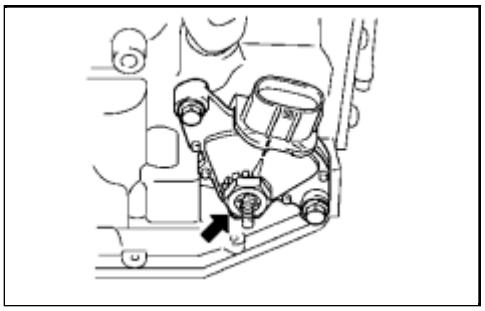

(c) Temporarily install the control shaft lever.

(d) Turn the lever counterclockwise until it stops, and then turn it clockwise 2 notches.

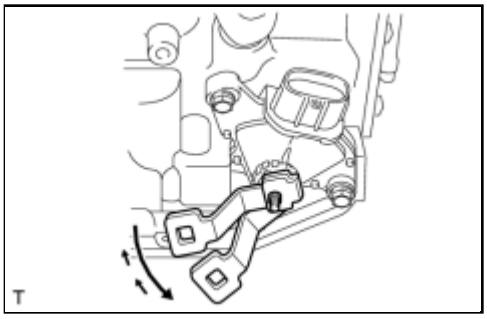

(e) Remove the control shaft lever.

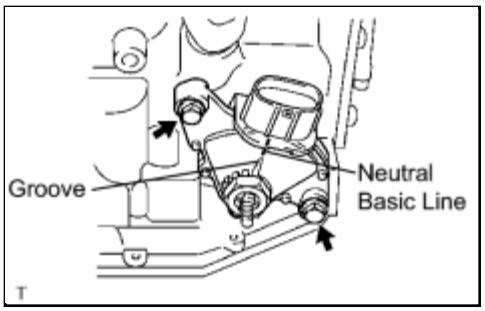

(f) Align the groove with the neutral basic line.

(g) Hold the switch in that position and tighten the 2 bolts.

Torque: 5.4 N·m (55 kgf·cm, 48in·lbf)

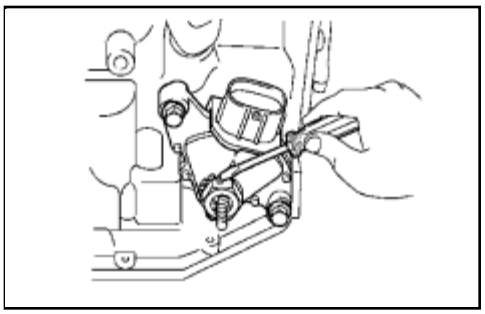

(h) Using a screwdriver, stake the nut with the nut stopper.

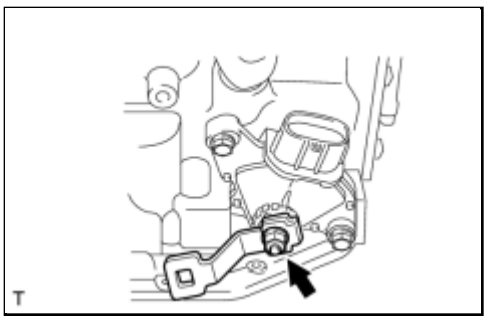

(i) Install the control shaft lever, washer and nut.

Torque: 13 N·m (130 kgf·cm, 9ft·lbf)

Last Modified: 3-10-2010	6.4 A	**From:** 200901
Model Year: 2010	**Model:** Corolla	**Doc ID:** RM000000YX9025X
Title: U250E AUTOMATIC TRANSMISSION / TRANSAXLE: AUTOMATIC TRANSAXLE UNIT: DISASSEMBLY (2010 Corolla)		

DISASSEMBLY

1. REMOVE PARK/NEUTRAL POSITION SWITCH ASSEMBLY

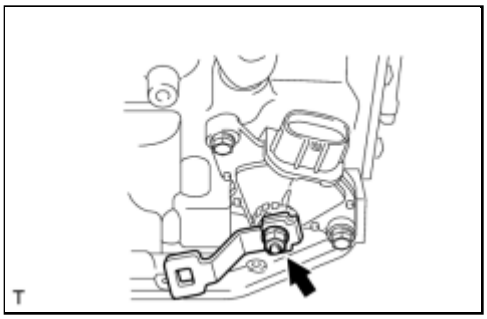

(a) Remove the nut, washer and control shaft lever.

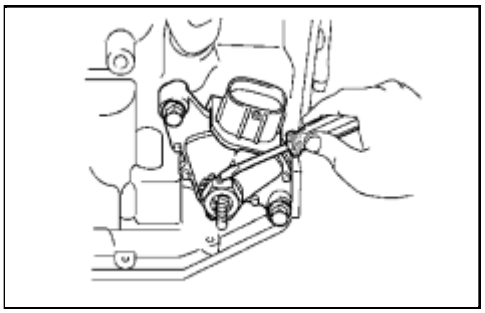

(b) Using a screwdriver, unstake the lock plate, and remove the lock nut and nut stopper.

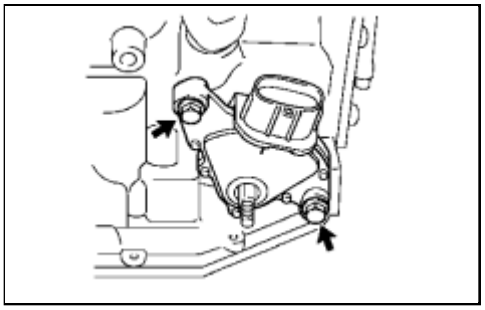

(c) Remove the 2 bolts and pull out the park/neutral position switch.

2. REMOVE NO. 2 BREATHER PLUG

(a) Remove the No. 2 breather plug from the transaxle case.

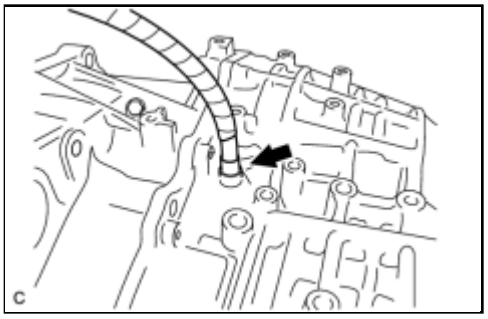

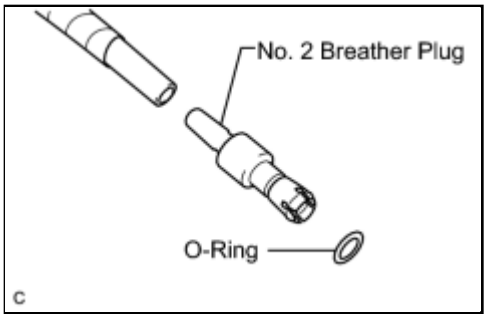

(b) Remove the hose and O-ring from the No. 2 breather plug.

3. REMOVE OIL COOLER TUBE ELBOW (INLET OIL COOLER ELBOW)

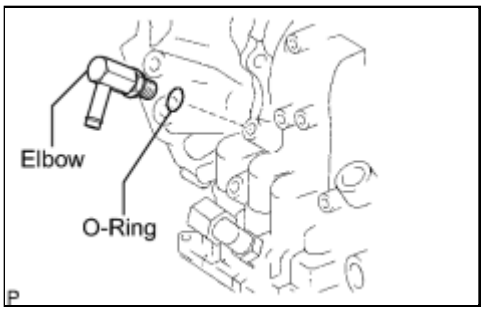

(a) Remove the elbow.

(b) Remove the O-ring from the elbow.

4. REMOVE OIL COOLER TUBE UNION (OUTLET OIL COOLER UNION)

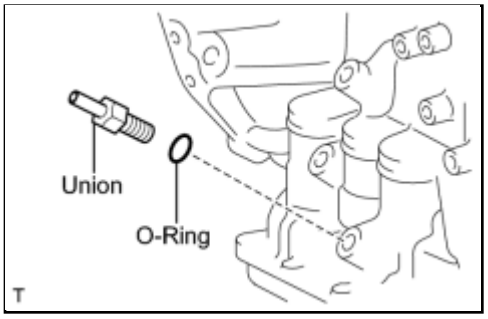

(a) Remove the union.

(b) Remove the O-ring from the union.

5. REMOVE SPEED SENSOR

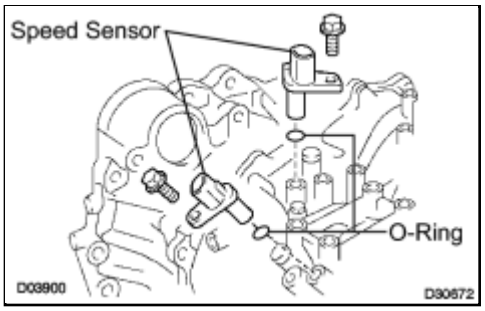

(a) Remove the 2 bolts and the 2 speed sensors from the transaxle assembly.

(b) Remove the 2 O-rings from the 2 speed sensors.

6. REMOVE NO. 1 TRANSAXLE CASE PLUG

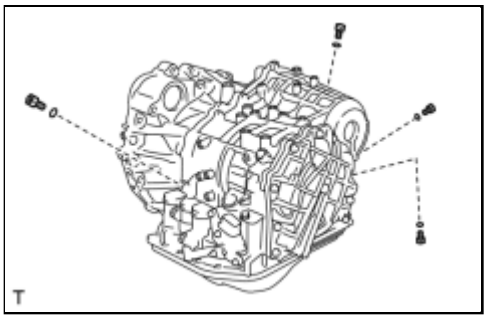

(a) Remove the 4 No. 1 transaxle case plugs from the transaxle case.

(b) Remove the O-ring from each No. 1 transaxle case plug.

7. SECURE AUTOMATIC TRANSAXLE ASSEMBLY

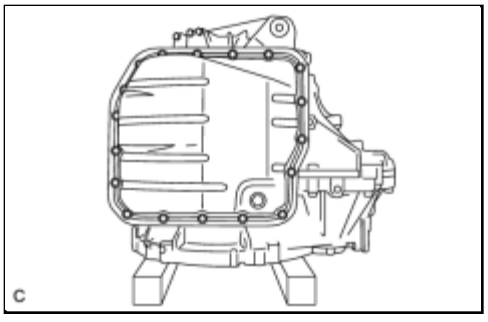

(a) Secure the transaxle assembly onto wooden blocks.

8. REMOVE AUTOMATIC TRANSAXLE OIL PAN SUB-ASSEMBLY

(a) Remove the drain plug and drain plug gasket from the oil pan.

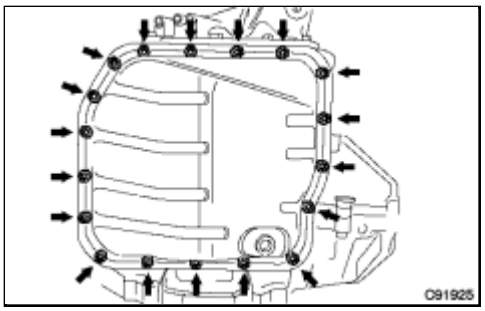

(b) Remove the 18 bolts, oil pan and gasket.

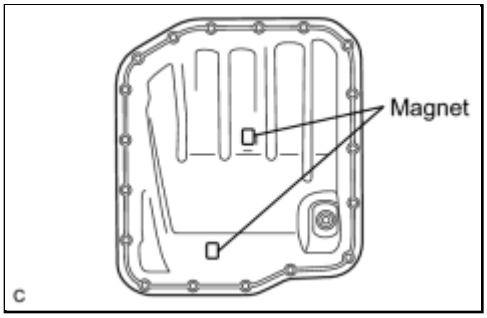

(c) Remove the 2 transmission oil cleaner magnets from the oil pan.

9. INSPECT TRANSMISSION OIL CLEANER MAGNET

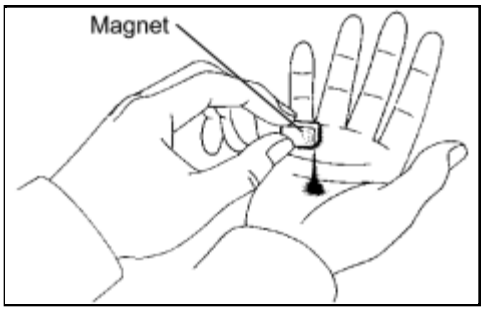

(a) Remove the magnets and use them to collect any steel chips. Examine the chips and particles in the pan and on the magnet to determine what type of wear has occurred in the transaxle.

Result:

Steel (magnetic)

bearing, gear, and plate wear

Brass (non-magnetic)

bushing wear

10. DISCONNECT TRANSMISSION WIRE

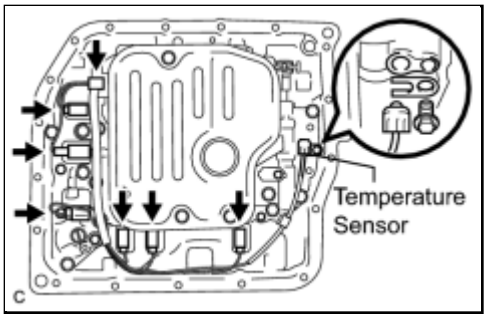

(a) Disconnect the 7 connectors from the shift solenoid valves.

(b) Remove the bolt, lock plate, and ATF temperature sensor.

11. REMOVE TRANSMISSION WIRE

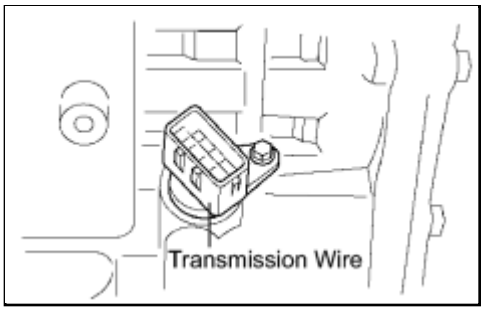

(a) Remove the bolt and transmission wire from the transaxle case.

12. REMOVE VALVE BODY OIL STRAINER ASSEMBLY

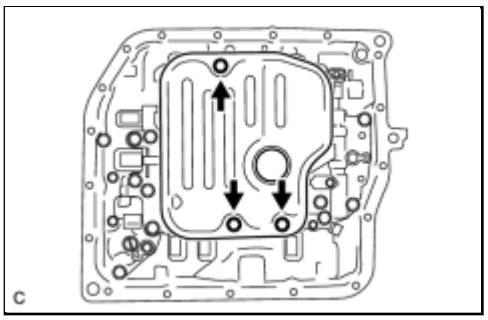

(a) Remove the 3 bolts and oil strainer.

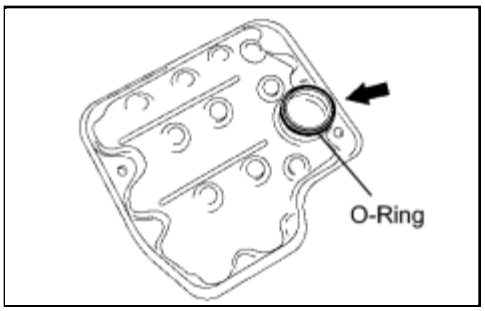

(b) Remove the O-ring from the oil strainer.

13. REMOVE TRANSMISSION VALVE BODY ASSEMBLY

(a) Support the valve body assembly and remove the 17 bolts and valve body assembly.

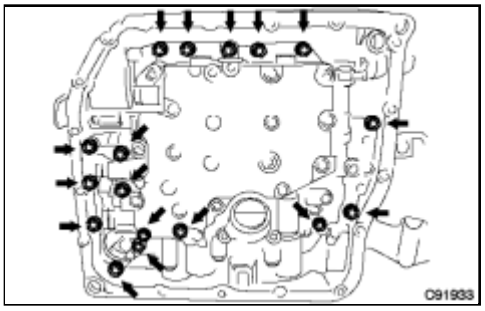

14. REMOVE NO. 1 GOVERNOR APPLY GASKET

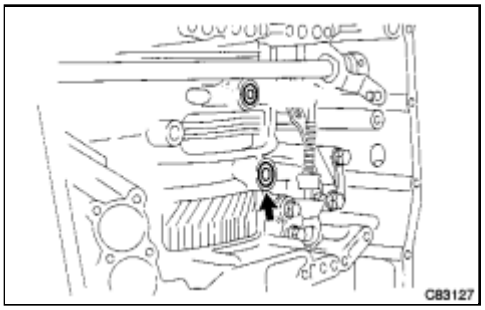

(a) Remove the No. 1 governor apply gasket from the transaxle case.

15. REMOVE TRANSAXLE CASE 2ND BRAKE GASKET

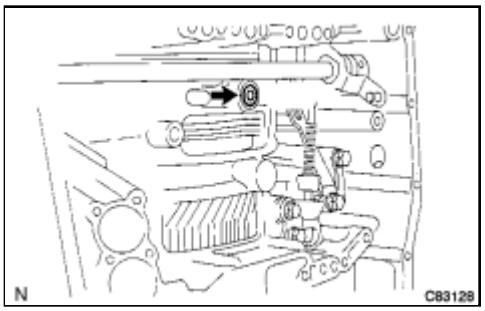

(a) Remove the transaxle case 2nd brake gasket from the transaxle case.

16. REMOVE BRAKE DRUM GASKET

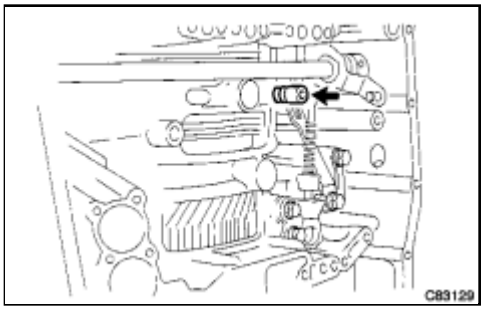

(a) Remove the brake drum gasket from the transaxle case.

17. REMOVE CHECK BALL BODY

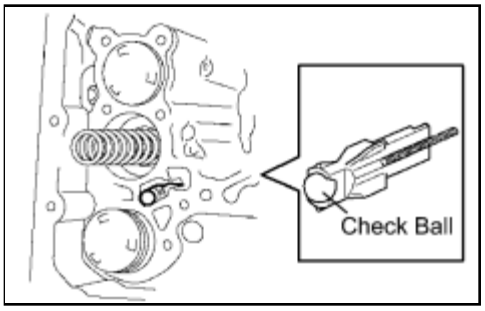

(a) Remove the check ball body and spring from the transaxle case.

18. REMOVE C-3 ACCUMULATOR PISTON

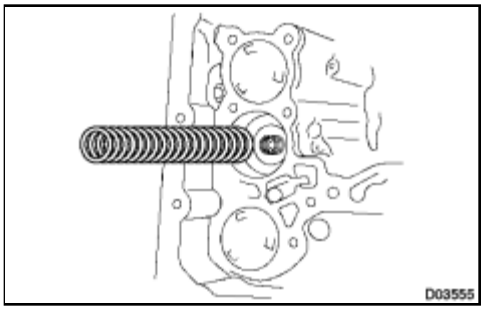

(a) Remove the spring from the C-3 accumulator piston.

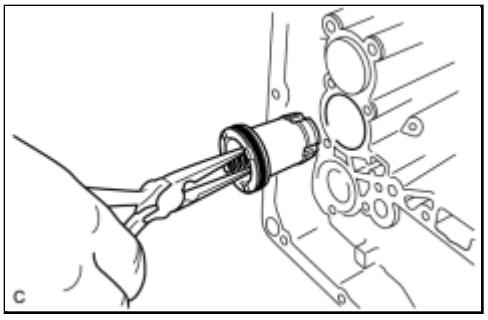

(b) Using needle-nose pliers, remove the C-3 accumulator piston from the transaxle case.

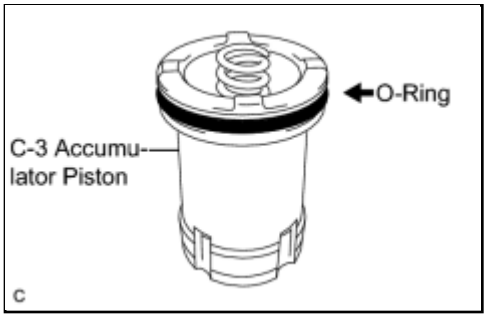

(c) Remove the O-ring from the C-3 accumulator piston.

19. REMOVE REVERSE CLUTCH ACCUMULATOR PISTON

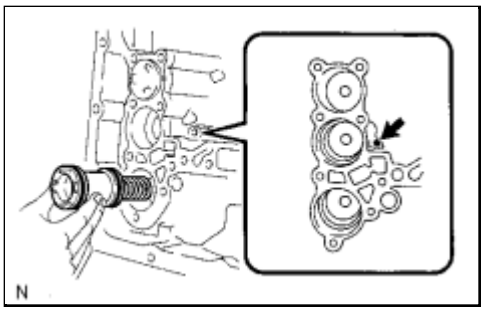

(a) Apply compressed air (392 kPa, 4.0 kgf/cm2, 57 psi) to the oil hole and remove the reverse accumulator piston and spring.

NOTICE:

- Applying compressed air may cause the piston to jump out. When removing the piston, hold it by hand using a piece of cloth.
- Take care not to splash ATF when applying compressed air.

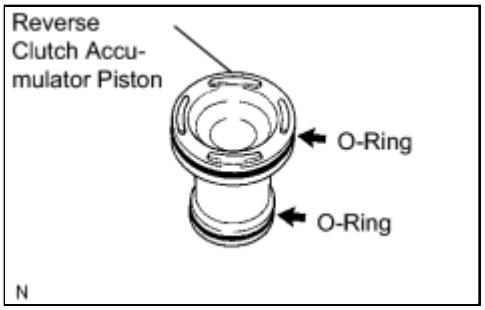

(b) Remove the 2 O-rings from the reverse clutch accumulator piston.

20. REMOVE B-3 ACCUMULATOR PISTON

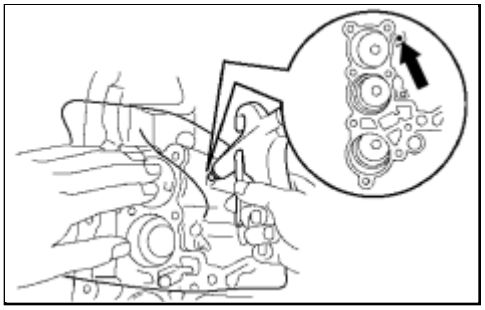

(a) Apply compressed air (392 kPa, 4.0 kgf/cm2, 57 psi) to the oil hole and remove the B-3 accumulator piston and 2 springs.

NOTICE:

- Applying compressed air may cause the piston to jump out. When removing the piston, hold it by hand using a piece of cloth.
- Take care not to splash ATF when applying compressed air.

(b) Remove the O-ring from the B-3 accumulator piston.

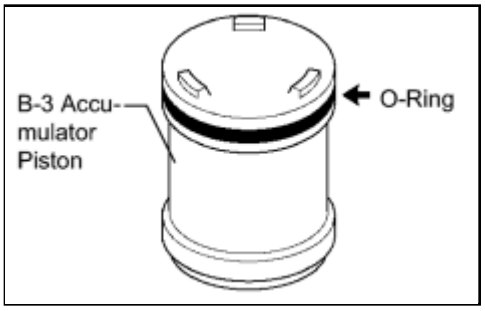

21. REMOVE MANUAL VALVE LEVER SHAFT RETAINER SPRING

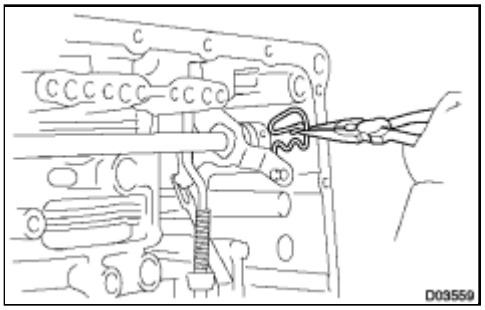

(a) Using needle-nose pliers, remove the manual valve lever shaft retainer spring.

22. REMOVE MANUAL DETENT SPRING SUB-ASSEMBLY

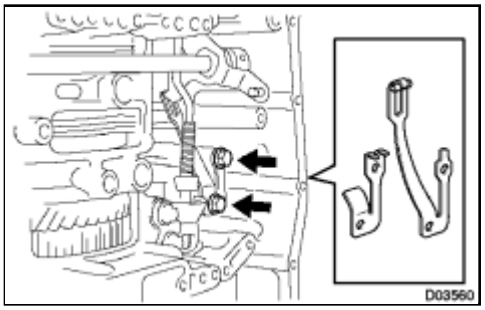

(a) Remove the 2 bolts and manual detent spring sub-assembly.

23. REMOVE PARKING LOCK PAWL BRACKET

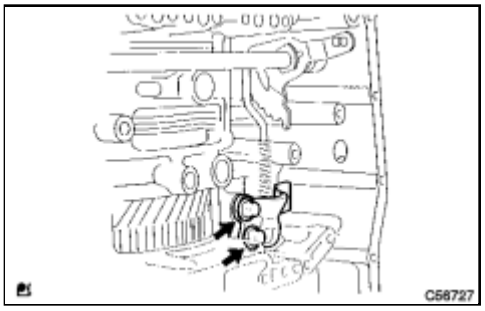

(a) Remove the 2 bolts and parking lock pawl bracket.

24. REMOVE MANUAL VALVE LEVER SUB-ASSEMBLY

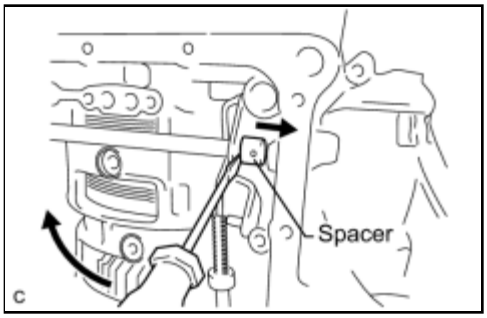

(a) Using a screwdriver, slide the spacer.

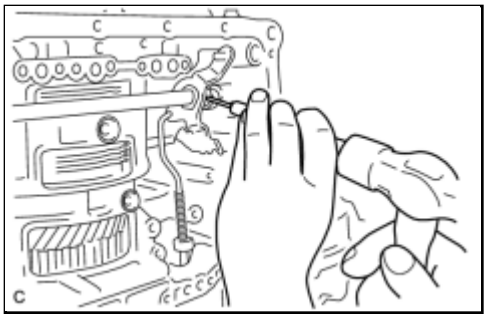

(b) Using a pin punch (φ3 mm) and hammer, drive out the pin.

HINT:

Slowly drive out the pin so that it will not fall into the transaxle case.

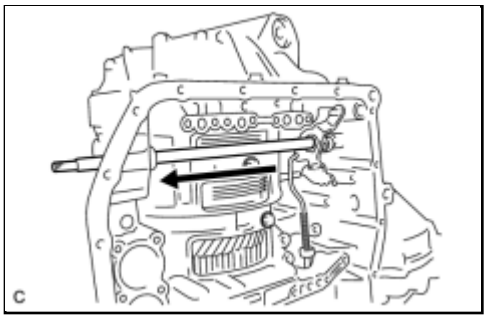

(c) Remove the manual valve lever shaft, manual valve lever and spacer.

25. REMOVE PARKING LOCK ROD SUB-ASSEMBLY

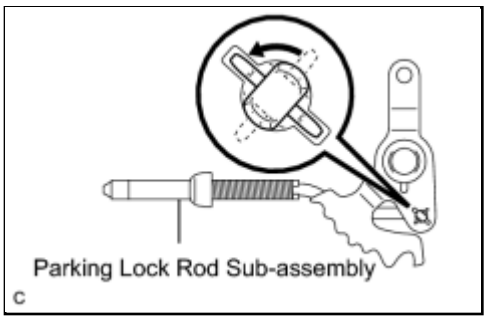

(a) Remove the parking lock rod sub-assembly from the manual valve lever sub-assembly.

HINT:

Align the dial with the notches on the manual valve lever sub-assembly to remove the parking lock rod sub-assembly.

26. REMOVE MANUAL VALVE LEVER SHAFT OIL SEAL

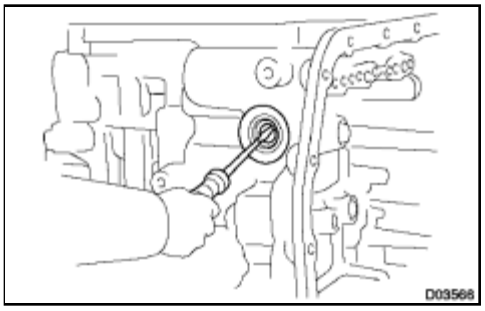

(a) Using a screwdriver, remove the oil seal from the transaxle case.

27. SECURE AUTOMATIC TRANSAXLE ASSEMBLY

(a) Secure the transaxle case with the oil pump facing up.

28. INSPECT INPUT SHAFT END PLAY INFO

29. REMOVE TRANSAXLE HOUSING

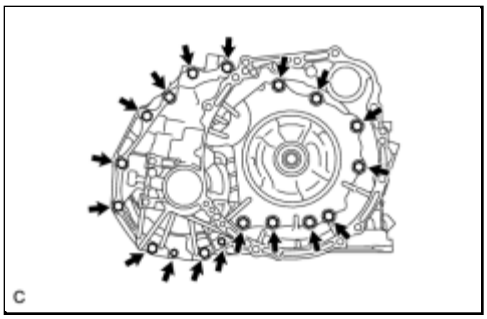

(a) Remove the 18 bolts.

(b) Tap on the circumference of the transaxle housing with a plastic hammer to remove the transaxle housing from the transaxle case.

NOTICE:

The differential may be accidentally removed when the transaxle housing is removed.

30. REMOVE OIL PUMP ASSEMBLY

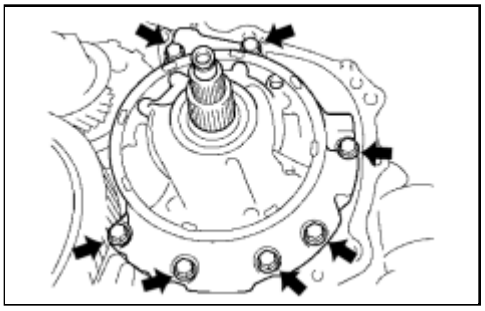

(a) Remove the 7 bolts and oil pump from the transaxle case.

31. REMOVE THRUST NEEDLE ROLLER BEARING

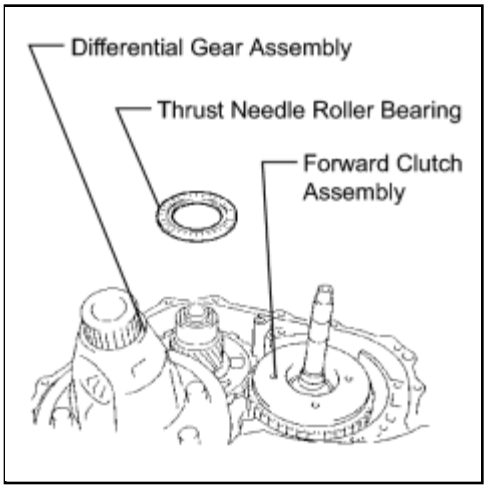

(a) Remove the thrust needle roller bearing from the underdrive planetary gear assembly.

32. REMOVE NO. 2 THRUST BEARING UNDERDRIVE RACE

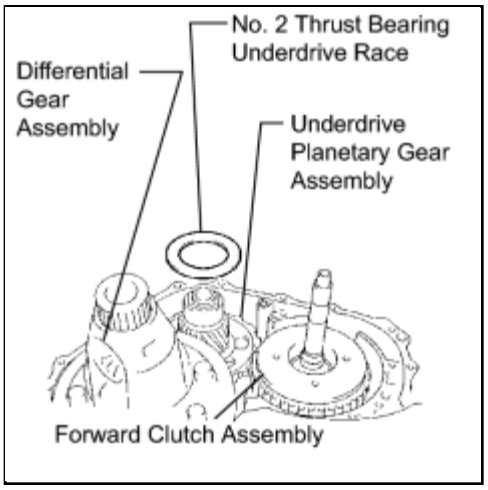

(a) Remove the No. 2 thrust bearing underdrive race from the underdrive planetary gear assembly.

33. REMOVE DIFFERENTIAL GEAR ASSEMBLY

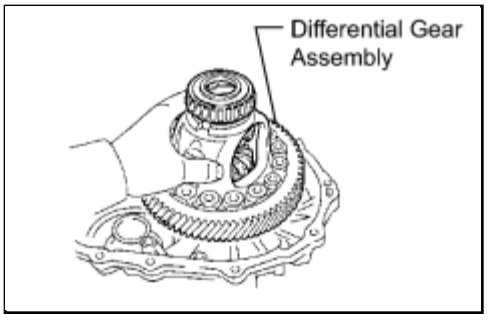

(a) Remove the differential gear assembly from the transaxle case.

34. REMOVE OVERDRIVE BRAKE GASKET

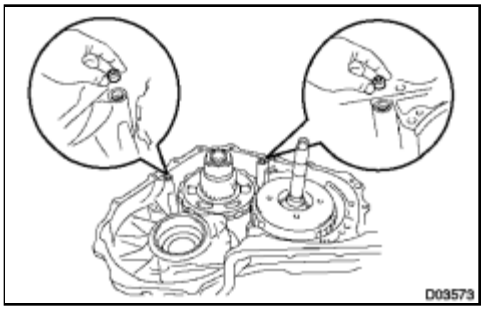

(a) Remove the 2 overdrive brake gaskets from the transaxle case.

35. REMOVE FORWARD CLUTCH ASSEMBLY

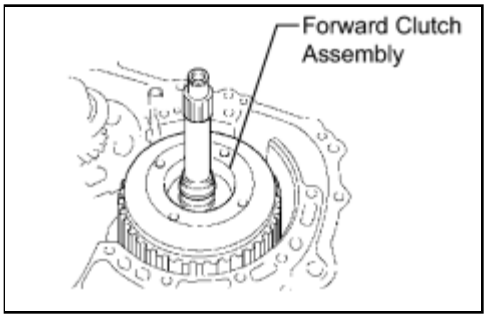

(a) Remove the forward clutch assembly from the transaxle case.

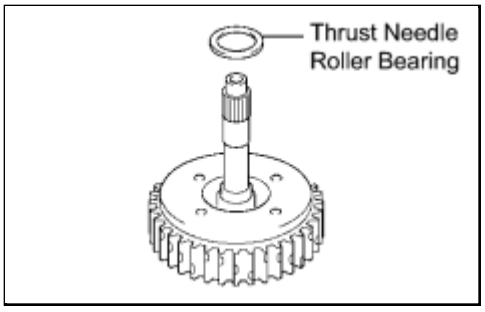

(b) Remove the thrust needle roller bearing from the forward clutch.

36. INSPECT PACK CLEARANCE OF FORWARD CLUTCH INFO

37. REMOVE FORWARD MULTIPLE DISC CLUTCH DISC

(a) Using a screwdriver, remove the snap ring.

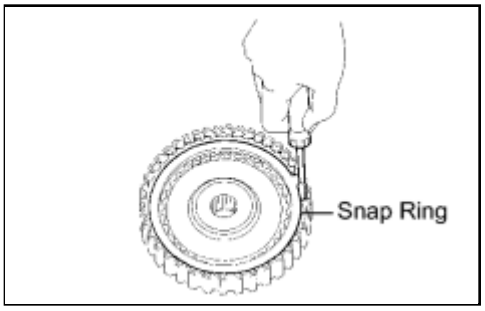

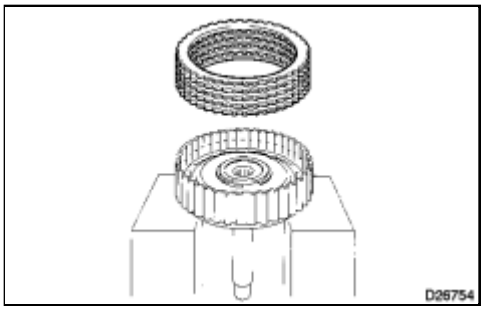

(b) Remove the flange, 5 discs and 5 plates from the input shaft assembly.

38. REMOVE FORWARD CLUTCH RETURN SPRING SUB-ASSEMBLY

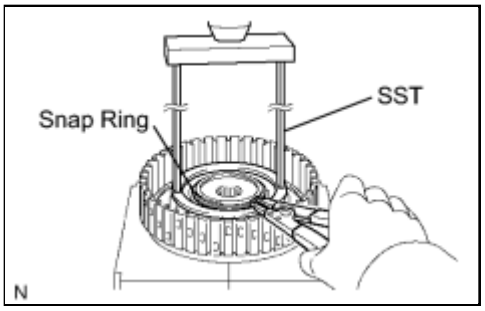

(a) Place SST on the spring retainer and compress the return spring with a press.

SST: 09387-00020

(b) Using a snap ring expander, remove the snap ring.

NOTICE:

- Stop the press when the spring seat is lowered 1 to 2 mm (0.0393 to 0.0787 in.) from the snap ring groove. This prevents the spring seat from being deformed.
- Do not expand the snap ring excessively.

(c) Remove the clutch balancer from the input shaft.

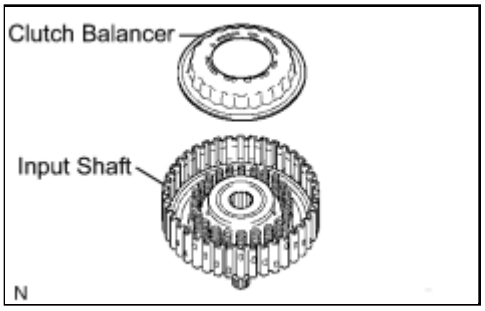

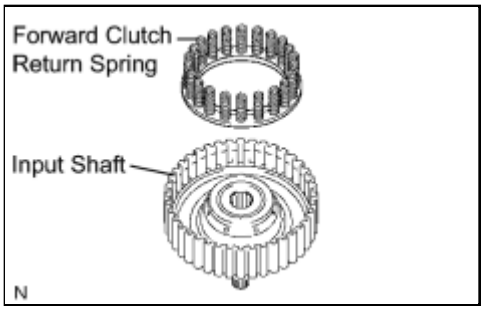

(d) Remove the forward clutch return spring from the input shaft.

39. REMOVE FORWARD CLUTCH PISTON SUB-ASSEMBLY

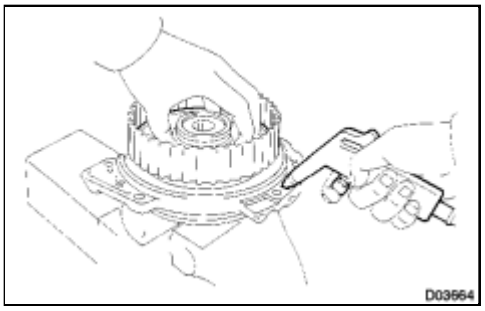

(a) Place the forward clutch drum onto the oil pump.

(b) Holding the forward clutch piston by hand, apply compressed air (392 kPa, 4.0 kgf/cm^2, 57 psi) to the oil pump to remove the forward clutch piston.

HINT:

If the piston is slanted and cannot be removed, either blow air again with the protruding side pushed, or remove the piston using needle nose pliers with the tips taped.

40. REMOVE INPUT SHAFT OIL SEAL RING

(a) Remove the input shaft oil seal ring from the input shaft.

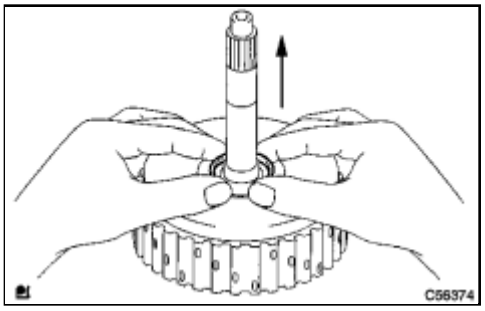

41. REMOVE MULTIPLE DISC CLUTCH HUB

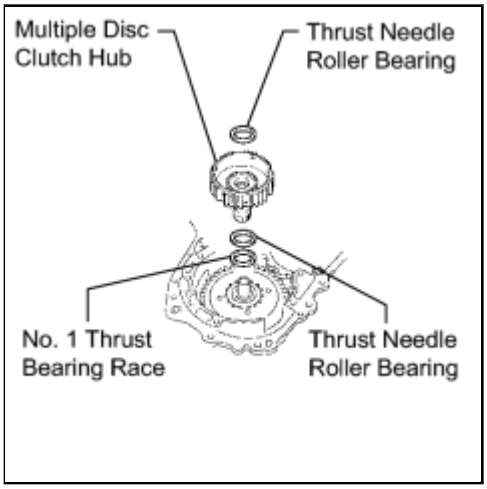

(a) Remove the thrust needle roller bearing, multiple disc clutch hub, thrust needle roller bearing and No. 1 thrust bearing race from the transaxle case.

42. INSPECT MULTIPLE DISC CLUTCH HUB INFO

43. REMOVE UNDERDRIVE PLANETARY GEAR ASSEMBLY

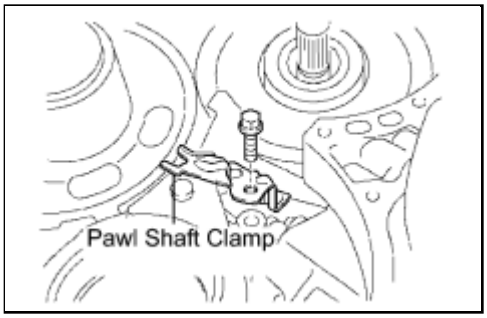

(a) Remove the bolt and pawl shaft clamp from the transaxle case.

(b) Remove the parking lock pawl shaft from the transaxle case.

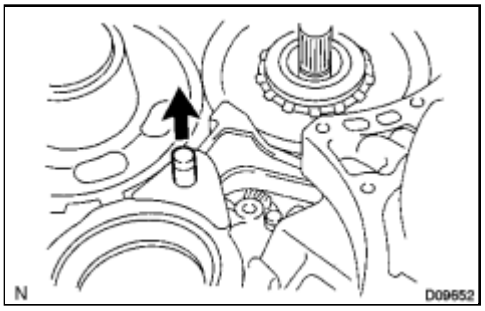

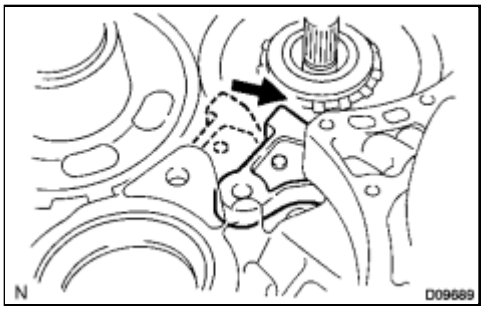

(c) Push the parking lock pawl.

HINT:

Failure to do so will cause interference when the underdrive planetary gear is removed.

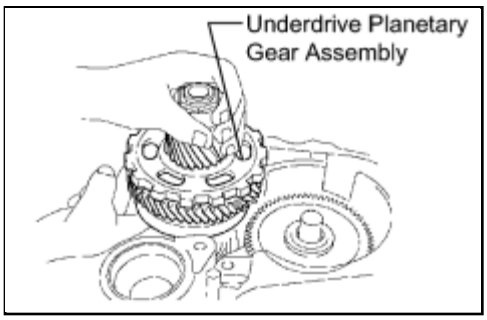

(d) Remove the underdrive planetary gear assembly from the transaxle case.

NOTICE:

Do not drop the underdrive planetary gear assembly.

44. REMOVE FRONT PLANETARY GEAR NUT

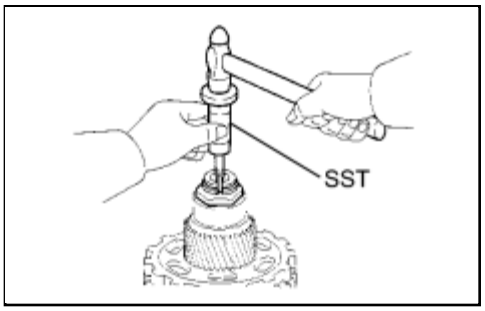

(a) Using SST and a hammer, loosen the staked part of the gear nut.

SST: 09930-00010

09931-00010

09931-00020

SST: 09387-00050

SST: 09495-65040

(b) Clamp the underdrive planetary gear in a soft jaw vise.

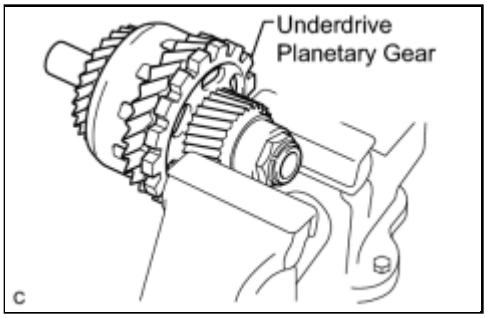

NOTICE:

Be careful not to damage the differential drive pinion.

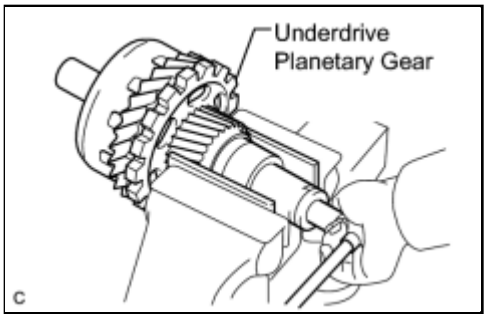

(c) Using a socket wrench, remove the gear nut.

45. REMOVE CYLINDRICAL ROLLER BEARING RACE INNER

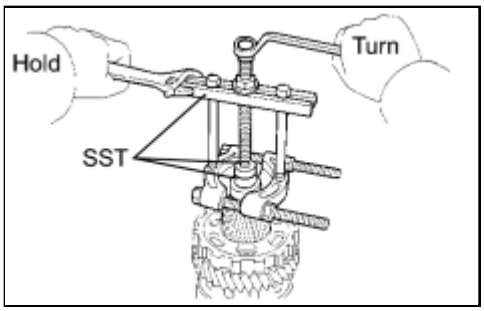

(a) Using SST, remove the cylindrical roller bearing race inner.

SST: 09950-00020
SST: 09950-00030
SST: 09950-40011
09957-04010
SST: 09950-60010
09951-00320

46. REMOVE UNDERDRIVE PLANETARY GEAR ASSEMBLY

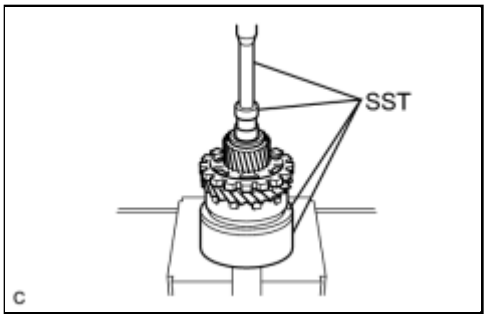

(a) Using SST and a press, remove the differential drive pinion, parking lock gear, counter driven gear with underdrive planetary ring gear, and angular ball bearing.

SST: 09387-00050
SST: 09495-65040
SST: 09950-60010
09951-00320
SST: 09950-70010
09951-07100

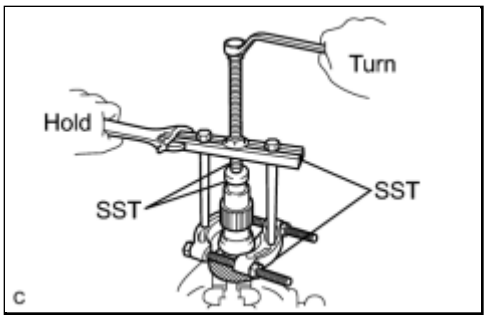

(b) Clamp the underdrive planetary gear in a soft jaw vise.

(c) Using SST, remove the rear angular ball bearing from the underdrive planetary gear.

SST: 09950-00020
SST: 09950-00030
SST: 09950-40011
09957-04010
SST: 09950-60010
09951-00320

47. REMOVE UNDERDRIVE PLANETARY RING GEAR

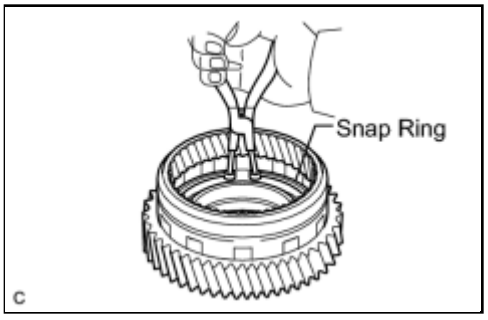

(a) Using snap ring pliers, remove the snap ring.

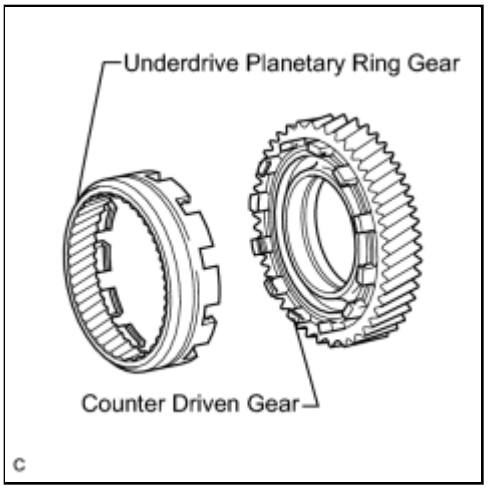

(b) Remove the underdrive planetary ring gear from the counter driven gear.

48. REMOVE PARKING LOCK PAWL

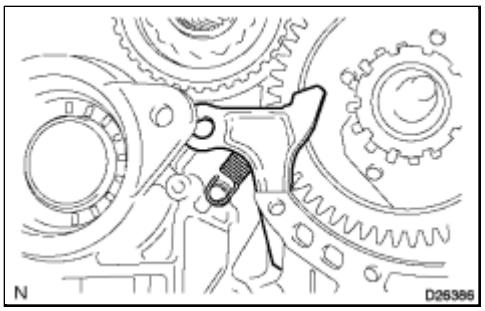

(a) Remove the spring, pawl pin and parking lock pawl.

49. REMOVE UNDERDRIVE CLUTCH ASSEMBLY

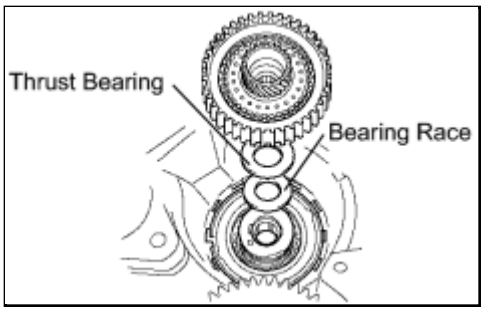

(a) Remove the underdrive clutch assembly, thrust bearing, and bearing race from the transaxle case.

50. REMOVE NO. 2 UNDERDRIVE CLUTCH FLANGE HOLE SNAP RING

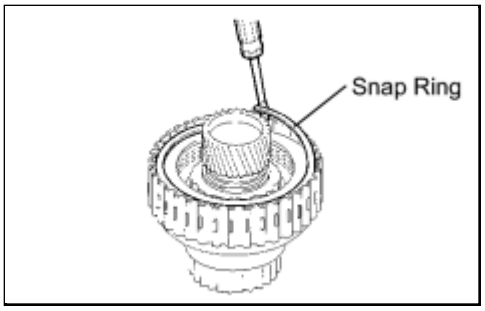

(a) Using a screwdriver, remove the No. 2 underdrive clutch flange hole snap ring.

51. REMOVE NO. 1 UNDERDRIVE CLUTCH DISC

(a) Remove the flange, 3 discs, and 3 plates from the underdrive clutch drum.

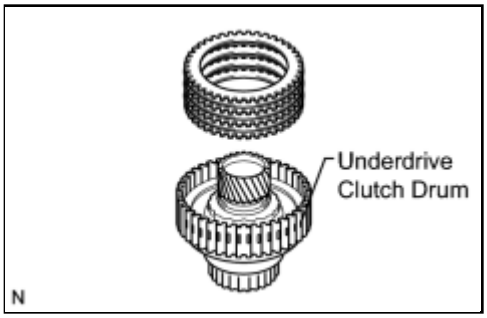

52. REMOVE UNDERDRIVE CLUTCH RETURN SPRING SUB-ASSEMBLY

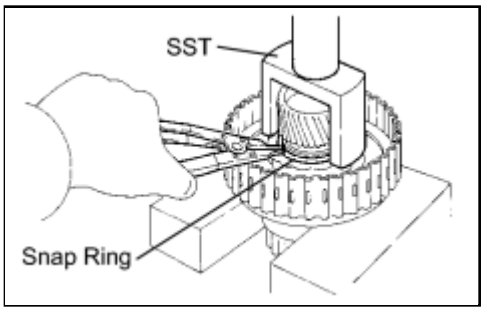

(a) Place SST on the clutch balancer and compress the spring with a press.

SST: 09350-32014

09351-32070

(b) Using a snap ring expander, remove the snap ring.

NOTICE:

- Stop the press when the spring seat is lowered 1 to 2 mm (0.0393 to 0.0787 in.) from the snap ring groove. This prevents the spring seat from being deformed.
- Do not expand the snap ring excessively.

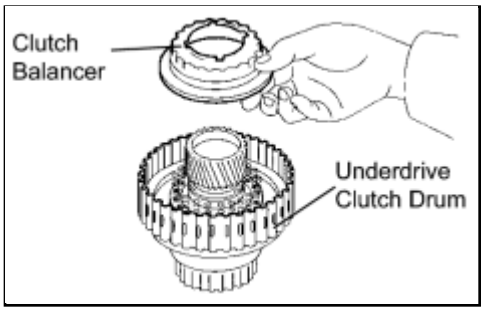

(c) Remove the clutch balancer from the underdrive clutch drum.

(d) Remove the return spring from the underdrive clutch drum.

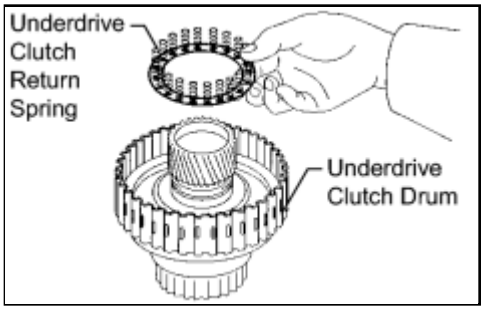

53. REMOVE UNDERDRIVE CLUTCH PISTON SET

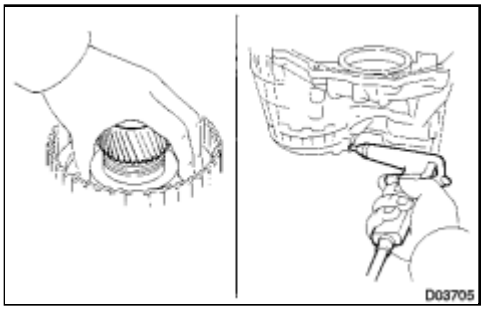

(a) Remove the underdrive clutch from the transaxle case.

NOTICE:

Be careful not to damage the oil seal ring.

(b) Holding the underdrive clutch piston by hand, apply compressed air (392 kPa, 4.0 kgf/cm^2, 57 psi) to the transaxle case to remove the underdrive clutch piston.

54. REMOVE UNDERDRIVE CLUTCH DRUM O-RING

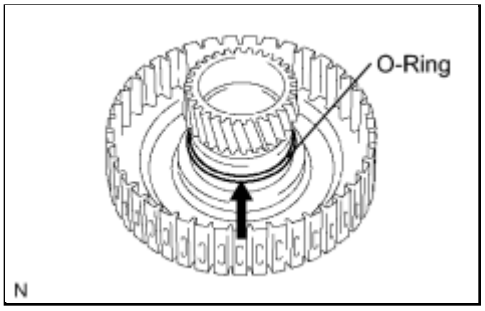

(a) Using a screwdriver, remove the O-ring from the underdrive clutch drum.

55. REMOVE UNDERDRIVE ONE-WAY CLUTCH ASSEMBLY

(a) Using a screwdriver, remove the snap ring from the transaxle case.

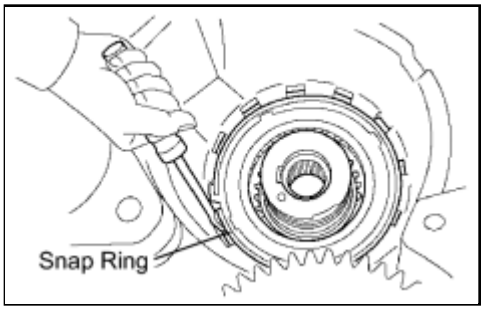

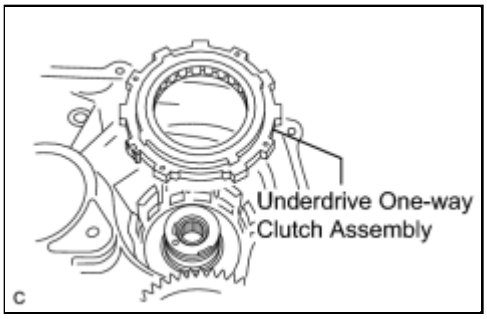

(b) Remove the underdrive one-way clutch from the transaxle case.

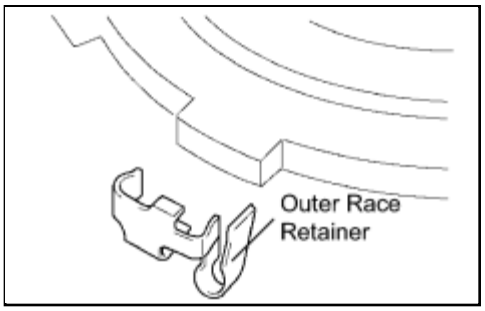

(c) Remove the outer race retainer from the one-way clutch.

56. REMOVE NO. 2 UNDERDRIVE CLUTCH DISC

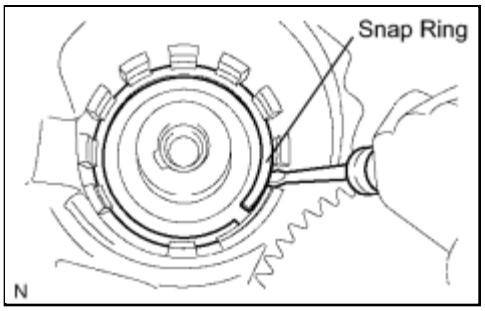

(a) Using a screwdriver, remove the snap ring.

(b) Remove the flange, 3 discs and 3 plates from the

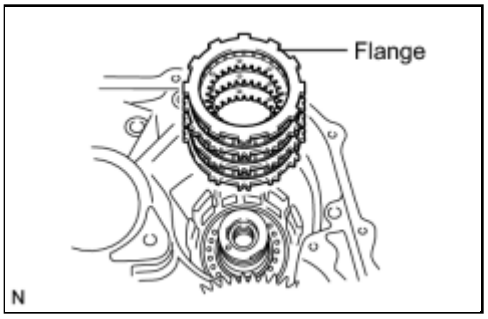

transaxle case.

57. INSPECT NO. 2 UNDERDRIVE CLUTCH DISC INFO

58. REMOVE TRANSAXLE REAR COVER SUB-ASSEMBLY

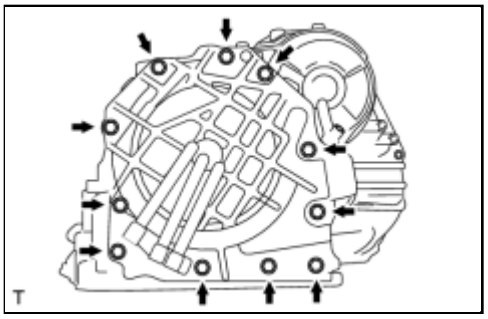

(a) Remove the 11 bolts.

(b) Tap on the circumference of the rear cover with a plastic hammer to remove the transaxle rear cover from the transaxle case.

59. REMOVE NO. 1 TRANSAXLE CASE PLUG

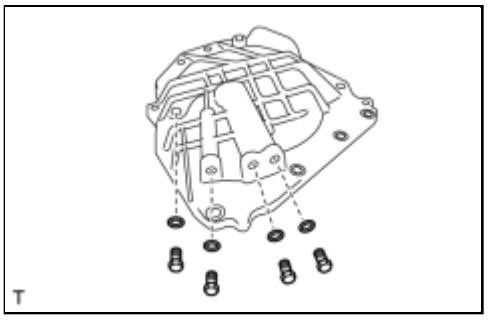

(a) Remove the 4 No. 1 transaxle case plugs from the transaxle rear cover.

(b) Remove the O-ring from each No. 1 transaxle case plug.

60. REMOVE REAR CLUTCH OIL SEAL RING

(a) Remove the 3 rear clutch oil seal rings from the transaxle rear cover.

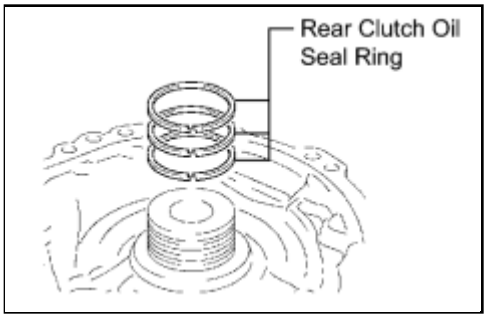

61. REMOVE NEEDLE ROLLER BEARING

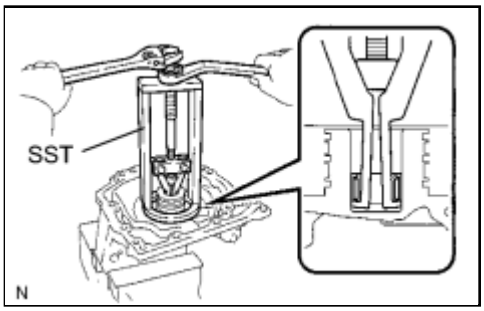

(a) Using SST, remove the needle roller bearing from the transaxle rear cover.

SST: 09387-00041

09387-01021

09387-01030

09387-01040

62. REMOVE NO. 1 GOVERNOR APPLY GASKET

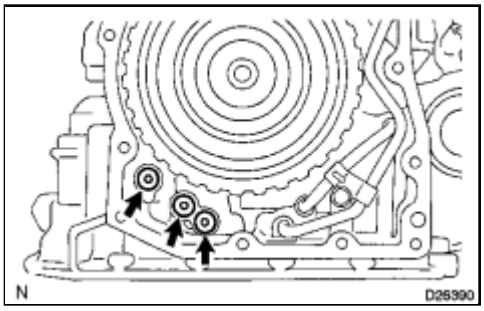

(a) Using a screwdriver, remove the 3 apply gaskets.

63. REMOVE BRAKE APPLY TUBE

(a) Remove the bolt, clamp and brake apply tube.

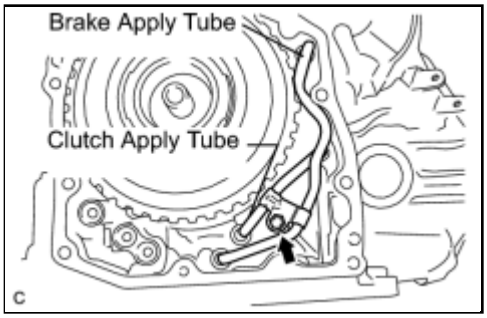

(b) Remove the clutch apply tube.

(c) Remove the brake apply tube from the clamp.

64. REMOVE DIRECT CLUTCH ASSEMBLY

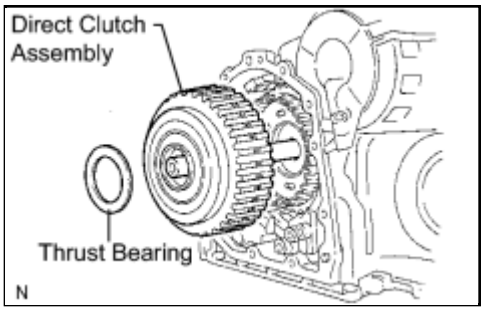

(a) Remove the thrust bearing and the direct clutch assembly from the transaxle case.

65. INSPECT PACK CLEARANCE OF DIRECT CLUTCH INFO

66. INSPECT PACK CLEARANCE OF OVERDRIVE CLUTCH INFO

67. REMOVE DIRECT MULTIPLE DISC CLUTCH DISC

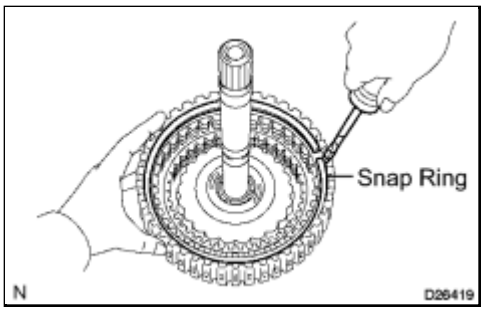

(a) Using a screwdriver, remove the snap ring from the intermediate shaft.

(b) Remove the flange, 3 discs, 3 plates and cushion plate from the intermediate shaft.

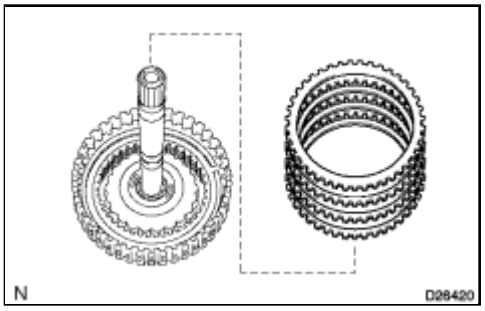

68. INSPECT DIRECT MULTIPLE DISC CLUTCH DISC INFO

69. REMOVE OVERDRIVE DIRECT CLUTCH DISC

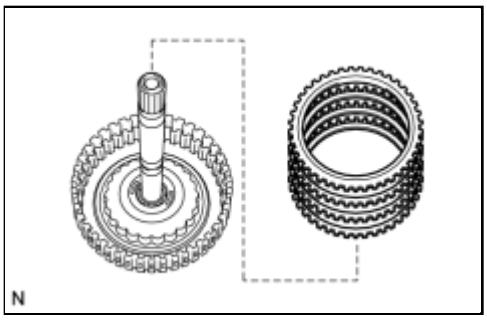

(a) Using a screwdriver, remove the snap ring from the intermediate shaft.

(b) Remove the flange, 3 discs and 3 plates from the intermediate shaft.

70. INSPECT OVERDRIVE DIRECT CLUTCH DISC INFO

71. REMOVE OVERDRIVE CLUTCH RETURN SPRING SUB-ASSEMBLY

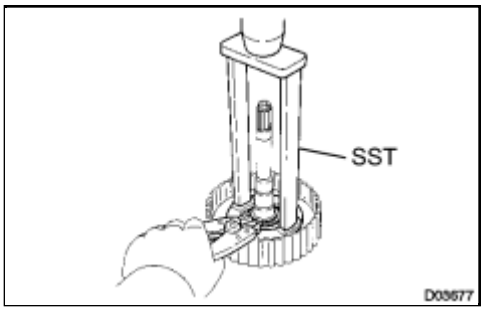

(a) Place SST on the clutch balancer and compress the spring with a press.

SST: 09387-00020

(b) Using a snap ring expander, remove the snap ring from the direct clutch drum.

NOTICE:

- Stop the press when the spring seat is lowered 1 to 2 mm (0.0393 to 0.0787 in.) from the snap ring groove. This prevents the spring seat from being deformed.
- Do not expand the snap ring excessively.

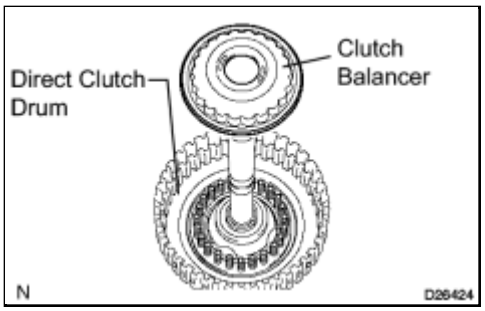

(c) Remove the clutch balancer from the overdrive direct clutch drum.

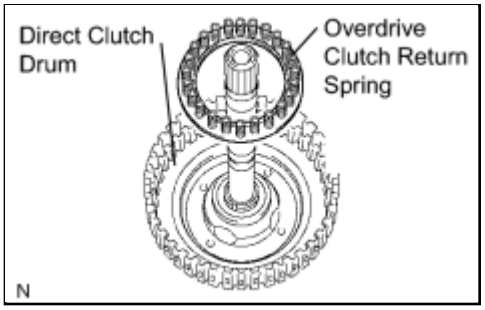

(d) Remove the overdrive clutch return spring from the overdrive direct clutch drum.

72. INSPECT OVERDRIVE CLUTCH RETURN SPRING SUB-ASSEMBLY INFO

73. REMOVE OVERDRIVE DIRECT CLUTCH PISTON

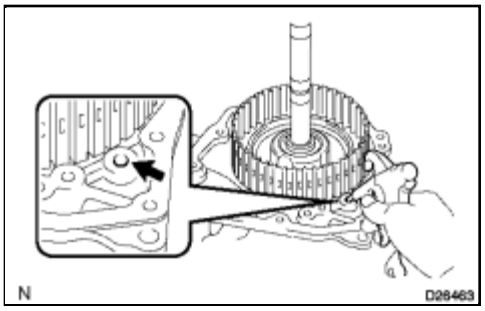

(a) Install the intermediate shaft on the transaxle rear cover.

(b) Holding the direct clutch piston by hand, apply compressed air (392 kPa, 4.0 kgf/cm^2, 57 psi) to the transaxle rear cover to remove the direct clutch piston.

74. REMOVE OVERDRIVE DIRECT CLUTCH DRUM SUB-ASSEMBLY

(a) Holding the direct clutch drum by hand, apply compressed air (392 kPa, 4.0 kgf/cm2, 57 psi) to the transaxle rear cover to remove the direct clutch drum.

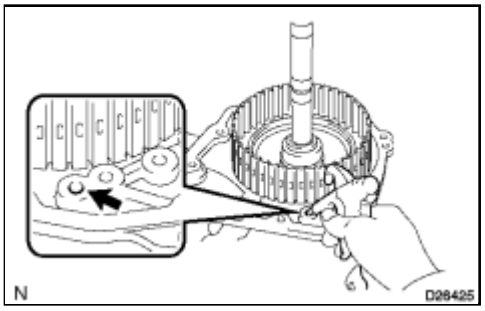

75. REMOVE OVERDRIVE DIRECT CLUTCH O-RING

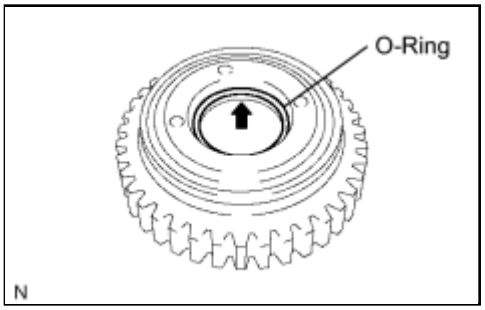

(a) Using a screwdriver, remove the O-ring from the direct clutch drum.

76. REMOVE OVERDRIVE DIRECT CLUTCH HUB SUB-ASSEMBLY

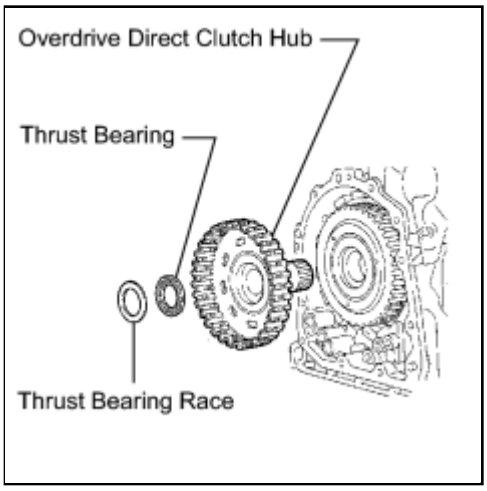

(a) Remove the thrust bearing race, thrust bearing, and overdrive direct clutch hub from the planetary gear assembly.

77. REMOVE REAR PLANETARY SUN GEAR ASSEMBLY

(a) Remove the rear planetary sun gear assembly from the transaxle case.

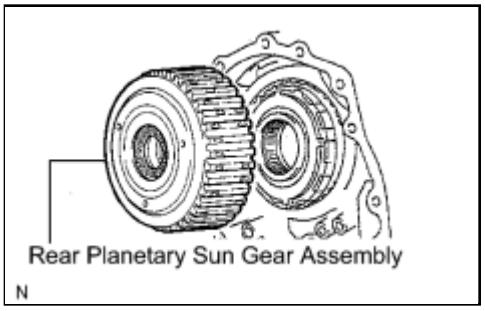

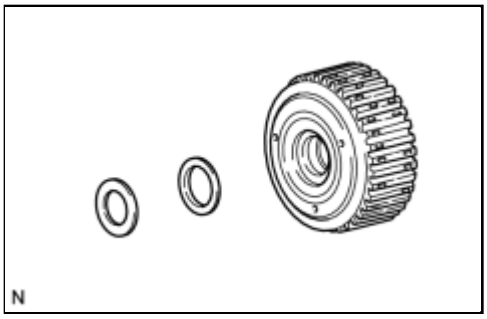

(b) Remove the thrust needle roller bearing and thrust bearing race from the rear planetary sun gear assembly.

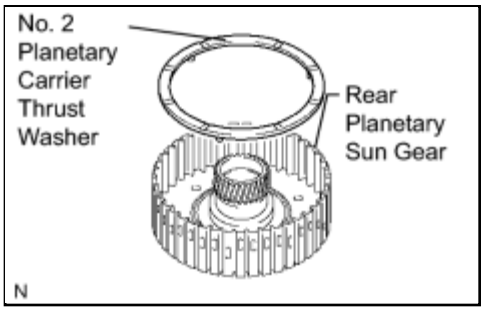

(c) Remove the No. 2 planetary carrier thrust washer from the rear planetary sun gear assembly.

78. REMOVE ONE-WAY CLUTCH ASSEMBLY

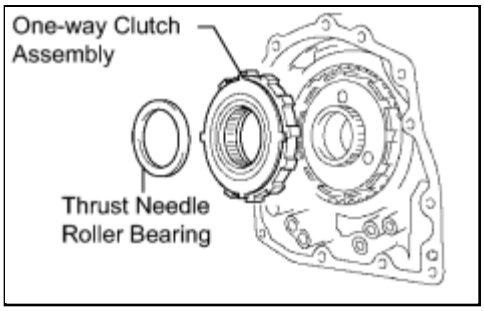

(a) Remove the one-way clutch assembly and the thrust needle roller bearing from the transaxle case.

(b) Remove the one-way clutch inner race from the one-way

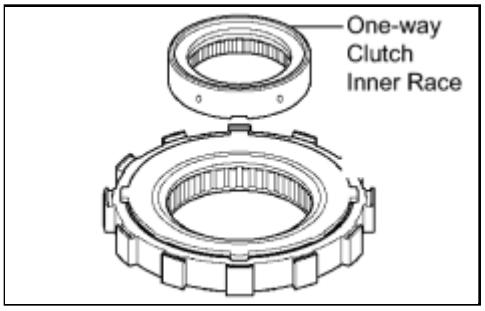

clutch assembly.

79. REMOVE ONE-WAY CLUTCH SLEEVE

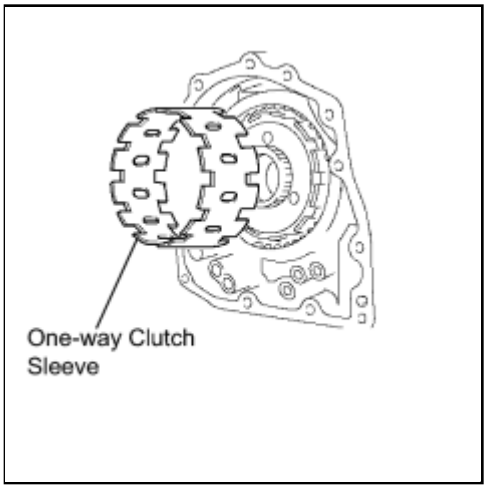

(a) Remove the one-way clutch sleeve from the transaxle case.

80. REMOVE NO. 1 PLANETARY CARRIER THRUST WASHER

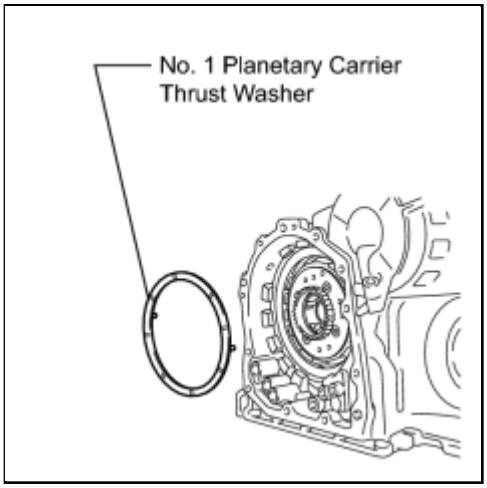

(a) Remove the No. 1 planetary carrier thrust washer from the planetary gear assembly.

81. REMOVE 2ND BRAKE DISC

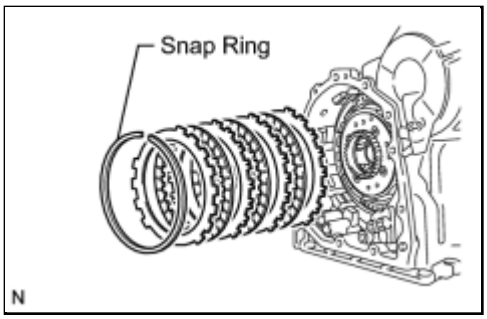

(a) Using a screwdriver, remove the snap ring.

(b) Remove the flange, 3 discs and 3 plates from the transaxle case.

82. INSPECT 2ND BRAKE DISC INFO

83. REMOVE 2ND BRAKE PISTON ASSEMBLY

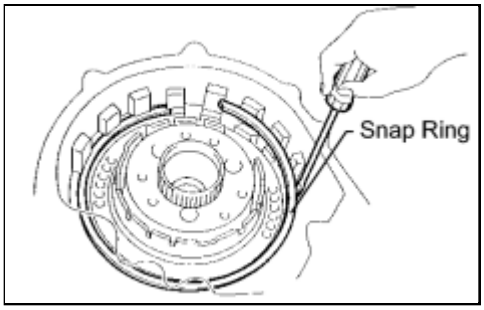

(a) Using a screwdriver, remove the snap ring.

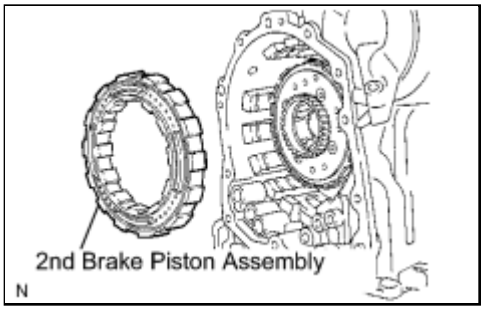

(b) Remove the 2nd brake piston assembly from the transaxle case.

84. REMOVE 2ND BRAKE PISTON RETURN SPRING SUB-ASSEMBLY

(a) Place SST on the return spring and compress it with a press.

SST: 09387-00060

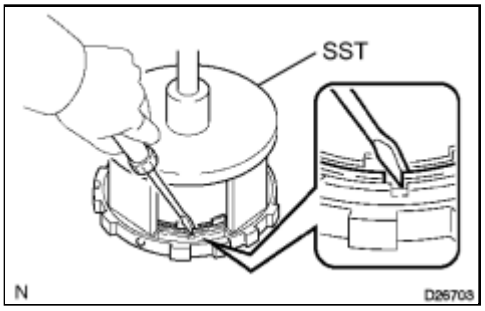

(b) Using a screwdriver, remove the snap ring.

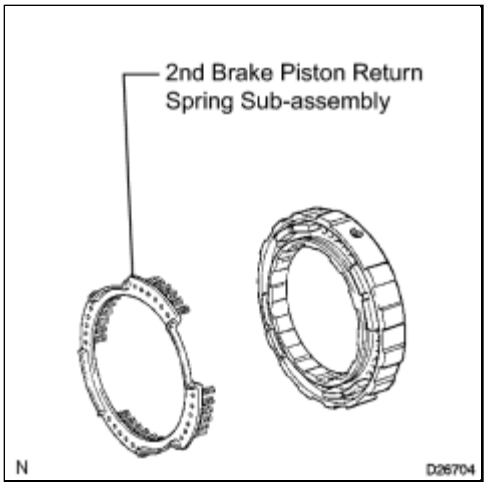

(c) Remove the 2nd brake piston return spring sub-assembly.

85. INSPECT 2ND BRAKE PISTON RETURN SPRING SUB-ASSEMBLY INFO

86. REMOVE 2ND BRAKE PISTON

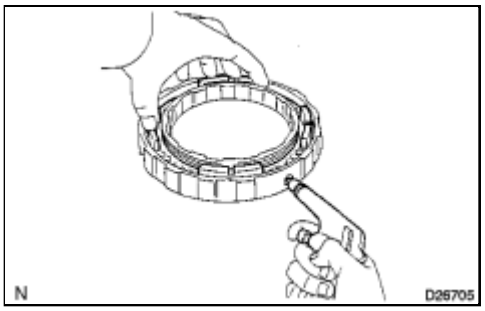

(a) Hold the 2nd brake piston and apply compressed air (392 kPa, 4.0 kgf/cm2, 57 psi) to the 2nd brake cylinder to remove the 2nd brake piston.

87. REMOVE 2ND BRAKE PISTON O-RING

(a) Remove the 2 O-rings from the 2nd brake piston.

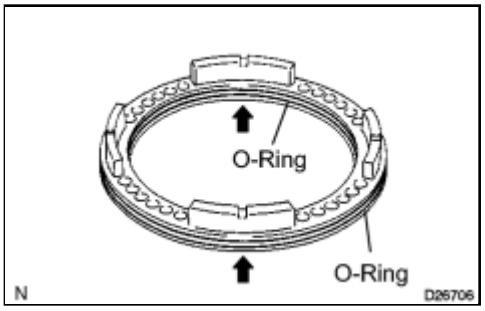

88. REMOVE REAR PLANETARY GEAR ASSEMBLY

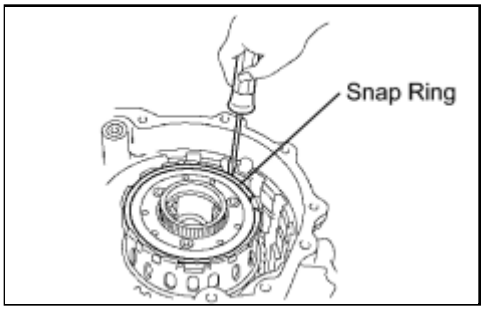

(a) Using a screwdriver, remove the snap ring.

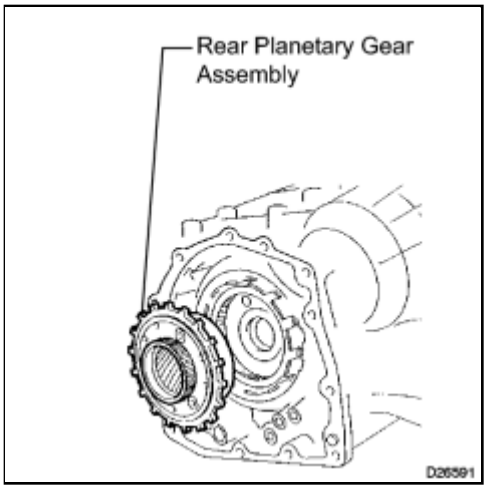

(b) Remove the rear planetary gear assembly from the transaxle case.

89. REMOVE INPUT SUN GEAR

(a) Remove the 2 thrust needle roller bearings, No. 2 thrust bearing races, No. 3 thrust bearing race, and input sun gear from the transaxle case.

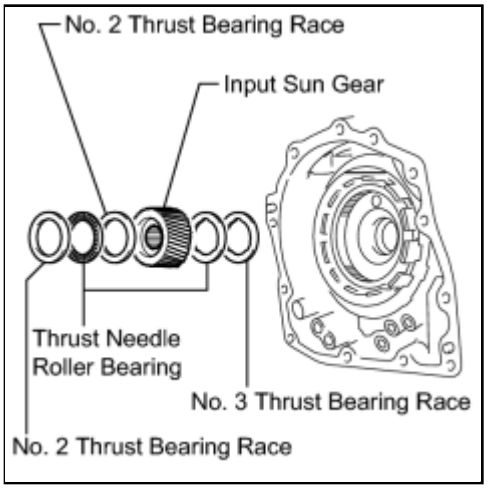

90. REMOVE 1ST AND REVERSE BRAKE DISC

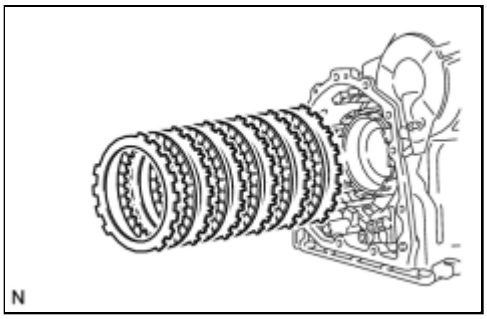

(a) Remove the flange, 5 discs and 5 plates from the transaxle case.

91. INSPECT 1ST AND REVERSE BRAKE DISC INFO

92. REMOVE FRONT PLANETARY GEAR ASSEMBLY

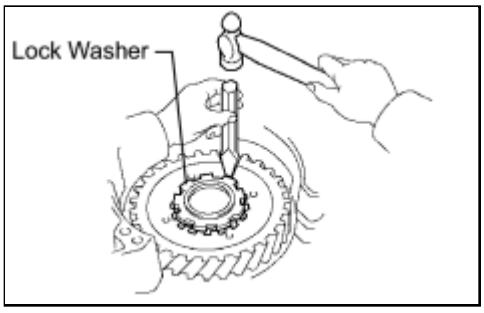

(a) Using a chisel and hammer, unstake the lock washer.

NOTICE:

Push down all claws of the washer. If the claws are not pushed down, SST cannot be fully pressed against the nut, and the nut cannot be loosened.

(b) Using SST, remove the nut and washer.

SST: 09387-00030

SST: 09387-00080

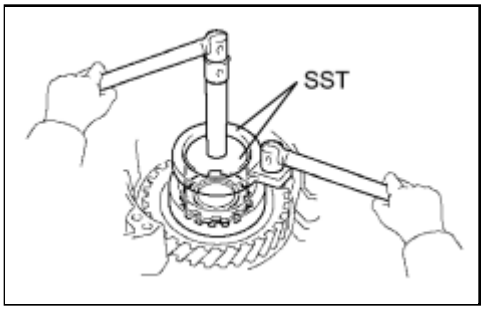

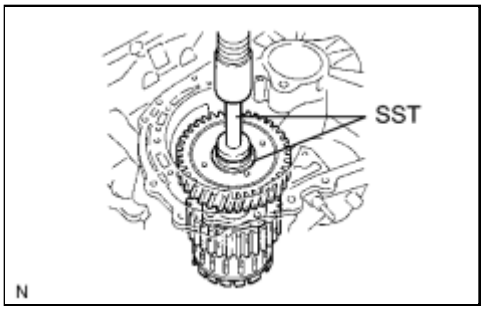

(c) Using SST and a press, remove the front planetary gear assembly from the counter drive gear.

SST: 09950-60010

09951-00450

SST: 09950-70010

09951-07100

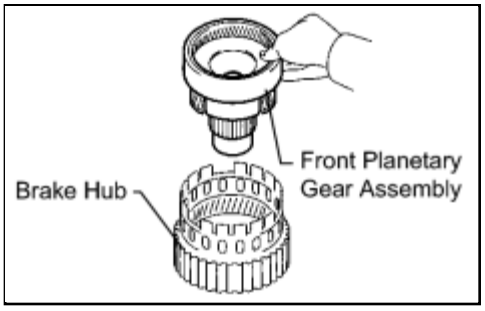

(d) Remove the front planetary gear assembly from the brake hub.

93. REMOVE FRONT PLANETARY RING GEAR

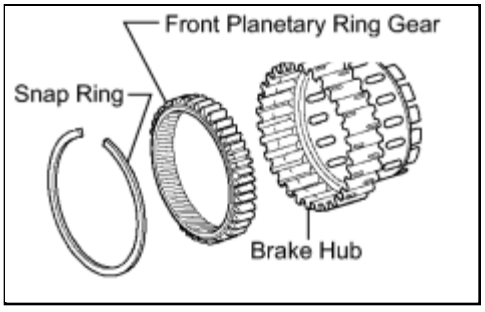

(a) Using a screwdriver, remove the snap ring and front planetary ring gear from the brake hub.

94. REMOVE 1ST AND REVERSE BRAKE RETURN SPRING SUB-ASSEMBLY

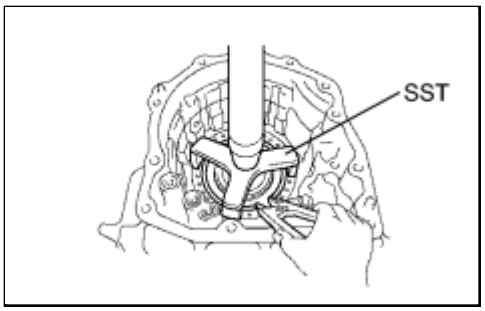

(a) Place SST on the return spring, and compress the return spring with a press.

SST: 09387-00070

(b) Using a snap ring expander, remove the snap ring.

NOTICE:

- Stop the press when the spring seat is lowered 1 to 2 mm (0.0393 to 0.0787 in.) from the snap ring groove to prevent the spring seat from being deformed.
- Do not expand the snap ring excessively.

(c) Remove the return spring.

95. INSPECT 1ST AND REVERSE BRAKE RETURN SPRING SUB-ASSEMBLY INFO

96. REMOVE 1ST AND REVERSE BRAKE PISTON

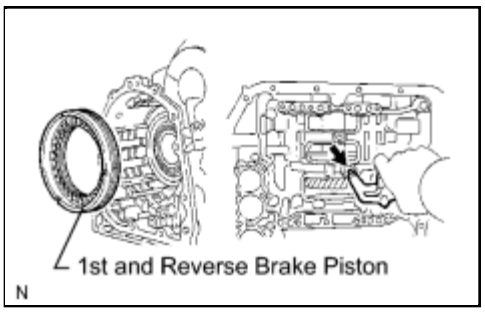

(a) Apply compressed air (392 kPa, 4.0 kgf/cm2, 57 psi) to the transaxle case to remove the 1st and reverse brake piston.

NOTICE:

- Applying compressed air may cause the piston to jump out. When removing the piston, hold it by hand using a piece of cloth.
- Take care not to splash ATF when applying compressed air.

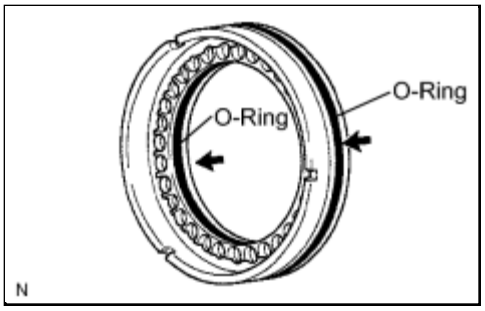

(b) Remove the 2 O-rings from the 1st and reverse brake piston.

97. REMOVE COUNTER DRIVE GEAR BEARING

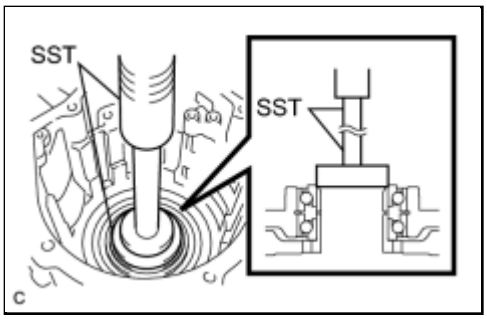

(a) Using SST and a press, remove the counter drive gear from the transaxle case.

SST: 09950-60010

09951-00590

SST: 09950-70010

09951-07100

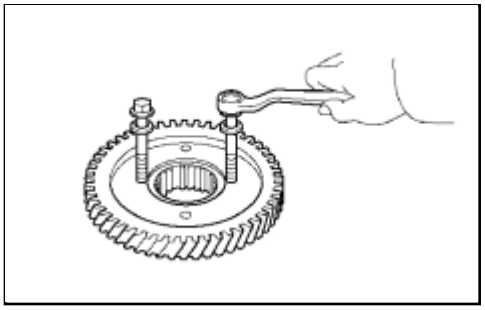

(b) Tighten the 2 bolts evenly and make a clearance of approximately. 20.0 mm (0.797 in.) between the counter drive gear and the inner race.

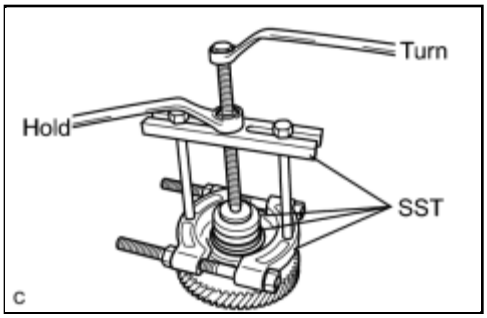

(c) Using SST, remove the tapered roller bearing inner race.

SST: 09950-00020

SST: 09950-00030

SST: 09950-60010

09951-00590

98. REMOVE COUNTER DRIVE ANGULAR BALL BEARING

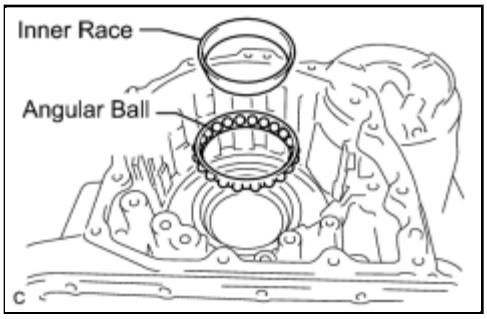

(a) Remove the bearing inner race (rear side) and angular ball (rear side).

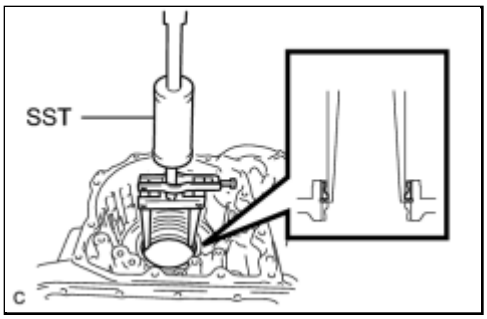

(b) Using SST, remove the bearing outer race (rear side) from the transaxle case.

SST: 09308-00010

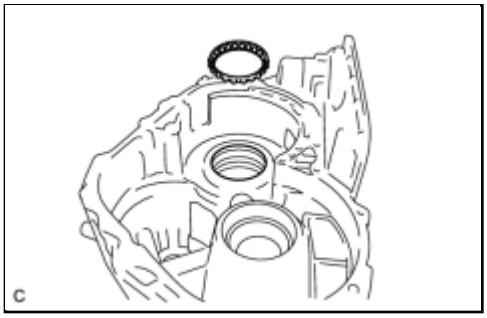

(c) Remove the angular ball (front side).

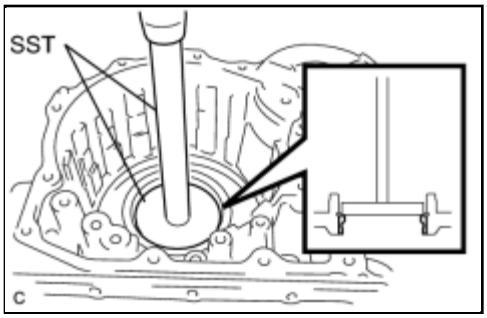

(d) Using SST and a press, remove the bearing outer race (front side) from the transaxle case.

SST: 09950-60020

09951-00810

SST: 09950-70010

09951-07200

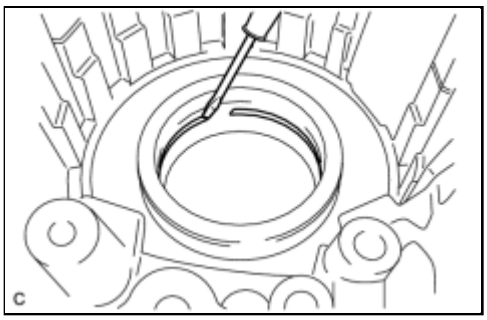

(e) Using a screwdriver, remove the snap ring from the transaxle case.

99. REMOVE UNDERDRIVE BRAKE RETURN SPRING SUB-ASSEMBLY

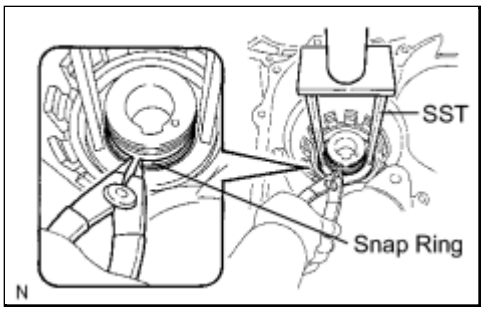

(a) Place SST on the return spring, and compress the return spring with a press.

SST: 09387-00020

(b) Using a snap ring expander, remove the snap ring.

NOTICE:

- Stop the press when the spring seat is lowered 1 to 2 mm (0.0393 to 0.0787 in.) from the snap ring groove to prevent the spring seat from being deformed.
- Do not expand the snap ring excessively.

(c) Remove the return spring.

100. INSPECT UNDERDRIVE BRAKE RETURN SPRING SUB-ASSEMBLY INFO

101. REMOVE UNDERDRIVE BRAKE PISTON

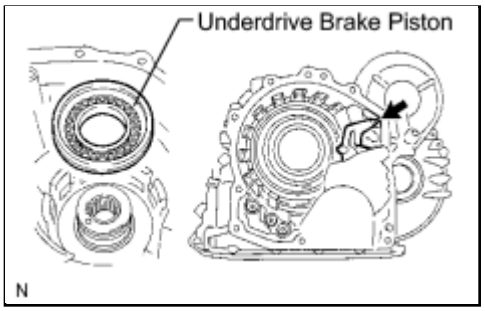

(a) Apply compressed air (392 kPa, 4.0 kgf/cm2, 57 psi) to the transaxle case to remove the underdrive brake piston.

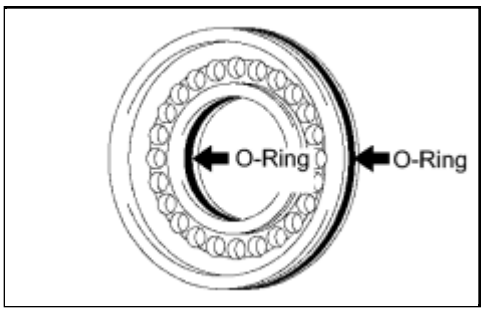

(b) Remove the 2 O-rings from the underdrive brake piston.

102. REMOVE NEEDLE ROLLER BEARING

(a) Using SST, remove the needle roller bearing from the

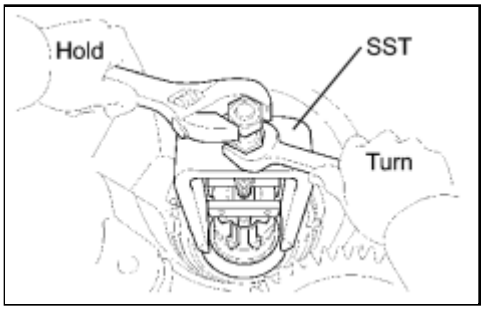

transaxle case.

SST: 09387-00041

09387-01010
09387-01030
09387-01040

103. REMOVE UNDERDRIVE CLUTCH DRUM OIL SEAL RING

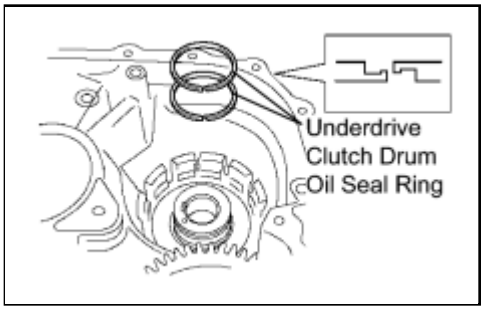

(a) Remove the 2 oil seal rings from the transaxle case.

104. REMOVE NO. 1 TRANSAXLE CASE PLUG

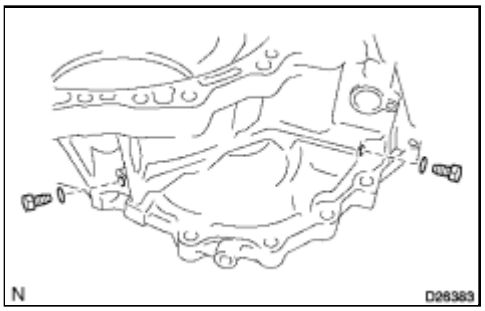

(a) Remove the 2 No. 1 transaxle case plugs.

(b) Remove the O-ring from each No. 1 transaxle case plug.

105. REMOVE UNDERDRIVE CYLINDRICAL ROLLER BEARING

(a) Using SST, remove the underdrive cylindrical roller bearing from the transaxle case.

SST: 09820-00031

SST: 09950-40011

09952-04010
09954-04010
09955-04061

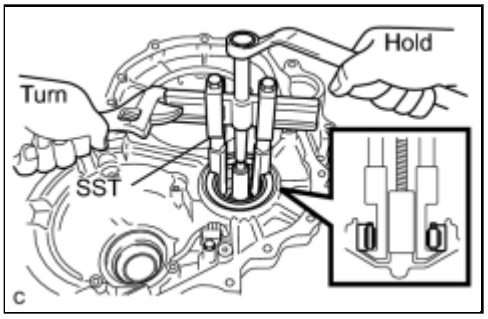

09957-04010
SST: 09950-50013
09951-05010
09953-05020

106. REMOVE UNDERDRIVE OUTPUT SHAFT OIL SEAL RING

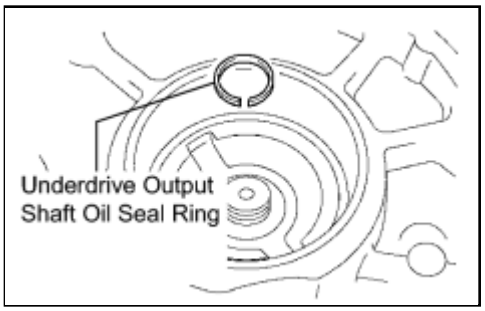

(a) Remove the oil seal ring from the transaxle housing.

107. REMOVE DIFFERENTIAL GEAR LUBE APPLY TUBE

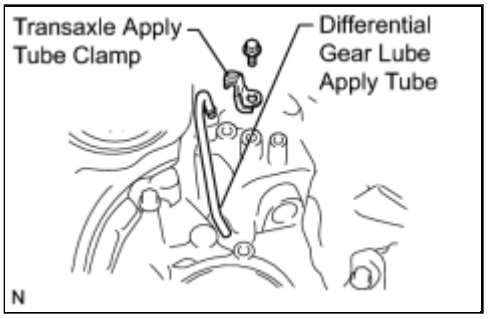

(a) Remove the bolt, transaxle apply tube clamp and differential gear lube apply tube from the transaxle housing.

Last Modified: 3-10-2010	6.4 K	**From:** 200901
Model Year: 2010	**Model:** Corolla	**Doc ID:** RM000003DGB004X
Title: U250E AUTOMATIC TRANSMISSION / TRANSAXLE: AUTOMATIC TRANSAXLE UNIT: COMPONENTS (2010 Corolla)		

COMPONENTS

ILLUSTRATION

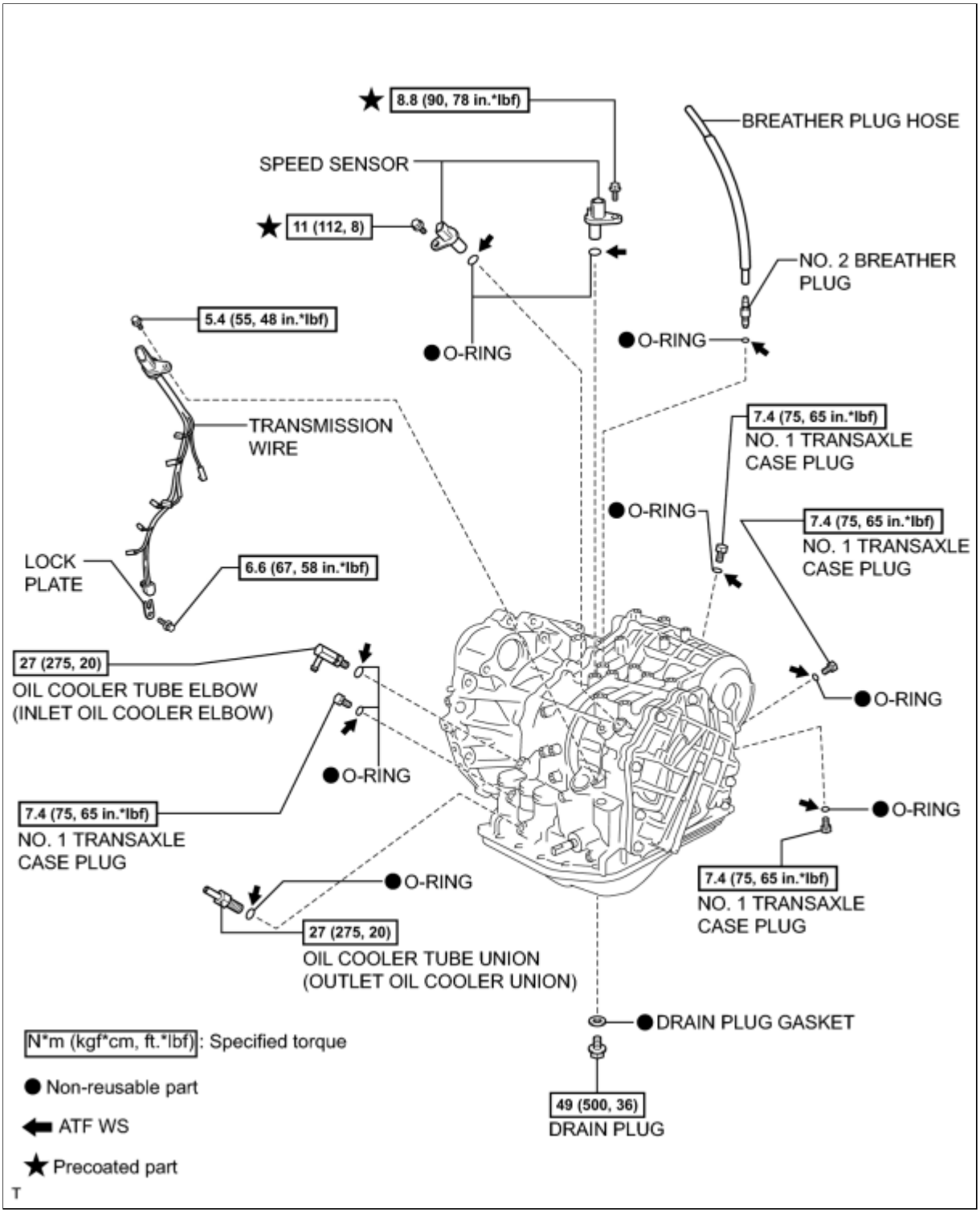

ILLUSTRATION

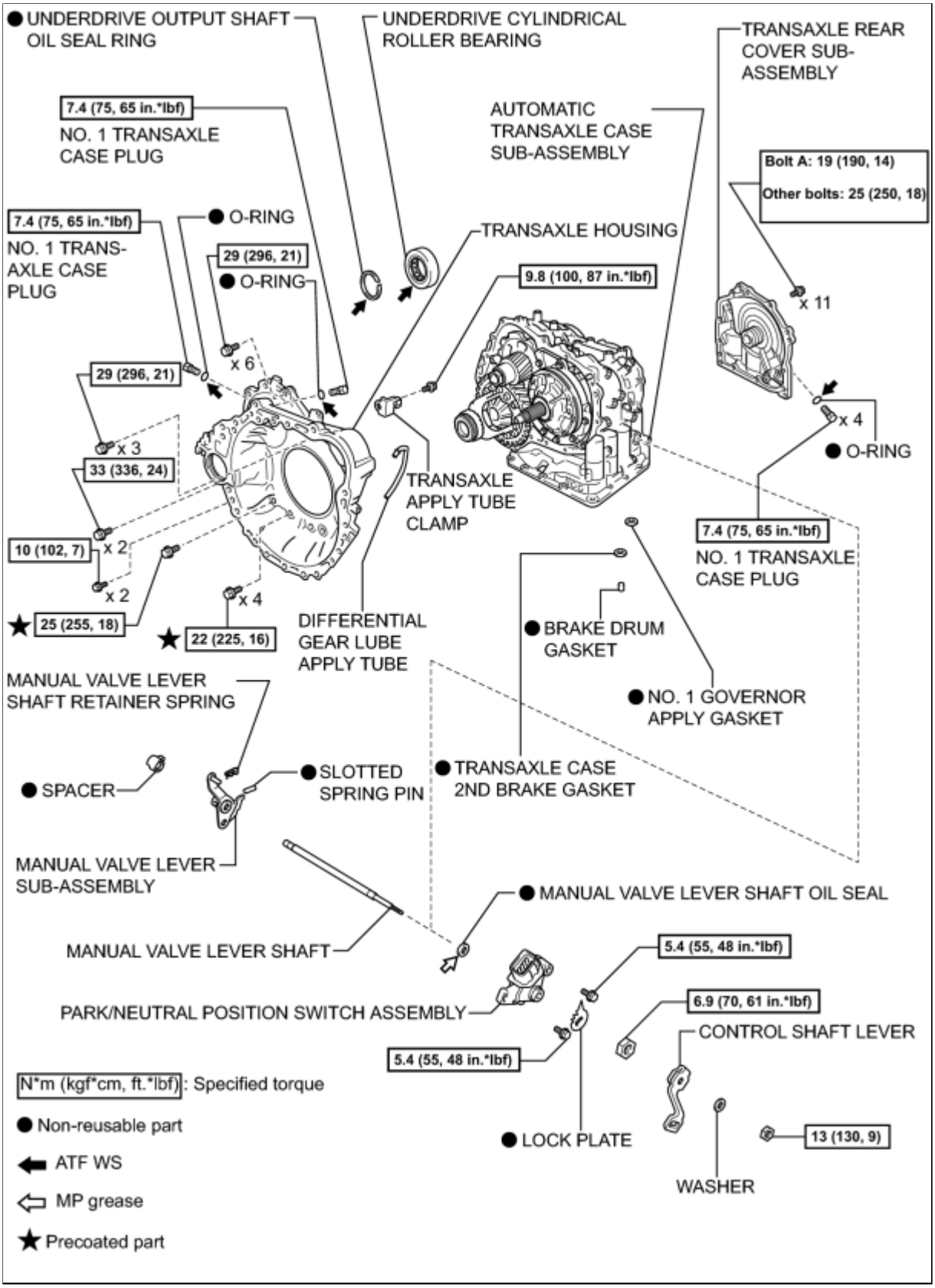

ILLUSTRATION

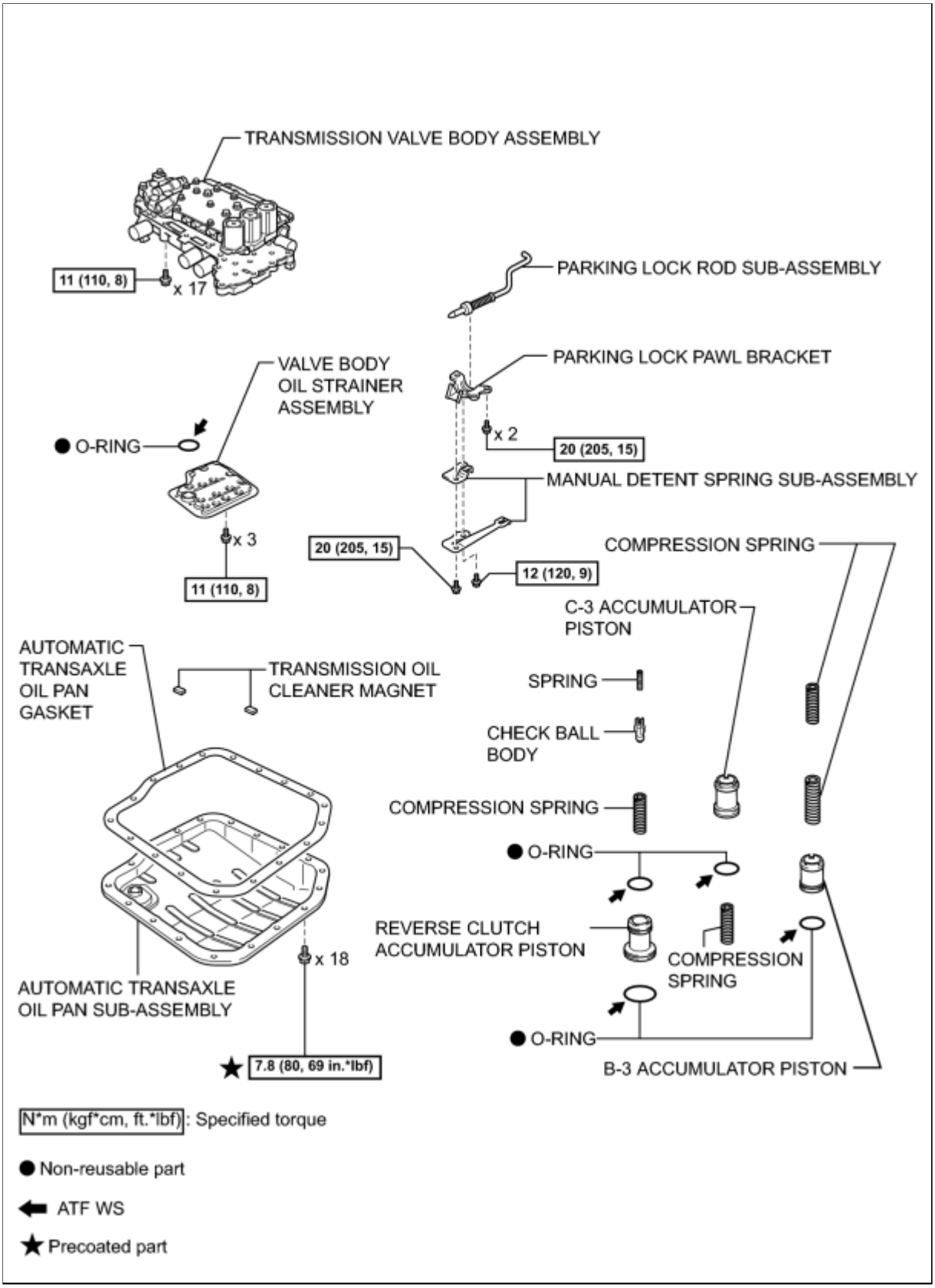

ILLUSTRATION

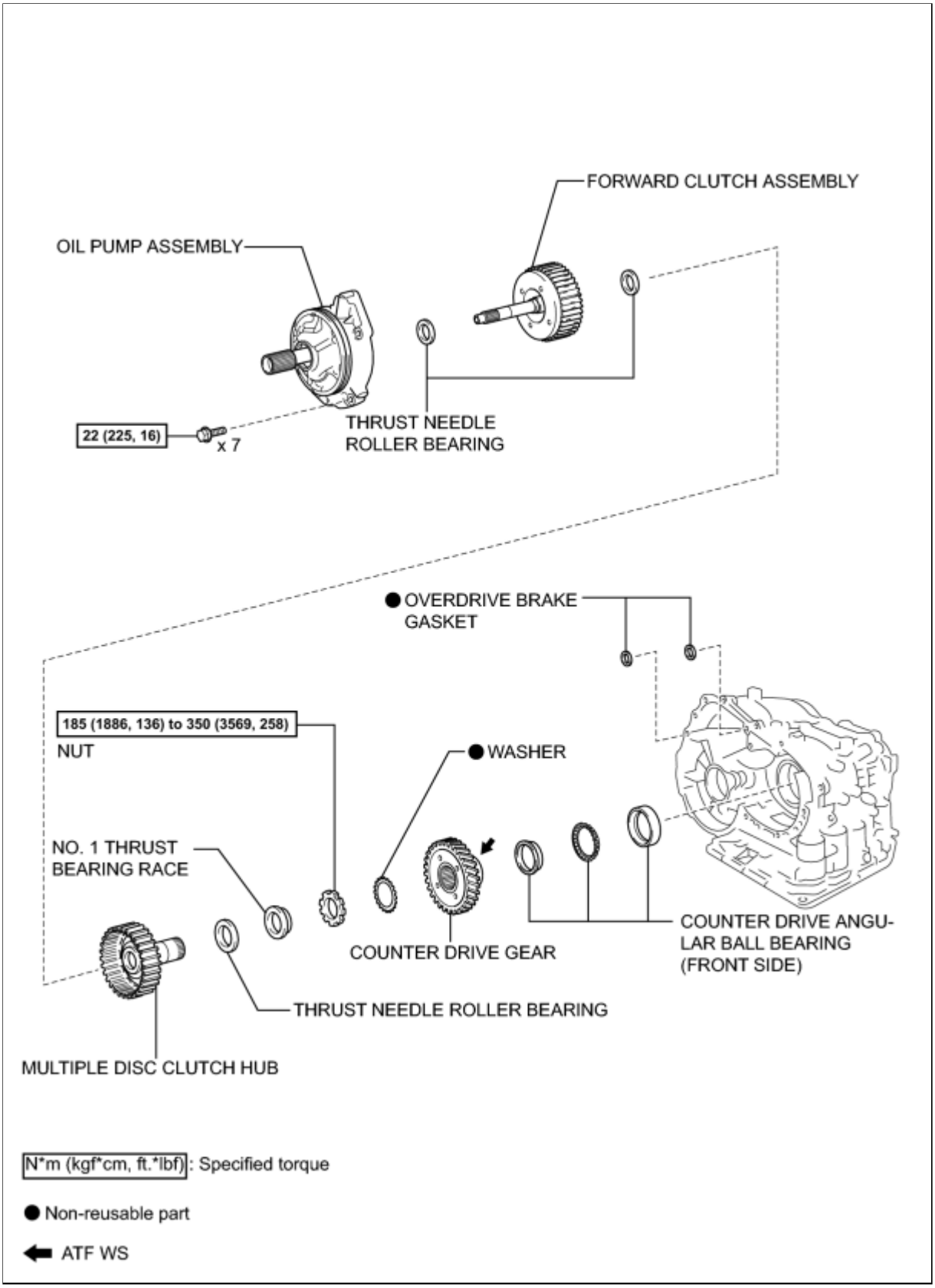

ILLUSTRATION

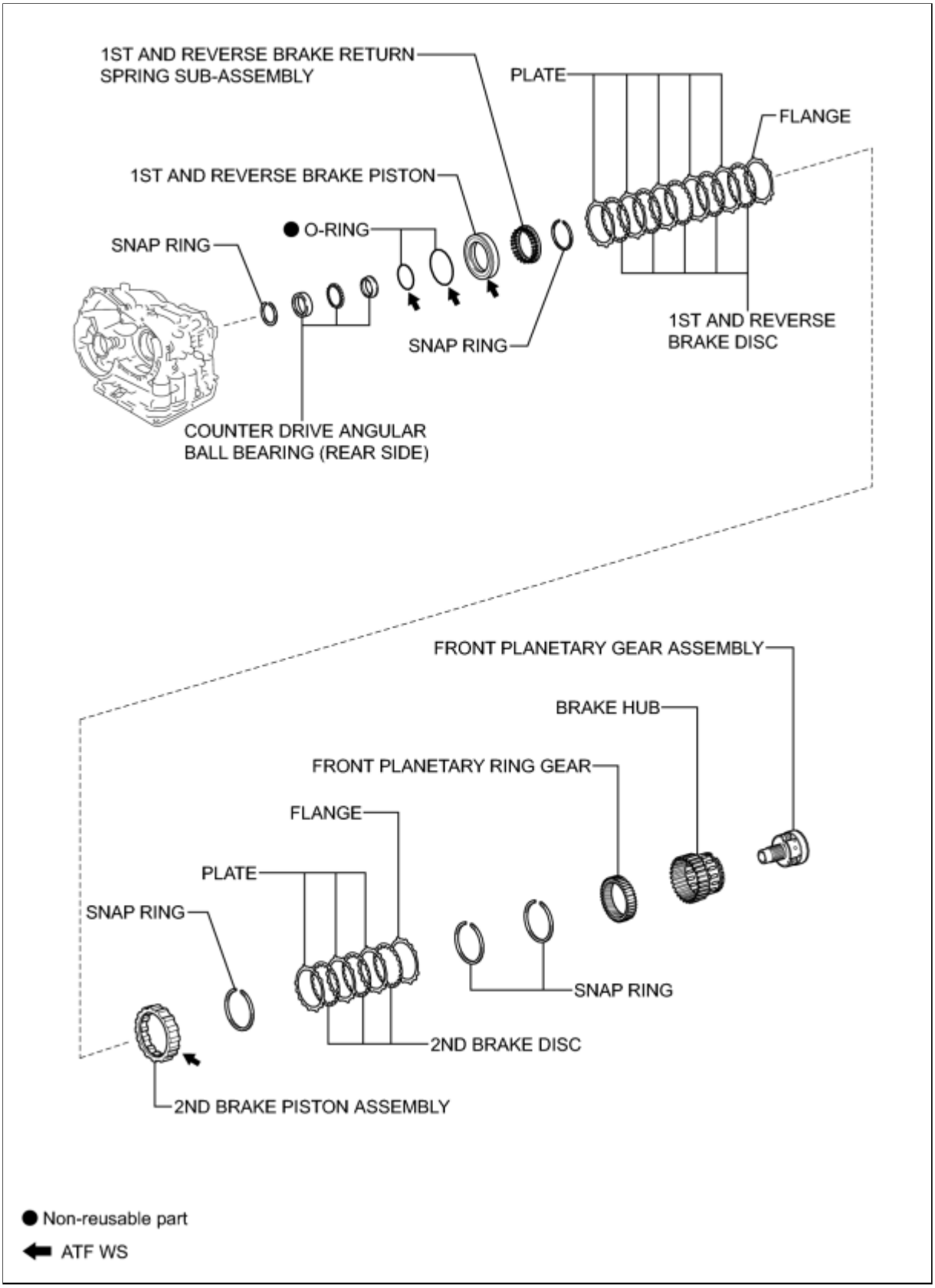

ILLUSTRATION

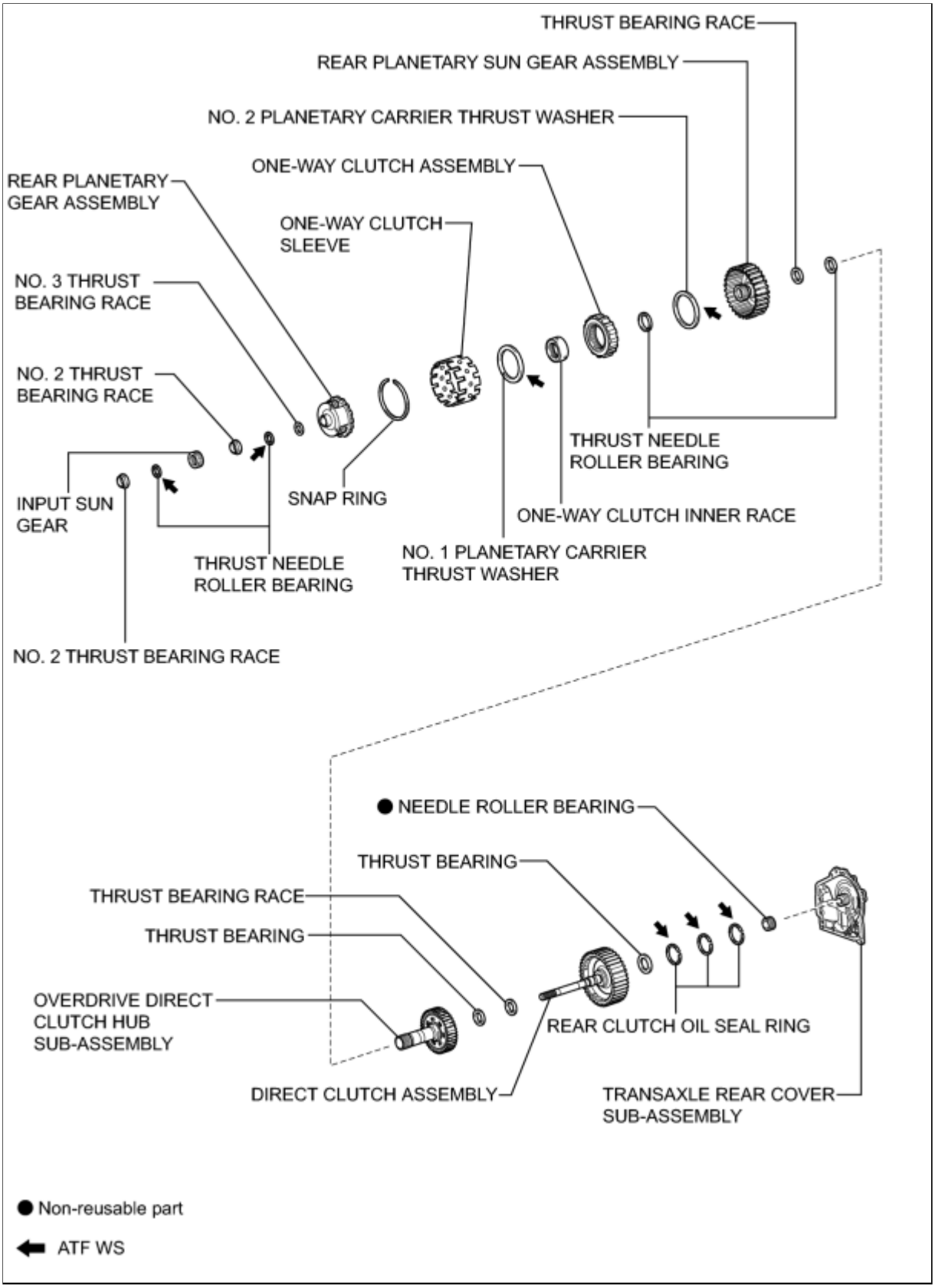

ILLUSTRATION

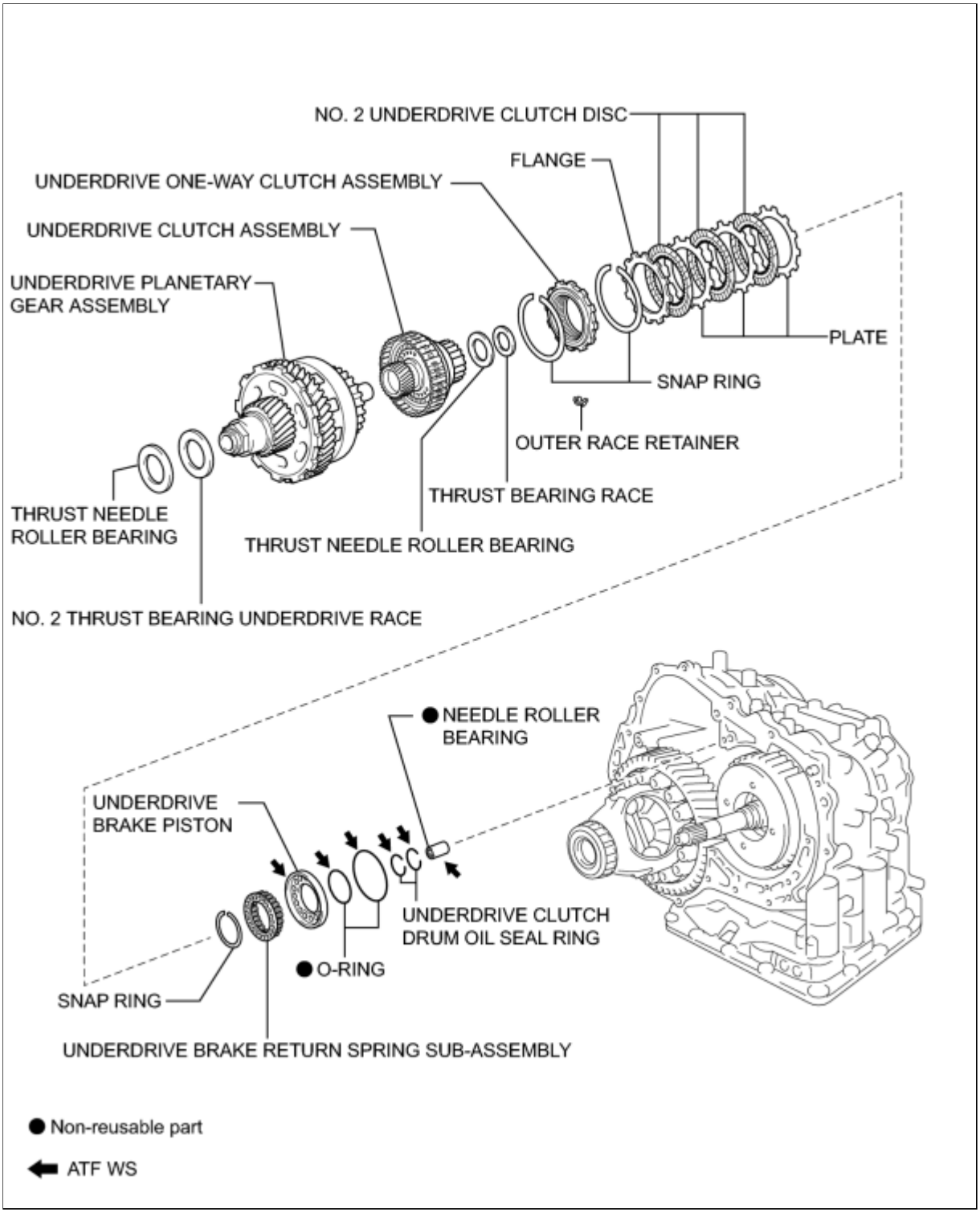

ILLUSTRATION

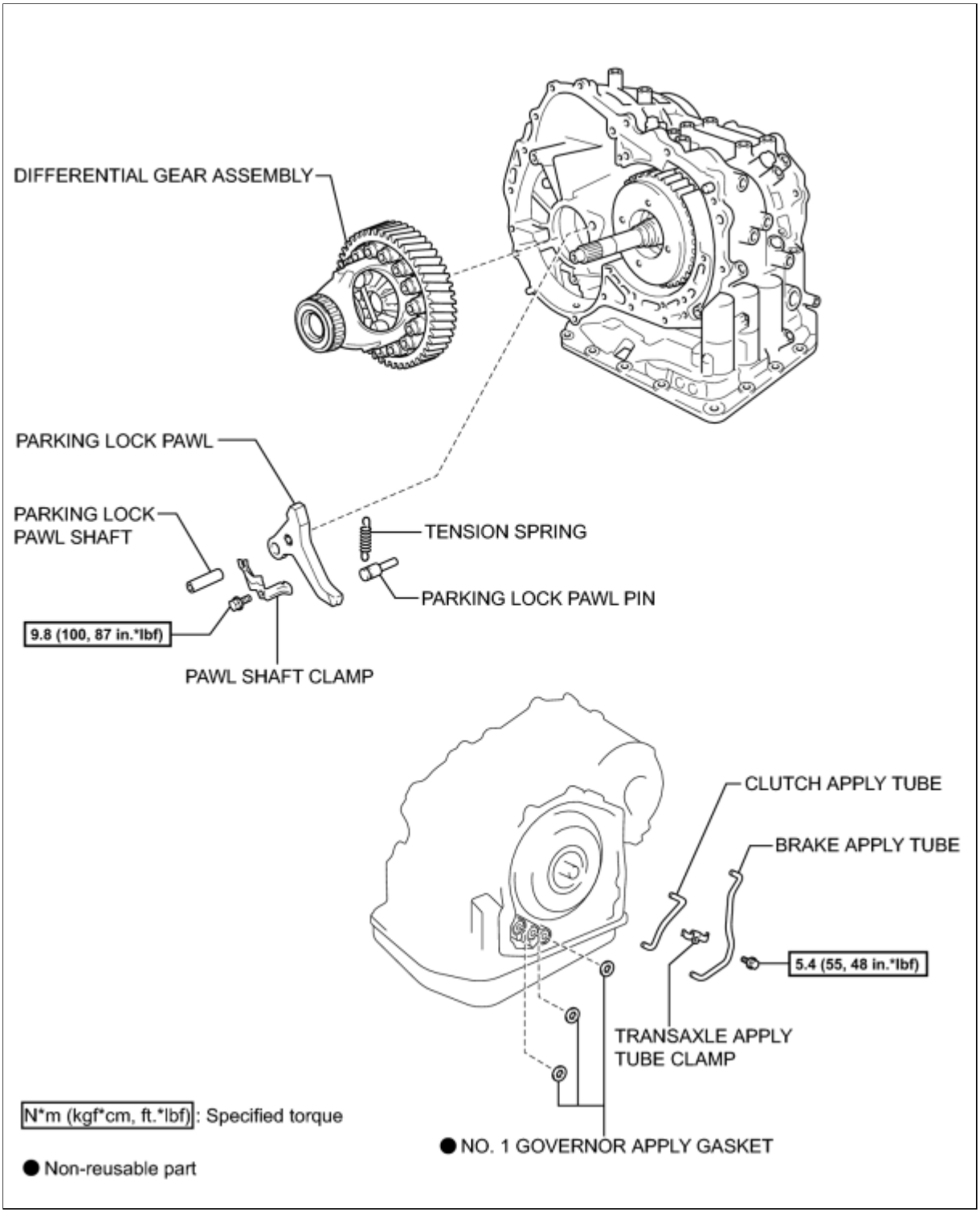

ILLUSTRATION

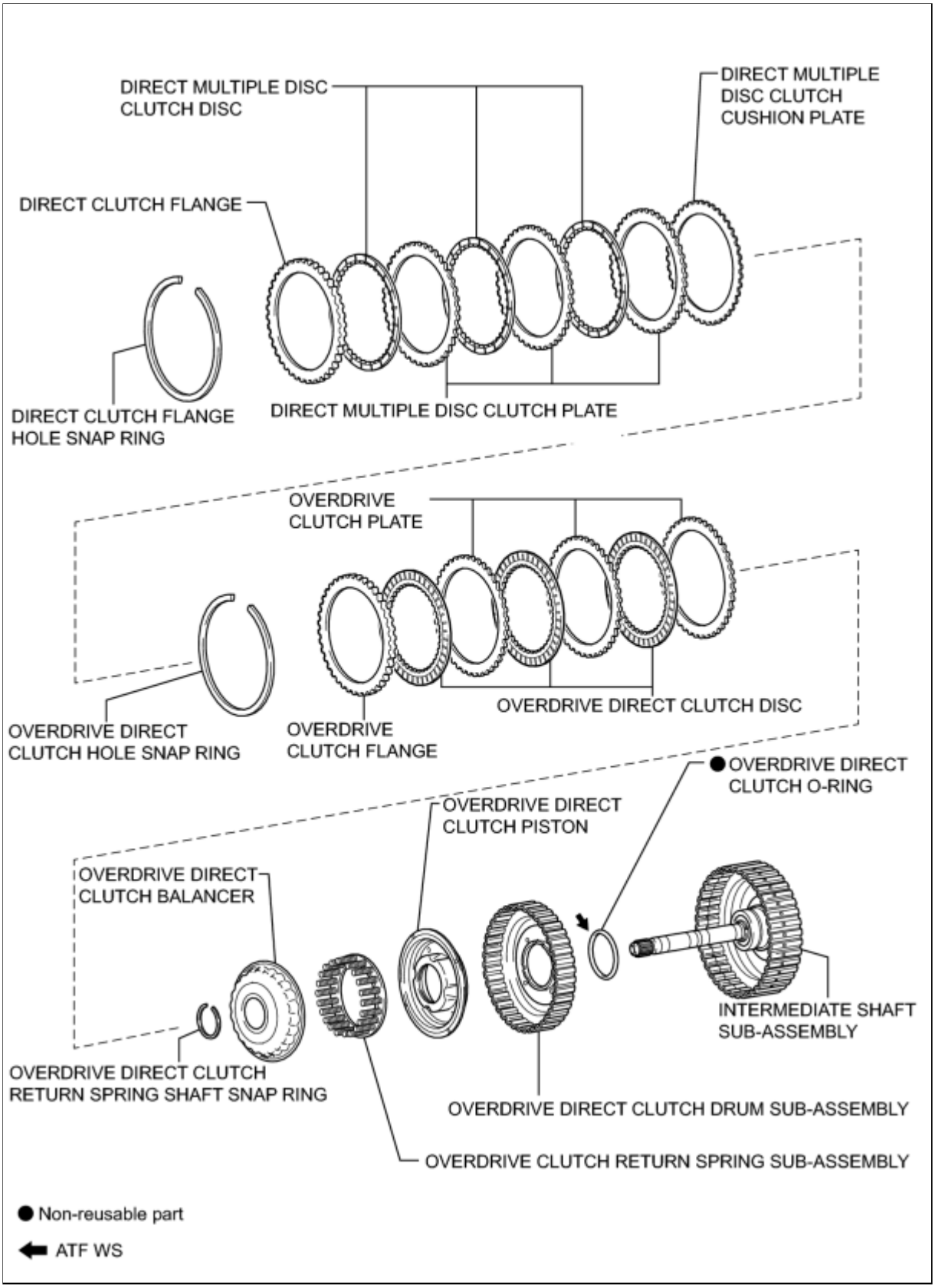

ILLUSTRATION

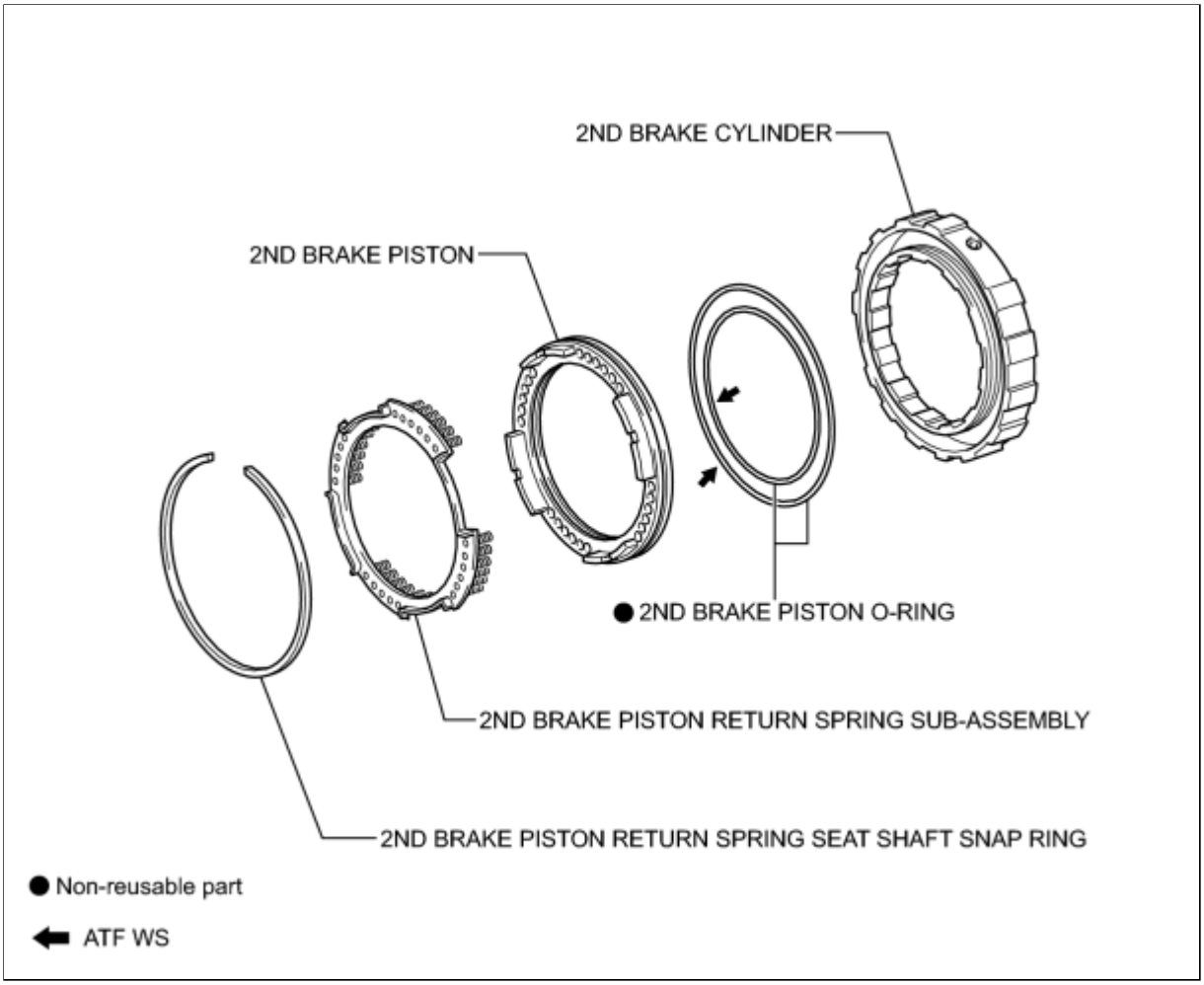

ILLUSTRATION

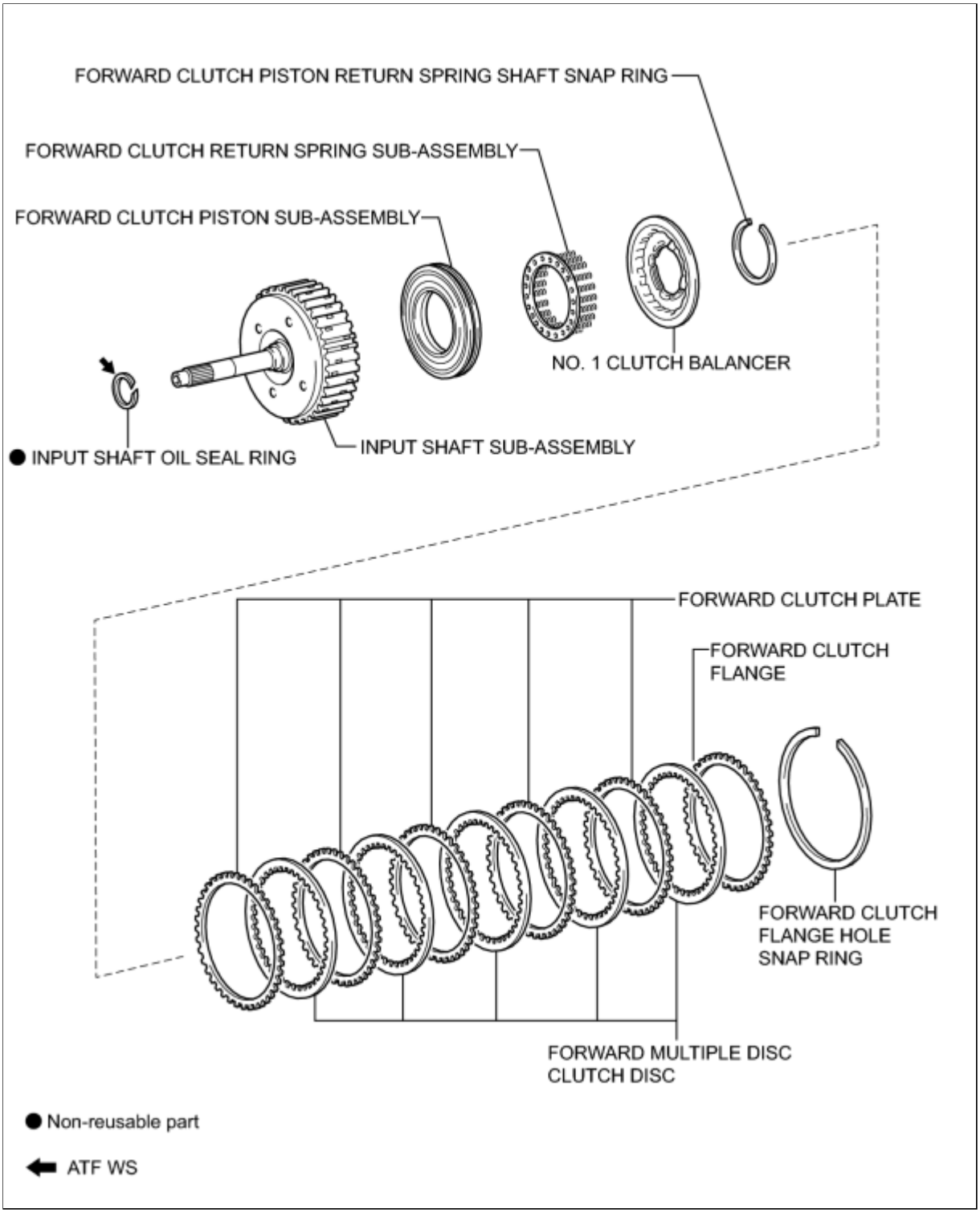

ILLUSTRATION

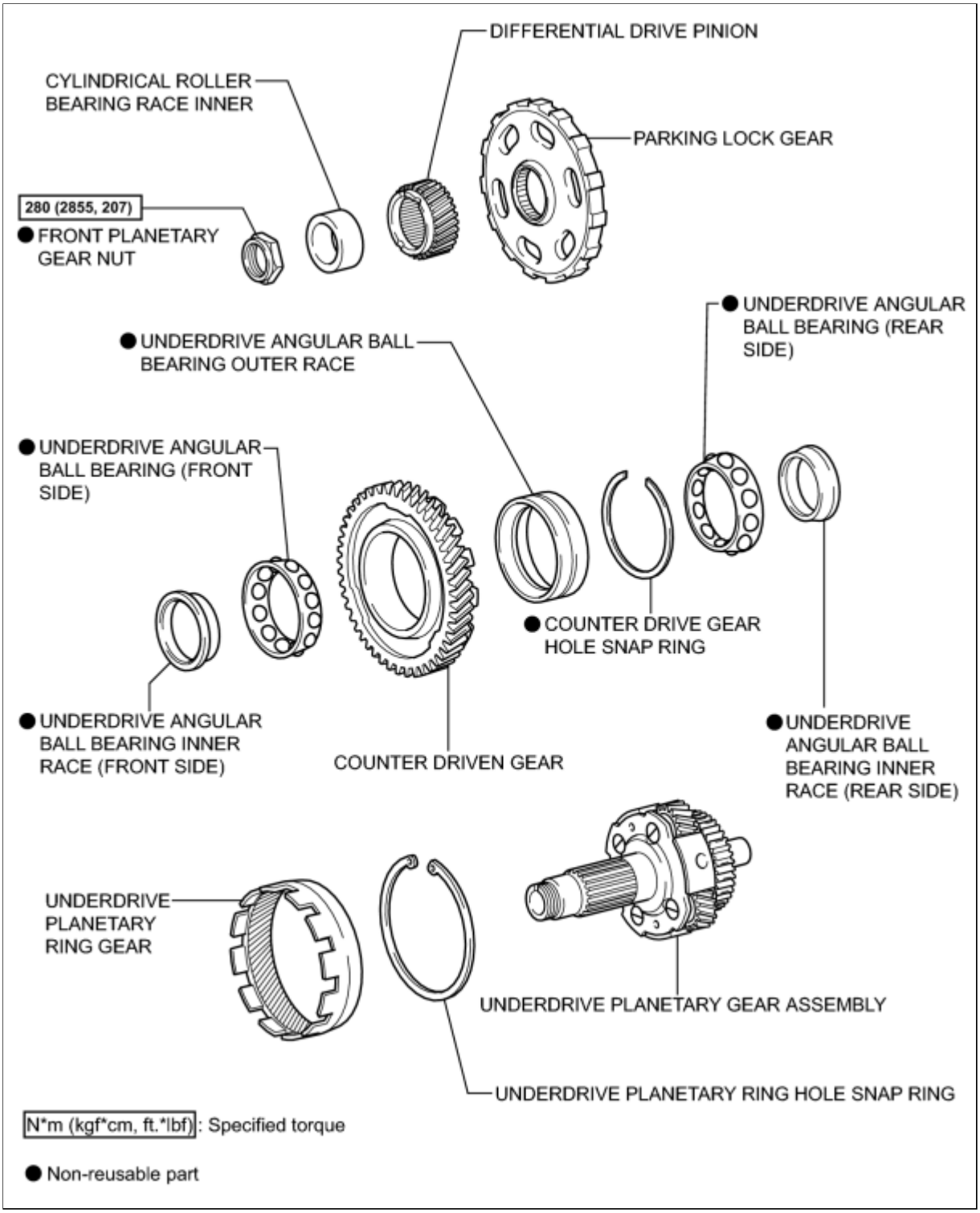

ILLUSTRATION

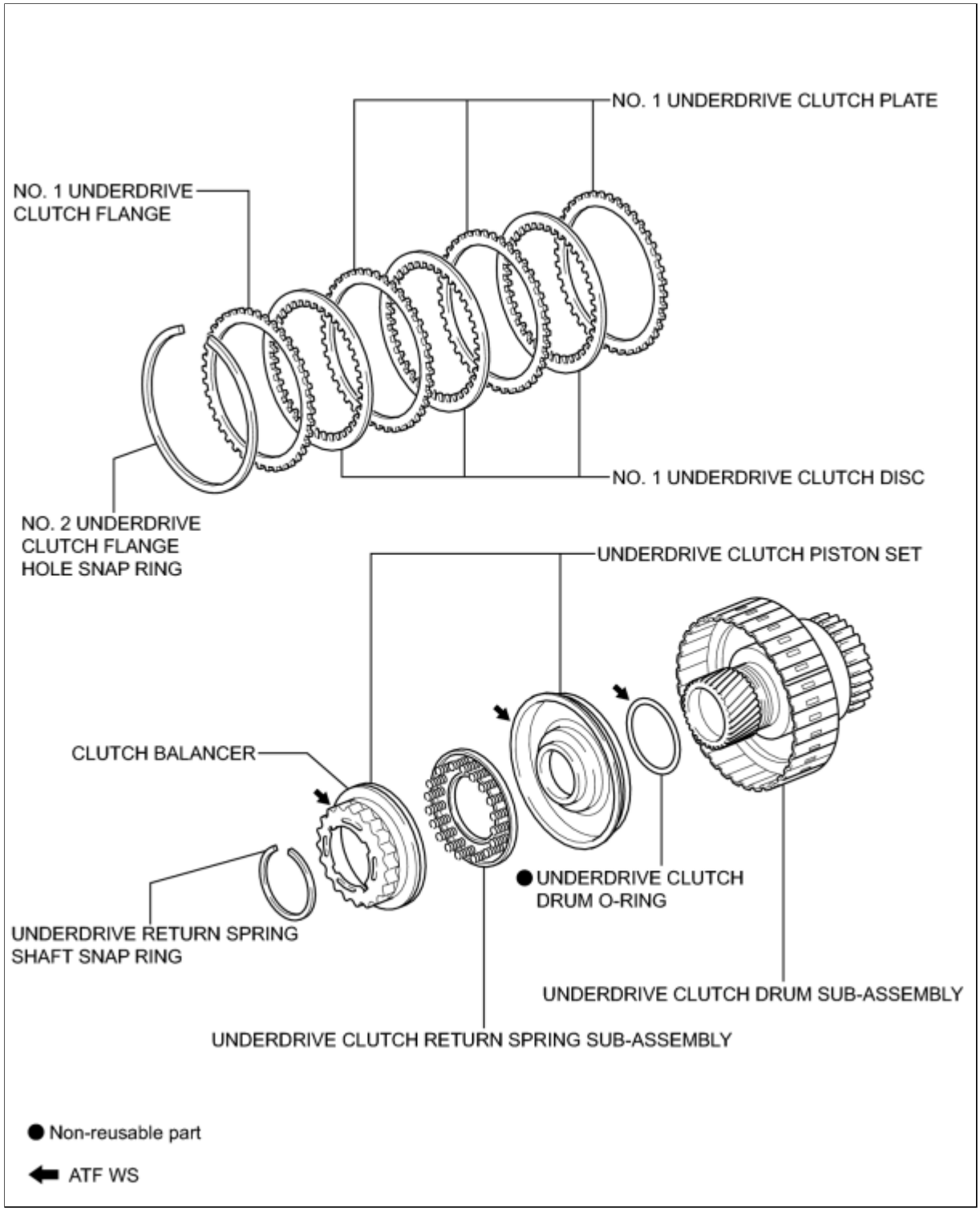
NO. 1 UNDERDRIVE CLUTCH PLATE
NO. 1 UNDERDRIVE CLUTCH FLANGE
NO. 1 UNDERDRIVE CLUTCH DISC
NO. 2 UNDERDRIVE CLUTCH FLANGE HOLE SNAP RING
UNDERDRIVE CLUTCH PISTON SET
CLUTCH BALANCER
UNDERDRIVE CLUTCH DRUM O-RING
UNDERDRIVE RETURN SPRING SHAFT SNAP RING
UNDERDRIVE CLUTCH DRUM SUB-ASSEMBLY
UNDERDRIVE CLUTCH RETURN SPRING SUB-ASSEMBLY
● Non-reusable part
ATF WS

Last Modified: 3-10-2010	6.4 A	**From:** 200901
Model Year: 2010	**Model:** Corolla	**Doc ID:** RM000000192I018X
Title: U341E AUTOMATIC TRANSMISSION / TRANSAXLE: AUTOMATIC TRANSAXLE UNIT: REASSEMBLY (2010 Corolla)		

REASSEMBLY

1. BEARING POSITION

(a) Check each bearing position and installation direction.

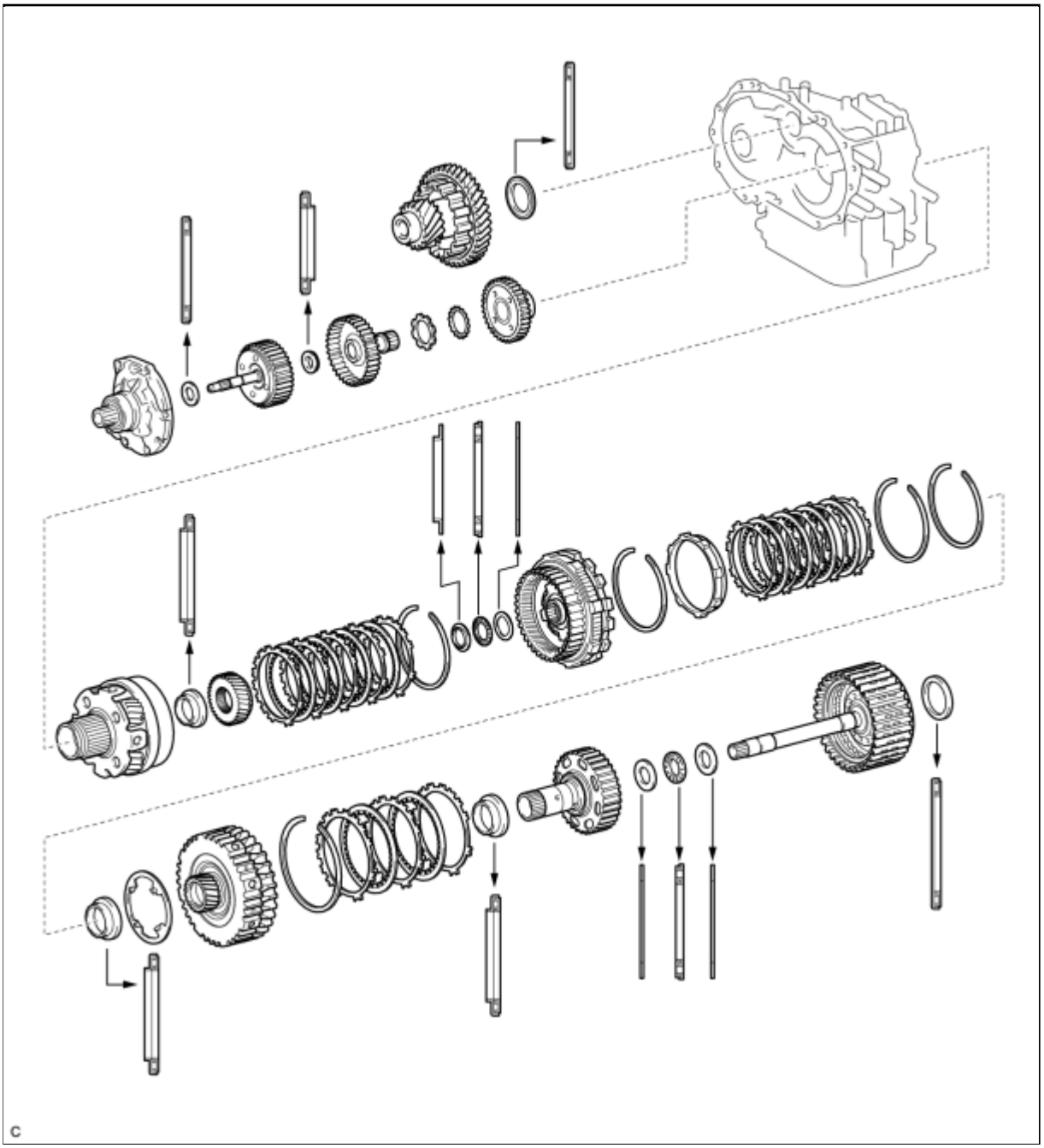

2. INSPECT DIFFERENTIAL CASE TAPERED ROLLER BEARING PRELOAD

(a) Coat the front differential case and bearing with ATF and install them to the transaxle case.

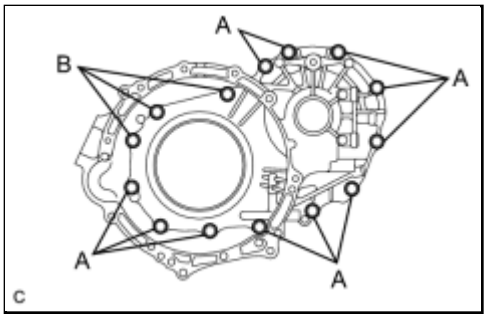

(b) Install the transaxle housing with the 14 bolts.

Bolt A - Torque: 29 N·m (296 kgf·cm, 21ft·lbf)
Bolt B - Torque: 22 N·m (224 kgf·cm, 16ft·lbf)

(c) Using SST and a small torque wrench, measure the preload of the differential gear.

Preload:

BEARING	STANDARD
New	0.98 to 1.57 N*m (10.0 to 16.0 kgf*cm, 8.7 to 13.9 in.*lbf)
Used	0.49 to 0.78 N*m (5.0 to 8.0 kgf*cm, 4.3 to 6.9 in.*lbf)

If the preload is not within the specifications, remove the differential from the transaxle case.

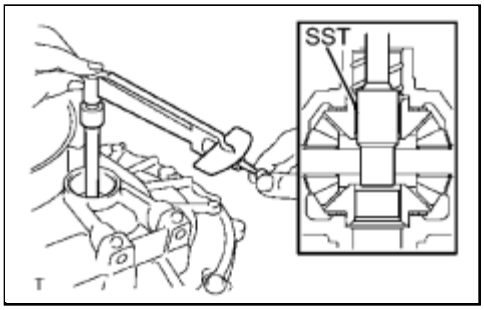

Select a new transaxle case side adjusting shim in accordance with the following table.

Adjusting Shim Thickness:

MARK	THICKNESS (MM (IN.))	MARK	THICKNESS (MM (IN.))
01	1.90 (0.0748)	11	2.40 (0.0945)
02	1.95 (0.0768)	12	2.45 (0.0965)
03	2.00 (0.0787)	13	2.50 (0.0984)
04	2.05 (0.0807)	14	2.55 (0.1004)
05	2.10 (0.0827)	15	2.60 (0.1024)
06	2.15 (0.0846)	16	2.65 (0.1043)
07	2.20 (0.0866)	17	2.70 (0.1063)
08	2.25 (0.0885)	18	2.75 (0.1083)
09	2.30 (0.0906)	19	2.80 (0.1102)
10	2.35 (0.0925)		

3. INSTALL NO. 1 TRANSAXLE CASE OIL SEAL

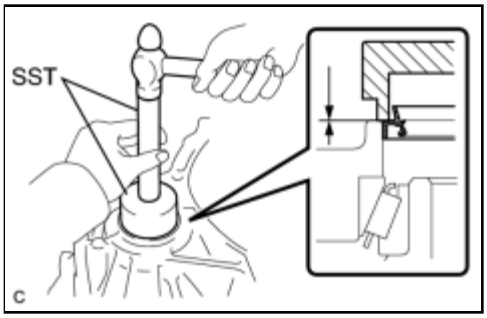

(a) Coat the lip of a new No. 1 transaxle case oil seal with MP grease.

(b) Using SST and a hammer, drive in the No. 1 transaxle case oil seal.

SST: 09387-00010

SST: 09950-70010

09951-07100

Oil seal driven in depth:

-0.5 to 0.5 mm (-0.0197 to 0.0197 in.)

4. INSTALL NO. 2 TRANSAXLE CASE OIL SEAL

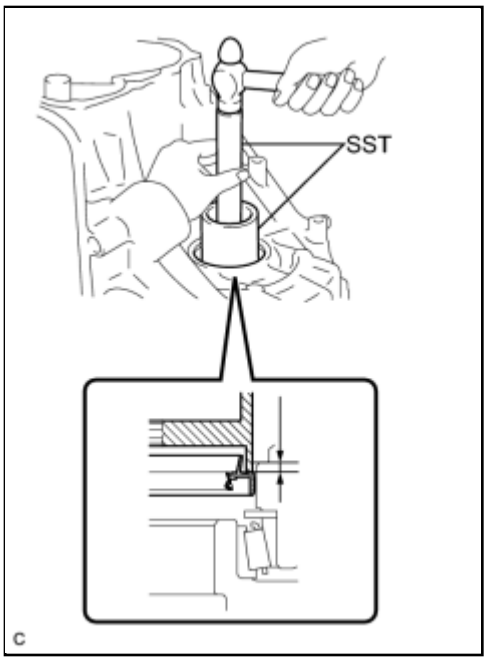

(a) Coat the lip of a new No. 2 transaxle case oil seal with MP grease.

(b) Using SST and a hammer, drive in the No. 2 transaxle case oil seal.

SST: 09726-27012

09726-02041

SST: 09950-70010

09951-07150

Oil seal driven in depth:

2.2 to 3.2 mm (0.0866 to 0.126 in.)

5. INSTALL FRONT DRIVE PINION REAR TAPERED ROLLER BEARING

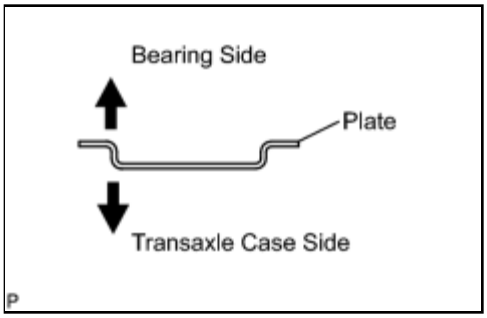

(a) Install the No. 1 transaxle case plate onto the transaxle case.

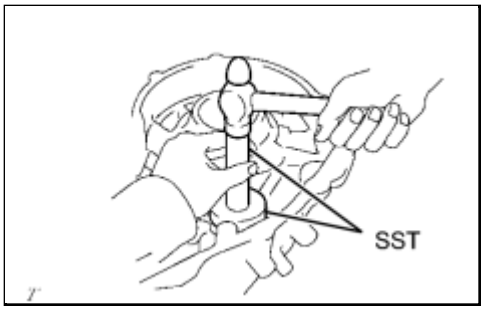

(b) Using SST and a hammer, install a new front drive pinion rear tapered roller bearing to the transaxle case.

SST: 09950-60010

09951-00610

SST: 09950-70010

09951-07150

6. INSTALL FRONT DRIVE PINION FRONT TAPERED ROLLER BEARING

(a) Install the thrust bearing to the transaxle housing.

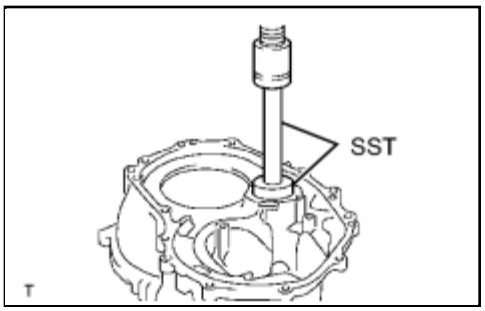

(b) Using SST and a press, install a new front drive pinion front tapered roller bearing to the transaxle housing.

SST: 09950-60010

09951-00650

SST: 09950-70010

09951-07150

7. INSTALL DIFFERENTIAL GEAR LUBE APPLY TUBE

(a) Install the differential gear lube apply tube to the transaxle housing.

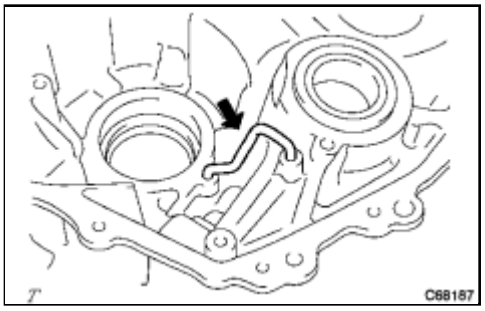

8. INSTALL BEARING LOCK PLATE

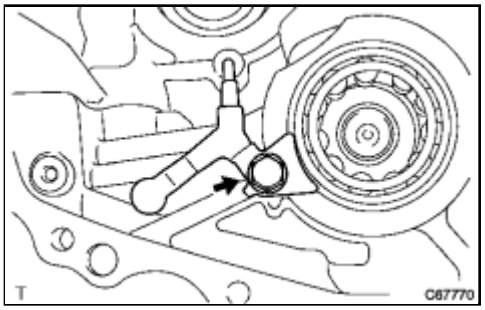

(a) Install the bearing lock plate to the transaxle housing with the bolt.

Torque: 11 N·m (112 kgf·cm, 8ft·lbf)

9. INSTALL COUNTER DRIVE GEAR HOLE SNAP RING

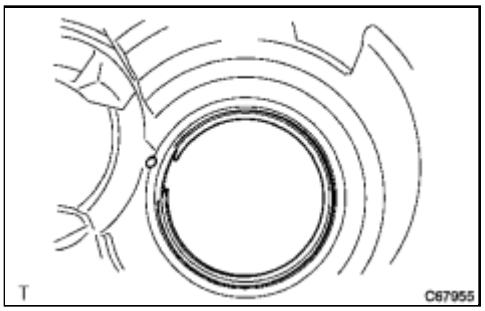

(a) Using a screwdriver, install the counter drive gear hole snap ring to the transaxle case.

10. INSTALL COUNTER DRIVE GEAR BEARING LH

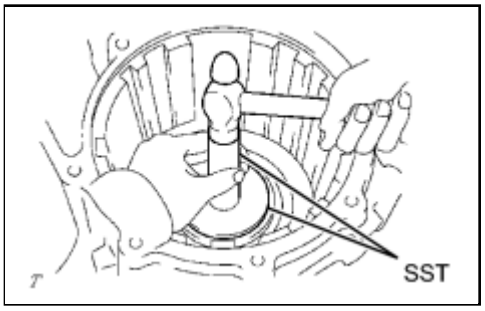

(a) Using SST and a hammer, install the counter drive gear bearing outer race LH to the transaxle case.

SST: 09950-60020

09951-00890

SST: 09950-70010

09951-07150

(b) Install the counter drive gear bearing inner race LH and angular ball to the transaxle case.

11. INSTALL COUNTER DRIVE GEAR BEARING RH

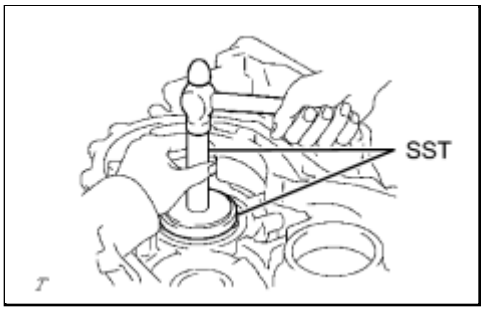

(a) Using SST and a hammer, install the counter drive gear bearing outer race RH to the transaxle case.

SST: 09950-60020

09951-00890

SST: 09950-70010

09951-07150

(b) Install the counter drive gear bearing RH to the transaxle case.

12. INSTALL MANUAL VALVE LEVER SHAFT OIL SEAL

(a) Coat the lip of a new manual valve lever shaft oil seal with MP grease.

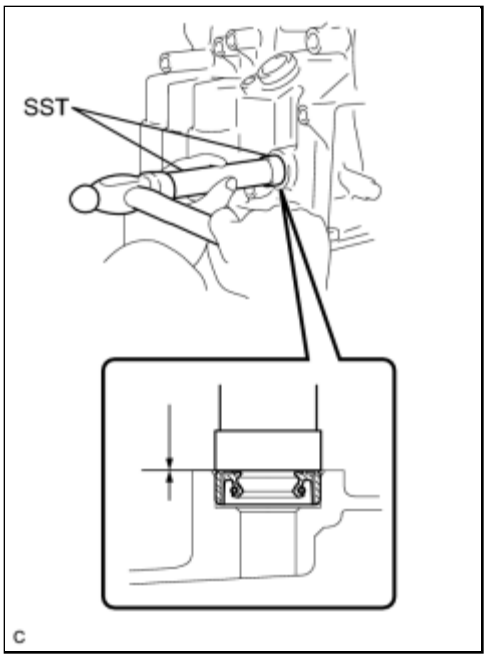

(b) Using SST and a hammer, install the new manual valve lever shaft oil seal.

SST: 09950-60010

09951-00220

SST: 09950-70010

09951-07100

Oil seal driven in depth:

-0.5 to 0.5 mm (-0.0197 to 0.0197 in.)

13. INSTALL DIFFERENTIAL DRIVE PINION

(a) Using SST and a press, install the differential drive pinion to the counter driven gear.

SST: 09950-60010

09951-00350

SST: 09950-70010

09951-07150

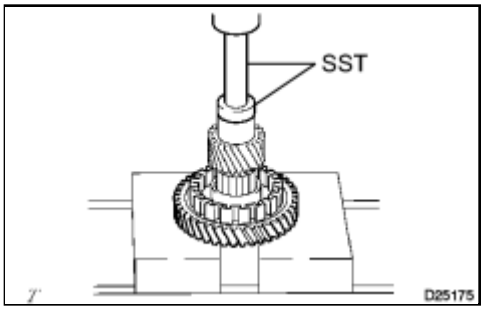

NOTICE:

When replacing the counter driven gear, replace the counter drive gear in the transaxle case as well.

Press in the differential drive pinion until it comes into contact with the counter driven gear.

14. INSTALL DIFFERENTIAL DRIVE PINION PLUG

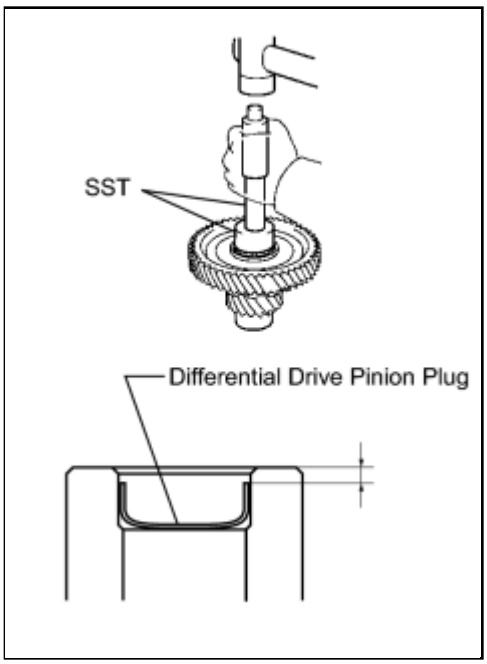

(a) Using SST and a plastic hammer, install a new differential drive pinion plug to the differential drive pinion.

SST: 09221-25026

09221-00071

Standard clearance:

2.5 to 3.5 mm (0.0984 to 0.137 in.)

15. INSTALL COUNTER DRIVEN GEAR

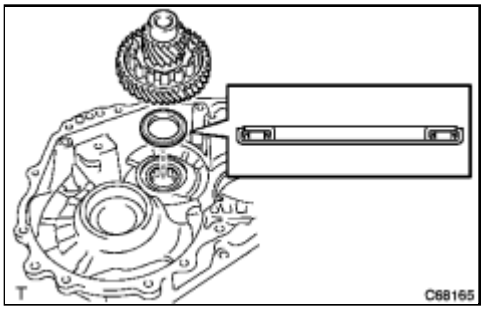

(a) Install the counter driven gear and drive pinion thrust bearing LH to the transaxle case.

16. INSTALL PARKING LOCK PAWL

(a) Coat the parking lock pawl shaft with ATF.

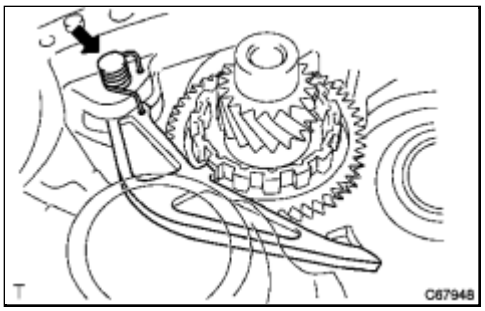

(b) Install the parking lock pawl, parking lock pawl shaft torsion spring and parking lock pawl shaft to the transaxle case.

NOTICE:

Check that the parking lock pawl moves smoothly.

17. INSTALL MANUAL VALVE LEVER SHAFT

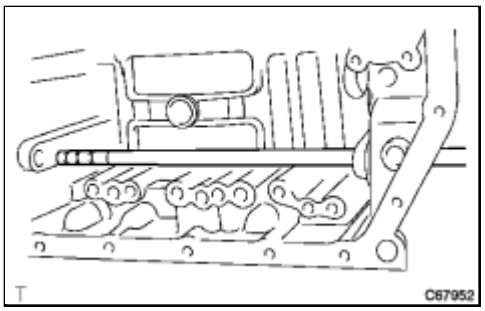

(a) Install the manual valve lever shaft to the transaxle case.

NOTICE:

Do not damage the oil seal lip.

18. INSTALL PARKING LOCK ROD SUB-ASSEMBLY

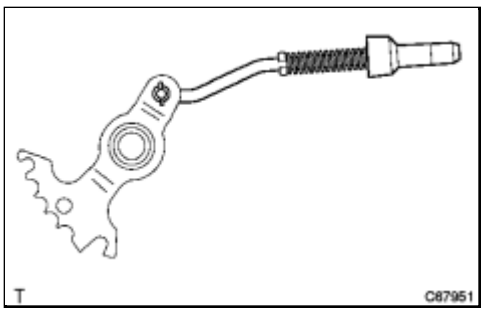

(a) Install the parking lock rod to the manual valve lever.

19. INSTALL MANUAL VALVE LEVER SUB-ASSEMBLY

(a) Coat the manual valve lever sub-assembly with ATF.

(b) Install the manual valve lever and a new manual valve lever spacer to the manual valve lever shaft.

(c) Using a pin punch and hammer, drive in the pin.

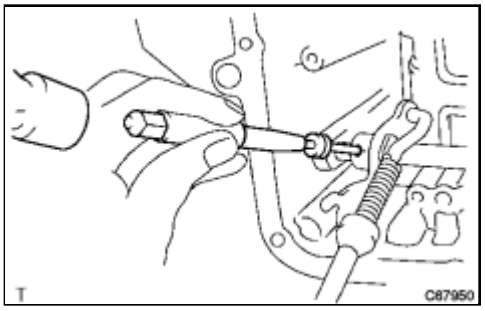

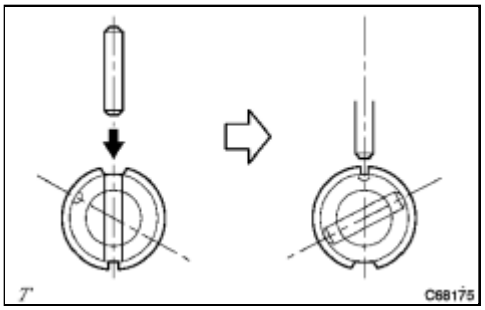

(d) Turn the spacer and lever shaft to align the small hole for locating the staking position mark on the lever shaft.

(e) Using a pin punch, stake the spacer through the small hole.

(f) Check that the spacer does not turn.

20. INSTALL MANUAL VALVE LEVER SHAFT RETAINER SPRING

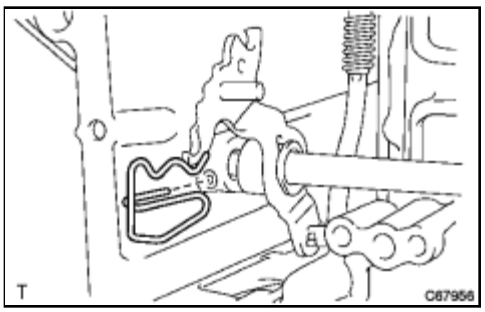

(a) Install the manual valve lever shaft retainer spring to the manual valve lever shaft.

21. INSTALL PARKING LOCK PAWL BRACKET

(a) Install the parking lock pawl bracket, parking lock rod and cam guide sleeve to the transaxle case with the 3 bolts.

Torque: 20 N·m (204 kgf·cm, 15ft·lbf)

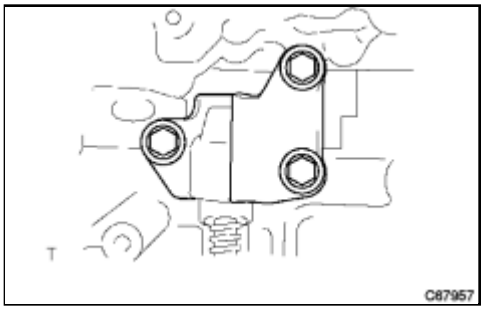

22. INSTALL COUNTER DRIVE GEAR

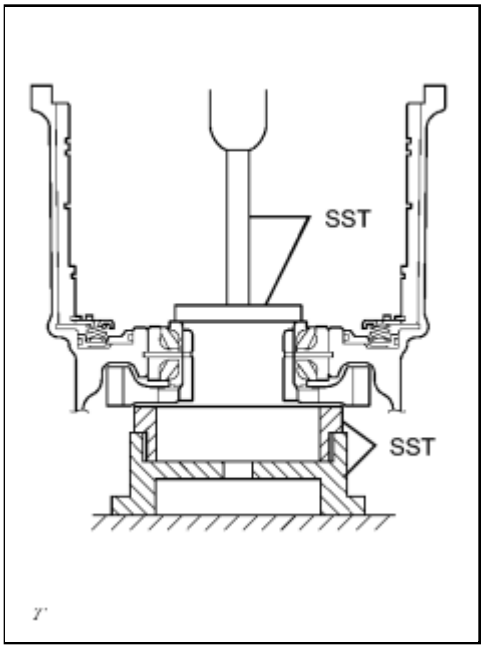

(a) Using SST and a press, install the counter drive gear to the transaxle case.

SST: 09223-15030
SST: 09527-17011
SST: 09950-60010
09951-00650
SST: 09950-70010
09951-07150

23. INSTALL PLANETARY GEAR ASSEMBLY

(a) Using SST and a press, install the planetary gear assembly to the transaxle case.

SST: 09950-60010
09951-00480
SST: 09223-15030
SST: 09527-17011
SST: 09950-70010
09951-07150

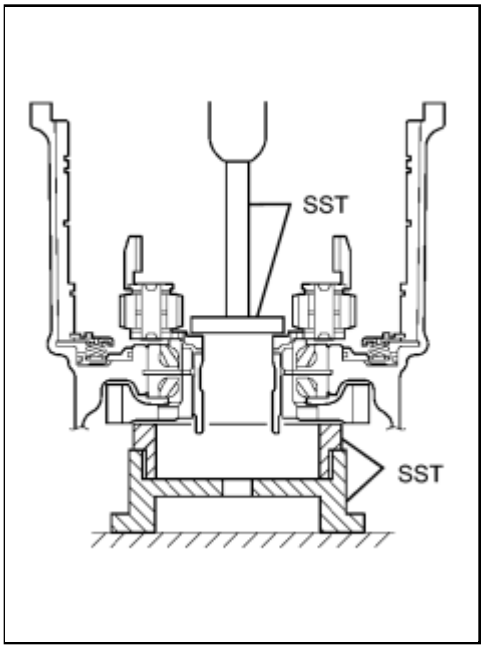

24. INSTALL COUNTER DRIVE GEAR NUT

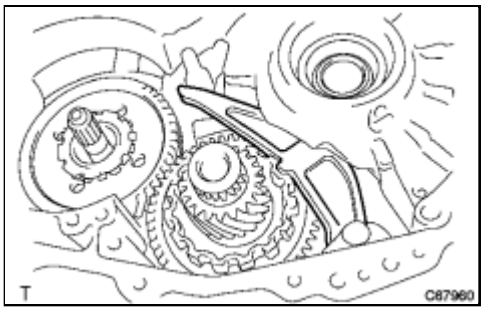

(a) Secure the counter driven gear with the parking lock pawl.

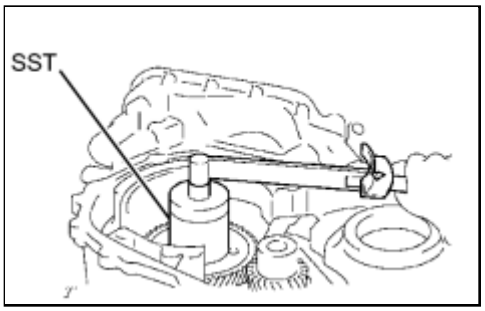

(b) Using SST, install a new lock washer and nut.

SST: 09387-00120

Torque: 280 N·m (2855 kgf·cm, 207ft·lbf)

(c) Using SST and a small torque wrench, measure the rotating torque while turning the counter drive gear at 60 turns per minute.

SST: 09387-00120

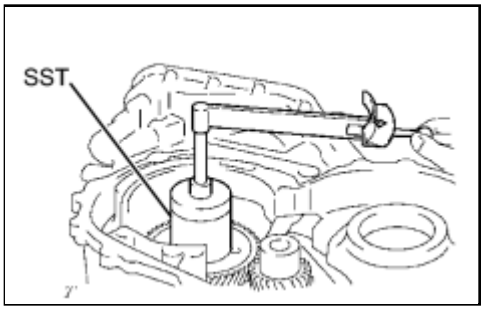

Rotating torque:
0.20 to 0.49 N*m (2.0 to 5.0 kgf*cm, 1.8 to 4.3 in.*lbf)

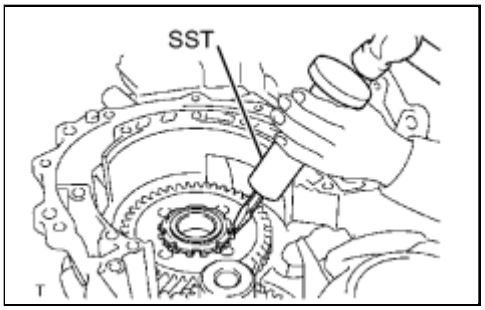

(d) Using SST and a hammer, stake the lock nut washer.

SST: 09930-00010

25. INSTALL NO. 2 1ST AND REVERSE BRAKE PISTON O-RING

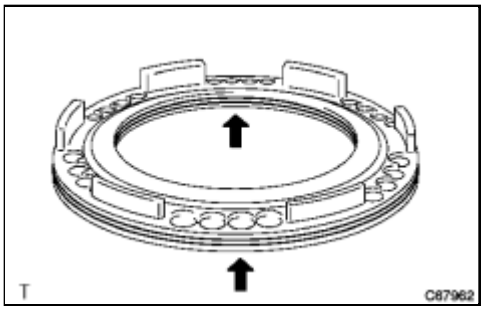

(a) Coat 2 new No. 2 1st and reverse brake piston O-rings with ATF, and install them to the No. 2 1st and reverse brake piston.

26. INSTALL NO. 2 1ST AND REVERSE BRAKE PISTON

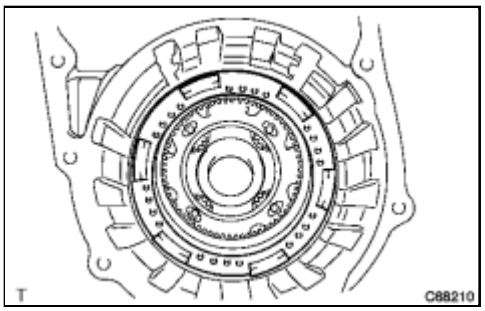

(a) Coat the No. 2 1st and reverse brake piston with ATF, and install it to the transaxle case.

NOTICE:

Do not damage the oil seal lip.

27. INSTALL 1ST AND REVERSE BRAKE RETURN SPRING SUB-ASSEMBLY

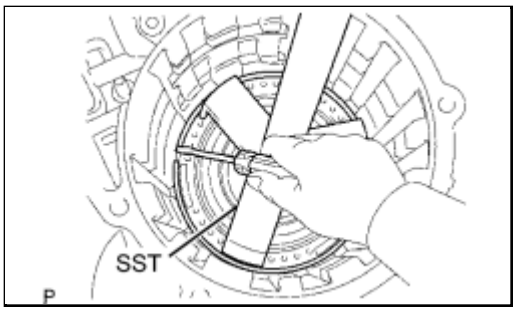

(a) Install the 1st and reverse brake return spring sub-assembly to the transaxle case.

(b) Using SST, a press and a screwdriver, install the snap ring.

SST: 09387-00070

28. INSTALL 1ST AND REVERSE BRAKE DISC

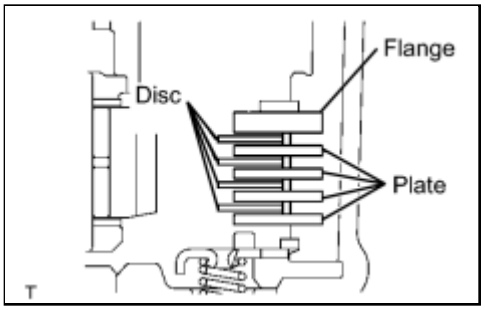

(a) Install the 4 plates, 4 discs and flange to the transaxle case.

(b) Using a screwdriver, install the snap ring.

29. INSPECT PACK CLEARANCE OF 1ST AND REVERSE BRAKE

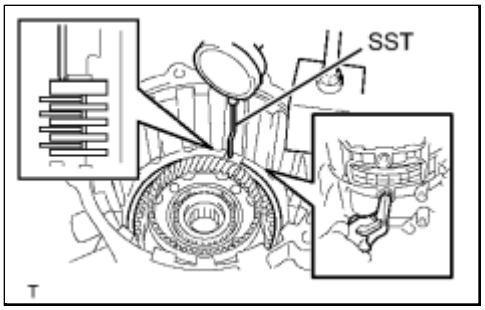

(a) Using SST and a dial indicator, measure the 1st and reverse brake clearance while pressing the discs and plates from the rear side.

SST: 09350-36010

09350-06110

Pack clearance:

0.81 to 1.20 mm (0.0318 to 0.0472 in.)

NOTICE:

If the clearance is not within the specified range, select a new brake flange.

HINT:

There are 4 different thicknesses of flanges available.

Flange Thickness:

MARK	THICKNESS (MM (IN.))	MARK	THICKNESS (MM (IN.))
-	3.4 (0.134)	2	3.8 (0.150)
1	3.6 (0.142)	3	4.0 (0.157)

(b) Check that the 1st and reverse brake piston moves when compressed air (392 kPa, 4.0 kgf/cm^2, 57 psi) is applied to the oil hole.

30. INSTALL FRONT PLANETARY SUN GEAR

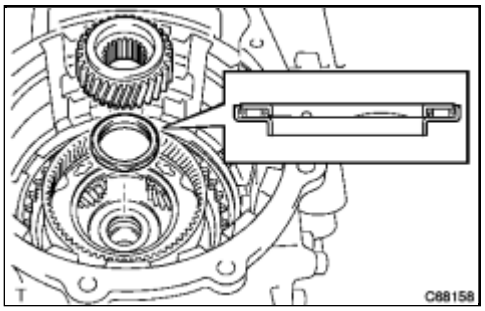

(a) Install the planetary sun gear and needle roller bearing to the planetary gear assembly.

31. INSTALL 2ND BRAKE CYLINDER O-RING

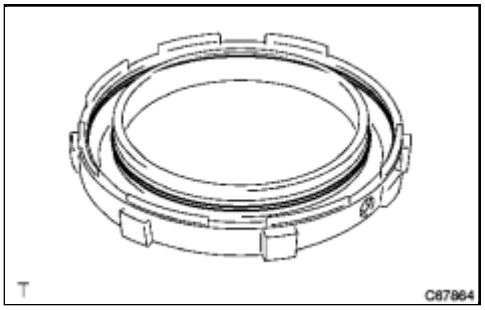

(a) Coat 2 new 2nd brake cylinder O-rings with ATF, and install them into the 2nd brake cylinder.

NOTICE:
Do not damage the O-rings.

32. INSTALL 2ND BRAKE PISTON

(a) Coat the 2nd brake piston with ATF, and install it into the 2nd brake cylinder.

CAUTION:
Do not damage the O-rings when pressing the 2nd brake piston into the 2nd brake cylinder by hand.

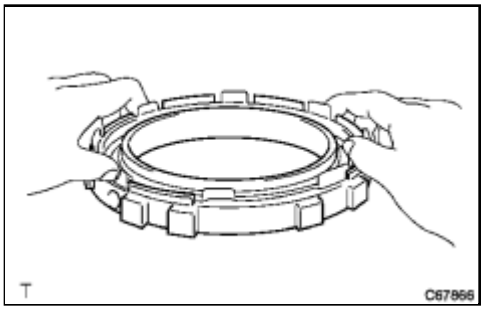

33. INSTALL 2ND BRAKE PISTON RETURN SPRING SUB-ASSEMBLY

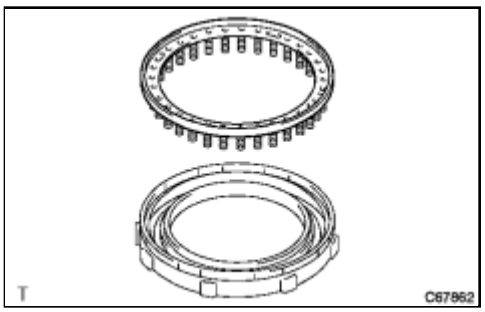

(a) Install the piston return spring.

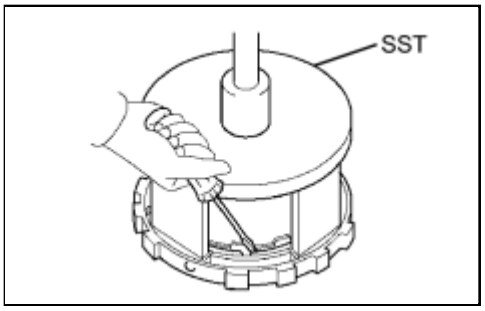

(b) Place SST on the piston return spring, and compress the piston return spring with a press.

SST: 09387-00060

(c) Using a screwdriver, install the snap ring.

NOTICE:

Make sure that the end gap of the snap ring is not aligned with the piston return spring claw.

34. INSTALL OUTER RACE RETAINER

(a) Install the outer race retainer to the No. 2 one-way clutch.

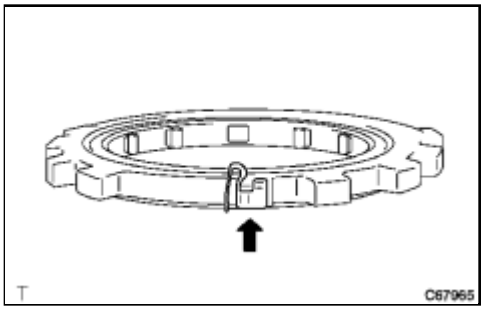

35. INSTALL NO. 2 ONE-WAY CLUTCH

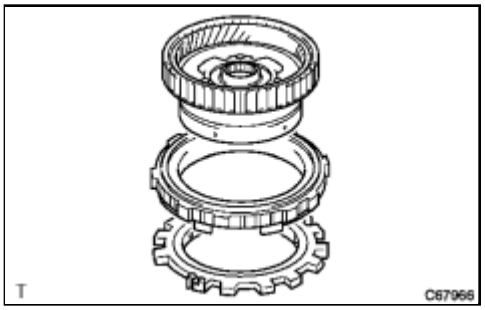

(a) Install the No. 2 one-way clutch and 2nd brake piston assembly to the rear planetary gear assembly.

36. INSTALL REAR PLANETARY GEAR THRUST NEEDLE ROLLER BEARING

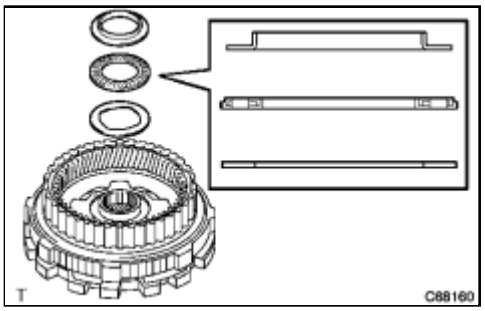

(a) Install the No. 2 thrust bearing race, the planetary gear thrust needle roller bearing and thrust bearing race to the rear planetary gear assembly.

37. INSTALL REAR PLANETARY GEAR ASSEMBLY

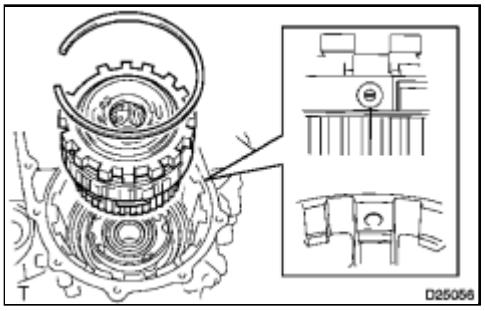

(a) Install the rear planetary gear assembly to the transaxle case.

(b) Using a screwdriver, install the snap ring.

38. INSPECT NO. 2 ONE-WAY CLUTCH

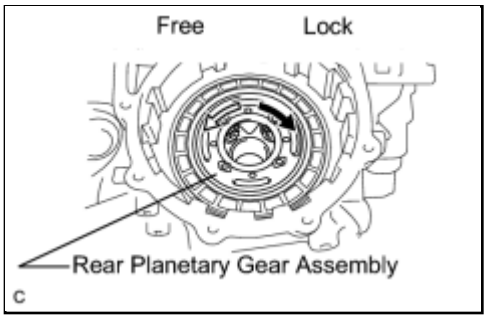

(a) Check that the rear planetary gear assembly turns freely counterclockwise and locks when turned clockwise.

39. INSTALL 2ND BRAKE PISTON SLEEVE

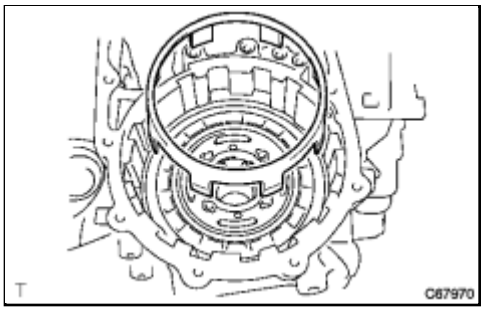

(a) Install the 2nd brake piston sleeve to the transaxle case.

40. INSTALL 2ND BRAKE DISC

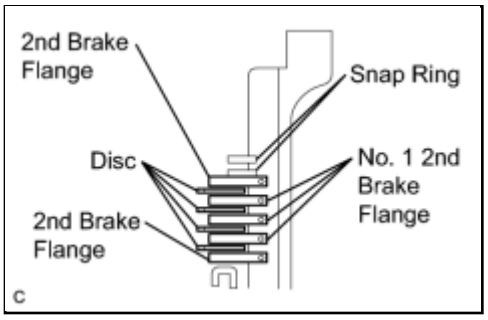

(a) Install the 4 discs, 3 No. 1 2nd brake flanges and 2 2nd brake flanges to the transaxle case.

(b) Using a screwdriver, install the 2 snap rings to the transaxle case.

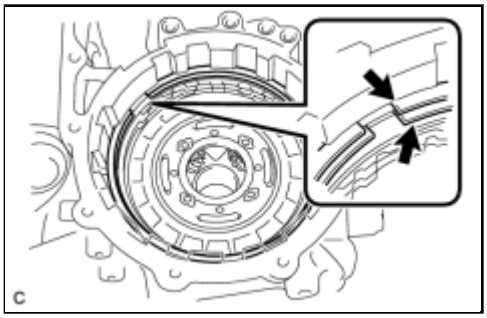

41. INSPECT PACK CLEARANCE OF 2ND BRAKE

(a) Using a dial indicator, measure the 2nd brake pack clearance while applying and releasing compressed air (392 to 785 kPa, 4.0 to 8.0 kgf/cm2, 57 to 114 psi).

Pack clearance:
0.85 to 1.24 mm (0.0334 to 0.0488 in.)

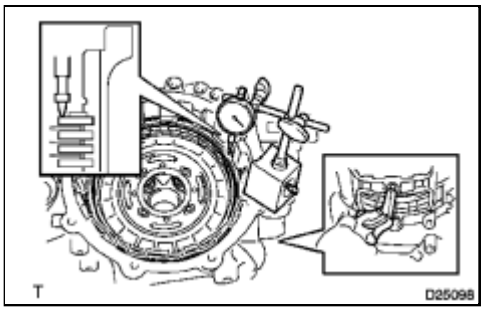

NOTICE:

If the clearance is not within the specified range, select a new brake flange.

HINT:

There are 4 different thicknesses of flanges available.

Flange Thickness:

MARK	THICKNESS (MM (IN.))	MARK	THICKNESS (MM (IN.))
-	3.0 (0.118)	2	3.4 (0.134)
1	3.2 (0.126)	3	3.6 (0.142)

42. INSTALL ONE-WAY CLUTCH ASSEMBLY

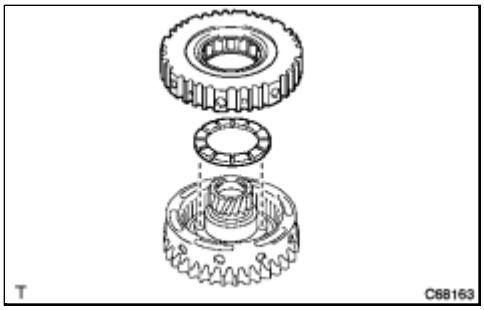

(a) Install the No. 2 thrust washer to the rear planetary gear assembly.

(b) Install the one-way clutch assembly to the rear planetary sun gear assembly.

43. INSPECT ONE-WAY CLUTCH ASSEMBLY

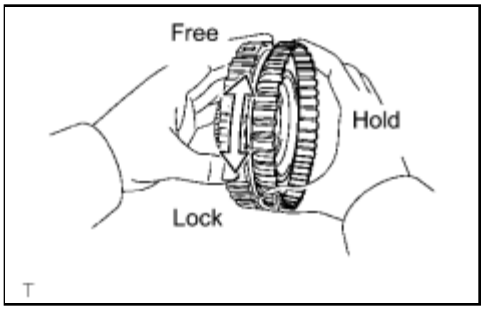

(a) Hold the rear planetary sun gear, turn the one-way clutch and check that the one-way clutch turns freely counterclockwise and locks when turned clockwise.

44. INSTALL REAR PLANETARY SUN GEAR THRUST NEEDLE ROLLER BEARING

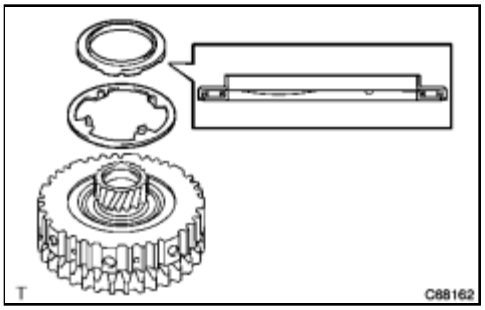

(a) Install the thrust needle roller bearing and the washer to the rear planetary sun gear.

45. INSTALL REAR PLANETARY SUN GEAR ASSEMBLY

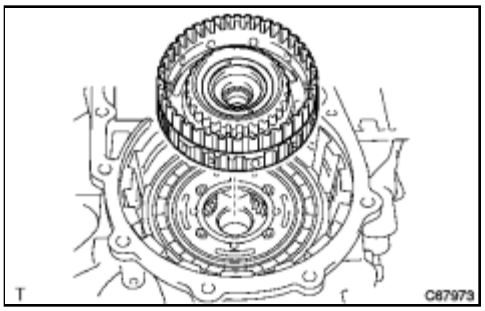

(a) Install the rear planetary sun gear assembly.

46. INSTALL REAR NO. 2 PLANETARY SUN GEAR THRUST NEEDLE ROLLER BEARING

(a) Install the rear No. 2 planetary sun gear thrust needle roller bearing to the rear planetary sun gear.

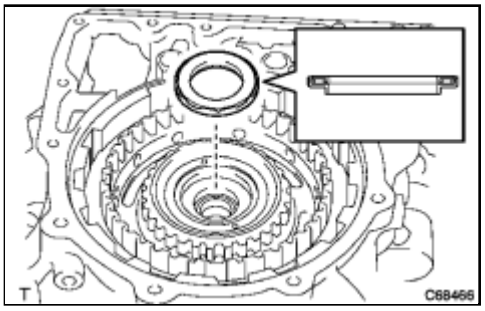

47. INSTALL DIRECT CLUTCH HUB

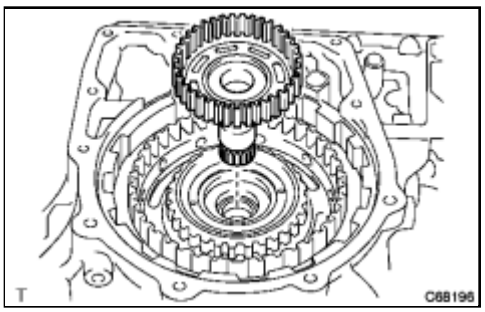

(a) Install the direct clutch hub.

48. INSTALL THRUST NEEDLE ROLLER BEARING

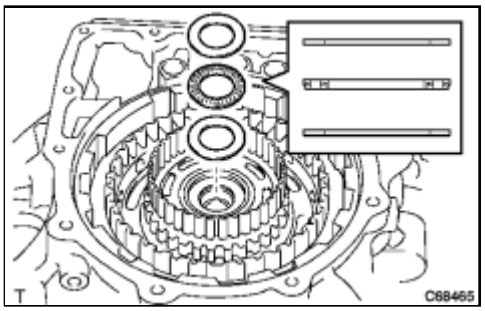

(a) Install the No. 3 thrust bearing race, the thrust needle roller bearing and the C-2 hub thrust bearing race to the direct clutch hub.

49. INSTALL 2ND COAST AND OVERDRIVE BRAKE DISC

(a) Measure the flange thickness. (Dimension A)

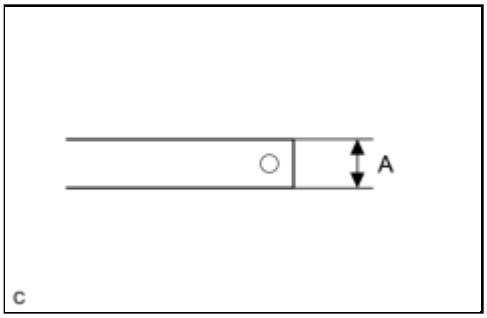

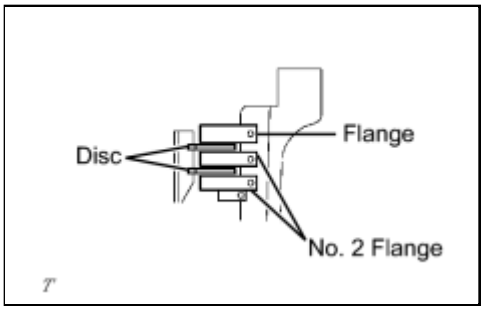

(b) Install the 2 discs, 2 No. 2 flanges and flange to the transaxle case.

50. INSTALL DIRECT CLUTCH DRUM O-RING

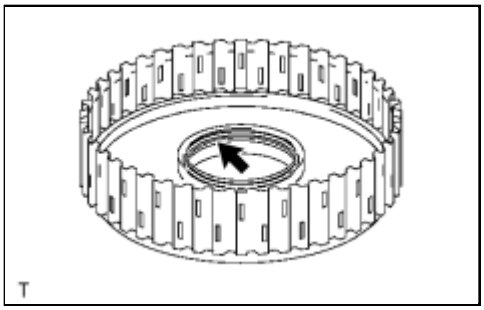

(a) Coat a new O-ring with ATF and install it to the direct clutch drum.

NOTICE:
Do not damage the O-ring.

51. INSTALL DIRECT CLUTCH PISTON O-RING

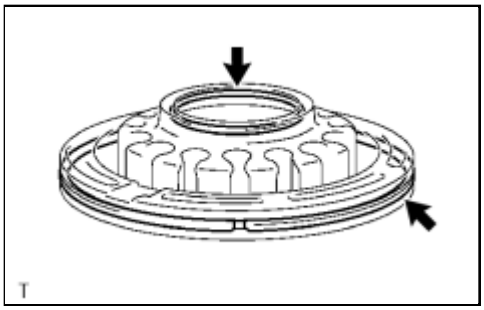

(a) Coat 2 new O-rings with ATF and install them to the direct clutch piston.

NOTICE:
Do not damage the O-rings.

52. INSTALL DIRECT CLUTCH DRUM SUB-ASSEMBLY

(a) Coat the direct clutch drum with ATF.

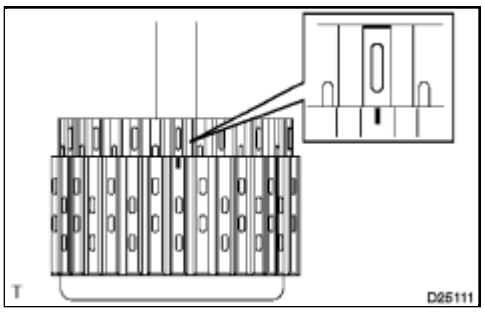

(b) Align a cutout on the intermediate shaft assembly with the matchmark on the direct clutch drum and install the direct clutch drum to the intermediate shaft assembly.

NOTICE:

Do not damage the O-ring or the lip of the clutch drum.

53. INSTALL DIRECT CLUTCH PISTON SUB-ASSEMBLY

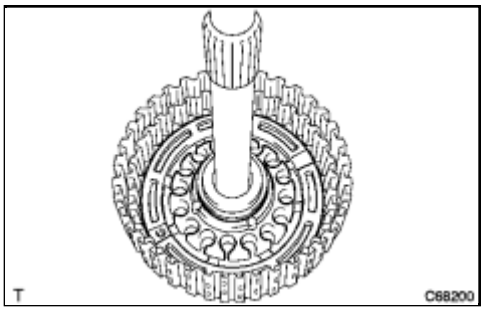

(a) Coat the direct clutch piston with ATF and install it to the intermediate shaft.

NOTICE:

Do not damage the O-ring or the direct clutch piston.

54. INSTALL DIRECT CLUTCH RETURN SPRING SUB-ASSEMBLY

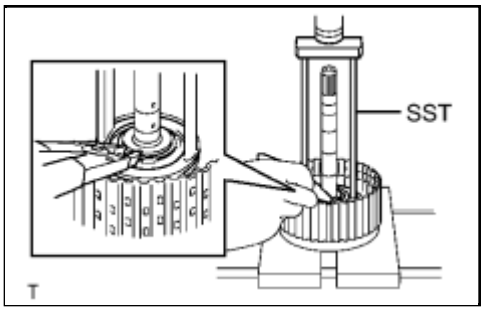

(a) Install the direct clutch return spring onto the direct clutch piston.

(b) Place SST on the piston return spring and compress the springs with a press.

SST: 09387-00020

(c) Using snap ring pliers, install the snap ring to the direct clutch drum.

NOTICE:

- Stop the press when the spring seat is lowered 1 to 2 mm (0.0393 to 0.0787 in.) from the snap ring groove to prevent the spring seat from being deformed.
- Do not expand the snap ring excessively.

55. INSTALL DIRECT CLUTCH DISC

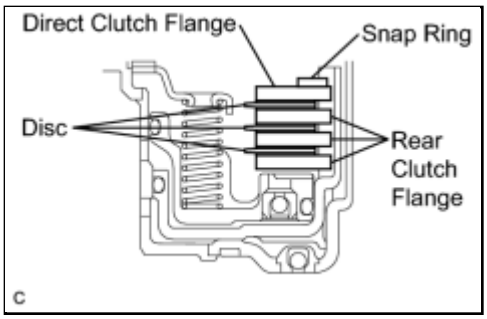

(a) Coat the 3 rear clutch flanges, 3 discs and direct clutch flange with ATF and install them to the intermediate shaft.

(b) Install the snap ring to the intermediate shaft.

56. INSTALL REVERSE CLUTCH DISC

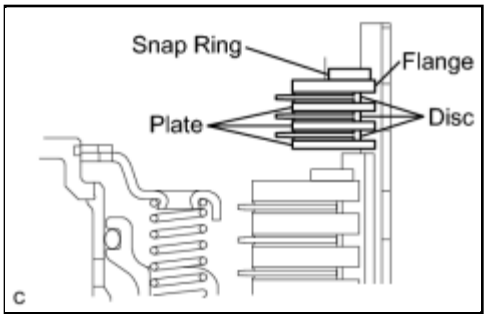

(a) Coat the 3 plates, 3 discs and flange with ATF, and install them to the intermediate shaft.

(b) Install the snap ring to the intermediate shaft.

57. INSPECT PACK CLEARANCE OF REVERSE CLUTCH

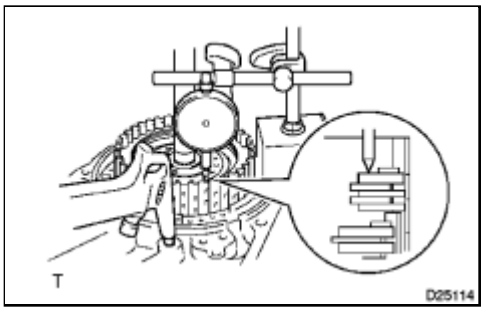

(a) Install the intermediate shaft and thrust needle roller bearing to the rear transaxle cover.

(b) Using a dial indicator, measure the reverse clutch pack clearance while applying and releasing compressed air (392 kPa, 4.0 kgf/cm^2, 57 psi).

Pack clearance:
0.62 to 1.16 mm (0.0244 to 0.0456 in.)

NOTICE:

If the clearance is not within the specified range, select a new clutch flange.

HINT:

There are 4 different thicknesses of flanges available.

Flange Thickness:

NO.	THICKNESS (MM (IN.))	NO.	THICKNESS (MM (IN.))
-	3.0 (0.118)	2	3.4 (0.134)
1	3.2 (0.126)	3	3.6 (0.142)

58. INSPECT PACK CLEARANCE OF DIRECT CLUTCH

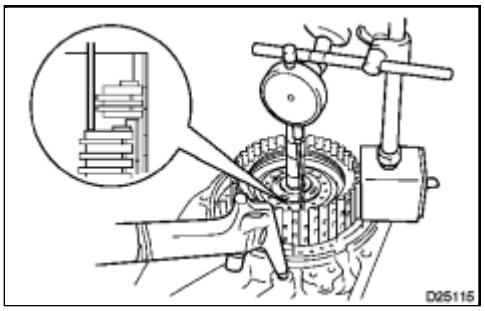

(a) Install the intermediate shaft and thrust needle roller bearing to the transaxle rear cover.

(b) Using a dial indicator and measuring terminal (SST), measure the forward clutch pack clearance while applying and releasing compressed air (392 kPa, 4.0 kgf/cm^2, 57 psi).

SST: 09350-36010

09350-06110

HINT:

The direct and reverse clutch will come out as compressed air is applied.

Therefore, while performing the check, press on the input shaft of the direct and reverse clutch using a press or the equivalent so that the pressure is not applied to the direct and reverse clutch.

Pack clearance:
0.62 to 1.02 mm (0.0244 to 0.0402 in.)

NOTICE:

If the clearance is not within the specified range, select a new clutch flange.

HINT:

There are 4 different flange thicknesses.

Flange Thickness:

NO.	THICKNESS (MM (IN.))	NO.	THICKNESS (MM (IN.))
-	3.0 (0.118)	2	3.4 (0.134)
1	3.2 (0.126)	3	3.6 (0.142)

59. INSTALL INTERMEDIATE SHAFT ASSEMBLY

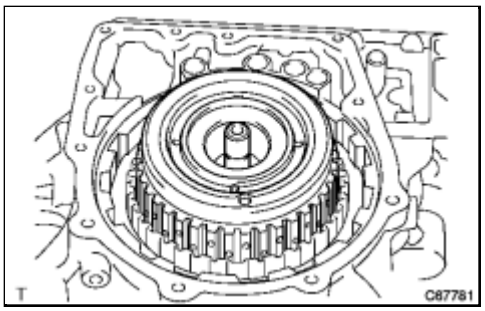

(a) Install the intermediate shaft assembly to the transaxle case.

60. INSPECT 2ND COAST AND OVERDRIVE BRAKE CLEARANCE

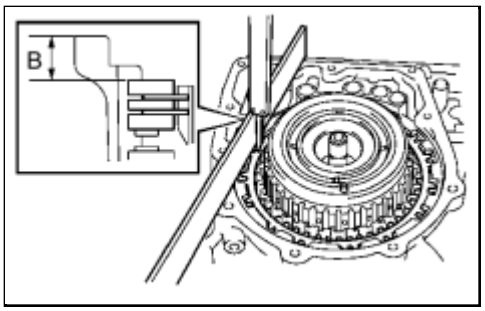

(a) As shown in the illustration, place a straightedge on the transaxle case and measure the distance between the 2nd coast and overdrive brake flange and the straightedge using a vernier caliper. (Dimension B)

(b) As shown in the illustration, place a straightedge on the overdrive brake piston and measure the distance between the transaxle rear cover and straightedge using a vernier caliper. (Dimension C)

Calculate the piston stroke value using the following formula.

Formula:

(Dimension A + Dimension B) - Dimension C

Pack clearance:

2.10 to 2.49 mm (0.0826 to 0.0980 in.)

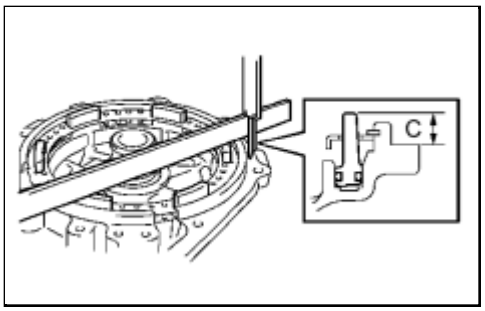

NOTICE:

If the clearance is not within the specified range, select a new brake flange.

HINT:

There are 4 different thicknesses of flanges available.

Flange Thickness:

MARK	THICKNESS (MM (IN.))	MARK	THICKNESS (MM (IN.))
4	4.0 (0.1575)	6	4.4 (0.1732)

5	4.2 (0.1654)	7	4.6 (0.1811)

61. INSTALL REAR CLUTCH DRUM THRUST NEEDLE ROLLER BEARING

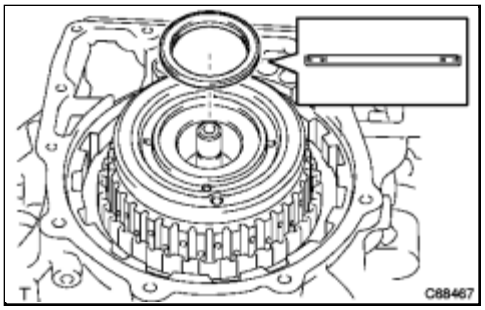

(a) Install the bearing to the intermediate shaft.

62. INSPECT INTERMEDIATE SHAFT ASSEMBLY

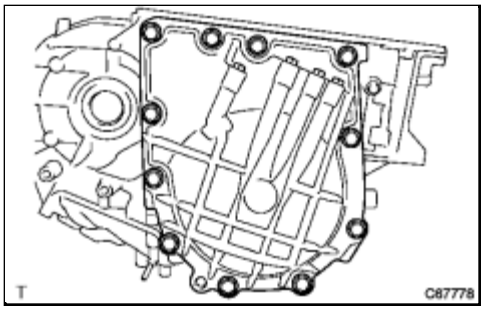

(a) Install the rear transaxle cover with the 11 bolts.

Torque: 25 N·m (255 kgf·cm, 18ft·lbf)

(b) Using a dial indicator, measure the intermediate shaft end play.

End play:
0.21 to 0.96 mm (0.00826 to 0.0377 in.)

If the end play is not as specified, select and replace the rear clutch drum thrust needle roller bearing.

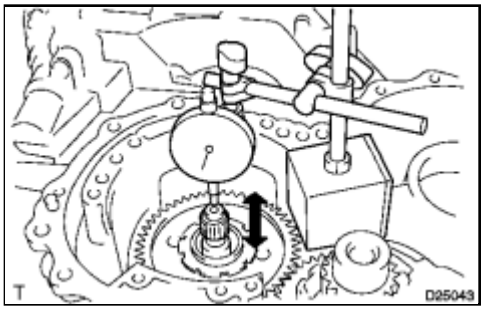

HINT:

There are 2 different thicknesses of trust needle roller bearings available.

COLOR	THICKNESS (MM (IN.))
Brown	0.785 (0.0309)

Black	1.1 (0.0433)

(c) Remove the 11 bolts and the rear transaxle cover.

63. INSTALL TRANSAXLE CASE GASKET

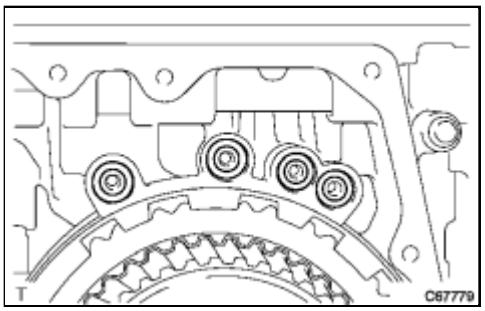

(a) Install 4 new gaskets to the transaxle case.

64. INSTALL REAR TRANSAXLE COVER NEEDLE ROLLER BEARING

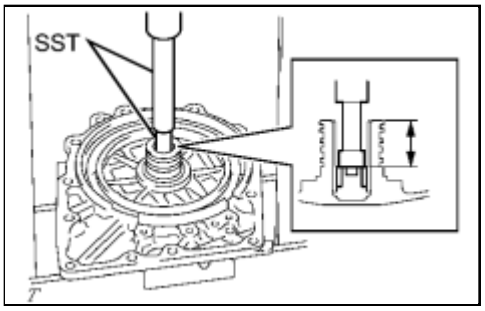

(a) Coat a new needle roller bearing with ATF.

(b) Using SST and a press, install the needle roller bearing into the rear transaxle cover.

SST: 09950-60010

09951-00190

09952-06010

SST: 09950-70010

09951-07100

Standard clearance:

25.1 mm (0.988 in.)

65. INSTALL CLUTCH DRUM OIL SEAL RING

(a) Compress the 3 oil seal rings from both sides to reduce dimension A.

Dimension A:

5.0 mm (0.197 in.)

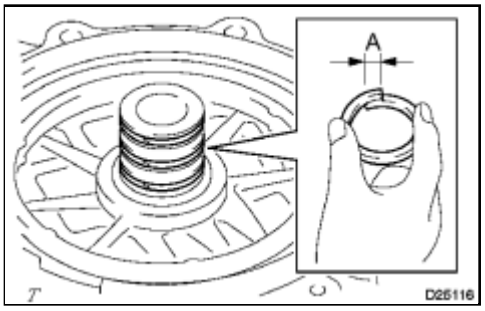

(b) Coat 3 oil seal rings with ATF and install them to the rear transaxle cover.

66. INSTALL 2ND COAST AND OVERDRIVE O-RING

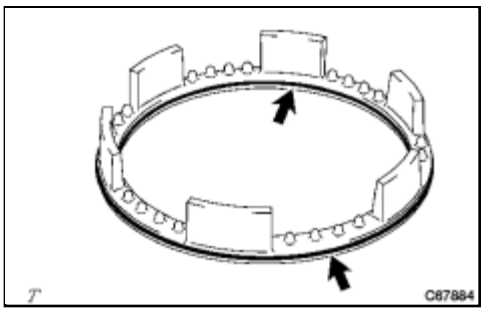

(a) Coat 2 new O-rings with ATF and install them to the 2nd coast and overdrive brake piston.

NOTICE:

Do not damage the O-rings.

67. INSTALL 2ND COAST AND OVERDRIVE BRAKE PISTON

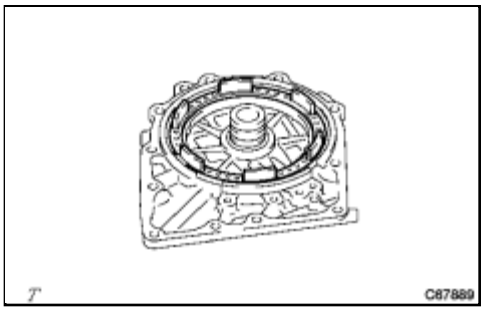

(a) Coat the piston with ATF and install it to the rear transaxle cover.

NOTICE:

Do not damage the O-rings.

68. INSTALL OVERDRIVE BRAKE RETURN SPRING SUB-ASSEMBLY

(a) Using SST and a press, install the overdrive brake return spring and snap ring to the rear transaxle cover.

SST: 09387-00070

NOTICE:

- Stop the press when the spring seat is lowered 1 to 2 mm (0.0393 to 0.0787 in.) from the snap ring groove to prevent the spring seat from being deformed.

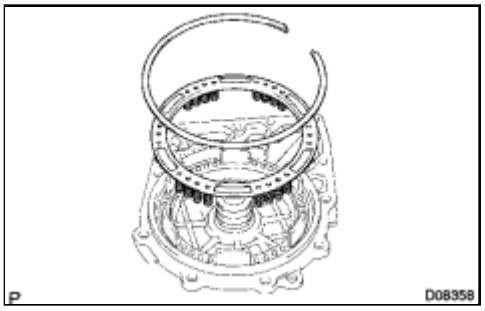

- Do not expand the snap ring excessively.

69. INSTALL REAR TRANSAXLE COVER PLUG

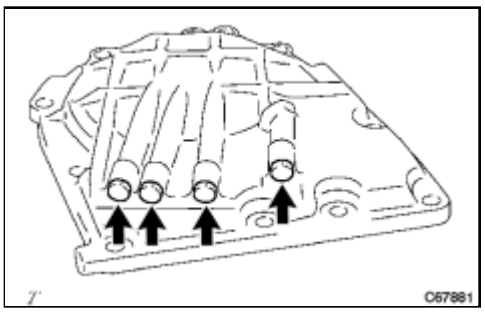

(a) Coat 4 new O-rings with ATF, and install them to the 4 rear transaxle cover plugs.

(b) Install the 4 rear transaxle cover plugs to the rear transaxle cover.

Torque: 7.4 N·m (76 kgf·cm, 66in·lbf)

NOTICE:

Do not damage the O-rings.

70. INSTALL REAR TRANSAXLE COVER ASSEMBLY

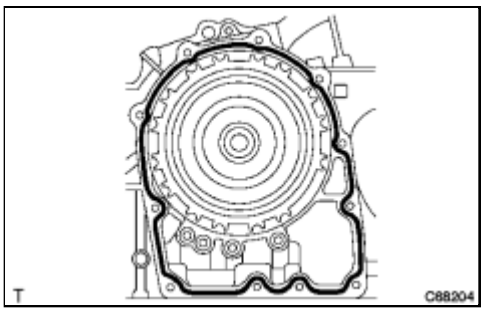

(a) Apply seal packing to the transaxle case.

Seal packing:
Toyota Genuine Seal Packing 1281, Three Bond 1281 or equivalent

(b) Install the rear transaxle cover with the 11 bolts.

Torque: 25 N·m (255 kgf·cm, 18ft·lbf)

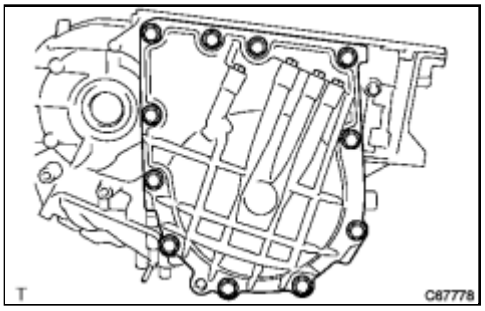

71. INSTALL FORWARD CLUTCH HUB SUB-ASSEMBLY

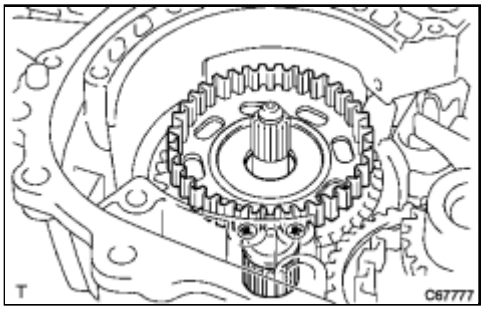

(a) Install the forward clutch hub sub-assembly onto the transaxle case.

72. INSTALL FORWARD CLUTCH HUB THRUST NEEDLE ROLLER BEARING

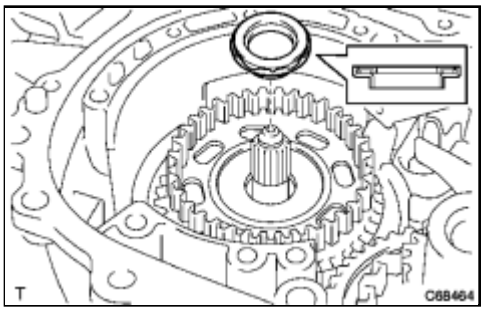

(a) Install the bearing to the forward clutch hub.

73. INSTALL INPUT SHAFT OIL SEAL RING

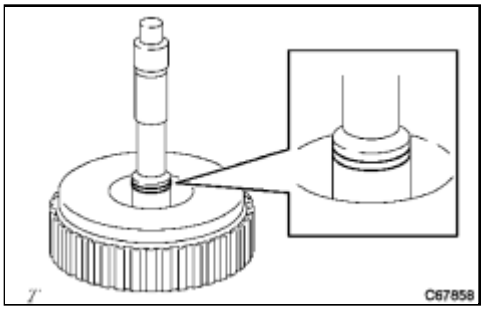

(a) Coat a new input shaft oil seal ring with ATF, and install it to the input shaft.

74. INSTALL FORWARD CLUTCH PISTON O-RING

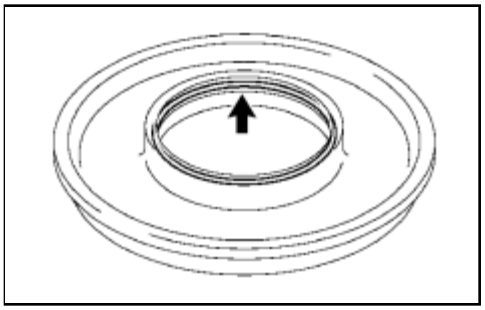

(a) Coat a new clutch piston O-ring with ATF, and install it to the forward clutch piston.

75. INSTALL FORWARD CLUTCH PISTON

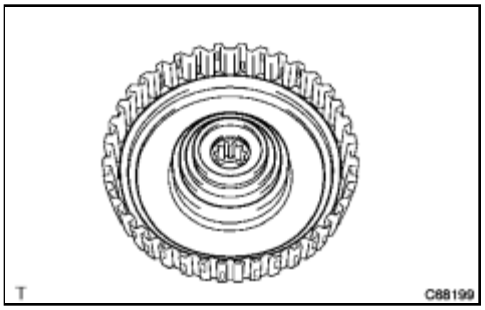

(a) Install the forward clutch piston to the input shaft.

NOTICE:

Do not damage the O-ring.

76. INSTALL FORWARD CLUTCH RETURN SPRING SUB-ASSEMBLY

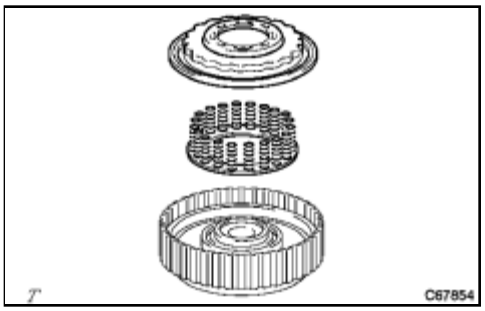

(a) Install the return spring and clutch balancer to the input shaft.

(b) Using SST, a press and snap ring pliers, install the snap ring to the input shaft.

SST: 09320-89010

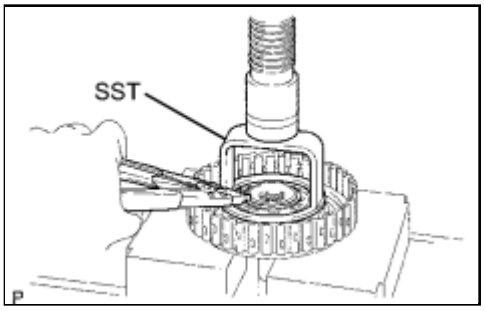

77. INSTALL FRONT CLUTCH DISC

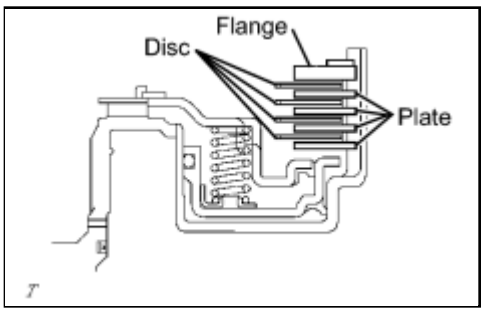

(a) Install the 4 plates, 4 discs and flange.

(b) Using a screwdriver, install the snap ring to the input shaft.

78. INSPECT PACK CLEARANCE OF FORWARD CLUTCH

(a) Using a dial indicator, measure the pack clearance while applying and releasing compressed air (392 kPa, 4.0 kgf/cm2, 57 psi).

Pack clearance:
1.41 to 1.80 mm (0.0555 to 0.0708 in.)

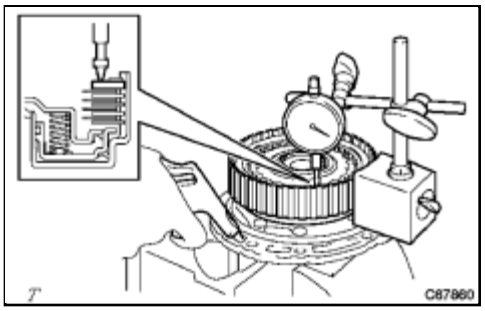

NOTICE:

If the clearance is not within the specified range, install a new brake flange.

HINT:

There are 4 different thicknesses of flanges available.

Flange Thickness:

NO.	THICKNESS (MM (IN.))	NO.	THICKNESS (MM (IN.))
-	3.0 (0.118)	2	3.4 (0.134)
1	3.2 (0.126)	3	3.6 (0.142)

79. INSTALL STATOR SHAFT THRUST NEEDLE ROLLER BEARING

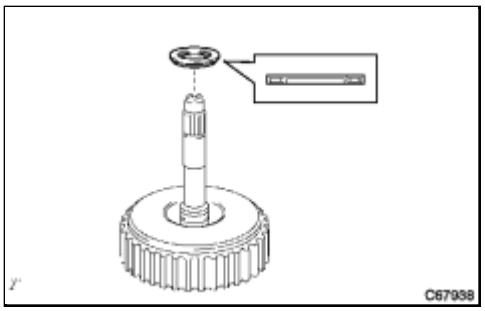

(a) Install the bearing to the input shaft assembly.

80. INSTALL INPUT SHAFT ASSEMBLY

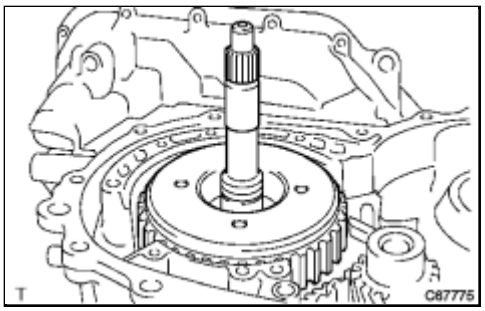

(a) Install the input shaft assembly to the transaxle case.

81. INSTALL OVERDRIVE BRAKE GASKET

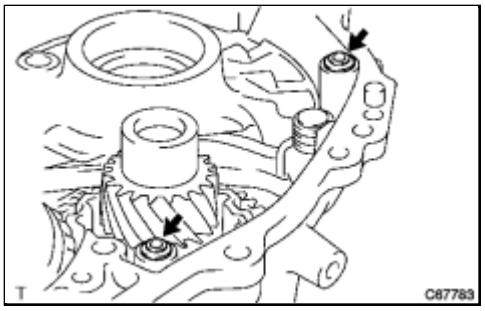

(a) Install 2 new gaskets to the transaxle case.

82. INSTALL DIFFERENTIAL GEAR ASSEMBLY

(a) Install the differential gear assembly to the transaxle case.

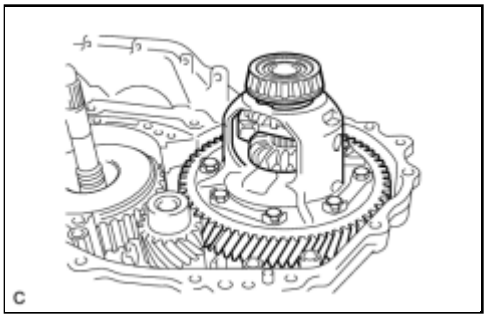

83. INSTALL OIL PUMP ASSEMBLY

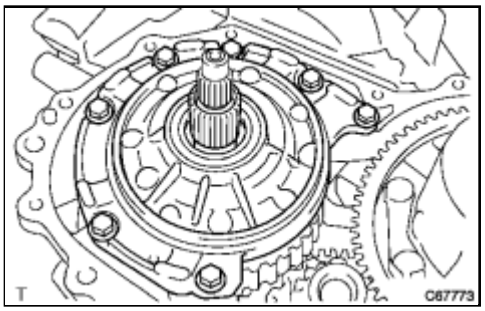

(a) Install the oil pump with the 7 bolts.

Torque: 22 N·m (224 kgf·cm, 16ft·lbf)

84. INSPECT INPUT SHAFT ASSEMBLY

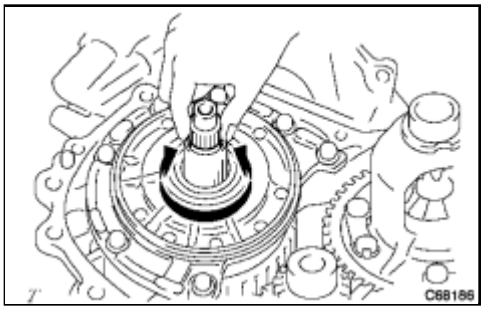

(a) Make sure that the input shaft turns smoothly.

85. INSPECT INPUT SHAFT END PLAY

(a) Measure the end play in the axial direction.

End play:
0.38 to 1.29 mm (0.0149 to 0.0507 in.)

If the end play is not as specified, replace the forward clutch hub thrust needle roller bearing and the stator shaft thrust needle bearing.

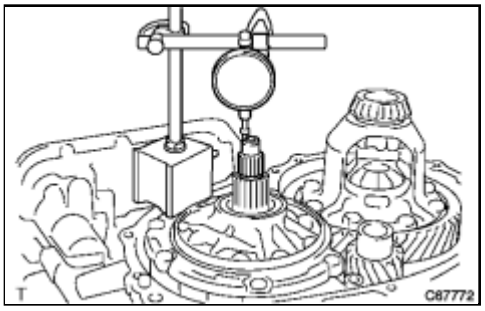

86. INSTALL TRANSAXLE HOUSING

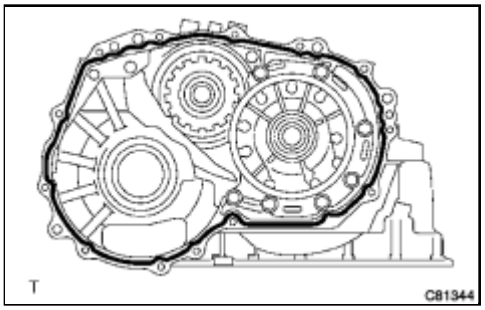

(a) Apply seal packing to the transaxle case.

Seal packing:
Toyota Genuine Seal Packing 1281, Three Bond 1281 or equivalent

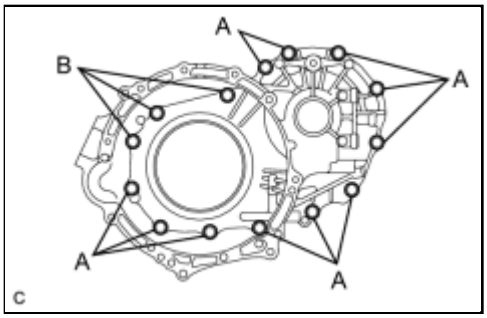

(b) Install the transaxle housing with the 14 bolts.

Bolt A - Torque: 29 N·m (296 kgf·cm, 21ft·lbf)
Bolt B - Torque: 22 N·m (224 kgf·cm, 16ft·lbf)

87. INSTALL C-2 ACCUMULATOR PISTON

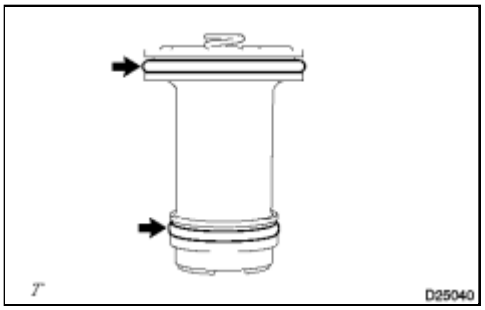

(a) Coat 2 new O-rings with ATF and install them to the C-2 accumulator piston.

NOTICE:
Do not damage the O-rings.

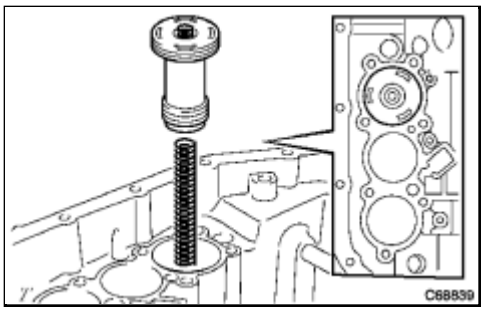

(b) Install the spring and C-2 accumulator piston.

Accumulator Spring:

SPRING	FREE LENGTH/ OUTER DIAMETER (MM (IN.))	COLOR
C-2	66.20 to 67.60 (2.606 to 2.661) 17.20 (0.677)	-

88. INSTALL C-3 ACCUMULATOR PISTON

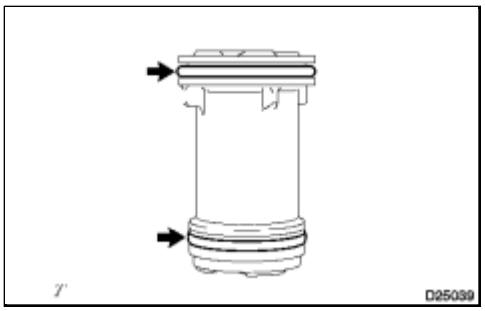

(a) Coat 2 new O-rings with ATF and install them to the C-3 accumulator piston.

NOTICE:

Do not damage the O-rings.

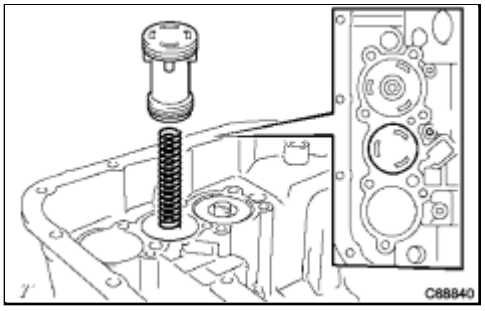

(b) Install the spring and C-3 accumulator piston.

Accumulator Spring:

SPRING	FREE LENGTH/ OUTER DIAMETER (MM (IN.))	COLOR
C-3	87.30 (3.437) 18.70 (0.736)	Orange

89. INSTALL B-2 ACCUMULATOR PISTON

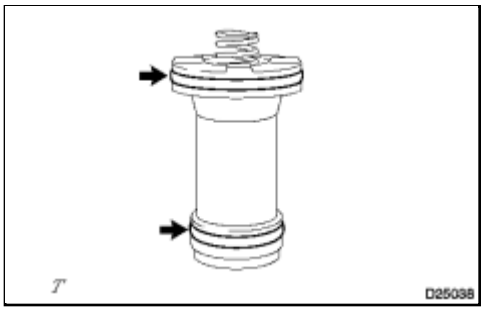

(a) Coat 2 new O-rings with ATF and install them to the B-2 accumulator piston.

NOTICE:

Do not damage the O-rings.

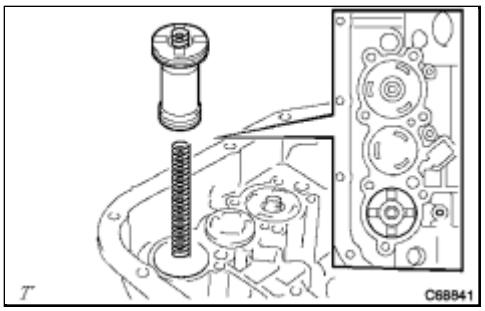

(b) Install the spring and B-2 accumulator piston.

Accumulator Spring:

SPRING	FREE LENGTH/ OUTER DIAMETER (MM (IN.))	COLOR
B-2	66.90 (2.633) 15.50 (0.610)	White

90. INSTALL CHECK BALL BODY

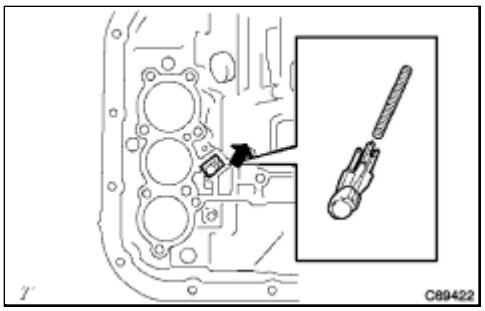

(a) Install the spring and check ball body.

91. INSTALL BRAKE DRUM GASKET

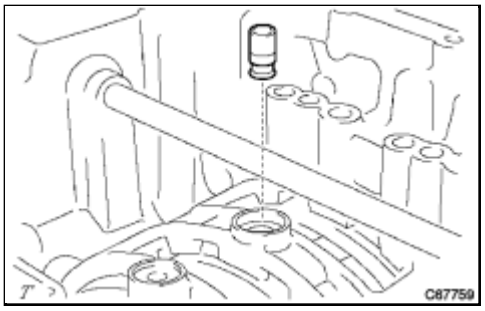

(a) Install a new brake drum gasket.

92. INSTALL TRANSAXLE CASE GASKET

(a) Coat a new transaxle case gasket with ATF, and install it to the transaxle case.

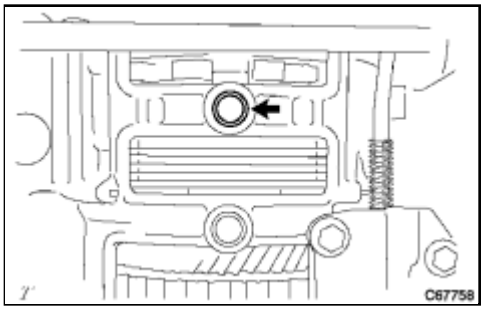

93. INSTALL TRANSAXLE CASE 2ND BRAKE GASKET

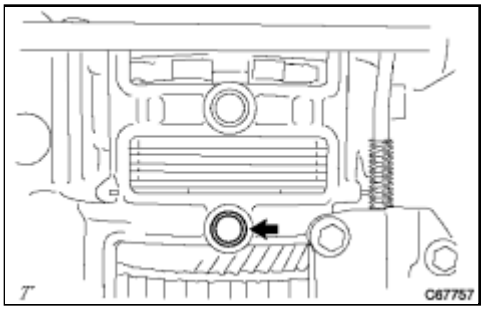

(a) Coat a new transaxle case 2nd brake gasket with ATF, and install it to the transaxle case.

94. INSTALL TRANSMISSION WIRE

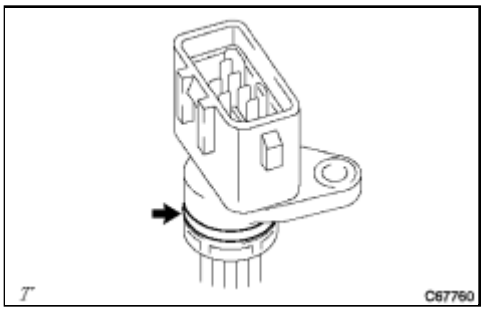

(a) Coat a new O-ring with ATF, and install it into the transmission wire.

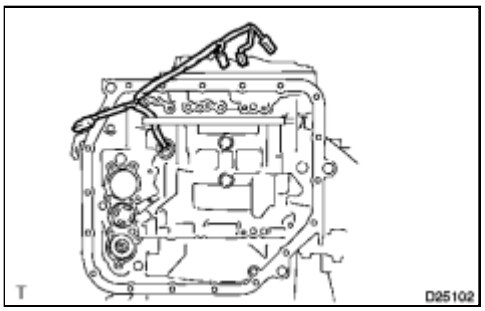

(b) Insert the transmission wire to the transaxle.



(c) Install the transmission wire with the bolt.

Torque: 5.4 N·m (55 kgf·cm, 48in·lbf)

95. INSTALL TRANSMISSION VALVE BODY ASSEMBLY

(a) Align the groove of the manual valve with the pin of the manual valve lever.

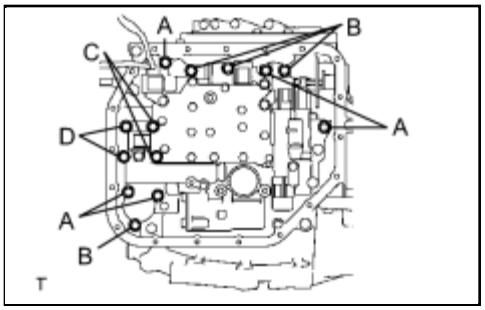

(b) Temporarily install the valve body with the 13 bolts.

Bolt length:
Bolt A: 32 mm (1.26 in.)
Bolt B: 22 mm (0.866 in.)
Bolt C: 55 mm (2.17 in.)
Bolt D: 45 mm (1.77 in.)

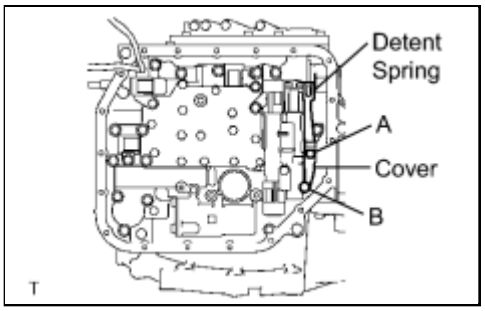

(c) Temporarily install the detent spring and detent spring cover with the 2 bolts.

Bolt length:
Bolt A: 14 mm (0.551 in.)
Bolt B: 45 mm (1.77 in.)

(d) Check that the manual valve lever is in contact with the center of the roller at the tip of the detent spring.

(e) Tighten the 15 bolts.

Torque: 11 N·m (112 kgf·cm, 8ft·lbf)

(f) Connect the 5 solenoid connectors.

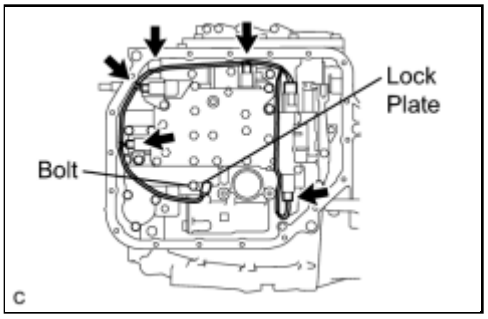

(g) Install the ATF temperature sensor with the lock plate and bolt.

Torque: 11 N·m (112 kgf·cm, 8ft·lbf)

Bolt length:

55 mm (2.17 in.)

96. INSTALL VALVE BODY OIL STRAINER ASSEMBLY

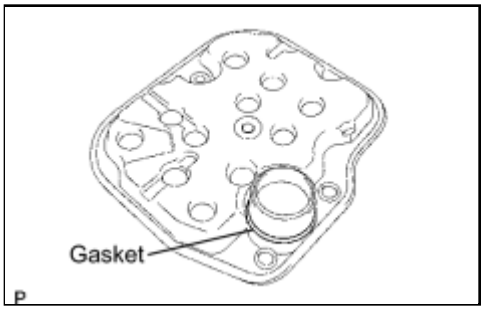

(a) Coat a new gasket with ATF, and install it to the oil strainer.

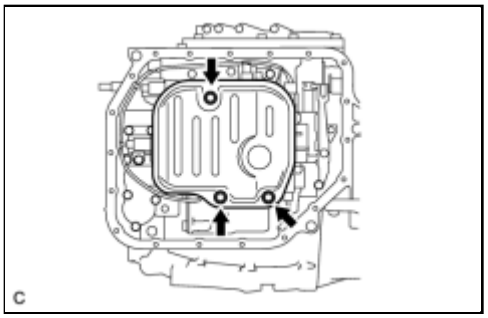

(b) Install the valve body oil strainer assembly to the automatic transaxle with the 3 bolts.

Torque: 11 N·m (112 kgf·cm, 8ft·lbf)

97. INSTALL AUTOMATIC TRANSAXLE OIL PAN SUB-ASSEMBLY

(a) Install the 2 magnets to the oil pan.

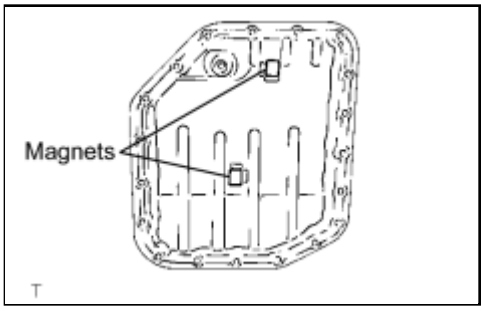

(b) Install a new oil pan gasket to the oil pan.

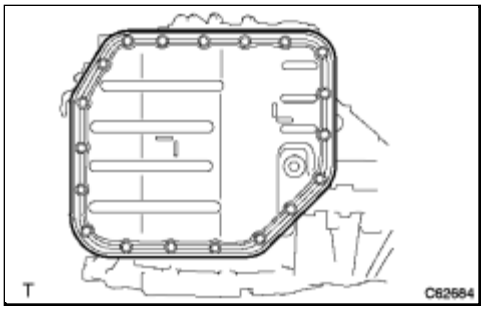

(c) Install the oil pan with the 19 bolts.

Torque: 7.8 N·m (80 kgf·cm, 69in·lbf)

98. INSTALL BREATHER PLUG

(a) Install the breather plug to the transaxle case.

99. INSTALL BREATHER PLUG HOSE

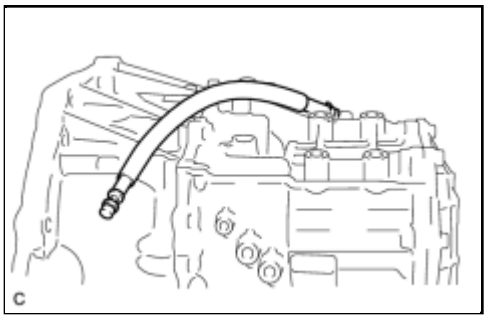

(a) Install the breather plug hose to the breather plug.

100. INSTALL NO. 1 TRANSAXLE CASE PLUG

(a) Coat 5 new O-rings with ATF, and install them to the 5 No. 1 transaxle case plugs.

(b) Install the 4 No. 1 transaxle case plugs to the transaxle housing and transaxle case.

Torque: 7.4 N·m (76 kgf·cm, 66in·lbf)

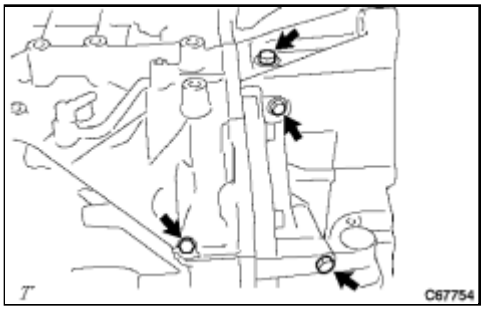

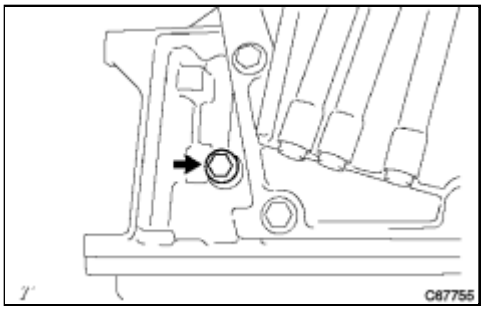

(c) Install the No. 1 transaxle case plug to the transaxle case.

Torque: 7.4 N·m (76 kgf·cm, 66in·lbf)

101. INSTALL OIL COOLER TUBE UNION

(a) Coat 2 new O-rings with ATF, and install them into the 2 oil cooler tube unions.

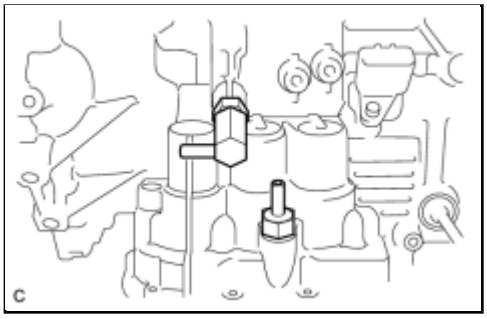

(b) Install the 2 oil cooler tube unions to the transaxle case.

Torque: 27 N·m (275 kgf·cm, 20ft·lbf)

102. INSTALL SPEED SENSOR

(a) Coat a new O-ring with ATF, and install it to the speed sensor.

(b) Install the speed sensor to the transaxle case with the bolt.

Torque: 5.4 N·m (55 kgf·cm, 48in·lbf)

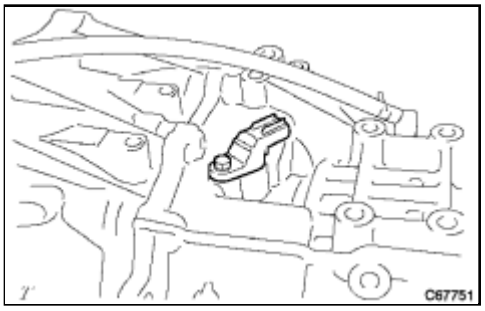

103. INSTALL PARK/NEUTRAL POSITION SWITCH ASSEMBLY

(a) Install the park/neutral position switch assembly to the automatic transaxle.

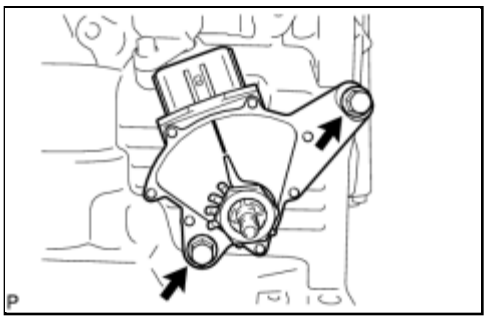

(b) Temporarily install the 2 bolts.

(c) Replace the lock plate with a new one and tighten the manual valve shaft nut.

Torque: 6.9 N·m (70 kgf·cm, 61in·lbf)

(d) Temporarily install the control shaft lever.

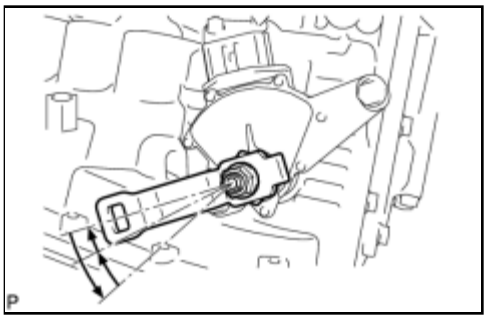

(e) Turn the lever counterclockwise until it stops, then turn it clockwise 2 notches.

(f) Remove the control shaft lever.

(g) Align the groove with the neutral basic line.

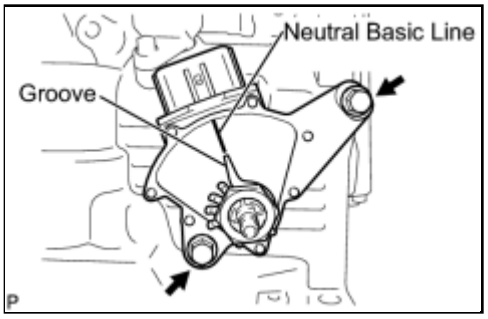

(h) Hold the switch in this position and tighten the 2 bolts.

Torque: 5.4 N·m (55 kgf·cm, 48in·lbf)

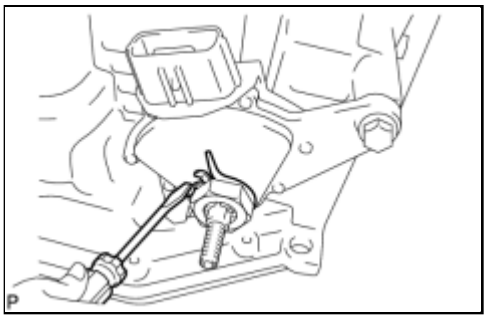

(i) Using a screwdriver, stake the nut with the lock plate.

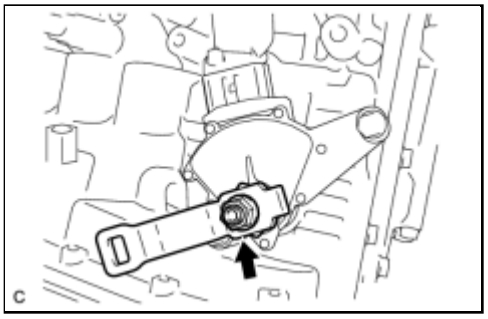

(j) Install the control shaft lever with the nut and washer.

Torque: 13 N·m (133 kgf·cm, 10ft·lbf)

104. INSTALL SPEEDOMETER DRIVEN HOLE COVER SUB-ASSEMBLY

(a) Coat a new O-ring with ATF and install it to the speedometer driven hole cover sub-assembly.

(b) Install the speedometer driven hole cover sub-assembly to the transaxle housing.

Torque: 5.5 N·m (56 kgf·cm, 49in·lbf)

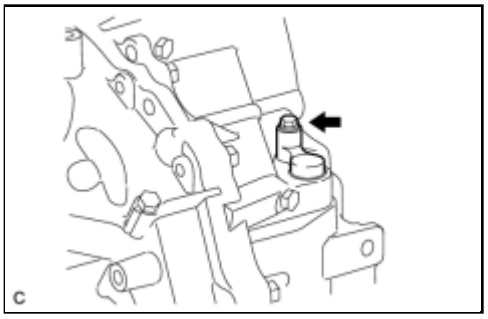
C

Last Modified: 3-10-2010	6.4 A	**From:** 200901
Model Year: 2010	**Model:** Corolla	**Doc ID:** RM00000192H018X
Title: U341E AUTOMATIC TRANSMISSION / TRANSAXLE: AUTOMATIC TRANSAXLE UNIT: DISASSEMBLY (2010 Corolla)		

DISASSEMBLY

1. REMOVE SPEEDOMETER DRIVEN HOLE COVER SUB-ASSEMBLY

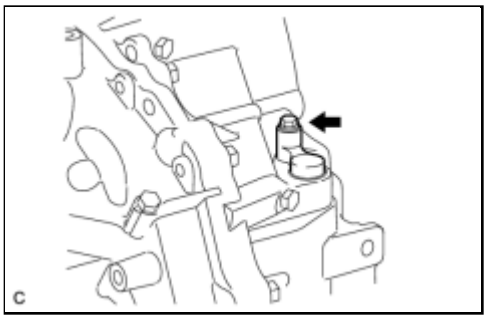

(a) Remove the bolt and speedometer driven hole cover sub-assembly from the transaxle housing.

(b) Remove the O-ring from the speedometer driven hole cover sub-assembly.

2. REMOVE PARK/NEUTRAL POSITION SWITCH ASSEMBLY

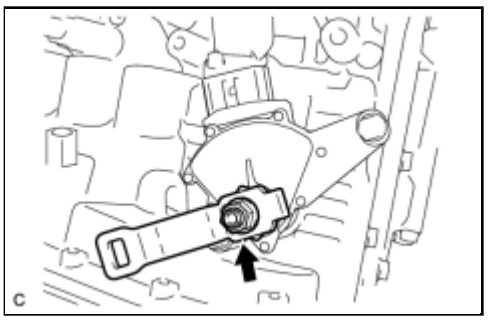

(a) Remove the nut and washer and remove the control shaft lever.

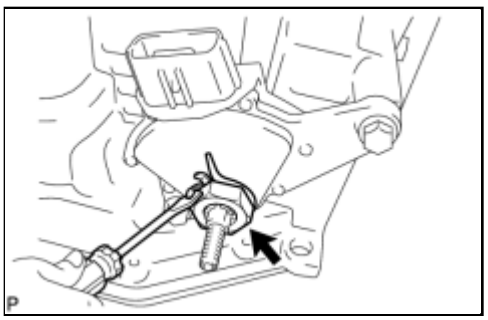

(b) Using a screwdriver, pry out the lock plate and remove the manual valve shaft nut.

(c) Remove the 2 bolts and pull out the park/neutral position

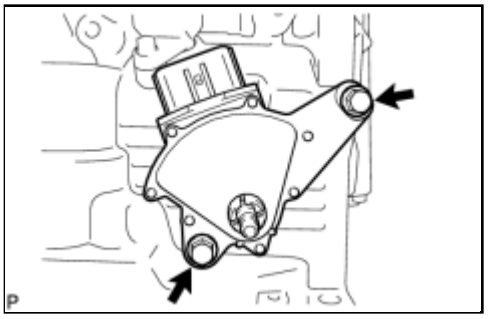

switch assembly.

3. REMOVE SPEED SENSOR

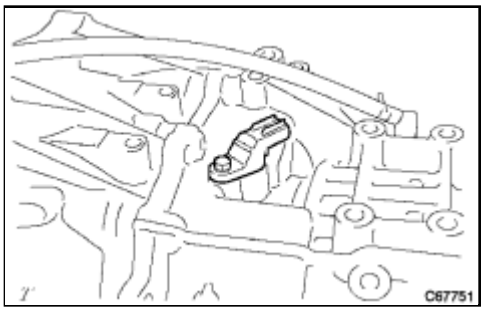

(a) Remove the bolt and speed sensor from the transaxle case.

4. REMOVE OIL COOLER TUBE UNION

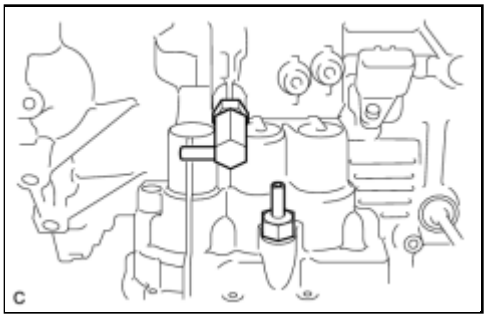

(a) Remove the 2 oil cooler tube unions from the transaxle case.

(b) Remove the O-ring from oil cooler tube union.

5. REMOVE NO. 1 TRANSAXLE CASE PLUG

(a) Remove the 4 No. 1 transaxle case plugs from the transaxle housing and transaxle case.

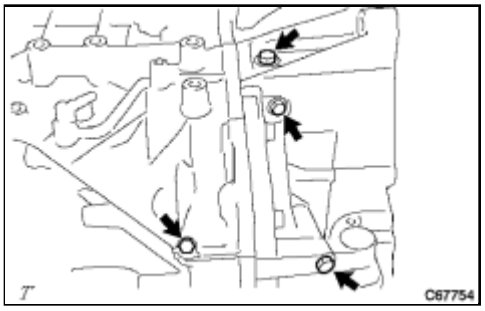

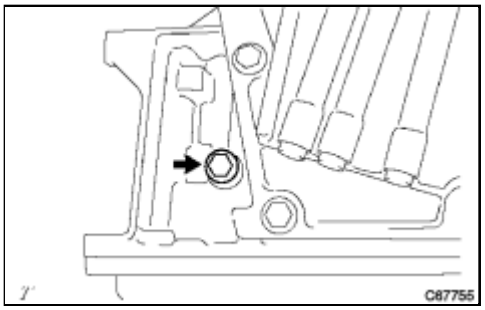

(b) Remove the No. 1 transaxle case plug from the transaxle case.

(c) Remove the O-ring from No. 1 transaxle case plug.

6. REMOVE BREATHER PLUG HOSE

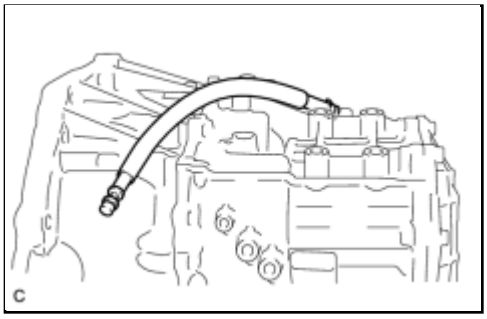

(a) Remove the breather plug hose from the breather plug.

7. REMOVE BREATHER PLUG

(a) Remove the breather plug from the transaxle case.

8. SECURE AUTOMATIC TRANSAXLE ASSEMBLY

(a) Secure the transaxle onto wooden blocks.

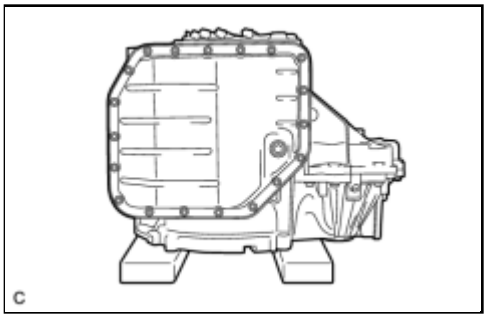

9. REMOVE AUTOMATIC TRANSAXLE OIL PAN SUB-ASSEMBLY

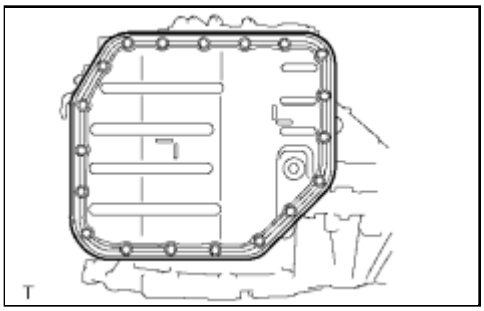

(a) Remove the 19 bolts and remove the oil pan and oil pan gasket.

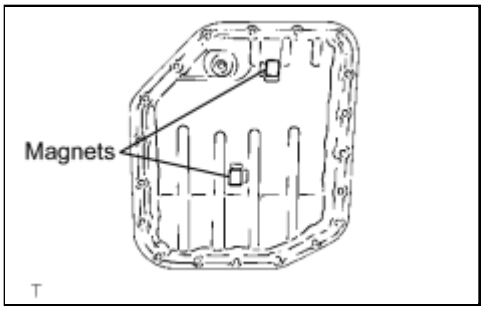

(b) Remove the 2 oil cleaner magnets from the oil pan.

(c) Examine the particles in the oil pan.

(1) Collect any steel chips with the removed magnets.

Carefully look at the foreign matter and particles in the oil pan and on the magnets to predict the type of wear which might be found in the transaxle.

Steel (magnetic): bearing, gear and clutch plate wear

Brass (non-magnetic): bearing wear

10. REMOVE VALVE BODY OIL STRAINER ASSEMBLY

(a) Remove the 3 bolts and remove the oil strainer assembly.

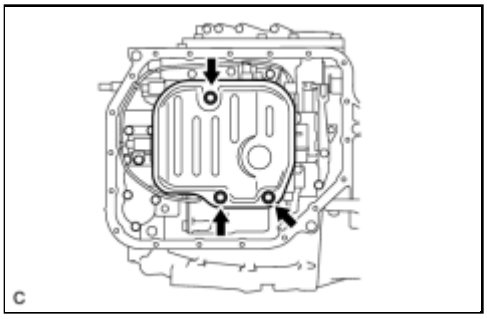

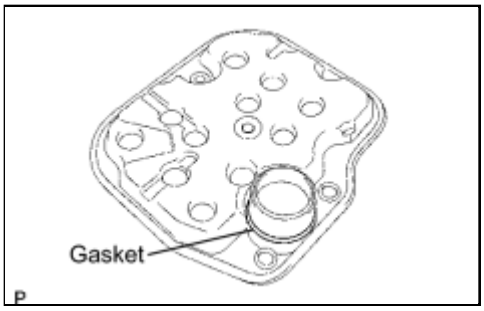

(b) Remove the oil strainer gasket from the oil strainer assembly.

11. REMOVE TRANSMISSION VALVE BODY ASSEMBLY

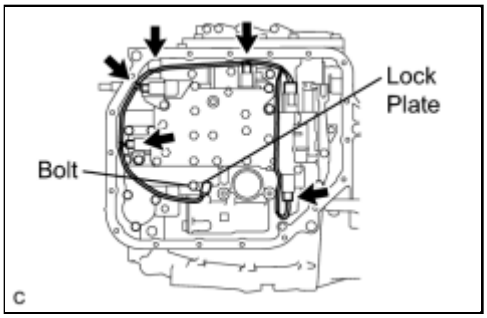

(a) Disconnect the 5 solenoid connectors.

(b) Remove the bolt and lock plate and remove the ATF temperature sensor.

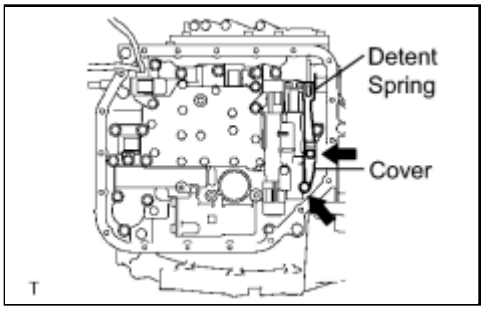

(c) Remove the 2 bolts and remove the detent spring cover and detent spring.

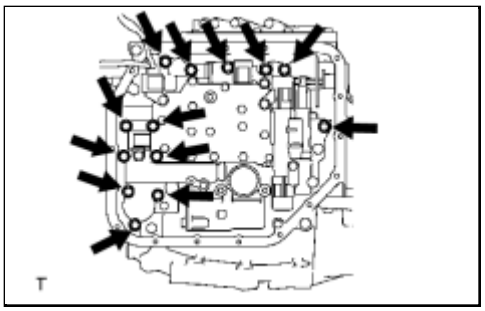

(d) Remove the 13 bolts and the valve body assembly from the transaxle case.

12. REMOVE TRANSMISSION WIRE



(a) Remove the bolt and the transmission wire from the transaxle case.

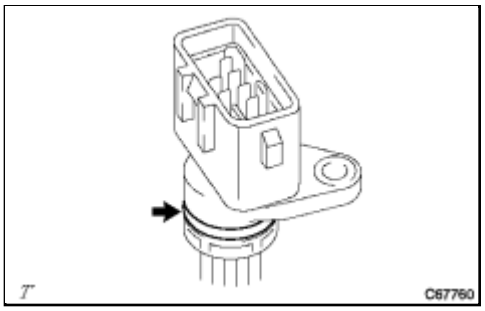

(b) Remove the O-ring from the transmission wire.

13. REMOVE TRANSAXLE CASE 2ND BRAKE GASKET

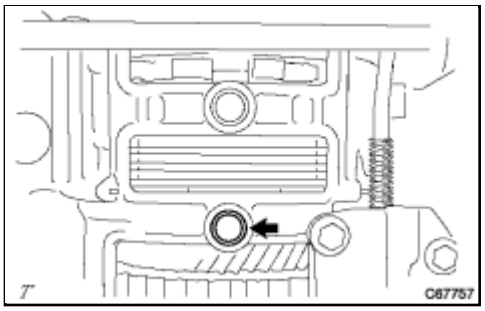

(a) Remove the transaxle case 2nd brake gasket from the transaxle case.

14. REMOVE TRANSAXLE CASE GASKET

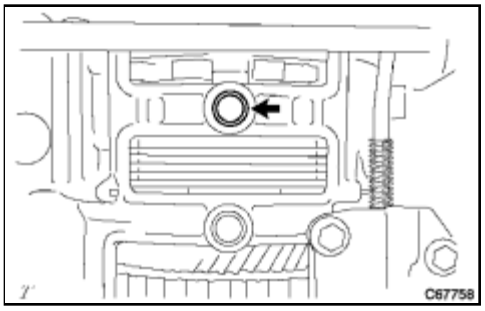

(a) Remove the transaxle case gasket from the transaxle case.

15. REMOVE BRAKE DRUM GASKET

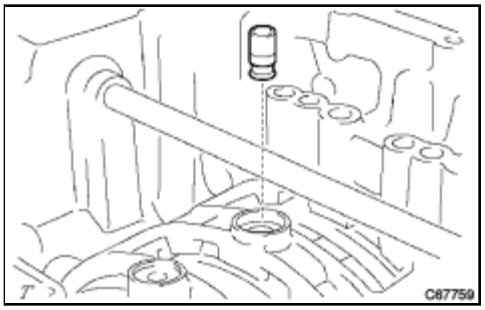

(a) Remove the brake drum gasket from the transaxle case.

16. REMOVE CHECK BALL BODY

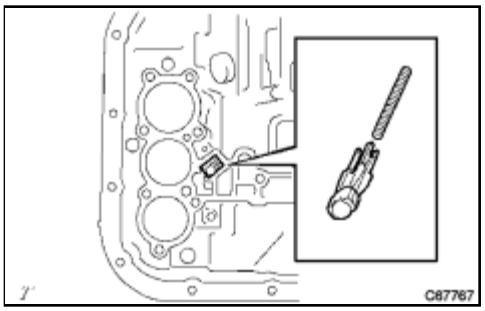

(a) Remove the check ball body and spring from the transaxle case.

17. REMOVE B-2 ACCUMULATOR PISTON

(a) Apply compressed air (392 kPa, 4.0 kgf/cm2, 57 psi) to the oil hole and remove the B-2 accumulator piston and spring.

NOTICE:

- Blowing air may cause the piston to jump out. When

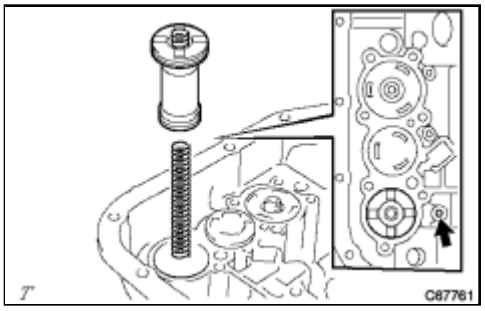

removing the piston, hold it by hand using a piece of cloth.

- Do not splash ATF with compressed air.

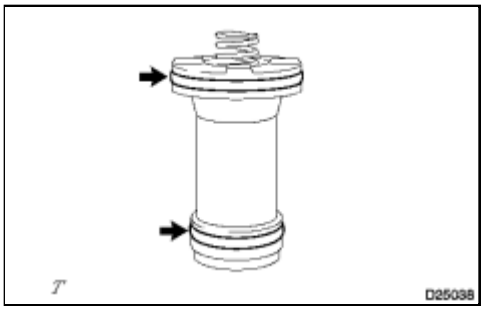

(b) Remove the 2 O-rings from the B-2 accumulator piston.

18. REMOVE C-3 ACCUMULATOR PISTON

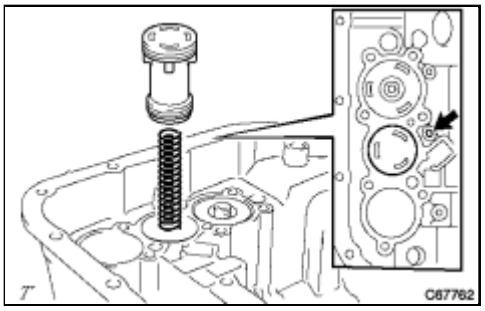

(a) Apply compressed air (392 kPa, 4.0 kgf/cm2, 57 psi) to the oil hole and remove the C-3 accumulator piston and spring.

NOTICE:

- Blowing air may cause the piston to jump out. When removing the piston, hold it by hand using a piece of cloth.
- Do not splash ATF with compressed air.

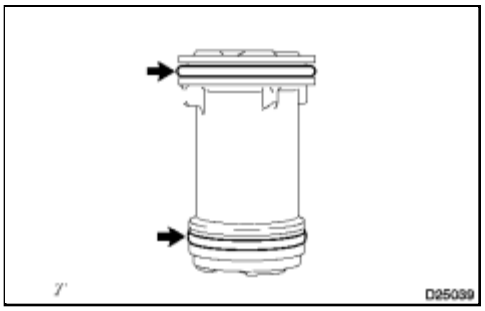

(b) Remove the 2 O-rings from the C-3 accumulator piston.

19. REMOVE C-2 ACCUMULATOR PISTON

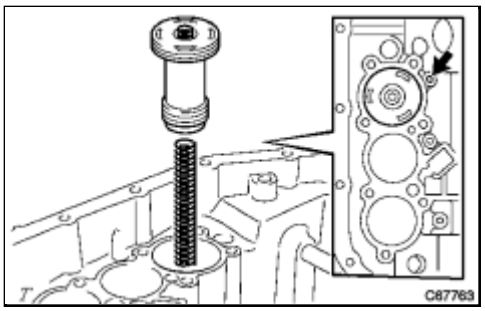

(a) Apply compressed air (392 kPa, 4.0 kgf/cm2, 57 psi) to the oil hole and remove the C-2 accumulator piston and the spring.

NOTICE:

- Blowing air may cause the piston to jump out. When removing the piston, hold it by hand using a piece of cloth.
- Do not splash ATF with compressed air.

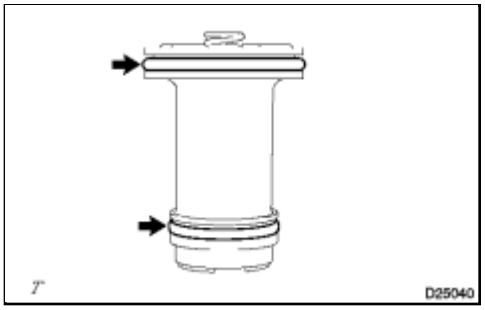

(b) Remove the 2 O-rings from the C-2 accumulator piston.

20. REMOVE TRANSAXLE HOUSING

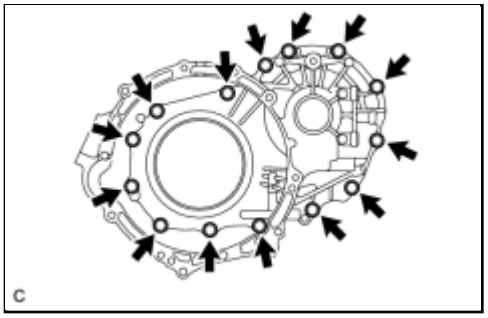

(a) Remove the 14 bolts.

(b) Tap around the circumference of the transaxle housing with a plastic hammer to remove the transaxle housing from the transaxle case.

NOTICE:

The differential gear assembly may be accidentally removed when the transaxle housing is removed.

21. INSPECT INPUT SHAFT END PLAY

(a) Measure the end play in the axial direction.

End play:
0.38 to 1.29 mm (0.0149 to 0.0507 in.)

If the end play is not as specified, replace the stator shaft thrust needle roller bearing and the forward clutch hub

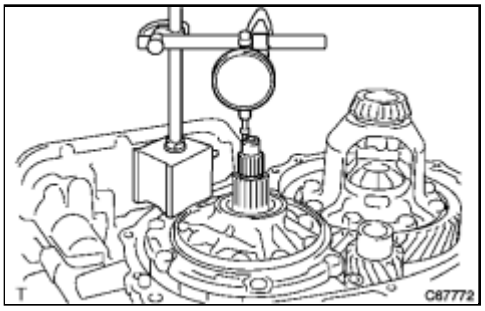

thrust needle roller bearing.

22. REMOVE OIL PUMP ASSEMBLY

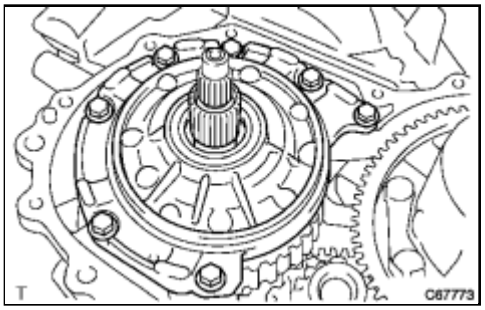

(a) Remove the 7 bolts and the oil pump assembly from the transaxle case.

23. REMOVE DIFFERENTIAL GEAR ASSEMBLY

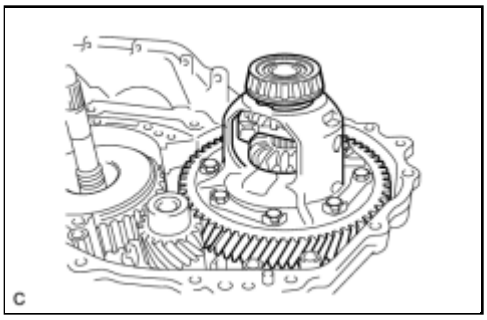

(a) Remove the differential gear assembly from the transaxle case.

24. REMOVE OVERDRIVE BRAKE GASKET

(a) Using a screwdriver, remove the 2 overdrive brake gaskets from the transaxle case.

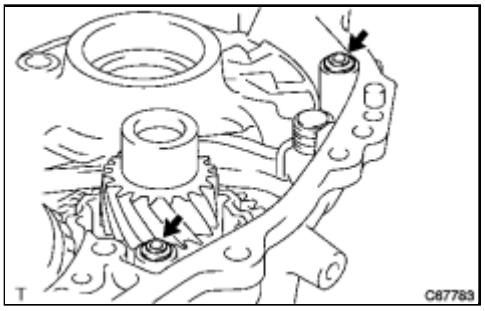

25. REMOVE INPUT SHAFT ASSEMBLY

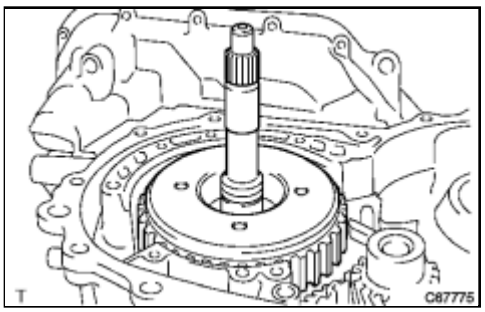

(a) Remove the input shaft assembly from the transaxle case.

26. REMOVE STATOR SHAFT THRUST NEEDLE ROLLER BEARING

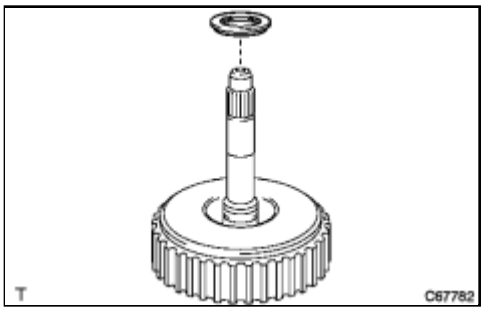

(a) Remove the stator shaft thrust needle roller bearing from the input shaft.

27. REMOVE FRONT CLUTCH DISC

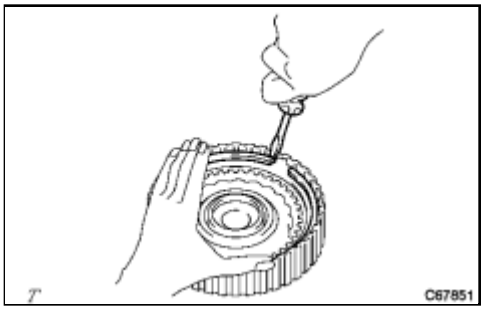

(a) Using a screwdriver, remove the snap ring.

(b) Remove the flange, 4 discs and 4 plates from the input shaft.

28. REMOVE FORWARD CLUTCH RETURN SPRING SUB-ASSEMBLY

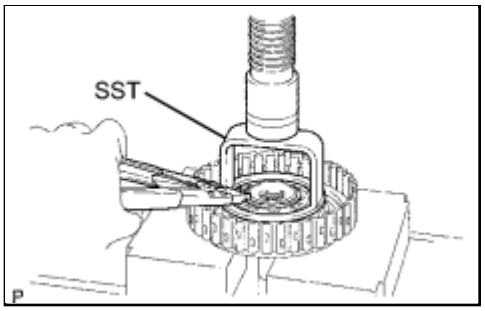

(a) Using SST on the clutch balancer, compress the return spring with a press.

SST: 09320-89010

NOTICE:

Do not compress the return spring excessively.

(b) Using a snap ring expander, remove the snap ring.

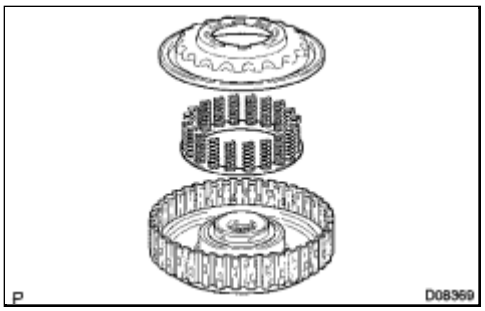

(c) Remove the clutch balancer and piston return spring.

29. REMOVE FORWARD CLUTCH PISTON

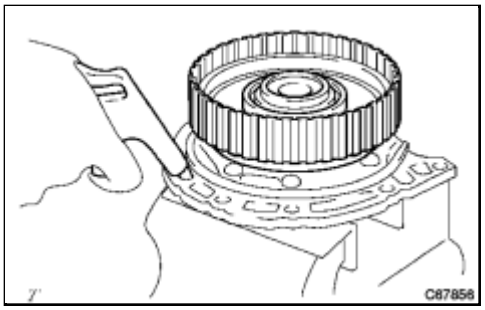

(a) Place the input shaft onto the oil pump.

(b) Holding the forward clutch piston by hand, apply compressed air (392 kPa, 4.0 kgf/cm^2, 57 psi) to the oil pump to remove the forward clutch piston.

HINT:

If the piston cannot be removed because it is tilted, either apply compressed air again while keeping the piston level or remove the piston using needle-nose pliers with their tips wrapped in protective tape.

30. REMOVE FORWARD CLUTCH PISTON O-RING

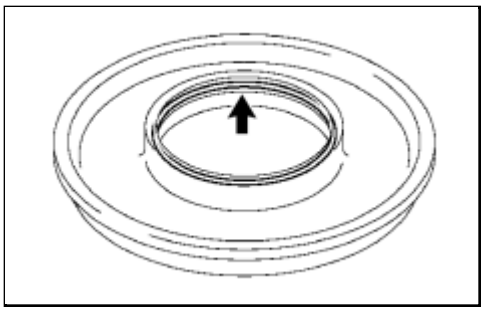

(a) Using a screwdriver, remove the clutch piston O-ring from the forward clutch piston.

31. REMOVE INPUT SHAFT OIL SEAL RING

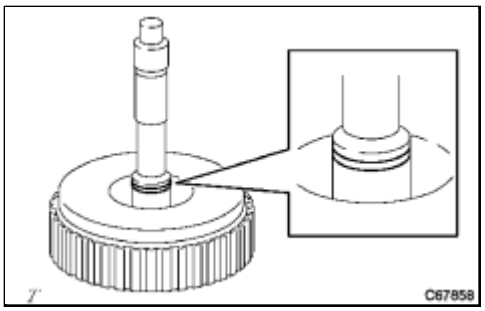

(a) Using a screwdriver, remove the input shaft oil seal ring from the input shaft.

32. REMOVE FORWARD CLUTCH HUB THRUST NEEDLE ROLLER BEARING

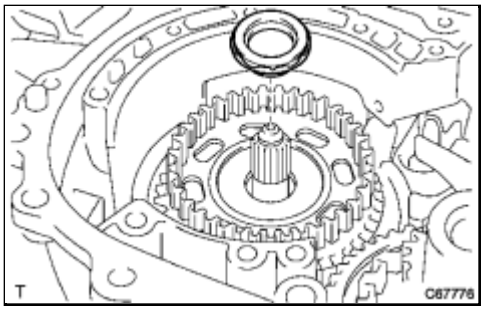

(a) Remove the forward clutch hub thrust needle roller bearing from the forward clutch hub.

33. INSPECT INTERMEDIATE SHAFT ASSEMBLY

(a) Using a dial indicator, measure the intermediate shaft end play.

End play:

0.21 to 0.96 mm (0.00826 to 0.0377 in.)

If the end play is not as specified, select and replace the rear clutch drum thrust needle roller bearing.

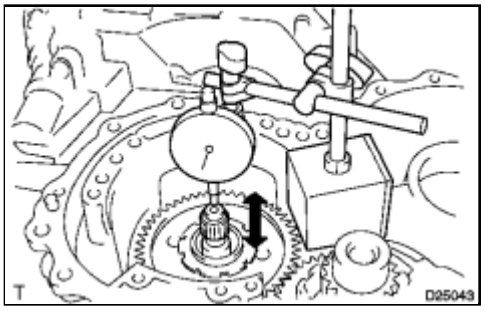

34. REMOVE FORWARD CLUTCH HUB SUB-ASSEMBLY

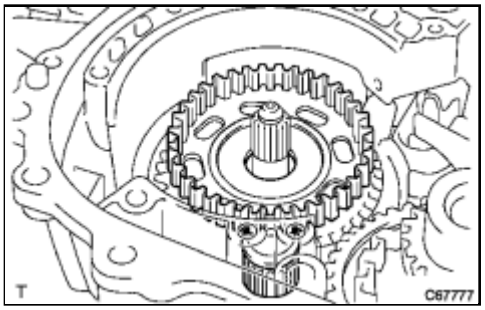

(a) Remove the forward clutch hub from the transaxle case.

35. REMOVE REAR TRANSAXLE COVER ASSEMBLY

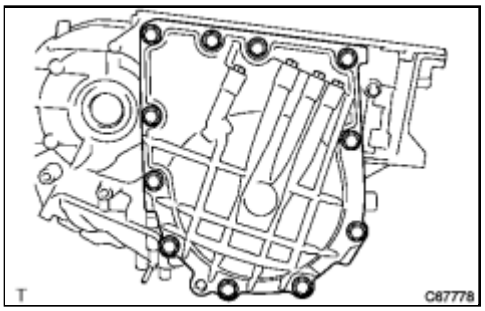

(a) Remove the 11 bolts.

(b) Tap around the circumference of the rear transaxle cover with a plastic hammer to remove the rear transaxle cover from the transaxle case.

36. REMOVE REAR TRANSAXLE COVER PLUG

(a) Remove the 4 rear transaxle cover plugs from the rear transaxle cover.

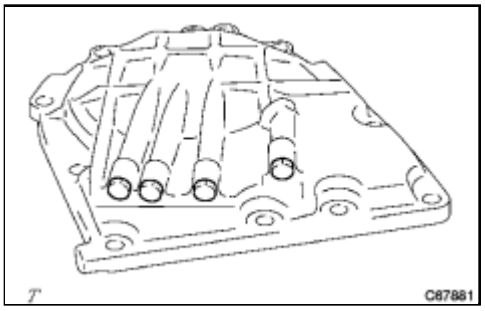

(b) Using a screwdriver, remove the O-ring from each rear transaxle cover plug.

37. REMOVE OVERDRIVE BRAKE RETURN SPRING SUB-ASSEMBLY

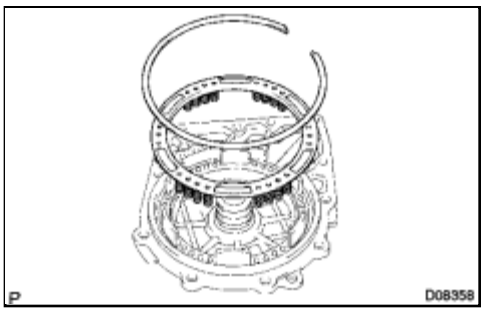

(a) Using SST, a press and a screwdriver, remove the snap ring.

SST: 09387-00070

NOTICE:

Stop the press when the overdrive brake piston is lowered 1 to 2 mm (0.0394 to 0.0787 in.) from the snap ring groove to prevent the overdrive brake piston from being deformed.

(b) Remove the overdrive brake return spring from the rear transaxle cover.

38. REMOVE 2ND COAST AND OVERDRIVE BRAKE PISTON

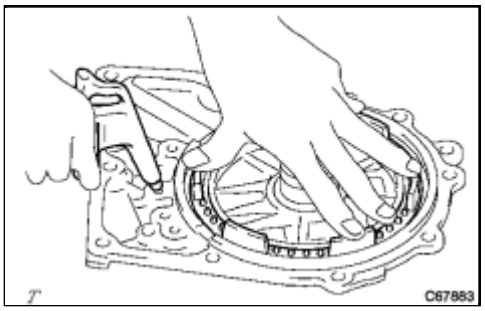

(a) Apply compressed air (392 kPa, 4.0 kgf/cm2, 57 psi) to the rear transaxle cover to remove the overdrive brake piston.

NOTICE:

- Blowing air may cause the piston to jump out. When removing the piston, hold it by hand using a piece of cloth.
- Do not splash ATF with compressed air.

39. REMOVE 2ND COAST AND OVERDRIVE O-RING

(a) Using a screwdriver, remove the 2 O-rings from the 2nd coast and overdrive brake piston.

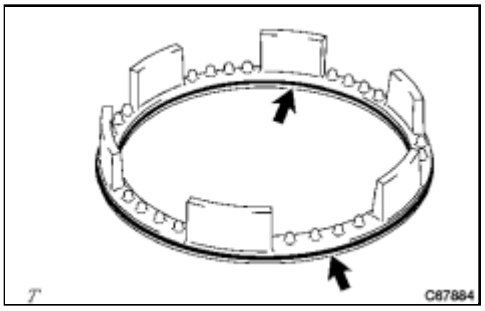

40. REMOVE CLUTCH DRUM OIL SEAL RING

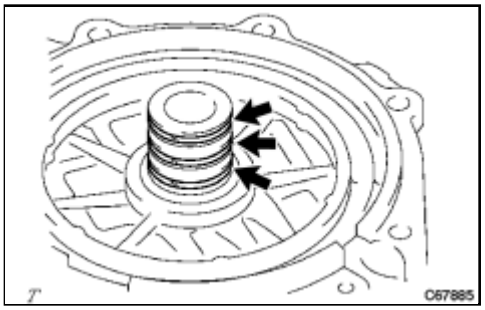

(a) Remove the 3 oil seal rings from the rear transaxle cover.

41. REMOVE REAR TRANSAXLE COVER NEEDLE ROLLER BEARING

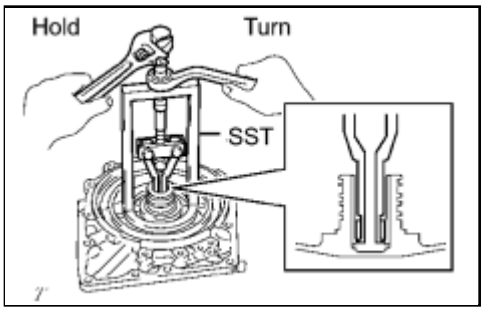

(a) Using SST, remove the bearing from the rear transaxle cover.

SST: 09387-00041

09387-01021

42. REMOVE TRANSAXLE CASE GASKET

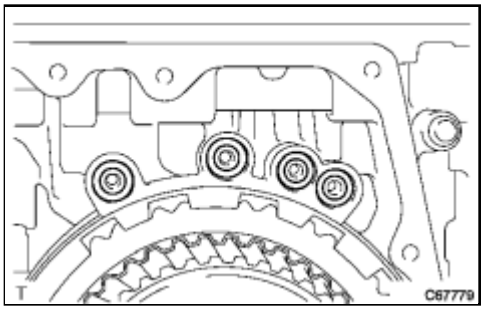

(a) Remove the 4 transaxle case gaskets.

43. REMOVE REAR CLUTCH DRUM THRUST NEEDLE ROLLER BEARING

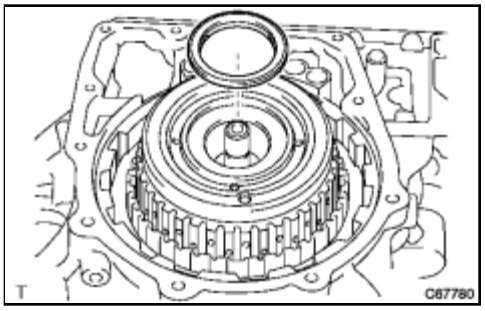

(a) Using a magnetic pick-up tool, remove the rear clutch drum thrust needle roller bearing.

44. REMOVE INTERMEDIATE SHAFT ASSEMBLY

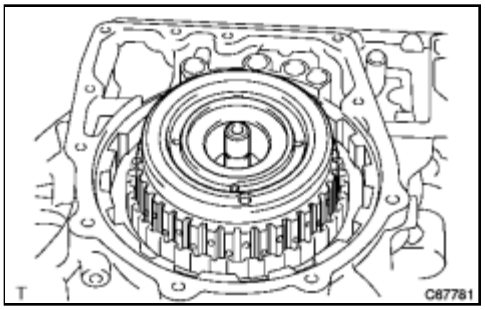

(a) Remove the intermediate shaft assembly from the transaxle case.

45. REMOVE REVERSE CLUTCH DISC

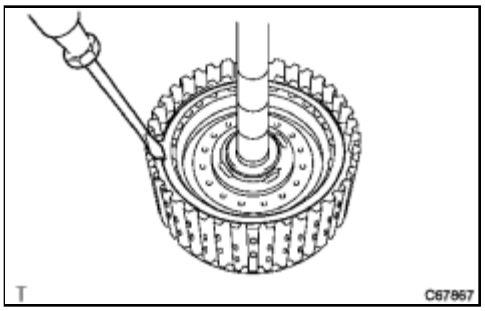

(a) Using a screwdriver, remove the snap ring.

(b) Remove the flange, 3 discs and 3 plates.

46. REMOVE DIRECT CLUTCH DISC

(a) Using a screwdriver, remove the snap ring.

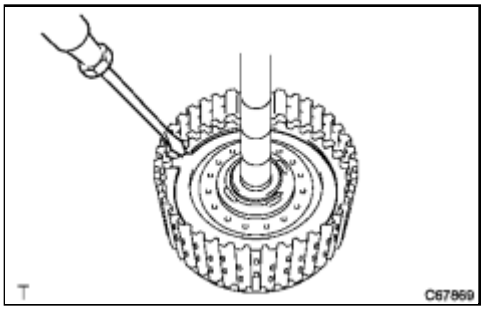

(b) Remove the direct clutch flange, 3 discs and 3 rear clutch flanges.

47. REMOVE DIRECT CLUTCH RETURN SPRING SUB-ASSEMBLY

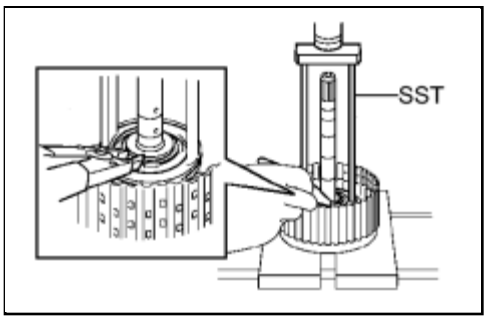

(a) Using SST and a press.

SST: 09387-00020

(b) Using snap ring pliers, remove the snap ring.

(c) Remove the direct clutch return spring sub-assembly from the intermediate shaft.

48. REMOVE DIRECT CLUTCH PISTON SUB-ASSEMBLY

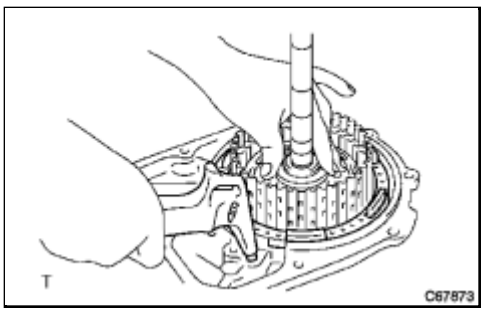

(a) Install the intermediate shaft onto the rear transaxle cover.

(b) Apply compressed air (392 kPa, 4.0 kgf/cm^2, 57 psi) to the oil hole shown in the illustration and remove the direct clutch piston from the intermediate shaft.

NOTICE:

- Blowing air may cause the piston to jump out. When removing the piston, hold it by hand using a piece of cloth.
- Do not splash ATF with compressed air.

49. REMOVE DIRECT CLUTCH DRUM SUB-ASSEMBLY

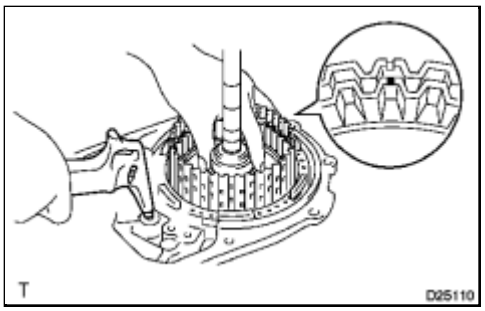

(a) Install the intermediate shaft onto the rear transaxle cover.

(b) Put a matchmark on the direct clutch drum in the same position as the cutout of the intermediate shaft assembly.

(c) Apply compressed air (392 kPa, 4.0 kgf/cm^2, 57 psi) to the oil hole shown in the illustration and remove the direct clutch drum from the intermediate shaft.

NOTICE:

- Blowing air may cause the drum to jump out. When removing the drum, hold it by hand using a piece of cloth.
- Do not splash ATF with compressed air.

50. REMOVE DIRECT CLUTCH PISTON O-RING

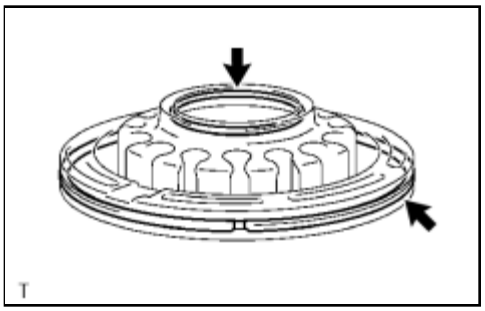

(a) Using a screwdriver, remove the 2 piston O-rings from the direct clutch piston.

51. REMOVE DIRECT CLUTCH DRUM O-RING

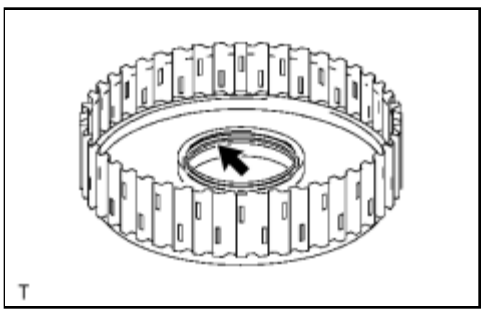

(a) Using a screwdriver, remove the direct clutch drum O-ring from the direct clutch drum.

52. REMOVE 2ND COAST AND OVERDRIVE BRAKE DISC

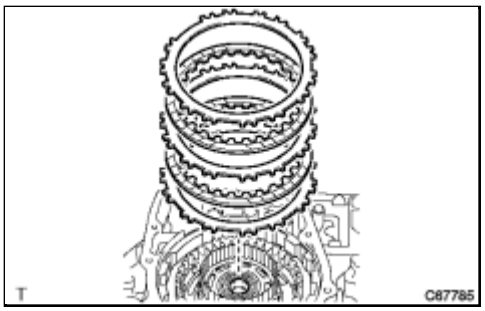

(a) Remove the flange, 2 discs and 2 No. 2 flanges from the transaxle.

53. REMOVE THRUST NEEDLE ROLLER BEARING

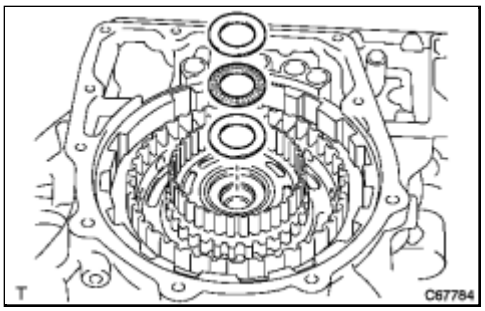

(a) Using a magnetic pick-up tool, remove the C-2 hub thrust bearing race, the thrust needle roller bearing and the No. 3 thrust bearing race from the direct clutch hub.

54. REMOVE DIRECT CLUTCH HUB

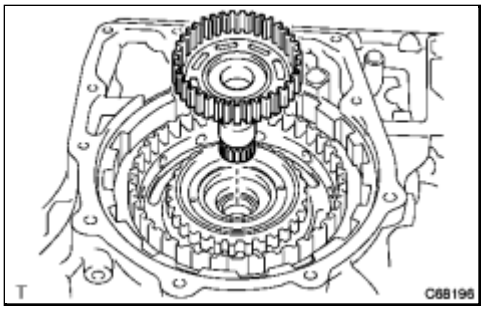

(a) Remove the direct clutch hub from the transaxle case.

55. REMOVE REAR NO. 2 PLANETARY SUN GEAR THRUST NEEDLE ROLLER BEARING

(a) Using a magnetic pick-up tool, remove the rear No. 2 planetary sun gear thrust needle roller bearing from the rear planetary sun gear assembly.

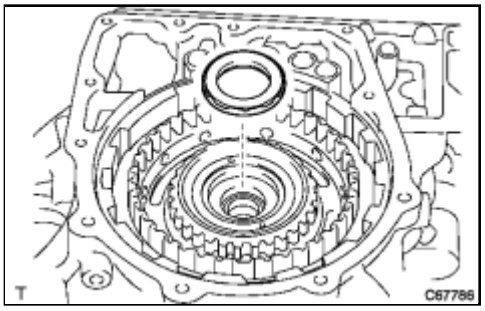

56. REMOVE REAR PLANETARY SUN GEAR ASSEMBLY

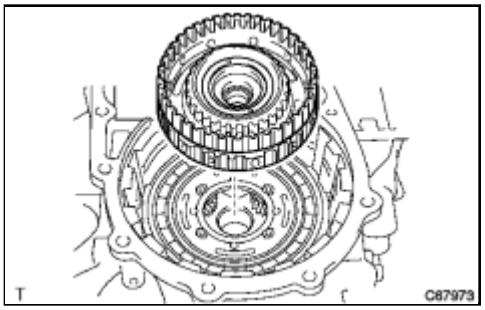

(a) Remove the rear planetary sun gear from the transaxle case.

57. REMOVE REAR PLANETARY SUN GEAR THRUST NEEDLE ROLLER BEARING

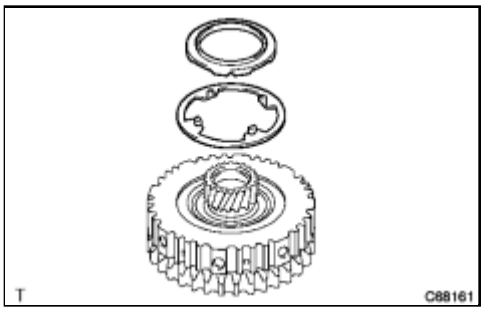

(a) Remove the rear planetary sun gear thrust needle roller bearing and No. 1 planetary carrier thrust washer from the one-way clutch assembly.

58. INSPECT ONE-WAY CLUTCH ASSEMBLY

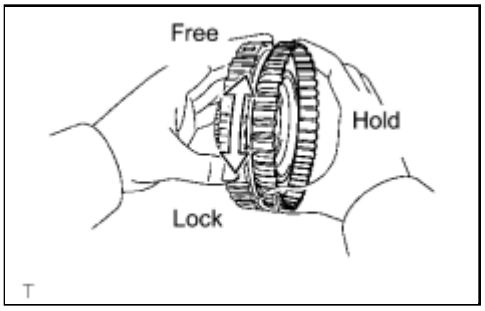

(a) Hold the rear planetary sun gear and turn the one-way clutch.

(b) Make sure that the one-way clutch turns freely counterclockwise and locks when turned clockwise.

59. REMOVE ONE-WAY CLUTCH ASSEMBLY

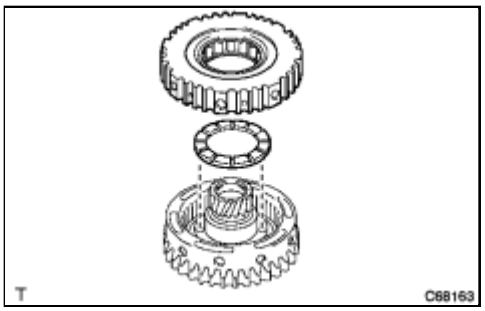

(a) Remove the one-way clutch assembly and No. 2 planetary carrier thrust washer from the rear planetary sun gear.

60. REMOVE 2ND BRAKE DISC

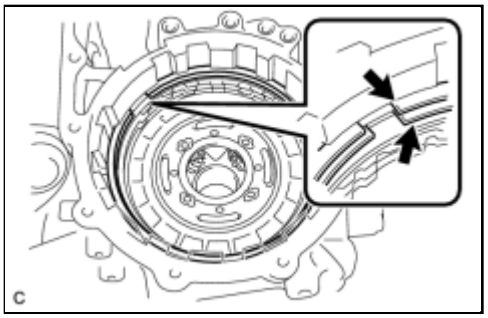

(a) Using a screwdriver, remove the 2 snap rings.

(b) Remove the 2 flanges, 4 discs and 3 flanges from the transaxle.

61. REMOVE 2ND BRAKE PISTON SLEEVE

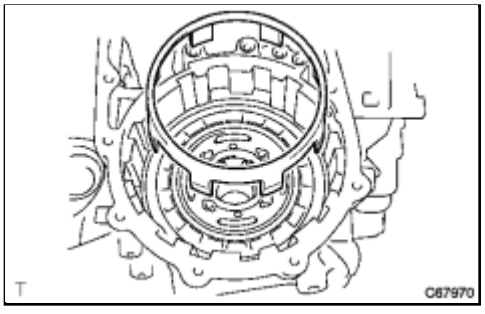

(a) Remove the 2nd brake piston sleeve from the transaxle case.

62. INSPECT NO. 2 ONE-WAY CLUTCH

(a) Turn the rear planetary gear assembly.

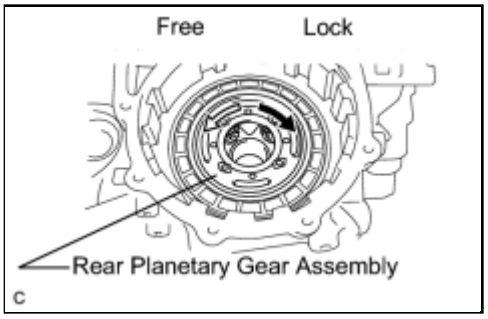

(b) Make sure that the rear planetary gear assembly turns freely counterclockwise and locks when turned clockwise.

63. REMOVE REAR PLANETARY GEAR ASSEMBLY

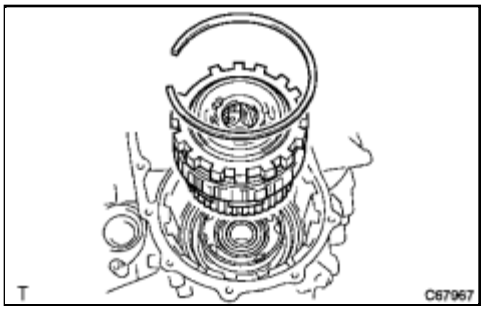

(a) Using a screwdriver, remove the snap ring.

(b) Remove the rear planetary gear assembly from the transaxle case.

64. REMOVE REAR PLANETARY GEAR THRUST NEEDLE ROLLER BEARING

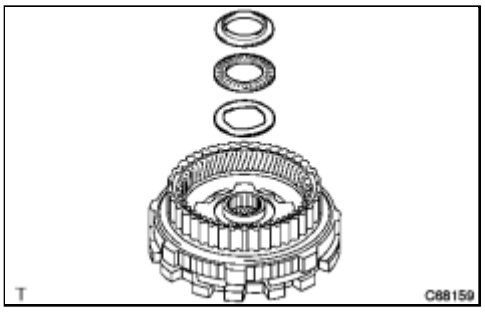

(a) Remove the thrust needle roller bearing and 2 bearing races from the rear planetary gear assembly.

65. REMOVE NO. 2 ONE-WAY CLUTCH

(a) Separate the 2nd brake assembly, No. 2 one-way clutch and the rear planetary gear.

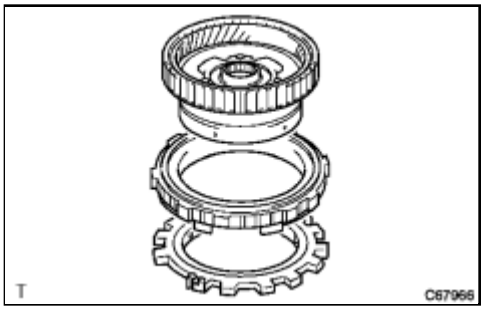

66. REMOVE OUTER RACE RETAINER

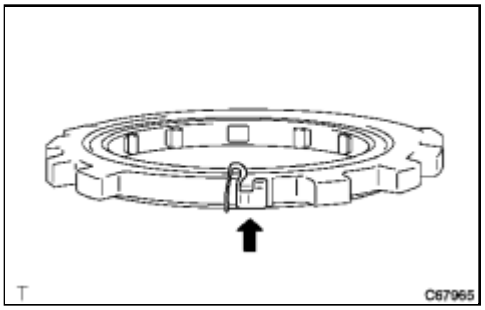

(a) Remove the retainer from the No. 2 one-way clutch.

67. REMOVE 2ND BRAKE PISTON RETURN SPRING SUB-ASSEMBLY

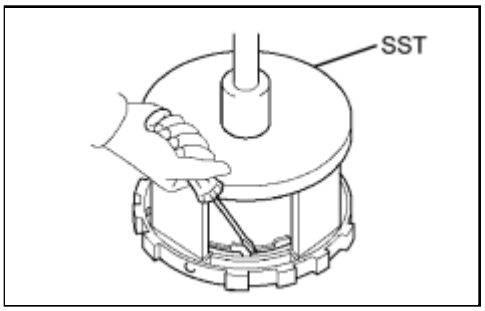

(a) Using SST and a press, remove the snap ring from the 2nd brake piston.

SST: 09387-00060

(b) Remove the 2nd brake return spring from the 2nd brake cylinder.

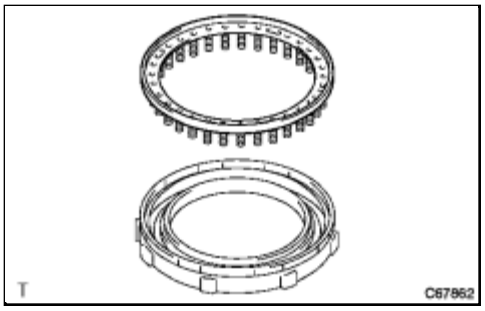

(c) Remove the 2nd brake piston return spring sub-assembly from the 2nd brake cylinder.

68. REMOVE 2ND BRAKE PISTON

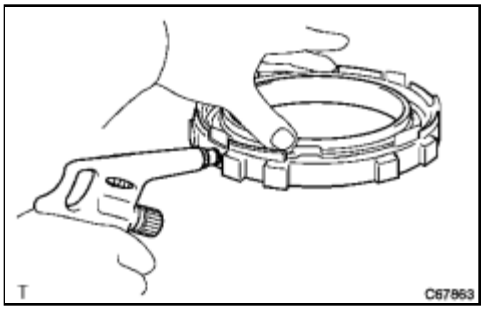

(a) Hold the 2nd brake piston and apply compressed air (392 kPa, 4.0 kgf/cm2, 57 psi) to the 2nd brake cylinder to remove the 2nd brake piston.

69. REMOVE 2ND BRAKE CYLINDER O-RING

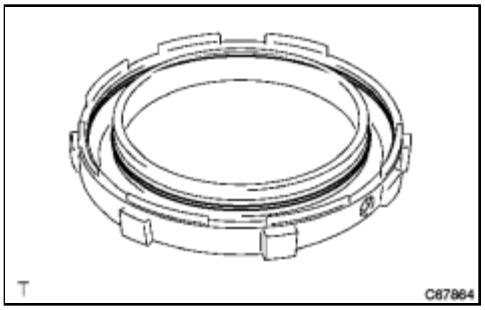

(a) Using a screwdriver, remove the 2 O-rings from the 2nd brake cylinder.

70. REMOVE FRONT PLANETARY SUN GEAR

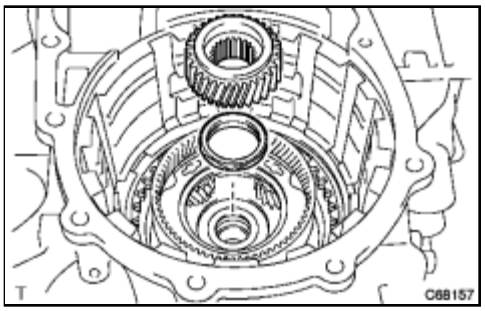

(a) Remove the front planetary sun gear and thrust needle roller bearing from the transaxle case.

71. REMOVE 1ST AND REVERSE BRAKE DISC

(a) Using a screwdriver, remove the snap ring.

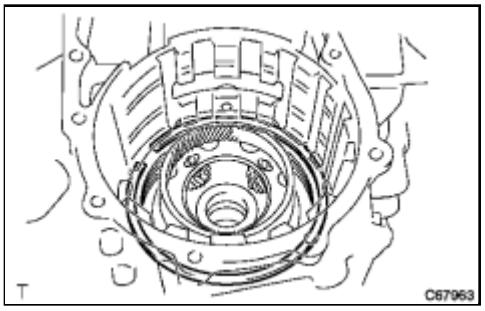

(b) Remove the flange, 4 discs and 4 plates from the transaxle case.

72. REMOVE 1ST AND REVERSE BRAKE RETURN SPRING SUB-ASSEMBLY

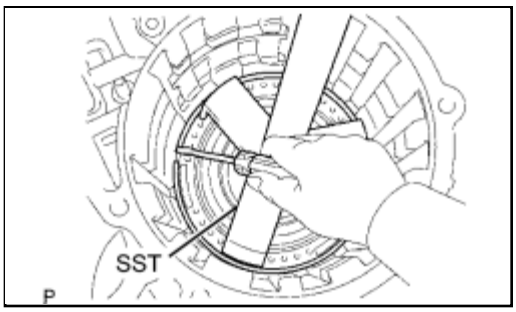

(a) Using SST, a press and a screwdriver, remove the snap ring.

SST: 09387-00070

(b) Remove the 1st and reverse brake return spring sub-assembly.

73. REMOVE NO. 2 1ST AND REVERSE BRAKE PISTON

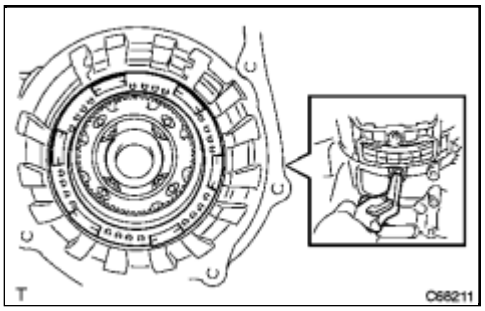

(a) Apply compressed air (392 kPa, 4.0 kgf/cm2, 57 psi) to the transaxle case to remove the No. 2 1st and reverse brake piston.

NOTICE:

- Blowing air may cause the piston to jump out. When removing the piston, hold it by hand using a piece of cloth.
- Do not splash ATF with compressed air.

74. REMOVE NO. 2 1ST AND REVERSE BRAKE PISTON O-RING

(a) Remove the 2 O-rings from the No. 2 1st and reverse brake piston.

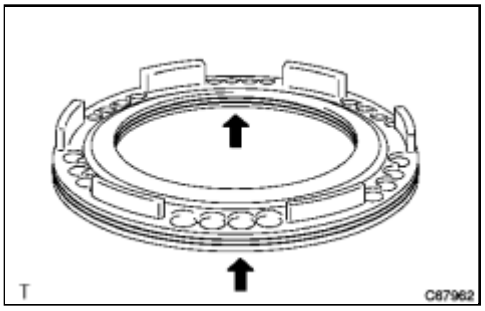

75. REMOVE COUNTER DRIVE GEAR NUT

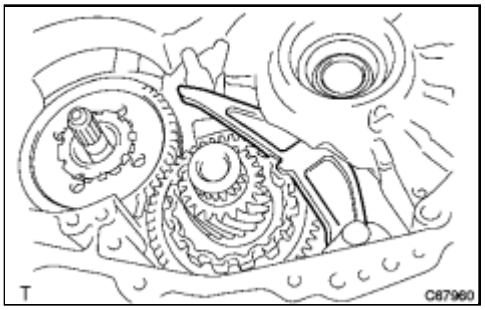

(a) Secure the counter driven gear with the parking lock pawl.

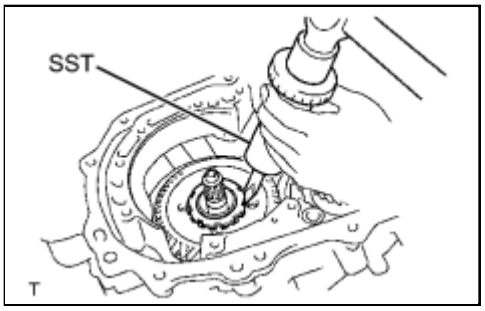

(b) Using SST and a hammer, release the lock nut washer.

SST: 09930-00010

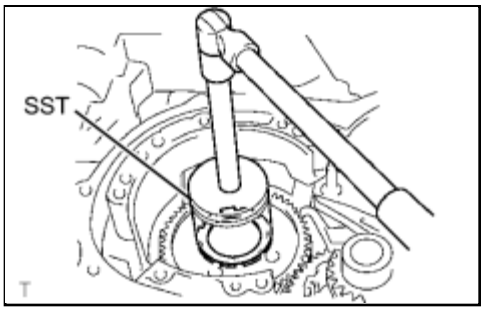

(c) Using SST, remove the nut and lock nut washer.

SST: 09387-00120

76. REMOVE PLANETARY GEAR ASSEMBLY

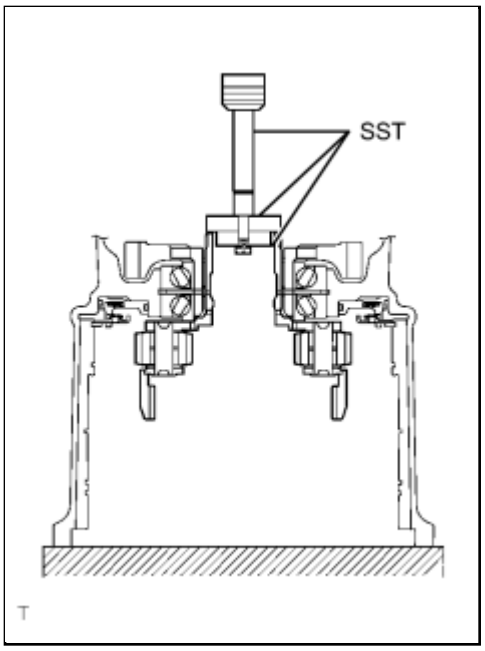

(a) Using SST and a press, remove the planetary gear assembly from the transaxle case.

SST: 09950-60010

09951-00400

09951-00320

09952-06010

SST: 09950-70010

09951-07100

77. REMOVE COUNTER DRIVE GEAR

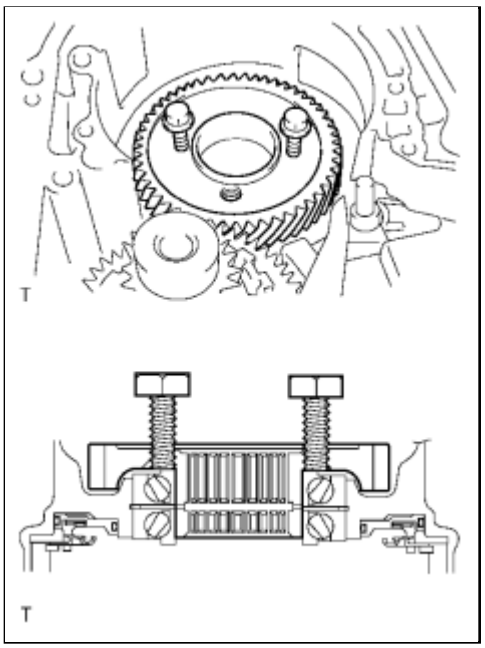

(a) Install the 2 bolts to the counter drive gear.

Bolt (M6):
Length = 40 to 80 mm (1.57 to 3.15 in.)
Pitch = 1.0 mm (0.0394 in.)

(b) Rotate the 2 bolts and remove the counter drive gear and front planetary sun gear.

(c) Remove the 2 radial ball bearings from the counter drive gear and front planetary sun gear.

78. REMOVE PARKING LOCK PAWL BRACKET

(a) Remove the 3 bolts, cam guide and bracket from the

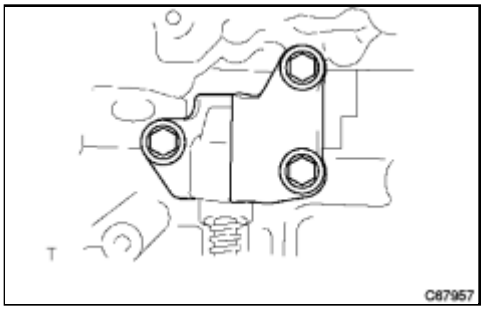

transaxle case.

79. REMOVE MANUAL VALVE LEVER SHAFT RETAINER SPRING

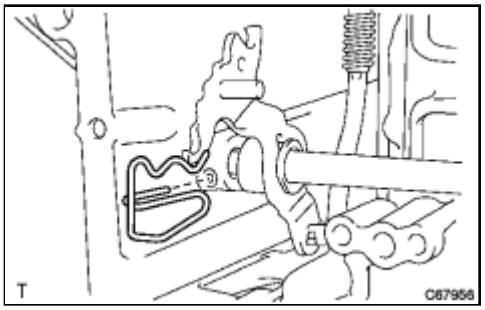

(a) Remove the manual valve lever shaft retainer spring from the manual valve lever shaft.

80. REMOVE MANUAL VALVE LEVER SUB-ASSEMBLY

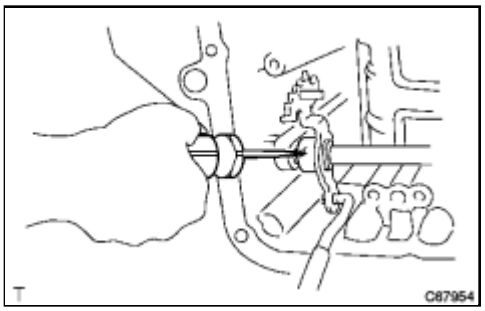

(a) Using a screwdriver, release and remove the spacer.

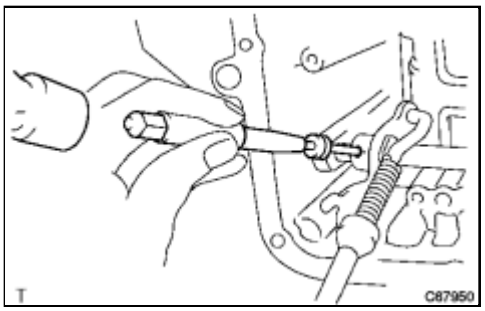

(b) Using a pin punch and hammer, drive out the manual valve lever shaft spring pin.

(c) Remove the manual valve lever shaft and manual valve lever.

81. REMOVE PARKING LOCK ROD SUB-ASSEMBLY

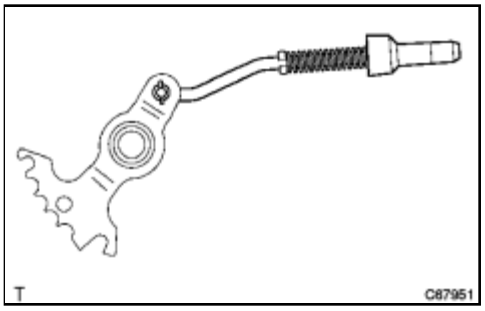

(a) Remove the parking lock rod from the manual valve lever.

82. REMOVE MANUAL VALVE LEVER SHAFT

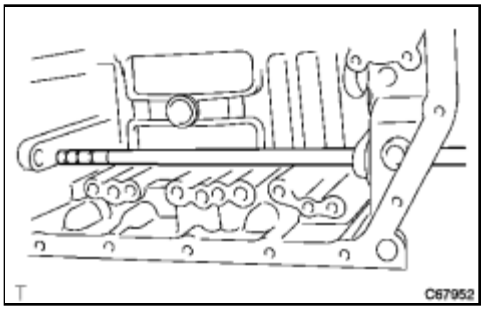

(a) Remove the manual valve lever shaft from the transaxle case.

83. REMOVE PARKING LOCK PAWL

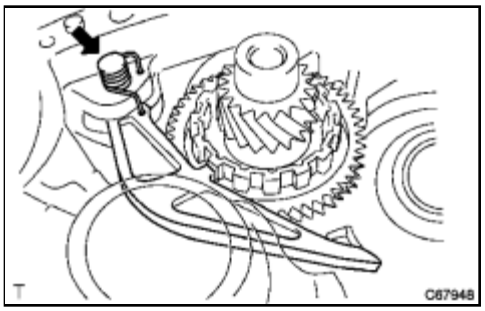

(a) Using a screwdriver, remove the parking lock pawl shaft from the transaxle case.

(b) Remove the parking lock pawl torsion spring and parking lock pawl from the transaxle case.

84. REMOVE COUNTER DRIVEN GEAR

(a) Remove the counter driven gear, drive pinion and drive pinion thrust bearing LH from the transaxle case.

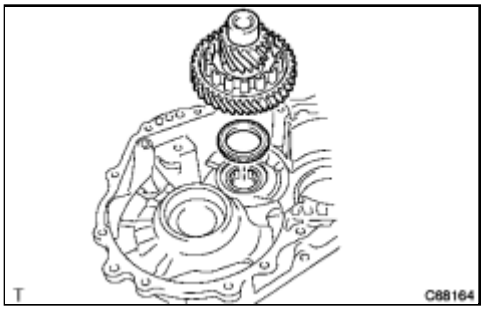

85. REMOVE DIFFERENTIAL DRIVE PINION PLUG

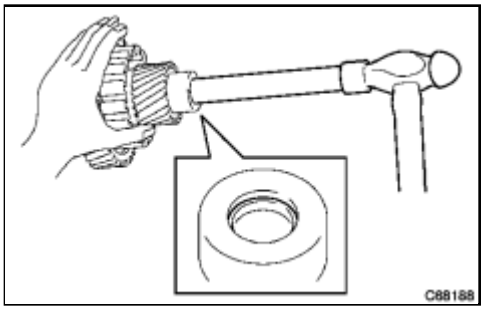

(a) Using a brass bar and a hammer, remove the differential drive pinion plug.

86. REMOVE DIFFERENTIAL DRIVE PINION

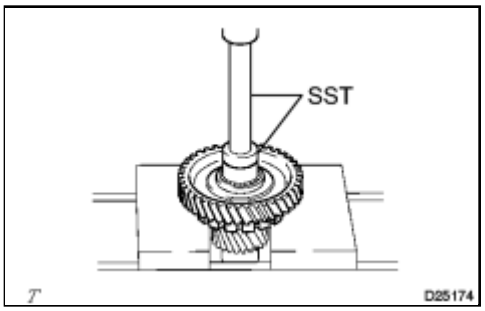

(a) Using SST and a press, remove the differential drive pinion from the counter driven gear.

SST: 09950-60010

09951-00350

SST: 09950-70010

09951-07150

87. REMOVE BEARING LOCK PLATE

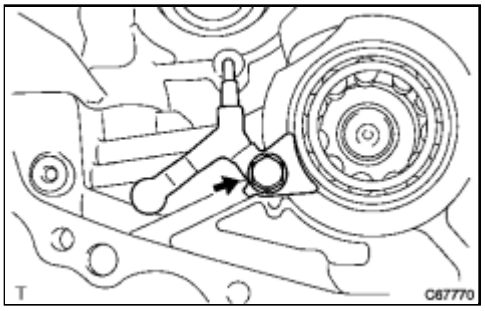

(a) Remove the bolt and the bearing lock plate.

88. REMOVE DIFFERENTIAL GEAR LUBE APPLY TUBE

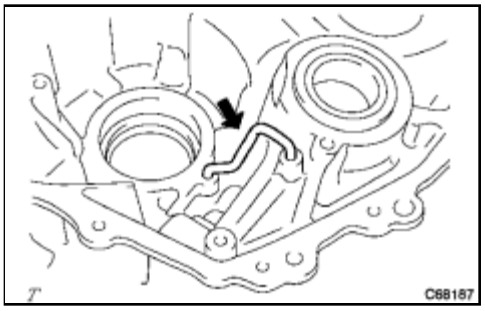

(a) Remove the differential gear lube apply tube from the transaxle housing.

89. REMOVE FRONT DRIVE PINION FRONT TAPERED ROLLER BEARING

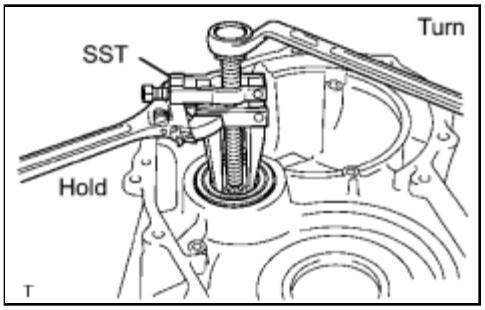

(a) Using SST, remove the front drive pinion front tapered roller bearing from the transaxle housing.

SST: 09308-10010

90. REMOVE FRONT DRIVE PINION REAR TAPERED ROLLER BEARING

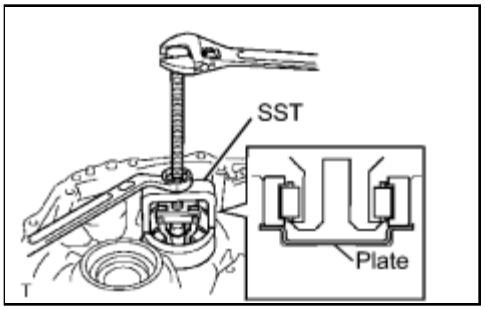

(a) Using SST, remove the front drive pinion rear tapered roller bearing from the transaxle case.

SST: 09612-65014

09612-01040

(b) Remove the No. 1 transaxle case plate from the transaxle case.

91. REMOVE COUNTER DRIVE GEAR BEARING LH

(a) Remove the counter drive gear bearing inner race LH and angular ball from the transaxle case.

(b) Using SST, remove the counter drive gear bearing outer race LH from the transaxle case.

SST: 09308-00010

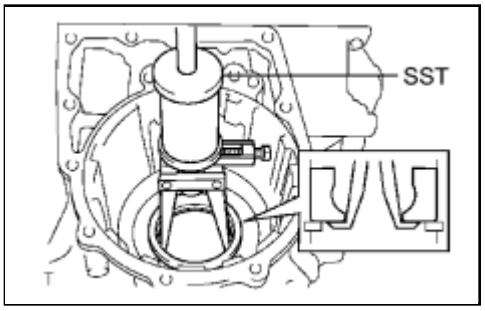

92. REMOVE COUNTER DRIVE GEAR BEARING RH

(a) Remove the counter drive gear bearing RH from the transaxle case.

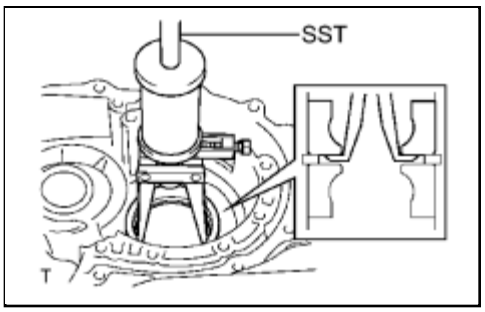

(b) Using SST, remove the counter drive gear bearing outer race RH from the transaxle case.

SST: 09308-00010

93. REMOVE COUNTER DRIVE GEAR HOLE SNAP RING

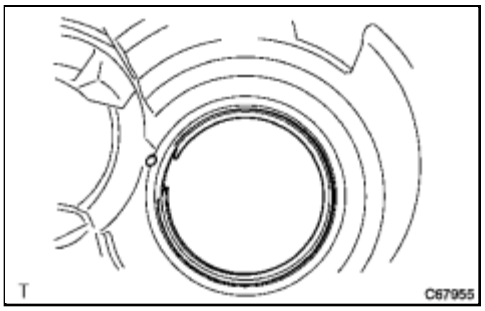

(a) Using a screwdriver, remove the counter drive gear hole snap ring from the transaxle case.

94. REMOVE MANUAL VALVE LEVER SHAFT OIL SEAL

(a) Using a screwdriver, remove the manual valve lever shaft oil seal from the transaxle case.

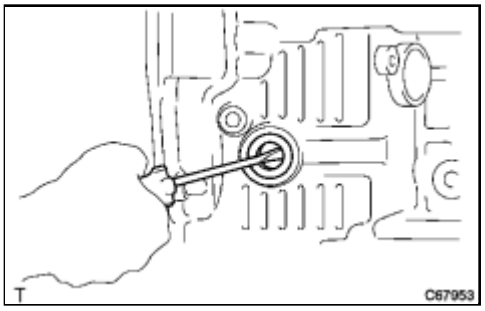

95. REMOVE NO. 2 TRANSAXLE CASE OIL SEAL

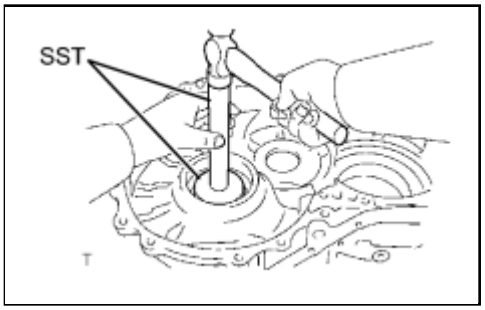

(a) Using SST and a hammer, remove the No. 2 transaxle case oil seal from the transaxle case.

SST: 09950-60010

09951-00550

SST: 09950-70010

09951-07100

96. REMOVE NO. 1 TRANSAXLE CASE OIL SEAL

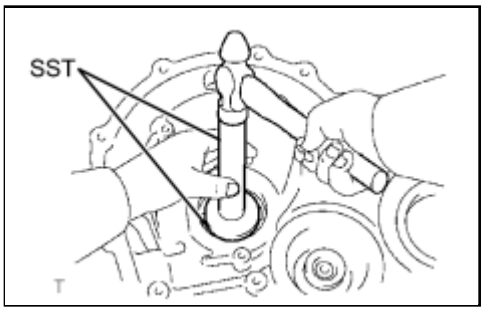

(a) Using SST and a hammer, remove the No. 1 transaxle case oil seal from the transaxle housing.

SST: 09950-60010

09951-00530

SST: 09950-70010

09951-07100

Last Modified: 3-10-2010	6.4 G	**From:** 200901
Model Year: 2010	**Model:** Corolla	**Doc ID:** RM000003DEZ005X
Title: U250E AUTOMATIC TRANSMISSION / TRANSAXLE: AUTOMATIC TRANSAXLE UNIT: INSPECTION (2010 Corolla)		

INSPECTION

1. INSPECT MULTIPLE DISC CLUTCH HUB

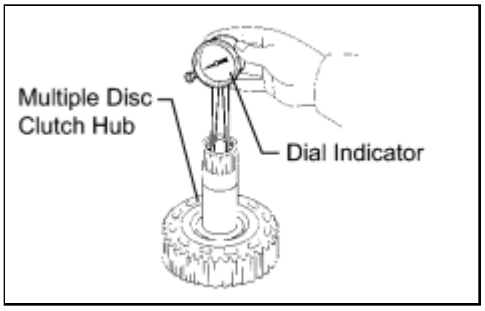

(a) Using a dial indicator, measure the inside diameter of the multiple disc clutch hub bushing.

Standard inside diameter:
23.025 to 23.046 mm (0.9065 to 0.9073 in.)
Maximum inside diameter:
23.09 mm (0.9091 in.)

If the diameter is greather than the maximum, replace the multiple disc clutch hub with a new one.

NOTICE:

Check the contact surface of the bushing in the direct clutch shaft. If any scratches or discoloration is found, replace the direct clutch sub-assembly with a new one.

2. INSPECT NO. 2 UNDERDRIVE CLUTCH DISC

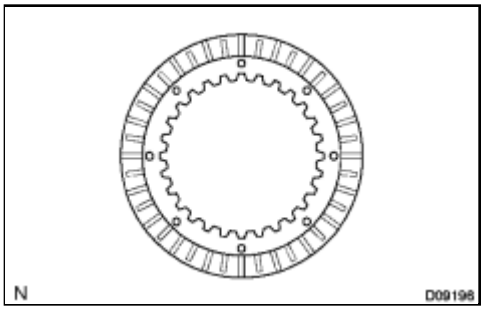

(a) Check if the sliding surfaces of the discs, plates and flange are worn or burnt.

If necessary, replace them.

NOTICE:

- If the linings of a disc is peeled off or discolored, or even if a part of the groove is damaged, replace all discs.
- Before assembling new discs, soak them in ATF for at least 15 minutes.

3. INSPECT OVERDRIVE DIRECT CLUTCH DRUM SUB-ASSEMBLY

(a) Using a dial indicator, measure the inside diameter of the overdrive direct clutch drum sub-assembly bushing.

Standard inside diameter:
23.025 to 23.046 mm (0.9065 to 0.9073 in.)
Maximum inside diameter:
23.09 mm (0.9091 in.)

If the diameter is greather than the maximum, replace the overdrive direct clutch drum sub-assembly.

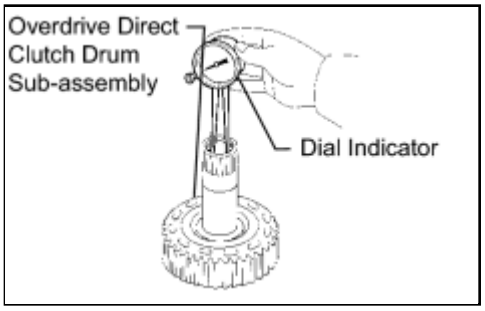

NOTICE:

Check the contact surface of the bushing in the direct clutch shaft. If any scratches or discoloration is found, replace the direct clutch sub-assembly with a new one.

4. INSPECT 2ND BRAKE DISC

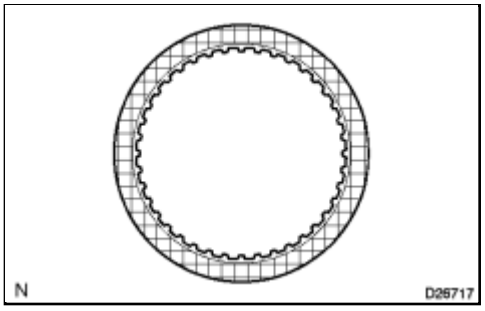

(a) Check if the sliding surfaces of the discs, plates and flange are worn or burnt.

If necessary, replace them.

NOTICE:

- If the linings of a disc is peeled off or discolored, or even if a part of the groove is damaged, replace all discs.
- Before assembling new discs, soak them in ATF for at least 15 minutes.

5. INSPECT 1ST AND REVERSE BRAKE DISC

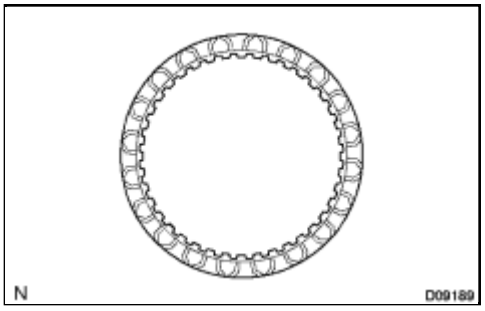

(a) Check if the sliding surfaces of the discs, plates and flange are worn or burnt.

If necessary, replace them.

NOTICE:

- If the linings of a disc is peeled off or discolored, or even if a part of the groove is damaged, replace all discs.
- Before assembling new discs, soak them in ATF for at least 15 minutes.

6. INSPECT 1ST AND REVERSE BRAKE RETURN SPRING SUB-ASSEMBLY

(a) Using a vernier caliper, measure the free length of the spring together with the spring seat.

Standard free length:
17.63 mm (0.6941 in.)

If the free length is shorter than the standard free length, replace the 1st and reverse brake return spring sub-assembly.

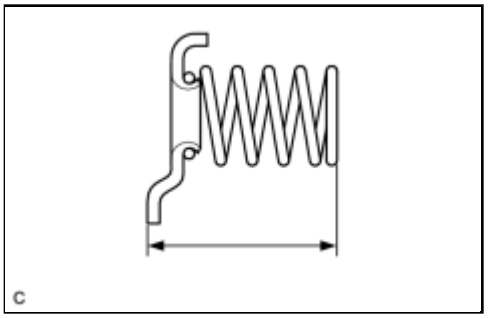

7. INSPECT UNDERDRIVE BRAKE RETURN SPRING SUB-ASSEMBLY

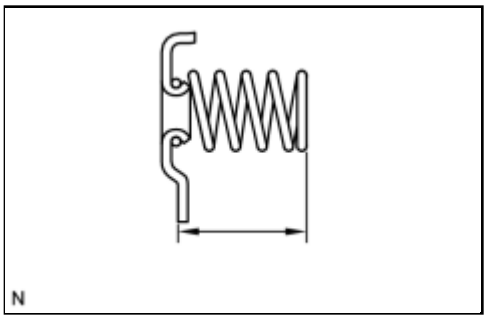

(a) Using a vernier caliper, measure the free length of the spring together with the spring seat.

Standard free length:
13.24 mm (0.5213 in.)

If the free length is shorter than the standard free length, replace the underdrive brake return spring sub-assembly.

8. INSPECT PACK CLEARANCE OF 1ST AND REVERSE BRAKE

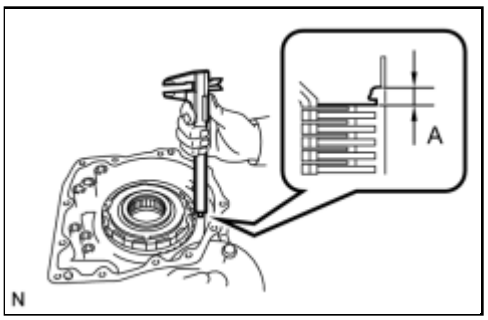

(a) Using a vernier caliper, measure the distance between the disc surface and the contact surface of the 2nd brake cylinder and transaxle case (Dimension A).

(b) Select an appropriate flange so that the pack clearance will be within the specified range.

Pack clearance:
0.745 to 1.21 mm (0.0293 to 0.0476 in.)

HINT:

Piston stroke = Dimension A - Flange thickness

Flange Thickness

MARK	THICKNESS (MM (IN.))	MARK	THICKNESS (MM (IN.))

MARK	THICKNESS (MM (IN.))	MARK	THICKNESS (MM (IN.))
1	1.8 (0.0708)	5	2.2 (0.0866)
2	1.9 (0.0748)	6	2.3 (0.0906)
3	2.0 (0.0787)	7	2.4 (0.0945)
4	2.1 (0.0827)	8	2.5 (0.0984)

(c) Install the flange.

9. INSPECT PACK CLEARANCE OF 2ND BRAKE

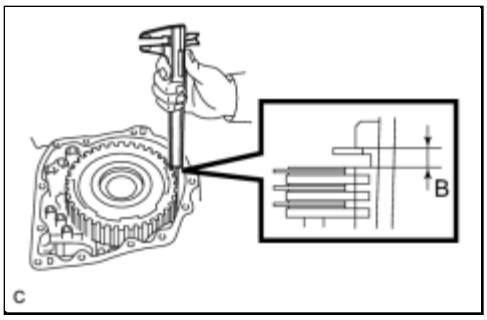

(a) Using a vernier caliper, measure the distance between the disc surface and snap ring surface (Dimension B).

(b) Select an appropriate flange so that the pack clearance will be within the specified range.

Pack clearance:
0.53 to 0.91 mm (0.0209 to 0.0358 in.)

HINT:

Piston stroke = Dimension B - Flange thickness - Snap ring thickness 1.6 mm (0.0630 in.)

Flange Thickness

MARK	THICKNESS (MM (IN.))	MARK	THICKNESS (MM (IN.))
0	2.9 (0.114)	5	3.4 (0.134)
1	3.0 (0.118)	6	3.5 (0.138)
2	3.1 (0.122)	7	3.6 (0.142)
3	3.2 (0.126)	8	3.7 (0.146)
4	3.3 (0.130)	-	-

(c) Install the flange.

10. INSPECT PACK CLEARANCE OF UNDERDRIVE BRAKE

(a) Using a dial indicator, measure the underdrive clutch pack clearance while applying and releasing compressed air

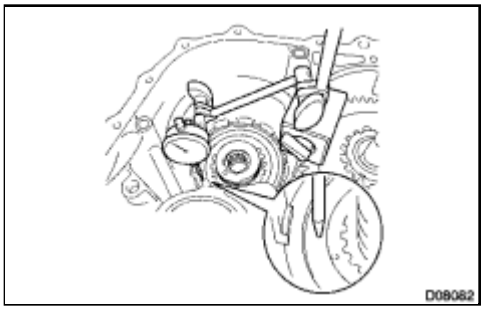

(392 kPa, 4.0 kgf/cm2, 57 psi).

Pack clearance:
1.81 to 2.20 mm (0.0713 to 0.0866 in.)

(b) Select an appropriate flange from the table below so that the pack clearance will be within the specified range.

Flange Thickness

MARK	THICKNESS (MM (IN.))	MARK	THICKNESS (MM (IN.))
Y	2.8 (0.110)	C	3.4 (0.134)
A	3.0 (0.118)	D	3.6 (0.142)
B	3.2 (0.126)	-	-

(c) Temporarily remove the snap ring and attach the flange to the transaxle case.

(d) Reinstall the snap ring to the transaxle case.

11. INSPECT UNDERDRIVE ONE-WAY CLUTCH ASSEMBLY

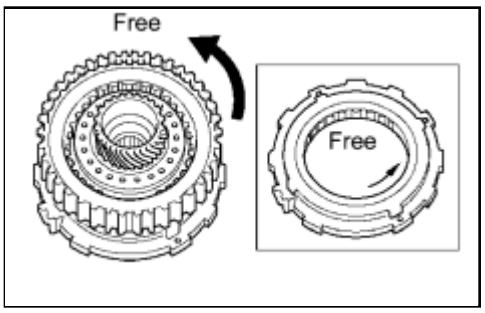

(a) Install the underdrive clutch assembly to the one-way clutch.

(b) Make sure that the underdrive one-way clutch turns freely counterclockwise and locks when turned clockwise.

(c) Remove the underdrive clutch assembly from the one-way clutch.

12. INSPECT INPUT SHAFT END PLAY

(a) Using a dial indicator, measure the input shaft end play.

End play:
0.262 to 1.249 mm (0.0103 to 0.0492 in.)

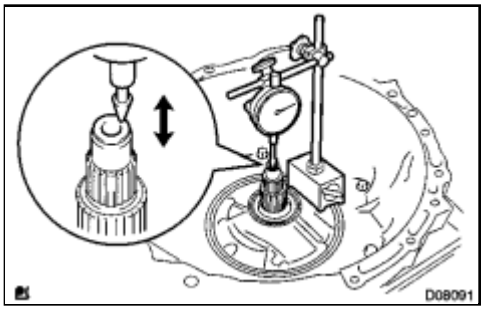

13. INSPECT DIRECT MULTIPLE DISC CLUTCH DISC

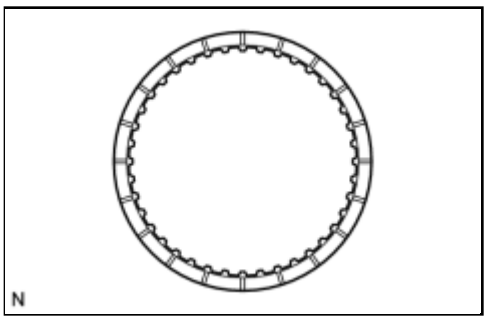

(a) Check if the sliding surfaces of the discs, plates, and flange are worn or burnt.

If necessary, replace them.

NOTICE:

- If the linings of a disc is peeled off or discolored, or even if a part of the groove is damaged, replace all discs.
- Before assembling new discs, soak them in ATF for at least 15 minutes.

14. INSPECT OVERDRIVE DIRECT CLUTCH DISC

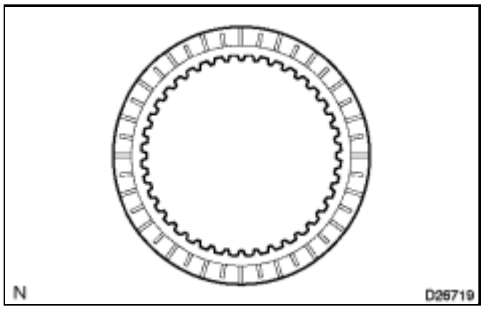

(a) Check if the sliding surfaces of the discs, plates, and flange are worn or burnt. If necessary, replace them.

NOTICE:

- If the linings of a disc is peeled off or discolored, or even if a part of the groove is damaged, replace all discs.
- Before assembling new discs, soak them in ATF for at least 15 minutes.

15. INSPECT OVERDRIVE CLUTCH RETURN SPRING SUB-ASSEMBLY

(a) Using a vernier caliper, measure the free length of the spring together with the spring seat.

Standard free length:
25.91 mm (1.0201 in.)

If the free length is shorter than the standard free length, replace the overdrive clutch return spring sub-assembly.

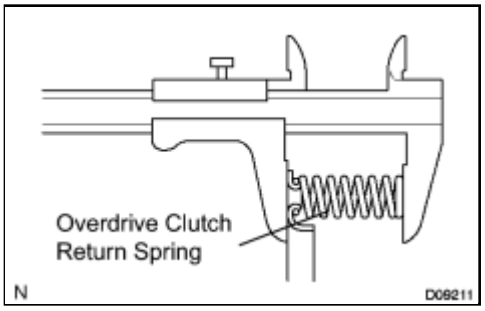

16. INSPECT PACK CLEARANCE OF DIRECT CLUTCH

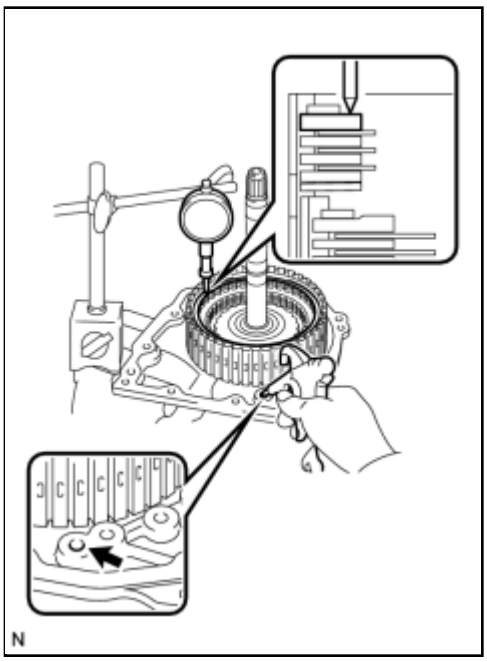

(a) Install the intermediate shaft and needle roller bearing on the transaxle rear cover.

NOTICE:

Be careful not to damage the oil seal ring outers.

(b) Using a dial indicator, measure the direct clutch pack clearance while applying and releasing compressed air (392 kPa, 4.0 kgf/cm^2, 57 psi).

Pack clearance:
1.05 to 1.47 mm (0.04134 to 0.05787 in.)

If the pack clearance is not as specified, inspect the discs, plates and flange.

17. INSPECT PACK CLEARANCE OF OVERDRIVE CLUTCH

(a) Using a dial indicator, measure the overdrive clutch pack clearance while applying and releasing compressed air (392 kPa, 4.0 kgf/cm2, 57 psi).

Pack clearance:
0.61 to 0.83 mm (0.02402 to 0.03268 in.)

If the pack clearance is not as specified, inspect the discs, plates and flange.

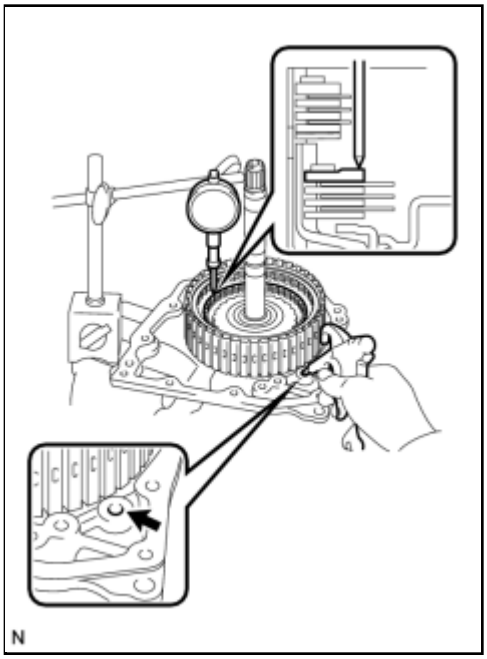

18. INSPECT PACK CLEARANCE OF DIRECT CLUTCH

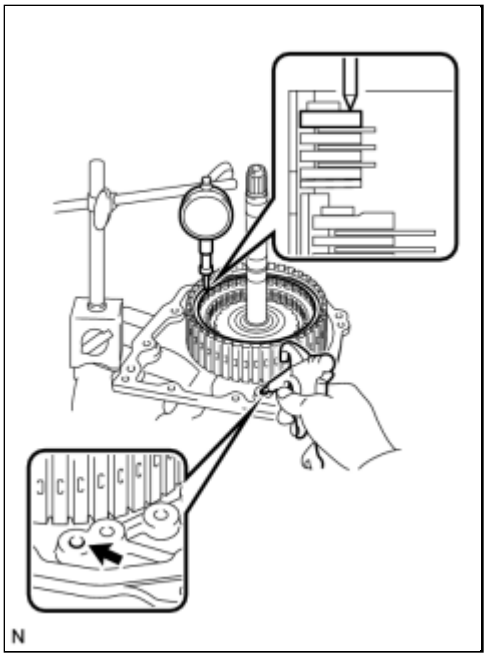

(a) Install the intermediate shaft on the transaxle rear cover.

(b) Using a dial indicator, measure the direct clutch pack clearance while applying and releasing compressed air (392 kPa, 4.0 kgf/cm^2, 57 psi).

Pack clearance:

1.05 to 1.47 mm (0.04134 to 0.05787 in.)

If the pack clearance is less than the minimum, the parts may have been assembled incorrectly, so check and reassemble them.

If the clearance is not as specified, select another flange.

HINT:

There are 8 different thicknesses of flanges available.

Flange Thickness

MARK	THICKNESS (MM (IN.))	MARK	THICKNESS (MM (IN.))
0	2.9 (0.114)	4	3.3 (0.130)
1	3.0 (0.118)	5	3.4 (0.134)
2	3.1 (0.122)	6	3.5 (0.138)
3	3.2 (0.126)	7	3.6 (0.142)

19. INSPECT PACK CLEARANCE OF OVERDRIVE CLUTCH

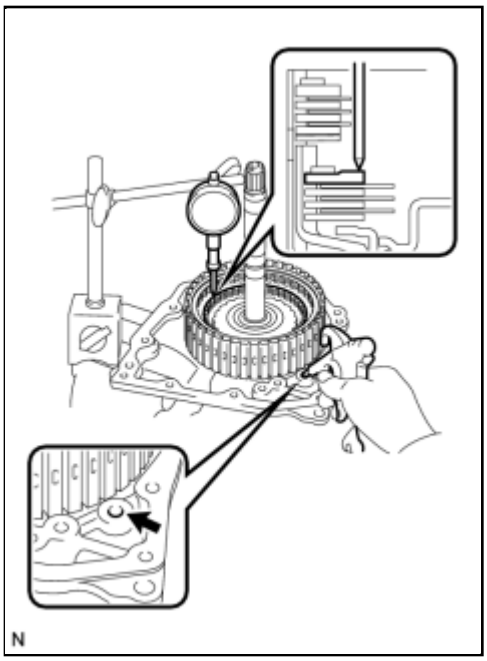

(a) Using a dial indicator, measure the overdrive clutch pack clearance while applying and releasing compressed air (392 kPa, 4.0 kgf/cm2, 57 psi).

Pack clearance:
0.61 to 0.83 mm (0.02402 to 0.03268 in.)

If the pack clearance is less than the minimum, the parts may have been assembled incorrectly, so check and reassemble them.

If the clearance is not as specified, select another flange.

HINT:

There are 7 different thicknesses of flanges available.

Flange Thickness

MARK	THICKNESS (MM (IN.))	MARK	THICKNESS (MM (IN.))
0	2.5 (0.0984)	4	2.9 (0.114)
1	2.6 (0.102)	5	3.0 (0.118)
2	2.7 (0.106)	6	3.1 (0.122)
3	2.8 (0.110)	-	-

(b) Check that the disc rotates after inserting the rear planetary sun gear.

NOTICE:

Do not place the rear planetary sun gear in a vise.

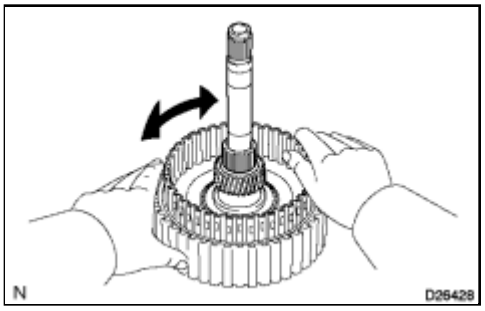

20. INSPECT 2ND BRAKE PISTON RETURN SPRING SUB-ASSEMBLY

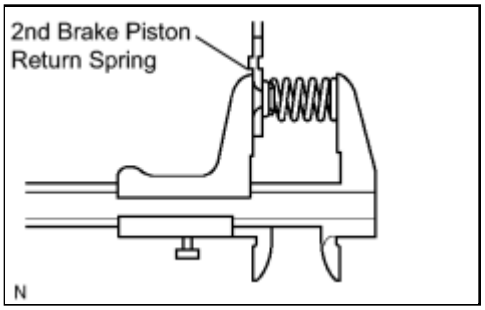

(a) Using a vernier caliper, measure the free length of the spring together with the spring seat.

Standard free length:
16.61 mm (0.6539 in.)

If the free length is shorter than the standard free length, replace the 2nd brake piston return spring sub-assembly.

21. INSPECT PACK CLEARANCE OF FORWARD CLUTCH

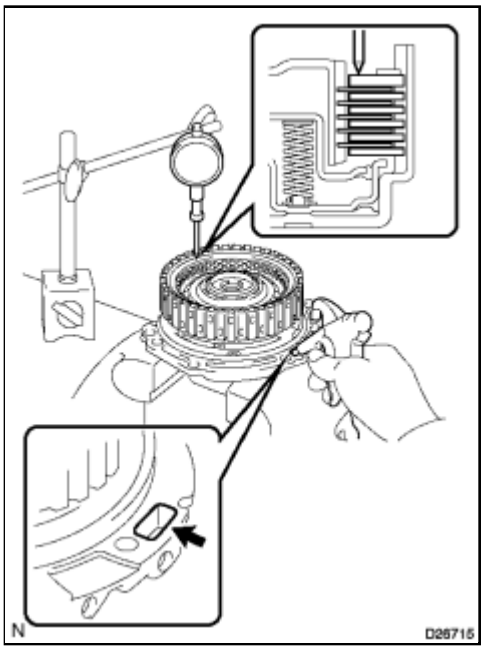

(a) Install the forward clutch on the oil pump.

NOTICE:

Be careful not to damage the oil seal ring of the oil pump.

(b) Using a dial indicator, measure the forward clutch pack clearance while applying and releasing compressed air (392 kPa, 4.0 kgf/cm^2, 57 psi).

Pack clearance:

1.00 to 1.25 mm (0.0394 to 0.0492 in.)

If the clearance is not within the standard, inspect the discs, plates and flange.

If the piston stroke is less than the minimum, the parts may have been assembled incorrectly. Check and reassemble them again.

HINT:

- As the opening is large, cover it with a piece of cloth or shop rag to prevent the compressed air from being released.
- There are 7 different thicknesses of flanges available.

Flange Thickness:

NO.	THICKNESS (MM (IN.))	NO.	THICKNESS (MM (IN.))
0	2.85 (0.1122)	4	3.45 (0.1358)
1	3.00 (0.1181)	5	3.60 (0.1417)
2	3.15 (0.1240)	6	3.75 (0.1476)
3	3.30 (0.1299)	-	-

22. INSPECT FORWARD MULTIPLE DISC CLUTCH DISC

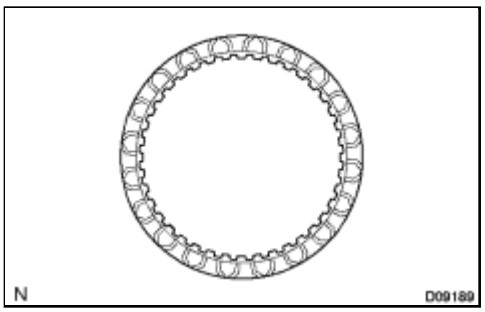

(a) Check if the sliding surfaces of the discs, plates, and flange are worn or burnt.

If necessary, replace them.

HINT:

- If the linings of a disc is peeled off or discolored, or even if a part of the groove is damaged, replace all discs.
- Before assembling new discs, soak them in ATF for at least 15 minutes.

23. INSPECT FORWARD CLUTCH RETURN SPRING SUB-ASSEMBLY

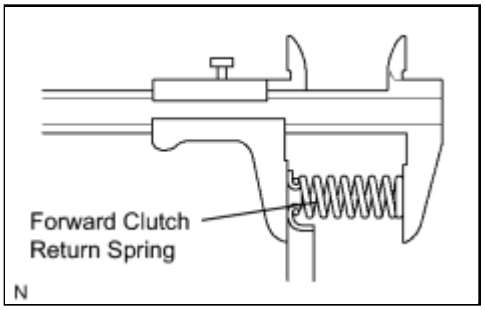

(a) Using a vernier caliper, measure the free length of the spring together with the spring seat.

Standard free length:
26.74 mm (1.0528 in.)

If the free length is shorter than the standard free length, replace the forward clutch return spring sub-assembly.

24. INSPECT FORWARD MULTIPLE DISC CLUTCH DISC

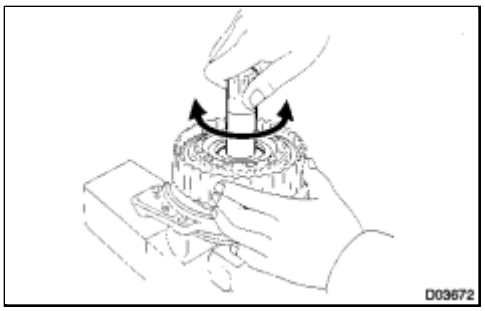

(a) Check if the disc rotates when lightly rotating the forward clutch assembly after inserting the multiple disc clutch.

NOTICE:

Do not place the forward clutch assembly in a vise.

25. INSPECT UNDERDRIVE PLANETARY GEAR PRELOAD

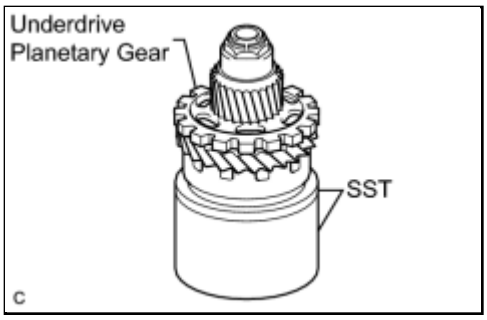

(a) Using SST, fix the underdrive planetary gear assembly.

SST: 09387-00050

SST: 09495-65040

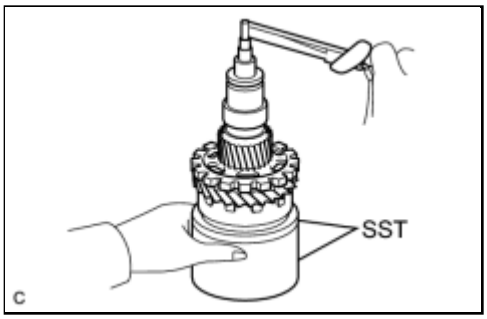

(b) Using SST and a torque wrench, measure the turning torque of the underdrive planetary gear assembly while turning the torque wrench at 60 rpm.

SST: 09387-00050

SST: 09495-65040

Turning torque at 60 rpm:

0.28 to 0.89 N*m (2.9 to 9.1 kgf*cm, 2.5 to 7.9 in.*lbf)

HINT:

Use a torque wrench with a fulcrum length of 160 mm (6.30 in.).

26. INSPECT UNDERDRIVE PACK CLEARANCE

(a) Install the underdrive clutch to the transaxle case.

NOTICE:

Be careful not to damage the oil seal rings.

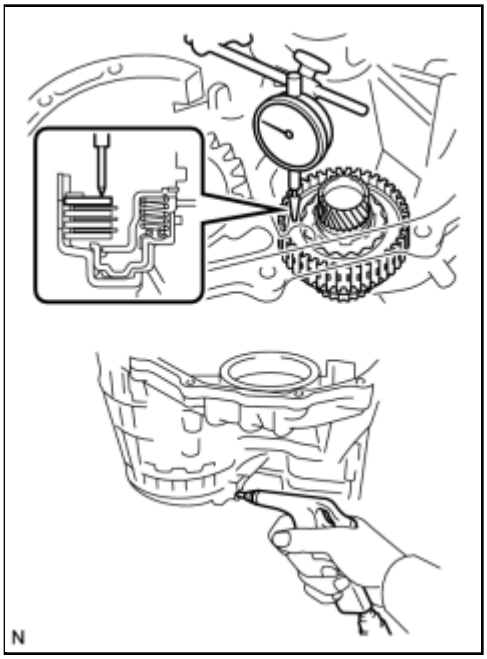

(b) Install a dial indicator as shown in the illustration.

(c) Measure the underdrive clutch pack clearance while applying and releasing compressed air (392 kPa, 4.0 kgf/cm^2, 57 psi).

Pack clearance:
1.51 to 1.71 mm (0.0594 to 0.0673 in.)

If the pack clearance is not within the specified range, inspect the discs, plates, and flange.

27. INSPECT NO. 1 UNDERDRIVE CLUTCH DISC

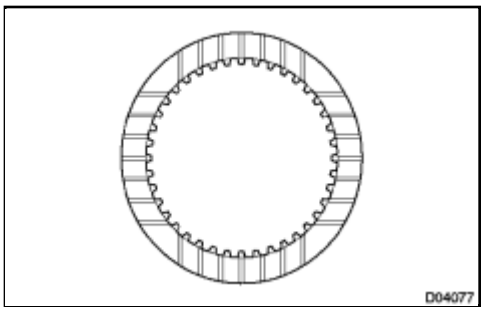

(a) Check if the sliding surfaces of the discs, plates and flange are worn or burnt.

If necessary, replace them.

HINT:

- If the linings of a disc is peeled off or discolored, or even if a part of the groove is damaged, replace all discs.
- Before assembling new discs, soak them in ATF for at least 15 minutes.

28. INSPECT UNDERDRIVE CLUTCH DRUM SUB-ASSEMBLY

(a) Using a dial indicator, measure the inside diameter of the underdrive clutch drum bushing.

Standard inside diameter:
32.56 to 32.58 mm (1.2818 to 1.2826 in.)
Maximum inside diameter:

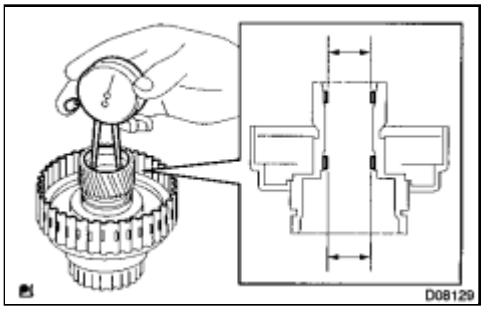

32.63 mm (1.2846 in.)

If the inside diameter is greater than the maximum, replace the underdrive clutch drum.

29. INSPECT UNDERDRIVE CLUTCH RETURN SPRING SUB-ASSEMBLY

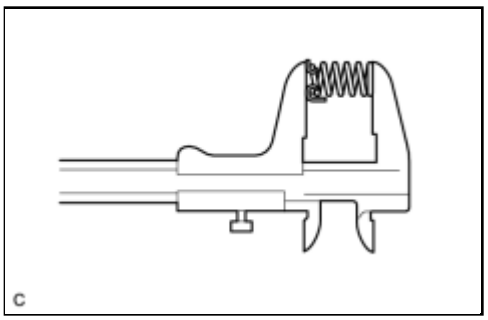

(a) Using a vernier caliper, measure the free length of the spring together with the spring seat.

Standard free length:
17.14 mm (0.6748 in.)

If the free length is shorter than the standard free length, replace the underdrive clutch return spring sub-assembly.

Last Modified: 3-10-2010	6.4 K	**From:** 200901
Model Year: 2010	**Model:** Corolla	**Doc ID:** RM00000192G018X
Title: U341E AUTOMATIC TRANSMISSION / TRANSAXLE: AUTOMATIC TRANSAXLE UNIT: COMPONENTS (2010 Corolla)		

COMPONENTS

ILLUSTRATION

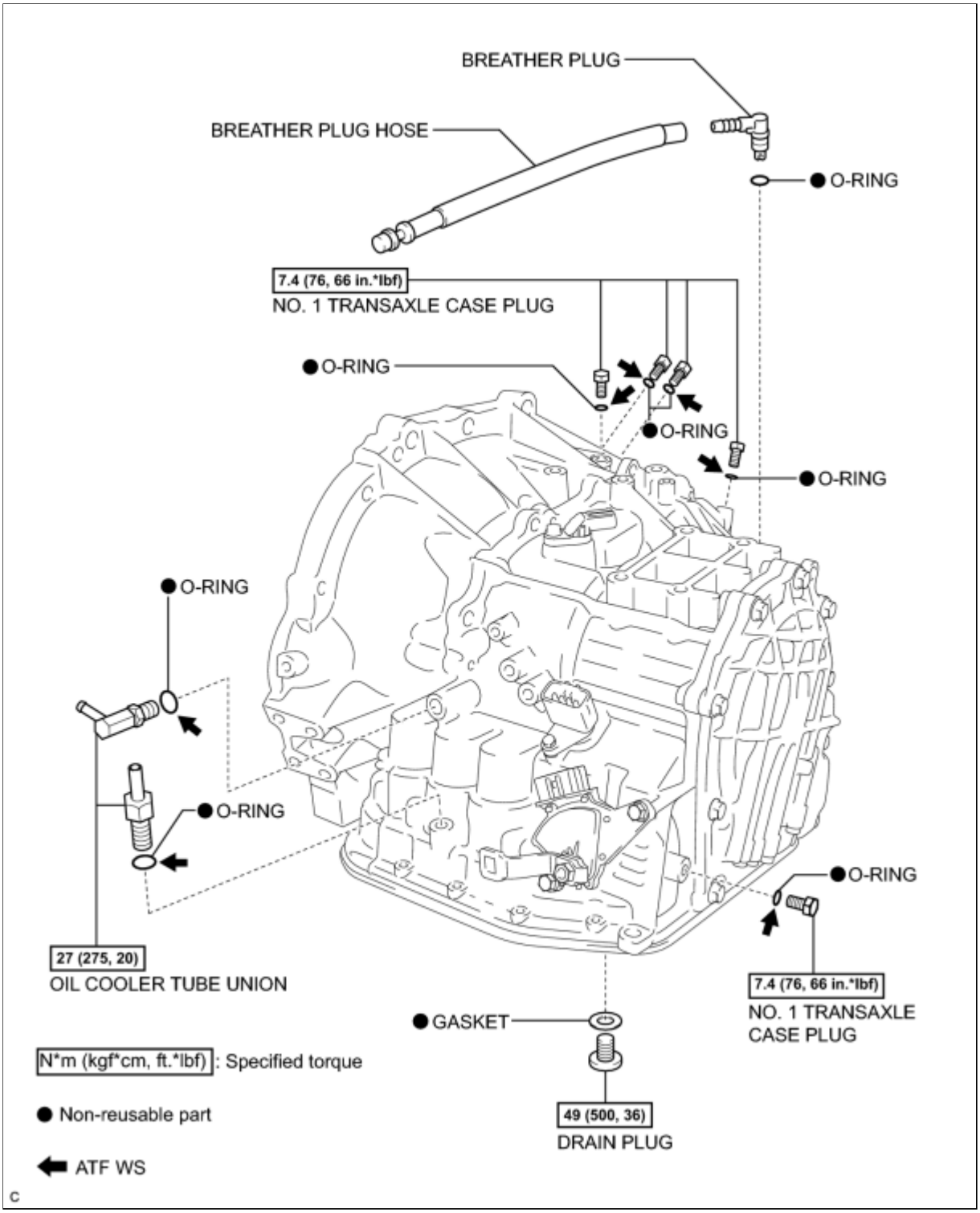

ILLUSTRATION

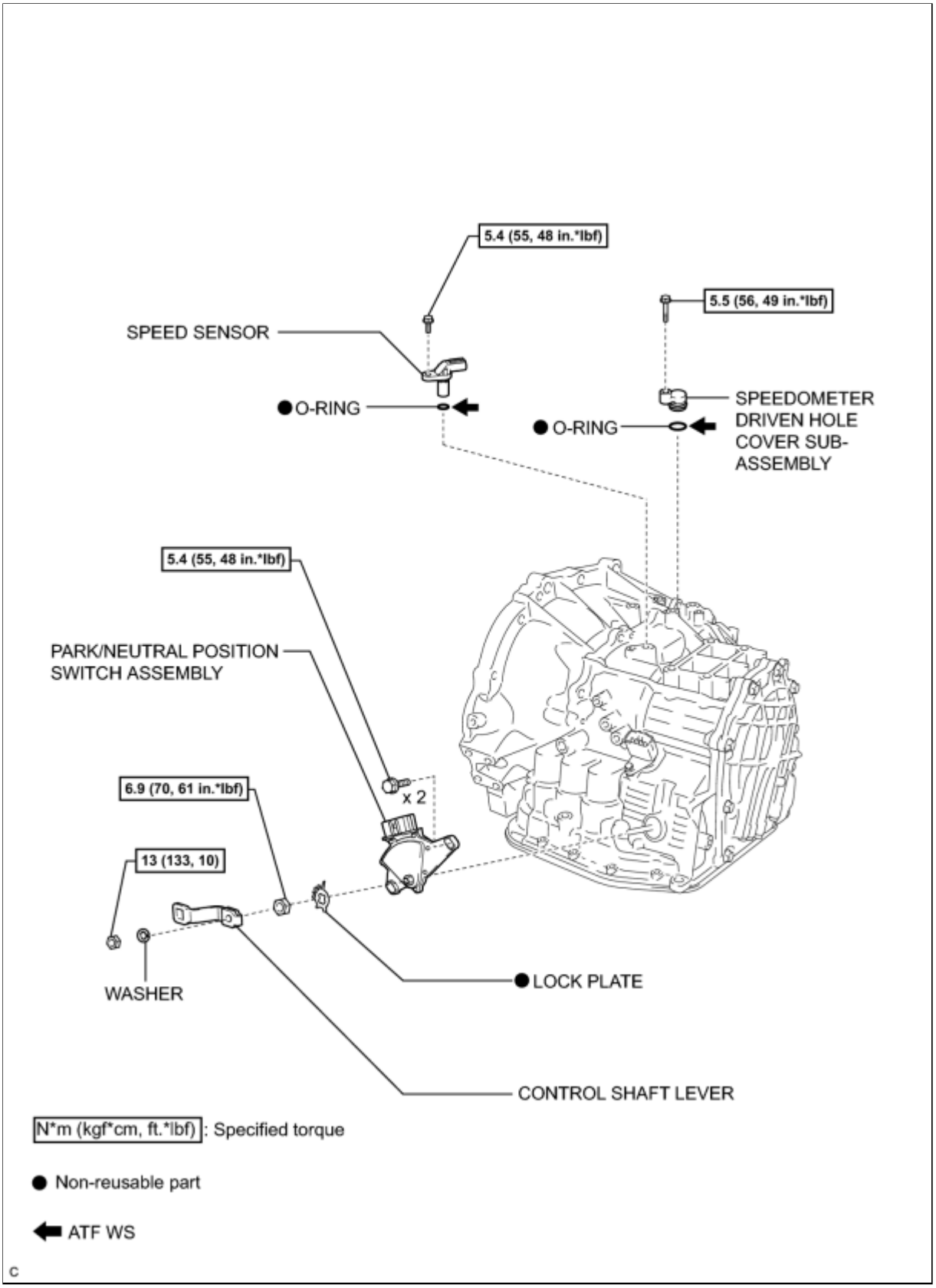

ILLUSTRATION

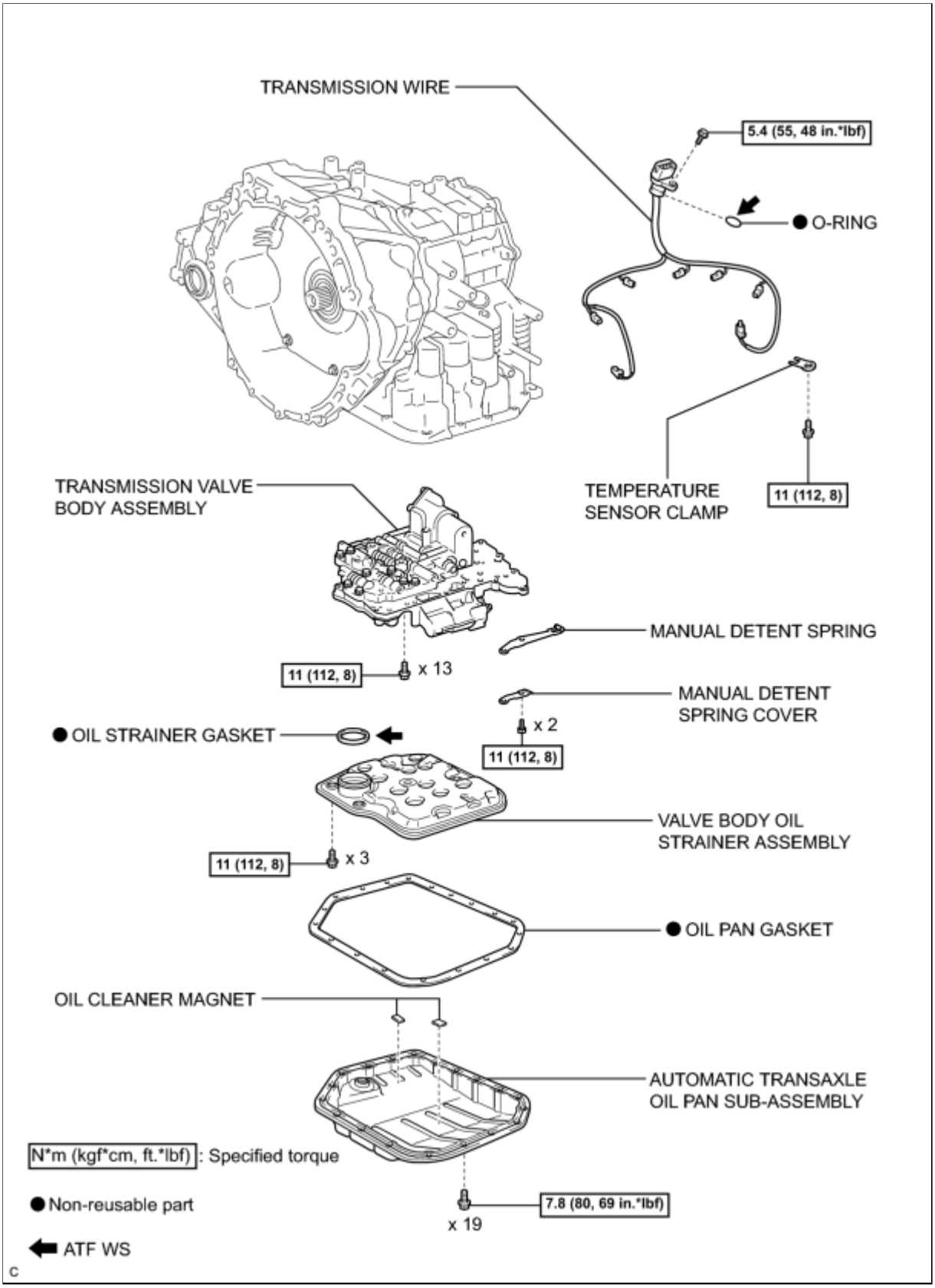

ILLUSTRATION

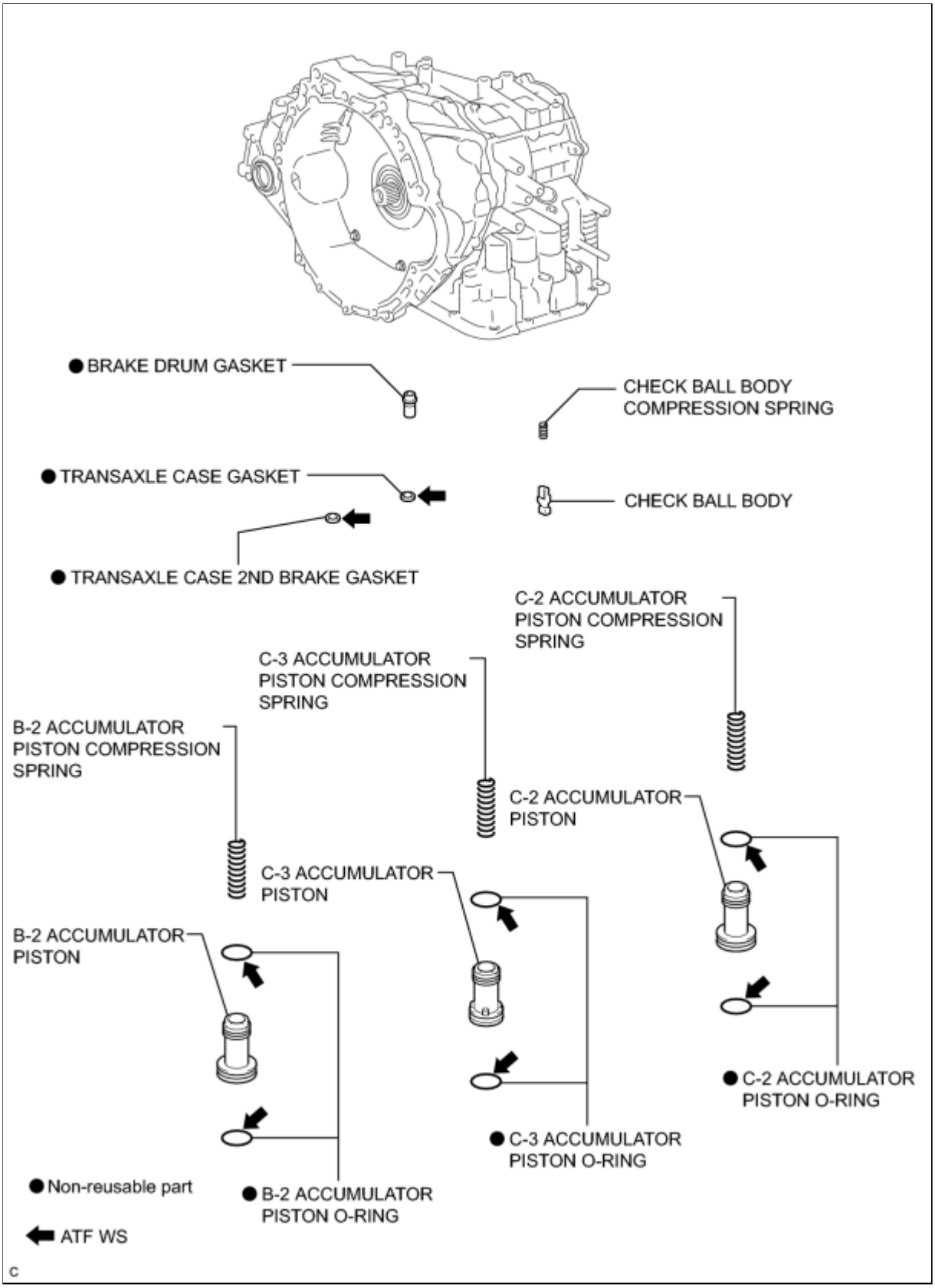

ILLUSTRATION

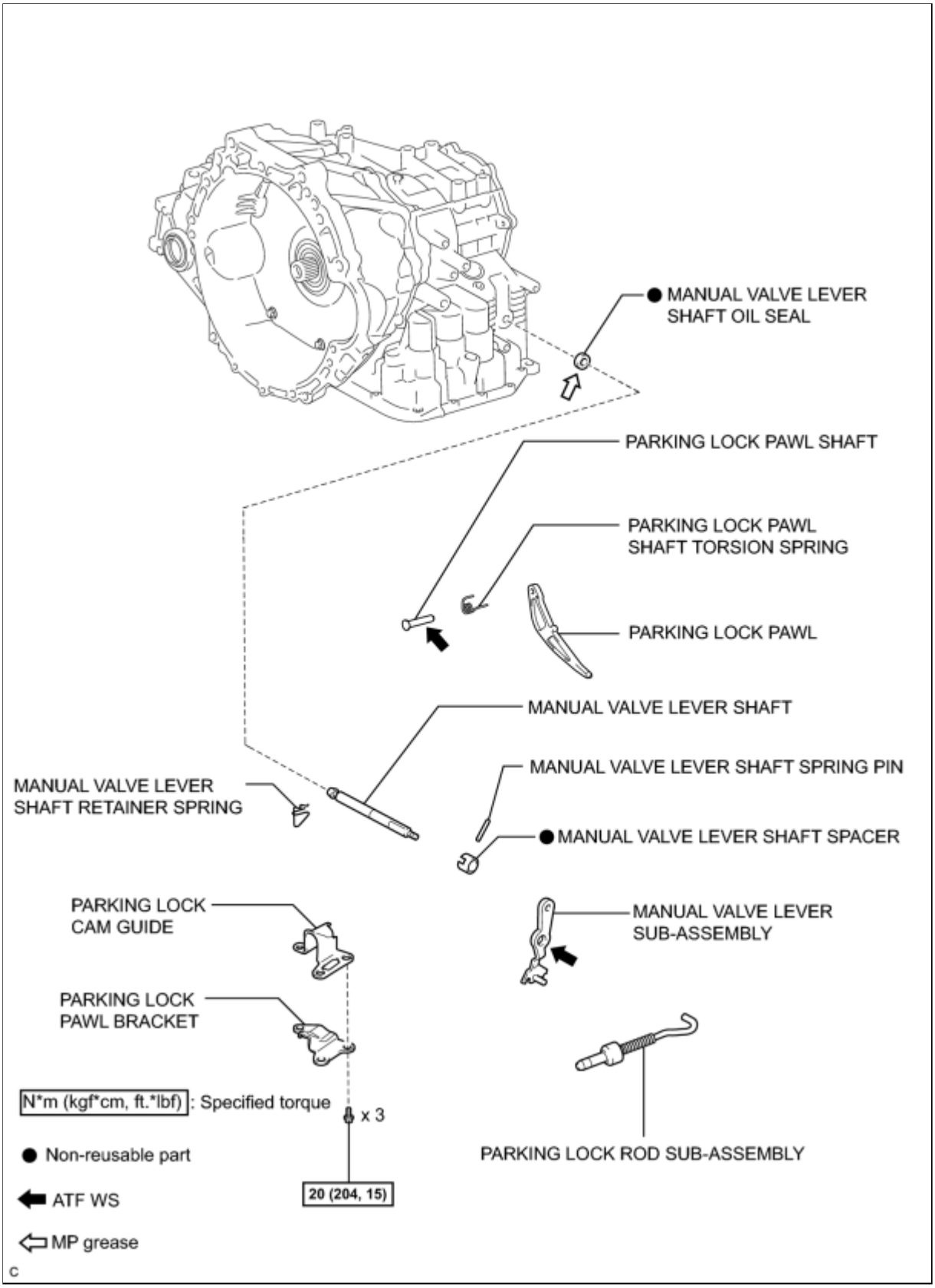

ILLUSTRATION

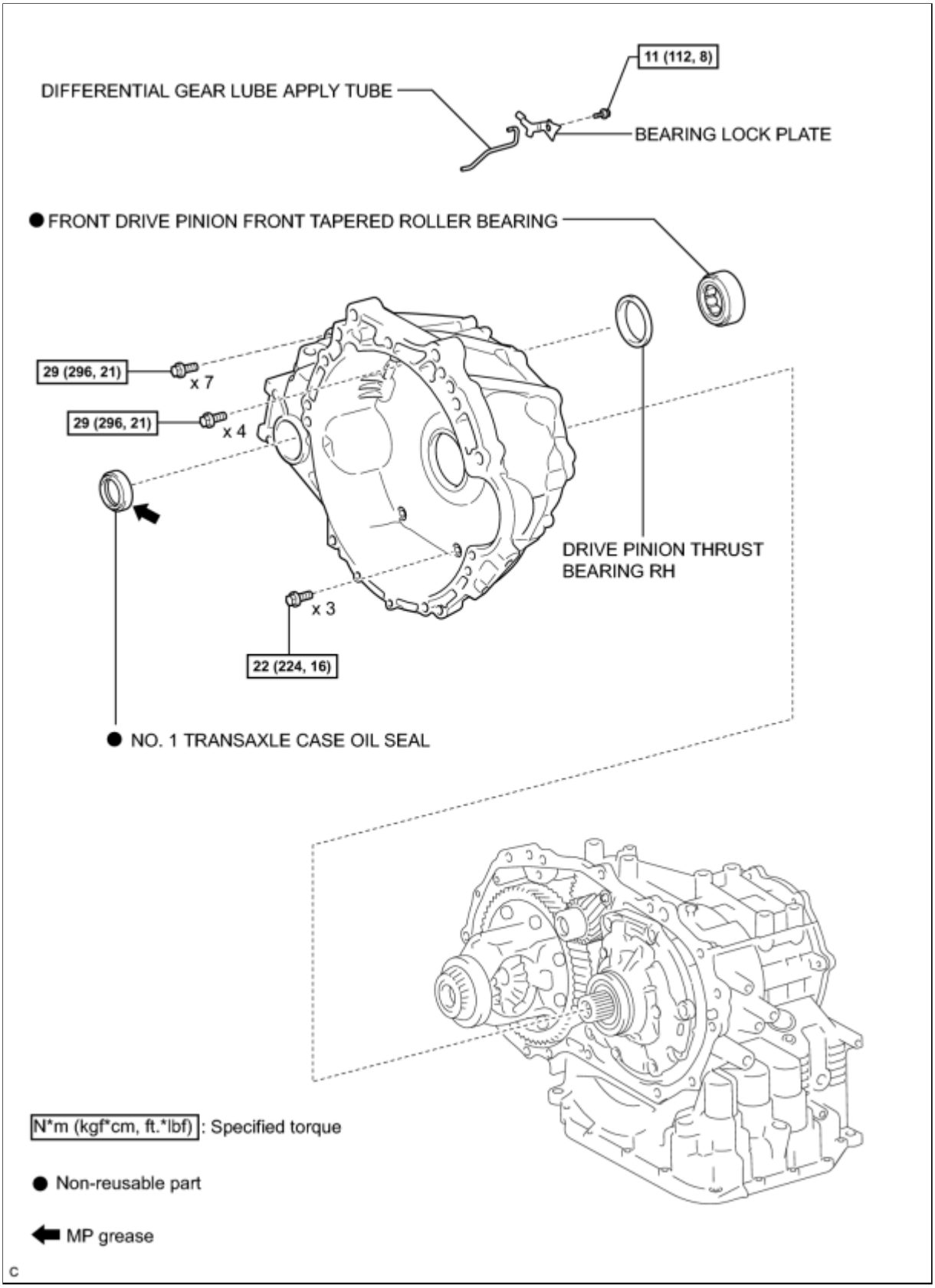

ILLUSTRATION

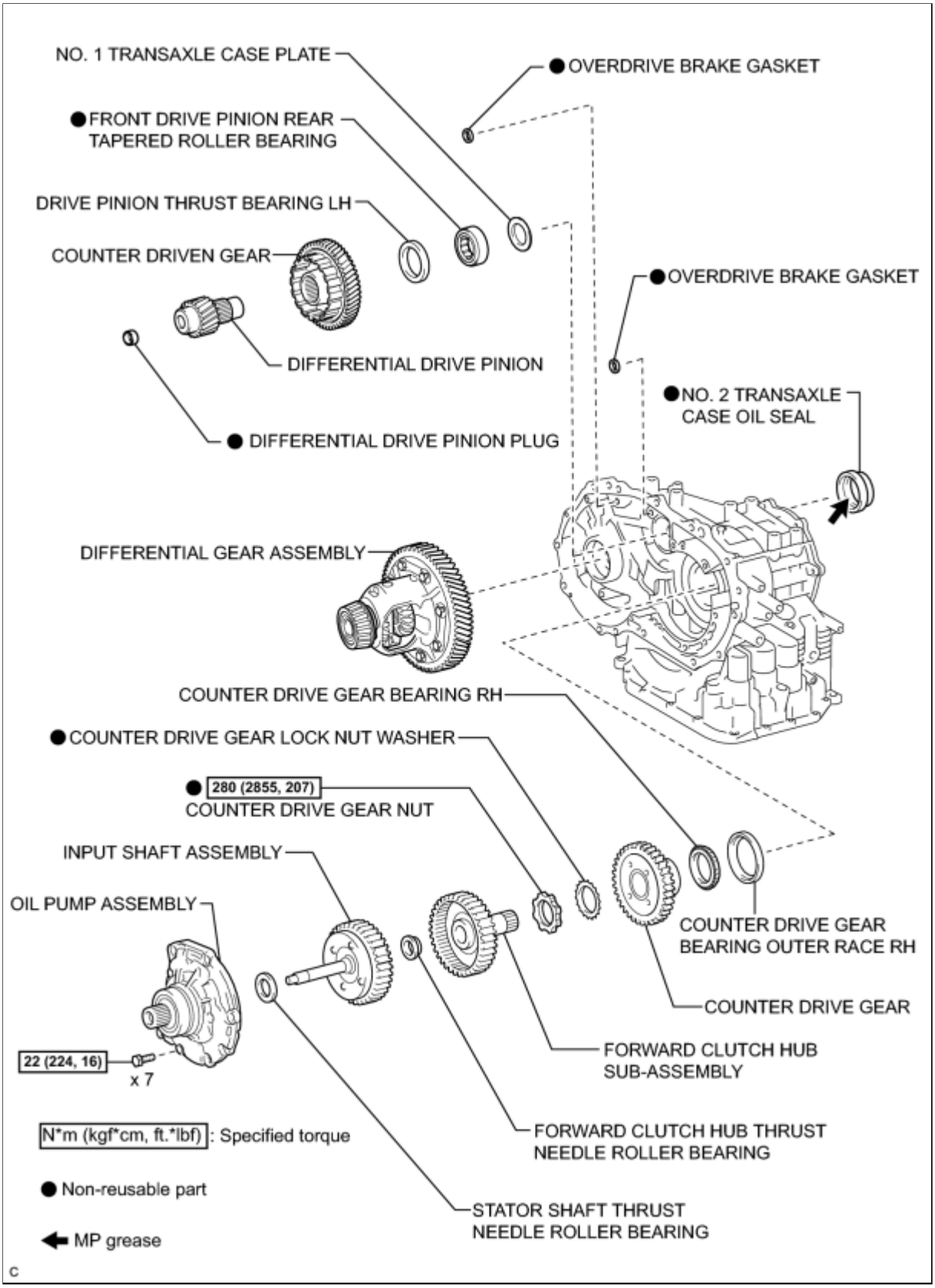

ILLUSTRATION

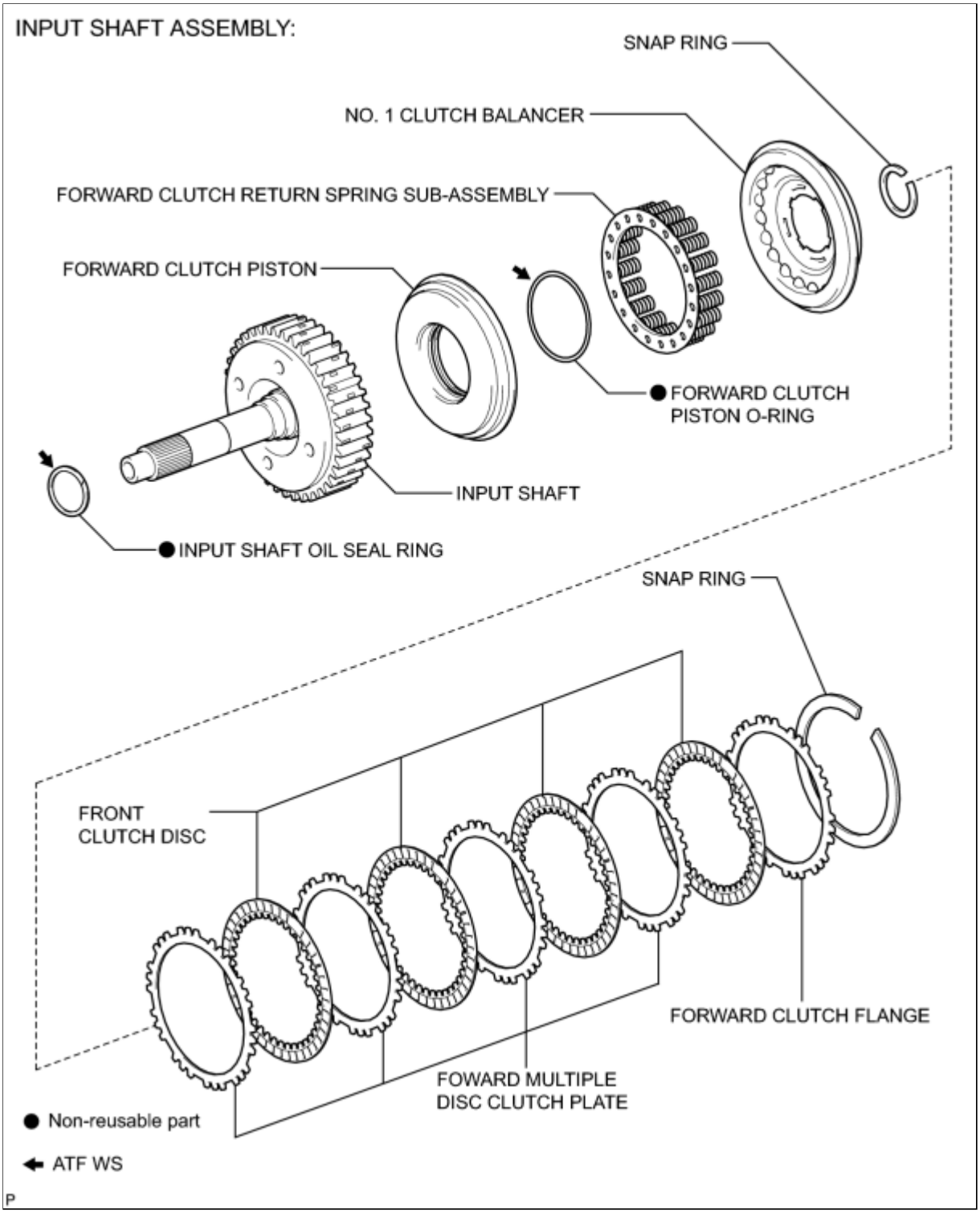

ILLUSTRATION

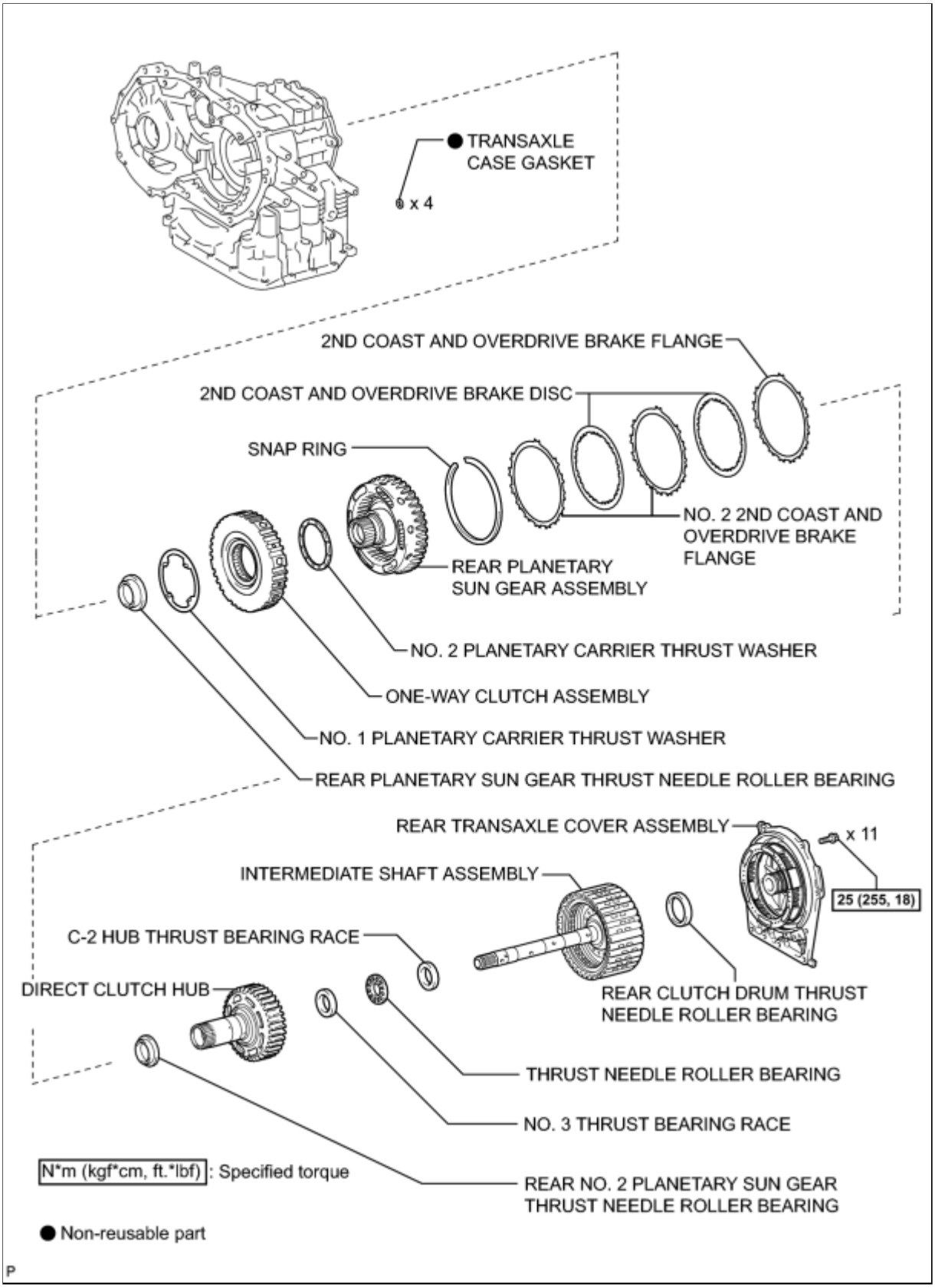

ILLUSTRATION

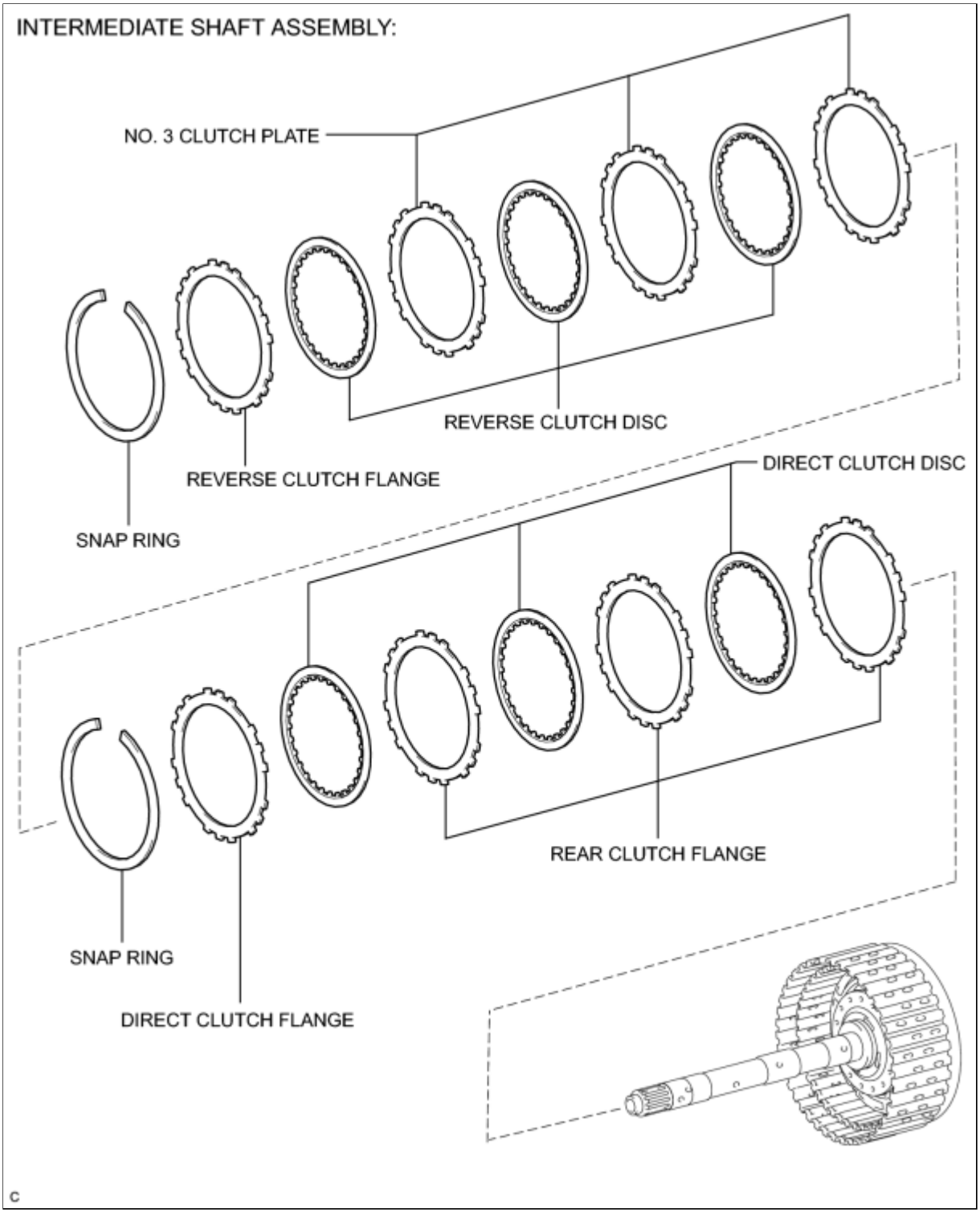

ILLUSTRATION

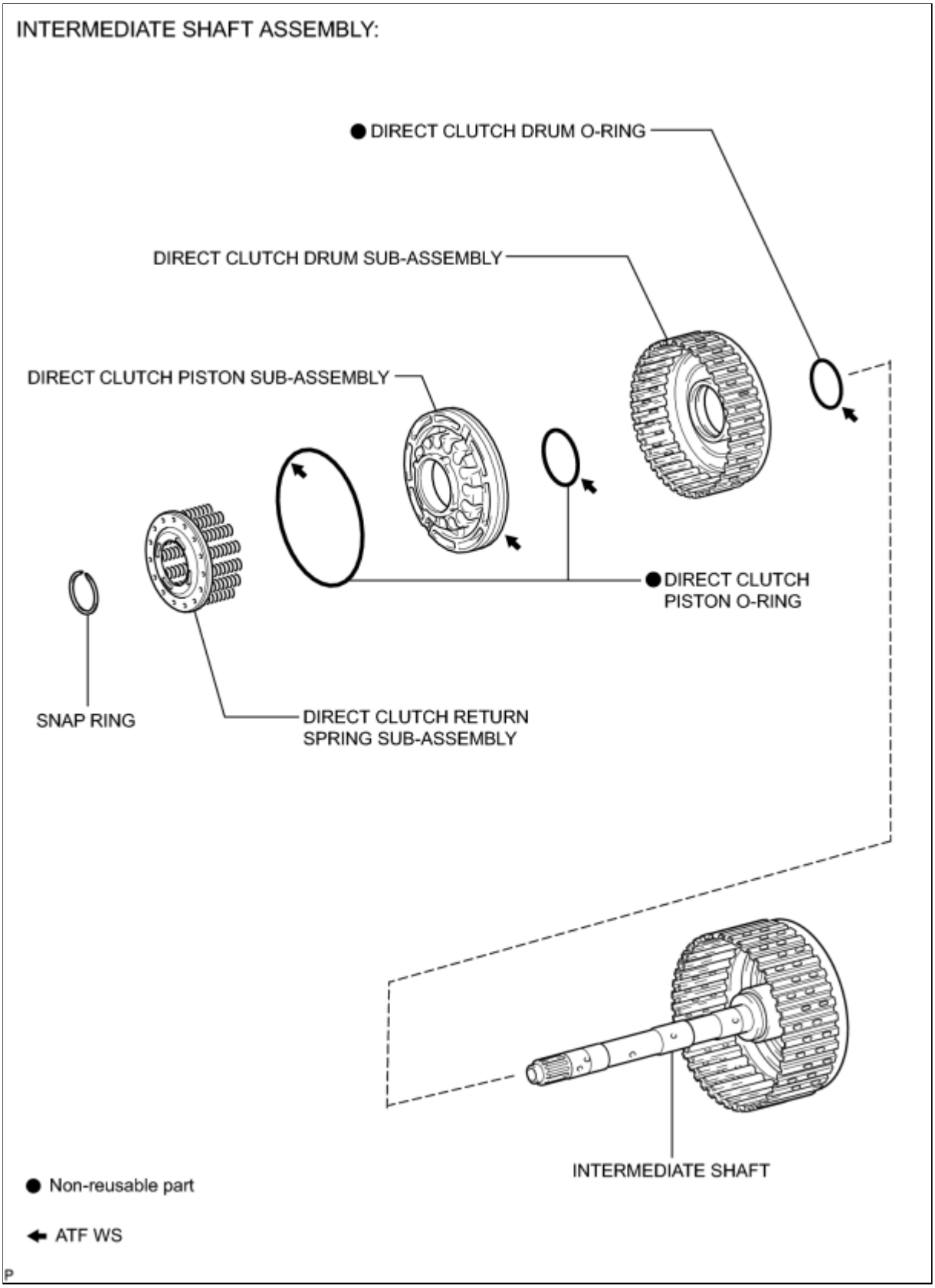

ILLUSTRATION

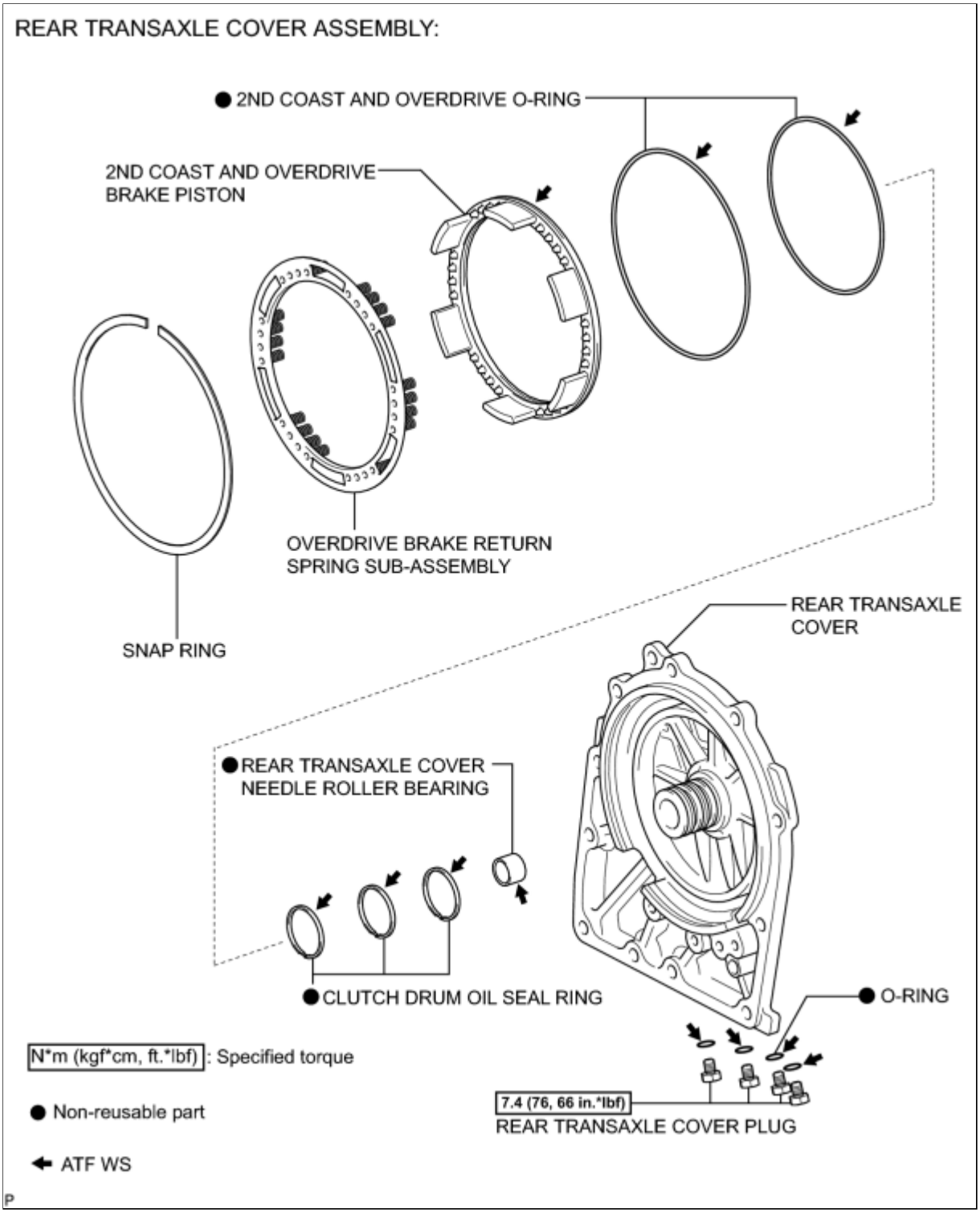

ILLUSTRATION

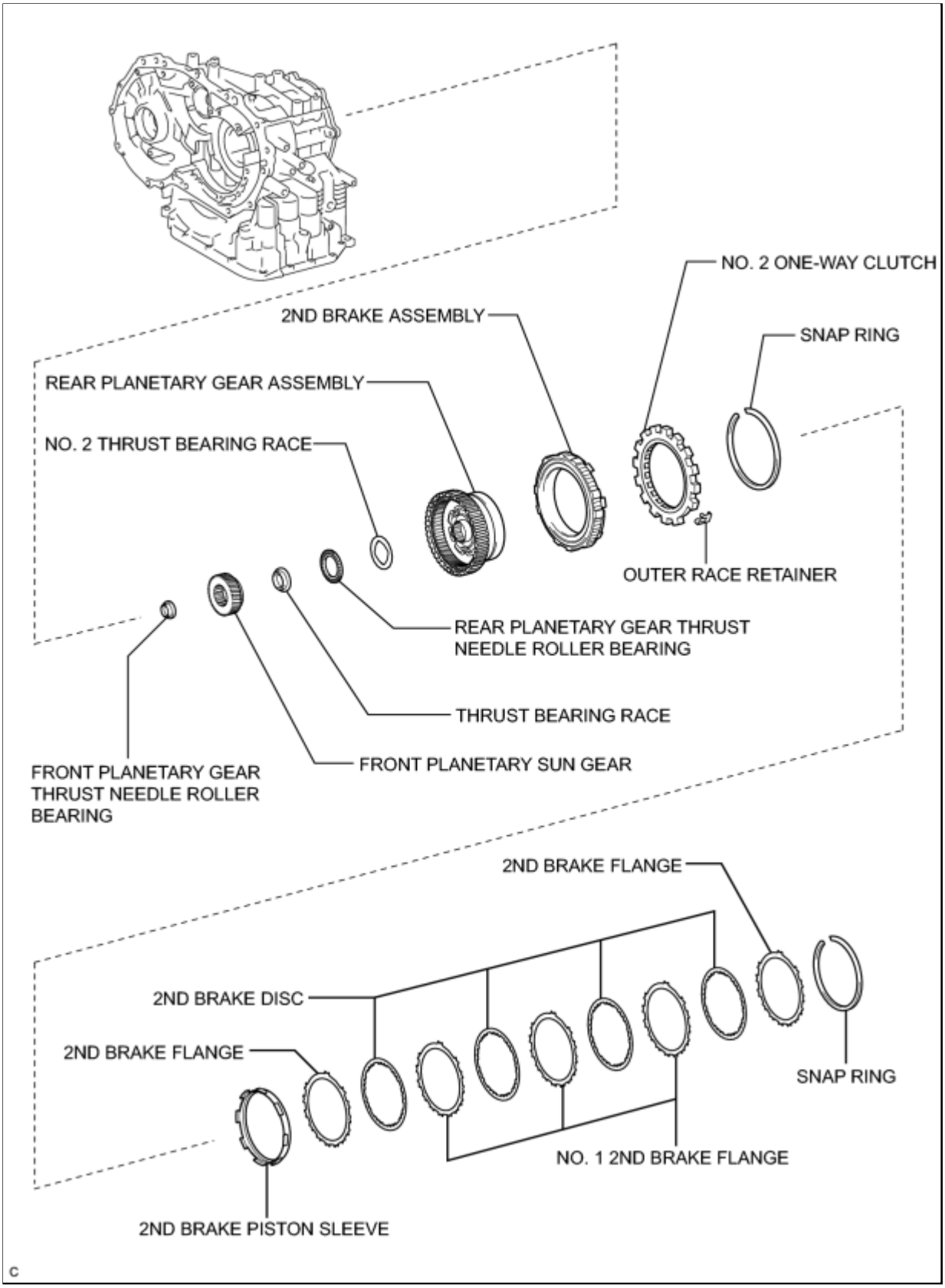

ILLUSTRATION

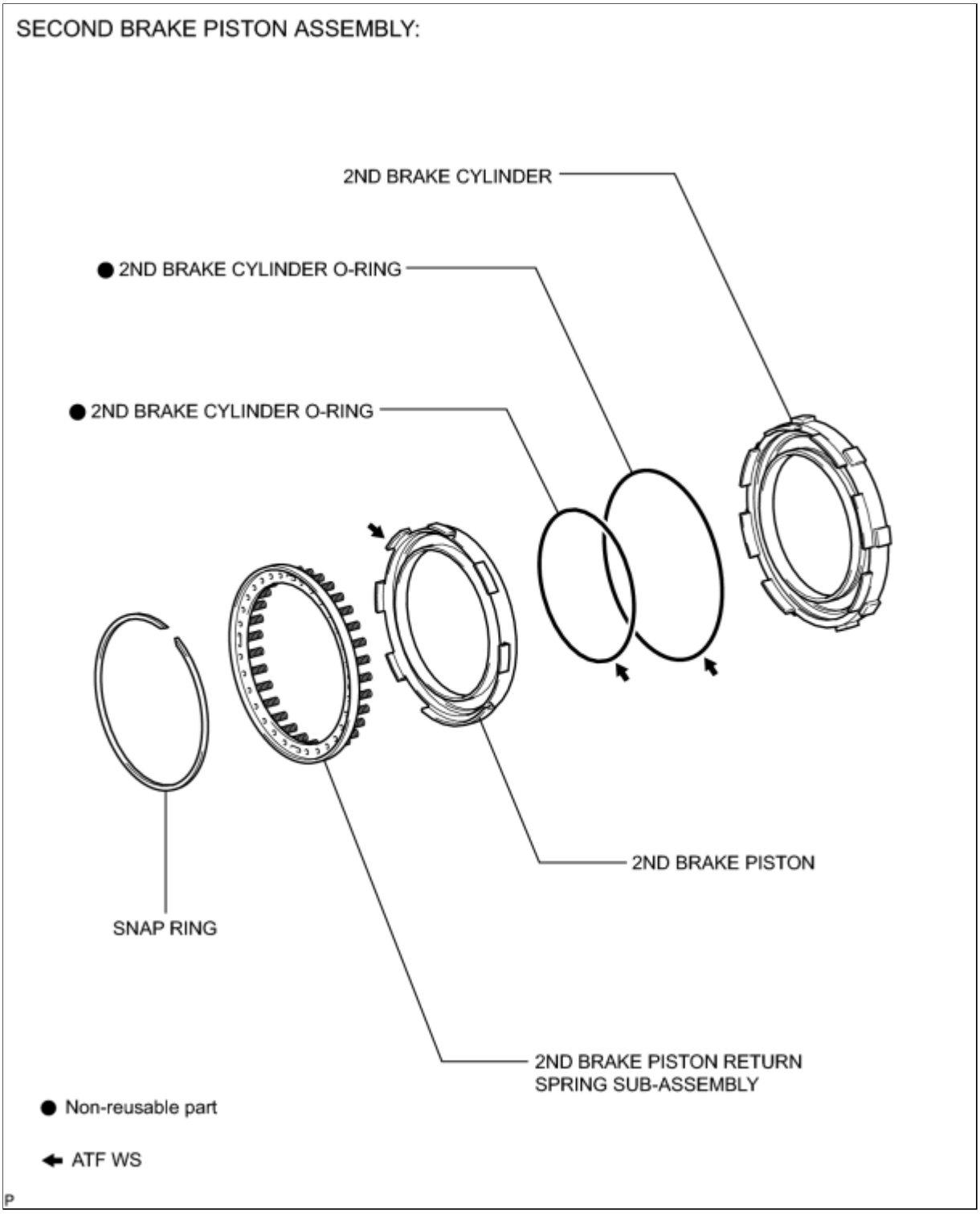

ILLUSTRATION

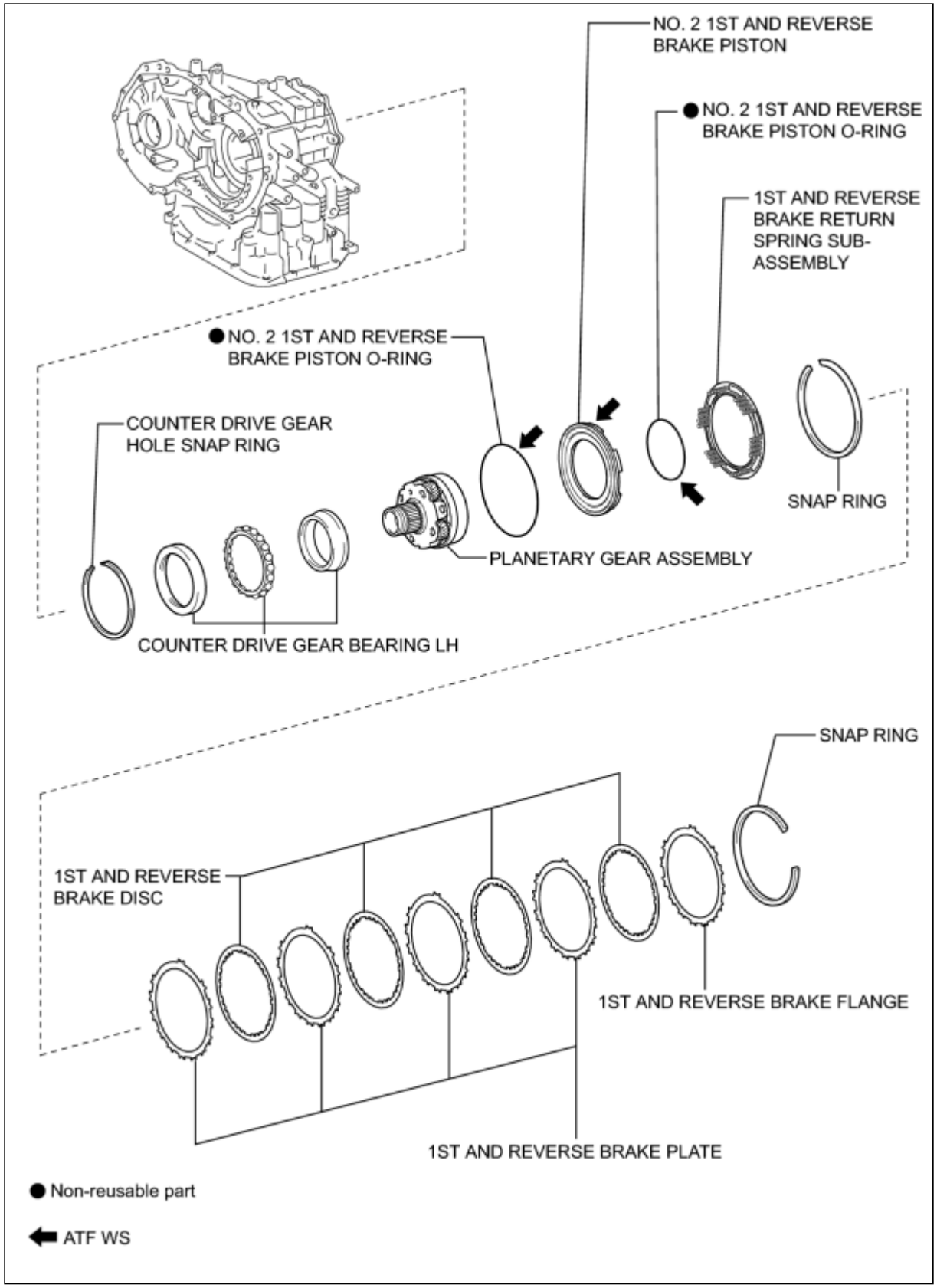
NO. 2 1ST AND REVERSE BRAKE PISTON
● NO. 2 1ST AND REVERSE BRAKE PISTON O-RING
1ST AND REVERSE BRAKE RETURN SPRING SUB-ASSEMBLY
● NO. 2 1ST AND REVERSE BRAKE PISTON O-RING
COUNTER DRIVE GEAR HOLE SNAP RING
SNAP RING
PLANETARY GEAR ASSEMBLY
COUNTER DRIVE GEAR BEARING LH
SNAP RING
1ST AND REVERSE BRAKE DISC
1ST AND REVERSE BRAKE FLANGE
1ST AND REVERSE BRAKE PLATE
● Non-reusable part
ATF WS

Last Modified: 3-10-2010	6.4 G	**From:** 200901
Model Year: 2010	**Model:** Corolla	**Doc ID:** RM00000192F018X
Title: U341E AUTOMATIC TRANSMISSION / TRANSAXLE: AUTOMATIC TRANSAXLE UNIT: INSPECTION (2010 Corolla)		

INSPECTION

1. INSPECT FRONT CLUTCH DISC

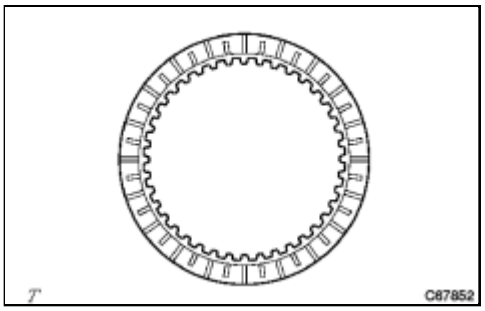

(a) Check whether the sliding surfaces of the discs, plates and flanges are worn or burnt.

If necessary, replace them.

NOTICE:

- If the lining of any disc is peeled off or discolored, or even if part of the printed number is damaged, replace all the discs.
- Before assembling new discs, soak them in ATF for at least 15 minutes.

2. INSPECT FORWARD CLUTCH RETURN SPRING SUB-ASSEMBLY

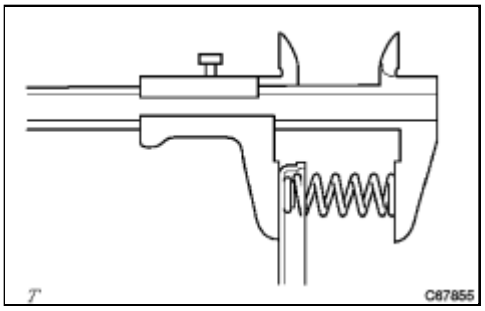

(a) Using a vernier caliper, measure the free length of the spring together with the spring seat.

Standard free length:
21.69 mm (0.853 in.)

3. INSPECT OVERDRIVE BRAKE RETURN SPRING SUB-ASSEMBLY

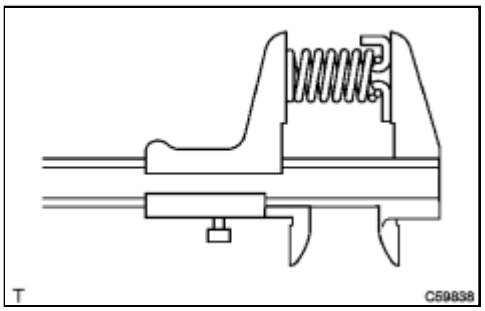

(a) Using a vernier caliper, measure the free length of the spring together with the spring seat.

Standard free length:
17.88 mm (0.703 in.)

4. INSPECT REVERSE CLUTCH DISC

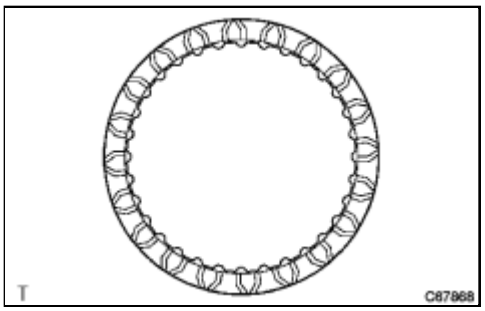

(a) Check whether the sliding surfaces of the discs, plates and flanges are worn or burnt.

If necessary, replace them.

NOTICE:

- If the lining of any disc is peeled off or discolored, or even if part of the printed mark is damaged, replace all the discs.
- Before assembling new discs, soak them in ATF for at least 15 minutes.

5. INSPECT DIRECT CLUTCH DISC

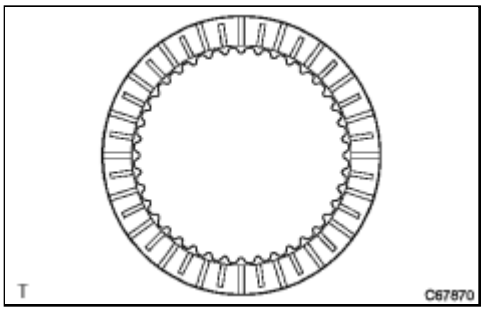

(a) Check whether the sliding surfaces of the discs, plates and flanges are worn or burnt.

If necessary, replace them.

NOTICE:

- If the lining of any disc is peeled off or discolored, or even if part of the printed mark is damaged, replace all the discs.
- Before assembling new discs, soak them in ATF for at least 15 minutes.

6. INSPECT DIRECT CLUTCH RETURN SPRING SUB-ASSEMBLY

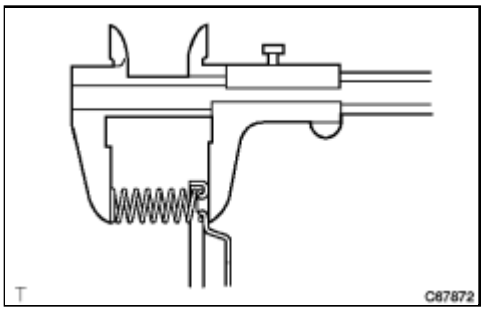

(a) Using a vernier caliper, measure the free length of the spring together with the spring seat.

Standard free length:
31.7 mm (1.248 in.)

7. INSPECT DIRECT CLUTCH PISTON SUB-ASSEMBLY

(a) Shake the direct clutch pin and confirm that the check ball is not stuck.

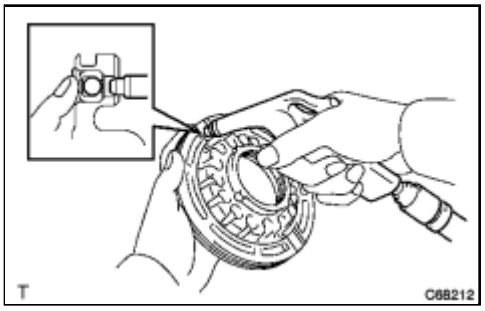

(b) Apply low pressure compressed air to the check ball and confirm that there is no air leaks.

8. INSPECT INTERMEDIATE SHAFT SUB-ASSEMBLY

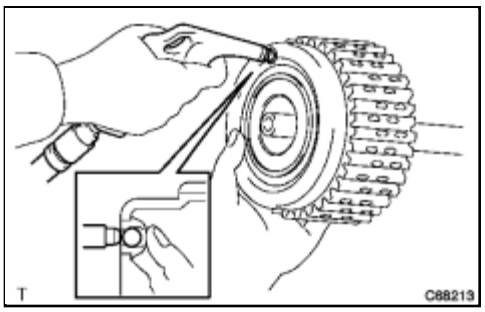

(a) Shake the direct clutch pin and confirm that the check ball is not stuck.

(b) Apply low pressure compressed air to the check ball and confirm that there is no air leaks.

9. INSPECT 2ND COAST AND OVERDRIVE BRAKE DISC

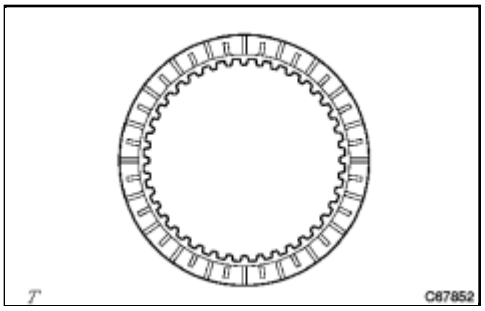

(a) Check whether the sliding surfaces of the discs, plates and flanges are worn or burnt.

If necessary, replace them.

NOTICE:

- If the lining of any disc is peeled off or discolored, or even if part of the printed number is damaged, replace all the discs.
- Before assembling new discs, soak them in ATF for at least 15 minutes.

10. INSPECT 2ND BRAKE DISC

(a) Check whether the sliding surfaces of the discs, plates and flanges are worn or burnt.

If necessary, replace them.

NOTICE:

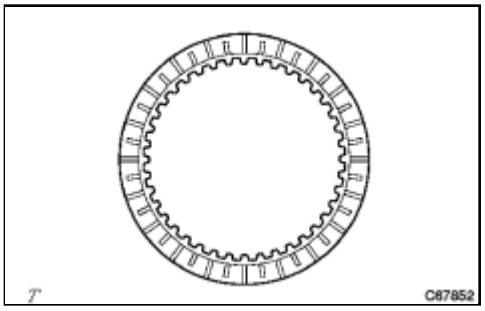

- If the lining of any disc is peeled off or discolored or even if part of the printed mark is damaged, replace all the discs.
- Before assembling new discs, soak them in ATF for at least 15 minutes.

11. INSPECT 2ND BRAKE PISTON RETURN SPRING SUB-ASSEMBLY

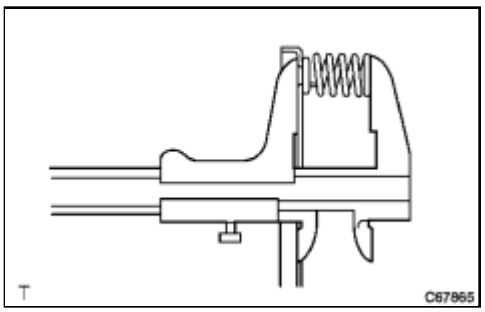

(a) Using a vernier caliper, measure the free length of the spring together with the spring seat.

Standard free length:
14.65 mm (0.576 in.)

12. INSPECT 1ST AND REVERSE BRAKE DISC

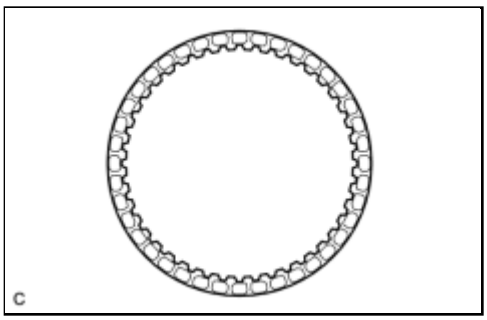

(a) Check whether the sliding surfaces of the discs, plates and flanges are worn or burnt.

If necessary, replace them.

NOTICE:

- If the lining of any disc is peeled off or discolored, or even if part of the printed mark is damaged, replace all the discs.
- Before assembling new discs, soak them in ATF for at least 15 minutes.

13. INSPECT 1ST AND REVERSE BRAKE RETURN SPRING SUB-ASSEMBLY

(a) Using a vernier caliper, measure the free length of the spring together with the spring seat.

Standard free length:
13.96 mm (0.549 in.)

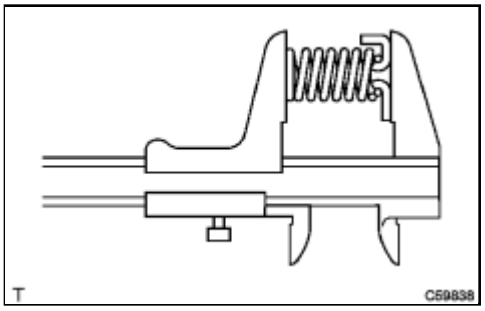
T
C59838

Last Modified: 3-10-2010	6.4 K	**From:** 200901
Model Year: 2010	**Model:** Corolla	**Doc ID:** RM000001CVI00HX
Title: U250E AUTOMATIC TRANSMISSION / TRANSAXLE: DIFFERENTIAL CASE: COMPONENTS (2010 Corolla)		

COMPONENTS

ILLUSTRATION

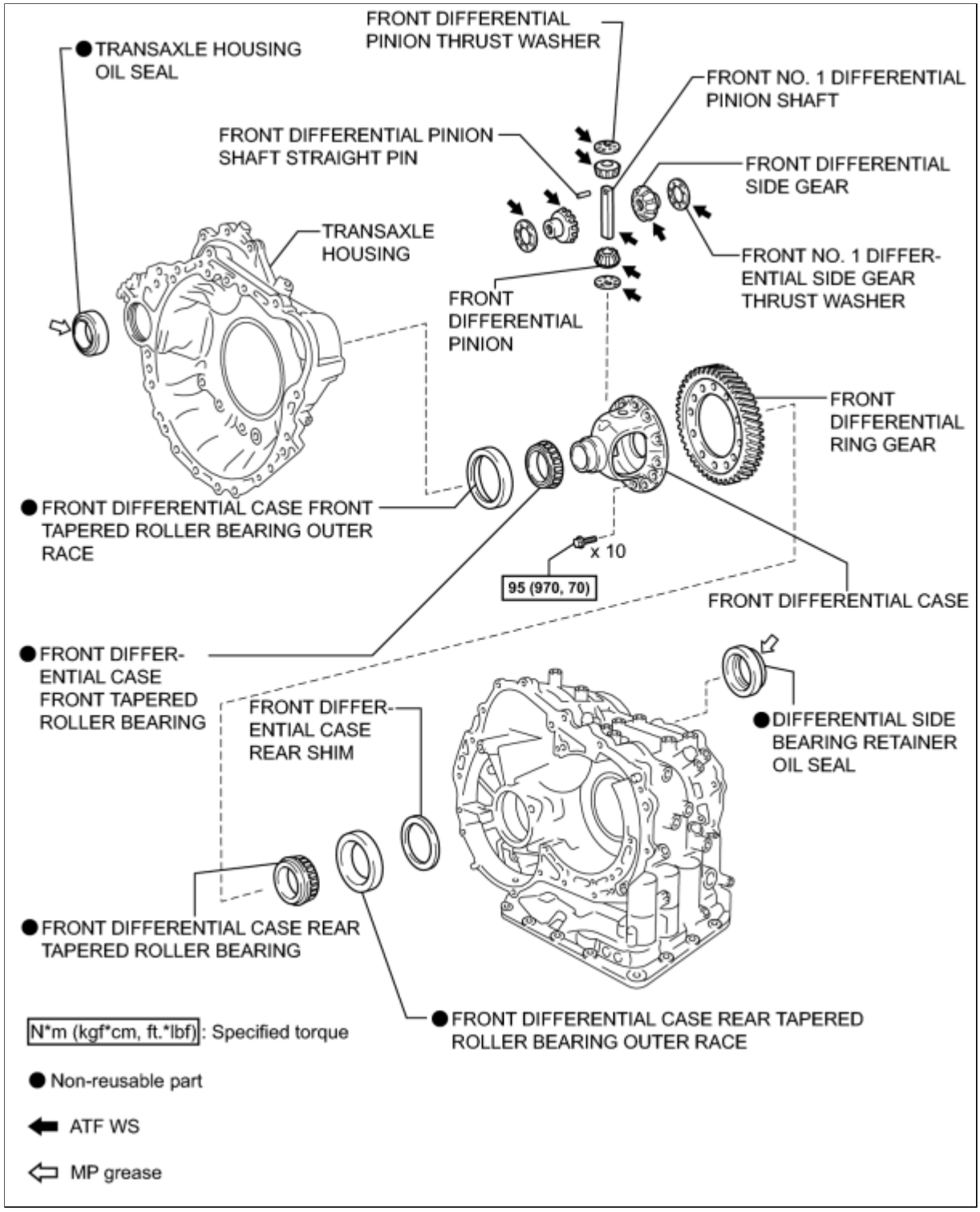
FRONT DIFFERENTIAL PINION THRUST WASHER
● TRANSAXLE HOUSING OIL SEAL
FRONT NO. 1 DIFFERENTIAL PINION SHAFT
FRONT DIFFERENTIAL PINION SHAFT STRAIGHT PIN
FRONT DIFFERENTIAL SIDE GEAR
TRANSAXLE HOUSING
FRONT NO. 1 DIFFERENTIAL SIDE GEAR THRUST WASHER
FRONT DIFFERENTIAL PINION
FRONT DIFFERENTIAL RING GEAR
● FRONT DIFFERENTIAL CASE FRONT TAPERED ROLLER BEARING OUTER RACE
x 10
95 (970, 70)
FRONT DIFFERENTIAL CASE
● FRONT DIFFERENTIAL CASE FRONT TAPERED ROLLER BEARING
FRONT DIFFERENTIAL CASE REAR SHIM
● DIFFERENTIAL SIDE BEARING RETAINER OIL SEAL
● FRONT DIFFERENTIAL CASE REAR TAPERED ROLLER BEARING
● FRONT DIFFERENTIAL CASE REAR TAPERED ROLLER BEARING OUTER RACE
N*m (kgf*cm, ft.*lbf): Specified torque
● Non-reusable part
ATF WS
MP grease

Last Modified: 3-10-2010	6.4 A	**From:** 200901
Model Year: 2010	**Model:** Corolla	**Doc ID:** RM0000018KN01YX
Title: U250E AUTOMATIC TRANSMISSION / TRANSAXLE: DIFFERENTIAL CASE: DISASSEMBLY (2010 Corolla)		

DISASSEMBLY

1. REMOVE FRONT DIFFERENTIAL RING GEAR

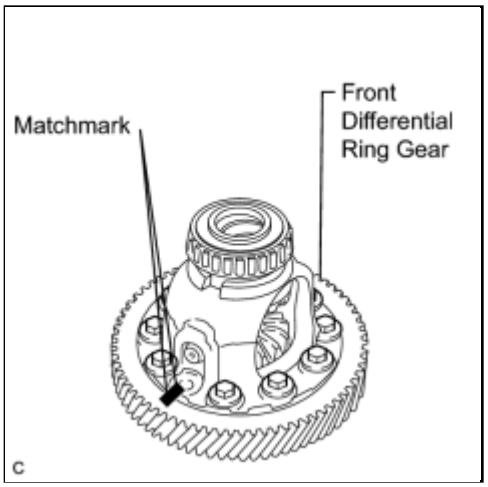

(a) Put matchmarks on the front differential ring gear and differential case.

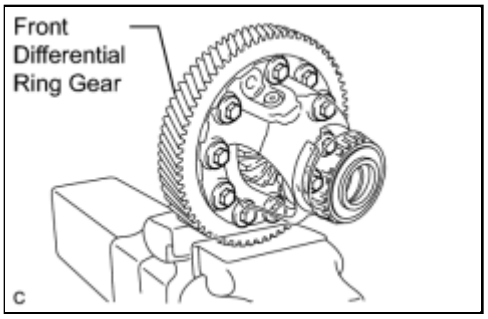

(b) Remove the 10 bolts.

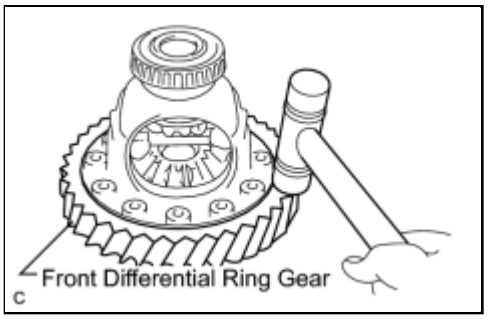

(c) Using a plastic hammer, tap on the front differential ring gear to remove it from the case.

2. REMOVE FRONT DIFFERENTIAL CASE FRONT TAPERED ROLLER BEARING

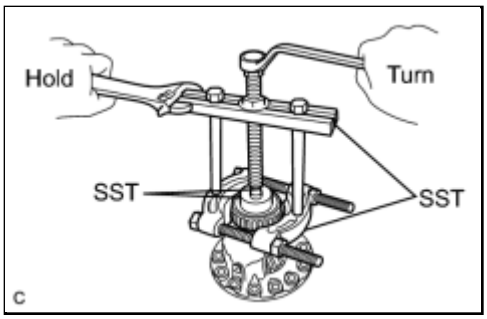

(a) Using SST, remove the front differential case front tapered roller bearing from the differential case.

SST: 09950-00020
SST: 09950-00030
SST: 09950-40011
09957-04010
SST: 09950-60010
09951-00480

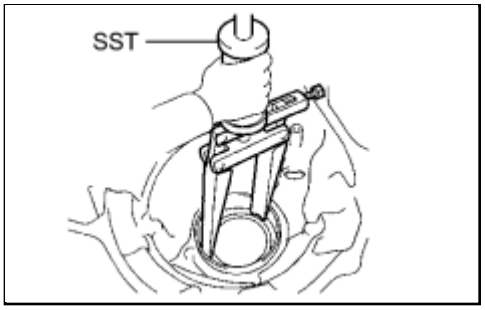

(b) Using SST, remove the front differential case front tapered roller bearing outer race.

SST: 09308-00010

3. REMOVE FRONT DIFFERENTIAL CASE REAR TAPERED ROLLER BEARING

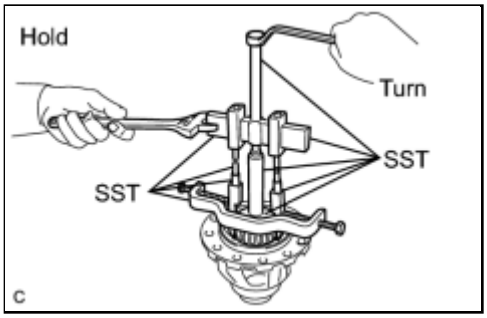

(a) Using SST, remove the front differential case rear tapered roller bearing from the differential case.

SST: 09950-00020
SST: 09950-00030
SST: 09950-40011
09955-04061
09957-04010
09958-04011
SST: 09950-50013
09951-05010
09952-05010
09953-05020
09954-05021
09955-05010
SST: 09950-60010
09951-00480
SST: 09950-70010
09951-07100

(b) Using SST, remove the front differential case rear tapered roller bearing outer race.

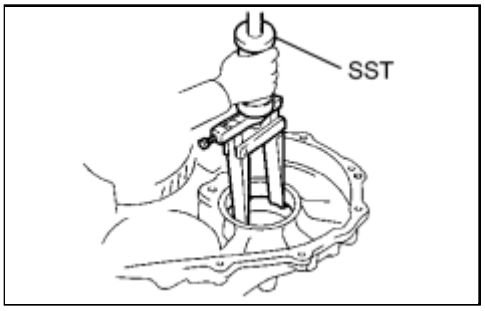

SST: 09308-00010

4. REMOVE FRONT DIFFERENTIAL PINION SHAFT STRAIGHT PIN

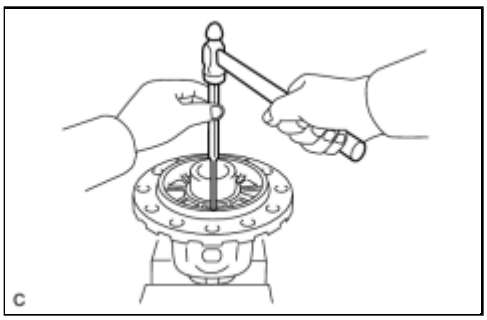

(a) Using a pin punch and hammer, remove the straight pin.

NOTICE:

Before removing the straight pin, unstake it with a pin punch.

5. REMOVE FRONT NO. 1 DIFFERENTIAL PINION SHAFT

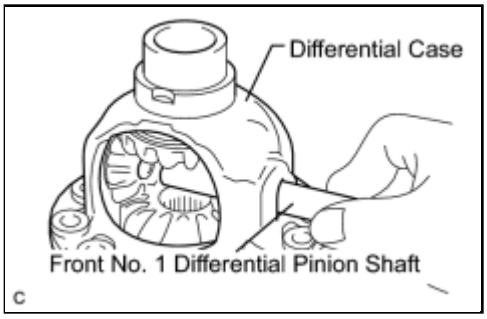

(a) Remove the front No. 1 differential pinion shaft from the differential case.

6. REMOVE FRONT DIFFERENTIAL SIDE GEAR

(a) Remove the 2 front differential pinions, 2 pinion thrust washers, 2 front differential side gears and 2 side gear thrust washers from the differential case.

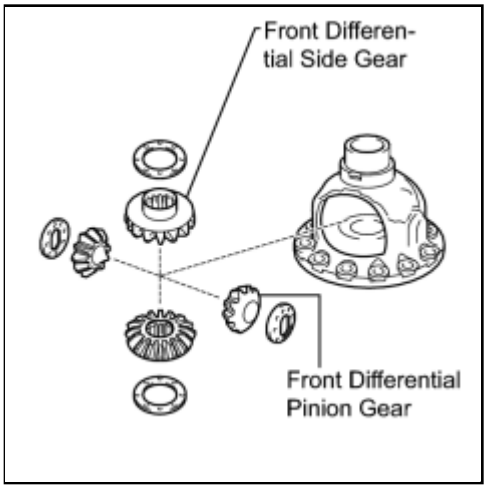

7. REMOVE TRANSAXLE HOUSING OIL SEAL

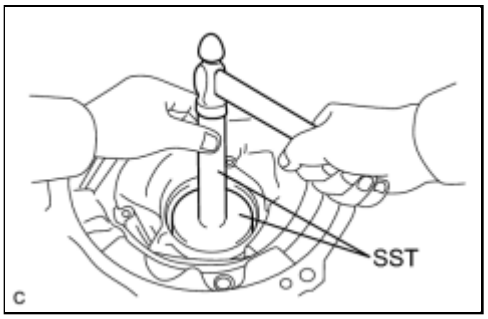

(a) Using SST and a hammer, remove the oil seal.

SST: 09950-70010

09951-07200

SST: 09950-60010

09951-00630

8. REMOVE DIFFERENTIAL SIDE BEARING RETAINER OIL SEAL

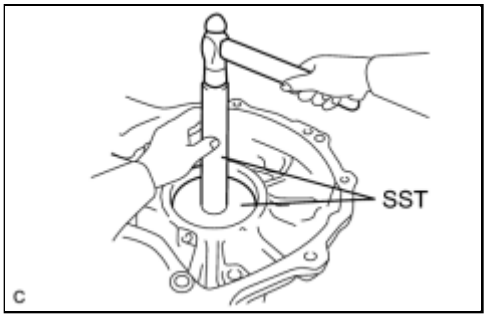

(a) Using SST and a hammer, remove the oil seal.

SST: 09950-70010

09951-07100

SST: 09608-10010

Last Modified: 3-10-2010	6.4 A	**From:** 200901
Model Year: 2010	**Model:** Corolla	**Doc ID:** RM0000018KO01YX
Title: U250E AUTOMATIC TRANSMISSION / TRANSAXLE: DIFFERENTIAL CASE: REASSEMBLY (2010 Corolla)		

REASSEMBLY

1. INSTALL FRONT DIFFERENTIAL SIDE GEAR

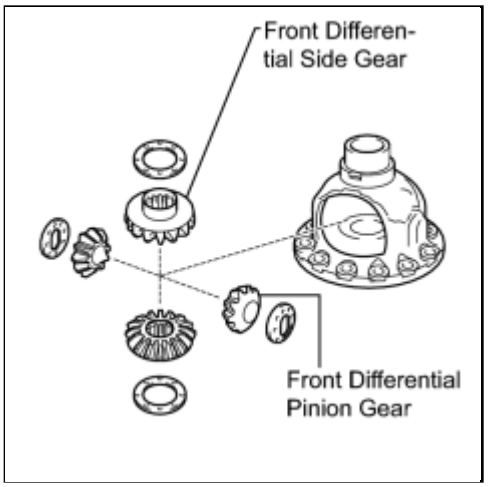

(a) Coat the 2 front differential side gears, 2 side gear thrust washers, 2 front differential pinions and 2 pion thrust washers with ATF and install them to the differential case.

2. INSTALL FRONT NO. 1 DIFFERENTIAL PINION SHAFT

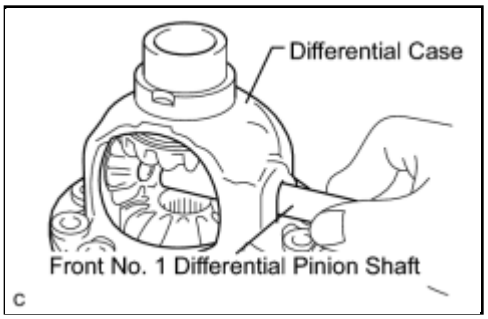

(a) Coat the front No. 1 differential pinion shaft with ATF, and install it to the differential case.

3. INSTALL FRONT DIFFERENTIAL PINION SHAFT STRAIGHT PIN

(a) Using a pin punch and hammer, install the pinion shaft straight pin.

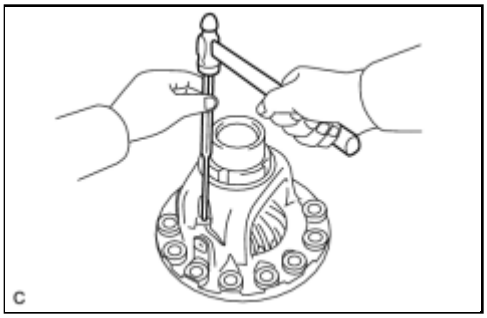

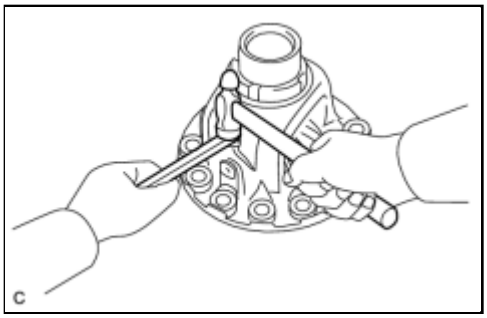

(b) Using a chisel and hammer, stake the differential case.

NOTICE:

Stake it after adjusting the backlash INFO **.**

4. INSTALL FRONT DIFFERENTIAL CASE FRONT TAPERED ROLLER BEARING

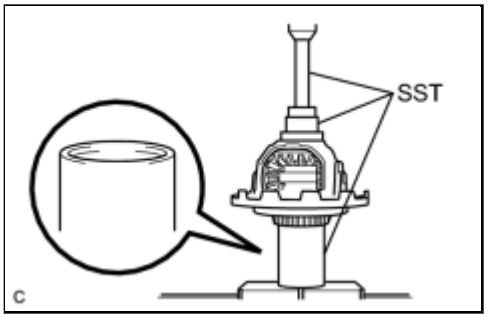

(a) Using SST and a press, install the front differential case front tapered roller bearing to the differential case.

SST: 09550-60010

09951-00480

SST: 09950-70010

09951-07100

SST: 09710-04081

NOTICE:

Do not damage the bearing cage during installation of the bearing inner race.

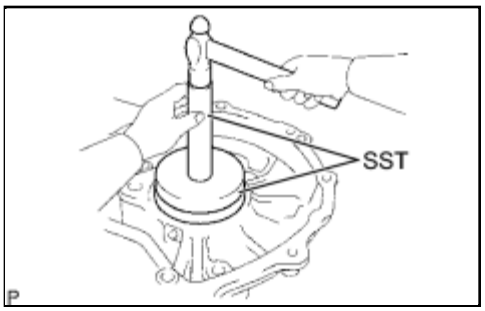

(b) Using SST and a hammer, install the front differential case front tapered roller bearing outer race to the transaxle housing.

SST: 09950-60020

09951-00750

SST: 09950-70010

09951-07200

5. INSTALL FRONT DIFFERENTIAL CASE REAR TAPERED ROLLER BEARING

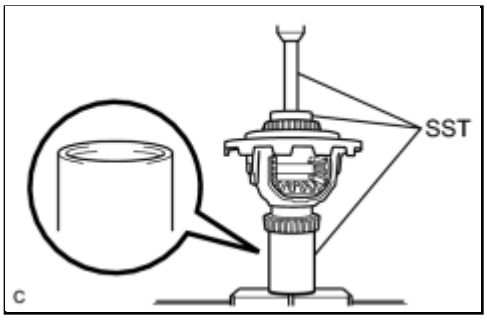

(a) Using SST and a press, install the front differential case rear tapered roller bearing to the differential case.

SST: 09710-04081

SST: 09550-60010

09951-00480

SST: 09950-70010

09951-07100

NOTICE:

Do not damage the bearing when installing the bearing inner race.

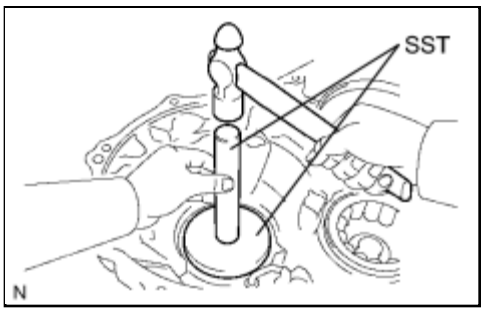

(b) Using SST and a hammer, install the front differential case rear tapered roller bearing outer race to the transaxle housing.

SST: 09550-60010

09951-00790

SST: 09950-70010

09951-00710

NOTICE:

Make sure that there is no clearance between the bearing and transaxle housing.

6. ADJUST DIFFERENTIAL SIDE BEARING PRELOAD

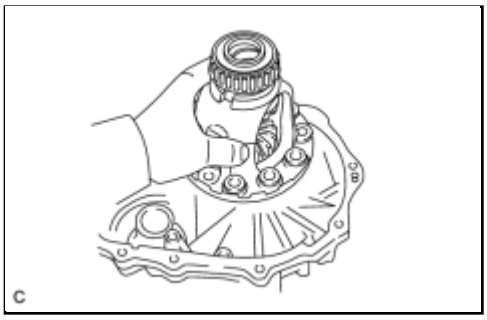

(a) Install the differential assembly to the transaxle case.

(b) Clean the contact surfaces of the transaxle case and transaxle housing.

(c) Install the transaxle housing to the transaxle case and tighten the 18 bolts.

Bolt A - Torque: 29 N·m (296 kgf·cm, 21ft·lbf)

Bolt B - Torque: 29 N·m (296 kgf·cm, 21ft·lbf)

Bolt C - Torque: 22 N·m (224 kgf·cm, 16ft·lbf)

Bolt D - Torque: 10 N·m (102 kgf·cm, 7ft·lbf)

Bolt E - Torque: 33 N·m (336 kgf·cm, 24ft·lbf)

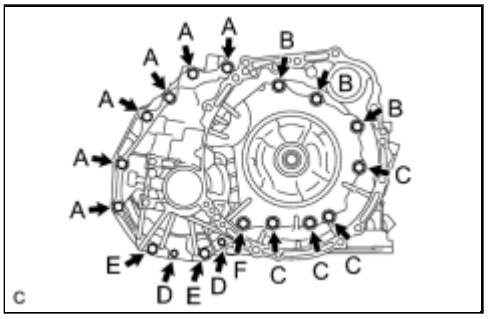

Bolt F - Torque: 25 N·m (255 kgf·cm, 18ft·lbf)

Bolt length:

Bolt B, C, D, F

50 mm (1.969 in.)

Bolt A, E

42 mm (1.654 in.)

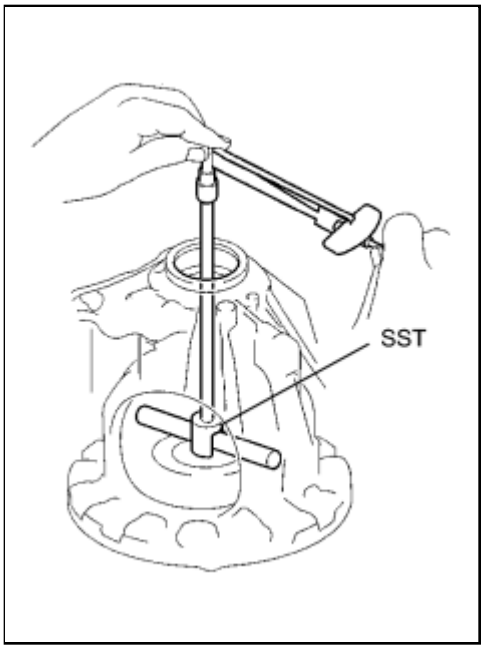

(d) Using SST, turn the differential assembly right and left 2 or 3 times to settle the bearing.

SST: 09564-32011

(e) Using SST and a torque wrench, measure the rotating torque of the differential.

SST: 09564-32011

Rotating torque at 60 rpm:

New bearing

0.20 to 1.0 N*m (2.0 to 10.2 kgf*cm, 1.8 to 8.9 in.*lbf)

Used bearing

0.10 to 0.50 N*m (1.0 to 5.1 kgf*cm, 0.9 to 4.4 in.*lbf)

HINT:

If the rotating torque is not within the specified range, refer to the table below to select a thrust washer so that the rotating torque is within the specified range.

Flange Thickness

MARK	THICKNESS (MM (IN.))	MARK	THICKNESS (MM (IN.))
0	1.90 (0.0748)	A	2.40 (0.0945)
1	1.95 (0.0768)	B	2.45 (0.0965)

MARK	THICKNESS (MM (IN.))	MARK	THICKNESS (MM (IN.))
2	2.00 (0.0787)	C	2.50 (0.0984)
3	2.05 (0.0807)	D	2.55 (0.1004)
4	2.10 (0.0827)	E	2.60 (0.1024)
5	2.15 (0.0846)	F	2.65 (0.1043)
6	2.20 (0.0866)	G	2.70 (0.1063)
7	2.25 (0.0886)	H	2.75 (0.1083)
8	2.30 (0.0906)	J	2.80 (0.1102)
9	2.35 (0.0925)	-	-

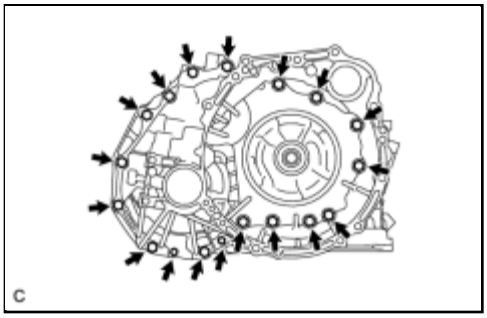

(f) Remove the 18 bolts and the transaxle housing.

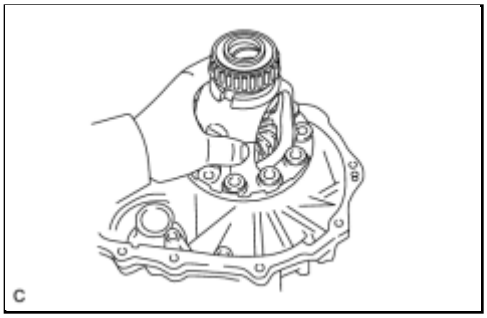

(g) Remove the differential assembly.

7. INSTALL FRONT DIFFERENTIAL RING GEAR

(a) Using ATF and a heater, heat the front differential ring gear to 90 to 110°C (194 to 230°F).

NOTICE:

Do not heat the ring gear to over 110°C (230°F).

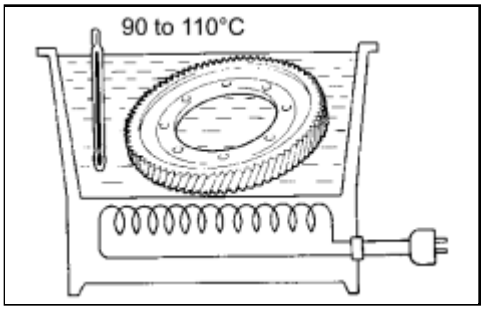

(b) Clean the contact surface of the front differential case.

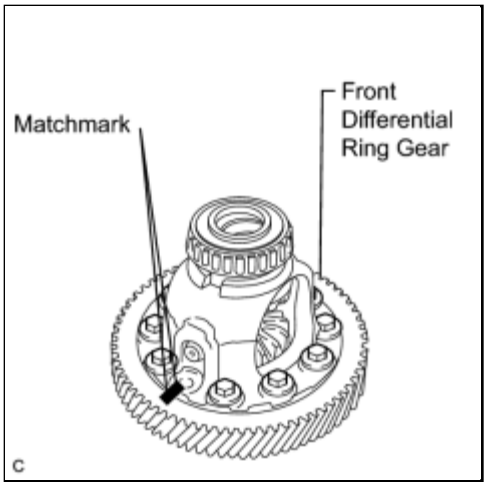

(c) Align the matchmarks, and install the front differential ring gear case quickly.

NOTICE:

Do not install the bolts while the ring gear is hot.

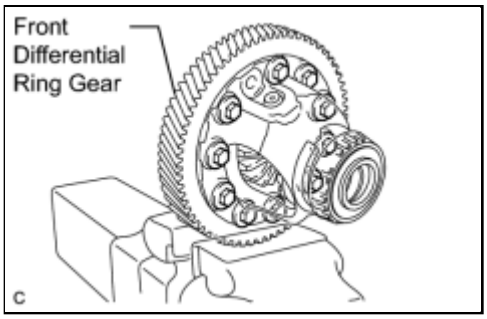

(d) Tighten the 10 bolts.

Torque: 95 N·m (970 kgf·cm, 70ft·lbf)

NOTICE:

Tighten the bolts one at a time in diagonal order.

8. INSTALL TRANSAXLE HOUSING OIL SEAL

(a) Using SST and a hammer, drive in a new oil seal.

SST: 09316-60011

09316-00011

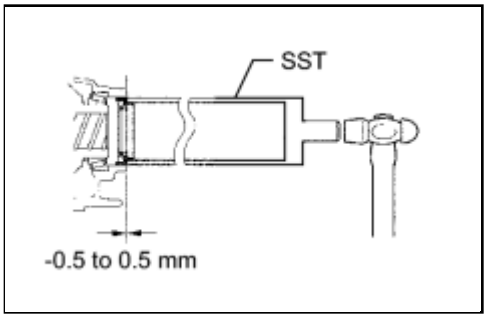

(b) Coat the lip of the oil seal with a small amount of MP grease.

Oil seal drive in depth:
-0.5 to 0.5 mm (-0.0197 to 0.0197 in.)

9. INSTALL DIFFERENTIAL SIDE BEARING RETAINER OIL SEAL

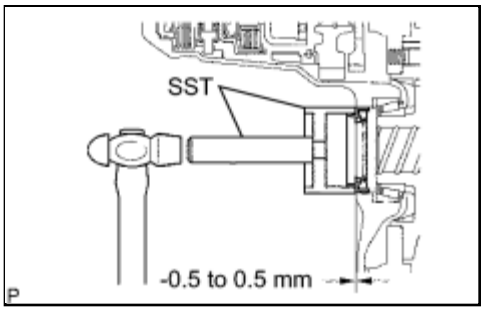

(a) Using SST and a hammer, drive in a new oil seal.

SST: 09649-17010
SST: 09950-70010
09951-07150

(b) Coat the lip of the oil seal with a small amount of MP grease.

Oil seal drive in depth:
-0.5 to 0.5 mm (-0.0197 to 0.0197 in.)

Last Modified: 3-10-2010	6.4 G	**From:** 200901
Model Year: 2010	**Model:** Corolla	**Doc ID:** RM0000018KM01YX
Title: U250E AUTOMATIC TRANSMISSION / TRANSAXLE: DIFFERENTIAL CASE: INSPECTION (2010 Corolla)		

INSPECTION

1. INSPECT BACKLASH

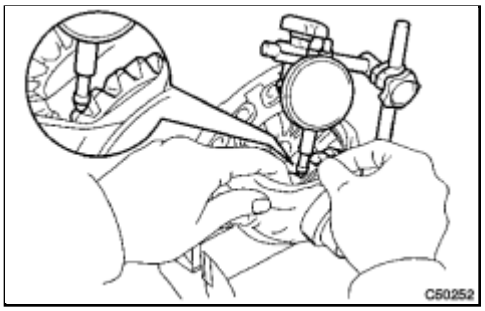

(a) Using a dial indicator, inspect the backlash of the side gear.

Standard backlash:
0.05 to 0.20 mm (0.00197 to 0.00787 in.)

Thrust Washer Thickness

MARK	THICKNESS (MM (IN.))
1	1.000 (0.0394)
2	1.100 (0.0433)
3	1.200 (0.0472)
4	1.300 (0.0512)

Last Modified: 3-10-2010	6.4 K	**From:** 200901
Model Year: 2010	**Model:** Corolla	**Doc ID:** RM00000193301AX
Title: U341E AUTOMATIC TRANSMISSION / TRANSAXLE: DIFFERENTIAL CASE: COMPONENTS (2010 Corolla)		

COMPONENTS

ILLUSTRATION

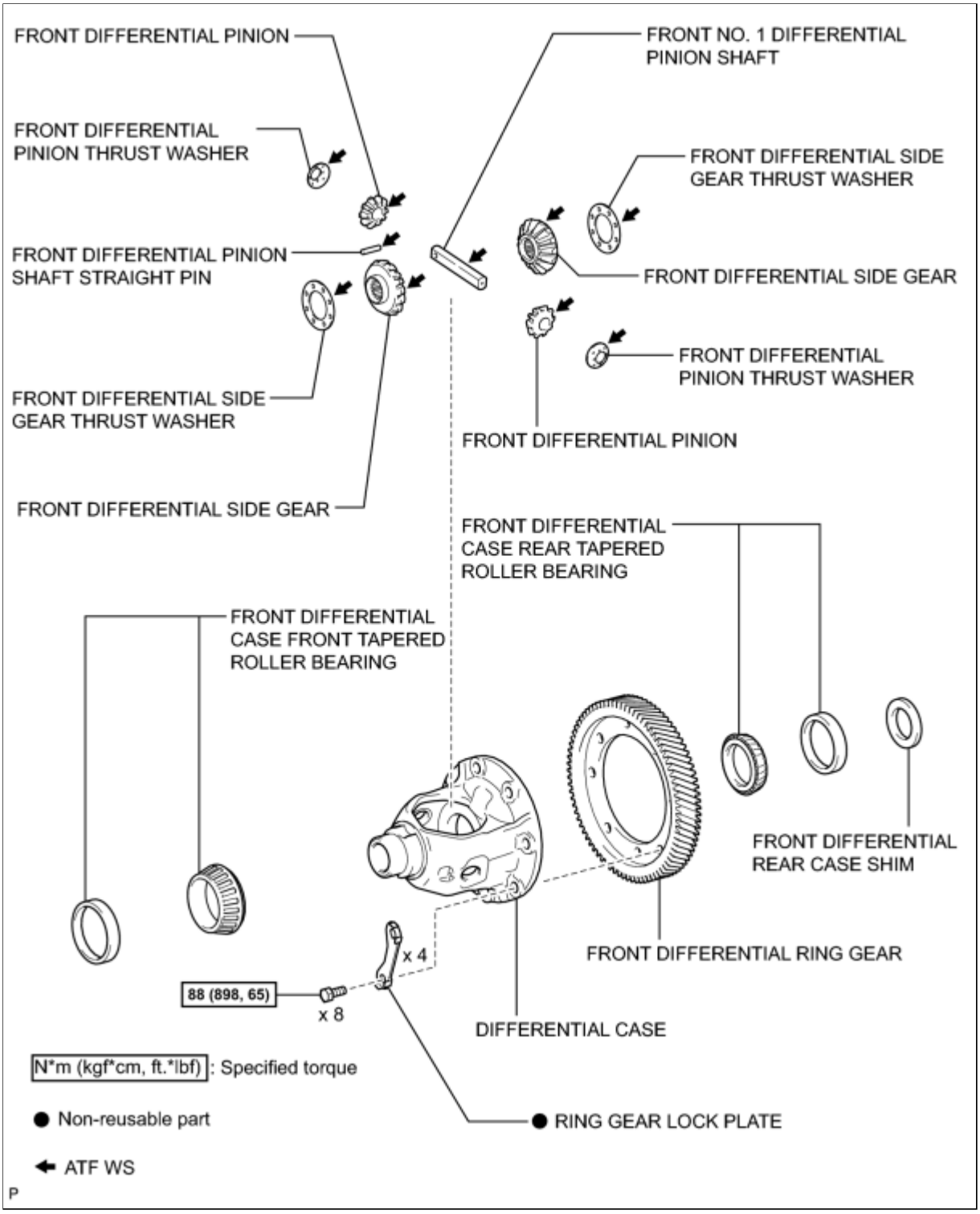
FRONT DIFFERENTIAL PINION
FRONT NO. 1 DIFFERENTIAL PINION SHAFT
FRONT DIFFERENTIAL PINION THRUST WASHER
FRONT DIFFERENTIAL SIDE GEAR THRUST WASHER
FRONT DIFFERENTIAL PINION SHAFT STRAIGHT PIN
FRONT DIFFERENTIAL SIDE GEAR
FRONT DIFFERENTIAL PINION THRUST WASHER
FRONT DIFFERENTIAL SIDE GEAR THRUST WASHER
FRONT DIFFERENTIAL PINION
FRONT DIFFERENTIAL SIDE GEAR
FRONT DIFFERENTIAL CASE REAR TAPERED ROLLER BEARING
FRONT DIFFERENTIAL CASE FRONT TAPERED ROLLER BEARING
FRONT DIFFERENTIAL REAR CASE SHIM
FRONT DIFFERENTIAL RING GEAR
x 4
88 (898, 65)
x 8
DIFFERENTIAL CASE
N*m (kgf*cm, ft.*lbf) : Specified torque
● Non-reusable part
RING GEAR LOCK PLATE
ATF WS
P

Last Modified: 3-10-2010	6.4 A	**From:** 200901
Model Year: 2010	**Model:** Corolla	**Doc ID:** RM00000193401AX
Title: U341E AUTOMATIC TRANSMISSION / TRANSAXLE: DIFFERENTIAL CASE: DISASSEMBLY (2010 Corolla)		

DISASSEMBLY

1. REMOVE FRONT DIFFERENTIAL CASE FRONT TAPERED ROLLER BEARING

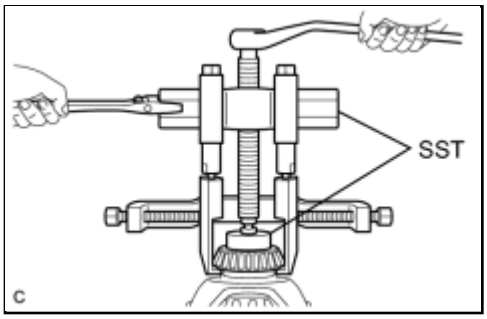

(a) Using SST, remove the front differential case front tapered roller bearing from the differential case.

SST: 09950-40011

09951-04010
09952-04010
09953-04030
09954-04010
09955-04061
09957-04010
09958-04011

SST: 09950-60010

09951-00390

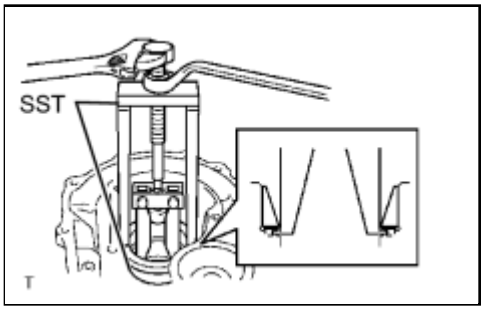

(b) Using SST, remove the front differential case front tapered roller bearing outer race from the transaxle housing.

SST: 09387-00041

09387-02020
09387-02010

2. REMOVE FRONT DIFFERENTIAL CASE REAR TAPERED ROLLER BEARING

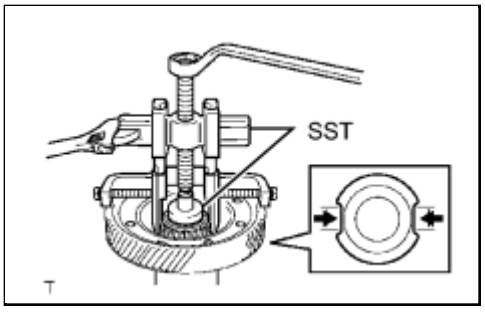

(a) Using SST, remove the front differential case rear tapered roller bearing from the differential case.

SST: 09950-40011

09951-04010
09952-04010
09953-04020
09954-04010
09955-04061
09957-04010
09958-04011

SST: 09950-60010

09951-00430

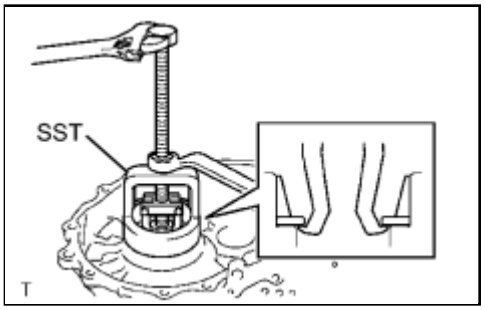

(b) Using SST, remove the front differential case rear tapered roller bearing outer race from the transaxle case.

SST: 09612-65014

09612-01010

3. REMOVE FRONT DIFFERENTIAL RING GEAR

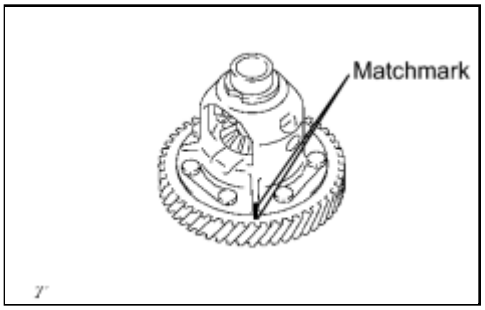

(a) Place matchmarks on the front differential ring gear and differential case.

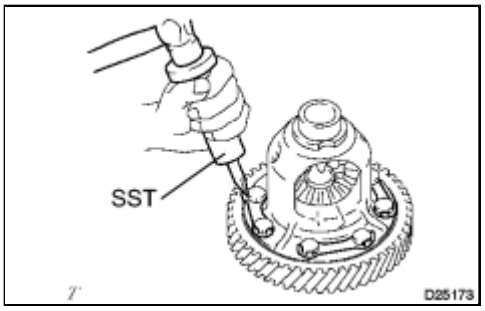

(b) Using SST and a hammer, release the lock plate.

SST: 09930-00010

(c) Remove the 8 bolts and the 4 ring gear lock plates.

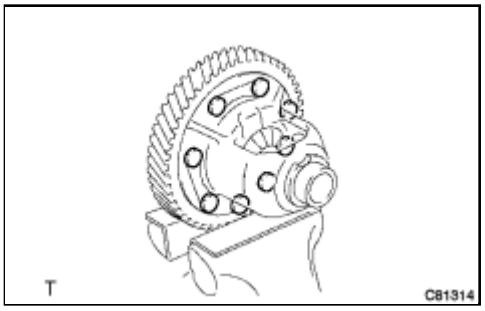

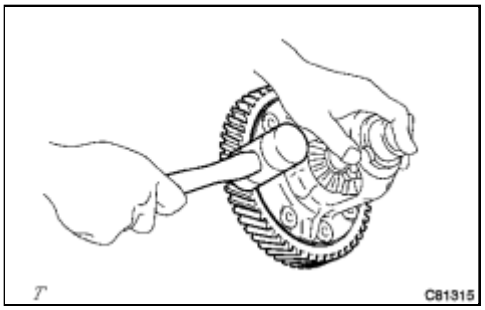

(d) Using a plastic hammer, remove the front differential ring gear from the differential case.

4. REMOVE FRONT DIFFERENTIAL PINION SHAFT STRAIGHT PIN

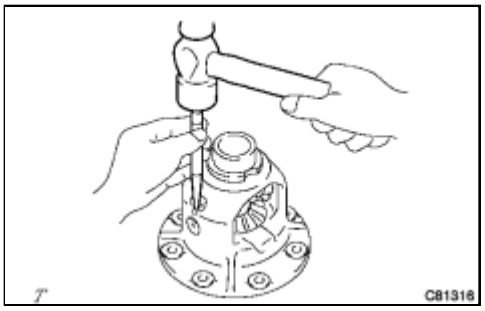

(a) Using a punch and a hammer, release the differential case.

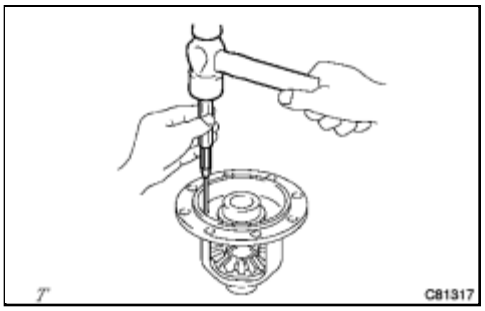

(b) Using a pin punch and a hammer, remove the straight pin.

5. REMOVE FRONT NO. 1 DIFFERENTIAL PINION SHAFT

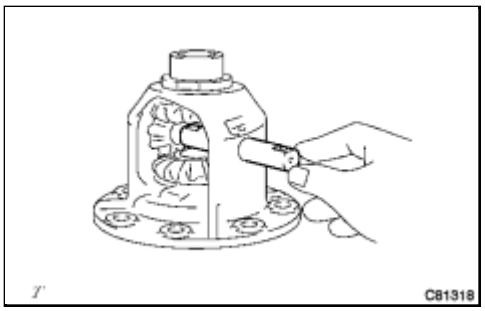

(a) Remove the front No. 1 differential pinion shaft from the front differential case.

6. REMOVE FRONT DIFFERENTIAL SIDE GEAR

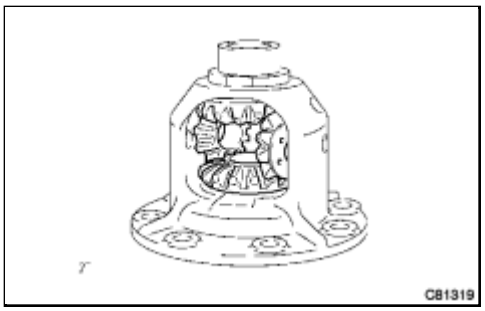

(a) Remove the 2 front differential pinions, 2 front differential pinion thrust washers, 2 front differential side gears and 2 front differential side gear thrust washers from the front differential case.

Last Modified: 3-10-2010	6.4 A	**From:** 200901
Model Year: 2010	**Model:** Corolla	**Doc ID:** RM00000193501AX
Title: U341E AUTOMATIC TRANSMISSION / TRANSAXLE: DIFFERENTIAL CASE: REASSEMBLY (2010 Corolla)		

REASSEMBLY

1. INSTALL FRONT DIFFERENTIAL SIDE GEAR

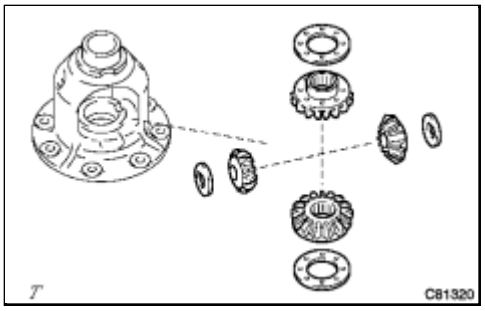

(a) After applying ATF to the 2 front differential side gears, 2 front differential side gear thrust washers, 2 front differential pinions and 2 front differential pinion thrust washers, install them to the front differential case.

HINT:

When installing them, set the alignment of the front differential pinions perpendicular to that of the side gear and rotate them so that their holes are aligned with the holes in the differential case.

2. INSTALL FRONT NO. 1 DIFFERENTIAL PINION SHAFT

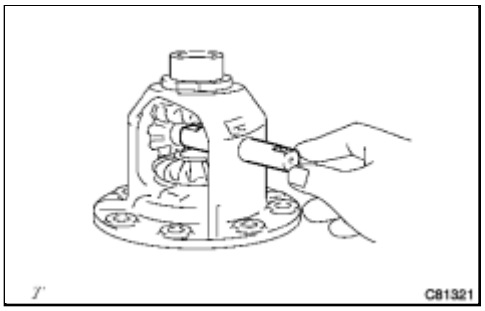

(a) Install the front No. 1 differential pinion shaft so as to align the lock pin holes in the pinion shaft and front differential case.

3. INSPECT DIFFERENTIAL SIDE GEAR BACKLASH INFO

4. INSTALL FRONT DIFFERENTIAL PINION SHAFT STRAIGHT PIN

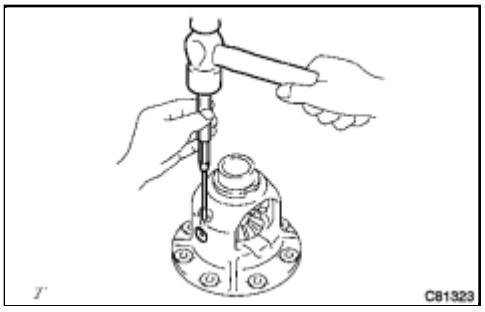

(a) Using a pin punch and a hammer, install the pinion shaft straight pin.

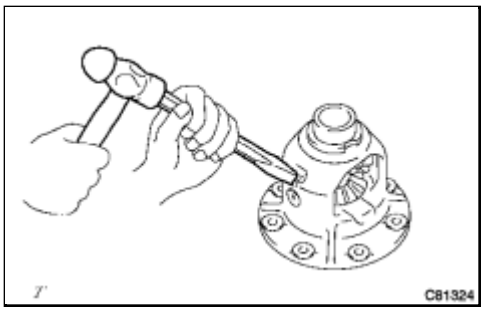

(b) Using a chisel and a hammer, stake the differential case.

5. INSTALL FRONT DIFFERENTIAL RING GEAR

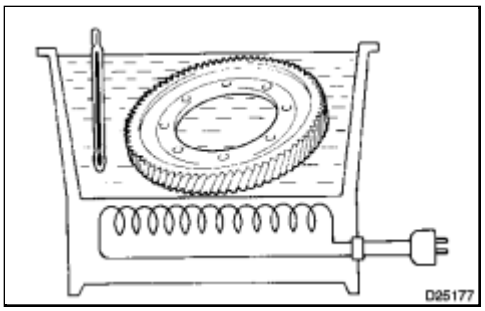

(a) Using ATF and a heater, heat the front differential ring gear to 90 to 110°C (194 to 230°F).

(b) Clean the contact surface of the front differential case.

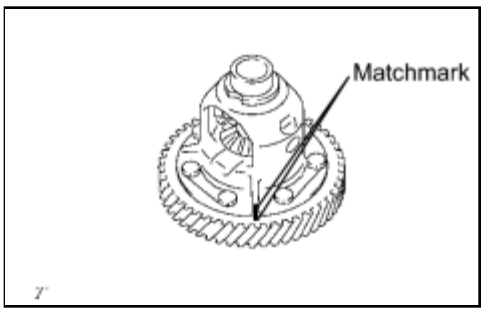

(c) Align the matchmarks, and install the front differential ring gear case quickly.

NOTICE:

Do not install the bolts while the ring gear is hot.

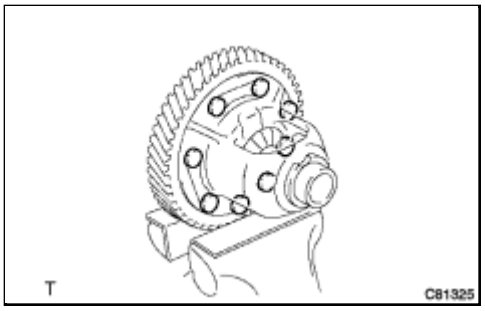

(d) Install 4 new ring gear lock plates with the 8 bolts.

Torque: 88 N·m (898 kgf·cm, 65ft·lbf)

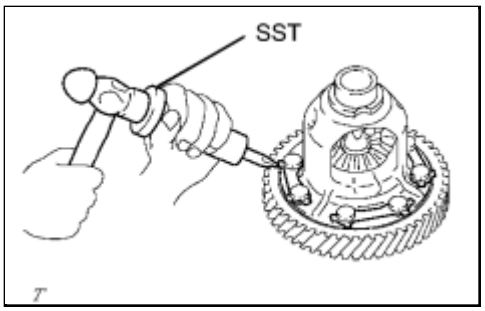

(e) Using SST, stake the ring gear lock plate.

SST: 09930-00010

6. INSTALL FRONT DIFFERENTIAL CASE REAR TAPERED ROLLER BEARING

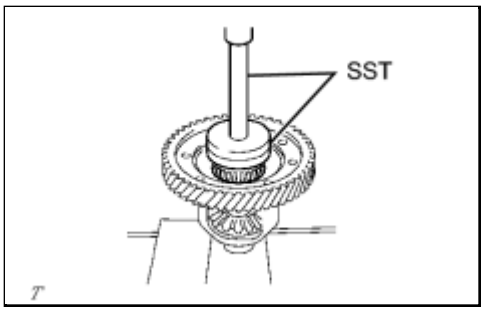

(a) Using SST and a press, install the front differential case rear tapered roller bearing inner race to the differential case.

SST: 09726-40010

SST: 09950-60020

09951-00790

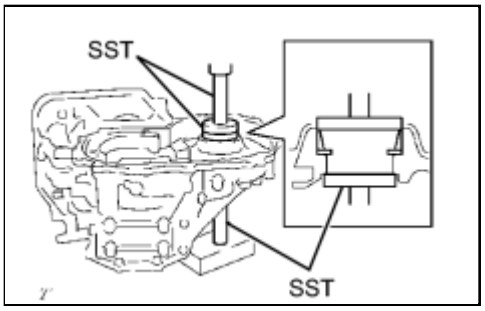

(b) Using SST and a press, install the shim and bearing outer race to the transaxle case.

SST: 09950-60020

09951-00720

SST: 09950-60010

09951-00650

SST: 09950-70010

09951-07100

09951-07200

7. INSTALL FRONT DIFFERENTIAL CASE FRONT TAPERED ROLLER BEARING

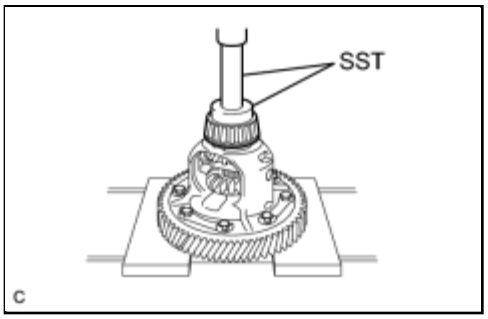

(a) Using SST and a press, install the front differential case front tapered roller bearing inner race to the differential case.

SST: 09950-60010

09951-00460

SST: 09950-70010

09951-07100

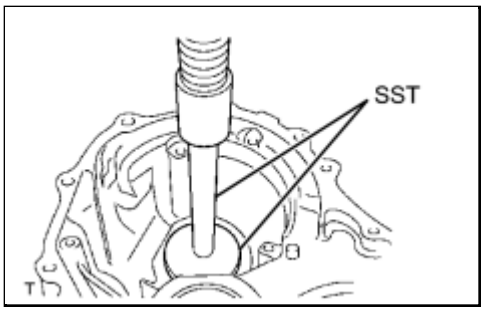

(b) Using SST and a press, install the front differential case front tapered roller bearing to the transaxle housing.

SST: 09950-70010

09951-07150

SST: 09950-60020

09951-00680

Last Modified: 3-10-2010	6.4 G	**From:** 200901
Model Year: 2010	**Model:** Corolla	**Doc ID:** RM000003DSK003X
Title: U341E AUTOMATIC TRANSMISSION / TRANSAXLE: DIFFERENTIAL CASE: INSPECTION (2010 Corolla)		

INSPECTION

1. INSPECT DIFFERENTIAL SIDE GEAR BACKLASH

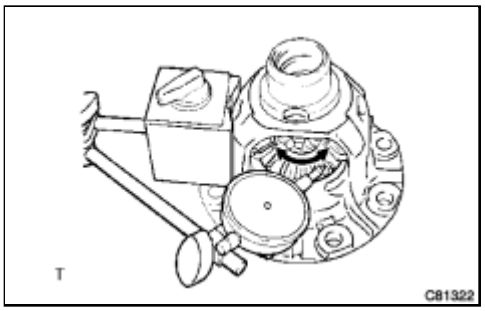

(a) Measure the differential side gear backlash while holding 1 pinion gear toward the case.

Standard backlash:

0.05 to 0.20 mm (0.00196 to 0.00787 in.)

If the backlash is not within the specified range, install the correct thrust washer to the side gear.

(b) Referring to the table below, select thrust washers which will ensure that the backlash is within the specified range for both sides.

Thrust Washer Thickness:

THICKNESS MM (IN.)	THICKNESS (MM (IN.))
0.95 (0.0374)	1.10 (0.0433)
1.00 (0.0394)	1.15 (0.0453)
1.05 (0.0413)	1.20 (0.0472)

If the backlash is not within the specified range, install a thrust washer of a different thickness.

Last Modified: 3-10-2010	6.4 K	**From:** 200901
Model Year: 2010	**Model:** Corolla	**Doc ID:** RM0000016E802JX
Title: U250E AUTOMATIC TRANSMISSION / TRANSAXLE: DIFFERENTIAL OIL SEAL: COMPONENTS (2010 Corolla)		

COMPONENTS

ILLUSTRATION

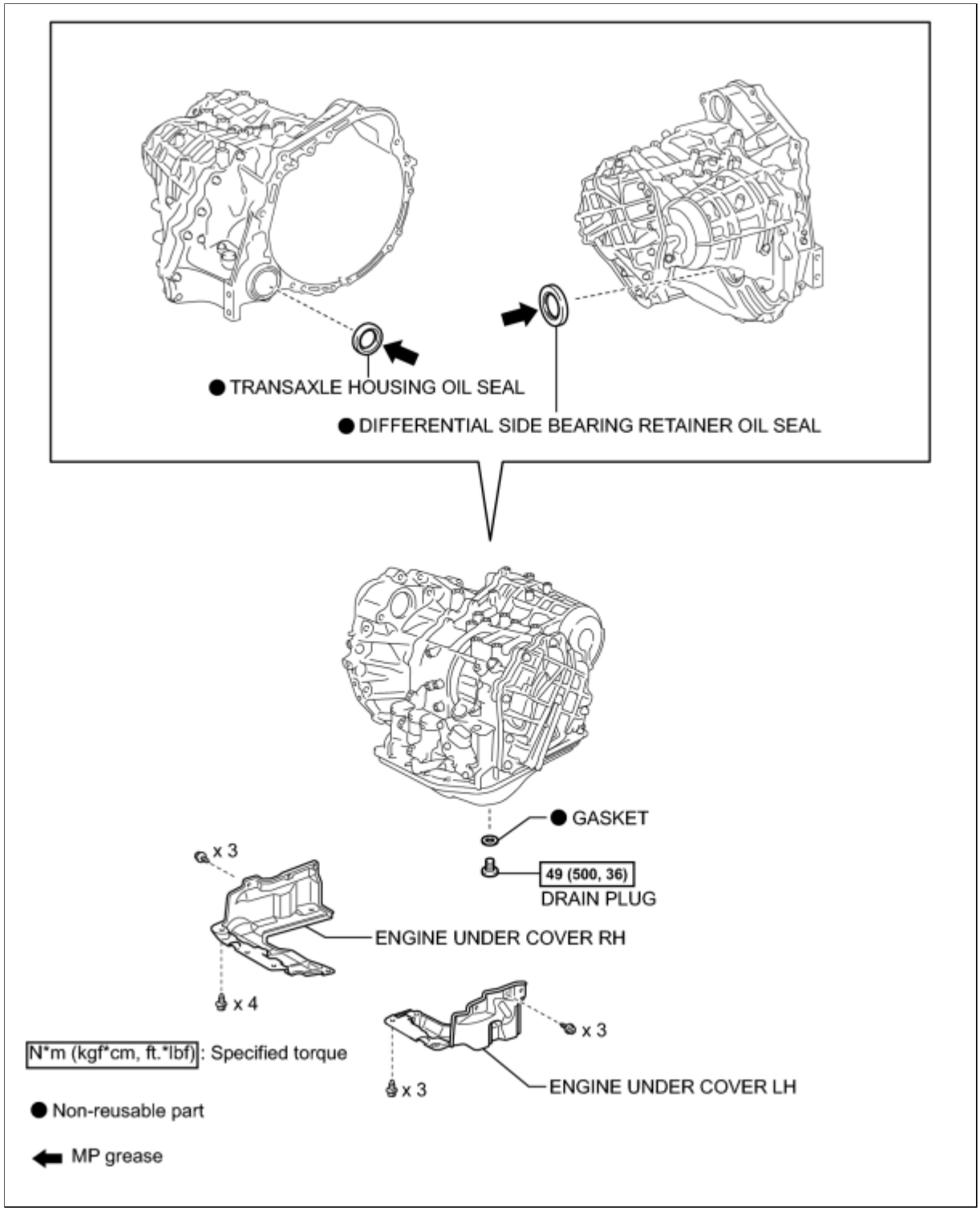
● TRANSAXLE HOUSING OIL SEAL
● DIFFERENTIAL SIDE BEARING RETAINER OIL SEAL
● GASKET
49 (500, 36)
DRAIN PLUG
x 3
ENGINE UNDER COVER RH
x 4
x 3
x 3
ENGINE UNDER COVER LH
N*m (kgf*cm, ft.*lbf): Specified torque
● Non-reusable part
MP grease

Last Modified: 3-10-2010	6.4 A	**From:** 200901
Model Year: 2010	**Model:** Corolla	**Doc ID:** RM000003DXL004X
Title: U250E AUTOMATIC TRANSMISSION / TRANSAXLE: DIFFERENTIAL OIL SEAL: REPLACEMENT (2010 Corolla)		

REPLACEMENT

1. REMOVE ENGINE UNDER COVER LH

2. REMOVE ENGINE UNDER COVER RH

3. DRAIN AUTOMATIC TRANSAXLE FLUID INFO

4. REMOVE FRONT DRIVE SHAFT ASSEMBLY

INFO

5. REMOVE TRANSAXLE HOUSING OIL SEAL

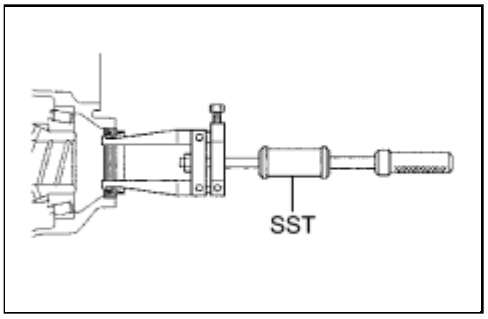

(a) Using SST, pull out the oil seal.

SST: 09308-00010

6. REMOVE DIFFERENTIAL SIDE BEARING RETAINER OIL SEAL

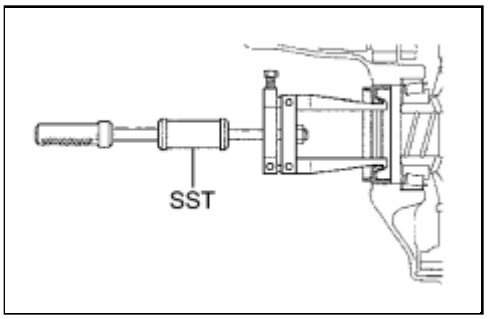

(a) Using SST, pull out the oil seal.

SST: 09308-00010

7. INSTALL TRANSAXLE HOUSING OIL SEAL

(a) Using SST and a hammer, install a new oil seal.

SST: 09316-60011

09316-00011

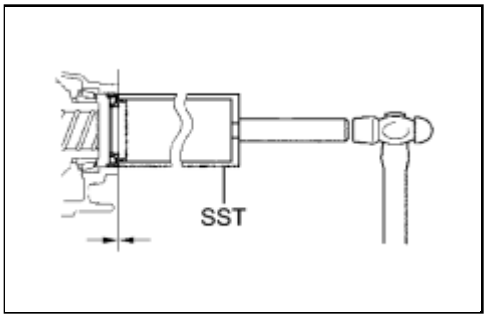

Oil seal installation depth:
-0.5 to 0.5 mm (-0.0197 to 0.0197 in.)

(b) Coat the lip of the oil seal with MP grease.

8. INSTALL DIFFERENTIAL SIDE BEARING RETAINER OIL SEAL

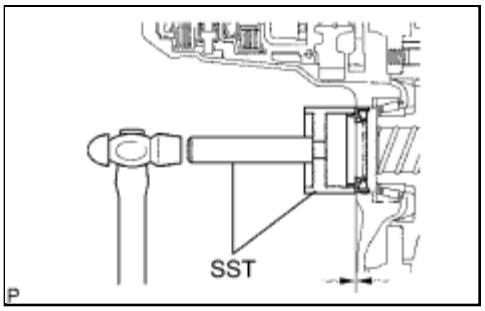

(a) Using SST and a hammer, install a new oil seal.

SST: 09649-17010

SST: 09950-70010

09951-07150

Oil seal installation depth:
-0.5 to 0.5 mm (-0.0197 to 0.0197 in.)

(b) Coat the lip of the oil seal with MP grease.

9. INSTALL FRONT DRIVE SHAFT ASSEMBLY

INFO

10. ADD AUTOMATIC TRANSAXLE FLUID

11. INSPECT TRANSAXLE FLUID LEVEL INFO

12. INSTALL ENGINE UNDER COVER LH

13. INSTALL ENGINE UNDER COVER RH

Last Modified: 3-10-2010	6.4 K	**From:** 200901
Model Year: 2010	**Model:** Corolla	**Doc ID:** RM000001920010X
Title: U341E AUTOMATIC TRANSMISSION / TRANSAXLE: DIFFERENTIAL OIL SEAL: COMPONENTS (2010 Corolla)		

COMPONENTS

ILLUSTRATION

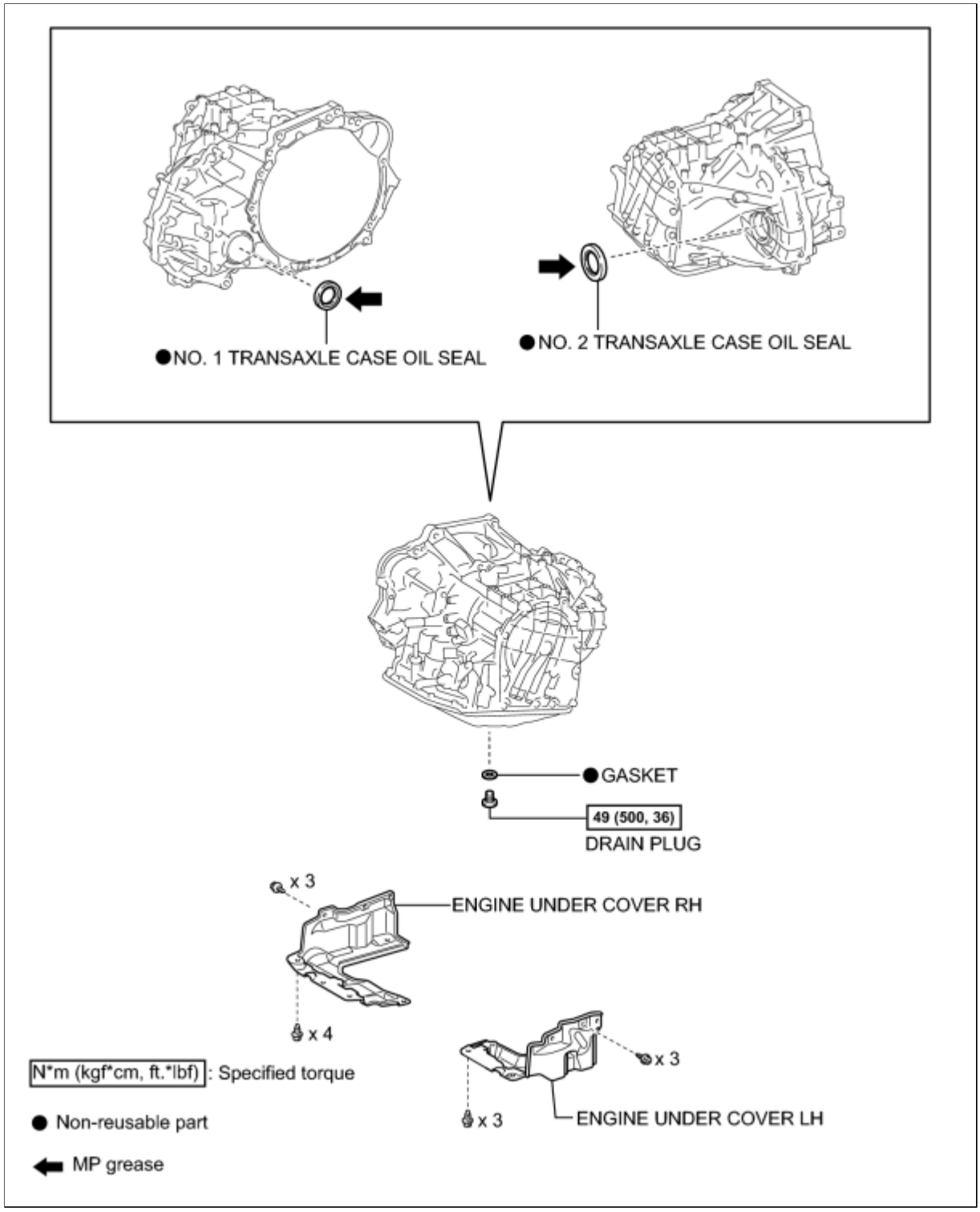
●NO. 1 TRANSAXLE CASE OIL SEAL
●NO. 2 TRANSAXLE CASE OIL SEAL
●GASKET
49 (500, 36)
DRAIN PLUG
x 3
ENGINE UNDER COVER RH
x 4
x 3
x 3
ENGINE UNDER COVER LH
N*m (kgf*cm, ft.*lbf) : Specified torque
● Non-reusable part
MP grease

Last Modified: 3-10-2010	6.4 A	**From:** 200901
Model Year: 2010	**Model:** Corolla	**Doc ID:** RM0000032JA00TX
Title: U341E AUTOMATIC TRANSMISSION / TRANSAXLE: DIFFERENTIAL OIL SEAL: REPLACEMENT (2010 Corolla)		

REPLACEMENT

1. REMOVE ENGINE UNDER COVER LH

2. REMOVE ENGINE UNDER COVER RH

3. DRAIN AUTOMATIC TRANSAXLE FLUID INFO

4. REMOVE FRONT DRIVE SHAFT ASSEMBLY

INFO

5. REMOVE NO. 1 TRANSAXLE CASE OIL SEAL

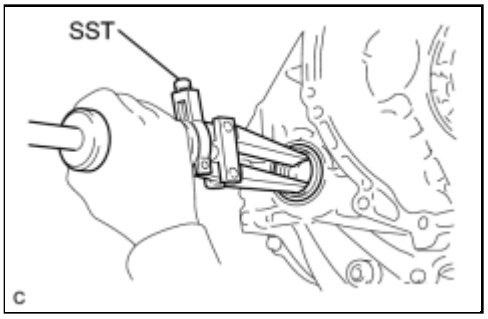

(a) Using SST, remove the No. 1 transaxle case oil seal from the transaxle case.

SST: 09308-00010

6. REMOVE NO. 2 TRANSAXLE CASE OIL SEAL

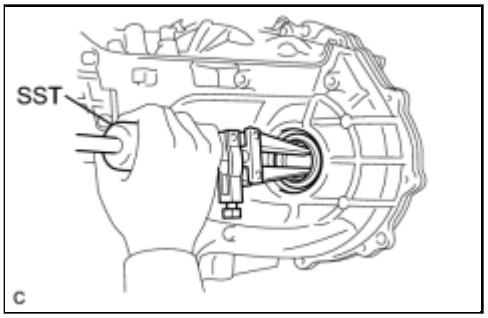

(a) Using SST, remove the No. 2 transaxle case oil seal from the transaxle housing.

SST: 09308-00010

7. INSTALL NO. 1 TRANSAXLE CASE OIL SEAL

(a) Using SST and a hammer, install a new oil seal to the transaxle case.

SST: 09387-00010

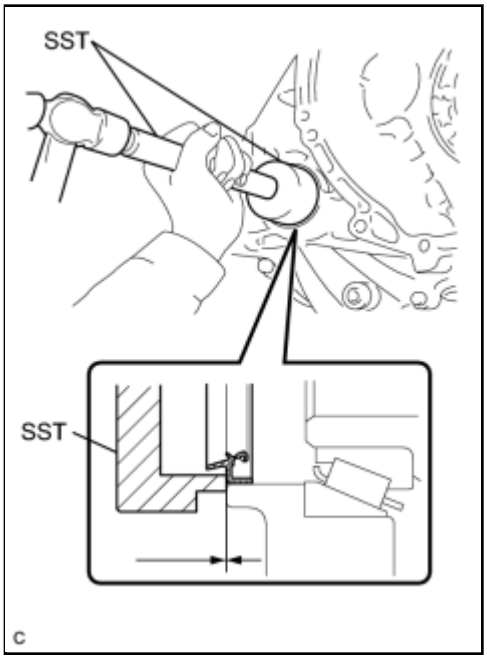

SST: 09950-70010

09951-07200

Standard depth:

-0.5 to 0.5 mm (-0.0197 to 0.0197 in.)

NOTICE:

Do not damage the oil seal lip.

(b) Coat the lip of the oil seal with MP grease.

8. INSTALL NO. 2 TRANSAXLE CASE OIL SEAL

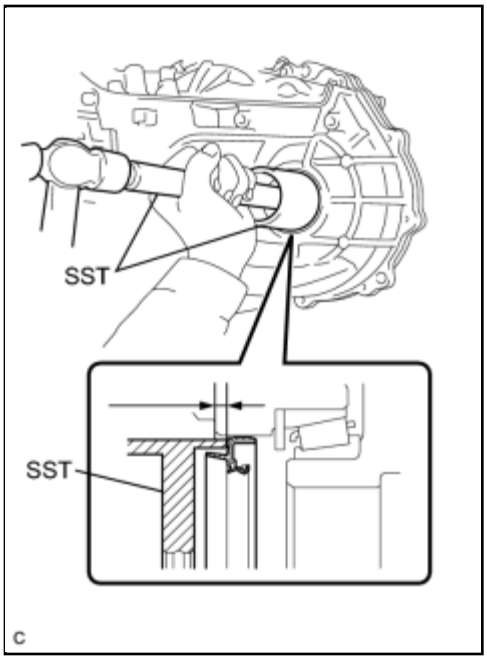

(a) Using SST and a hammer, install a new oil seal to the transaxle housing.

SST: 09726-27012

09726-02041

SST: 09950-70010

09951-07200

Standard depth:

2.2 to 3.2 mm (0.0866 to 0.126 in.)

NOTICE:

Do not damage the oil seal lip.

(b) Coat the lip of the oil seal with MP grease.

9. INSTALL FRONT DRIVE SHAFT ASSEMBLY

INFO

10. ADD AUTOMATIC TRANSAXLE FLUID

11. INSPECT TRANSAXLE FLUID LEVEL INFO

12. INSTALL ENGINE UNDER COVER LH

13. INSTALL ENGINE UNDER COVER RH

Last Modified: 3-10-2010	6.4 K	**From:** 200901
Model Year: 2010	**Model:** Corolla	**Doc ID:** RM000001CUO00HX
Title: U250E AUTOMATIC TRANSMISSION / TRANSAXLE: OIL PUMP: COMPONENTS (2010 Corolla)		

COMPONENTS

ILLUSTRATION

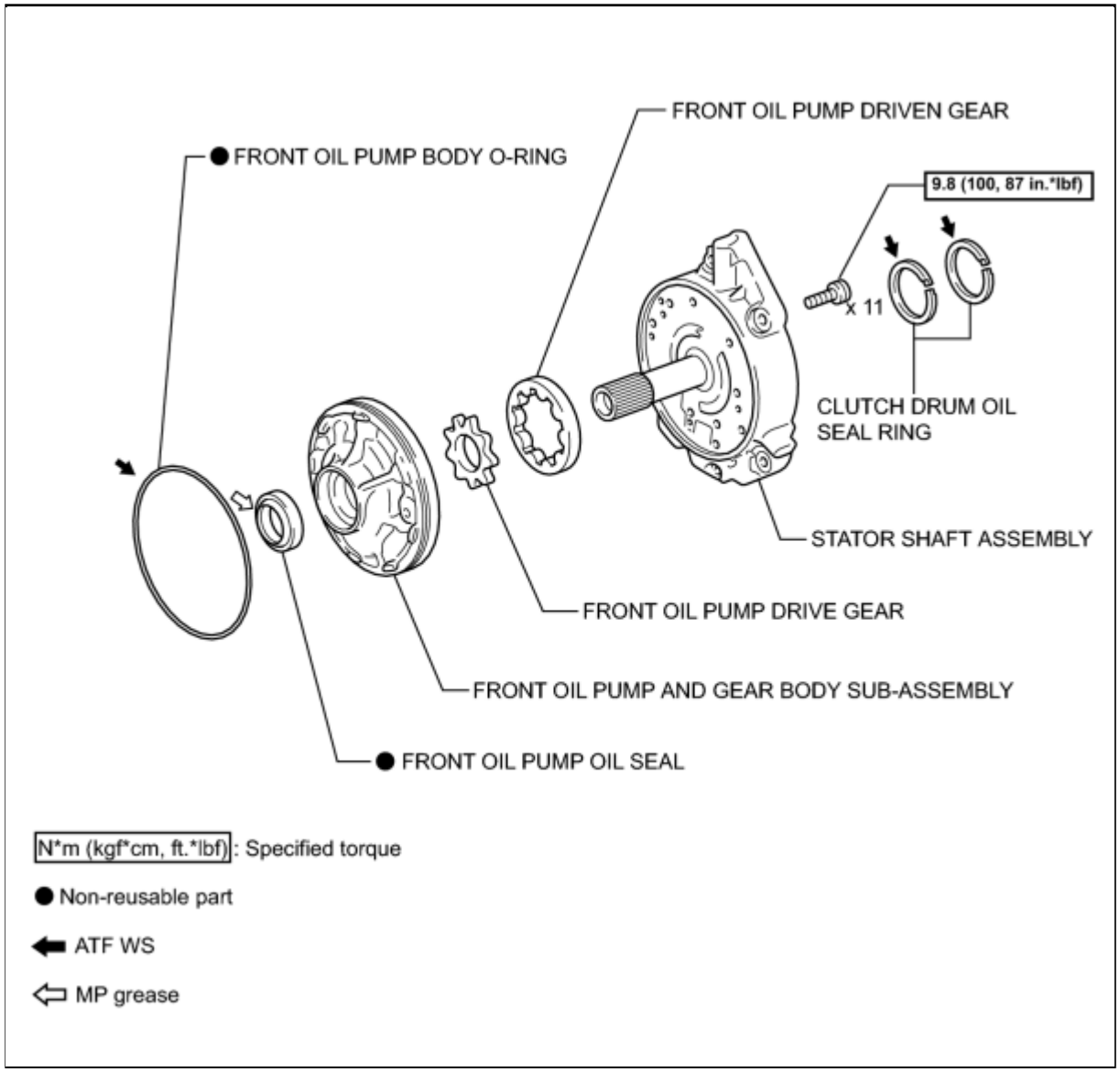

Last Modified: 3-10-2010	6.4 A	**From:** 200901
Model Year: 2010	**Model:** Corolla	**Doc ID:** RM000000YXC026X
Title: U250E AUTOMATIC TRANSMISSION / TRANSAXLE: OIL PUMP: DISASSEMBLY (2010 Corolla)		

DISASSEMBLY

1. INSPECT OIL PUMP ASSEMBLY INFO

2. REMOVE CLUTCH DRUM OIL SEAL RING

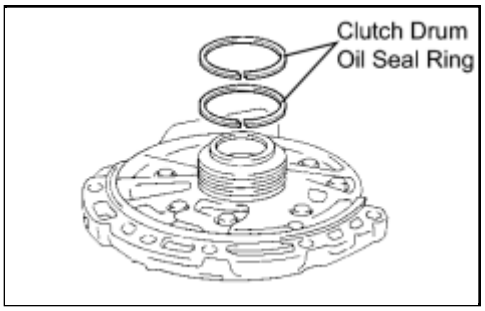

(a) Remove the 2 clutch drum oil seal rings.

3. REMOVE STATOR SHAFT ASSEMBLY

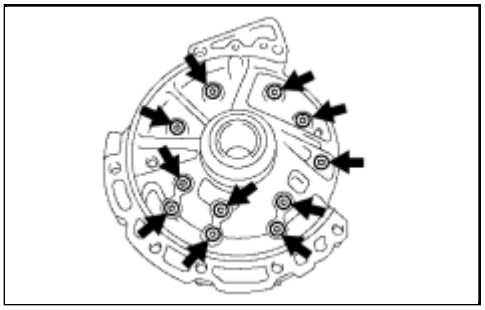

(a) Using a "TORX" socket (T30), remove the 11 bolts and stator shaft.

(b) Keep the bolts in the order removed.

4. INSPECT CLEARANCE OF OIL PUMP ASSEMBLY INFO

5. REMOVE FRONT OIL PUMP DRIVE GEAR

(a) Remove the front oil pump drive gear.

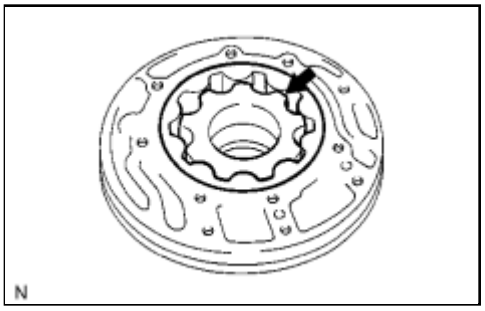

6. REMOVE FRONT OIL PUMP DRIVEN GEAR

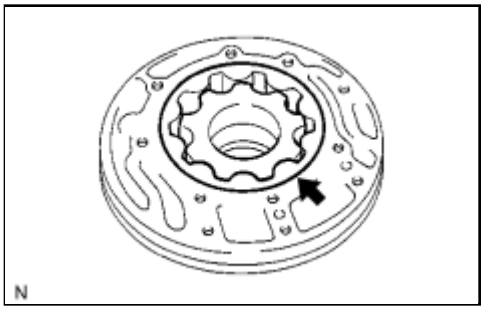

(a) Remove the front oil pump driven gear.

7. REMOVE FRONT OIL PUMP BODY O-RING

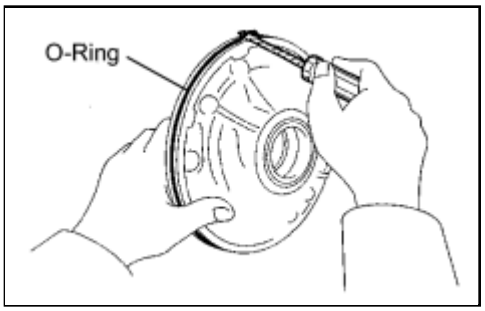

(a) Using a screwdriver, remove the O-ring.

HINT:

Tape the screwdriver tip before use.

8. REMOVE FRONT OIL PUMP OIL SEAL

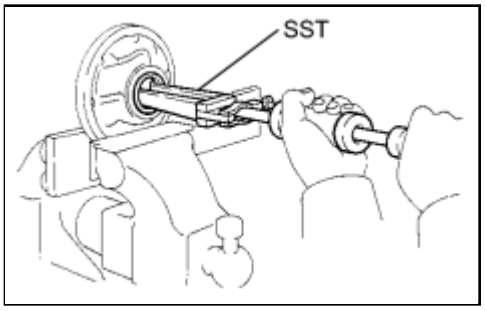

(a) Mount the oil pump in a soft jaw vise.

(b) Using SST, remove the oil seal from the oil pump body.

SST: 09308-00010

Last Modified: 3-10-2010	6.4 G	**From:** 200901
Model Year: 2010	**Model:** Corolla	**Doc ID:** RM000000YXB026X
Title: U250E AUTOMATIC TRANSMISSION / TRANSAXLE: OIL PUMP: INSPECTION (2010 Corolla)		

INSPECTION

1. INSPECT OIL PUMP ASSEMBLY

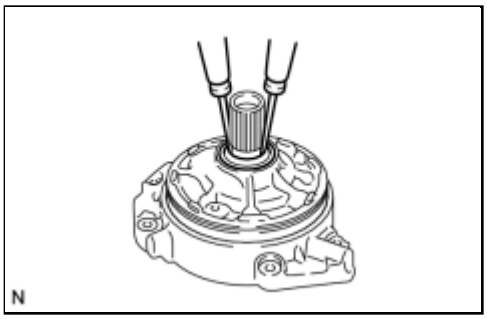

(a) Turn the drive gear with 2 screwdrivers and make sure that it rotates smoothly.

NOTICE:

Be careful not to damage the oil seal lip.

2. INSPECT CLEARANCE OF OIL PUMP ASSEMBLY

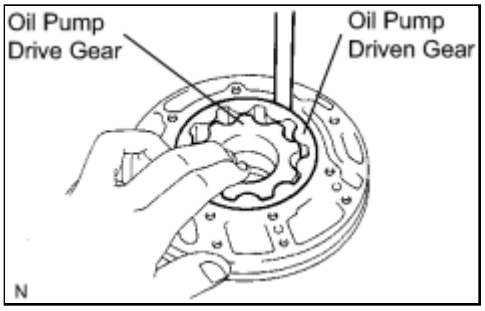

(a) Push the driven gear to one side of the body.

(b) Using a feeler gauge, measure the clearance.

Standard body clearance:
0.10 to 0.17 mm (0.00394 to 0.00669 in.)
Side clearance:
0.02 to 0.05 mm (0.000787 to 0.00197 in.)
Maximum body clearance:
0.17 mm (0.00669 in.)

If the body clearance is greater than the maximum, replace the oil pump body sub-assembly.

(c) Using a feeler gauge, measure the tip clearance between the driven gear teeth and drive gear teeth.

Standard tip clearance:
0.07 to 0.15 mm (0.00276 to 0.00591 in.)

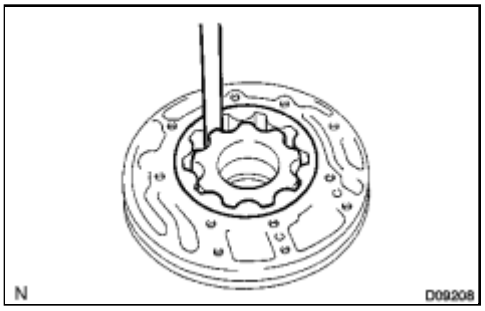

Maximum tip clearance

0.15 mm (0.00591 in.)

If the tip clearance is greater than the maximum, replace the oil pump body sub-assembly.

(d) Using a straightedge and feeler gauge, measure the side clearance of both gears.

Standard side clearance:

0.02 to 0.05 mm (0.000787 to 0.00197 in.)

Maximum side clearance

0.05 mm (0.00197 in.)

Drive Gear Thickness

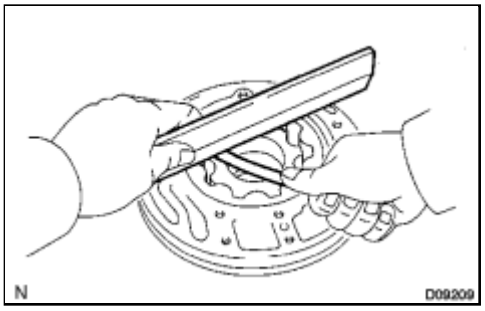

MARK	THICKNESS (MM (IN.))
A	11.690 to 11.699 (0.4602 to 0.4606)
B	11.700 to 11.709 (0.4606 to 0.4610)
C	11.710 to 11.720 (0.4610 to 0.4614)
D	11.721 to 11.730 (0.4615 to 0.4618)
E	11.731 to 11.740 (0.4619 to 0.4622)

Driven Gear Thickness

MARK	THICKNESS (MM (IN.))
A	11.690 to 11.699 (0.4602 to 0.4606)
B	11.700 to 11.709 (0.4606 to 0.4610)
C	11.710 to 11.720 (0.4610 to 0.4614)
D	11.721 to 11.730 (0.4615 to 0.4618)
E	11.731 to 11.740 (0.4619 to 0.4622)

3. INSPECT FRONT OIL PUMP AND GEAR BODY SUB-ASSEMBLY

(a) Using a dial indicator, measure the inside diameter of the

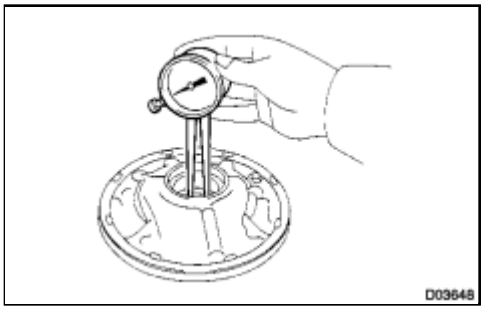

oil pump body bushing.

Standard inside diameter:
38.113 to 38.138 mm (1.50051 to 1.50149 in.)

Maximum inside diameter
38.188 mm (1.50346 in.)

If the inside diameter is greater than the maximum, replace the oil pump and gear body sub-assembly.

4. INSPECT STATOR SHAFT ASSEMBLY

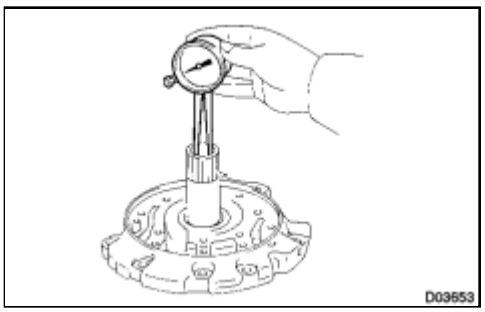

(a) Using a dial indicator, measure the inside diameter of the stator shaft.

Standard inside diameter:
21.500 to 21.526 mm (0.84646 to 0.84748 in.)

Maximum inside diameter
21.57 mm (0.8492 in.)

If the inside diameter is greater than the maximum, replace the stator shaft.

Last Modified: 3-10-2010	6.4 A	**From:** 200901
Model Year: 2010	**Model:** Corolla	**Doc ID:** RM000000YXD026X
Title: U250E AUTOMATIC TRANSMISSION / TRANSAXLE: OIL PUMP: REASSEMBLY (2010 Corolla)		

REASSEMBLY

1. INSTALL FRONT OIL PUMP OIL SEAL

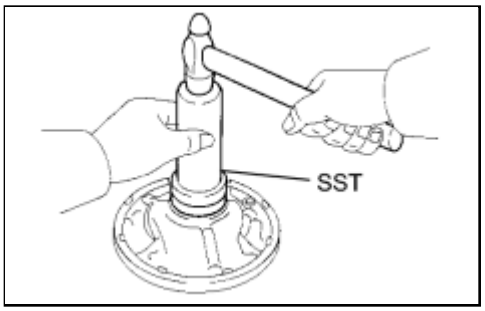

(a) Using SST and a hammer, install a new oil seal to the oil pump body.

SST: 09350-32014

09351-32140

HINT:

The seal end should be flush with the outer edge of the oil pump.

(b) Coat the lip of the oil seal with MP grease.

2. INSTALL FRONT OIL PUMP BODY O-RING

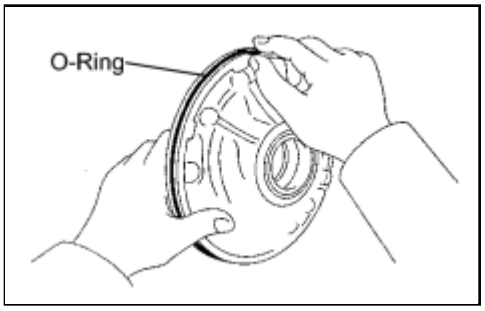

(a) Coat a new O-ring with ATF, and install it to the oil pump body.

NOTICE:

- Install the O-ring carefully to avoid twists or pinches.
- Apply sufficient ATF to the O-ring prior to installation.

3. INSTALL FRONT OIL PUMP DRIVEN GEAR

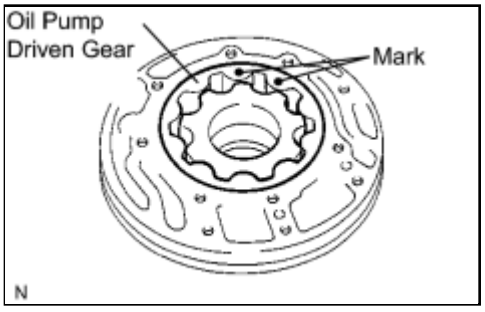

(a) Coat the front oil pump driven gear with ATF, and install it to the oil pump body with the marked side up.

4. INSTALL FRONT OIL PUMP DRIVE GEAR

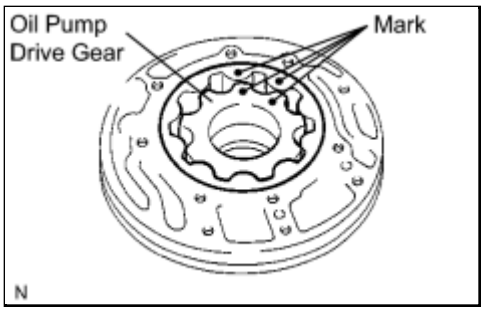

(a) Coat the front oil pump drive gear with ATF, and install it to the oil pump body with the marked side up.

5. INSTALL STATOR SHAFT ASSEMBLY

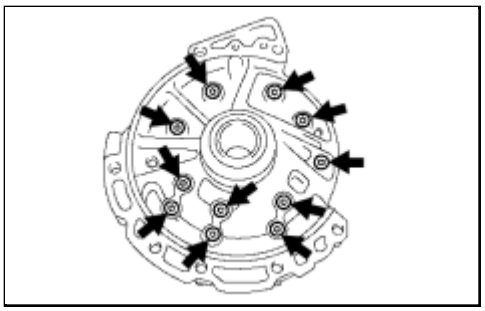

(a) Align the bolt holes in the stator shaft assembly with those in the front oil pump and gear body sub-assembly.

(b) Using a "TORX" socket (T30), install the 11 bolts.

Torque: 9.8 N·m (100 kgf·cm, 87in·lbf)

6. INSTALL CLUTCH DRUM OIL SEAL RING

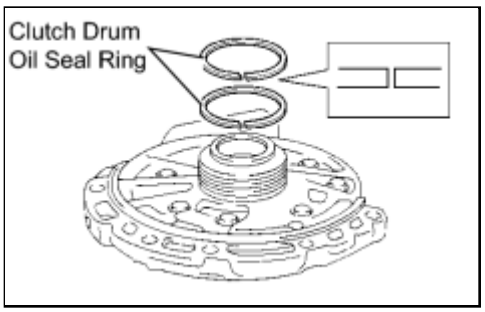

(a) Coat 2 new clutch drum oil seal rings with ATF.

(b) Install the 2 clutch drum oil seal rings.

NOTICE:

Do not expand the ring ends excessively.

Last Modified: 3-10-2010	6.4 K	**From:** 200901
Model Year: 2010	**Model:** Corolla	**Doc ID:** RM00000192K019X
Title: U341E AUTOMATIC TRANSMISSION / TRANSAXLE: OIL PUMP: COMPONENTS (2010 Corolla)		

COMPONENTS

ILLUSTRATION

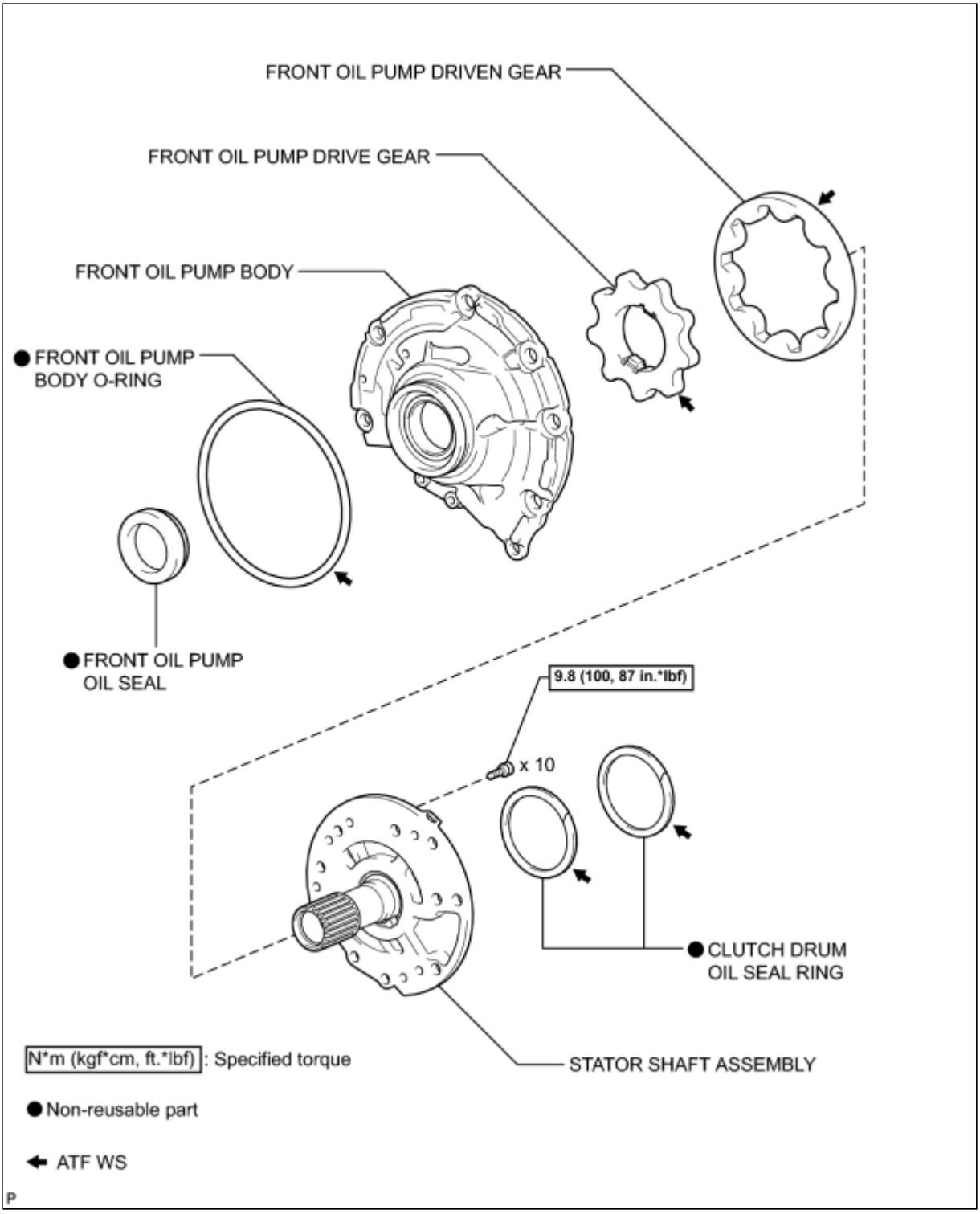
FRONT OIL PUMP DRIVEN GEAR
FRONT OIL PUMP DRIVE GEAR
FRONT OIL PUMP BODY
● FRONT OIL PUMP BODY O-RING
● FRONT OIL PUMP OIL SEAL
9.8 (100, 87 in.*lbf)
x 10
● CLUTCH DRUM OIL SEAL RING
STATOR SHAFT ASSEMBLY
N*m (kgf*cm, ft.*lbf): Specified torque
● Non-reusable part
ATF WS
P

Last Modified: 3-10-2010	6.4 A	**From:** 200901
Model Year: 2010	**Model:** Corolla	**Doc ID:** RM00000192L019X
Title: U341E AUTOMATIC TRANSMISSION / TRANSAXLE: OIL PUMP: DISASSEMBLY (2010 Corolla)		

DISASSEMBLY

1. REMOVE FRONT OIL PUMP BODY O-RING

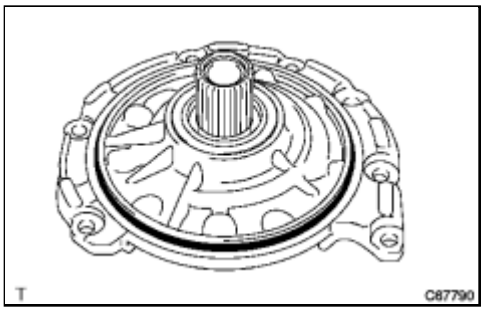

(a) Remove the front oil pump body O-ring from the oil pump.

2. REMOVE STATOR SHAFT ASSEMBLY

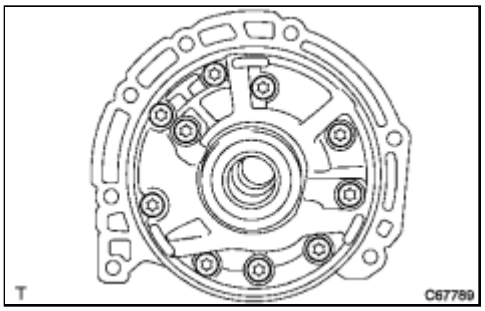

(a) Using a "TORX" socket wrench T30, remove the 10 "TORX" screws.

3. REMOVE FRONT OIL PUMP DRIVE GEAR

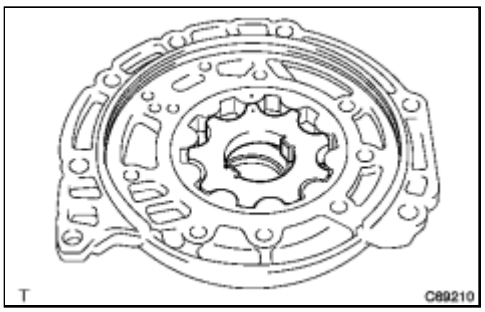

(a) Remove the front oil pump drive gear from the oil pump body.

4. REMOVE FRONT OIL PUMP DRIVEN GEAR

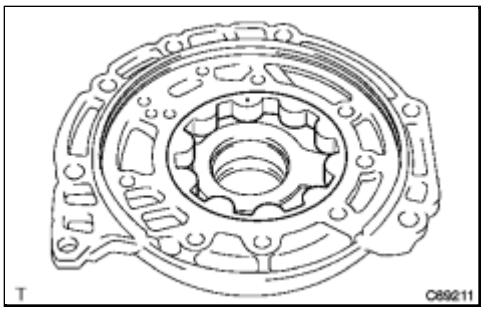

(a) Remove the front oil pump driven gear from the oil pump body.

5. REMOVE FRONT OIL PUMP OIL SEAL

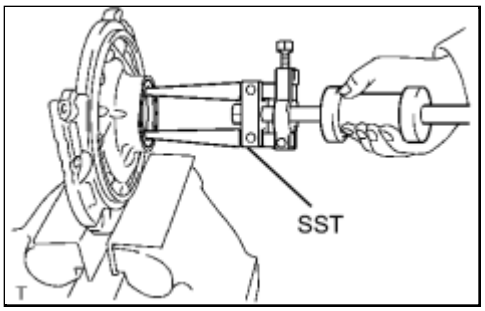

(a) Using SST, remove the front oil pump oil seal from the oil pump body.

SST: 09308-00010

6. REMOVE CLUTCH DRUM OIL SEAL RING

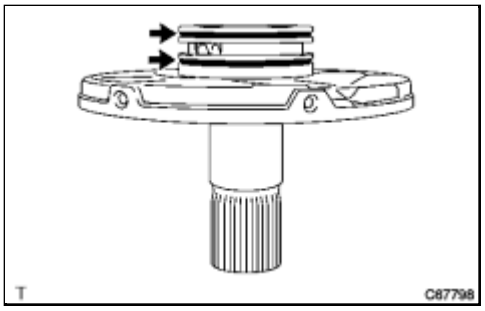

(a) Using a screwdriver, remove the 2 clutch drum oil seal rings from the stator shaft assembly.

Last Modified: 3-10-2010	6.4 G	**From:** 200901
Model Year: 2010	**Model:** Corolla	**Doc ID:** RM0000192J019X
Title: U341E AUTOMATIC TRANSMISSION / TRANSAXLE: OIL PUMP: INSPECTION (2010 Corolla)		

INSPECTION

1. INSPECT STATOR SHAFT ASSEMBLY

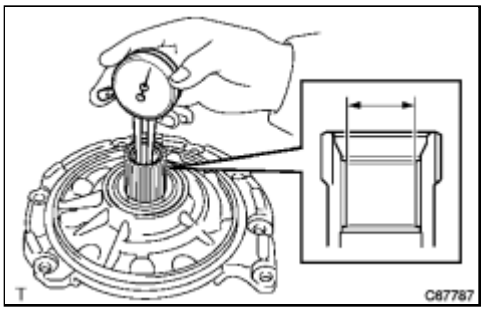

(a) Using a dial indicator, measure the inside diameter of the stator shaft bushings.

Standard inside diameter:
21.50 to 21.52 mm (0.846 to 0.847 in.)
Maximum inside diameter:
21.52 mm (0.847 in.)

If the inside diameter is greater than the maximum, replace the stator shaft.

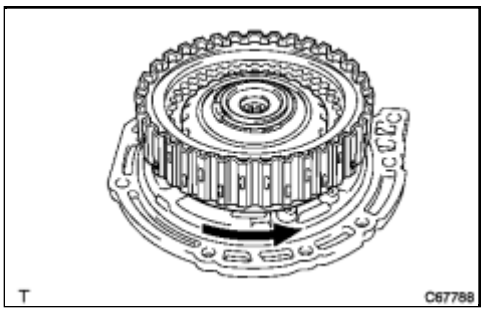

(b) Install the input shaft assembly onto the stator shaft assembly and check that the input shaft assembly turns smoothly.

NOTICE:

Replace the stator assembly with a new one if it moves roughly or makes unusual noise.

Inspect the input shaft's contact surface with the bearing when replacing, and replace the input shaft with a new one if any damage or discoloration is found.

2. INSPECT OIL PUMP GEAR CLEARANCE

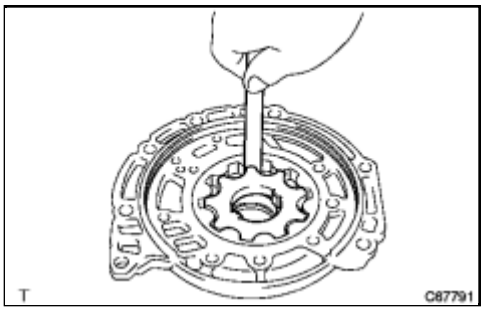

(a) Using a feeler gauge, measure the clearance between the tips of the driven gear teeth and the drive gear teeth.

Standard tip clearance:
0.07 to 0.15 mm (0.00275 to 0.00590 in.)
Maximum tip clearance:
0.15 mm (0.00590 in.)

If the tip clearance is greater than the maximum, replace the oil pump body sub-assembly.

(b) Push the driven gear to one side of the body. Using a feeler gauge, measure the clearance.

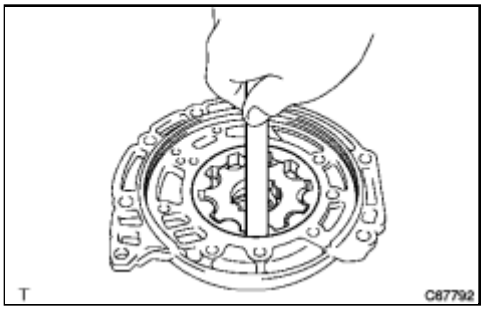

Standard body clearance:
0.10 to 0.15 mm (0.00393 to 0.00590 in.)
Maximum body clearance:
0.15 mm (0.00590 in.)

If the body clearance is greater than the maximum, replace the oil pump body sub-assembly.

(c) Using a steel straightedge and feeler gauge, measure the side clearance of both gears.

Standard side clearance:
0.02 to 0.05 mm (0.000787 to 0.00196 in.)
Maximum side clearance:
0.05 mm (0.00196 in.)

If the side clearance is greater than the maximum, replace the drive gear, driven gear or pump body.

Drive Gear Thickness:

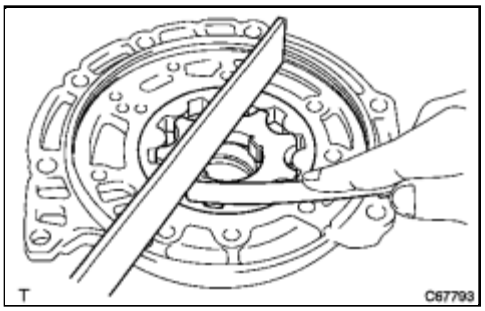

NO.	THICKNESS (MM (IN.))
1	9.440 to 9.449 (0.3717 to 0.3720)
2	9.450 to 9.459 (0.3720 to 0.3724)
3	9.460 to 9.470 (0.3724 to 0.3728)
4	9.471 to 9.480 (0.3729 to 0.3732)
5	9.481 to 9.490 (0.3733 to 0.3736)

Driven Gear Thickness:

NO.	THICKNESS (MM (IN.))
1	9.440 to 9.449 (0.3717 to 0.3720)
2	9.450 to 9.459 (0.3720 to 0.3724)
3	9.460 to 9.470 (0.3724 to 0.3728)
4	9.471 to 9.480 (0.3729 to 0.3732)
5	9.481 to 9.490 (0.3733 to 0.3736)

3. INSPECT FRONT OIL PUMP BODY SUB-ASSEMBLY

(a) Using a dial indicator, measure the inside diameter of the oil pump body bushing.

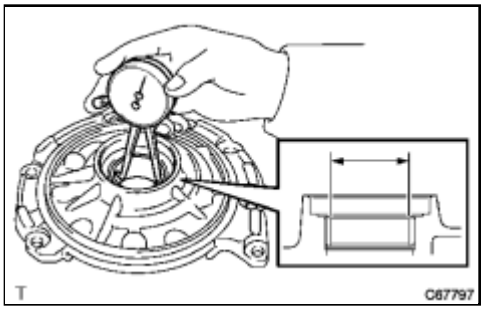

Standard inside diameter:
38.12 to 38.13 mm (1.500 to 1.501 in.)
Maximum inside diameter:
38.13 mm (1.501 in.)

If the inside diameter is greater than the maximum, replace the oil pump body sub-assembly.

Last Modified: 3-10-2010	6.4 A	**From:** 200901
Model Year: 2010	**Model:** Corolla	**Doc ID:** RM00000192M019X
Title: U341E AUTOMATIC TRANSMISSION / TRANSAXLE: OIL PUMP: REASSEMBLY (2010 Corolla)		

REASSEMBLY

1. INSTALL CLUTCH DRUM OIL SEAL RING

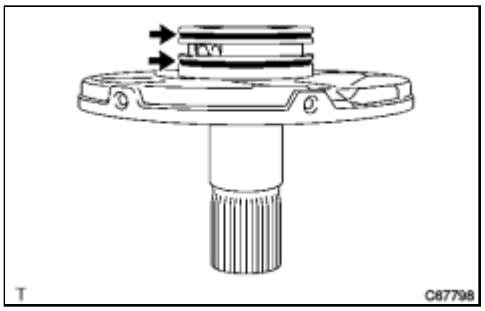

(a) Coat 2 new clutch drum oil seal rings with ATF, and install them to the stator shaft.

2. INSTALL FRONT OIL PUMP OIL SEAL

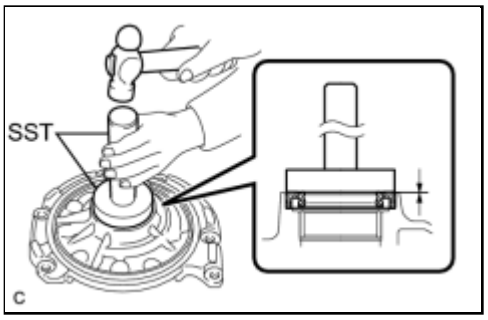

(a) Using SST and a hammer, install a new front oil pump oil seal to the oil pump body.

SST: 09950-60010

09951-00550

SST: 09950-70010

09951-07100

Oil seal driven in depth:

-0.15 to 0.15 mm (-0.00590 to 0.00590 in.)

3. INSTALL FRONT OIL PUMP DRIVEN GEAR

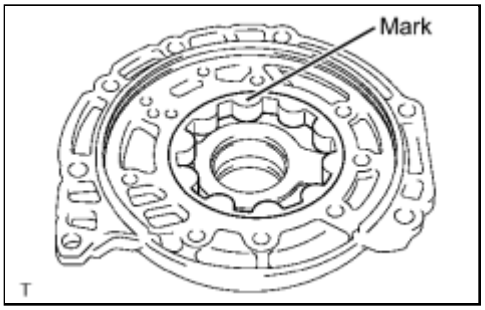

(a) Coat the front oil pump driven gear with ATF, and install it to the oil pump body with the marked side facing upward.

4. INSTALL FRONT OIL PUMP DRIVE GEAR

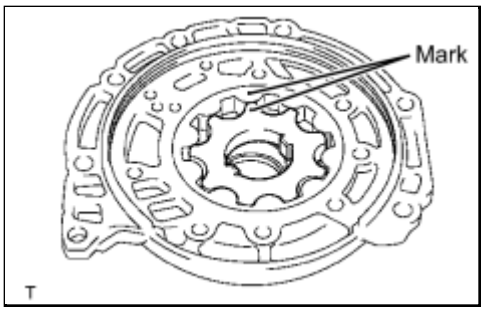

(a) Coat the front oil pump drive gear with ATF, and install it to the oil pump body with the marked side facing upward.

5. INSTALL STATOR SHAFT ASSEMBLY

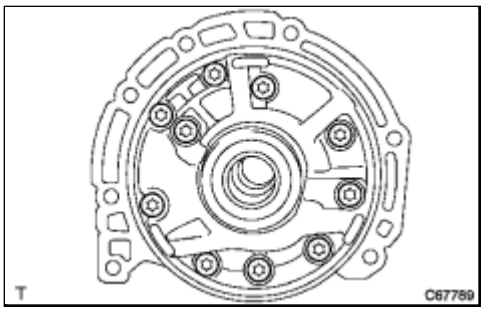

(a) Using a "TORX" socket wrench T30, install the stator shaft assembly with the 10 "TORX" screws.

Torque: 9.8 N·m (100 kgf·cm, 87in·lbf)

6. INSPECT OIL PUMP ASSEMBLY

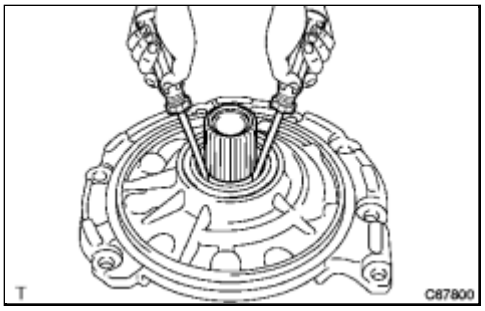

(a) Turn the drive gear with 2 screwdrivers and make sure that it rotates smoothly.

NOTICE:

Do not damage the oil seal lip.

7. INSTALL FRONT OIL PUMP BODY O-RING

(a) Coat a new front oil pump body O-ring with ATF, and install it to the oil pump.

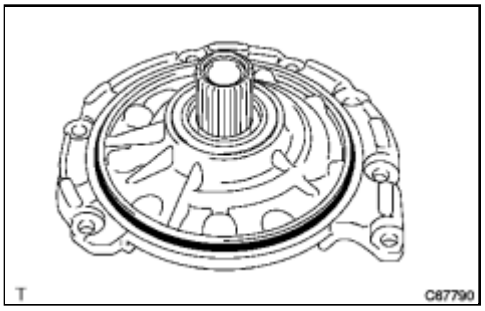
T
C87790

Last Modified: 3-10-2010	6.4 K	**From:** 200901
Model Year: 2010	**Model:** Corolla	**Doc ID:** RM000001CUJ00KX
Title: U250E AUTOMATIC TRANSMISSION / TRANSAXLE: PARK / NEUTRAL POSITION SWITCH: COMPONENTS (2010 Corolla)		

COMPONENTS

ILLUSTRATION

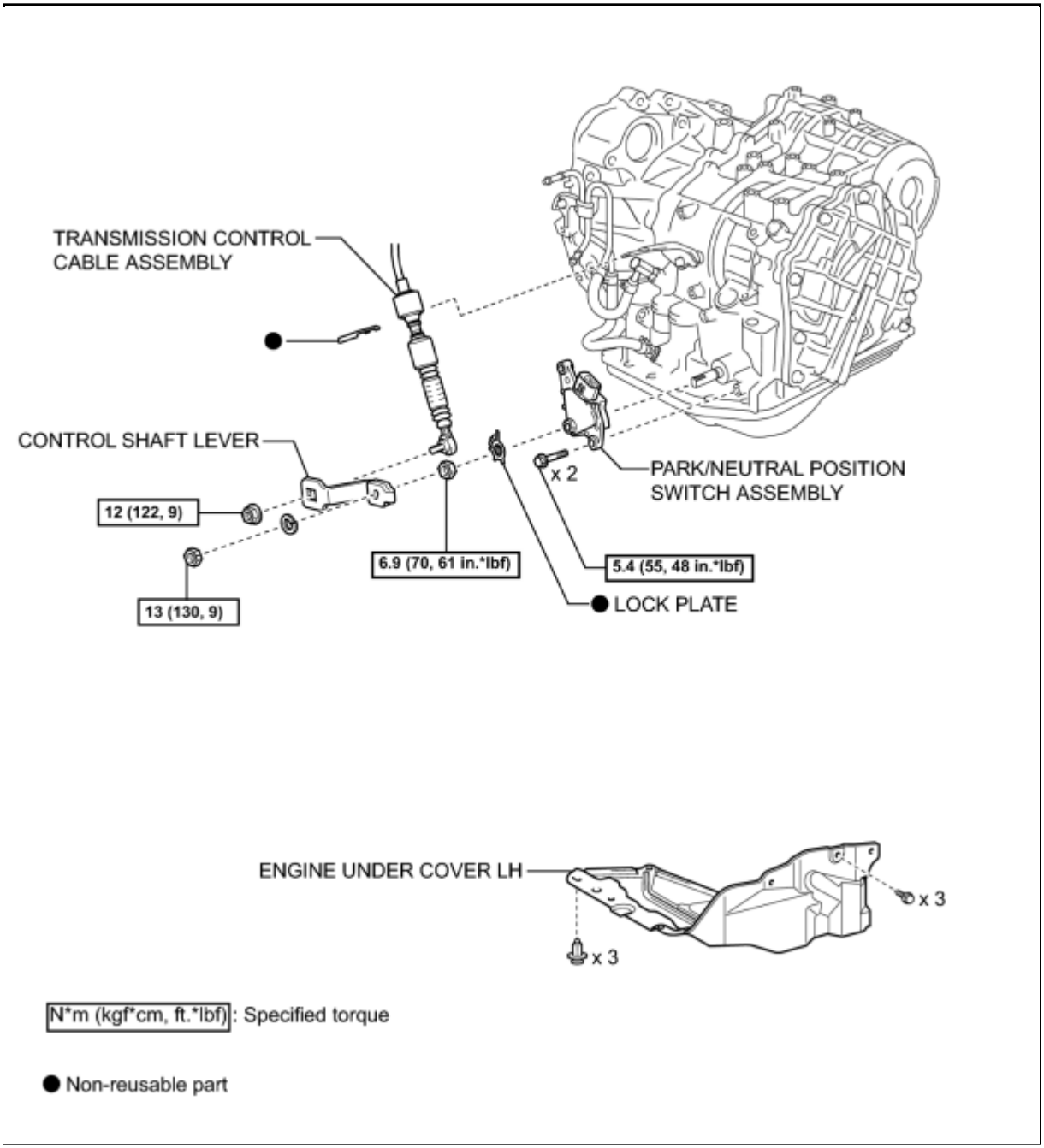

Last Modified: 3-10-2010	6.4 G	**From:** 200901
Model Year: 2010	**Model:** Corolla	**Doc ID:** RM000003D8Z004X
Title: U250E AUTOMATIC TRANSMISSION / TRANSAXLE: PARK / NEUTRAL POSITION SWITCH: ON-VEHICLE INSPECTION (2010 Corolla)		

ON-VEHICLE INSPECTION

1. INSPECT PARK/NEUTRAL POSITION SWITCH ASSEMBLY

(a) Apply the parking brake.

(b) Turn the ignition switch to ON.

(c) Depress the brake pedal and check that the engine starts when the shift lever is in N or P, but does not start in the other positions.

(d) Check that the reverse lights illuminate when the shift lever is in R, but do not function in the other positions.

If a malfunction or failure is found, check the park/ neutral position switch for continuity.

Last Modified: 3-10-2010	6.4 A	**From:** 200901
Model Year: 2010	**Model:** Corolla	**Doc ID:** RM000000YWR00YX
Title: U250E AUTOMATIC TRANSMISSION / TRANSAXLE: PARK / NEUTRAL POSITION SWITCH: REMOVAL (2010 Corolla)		

REMOVAL

1. REMOVE ENGINE UNDER COVER LH

2. SEPARATE TRANSMISSION CONTROL CABLE ASSEMBLY

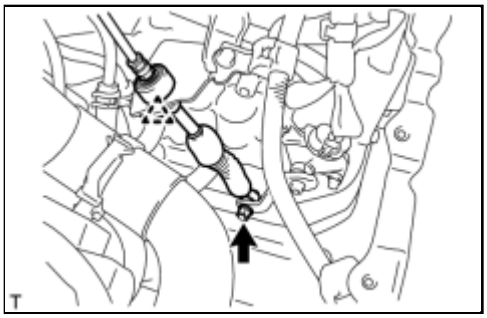

(a) Remove the nut and disconnect the control cable assembly from the control shaft lever.

(b) Remove the clip and disconnect the transmission control cable assembly from the control cable bracket.

3. REMOVE PARK/NEUTRAL POSITION SWITCH ASSEMBLY



(a) Disconnect the park/neutral position switch connector.

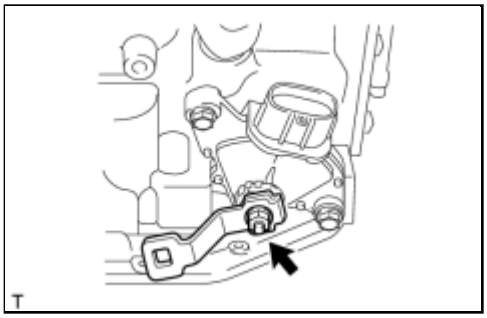

(b) Remove the nut, washer and control shaft lever.

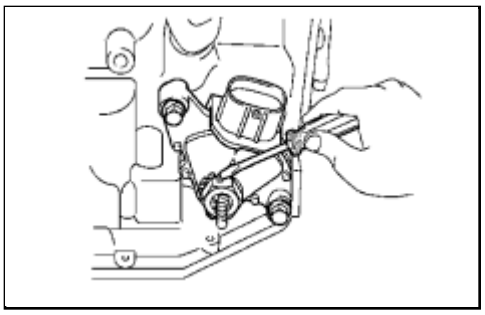

(c) Using a screwdriver, pry up the lock plate.

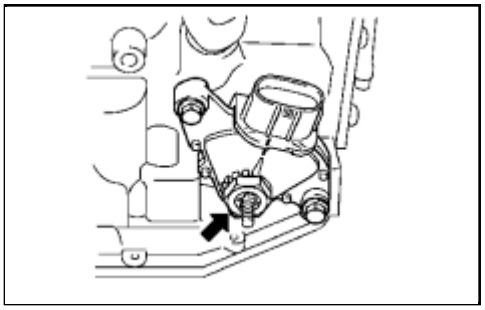

(d) Remove the lock nut and the lock plate.

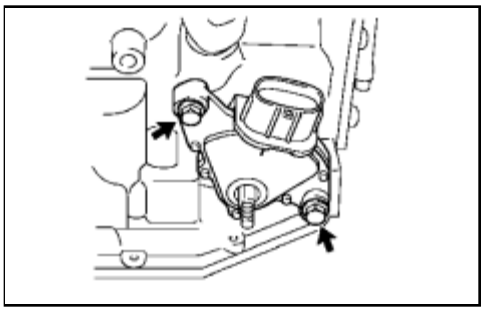

(e) Remove the 2 bolts and pull out the park/neutral position switch.

Last Modified: 3-10-2010	6.4 G	**From:** 200901
Model Year: 2010	**Model:** Corolla	**Doc ID:** RM000000YWQ00OX
Title: U250E AUTOMATIC TRANSMISSION / TRANSAXLE: PARK / NEUTRAL POSITION SWITCH: INSPECTION (2010 Corolla)		

INSPECTION

1. INSPECT PARK/NEUTRAL POSITION SWITCH ASSEMBLY

(a) Measure the resistance according to the value(s) in the table below.

Standard Resistance:

Component without harness connected:
(Park/Neutral Position Switch)

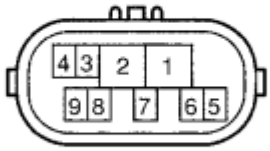

TESTER CONNECTION	CONDITION	SPECIFIED CONNECTION
2 - 6 and 4 - 5	P	Below 1 Ω
	Except P	10 kΩ or higher
2 - 1	R	Below 1 Ω
	Except R	10 kΩ or higher
2 - 9 and 4 - 5	N	Below 1 Ω
	Except N	10 kΩ or higher
2 - 7	D and S	Below 1 Ω
	Except D and S	10 kΩ or higher

If the result is not as specified, replace the park/neutral position switch.

Last Modified: 3-10-2010	6.4 N	**From:** 200901
Model Year: 2010	**Model:** Corolla	**Doc ID:** RM000000YWO00OX
Title: U250E AUTOMATIC TRANSMISSION / TRANSAXLE: PARK / NEUTRAL POSITION SWITCH: ADJUSTMENT (2010 Corolla)		

ADJUSTMENT

1. ADJUST PARK/NEUTRAL POSITION SWITCH ASSEMBLY

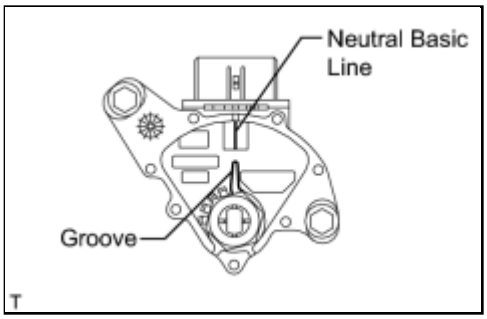

(a) Loosen the 2 bolts of the park/neutral position switch and move the shift lever to N.

(b) Align the groove with the neutral basic line.

(c) Hold the switch in that position and tighten the 2 bolts.

Torque: 5.4 N·m (55 kgf·cm, 48in·lbf)

(d) After adjustment, perform the switch inspection INFO .

Last Modified: 3-10-2010	6.4 A	**From:** 200901
Model Year: 2010	**Model:** Corolla	**Doc ID:** RM000000YWP00YX
Title: U250E AUTOMATIC TRANSMISSION / TRANSAXLE: PARK / NEUTRAL POSITION SWITCH: INSTALLATION (2010 Corolla)		

INSTALLATION

1. INSTALL PARK/NEUTRAL POSITION SWITCH ASSEMBLY

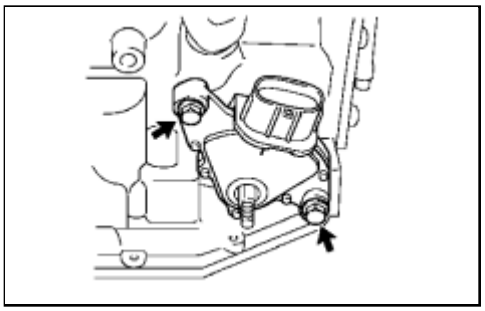

(a) Install the park/neutral position switch to the manual valve shaft.

(b) Temporarily install the 2 bolts.

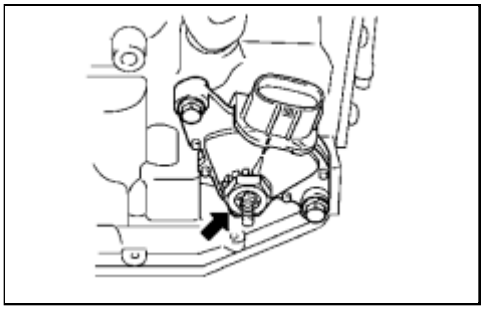

(c) Install a new lock plate and tighten the nut.

Torque: 6.9 N·m (70 kgf·cm, 61in·lbf)

(d) Temporarily install the control shaft lever.

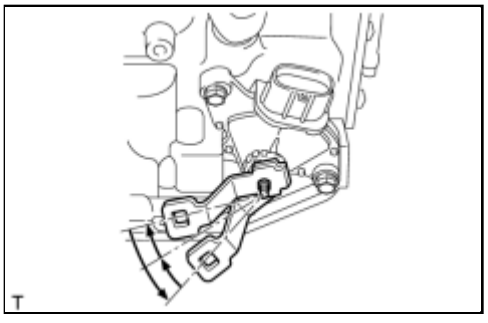

(e) Turn the lever counterclockwise until it stops, then turn it clockwise 2 notches.

(f) Remove the control shaft lever.

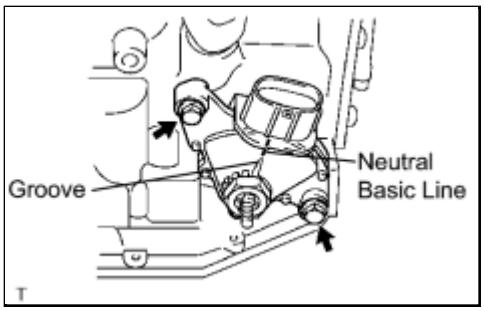

(g) Align the groove with the neutral basic line.

(h) Hold the switch in that position and tighten the 2 bolts.

Torque: 5.4 N·m (55 kgf·cm, 48in·lbf)

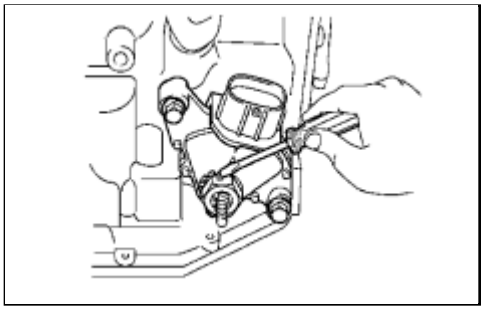

(i) Using a screwdriver, stake the nut with the lock plate.

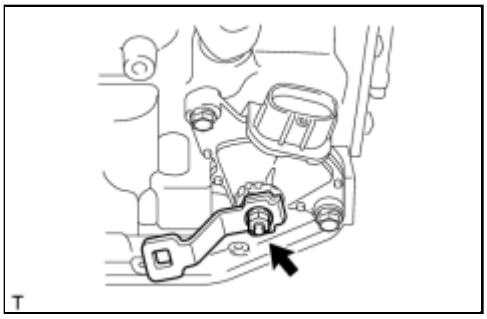

(j) Install the control shaft lever with the washer and nut.

Torque: 13 N·m (130 kgf·cm, 9ft·lbf)



(k) Connect the park/neutral position switch connector.

2. CONNECT TRANSMISSION CONTROL CABLE ASSEMBLY

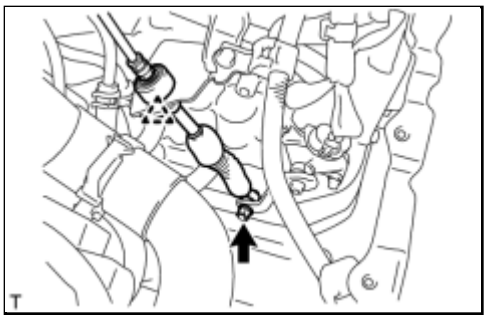

(a) Connect the transmission control cable to the bracket with a new clip.

(b) Connect the transmission control cable assembly to the control shaft lever with the nut.

Torque: 12 N·m (122 kgf·cm, 9ft·lbf)

3. INSTALL ENGINE UNDER COVER LH

4. INSPECT SHIFT LEVER POSITION INFO

5. ADJUST SHIFT LEVER POSITION INFO

6. INSPECT PARK/NEUTRAL POSITION SWITCH ASSEMBLY INFO

Last Modified: 3-10-2010	6.4 K	**From:** 200901
Model Year: 2010	**Model:** Corolla	**Doc ID:** RM00000191C015X
Title: U341E AUTOMATIC TRANSMISSION / TRANSAXLE: PARK / NEUTRAL POSITION SWITCH: COMPONENTS (2010 Corolla)		

COMPONENTS

ILLUSTRATION

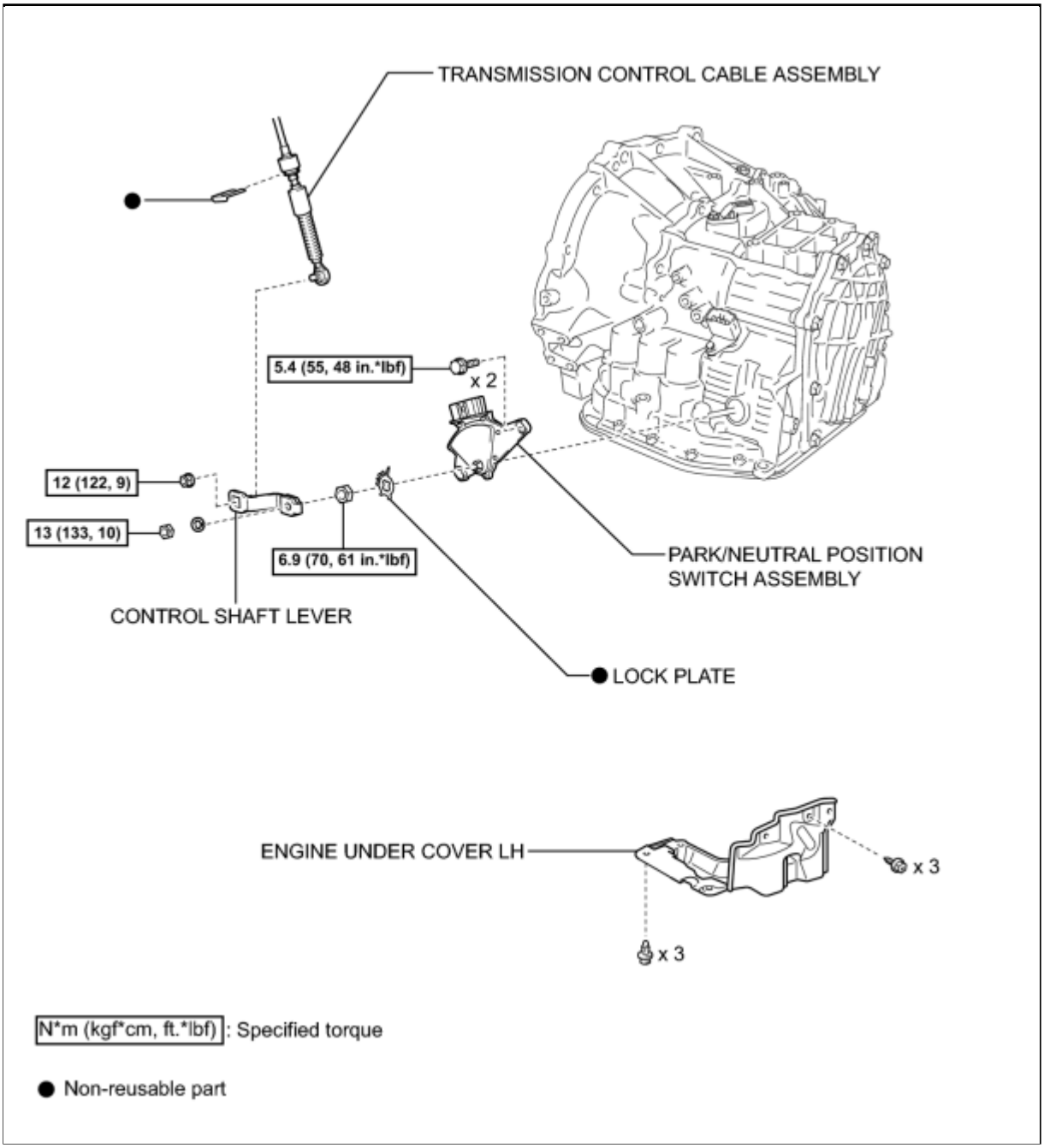

Last Modified: 3-10-2010	6.4 G	**From:** 200901
Model Year: 2010	**Model:** Corolla	**Doc ID:** RM00000191E01TX
Title: U341E AUTOMATIC TRANSMISSION / TRANSAXLE: PARK / NEUTRAL POSITION SWITCH: ON-VEHICLE INSPECTION (2010 Corolla)		

ON-VEHICLE INSPECTION

1. INSPECT PARK/NEUTRAL POSITION SWITCH ASSEMBLY

(a) Apply the parking brake and turn the ignition switch to ON.

(b) Depress the brake pedal and check that the engine starts with the shift lever in N or P, but does not start in the other positions.

(c) Check that the back-up light illuminates with the shift lever in R, but does not function in the other positions.

If a malfunction or failure is found, check the park/neutral position switch for continuity.

Last Modified: 3-10-2010	6.4 A	**From:** 200901
Model Year: 2010	**Model:** Corolla	**Doc ID:** RM00000191D01LX
Title: U341E AUTOMATIC TRANSMISSION / TRANSAXLE: PARK / NEUTRAL POSITION SWITCH: REMOVAL (2010 Corolla)		

REMOVAL

1. REMOVE ENGINE UNDER COVER LH

2. SEPARATE TRANSMISSION CONTROL CABLE ASSEMBLY

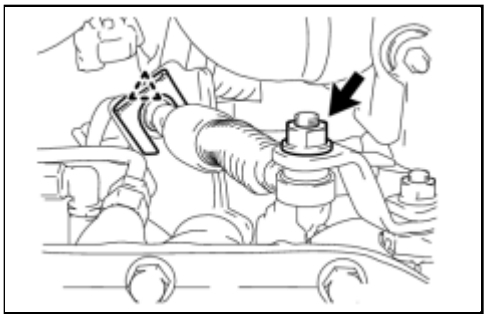

(a) Remove the nut and disconnect the control cable assembly from the control shaft lever.

(b) Remove the clip and disconnect the control cable assembly from the control cable bracket.

3. REMOVE PARK/NEUTRAL POSITION SWITCH ASSEMBLY

(a) Disconnect the connector from the park/neutral position switch assembly.

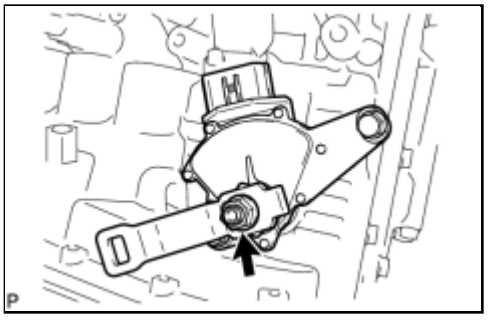

(b) Remove the nut, washer and control shaft lever.

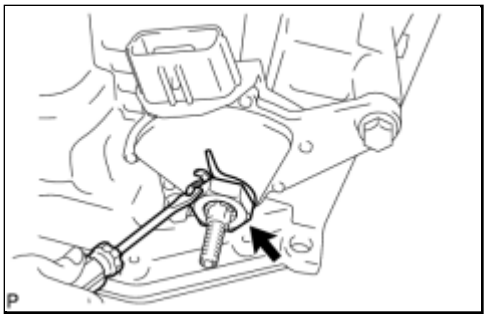

(c) Pry out the lock plate and remove the manual valve shaft nut.

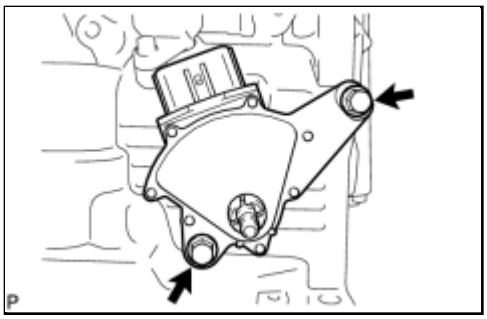

(d) Remove the 2 bolts and pull out the park/neutral position switch assembly.

Last Modified: 3-10-2010	6.4 G	**From:** 200901
Model Year: 2010	**Model:** Corolla	**Doc ID:** RM00000191B01LX
Title: U341E AUTOMATIC TRANSMISSION / TRANSAXLE: PARK / NEUTRAL POSITION SWITCH: INSPECTION (2010 Corolla)		

INSPECTION

1. INSPECT PARK/NEUTRAL POSITION SWITCH ASSEMBLY

(a) Disconnect the park/neutral position switch connector.

(b) Measure the resistance according to the value(s) in the table below.

Standard Resistance:

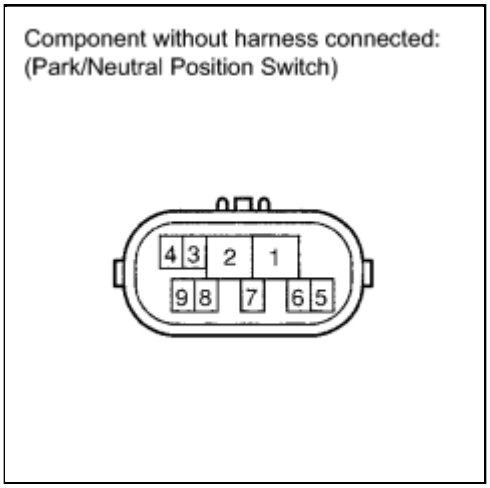

TESTER CONNECTION	CONDITION	SPECIFIED CONDITION
2 - 6 and 4 - 5	P position	Below 1 Ω
	Except P position	10 kΩ or higher
2 - 1	R position	Below 1 Ω
	Except R position	10 kΩ or higher
2 - 9 and 4 - 5	N position	Below 1 Ω
	Except N position	10 kΩ or higher
2 - 7	D position and 3 position	Below 1 Ω
	Except D position and 3 position	10 kΩ or higher
2 - 3	2 position	Below 1 Ω
	Except 2 position	10 kΩ or higher
2 - 8	L position	Below 1 Ω
	Except L position	10 kΩ or higher

If the result is not as specified, replace the park/neutral position switch.

Last Modified: 3-10-2010	6.4 N	**From:** 200901
Model Year: 2010	**Model:** Corolla	**Doc ID:** RM00000191901BX
Title: U341E AUTOMATIC TRANSMISSION / TRANSAXLE: PARK / NEUTRAL POSITION SWITCH: ADJUSTMENT (2010 Corolla)		

ADJUSTMENT

1. ADJUST PARK/NEUTRAL POSITION SWITCH ASSEMBLY

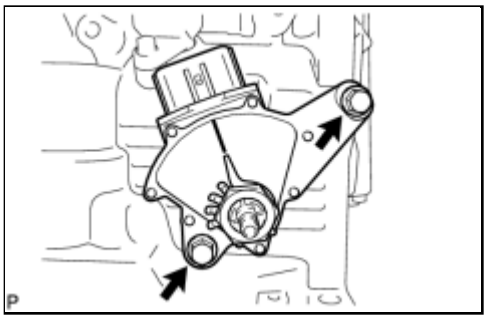

(a) Loosen the bolts of the park/neutral position switch and move the shift lever to N.

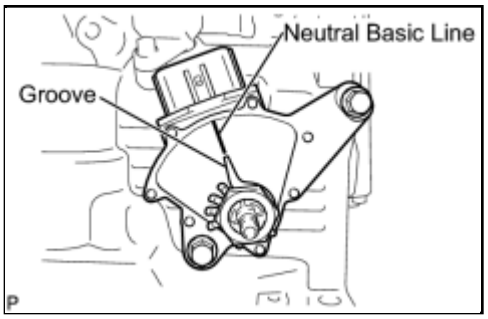

(b) Align the groove with the neutral basic line.

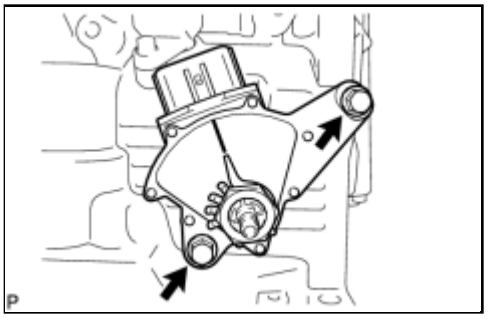

(c) Hold the switch in place and tighten the 2 bolts.

Torque: 5.4 N·m (55 kgf·cm, 48in·lbf)

(d) After the adjustment, perform the switch operation check INFO .

Last Modified: 3-10-2010	6.4 A	**From:** 200901
Model Year: 2010	**Model:** Corolla	**Doc ID:** RM00000191A01NX
Title: U341E AUTOMATIC TRANSMISSION / TRANSAXLE: PARK / NEUTRAL POSITION SWITCH: INSTALLATION (2010 Corolla)		

INSTALLATION

1. INSTALL PARK/NEUTRAL POSITION SWITCH ASSEMBLY

(a) Install the park/neutral position switch assembly to the automatic transaxle.

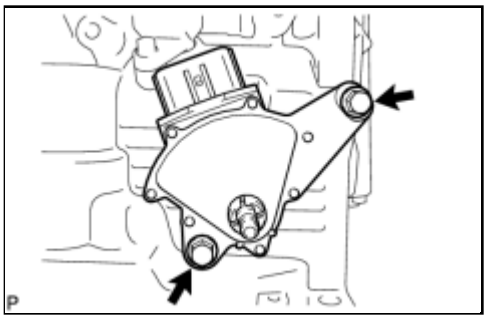

(b) Temporarily install the 2 bolts.

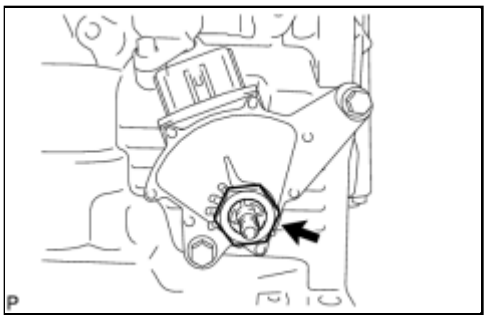

(c) Replace the lock plate with a new one and tighten the manual valve shaft nut.

Torque: 6.9 N·m (70 kgf·cm, 61in·lbf)

(d) Temporarily install the control shaft lever.

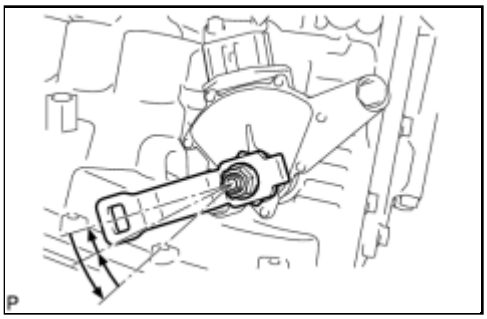

(e) Turn the lever counterclockwise until it stops, then turn it clockwise 2 notches.

(f) Remove the control shaft lever.

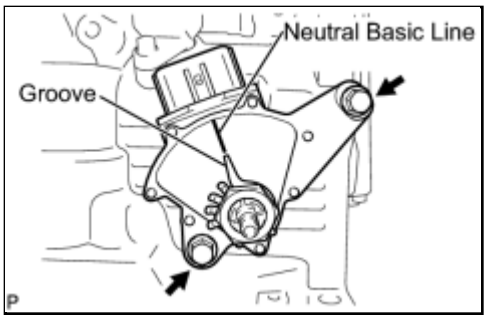

(g) Align the groove with the neutral basic line.

(h) Hold the switch in place and tighten the 2 bolts.

Torque: 5.4 N·m (55 kgf·cm, 48in·lbf)

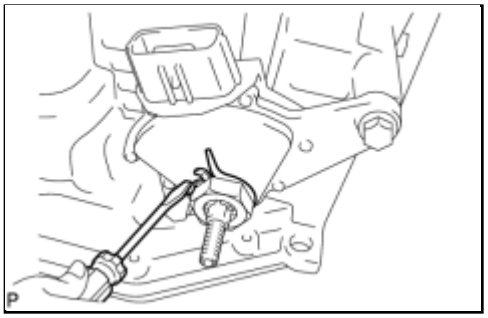

(i) Using a screwdriver, stake the nut with the lock plate.

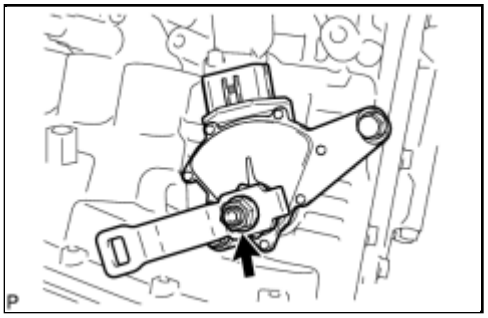

(j) Install the control shaft lever with the nut and washer.

Torque: 13 N·m (133 kgf·cm, 10ft·lbf)

(k) Connect the connector to the park/neutral position switch assembly.

2. INSTALL TRANSMISSION CONTROL CABLE ASSEMBLY

(a) Install the transmission control cable assembly to the control shaft lever with the nut.

Torque: 12 N·m (122 kgf·cm, 9ft·lbf)

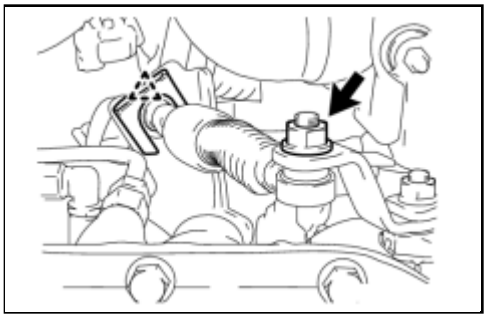

(b) Install the transmission control cable assembly to the bracket with a new clip.

3. ADJUST SHIFT LEVER POSITION INFO

4. INSPECT SHIFT LEVER POSITION INFO

5. INSPECT PARK/NEUTRAL POSITION SWITCH ASSEMBLY INFO

6. INSTALL ENGINE UNDER COVER LH

Last Modified: 3-10-2010	6.4 K	**From:** 200901
Model Year: 2010	**Model:** Corolla	**Doc ID:** RM0000020U601JX
Title: U250E AUTOMATIC TRANSMISSION / TRANSAXLE: SHIFT LEVER: COMPONENTS (2010 Corolla)		

COMPONENTS

ILLUSTRATION

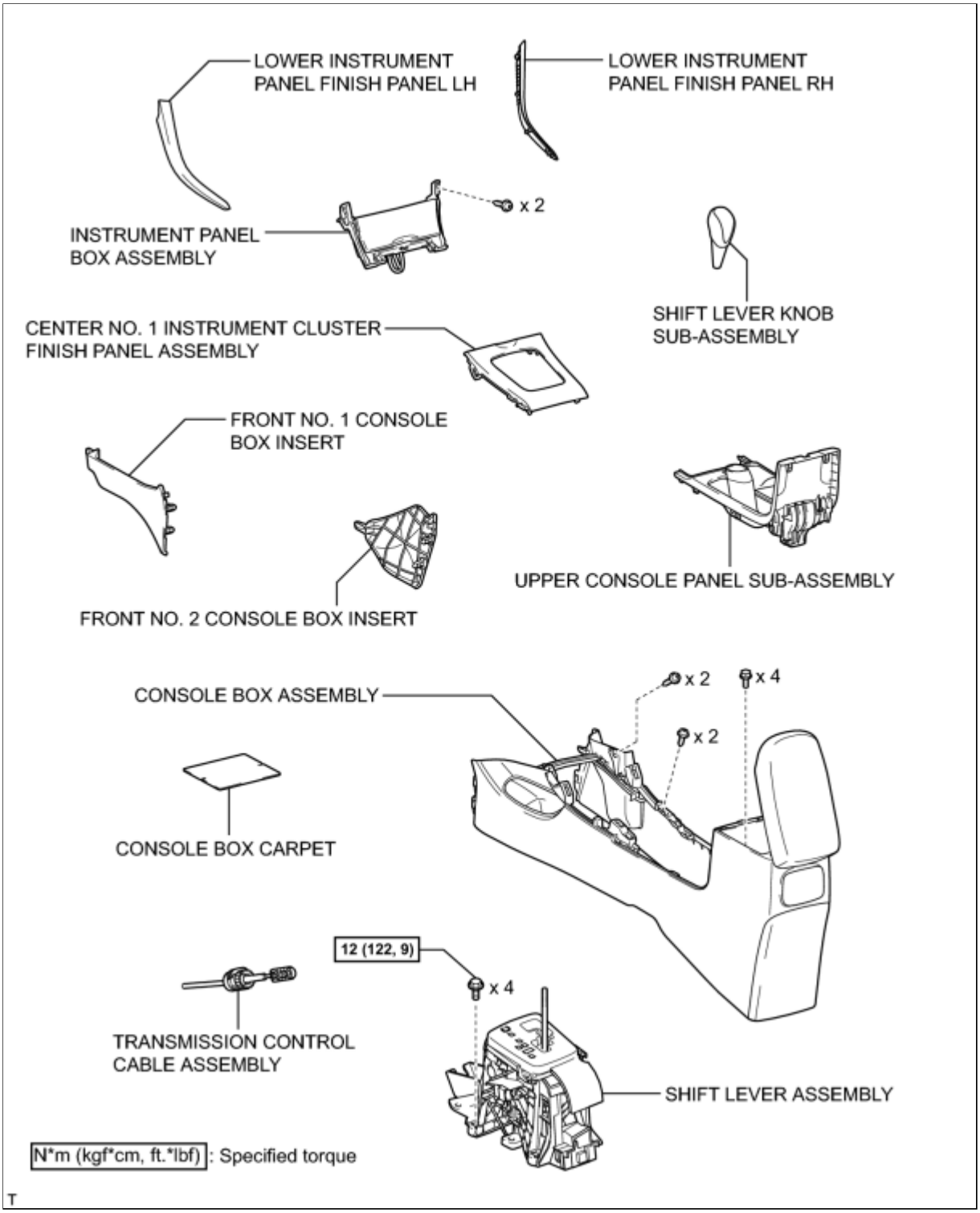

ILLUSTRATION

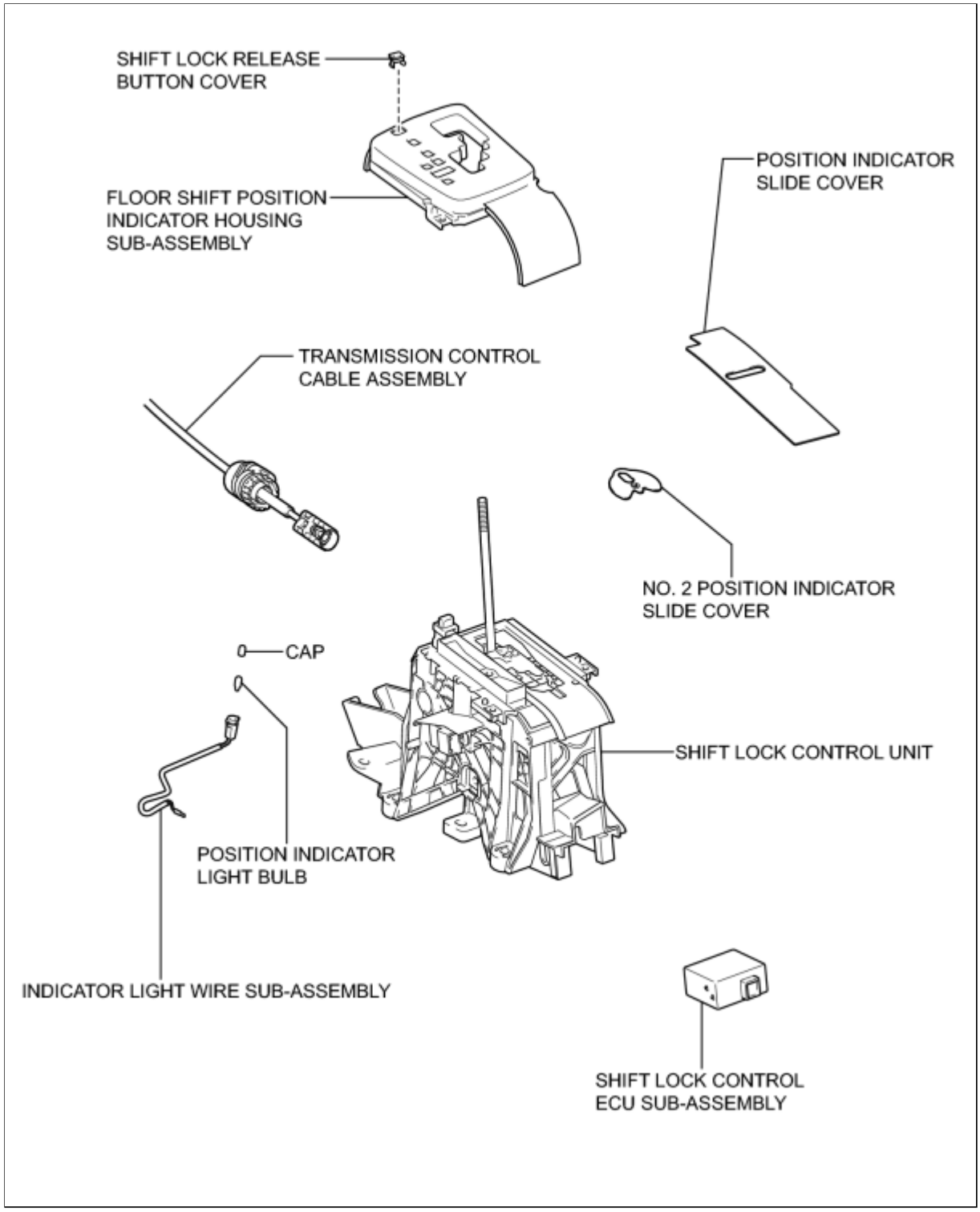
SHIFT LOCK RELEASE BUTTON COVER
FLOOR SHIFT POSITION INDICATOR HOUSING SUB-ASSEMBLY
POSITION INDICATOR SLIDE COVER
TRANSMISSION CONTROL CABLE ASSEMBLY
NO. 2 POSITION INDICATOR SLIDE COVER
CAP
SHIFT LOCK CONTROL UNIT
POSITION INDICATOR LIGHT BULB
INDICATOR LIGHT WIRE SUB-ASSEMBLY
SHIFT LOCK CONTROL ECU SUB-ASSEMBLY

Last Modified: 3-10-2010	6.4 G	**From:** 200901
Model Year: 2010	**Model:** Corolla	**Doc ID:** RM0000023CF01JX
Title: U250E AUTOMATIC TRANSMISSION / TRANSAXLE: SHIFT LEVER: ON-VEHICLE INSPECTION (2010 Corolla)		

ON-VEHICLE INSPECTION

1. INSPECT SHIFT LOCK CONTROL UNIT ASSEMBLY

(a) Inspect the shift lock operation.

(1) Move the shift lever to P.

(2) Turn the ignition switch off.

(3) Check that the shift lever cannot be moved from P to any other position.

(4) Turn the ignition switch to ON, depress the brake pedal, and check that the shift lever can be moved to another position.

If operation cannot be done as specified, inspect the shift lock control unit.

(b) Inspect the shift lock release button operation.

(1) When moving the shift lever with the shift lock release button pressed, check that the shift lever can be moved from P to any other position.

(c) Check the key interlock operation.

(1) Turn the ignition switch to ON.

(2) Depress the brake pedal and move the shift lever to any position other than P.

(3) Check that the ignition key cannot be turned to LOCK.

(4) Move the shift lever to P, turn the ignition key to LOCK and check that the ignition key can be removed.

If operation cannot be done as specified, inspect the shift lock control unit.

Last Modified: 3-10-2010	6.4 A	**From:** 200901
Model Year: 2010	**Model:** Corolla	**Doc ID:** RM0000020U701LX
Title: U250E AUTOMATIC TRANSMISSION / TRANSAXLE: SHIFT LEVER: REMOVAL (2010 Corolla)		

REMOVAL

1. REMOVE LOWER INSTRUMENT PANEL FINISH PANEL LH INFO

2. REMOVE LOWER INSTRUMENT PANEL FINISH PANEL RH INFO

3. REMOVE SHIFT LEVER KNOB SUB-ASSEMBLY INFO

4. REMOVE CENTER NO. 1 INSTRUMENT CLUSTER FINISH PANEL ASSEMBLY INFO

5. REMOVE INSTRUMENT PANEL BOX ASSEMBLY INFO

6. REMOVE FRONT NO. 1 CONSOLE BOX INSERT INFO

7. REMOVE FRONT NO. 2 CONSOLE BOX INSERT INFO

8. REMOVE UPPER CONSOLE PANEL SUB-ASSEMBLY INFO

9. REMOVE CONSOLE BOX CARPET INFO

10. REMOVE CONSOLE BOX ASSEMBLY INFO

11. DISCONNECT TRANSMISSION CONTROL CABLE ASSEMBLY

(a) Move the shift lever to N.

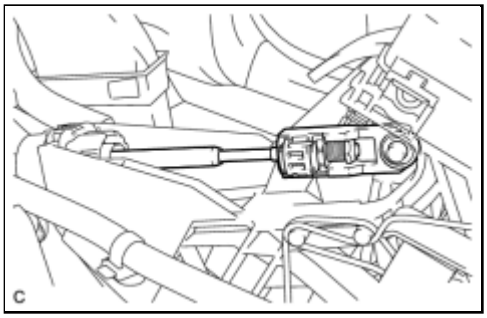

(b) Disconnect the end of the transmission control cable assembly from the shift lever assembly.

(c) Using a screwdriver, pull out the stopper of the transmission control cable.

NOTICE:

Do not remove the stopper. If the stopper is removed, reinstall it to its original position.

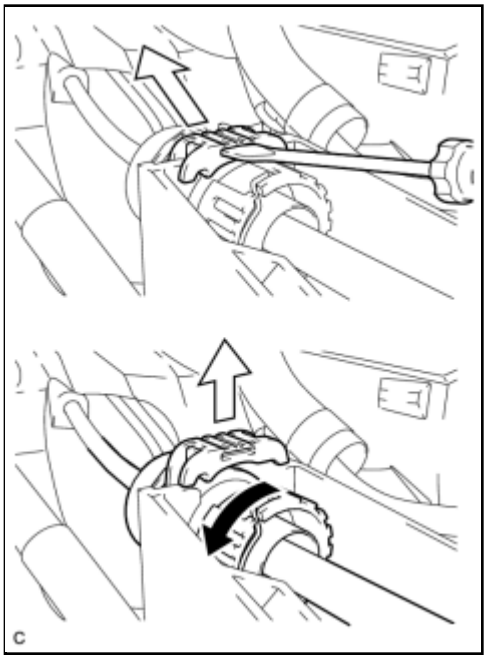

(d) Rotate the nut counterclockwise approximately 180°, and while holding the nut in place, disconnect the transmission control cable from the shift lever retainer.

NOTICE:

Do not over-rotate the nut as it will come off the internal spring and the transmission control cable will not be reusable.

12. REMOVE SHIFT LEVER ASSEMBLY

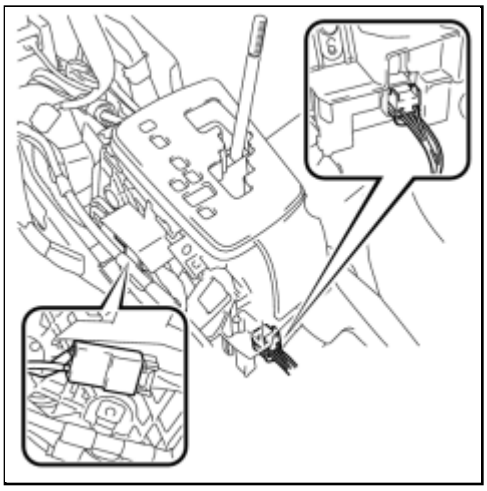

(a) Disconnect the 2 connectors from the shift lever assembly.

(b) Separate the 3 wire harness clamps from the shift lever assembly.



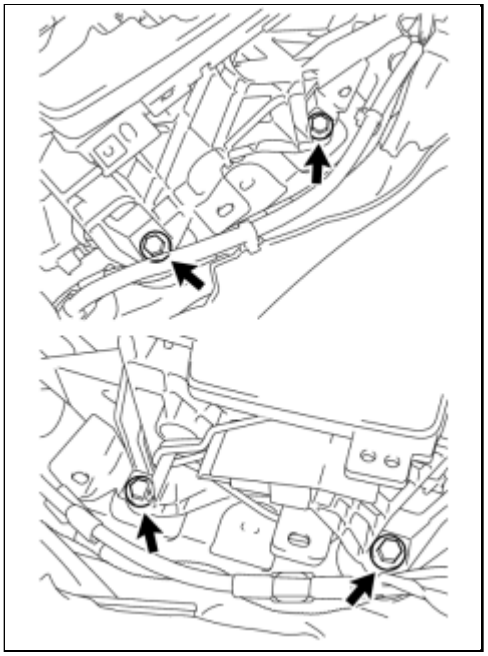

(c) Remove the 4 bolts and shift lever assembly.

Last Modified: 3-10-2010	6.4 A	**From:** 200901
Model Year: 2010	**Model:** Corolla	**Doc ID:** RM0000020U801JX
Title: U250E AUTOMATIC TRANSMISSION / TRANSAXLE: SHIFT LEVER: DISASSEMBLY (2010 Corolla)		

DISASSEMBLY

1. REMOVE FLOOR SHIFT POSITION INDICATOR HOUSING SUB-ASSEMBLY

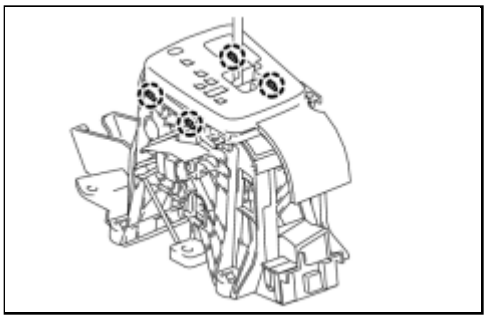

(a) Disengage the 4 claws and remove the position indicator housing sub-assembly from the shift lock control unit.

NOTICE:

Do not damage the floor shift position indicator housing sub-assembly.

2. REMOVE SHIFT LOCK RELEASE BUTTON COVER

(a) Remove the shift lock release button cover from the position indicator housing sub-assembly.

3. REMOVE POSITION INDICATOR SLIDE COVER

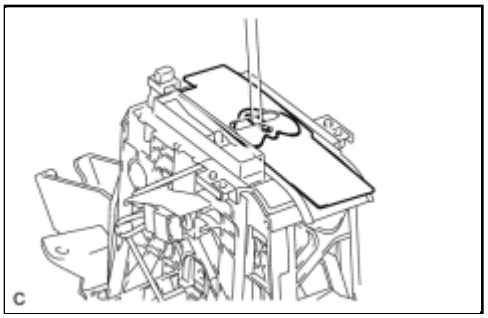

(a) Remove the position indicator slide cover with the No. 2 position indicator slide cover from the shift lock control unit.

4. REMOVE NO. 2 POSITION INDICATOR SLIDE COVER

(a) Remove the No. 2 position indicator slide cover from the position indicator slide cover.

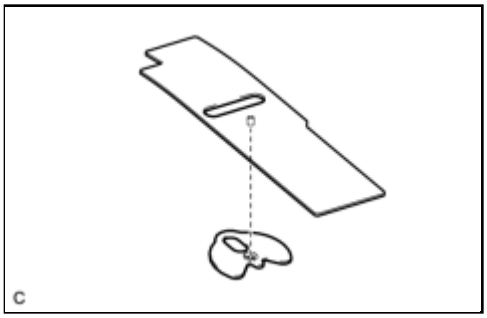

5. REMOVE INDICATOR LIGHT WIRE SUB-ASSEMBLY

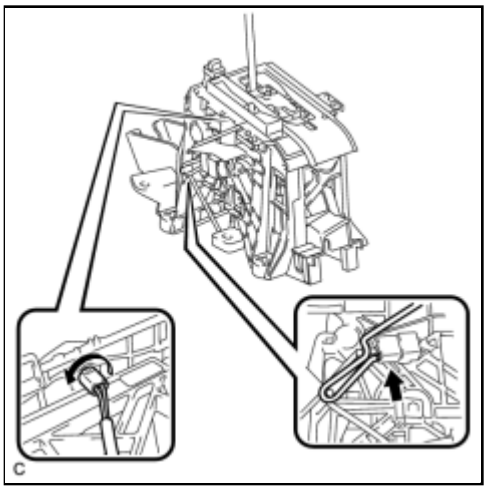

(a) Separate the position indicator light wire socket and connector from the shift lock control unit.

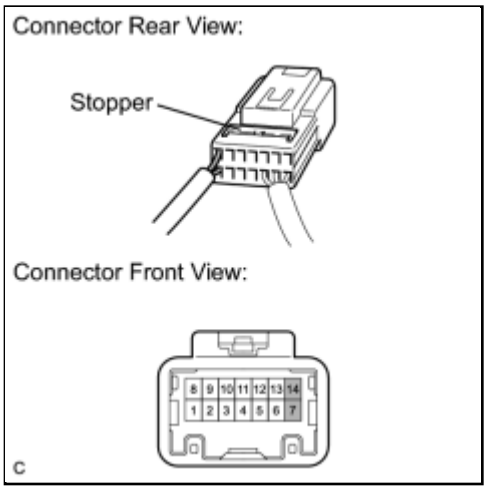

(b) Using a screwdriver, release the stopper.

(c) Using a screwdriver, disengage the locking lug of terminals 7 and 14, and pull the terminals out from the rear of the connector.

6. REMOVE POSITION INDICATOR LIGHT BULB

(a) Remove the bulb and cap from the indicator light wire socket.

7. REMOVE SHIFT LOCK CONTROL ECU SUB-ASSEMBLY

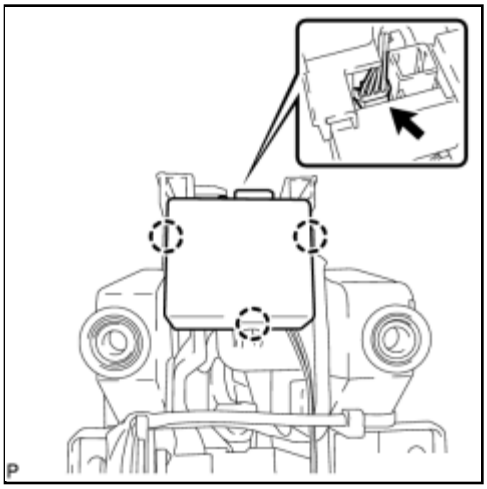

(a) Separate the connector from the shift lock control ECU sub-assembly.

(b) Disengage the 3 claws and the shift lock control ECU sub-assembly from the shift lock control unit.

Last Modified: 3-10-2010	6.4 G	**From:** 200901
Model Year: 2010	**Model:** Corolla	**Doc ID:** RM0000023CE01YX
Title: U250E AUTOMATIC TRANSMISSION / TRANSAXLE: SHIFT LEVER: INSPECTION (2010 Corolla)		

INSPECTION

1. INSPECT SHIFT LOCK CONTROL UNIT ASSEMBLY

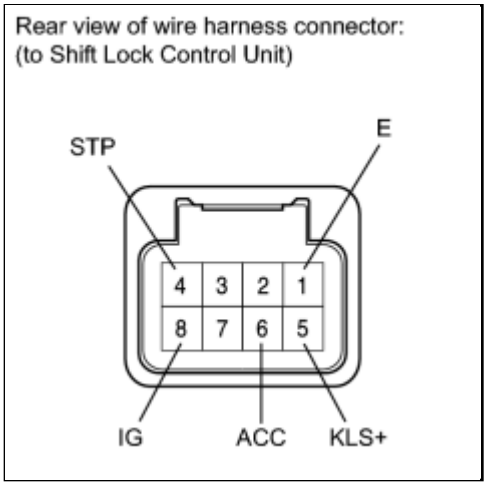

(a) Measure the voltage according to the value(s) in the table below.

Standard Voltage:

TESTER CONNECTION	CONDITION	SPECIFIED CONDITION
6 (ACC) - 1 (E)	Ignition switch ON	11 to 14 V
6 (ACC) - 1 (E)	Ignition switch ACC	11 to 14 V
6 (ACC) - 1 (E)	Ignition switch off	Below 1 V
4 (STP) - 1 (E)	Brake pedal depressed	11 to 14 V
4 (STP) - 1 (E)	Brake pedal released	Below 1 V
5 (KLS+) - 1 (E)	Ignition switch ACC and shift lever P	Below 1 V
	Ignition switch ACC and shift lever except P (Within approx. 1 second)	7.5 to 11 V
	Ignition switch ACC and shift lever except P (After approx. 1 second)	6 to 9.5 V
8 (IG) - 1 (E)	Ignition switch ON	11 to 14 V
8 (IG) - 1 (E)	Ignition switch off	Below 1 V

NOTICE:

Do not disconnect the shift lock control unit assembly connector.

(b) Measure the resistance according to the value(s) in the table below.

Standard Resistance:

TESTER	CONDITION	SPECIFIED

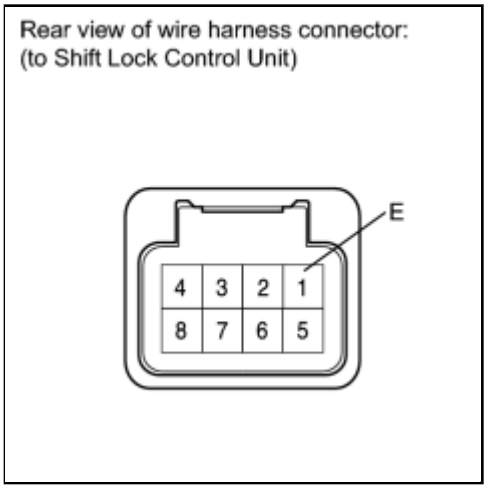

CONNECTION		CONDITION
1 (E) - Body ground	Always	Below 1 Ω

NOTICE:

Do not disconnect the shift lock control unit assembly connector.

If the result is not as specified, replace the shift lock control ECU sub-assembly.

2. INSPECT TRANSMISSION CONTROL SWITCH

(a) Disconnect the transmission control switch connector of the shift lock control unit assembly.

(b) Measure the resistance according to the value(s) in the table below when the shift lever is moved to each position.

Standard Resistance:

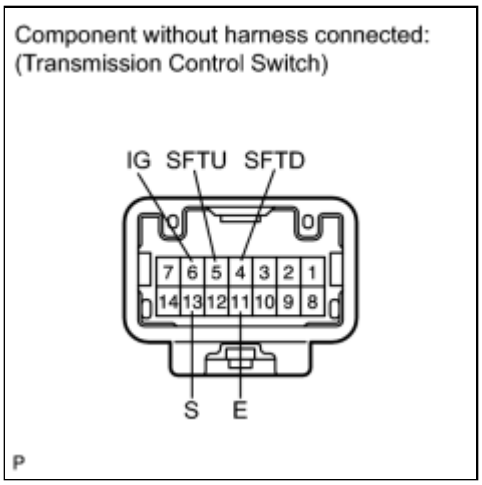

TESTER CONNECTION	SHIFT POSITION	SPECIFIED CONDITION
6 (IG) - 13 (S)	S, "+" and "-"	Below 1 Ω
5 (SFTU) - 11 (E)	Continuously shift to "+" (Up-shift)	Below 1 Ω
4 (SFTD) - 11 (E)	Continuously shift to "-" (Down-shift)	Below 1 Ω
6 (IG) - 13 (S)	Not on S "+" and "-"	10 kΩ or higher
5 (SFTU) - 11 (E)	S	10 kΩ or higher
4 (SFTD) - 11 (E)	S	10 kΩ or higher

If the result is not as specified, replace the shift lock control unit assembly.

3. INSPECT SHIFT LOCK SOLENOID

(a) Disconnect the shift lock solenoid connector.

(b) Measure the resistance according to the value(s) in the

table below when the shift lever is moved to each position.

Front view of wire harness connector:
(to Shift Lock Solenoid)

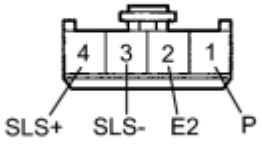

Standard Resistance:

TESTER CONNECTION	SHIFT POSITION	SPECIFIED CONDITION
1 (P) - 2 (E2)	P	10 kΩ or higher
1 (P) - 2 (E2)	Except P	Below 1 Ω

If the result is not as specified, replace the shift lock control unit assembly.

(c) Measure the resistance according to the value(s) in the table below.

Standard Resistance:

TESTER CONNECTION	CONDITION	SPECIFIED CONDITION
3 (SLS-) - 4 (SLS+)	Always	112 Ω

If the result is not as specified, replace the shift lock control unit assembly.

TOYOTA

Last Modified: 3-10-2010	6.4 A	**From:** 200901
Model Year: 2010	**Model:** Corolla	**Doc ID:** RM0000020U901JX
Title: U250E AUTOMATIC TRANSMISSION / TRANSAXLE: SHIFT LEVER: REASSEMBLY (2010 Corolla)		

REASSEMBLY

1. INSTALL SHIFT LOCK CONTROL ECU SUB-ASSEMBLY

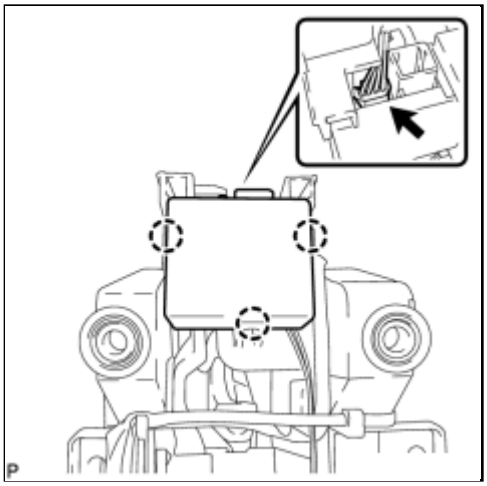

(a) Engage the 3 claws and install the shift lock control ECU sub-assembly to the shift lock control unit.

(b) Connect the shift lock solenoid connector to the shift lock control ECU sub-assembly.

2. INSTALL POSITION INDICATOR LIGHT BULB

(a) Install the cap to the bulb.

(b) Install the bulb to the position indicator light wire socket.

3. INSTALL INDICATOR LIGHT WIRE SUB-ASSEMBLY

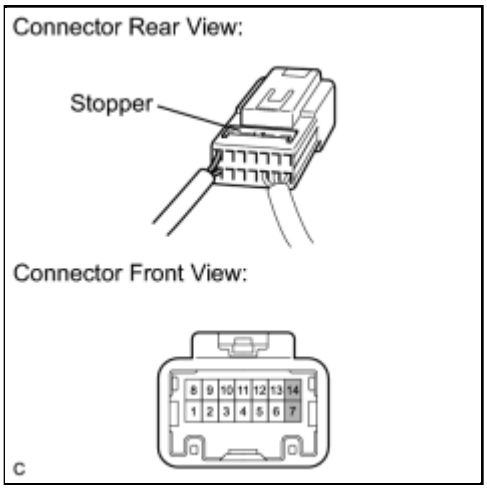

(a) Connect terminals 7 and 14 to the connector as shown in the illustration.

(b) Push in the stopper.

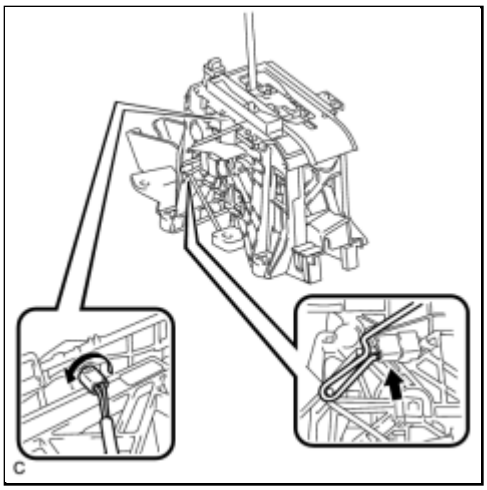

(c) Install the position indicator light wire socket and connector to the shift lock control unit.

4. INSTALL NO. 2 POSITION INDICATOR SLIDE COVER

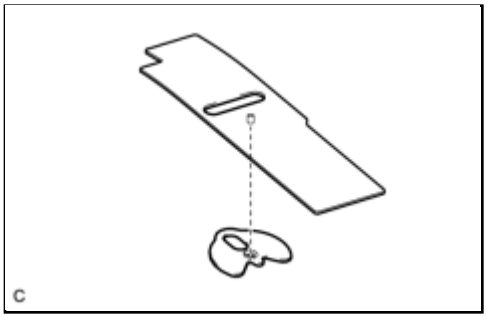

(a) Install the No. 2 position indicator slide cover to the position indicator slide cover.

5. INSTALL POSITION INDICATOR SLIDE COVER

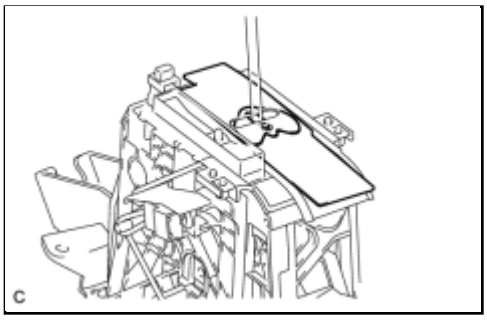

(a) Install the position indicator slide cover with the No. 2 position indicator slide cover to the shift lock control unit.

6. INSTALL SHIFT LOCK RELEASE BUTTON COVER

(a) Install the shift lock release button cover to the position indicator housing sub-assembly.

7. INSTALL FLOOR SHIFT POSITION INDICATOR HOUSING SUB-ASSEMBLY

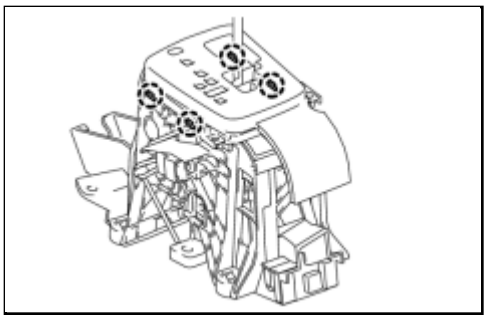

(a) Engage the 4 claws and install the floor shift position indicator housing sub-assembly to the shift lock control unit.

NOTICE:

Make sure that the claws are firmly engaged.

Last Modified: 3-10-2010	6.4 A	**From:** 200901
Model Year: 2010	**Model:** Corolla	**Doc ID:** RM0000020U501LX
Title: U250E AUTOMATIC TRANSMISSION / TRANSAXLE: SHIFT LEVER: INSTALLATION (2010 Corolla)		

INSTALLATION

1. INSTALL SHIFT LEVER ASSEMBLY

NOTICE:

Check that the park/neutral position switch and the shift lever are in N.

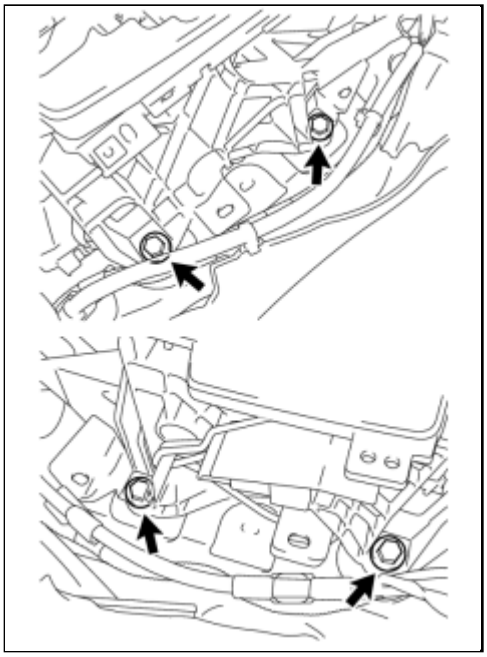

(a) Install the shift lever assembly with the 4 bolts.

Torque: 12 N·m (122 kgf·cm, 9ft·lbf)

(b) Install the 3 wire harness clamps to the shift lever assembly.



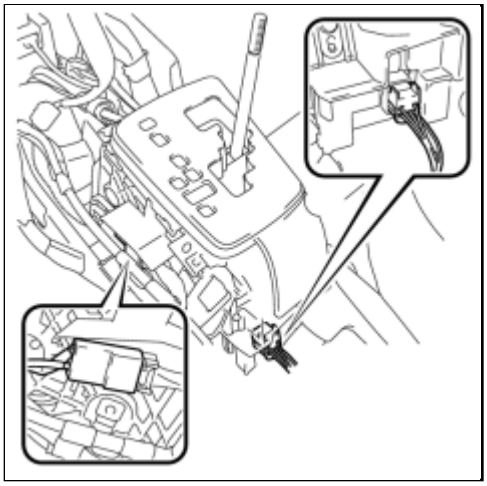

(c) Connect the 2 connectors to the shift lever assembly.

2. INSTALL TRANSMISSION CONTROL CABLE ASSEMBLY

(a) Turn the nut of the transmission control cable 180° counterclockwise. While holding the nut in place, push in the stopper until the stopper clicks twice.

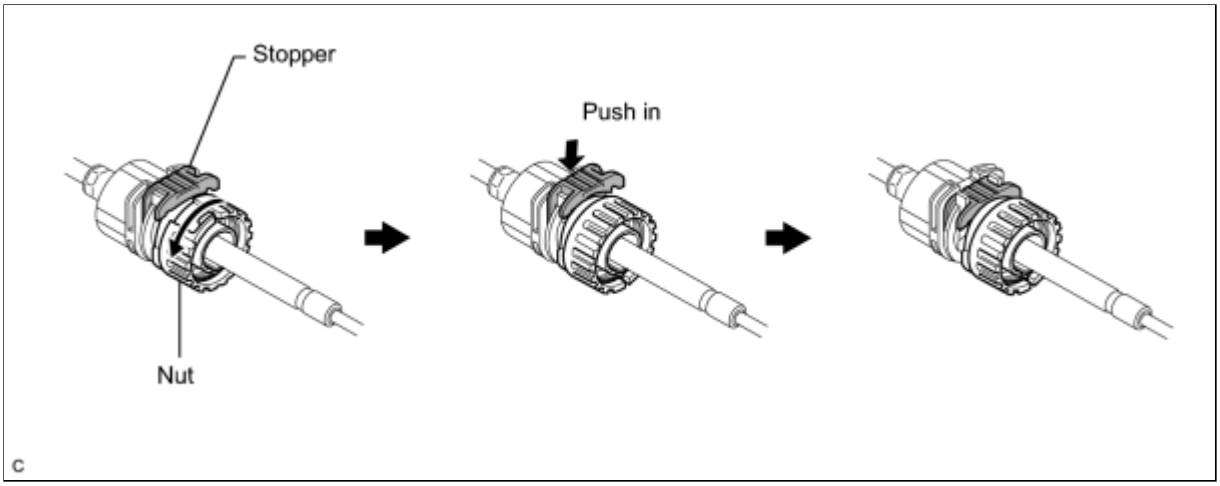

(b) Install the outer part of the transmission control cable to the shift lever retainer. Check that the spring is positioned at "A" and push in the stopper.

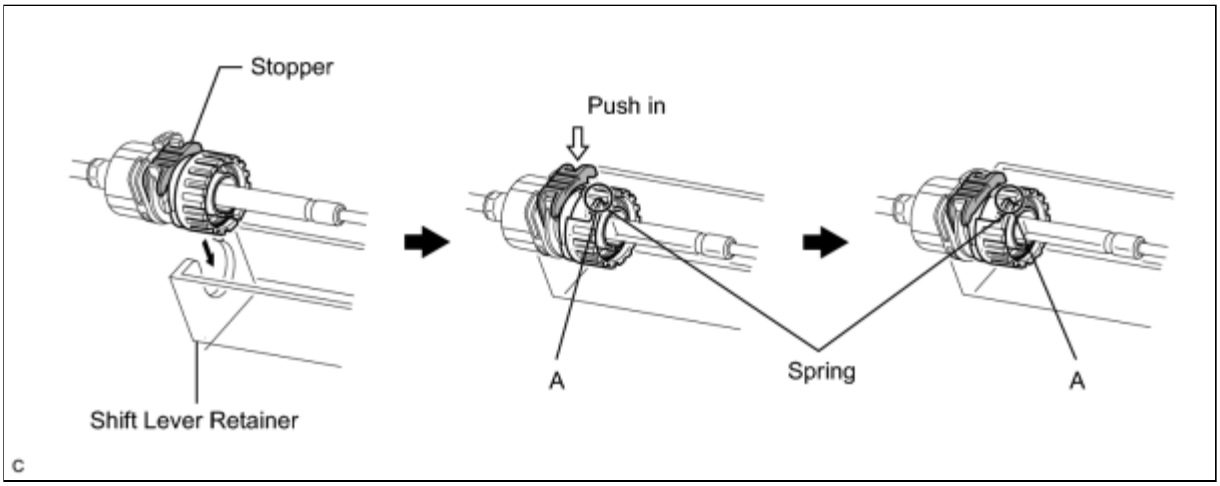

HINT:

If the stopper cannot be pushed in, slightly turn the nut clockwise and then push in the stopper again.

(c) Push the two claws together at the top of the transmission control cable lock piece. While holding the two claws together, push the two lugs on the bottom of the lock piece toward each other and upward to pull out the lock piece.

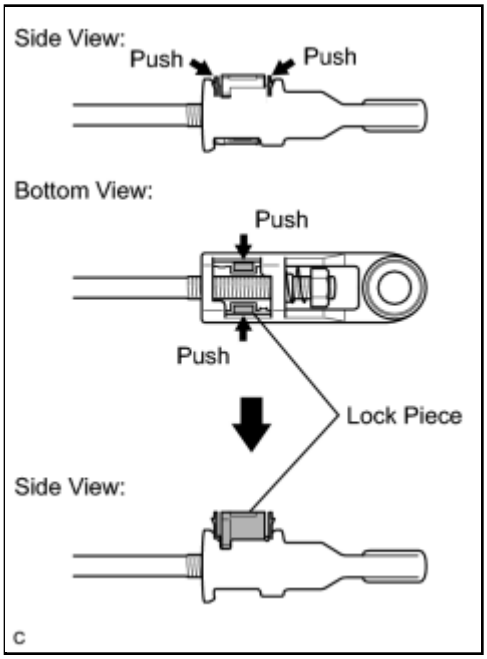

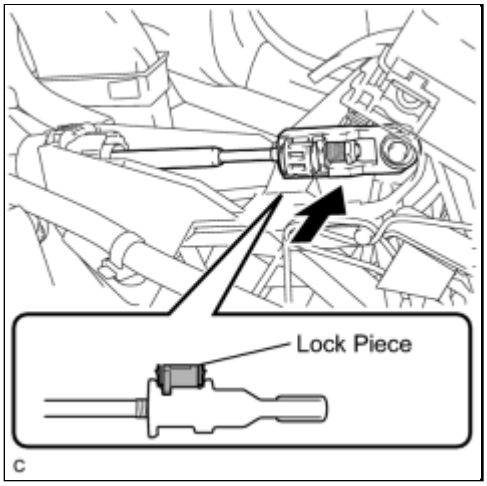

(d) Install the cable end to the shift lever assembly.

NOTICE:

- Check that the lock piece is pulled up.
- Install the cable end all the way to the base of the pin.

(e) Push the lock piece into the adjuster case.

NOTICE:

Securely push in the lock piece until it locks.

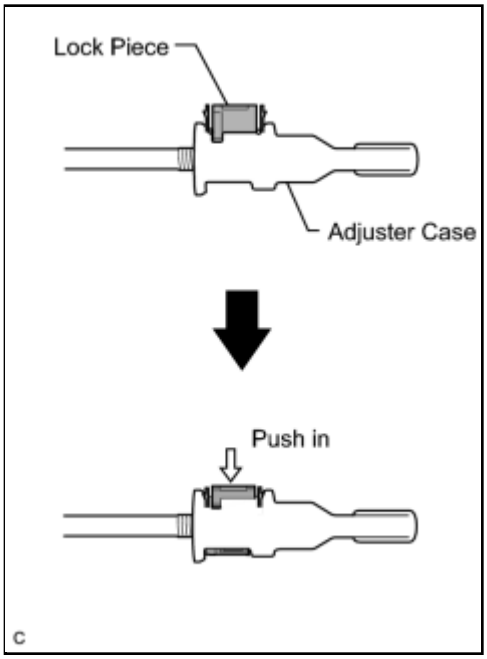

3. INSTALL CONSOLE BOX ASSEMBLY INFO

4. INSTALL CONSOLE BOX CARPET INFO

5. INSTALL UPPER CONSOLE PANEL SUB-ASSEMBLY INFO

6. INSTALL FRONT NO. 1 CONSOLE BOX INSERT INFO

7. INSTALL FRONT NO. 2 CONSOLE BOX INSERT INFO

8. INSTALL INSTRUMENT PANEL BOX ASSEMBLY INFO

9. INSTALL CENTER NO. 1 INSTRUMENT CLUSTER FINISH PANEL ASSEMBLY INFO

10. INSTALL SHIFT LEVER KNOB SUB-ASSEMBLY INFO

11. INSTALL LOWER INSTRUMENT PANEL FINISH PANEL LH INFO

12. INSTALL LOWER INSTRUMENT PANEL FINISH PANEL RH INFO

13. INSPECT SHIFT LEVER POSITION INFO

14. ADJUST SHIFT LEVER POSITION INFO

Last Modified: 3-10-2010	6.4 K	**From:** 200901
Model Year: 2010	**Model:** Corolla	**Doc ID:** RM0000020U601IX
Title: U341E AUTOMATIC TRANSMISSION / TRANSAXLE: SHIFT LEVER: COMPONENTS (2010 Corolla)		

COMPONENTS

ILLUSTRATION

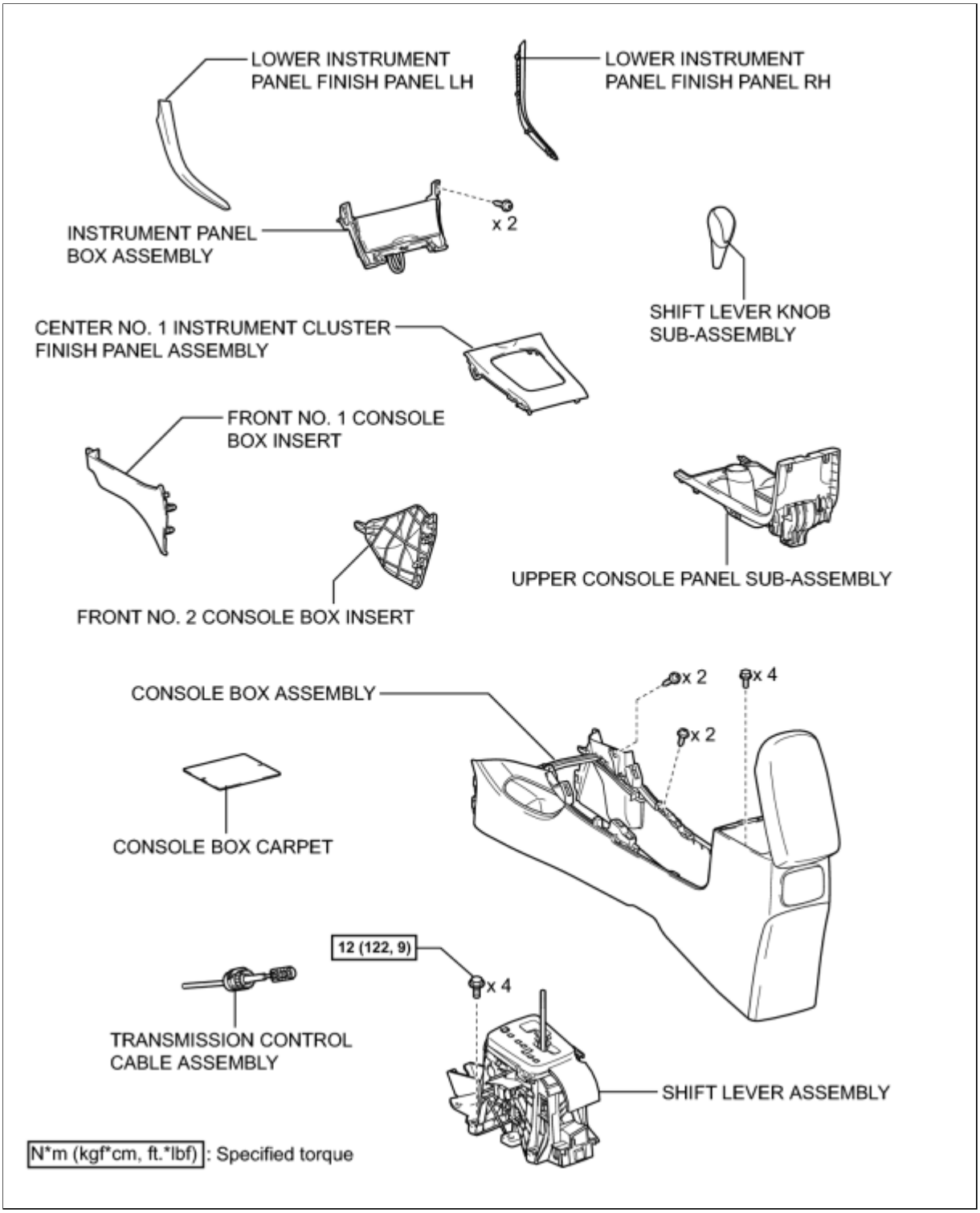

ILLUSTRATION

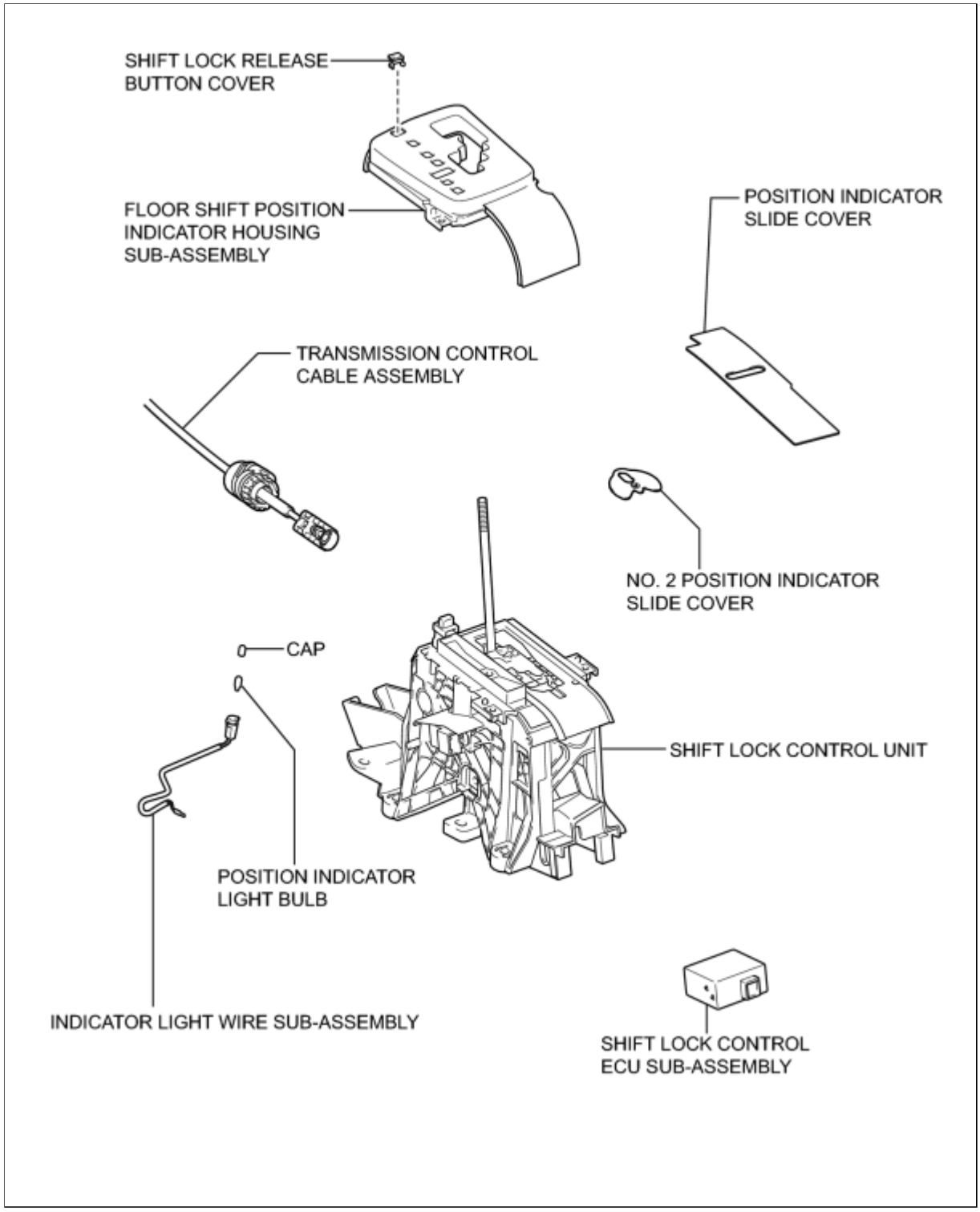
SHIFT LOCK RELEASE BUTTON COVER
FLOOR SHIFT POSITION INDICATOR HOUSING SUB-ASSEMBLY
POSITION INDICATOR SLIDE COVER
TRANSMISSION CONTROL CABLE ASSEMBLY
NO. 2 POSITION INDICATOR SLIDE COVER
CAP
SHIFT LOCK CONTROL UNIT
POSITION INDICATOR LIGHT BULB
INDICATOR LIGHT WIRE SUB-ASSEMBLY
SHIFT LOCK CONTROL ECU SUB-ASSEMBLY

Last Modified: 3-10-2010	6.4 G	**From:** 200901
Model Year: 2010	**Model:** Corolla	**Doc ID:** RM0000023CF01IX
Title: U341E AUTOMATIC TRANSMISSION / TRANSAXLE: SHIFT LEVER: ON-VEHICLE INSPECTION (2010 Corolla)		

ON-VEHICLE INSPECTION

1. INSPECT SHIFT LOCK CONTROL UNIT ASSEMBLY

(a) Inspect the shift lock operation.

(1) Move the shift lever to P.

(2) Turn the ignition switch off.

(3) Check that the shift lever cannot be moved from P to any other position.

(4) Turn the ignition switch to ON, depress the brake pedal, and check that the shift lever can be moved to another position.

If operation cannot be done as specified, inspect the shift lock control unit.

(b) Inspect the shift lock release button operation.

(1) When moving the shift lever with the shift lock release button pressed, check that the shift lever can be moved from P to any other position.

(c) Check the key interlock operation.

(1) Turn the ignition switch to ON.

(2) Depress the brake pedal and move the shift lever to any position other than P.

(3) Check that the ignition key cannot be turned to LOCK.

(4) Move the shift lever to P, turn the ignition key to LOCK and check that the ignition key can be removed.

If operation cannot be done as specified, inspect the shift lock control unit.

Last Modified: 3-10-2010	6.4 A	**From:** 200901
Model Year: 2010	**Model:** Corolla	**Doc ID:** RM0000020U701KX
Title: U341E AUTOMATIC TRANSMISSION / TRANSAXLE: SHIFT LEVER: REMOVAL (2010 Corolla)		

REMOVAL

1. REMOVE LOWER INSTRUMENT PANEL FINISH PANEL LH INFO

2. REMOVE LOWER INSTRUMENT PANEL FINISH PANEL RH INFO

3. REMOVE SHIFT LEVER KNOB SUB-ASSEMBLY INFO

4. REMOVE CENTER NO. 1 INSTRUMENT CLUSTER FINISH PANEL ASSEMBLY INFO

5. REMOVE INSTRUMENT PANEL BOX ASSEMBLY INFO

6. REMOVE FRONT NO. 1 CONSOLE BOX INSERT INFO

7. REMOVE FRONT NO. 2 CONSOLE BOX INSERT INFO

8. REMOVE UPPER CONSOLE PANEL SUB-ASSEMBLY INFO

9. REMOVE CONSOLE BOX CARPET INFO

10. REMOVE CONSOLE BOX ASSEMBLY INFO

11. DISCONNECT TRANSMISSION CONTROL CABLE ASSEMBLY

(a) Move the shift lever to N.

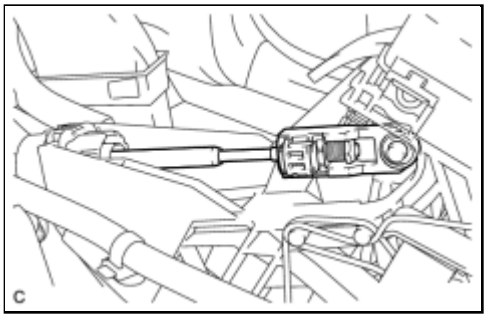

(b) Disconnect the end of the transmission control cable assembly from the shift lever assembly.

(c) Using a screwdriver, pull out the stopper of the transmission control cable.

NOTICE:

Do not remove the stopper. If the stopper is removed, reinstall it to its original position.

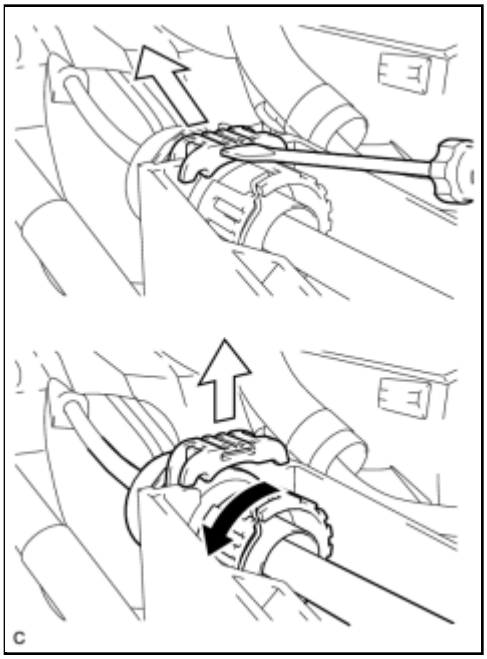

(d) Rotate the nut counterclockwise approximately 180°, and while holding the nut in place, disconnect the transmission control cable from the shift lever retainer.

NOTICE:

Do not over-rotate the nut as it will come off the internal spring and the transmission control cable will not be reusable.

12. REMOVE SHIFT LEVER ASSEMBLY

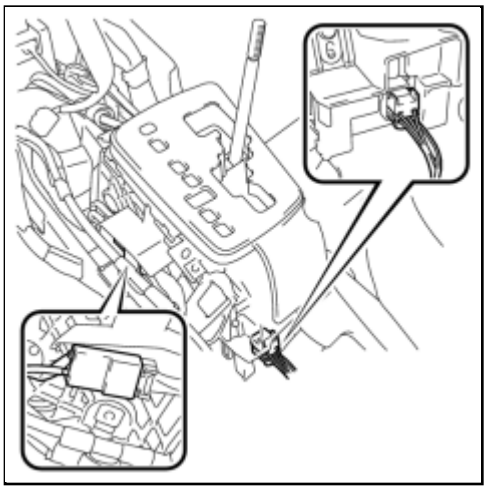

(a) Disconnect the 2 connectors from the shift lever assembly.

(b) Separate the 3 wire harness clamps from the shift lever assembly.



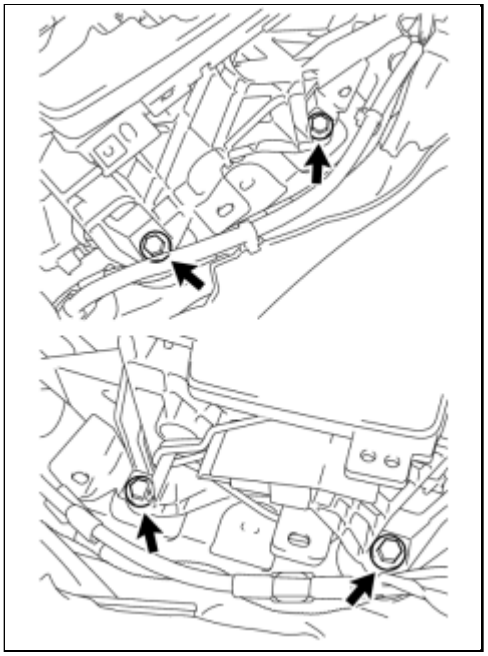

(c) Remove the 4 bolts and shift lever assembly.

Last Modified: 3-10-2010	6.4 A	**From:** 200901
Model Year: 2010	**Model:** Corolla	**Doc ID:** RM0000020U801IX
Title: U341E AUTOMATIC TRANSMISSION / TRANSAXLE: SHIFT LEVER: DISASSEMBLY (2010 Corolla)		

DISASSEMBLY

1. REMOVE FLOOR SHIFT POSITION INDICATOR HOUSING SUB-ASSEMBLY

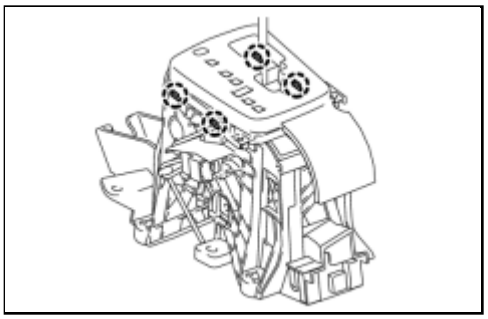

(a) Disengage the 4 claws and remove the position indicator housing sub-assembly from the shift lock control unit.

NOTICE:

Do not damage the floor shift position indicator housing sub-assembly.

2. REMOVE SHIFT LOCK RELEASE BUTTON COVER

(a) Remove the shift lock release button cover from the position indicator housing sub-assembly.

3. REMOVE POSITION INDICATOR SLIDE COVER

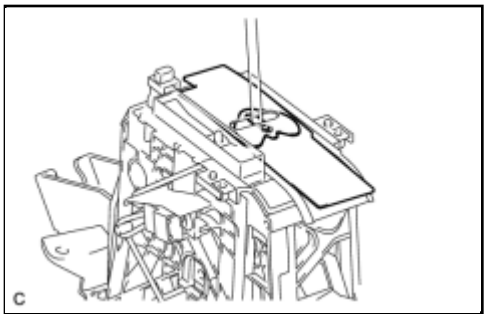

(a) Remove the position indicator slide cover with the No. 2 position indicator slide cover from the shift lock control unit.

4. REMOVE NO. 2 POSITION INDICATOR SLIDE COVER

(a) Remove the No. 2 position indicator slide cover from the position indicator slide cover.

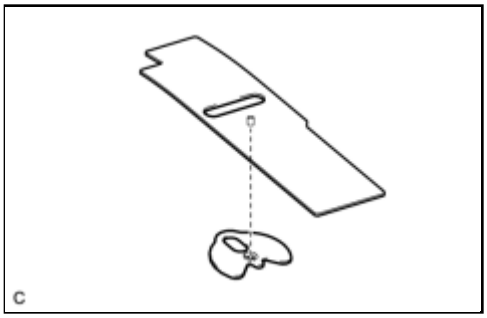

5. REMOVE INDICATOR LIGHT WIRE SUB-ASSEMBLY

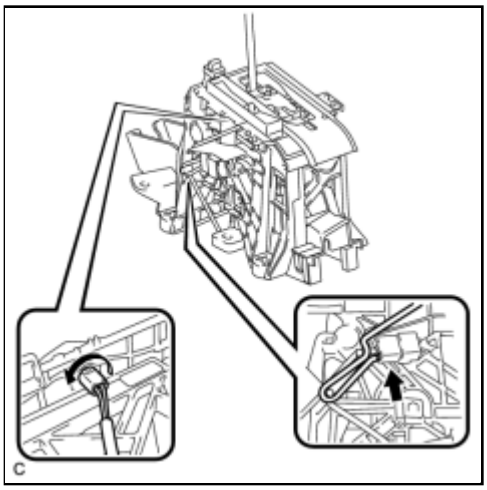

(a) Separate the position indicator light wire socket and connector from the shift lock control unit.

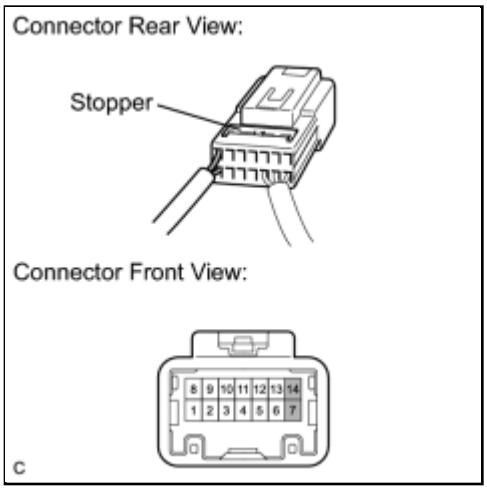

(b) Using a screwdriver, release the stopper.

(c) Using a screwdriver, disengage the locking lug of terminals 7 and 14, and pull the terminals out from the rear of the connector.

6. REMOVE POSITION INDICATOR LIGHT BULB

(a) Remove the bulb and cap from the indicator light wire socket.

7. REMOVE SHIFT LOCK CONTROL ECU SUB-ASSEMBLY

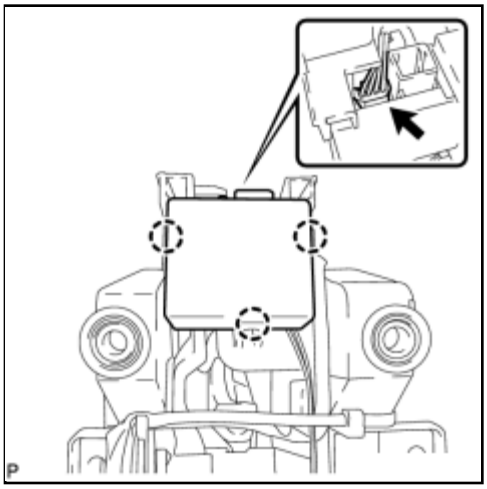

(a) Separate the connector from the shift lock control ECU sub-assembly.

(b) Disengage the 3 claws and the shift lock control ECU sub-assembly from the shift lock control unit.

Last Modified: 3-10-2010	6.4 G	**From:** 200901
Model Year: 2010	**Model:** Corolla	**Doc ID:** RM0000023CE01XX
Title: U341E AUTOMATIC TRANSMISSION / TRANSAXLE: SHIFT LEVER: INSPECTION (2010 Corolla)		

INSPECTION

1. INSPECT SHIFT LOCK CONTROL UNIT ASSEMBLY (w/o Smart Key System)

(a) Measure the voltage according to the value(s) in the table below.

Standard Voltage:

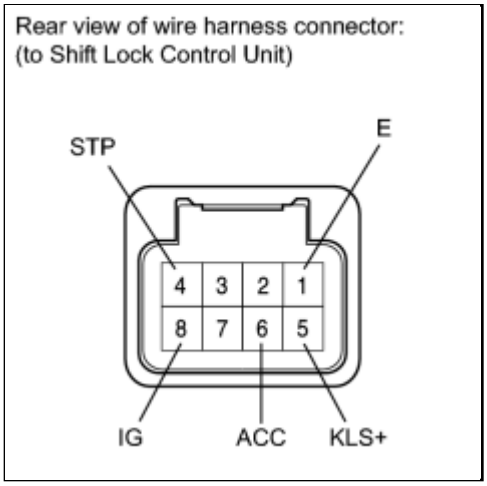

TESTER CONNECTION	CONDITION	SPECIFIED CONDITION
6 (ACC) - 1 (E)	Ignition switch ON	11 to 14 V
6 (ACC) - 1 (E)	Ignition switch ACC	11 to 14 V
6 (ACC) - 1 (E)	Ignition switch off	Below 1 V
4 (STP) - 1 (E)	Brake pedal depressed	11 to 14 V
4 (STP) - 1 (E)	Brake pedal released	Below 1 V
5 (KLS+) - 1 (E)	Ignition switch ACC and shift lever P	Below 1 V
	Ignition switch ACC and shift lever except P (Within approx. 1 second)	7.5 to 11 V
	Ignition switch ACC and shift lever except P (After approx. 1 second)	6 to 9.5 V
8 (IG) - 1 (E)	Ignition switch ON	11 to 14 V
8 (IG) - 1 (E)	Ignition switch off	Below 1 V

NOTICE:

Do not disconnect the shift lock control unit assembly connector.

(b) Measure the resistance according to the value(s) in the table below.

Standard Resistance:

TESTER	CONDITION	SPECIFIED

Rear view of wire harness connector:
(to Shift Lock Control Unit)

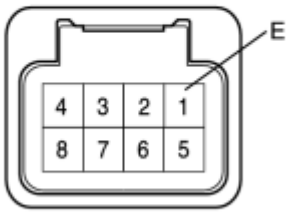

CONNECTION		CONDITION
1 (E) - Body ground	Always	Below 1 Ω

NOTICE:

Do not disconnect the shift lock control unit assembly connector.

If the result is not as specified, replace the shift lock control ECU sub-assembly.

2. INSPECT SHIFT LOCK CONTROL UNIT ASSEMBLY (w/ Smart Key System)

(a) Measure the voltage according to the value(s) in the table below.

Standard Voltage:

Rear view of wire harness connector:
(to Shift Lock Control Unit)

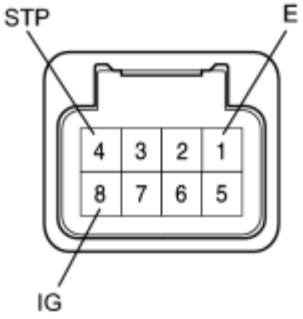

TESTER CONNECTION	CONDITION	SPECIFIED CONDITION
8 (IG) - 1 (E)	Engine switch on (IG)	11 to 14 V
8 (IG) - 1 (E)	Engine switch off	Below 1 V
4 (STP) - 1 (E)	Brake pedal depressed	11 to 14 V
4 (STP) - 1 (E)	Brake pedal released	Below 1 V

NOTICE:

Do not disconnect the shift lock control unit assembly connector.

(b) Measure the resistance according to the value(s) in the table below.

Standard Resistance:

TESTER CONNECTION	CONDITION	SPECIFIED CONDITION
1 (E) - Body ground	Always	Below 1 Ω

Rear view of wire harness connector:
(to Shift Lock Control Unit)

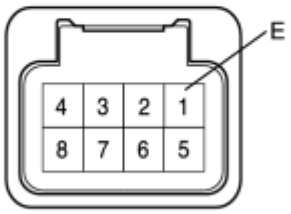

NOTICE:

Do not disconnect the shift lock control unit assembly connector.

If the result is not as specified, replace the shift lock control ECU sub-assembly.

3. INSPECT TRANSMISSION CONTROL SWITCH

(a) Disconnect the transmission control switch connector of the shift lock control unit assembly.

Component without harness connected:
(Transmission Control Switch)

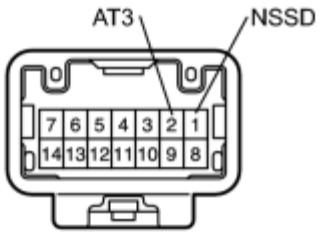

(b) Measure the resistance according to the value(s) in the table below when the shift lever is moved to each position.

Standard Resistance:

TESTER CONNECTION	SHIFT POSITION	SPECIFIED CONDITION
1 (NSSD) - 2 (AT3)	3 and 2	Below 1 Ω
1 (NSSD) - 2 (AT3)	Except 3 and 2	10 kΩ or higher

If the result is not as specified, replace the shift lock control unit assembly.

4. INSPECT SHIFT LOCK SOLENOID

(a) Disconnect the shift lock solenoid connector.

Front view of wire harness connector:
(to Shift Lock Solenoid)

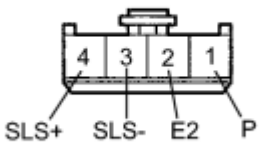

(b) Measure the resistance according to the value(s) in the table below when the shift lever is moved to each position.

Standard Resistance:

TESTER CONNECTION	SHIFT POSITION	SPECIFIED CONDITION
1 (P) - 2 (E2)	P	10 kΩ or higher
1 (P) - 2 (E2)	Except P	Below 1 Ω

If the result is not as specified, replace the shift lock control unit assembly.

(c) Measure the resistance according to the value(s) in the table below.

Standard Resistance:

TESTER CONNECTION	CONDITION	SPECIFIED CONDITION
3 (SLS-) - 4 (SLS+)	Always	112 Ω

If the result is not as specified, replace the shift lock control unit assembly.

Last Modified: 3-10-2010	6.4 A	**From:** 200901
Model Year: 2010	**Model:** Corolla	**Doc ID:** RM0000020U901IX
Title: U341E AUTOMATIC TRANSMISSION / TRANSAXLE: SHIFT LEVER: REASSEMBLY (2010 Corolla)		

REASSEMBLY

1. INSTALL SHIFT LOCK CONTROL ECU SUB-ASSEMBLY

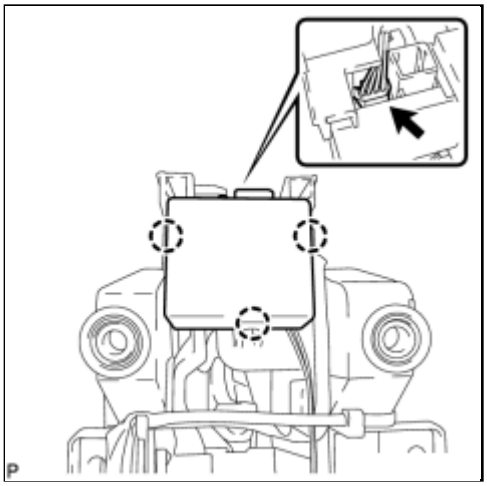

(a) Engage the 3 claws and install the shift lock control ECU sub-assembly to the shift lock control unit.

(b) Connect the shift lock solenoid connector to the shift lock control ECU sub-assembly.

2. INSTALL POSITION INDICATOR LIGHT BULB

(a) Install the cap to the bulb.

(b) Install the bulb to the position indicator light wire socket.

3. INSTALL INDICATOR LIGHT WIRE SUB-ASSEMBLY

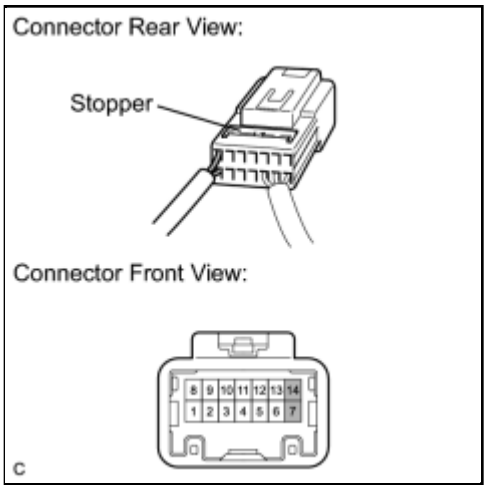

(a) Connect terminals 7 and 14 to the connector as shown in the illustration.

(b) Push in the stopper.

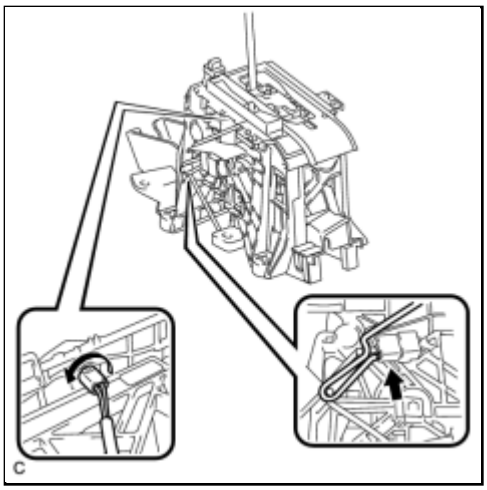

(c) Install the position indicator light wire socket and connector to the shift lock control unit.

4. INSTALL NO. 2 POSITION INDICATOR SLIDE COVER

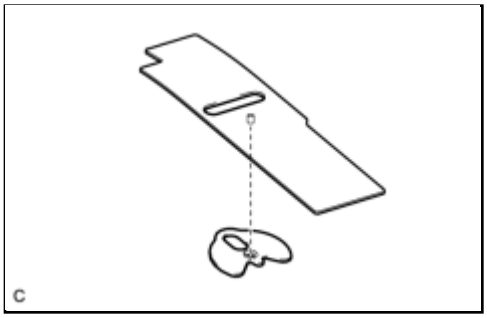

(a) Install the No. 2 position indicator slide cover to the position indicator slide cover.

5. INSTALL POSITION INDICATOR SLIDE COVER

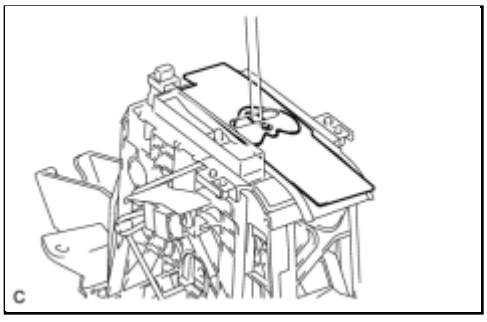

(a) Install the position indicator slide cover with the No. 2 position indicator slide cover to the shift lock control unit.

6. INSTALL SHIFT LOCK RELEASE BUTTON COVER

(a) Install the shift lock release button cover to the position indicator housing sub-assembly.

7. INSTALL FLOOR SHIFT POSITION INDICATOR HOUSING SUB-ASSEMBLY

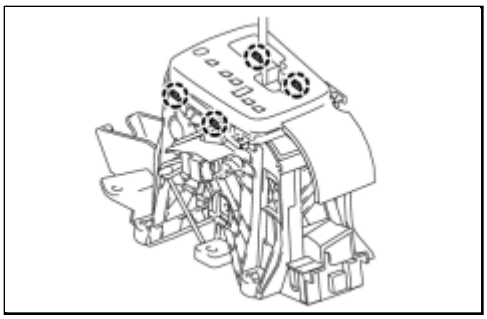

(a) Engage the 4 claws and install the floor shift position indicator housing sub-assembly to the shift lock control unit.

NOTICE:

Make sure that the claws are firmly engaged.

Last Modified: 3-10-2010	6.4 A	**From:** 200901
Model Year: 2010	**Model:** Corolla	**Doc ID:** RM0000020U501KX
Title: U341E AUTOMATIC TRANSMISSION / TRANSAXLE: SHIFT LEVER: INSTALLATION (2010 Corolla)		

INSTALLATION

1. INSTALL SHIFT LEVER ASSEMBLY

NOTICE:

Check that the park/neutral position switch and the shift lever are in N.

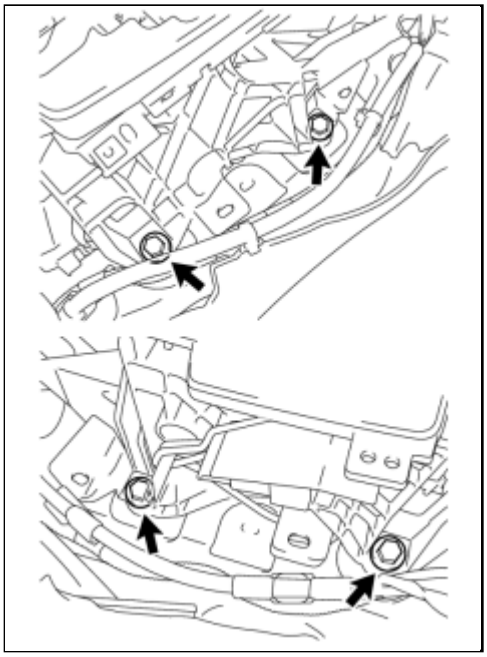

(a) Install the shift lever assembly with the 4 bolts.

Torque: 12 N·m (122 kgf·cm, 9ft·lbf)

(b) Install the 3 wire harness clamps to the shift lever assembly.



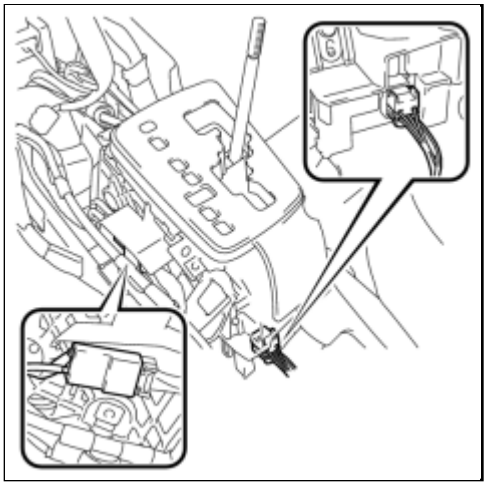

(c) Connect the 2 connectors to the shift lever assembly.

2. INSTALL TRANSMISSION CONTROL CABLE ASSEMBLY

(a) Turn the nut of the transmission control cable 180° counterclockwise. While holding the nut in place, push in the stopper until the stopper clicks twice.

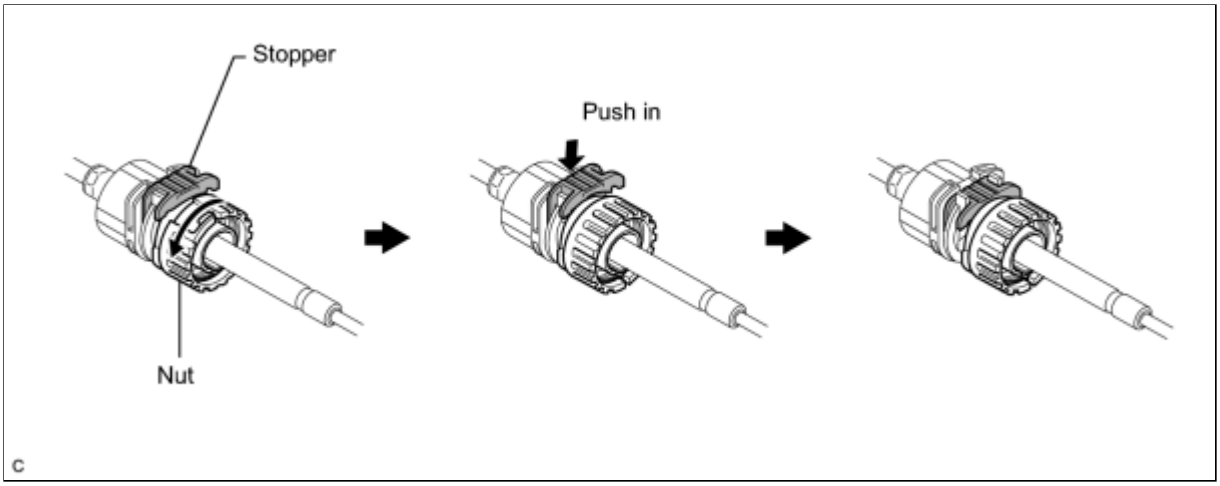

(b) Install the outer part of the transmission control cable to the shift lever retainer. Check that the spring is positioned at "A" and push in the stopper.

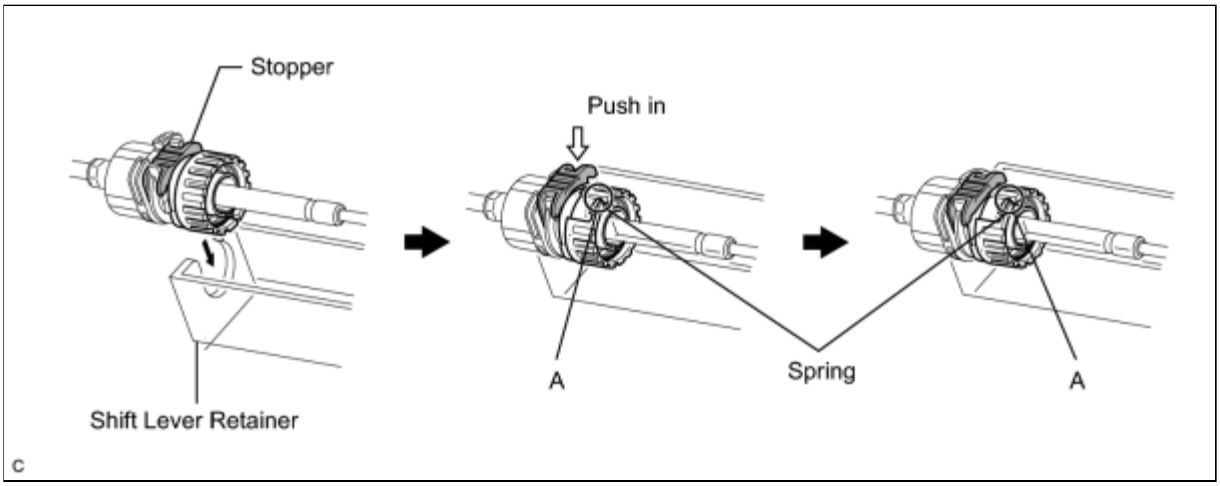

HINT:

If the stopper cannot be pushed in, slightly turn the nut clockwise and then push in the stopper again.

(c) Push the 2 claws together at the top of the transmission control cable lock piece. While holding the 2 claws together, push the 2 lugs on the bottom of the lock piece toward each other and upward to pull out the lock piece.

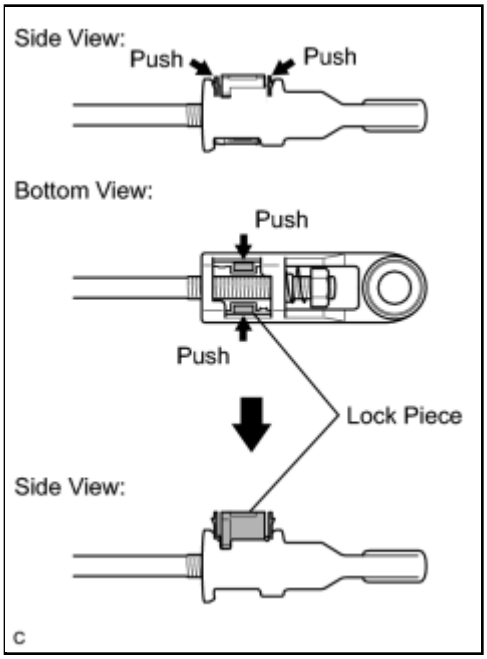

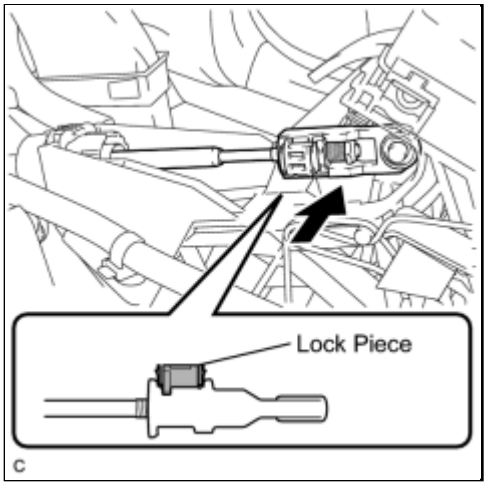

(d) Install the cable end to the shift lever assembly.

NOTICE:

- Check that the lock piece is pulled up.
- Install the cable end all the way to the base of the pin.

(e) Push the lock piece into the adjuster case.

NOTICE:

Securely push in the lock piece until it locks.

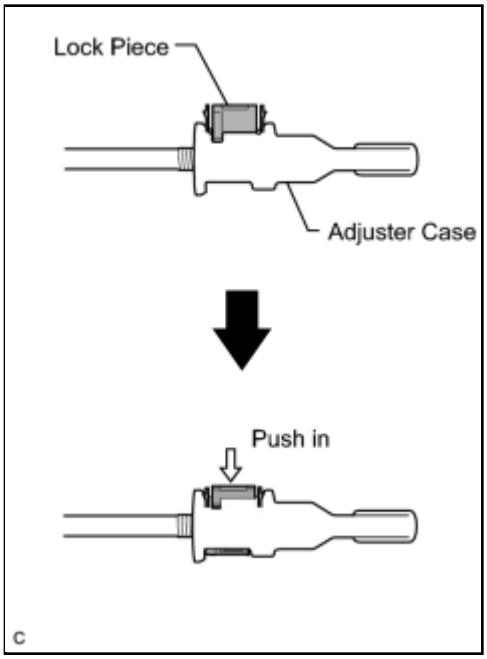

3. INSTALL CONSOLE BOX ASSEMBLY INFO

4. INSTALL CONSOLE BOX CARPET INFO

5. INSTALL UPPER CONSOLE PANEL SUB-ASSEMBLY INFO

6. INSTALL FRONT NO. 1 CONSOLE BOX INSERT INFO

7. INSTALL FRONT NO. 2 CONSOLE BOX INSERT INFO

8. INSTALL INSTRUMENT PANEL BOX ASSEMBLY INFO

9. INSTALL CENTER NO. 1 INSTRUMENT CLUSTER FINISH PANEL ASSEMBLY INFO

10. INSTALL SHIFT LEVER KNOB SUB-ASSEMBLY INFO

11. INSTALL LOWER INSTRUMENT PANEL FINISH PANEL LH INFO

12. INSTALL LOWER INSTRUMENT PANEL FINISH PANEL RH INFO

13. INSPECT SHIFT LEVER POSITION INFO

14. ADJUST SHIFT LEVER POSITION INFO

Last Modified: 3-10-2010	6.4 K	**From:** 200901
Model Year: 2010	**Model:** Corolla	**Doc ID:** RM000000U9T01ZX
Title: U250E AUTOMATIC TRANSMISSION / TRANSAXLE: SPEED SENSOR: COMPONENTS (2010 Corolla)		

COMPONENTS

ILLUSTRATION

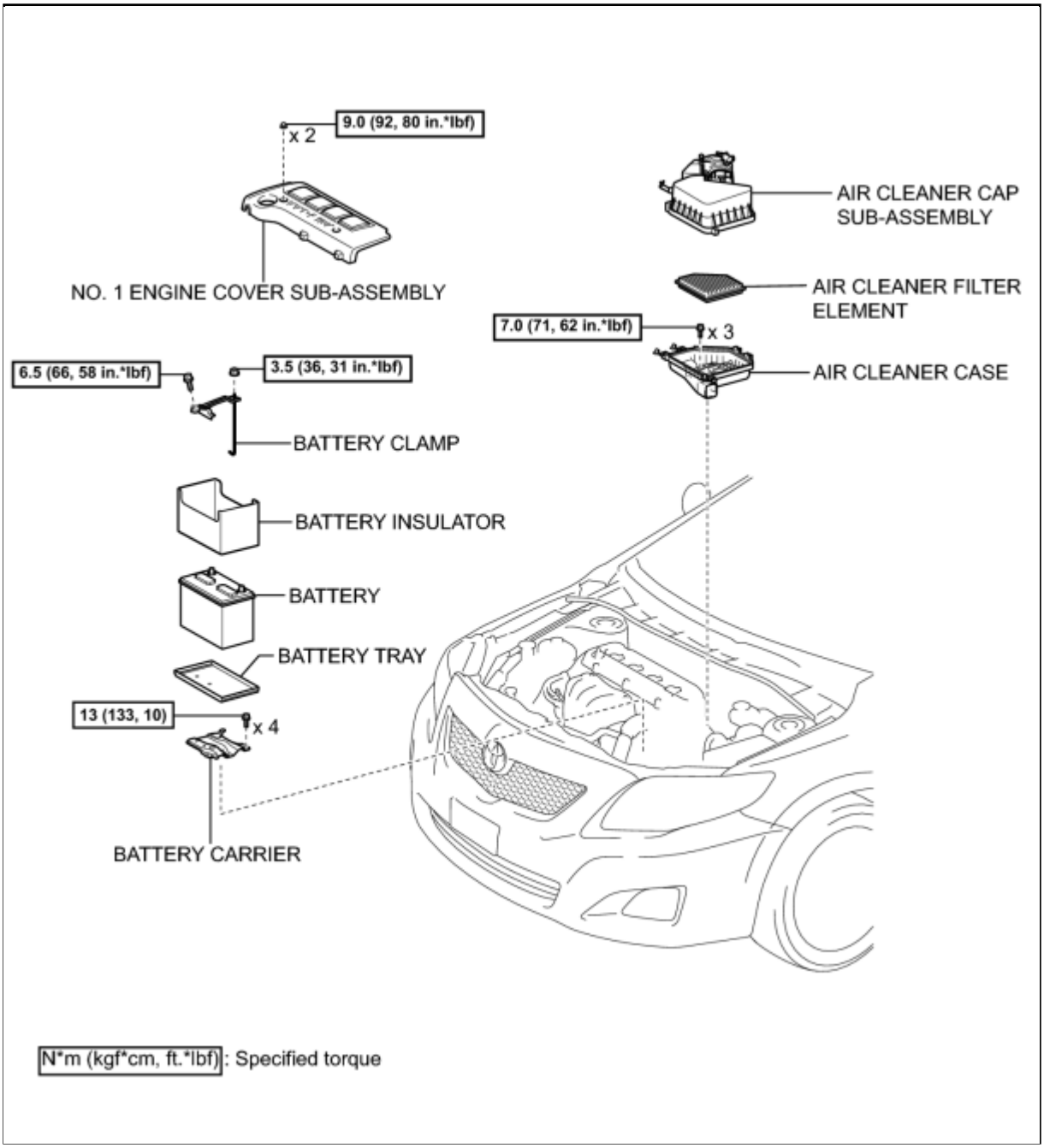

ILLUSTRATION

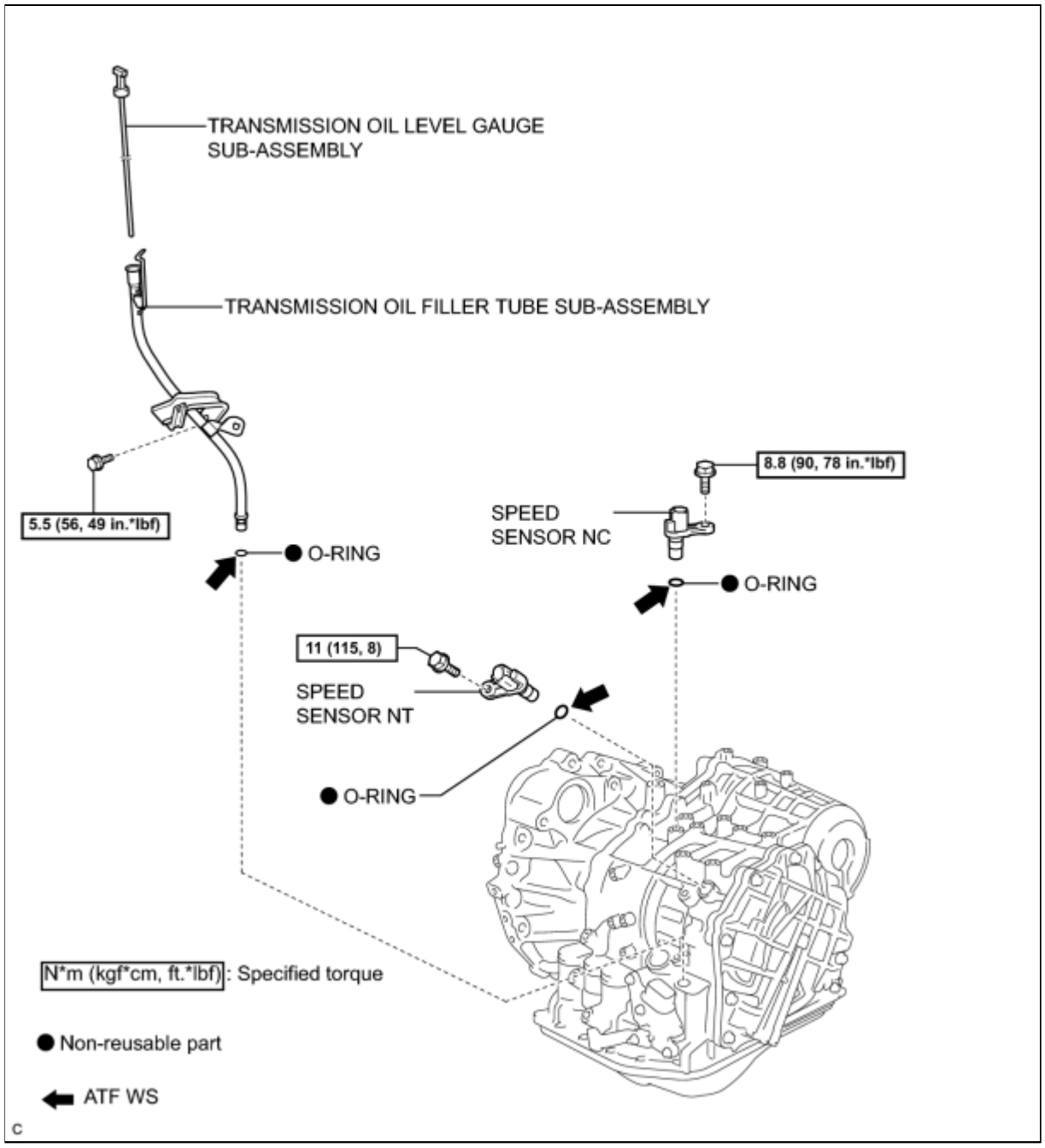
TRANSMISSION OIL LEVEL GAUGE SUB-ASSEMBLY
TRANSMISSION OIL FILLER TUBE SUB-ASSEMBLY
5.5 (56, 49 in.*lbf)
O-RING
8.8 (90, 78 in.*lbf)
SPEED SENSOR NC
O-RING
11 (115, 8)
SPEED SENSOR NT
O-RING
N*m (kgf*cm, ft.*lbf): Specified torque
Non-reusable part
ATF WS
C

Last Modified: 3-10-2010	6.4 A	**From:** 200901
Model Year: 2010	**Model:** Corolla	**Doc ID:** RM000000OE402EX
Title: U250E AUTOMATIC TRANSMISSION / TRANSAXLE: SPEED SENSOR: REMOVAL (2010 Corolla)		

REMOVAL

1. DISCONNECT CABLE FROM NEGATIVE BATTERY TERMINAL

NOTICE:

When disconnecting the cable, some systems need to be initialized after the cable is reconnected INFO **.**

2. REMOVE NO. 1 ENGINE COVER SUB-ASSEMBLY INFO

3. REMOVE AIR CLEANER CAP SUB-ASSEMBLY INFO

4. REMOVE AIR CLEANER CASE INFO

5. REMOVE BATTERY INFO

6. REMOVE BATTERY CARRIER INFO

7. REMOVE TRANSMISSION OIL FILLER TUBE SUB-ASSEMBLY

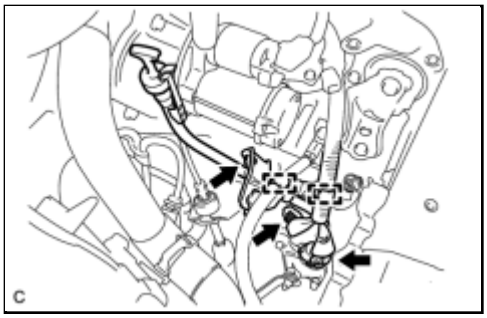

(a) Remove the transmission oil level gauge sub-assembly.

(b) Disconnect the transmission wire connector, park/neutral position switch connector and 2 wire harness clamps.

(c) Remove the bolt and transmission oil filler tube sub-assembly.

(d) Remove the O-ring from the transmission oil filler tube sub-assembly.

8. REMOVE SPEED SENSOR NT

(a) Disconnect the speed sensor connector.

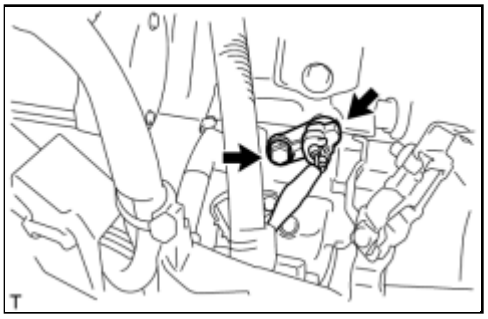

(b) Remove the bolt and speed sensor.

(c) Remove the O-ring from the speed sensor.

9. REMOVE SPEED SENSOR NC

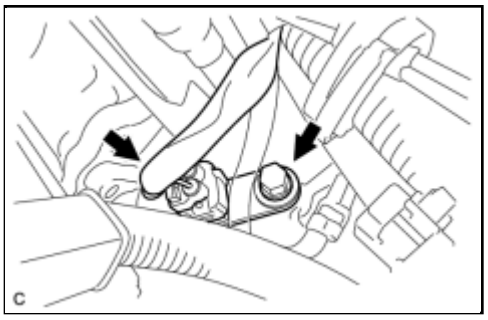

(a) Disconnect the speed sensor connector.

(b) Remove the bolt and speed sensor.

(c) Remove the O-ring from the speed sensor.

Last Modified: 3-10-2010	6.4 G	**From:** 200901
Model Year: 2010	**Model:** Corolla	**Doc ID:** RM000000UKF021X
Title: U250E AUTOMATIC TRANSMISSION / TRANSAXLE: SPEED SENSOR: INSPECTION (2010 Corolla)		

INSPECTION

1. INSPECT SPEED SENSOR NT

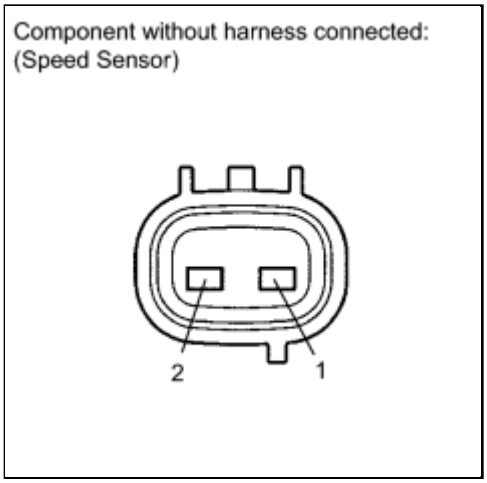

(a) Measure the resistance according to the value(s) in the table below.

Standard Resistance:

TESTER CONNECTION	CONDITION	SPECIFIED CONDITION
1 - 2	20°C (68°F)	560 to 680 Ω

If the resistance value is not as specified, replace the speed sensor.

2. INSPECT SPEED SENSOR NC

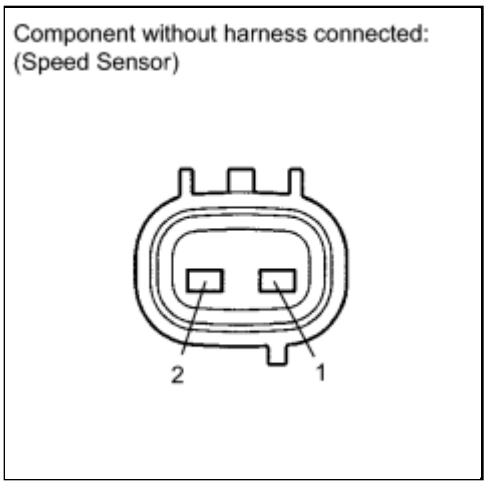

(a) Measure the resistance according to the value(s) in the table below.

Standard Resistance:

TESTER CONNECTION	CONDITION	SPECIFIED CONDITION
1 - 2	20°C (68°F)	560 to 680 Ω

If the resistance value is not as specified, replace the speed sensor.

Last Modified: 3-10-2010	6.4 A	**From:** 200901
Model Year: 2010	**Model:** Corolla	**Doc ID:** RM000000OE202EX
Title: U250E AUTOMATIC TRANSMISSION / TRANSAXLE: SPEED SENSOR: INSTALLATION (2010 Corolla)		

INSTALLATION

1. INSTALL SPEED SENSOR NC

(a) Coat a new O-ring with ATF WS and install it to the speed sensor.

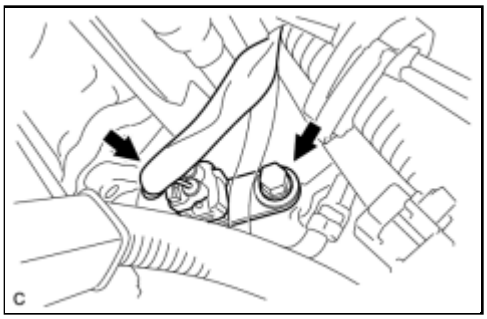

(b) Install the speed sensor with the bolt.

Torque: 8.8 N·m (90 kgf·cm, 78in·lbf)

(c) Connect the speed sensor connector.

2. INSTALL SPEED SENSOR NT

(a) Coat a new O-ring with ATF WS and install it to the speed sensor.

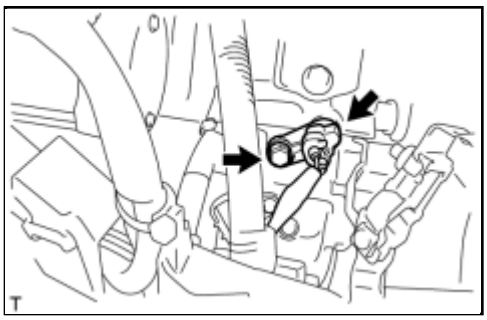

(b) Install the speed sensor with the bolt.

Torque: 11 N·m (115 kgf·cm, 8ft·lbf)

(c) Connect the speed sensor connector.

3. INSTALL TRANSMISSION OIL FILLER TUBE SUB-ASSEMBLY

(a) Apply ATF to a new O-ring, and install it to the transmission oil filler tube sub-assembly.

(b) Install the transmission oil filler tube sub-assembly to the automatic transaxle with the bolt.

Torque: 5.5 N·m (56 kgf·cm, 49in·lbf)

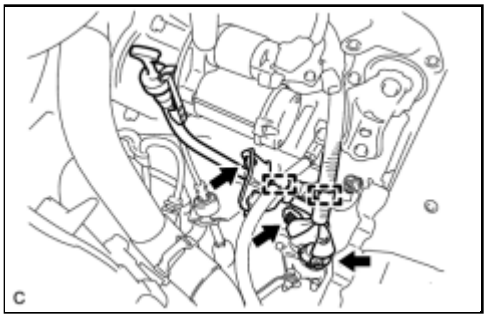

(c) Connect the transmission wire connector, park/neutral position switch connector and 2 wire harness clamps.

(d) Install the transmission oil level gauge sub-assembly to the transmission oil filler tube sub-assembly.

4. INSTALL BATTERY CARRIER INFO

5. INSTALL BATTERY INFO

6. INSTALL AIR CLEANER CASE INFO

7. INSTALL AIR CLEANER CAP SUB-ASSEMBLY INFO

8. INSTALL NO. 1 ENGINE COVER SUB-ASSEMBLY INFO

9. CONNECT CABLE TO NEGATIVE BATTERY TERMINAL

NOTICE:

When disconnecting the cable, some systems need to be initialized after the cable is reconnected INFO **.**

Last Modified: 3-10-2010	6.4 K	**From:** 200901
Model Year: 2010	**Model:** Corolla	**Doc ID:** RM000000U9T01YX
Title: U341E AUTOMATIC TRANSMISSION / TRANSAXLE: SPEED SENSOR: COMPONENTS (2010 Corolla)		

COMPONENTS

ILLUSTRATION

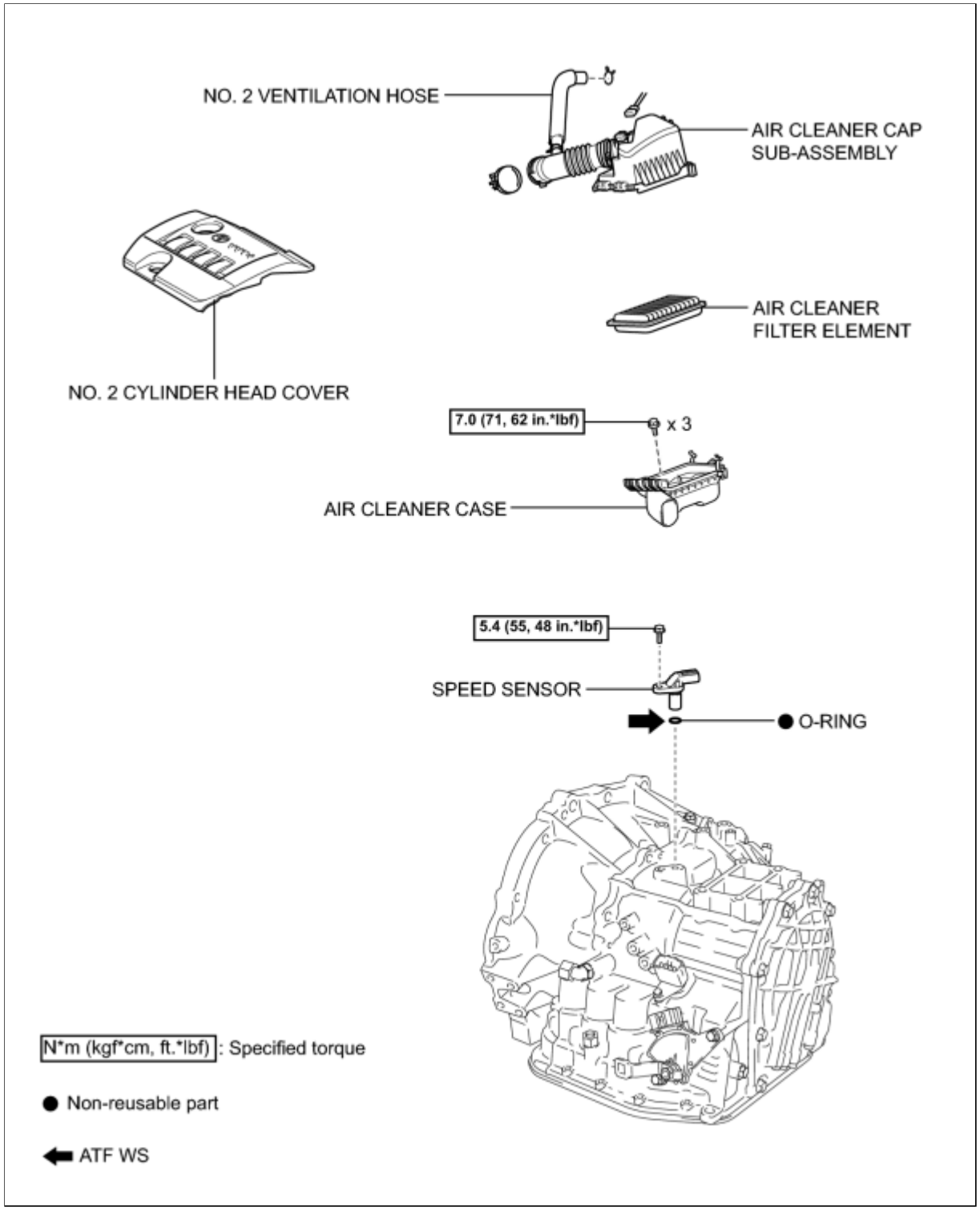
NO. 2 VENTILATION HOSE
AIR CLEANER CAP SUB-ASSEMBLY
AIR CLEANER FILTER ELEMENT
NO. 2 CYLINDER HEAD COVER
7.0 (71, 62 in.*lbf)
x 3
AIR CLEANER CASE
5.4 (55, 48 in.*lbf)
SPEED SENSOR
O-RING
N*m (kgf*cm, ft.*lbf) : Specified torque
Non-reusable part
ATF WS

Last Modified: 3-10-2010	6.4 A	**From:** 200901
Model Year: 2010	**Model:** Corolla	**Doc ID:** RM000000OE402DX
Title: U341E AUTOMATIC TRANSMISSION / TRANSAXLE: SPEED SENSOR: REMOVAL (2010 Corolla)		

REMOVAL

1. REMOVE NO. 2 CYLINDER HEAD COVER INFO

2. REMOVE AIR CLEANER CAP SUB-ASSEMBLY INFO

3. REMOVE AIR CLEANER CASE INFO

4. REMOVE SPEED SENSOR

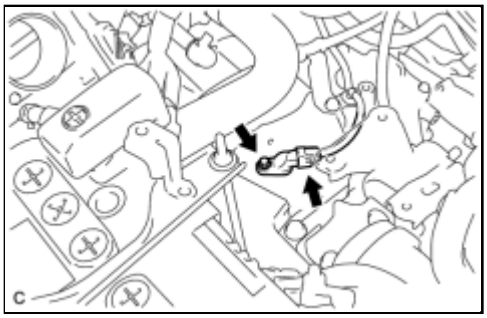

(a) Disconnect the speed sensor connector.

(b) Remove the bolt and speed sensor.

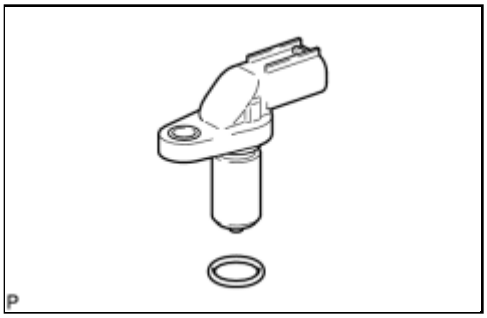

(c) Remove the O-ring from the speed sensor.

Last Modified: 3-10-2010	6.4 G	**From:** 200901
Model Year: 2010	**Model:** Corolla	**Doc ID:** RM000000UKF020X
Title: U341E AUTOMATIC TRANSMISSION / TRANSAXLE: SPEED SENSOR: INSPECTION (2010 Corolla)		

INSPECTION

1. INSPECT SPEED SENSOR

Component without harness connected:
(Speed Sensor)

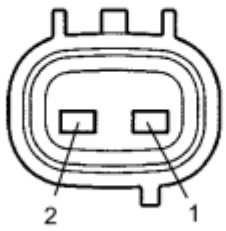

(a) Measure the resistance according to the value(s) in the table below.

Standard Resistance:

TESTER CONNECTION	CONDITION	SPECIFIED CONDITION
1 - 2	20°C (68°F)	560 to 680 Ω

If the resistance value is not as specified, replace the speed sensor.

Last Modified: 3-10-2010	6.4 A	**From:** 200901
Model Year: 2010	**Model:** Corolla	**Doc ID:** RM000000OE202DX
Title: U341E AUTOMATIC TRANSMISSION / TRANSAXLE: SPEED SENSOR: INSTALLATION (2010 Corolla)		

INSTALLATION

1. INSTALL SPEED SENSOR

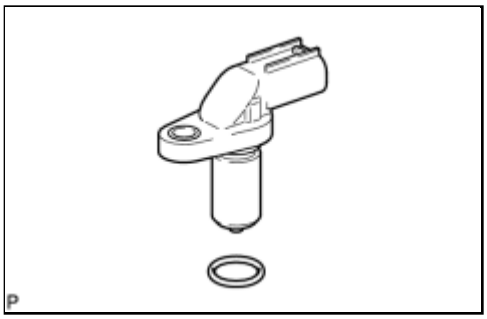

(a) Coat a new O-ring with ATF and install it to the speed sensor.

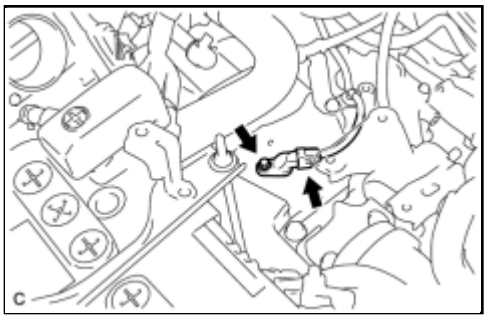

(b) Install the speed sensor with the bolt.

Torque: 5.4 N·m (55 kgf·cm, 48in·lbf)

(c) Connect the speed sensor connector.

2. INSTALL AIR CLEANER CASE INFO

3. INSTALL AIR CLEANER CAP SUB-ASSEMBLY INFO

4. INSTALL NO. 2 CYLINDER HEAD COVER INFO

Last Modified: 3-10-2010	6.4 G	**From:** 200901
Model Year: 2010	**Model:** Corolla	**Doc ID:** RM000000YXK02NX
Title: U250E AUTOMATIC TRANSMISSION / TRANSAXLE: TORQUE CONVERTER CLUTCH AND DRIVE PLATE: INSPECTION (2010 Corolla)		

INSPECTION

1. INSPECT TORQUE CONVERTER CLUTCH ASSEMBLY

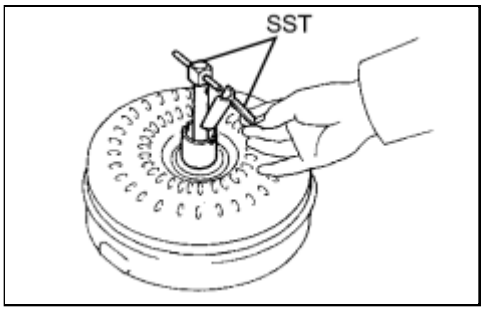

(a) Inspect the one-way clutch.

(1) Install SST onto the inner race of the one-way clutch.

SST: 09350-32014

09351-32010

(2) Set SST so that it fits in the notch of the converter hub and in the outer race of the one-way clutch.

SST: 09350-32014

09351-32020

(3) With the torque converter standing on its side, check that the clutch locks when SST is turned counterclockwise and rotates freely and smoothly when turned clockwise. If the results are not as specified, clean the converter and recheck the one-way clutch. If the results still are not as specified, replace the converter.

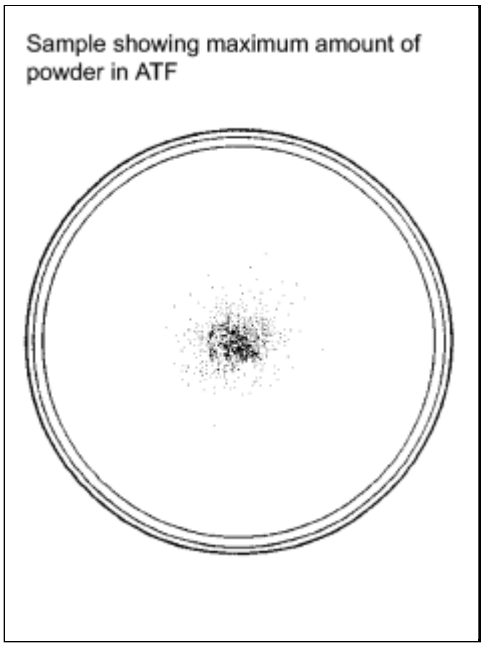

(b) Determine the condition of the torque converter clutch.

(1) Check that the following conditions are met:

- During the stall test or when the shift lever is in N, metallic sounds are not emitted from the torque converter clutch.
- The one-way clutch turns clockwise and locks when turned counterclockwise.
- The amount of powder in the ATF is not greater than the sample shown in the illustration.

If the results are not as specified, replace the torque converter clutch assembly.

HINT:

The sample illustration shows approximately 0.25 liters (0.26 US qts, 0.22 Imp. qts) of the ATF taken from a removed torque converter clutch.

(c) Replace the ATF in the torque converter clutch.

(1) If the ATF is discolored and/or has a foul odor, completely stir the ATF in the torque converter clutch and drain it.

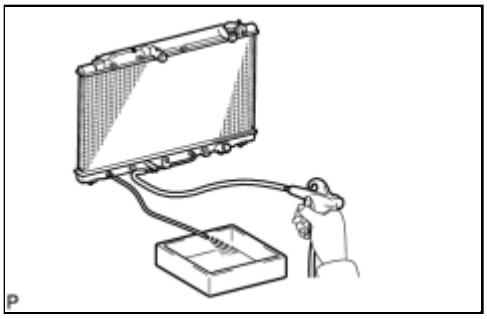

(d) Clean and check the oil cooler and oil pipe line.

(1) If the torque converter clutch is inspected or the ATF is replaced, clean the oil cooler and oil lines.

HINT:

- Spray compressed air of 196 kPa (2 kgf/cm^2, 28 psi) into inlet hose.
- If there is a large amount of fine powder in the ATF, add new ATF using a bucket pump and clean it again.

(2) If the ATF is cloudy, inspect the oil cooler (radiator).

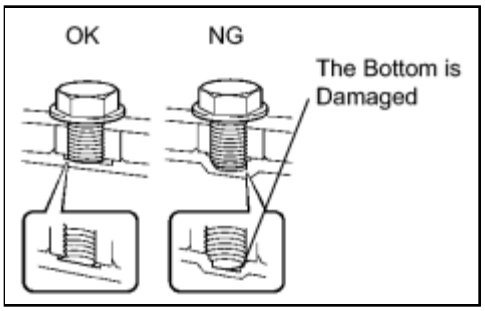

(e) Avoid damaging the torque converter clutch and the oil pump gear.

(1) If there is any damage to the end of the bolt for the torque converter clutch and to the bottom of the bolt hole, replace the bolt and the torque converter clutch.

(2) All of the bolts must be the same length.

(3) Bolts with washers must be used.

2. INSPECT DRIVE PLATE & RING GEAR SUB-ASSEMBLY

(a) Check the drive plate for damage.

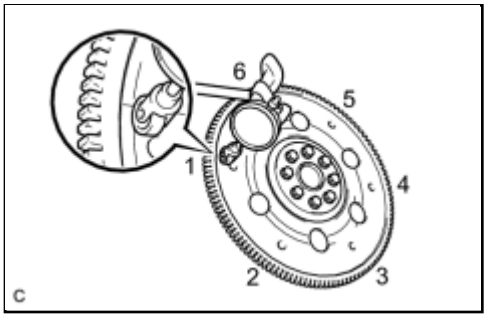

(b) Set up a dial indicator and measure the run out of the 6 portions around the torque converter fitting surface.

Maximum runout:
0.30 mm (0.0118 in.)

If the runout is not within the specification or the drive plate is damaged, replace the drive plate.

Last Modified: 3-10-2010	6.4 G	**From:** 200901
Model Year: 2010	**Model:** Corolla	**Doc ID:** RM00000192E01KX
Title: U341E AUTOMATIC TRANSMISSION / TRANSAXLE: TORQUE CONVERTER CLUTCH AND DRIVE PLATE: INSPECTION (2010 Corolla)		

INSPECTION

1. INSPECT TORQUE CONVERTER CLUTCH ASSEMBLY

(a) Inspect the one-way clutch.

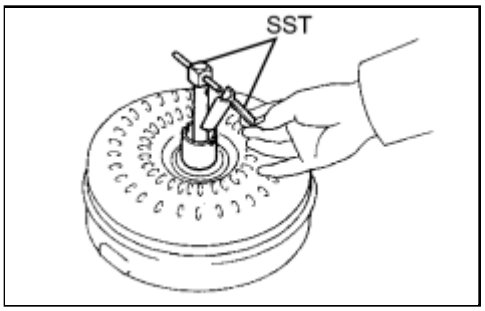

(1) Set SST so that it fits into the notch of the converter hub and the notch of the outer race of the one-way clutch.

SST: 09350-32014

09351-32010

09351-32020

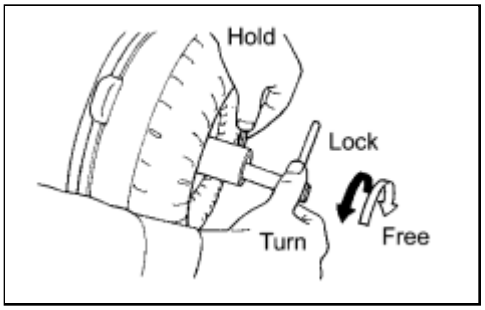

(2) Stand the torque converter up and turn the SST.

Check that it rotates smoothly when turned clockwise and locks up when turned counterclockwise.

SST: 09350-32014

09351-32010

09351-32020

If necessary, clean the converter and check the one-way clutch.

Replace the converter if the one-way clutch still does not operate as specified.

(b) Determine the condition of the torque converter clutch assembly.

(1) Check that the following conditions are met:

- During the stall test or when the shift lever is in N, metallic sounds are not emitted from the torque converter clutch.
- The one-way clutch turns in one direction and locks in the other direction.
- The amount of powder in the ATF is not greater than the sample shown in the illustration.

HINT:

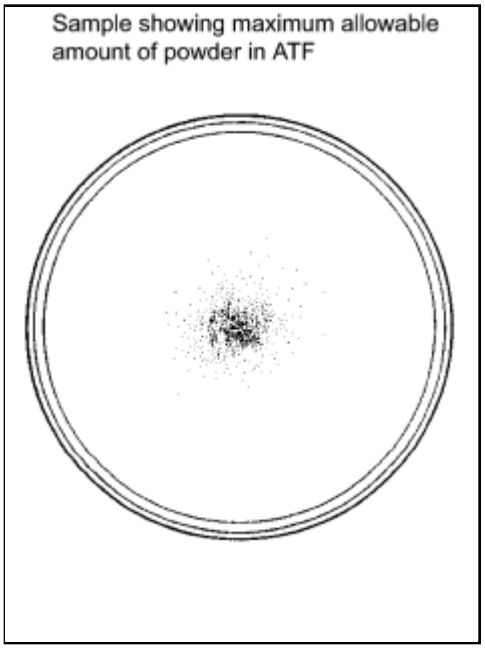

The sample illustration shows approximately 0.25 liters (0.26 US qts, 0.22 Imp. qts) of the ATF taken from a removed torque converter clutch.

(c) Replace the ATF in the torque converter clutch.

(1) If the ATF is discolored and/or has a foul odor, rock the torque converter to move the fluid around inside it. Drain the ATF with the mounting surface of the converter facing upward.

(d) Clean and check the oil cooler and oil pipe line.

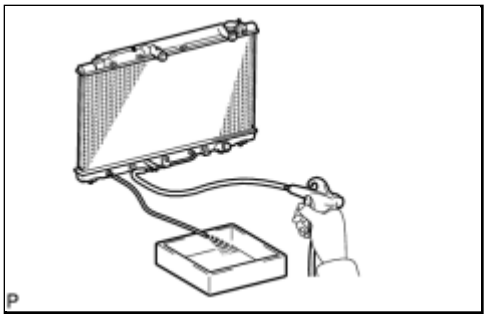

(1) If the torque converter clutch is inspected or the ATF is changed, clean the oil cooler and oil pipe line.

HINT:

- Spray compressed air of 196 kPa (2 kgf/cm^2, 28 psi) from the inlet hose.
- If excessive fine powder is found in the ATF, add new ATF using a bucket pump and clean it again.

(2) If the ATF is cloudy, inspect the oil cooler (radiator).

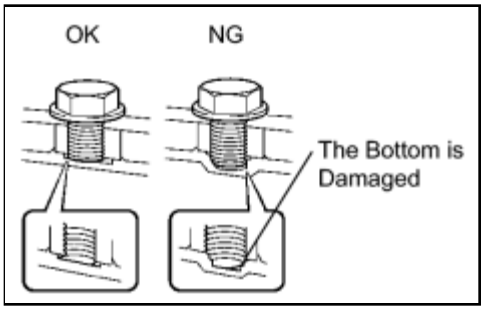

(e) Prevent deformation of the torque converter clutch and damage to the oil pump gear.

(1) When any marks due to interference are found on the end of the bolt for the torque converter clutch and on the bottom of the bolt hole, replace the bolt and the torque converter clutch.

(2) All of the bolts must be the same length.

(3) Washers must be used with the bolts.

2. INSPECT DRIVE PLATE AND RING GEAR

(a) Check the drive plate for damage.

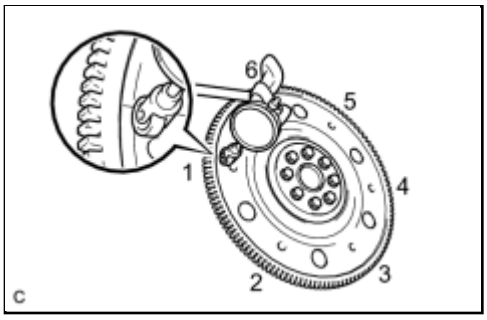

(b) Set up a dial indicator and measure the run out of the 6 portions around the torque converter fitting surfaces.

Maximum runout:
0.30 mm (0.0118 in.)

If the runout is not within the specification or drive plate is damaged, replace the drive plate.

Last Modified: 3-10-2010	6.4 K	**From:** 200901
Model Year: 2010	**Model:** Corolla	**Doc ID:** RM0000020UB01FX
Title: U250E AUTOMATIC TRANSMISSION / TRANSAXLE: TRANSMISSION CONTROL CABLE: COMPONENTS (2010 Corolla)		

COMPONENTS

ILLUSTRATION

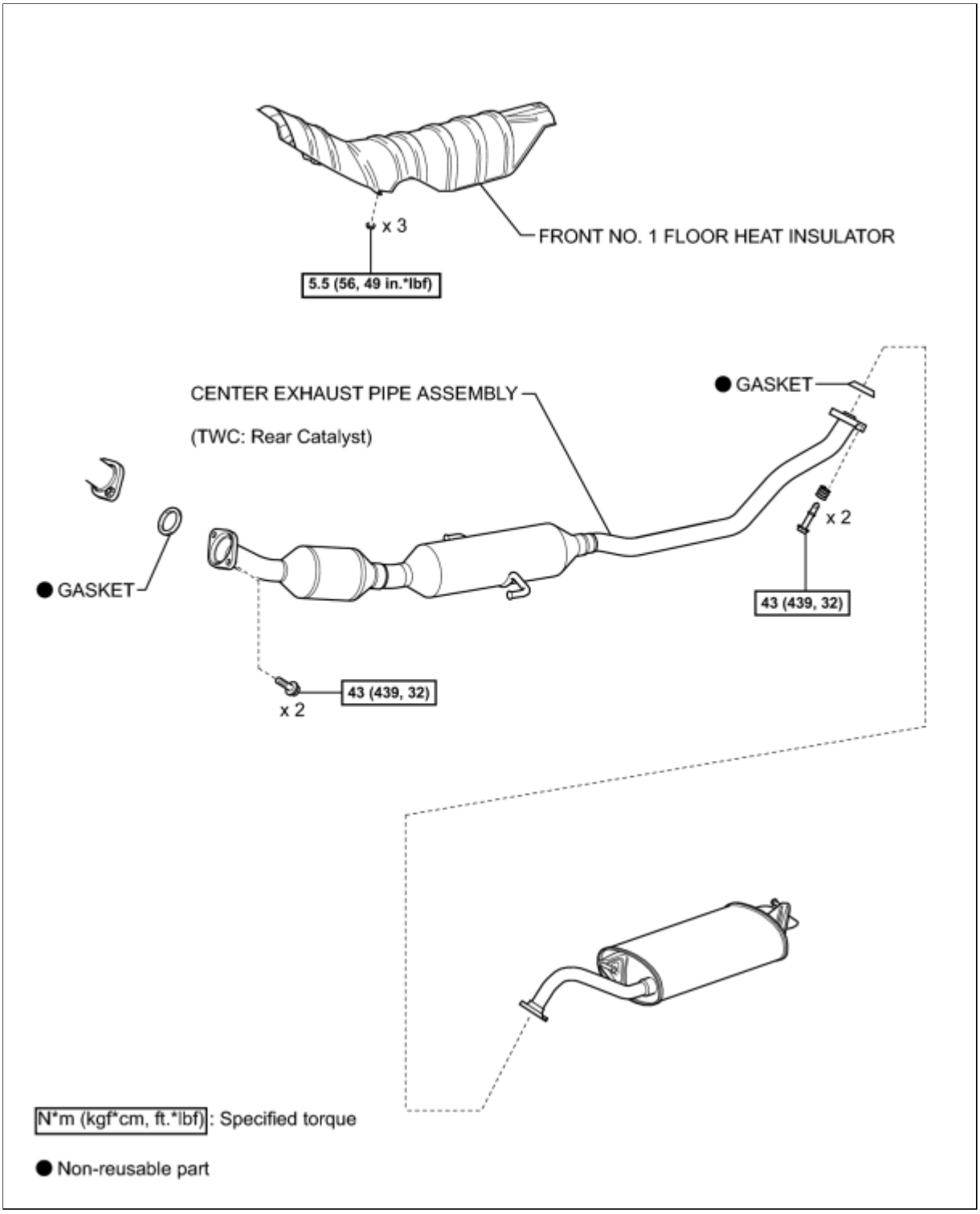

ILLUSTRATION

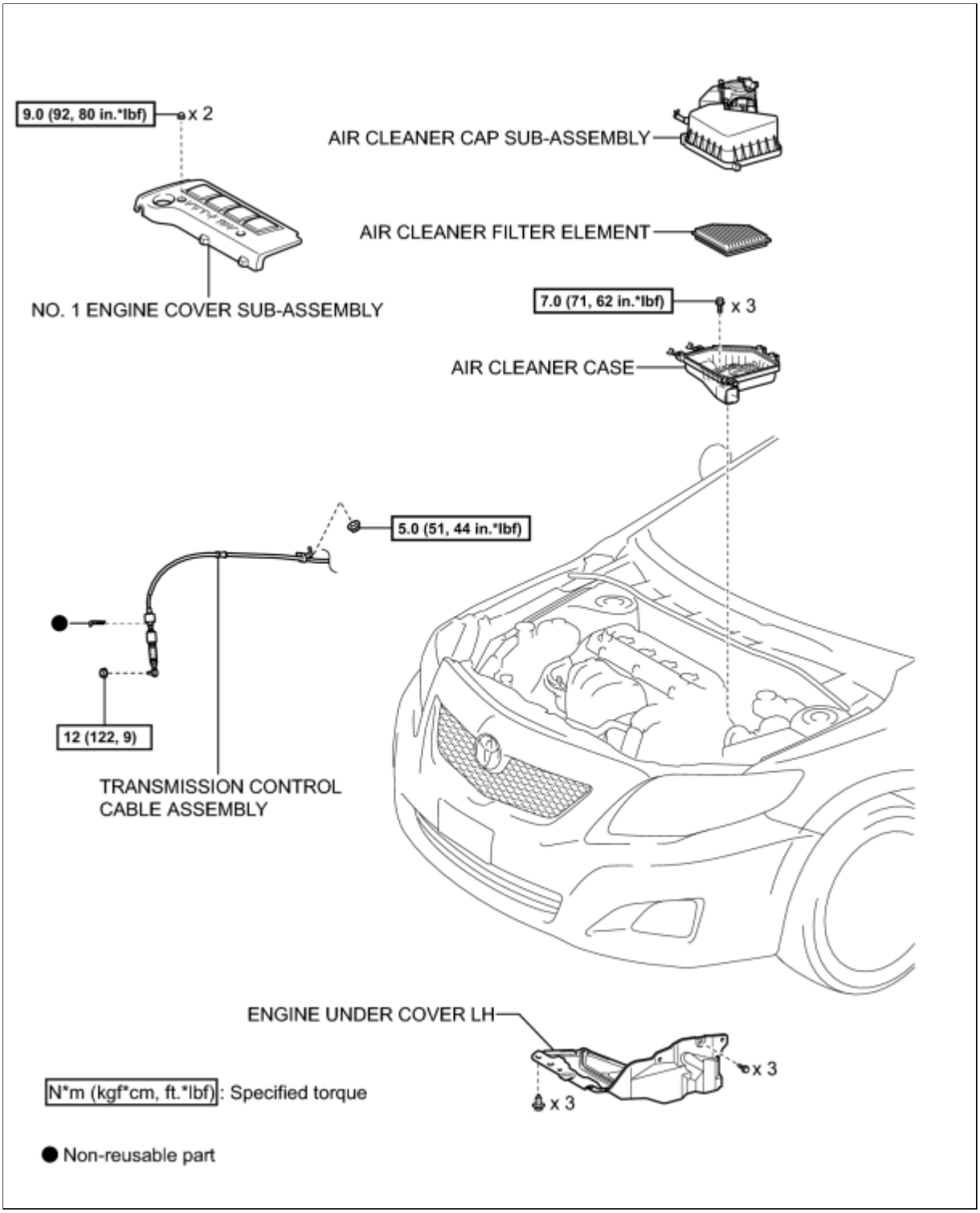

ILLUSTRATION

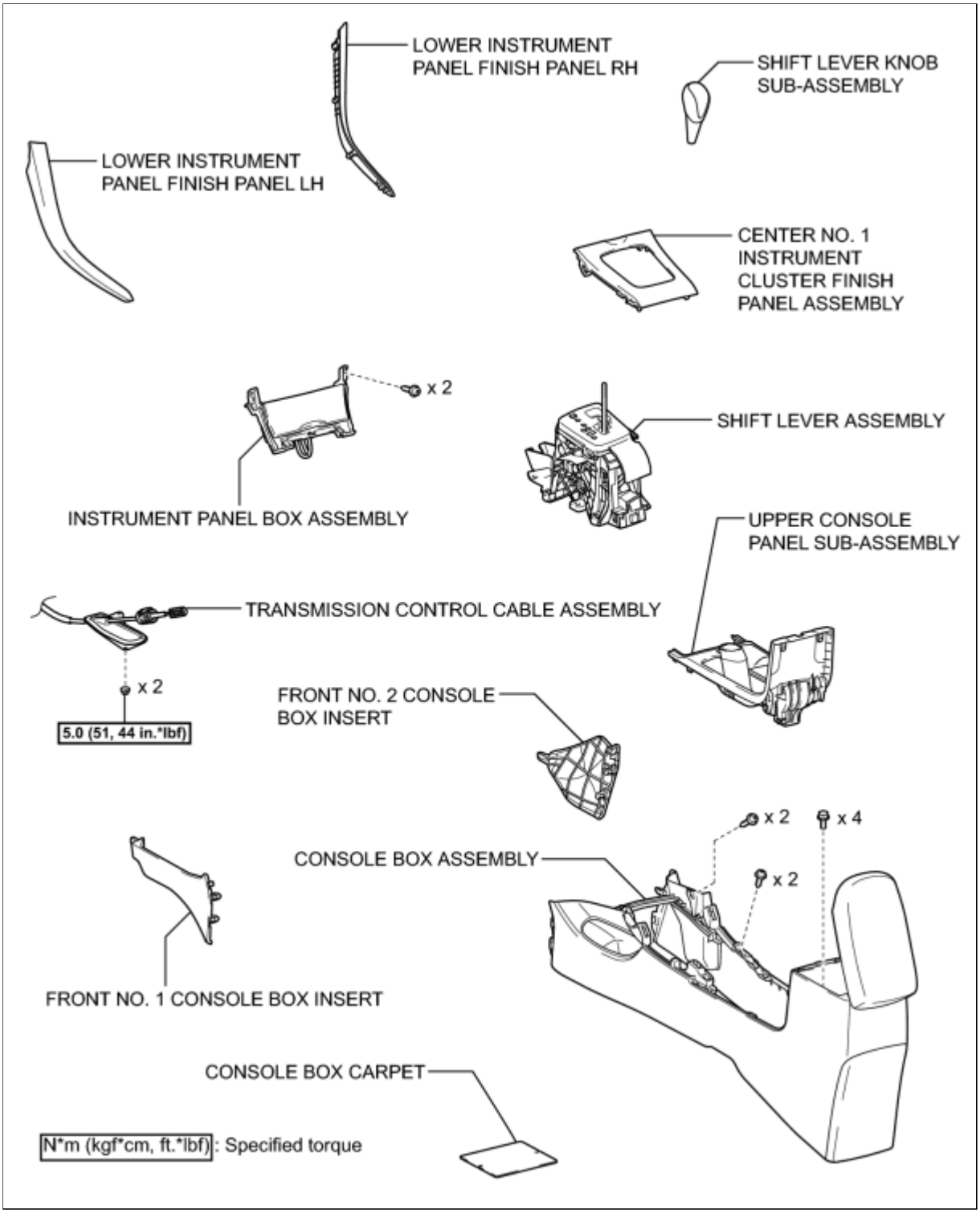
LOWER INSTRUMENT PANEL FINISH PANEL RH
SHIFT LEVER KNOB SUB-ASSEMBLY
LOWER INSTRUMENT PANEL FINISH PANEL LH
CENTER NO. 1 INSTRUMENT CLUSTER FINISH PANEL ASSEMBLY
x 2
SHIFT LEVER ASSEMBLY
INSTRUMENT PANEL BOX ASSEMBLY
UPPER CONSOLE PANEL SUB-ASSEMBLY
TRANSMISSION CONTROL CABLE ASSEMBLY
x 2
5.0 (51, 44 in.*lbf)
FRONT NO. 2 CONSOLE BOX INSERT
x 2
x 4
CONSOLE BOX ASSEMBLY
x 2
FRONT NO. 1 CONSOLE BOX INSERT
CONSOLE BOX CARPET
N*m (kgf*cm, ft.*lbf): Specified torque

Last Modified: 3-10-2010	6.4 A	**From:** 200901
Model Year: 2010	**Model:** Corolla	**Doc ID:** RM0000020UC01GX
Title: U250E AUTOMATIC TRANSMISSION / TRANSAXLE: TRANSMISSION CONTROL CABLE: REMOVAL (2010 Corolla)		

REMOVAL

1. REMOVE LOWER INSTRUMENT PANEL FINISH PANEL LH INFO

2. REMOVE LOWER INSTRUMENT PANEL FINISH PANEL RH INFO

3. REMOVE SHIFT LEVER KNOB SUB-ASSEMBLY INFO

4. REMOVE CENTER NO. 1 INSTRUMENT CLUSTER FINISH PANEL ASSEMBLY INFO

5. REMOVE INSTRUMENT PANEL BOX ASSEMBLY INFO

6. REMOVE FRONT NO. 1 CONSOLE BOX INSERT INFO

7. REMOVE FRONT NO. 2 CONSOLE BOX INSERT INFO

8. REMOVE UPPER CONSOLE PANEL SUB-ASSEMBLY INFO

9. REMOVE CONSOLE BOX CARPET INFO

10. REMOVE CONSOLE BOX ASSEMBLY INFO

11. REMOVE NO. 1 ENGINE COVER SUB-ASSEMBLY INFO

12. REMOVE AIR CLEANER CAP SUB-ASSEMBLY INFO

13. REMOVE AIR CLEANER CASE INFO

14. REMOVE ENGINE UNDER COVER LH

15. REMOVE CENTER EXHAUST PIPE ASSEMBLY INFO

16. REMOVE FRONT NO. 1 FLOOR HEAT INSULATOR

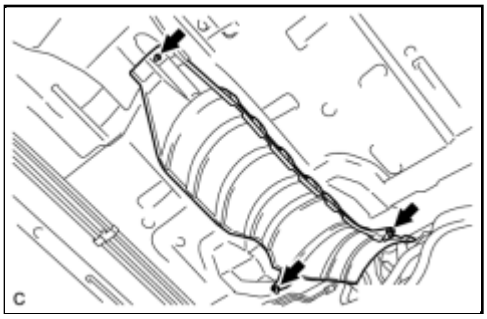

(a) Remove the 3 nuts and the front No. 1 floor heat insulator.

17. REMOVE TRANSMISSION CONTROL CABLE ASSEMBLY

(a) Move the shift lever to N.

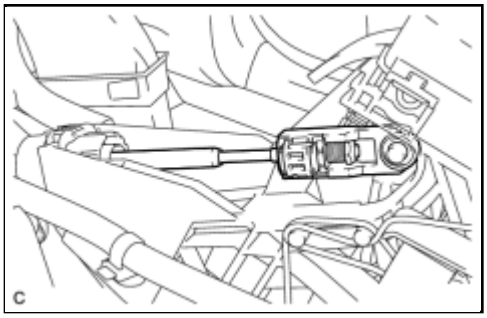

(b) Disconnect the end of the transmission control cable assembly from the shift lever assembly.

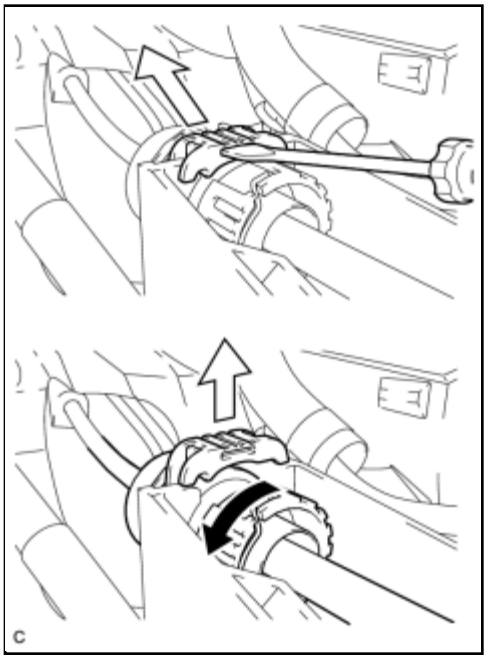

(c) Using a screwdriver, pull out the stopper of the transmission control cable.

NOTICE:

Do not remove the stopper. If the stopper is removed, reinstall it to its original position.

(d) Rotate the nut counterclockwise approximately 180°, and while holding the nut in place, disconnect the transmission control cable from the shift lever retainer.

NOTICE:

Do not over-rotate the nut as it will come off the internal spring and the transmission control cable will not be reusable.

(e) Remove the clip and disconnect the transmission control cable assembly from the control cable bracket.

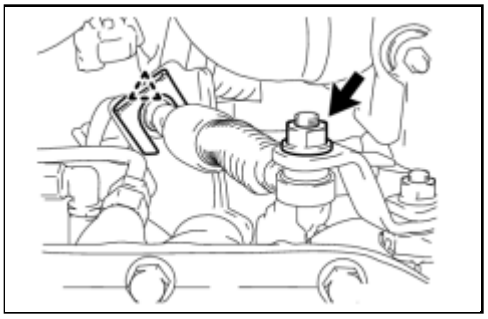

(f) Remove the nut and transmission control cable assembly from the control shaft lever.

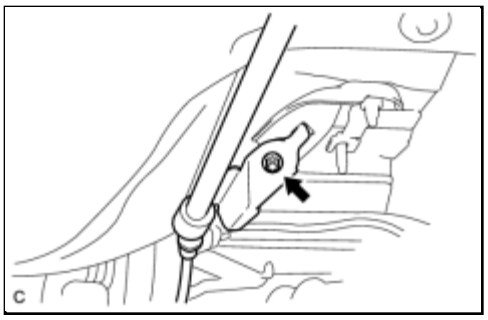

(g) Remove the nut and separate the transmission control cable assembly support from the rear engine mounting insulator.

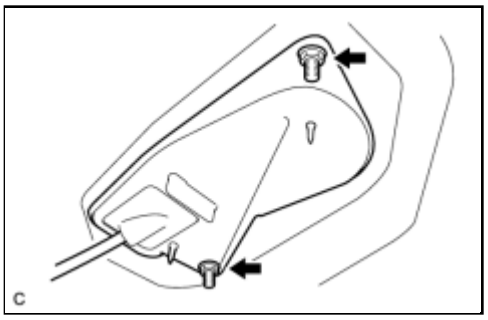

(h) Remove the 2 nuts and separate the transmission control cable assembly from the body.

(i) Pull out the transmission control cable assembly from the body.

Last Modified: 3-10-2010	6.4 N	**From:** 200901
Model Year: 2010	**Model:** Corolla	**Doc ID:** RM0000020U401VX
Title: U250E AUTOMATIC TRANSMISSION / TRANSAXLE: TRANSMISSION CONTROL CABLE: ADJUSTMENT (2010 Corolla)		

ADJUSTMENT

1. INSPECT SHIFT LEVER POSITION

(a) When moving the shift lever from P to R with the ignition switch ON and the brake pedal depressed, make sure that the shift lever moves smoothly and correctly into position.

(b) Start the engine and make sure that the vehicle moves forward when moving the shift lever from N to D and moves rearward when moving the shift lever to R. If the operation cannot be performed as specified, inspect the park/neutral position switch assembly and check the shift lever assembly installation condition.

2. ADJUST SHIFT LEVER POSITION

(a) Apply the parking brake and move the shift lever to N.

(b) Remove the console box assembly INFO .

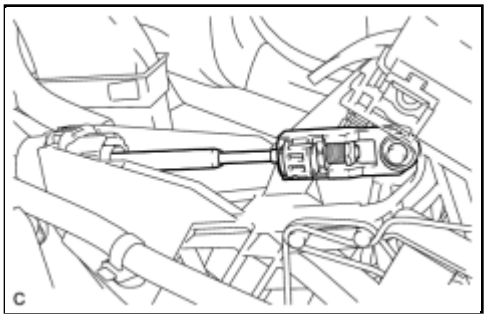

(c) Disconnect the end of the transmission control cable assembly from the shift lever assembly.

(d) Using a screwdriver, pull out the stopper of the transmission control cable.

NOTICE:

Do not remove the stopper. If the stopper is removed, reinstall it to its original position.

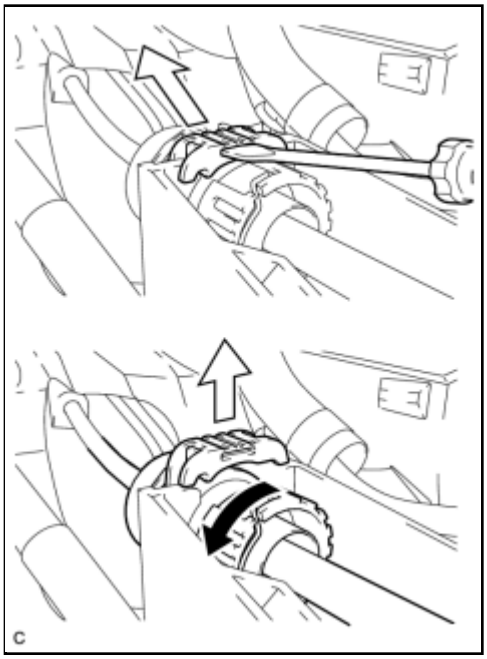

(e) Rotate the nut counterclockwise approximately 180°, and while holding the nut in place, disconnect the transmission control cable from the shift lever retainer.

NOTICE:

Do not over-rotate the nut as it will come off the internal spring and the transmission control cable will not be reusable.

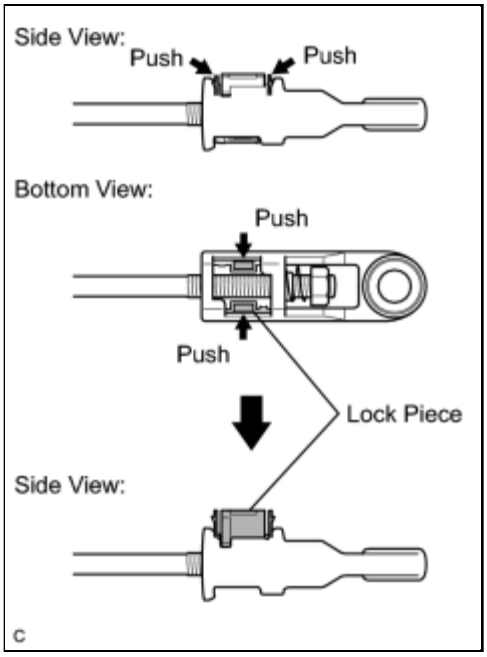

(f) Push the two claws together at the top of the transmission control cable lock piece. While holding the two claws together, push the two lugs on the bottom of the lock piece toward each other and upward to pull out the lock piece.

(g) Turn the nut of the transmission control cable 180° counterclockwise. While holding the nut in place, push in the stopper until the stopper clicks twice.

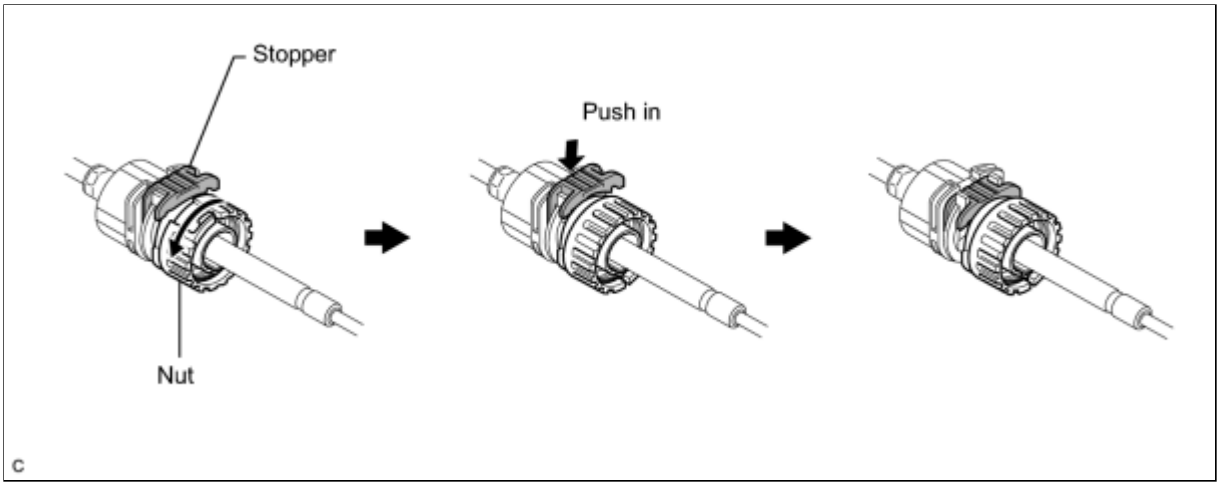

(h) Install the outer part of the transmission control cable to the shift lever retainer. Check that the spring is positioned at "A" and push in the stopper.

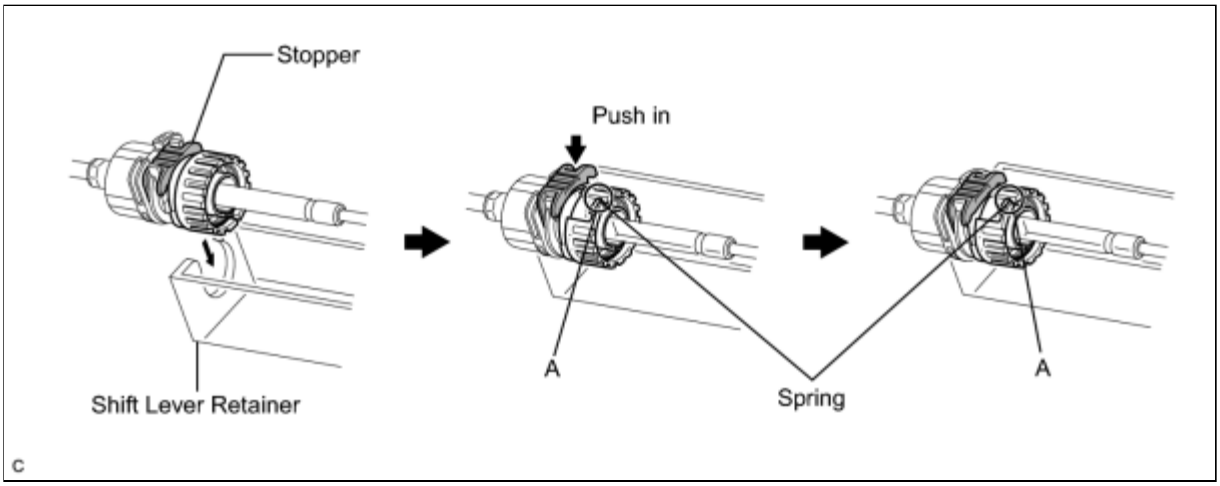

HINT:

If the stopper cannot be pushed in, slightly turn the nut clockwise and then push in the stopper again.

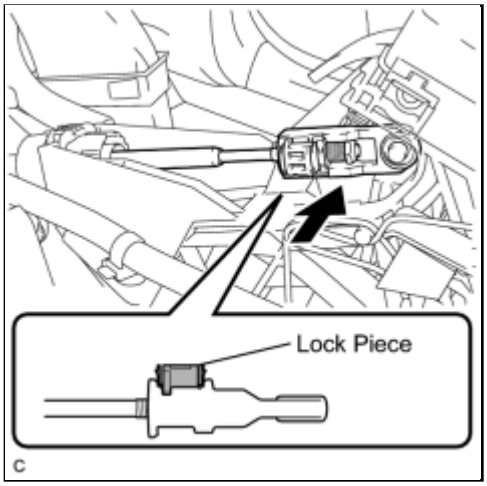

(i) Install the cable end to the shift lever assembly.

NOTICE:

- Check that the lock piece is pulled up.
- Install the cable end all the way to the base of the pin.

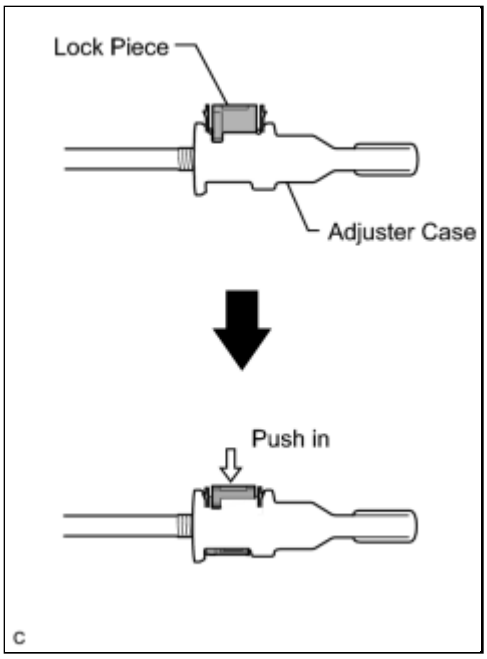

(j) Push the lock piece into the adjuster case.

NOTICE:

Securely push in the lock piece until it locks.

(k) After adjusting the shift lever position, check the operation and function of the shift lever. If there is a problem, adjust the position again.

(l) Install the console box assembly INFO .

Last Modified: 3-10-2010	6.4 A	**From:** 200901
Model Year: 2010	**Model:** Corolla	**Doc ID:** RM0000020UA01GX
Title: U250E AUTOMATIC TRANSMISSION / TRANSAXLE: TRANSMISSION CONTROL CABLE: INSTALLATION (2010 Corolla)		

INSTALLATION

1. INSTALL TRANSMISSION CONTROL CABLE ASSEMBLY

NOTICE:

Before installing the transmission control cable assembly, check that the park/neutral position switch and the shift lever are in N.

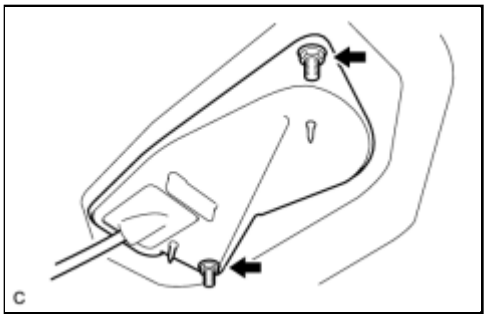

(a) Put the transmission control cable into the cabin and connect the transmission control cable with the 2 nuts.

Torque: 5.0 N·m (51 kgf·cm, 44in·lbf)

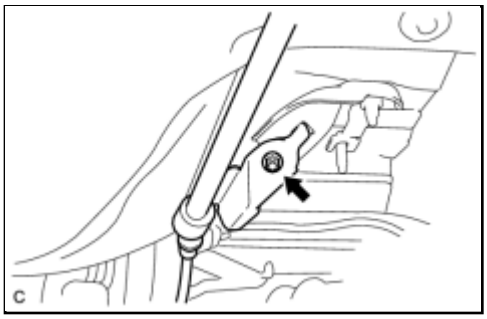

(b) Install the transmission control cable bracket to the rear engine mounting insulator with the nut.

Torque: 5.0 N·m (51 kgf·cm, 44in·lbf)

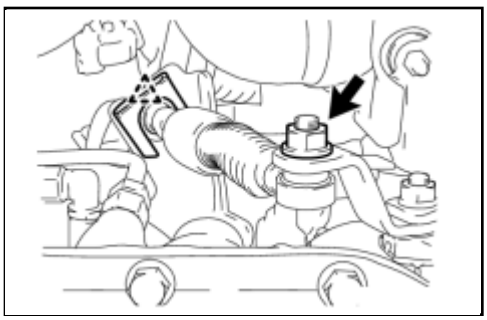

(c) Connect the transmission control cable to the transmission control cable bracket with a new clip.

(d) Connect the transmission control cable to the control shaft lever with the nut.

Torque: 12 N·m (122 kgf·cm, 9ft·lbf)

(e) Turn the nut of the transmission control cable 180° counterclockwise. While holding the nut in place, push in the stopper until the stopper clicks twice.

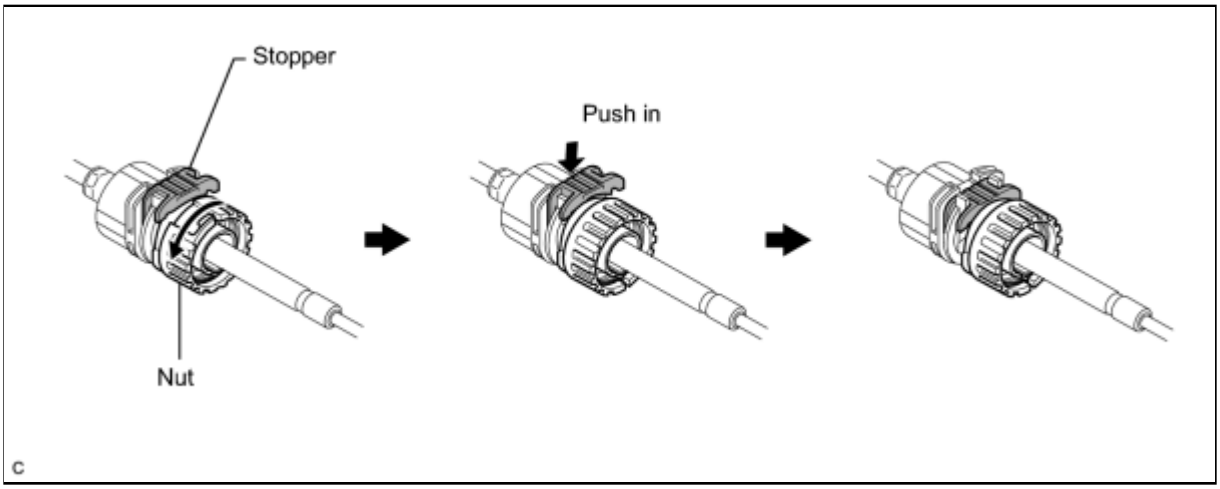

(f) Install the outer part of the transmission control cable to the shift lever retainer. Check that the spring is positioned at "A" and push in the stopper.

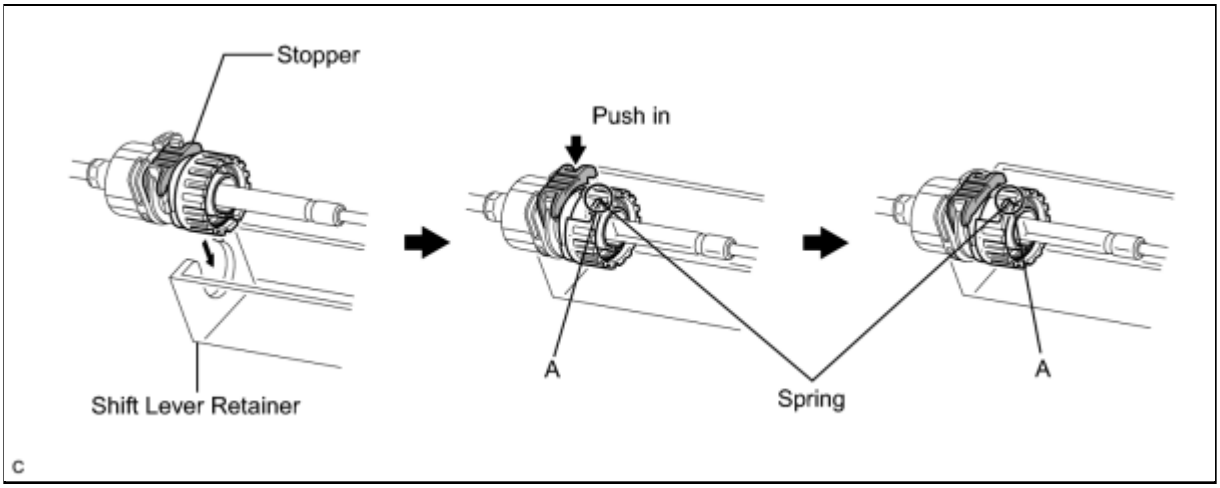

HINT:

If the stopper cannot be pushed in, slightly turn the nut clockwise and then push in the stopper again.

(g) Install the cable end to the shift lever assembly.

NOTICE:

- Check that the lock piece is pulled up.
- Install the cable end all the way to the base of the pin.

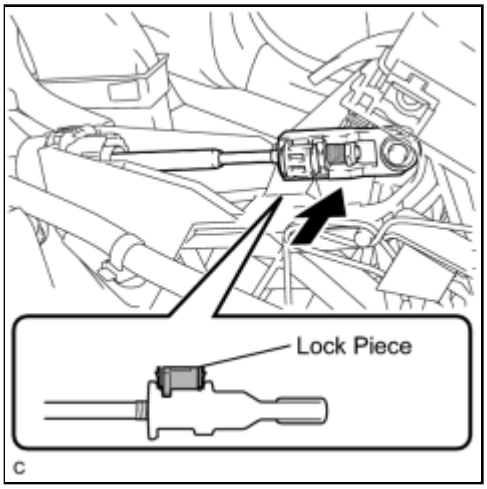

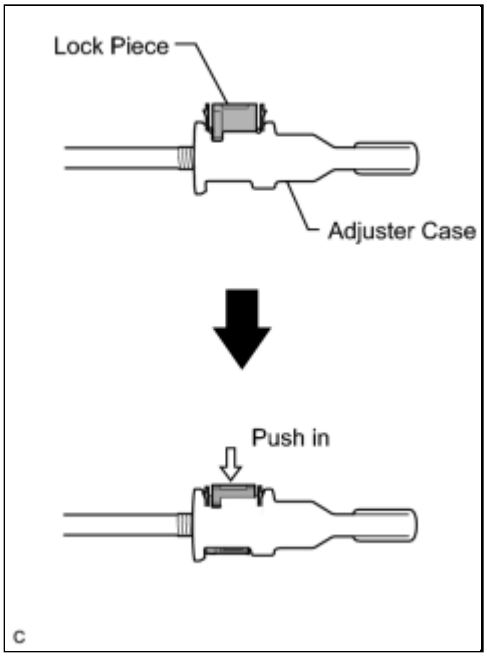

(h) Push the lock piece into the adjuster case.

NOTICE:

Securely push in the lock piece until it locks.

2. INSTALL FRONT NO. 1 FLOOR HEAT INSULATOR

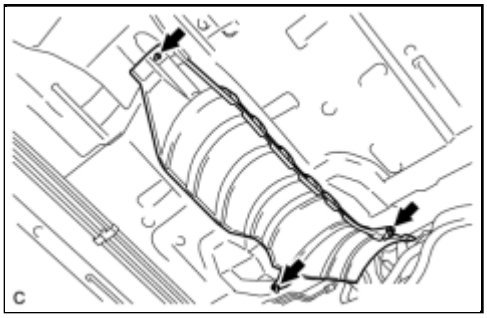

(a) Install the front No. 1 floor heat insulator with the 3 nuts.

Torque: 5.5 N·m (56 kgf·cm, 49in·lbf)

3. INSTALL CENTER EXHAUST PIPE ASSEMBLY INFO

4. INSTALL ENGINE UNDER COVER LH

5. INSTALL AIR CLEANER CASE INFO

6. INSTALL AIR CLEANER CAP SUB-ASSEMBLY INFO

7. INSTALL NO. 1 ENGINE COVER SUB-ASSEMBLY INFO

8. INSTALL CONSOLE BOX ASSEMBLY INFO

9. INSTALL CONSOLE BOX CARPET INFO

10. INSTALL UPPER CONSOLE PANEL SUB-ASSEMBLY INFO

11. INSTALL FRONT NO. 1 CONSOLE BOX INSERT INFO

12. INSTALL FRONT NO. 2 CONSOLE BOX INSERT INFO

13. INSTALL INSTRUMENT PANEL BOX ASSEMBLY INFO

14. INSTALL CENTER NO. 1 INSTRUMENT CLUSTER FINISH PANEL ASSEMBLY INFO

15. INSTALL SHIFT LEVER KNOB SUB-ASSEMBLY INFO

16. INSTALL LOWER INSTRUMENT PANEL FINISH PANEL LH INFO

17. INSTALL LOWER INSTRUMENT PANEL FINISH PANEL RH INFO

18. INSPECT SHIFT LEVER POSITION INFO

19. ADJUST SHIFT LEVER POSITION INFO



Last Modified: 3-10-2010	6.4 K	**From:** 200901
Model Year: 2010	**Model:** Corolla	**Doc ID:** RM0000020UB01EX
Title: U341E AUTOMATIC TRANSMISSION / TRANSAXLE: TRANSMISSION CONTROL CABLE: COMPONENTS (2010 Corolla)		

COMPONENTS

ILLUSTRATION

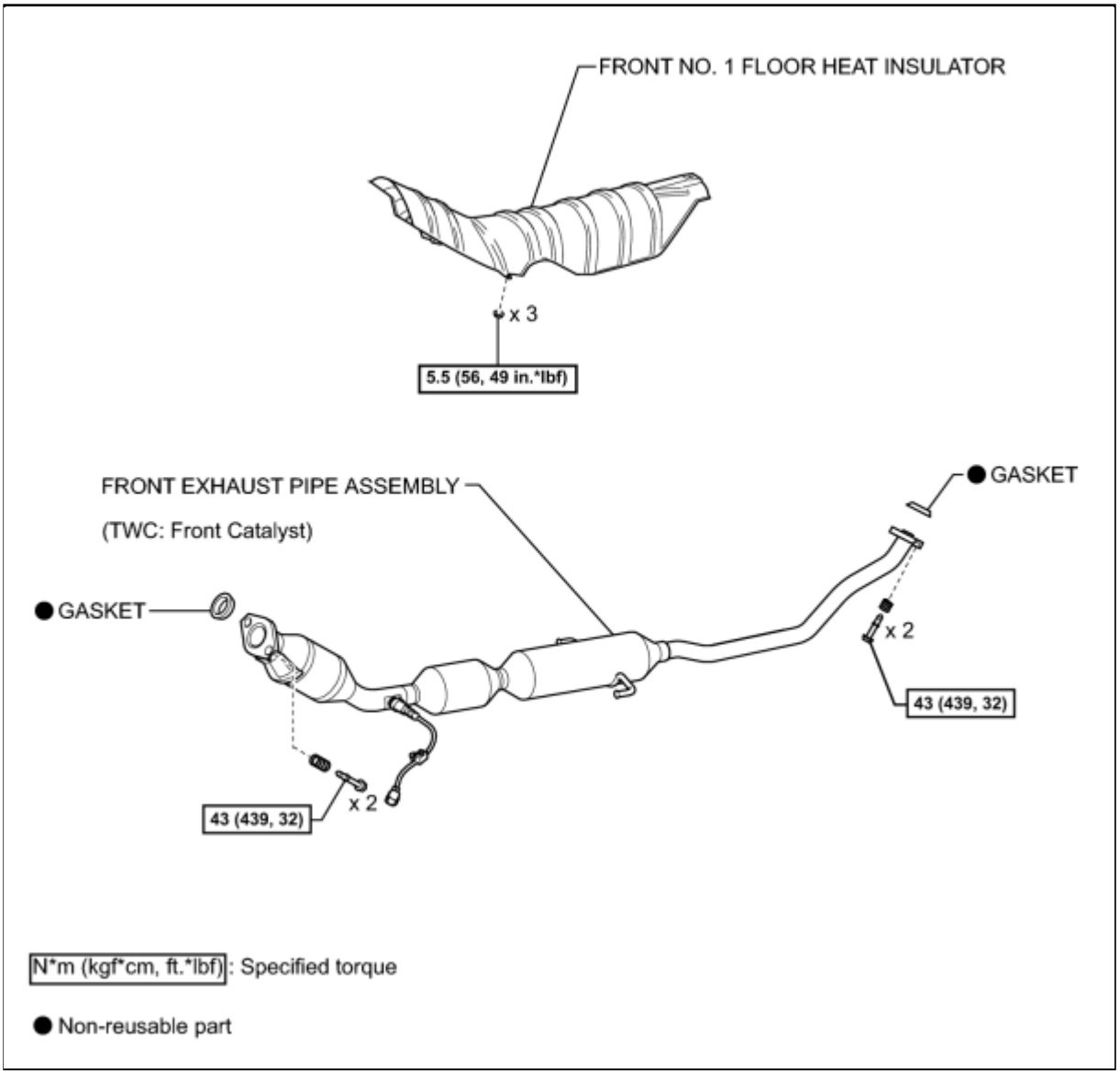

ILLUSTRATION

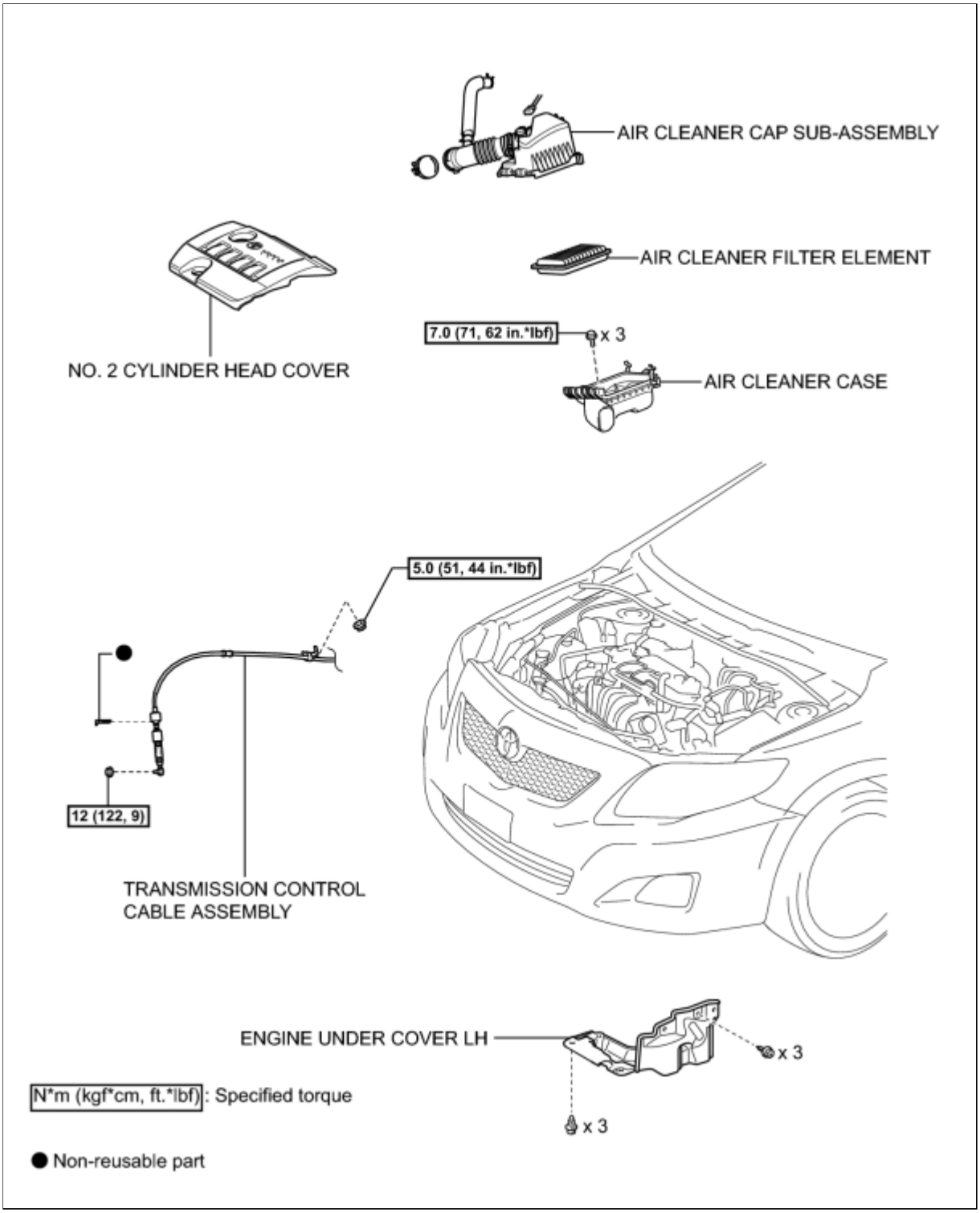

ILLUSTRATION

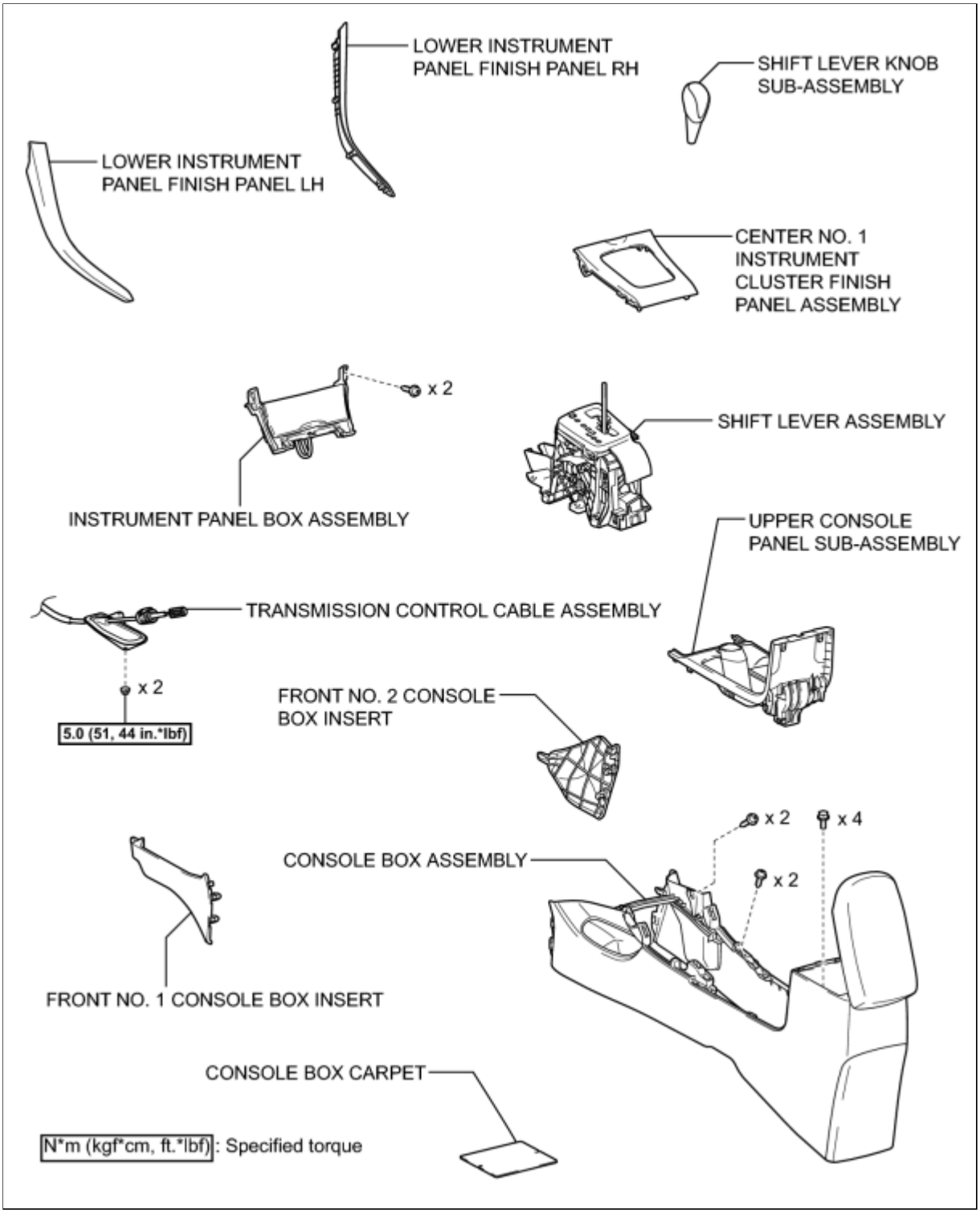
LOWER INSTRUMENT PANEL FINISH PANEL RH
SHIFT LEVER KNOB SUB-ASSEMBLY
LOWER INSTRUMENT PANEL FINISH PANEL LH
CENTER NO. 1 INSTRUMENT CLUSTER FINISH PANEL ASSEMBLY
x 2
SHIFT LEVER ASSEMBLY
INSTRUMENT PANEL BOX ASSEMBLY
UPPER CONSOLE PANEL SUB-ASSEMBLY
TRANSMISSION CONTROL CABLE ASSEMBLY
x 2
5.0 (51, 44 in.*lbf)
FRONT NO. 2 CONSOLE BOX INSERT
x 2
x 4
CONSOLE BOX ASSEMBLY
x 2
FRONT NO. 1 CONSOLE BOX INSERT
CONSOLE BOX CARPET
N*m (kgf*cm, ft.*lbf): Specified torque

Last Modified: 3-10-2010	6.4 A	**From:** 200901
Model Year: 2010	**Model:** Corolla	**Doc ID:** RM0000020UC01FX
Title: U341E AUTOMATIC TRANSMISSION / TRANSAXLE: TRANSMISSION CONTROL CABLE: REMOVAL (2010 Corolla)		

REMOVAL

1. REMOVE LOWER INSTRUMENT PANEL FINISH PANEL LH INFO

2. REMOVE LOWER INSTRUMENT PANEL FINISH PANEL RH INFO

3. REMOVE SHIFT LEVER KNOB SUB-ASSEMBLY INFO

4. REMOVE CENTER NO. 1 INSTRUMENT CLUSTER FINISH PANEL ASSEMBLY INFO

5. REMOVE INSTRUMENT PANEL BOX ASSEMBLY INFO

6. REMOVE FRONT NO. 1 CONSOLE BOX INSERT INFO

7. REMOVE FRONT NO. 2 CONSOLE BOX INSERT INFO

8. REMOVE UPPER CONSOLE PANEL SUB-ASSEMBLY INFO

9. REMOVE CONSOLE BOX CARPET INFO

10. REMOVE CONSOLE BOX ASSEMBLY INFO

11. REMOVE NO. 2 CYLINDER HEAD COVER INFO

12. REMOVE AIR CLEANER CAP SUB-ASSEMBLY INFO

13. REMOVE AIR CLEANER CASE INFO

14. REMOVE ENGINE UNDER COVER LH

15. REMOVE FRONT EXHAUST PIPE ASSEMBLY INFO

16. REMOVE FRONT NO. 1 FLOOR HEAT INSULATOR

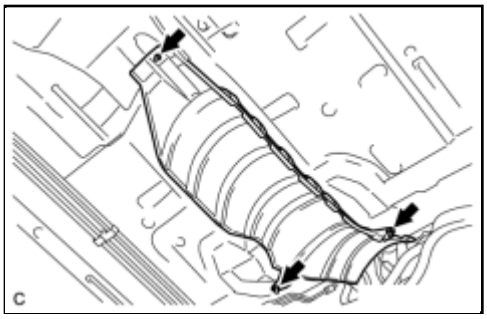

(a) Remove the 3 nuts and front No. 1 floor heat insulator.

17. REMOVE TRANSMISSION CONTROL CABLE ASSEMBLY

(a) Move the shift lever to N.

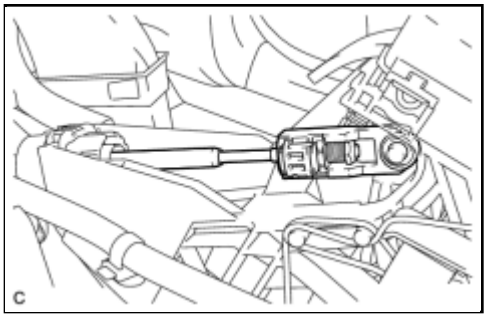

(b) Disconnect the end of the transmission control cable assembly from the shift lever assembly.

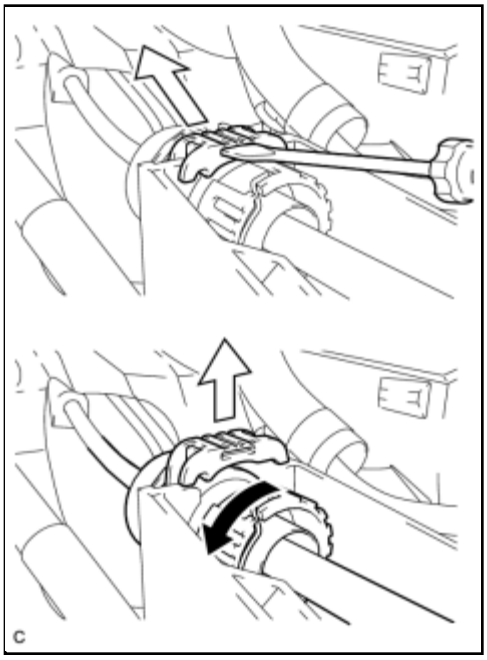

(c) Using a screwdriver, pull out the stopper of the transmission control cable.

NOTICE:

Do not remove the stopper. If the stopper is removed, reinstall it to its original position.

(d) Rotate the nut counterclockwise approximately 180°, and while holding the nut in place, disconnect the transmission control cable from the shift lever retainer.

NOTICE:

Do not over-rotate the nut as it will come off the internal spring and the transmission control cable will not be reusable.

(e) Remove the clip and disconnect the transmission control cable assembly from the control cable bracket.

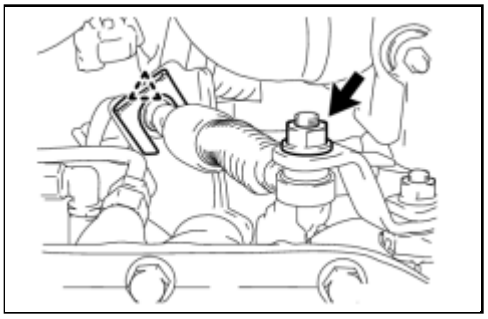

(f) Remove the nut and transmission control cable assembly from the control shaft lever.

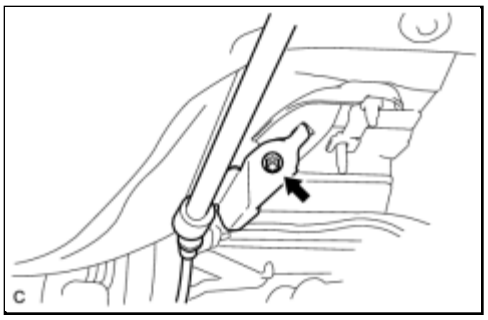

(g) Remove the nut and separate the transmission control cable assembly support from the rear engine mounting insulator.

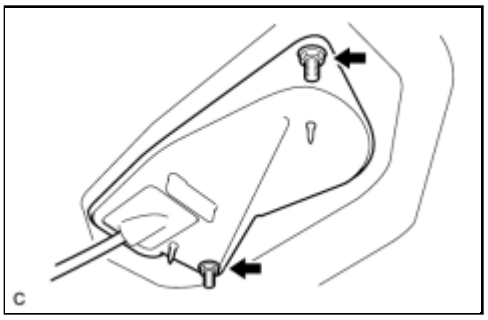

(h) Remove the 2 nuts and separate the transmission control cable assembly from the body.

(i) Pull out the transmission control cable assembly from the body.

Last Modified: 3-10-2010	6.4 N	**From:** 200901
Model Year: 2010	**Model:** Corolla	**Doc ID:** RM0000020U401UX
Title: U341E AUTOMATIC TRANSMISSION / TRANSAXLE: TRANSMISSION CONTROL CABLE: ADJUSTMENT (2010 Corolla)		

ADJUSTMENT

1. INSPECT SHIFT LEVER POSITION

(a) When moving the shift lever from P to R with the ignition switch ON and the brake pedal depressed, make sure that the shift lever moves smoothly and correctly into position.

(b) Start the engine and make sure that the vehicle moves forward when moving the shift lever from N to D and moves rearward when moving the shift lever to R. If the operation cannot be performed as specified, inspect the park/neutral position switch assembly and check the shift lever assembly installation condition.

2. ADJUST SHIFT LEVER POSITION

(a) Apply the parking brake and move the shift lever to N.

(b) Remove the console box assembly INFO .

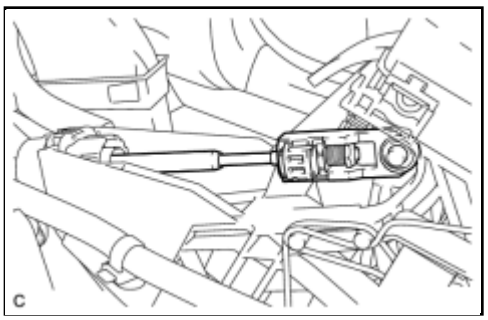

(c) Disconnect the end of the transmission control cable assembly from the shift lever assembly.

(d) Using a screwdriver, pull out the stopper of the transmission control cable.

NOTICE:

Do not remove the stopper. If the stopper is removed, reinstall it to its original position.

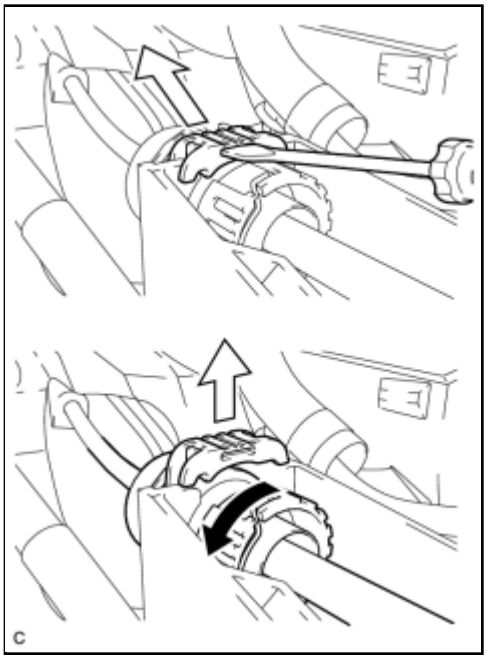

(e) Rotate the nut counterclockwise approximately 180°, and while holding the nut in place, disconnect the transmission control cable from the shift lever retainer.

NOTICE:

Do not over-rotate the nut as it will come off the internal spring and the transmission control cable will not be reusable.

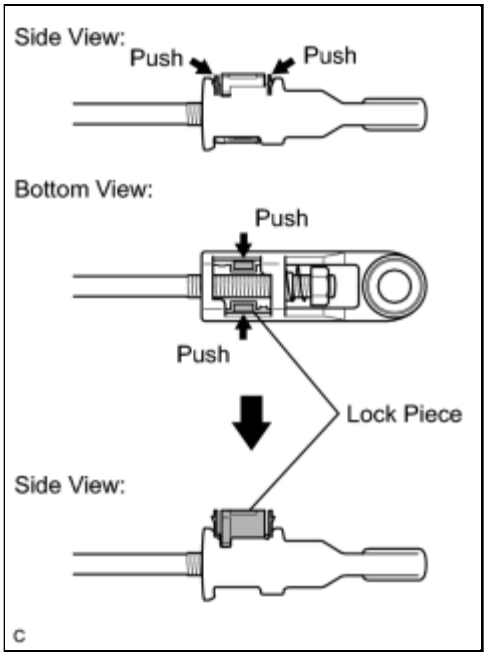

(f) Push the 2 claws together at the top of the transmission control cable lock piece. While holding the 2 claws together, push the 2 lugs on the bottom of the lock piece toward each other and upward to pull out the lock piece.

(g) Turn the nut of the transmission control cable 180° counterclockwise. While holding the nut in place, push in the stopper until the stopper clicks twice.

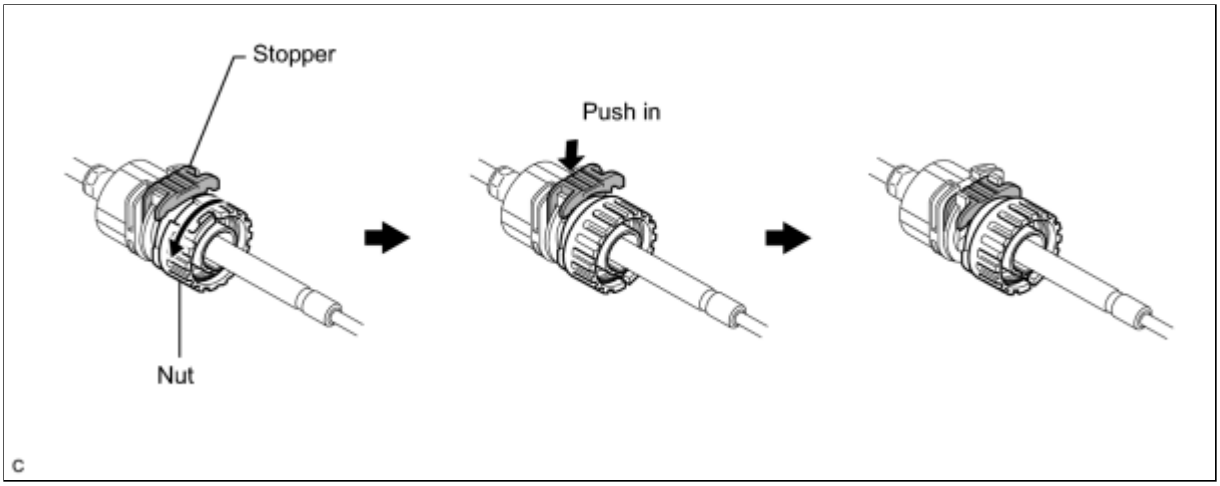

(h) Install the outer part of the transmission control cable to the shift lever retainer. Check that the spring is positioned at "A" and push in the stopper.

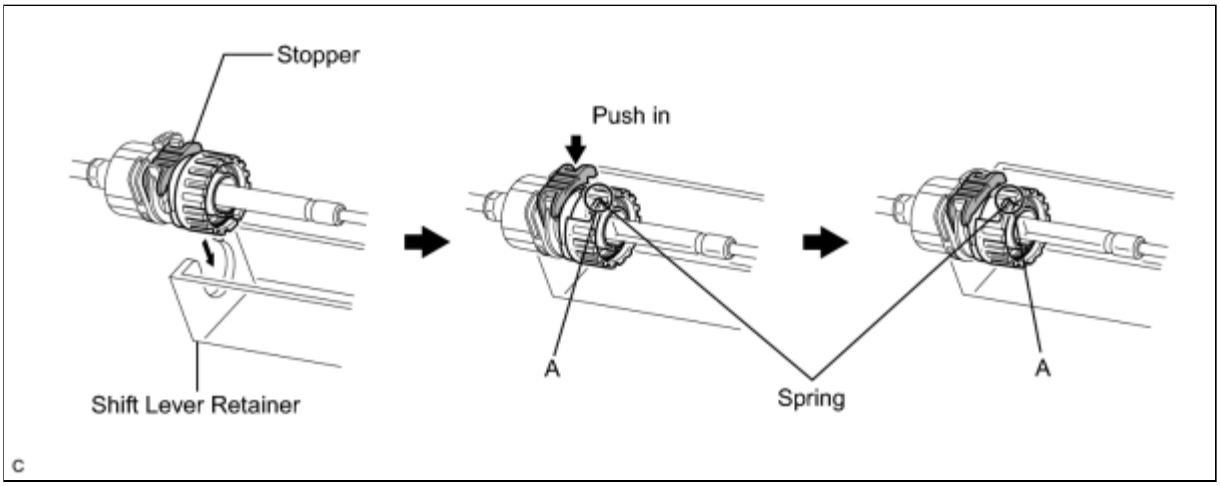

HINT:

If the stopper cannot be pushed in, slightly turn the nut clockwise and then push in the stopper again.

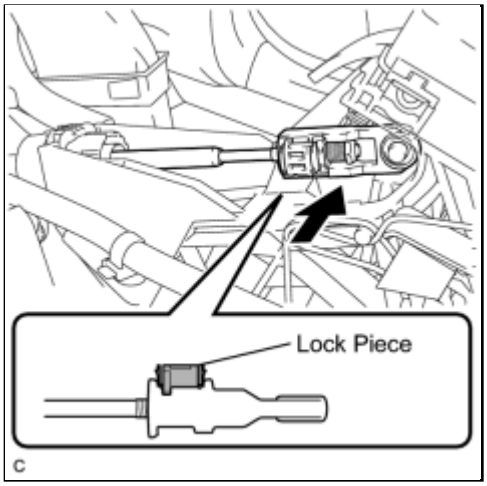

(i) Install the cable end to the shift lever assembly.

NOTICE:

- Check that the lock piece is pulled up.
- Install the cable end all the way to the base of the pin.

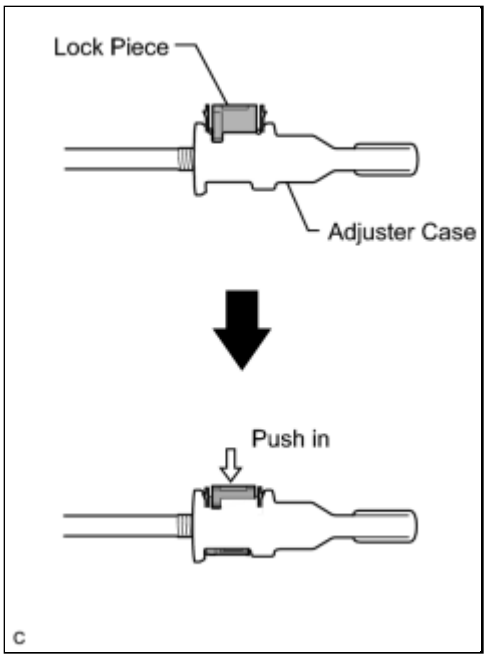

(j) Push the lock piece into the adjuster case.

NOTICE:

Securely push in the lock piece until it locks.

(k) After adjusting the shift lever position, check the operation and function of the shift lever. If there is a problem, adjust the position again.

(l) Install the console box assembly INFO .

Last Modified: 3-10-2010	6.4 A	**From:** 200901
Model Year: 2010	**Model:** Corolla	**Doc ID:** RM0000020UA01FX
Title: U341E AUTOMATIC TRANSMISSION / TRANSAXLE: TRANSMISSION CONTROL CABLE: INSTALLATION (2010 Corolla)		

INSTALLATION

1. INSTALL TRANSMISSION CONTROL CABLE ASSEMBLY

NOTICE:

Before installing the transmission control cable assembly, check that the park/neutral position switch and the shift lever are in N.

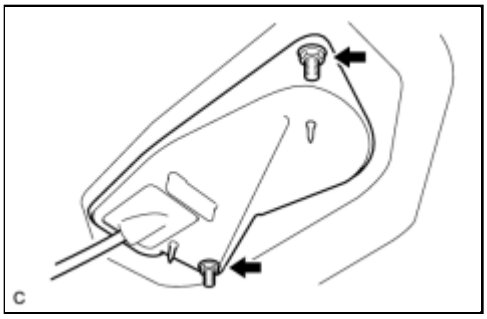

(a) Put the transmission control cable into the cabin and connect the transmission control cable with the 2 nuts.

Torque: 5.0 N·m (51 kgf·cm, 44in·lbf)

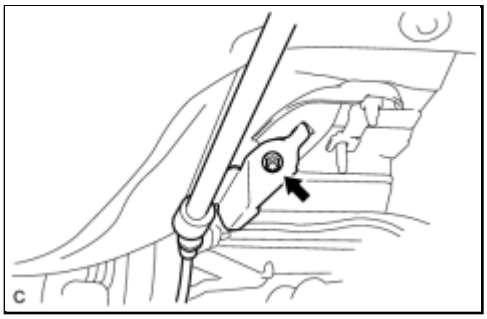

(b) Install the transmission control cable bracket to the rear engine mounting insulator with the nut.

Torque: 5.0 N·m (51 kgf·cm, 44in·lbf)

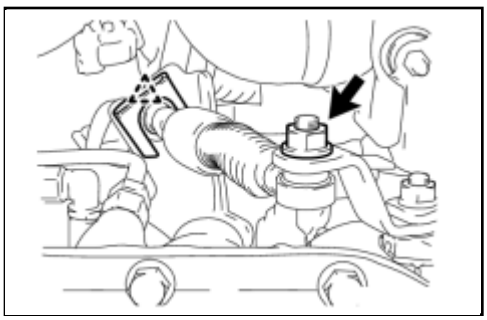

(c) Connect the transmission control cable to the transmission control cable bracket with a new clip.

(d) Connect the transmission control cable to the control shaft lever with the nut.

Torque: 12 N·m (122 kgf·cm, 9ft·lbf)

(e) Turn the nut of the transmission control cable 180° counterclockwise. While holding the nut in place, push in the stopper until the stopper clicks twice.

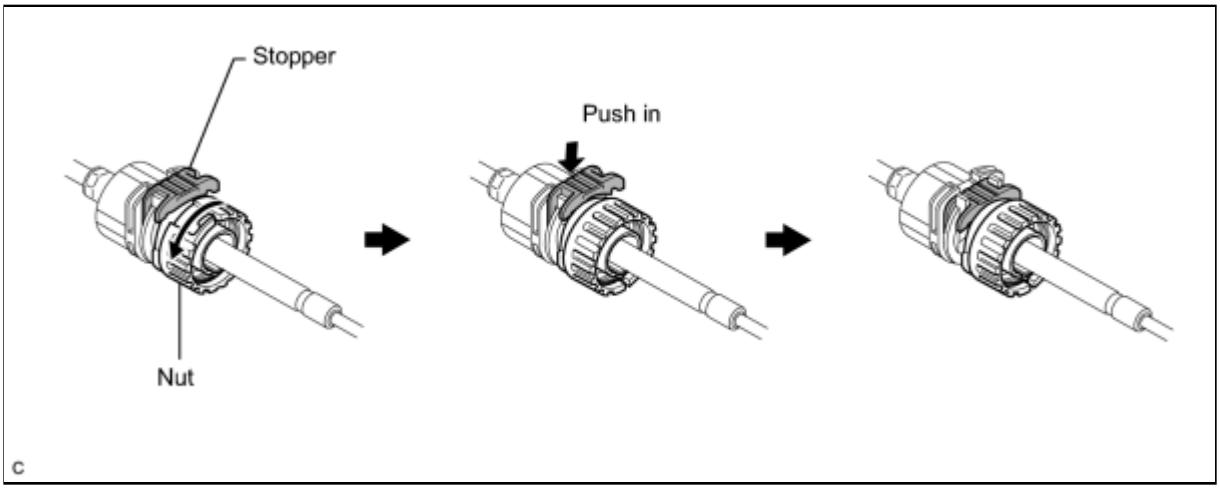

(f) Install the outer part of the transmission control cable to the shift lever retainer. Check that the spring is positioned at "A" and push in the stopper.

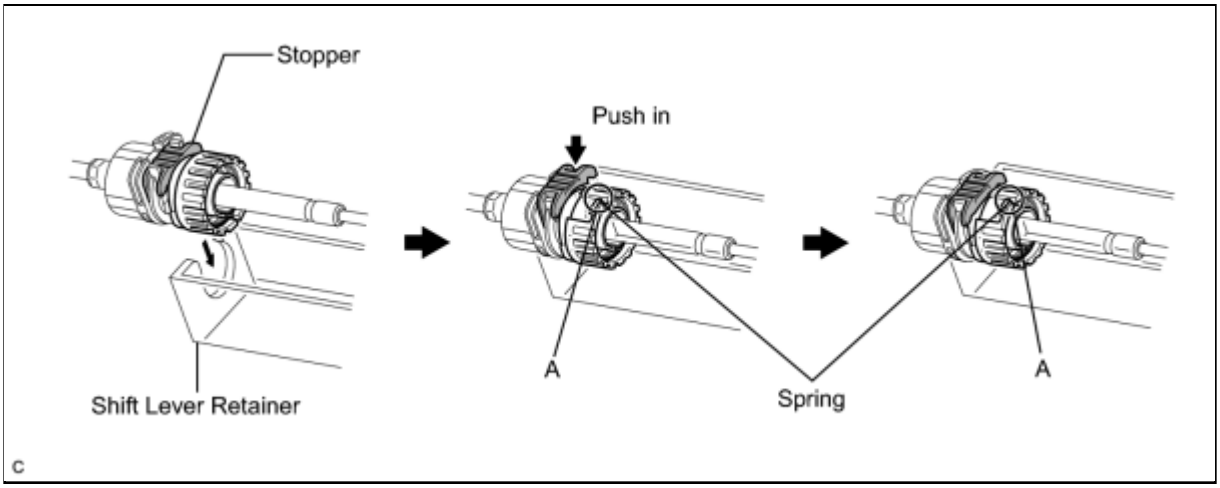

HINT:

If the stopper cannot be pushed in, slightly turn the nut clockwise and then push in the stopper again.

(g) Install the cable end to the shift lever assembly.

NOTICE:

- Check that the lock piece is pulled up.
- Install the cable end all the way to the base of the pin.

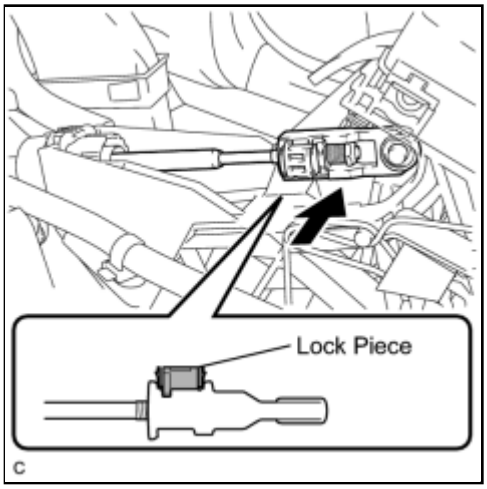

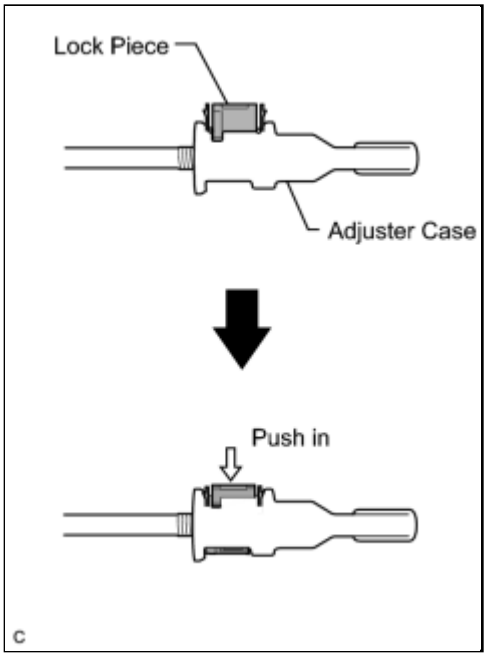

(h) Push the lock piece into the adjuster case.

NOTICE:

Securely push in the lock piece until it locks.

2. INSTALL FRONT NO. 1 FLOOR HEAT INSULATOR

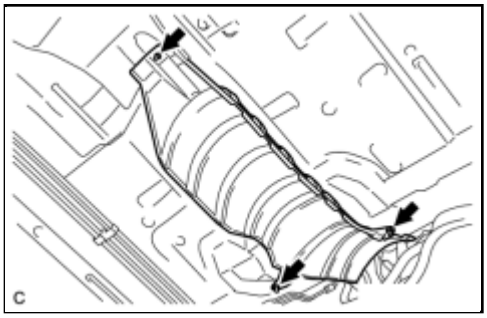

(a) Install the front No. 1 floor heat insulator with the 3 nuts.

Torque: 5.5 N·m (56 kgf·cm, 49in·lbf)

3. INSTALL FRONT EXHAUST PIPE ASSEMBLY INFO

4. INSTALL ENGINE UNDER COVER LH

5. INSTALL AIR CLEANER CASE INFO

6. INSTALL AIR CLEANER CAP SUB-ASSEMBLY INFO

7. INSTALL NO. 2 CYLINDER HEAD COVER INFO

8. INSTALL CONSOLE BOX ASSEMBLY INFO

9. INSTALL CONSOLE BOX CARPET INFO

10. INSTALL UPPER CONSOLE PANEL SUB-ASSEMBLY INFO

11. INSTALL FRONT NO. 1 CONSOLE BOX INSERT INFO

12. INSTALL FRONT NO. 2 CONSOLE BOX INSERT INFO

13. INSTALL INSTRUMENT PANEL BOX ASSEMBLY INFO

14. INSTALL CENTER NO. 1 INSTRUMENT CLUSTER FINISH PANEL ASSEMBLY INFO

15. INSTALL SHIFT LEVER KNOB SUB-ASSEMBLY INFO

16. INSTALL LOWER INSTRUMENT PANEL FINISH PANEL LH INFO

17. INSTALL LOWER INSTRUMENT PANEL FINISH PANEL RH INFO

18. INSPECT SHIFT LEVER POSITION INFO

19. ADJUST SHIFT LEVER POSITION INFO

Last Modified: 3-10-2010	6.4 K	**From:** 200901
Model Year: 2010	**Model:** Corolla	**Doc ID:** RM000001CUK00KX
Title: U250E AUTOMATIC TRANSMISSION / TRANSAXLE: TRANSMISSION WIRE: COMPONENTS (2010 Corolla)		

COMPONENTS

ILLUSTRATION

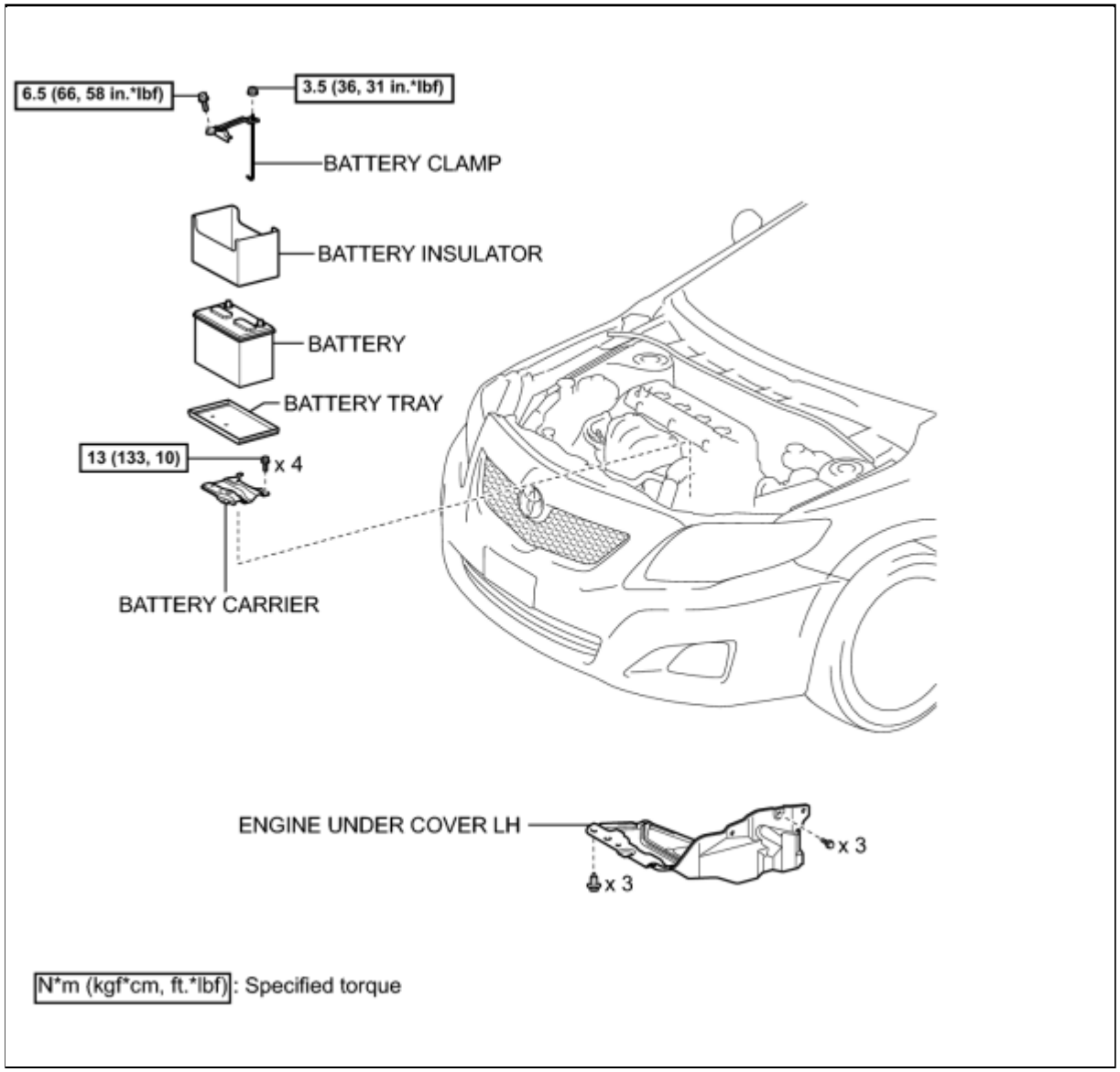

ILLUSTRATION

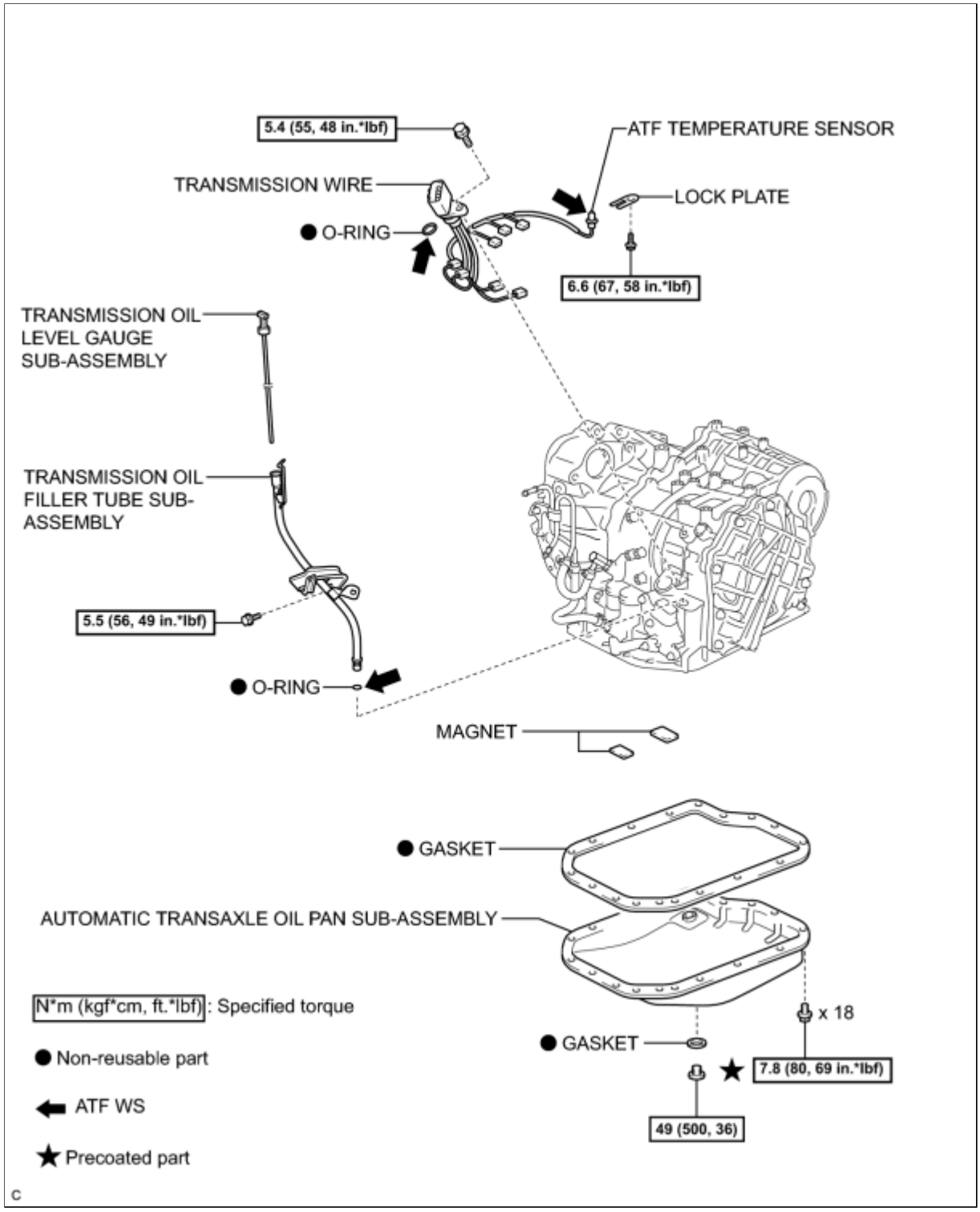
5.4 (55, 48 in.*lbf)
ATF TEMPERATURE SENSOR
TRANSMISSION WIRE
LOCK PLATE
O-RING
6.6 (67, 58 in.*lbf)
TRANSMISSION OIL LEVEL GAUGE SUB-ASSEMBLY
TRANSMISSION OIL FILLER TUBE SUB-ASSEMBLY
5.5 (56, 49 in.*lbf)
O-RING
MAGNET
GASKET
AUTOMATIC TRANSAXLE OIL PAN SUB-ASSEMBLY
x 18
GASKET
7.8 (80, 69 in.*lbf)
49 (500, 36)
N*m (kgf*cm, ft.*lbf): Specified torque
Non-reusable part
ATF WS
Precoated part
C

Last Modified: 3-10-2010	6.4 A	**From:** 200901
Model Year: 2010	**Model:** Corolla	**Doc ID:** RM000000YWZ00YX
Title: U250E AUTOMATIC TRANSMISSION / TRANSAXLE: TRANSMISSION WIRE: REMOVAL (2010 Corolla)		

REMOVAL

1. DISCONNECT CABLE FROM NEGATIVE BATTERY TERMINAL

NOTICE:

When disconnecting the cable, some systems need to be initialized after the cable is reconnected INFO **.**

2. DRAIN AUTOMATIC TRANSAXLE FLUID

(a) Remove the drain plug and gasket to drain the ATF.

(b) Install a new gasket and the drain plug.

Torque: 49 N·m (500 kgf·cm, 36ft·lbf)

3. REMOVE BATTERY INFO

4. REMOVE BATTERY CARRIER INFO

5. REMOVE TRANSMISSION OIL FILLER TUBE SUB-ASSEMBLY INFO

6. REMOVE ENGINE UNDER COVER LH

7. REMOVE AUTOMATIC TRANSAXLE OIL PAN SUB-ASSEMBLY

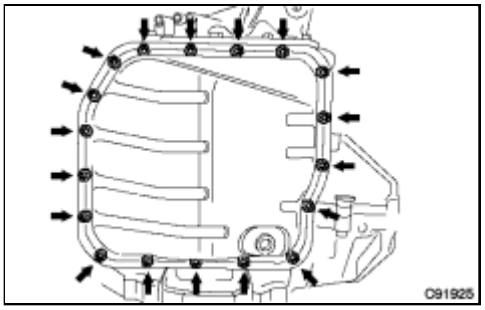

(a) Remove the 18 bolts, oil pan and gasket.

NOTICE:

Some fluid will remain in the oil pan. Remove all the pan bolts, and carefully remove the oil pan assembly.

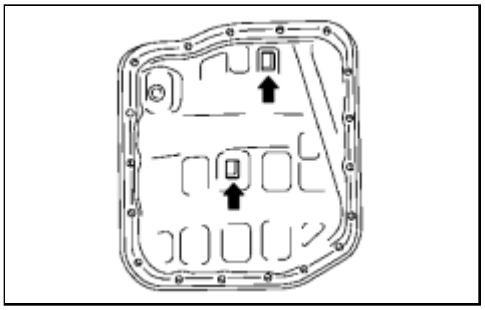

(b) Remove the 2 magnets from the oil pan.

(c) Examine particles in the pan.

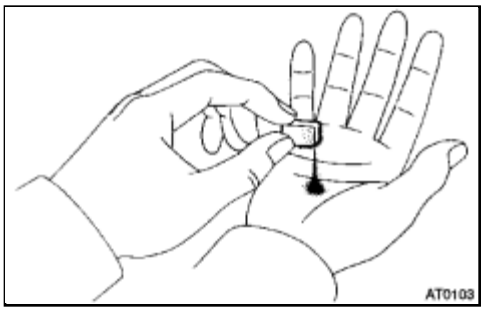

(1) Collect any steel chips with the removed magnets. Look carefully at the chips and particles in the pan and on the magnets to see the type of wear which might be found in the transaxle.

Result:

Steel (magnetic)

bearing, gear and plate wear

Brass (non-magnetic)

bushing wear

8. DISCONNECT TRANSMISSION WIRE

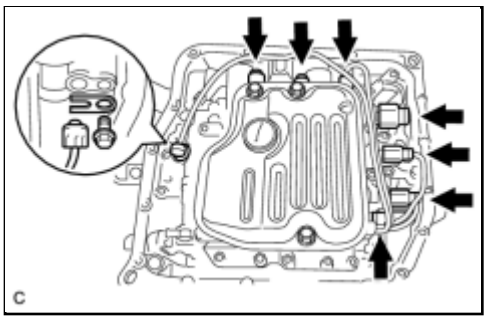

(a) Disconnect the 7 shift solenoid valve connectors.

(b) Remove the bolt and lock plate to disconnect the ATF temperature sensor.

9. REMOVE TRANSMISSION WIRE

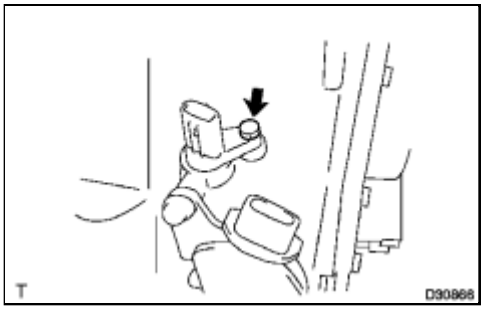

(a) Disconnect the transmission wire connector.

(b) Remove the bolt and transmission wire.

(c) Remove the O-ring from the transmission wire.

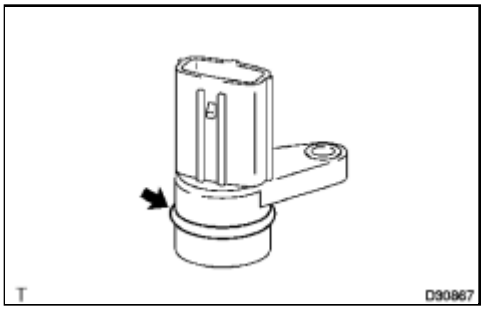
T
D90867

Last Modified: 3-10-2010	6.4 G	**From:** 200901
Model Year: 2010	**Model:** Corolla	**Doc ID:** RM000001STZ013X
Title: U250E AUTOMATIC TRANSMISSION / TRANSAXLE: TRANSMISSION WIRE: INSPECTION (2010 Corolla)		

INSPECTION

1. INSPECT TRANSMISSION WIRE

(a) Measure the resistance according to the value(s) in the table below.

Standard Resistance:

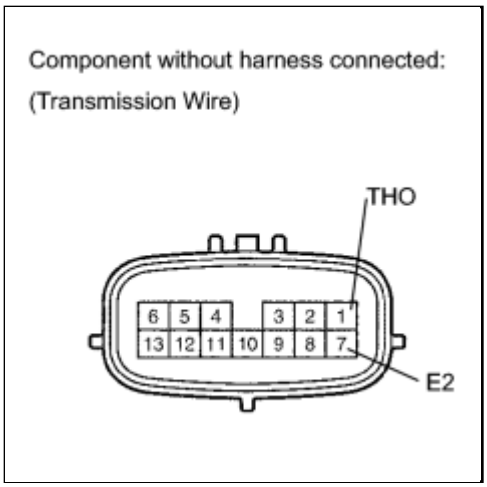

TESTER CONNECTION	ATF TEMPERATURE	SPECIFIED CONDITION
1 (THO) - 7 (E2)	10°C (50°F)	5 to 8 kΩ
1 (THO) - 7 (E2)	25°C (77°F)	2.5 to 4.5 kΩ
1 (THO) - 7 (E2)	110°C (230°F)	0.22 to 0.28 kΩ

HINT:

If the resistance is out of the specified range with the ATF temperature shown in the table above, the driveability of the vehicle may decrease.

If the resistance value is not as specified, replace the transmission wire.

Last Modified: 3-10-2010	6.4 A	**From:** 200901
Model Year: 2010	**Model:** Corolla	**Doc ID:** RM000000YWY00YX
Title: U250E AUTOMATIC TRANSMISSION / TRANSAXLE: TRANSMISSION WIRE: INSTALLATION (2010 Corolla)		

INSTALLATION

1. INSTALL TRANSMISSION WIRE

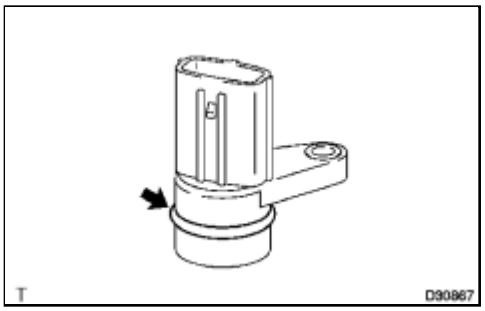

(a) Coat a new O-ring of the transmission wire connector with ATF WS and install it to the transmission wire.

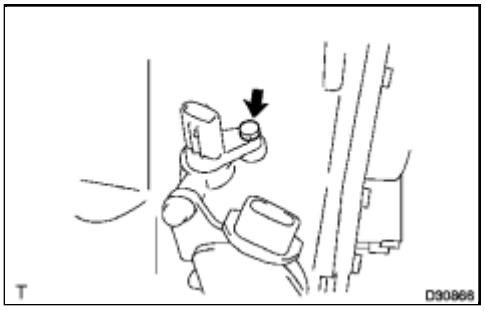

(b) Install the transmission wire with the bolt.

Torque: 5.4 N·m (55 kgf·cm, 48in·lbf)

(c) Connect the transmission wire connector.

2. CONNECT TRANSMISSION WIRE

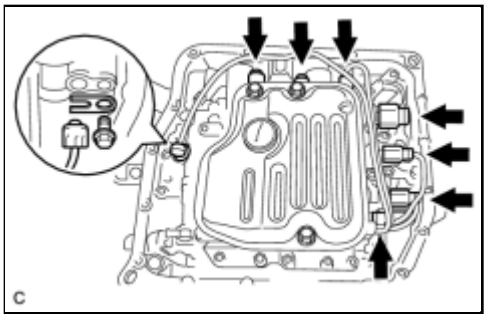

(a) Coat the O-ring of the ATF temperature sensor with ATF WS.

(b) Install the ATF temperature sensor with the lock plate and bolt.

Torque: 6.6 N·m (67 kgf·cm, 58in·lbf)

(c) Connect the 7 shift solenoid valve connectors.

3. INSTALL AUTOMATIC TRANSAXLE OIL PAN SUB-ASSEMBLY

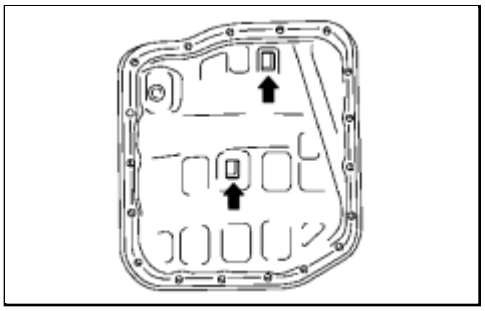

(a) Install the 2 magnets in the oil pan.

(b) Apply adhesive or equivalent to the 18 bolts.

Adhesive:
Toyota Genuine Adhesive 1344, Three Bond 1344 or equivalent

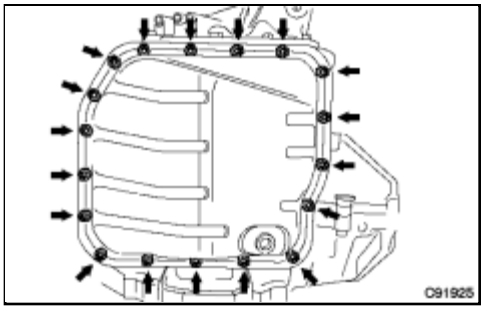

(c) Using a new gasket, install the oil pan to the transaxle case with the 18 bolts.

Torque: 7.8 N·m (80 kgf·cm, 69in·lbf)

NOTICE:

Since the bolts should be seal bolts, apply adhesive to the bolts and tighten them within 10 minutes of application.

4. INSTALL TRANSMISSION OIL FILLER TUBE SUB-ASSEMBLY INFO

5. INSTALL BATTERY CARRIER INFO

6. INSTALL BATTERY INFO

7. CONNECT CABLE TO NEGATIVE BATTERY TERMINAL

NOTICE:

When disconnecting the cable, some systems need to be initialized after the cable is reconnected INFO .

8. INSTALL ENGINE UNDER COVER LH

9. ADD AUTOMATIC TRANSAXLE FLUID

10. INSPECT TRANSAXLE FLUID LEVEL INFO

Last Modified: 3-10-2010	6.4 K	**From:** 200901
Model Year: 2010	**Model:** Corolla	**Doc ID:** RM00000191H010X
Title: U341E AUTOMATIC TRANSMISSION / TRANSAXLE: TRANSMISSION WIRE: COMPONENTS (2010 Corolla)		

COMPONENTS

ILLUSTRATION

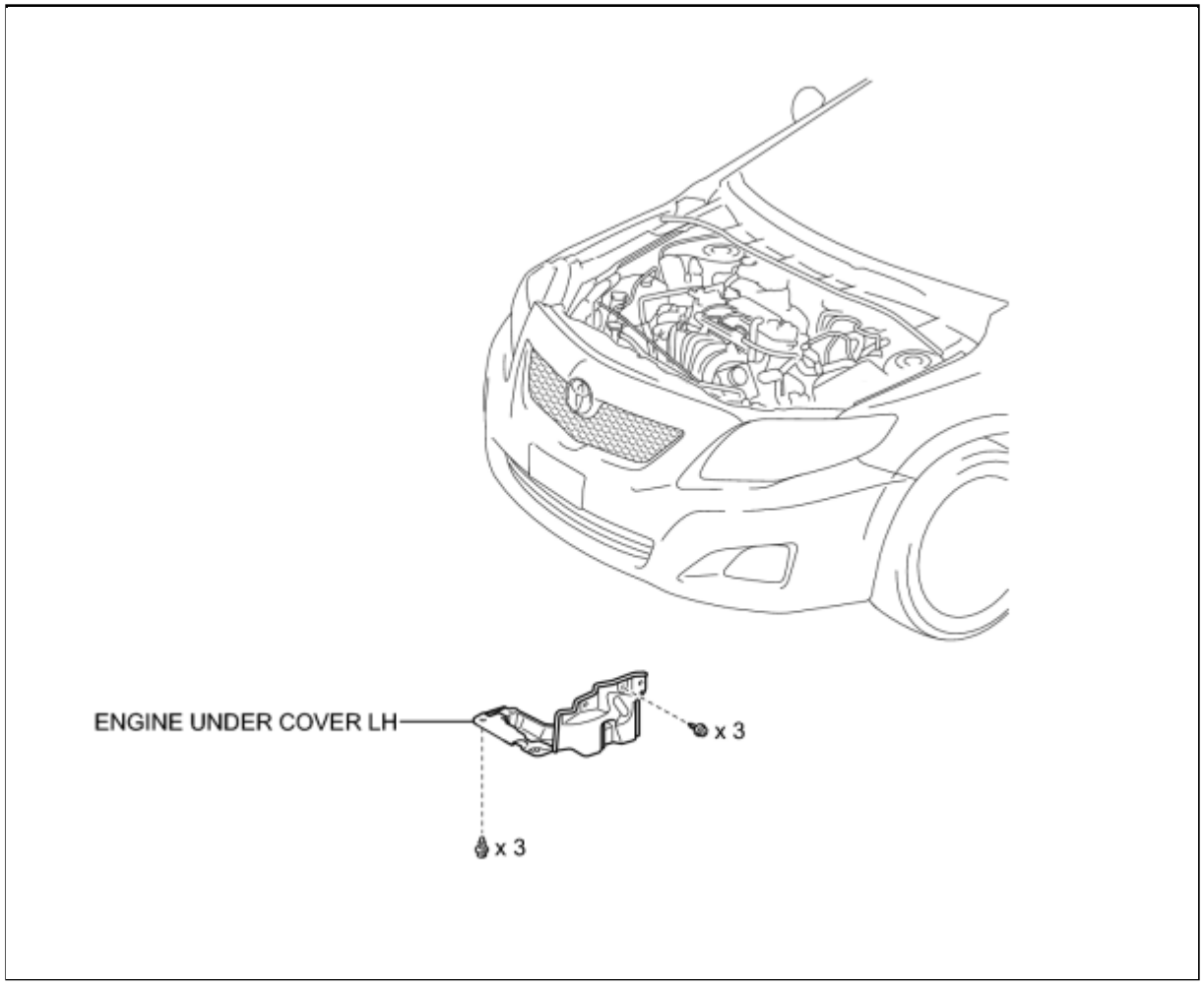

ILLUSTRATION

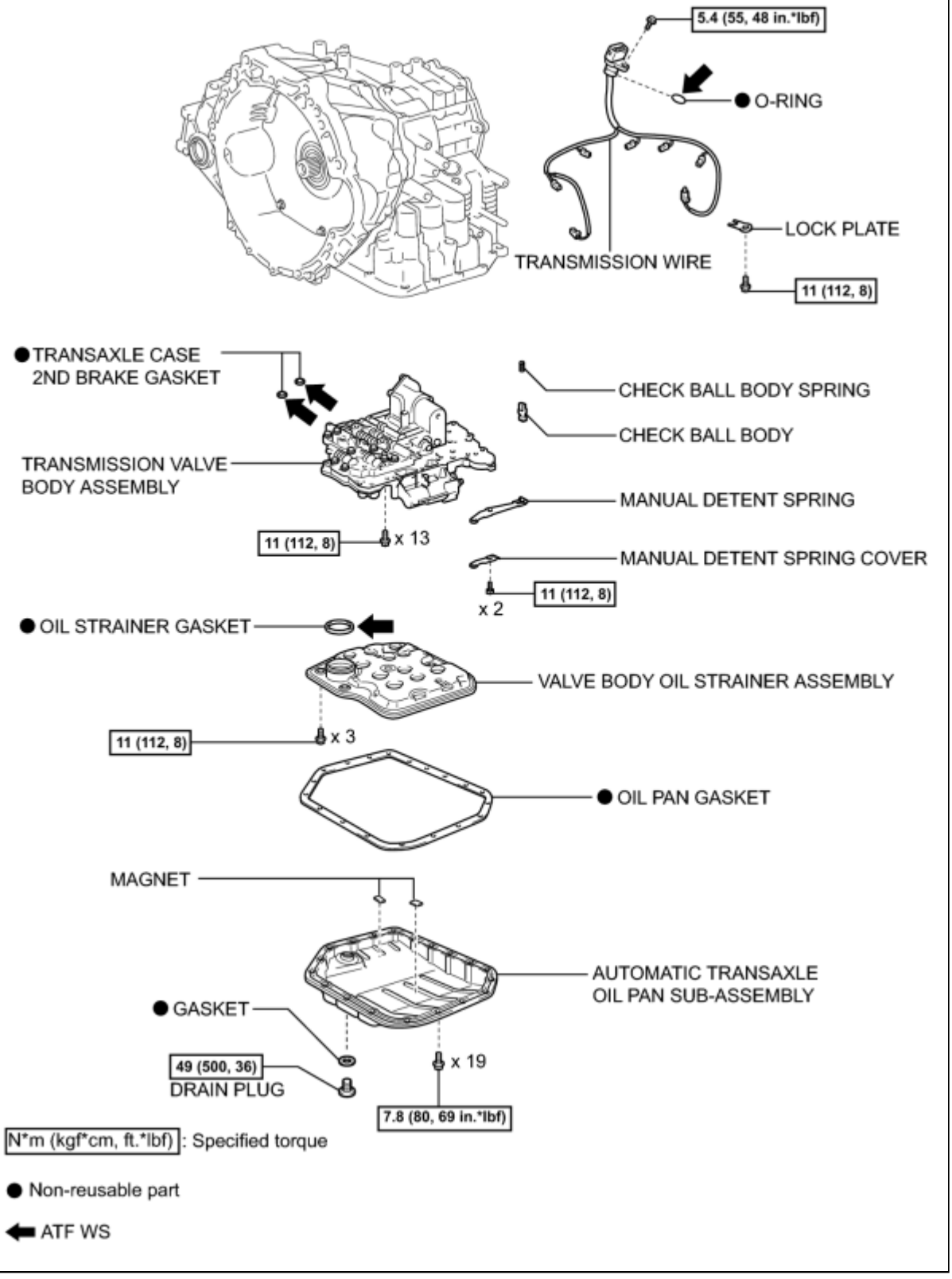
5.4 (55, 48 in.*lbf)
O-RING
LOCK PLATE
TRANSMISSION WIRE
11 (112, 8)
TRANSAXLE CASE
2ND BRAKE GASKET
CHECK BALL BODY SPRING
CHECK BALL BODY
TRANSMISSION VALVE
BODY ASSEMBLY
MANUAL DETENT SPRING
11 (112, 8)
x 13
MANUAL DETENT SPRING COVER
11 (112, 8)
x 2
OIL STRAINER GASKET
VALVE BODY OIL STRAINER ASSEMBLY
11 (112, 8)
x 3
OIL PAN GASKET
MAGNET
AUTOMATIC TRANSAXLE
OIL PAN SUB-ASSEMBLY
GASKET
49 (500, 36)
DRAIN PLUG
x 19
7.8 (80, 69 in.*lbf)
N*m (kgf*cm, ft.*lbf): Specified torque
Non-reusable part
ATF WS

Last Modified: 3-10-2010	6.4 A	**From:** 200901
Model Year: 2010	**Model:** Corolla	**Doc ID:** RM0000191I01FX
Title: U341E AUTOMATIC TRANSMISSION / TRANSAXLE: TRANSMISSION WIRE: REMOVAL (2010 Corolla)		

REMOVAL

1. REMOVE ENGINE UNDER COVER LH

2. DRAIN AUTOMATIC TRANSAXLE FLUID INFO

3. REMOVE AUTOMATIC TRANSAXLE OIL PAN SUB-ASSEMBLY INFO

4. REMOVE VALVE BODY OIL STRAINER ASSEMBLY INFO

5. REMOVE TRANSMISSION VALVE BODY ASSEMBLY INFO

6. REMOVE TRANSMISSION WIRE



(a) Remove the bolt and transmission wire from the transaxle case.

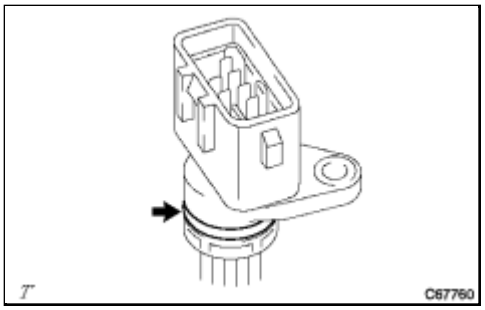

(b) Remove the O-ring from the transmission wire.

Last Modified: 3-10-2010	6.4 G	**From:** 200901
Model Year: 2010	**Model:** Corolla	**Doc ID:** RM00000191G01NX
Title: U341E AUTOMATIC TRANSMISSION / TRANSAXLE: TRANSMISSION WIRE: INSPECTION (2010 Corolla)		

INSPECTION

1. INSPECT TRANSMISSION WIRE

(a) Measure the resistance according to the value(s) in the table below.

Standard Resistance:

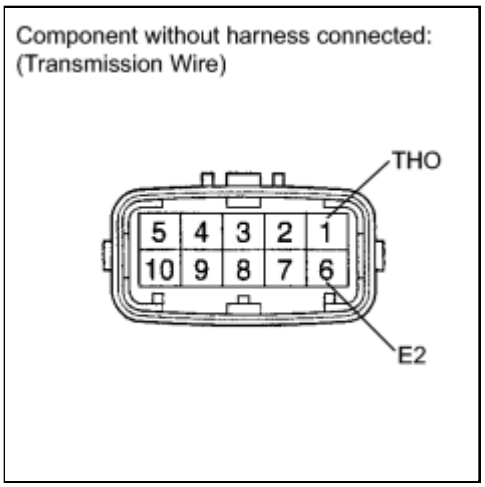

TESTER CONNECTION	ATF TEMPERATURE	SPECIFIED CONDITION
1 (THO) - 6 (E2)	10°C (50°F)	5 to 8 kΩ
1 (THO) - 6 (E2)	25°C (77°F)	2.5 to 4.5 kΩ
1 (THO) - 6 (E2)	110°C (230°F)	0.22 to 0.28 kΩ

HINT:

If the resistance is out of the specified range with the ATF temperature shown in the table above, the driveability of the vehicle may decrease.

If the resistance value is not as specified, replace the transmission wire.

Last Modified: 3-10-2010	6.4 K	**From:** 200901
Model Year: 2010	**Model:** Corolla	**Doc ID:** RM000001CUL00HX
Title: U250E AUTOMATIC TRANSMISSION / TRANSAXLE: VALVE BODY ASSEMBLY: COMPONENTS (2010 Corolla)		

COMPONENTS

ILLUSTRATION

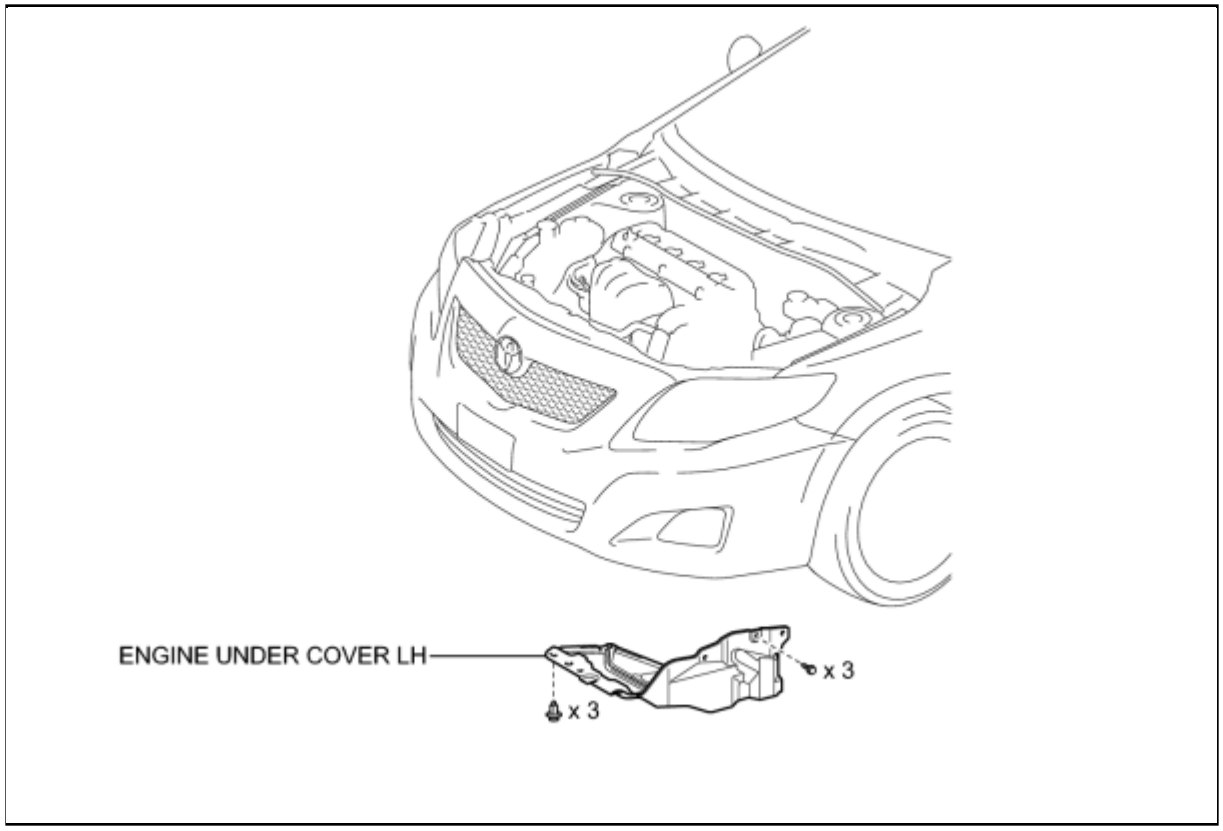

ILLUSTRATION

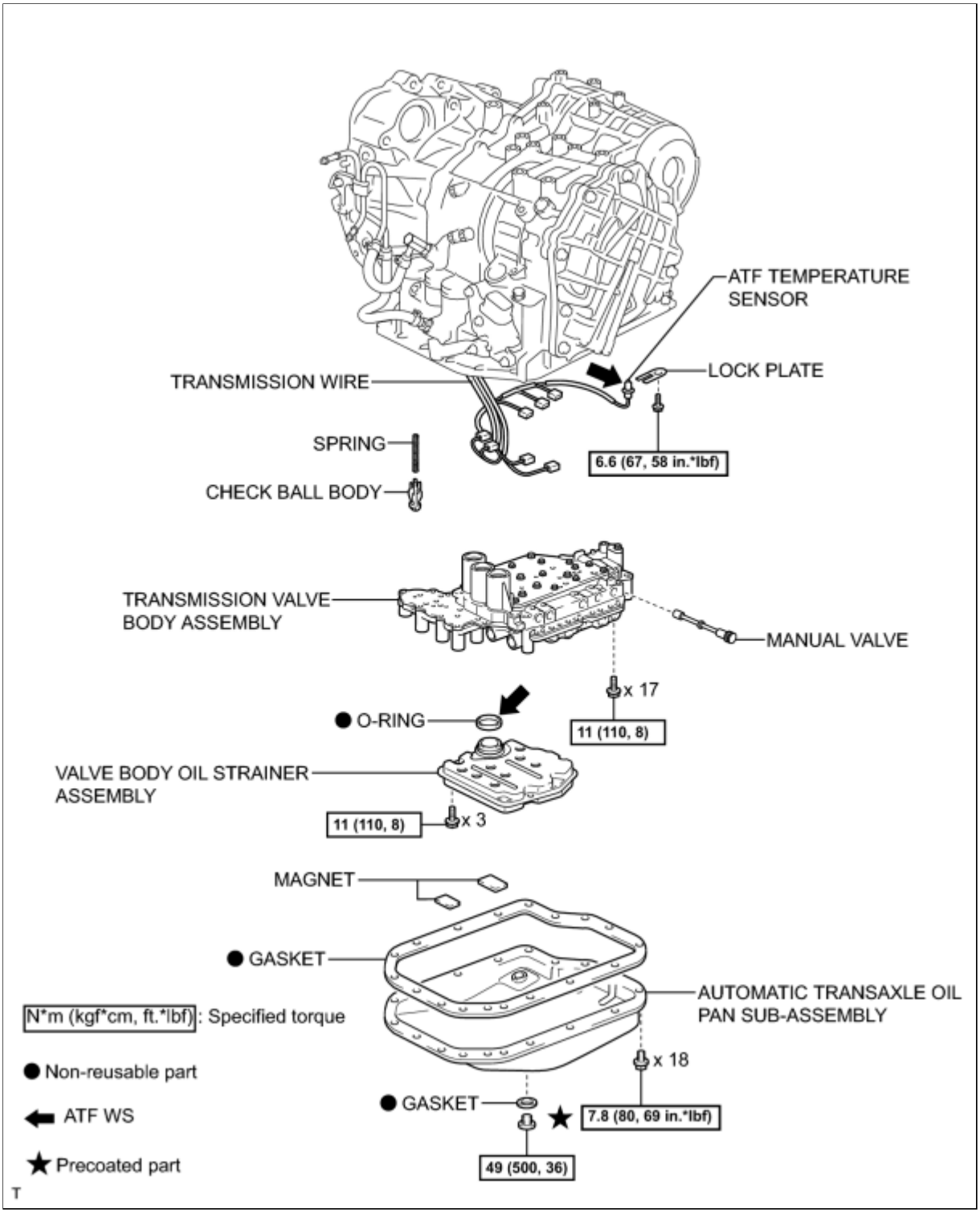

ILLUSTRATION

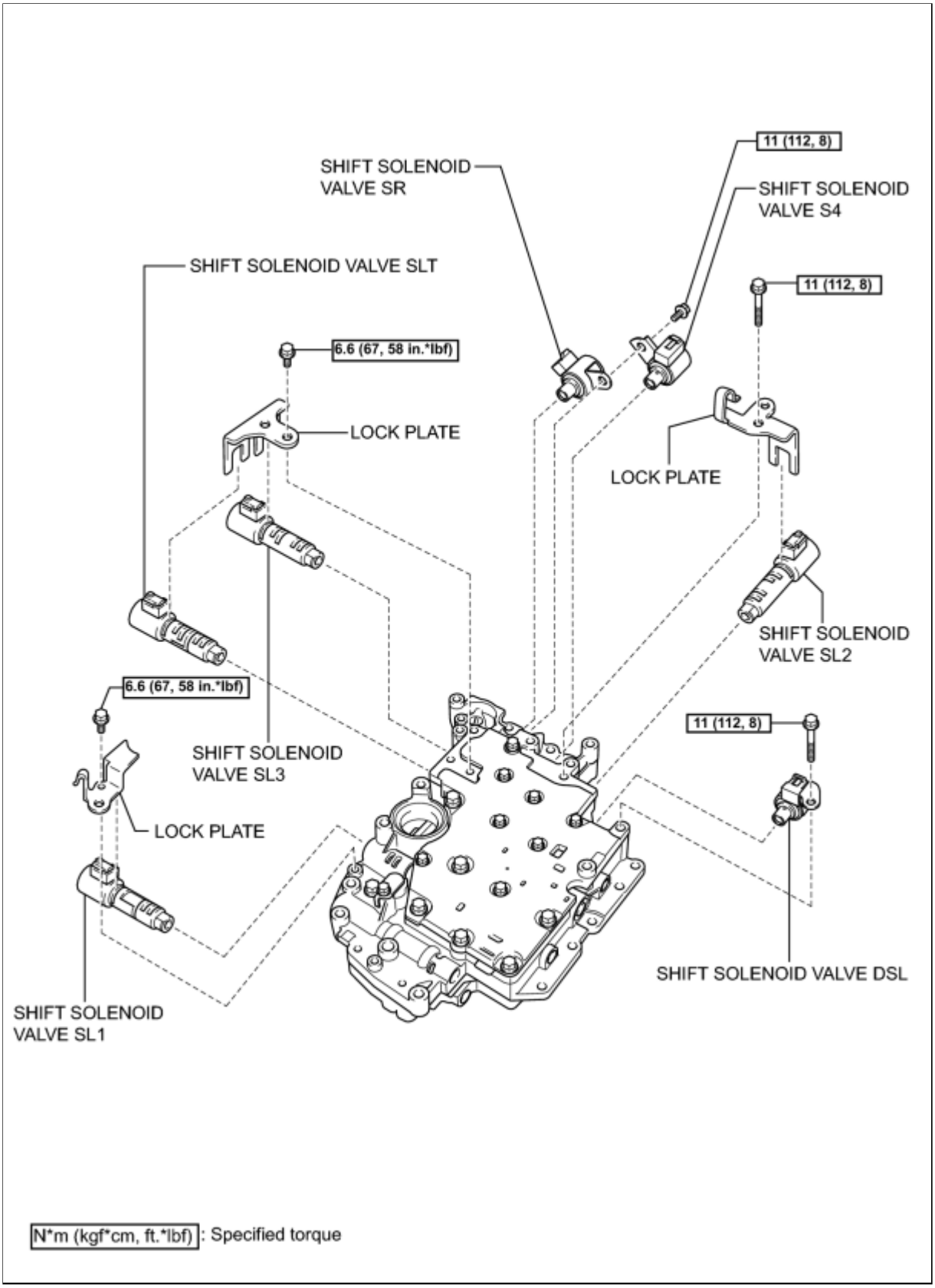

N*m (kgf*cm, ft.*lbf) : Specified torque

Last Modified: 3-10-2010	6.4 A	**From:** 200901
Model Year: 2010	**Model:** Corolla	**Doc ID:** RM00000191F01FX
Title: U341E AUTOMATIC TRANSMISSION / TRANSAXLE: TRANSMISSION WIRE: INSTALLATION (2010 Corolla)		

INSTALLATION

1. INSTALL TRANSMISSION WIRE

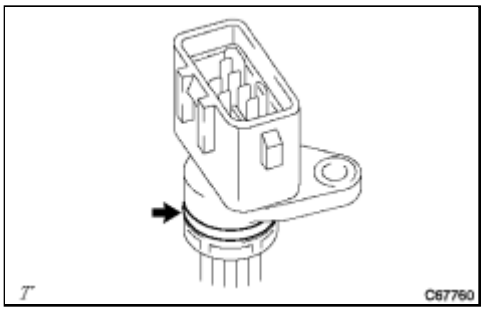

(a) Coat a new O-ring with ATF and install it to the transmission wire.

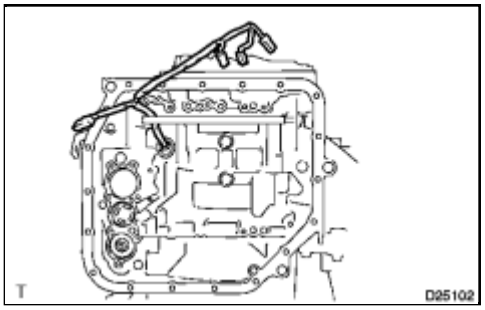

(b) Pass the transmission wire through the transaxle.



(c) Install the transmission wire with the bolt.

Torque: 5.4 N·m (55 kgf·cm, 48in·lbf)

2. INSTALL TRANSMISSION VALVE BODY ASSEMBLY INFO

3. INSTALL VALVE BODY OIL STRAINER ASSEMBLY INFO

4. INSTALL AUTOMATIC TRANSAXLE OIL PAN SUB-ASSEMBLY INFO

5. ADD AUTOMATIC TRANSAXLE FLUID

6. INSPECT TRANSAXLE FLUID LEVEL INFO

7. INSTALL ENGINE UNDER COVER LH

Last Modified: 3-10-2010	6.4 A	**From:** 200901
Model Year: 2010	**Model:** Corolla	**Doc ID:** RM000000YWX01GX
Title: U250E AUTOMATIC TRANSMISSION / TRANSAXLE: VALVE BODY ASSEMBLY: REMOVAL (2010 Corolla)		

REMOVAL

1. REMOVE ENGINE UNDER COVER LH

2. DRAIN AUTOMATIC TRANSAXLE FLUID INFO

3. REMOVE AUTOMATIC TRANSAXLE OIL PAN SUB-ASSEMBLY INFO

4. DISCONNECT TRANSMISSION WIRE

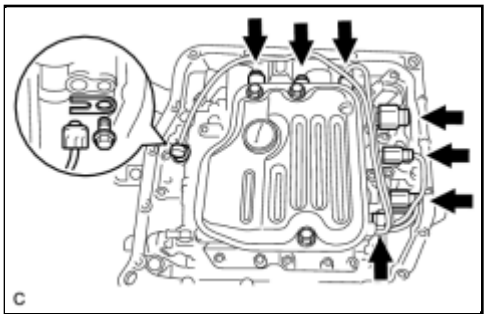

(a) Disconnect the 7 shift solenoid valve connectors.

(b) Remove the bolt and lock plate to disconnect the ATF temperature sensor.

5. REMOVE VALVE BODY OIL STRAINER ASSEMBLY

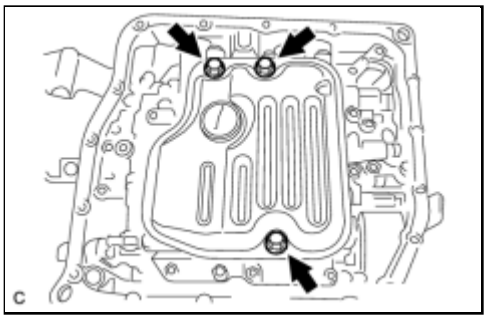

(a) Remove the 3 bolts and oil strainer.

NOTICE:

Be careful as some fluid will come out of the oil strainer.

(b) Remove the O-ring from the oil strainer.

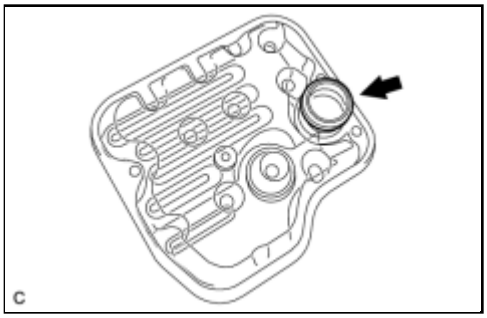

6. REMOVE TRANSMISSION VALVE BODY ASSEMBLY

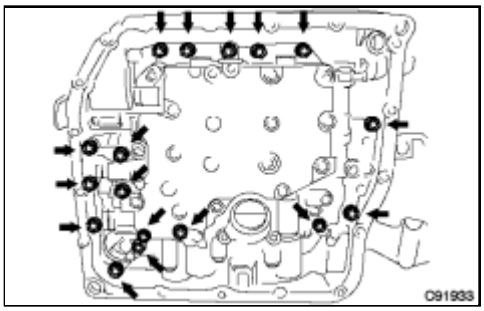

(a) Support the valve body assembly and remove the 17 bolts and the valve body assembly.

NOTICE:

Be careful not to drop the check ball, spring or accumulator piston.

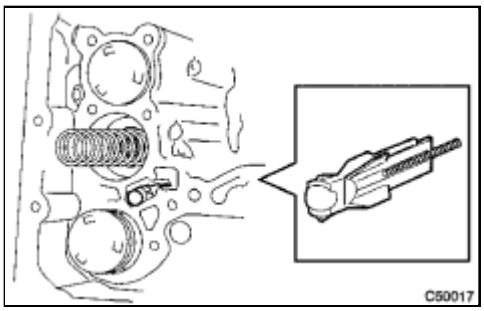

(b) Remove the check ball body and spring.

7. REMOVE MANUAL VALVE

(a) Remove the manual valve from the valve body assembly.

Last Modified: 3-10-2010	6.4 A	**From:** 200901
Model Year: 2010	**Model:** Corolla	**Doc ID:** RM00000109S00TX
Title: U250E AUTOMATIC TRANSMISSION / TRANSAXLE: VALVE BODY ASSEMBLY: DISASSEMBLY (2010 Corolla)		

DISASSEMBLY

1. REMOVE SHIFT SOLENOID VALVE SL3

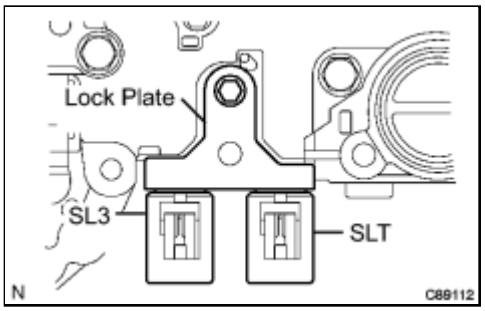

(a) Remove the bolt and lock plate from the valve body assembly.

(b) Remove the shift solenoid valve SL3 from the valve body assembly.

2. REMOVE SHIFT SOLENOID VALVE SLT

(a) Remove the shift solenoid valve SLT from the valve body assembly.

3. REMOVE SHIFT SOLENOID VALVE S4

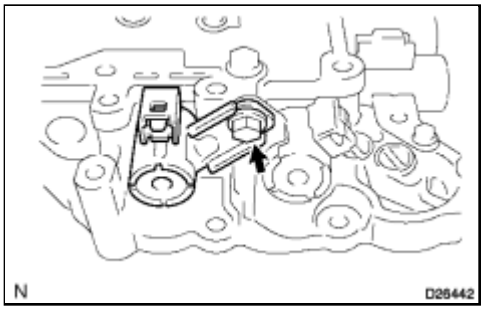

(a) Remove the bolt and shift solenoid valve S4 from the valve body assembly.

4. REMOVE SHIFT SOLENOID VALVE SR

(a) Remove the shift solenoid valve SR from the valve body assembly.

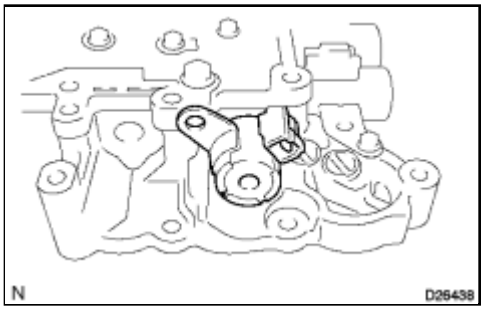

5. REMOVE SHIFT SOLENOID VALVE DSL

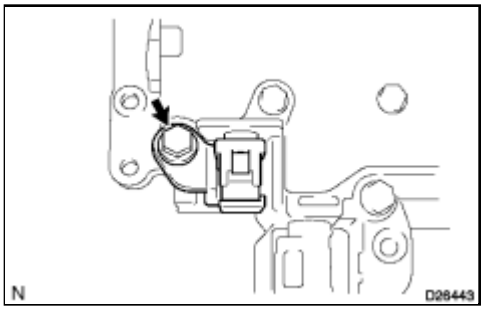

(a) Remove the bolt and shift solenoid valve DSL from the valve body assembly.

6. REMOVE SHIFT SOLENOID VALVE SL2

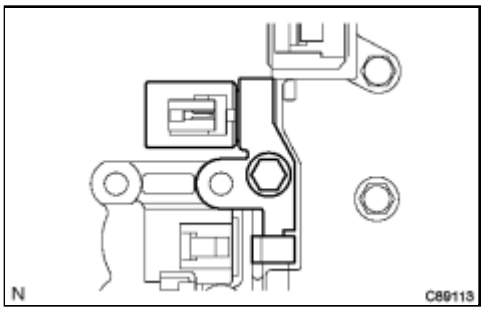

(a) Remove the bolt, lock plate and shift solenoid valve SL2 from the valve body assembly.

7. REMOVE SHIFT SOLENOID VALVE SL1

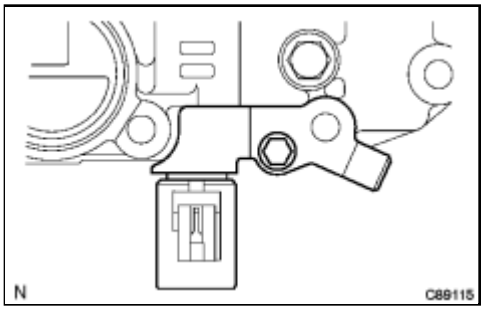

(a) Remove the bolt, lock plate and shift solenoid valve SL1 from the valve body assembly.

Last Modified: 3-10-2010	6.4 G	**From:** 200901
Model Year: 2010	**Model:** Corolla	**Doc ID:** RM000002D1F00MX
Title: U250E AUTOMATIC TRANSMISSION / TRANSAXLE: VALVE BODY ASSEMBLY: INSPECTION (2010 Corolla)		

INSPECTION

1. INSPECT SHIFT SOLENOID VALVE SL3

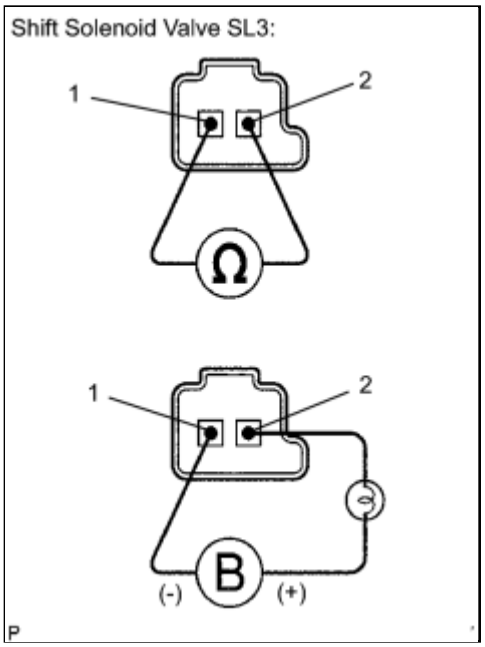

(a) Measure the resistance according to the value(s) in the table below.

Standard Resistance:

TESTER CONNECTION	CONDITION	SPECIFIED CONDITION
1 - 2	20°C (68°F)	5.0 to 5.6 Ω

If the value is not as specified, replace the shift solenoid valve SL3.

(b) Connect a positive (+) battery lead with a 21 W bulb to terminal 2 and a negative (-) battery lead to terminal 1 of the solenoid valve connector, then check the operation of the valve.

OK:

The solenoid valve makes an operating sound.

If the result is not as specified, replace the shift solenoid valve SL3.

2. INSPECT SHIFT SOLENOID VALVE SLT

(a) Measure the resistance according to the value(s) in the table below.

Standard Resistance:

TESTER CONNECTION	CONDITION	SPECIFIED CONDITION
1 - 2	20°C (68°F)	5.0 to 5.6 Ω

If the value is not as specified, replace the shift solenoid

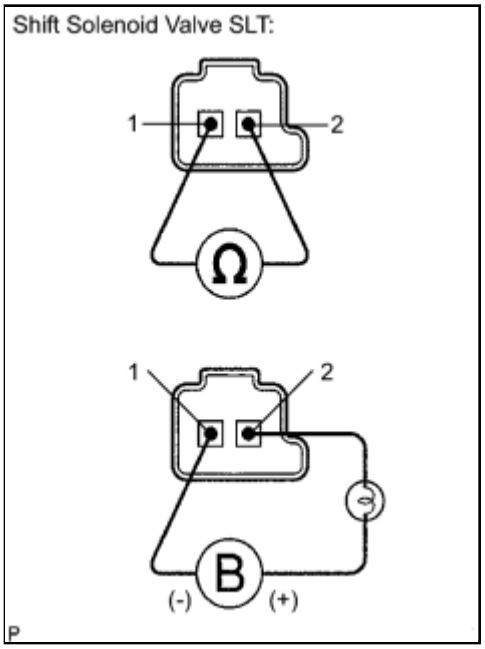

valve SLT.

(b) Connect a positive (+) battery lead with a 21 W bulb to terminal 2 and a negative (-) battery lead to terminal 1 of the solenoid valve connector, then check the operation of the valve.

OK:

The solenoid valve makes an operating sound.

If the result is not as specified, replace the shift solenoid valve SLT.

3. INSPECT SHIFT SOLENOID VALVE S4

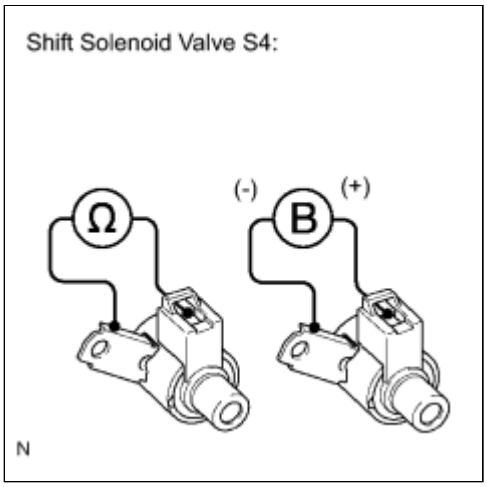

(a) Measure the resistance according to the value(s) in the table below.

Standard Resistance:

TESTER CONNECTION	CONDITION	SPECIFIED CONDITION
Solenoid Connector (S4) - Solenoid Body (S4)	20°C (68°F)	11 to 15 Ω

If the value is not as specified, replace the shift solenoid valve S4.

(b) Connect a positive (+) battery lead to the terminal of the solenoid connector, and a negative (-) battery lead to the solenoid body, then check the operation of the valve.

OK:

The solenoid valve makes an operating sound.

If the result is not as specified, replace the shift solenoid valve S4.

4. INSPECT SHIFT SOLENOID VALVE SR

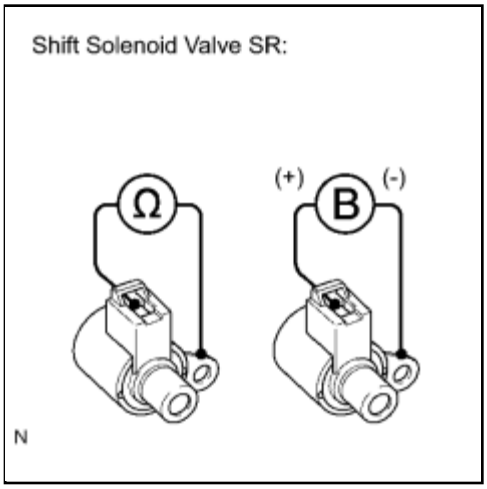

(a) Measure the resistance according to the value(s) in the table below.

Standard Resistance:

TESTER CONNECTION	CONDITION	SPECIFIED CONDITION
Solenoid Connector (SR) - Solenoid Body (SR)	20°C (68°F)	11 to 15 Ω

If the value is not as specified, replace the shift solenoid valve SR.

(b) Connect a positive (+) battery lead to the terminal of the solenoid connector, and a negative (-) battery lead to the solenoid body, then check the operation of the valve.

OK:

The solenoid valve makes an operating sound.

If the result is not as specified, replace the shift solenoid valve SR.

5. INSPECT SHIFT SOLENOID VALVE DSL

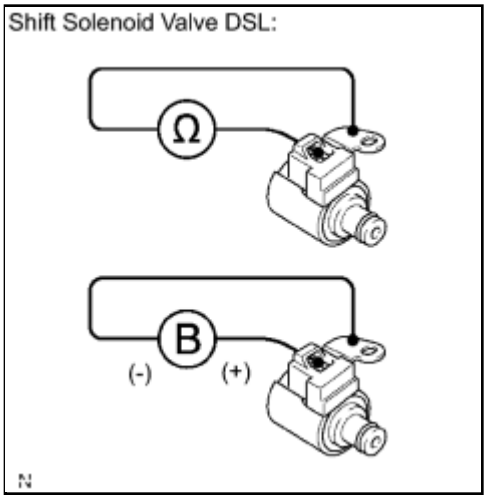

(a) Measure the resistance according to the value(s) in the table below.

Standard Resistance:

TESTER CONNECTION	CONDITION	SPECIFIED CONDITION
Solenoid Connector (DSL) - Solenoid Body (DSL)	20°C (68°F)	11 to 13 Ω

If the value is not as specified, replace the shift solenoid valve.

(b) Connect a positive (+) battery lead to the terminal of the solenoid connector, and a negative (-) battery lead to the solenoid body DSL, then check the operation of the valve.

OK:

The solenoid valve makes an operating sound.

If the result is not as specified, replace the shift solenoid valve DSL.

6. INSPECT SHIFT SOLENOID VALVE SL2

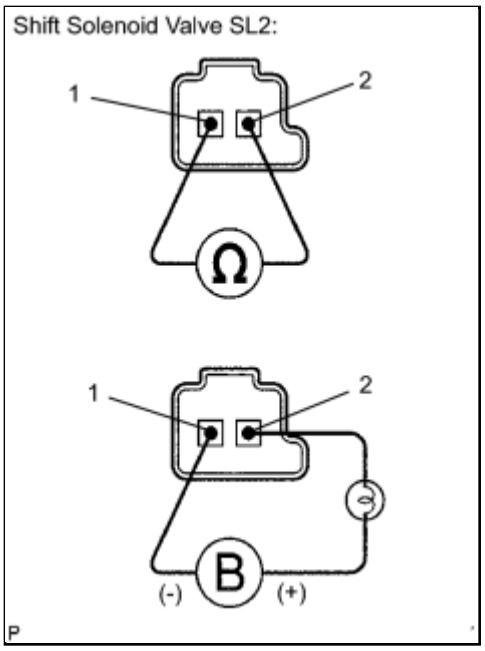

(a) Measure the resistance according to the value(s) in the table below.

Standard Resistance:

TESTER CONNECTION	CONDITION	SPECIFIED CONDITION
1 - 2	20°C (68°F)	5.0 to 5.6 Ω

If the value is not as specified, replace the shift solenoid valve SL2.

(b) Connect a positive (+) battery lead with a 21 W bulb to terminal 2 and a negative (-) battery lead to terminal 1 of the solenoid valve connector, then check the operation of the valve.

OK:

The solenoid valve makes an operating sound.

If the result is not as specified, replace the shift solenoid valve SL2.

7. INSPECT SHIFT SOLENOID VALVE SL1

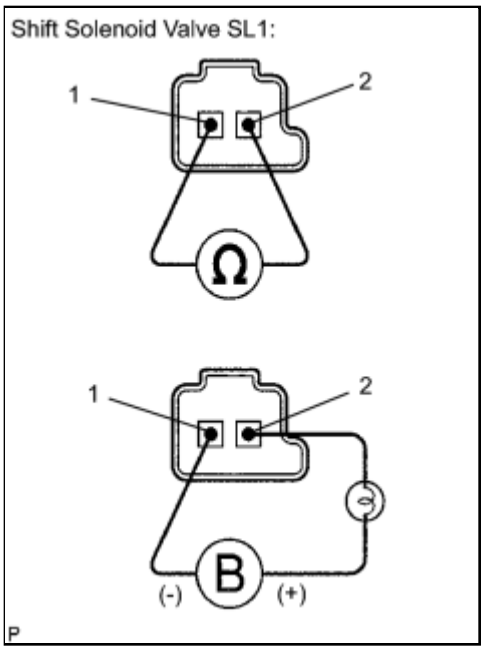

(a) Measure the resistance according to the value(s) in the table below.

Standard Resistance:

TESTER CONNECTION	CONDITION	SPECIFIED CONDITION
1 - 2	20°C (68°F)	5.0 to 5.6 Ω

If the value is not as specified, replace the shift solenoid valve SL1.

(b) Connect a positive (+) battery lead with a 21 W bulb to terminal 2 and a negative (-) battery lead

to terminal 1 of the solenoid valve connector, then check the operation of the valve.

OK:

The solenoid valve makes an operating sound.

If the result is not as specified, replace the shift solenoid valve SL1.

Last Modified: 3-10-2010	6.4 A	**From:** 200901
Model Year: 2010	**Model:** Corolla	**Doc ID:** RM00000109T00TX
Title: U250E AUTOMATIC TRANSMISSION / TRANSAXLE: VALVE BODY ASSEMBLY: REASSEMBLY (2010 Corolla)		

REASSEMBLY

1. INSTALL SHIFT SOLENOID VALVE SL1

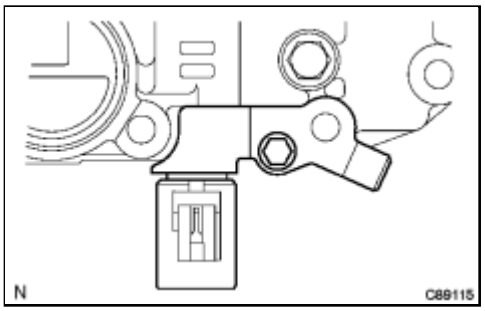

(a) Install the shift solenoid valve SL1 and lock plate to the valve body assembly with the bolt.

Torque: 6.6 N·m (67 kgf·cm, 58in·lbf)

2. INSTALL SHIFT SOLENOID VALVE SL2

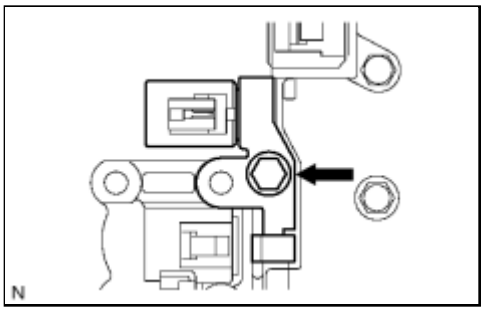

(a) Install the shift solenoid valve SL2 and lock plate to the valve body assembly with the bolt.

Torque: 11 N·m (112 kgf·cm, 8ft·lbf)

3. INSTALL SHIFT SOLENOID VALVE DSL

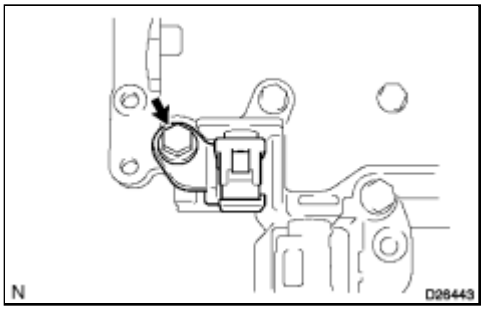

(a) Install the shift solenoid valve DSL to the valve body assembly with the bolt.

Torque: 11 N·m (112 kgf·cm, 8ft·lbf)

4. INSTALL SHIFT SOLENOID VALVE SR

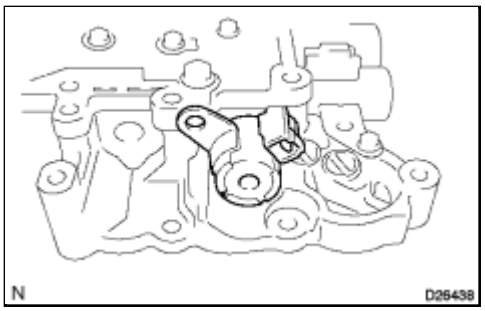

(a) Install the shift solenoid valve SR to the valve body assembly.

5. INSTALL SHIFT SOLENOID VALVE S4

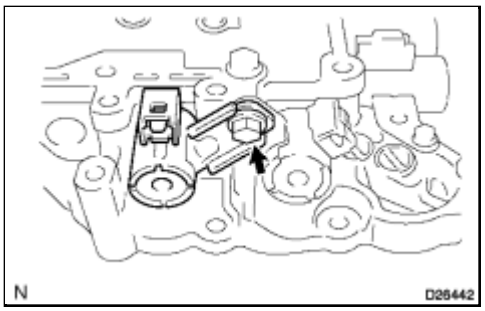

(a) Install the shift solenoid valve S4 to the valve body assembly with the bolt.

Torque: 11 N·m (112 kgf·cm, 8ft·lbf)

6. INSTALL SHIFT SOLENOID VALVE SL3

(a) Install the shift solenoid valve SL3 to the valve body assembly.

7. INSTALL SHIFT SOLENOID VALVE SLT

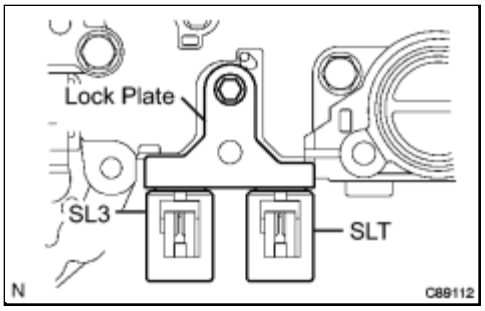

(a) Install the shift solenoid valve SLT and lock plate to the valve body assembly with the bolt.

Torque: 6.6 N·m (67 kgf·cm, 58in·lbf)

Last Modified: 3-10-2010	6.4 A	**From:** 200901
Model Year: 2010	**Model:** Corolla	**Doc ID:** RM000000YWW01GX
Title: U250E AUTOMATIC TRANSMISSION / TRANSAXLE: VALVE BODY ASSEMBLY: INSTALLATION (2010 Corolla)		

INSTALLATION

1. INSTALL MANUAL VALVE

(a) Install the manual valve to the valve body assembly.

2. INSTALL TRANSMISSION VALVE BODY ASSEMBLY

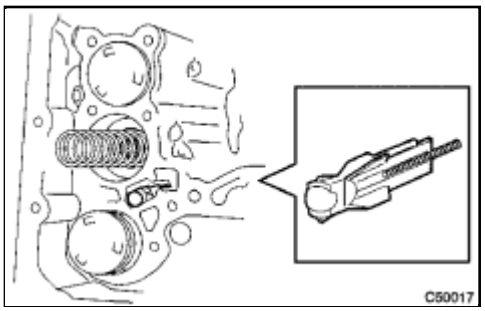

(a) Install the spring and check ball body.

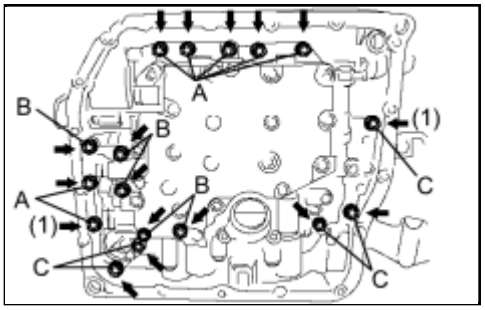

(b) Align the groove of the manual valve with the pin of the lever.

(c) Install the valve body with the 17 bolts.

Torque: 11 N·m (110 kgf·cm, 8ft·lbf)

NOTICE:

- Push the valve body against the accumulator piston spring and the check ball body to install it.
- First, temporarily tighten the bolts marked by (1) in the illustration because they are positioning bolts.

Bolt length:
Bolt A: 25 mm (0.984 in.)
Bolt B: 57 mm (2.24 in.)
Bolt C: 41 mm (1.61 in.)

3. INSTALL VALVE BODY OIL STRAINER ASSEMBLY

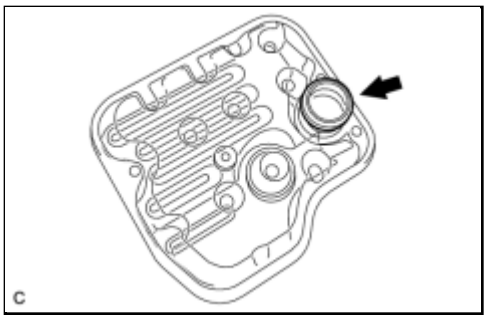

(a) Coat a new O-ring with ATF WS.

(b) Install the O-ring to the oil strainer.

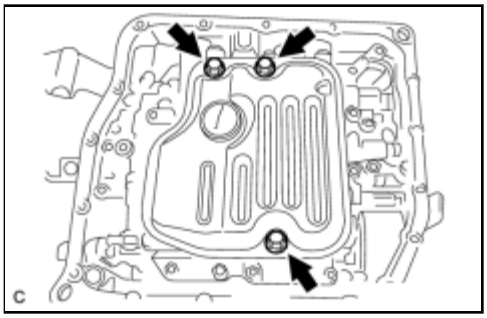

(c) Install the oil strainer with the 3 bolts.

Torque: 11 N·m (110 kgf·cm, 8ft·lbf)

4. INSTALL TRANSMISSION WIRE

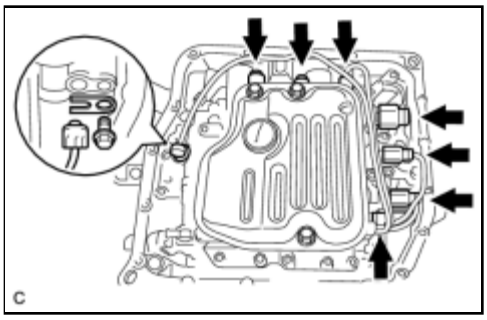

(a) Coat the O-ring with ATF WS.

(b) Install the ATF temperature sensor with the lock plate and bolt.

Torque: 6.6 N·m (67 kgf·cm, 58in·lbf)

(c) Connect the 7 shift solenoid valve connectors.

5. INSTALL AUTOMATIC TRANSAXLE OIL PAN SUB-ASSEMBLY INFO

6. INSTALL ENGINE UNDER COVER LH

7. ADD AUTOMATIC TRANSAXLE FLUID

8. INSPECT TRANSAXLE FLUID LEVEL INFO

Last Modified: 3-10-2010	6.4 K	**From:** 200901
Model Year: 2010	**Model:** Corolla	**Doc ID:** RM00000191K00ZX
Title: U341E AUTOMATIC TRANSMISSION / TRANSAXLE: VALVE BODY ASSEMBLY: COMPONENTS (2010 Corolla)		

COMPONENTS

ILLUSTRATION

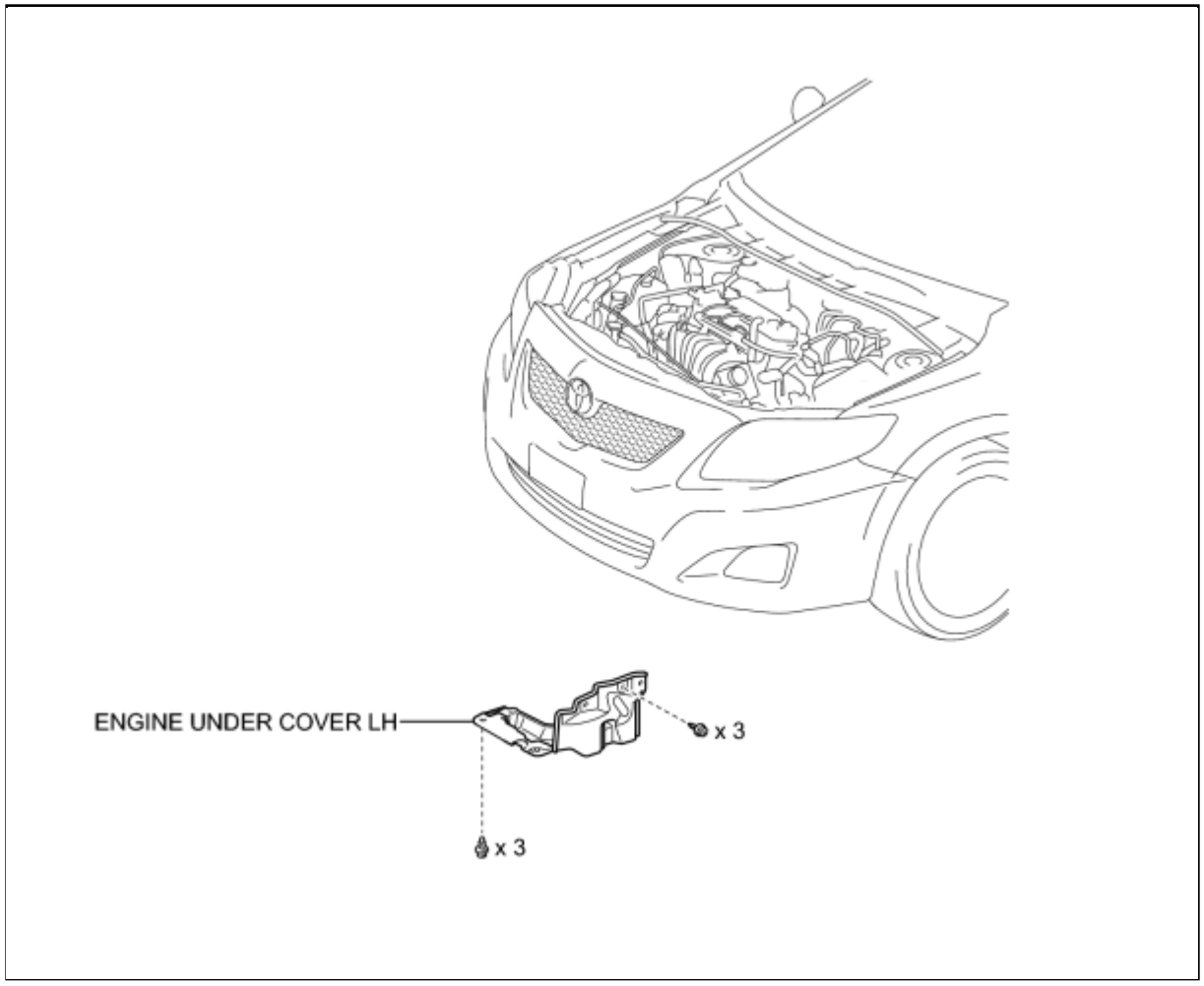

ILLUSTRATION

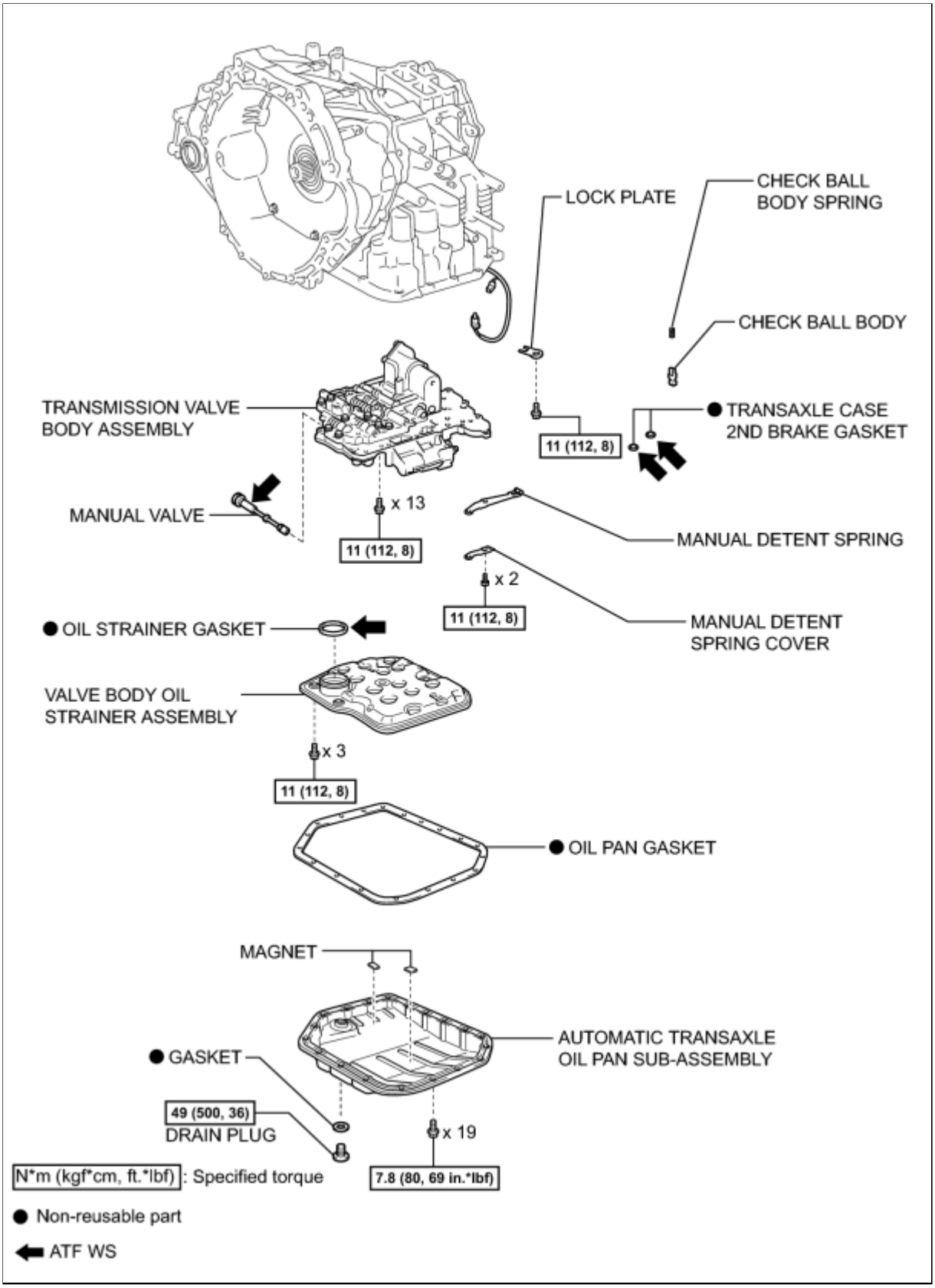

ILLUSTRATION

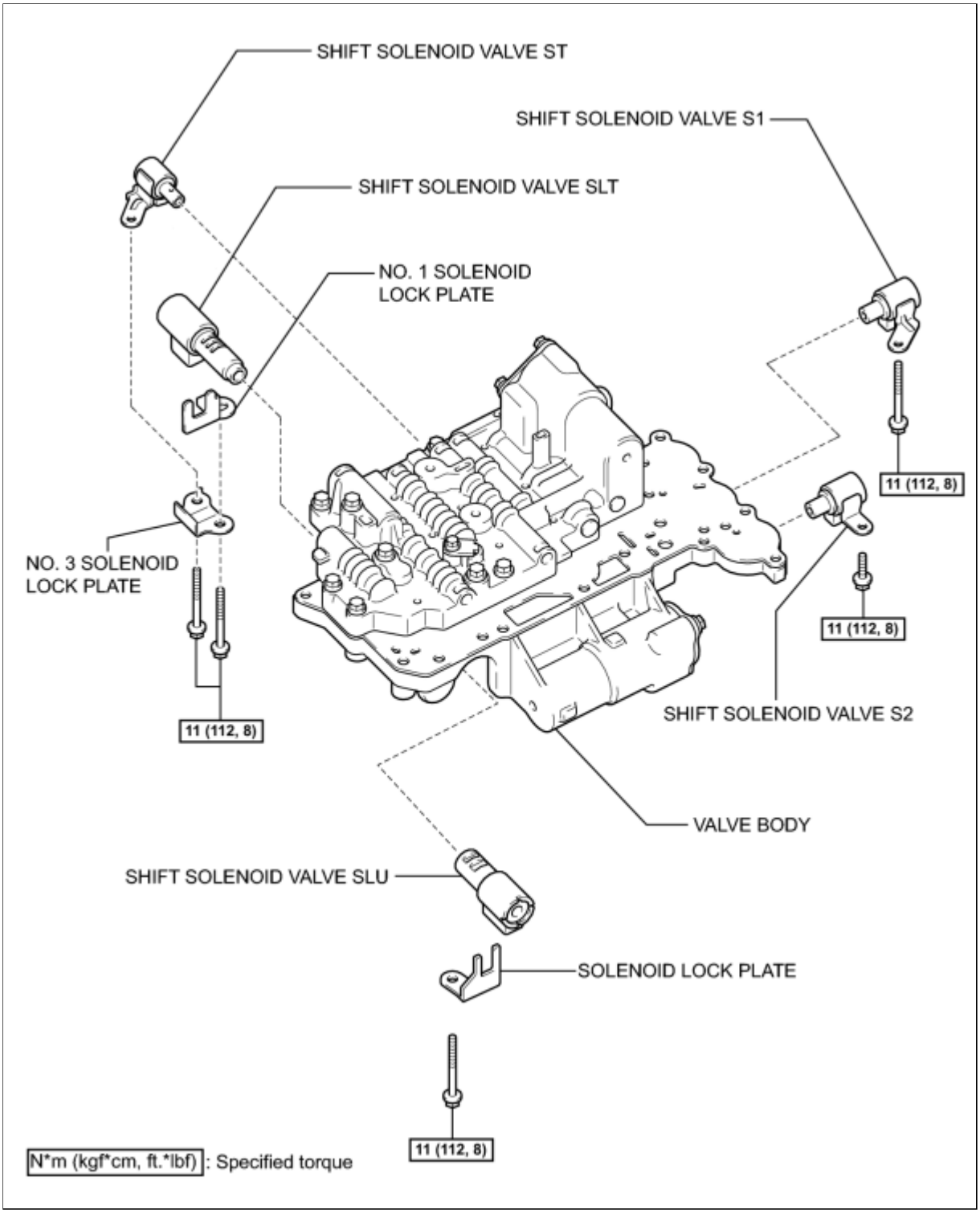
SHIFT SOLENOID VALVE ST
SHIFT SOLENOID VALVE S1
SHIFT SOLENOID VALVE SLT
NO. 1 SOLENOID LOCK PLATE
11 (112, 8)
NO. 3 SOLENOID LOCK PLATE
11 (112, 8)
11 (112, 8)
SHIFT SOLENOID VALVE S2
VALVE BODY
SHIFT SOLENOID VALVE SLU
SOLENOID LOCK PLATE
11 (112, 8)
N*m (kgf*cm, ft.*lbf) : Specified torque

Last Modified: 3-10-2010	6.4 A	**From:** 200901
Model Year: 2010	**Model:** Corolla	**Doc ID:** RM00000191L01DX
Title: U341E AUTOMATIC TRANSMISSION / TRANSAXLE: VALVE BODY ASSEMBLY: REMOVAL (2010 Corolla)		

REMOVAL

1. REMOVE ENGINE UNDER COVER LH

2. DRAIN AUTOMATIC TRANSAXLE FLUID

(a) Remove the drain plug and gasket, and drain ATF.

(b) Install a new gasket and the drain plug.

Torque: 49 N·m (500 kgf·cm, 36ft·lbf)

3. REMOVE AUTOMATIC TRANSAXLE OIL PAN SUB-ASSEMBLY

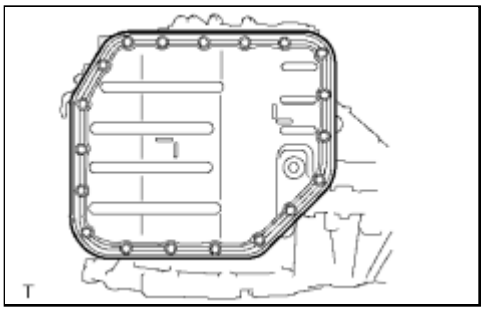

(a) Remove the 19 bolts, oil pan and oil pan gasket.

NOTICE:

Some fluid will remain in the oil pan.

Remove all the oil pan bolts, and carefully remove the oil pan sub-assembly.

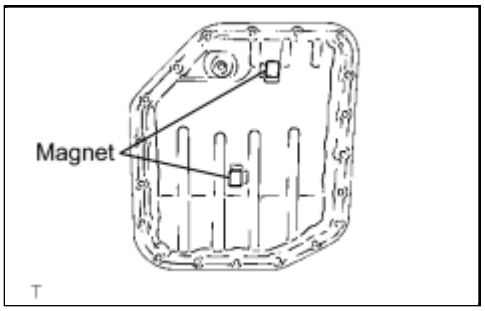

(b) Remove the 2 magnets from the oil pan.

(c) Examine the particles in the oil pan.

(1) Collect any steel chips with the removed magnets. Look carefully at the chips and particles in the pan and on the magnets to see the type of wear which might be found in the transaxle.

Result:

Steel (magnetic)

bearing, gear and plate wear

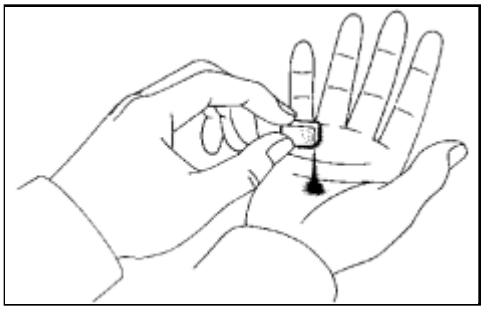

Brass (non-magnetic)
bushing wear

4. REMOVE VALVE BODY OIL STRAINER ASSEMBLY

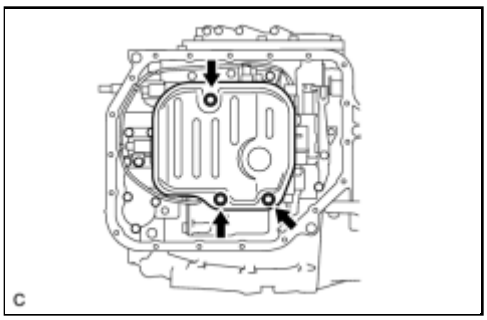

(a) Remove the 3 bolts and oil strainer.

NOTICE:

Perform the operation carefully as some fluid will come out from the oil strainer.

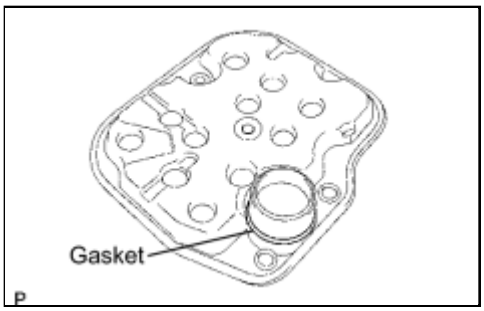

(b) Remove the oil strainer gasket from the oil strainer.

5. REMOVE TRANSMISSION VALVE BODY ASSEMBLY

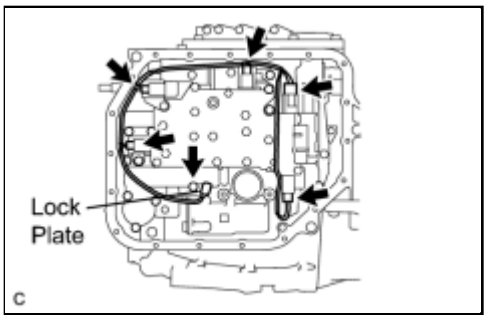

(a) Disconnect the 5 connectors.

(b) Remove the bolt, lock plate and ATF temperature sensor.

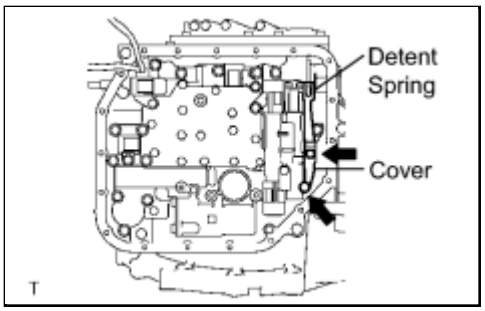

(c) Remove the 2 bolts, manual detent spring cover and manual detent spring.

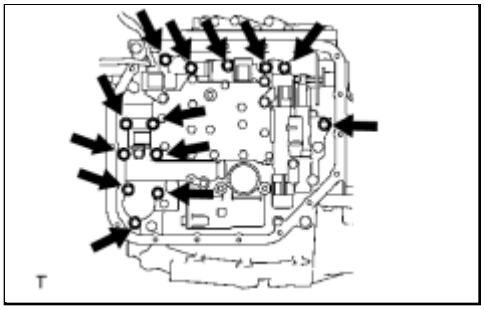

(d) Remove the 13 bolts and valve body assembly.

NOTICE:

Do not drop the check ball body, check ball body spring or accumulator piston.

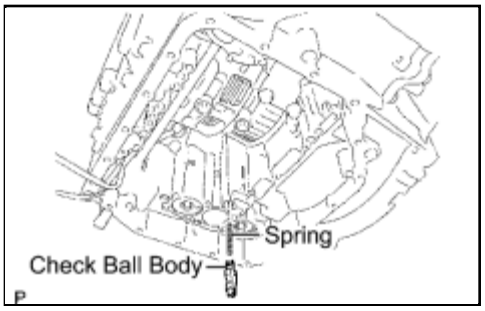

(e) Remove the check ball body and check ball body spring.

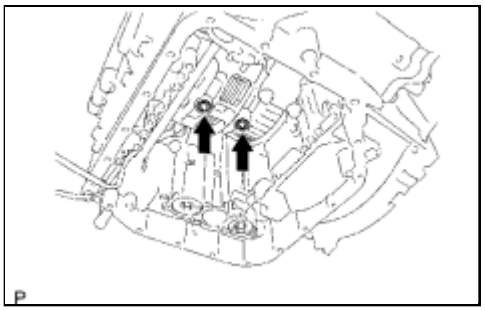

(f) Remove the 2 transaxle case 2nd brake gaskets.

6. REMOVE MANUAL VALVE

(a) Remove the manual valve from the valve body.

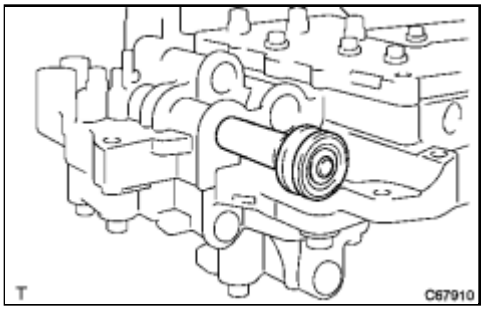
T
C67910

Last Modified: 3-10-2010	6.4 G	**From:** 200901
Model Year: 2010	**Model:** Corolla	**Doc ID:** RM0000192Z01WX
Title: U341E AUTOMATIC TRANSMISSION / TRANSAXLE: VALVE BODY ASSEMBLY: INSPECTION (2010 Corolla)		

INSPECTION

1. INSPECT SHIFT SOLENOID VALVE S1

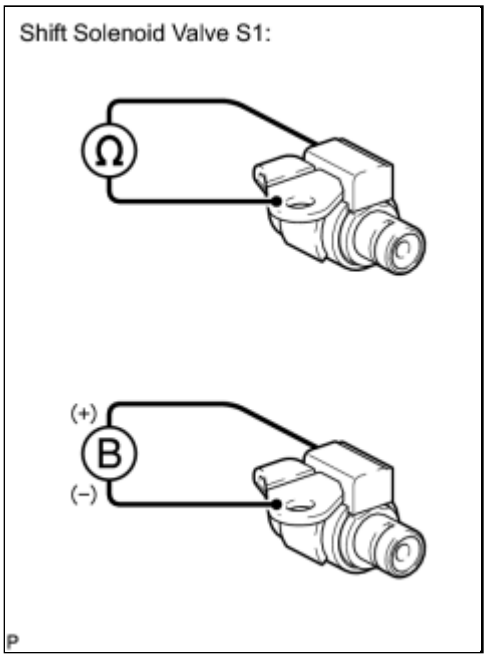

(a) Measure the resistance according to the value(s) in the table below.

Standard Resistance:

TESTER CONNECTION	CONDITION	SPECIFIED CONDITION
Solenoid Connector (S1) - Solenoid Body (S1)	15 to 25°C (59 to 77°F)	11 to 15 Ω

If the value is not as specified, replace the shift solenoid valve S1.

(b) Connect a positive (+) battery lead to the terminal of the solenoid connector, and a negative (-) battery lead to the solenoid body, and check the operation of the valve.

NOTICE:

When using battery voltage during this inspection, do not bring the positive and negative tester probes too close to each other as a short circuit may occur.

OK:

The solenoid makes an operating sound.

If the operation cannot be done as specified, replace the shift solenoid valve S1.

2. INSPECT SHIFT SOLENOID VALVE S2

(a) Measure the resistance according to the value(s) in the table below.

Standard Resistance:

TESTER CONNECTION	CONDITION	SPECIFIED CONDITION

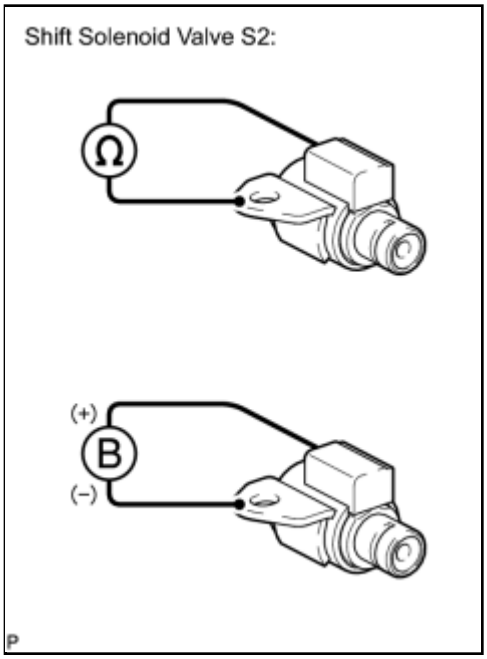

Solenoid Connector (S2) - Solenoid Body (S2)	15 to 25°C (59 to 77°F)	11 to 15 Ω

If the value is not as specified, replace the shift solenoid valve S2.

(b) Connect a positive (+) battery lead to the terminal of the solenoid connector, and a negative (-) battery lead to the solenoid body, and check the operation of the valve.

NOTICE:

When using battery voltage during this inspection, do not bring the positive and negative tester probes too close to each other as a short circuit may occur.

OK:

The solenoid makes an operating sound.

If the operation cannot be done as specified, replace the shift solenoid valve S2.

3. INSPECT SHIFT SOLENOID VALVE ST

(a) Measure the resistance according to the value(s) in the table below.

Standard Resistance:

TESTER CONNECTION	CONDITION	SPECIFIED CONDITION
Solenoid Connector (ST) - Solenoid Body (ST)	15 to 25°C (59 to 77°F)	11 to 15 Ω

If the value is not as specified, replace the shift solenoid valve ST.

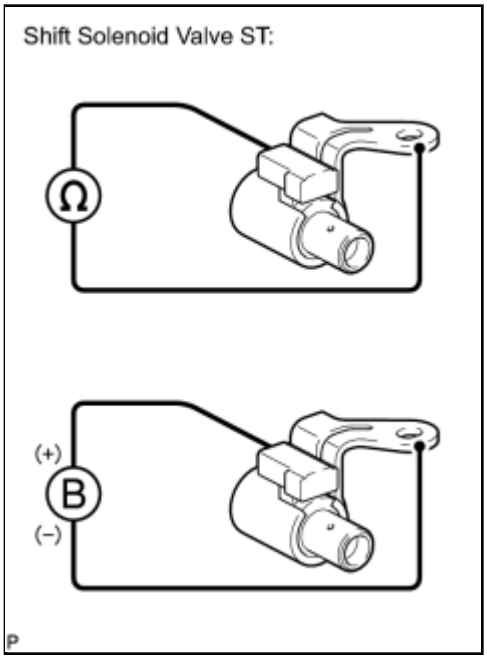

(b) Connect a positive (+) battery lead to the terminal of the solenoid connector, and a negative (-) battery lead to the solenoid body, and check the operation of the valve.

NOTICE:

When using battery voltage during this inspection, do not bring the positive and negative tester probes too close to each other as a short circuit may occur.

OK:

The solenoid makes an operating sound.

If the operation cannot be done as specified, replace the shift solenoid valve ST.

4. INSPECT SHIFT SOLENOID VALVE SLT

(a) Measure the resistance according to the value(s) in the table below.

Standard Resistance:

TESTER CONNECTION	CONDITION	SPECIFIED CONDITION
1 - 2	20°C (68°F)	5.0 to 5.6 Ω

If the value is not as specified, replace the shift solenoid valve SLT.

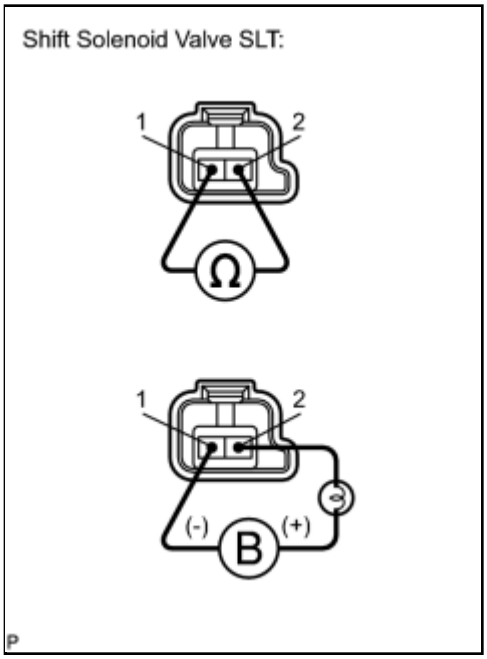

(b) Connect a positive (+) battery lead with a 21 W bulb to terminal 2 and a negative (-) battery lead to terminal 1 of the solenoid valve connector, and check the operation of the valve.

NOTICE:

When using battery voltage during this inspection, do not bring the positive and negative tester probes too close to each other as a short circuit may occur.

OK:

The solenoid makes an operating sound.

If the operation cannot be done as specified, replace the shift solenoid valve SLT.

5. INSPECT SHIFT SOLENOID VALVE SLU

(a) Measure the resistance according to the value(s) in the table below.

Standard Resistance:

TESTER CONNECTION	CONDITION	SPECIFIED CONDITION
1 - 2	20°C (68°F)	5.0 to 5.6 Ω

If the value is not as specified, replace the shift solenoid valve SLU.

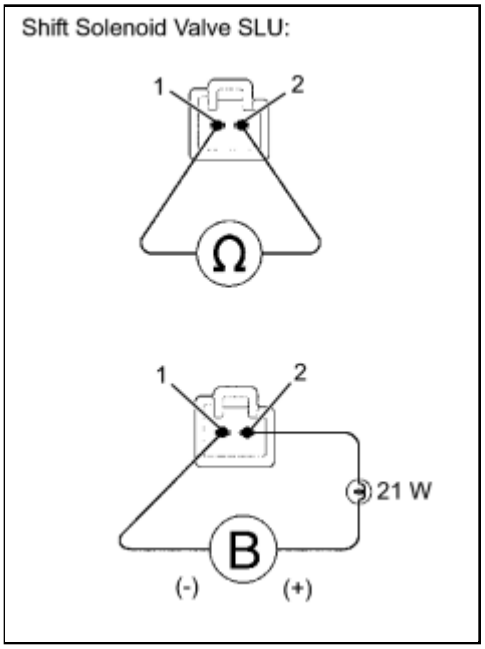

(b) Connect a positive (+) battery lead with a 21 W bulb to terminal 2 and a negative (-) battery lead to terminal 1 of the solenoid valve connector, and check the operation of the valve.

NOTICE:

While using battery voltage during this inspection, do not bring the positive and negative tester probes too close to each other as a short circuit may occur.

OK:

The solenoid makes an operating sound.

If the operation cannot be done as specified, replace the shift solenoid valve SLU.

Last Modified: 3-10-2010	6.4 A	**From:** 200901
Model Year: 2010	**Model:** Corolla	**Doc ID:** RM00000193101OX
Title: U341E AUTOMATIC TRANSMISSION / TRANSAXLE: VALVE BODY ASSEMBLY: DISASSEMBLY (2010 Corolla)		

DISASSEMBLY

1. REMOVE SHIFT SOLENOID VALVE S1

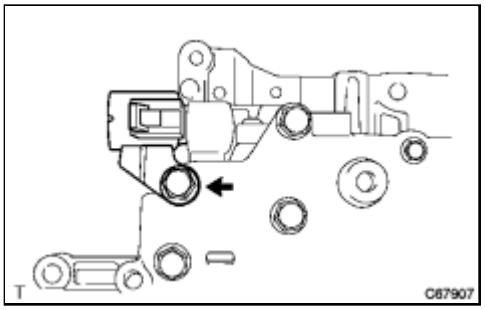

(a) Remove the bolt and pull out the shift solenoid valve S1.

2. REMOVE SHIFT SOLENOID VALVE S2

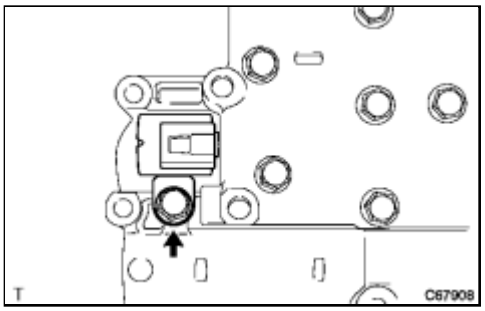

(a) Remove the bolt and pull out the shift solenoid valve S2.

3. REMOVE SHIFT SOLENOID VALVE SLU

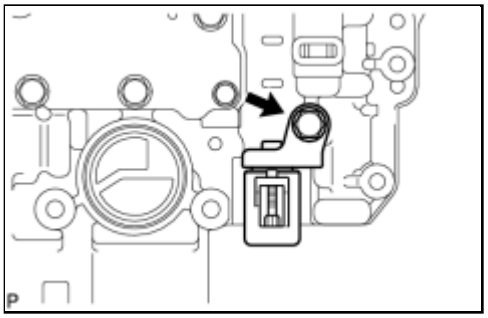

(a) Remove the bolt and solenoid lock plate.

(b) Pull out the shift solenoid valve SLU.

4. REMOVE NO. 3 SOLENOID LOCK PLATE

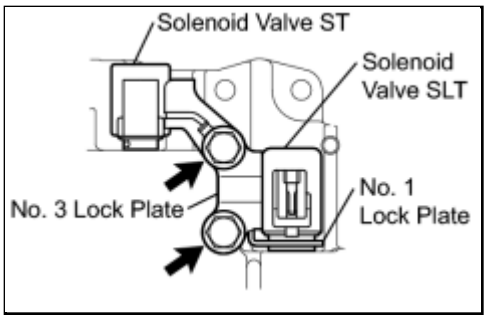

(a) Remove the 2 bolts and No. 3 solenoid lock plate from the valve body.

(b) Pull out the shift solenoid valve ST from the valve body.

(c) Remove the No. 1 solenoid lock plate from the shift solenoid valve SLT.

(d) Pull out the shift solenoid valve SLT from the valve body.

Last Modified: 3-10-2010	6.4 A	**From:** 200901
Model Year: 2010	**Model:** Corolla	**Doc ID:** RM000001932010X
Title: U341E AUTOMATIC TRANSMISSION / TRANSAXLE: VALVE BODY ASSEMBLY: REASSEMBLY (2010 Corolla)		

REASSEMBLY

1. INSTALL NO. 3 SOLENOID LOCK PLATE

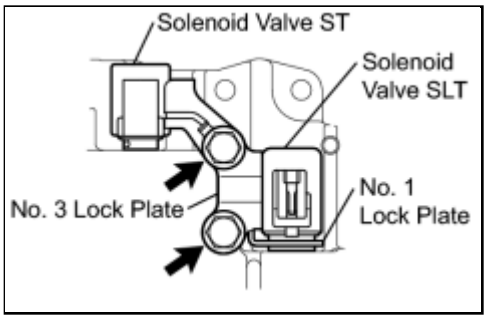

(a) Install the shift solenoid valve SLT to the valve body.

(b) Install the No. 1 solenoid lock plate to the shift solenoid valve SLT.

(c) Install the shift solenoid valve ST to the valve body.

(d) Install the No. 3 solenoid lock plate to the valve body with the 2 bolts.

Torque: 11 N·m (112 kgf·cm, 8ft·lbf)

2. INSTALL SHIFT SOLENOID VALVE SLU

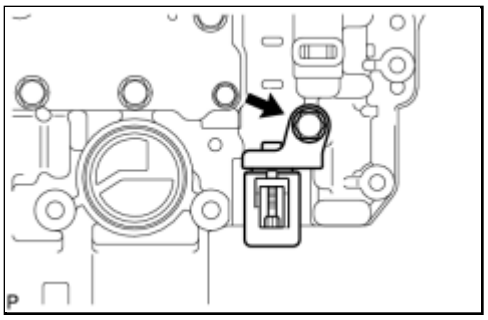

(a) Install the shift solenoid valve SLU onto the valve body.

(b) Install the solenoid lock plate with the bolt.

Torque: 11 N·m (112 kgf·cm, 8ft·lbf)

3. INSTALL SHIFT SOLENOID VALVE S2

(a) Install the shift solenoid valve S2 to the valve body with the bolt.

Torque: 11 N·m (112 kgf·cm, 8ft·lbf)

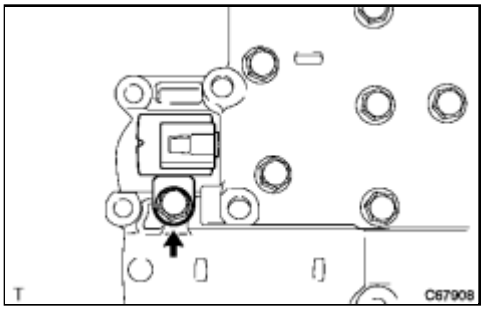

4. INSTALL SHIFT SOLENOID VALVE S1

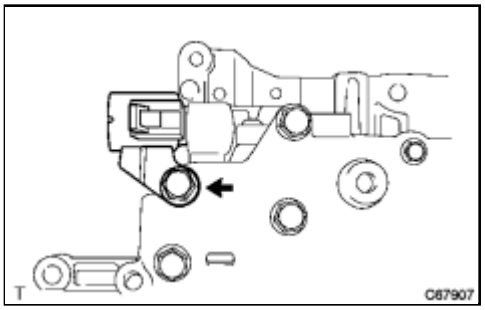

(a) Install the shift solenoid valve S1 to the valve body with the bolt.

Torque: 11 N·m (112 kgf·cm, 8ft·lbf)

Last Modified: 3-10-2010	6.4 A	**From:** 200901
Model Year: 2010	**Model:** Corolla	**Doc ID:** RM0000191J01DX
Title: U341E AUTOMATIC TRANSMISSION / TRANSAXLE: VALVE BODY ASSEMBLY: INSTALLATION (2010 Corolla)		

INSTALLATION

1. INSTALL MANUAL VALVE

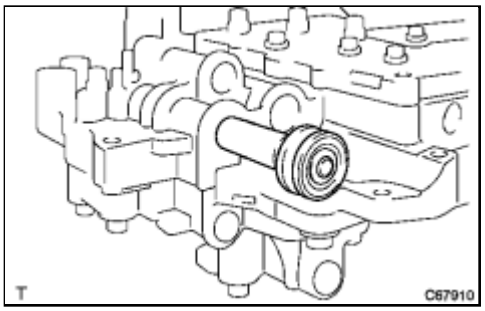

(a) Coat the manual valve with ATF WS, and install it to the valve body.

2. INSTALL TRANSMISSION VALVE BODY ASSEMBLY

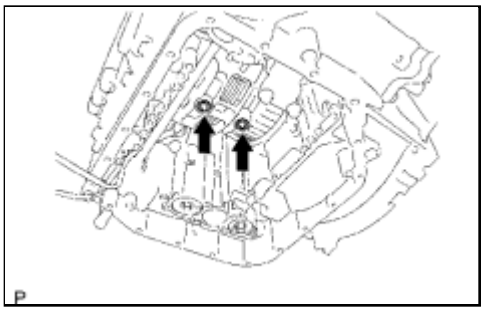

(a) Coat 2 new transaxle case 2nd brake gaskets with ATF WS, and install them to the transaxle case.

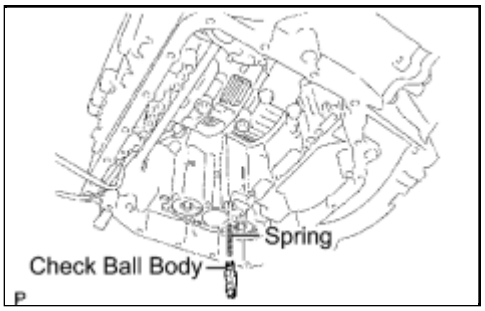

(b) Install the check ball body spring and check ball body.

(c) Align the groove of the manual valve with the pin of the manual valve lever.

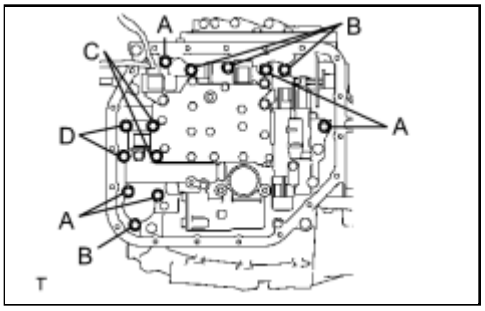

(d) Temporarily install the valve body with the 13 bolts.

Bolt length:

Bolt A

32 mm (1.26 in.)

Bolt B

22 mm (0.866 in.)

Bolt C

55 mm (2.17 in.)

Bolt D

45 mm (1.77 in.)

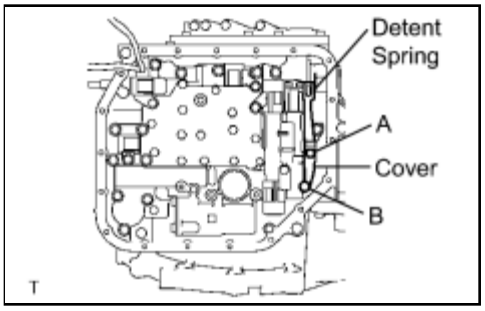

(e) Temporarily install the manual detent spring and manual detent spring cover with the 2 bolts.

Bolt length:

Bolt A

14 mm (0.551 in.)

Bolt B

45 mm (1.77 in.)

(f) Check that the manual valve lever comes into contact with the center of the roller at the tip of the manual detent spring.

(g) Tighten the 15 bolts.

Torque: 11 N·m (112 kgf·cm, 8ft·lbf)

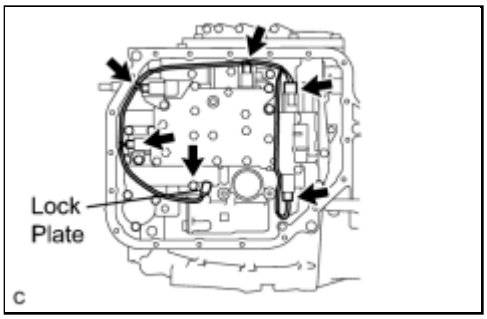

(h) Install the ATF temperature sensor with the lock plate and bolt.

Torque: 11 N·m (112 kgf·cm, 8ft·lbf)

(i) Connect the 5 shift solenoid valve connectors.

3. INSTALL VALVE BODY OIL STRAINER ASSEMBLY

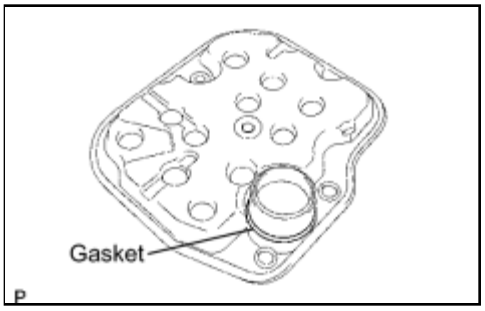

(a) Coat a new oil strainer gasket with ATF WS and install it to the oil strainer.

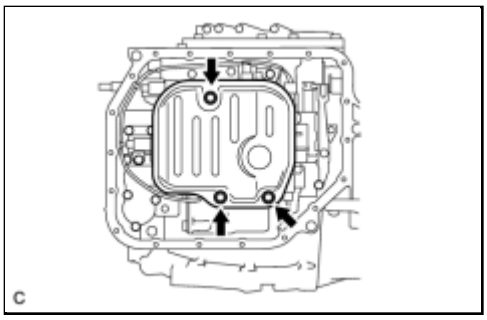

(b) Install the oil strainer with the 3 bolts.

Torque: 11 N·m (112 kgf·cm, 8ft·lbf)

4. INSTALL AUTOMATIC TRANSAXLE OIL PAN SUB-ASSEMBLY

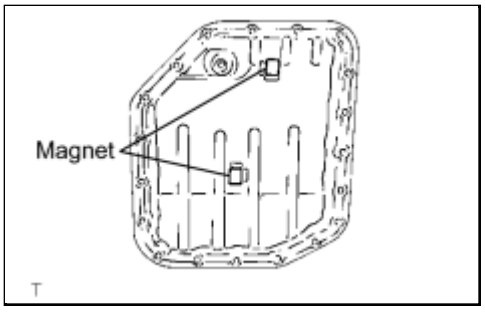

(a) Install the 2 magnets to the oil pan, as shown in the illustration.

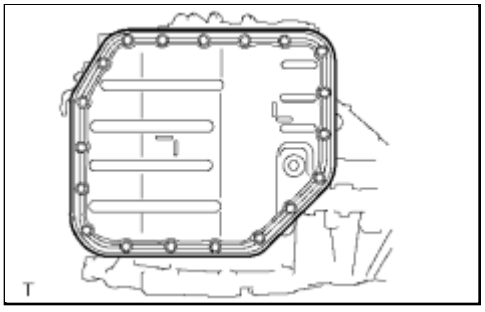

(b) Install the oil pan and a new gasket with the 19 bolts.

Torque: 7.8 N·m (80 kgf·cm, 69in·lbf)

5. ADD AUTOMATIC TRANSAXLE FLUID

6. INSPECT TRANSAXLE FLUID LEVEL INFO

7. INSTALL ENGINE UNDER COVER LH

Last Modified: 3-10-2010	6.4 K	**From:** 200901
Model Year: 2010	**Model:** Corolla	**Doc ID:** RM000000YWU01UX
Title: U250E AUTOMATIC TRANSMISSION / TRANSAXLE: AUTOMATIC TRANSAXLE ASSEMBLY: COMPONENTS (2010 Corolla)		

COMPONENTS

ILLUSTRATION

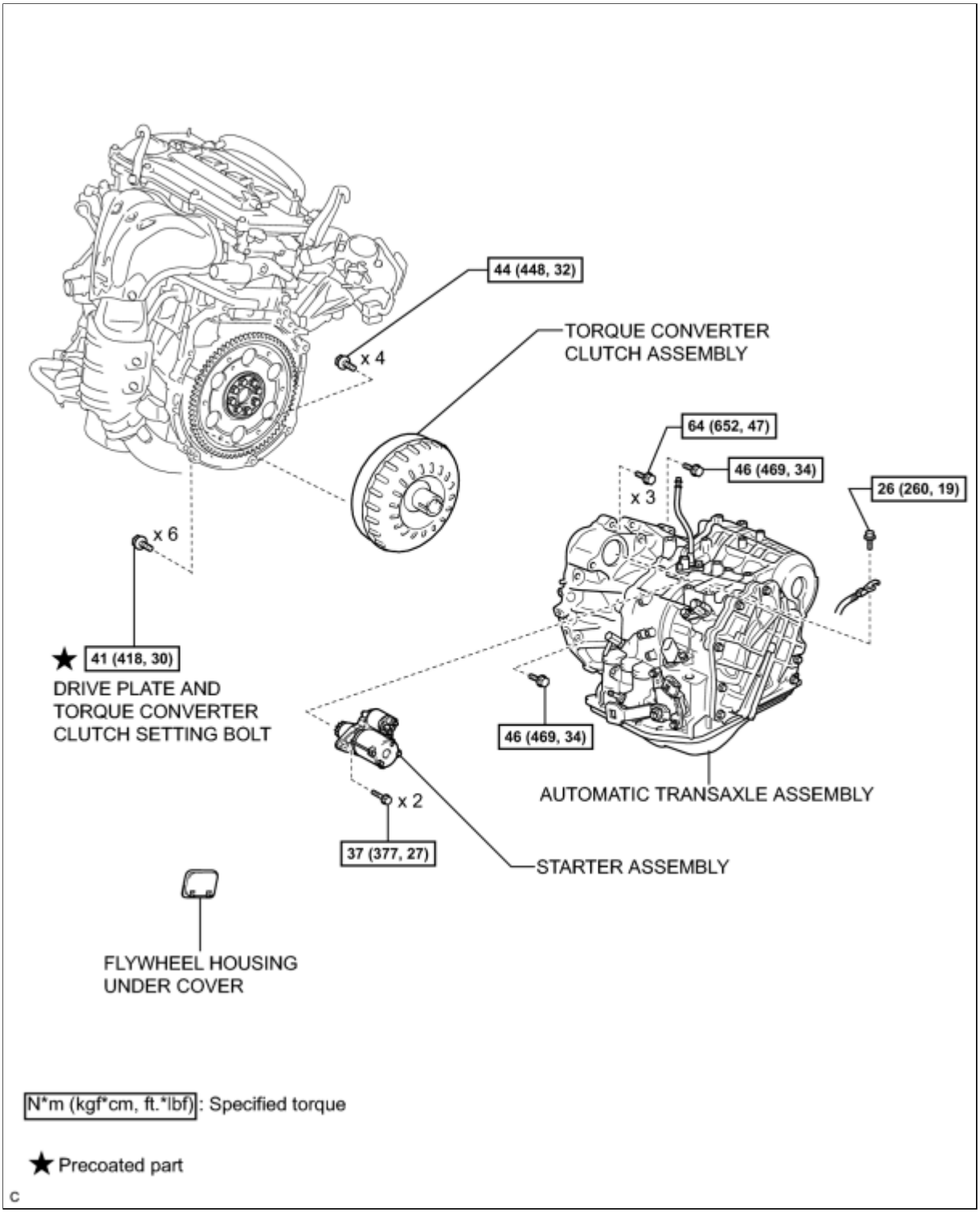

ILLUSTRATION

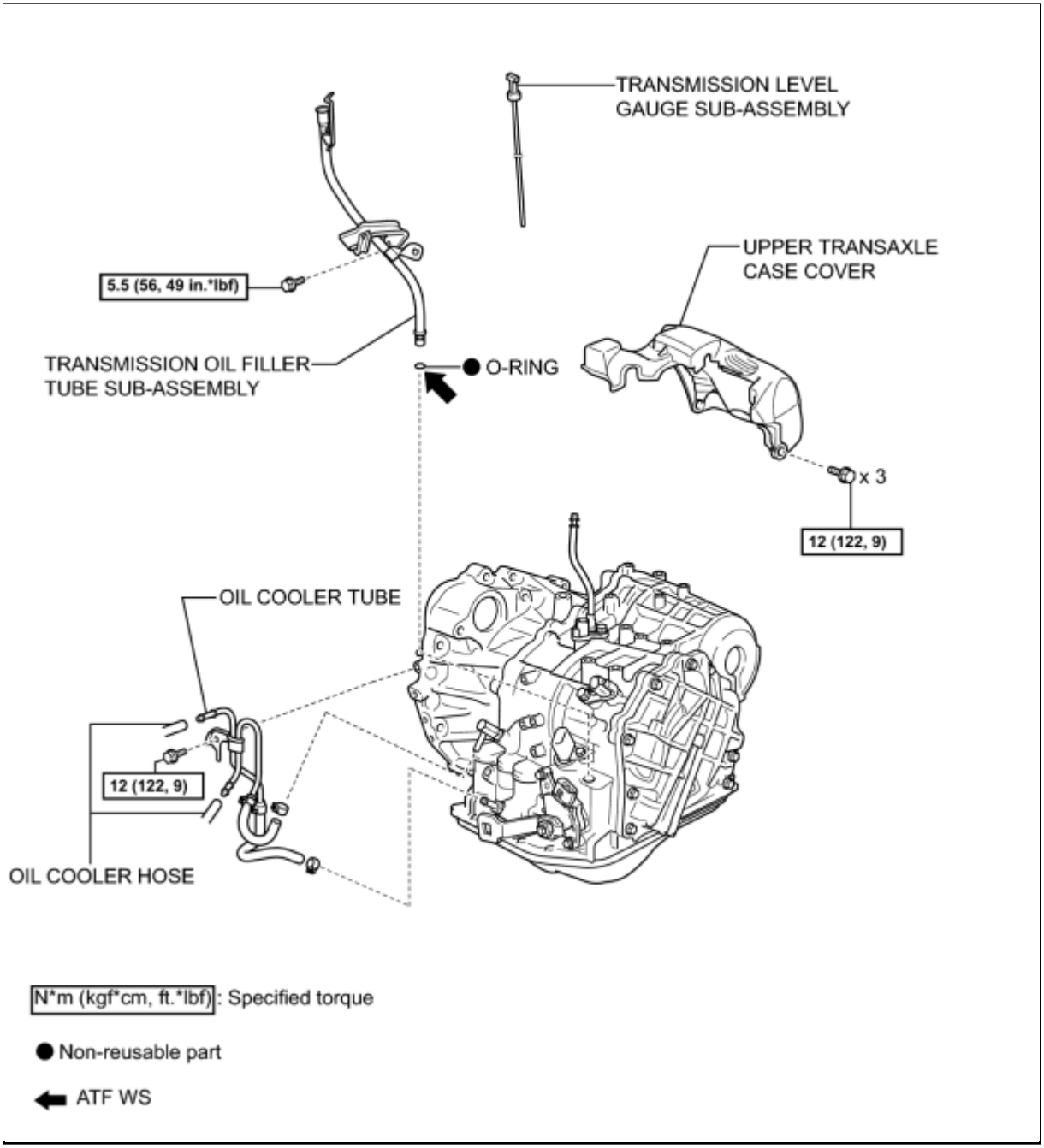

ILLUSTRATION

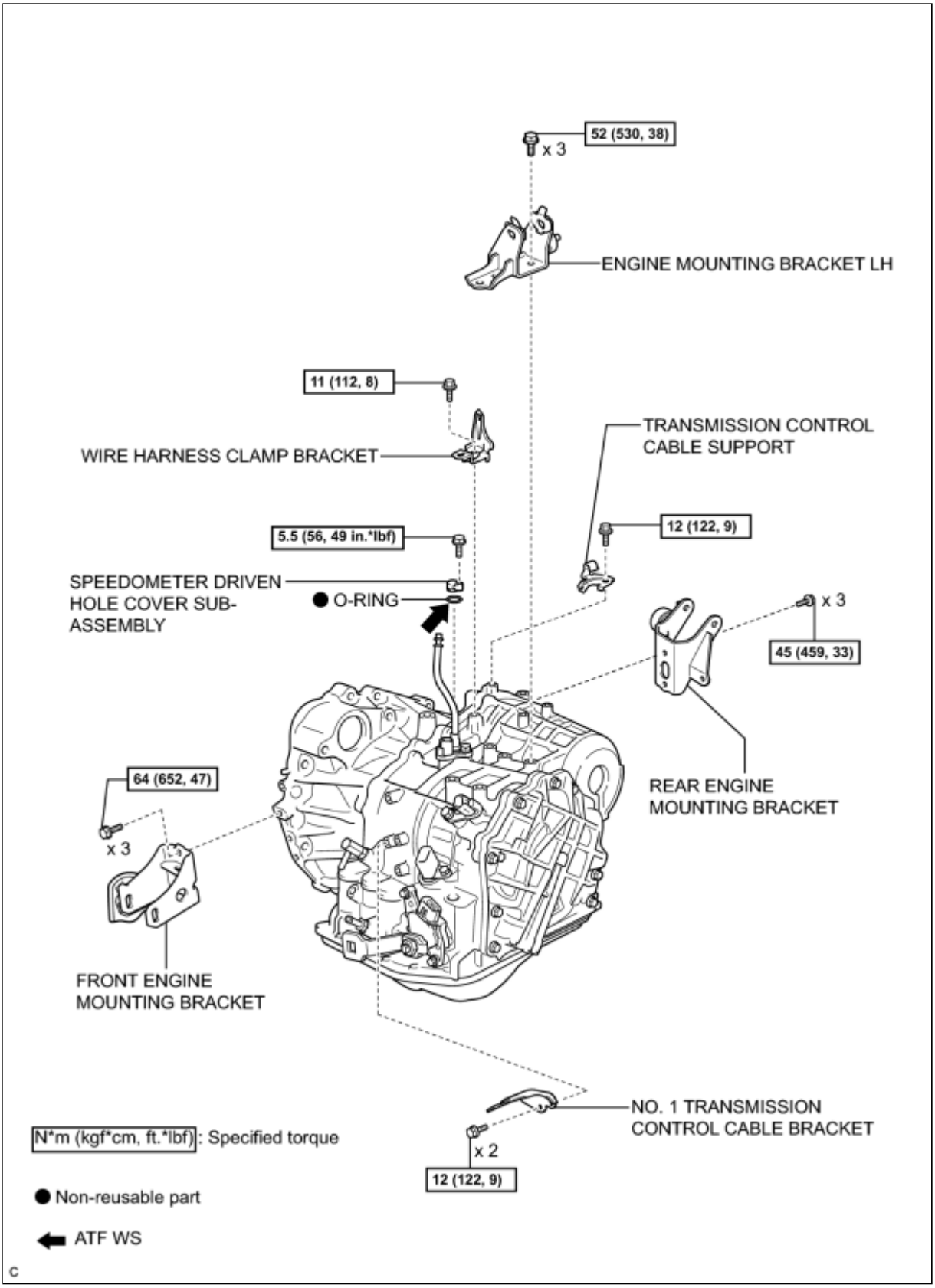
52 (530, 38)
x 3
ENGINE MOUNTING BRACKET LH
11 (112, 8)
WIRE HARNESS CLAMP BRACKET
TRANSMISSION CONTROL CABLE SUPPORT
12 (122, 9)
5.5 (56, 49 in.*lbf)
SPEEDOMETER DRIVEN HOLE COVER SUB-ASSEMBLY
● O-RING
x 3
45 (459, 33)
REAR ENGINE MOUNTING BRACKET
64 (652, 47)
x 3
FRONT ENGINE MOUNTING BRACKET
NO. 1 TRANSMISSION CONTROL CABLE BRACKET
x 2
12 (122, 9)
N*m (kgf*cm, ft.*lbf): Specified torque
● Non-reusable part
ATF WS

c

Last Modified: 3-10-2010	6.4 A	**From:** 200901
Model Year: 2010	**Model:** Corolla	**Doc ID:** RM000000YWS026X
Title: U250E AUTOMATIC TRANSMISSION / TRANSAXLE: AUTOMATIC TRANSAXLE ASSEMBLY: INSTALLATION (2010 Corolla)		

INSTALLATION

1. INSPECT TORQUE CONVERTER CLUTCH ASSEMBLY INFO

2. INSTALL TORQUE CONVERTER CLUTCH ASSEMBLY

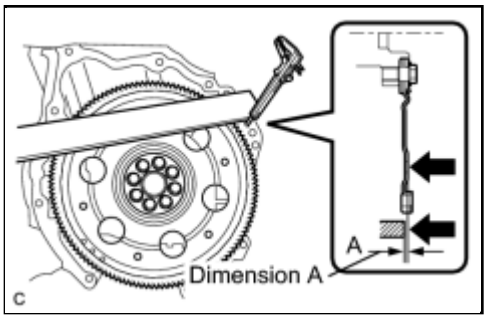

(a) Using a vernier caliper and a straightedge, measure dimension "A" between the transaxle fitting surface of the engine and the converter fitting surface of the drive plate. (#1)

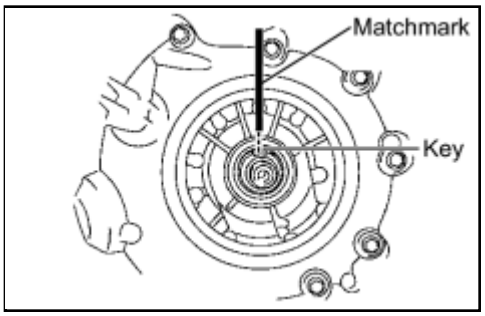

(b) Set the key of the front oil pump drive gear to the top and put a mark on the housing.

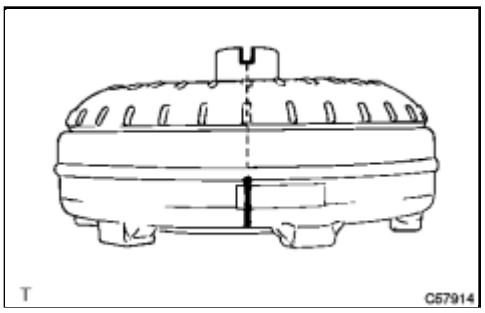

(c) Put a mark on the torque converter clutch so that its groove can be clearly indicated.

(d) Align the 2 marks on the transaxle case and torque converter clutch and fit the spline part of the input shaft to the spline part of the turbine runner.

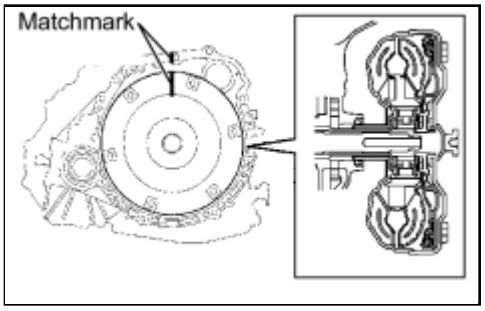

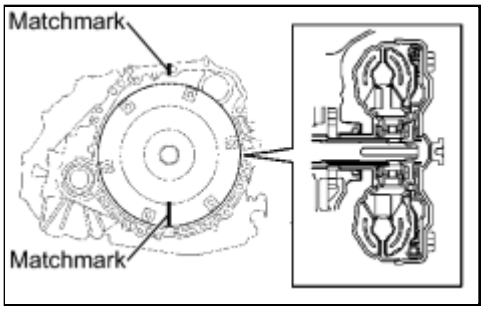

(e) Rotating the torque converter clutch, fit the spline part of the stator shaft to the spline part of the stator.

HINT:

Rotate the torque converter clutch about 180°.

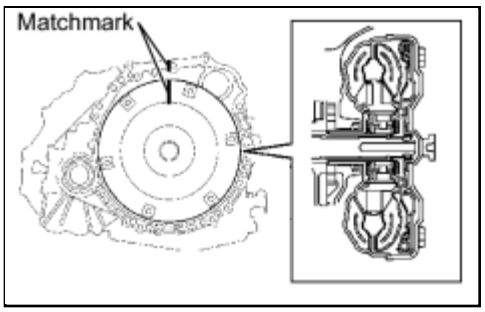

(f) Rotating the torque converter clutch, align the 2 marks on the case and the torque converter clutch again and fit the key of the oil pump drive gear into the key way of the torque converter clutch.

CAUTION:

When rotating the torque converter clutch, do not rotate it with excessive force.

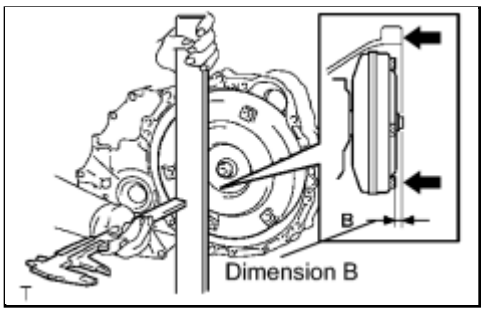

(g) Using a vernier caliper and a straightedge, measure dimension "B" shown in the illustration and check that "B" is greater than "A" (measured in step (#1)).

Standard:

A + 1 mm (0.0394 in.) or more

NOTICE:

Remember to subtract the thickness of the straightedge.

3. INSTALL WIRE HARNESS CLAMP BRACKET

(a) Install the bracket with the bolt.

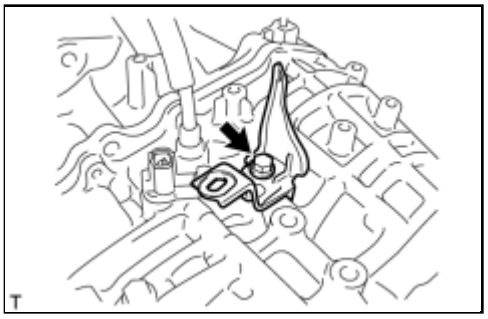

Torque: 11 N·m (112 kgf·cm, 8ft·lbf)

4. INSTALL UPPER TRANSAXLE CASE COVER

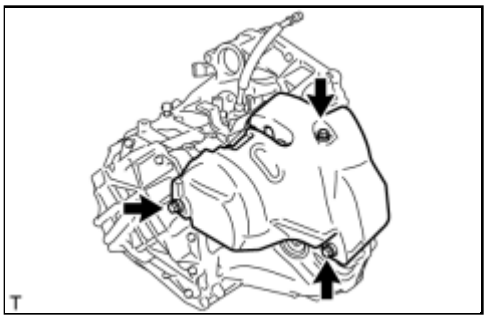

(a) Install the upper transmission case cover with the 3 bolts.

Torque: 12 N·m (122 kgf·cm, 9ft·lbf)

5. INSTALL SPEEDOMETER DRIVEN HOLE COVER SUB-ASSEMBLY

(a) Coat a new O-ring with ATF WS, and install it to the hole cover.

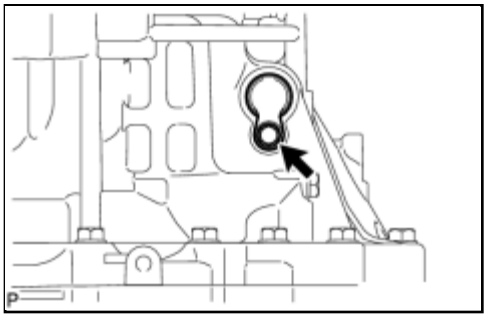

(b) Install the hole cover to the transaxle case with the bolt.

Torque: 5.5 N·m (56 kgf·cm, 49in·lbf)

6. INSTALL OIL COOLER TUBE

(a) Connect the 2 oil cooler hoses to the 2 unions with the 2 hose clamps.

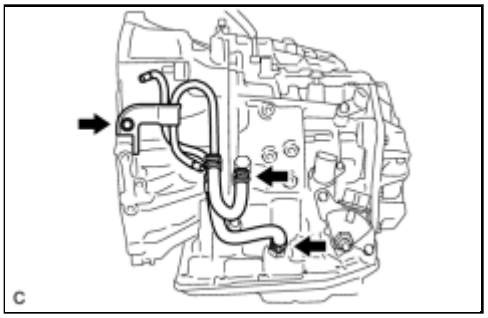

(b) Install the oil cooler tube sub-assembly to the automatic transaxle with the bolt.

Torque: 12 N·m (122 kgf·cm, 9ft·lbf)

7. INSTALL TRANSMISSION OIL FILLER TUBE SUB-ASSEMBLY

(a) Coat a new O-ring with ATF WS, and install it to the oil filler tube.

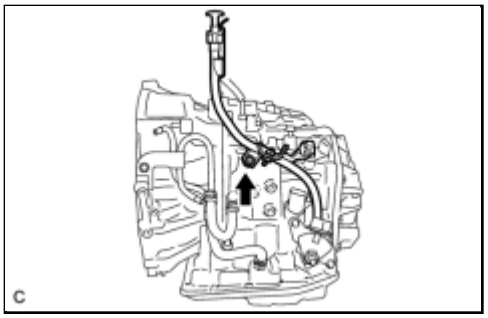

(b) Install the oil filler tube to the automatic transaxle with the bolt.

Torque: 5.5 N·m (56 kgf·cm, 49in·lbf)

(c) Install the transmission oil level gauge sub-assembly.

8. INSTALL NO. 1 TRANSMISSION CONTROL CABLE BRACKET

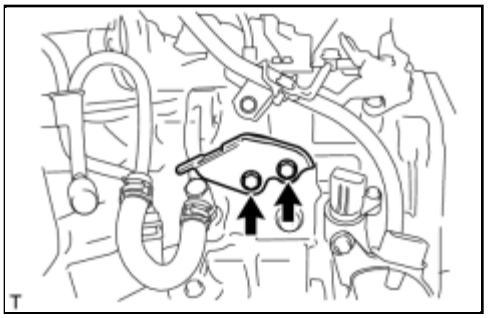

(a) Install the No. 1 transmission control cable bracket with the 2 bolts.

Torque: 12 N·m (122 kgf·cm, 9ft·lbf)

9. INSTALL ENGINE MOUNTING BRACKET LH

(a) Install the engine mounting bracket LH to the automatic transaxle with the 3 bolts.

Torque: 52 N·m (530 kgf·cm, 38ft·lbf)

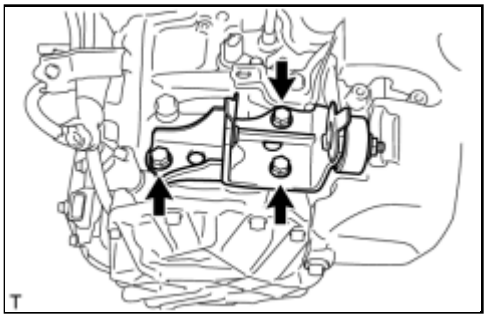

10. INSTALL REAR ENGINE MOUNTING BRACKET

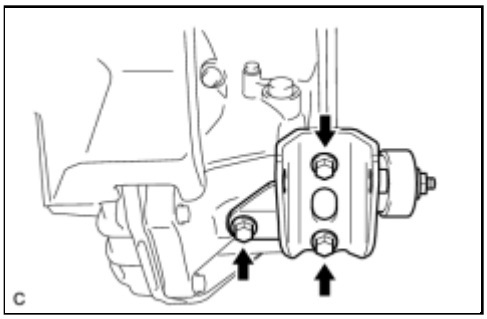

(a) Install the rear engine mounting bracket to the automatic transaxle with the 3 bolts.

Torque: 45 N·m (459 kgf·cm, 33ft·lbf)

11. INSTALL FRONT ENGINE MOUNTING BRACKET

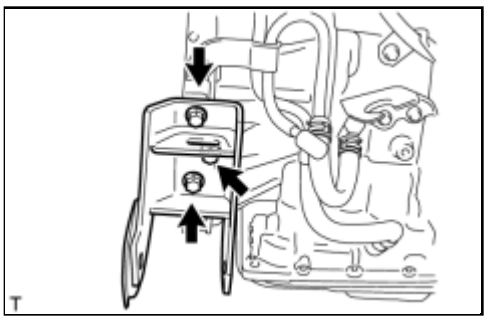

(a) Install the front engine mounting bracket to the automatic transaxle with the 3 bolts.

Torque: 64 N·m (652 kgf·cm, 47ft·lbf)

12. INSTALL AUTOMATIC TRANSAXLE ASSEMBLY

NOTICE:

Make sure the knock pins are fully engaged and the transaxle securely fitted to the engine before tightening the bolts.

(a) Install the automatic transaxle to the engine with the 5 bolts.

Bolt A - Torque: 64 N·m (652 kgf·cm, 47ft·lbf)
Bolt B - Torque: 46 N·m (469 kgf·cm, 34ft·lbf)
Bolt C - Torque: 46 N·m (469 kgf·cm, 34ft·lbf)

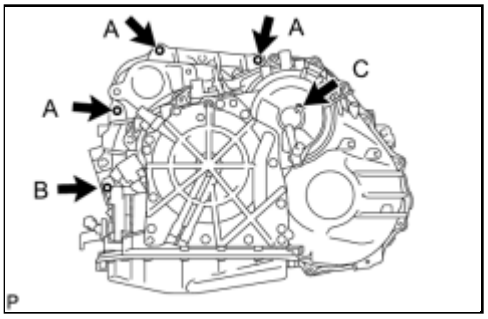

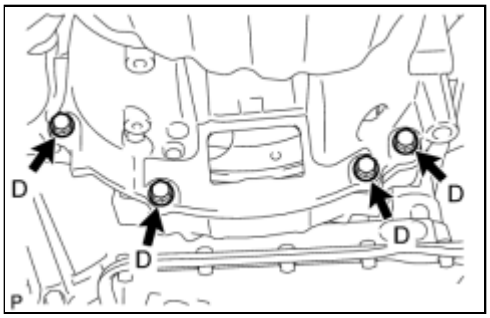

(b) Install the 4 lower side mounting bolts.

Bolt D - Torque: 44 N·m (448 kgf·cm, 32ft·lbf)

13. INSTALL WIRE HARNESS AND CONNECTOR

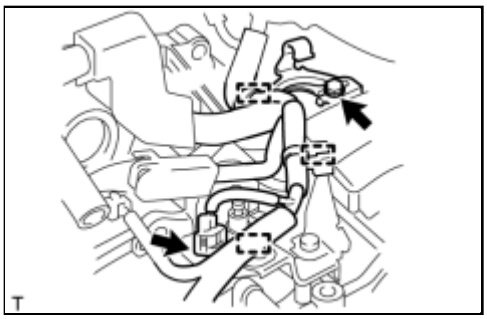

(a) Install the 3 engine wire clamps and speed sensor connector.

(b) Install the transmission control cable support with the bolt.

Torque: 12 N·m (122 kgf·cm, 9ft·lbf)

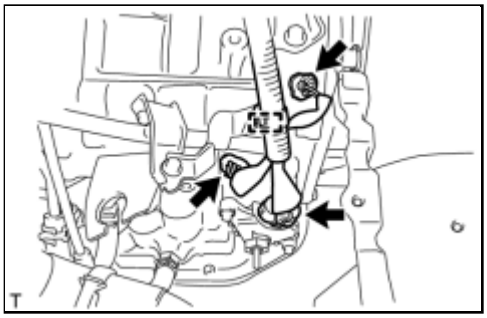

(c) Install the engine wire clamp, speed sensor connector, park/neutral position switch connector and transmission wire connector.

14. INSTALL STARTER ASSEMBLY INFO

15. INSTALL DRIVE PLATE AND TORQUE CONVERTER CLUTCH SETTING BOLT

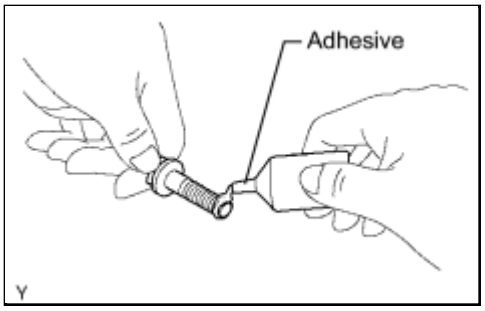

(a) Apply a few drops of adhesive to 2 or 3 threads of the 6 torque converter clutch mounting bolts tip.

Adhesive:
Toyota Genuine Adhesive 1324, Three Bond 1324 or equivalent.

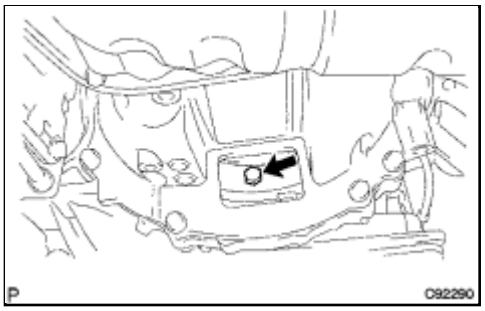

(b) Install the 6 torque converter clutch mounting bolts.

Torque: 41 N·m (418 kgf·cm, 30ft·lbf)

NOTICE:

Install the black colored bolt first, and then the silver colored 5 bolts.

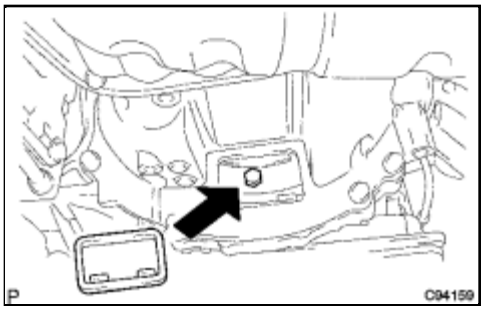

(c) Install the flywheel housing under cover.

16. TEMPORARILY TIGHTEN FRONT ENGINE MOUNTING INSULATOR INFO

17. TEMPORARILY TIGHTEN REAR ENGINE MOUNTING INSULATOR INFO

18. INSTALL ENGINE ASSEMBLY WITH TRANSAXLE

HINT:

See the steps from "Install Engine Assembly with Transaxle" through "Check ABS Speed Sensor Signal" INFO **.**

19. RESET MEMORY

HINT:

Perform Reset Memory (AT initialization) when replacing the automatic transaxle assembly INFO **.**



Last Modified: 3-10-2010	6.4 A	**From:** 200901
Model Year: 2010	**Model:** Corolla	**Doc ID:** RM000000YWV024X
Title: U250E AUTOMATIC TRANSMISSION / TRANSAXLE: AUTOMATIC TRANSAXLE ASSEMBLY: REMOVAL (2010 Corolla)		

REMOVAL

1. REMOVE ENGINE ASSEMBLY WITH TRANSAXLE

HINT:

See the steps from "Discharge Fuel System Pressure" through "Remove Engine Assembly with Transaxle" INFO

.

2. REMOVE DRIVE PLATE AND TORQUE CONVERTER CLUTCH SETTING BOLT

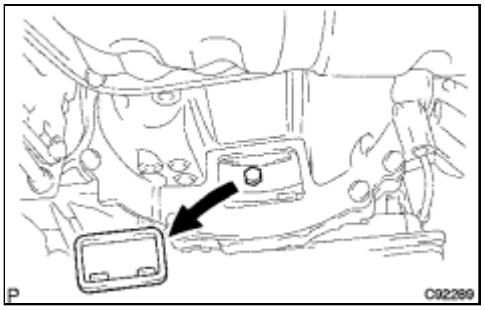

(a) Remove the flywheel housing under cover.

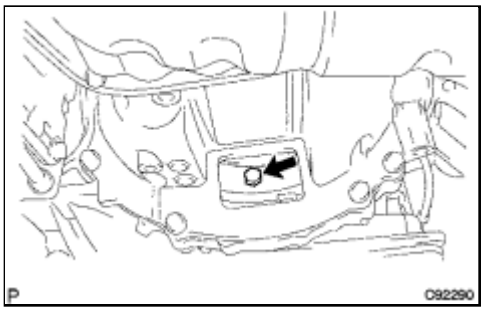

(b) Turn the crankshaft to gain access and remove the 6 bolts while holding the crankshaft pulley bolt with a wrench.

NOTICE:

One of the 6 bolts has a different color than the other ones.

3. INSTALL ENGINE HANGERS INFO

4. REMOVE FRONT ENGINE MOUNTING INSULATOR INFO

5. REMOVE REAR ENGINE MOUNTING INSULATOR INFO

6. REMOVE STARTER ASSEMBLY INFO

7. DISCONNECT WIRE HARNESS AND CONNECTOR

(a) Remove the bolt, disconnect the 3 engine wire clamps and

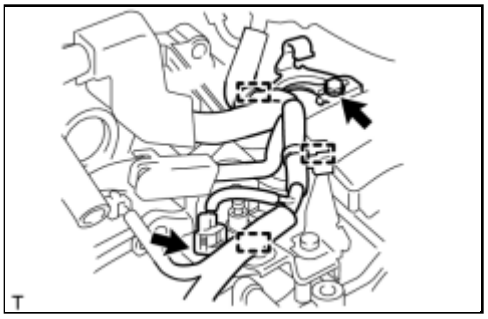

speed sensor connector.

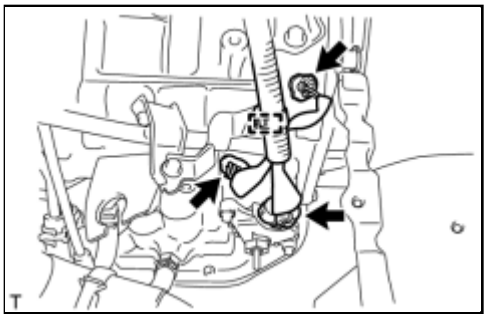

(b) Disconnect the engine wire clamp, speed sensor connector, park/neutral position switch connector and transmission wire connector.

8. REMOVE AUTOMATIC TRANSAXLE ASSEMBLY

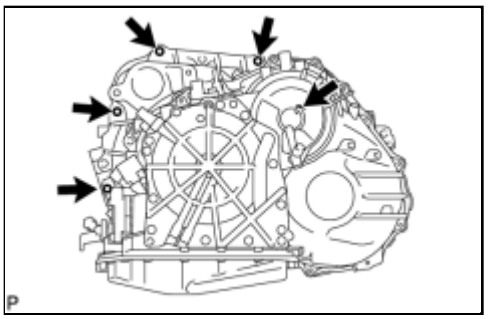

(a) Remove the 5 bolts.

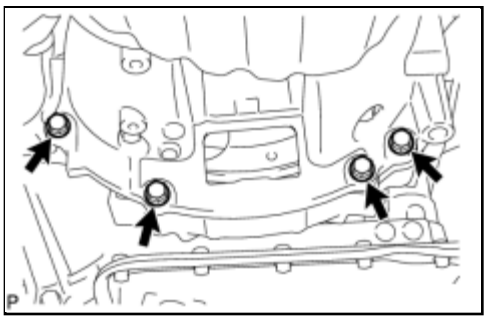

(b) Remove the 4 lower side mounting bolts.

(c) Separate and remove the automatic transaxle.

9. REMOVE FRONT ENGINE MOUNTING BRACKET

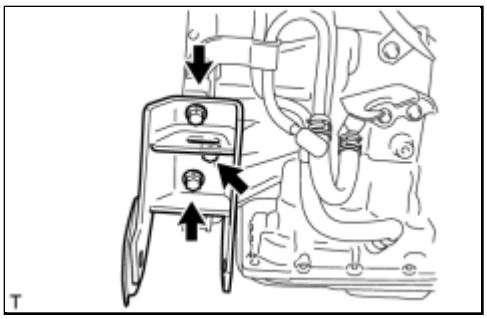

(a) Remove the 3 bolts and front engine mounting bracket.

10. REMOVE REAR ENGINE MOUNTING BRACKET

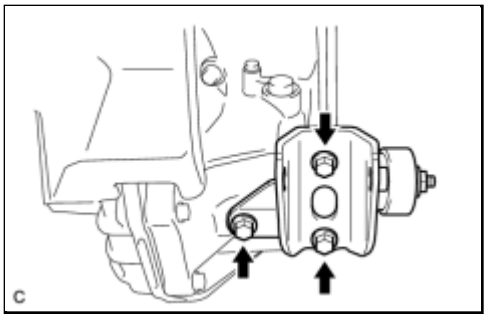

(a) Remove the 3 bolts and rear engine mounting bracket.

11. REMOVE ENGINE MOUNTING BRACKET LH

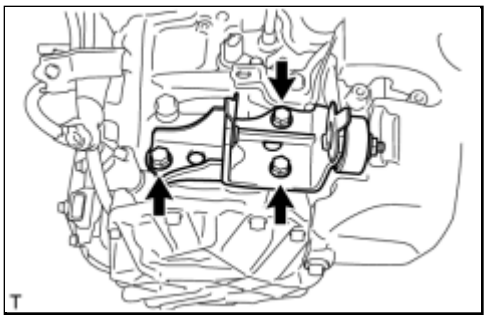

(a) Remove the 3 bolts and engine mounting bracket LH.

12. REMOVE NO. 1 TRANSMISSION CONTROL CABLE BRACKET

(a) Remove the 2 bolts and No. 1 transmission control cable bracket.

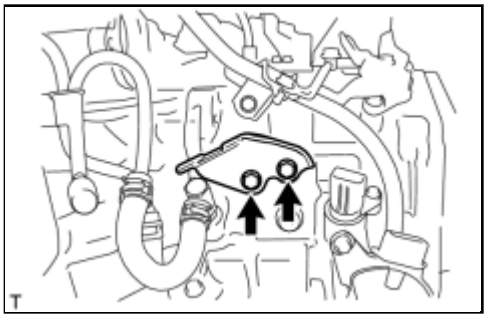

13. REMOVE TRANSMISSION OIL FILLER TUBE SUB-ASSEMBLY

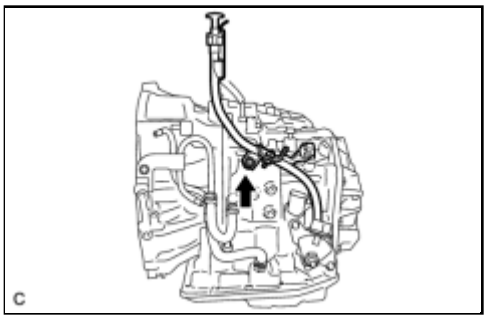

(a) Remove the transmission oil level gauge sub-assembly.

(b) Remove the bolt and remove the transmission oil filler tube sub-assembly.

(c) Remove the O-ring from the transmission oil filler tube sub-assembly.

14. REMOVE OIL COOLER TUBE

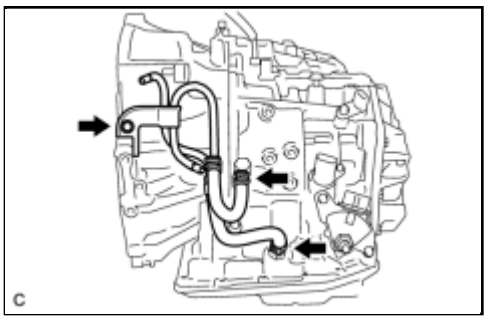

(a) Remove the 2 hose clamps, bolt and oil cooler tube sub-assembly.

15. REMOVE SPEEDOMETER DRIVEN HOLE COVER SUB-ASSEMBLY

(a) Remove the bolt and hole cover from the transaxle case.

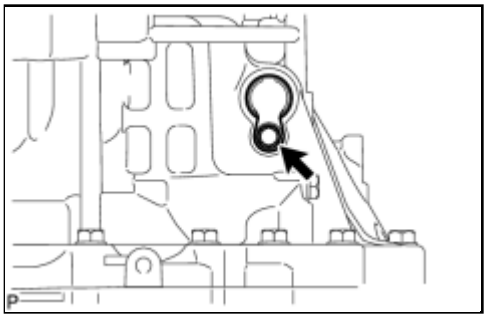

(b) Remove the O-ring from the hole cover.

16. REMOVE UPPER TRANSAXLE CASE COVER

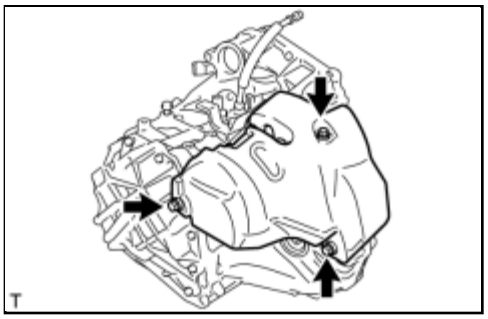

(a) Remove the 3 bolts and upper transaxle case cover.

17. REMOVE WIRE HARNESS CLAMP BRACKET

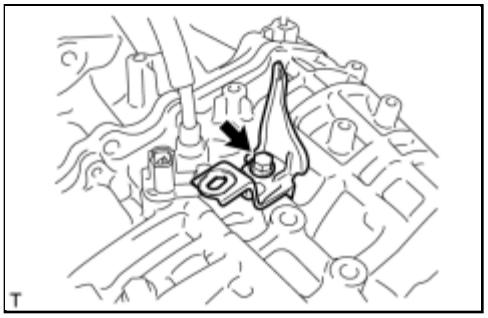

(a) Remove the bolt and wire harness clamp bracket.

18. REMOVE TORQUE CONVERTER CLUTCH ASSEMBLY

(a) Remove the torque converter clutch from the automatic transaxle.

Last Modified: 3-10-2010	6.4 K	**From:** 200901
Model Year: 2010	**Model:** Corolla	**Doc ID:** RM00000192C01UX
Title: U341E AUTOMATIC TRANSMISSION / TRANSAXLE: AUTOMATIC TRANSAXLE ASSEMBLY: COMPONENTS (2010 Corolla)		

COMPONENTS

ILLUSTRATION

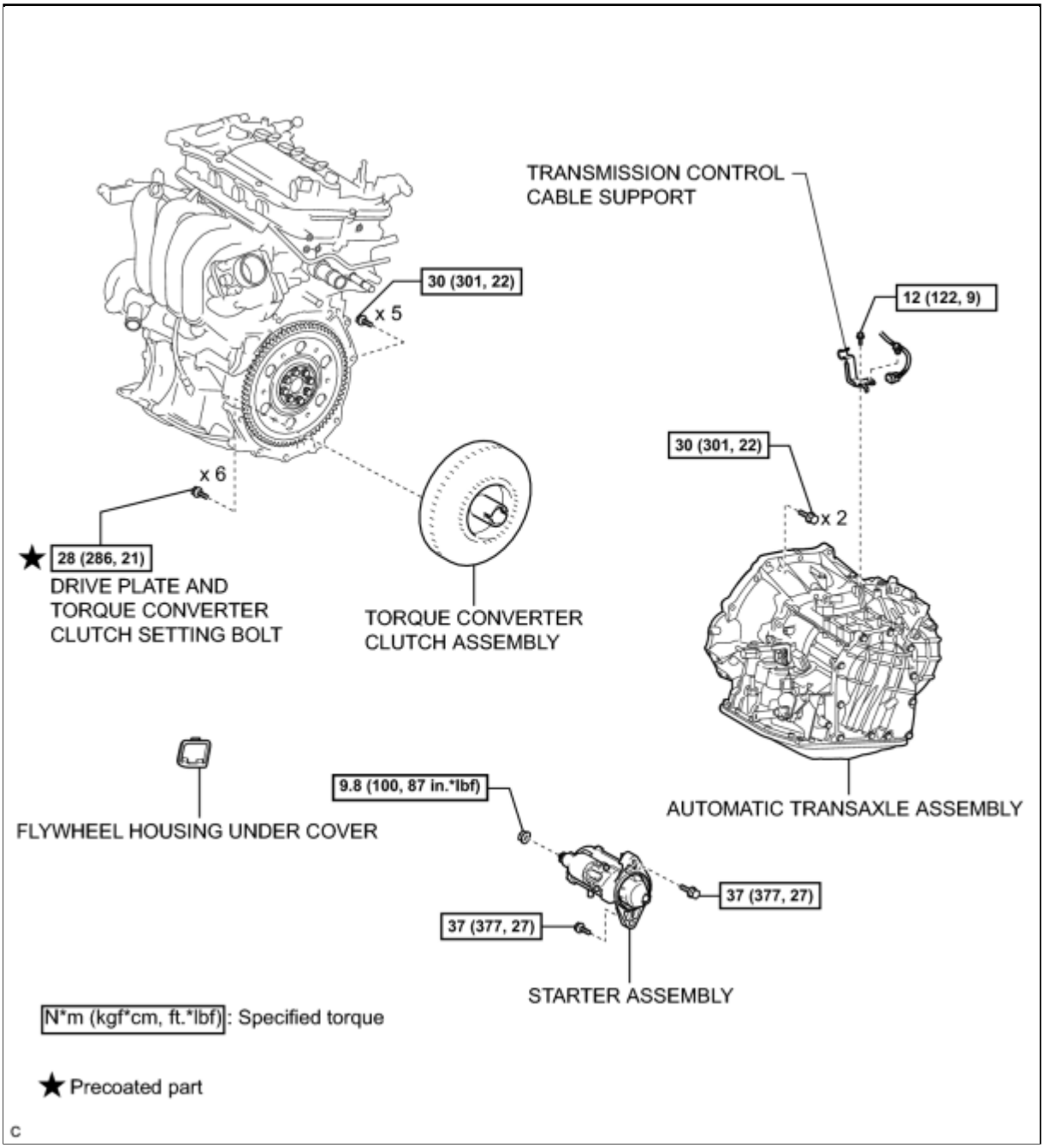

ILLUSTRATION

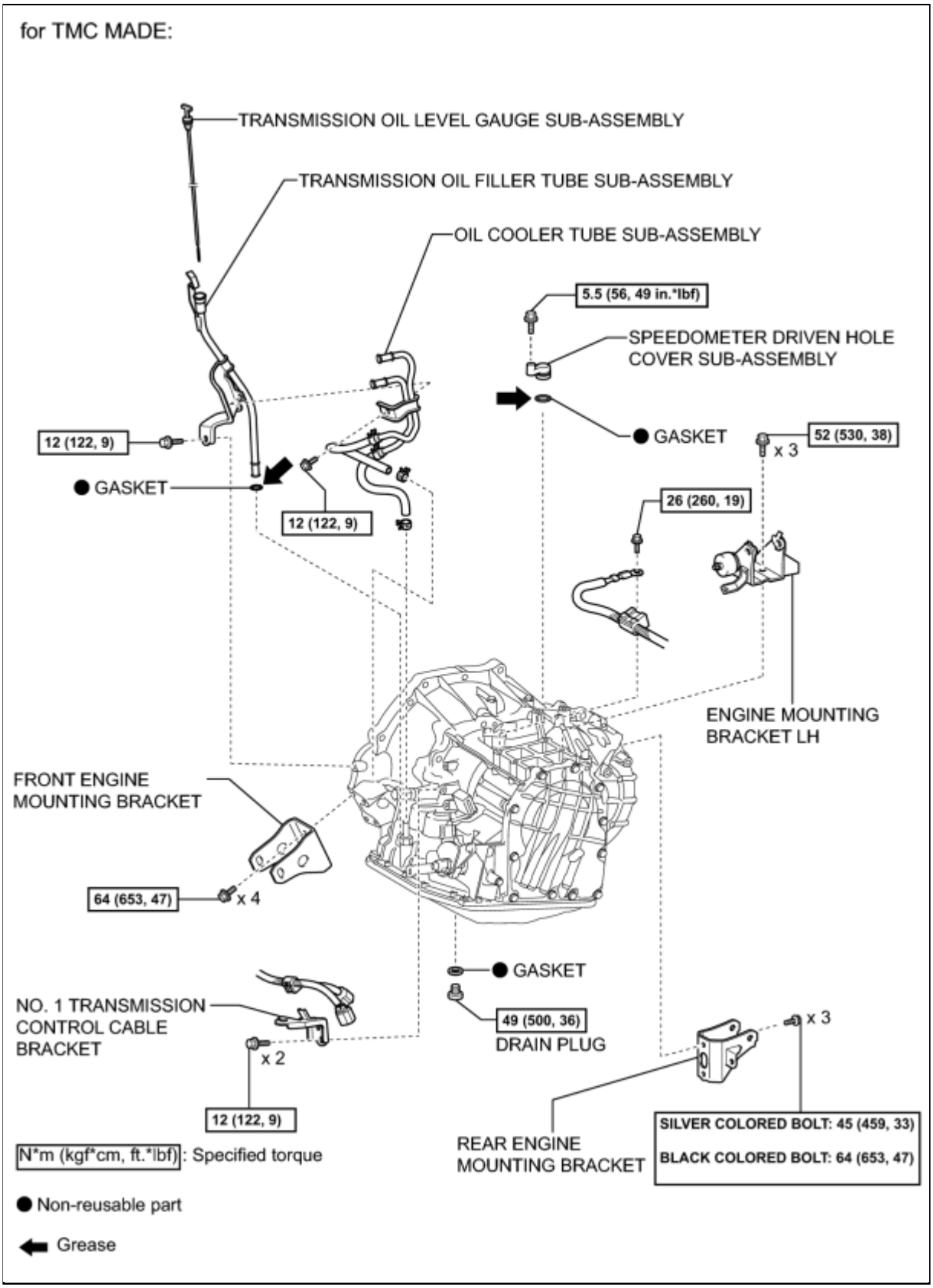

ILLUSTRATION

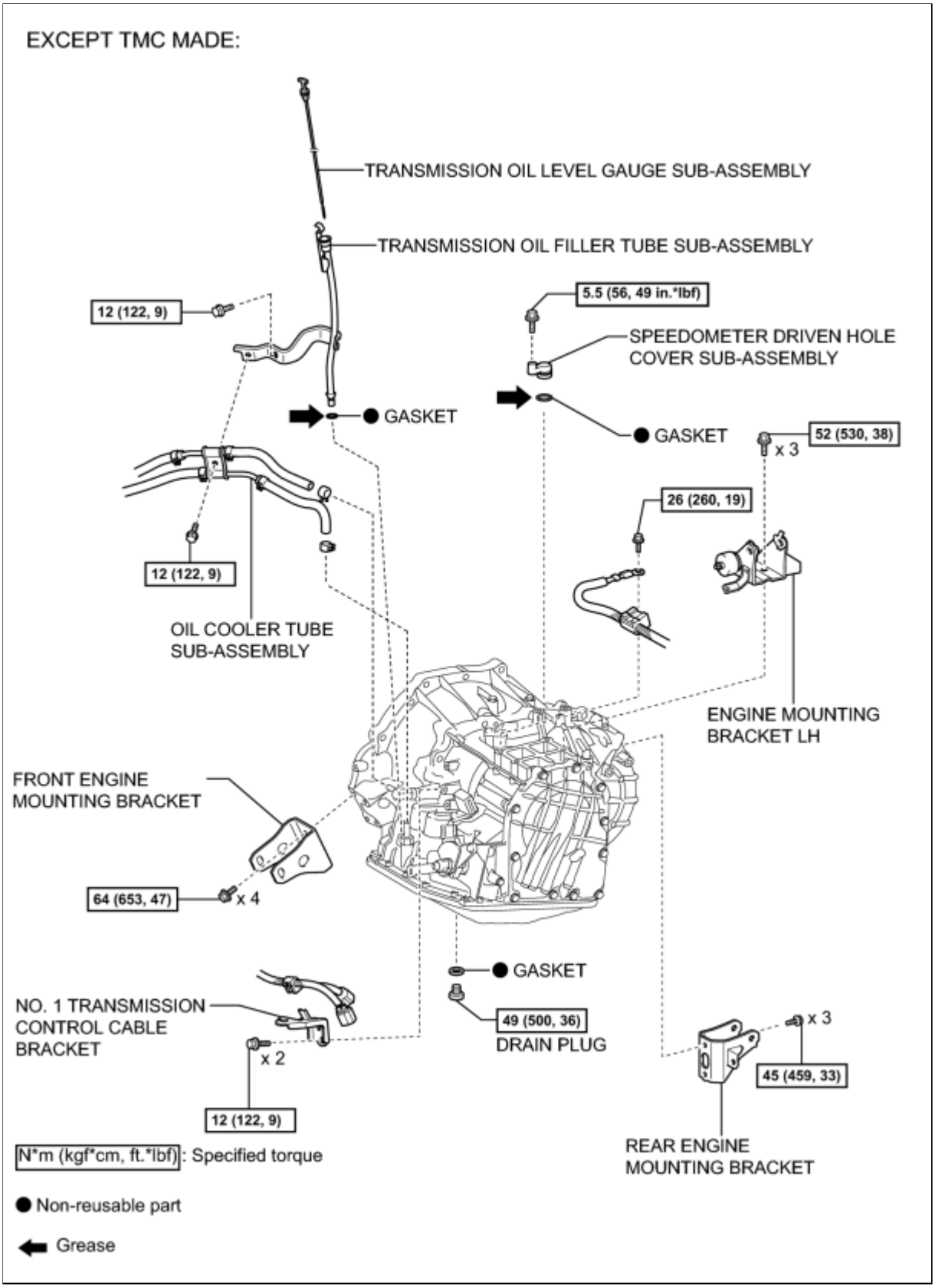
EXCEPT TMC MADE:
TRANSMISSION OIL LEVEL GAUGE SUB-ASSEMBLY
TRANSMISSION OIL FILLER TUBE SUB-ASSEMBLY
12 (122, 9)
5.5 (56, 49 in.*lbf)
SPEEDOMETER DRIVEN HOLE COVER SUB-ASSEMBLY
GASKET
GASKET
52 (530, 38)
x 3
26 (260, 19)
12 (122, 9)
OIL COOLER TUBE SUB-ASSEMBLY
ENGINE MOUNTING BRACKET LH
FRONT ENGINE MOUNTING BRACKET
64 (653, 47)
x 4
GASKET
49 (500, 36)
DRAIN PLUG
NO. 1 TRANSMISSION CONTROL CABLE BRACKET
x 2
12 (122, 9)
x 3
45 (459, 33)
REAR ENGINE MOUNTING BRACKET
N*m (kgf*cm, ft.*lbf): Specified torque
Non-reusable part
Grease

Last Modified: 3-10-2010	6.4 A	**From:** 200901
Model Year: 2010	**Model:** Corolla	**Doc ID:** RM00000192D020X
Title: U341E AUTOMATIC TRANSMISSION / TRANSAXLE: AUTOMATIC TRANSAXLE ASSEMBLY: REMOVAL (2010 Corolla)		

REMOVAL

1. REMOVE ENGINE ASSEMBLY WITH TRANSAXLE

HINT:

See the steps from "Discharge Fuel System Pressure" through "Remove Engine Assembly with Transaxle" INFO

.

2. REMOVE FLYWHEEL HOUSING UNDER COVER



(a) Remove the flywheel housing under cover.

3. REMOVE DRIVE PLATE AND TORQUE CONVERTER CLUTCH SETTING BOLT

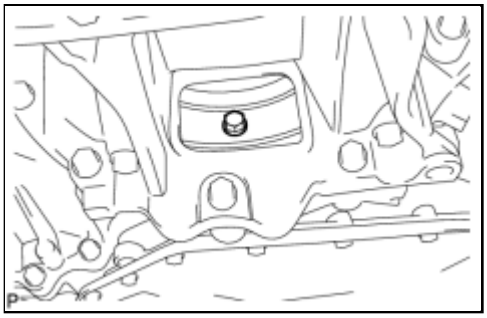

(a) Remove the 6 torque converter clutch setting bolts while holding the crankshaft pulley bolt with a wrench.

NOTICE:

One of the 6 bolts has a different color than the other ones.

4. REMOVE FRONT ENGINE MOUNTING INSULATOR INFO

5. REMOVE REAR ENGINE MOUNTING INSULATOR INFO

6. REMOVE OIL COOLER TUBE SUB-ASSEMBLY (except TMC Made)

(a) Remove the 2 hose clamps and bolt, and disconnect the oil cooler.

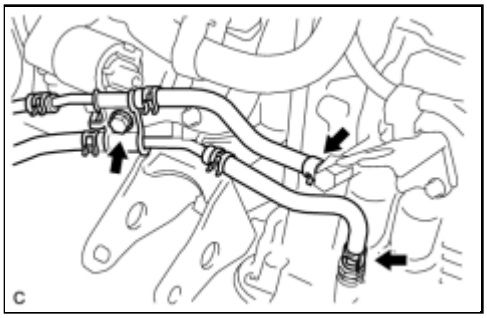

7. REMOVE TRANSMISSION OIL FILLER TUBE SUB-ASSEMBLY (except TMC Made)

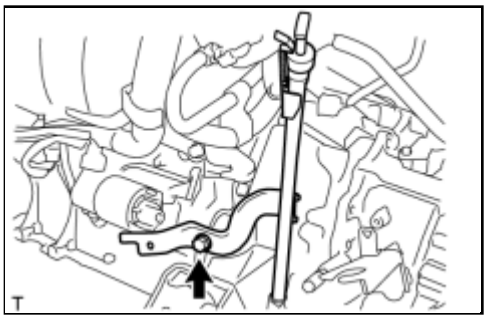

(a) Remove the transmission oil level gauge sub-assembly.

(b) Remove the bolt and transmission oil filler tube sub-assembly.

(c) Remove the O-ring from the transmission oil filler tube sub-assembly.

8. REMOVE STARTER ASSEMBLY INFO

9. SEPARATE TRANSMISSION CONTROL CABLE SUPPORT

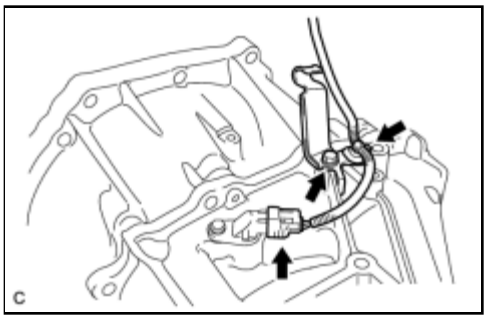

(a) Separate the speed sensor connector and wire harness clamp.

(b) Remove the bolt and transmission control cable bracket from the automatic transaxle.

10. REMOVE NO. 1 TRANSMISSION CONTROL CABLE BRACKET

(a) Separate the 2 connectors and wire harness clamp.

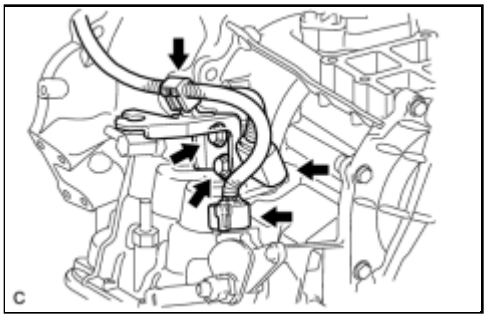

(b) Remove the 2 bolts and remove the No. 1 transmission control cable bracket from the automatic transaxle.

11. REMOVE AUTOMATIC TRANSAXLE ASSEMBLY

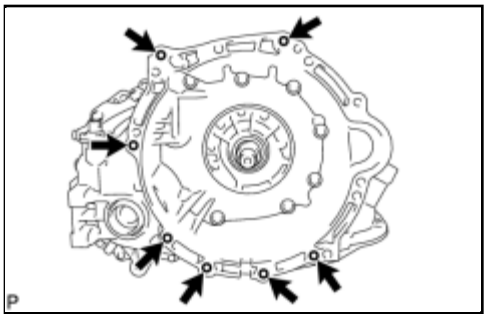

(a) Remove the 7 bolts and automatic transaxle from the engine.

12. REMOVE ENGINE MOUNTING BRACKET LH

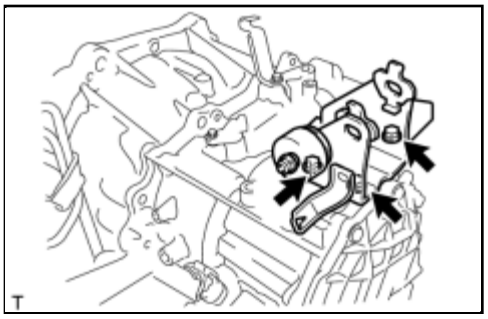

(a) Remove the 3 bolts and engine mounting bracket LH from the automatic transaxle.

13. REMOVE FRONT ENGINE MOUNTING BRACKET

(a) Remove the 4 bolts and front engine mounting bracket from the automatic transaxle.

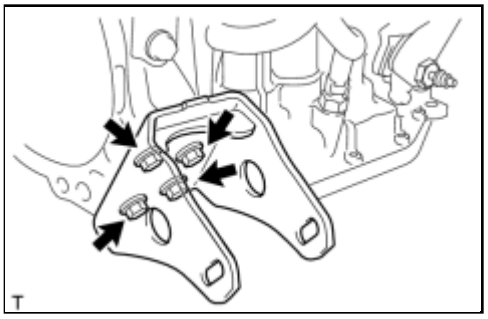

14. REMOVE REAR ENGINE MOUNTING BRACKET

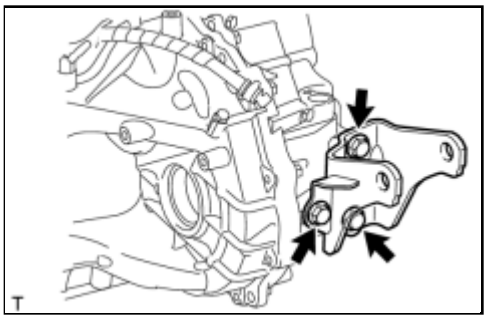

(a) Remove the 3 bolts and rear engine mounting bracket from the automatic transaxle.

15. REMOVE OIL COOLER TUBE SUB-ASSEMBLY (for TMC Made)

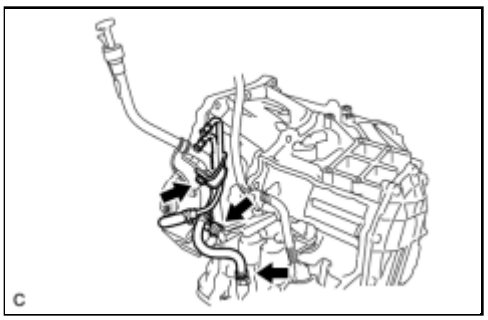

(a) Remove the 2 hose clamps, bolt and oil cooler tube sub-assembly.

16. REMOVE TRANSMISSION OIL FILLER TUBE SUB-ASSEMBLY (for TMC Made)

(a) Remove the transmission oil level gauge sub-assembly.

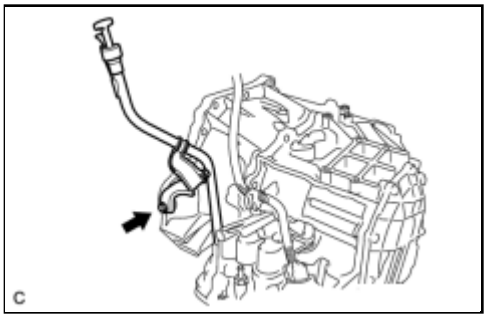

(b) Remove the bolt and transmission oil filler tube sub-assembly.

(c) Remove the O-ring from the transmission oil filler tube sub-assembly.

17. REMOVE SPEEDOMETER DRIVEN HOLE COVER SUB-ASSEMBLY

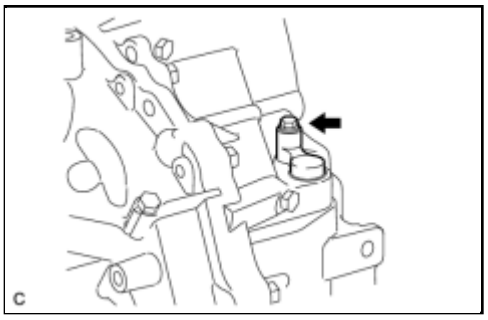

(a) Remove the bolt and speedometer driven hole cover sub-assembly.

18. REMOVE TORQUE CONVERTER CLUTCH ASSEMBLY

(a) Remove the torque converter clutch from the automatic transaxle.

Last Modified: 3-10-2010	6.4 A	**From:** 200901
Model Year: 2010	**Model:** Corolla	**Doc ID:** RM00000192B020X
Title: U341E AUTOMATIC TRANSMISSION / TRANSAXLE: AUTOMATIC TRANSAXLE ASSEMBLY: INSTALLATION (2010 Corolla)		

INSTALLATION

1. INSPECT TORQUE CONVERTER CLUTCH ASSEMBLY INFO

2. INSTALL TORQUE CONVERTER CLUTCH ASSEMBLY

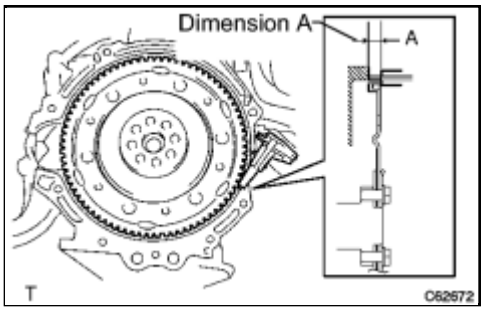

(a) Using a vernier caliper, measure dimension A between the transaxle fitting surface of the engine and the converter fitting surface of the drive plate. (#1)

HINT:

The ring gear side surface and the converter fitting surface are same level.

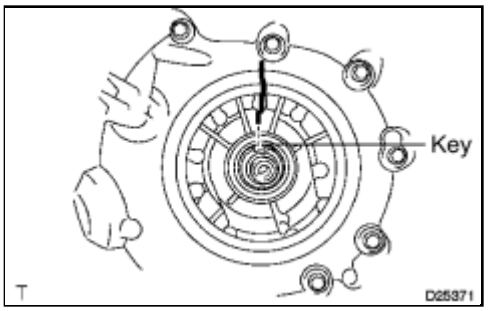

(b) Set the key at the top of the front oil pump drive gear and put a matchmark on the housing.

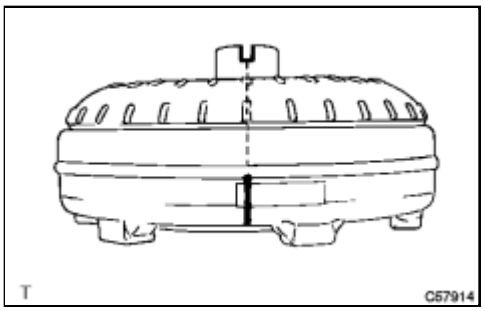

(c) Put a matchmark on the torque converter so that its groove is clearly indicated.

(d) Align the matchmarks on the case with the one on the converter and fit the spline of the input shaft to the spline of the turbine runner.

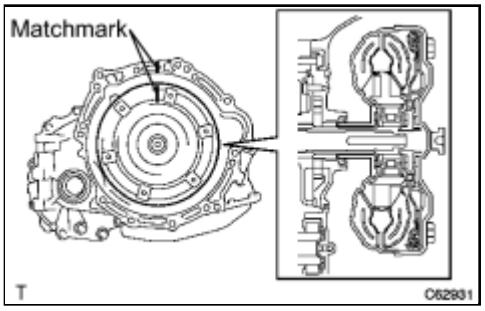

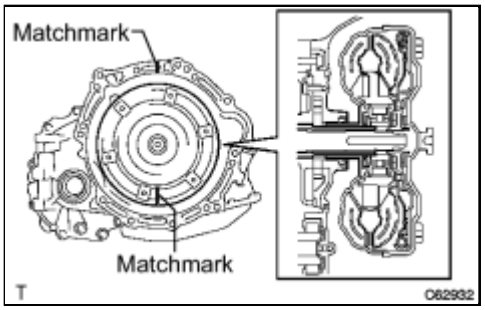

(e) Rotating the converter, fit the spline of the stator shaft with that of the stator.

HINT:

Rotate the converter approximately 180°.

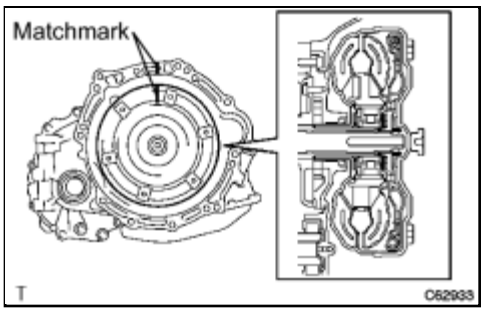

(f) Rotating the converter, align the mark on the case with the one on the converter again and fit the key of the oil pump drive gear into the keyway of the converter.

NOTICE:

Do not push the converter excessively when rotating it.

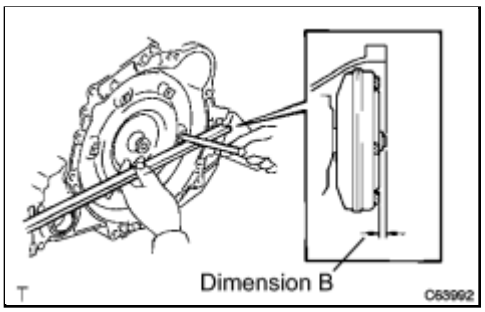

(g) Using a vernier caliper and a straightedge, measure dimension B shown in the illustration and check that dimension B is greater than dimension A, which was measured in step #1.

Standard:

A + 1 mm (0.0394 in.) or more

NOTICE:

Subtract the thickness of the straightedge from the measured value to gain dimension B.

3. INSTALL SPEEDOMETER DRIVEN HOLE COVER SUB-ASSEMBLY

(a) Install the speedometer driven hole cover sub-assembly

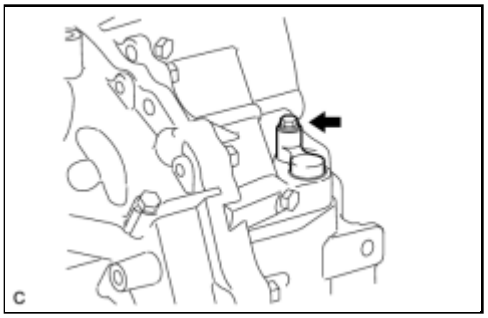

to the automatic transaxle with the bolt.

Torque: 5.5 N·m (56 kgf·cm, 49in·lbf)

4. INSTALL TRANSMISSION OIL FILLER TUBE SUB-ASSEMBLY (for TMC Made)

(a) Apply ATF to a new O-ring, and install it to the transmission oil filler tube sub-assembly.

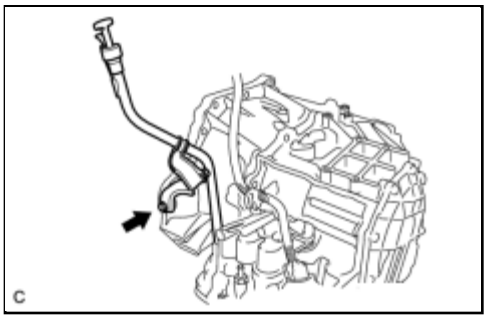

(b) Install the transmission oil filler tube sub-assembly to the automatic transaxle with the bolt.

Torque: 12 N·m (122 kgf·cm, 9ft·lbf)

(c) Install the transmission oil level gauge sub-assembly.

5. INSTALL OIL COOLER TUBE SUB-ASSEMBLY (for TMC Made)

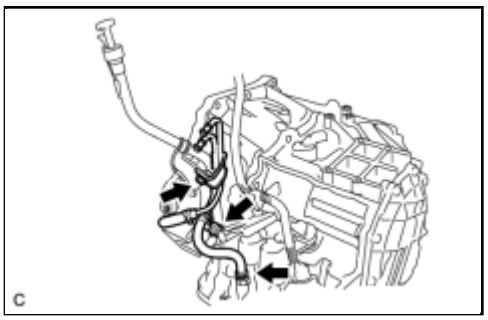

(a) Connect the 2 oil cooler hoses to the 2 unions with the 2 hose clamps.

(b) Install the oil cooler tube sub-assembly to the automatic transaxle with the bolt.

Torque: 12 N·m (122 kgf·cm, 9ft·lbf)

6. INSTALL REAR ENGINE MOUNTING BRACKET (for TMC Made)

(a) Install the rear engine mounting bracket to the automatic transaxle with the 3 bolts.

Silver Colored Bolt - Torque: 45 N·m (459 kgf·cm, 33ft·lbf)

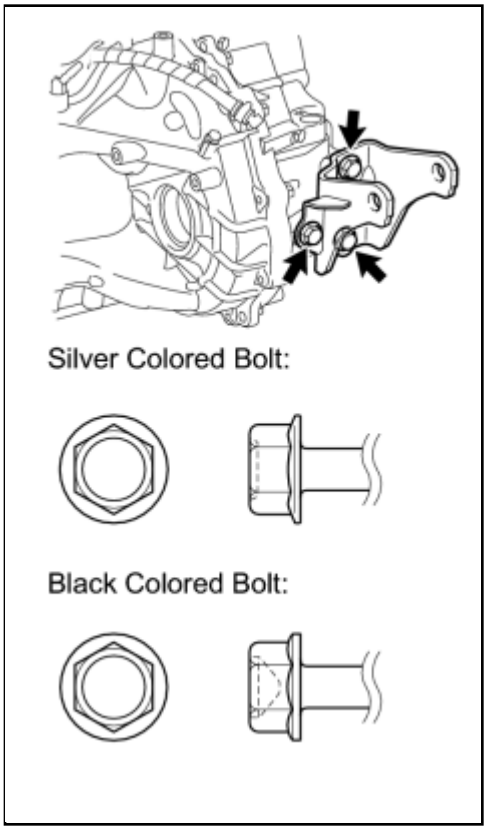

Black Colored Bolt - Torque: 64 N·m (653 kgf·cm, 47ft·lbf)

7. INSTALL REAR ENGINE MOUNTING BRACKET (except TMC Made)

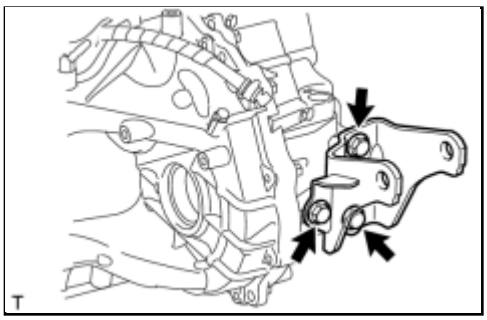

(a) Install the rear engine mounting bracket to the automatic transaxle with the 3 bolts.

Torque: 45 N·m (459 kgf·cm, 33ft·lbf)

8. INSTALL FRONT ENGINE MOUNTING BRACKET

(a) Install the front engine mounting bracket to the automatic transaxle with the 4 bolts.

Torque: 64 N·m (653 kgf·cm, 47ft·lbf)

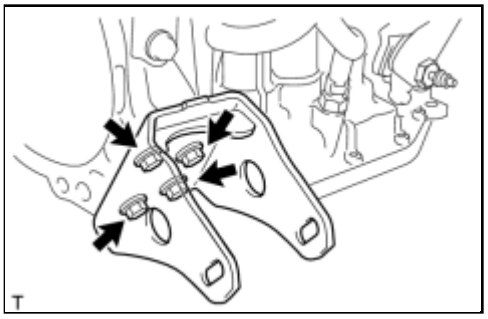

9. INSTALL ENGINE MOUNTING BRACKET LH

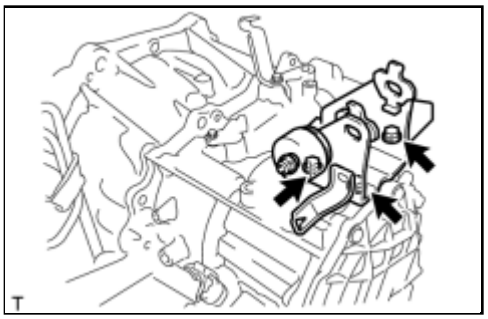

(a) Install the engine mounting bracket LH to the automatic transaxle with the 3 bolts.

Torque: 52 N·m (530 kgf·cm, 38ft·lbf)

10. INSTALL AUTOMATIC TRANSAXLE ASSEMBLY

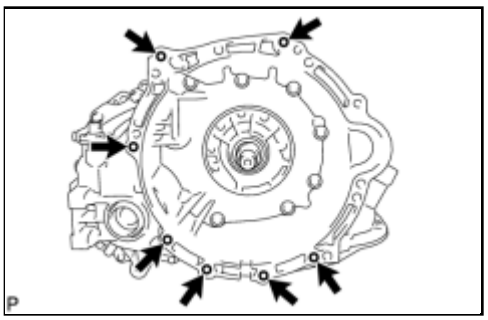

(a) Install the automatic transaxle to the engine with the 7 bolts.

Torque: 30 N·m (301 kgf·cm, 22ft·lbf)

NOTICE:

Make sure the knock pins are fully engaged and the transaxle securely fitted to the engine before tightening the bolts.

11. INSTALL NO. 1 TRANSMISSION CONTROL CABLE BRACKET

(a) Install the No. 1 transmission control cable bracket to the automatic transaxle with the 2 bolts.

Torque: 12 N·m (122 kgf·cm, 9ft·lbf)

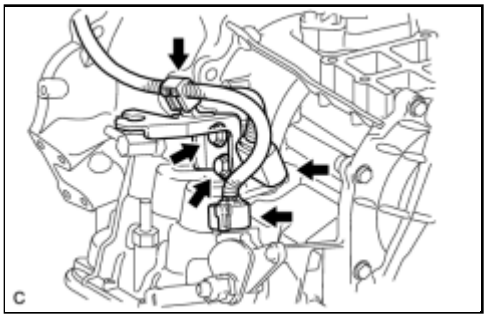

(b) Connect the 2 connectors and wire harness clamp.

12. INSTALL TRANSMISSION CONTROL CABLE SUPPORT

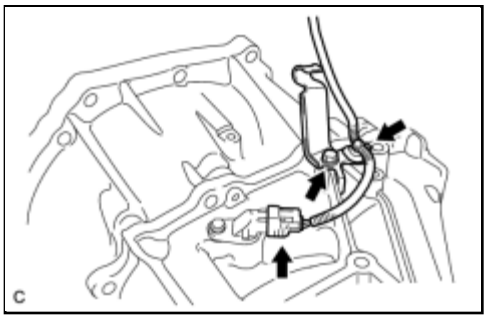

(a) Install the transmission control cable support with the bolt.

Torque: 12 N·m (122 kgf·cm, 9ft·lbf)

(b) Connect the wire harness clamp and speed sensor connector.

13. INSTALL STARTER ASSEMBLY INFO

14. INSTALL TRANSMISSION OIL FILLER TUBE SUB-ASSEMBLY (except TMC Made)

(a) Apply ATF WS to a new O-ring, and install it to the transmission oil filler tube sub-assembly.

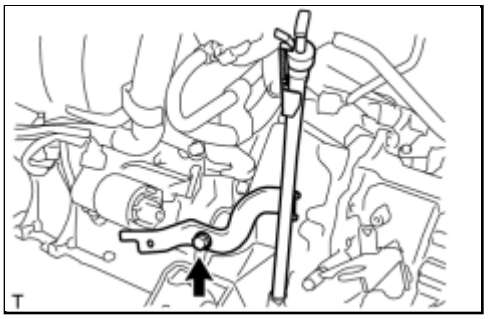

(b) Install the transmission oil filler tube sub-assembly to the automatic transaxle with the bolt.

Torque: 12 N·m (122 kgf·cm, 9ft·lbf)

(c) Install the transmission oil level gauge sub-assembly to the transmission oil filler tube sub-assembly.

15. INSTALL OIL COOLER TUBE SUB-ASSEMBLY (except TMC Made)

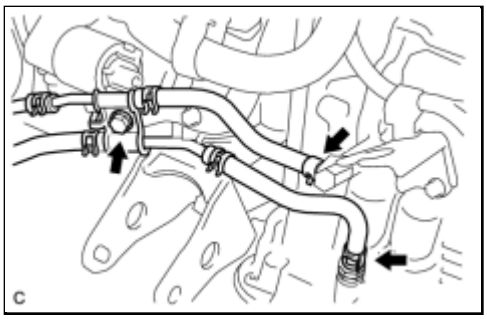

(a) Connect the 2 oil cooler hoses to the 2 unions with the 2 hose clamps.

(b) Install the oil cooler tube to the automatic transaxle with the bolt.

Torque: 12 N·m (122 kgf·cm, 9ft·lbf)

16. INSTALL FRONT ENGINE MOUNTING INSULATOR INFO

17. INSTALL REAR ENGINE MOUNTING INSULATOR INFO

18. INSTALL DRIVE PLATE AND TORQUE CONVERTER CLUTCH SETTING BOLT

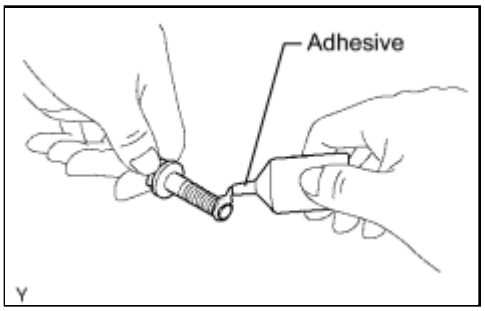

(a) Apply a few drops of adhesive to 2 or 3 threads of the 6 torque converter clutch setting bolts tip.

Adhesive:
Toyota Genuine Adhesive 1324, Three Bond 1324 or equivalent

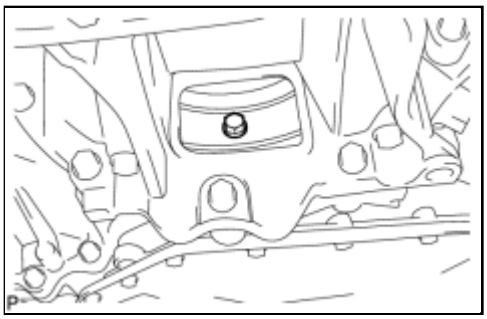

(b) Install the 6 torque converter clutch setting bolts while holding the crankshaft pulley bolt with a wrench.

Torque: 28 N·m (286 kgf·cm, 21ft·lbf)

NOTICE:

Install the black colored bolt first, and then the silver colored 5 bolts.

19. INSTALL FLYWHEEL HOUSING UNDER COVER

(a) Install the flywheel housing under cover to the automatic transaxle.



20. INSTALL ENGINE ASSEMBLY WITH TRANSAXLE

HINT:

See the steps from "Install Engine Assembly with Transaxle" through "Check ABS Speed Sensor Signal" INFO **.**

21. RESET MEMORY

HINT:

Perform Reset Memory (AT initialization) when replacing the automatic transaxle assembly INFO **.**

Last Modified: 3-10-2010	6.4 G	**From:** 200901
Model Year: 2010	**Model:** Corolla	**Doc ID:** RM0000016SC02SX
Title: U250E AUTOMATIC TRANSMISSION / TRANSAXLE: AUTOMATIC TRANSAXLE FLUID: ON-VEHICLE INSPECTION (2010 Corolla)		

ON-VEHICLE INSPECTION

1. CHECK TRANSAXLE FLUID LEVEL

HINT:

Drive the vehicle so that the engine and transaxle are at normal operating temperature.

Fluid temperature:
70 to 80°C (158 to 176°F)

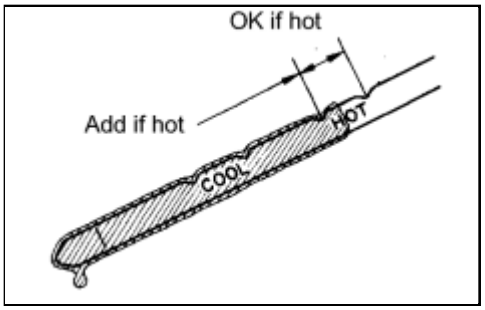

(a) Park the vehicle on a level surface and set the parking brake.

(b) With the engine idling and the brake pedal depressed, move the shift lever to all positions from P to S. Then return it to P.

(c) Pull out the dipstick and wipe it clean.

(d) Push the dipstick back fully into the pipe.

(e) Pull the dipstick out again and check that the fluid level is within the HOT range. If the fluid level is below the HOT range, add new fluid and recheck the fluid level. If the fluid level exceeds the HOT range, drain the fluid once, add a proper amount of new fluid and recheck the fluid level.

Last Modified: 3-10-2010	6.4 G	**From:** 200901
Model Year: 2010	**Model:** Corolla	**Doc ID:** RM0000016SC02RX
Title: U341E AUTOMATIC TRANSMISSION / TRANSAXLE: AUTOMATIC TRANSAXLE FLUID: ON-VEHICLE INSPECTION (2010 Corolla)		

ON-VEHICLE INSPECTION

1. CHECK FLUID LEVEL

HINT:

Drive the vehicle so that the engine and transaxle are at normal operating temperature.

Fluid temperature:
70 to 80°C (158 to 176°F)

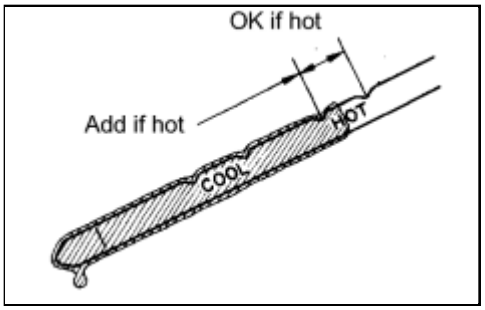

(a) Park the vehicle on a level surface and set the parking brake.

(b) With the engine idling and the brake pedal depressed, move the shift lever to all positions from P to L. Then return it to P.

(c) Pull out the dipstick and wipe it clean.

(d) Push the dipstick back fully into the pipe.

(e) Pull the dipstick out again and check that the fluid level is within the HOT range. If the fluid level is below the HOT range, add new fluid and recheck the fluid level. If the fluid level exceeds the HOT range, drain the fluid once, add a proper amount of new fluid and recheck the fluid level.

Last Modified: 3-10-2010	6.4 L	**From:** 200901
Model Year: 2010	**Model:** Corolla	**Doc ID:** RM000000U9U07XX
Title: U250E AUTOMATIC TRANSMISSION / TRANSAXLE: AUTOMATIC TRANSAXLE SYSTEM: PRECAUTION (2010 Corolla)		

PRECAUTION

NOTICE:

- Perform the RESET MEMORY (AT initialization) when replacing the automatic transaxle assembly, engine assembly or ECM INFO .
- Perform the REGISTRATION (VIN registration) when replacing the ECM INFO .

HINT:

RESET MEMORY can not be completed by only disconnecting the battery cable.

1. EXPRESSIONS OF IGNITION SWITCH

(a) The type of ignition switch used on this model differs according to the specifications of the vehicle. The expressions listed in the table below are used in this section.

SWITCH TYPE		IGNITION SWITCH (POSITION)	ENGINE SWITCH (CONDITION)
Expression	Ignition switch off	LOCK	Off
	Ignition switch ON	ON	On (IG)
	Ignition switch ACC	ACC	On (ACC)
	Engine start	START	Start

2. REMOVAL AND INSTALLATION PROCEDURE PRECAUTIONS

(a) The automatic transaxle is composed of highly precision-finished parts which need careful inspection before reassembly. Even a small nick could cause fluid leakage or affect the performance. The instructions here are organized so that you work on only one component group at a time. This will help avoid confusion caused by similar-looking parts of different sub-assemblies being on your workbench at the same time. The component groups are inspected and repaired from the converter housing side. Complete the inspection, repair and reassembly before proceeding to the next component group as much as possible. If a defect is found in a certain component group during reassembly, inspect and repair this group immediately. If a component group cannot be assembled because some parts are being ordered, be sure to keep all parts of the group in a separate container while proceeding with disassembly, inspection, repair and reassembly of other component groups. Recommended: Toyota Genuine ATF WS

(b) All disassembled parts should be washed clean and any fluid passages and holes should be blown through with compressed air.

(c) Dry all parts with compressed air. Never use a shop rag or a piece of cloth to dry them.

(d) When using compressed air, always aim away from yourself to prevent accidentally spraying ATF or kerosene in your face.

(e) Only recommended automatic transaxle fluid or kerosene should be used for cleaning.

(f) After cleaning, the parts should be arranged in the correct order for efficient inspection, repair, and reassembly.

(g) New discs for the brakes and clutches that are to be used for replacement must be soaked in ATF for at least 15 minutes before reassembly.

(h) All oil seal rings, clutch discs, clutch plates, rotating parts, and sliding surfaces should be coated with ATF prior to reassembly.

(i) All gaskets and rubber O-rings should be replaced with new ones.

(j) Do not apply adhesive cements to gaskets and similar parts.

(k) Make sure that the ends of a snap ring are not aligned with one of the cutouts and are installed in the groove correctly.

(l) When replacing a worn bushing, the sub-assembly containing the bushing must also be replaced.

(m) Check thrust bearings and races for wear or damage. Replace them as necessary.

(n) When working with FIPG material, you must observe the following:

- Using a razor blade and a gasket scraper, remove all the old packing (FIPG) material from the gasket surface.
- Thoroughly clean all components to remove any loose material.
- Clean both sealing surfaces with a non-residue solvent.
- Parts must be reassembled within 10 minutes of application. Otherwise, the packing (FIPG) material must be removed and reapplied.

Last Modified: 3-10-2010	6.4 D	**From:** 200901
Model Year: 2010	**Model:** Corolla	**Doc ID:** RM000000W7I0BOX
Title: U250E AUTOMATIC TRANSMISSION / TRANSAXLE: AUTOMATIC TRANSAXLE SYSTEM: DEFINITION OF TERMS (2010 Corolla)		

DEFINITION OF TERMS

TERM	DEFINITION
Monitor description	Description of what the ECM monitors and how it detects malfunctions (monitoring purpose and its details).
Related DTCs	Diagnostic code
Typical enabling condition	Preconditions that allow the ECM to detect malfunctions. With all preconditions satisfied, the ECM sets the DTC when the monitored value(s) exceeds the malfunction threshold(s).
Sequence of operation	The priority order that is applied to monitoring, if multiple sensors and components are used to detect the malfunction. While another sensor is being monitored, the next sensor or component will not be monitored until the previous monitoring has concluded.
Required sensor/components	The sensors and components that are used by the ECM to detect malfunctions.
Frequency of operation	The number of times that the ECM checks for malfunctions per driving cycle. "Once per driving cycle" means that the ECM detects malfunction only one time during a single driving cycle. "Continuous" means that the ECM detects malfunction every time when enabling condition is met.
Duration	The minimum time that the ECM must sense a continuous deviation in the monitored value(s) before setting a DTC. This timing begins after the "typical enabling conditions" are met.
Malfunction thresholds	Beyond this value, the ECM will conclude that there is a malfunction and set a DTC.
MIL operation	MIL illumination timing after a defect is detected. "Immediately" means that the ECM illuminates MIL the instant the ECM determines that there is a malfunction. "2 driving cycle" means that the ECM illuminates MIL if the same malfunction is detected again in the 2nd driving cycle.
Component operating range	Normal operation range of sensors and solenoids under normal driving conditions. Use these ranges as a reference. They cannot be used to judge if a sensor or solenoid is defective or not.

Last Modified: 3-10-2010	6.4 R	**From:** 200901
Model Year: 2010	**Model:** Corolla	**Doc ID:** RM000000W720AKX
Title: U250E AUTOMATIC TRANSMISSION / TRANSAXLE: AUTOMATIC TRANSAXLE SYSTEM: PARTS LOCATION (2010 Corolla)		

PARTS LOCATION

ILLUSTRATION

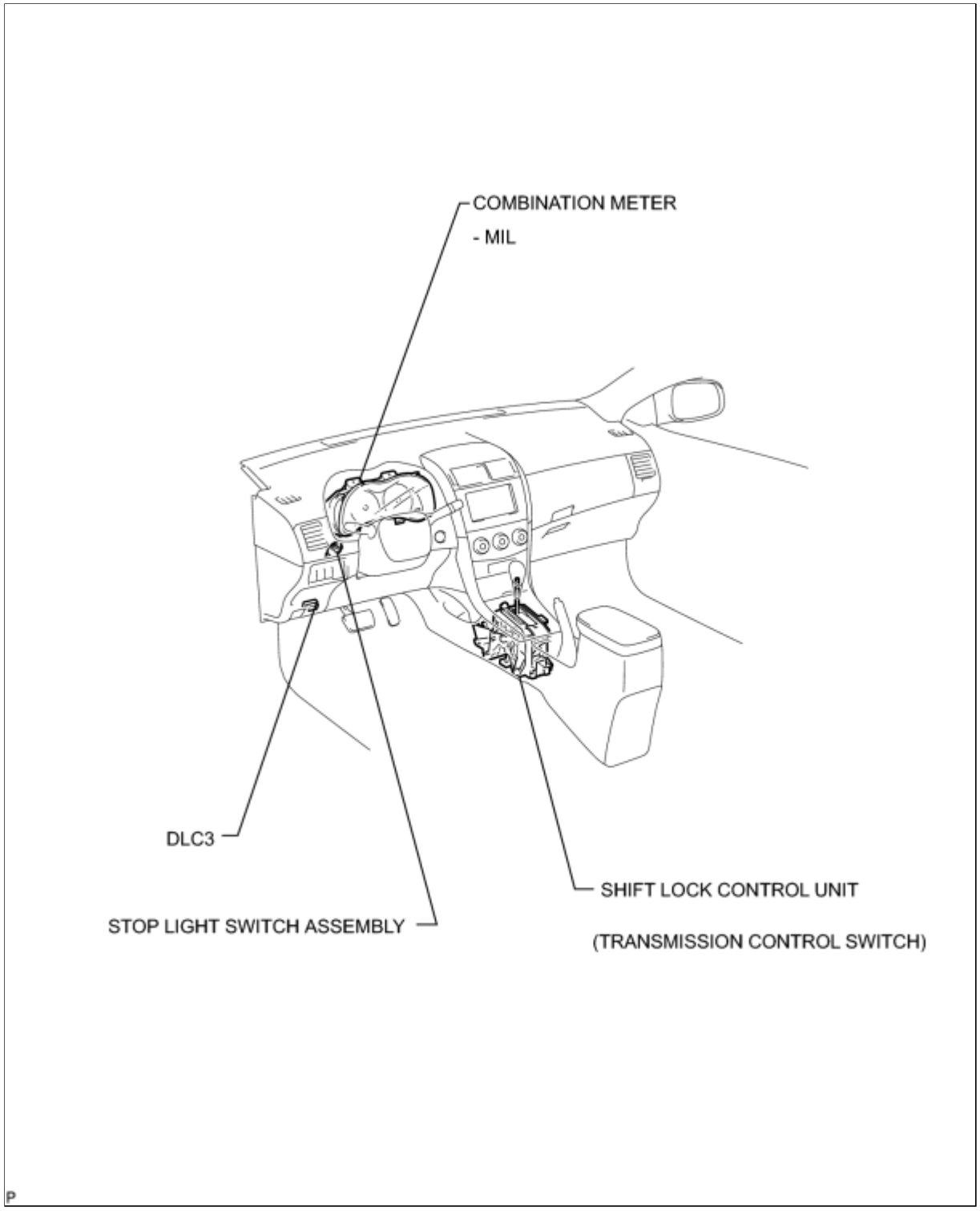

P

ILLUSTRATION

VALVE BODY ASSEMBLY :

SHIFT SOLENOID VALVE (SL1, SL2, SL3, S4, SR, DSL, SLT)

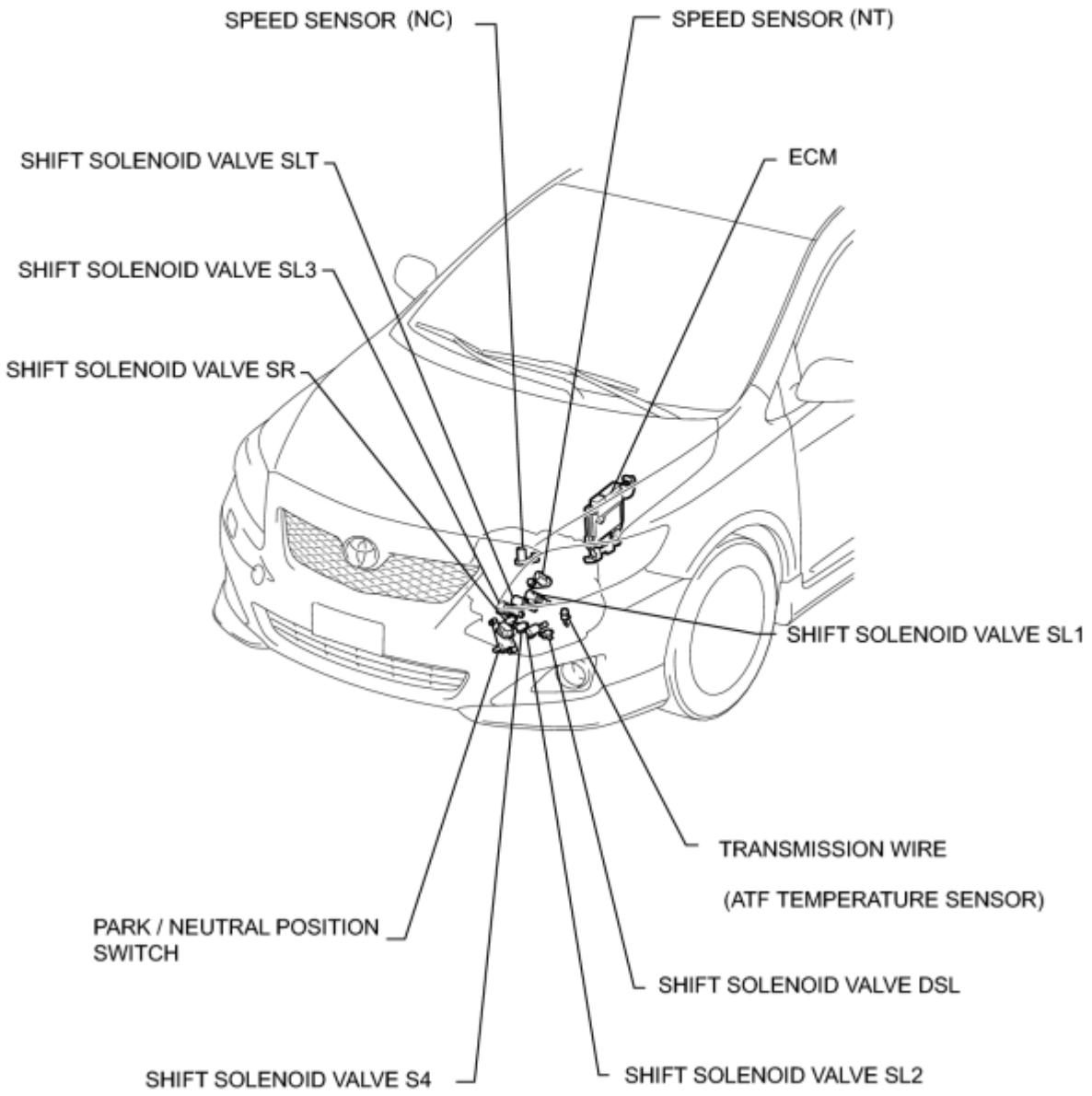

P

Last Modified: 3-10-2010	6.4 U	**From:** 200901
Model Year: 2010	**Model:** Corolla	**Doc ID:** RM000000W7D09HX
Title: U250E AUTOMATIC TRANSMISSION / TRANSAXLE: AUTOMATIC TRANSAXLE SYSTEM: SYSTEM DIAGRAM (2010 Corolla)		

SYSTEM DIAGRAM

The configuration of the electronic control system in the U250E automatic transaxle is as shown in the following chart.

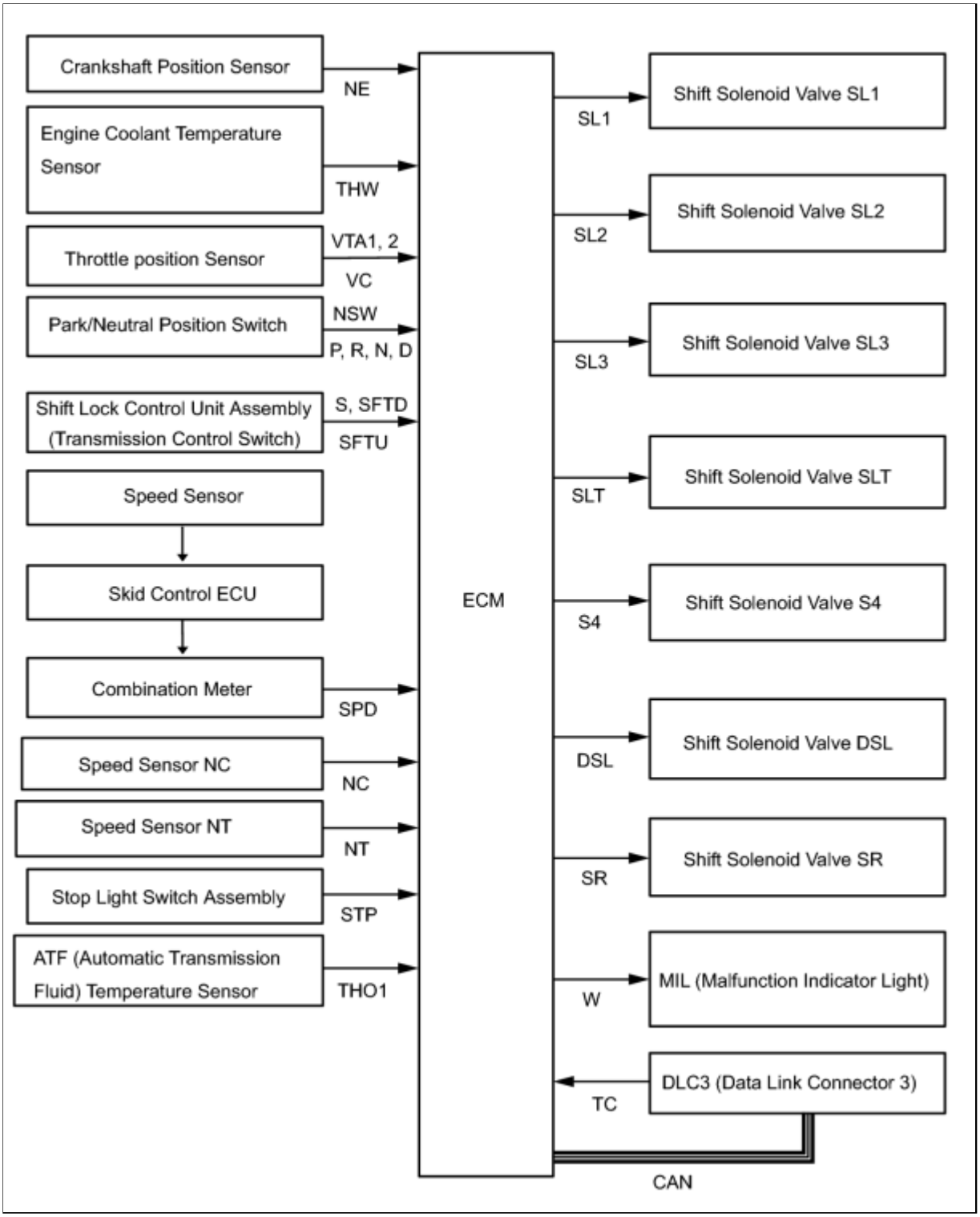
Crankshaft Position Sensor
NE
Engine Coolant Temperature Sensor
THW
Throttle position Sensor
VTA1, 2
VC
Park/Neutral Position Switch
NSW
P, R, N, D
Shift Lock Control Unit Assembly (Transmission Control Switch)
S, SFTD
SFTU
Speed Sensor
Skid Control ECU
Combination Meter
SPD
Speed Sensor NC
NC
Speed Sensor NT
NT
Stop Light Switch Assembly
STP
ATF (Automatic Transmission Fluid) Temperature Sensor
THO1
ECM
SL1
Shift Solenoid Valve SL1
SL2
Shift Solenoid Valve SL2
SL3
Shift Solenoid Valve SL3
SLT
Shift Solenoid Valve SLT
S4
Shift Solenoid Valve S4
DSL
Shift Solenoid Valve DSL
SR
Shift Solenoid Valve SR
W
MIL (Malfunction Indicator Light)
TC
DLC3 (Data Link Connector 3)
CAN

Last Modified: 3-10-2010	6.4 D	**From:** 200901
Model Year: 2010	**Model:** Corolla	**Doc ID:** RM000000W6Z0DJX
Title: U250E AUTOMATIC TRANSMISSION / TRANSAXLE: AUTOMATIC TRANSAXLE SYSTEM: HOW TO PROCEED WITH TROUBLESHOOTING (2010 Corolla)		

HOW TO PROCEED WITH TROUBLESHOOTING

HINT:

- The ECM of this system is connected to the CAN and multiplex communication system. Therefore, before starting troubleshooting, make sure to check that there is no trouble in the CAN and multiplex communication systems.
- *: Use Techstream

1.	**Vehicle Brought to Workshop**

NEXT

2.	**Customer Problem Analysis**

NEXT

3.	**Connect Techstream to the DLC3***

NEXT

4.	**Check and Clear DTCs and Freeze Frame Data***

HINT: INFO .

NEXT

5.	**Visual Inspection**

NEXT

6.	**Setting the Check Mode Diagnosis***

HINT: INFO .

NEXT

7.	**Problem Symptom Confirmation**

HINT: INFO .

Symptom does not occur: Go to step 8

Symptom occurs: Go to step 9

8.	**Symptom Simulation**

HINT: INFO .

NEXT

9.	DTC Check*

HINT: INFO .

▶ DTC is not output: Go to step 10

▶ DTC is output: Go to step 17

10.	Basic Inspection

HINT: INFO , INFO and INFO).

NG ▶ Go to step 19

OK ▼

11.	Mechanical System Test

HINT: INFO .

NG ▶ Go to step 16

OK ▼

12.	Hydraulic Test

HINT: INFO .

NG ▶ Go to step 16

OK

▼

13.	**Manual Shifting Test**

HINT: INFO .

NG ▶ **Go to step 15**

OK

▼

14.	**Problem Symptoms Table Chapter 1**

HINT: INFO .

NG ▶ **Go to step 18**

OK

▼

15.	**Problem Symptoms Table Chapter 2**

HINT: INFO .

NEXT

▼

16.	**Part Inspection**

Go to step 19

17.	DTC Chart

HINT: INFO .

NEXT

18.	Circuit Inspection

NEXT

19.	Repair or Replace

NEXT

20.	Confirmation Test

NEXT End

Last Modified: 3-10-2010	6.4 D	**From:** 200901
Model Year: 2010	**Model:** Corolla	**Doc ID:** RM000000W750BMX
Title: U250E AUTOMATIC TRANSMISSION / TRANSAXLE: AUTOMATIC TRANSAXLE SYSTEM: SYSTEM DESCRIPTION (2010 Corolla)		

SYSTEM DESCRIPTION

1. SYSTEM DESCRIPTION

(a) The ECT (Electronic controlled automatic transmission/transxle) is an automatic transmission/transaxle that electronically controls shift timing using the ECM. The ECM detects electrical signals that indicate engine and driving conditions, and controls the shift point, based on driver habits and road conditions. As a result, fuel efficiency and power transmission performance are improved.

Shift shock has been reduced by controlling the engine and transmission simultaneously.

In addition, the ECT has features such as follows:

- Diagnostic function.
- Fail-safe function when a malfunction occurs.

Last Modified: 3-10-2010	6.4 D	**From:** 200901
Model Year: 2010	**Model:** Corolla	**Doc ID:** RM000000W790AXX
Title: U250E AUTOMATIC TRANSMISSION / TRANSAXLE: AUTOMATIC TRANSAXLE SYSTEM: ROAD TEST (2010 Corolla)		

ROAD TEST

1. PROBLEM SYMPTOM CONFIRMATION

(a) Based on the result of the customer problem analysis, try to reproduce the symptoms. If the problem is that the transaxle does not shift up, shift down, or the shift point is too high or too low, conduct the following road test referring to the automatic shift schedule and simulate the problem symptoms.

2. ROAD TEST

NOTICE:

Preform the test at the ATF (Automatic Transmission Fluid) temperature 50 to 80 °C (122 to 176 °F) in the normal operation.

(a) D position test:

Shift into the D position and fully depress the accelerator pedal and check the following points.

(1) Check up-shift operation.

Check that 1 → 2, 2 → 3, 3 → 4 and 4 → 5th up-shifts take place, and that the shift points conform to the automatic shift schedule INFO .

HINT:

5th Gear Up-shift Prohibition Control

- Engine coolant temperature is 55°C (131°F) or less and vehicle speed is at 70km/h (43 mph) or less.
- ATF temperature is -2°C (28°F) or less.

5th and 4th Gear Lock-up Prohibition Control

- Brake pedal is depressed.
- Accelerator pedal is released.
- Engine coolant temperature is 60°C (140°F) or less.

(2) Check for shift shock and slip.

Check for shock and slip at the 1 → 2, 2 → 3, 3 → 4, and 4→ 5th up-shifts.

(3) Check for abnormal noise and vibration.

Check for abnormal noise and vibration when up-shifting from 1 → 2, 2 → 3, 3 → 4, and 4→ 5 while driving with the shift lever in the D position, and also check while driving in the lock-up condition.

HINT:

The check for the cause of abnormal noise and vibration must be done thoroughly as it could also be due to loss of balance in the differential, torque converter clutch, etc.

(4) Check kick-down operation.

Check vehicle speeds when the 2nd to 1st, 3rd to 2nd, 4th to 3rd, and 5th to 4th kick-downs

take place while driving with the shift lever in the D position. Confirm that each speed is within the applicable vehicle speed range indicated in the automatic shift schedule INFO .

(5) Check for abnormal shock and slip at kick-down.

(6) Check the lock-up mechanism.

- Drive in the D position (5th gear), at a steady speed (lock-up ON).
- Lightly depress the accelerator pedal and check that the engine speed does not change abruptly.

HINT:

- There is no lock-up function in the 1st, 2nd and 3rd gears.
- If there is a big jump in engine speed, there is no lock-up.

(b) S position test

Shift to the S position, depress the accelerator pedal and check the following points:

(1) Check shift operation.

- While driving in the D position and 5th gear, shift into the S position and back to the D position. Check that the gear change 5 → 4 down-shift and 4 → 5 up-shift can be performed.
- With the shift lever in the S position (while the vehicle is stopped), shift into the "+" position to check that the shift position on the combination meter changes as follows: 1 → 2, 2 → 3, 3 → 4, and 4 → 5.
- While driving in the 4(S) position and 4th gear (at a vehicle speed of approximately 40 to 50 km/h (25 to 31 mph)), shift into the "-" position and check if the 3rd gear down-shift occurs and the engine brake performs properly.
- While driving in the 3(S) position and 3rd gear (at a vehicle speed of approximately 30 to 40 km/h (19 to 25 mph)), shift into the "-" position and check if the 2nd gear down-shift occurs and the engine brake performs properly.
- While driving in the 2(S) position and 2nd gear (at a vehicle speed of approximately 20 to 30 km/h (12 to 19 mph)), shift into the "-" position and check if the 1st gear down-shift occurs and the engine brake performs properly.

HINT:

Manual shift (S position) is prohibited under either of the following conditions:

- Down-shifting may cause engine overrun.
- The driver continuously down-shifts. (Down-shifting to 1st gear may not be performed.)

(c) R position test:

Shift into the R position, lightly depress the accelerator pedal, and check that the vehicle moves backward without any abnormal noise or vibration.

CAUTION:

Before conducting this test ensure that the test area is free from people and obstruction.

(d) P position test:

Stop the vehicle on a grade (more than 5°) and after shifting into the P position, release the parking brake. Then, check that the parking lock pawl holds the vehicle in place.

(e) Uphill/downhill control function:

(1) Check that the gear does not up-shift to the 4th or 5th gear while the vehicle is driving uphill.

(2) Check that the gear automatically down-shifts from the 5th to 4th or from the 4th to 3rd gear

when brake is applied while the vehicle is driving downhill.

Last Modified: 3-10-2010	6.4 D	**From:** 200901
Model Year: 2010	**Model:** Corolla	**Doc ID:** RM000000W7B0BXX
Title: U250E AUTOMATIC TRANSMISSION / TRANSAXLE: AUTOMATIC TRANSAXLE SYSTEM: HYDRAULIC TEST (2010 Corolla)		

HYDRAULIC TEST

1. PERFORM HYDRAULIC TEST

(a) Measure the line pressure.

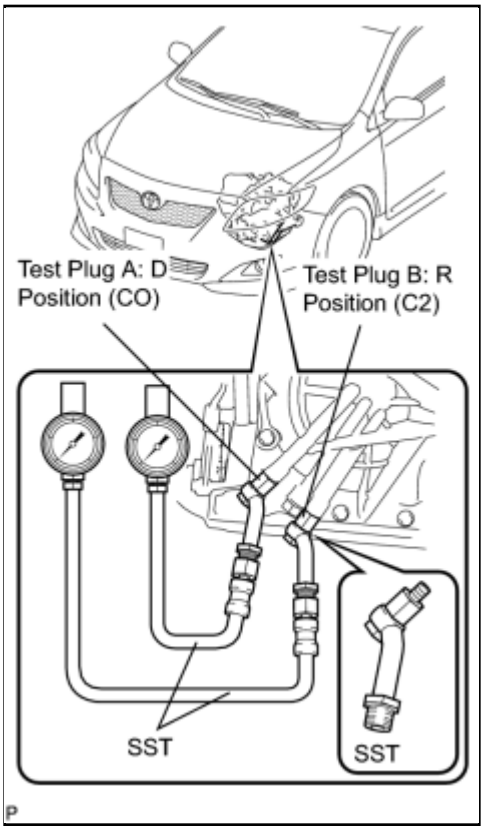

NOTICE:

- Perform the test at the normal operating ATF (Automatic Transmission Fluid) temperature: 50 to 80°C (122 to 176°F).
- The line pressure test should always be carried out in pairs. One technician should observe the conditions of wheels or wheel stoppers outside the vehicle while the other is performing the test.
- Be careful to prevent SST hose from interfering with the exhaust pipe.
- This Check must be conducted after checking and adjusting engine.
- Perform under condition that A/C is OFF.
- When conducting stall test, do not continue more than 10 seconds.

(1) Warm up the ATF (Automatic Transmission Fluid).

(2) Lift the vehicle up.

(3) Remove the engine under cover.

(4) Connect Techstream to the DLC3.

(5) Remove the test plug A on the transaxle case front left side and install the SST.

SST: 09992-00095

09992-00231

09992-00271

NOTICE:

There is a difference in installation point between D position and R position.

(6) Start the engine.

(7) Using Techstream, shift to D position and hold 3rd gear by active test, and measure the line pressure in idling.

Specified line pressure:

CONDITION	D POSITION KPA (KGF / CM^2, PSI)
Idling	372 to 412 kPa (3.8 to 4.2 kgf/cm^2, 54 to 60 psi)

(8) Turn the ignition switch off.

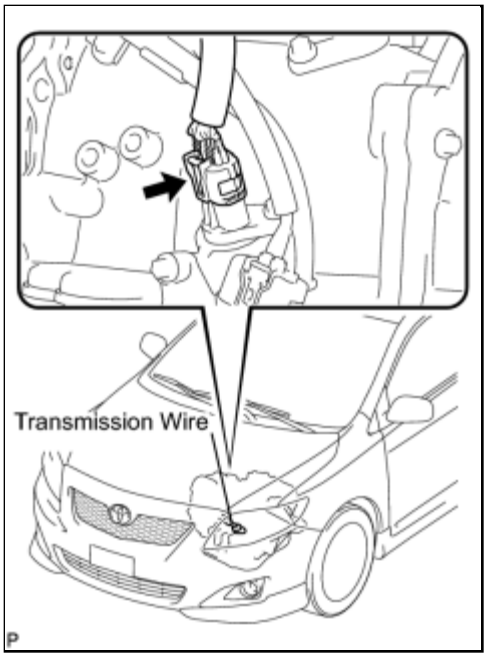

(9) Disconnect the connector of the transmission wire.

HINT:

Disconnect the connector only when performing the D position stall test.

(10) Start the engine.

(11) Firmly depress the brake pedal, shift to the D position, depress the accelerator pedal all the way down and check the line pressure while the stall test is performed.

Specified line pressure:

CONDITION	D POSITION KPA (KGF / CM^2, PSI)
Stall test	931 to 1031 kPa (9.5 to 10.5 kgf/cm^2, 135 to 150 psi)

(12) Turn the ignition switch off.

(13) Remove the SST, install the test plug A.

(14) Remove the test plug B, install the SST and start engine.

SST: 09992-00095

09992-00231, 09992-00271

(15) Connect the transmission wire connector, depress the brake pedal firmly, shift to the R position and check that the line pressure while the engine is idling and during the stall test.

Specified line pressure:

CONDITION	R POSITION KPA (KGF / CM^2, PSI)
Idling	672 to 742 kPa (6.9 to 7.6 kgf/cm^2, 97 to 108 psi)
Stall test	1768 to 1968 kPa (18.0 to 20.1 kgf/cm^2, 256 to 285 psi)

(16) Remove the SST, install the test plug B.

(17) Clear the DTC.

Evaluation:

PROBLEM	POSSIBLE CAUSE
Measured values are higher than specified in all positions	• Shift solenoid valve (SLT) defective • Regulator valve defective
Measured values are lower than specified in all positions	• Shift solenoid valve (SLT) defective • Regulator valve defective • Oil pump defective • U/D (Underdrive) direct clutch defective
Pressure is low in the D position only	• D position circuit fluid leak • Forward clutch defective
Pressure is low in the R position only	• R position circuit fluid leak • Reverse clutch defective • 1st and reverse brake defective

Last Modified: 3-10-2010	6.4 D	**From:** 200901
Model Year: 2010	**Model:** Corolla	**Doc ID:** RM000000W7A0C7X
Title: U250E AUTOMATIC TRANSMISSION / TRANSAXLE: AUTOMATIC TRANSAXLE SYSTEM: MECHANICAL SYSTEM TESTS (2010 Corolla)		

MECHANICAL SYSTEM TESTS

1. PERFORM MECHANICAL SYSTEM TESTS

(a) Measure the stall speed.

The object of this test is to check the overall performance of the transaxle and engine by measuring the stall speeds in the D position.

NOTICE:

- Driving test should be done on a paved road (a nonskid road).
- Perform the test at the normal operating ATF (Automatic Transmission Fluid) temperature 50 to 80°C (122 to 176°F).
- Do not continuously run this test for longer than 10 seconds.
- To ensure safety, do this test in a wide, clear level area which provides good traction.
- The stall test should always be carried out in pairs. One technician should observe the conditions of wheels or wheel stoppers outside the vehicle while the other is doing the test.

(1) Chock the 4 wheels.

(2) Connect Techstream to the DLC3.

(3) Fully apply the parking brake.

(4) Keep your left foot pressed firmly on the brake pedal.

(5) Start the engine.

(6) Shift into the D position. Press all the way down on the accelerator pedal with your right foot.

(7) Quickly read the stall speed at this time.

Stall speed:
2310 +- 150 rpm

Evaluation:

PROBLEM	POSSIBLE CAUSE
(a) Stall engine speed is low in D position	• Engine power output may be insufficient • Stator one-way clutch not operating properly **HINT:** **If the value is less than the specified value by 600 rpm or more, the torque converter could be faulty.**
(b) Stall engine speed is high in D position	• Line pressure is too low • Forward clutch slipping • U/D (Underdrive) brake slipping • U/D (Underdrive) one-way clutch is not operating properly • No.1 one-way clutch not operating properly

PROBLEM	POSSIBLE CAUSE
	• Improper fluid level

(b) Measure the time lag.

(1) When the shift lever is shifted while the engine is idling, there will be a certain time lapse or lag before the shock can be felt. This is used for checking the condition of the clutch and brake.

NOTICE:

- Perform the test at the normal operating ATF (Automatic Transmission Fluid) temperature: 50 to 80°C (122 to 176°F).
- Be sure to allow 1 minute interval between tests.
- Perform the test three times, and measure the time lags. Calculate the average value of the three time lags.

(2) Connect Techstream to the DLC3.

(3) Fully apply the parking brake.

(4) Start and warm up the engine and check idle speed.

Idle speed:
approx. 700 rpm (In N position and A/C OFF)

(5) Shift the lever from N to D position. Using a stop watch, measure the time from when the lever is shifted until the shock is felt.

Time lag:
N → D less than 1.2 seconds

(6) In the same way, measure the time lag for N → R.

Time lag:
N → R less than 1.5 seconds

Evaluation (If N → D or N → R time lag is longer than the specified):

PROBLEM	POSSIBLE CAUSE
N → D time lag is longer	• Line pressure is too low • Forward clutch worn • No.1 one-way clutch is not operating properly • U/D (Underdrive) one-way clutch is not operating • U/D (Underdrive) brake worn
N → R time lag is longer	• Line pressure is too low • Reverse clutch worn • 1st and reverse brake worn • U/D (Underdrive) brake worn

Last Modified: 3-10-2010	6.4 D	**From:** 200901
Model Year: 2010	**Model:** Corolla	**Doc ID:** RM000000W7C0CXX
Title: U250E AUTOMATIC TRANSMISSION / TRANSAXLE: AUTOMATIC TRANSAXLE SYSTEM: MANUAL SHIFTING TEST (2010 Corolla)		

MANUAL SHIFTING TEST

1. PERFORM MANUAL SHIFTING TEST

HINT:

- With this test, it can be determined whether the trouble occurs in the electrical circuit or is a mechanical problem in the transaxle.
- If any abnormalities are found in the following test, the problem is in the transaxle itself.

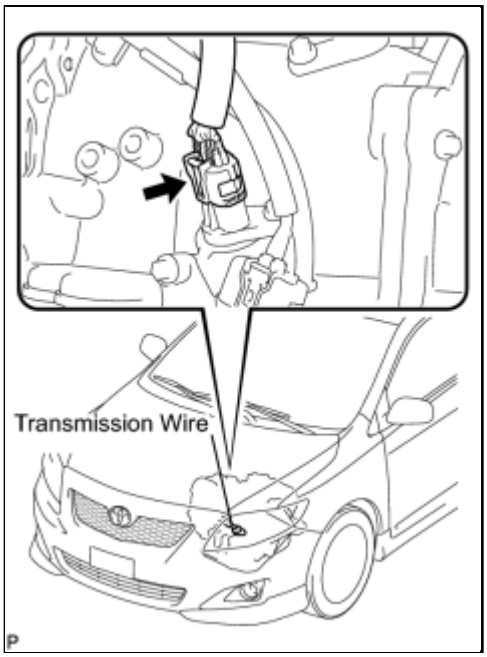

(a) Disconnect the connector of the transmission wire.

(b) Drive with the transmission wire disconnected.

Shifting the shift lever to the D position to check whether the shifting condition changes the table below.

SHIFT POSITION	SHIFTING CONDITION
D	No Shift (Not Change)

HINT:

When driving with the transmission wire disconnected, the gear position will be as follows:

- When the shift lever is in the D position, the gear is held in the 4th position.
- When the shift lever is in the R or the P position, the gear is also in the R or the P position respectively.

(c) Connect the connector of the transmission wire.

(d) Clear the DTC 

.

Last Modified: 3-10-2010	6.4 D	**From:** 200901
Model Year: 2010	**Model:** Corolla	**Doc ID:** RM000000W7F0B2X
Title: U250E AUTOMATIC TRANSMISSION / TRANSAXLE: AUTOMATIC TRANSAXLE SYSTEM: INITIALIZATION (2010 Corolla)		

INITIALIZATION

1. RESET MEMORY

NOTICE:

- Perform the RESET MEMORY (AT initialization) when replacing the automatic transaxle assembly, engine assembly or ECM.
- The RESET MEMORY can be performed only with Techstream.

HINT:

The ECM memorizes the condition that the ECT controls the automatic transaxle assembly and engine assembly according to those characteristics. Therefore, when the automatic transaxle assembly, engine assembly, or ECM has been replaced, it is necessary to reset the memory so that the ECM can memorize the new information.

Reset procedure is as follows.

(a) Turn the ignition switch off.

(b) Connect the Techstream to the DLC3.

(c) Turn the ignition switch to ON and the Techstream main switch on.

(d) Enter the following menu: Powertrain / Engine and ECT / Utility / Reset Memory. Then, press "Next".

CAUTION:

After performing the RESET MEMORY, be sure to perform the ROAD TEST INFO **described earlier.**

HINT:

The ECM is learned by performing the ROAD TEST.

Last Modified: 3-10-2010	6.4 D	**From:** 200901
Model Year: 2010	**Model:** Corolla	**Doc ID:** RM000000W7K0BPX
Title: U250E AUTOMATIC TRANSMISSION / TRANSAXLE: AUTOMATIC TRANSAXLE SYSTEM: MONITOR DRIVE PATTERN (2010 Corolla)		

MONITOR DRIVE PATTERN

1. MONITOR DRIVE PATTERN FOR ECT TEST

(a) Perform this drive pattern as one method to simulate the detection conditions of the ECT malfunctions. (The DTCs may not be detected due the actual driving conditions. And some codes may not be detected through this drive pattern.)

HINT:

Preparation for driving

- Warm up the engine sufficiently. (Engine coolant temperature is 60°C (140°F) or higher)
- Drive the vehicle when the atmospheric temperature is -10°C (14°F) or higher. (Malfunction is not detected when the atmospheric temperature is less than -10°C (14°F))

Driving note

- Drive the vehicle through all gears.

  Stop → 1st → 2nd → 3rd → 4th → 5th → 5th (lock-up ON).
- Perform engine brake test in the S position.

  While driving in the 5(S) position and 5th gear lock-up, shift into the "-" position and down-shift from 5th to 4th, 4th to 3rd, 3rd to 2nd, 2nd to 1st.

  Check that the engine brake performs properly whenever down-shift takes place.
- Repeat the above driving pattern three times or more.

NOTICE:

- The monitor status can be checked using Techstream. When using Techstream, monitor status can be found in the "Powertrain / Engine and ECT / Data List".
- In the event that the drive pattern must be interrupted (possibly due to traffic conditions or other factors), the drive pattern can be resumed and, in most cases, the monitor can be completed.
- Perform this drive pattern on a level road as much as possible and strictly observe the posted speed limits and traffic laws while driving.

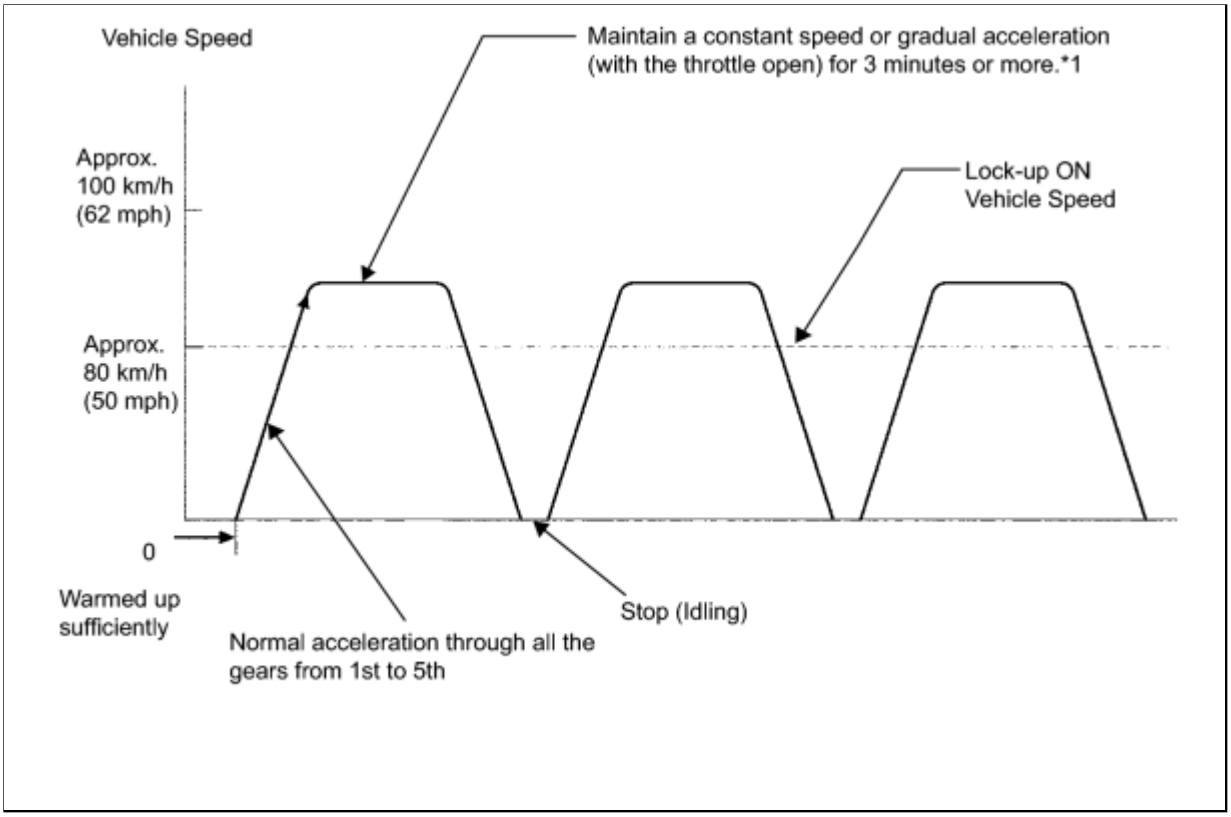

HINT:

***1: Drive at such a speed in the uppermost gear, to engage lock-up. The vehicle can be driven at a speed lower than that in the above diagram under the lock-up condition.**

NOTICE:

If necessary to drive the vehicle for approximately 30 minutes to detect DTC P0711 (ATF temperature sensor malfunction).

Last Modified: 3-10-2010	6.4 T	**From:** 200901
Model Year: 2010	**Model:** Corolla	**Doc ID:** RM000000W730DEX
Title: U250E AUTOMATIC TRANSMISSION / TRANSAXLE: AUTOMATIC TRANSAXLE SYSTEM: PROBLEM SYMPTOMS TABLE (2010 Corolla)		

PROBLEM SYMPTOMS TABLE

HINT:

- If a normal code is displayed during the diagnostic trouble code check although the trouble still occurs, check the electrical circuits for each symptom in the order given in the charts on the following pages and proceed to the page given for troubleshooting.
- The Matrix Chart is divided into 2 chapters.
- When the circuit on which mark *1 is attached is a malfunction, DTC could be output.

Chapter 1:

Refer to the table below when the trouble cause is considered to be electrical. If the instruction PROCEED TO NEXT CIRCUIT INSPECTION SHOWN IN PROBLEM SYMPTOMS TABLE is given in the flowchart of each circuit, inspect the suspected areas in descending order for each symptom. If the trouble still occurs even though there are no abnormalities in the inspections listed for the symptoms, check and replace the ECM.

Chapter 1: Electronic Circuit Matrix Chart

SYMPTOM	SUSPECTED AREA	SEE PAGE
No down-shift (A particular gear, from 1st to 4th gear, is not down-shifted)	ECM	INFO
No down-shift (5th -> 4th)	Park/neutral position switch circuit *1	INFO
	Shift solenoid valve (S4) circuit *1	INFO
	ECM	INFO
No up-shift (A particular gear, from 1st to 4th gear, is not up-shifted)	ECM	INFO
No up-shift (4th -> 5th)	ECM	INFO
No lock-up	Engine coolant temp. sensor circuit *1 (for 2AZ-FE)	INFO
	ECM	INFO
No lock-up off	ECM	INFO
Shift point too high or too low	Throttle position sensor circuit *1 (for 2AZ-FE)	INFO
	ECM	INFO

SYMPTOM	SUSPECTED AREA	SEE PAGE
Up-shift to 5th from 4th while engine is cold	Engine coolant temp. sensor circuit *1 (for 2AZ-FE)	INFO
	ECM	INFO
No gear change by shifting into "+" or "-" while the shifting lever is in the S position	Transmission control switch circuit	INFO
	ECM	INFO
Harsh engagement (N -> D)	Shift solenoid valve (SL1) circuit *1	INFO
	ECM	INFO
Harsh engagement (Lock-up)	ECM	INFO
Harsh engagement (Any driving position)	ECM	INFO
Poor acceleration	ECM	INFO
No kick-down	ECM	INFO
Engine stalls when starting off or stopping	ECM	INFO
Malfunction in shifting	Transmission control switch circuit	INFO
	ECM	INFO

Chapter 2: On-Vehicle Repair and Off-Vehicle Repair

SYMPTOM	SUSPECTED AREA	SEE PAGE
Vehicle does not move in any forward position and in reverse positions	Valve body assembly	INFO
	U/D brake (B3)	INFO
	Torque converter clutch	INFO
Vehicle does not move in R position	Valve body assembly	INFO
	Reverse clutch (C2)	INFO
	1st and reverse brake (B2)	INFO
No up-shift (1st -> 2nd)	Valve body assembly	INFO
	2nd and O/D brake (B1)	INFO
No up-shift (2nd -> 3rd)	Valve body assembly	INFO
	Direct and O/D clutch (C0)	INFO

SYMPTOM	SUSPECTED AREA	SEE PAGE
No up-shift (3rd -> 4th)	Valve body assembly	INFO
	2nd and O/D brake (B1)	INFO
No up-shift (4th -> 5th)	Shift solenoid valve (S4)	INFO
	Valve body assembly	INFO
	U/D clutch (C3)	INFO
No down-shift (5th -> 4th)	Shift solenoid valve (S4)	INFO
	Valve body assembly	INFO
No down-shift (4th -> 3rd)	Valve body assembly	INFO
No down-shift (3rd -> 2nd)	Valve body assembly	INFO
No down-shift (2nd -> 1st)	Valve body assembly	INFO
No lock-up or No lock-up off	Shift solenoid valve (DSL)	INFO
	Valve body assembly	INFO
	Torque converter clutch	INFO
Harsh engagement (N -> D)	Shift solenoid valve (SL1)	INFO
	Valve body assembly	INFO
	C1 accumulator	INFO
	Forward clutch (C1)	INFO
	One-way clutch No. 1 (F1)	INFO
	U/D one-way clutch (F2)	INFO
Harsh engagement (Lock-up)	Shift solenoid valve (SL2)	INFO
	Valve body assembly	INFO
	Torque converter clutch	INFO
Harsh engagement (N -> R)	Valve body assembly	INFO
	C2 accumulator	INFO
	Reverse clutch (C2)	INFO
	1st and reverse brake (B2)	INFO

SYMPTOM	SUSPECTED AREA	SEE PAGE
Harsh engagement (1st -> 2nd -> 3rd -> 4th -> 5th)	Shift solenoid valve (SLT)	INFO
	Valve body assembly	INFO
Harsh engagement (1st -> 2nd)	Valve body assembly	INFO
	2nd and O/D brake (B1)	INFO
Harsh engagement (2nd -> 3rd)	Valve body assembly	INFO
	C0 accumulator	INFO
	Direct and O/D clutch (C0)	INFO
Harsh engagement (3rd -> 4th)	Valve body assembly	INFO
	2nd and O/D brake (B1)	INFO
Harsh engagement (4th -> 5th)	Valve body assembly	INFO
	C3 accumulator	INFO
	U/D clutch (C3)	INFO
Harsh engagement (5th -> 4th)	Valve body assembly	INFO
	B3 accumulator	INFO
Slip or shudder (Forward and reverse: After warm-up)	Valve body assembly	INFO
	Oil strainer	INFO
	Direct and O/D clutch (C0)	INFO
	Forward clutch (C1)	INFO
	U/D clutch (C3)	INFO
	2nd and brake (B1)	INFO
	U/D brake (B3)	INFO
	One-way clutch No. 1 (F1)	INFO
	U/D one-way clutch (F2)	INFO
	Torque converter clutch	INFO
Slip or shudder (Particular position: Just after engine starts)	Torque converter clutch	INFO
Slip or shudder (R position)	Reverse clutch (C2)	INFO

SYMPTOM	SUSPECTED AREA	SEE PAGE
	1st and reverse brake (B2)	INFO
Slip or shudder (1st)	Forward clutch (C1)	INFO
	One-way clutch No. 1 (F1)	INFO
	U/D one-way clutch (F2)	INFO
Slip or shudder (2nd)	2nd and O/D brake (B1)	INFO
Slip or shudder (3rd)	Direct and O/D clutch (C0)	INFO
Slip or shudder (4th)	2nd and O/D brake (B1)	INFO
Slip or shudder (5th)	U/D clutch (C3)	INFO
Shift position too high or too low	Shift solenoid valve (SLT)	INFO
No engine braking (1st +- 4th: D position)	U/D brake (B3)	INFO
No engine braking (1st: L (1) position)	Valve body assembly	INFO
	1st and reverse brake (B2)	INFO
No engine braking (2nd: 2 position)	Valve body assembly	INFO
	2nd and O/D brake (B1)	INFO
No engine braking (3rd: 3 position)	U/D brake (B3)	INFO
No kick-down	Valve body assembly	INFO
Poor acceleration (All positions)	Shift solenoid valve (SLT)	INFO
	Torque converter clutch	INFO
Poor acceleration (5th)	U/D clutch (C3)	INFO
	U/D planetary gear unit	INFO
Engine stalls when starting off or stopping	Shift solenoid valve (DSL)	INFO
	Torque converter clutch	INFO

Last Modified: 3-10-2010	6.4 U	**From:** 200901
Model Year: 2010	**Model:** Corolla	**Doc ID:** RM000000W740A2X
Title: U250E AUTOMATIC TRANSMISSION / TRANSAXLE: AUTOMATIC TRANSAXLE SYSTEM: TERMINALS OF ECM (2010 Corolla)		

TERMINALS OF ECM

1. ECM

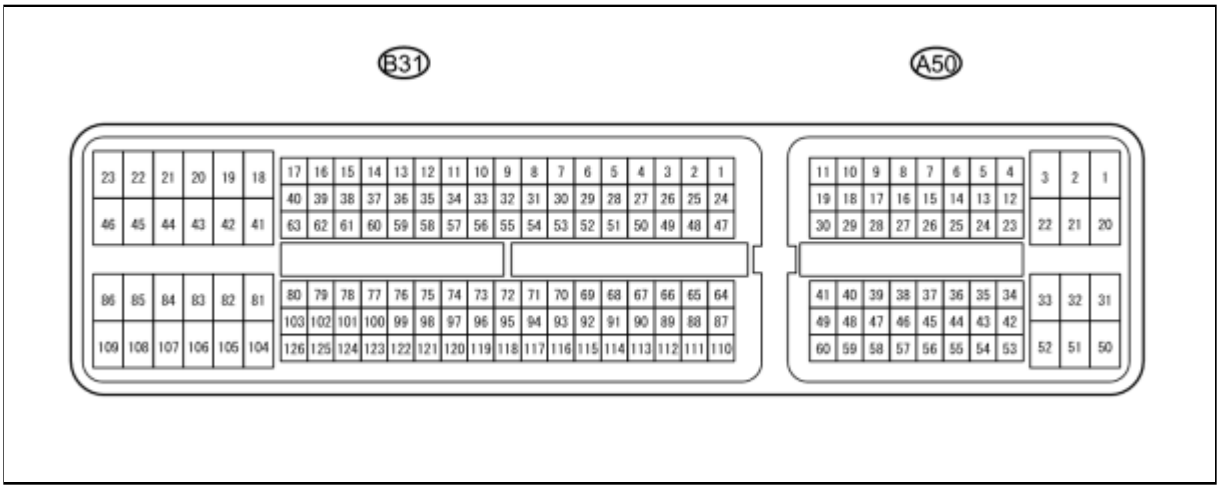

HINT:

Each ECM terminal's standard voltage is shown in the table below.

In the table, first follow the information under "Condition". Look under "Terminal No. (Symbols)" for the terminals to inspected. The standard voltage between the terminals is shown under "Specific Condition".

Use the illustration above as a reference for the ECM terminals.

TERMINALS NO. (SYMBOLS)	TERMINAL DESCRIPTION	CONDITION	SPECIFIED CONDITION
B31-56 (D) - B31-104 (E1)	D shift position switch signal	Ignition switch ON and shift lever D and S position	11 to 14 V
		Ignition switch ON and shift lever except D and S position	Below 1 V
B31-53 (R) - B31-104 (E1)	R shift position switch signal	Ignition switch ON and shift lever R position	11 to 14 V
		Ignition switch ON and shift lever except R position	Below 1 V
A50-8 (SPD) - B31-104 (E1)	Speed signal	Vehicle speed 20 km/h (12mph)	Pulse generation (See waveform 8)
A50-36 (STP) - B31-104 (E1)	Stop light switch signal	Brake pedal is depressed	7.5 to 14 V
		Brake pedal is released	Below 1.5 V

TERMINALS NO. (SYMBOLS)	TERMINAL DESCRIPTION	CONDITION	SPECIFIED CONDITION
A50-51 (SFTD) - B31-104 (E1)	Down shift switch signal	Ignition switch ON and shift lever S position	11 to 14 V
		Ignition switch ON and shift lever "-" position (Down shift)	Below 1 V
A50-16 (SFTU) - B31-104 (E1)	Up shift switch signal	Ignition switch ON and shift lever S position	11 to 14 V
		Ignition switch ON and shift lever "+" position (Up shift)	Below 1 V
B31-74 (S) - B31-104 (E1)	S shift position switch signal	Ignition switch ON and shift lever S position	11 to 14 V
		Ignition switch ON and shift lever except S position	Below 1 V
B31-73 (P) - B31-104 (E1)	Park position switch signal	Ignition switch ON and shift lever P position	11 to 14 V
		Ignition switch ON and shift lever except P position	Below 1 V
B31-54 (N) - B31-104 (E1)	Neutral position switch signal	Ignition switch ON and shift lever N position	11 to 14 V
		Ignition switch ON and shift lever except N position	Below 1 V
B31-52 (NSW) - B31-104 (E1)	Park neutral switch signal	Ignition switch ON and shift lever P and N position	Below 2 V
		Ignition switch ON and shift lever except P and N position	11 to 14 V
B31-79 (DSL) - B31-104 (E1)	DSL solenoid signal	Vehicle speed 65 km/h (40mph), lock-up (ON to OFF)	Pulse generation (See waveform 2)
B31-80 (SR) - B31-104 (E1)	SR solenoid signal	Ignition switch ON	Below 1 V
		3rd, 4th or 5th gear	11 to 14 V
		1st or 2nd gear	Below 1 V
B31-78 (S4) - B31-104 (E1)	S4 solenoid signal	Ignition switch ON	Below 1 V
		5th gear	11 to 14 V
		Except 5th gear	Below 1 V
B31-60 (SL3+) - B31-61 (SL3-)	SL3 solenoid signal	Engine idle speed	Pulse generation (See waveform 3)
B31-58 (SL2+) - B31-59 (SL2-)	SL2 solenoid signal	Engine idle speed	Pulse generation (See waveform 4)

TERMINALS NO. (SYMBOLS)	TERMINAL DESCRIPTION	CONDITION	SPECIFIED CONDITION
B31-57 (SL1+) - B31-77 (SL1-)	SL1 solenoid signal	Engine idle speed	Pulse generation (See waveform 5)
B31-101 (NC+) - B31-102 (NC-)	Speed sensor (NC) signal	Vehicle speed 30 km/h (19mph): (3rd gear) Engine speed 1,400 rpm	Pulse generation (See waveform 6)
B31-125 (NT+) - B31-124 (NT-)	Speed sensor (NT) signal	Vehicle speed 20 km/h (12mph)	Pulse generation (See waveform 7)
B31-76 (SLT+) - B31-75 (SLT-)	SLT solenoid signal	Engine idle speed	Pulse generation (See waveform 1)
B31-72 (THO1) - B31-95 (ETHO)	ATF temperature sensor signal	ATF temperature: 115°C (239°F) or more	Below 1.5 V

(a) Waveform 1

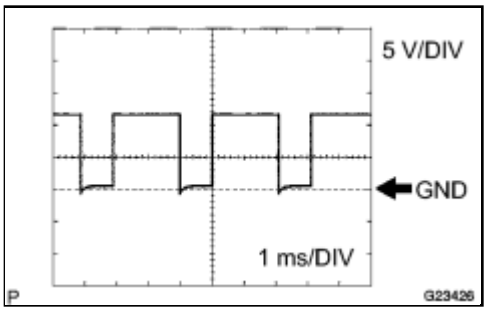

Reference:

Terminal	SLT+ - SLT-
Tool setting	5 V/DIV, 1ms/DIV
Vehicle condition	Engine idle speed

(b) Waveform 2

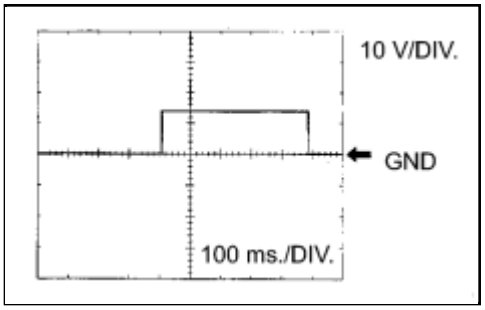

Reference:

Terminal	DSL - E1
Tool setting	10 V/DIV, 100ms/DIV
Vehicle condition	Vehicle speed 65 km/h (40 mph), lock-up (ON to OFF)

(c) Waveform 3

Reference:

Terminal	SL3+ - SL3-

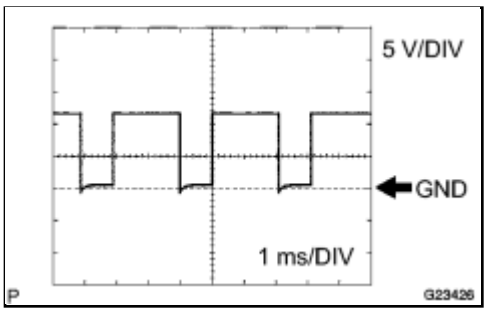

Tool setting	5 V/DIV, 1ms/DIV
Vehicle condition	Engine idle speed

(d) Waveform 4

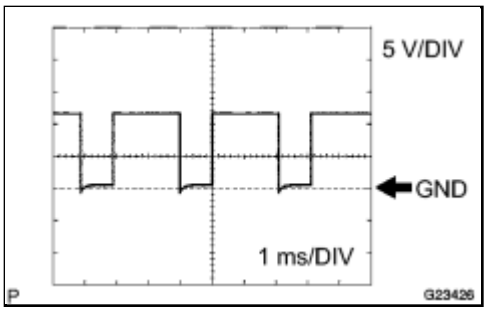

Reference:

Terminal	SL2+ - SL2-
Tool setting	5 V/DIV, 1ms/DIV
Vehicle condition	Engine idle speed

(e) Waveform 5

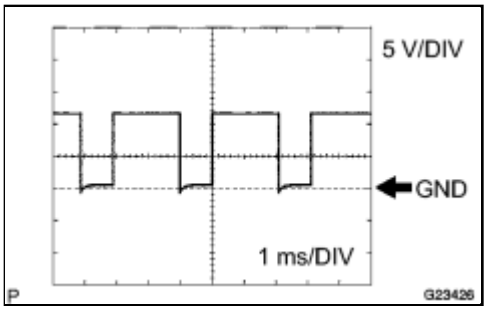

Reference:

Terminal	SL1+ - SL1-
Tool setting	5 V/DIV, 1ms/DIV
Vehicle condition	Engine idle speed

(f) Waveform 6

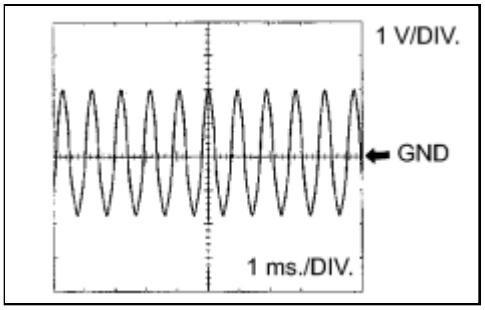

Reference:

Terminal	NC+ - NC-
Tool setting	1 V/DIV, 1ms/DIV
Vehicle condition	Vehicle speed 30 km/h (19 mph): (3rd gear) Engine speed 1.400 rpm

(g) Waveform 7

Reference:

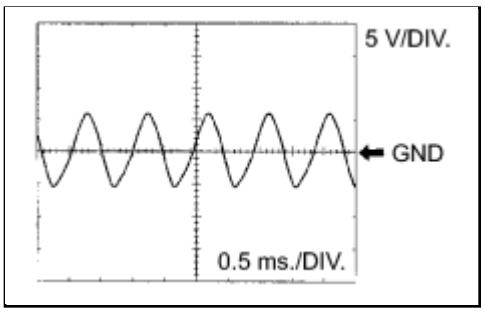

Terminal	NT+ - NT-
Tool setting	5 V/DIV, 0.5ms/DIV
Vehicle condition	Vehicle speed 20 km/h (12 mph)

(h) Waveform 8

Reference:

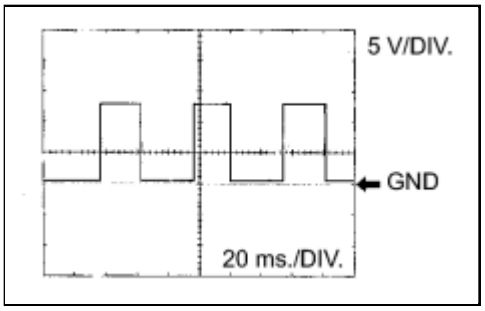

Terminal	SPD - E1
Tool setting	5 V/DIV, 20ms/DIV
Vehicle condition	Vehicle speed 20 km/h (12 mph)

HINT:

Depending on the vehicle, the output waveform voltage, influenced by optionally installed systems, may become 5V.

Last Modified: 3-10-2010	6.4 D	**From:** 200901
Model Year: 2010	**Model:** Corolla	**Doc ID:** RM000000W770CMX
Title: U250E AUTOMATIC TRANSMISSION / TRANSAXLE: AUTOMATIC TRANSAXLE SYSTEM: DTC CHECK / CLEAR (2010 Corolla)		

DTC CHECK / CLEAR

NOTICE:

When the diagnosis system is changed from normal mode to check mode or vice versa, all DTCs and freeze frame data recorded in normal mode are cleared. Before changing modes, always check and make a note of DTCs and freeze frame data.

HINT:

- DTCs which are stored in the ECM can be displayed on the Techstream. The Techstream can display the current, pending and permanent DTCs.
- If a malfunction is detected during the current driving cycle, current and permanent DTCs are stored.
- Some DTCs are not stored if the ECM does not detect the same malfunction again during a second consecutive driving cycle. However, such malfunctions, detected on only one occasion, are stored as pending DTCs.
- Current and pending DTCs can be cleared by using the Techstream or by disconnecting the cable from the negative battery terminal. However, permanent DTCs cannot be cleared using either of these two methods.
- After clearing current DTCs using the Techstream (or by disconnecting the cable from the negative battery terminal), permanent DTCs can be cleared when the system is determined to be normal for the relevant DTCs and then the universal trip is performed.

2 Trip Detection Examples

Pending DTC	Store condition	Malfunction detected
	Clear condition	System determined to be normal or DTCs cleared using Techstream or Cable disconnected from negative battery terminal
Current DTC	Store condition	Malfunction detected (2nd trip)
	Clear condition	No malfunctions in 40 driving cycles or DTCs cleared using Techstream or Cable disconnected from negative battery terminal
Permanent DTC	Store condition	Malfunction detected (2nd trip)
	Clear condition	Ignition switch turned to ON after no malfunction is detected in 3 consecutive driving cycles or

		After DTCs cleared using Techstream or cable disconnected from negative battery terminal, malfunction not detected when universal trip driving performed
MIL	ON	Malfunction detected (2nd trip)
	OFF	Ignition switch turned to ON after no malfunction is detected in 3 consecutive driving cycles or DTCs cleared using Techstream or Cable disconnected from negative battery terminal

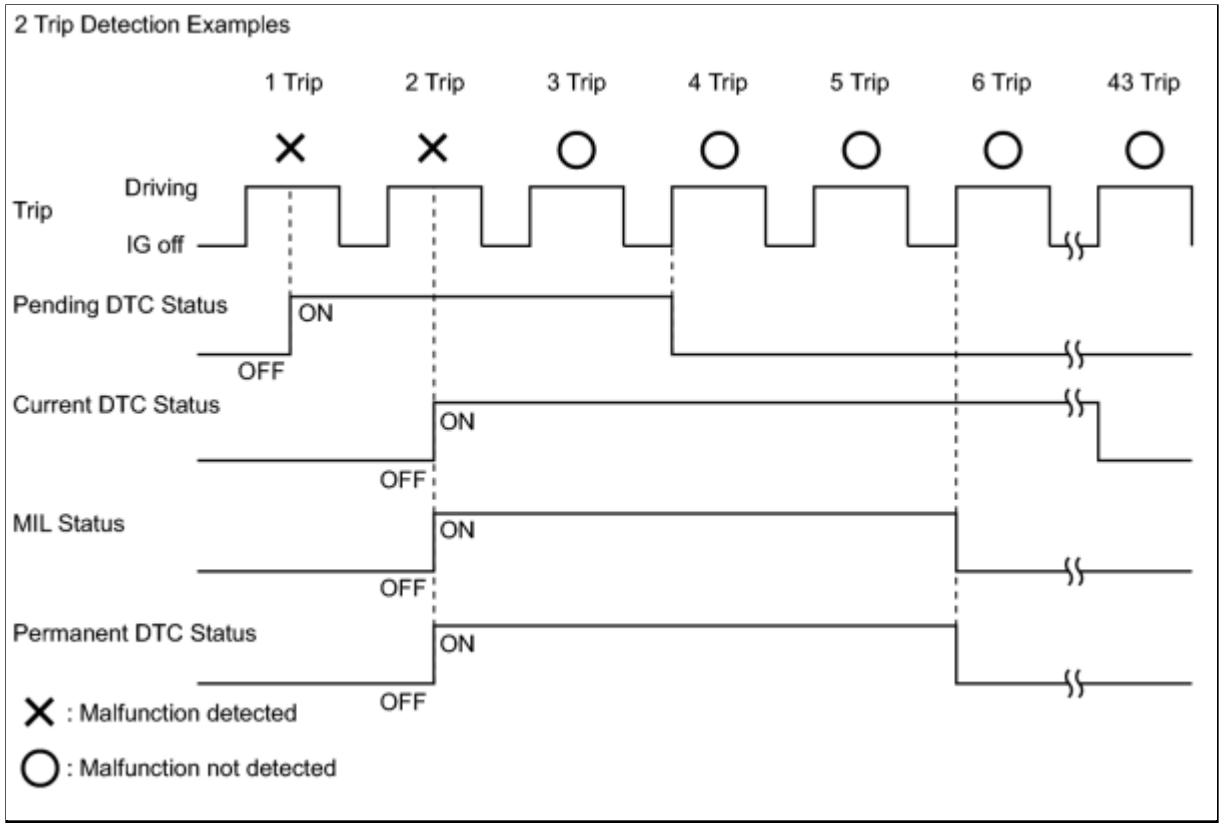

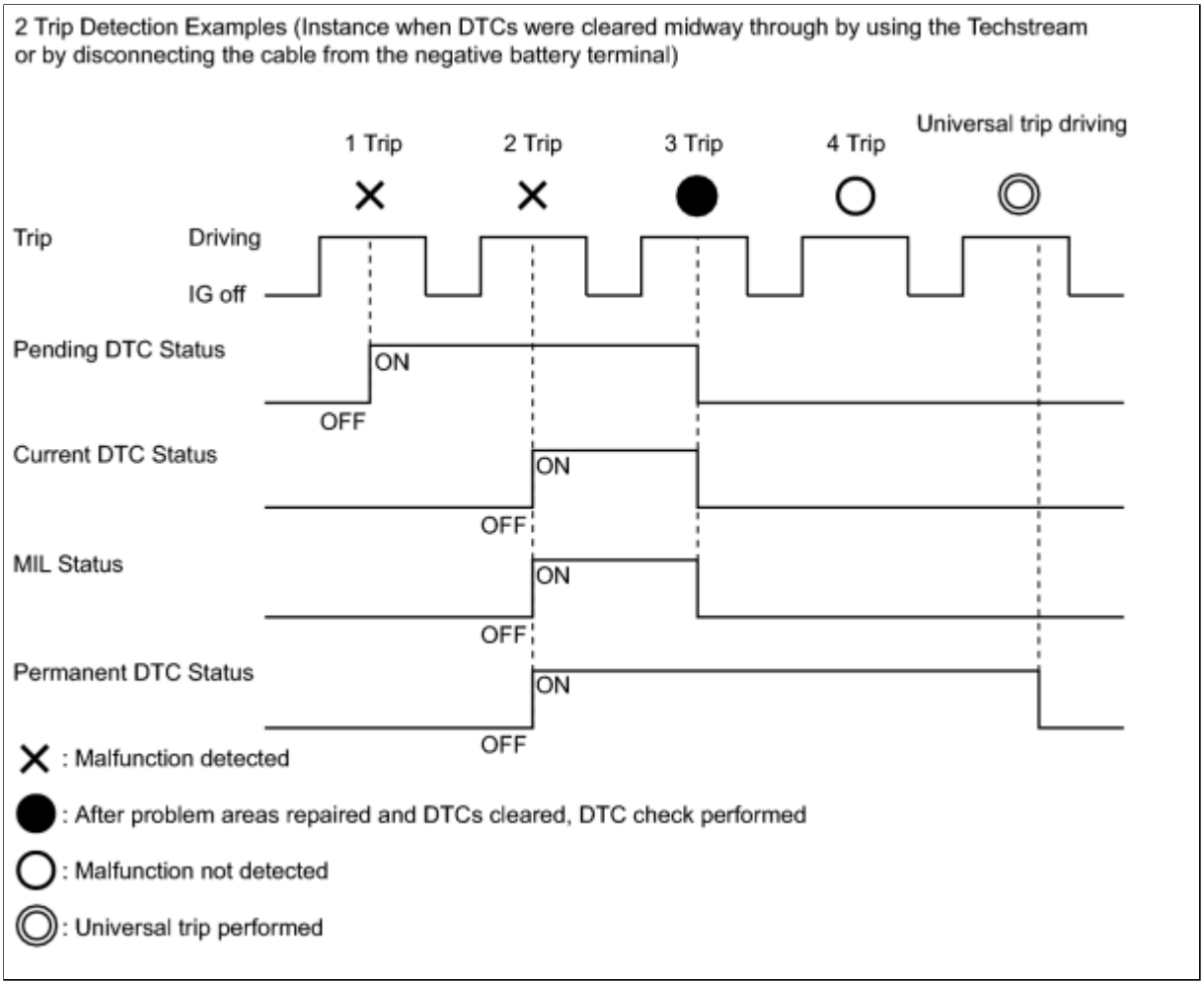

1. CHECK DTC

(a) Connect the Techstream to the DLC3.

(b) Turn the ignition switch to ON.

(c) Turn the Techstream on.

(d) Enter the following menus: Powertrain / Engine and ECT / Trouble Codes.

(e) Check the DTC(s) and freeze frame data, and then write them down.

(f) Check the details of the DTC(s) INFO .

2. CLEAR DTC (Pending and Current DTC)

(a) Connect the Techstream to the DLC3.

(b) Turn the ignition switch to ON.

(c) Turn the Techstream on.

(d) Enter the following menus: Powertrain / Engine and ECT / Trouble Codes.

(e) Clear the DTCs.

3. CLEAR DTC (Pending and Current DTC without using Techstream)

(a) Perform either of the following operations:

(1) Disconnect the cable from the negative (-) battery terminal for more than 1 minute.

(2) Remove the EFI MAIN and ETCS fuses from the engine room relay block located inside the

engine compartment for more than 1 minute.

4. CLEAR PERMANENT DTC

HINT:

Even if the following procedure is not performed, permanent DTCs are cleared if no malfunction are detected during 3 consecutive driving cycles.

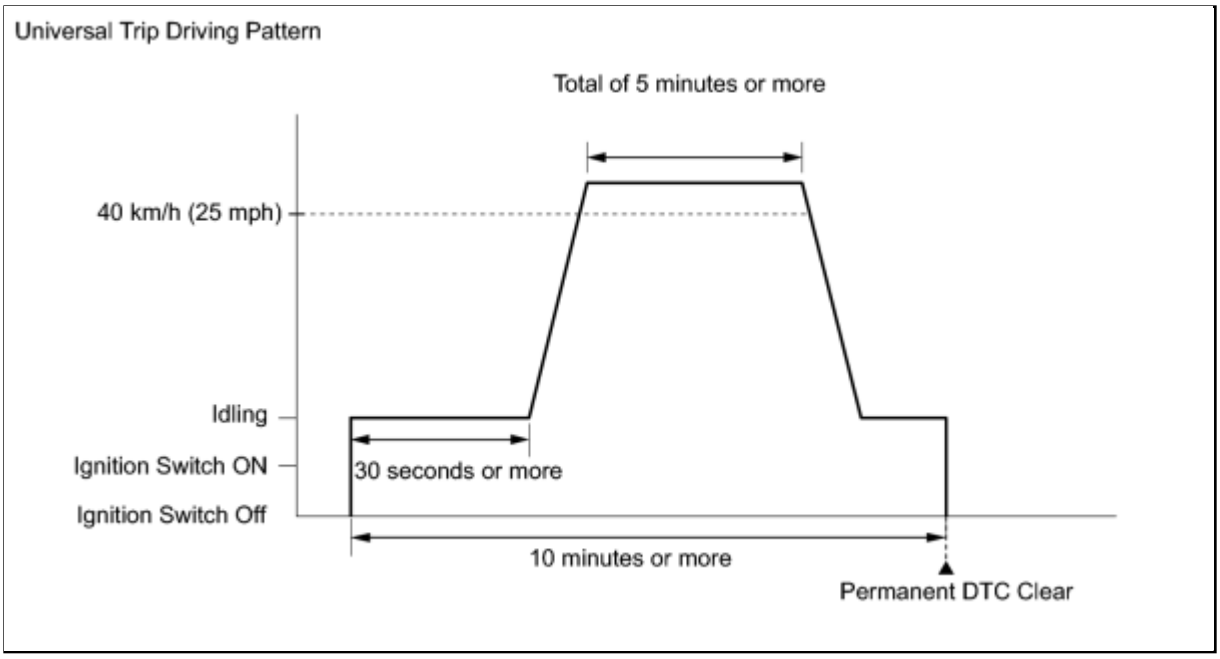

(a) Connect the Techstream to the DLC3.

(b) Turn the ignition switch to ON.

(c) Turn the Techstream on.

(d) Enter the following menus: Powertrain / Engine and ECT / Trouble Codes.

(e) Check if permanent DTCs are stored.

HINT:

If permanent DTCs are not output, it is not necessary to continue this procedure.

(f) Clear DTCs.

(g) Perform the universal trip.

1. Idle the engine for 30 seconds or more.
2. Drive the vehicle at 40 km/h (25 mph) or more for a total of 5 minutes or more.

   HINT:

   - It is possible to complete the drive pattern even if the vehicle decelerates to less than 40 km/h (25 mph) during the driving cycle provided that the vehicle is driven at 40 km/h (25 mph) or more for a total of 5 minutes.
   - When accelerating through the gears, make sure the vehicle is driven so all gears are used in order and no gears are skipped.

3. Allow 10 minutes or more to elapse from the time the engine is started.

(h) Turn the ignition switch off.

(i) Wait 15 seconds.

(j) Turn the ignition switch to ON.

(k) Enter the following menus: Powertrain / Engine and ECT / Trouble Codes.

(l) Check that the permanent DTCs have been cleared.

HINT:

- If the permanent DTCs have not been cleared, perform the universal trip again.
- The permanent DTCs are cleared when the universal trip is completed.



Last Modified: 3-10-2010	6.4 D	**From:** 200901
Model Year: 2010	**Model:** Corolla	**Doc ID:** RM000000W760D8X
Title: U250E AUTOMATIC TRANSMISSION / TRANSAXLE: AUTOMATIC TRANSAXLE SYSTEM: DIAGNOSIS SYSTEM (2010 Corolla)		

DIAGNOSIS SYSTEM

1. DESCRIPTION

(a) When troubleshooting OBD II vehicles, the only difference from the usual troubleshooting procedure is to connect Techstream to the vehicle, and read off various data output from the vehicle's ECM.



(b) OBD II regulations require that the vehicle's on-board computer illuminate the Malfunction Indicator Lamp (MIL) on the instrument panel when the computer detects a malfunction in the computer itself or in the drive system components which affect the vehicle emissions. In addition to illuminating the MIL when a malfunction is detected, the applicable DTCs prescribed by SAE J2012 are recorded in the ECM memory INFO .

If the malfunction does not occur in 3 consecutive trips, the MIL goes off but the DTCs remain in the ECM memory.

(c) To check the DTCs, connect the Techstream to the DLC3 of the vehicle. Techstream also enables you to erase the DTCs and check freeze frame data and various forms of engine data (For operating instructions, see the instruction book).

(d) The DTCs include SAE controlled codes and Manufacturer controlled codes. SAE controlled codes must be set as prescribed by the SAE, while Manufacturer controlled codes can be set freely by a manufacturer within the prescribed limits INFO .

(e) The diagnosis system operates in "normal mode" during the normal vehicle use. In normal mode, "2-trip detection logic" is used to ensure accurate detection of malfunction. "Check mode" is also available to technicians as an option. In check mode, "1-trip detection logic" is used for simulating malfunction symptoms and increasing the system's ability to detect malfunctions, including intermittent malfunction.

(f) *2 trip detection logic: When a malfunction is first detected, the malfunction is temporarily stored in the ECM memory (1st trip). IF the ignition switch is turned off and then turned on (IG) again, and same malfunction is detected again, the MIL will illuminate.

(g) The ECM records vehicle and driving condition information as freeze frame data the moment a DTC is stored. When troubleshooting, freeze frame data can be helpful in determining whether the vehicle was running or stopped, whether the engine was warmed up or not, whether the air/fuel ratio was lean or rich, as well as other data recorded at the time of a malfunction.

(h) Techstream displays freeze frame data recorded at five different points: 1) 3 times before the DTC is set, 2) once when the DTC is set, and 3) once after the DTC is set. The data can be used to simulate the vehicle's condition around the time of the malfunction. The data may be helpful

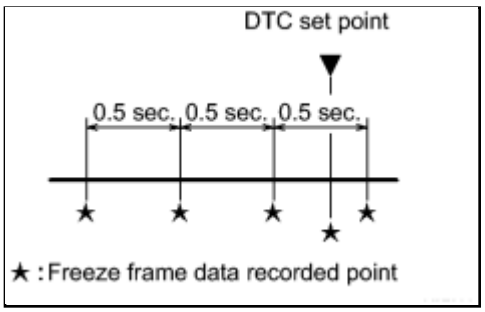

in determining the cause of a malfunction. It may also be helpful in determining whether a DTC is being caused by a temporary malfunction.

2. INSPECT THE DLC3

(a) Check the DLC3 INFO .

3. CHECK BATTERY VOLTAGE

(a) Measure the battery voltage.

Battery voltage:
11 to 14 V

If voltage is below 11 V, replace the battery before proceeding.

4. CHECK MIL

(a) Check that the MIL illuminates when turning the ignition switch to the ON position.

HINT:

If the MIL does not light up, troubleshoot the combination meter.

(b) When the engine is started, the MIL should go off. If the lamp remains on, it means that the diagnosis system has detected a malfunction or abnormality in the system.

Last Modified: 3-10-2010	6.4 D	**From:** 200901
Model Year: 2010	**Model:** Corolla	**Doc ID:** RM000000W780BRX
Title: U250E AUTOMATIC TRANSMISSION / TRANSAXLE: AUTOMATIC TRANSAXLE SYSTEM: CHECK MODE PROCEDURE (2010 Corolla)		

CHECK MODE PROCEDURE

HINT:

Check mode has a higher sensitivity to malfunctions and can detect malfunction that normal mode cannot detect. Check mode can also detect all the malfunctions that normal mode can detect. In check mode, DTCs are detected with 1-trip detection logic.

1. DTC CHECK (CHECK MODE)

HINT:

Techstream only: Compared to the normal mode, the check mode is more sensitive for detecting malfunctions. Furthermore, the same diagnostic items which are detected in the normal mode can also be detected in the check mode.

(a) Procedure for Check Mode using Techstream.

(1) Check the initial conditions.

- Battery positive voltage 11 V or more
- Throttle valve fully closed
- Transaxle in the P or N position
- A/C switch is off

(2) Turn the ignition switch off.

(3) Connect Techstream to the DLC3.

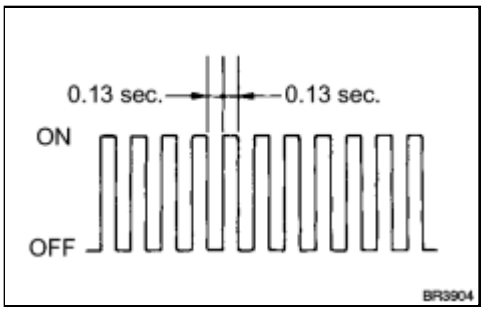

(4) Turn the ignition switch to the ON position and turn the Techstream main switch ON.

(5) Enter the following menus: Powertrain / Engine and ECT / Utility / Check Mode.

NOTICE:

All DTCs and freeze frame data recorded will be erased if: 1) Techstream is used to change the ECM from normal mode to check mode or vice-versa; or 2) during check mode, the ignition switch is turned from the ON position to ACC position or turned OFF.

(6) Start the engine (the MIL goes off after the engine starts).

(7) Perform "MONITOR DRIVE PATTERN" for the ECT test INFO, or simulate the conditions of the malfunction described by the customer.

NOTICE:

Leave the ignition switch to the ON position until you have checked the DTCs, etc.

(8) After simulating malfunction conditions, use the Techstream diagnosis selector to check the DTCs and freeze frame data, etc.

(9) When you use Techstream: Enter the following menus: Powertrain / Engine and ECT / Trouble Codes.

(10) After checking the DTC, inspect the applicable circuit.

(11) INFO to confirm the details of the DTCs.

2. DTC CLEAR

(a) Connect Techstream to the DLC3.

(b) Turn the ignition switch to the ON position and turn the Techstream main switch ON.

(c) When you use Techstream: Enter the following menus: Powertrain / Engine and ECT / Trouble Codes / Clear.

HINT:

When operating Techstream to erase the codes, the DTCs and freeze frame data will be erased. (See the Techstream instruction book for operating instructions.)

Last Modified: 3-10-2010	6.4 U	**From:** 200901
Model Year: 2010	**Model:** Corolla	**Doc ID:** RM000000O8L0BUX
Title: U250E AUTOMATIC TRANSMISSION / TRANSAXLE: AUTOMATIC TRANSAXLE SYSTEM: FAIL-SAFE CHART (2010 Corolla)		

FAIL-SAFE CHART

1. FAIL-SAFE

This function minimizes the loss of the ECT functions when any malfunction occurs in a sensor or solenoid.

(a) ATF (Automatic Transmission Fluid) temperature sensor:

When the ATF temperature sensor has a malfunction, 5th upshift is prohibited.

(b) Counter gear speed sensor NC (Speed sensor NC):

When the counter gear speed sensor has a malfunction, 5th upshift is prohibited.

(c) Shift solenoid valve DSL:

When the solenoid valve DSL has a malfunction, the current to the solenoid valve is stopped.

This stops lock-up control, then fuel economy decreases.

(d) Shift solenoid valve SL1, SL2, SL3 and S4:

Fail safe function:

If either of the shift solenoid valve circuits develops an open or short, the ECM turns the other shift solenoid "ON" and "OFF" in order to shift into the gear positions shown in the table below.

Manual shifting as shown in the following table must be done (In case of a short circuit, the ECM stops sending the current to the short circuited solenoid).

Even if starting the engine in the fail-safe mode, the gear position remains in the same position.

HINT:

FL: Flex Lock-up

Normal	Solenoid Valve	SL1	ON	OFF	ON	OFF	OFF
		SL2	ON	ON	OFF	FL	FL
		SL3	OFF	OFF	OFF	ON	ON
		S4	OFF	OFF	OFF	OFF	ON
	Gear Position		1st	2nd	3rd	4th	5th
SL1 Malfunction (During driving at 1st or 2nd)	Solenoid Valve	SL1	OFF				
		SL2	ON	ON	OFF to ON	FL to ON	FL to ON
		SL3	OFF	OFF	OFF	ON to OFF	ON to OFF

		S4	OFF	OFF	OFF	OFF	ON to OFF
	Gear Position		1st to 2nd	2nd	3rd to 2nd	4th to 2nd	5th to 2nd
SL1 Malfunction (During driving at 3rd)	Solenoid Valve	SL1	OFF				
		SL2	ON to FL	ON to FL	OFF to FL	FL	FL
		SL3	OFF	OFF	OFF	ON to OFF	ON to OFF
		S4	OFF to ON	OFF to ON	OFF to ON	OFF to ON	ON
	Gear Position		1st to 4th	2nd to 4th	3rd to 4th	4th	5th to 4th
SL1 Malfunction (During driving at 4th or 5th)	Solenoid Valve	SL1	OFF				
		SL2	ON to FL	ON to FL	OFF to FL	FL	FL
		SL3	OFF to ON	OFF to ON	OFF to ON	ON	ON
		S4	OFF	OFF	OFF	OFF	ON
	Gear Position		1st to 4th	2nd to 4th	3rd to 4th	4th	5th
SL2 Malfunction	Solenoid Valve	SL1	ON	OFF to ON	ON	OFF to ON	OFF to ON
		SL2	OFF				
		SL3	OFF	OFF	OFF	ON to OFF	ON to OFF
		S4	OFF to ON	OFF to ON	OFF to ON	OFF to ON	ON
	Gear Position		1st to 4th	2nd to 4th	3rd to 4th	4th	5th to 4th
SL3 Malfunction	Solenoid Valve	SL1	ON	OFF	ON	OFF to ON	OFF to ON
		SL2	ON	ON	OFF	FL	FL
		SL3	OFF				
		S4	OFF	OFF	OFF	OFF to ON	ON
	Gear Position		1st	2nd	3rd	4th	5th to 4th
S4 Malfunction	Solenoid	SL1	ON	OFF	ON	OFF	OFF

	Valve	SL2	ON	ON	OFF	FL	FL
		SL3	OFF	OFF	OFF	ON	ON
		S4	OFF				
	Gear Position		1st	2nd	3rd	4th	5th to 4th
SL1, SL2, SL3, and S4 Malfunction	Solenoid Valve	SL1	OFF				
		SL2	OFF				
		SL3	OFF				
		S4	OFF				
	Gear Position		1st to 4th	2nd to 4th	3rd to 4th	4th	5th to 4th



Last Modified: 3-10-2010	6.4 C	**From:** 200901
Model Year: 2010	**Model:** Corolla	**Doc ID:** RM000000W840ELX
Title: U250E AUTOMATIC TRANSMISSION / TRANSAXLE: AUTOMATIC TRANSAXLE SYSTEM: P0705: Transmission Range Sensor Circuit Malfunction (PRNDL Input) (2010 Corolla)		

DTC	**P0705**	**Transmission Range Sensor Circuit Malfunction (PRNDL Input)**

DESCRIPTION

The park/neutral position switch detects the shift lever position and sends signals to the ECM.

DTC NO.	DTC DETECTION CONDITION	TROUBLE AREA
P0705	(A) Any 2 or more signals of the following are ON simultaneously (2-trip detection logic) • P input signal is ON. • N input signal is ON. • R input signal is ON. • D input signal is ON. (B) Any 2 or more signals of the following are ON simultaneously (2-trip detection logic) • NSW input signal is ON. • R input signal is ON. • D input signal is ON (C) When any of following conditions is met for 2.0 sec. or more in the S position (2-trip detection logic) • NSW input signal is ON. • P input signal is ON. • N input signal is ON. • R input signal is ON. (D) All switches are OFF simultaneously for NSW, P, N, R, D positions (2-trip detection logic). • NSW input signal is OFF. • P input signal is OFF. • N input signal is OFF. • R input signal is OFF. • D input signal is OFF	• Open or short in park/neutral position switch circuit • Park/neutral position switch • ECM

MONITOR DESCRIPTION

These DTCs indicate a problem with the park/neutral position switch and the wire harness in the park/neutral position switch circuit.

The park/neutral position switch detects the shift lever position and sends a signal to the ECM.

For security, the park/neutral position switch detects the shift lever position so that engine can be started only when the shift lever is in the P or N position.

The park/neutral position switch sends a signal to the ECM according to the shift position (P, R, N, or D). The ECM determines that there is a problem with the switch or related parts if it receives more than 1 position signal simultaneously. The ECM will turn on the MIL and store the DTC.

MONITOR STRATEGY

Related DTCs	P0705: Park/neutral position switch/Verify switch input
Required sensors/Components	Park/neutral position switch
Frequency of operation	Continuous
Duration	Condition (A), (B), (C) 2 sec. Condition (D) 60 sec.
MIL operation	2 driving cycles
Sequence of operation	None

TYPICAL ENABLING CONDITIONS

The monitor will run whenever this DTC is not present.	None
Ignition switch	ON
Battery voltage	10.5 V or more

TYPICAL MALFUNCTION THRESHOLDS

1. One of the following conditions is met: Condition (A), (B), (C) and (D)

Condition (A)

Number of the following signal input at the same time	2 or more
P switch	ON
N switch	ON
R switch	ON
D switch	ON

Condition (B)

Number of the following signal input at the same time	2 or more
NSW switch	ON
R switch	ON
D switch	ON

Condition (C) When shift lever is in the S position, one of the following conditions is met.

NSW switch	ON
P switch	ON
N switch	ON
R switch	ON

Condition (D) All of following conditions are met.

NSW switch	OFF
P switch	OFF
N switch	OFF
R switch	OFF
D switch	OFF

COMPONENT OPERATING RANGE

Park/neutral Position switch	The park/neutral position switch sends only one signal to the ECM.

WIRING DIAGRAM

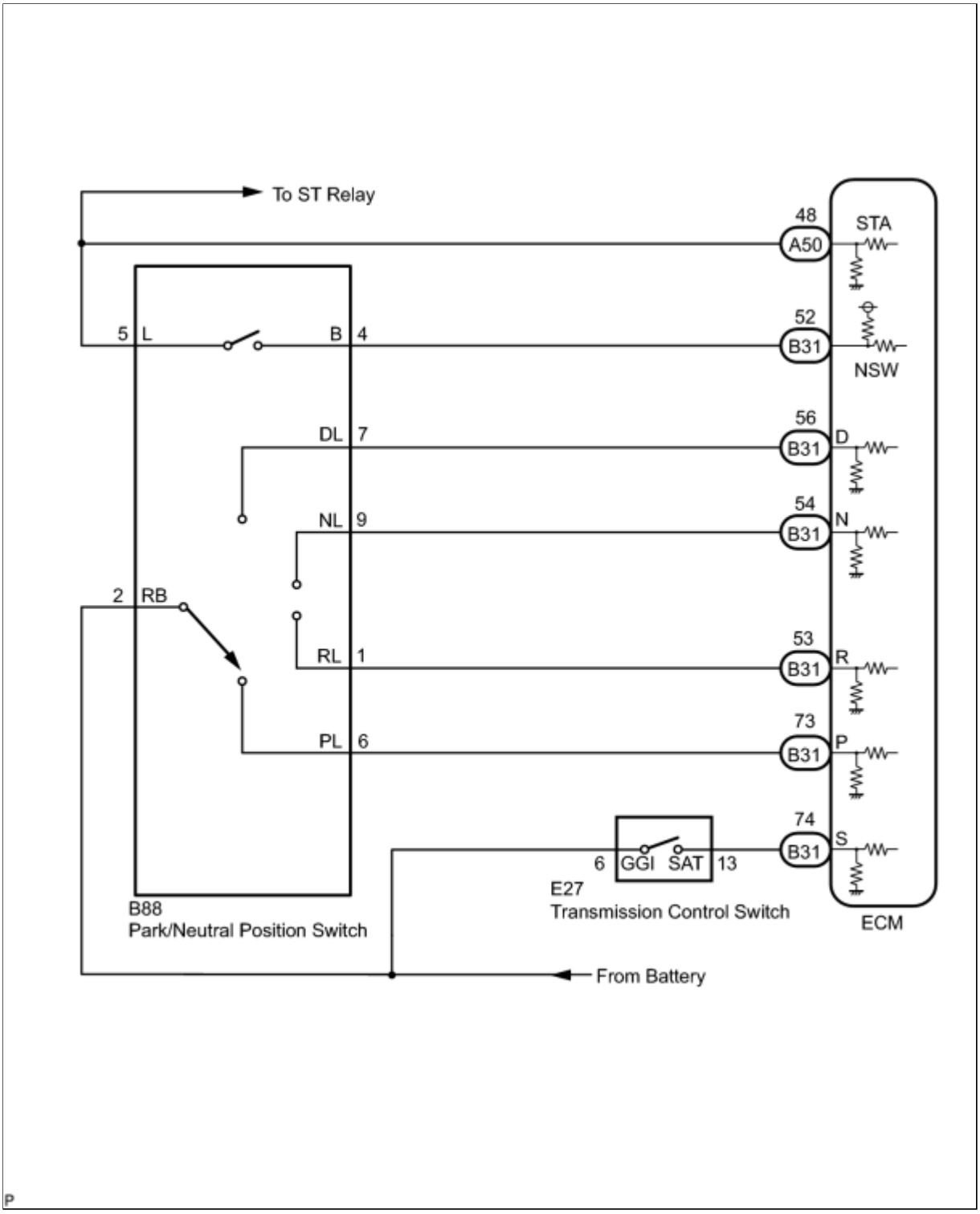

INSPECTION PROCEDURE

NOTICE:

Perform the universal trip to clear permanent DTCs INFO **.**

HINT:

Using Techstream to read the Data List allows the values or states of switches, sensors, actuators and other items to be read without removing any parts. This non-intrusive inspection can be very useful because intermittent conditions or signals may be discovered before parts or wiring is disturbed. Reading the Data List

information early in troubleshooting is one way to save diagnostic time.

NOTICE:

In the table below, the values listed under "Normal Condition" are reference values. Do not depend solely on these reference values when deciding whether a part is faulty or not.

1. READ DATA LIST

(a) Warm up the engine.

(b) Turn the ignition switch off.

(c) Connect Techstream to the DLC3.

(d) Turn the ignition switch to the on position.

(e) Turn on the tester.

(f) Select the item "Powertrain / Engine and ECT / Data List".

(g) According to the display on the tester, read the "Data List".

TESTER DISPLAY	MEASUREMENT ITEM/RANGE	NORMAL CONDITION	DIAGNOSTIC NOTE
Neutral Position SW Signal	PNP Switch Status/ ON or OFF	Shift lever position is: P and N: ON Except P and N: OFF	When the shift lever position displayed on Techstream differs from the actual position, adjustment of the PNP switch or the shift cable may be incorrect.
Shift SW Status (R Range)	PNP Switch Status/ ON or OFF	Shift lever position is: R: ON Except R: OFF	↑
Shift SW Status (P Range)	PNP Switch Status/ ON or OFF	Shift lever position is: P: ON Except P: OFF	↑
Shift SW Status (N Range)	PNP Switch Status/ ON or OFF	Shift lever position is: N: ON Except N: OFF	↑
Shift SW Status (D Range)	PNP Switch Status/ ON or OFF	Shift lever position is: D and S: ON Except D and S: OFF	↑
Sports Mode Selection SW	Sport Mode Select Switch Status/ ON or OFF	Shift lever position is: S, "+" and "-": ON Except S, "+" and "-": OFF	-

PROCEDURE

1.	**CHECK HARNESS AND CONNECTOR (BATTERY - PARK/NEUTRAL POSITION SWITCH)**

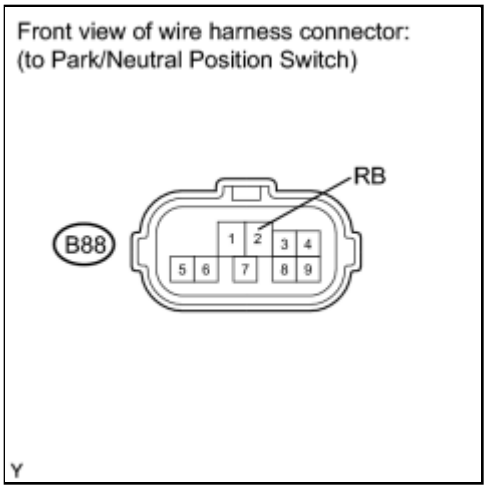

(a) Disconnect the park/neutral position switch connector.

(b) Turn the ignition switch to ON.

(c) Measure the voltage according to the value(s) in the table below.

Standard voltage:

TESTER CONNECTION	SWITCH CONDITION	SPECIFIED CONDITION
B88-2 (RB) - Body ground	Ignition switch ON	11 to 14 V

NG ▶ **REPAIR OR REPLACE HARNESS OR CONNECTOR**

OK ▼

2.	**CHECK HARNESS AND CONNECTOR (OUTPUT SIGNAL)**

(a) Turn the ignition switch to ON.

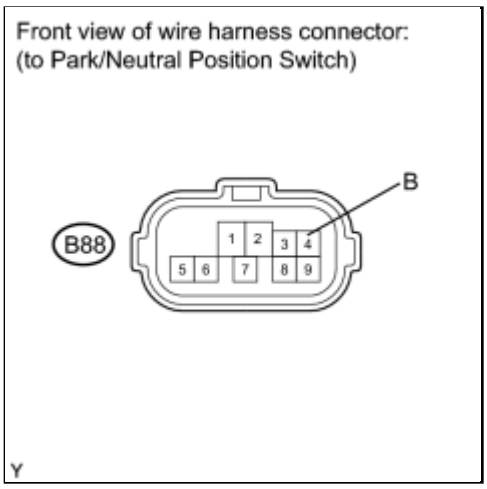

(b) Measure the voltage according to the value(s) in the table below.

Standard voltage:

TESTER CONNECTION	SWITCH CONDITION	SPECIFIED CONDITION
B88-4 (B) - Body ground	Ignition switch ON	11 to 14 V

NG ▶ **CHECK HARNESS AND CONNECTOR (PARK/NEUTRAL POSITION SWITCH - ECM)**

OK ▼

3.	**INSPECT PARK/NEUTRAL POSITION SWITCH ASSEMBLY**

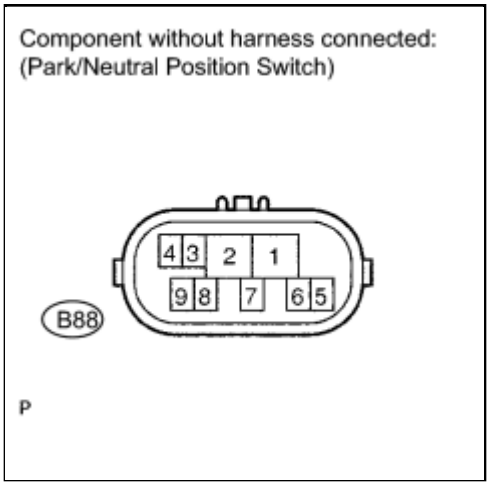

(a) Disconnect the park/neutral position switch connector.

(b) Measure resistance according to the value(s) in the table below when the shift lever is moved to each position.

Standard resistance:

TESTER CONNECTION	SHIFT POSITION	SPECIFIED CONDITION
4 - 5	P and N	Below 1 Ω
	Except P and N	10 Ω or higher
2 - 6	P	Below 1 Ω
	Except P	10 Ω or higher
2 - 1	R	Below 1 Ω
	Except R	10 Ω or higher
2 - 9	N	Below 1 Ω
	Except N	10 Ω or higher
2 - 7	D, S, "+" and "-"	Below 1 Ω
	Except D, S, "+" and "-"	10 Ω or higher

NG ▶ **REPLACE PARK/NEUTRAL POSITION SWITCH ASSEMBLY**

OK ▼

4.	**CHECK HARNESS AND CONNECTOR (PARK/NEUTRAL POSITION SWITCH - ECM)**

(a) Connect the park/neutral position switch connector.

(b) Disconnect the ECM connector.

(c) Turn the ignition switch to ON, and measure the voltage according to the value(s) in the table below when the shift lever is moved to each position.

Standard voltage:

TESTER CONNECTION	SHIFT POSITION	SPECIFIED CONDITION
B31-73 (P) - Body	P	11 to 14 V

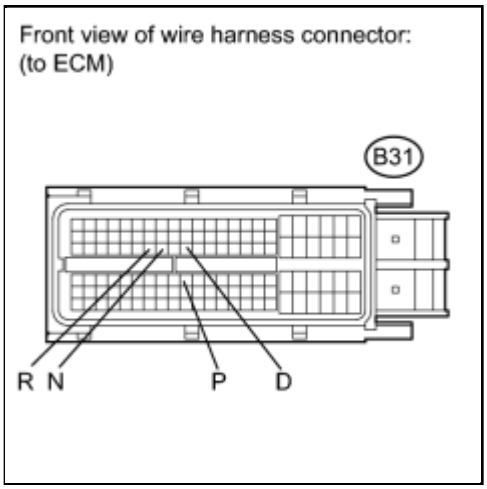

ground	Except P	Below 1 V
B31-54 (N) - Body ground	N	11 to 14 V
	Except N	Below 1 V
B31-53 (R) - Body ground	R	11 to 14 V *
	Except R	Below 1 V
B31-56 (D) - Body ground	D and S	11 to 14 V
	Except D and S	Below 1 V

HINT:

***: The voltage will drop slightly due to the turning on of the back up light.**

NG ▶ **REPAIR OR REPLACE HARNESS OR CONNECTOR**

OK ▼

5.	**CHECK HARNESS AND CONNECTOR (BATTERY - TRANSMISSION CONTROL SWITCH)**

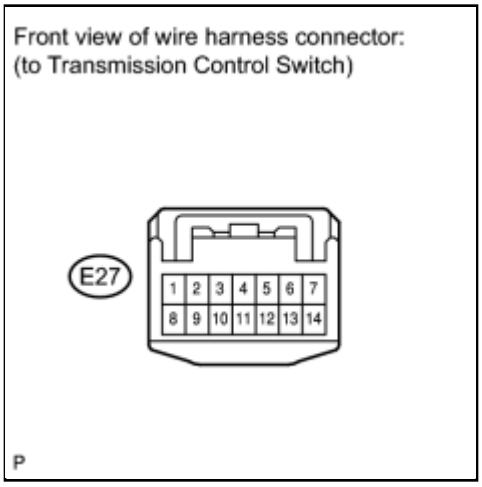

(a) Disconnect the transmission control switch connector of shift lock control unit assembly.

(b) Turn the ignition switch to ON.

(c) Measure the voltage according to the value(s) in the table below.

Standard voltage:

TESTER CONNECTION	SWITCH CONDITION	SPECIFIED CONDITION
E27-6 - Body ground	Ignition switch ON	11 to 14 V

NG ▶ **REPAIR OR REPLACE HARNESS OR CONNECTOR**

OK ▼

6.	**INSPECT SHIFT LOCK CONTROL UNIT (TRANSMISSION CONTROL SWITCH)**

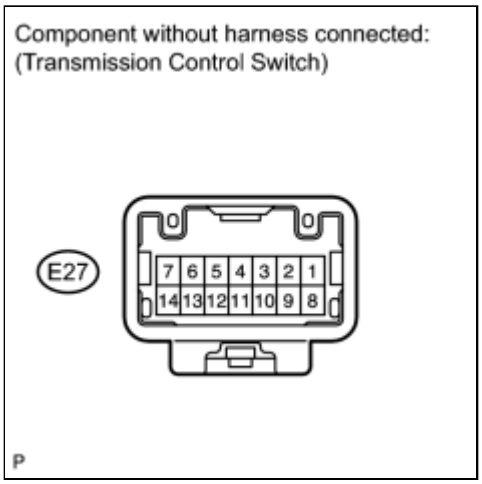

(a) Disconnect the transmission control switch connector of shift lock control unit assembly.

(b) Measure the resistance according to the value(s) in the table below when the shift lever is moved to each position.

Standard resistance:

TESTER CONNECTION	SHIFT POSITION	SPECIFIED CONDITION
E27-6 - E27-13	S, "+" and "-"	Below 1 Ω
	Except S, "+" and "-"	10 Ω or higher

NG ▶ **REPLACE SHIFT LOCK CONTROL UNIT**

OK ▼

7.	CHECK HARNESS AND CONNECTOR (TRANSMISSION CONTROL SWITCH - ECM)

(a) Connect the park/neutral position switch connector.

(b) Disconnect the ECM connector.

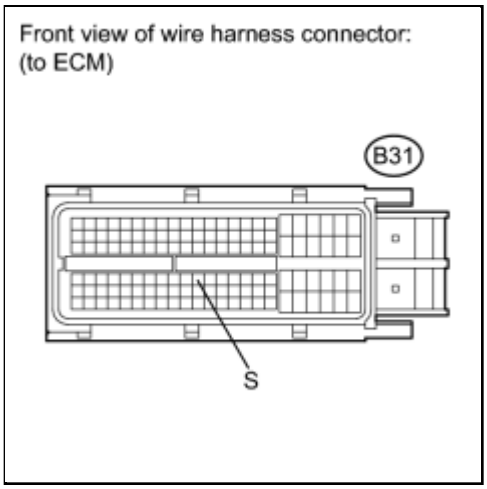

(c) Turn the ignition switch to ON, and measure the voltage according to the value(s) in the table below when the shift lever is moved to each position.

Standard voltage:

TESTER CONNECTION	SHIFT POSITION	SPECIFIED CONDITION
B31-74 (S) - Body ground	S, "+" and "-"	11 to 14 V
	Except S, "+" and "-"	Below 1 V

NG ▶ **REPAIR OR REPLACE HARNESS OR CONNECTOR**

OK ▶ **REPLACE ECM**

8.	CHECK HARNESS AND CONNECTOR (PARK/NEUTRAL POSITION SWITCH - ECM)

(a) Turn the ignition switch off.

(b) Disconnect the ECM connector.

(c) Disconnect the park/neutral position switch connector.

(d) Measure the resistance according to the value(s) in the table below.

Standard resistance (Check for open):

TESTER CONNECTION	CONDITION	SPECIFIED CONDITION
B88-4 (B) - B31-52 (NSW)	Always	Below 1 Ω

Standard resistance (Check for short):

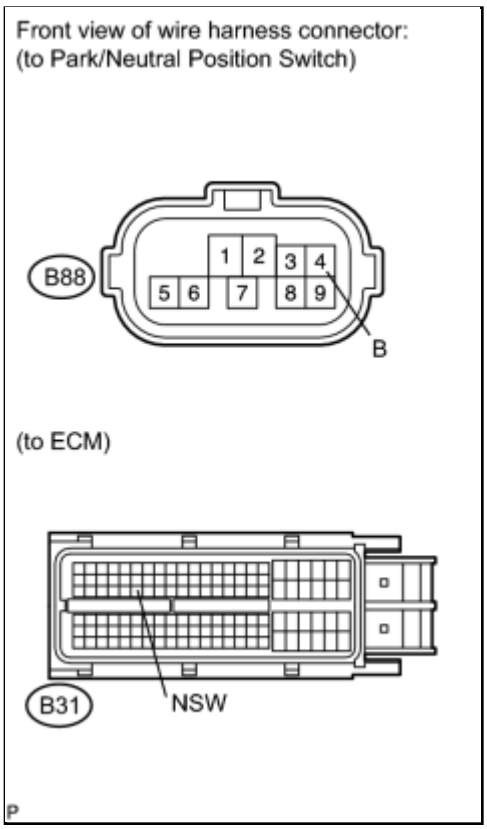

TESTER CONNECTION	CONDITION	SPECIFIED CONDITION
B88-4 (B) or B31-52 (NSW) - Body ground	Always	10 kΩ or higher

NG ▶ **REPAIR OR REPLACE HARNESS OR CONNECTOR**

OK ▶ **REPLACE ECM**

Last Modified: 3-10-2010	6.4 U	**From:** 200901
Model Year: 2010	**Model:** Corolla	**Doc ID:** RM000000W7E0CHX
Title: U250E AUTOMATIC TRANSMISSION / TRANSAXLE: AUTOMATIC TRANSAXLE SYSTEM: DATA LIST / ACTIVE TEST (2010 Corolla)		

DATA LIST / ACTIVE TEST

1. DATA LIST

HINT:

Using Techstream to read the Data List allows the values or states of switches, sensors, actuators and other items to be read without removing any parts. This non-intrusive inspection can be very useful because intermittent conditions or signals may be discovered before parts or wiring is disturbed. Reading the Data List information early in troubleshooting is one way to save diagnostic time.

NOTICE:

In the table below, the values listed under "Normal Condition" are reference values. Do not depend solely on these reference values when deciding whether a part is faulty or not.

(a) Warm up the engine.

(b) Turn the ignition switch off.

(c) Connect Techstream to the DLC3.

(d) Turn the ignition switch to the ON position.

(e) Turn on the tester.

(f) Select the item "Powertrain / Engine and ECT / Data List".

(g) According to the display on the tester, read the "Data List".

TESTER DISPLAY	MEASUREMENT ITEM/RANGE	NORMAL CONDITION	DIAGNOSTIC NOTE
Stop Light Switch	Stop light switch Status/ ON or OFF	• Brake Pedal is depressed: ON • Brake Pedal is released: OFF	-
Neutral Position SW Signal	PNP switch Status/ ON or OFF	Shift lever position is: P and N: ON Except P and N: OFF	When the shift lever position displayed on the Techstream differs from the actual position, adjustment of the PNP switch or the shift cable may be incorrect. **HINT:** **When the failure still occurs even after adjusting these parts,** INFO .
Shift SW Status (R Range)	PNP switch Status/ ON or OFF	Shift lever position is: P: ON Except P: OFF	↑
Shift SW		Shift lever position is:	

2. ACTIVE TEST

HINT:

Using Techstream to perform Active Test allows relays, VSVs, actuators and other items to be operated without removing any parts. This non-intrusive functional inspection can be very useful because intermittent operation may be discovered before parts or wiring is disturbed. Performing Active Test early in troubleshooting is one way to save diagnostic time. Data List information can be displayed while performing Active Test.

(a) Warm up the engine.

(b) Turn the ignition switch off.

(c) Connect Techstream to the DLC3.

(d) Turn the ignition switch to the ON position.

(e) Push the "ON" button of Techstream.

(f) Select the item "Powertrain / Engine and ECT / Active Test".

(g) According to the display on tester, perform the "Active Test".

TESTER DISPLAY	TEST PART	CONTROL RANGE	DIAGNOSTIC NOTE
Control the Shift Position	[Test Details] Operate the shift solenoid valve and set the each shift position by yourself. [Vehicle Condition] • IDL: ON • Less than 50 km/h (31 mph) [Others] • Press "→" button: Shift up • Press "←" button: Shift down	1st / 2nd / 3rd / 4th / 5th	Possible to check the operation of the shift solenoid valves.
Activate the Lock Up	[Test Details] Control the shift solenoid DSL to set the automatic transaxle to the lock-up condition. [Vehicle Condition] • Vehicle Speed: 60 km/h (37 mph) or more	ON / OFF	Possible to check the DSL operation.
Activate the Solenoid (SL1)	[Test Details] Operate the shift solenoid SL1 [Vehicle Condition] • Vehicle Stopped. • Shift lever P or N position	ON / OFF	-
Activate the Solenoid (SL2)	[Test Details] Operate the shift solenoid SL2 [Vehicle Condition] • Vehicle Stopped. • Shift lever P or N position	ON / OFF	-

TESTER DISPLAY	TEST PART	CONTROL RANGE	DIAGNOSTIC NOTE
Activate the Solenoid (SL3)	[Test Details] Operate the shift solenoid SL3 [Vehicle Condition] • Vehicle Stopped. • Shift lever P or N position	ON / OFF	-
Activate the Solenoid (S4))	[Test Details] Operate the shift solenoid S4 [Vehicle Condition] • Vehicle Stopped. • Shift lever P or N position	ON / OFF	-
Activate the Solenoid (SR)	[Test Details] Operate the shift solenoid SR [Vehicle Condition] • Vehicle Stopped. • Shift lever P or N position	ON / OFF	-
Activate the Solenoid (DSL)	[Test Details] Operate the shift solenoid DSL [Vehicle Condition] • Vehicle Stopped. • Shift lever P or N position	ON / OFF	-
Activate the Solenoid (SLT)*	[Test Details] Operate the shift solenoid SLT and raise the line pressure. [Vehicle Condition] • Vehicle Stopped. • IDL: ON **HINT:** **OFF: Line pressure up (When the active test of "Activate the Solenoid (SLT)" is performed, the ECM commands the SLT solenoid to turn off).** ON: No action (normal operation)	ON / OFF	-

*: "Activate the Solenoid (SLT)" in the Active Test is performed to check the line pressure changes by connecting the SST to the automatic transaxle, which is used in the HYDRAULIC TEST INFO as well.

HINT:

The pressure values in Active Test and HYDRAULIC TEST are different from each other.

Last Modified: 3-10-2010	6.4 S	**From:** 200901
Model Year: 2010	**Model:** Corolla	**Doc ID:** RM000000W710BDX
Title: U250E AUTOMATIC TRANSMISSION / TRANSAXLE: AUTOMATIC TRANSAXLE SYSTEM: DIAGNOSTIC TROUBLE CODE CHART (2010 Corolla)		

DIAGNOSTIC TROUBLE CODE CHART

If a DTC is displayed during the DTC check, check the parts listed in the table below and proceed to the page given.

HINT:

- *1: Comes on MIL (Malfunction Indicator Lamp) light up
- *2: "DTC stored" mark means ECM memorizes the malfunction code if the ECM detects the DTC detection condition.
- This DTC may be output when the clutch, brake and gear components etc. inside the automatic transaxle are damaged.

AUTOMATIC TRANSAXLE SYSTEM

DTC CODE	DETECTION ITEM	TROUBLE AREA	MIL *1	MEMORY *2	SEE PAGE
P0705	Transmission Range Sensor Circuit Malfunction (PRNDL Input)	1. Open or short in park/neutral position switch circuit 2. Park/neutral position switch 3. ECM	Comes on	DTC stored	INFO
P0711	Transmission Fluid Temperature Sensor "A" Performance	1. Transmission wire (ATF temperature sensor)	Comes on	DTC stored	INFO
P0712	Transmission Fluid Temperature Sensor "A" Circuit Low Input	1. Short in ATF temperature sensor circuit 2. Transmission wire (ATF temperature sensor) 3. ECM	Comes on	DTC stored	INFO
P0713	Transmission Fluid Temperature Sensor "A" Circuit High Input	1. Open in ATF temperature sensor circuit 2. Transmission wire (ATF temperature sensor) 3. ECM	Comes on	DTC stored	INFO
P0717	Turbine Speed Sensor Circuit No Signal	1. Open or short in transmission revolution sensor NT (speed sensor NT) circuit 2. Transmission revolution sensor NT (speed sensor NT)	Comes on	DTC stored	INFO

DTC CODE	DETECTION ITEM	TROUBLE AREA	MIL *1	MEMORY *2	SEE PAGE
		3. ECM 4. Automatic transaxle assembly			
P0724	Brake Switch "B" Circuit High	1. Short in stop light switch circuit 2. Stop light switch 3. ECM	Comes on	DTC stored	INFO
P0741	Torque Converter Clutch Solenoid Performance (Shift Solenoid Valve DSL)	1. Shift solenoid valve DSL remains open or closed 2. Valve body is blocked 3. Torque converter clutch 4. Automatic transaxle (clutch, brake or gear etc.) 5. Line pressure is too low	Comes on	DTC stored	INFO
P0746	Pressure Control Solenoid "A" Performance (Shift Solenoid Valve SL1)	1. Shift solenoid valve SL1 remains open or closed 2. Valve body is blocked 3. Automatic transaxle (clutch, brake or gear etc.)	Comes on	DTC stored	INFO
P0748	Pressure Control Solenoid "A" Electrical (Shift Solenoid Valve SL1)	1. Open or short in shift solenoid valve SL1 circuit 2. Shift solenoid valve SL1 3. ECM	Comes on	DTC stored	INFO
P0766	Shift Solenoid "D" Performance (Shift Solenoid Valve S4)	1. Shift solenoid valve S4 remains open or closed 2. Valve body is blocked (Brake control valve) 3. Automatic transaxle (clutch, brake or gear etc.)	Comes on	DTC stored	INFO
P0771	Shift Solenoid "E" Performance (Shift Solenoid Valve SR)	1. Shift solenoid valve SR remains open or closed 2. Valve body is blocked 3. Automatic transaxle (clutch, brake or gear etc.)	Comes on	DTC stored	INFO
P0776	Pressure Control Solenoid "B" Performance (Shift Solenoid Valve SL2)	1. Shift solenoid valve SL2 remains open or closed 2. Valve body is blocked 3. Automatic transaxle (clutch, brake or gear etc.)	Comes on	DTC stored	INFO
P0778	Pressure Control Solenoid "B" Electrical (Shift Solenoid Valve SL2)	1. Open or short in shift solenoid valve SL2 circuit 2. Shift solenoid valve SL2	Comes on	DTC stored	INFO

DTC CODE	DETECTION ITEM	TROUBLE AREA	MIL *1	MEMORY *2	SEE PAGE
		3. ECM			
P0793	Intermediate Shaft Speed Sensor "A"	1. Open or short in transmission revolution sensor NC (speed sensor NC) circuit 2. Transmission revolution sensor NC (speed sensor NC) 3. ECM	Comes on	DTC stored	INFO
P0796	Pressure Control Solenoid "C" Performance (Shift Solenoid Valve SL3)	1. Shift solenoid valve SL3 remains open or closed 2. Valve body is blocked 3. Automatic transaxle (clutch, brake or gear etc.)	Comes on	DTC stored	INFO
P0798	Pressure Control Solenoid "C" Electrical (Shift Solenoid Valve SL3)	1. Open or short in shift solenoid valve SL3 circuit 2. Shift solenoid valve SL3 3. ECM	Comes on	DTC stored	INFO
P0982	Shift Solenoid "D" Control Circuit Low (Shift Solenoid Valve S4)	1. Short in shift solenoid valve S4 circuit 2. Shift solenoid valve S4 3. ECM	Comes on	DTC stored	INFO
P0983	Shift Solenoid "D" Control Circuit High (Shift Solenoid Valve S4)	1. Open in shift solenoid valve S4 circuit 2. Shift solenoid valve S4 3. ECM	Comes on	DTC stored	INFO
P0985	Shift Solenoid "E" Control Circuit Low (Shift Solenoid Valve SR)	1. Short in shift solenoid valve SR circuit 2. Shift solenoid valve SR 3. ECM	Comes on	DTC stored	INFO
P0986	Shift Solenoid "E" Control Circuit High (Shift Solenoid Valve SR)	1. Open in shift solenoid valve SR circuit 2. Shift solenoid valve SR 3. ECM	Comes on	DTC stored	INFO
P2714	Pressure Control Solenoid "D" Performance (Shift Solenoid Valve SLT)	1. Shift solenoid valve SLT remains closed 2. Valve body is blocked 3. Automatic transaxle (clutch, brake or gear etc.)	Comes on	DTC stored	INFO
P2716	Pressure Control Solenoid "D" Electrical (Shift Solenoid Valve SLT)	1. Open or short in shift solenoid valve SLT circuit 2. Shift solenoid valve SLT	Comes on	DTC stored	INFO

DTC CODE	DETECTION ITEM	TROUBLE AREA	MIL *1	MEMORY *2	SEE PAGE
		3. ECM			
P2769	Torque Converter Clutch Solenoid Circuit Low (Shift Solenoid Valve DSL)	1. Short in shift solenoid valve DSL circuit 2. Shift solenoid valve DSL 3. ECM	Comes on	DTC stored	INFO
P2770	Torque Converter Clutch Solenoid Circuit High (Shift Solenoid Valve DSL)	1. Open in shift solenoid valve DSL circuit 2. Shift solenoid valve DSL 3. ECM	Comes on	DTC stored	INFO

Last Modified: 3-10-2010	6.4 C	**From:** 200901
Model Year: 2010	**Model:** Corolla	**Doc ID:** RM000000W7Z09RX
Title: U250E AUTOMATIC TRANSMISSION / TRANSAXLE: AUTOMATIC TRANSAXLE SYSTEM: P0711: Transmission Fluid Temperature Sensor "A" Performance (2010 Corolla)		

DTC	**P0711**	**Transmission Fluid Temperature Sensor "A" Performance**

DESCRIPTION

The ATF (Automatic Transmission Fluid) temperature sensor converts the fluid temperature into a resistance value which is input into the ECM.

DTC NO.	DTC DETECTION CONDITION	TROUBLE AREA
P0711	One of the following conditions (A), (B) or (C) is met: (A) (a), (b) and (c) are detected: (2-trip detection logic) • (a) Intake air and engine coolant temperatures are more than 15°C (59°F) at engine start • (b) Soak time is more than 5 hours • (c) After normal driving for over 10 min. and 5 km (3 mile) or more, ATF temperature is less than 20°C (68°F) (B) Both (a) and (b) are detected: (2-trip detection logic) • (a) Intake air and engine coolant temperatures are more than -10°C (14°F) at engine start • (b) After normal driving for over 19 min. and 9 km (6 mile) or more, ATF temperature is less than 20°C (68°F) (C) Both (a) and (b) are detected: (2-trip detection logic) • (a) Engine coolant temperature is less than 35°C (95°F) at engine start • (b) ATF temperature is 110°C (230°F) or more when engine coolant temperature reaches 60°C (140°F)	Transmission wire (ATF temperature sensor)

MONITOR DESCRIPTION

The ATF temperature sensor converts the ATF temperature to an electrical resistance value. Based on the resistance, the ECM determines the ATF temperature and detects an open or short in the ATF temperature circuit or a fault in the ATF temperature sensor.

After running the vehicle for a certain period, the ATF temperature should increase. If the ATF

temperature is below 20°C (68°F) after running the vehicle for a certain period, the ECM interprets this as a fault, and turns on the, MIL and stores the DTC.

When the ATF temperature is 110°C (230°F) or more and engine coolant temperature reaches 60°C (140°F) after cold start, the ECM also determines this as a fault, turns on the MIL, and stores the DTC.

MONITOR STRATEGY

Related DTCs	P0711: ATF temperature sensor/Rationality check
Required sensors/Components	ATF temperature sensor (TFT sensor)
Frequency of operation	Continuous
Duration	3 sec.: Condition (A), (B) Continuous.: Condition (C)
MIL operation	2 driving cycles
Sequence of operation	None

TYPICAL ENABLING CONDITIONS

All:

The monitor will run whenever this DTC is not present. (Not circuit malfunction)	P0712, P0713 (ATF temperature sensor circuit) P0115, P0117, P0118 (ECT sensor circuit) P0112, P0113 (IAT sensor circuit) P0120, P0121, P0122, P0123, P0220, P0222, P0223, P0604, P0606, P060A, P060D, P060E, P0657, P1607, P2102, P2103, P2111, P2112, P2118, P2119, P2135 (Electronic throttle system) P2610 (Soak timer circuit)

Condition (A):

Time after engine start	10 min.
Driving distance after engine start	5 km (3 mile) or more
IAT (Intake air temperature) (12 sec. after starting engine)	15°C (59°F) or more
ECT (12 sec. after starting engine)	15°C (59°F) or more
Soak time	5 hours

Condition (B):

Time after engine start	18 min. and 20 sec.
Driving distance after engine start	9 km (6 mile) or more
IAT (Intake air temperature) (12 sec. after starting engine)	-10°C (14°F) or more
ECT (12 sec. after starting engine)	-10°C (14°F) or more

Condition (C):

ECT (Current temperature)	60°C (140°F) or more
ECT (12 sec. after engine start)	Less than 35°C (95°F)

TYPICAL MALFUNCTION THRESHOLDS

Condition (A), (B):

ATF temperature sensor	Less than 20°C (68°F)

Condition (C):

ATF temperature sensor	110°C (230°F) or more

COMPONENT OPERATING RANGE

ATF temperature sensor	Atmospheric temperature to approx. 130°C (266°F)

WIRING DIAGRAM

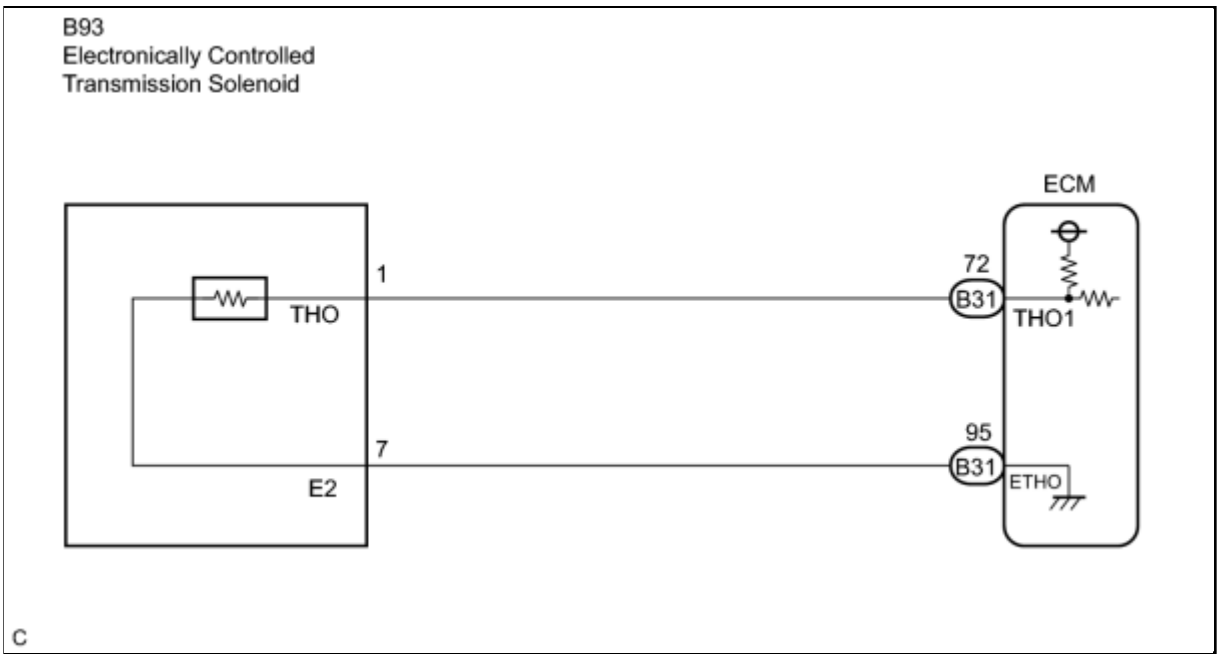

INSPECTION PROCEDURE

NOTICE:

- Perform the universal trip to clear permanent DTCs INFO .
- If DTCs P0711 and P2610 are output simultaneously, confirm that the ATF temperature is as

specified in "Normal Condition" using the Techstream first. When the ATF temperature is as specified in "Normal Condition", perform troubleshooting for DTC P2610 INFO .

- In the table below, the value listed under "Normal Condition" are reference values.

HINT:

Using Techstream to read the Data List allows the values or states of switches, sensors, actuators and other items to be read without removing any parts. This non-intrusive inspection can be very useful because intermittent conditions or signals may be discovered before parts or wiring is disturbed. Reading the Data List information early in troubleshooting is one way to save diagnostic time.

1. READ DATA LIST

(a) Warm up the engine.

(b) Turn the ignition switch off.

(c) Connect Techstream to the DLC3.

(d) Turn the ignition switch to the on position.

(e) Turn on the tester.

(f) Select the item "Powertrain / Engine and ECT / Data List".

(g) According to the display on the tester, read the "Data List".

TESTER DISPLAY	MEASUREMENT ITEM/RANGE	NORMAL CONDITION	DIAGNOSTIC NOTE
A/T Oil Temperature 1	ATF Temp. Sensor Value/min.: -40°C (-40°F), max.: 215°C (419°F)	• After Stall Test; Approx. 80°C (176°F) • Equal to ambient temperature when cold soak	If the value is "-40°C (-40°F)" or "215°C (419°F)", ATF temp. sensor circuit is opened or shorted.

HINT:

When DTC P0712 is output and Techstream output is 150°C (302°F), there is a short circuit.

When DTC P0713 is output and Techstream output is -40°C (-40°F), there is an open circuit.

Measure the resistance between terminal THO1 (THO) and body ground.

TEMPERATURE DISPLAYED	MALFUNCTION
-40°C (-40°F)	Open circuit
150°C (302°F) or more	Short circuit

HINT:

If a circuit related to the ATF temperature sensor become open, P0713 is immediately set (in 0.5 second).

When P0713 is set, P0711 cannot be detected.

It is not necessary to inspect the circuit when P0711 is set.

PROCEDURE

1.	**CHECK OTHER DTCS OUTPUT (IN ADDITION TO DTC P0711)**

(a) Connect Techstream to the DLC3.

(b) Turn the ignition switch to the on position and push the Techstream main switch ON.

(c) When you use Techstream:

Select the item "Powertrain / Engine and ECT / Trouble Codes".

(d) Read the DTCs using Techstream.

Result:

DISPLAY (DTC OUTPUT)	PROCEED TO
Only "P0711" is output	A
"P0711" and other DTCs	B

HINT:

If any other codes besides "P0711" are output, perform troubleshooting for those DTCs first.

B ▶ **GO TO DTC CHART**

A ▼

2.	**CHECK TRANSMISSION FLUID LEVEL**

OK:

Automatic transmission fluid level is correct.

NG ▶ **ADD FLUID**

OK ▶ **REPLACE TRANSMISSION WIRE (ATF TEMPERATURE SENSOR)**

Last Modified: 3-10-2010	6.4 C	**From:** 200901
Model Year: 2010	**Model:** Corolla	**Doc ID:** RM000000W850B0X
Title: U250E AUTOMATIC TRANSMISSION / TRANSAXLE: AUTOMATIC TRANSAXLE SYSTEM: P0712,P0713: Transmission Fluid Temperature Sensor "A" Circuit Low Input (2010 Corolla)		

DTC	**P0712**	**Transmission Fluid Temperature Sensor "A" Circuit Low Input**

DTC	**P0713**	**Transmission Fluid Temperature Sensor "A" Circuit High Input**

DESCRIPTION

The ATF (Automatic Transmission Fluid) temperature sensor converts the fluid temperature into a resistance value which is input into the ECM.

The ECM applies a voltage to the temperature sensor through ECM terminal THO1.

The sensor resistance changes with the transmission fluid temperature. As the temperature becomes higher, the sensor resistance decreases.

One terminal of the sensor is grounded so that the sensor resistance decreases and the voltage goes down as the temperature becomes higher.

The ECM calculates the fluid temperature based on the voltage signal.

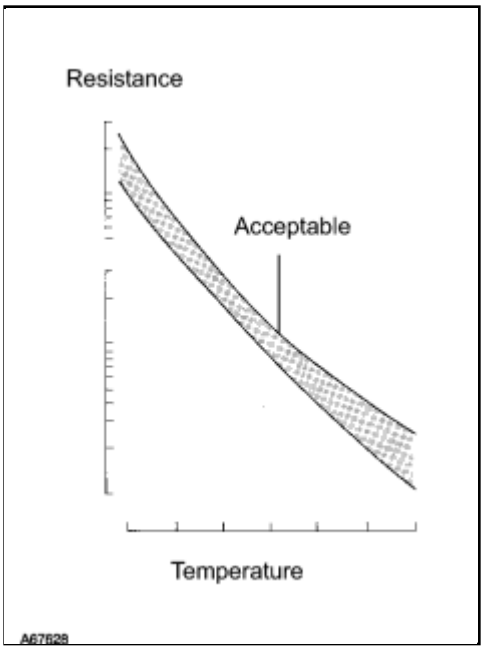

DTC NO.	DTC DETECTION CONDITION	TROUBLE AREA

DTC NO.	DTC DETECTION CONDITION	TROUBLE AREA
P0712	ATF temperature sensor resistance is less than 79 Ω for 0.5 sec. or more (1-trip detection logic)	• Short in ATF temperature sensor circuit • Transmission wire (ATF temperature sensor) • ECM
P0713	Either of the following conditions is met (1-trip detection logic) (A) 15 minutes or more after the engine is started, ATF temperature sensor resistance is more than 156 kΩ for 0.5 sec. or more. (B) The condition (A) of "TYPICAL ENABLING CONDITIONS" for DTC P0711 is met and ATF temperature sensor resistance is more than 156 kΩ for 0.5 sec. or more.	• Open in ATF temperature sensor circuit • Transmission wire (ATF temperature sensor) • ECM

MONITOR DESCRIPTION

These DTCs indicate an open or short in the automatic transmission fluid (ATF) temperature sensor (TFT sensor) circuit. The automatic transmission fluid (ATF) temperature sensor converts ATF temperature to an electrical resistance value. Based on the resistance, the ECM determines the ATF temperature, and the ECM detects an opens or shorts in the ATF temperature circuit. If the resistance value of the ATF temperature is less than 79 Ω *1or more than 156 kΩ *2, the ECM interprets this as a fault in the ATF sensor or wiring. The ECM will turn on the MIL and store the DTC.

*1: 150°C (302°F) or more is indicated regardless of the actual ATF temperature.

*2: -40°C (-40°F) is indicated regardless of the actual ATF temperature.

HINT:

The ATF temperature can be checked on the Techstream display.

MONITOR STRATEGY

Related DTCs	P0712: ATF temperature sensor/Range check (Low resistance) P0713: ATF temperature sensor/Range check (High resistance)
Required sensors/Components	ATF temperature sensor (TFT sensor)
Frequency of operation	Continuous
Duration	0.5 sec.
MIL operation	Immediate
Sequence of operation	None

TYPICAL ENABLING CONDITIONS

P0712: Range check (Low resistance)

The monitor will run whenever these DTCs are not present.	None
The typical enabling condition is not available.	-

P0713: Range check (High resistance)

One of the following conditions is met: Condition (A) or (B)

Condition (A)

The monitor will run whenever this DTC is not present.	None
Time after engine start	15 min. or more

TYPICAL MALFUNCTION THRESHOLDS

P0712: Range check (Low resistance)

TFT sensor resistance	Less than 79 Ω

P0713: Range check (High resistance)

TFT sensor resistance	More than 156 kΩ

COMPONENT OPERATING RANGE

TFT sensor.	Atmospheric temperature to approx. 130°C (266°F)

WIRING DIAGRAM

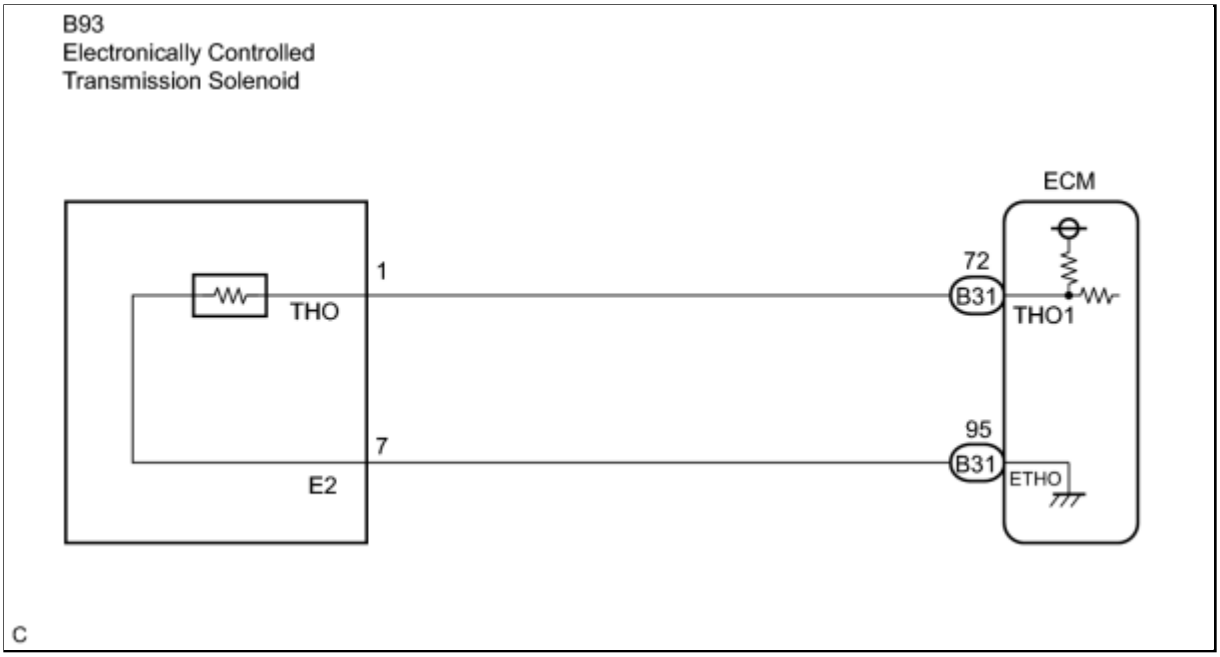

INSPECTION PROCEDURE

NOTICE:

Perform the universal trip to clear permanent DTCs INFO **.**

HINT:

Using Techstream to read the Data List allows the values or states of switches, sensors, actuators and other items to be read without removing any parts. This non-intrusive inspection can be very useful because intermittent conditions or signals may be discovered before parts or wiring is disturbed. Reading the Data List information early in troubleshooting is one way to save diagnostic time.

NOTICE:

In the table below, the values listed under "Normal Condition" are reference values. Do not depend solely on these reference values when deciding whether a part is faulty or not.

1. READ DATA LIST

(a) Warm up the engine.

(b) Turn the ignition switch off.

(c) Connect Techstream to the DLC3.

(d) Turn the ignition switch to the on position.

(e) Turn on the tester.

(f) Select the item "Powertrain / Engine and ECT / Data List".

(g) According to the display on the tester, read the "Data List".

TESTER DISPLAY	MEASUREMENT ITEM/RANGE	NORMAL CONDITION	DIAGNOSTIC NOTE
A/T Oil Temperature 1	ATF Temp. Sensor Value/min.: -40°C (-40°F), max.: 215°C	• After Stall Test; Approx. 80°C (176°F)	If the value is "-40°C (-40°F)" or "215°C (419°F)", ATF temp. sensor

TESTER DISPLAY	MEASUREMENT ITEM/RANGE	NORMAL CONDITION	DIAGNOSTIC NOTE
	(419°F)	• Equal to ambient temperature when cold soak	circuit is opened or shorted.

HINT:

When DTC P0712 is output and Techstream output is 150°C (302°F), there is a short circuit.

When DTC P0713 is output and Techstream output is -40°C (-40°F), there is an open circuit.

Measure the resistance between terminal THO1 (THO) and body ground.

TEMPERATURE DISPLAYED	MALFUNCTION
-40°C (-40°F)	Open circuit
150°C (302°F) or more	Short circuit

HINT:

If a circuit related to the ATF temperature sensor become open, P0713 is immediately set (in 0.5 second).

When P0713 is set, P0711 cannot be detected.

It is not necessary to inspect the circuit when P0711 is set.

PROCEDURE

1.	**INSPECT TRANSMISSION WIRE (ATF TEMPERATURE SENSOR)**

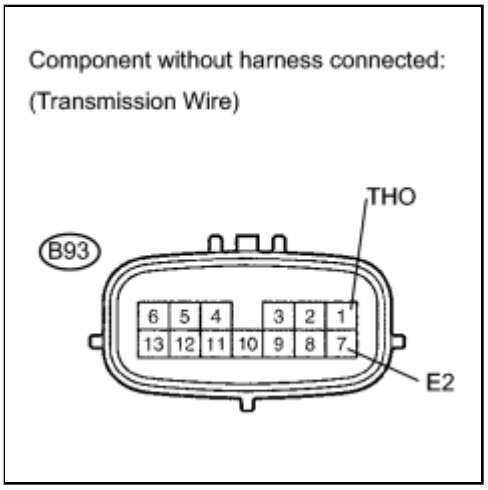

(a) Disconnect the transmission wire connector from the transaxle.

(b) Measure the resistance according to the value(s) in the table below.

Standard resistance:

TESTER CONNECTION	CONDITION	SPECIFIED CONDITION
1 (THO) - 7 (E2)	Always	79 Ω to 156 kΩ
1 (THO) - Body ground	Always	10 kΩ or higher
7 (E2) - Body ground	Always	↑

HINT:

If the resistance is out of the specified range with either the ATF temperature shown in the table below, the driveability of the vehicle may decrease.

ATF TEMPERATURE	SPECIFIED CONDITION
10 °C (50°F)	5 to 8 kΩ
25 °C (77°F)	2.5 to 4.5 kΩ
110°C (230°F)	0.22 to 0.28 kΩ

NG ▶ **REPAIR OR REPLACE TRANSMISSION WIRE**

OK ▼

2.	**CHECK HARNESS AND CONNECTOR (TRANSMISSION WIRE - ECM)**

(a) Connect the transmission wire connector to the transaxle.

(b) Disconnect the ECM connectors.

(c) Measure the resistance according to the value(s) in the table below.

Standard resistance:

TESTER CONNECTION	CONDITION	SPECIFIED CONDITION
B31-72 (THO1) - B31-95 (ETHO)	Always	79 Ω to 156 kΩ

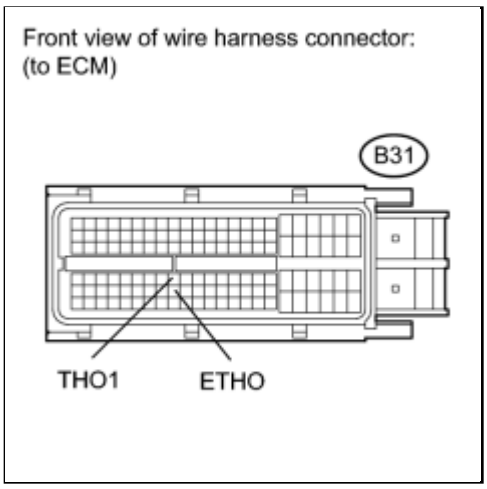

(d) Measure the resistance according to the value(s) in the table below.

Standard resistance:

TESTER CONNECTION	CONDITION	SPECIFIED CONDITION
B31-72 (THO1) - Body ground	Always	10 kΩ or higher
B31-95 (ETHO) - Body ground	Always	

NG ▶ **REPAIR OR REPLACE HARNESS OR CONNECTOR**

OK ▶ **REPLACE ECM**

Last Modified: 3-10-2010	6.4 C	**From:** 200901
Model Year: 2010	**Model:** Corolla	**Doc ID:** RM0000015VR044X
Title: U250E AUTOMATIC TRANSMISSION / TRANSAXLE: AUTOMATIC TRANSAXLE SYSTEM: P0717: Turbine Speed Sensor Circuit No Signal (2010 Corolla)		

DTC	**P0717**	**Turbine Speed Sensor Circuit No Signal**

DESCRIPTION

This sensor detects the rotation speed of the input turbine. By comparing the input turbine speed signal (NT) with the counter gear speed sensor signal (NC), the ECM detects the shift timing of the gears and appropriately controls the engine torque and hydraulic pressure according to various conditions. Thus, providing smooth gear shift.

DTC NO.	DTC DETECTION CONDITION	TROUBLE AREA
P0717	ECM detects conditions (a), (b) and (c) continuously for 5 sec. or more: (1-trip detection logic) (a) Vehicle speed: 50 km/h (31 mph) or more (b) Park/neutral position switch (NSW and R) is OFF (c) Speed sensor (NT): less than 300 rpm	• Open or short in transmission revolution sensor NT (speed sensor NT) circuit • Transmission revolution sensor NT (speed sensor NT) • ECM • Automatic transaxle assembly

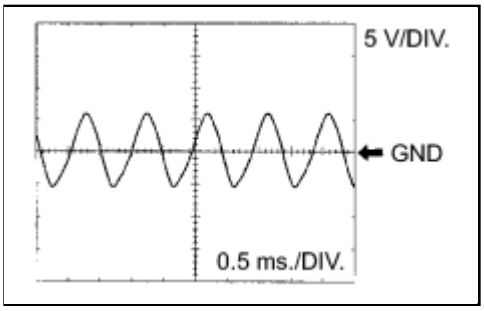

Reference (Using an oscilloscope):

Check the waveform between terminals NT+ and NT- of the ECM connector.

Standard: Refer to the illustration.

Terminal	NT+ - NT-
Tool setting	5 V/DIV., 0.5 ms./DIV.
Vehicle condition	Vehicle speed 20 km/h (12 mph)

MONITOR DESCRIPTION

The NT terminal of the ECM detects a revolution signal from the speed sensor (NT) (input RPM). The ECM calculates a gearshift comparing the speed sensor (NT) with the speed sensor (NC).

While the vehicle is operating in 2nd, 3rd, 4th or 5th gear in the shift position of D, if the input shaft revolution is less than 300 rpm *1although the output shaft revolution is more than 1,000 rpm *2, the ECM detects the trouble, illuminates the MIL and stores the DTC.

*1: Pulse is not output or is irregularly output.

*2: The vehicle speed is 50 km/h (31 mph) or more.

MONITOR STRATEGY

Related DTCs	P0717: Speed sensor (NT)/Verify pulse input
Required sensors/Components	Speed sensor (NT), Speed sensor (NC)
Frequency of operation	Continuous
Duration	5 sec.
MIL operation	Immediate
Sequence of operation	None

TYPICAL ENABLING CONDITIONS

The monitor will run whenever this DTC is not present.	P0500 (VSS) P0748, P0778, P0798 (Shift solenoid valve (range))
Shift change	Shift change is completed and before starting next shift change operation
ECM selected gear	2nd, 3rd, 4th or 5th
Output shaft rpm	1,000 rpm or more
NSW switch	OFF
R switch	OFF
Engine	Running
Battery voltage	8 V or more
Ignition switch	ON
Starter	OFF

TYPICAL MALFUNCTION THRESHOLDS

Sensor signal rpm	Less than 300 rpm

COMPONENT OPERATING RANGE

Speed sensor (NT)	Turbine speed is equal to engine speed with lock-up ON

WIRING DIAGRAM

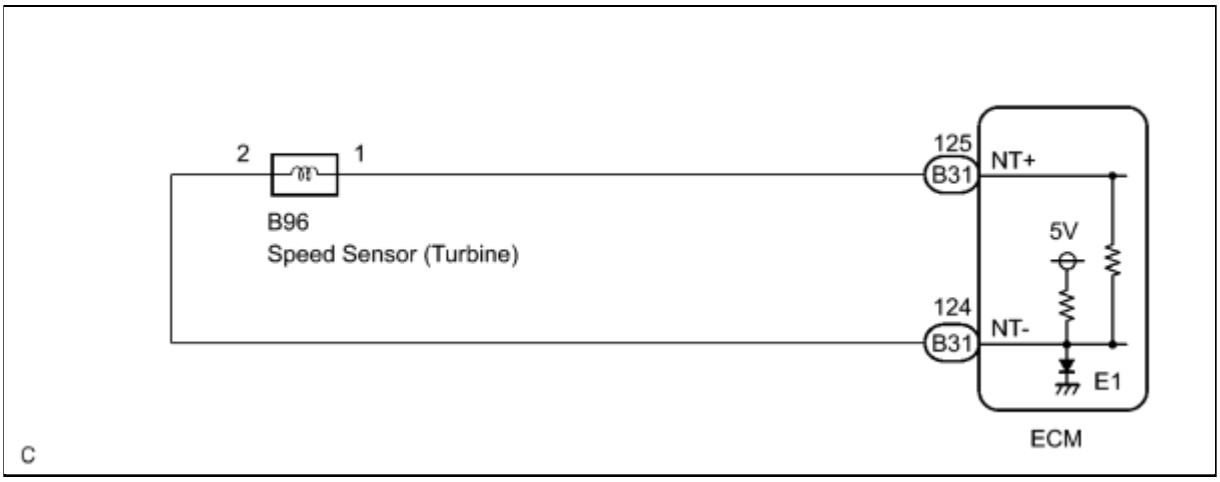

INSPECTION PROCEDURE

NOTICE:

Perform the universal trip to clear permanent DTCs INFO **.**

PROCEDURE

1.	**INSPECT SPEED SENSOR INSTALLATION**

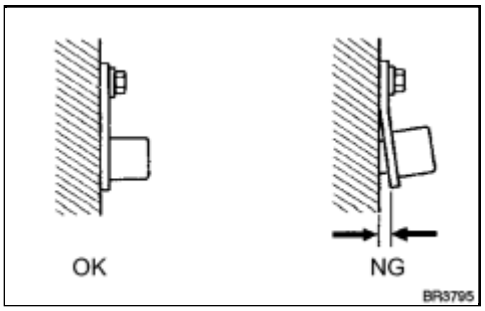

(a) Check the speed sensor installation.

OK:

The installation bolt is tightened properly and there is no clearance between the sensor and transaxle case.

NG ▶ **REPLACE SPEED SENSOR (NT)**

OK

2.	**INSPECT SPEED SENSOR (NT)**

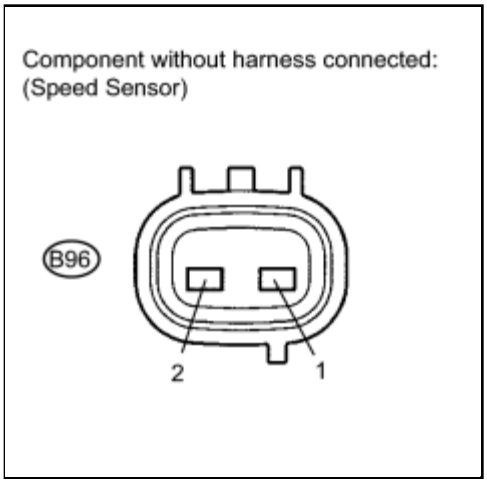

(a) Disconnect the speed sensor connector from the transaxle.

(b) Measure the resistance according to the value(s) in the table below.

Standard resistance:

TESTER CONNECTION	CONDITION	SPECIFIED CONDITION 20 °C (68 °F)
1 - 2	20°C (68°F)	560 to 680 Ω

NG ▶ **REPLACE SPEED SENSOR (NT)**

OK

3.	**CHECK HARNESS AND CONNECTOR (SPEED SENSOR - ECM)**

(a) Connect the speed sensor connector.

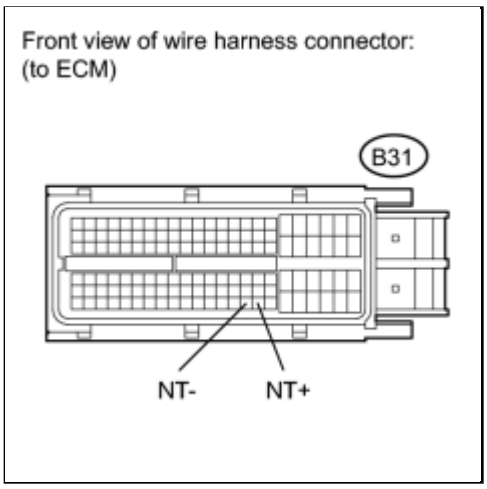

(b) Disconnect the ECM connector.

(c) Measure the resistance according to the value(s) in the table below.

Standard resistance:

TESTER CONNECTION	CONDITION	SPECIFIED CONDITION
B31-125 (NT+) - B31-124 (NT-)	20°C (68°F)	560 to 680 Ω

(d) Measure the resistance according to the value(s) in the table below.

Standard resistance (Check for short):

TESTER CONNECTION	CONDITION	SPECIFIED CONDITION
B31-125 (NT+) - Body ground	Always	10 kΩ or higher
B31-124 (NT-) - Body ground	Always	

NG ▶ **REPAIR OR REPLACE HARNESS OR CONNECTOR**

OK ▶ **REPLACE ECM**

Last Modified: 3-10-2010	6.4 C	**From:** 200901
Model Year: 2010	**Model:** Corolla	**Doc ID:** RM0000015W003HX
Title: U250E AUTOMATIC TRANSMISSION / TRANSAXLE: AUTOMATIC TRANSAXLE SYSTEM: P0724: Brake Switch "B" Circuit High (2010 Corolla)		

DTC	**P0724**	**Brake Switch "B" Circuit High**

DESCRIPTION

The purpose of this circuit is to prevent the engine from stalling while driving in lock-up condition when brakes are suddenly applied.

When the brake pedal is depressed, this switch sends a signals to the ECM. Then the ECM cancels the operation of the lock-up clutch while braking is in progress.

DTC NO.	DTC DETECTING CONDITION	TROUBLE AREA
P0724	The stop light switch remains ON even when the vehicle is driven in a STOP (less than 3 km/h (2 mph) and GO (30 km/h (19 mph) or more) fashion 5 times. (2-trip detection logic).	• Short in stop light switch circuit • Stop light switch • ECM

MONITOR DESCRIPTION

This DTC indicates that the stop light switch remains on. When the stop light switch remains ON during "stop and go" driving, the ECM interprets this as a fault in the stop light switch and the MIL comes on and the ECM stores the DTC. The vehicle must stop (less than 3 km/h (2 mph)) and go (30 km/h (19 mph) or more) 5 times for two driving cycles in order to detect a malfunction.

MONITOR STRATEGY

Related DTCs	P0724: Stop light switch/Rationality
Required sensors/Components	Stop light switch, Vehicle speed sensor
Frequency of operation	Continuous
Duration	GO and STOP 5 times
MIL operation	2 driving cycles
Sequence of operation	None

TYPICAL ENABLING CONDITIONS

The monitor will run whenever this DTC is not present.	None
Ignition switch	ON
Starter	OFF
Battery voltage	8 V or more
GO (Vehicle speed is 30 km/h (18.63 mph) or more)	Once
STOP (Vehicle speed is less than 3 km/h (1.86 mph))	Once

TYPICAL MALFUNCTION THRESHOLDS

Brake switch	Remain ON during GO and STOP 5 times

WIRING DIAGRAM

INFO

INSPECTION PROCEDURE

NOTICE:

Perform the universal trip to clear permanent DTCs INFO **.**

PROCEDURE

1.	**READ VALUE USING DATA LIST**

HINT:

Using Techstream to read the Data List allows the values or states of switches, sensors, actuators and other items to be read without removing any parts. This non-intrusive inspection can be very useful because intermittent conditions or signals may be discovered before parts or wiring is disturbed. Reading the Data List information early in troubleshooting is one way to save diagnostic time.

(a) Warm up the engine.

(b) Turn the ignition switch off.

(c) Connect Techstream to the DLC3.

(d) Turn the ignition switch to the on position.

(e) Turn on the tester.

(f) Select the item "Powertrain / Engine and ECT / Data List".

(g) According to the display on the tester, read the "Data List".

TESTER DISPLAY	MEASUREMENT ITEM/RANGE (DISPLAY)	NORMAL CONDITION	DIAGNOSTIC NOTE
Stop Light Switch	Stop light Switch Status/ ON or OFF	Brake pedal is depressed: ON Brake pedal is released: OFF	-

NOTICE:

In the table below, the value listed under "Normal Condition" are reference values. Do not depend solely on these reference values when deciding whether apart is faulty or not.

Result

RESULT	PROCEED TO
NG	A
OK	B

B ▶ **CHECK HARNESS AND CONNECTOR (STOP LIGHT SWITCH ASSEMBLY - ECM)**

A ▼

2.	**INSPECT STOP LIGHT SWITCH ASSEMBLY**

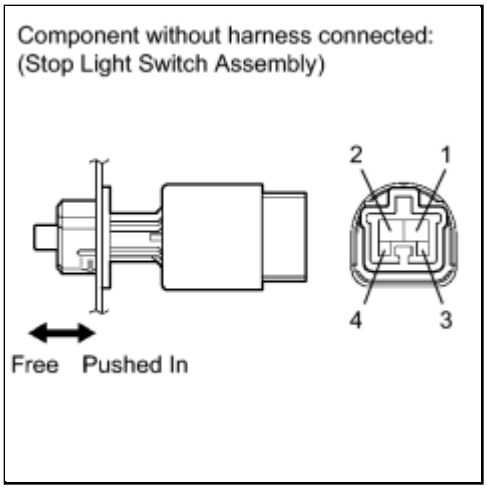

(a) Remove the stop light switch assembly.

(b) Measure the resistance according to the value(s) in the table below.

Standard resistance:

TESTER CONNECTION	SWITCH POSITION	SPECIFIED CONDITION
1 - 2	Switch pin free	Below 1 Ω
	Switch pin pushed in	10 kΩ or higher
3 - 4	Switch pin free	10 kΩ or higher
	Switch pin pushed in	Below 1 Ω

NG ▶ **REPLACE STOP LIGHT SWITCH ASSEMBLY**

OK ▼

3.	CHECK HARNESS AND CONNECTOR (STOP LIGHT SWITCH ASSEMBLY - ECM)

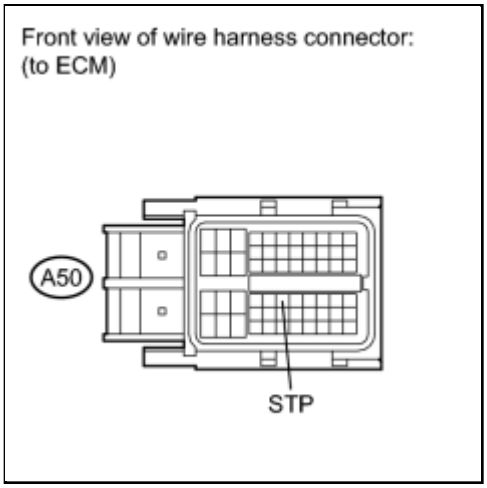

(a) Install the stop light switch assembly.

(b) Measure the voltage according to the value(s) in the table below when the brake pedal is depressed and released.

Standard voltage:

CONDITION	TESTER CONNECTION	SPECIFIED CONDITION
A50-36 (STP) - Body ground	Brake pedal is depressed	11 to 14 V
	Brake pedal is released	Below 1 V

NG ▶ **REPAIR OR REPLACE HARNESS OR CONNECTOR**

OK ▶ **REPLACE ECM**

Last Modified: 3-10-2010	6.4 C	**From:** 200901
Model Year: 2010	**Model:** Corolla	**Doc ID:** RM0000015VW01WX
Title: U250E AUTOMATIC TRANSMISSION / TRANSAXLE: AUTOMATIC TRANSAXLE SYSTEM: P0741: Torque Converter Clutch Solenoid Performance (Shift Solenoid Valve DSL) (2010 Corolla)		

DTC	**P0741**	**Torque Converter Clutch Solenoid Performance (Shift Solenoid Valve DSL)**

SYSTEM DESCRIPTION

The ECM uses the signals from the throttle position sensor, air-flow meter, turbine (input) speed sensor, intermediate (counter) shaft speed sensor and crankshaft position sensor to monitor the engagement condition of the lock-up clutch.

Then the ECM compares the engagement condition of the lock-up clutch with the lock-up schedule in the ECM memory to detect a mechanical problems of the shift solenoid valve DSL, valve body and torque converter clutch.

DTC NO.	DTC DETECTION CONDITION	TROUBLE AREA
P0741	Lock-up does not occur when driving in lock-up range Lock-up remains ON in lock-up OFF range (2-trip detection logic)	• Shift solenoid valve DSL remains open or closed • Valve body is blocked • Torque converter clutch • Automatic transaxle (clutch, brake or gear etc.) • Line pressure is too low

MONITOR DESCRIPTION

Torque converter lock-up is controlled by the ECM based on the speed sensor (NT), speed sensor (NC), engine rpm, engine load, engine temperature, vehicle speed, transmission temperature, and gear selection. The ECM determines the lock-up status of the torque converter by comparing the engine rpm (NE) to the input turbine rpm (NT). The ECM calculates the actual transmission gear by comparing input turbine rpm (NT) to counter gear rpm (NC). When conditions are appropriate, the ECM requests "lock-up" by applying control voltage to the shift solenoid DSL. When the DSL is turned on, it applies pressure to the lock-up relay valve and locks the torque converter clutch.

If the ECM detects no lock-up after lock-up has been requested or if it detects lock-up when it is not requested, the ECM interprets this as a fault in the shift solenoid valve DSL or lock-up system performance. The ECM will turn on the MIL and store the DTC.

Example:

HINT:

When any of the following is met, the system judges it as a malfunction.

- There is a difference in rotation between the input side (engine speed) and output side (input turbine speed) of the torque converter when the ECM commands lock-up.

  (Engine speed is at least 100 rpm greater than input turbine speed.)
- There is no difference in rotation between the input side (engine speed) and output side (input turbine speed) of the torque converter when the ECM commands lock-up off.

  (The difference between engine speed and input turbine speed is less than 35 rpm.)

MONITOR STRATEGY

Related DTCs	P0741: Shift solenoid valve DSL/OFF malfunction Shift solenoid valve DSL/ON malfunction
Required sensors/Components	Shift solenoid valve DSL, Speed sensor (NT), Speed sensor (NC), Crankshaft position sensor (NE), Throttle position sensor (VPA1), Mass air flow sensor (MAF), Transmission temperature sensor (THO1), Engine coolant temperature sensor (ECT)
Frequency of operation	Continuous
Duration	OFF malfunction (A) Continuous. OFF malfunction (B) 1 sec. OFF malfunction (C) 3.5 sec. ON malfunction 1.8 sec.
MIL operation	2 driving cycles
Sequence of operation	None

TYPICAL ENABLING CONDITIONS

All:

The monitor will run whenever this DTC is not present. (Not circuit malfunction)	P0712, P0713 (ATF temperature sensor circuit) P0115, P0117, P0118 (ECT sensor circuit) P0717 (Turbine speed sensor circuit) P0793 (Intermediate shaft speed sensor circuit) P0500 (Vehicle speed sensor circuit) P0748 (Shift solenoid valve SL1 circuit) P0778 (Shift solenoid valve SL2 circuit) P0798 (Shift solenoid valve SL3 circuit) P0982, P0983 (Shift solenoid valve S4 circuit) P0985, P0986 (Shift solenoid valve SR circuit) P2769, P2770 (Shift solenoid valve DSL circuit)

	P0120, P0121, P0122, P0123, P0220, P0222, P0223, P0604, P0606, P060A, P060D, P060E, P0657, P1607, P2102, P2103, P2111, P2112, P2118, P2119, P2135 (Electronic throttle system)
ECT (Engine coolant temperature)	10°C (50°F) or more
Transmission range	"D"
TFT (Transmission fluid temperature)	-20°C (-4°F) or more

OFF malfunction (A):

ECM selected gear	3rd
Throttle valve opening angle	4.5% or more at engine speed gear 1900 rpm (varies with engine speed)

OFF malfunction (B):

ECM selected gear	5th
Vehicle speed	10 km/h (6 mph) or more

OFF malfunction (C):

ECM lock-up command	ON
ECM selected gear	3rd, 4th or 5th
Vehicle speed	25 km/h (16 mph) or more

ON malfunction:

ECM lock-up command	OFF
ECM selected gear	3rd, 4th or 5th
Throttle valve opening angle	8.5% or more
Vehicle speed	3rd 25 to 60 km/h (16 to 37 mph)
	4th, 5th 25 to 120 km/h (16 to 75 mph)

TYPICAL MALFUNCTION THRESHOLDS

Either of the following conditions is met: OFF malfunction or ON malfunction

OFF malfunction:

Engine speed - Input (turbine) speed When condition "OFF" malfunction (A)" of shift solenoid "D" is detected;	75 rpm or more
Engine speed - Input (turbine) speed When condition "OFF" malfunction (A)" of shift solenoid "D" is not detected;	100 rpm or more

ON malfunction:

Difference between engine speed and input (turbine) speed	Less than 35 rpm

INSPECTION PROCEDURE

NOTICE:

Perform the universal trip to clear permanent DTCs INFO **.**

HINT:

Using Techstream to perform Active Test allows relays, VSVs, actuators and other items to be operated without removing any parts. This non-intrusive functional inspection can be very useful because intermittent operation may be discovered before parts or wiring is disturbed. Performing Active Test early in troubleshooting is one way to save diagnostic time. Data List information can be displayed while performing Active Test.

1. PERFORM ACTIVE TEST

(a) Warm up the engine.

(b) Turn the ignition switch off.

(c) Connect Techstream to the DLC3.

(d) Turn the ignition switch to the on position.

(e) Select the item "Powertrain / Engine and ECT / Active Test".

(f) According to the display on the tester, perform the "Active Test".

TESTER DISPLAY	TEST PART	CONTROL RANGE	DIAGNOSTIC NOTE
Activate the Lock Up	[Test Details] Control the shift solenoid DSL to set the automatic transaxle to the lock-up condition. [Vehicle Condition] • Throttle valve opening angle: Less than 35 % • Vehicle Speed: 60 km/h (37 mph) or more	ON/OFF	Possible to check the DSL operation.

HINT:

- This test can be conducted when the vehicle speed is 60 km/h (37 mph) or more.
- This test can be conducted in the 5th gear.

(g) Lightly depress the accelerator pedal and check that the engine speed does not change abruptly.

HINT:

- When changing the accelerator pedal opening angle while driving, if the engine speed does not change, lock-up is on.
- Slowly release, but not fully, the accelerator pedal in order to decelerate. (Fully releasing the pedal will close the throttle valve and lock-up may be turned off.)

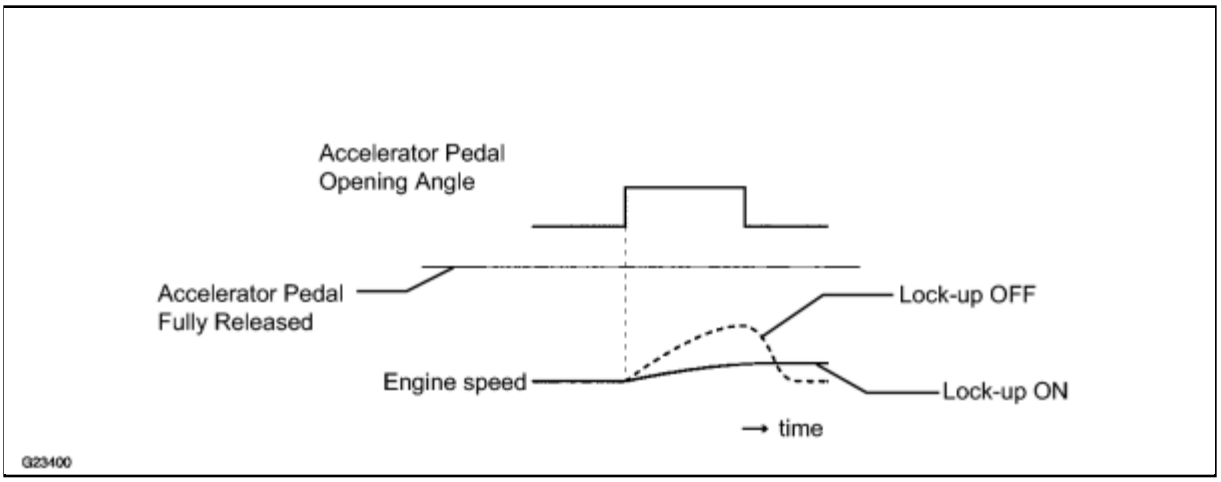

PROCEDURE

1.	**CHECK OTHER DTCS OUTPUT (IN ADDITION TO DTC P0741)**

(a) Connect Techstream to the DLC3.

(b) Turn the ignition switch to the on position and turn the Techstream main switch ON.

(c) When you use Techstream:

Select the item "Powertrain / Engine and ECT / Trouble Codes".

(d) Read the DTCs using Techstream.

Result:

DISPLAY (DTC OUTPUT)	PROCEED TO
Only "P0741" is output	A
"P0741" and other DTCs	B

HINT:

If any other codes besides "P0741" are output, perform the troubleshooting for those DTCs first.

B ▶ **GO TO DTC CHART**

A

2.	**INSPECT TRANSMISSION WIRE (DSL)**

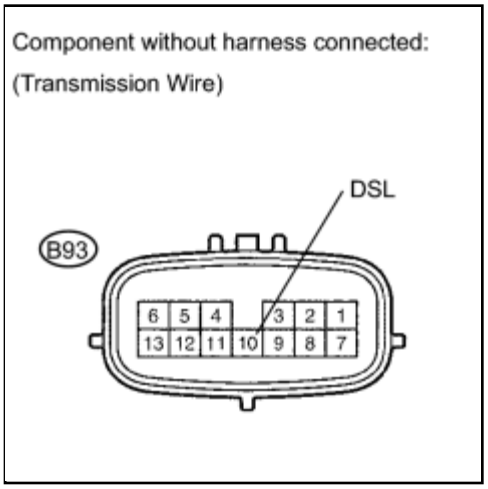

(a) Disconnect the transmission wire connector from the transaxle.

(b) Measure the resistance according to the value(s) in the table below.

Standard resistance:

TESTER CONNECTION	CONDITION	SPECIFIED CONDITION
10 - Body ground	20°C (68°F)	11 to 13 Ω

NG ▶ **INSPECT SHIFT SOLENOID VALVE DSL**

OK

3.	**CHECK HARNESS AND CONNECTOR (TRANSMISSION WIRE - ECM)**

(a) Connect the transmission wire connector.

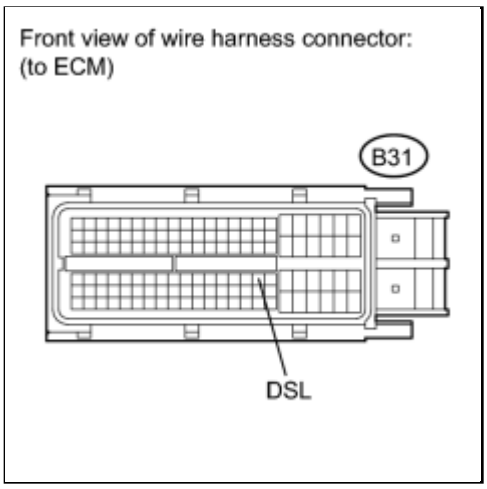

(b) Disconnect the ECM connector.

(c) Measure the resistance according to the value(s) in the table below.

Standard resistance:

TESTER CONNECTION	CONDITION	SPECIFIED CONDITION
B31-79 (DSL) - Body ground	20°C (68°F)	11 to 13 Ω

NG ▶ **REPAIR OR REPLACE HARNESS OR CONNECTOR**

OK ▼

4.	**INSPECT SHIFT SOLENOID VALVE DSL**

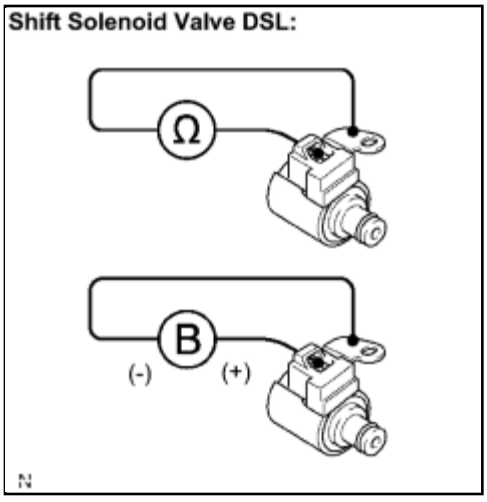

(a) Remove the shift solenoid valve DSL.

(b) Measure the resistance according to the value(s) in the table below.

Standard resistance:

TESTER CONNECTION	CONDITION	SPECIFIED CONDITION
Solenoid Connector (DSL) - Solenoid Body (DSL)	20°C (68°F)	11 to 13 Ω

(c) Connect the positive (+) lead to the terminal of the solenoid connector, and the negative (-) lead to the solenoid body.

OK:

The solenoid valve makes an operating sound.

NG ▶ **REPLACE SHIFT SOLENOID VALVE DSL**

OK ▼

5.	CHECK TRANSMISSION WIRE

OK:

The connectors and pins are securely installed.

There is no open or short on the wire harness.

NG ▶ **REPAIR OR REPLACE TRANSMISSION WIRE**

OK ▼

6.	INSPECT TRANSMISSION VALVE BODY ASSEMBLY

OK:

There are no foreign objects on each valve and they operate smoothly.

NG ▶ **REPAIR OR REPLACE TRANSMISSION VALVE BODY ASSEMBLY**

OK

7.	**INSPECT TORQUE CONVERTER CLUTCH ASSEMBLY**

OK:

The torque converter clutch operates normally.

NG ▶ **REPLACE TORQUE CONVERTER CLUTCH ASSEMBLY**

OK ▶ **REPAIR OR REPLACE AUTOMATIC TRANSAXLE ASSEMBLY**

Last Modified: 3-10-2010	6.4 C	**From:** 200901
Model Year: 2010	**Model:** Corolla	**Doc ID:** RM0000015VT02JX
Title: U250E AUTOMATIC TRANSMISSION / TRANSAXLE: AUTOMATIC TRANSAXLE SYSTEM: P0746: Pressure Control Solenoid "A" Performance (Shift Solenoid Valve SL1) (2010 Corolla)		

DTC	**P0746**	**Pressure Control Solenoid "A" Performance (Shift Solenoid Valve SL1)**

SYSTEM DESCRIPTION

The ECM uses signals from the vehicle speed sensor to detect the actual gear position (1st, 2nd, 3rd, 4th or 5th gear).

Then the ECM compares the actual gear with the shift schedule in the ECM memory to detect mechanical problems of the shift solenoid valves, valve body or automatic transaxle (clutch, brake or gear etc.).

DTC NO.	DTC DETECTING CONDITION	TROUBLE AREA
P0746	The gear required by the ECM does not match the actual gear when driving (2-trip detection logic)	• Shift solenoid valve SL1 remains open or closed • Valve body is blocked • Automatic transaxle (clutch, brake or gear etc.)

MONITOR DESCRIPTION

The ECM commands gear shifts by turning the shift solenoid valves "ON/OFF". According to the input shaft revolution, intermediate (counter) shaft revolution and output shaft revolution, the ECM detects the actual gear position (1st, 2nd, 3rd, 4th or 5th gear position). When the gear position commanded by the ECM and the actual gear position are not the same, the ECM illuminates the MIL, and store the DTC.

HINT:

Example:

When either condition (a) or (b) is met, the ECM detects a malfunction.

(a) The ECM commands the 1st gear, but the actual gear is 2nd.

(b) The ECM commands the 2nd gear, but the actual gear is 1st.

MONITOR STRATEGY

Related DTCs	P0746:

	Shift solenoid valve SL1/OFF malfunction Shift solenoid valve SL1/ON malfunction
Required sensors/Components	Shift solenoid valve SL1, Speed sensor (NT), Speed sensor (NC), Crankshaft position sensor (NE)
Frequency of operation	Continuous
Duration	0.8 sec.
MIL operation	2 driving cycles
Sequence of operation	None

TYPICAL ENABLING CONDITIONS

ALL:

The monitor will run whenever this DTC is not present. (Not circuit malfunction)	P0712, P0713 (ATF temperature sensor circuit) P0115, P0117, P0118 (ECT sensor circuit) P0717 (Turbine speed sensor circuit) P0793 (Intermediate shaft speed sensor circuit) P0500 (Vehicle speed sensor circuit) P0748 (Shift solenoid valve SL1 circuit) P0778 (Shift solenoid valve SL2 circuit) P0798 (Shift solenoid valve SL3 circuit) P0982, P0983 (Shift solenoid valve S4 circuit) P0985, P0986 (Shift solenoid valve SR circuit) P2769, P2770 (Shift solenoid valve DSL circuit) P0120, P0121, P0122, P0123, P0220, P0222, P0223, P0604, P0606, P060A, P060D, P060E, P0657, P1607, P2102, P2103, P2111, P2112, P2118, P2119, P2135 (Electronic throttle system)
ECT (Engine coolant temperature)	10°C (50°F) or more
Transmission range	"D"
TFT (Transmission fluid temperature)	-20°C (-4°F) or more

OFF malfunction:

ECM selected gear	1st
Vehicle speed	Less than 40 km/h (25 mph)
Throttle valve opening angle	4.5% or more at engine speed 1900 rpm (Varies with engine speed)

ON malfunction:

ECM selected gear	2nd
Throttle valve opening angle	4.5% or more at engine speed 1900 rpm (Varies with engine speed)

TYPICAL MALFUNCTION THRESHOLDS

Either of the following conditions is met: OFF malfunction or ON malfunction OFF malfunction:

2 detections are necessary per driving cycle:

1st detection; temporary flag ON

2nd detection; pending fault code ON

Input (turbine) speed/Intermediate shaft speed	1.49 to 1.63

ON malfunction:

Input (turbine) speed/Intermediate shaft speed	2.72 to 2.86

INSPECTION PROCEDURE

NOTICE:

Perform the universal trip to clear permanent DTCs INFO **.**

HINT:

Using Techstream to perform Active Test allows relays, VSVs, actuators and other items to be operated without removing any parts. This non-intrusive functional inspection can be very useful because intermittent operation may be discovered before parts or wiring is disturbed. Performing Active Test early in troubleshooting is one way to save diagnostic time. Data List information can be displayed while performing Active Test.

1. PERFORM ACTIVE TEST

(a) Warm up the engine.

(b) Turn the ignition switch off.

(c) Connect Techstream to the DLC3.

(d) Turn the ignition switch to the on position.

(e) Turn on the tester.

(f) Select the item "Powertrain / Engine and ECT / Active Test / Shift Status".

(g) According to the display on the tester, perform the "Active Test".

HINT:

While driving, the shift position can be forcibly changed with Techstream.

Comparing the shift position commanded by the Active Test with the actual shift position enables you to

confirm the problem INFO **.**

TESTER DISPLAY	TEST PART	CONTROL RANGE	DIAGNOSTIC NOTE
Control the Shift Position	[Test Details] Operate the shift solenoid valve and set each shift position by yourself. [Vehicle Condition] • IDL: ON • Less than 50 km/h (31 mph) [Others] • Press "→" button: Shift up • Press "←" button: Shift down	1st/2nd /3rd/4th/5th	Possible to check the operation of the shift solenoid valves.

HINT:

- This test can be conducted when the vehicle speed is 50 km/h (31 mph) or less.
- The shift position commanded by the ECM is shown in the Data List / Shift Status display on Techstream.

PROCEDURE

1.	**CHECK OTHER DTCS OUTPUT (IN ADDITION TO DTC P0746)**

(a) Connect Techstream to the DLC3.

(b) Turn the ignition switch to the on position and turn the Techstream main switch ON.

(c) When you use Techstream:

Select the item "Powertrain / Engine and ECT / Trouble Codes".

(d) Read the DTCs using Techstream.

Result:

DISPLAY (DTC OUTPUT)	PROCEED TO
Only "P0746" is output	A
"P0746" and other DTCs	B

HINT:

If any other codes besides "P0746" are output, perform the troubleshooting for those DTCs first.

B GO TO DTC CHART

A

2.	INSPECT SHIFT SOLENOID VALVE SL1

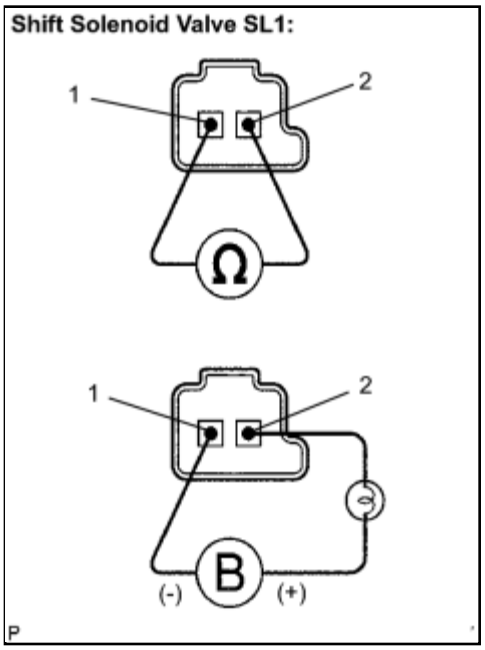

(a) Remove the shift solenoid valve SL1.

(b) Measure the resistance according to the value(s) in the table below.

Standard resistance:

TESTER CONNECTION	CONDITION	SPECIFIED CONDITION
1 - 2	20°C (68°F)	5.0 to 5.6 Ω

(c) Connect the positive (+) lead with a 21 W bulb to terminal 2 and the negative (-) lead to terminal 1 of the solenoid valve connector, then check the movement of the valve.

OK:

The solenoid makes an operating sound.

NG REPLACE SHIFT SOLENOID VALVE SL1

OK

3.	INSPECT TRANSMISSION VALVE BODY ASSEMBLY

OK:
There are no foreign objects on each valve and they operate smoothly.

NG ▶ REPAIR OR REPLACE TRANSMISSION VALVE BODY ASSEMBLY

OK ▼

4.	INSPECT TORQUE CONVERTER CLUTCH ASSEMBLY

OK:
The torque converter clutch operates normally.

NG ▶ REPLACE TORQUE CONVERTER CLUTCH ASSEMBLY

OK ▶ REPAIR OR REPLACE AUTOMATIC TRANSAXLE ASSEMBLY

Last Modified: 3-10-2010	6.4 C	**From:** 200901
Model Year: 2010	**Model:** Corolla	**Doc ID:** RM0000015W4028X
Title: U250E AUTOMATIC TRANSMISSION / TRANSAXLE: AUTOMATIC TRANSAXLE SYSTEM: P0748: Pressure Control Solenoid "A" Electrical (Shift Solenoid Valve SL1) (2010 Corolla)		

DTC	**P0748**	**Pressure Control Solenoid "A" Electrical (Shift Solenoid Valve SL1)**

DESCRIPTION

Shifting from 1st to 5th is performed in combination with "ON" and "OFF" operation of the shift solenoid valves SL1, SL2, SL3, S4 and SR which are controlled by the ECM. If an open or short circuit occurs in either of the shift solenoid valves, the ECM controls the remaining normal shift solenoid valves to allow the vehicle to be operated smoothly (Fail safe function).

DTC NO.	DTC DETECTION CONDITION	TROUBLE AREA
P0748	• The ECM checks for an open or short in the shift solenoid valve SL1 circuit while driving and shift gears. (1-trip detection logic) • Output signal duty equals to 100 %. (NOTE: SL1 output signal duty is less than 100 % under normal condition.)	• Open or short in shift solenoid valve SL1 circuit • Shift solenoid valve SL1 • ECM

MONITOR DESCRIPTION

The ECM commands gear shifts by turning the shift solenoid valves "ON/OFF". When there is an open or short circuit in any shift solenoid valve circuit, the ECM detects the problem and illuminates the MIL and stores the DTC. And the ECM performs the fail-safe function and turns the other normal shift solenoid valves "ON/OFF" (In case of an open or short circuit, the ECM stops sending current to the circuit.)

INFO .

MONITOR STRATEGY

Related DTCs	P0748: Shift solenoid valve SL1/Range check
Required sensors/Components	Shift solenoid valve SL1
Frequency of operation	Continuous
Duration	1 sec.
MIL operation	Immediate

Sequence of operation	None

TYPICAL ENABLING CONDITIONS

The monitor will run whenever this DTC is not present.	None
Solenoid current cut status	Not cut
Battery voltage	11 V or more
Ignition switch	ON
Starter	OFF
CPU commanded duty ratio to SL1	19% or more

TYPICAL MALFUNCTION THRESHOLDS

Solenoid status from IC	Fail (Open or short)

COMPONENT OPERATING RANGE

Output signal duty	Less than 100%

WIRING DIAGRAM

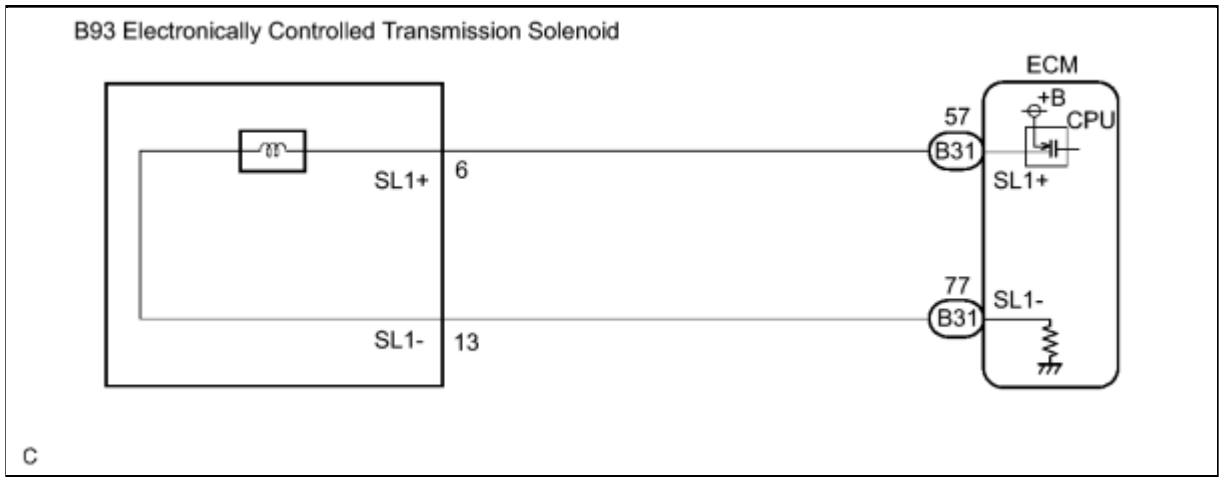

INSPECTION PROCEDURE

NOTICE:

Perform the universal trip to clear permanent DTCs INFO **.**

PROCEDURE

1.	**INSPECT TRANSMISSION WIRE (SL1)**

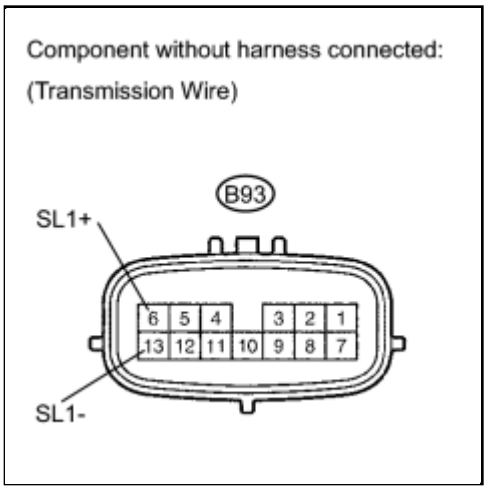

(a) Disconnect the transmission wire connector from the transaxle.

(b) Measure the resistance according to the value(s) in the table below.

Standard resistance:

TESTER CONNECTION	CONDITION	SPECIFIED CONDITION
6 (SL1+) - 13 (SL1-)	20°C (68°F)	5.0 to 5.6 Ω

(c) Measure the resistance according to the value(s) in the table below.

Standard resistance (Check for short):

TESTER CONNECTION	CONDITION	SPECIFIED CONDITION
6 (SL1+) - Body ground	Always	10 kΩ or higher
13 (SL1-) - Body ground	Always	

NG ▶ **INSPECT SHIFT SOLENOID VALVE SL1**

OK ▼

2.	**CHECK HARNESS AND CONNECTOR (TRANSMISSION WIRE - ECM)**

(a) Connect the transmission connector to the transaxle.

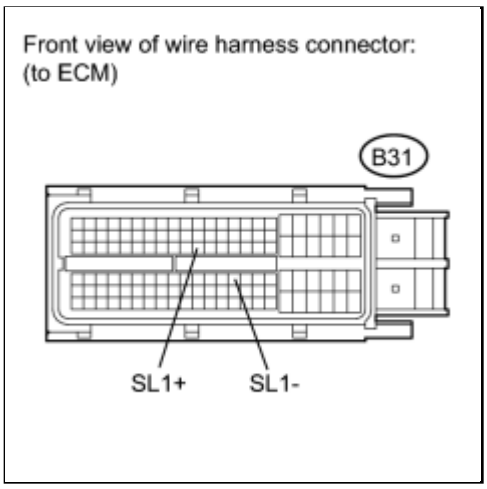

(b) Disconnect the connector from the ECM.

(c) Measure the resistance according to the value(s) in the table below.

Standard resistance:

TESTER CONNECTION	CONDITION	SPECIFIED CONDITION
B31-57 (SL1+) - B31-77 (SL1-)	20°C (68°F)	5.0 to 5.6 Ω

(d) Measure the resistance according to the value(s) in the table below.

Standard resistance (Check for short):

TESTER CONNECTION	CONDITION	SPECIFIED CONDITION
B31-57 (SL1+) - Body ground	Always	10 kΩ or higher
B31-77 (SL1-) - Body ground	Always	

NG ▶ **REPAIR OR REPLACE HARNESS OR CONNECTOR**

OK ▶ **REPLACE ECM**

3.	**INSPECT SHIFT SOLENOID VALVE SL1**

(a) Remove the shift solenoid valve SL1.

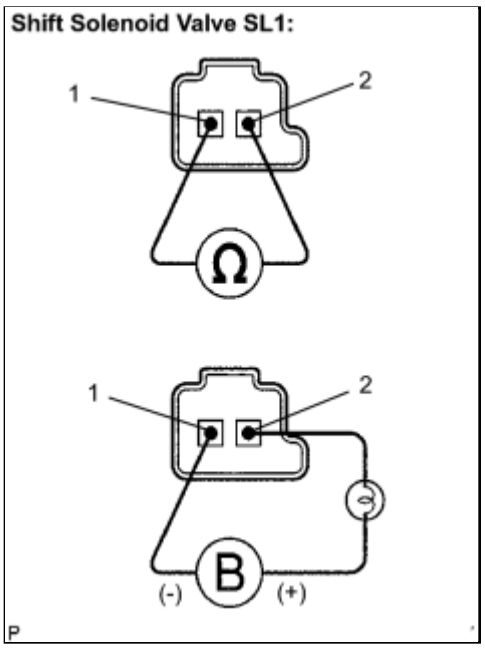

(b) Measure the resistance according to the value(s) in the table below.

Standard resistance:

TESTER CONNECTION	CONDITION	SPECIFIED CONDITION
1 - 2	20°C (68°F)	5.0 to 5.6 Ω

(c) Connect the positive (+) lead with a 21 W bulb to terminal 2 and the negative (-) lead to terminal 1 of the solenoid valve connector, then check the movement of the valve.

OK:

The solenoid makes an operating sound.

NG ▶ **REPLACE SHIFT SOLENOID VALVE SL1**

OK ▶ **REPAIR OR REPLACE TRANSMISSION WIRE**

Last Modified: 3-10-2010	6.4 C	**From:** 200901
Model Year: 2010	**Model:** Corolla	**Doc ID:** RM000000W8205HX
Title: U250E AUTOMATIC TRANSMISSION / TRANSAXLE: AUTOMATIC TRANSAXLE SYSTEM: P0766: Shift Solenoid "D" Performance (Shift Solenoid Valve S4) (2010 Corolla)		

DTC	**P0766**	**Shift Solenoid "D" Performance (Shift Solenoid Valve S4)**

SYSTEM DESCRIPTION

The ECM uses signals from the vehicle speed sensor to detect the actual gear position (1st, 2nd, 3rd, 4th or 5th gear).

Then the ECM compares the actual gear with the shift schedule in the ECM memory to detect mechanical problems of the shift solenoid valves, valve body or automatic transaxle (clutch, brake or gear etc.).

DTC NO.	DTC DETECTING CONDITION	TROUBLE AREA
P0766	The gear required by the ECM does not match the actual gear when driving (2-trip detection logic)	• Shift solenoid valve S4 remains open or closed • Valve body is blocked • Automatic transaxle (clutch, brake or gear etc.)

MONITOR DESCRIPTION

The ECM commands gear shifts by turning the shift solenoid valves "ON/OFF". According to the input shaft revolution, intermediate (counter) shaft revolution and output shaft revolution, the ECM detects the actual gear position (1st, 2nd, 3rd, 4th or 5th gear position). When the gear position commanded by the ECM and the actual gear position are not the same, the ECM illuminates the MIL and stores the DTC.

MONITOR STRATEGY

Related DTCs	P0766: Shift solenoid valve S4/OFF malfunction Shift solenoid valve S4/ON malfunction
Required sensors/Components	Shift solenoid valve S4, Speed sensor (NT), Speed sensor (NC), Crankshaft position sensor (NE)
Frequency of operation	Continuous

Duration	OFF malfunction (A) and ON malfunction (B) 1 sec. OFF malfunction (B) 1.2 sec. ON malfunction (A) 0.8 sec.
MIL operation	2 driving cycles
Sequence of operation	None

TYPICAL ENABLING CONDITIONS

All:

The monitor will run whenever this DTC is not present. (Not circuit malfunction)	P0712, P0713 (ATF temperature sensor circuit) P0115, P0117, P0118 (ECT sensor circuit) P0717 (Turbine speed sensor circuit) P0793 (Intermediate shaft speed sensor circuit) P0500 (Vehicle speed sensor circuit) P0748 (Shift solenoid valve SL1 circuit) P0778 (Shift solenoid valve SL2 circuit) P0798 (Shift solenoid valve SL3 circuit) P0982, P0983 (Shift solenoid valve S4 circuit) P0985, P0986 (Shift solenoid valve SR circuit) P2769, P2770 (Shift solenoid valve DSL circuit) P0120, P0121, P0122, P0123, P0220, P0222, P0223, P0604, P0606, P060A, P060D, P060E, P0657, P1607, P2102, P2103, P2111, P2112, P2118, P2119, P2135 (Electronic throttle system)
ECT (Engine coolant temperature)	10°C (50°F) or more
Transmission range	"D"
TFT (Transmission fluid temperature)	-20°C (-4°F) or more

OFF malfunction (A):

ECM selected gear	5th
Throttle valve opening angle	5% or more
Vehicle speed	10 km/h (6 mph) or more

OFF malfunction (B):

ECM lock-up command	ON
ECM selected gear	3rd, 4th or 5th

Throttle valve opening angle	10% or more
Vehicle speed	3rd 25 to 100 km/h (16 to 62 mph)
	4th, 5th 25 to 120 km/h (16 to 75 mph)

ON malfunction (A):

ECM selected gear	4th or 5th
Throttle valve opening angle	4.5% or more at engine speed 1,900 rpm (Varies with engine speed)

ON malfunction (B):

ECM selected gear	4th
Throttle valve opening angle	5% or more
Vehicle speed	10 km/h (6 mph) or more

TYPICAL MALFUNCTION THRESHOLDS

Either of the following conditions is met: OFF malfunction (A) and (B), or ON malfunction (A) and (B)

2 detections are necessary per driving cycle:

1st detection; temporary flag ON

2nd detection; pending fault code ON

OFF malfunction (A):

Intermediate shaft speed/Output speed	1.34 to 1.48

OFF malfunction (B):

Difference between engine speed and input (turbine) speed	Less than 35 rpm

ON malfunction (A):

Input (turbine) speed/Intermediate shaft speed	0.64 to 0.74

ON malfunction (B):

Intermediate shaft speed/Output speed	0.95 to 1.09

INSPECTION PROCEDURE

NOTICE:

Perform the universal trip to clear permanent DTCs INFO **.**

HINT:

Using Techstream to perform Active Test allows relays, VSVs, actuators and other items to be operated without removing any parts. This non-intrusive functional inspection can be very useful because intermittent operation may be discovered before parts or wiring is disturbed. Performing Active Test early in troubleshooting is one way to save diagnostic time. Data List information can be displayed while performing Active Test.

1. PERFORM ACTIVE TEST

(a) Warm up the engine.

(b) Turn the ignition switch off.

(c) Connect Techstream to the DLC3.

(d) Turn the ignition switch to the on position.

(e) Turn on the tester.

(f) Select the item "Powertrain / Engine and ECT / Active Test / Shift Status".

(g) According to the display on the tester, perform the "Active Test".

HINT:

While driving, the shift position can be forcibly changed with Techstream.

Comparing the shift position commanded by the Active Test with the actual shift position enables you to confirm the problem INFO **.**

TESTER DISPLAY	TEST PART	CONTROL RANGE	DIAGNOSTIC NOTE
Control the Shift Position	[Test Details] Operate the shift solenoid valve and set each shift position by yourself. [Vehicle Condition] • IDL: ON • Less than 50 km/h (31 mph) [Others] • Press "→" button: Shift up • Press "←" button: Shift down	1st/2nd /3rd/4th/5th	Possible to check the operation of the shift solenoid valves.

HINT:

- This test can be conducted when the vehicle speed is 50 km/h (31 mph) or less.
- The shift position commanded by the ECM is shown in the Data List / Shift Status display on Techstream.

PROCEDURE

1.	**CHECK OTHER DTCS OUTPUT (IN ADDITION TO DTC P0766)**

(a) Connect Techstream to the DLC3.

(b) Turn the ignition switch to the on position and turn the Techstream main switch ON.

(c) When you use Techstream:

Select the item "Powertrain / Engine and ECT / Trouble Codes".

(d) Read the DTCs using Techstream.

Result:

DISPLAY (DTC OUTPUT)	PROCEED TO
Only "P0766" is output	A
"P0766" and other DTCs	B

HINT:

If any other codes besides "P0766" are output, perform the troubleshooting for those DTCs first.

B ▶ **GO TO DTC CHART**

A ▼

2.	**INSPECT SHIFT SOLENOID VALVE S4**

(a) Remove the shift solenoid valve S4.

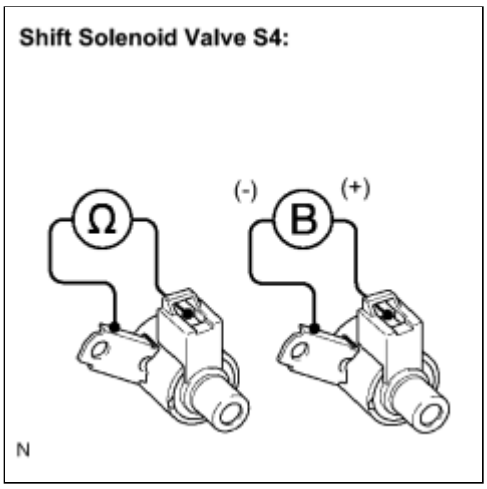

(b) Measure the resistance according to the value(s) in the table below.

Standard resistance:

TESTER CONNECTION	CONDITION	SPECIFIED CONDITION
Solenoid Connector (S4) - Solenoid Body (S4)	20°C (68°F)	11 to 15 Ω

(c) Connect the positive (+) lead to the terminal of the solenoid connector, and the negative (-) lead to the solenoid body.

OK:

The solenoid makes an operating sound.

NG ▶ **REPLACE SHIFT SOLENOID VALVE S4**

OK ▼

3.	INSPECT TRANSMISSION VALVE BODY ASSEMBLY

OK:

There are no foreign objects on each valve and they operate smoothly.

NG ▶ **REPAIR OR REPLACE TRANSMISSION VALVE BODY ASSEMBLY**

OK ▼

4.	**INSPECT TORQUE CONVERTER CLUTCH ASSEMBLY**

OK:

The torque converter clutch operates normally.

NG ▶ **REPLACE TORQUE CONVERTER CLUTCH ASSEMBLY**

OK ▶ **REPAIR OR REPLACE AUTOMATIC TRANSAXLE ASSEMBLY**

Last Modified: 3-10-2010	6.4 C	**From:** 200901
Model Year: 2010	**Model:** Corolla	**Doc ID:** RM0000015VX01ZX
Title: U250E AUTOMATIC TRANSMISSION / TRANSAXLE: AUTOMATIC TRANSAXLE SYSTEM: P0771: Shift Solenoid "E" Performance (Shift Solenoid Valve SR) (2010 Corolla)		

DTC	**P0771**	**Shift Solenoid "E" Performance (Shift Solenoid Valve SR)**

SYSTEM DESCRIPTION

The ECM uses signals from the vehicle speed sensor to detect the actual gear position (1st, 2nd, 3rd, 4th or 5th gear).

Then the ECM compares the actual gear with the shift schedule in the ECM memory to detect mechanical problems of the shift solenoid valves, valve body or automatic transaxle (clutch, brake or gear etc.).

DTC NO.	DTC DETECTING CONDITION	TROUBLE AREA
P0771	The gear required by the ECM does not match the actual gear when driving (2-trip detection logic)	• Shift solenoid valve SR remains open or closed • Valve body is blocked • Automatic transaxle (clutch, brake or gear etc.)

MONITOR DESCRIPTION

The ECM commands gear shifts by turning the shift solenoid valves "ON/OFF". According to the input shaft revolution, intermediate (counter) shaft revolution and output shaft revolution, the ECM detects the actual gear position (1st, 2nd, 3rd, 4th or 5th gear position). When the gear position commanded by the ECM and the actual gear position are not the same, the ECM illuminates the MIL and stores the DTC.

MONITOR STRATEGY

Related DTCs	P0771: Shift solenoid valve SR/OFF malfunction Shift solenoid valve SR/ON malfunction
Required sensors/Components	Shift solenoid valve SR, Speed sensor (NT), Speed sensor (NC), Crankshaft position sensor (NE)
Frequency of operation	Continuous

Duration	OFF malfunction (A) 1 sec. OFF malfunction (B) 3.5 sec. ON malfunction (A) Continuous ON malfunction (B) and (C) 0.8 sec.
MIL operation	2 driving cycles
Sequence of operation	None

TYPICAL ENABLING CONDITIONS

All:

The monitor will run whenever this DTC is not present. (Not circuit malfunction)	P0712, P0713 (ATF temperature sensor circuit) P0115, P0117, P0118 (ECT sensor circuit) P0717 (Turbine speed sensor circuit) P0793 (Intermediate shaft speed sensor circuit) P0500 (Vehicle speed sensor circuit) P0748 (Shift solenoid valve SL1 circuit) P0778 (Shift solenoid valve SL2 circuit) P0798 (Shift solenoid valve SL3 circuit) P0982, P0983 (Shift solenoid valve S4 circuit) P0985, P0986 (Shift solenoid valve SR circuit) P2769, P2770 (Shift solenoid valve DSL circuit) P0120, P0121, P0122, P0123, P0220, P0222, P0223, P0604, P0606, P060A, P060D, P060E, P0657, P1607, P2102, P2103, P2111, P2112, P2118, P2119, P2135 (Electronic throttle system)
ECT (Engine coolant temperature)	10°C (50°F) or more
Transmission range	"D"
TFT (Transmission fluid temperature)	-20°C (-4°F) or more

OFF malfunction (A):

ECM selected gear	5th
Throttle valve opening angle	5% or more
Vehicle speed	10 km/h (6 mph) or more

OFF malfunction (B):

ECM lock-up command	ON
ECM selected gear	3rd, 4th or 5th
Vehicle speed	25 km/h (16 mph) or more

ON malfunction (A):

ECM lock-up command	OFF

ON malfunction (B):

ECM selected gear	1st
Vehicle speed	Less than 40 km/h (25 mph)
Throttle valve opening angle	4.5% or more at engine speed 1900 rpm (Varies with engine speed)

ON malfunction (C):

ECM selected gear	3rd
Throttle valve opening angle	4.5% or more at engine speed 1900 rpm (Varies with engine speed)

ON malfunction (D):

Duration time from shift command of ECM	15 sec. or more
ECM selected gear	4th or 5th

TYPICAL MALFUNCTION THRESHOLDS

Either of the following conditions is met: OFF malfunction (A) and (B), or ON malfunction (A), (B), (C) and (D)

OFF malfunction (A):

Intermediate shaft speed/Output speed	1.34 to 1.48

OFF malfunction (B):

Engine speed - Input (turbine) speed When condition "OFF" malfunction (A)" of shift solenoid "D" is detected;	75 rpm or more
Engine speed - Input (turbine) speed When condition "OFF" malfunction (A)" of shift solenoid "D" is not detected;	100 rpm or more

ON malfunction (A):

Difference between engine speed and input (turbine) speed	150 rpm or more

ON malfunction (B):

Input (turbine) speed/Intermediate shaft speed	0.93 to 1.07

ON malfunction (C):

Input (turbine) speed/Intermediate shaft speed	0.93 to 1.07

ON malfunction (D):

Input (turbine) speed/Intermediate shaft speed	0.64 to 0.74

INSPECTION PROCEDURE

NOTICE:

Perform the universal trip to clear permanent DTCs INFO **.**

HINT:

Using Techstream to perform Active Test allows relays, VSVs, actuators and other items to be operated without removing any parts. This non-intrusive functional inspection can be very useful because intermittent operation may be discovered before parts or wiring is disturbed. Performing Active Test early in troubleshooting is one way to save diagnostic time. Data List information can be displayed while performing Active Test.

1. PERFORM ACTIVE TEST

(a) Warm up the engine.

(b) Turn the ignition switch off.

(c) Connect Techstream to the DLC3.

(d) Turn the ignition switch to the on position.

(e) Turn on the tester.

(f) Select the item "Powertrain / Engine and ECT / Active Test / Shift Status".

(g) According to the display on the tester, perform the "Active Test".

HINT:

While driving, the shift position can be forcibly changed with Techstream.

Comparing the shift position commanded by the Active Test with the actual shift position enables you to confirm the problem INFO **.**

TESTER DISPLAY	TEST PART	CONTROL RANGE	DIAGNOSTIC NOTE

TESTER DISPLAY	TEST PART	CONTROL RANGE	DIAGNOSTIC NOTE
Control the Shift Position	[Test Details] Operate the shift solenoid valve and set each shift position by yourself. [Vehicle Condition] • IDL: ON • Less than 50 km/h (31 mph) [Others] • Press "→" button: Shift up • Press "←" button: Shift down	1st/2nd /3rd/4th/5th	Possible to check the operation of the shift solenoid valves.

HINT:

- This test can be conducted when the vehicle speed is 50 km/h (31 mph) or less.
- The shift position commanded by the ECM is shown in the Data List / Shift Status display on Techstream.

PROCEDURE

1.	**CHECK OTHER DTCS OUTPUT (IN ADDITION TO DTC P0771)**

(a) Connect Techstream to the DLC3.

(b) Turn the ignition switch to the on position and turn the Techstream main switch ON.

(c) When you use Techstream:

Select the item "Powertrain / Engine and ECT / Trouble Codes".

(d) Read the DTCs using Techstream.

Result:

DISPLAY (DTC OUTPUT)	PROCEED TO
Only "P0771" is output	A
"P0771" and other DTCs	B

HINT:

If any other codes besides "P0771" are output, perform the troubleshooting for those DTCs first.

B **GO TO DTC CHART**

A

2.	**INSPECT SHIFT SOLENOID VALVE SR**

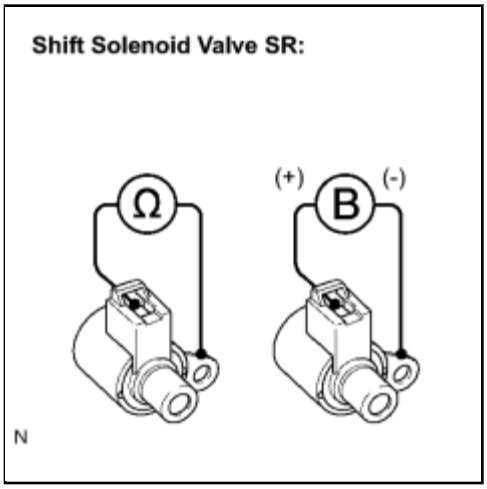

(a) Remove the shift solenoid valve SR.

(b) Measure the resistance according to the value(s) in the table below.

Standard resistance:

TESTER CONNECTION	CONDITION	SPECIFIED CONDITION
Solenoid Connector (SR) - Solenoid Body (SR)	20°C (68°F)	11 to 15 Ω

(c) Connect positive (+) lead to the terminal of solenoid connector, negative (-) lead to the solenoid body.

OK:

The solenoid makes an operating sound.

NG ▶ **REPLACE SHIFT SOLENOID VALVE SR**

OK

3.	**INSPECT TRANSMISSION VALVE BODY ASSEMBLY**

OK:

There are no foreign objects on each valve and they operate smoothly.

NG ▶ **REPAIR OR REPLACE TRANSMISSION VALVE BODY ASSEMBLY**

OK ▼

4.	**INSPECT TORQUE CONVERTER CLUTCH ASSEMBLY**

OK:
The torque converter clutch operates normally.

NG ▶ **REPLACE TORQUE CONVERTER CLUTCH ASSEMBLY**

OK ▶ **REPAIR OR REPLACE AUTOMATIC TRANSAXLE ASSEMBLY**

Last Modified: 3-10-2010	6.4 C	**From:** 200901
Model Year: 2010	**Model:** Corolla	**Doc ID:** RM0000015VU02JX
Title: U250E AUTOMATIC TRANSMISSION / TRANSAXLE: AUTOMATIC TRANSAXLE SYSTEM: P0776: Pressure Control Solenoid "B" Performance (Shift Solenoid Valve SL2) (2010 Corolla)		

DTC	**P0776**	**Pressure Control Solenoid "B" Performance (Shift Solenoid Valve SL2)**

SYSTEM DESCRIPTION

The ECM uses signals from the vehicle speed sensor to detect the actual gear position (1st, 2nd, 3rd, 4th or 5th gear).

Then the ECM compares the actual gear with the shift schedule in the ECM memory to detect mechanical problems of the shift solenoid valves, valve body or automatic transaxle (clutch, brake or gear etc.).

DTC NO.	DTC DETECTING CONDITION	TROUBLE AREA
P0776	The gear required by the ECM does not match the actual gear when driving (2-trip detection logic)	• Shift solenoid valve SL2 remains open or closed • Valve body is blocked • Automatic transaxle (clutch, brake or gear etc.)

MONITOR DESCRIPTION

The ECM commands gear shifts by turning the shift solenoid valves "ON/OFF". According to the input shaft revolution, intermediate (counter) shaft revolution and output shaft revolution, the ECM detects the actual gear position (1st, 2nd, 3rd, 4th or 5th gear position). When the gear position commanded by the ECM and the actual gear position are not the same, the ECM illuminates the MIL and stores the DTC.

MONITOR STRATEGY

Related DTCs	P0776: Shift solenoid valve SL2/OFF malfunction Shift solenoid valve SL2/ON malfunction
Required sensors/Components	Shift solenoid valve SL2, Speed sensor (NT), Speed sensor (NC), Crankshaft position sensor (NE)
Frequency of operation	Continuous

Duration	OFF malfunction (A) 1.8 sec. OFF malfunction (B) and (C) 0.8 sec. ON malfunction (A) and (B) 0.8 sec. ON malfunction (C) 0.4 sec.
MIL operation	2 driving cycles
Sequence of operation	None

TYPICAL ENABLING CONDITIONS

All:

The monitor will run whenever this DTC is not present. (Not circuit malfunction)	P0712, P0713 (ATF temperature sensor circuit) P0115, P0117, P0118 (ECT sensor circuit) P0717 (Turbine speed sensor circuit) P0793 (Intermediate shaft speed sensor circuit) P0500 (Vehicle speed sensor circuit) P0748 (Shift solenoid valve SL1 circuit) P0778 (Shift solenoid valve SL2 circuit) P0798 (Shift solenoid valve SL3 circuit) P0982, P0983 (Shift solenoid valve S4 circuit) P0985, P0986 (Shift solenoid valve SR circuit) P2769, P2770 (Shift solenoid valve DSL circuit) P0120, P0121, P0122, P0123, P0220, P0222, P0223, P0604, P0606, P060A, P060D, P060E, P0657, P1607, P2102, P2103, P2111, P2112, P2118, P2119, P2135 (Electronic throttle system)
ECT (Engine coolant temperature)	10°C (50°F) or more
Transmission range	"D"
TFT (Transmission fluid temperature)	-20°C (-4°F) or more

OFF malfunction (A):

ECM lock-up command	OFF
Vehicle speed	3rd Less than 60 km/h (37 mph)
	4th, 5th Less than 120 km/h (75 mph)
Throttle valve opening angle	8.5% or more

OFF malfunction (B):

ECM selected gear	1st
Vehicle speed	Less than 40 km/h (25 mph)
Throttle valve opening angle	4.5% or more at engine speed 1900 rpm (Varies with engine speed)

OFF malfunction (C):

ECM selected gear	3rd
Throttle valve opening angle	4.5% or more at engine speed 1900 rpm (Varies with engine speed)

OFF malfunction (D):

Duration time from shift command of ECM	15 sec. or more
ECM selected gear	4th or 5th

ON malfunction (A):

ECM selected gear	1st
Vehicle speed	Less than 40 km/h (25 mph)
Throttle valve opening angle	4.5% or more at engine speed 1900 rpm (Varies with engine speed)

ON malfunction (B):

ECM selected gear	3rd
Throttle valve opening angle	7% or more at output speed 1400 rpm (Varies with engine speed)
Malfunction of pressure control solenoid "B" (SL2) and "C" (SL3)	Not detected

ON malfunction (C):

Throttle valve opening angle	7.0% or more at output speed 1050 rpm (Varies with engine speed)
Malfunction of pressure control solenoid "B" (SL2)	Not detected

TYPICAL MALFUNCTION THRESHOLDS

Either of the following conditions is met: OFF malfunction (A),

(B), (C) and (D), or ON malfunction (A), (B) and (C)

OFF malfunction (A):

Difference between engine speed and input (turbine) speed	Less than 35 rpm

OFF malfunction (B) and (C):

Input (turbine) speed/Intermediate shaft speed	0.93 to 1.07

OFF malfunction (D):

Input (turbine) speed/Intermediate shaft speed	0.64 to 0.74

ON malfunction (A):

Input (turbine) speed/Intermediate shaft speed	2.72 to 2.86

ON malfunction (B):

Input (turbine) speed - Intermediate shaft speed	700 rpm or more

ON malfunction (C):

Input (turbine) speed - Intermediate shaft speed	Less than -500 rpm or 700 rpm or more

INSPECTION PROCEDURE

NOTICE:

Perform the universal trip to clear permanent DTCs INFO **.**

HINT:

Using Techstream to perform Active Test allows relays, VSVs, actuators and other items to be operated without removing any parts. This non-intrusive functional inspection can be very useful because intermittent operation may be discovered before parts or wiring is disturbed. Performing Active Test early in troubleshooting is one way to save diagnostic time. Data List information can be displayed while performing Active Test.

1. PERFORM ACTIVE TEST

(a) Warm up the engine.

(b) Turn the ignition switch off.

(c) Connect Techstream to the DLC3.

(d) Turn the ignition switch to the on position.

(e) Turn on the tester.

(f) Select the item "Powertrain / Engine and ECT / Active Test / Shift Status".

(g) According to the display on the tester, perform the "Active Test".

HINT:

While driving, the shift position can be forcibly changed with Techstream.

Comparing the shift position commanded by the Active Test with the actual shift position enables you to confirm the problem INFO **.**

TESTER DISPLAY	TEST PART	CONTROL RANGE	DIAGNOSTIC NOTE
Control the Shift Position	[Test Details] Operate the shift solenoid valve and set each shift position by yourself. [Vehicle Condition] • IDL: ON • Less than 50 km/h (31 mph) [Others] • Press "→" button: Shift up • Press "←" button: Shift down	1st/2nd /3rd/4th/5th	Possible to check the operation of the shift solenoid valves.

HINT:

- This test can be conducted when the vehicle speed is 50 km/h (31 mph) or less.
- The shift position commanded by the ECM is shown in the Data List / Shift Status display on Techstream.

PROCEDURE

1.	**CHECK OTHER DTCS OUTPUT (IN ADDITION TO DTC P0776)**

(a) Connect Techstream to the DLC3.

(b) Turn the ignition switch to the on position and turn the Techstream main switch ON.

(c) When you use Techstream:

Select the item "Powertrain / Engine and ECT / Trouble Codes".

(d) Read the DTCs using Techstream.

Result:

DISPLAY (DTC OUTPUT)	PROCEED TO
Only "P0776" is output	A
"P0776" and other DTCs	B

HINT:

If any other codes besides "P0776" are output, perform the troubleshooting for those DTCs first.

B ▶ **GO TO DTC CHART**

A ▼

2.	**INSPECT SHIFT SOLENOID VALVE SL2**

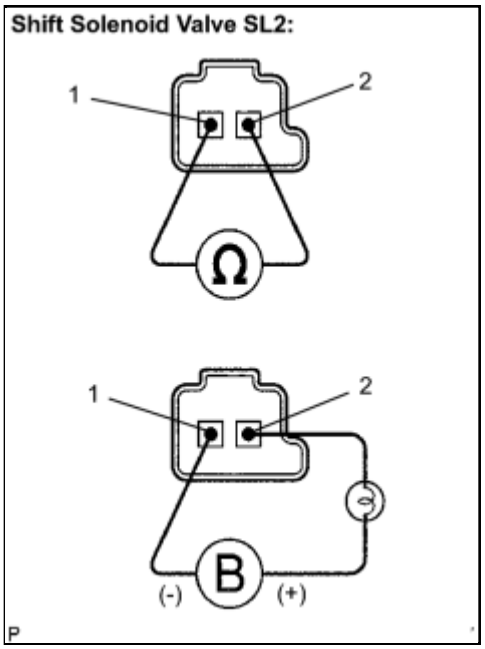

(a) Remove the shift solenoid valve SL2.

(b) Measure the resistance according to the value(s) in the table below.

Standard resistance:

TESTER CONNECTION	CONDITION	SPECIFIED CONDITION
1 - 2	20°C (68°F)	5.0 to 5.6 Ω

(c) Connect the positive (+) lead with a 21 W bulb to terminal 2 and the negative (-) lead to

terminal 1 of the solenoid valve connector, then check the movement of the valve.

OK:

The solenoid makes an operating sound.

NG ▶ REPLACE SHIFT SOLENOID VALVE SL2

OK ▼

3.	INSPECT TRANSMISSION VALVE BODY ASSEMBLY

OK:

There are no foreign objects on each valve and they operate smoothly.

NG ▶ REPAIR OR REPLACE TRANSMISSION VALVE BODY ASSEMBLY

OK ▼

4.	INSPECT TORQUE CONVERTER CLUTCH ASSEMBLY

OK:

The torque converter clutch operates normally.

NG ▶ REPLACE TORQUE CONVERTER CLUTCH ASSEMBLY

OK ▶ REPAIR OR REPLACE AUTOMATIC TRANSAXLE ASSEMBLY

Last Modified: 3-10-2010	6.4 C	**From:** 200901
Model Year: 2010	**Model:** Corolla	**Doc ID:** RM0000015W5028X
Title: U250E AUTOMATIC TRANSMISSION / TRANSAXLE: AUTOMATIC TRANSAXLE SYSTEM: P0778: Pressure Control Solenoid "B" Electrical (Shift Solenoid Valve SL2) (2010 Corolla)		

DTC	**P0778**	**Pressure Control Solenoid "B" Electrical (Shift Solenoid Valve SL2)**

DESCRIPTION

Shifting from 1st to 5th is performed in combination with "ON" and "OFF" operation of the shift solenoid valves SL1, SL2, SL3, S4 and SR which are controlled by the ECM. If an open or short circuit occurs in either of the shift solenoid valves, the ECM controls the remaining normal shift solenoid valves to allow the vehicle to be operated smoothly (Fail safe function).

DTC NO.	DTC DETECTION CONDITION	TROUBLE AREA
P0778	ECM checks for an open or short circuit in shift solenoid valves SL2 (1-trip detection logic) Hybrid IC for solenoid indicates fail.	• Open or short in shift solenoid valve SL2 circuit • Shift solenoid valve SL2 • ECM

MONITOR DESCRIPTION

The ECM commands gear shifts by turning the shift solenoid valves "ON/OFF". When there is an open or short circuit in any shift solenoid valve circuit, the ECM detects the problem and illuminates the MIL and stores the DTC. And the ECM performs the fail-safe function and turns the other normal shift solenoid valves "ON/OFF" (In case of an open or short circuit, the ECM stops sending current to the circuit.)

INFO .

MONITOR STRATEGY

Related DTCs	P0778: Shift solenoid valve SL2/Range check
Required sensors/Components	Shift solenoid valve SL2
Frequency of operation	Continuous
Duration	1 sec.
MIL operation	Immediate
Sequence of operation	None

TYPICAL ENABLING CONDITIONS

The monitor will run whenever this DTC is not present.	None
Solenoid current cut status	Not cut
Battery voltage	11 V or more
Ignition switch	ON
Starter	OFF
CPU commanded duty ratio to SL2	19% or more

TYPICAL MALFUNCTION THRESHOLDS

Solenoid status from IC	Fail (Open or short)

COMPONENT OPERATING RANGE

Output signal duty	Less than 100%

WIRING DIAGRAM

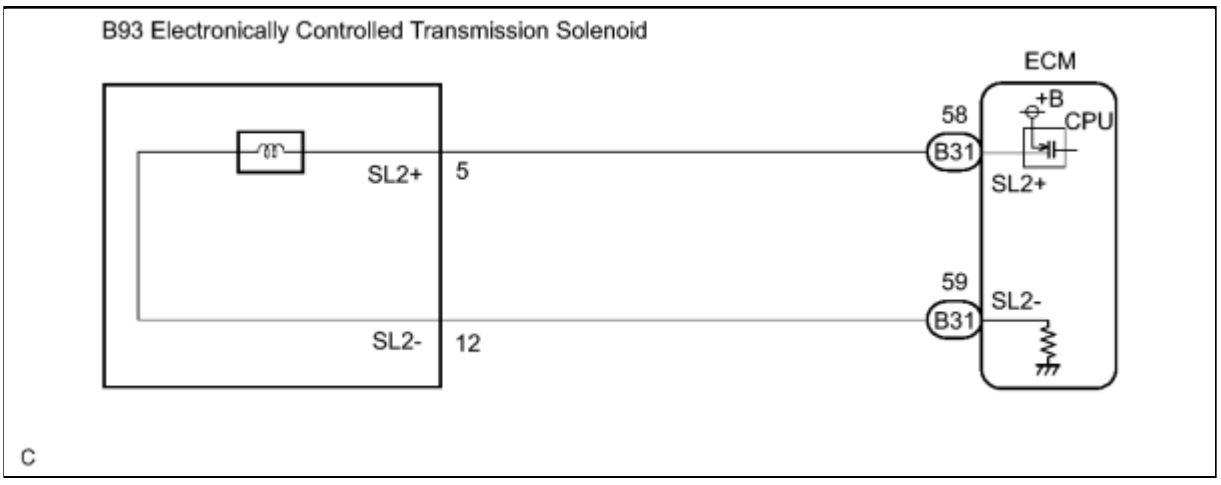

INSPECTION PROCEDURE

NOTICE:

Perform the universal trip to clear permanent DTCs INFO **.**

PROCEDURE

1.	**INSPECT TRANSMISSION WIRE (SL2)**

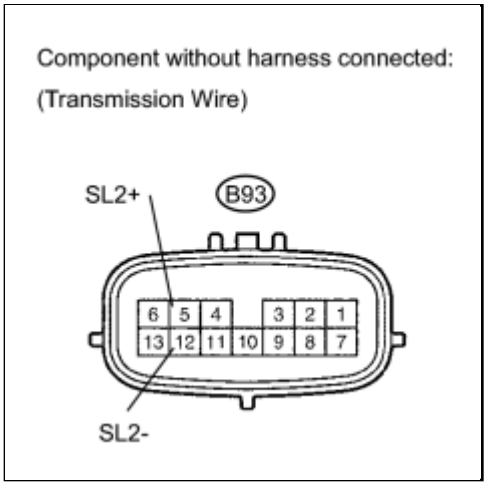

(a) Disconnect the transmission wire connector from the transaxle.

(b) Measure the resistance according to the value(s) in the table below.

Standard resistance:

TESTER CONNECTION	CONDITION	SPECIFIED CONDITION
5 (SL2+) - 12 (SL2-)	20°C (68°F)	5.0 to 5.6 Ω

(c) Measure the resistance according to the value(s) in the table below.

Standard resistance (Check for short):

TESTER CONNECTION	CONDITION	SPECIFIED CONDITION
5 (SL2+) - Body ground	Always	10 kΩ or higher
12 (SL2-) - Body ground	Always	

NG ▶ **INSPECT SHIFT SOLENOID VALVE SL2**

OK ▼

2.	**CHECK HARNESS AND CONNECTOR (TRANSMISSION WIRE - ECM)**

(a) Connect the transmission connector to the transaxle.

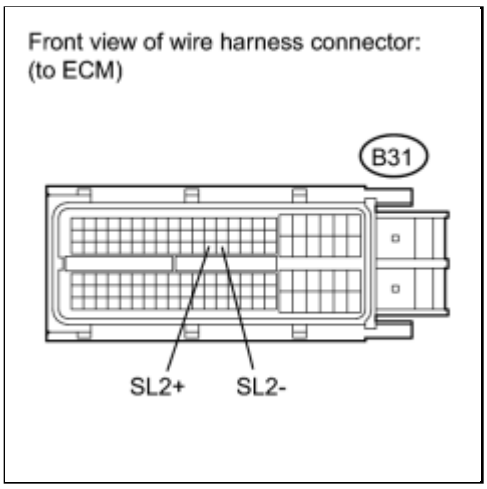

(b) Disconnect the connector from the ECM.

(c) Measure the resistance according to the value(s) in the table below.

Standard resistance:

TESTER CONNECTION	CONDITION	SPECIFIED CONDITION
B31-58 (SL2+) - B31-59 (SL2-)	20°C (68°F)	5.0 to 5.6 Ω

(d) Measure the resistance according to the value(s) in the table below.

Standard resistance (Check for short):

TESTER CONNECTION	CONDITION	SPECIFIED CONDITION
B31-58 (SL2+) - Body ground	Always	10 kΩ or higher
B31-59 (SL2-) - Body ground	Always	

NG ▶ **REPAIR OR REPLACE HARNESS OR CONNECTOR**

OK ▶ **REPLACE ECM**

3.	**INSPECT SHIFT SOLENOID VALVE SL2**

(a) Remove the shift solenoid valve SL2.

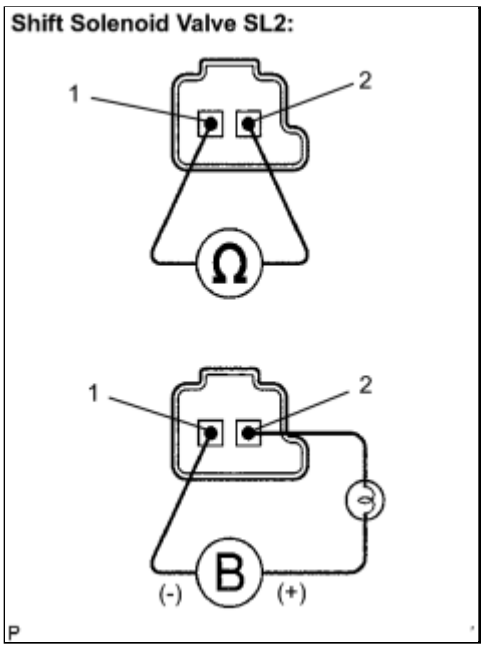

(b) Measure the resistance according to the value(s) in the table below.

Standard resistance:

TESTER CONNECTION	CONDITION	SPECIFIED CONDITION
1 - 2	20°C (68°F)	5.0 to 5.6 Ω

(c) Connect the positive (+) lead with a 21 W bulb to terminal 2 and the negative (-) lead to terminal 1 of the solenoid valve connector, then check the movement of the valve.

OK:

The solenoid makes an operating sound.

NG ▶ **REPLACE SHIFT SOLENOID VALVE SL2**

OK ▶ **REPAIR OR REPLACE TRANSMISSION WIRE**

Last Modified: 3-10-2010	6.4 C	**From:** 200901
Model Year: 2010	**Model:** Corolla	**Doc ID:** RM0000015VS028X
Title: U250E AUTOMATIC TRANSMISSION / TRANSAXLE: AUTOMATIC TRANSAXLE SYSTEM: P0793: Intermediate Shaft Speed Sensor "A" (2010 Corolla)		

DTC	**P0793**	**Intermediate Shaft Speed Sensor "A"**

DESCRIPTION

This sensor detects the rotation speed of the counter gear. By comparing the counter gear speed signal (NC) with the direct clutch speed sensor signal (NT), the ECM detects the shift timing of the gears and appropriately controls the engine torque and hydraulic pressure according to various conditions. Thus smooth gear shifting is performed.

DTC NO.	DTC DETECTION CONDITION	TROUBLE AREA
P0793	ECM detects conditions (a), (b) and (c) continuously for 5 sec. or more: (1-trip detection logic) • (a) Vehicle speed: 50 km/h (31 mph) or more • (b) Park/neutral position switch (NSW) is OFF • (c) Speed sensor (NC): less than 300 rpm	• Open or short in transmission revolution sensor NC (speed sensor NC) circuit • Transmission revolution sensor NC (speed sensor NC) • ECM

Reference (Using an oscilloscope):

Check the waveform between terminals NC+ and NC- of the ECM connector.

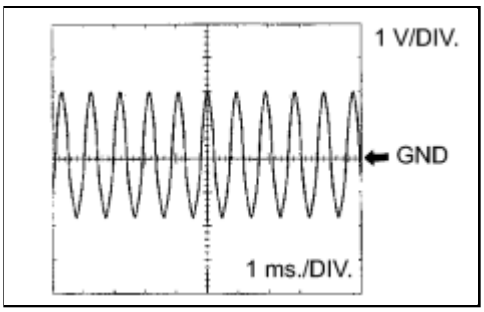

Standard: Refer to the illustration.

Terminal	NC+ - NC-
Tool setting	1 V/DIV., 1 ms./DIV.

Vehicle condition	Vehicle speed 30 km/h (19 mph): (3rd gear) Engine speed 1,400 rpm

MONITOR DESCRIPTION

The NC terminal of the ECM detects a revolution signal from the speed sensor (NC) (counter gear rpm). The ECM calculates a gearshift comparing the speed sensor (NT) with the speed sensor (NC).

While the vehicle is operating in 2nd, 3rd, 4th or 5th gear in the shift position of D, if the counter gear revolution is less than 300 rpm *1although the output shaft revolution is more than 1,000 rpm *2, the ECM detects the trouble, illuminates the MIL and stores the DTC.

*1: Pulse is not output or is irregularly output.

*2: The vehicle speed is 50 km/h (31 mph) or more.

MONITOR STRATEGY

Related DTCs	P0793: Speed sensor (NC)/Verify pulse input
Required sensors/Components	Speed sensor (NC), Speed sensor (NT), Park/neutral position switch
Frequency of operation	Continuous
Duration	5 sec.
MIL operation	Immediate
Sequence of operation	None

TYPICAL ENABLING CONDITIONS

The monitor will run whenever this DTC is not present.	P0500 (VSS) P0748, P0778, P0798 (Shift solenoid valve(range))
Engine	Running
NSW switch	OFF
Output shaft rpm	1,000 rpm or more
Battery voltage	8 V or more
Ignition switch	ON
Starter	OFF

TYPICAL MALFUNCTION THRESHOLDS

Sensor signal rpm	Less than 300 rpm

COMPONENT OPERATING RANGE

Counter gear speed sensor (NC)	**HINT:** **3rd when shift lever position is D position (After warming up the engine);** • Intermediate shaft speed (NC) becomes close to the engine speed.

WIRING DIAGRAM

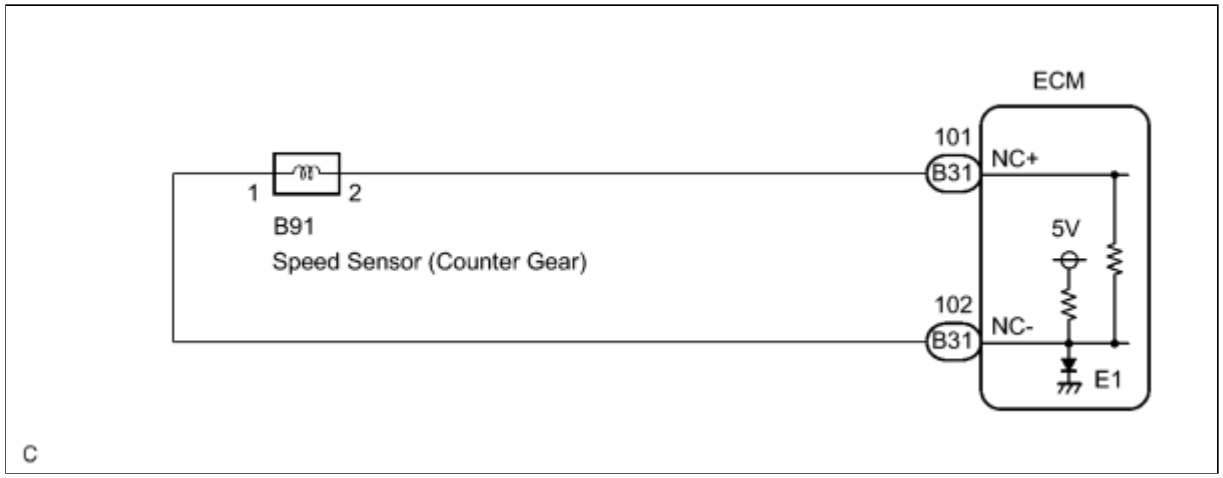

INSPECTION PROCEDURE

NOTICE:

Perform the universal trip to clear permanent DTCs INFO **.**

HINT:

Using Techstream to read the Data List allows the values or states of switches, sensors, actuators and other items to be read without removing any parts. This non-intrusive inspection can be very useful because intermittent conditions or signals may be discovered before parts or wiring is disturbed. Reading the Data List information early in troubleshooting is one way to save diagnostic time.

NOTICE:

In the table below, the values listed under "Normal Condition" are reference values. Do not depend solely on these reference values when deciding whether a part is faulty or not.

1. READ DATA LIST

(a) Warm up the engine.

(b) Turn the ignition switch off.

(c) Connect Techstream to the DLC3.

(d) Turn the ignition switch to the on position.

(e) Turn on the tester.

(f) Select the item "Powertrain / Engine and ECT / Data List".

(g) According to the display on the tester, read the "Data List".

TESTER DISPLAY	MEASUREMENT ITEM/RANGE	NORMAL CONDITION	DIAGNOSTIC NOTE
SPD (NC)	Counter Gear Speed/display: 50 r/min	**HINT:** **3rd when shift lever position is D position (After warming up the engine);** • Intermediate shaft speed (NC) becomes close to the engine speed.	-

HINT:

- SPD (NC) is always 0 while driving:

  Open or short in the sensor or circuit.
- SPD (NC) is always more than 0 and less than 300 rpm while driving the vehicle at 50 km/h (31 mph) or more:

  Sensor trouble, improper installation, or intermittent connection trouble of the circuit.

PROCEDURE

1.	**INSPECT SPEED SENSOR INSTALLATION**

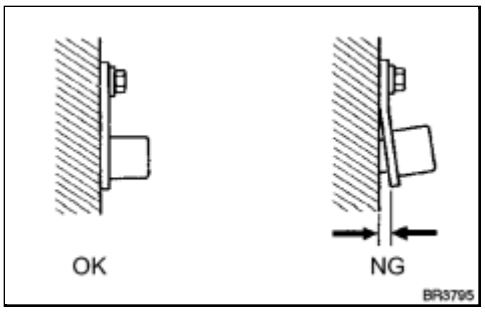

(a) Check the speed sensor installation.

OK:

The installation bolt is tightened properly and there is no clearance between the sensor and transaxle case.

NG ▶ **REPLACE SPEED SENSOR (NC)**

OK

2.	**INSPECT SPEED SENSOR (NC)**

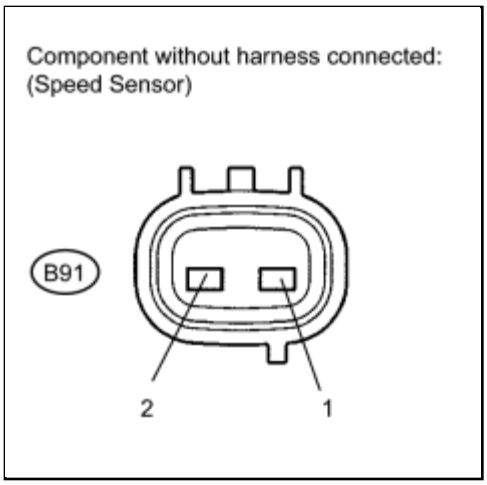

(a) Disconnect the speed sensor connector from the transaxle.

(b) Measure the resistance according to the value(s) in the table below.

Standard resistance:

TESTER CONNECTION	CONDITION	SPECIFIED CONDITION
1 - 2	20 °C (68 °F)	560 to 680 Ω

NG ▶ **REPLACE SPEED SENSOR (NC)**

OK

3.	**CHECK HARNESS AND CONNECTOR (SPEED SENSOR - ECM)**

(a) Connect the speed sensor connector.

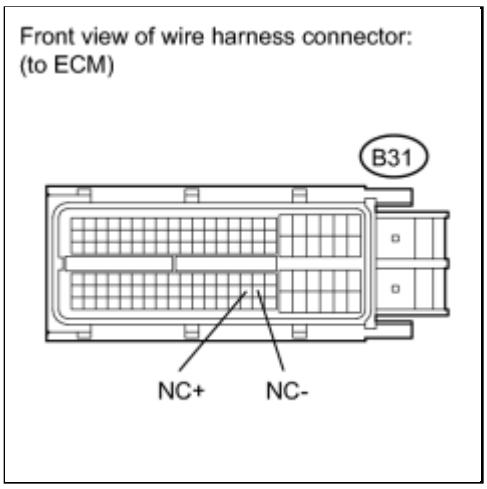

(b) Disconnect the ECM connector.

(c) Measure the resistance according to the value(s) in the table below.

Standard resistance:

TESTER CONNECTION	CONDITION	SPECIFIED CONDITION
B31-101 (NC+) - B31-102 (NC-)	20 °C (68 °F)	560 to 680 Ω

(d) Measure the resistance according to the value(s) in the table below.

Standard resistance (Check for short):

TESTER CONNECTION	CONDITION	SPECIFIED CONDITION
B31-101 (NC+) - Body ground	Always	10 kΩ or higher
B31-102 (NC-) - Body ground	Always	

NG ▶ **REPAIR OR REPLACE HARNESS OR CONNECTOR**

OK ▶ **REPLACE ECM**

Last Modified: 3-10-2010	6.4 C	**From:** 200901
Model Year: 2010	**Model:** Corolla	**Doc ID:** RM0000015VV02NX
Title: U250E AUTOMATIC TRANSMISSION / TRANSAXLE: AUTOMATIC TRANSAXLE SYSTEM: P0796: Pressure Control Solenoid "C" Performance (Shift Solenoid Valve SL3) (2010 Corolla)		

DTC	**P0796**	**Pressure Control Solenoid "C" Performance (Shift Solenoid Valve SL3)**

SYSTEM DESCRIPTION

The ECM uses signals from the vehicle speed sensor to detect the actual gear position (1st, 2nd, 3rd, 4th or 5th gear).

Then the ECM compares the actual gear with the shift schedule in the ECM memory to detect mechanical troubles of the shift solenoid valves and valve body.

DTC NO.	DTC DETECTING CONDITION	TROUBLE AREA
P0796	The gear required by the ECM does not match the actual gear when driving (2-trip detection logic)	• Shift solenoid valve SL3 remains open or closed • Valve body is blocked • Automatic transaxle (clutch, brake or gear etc.)

MONITOR DESCRIPTION

The ECM commands gear shifts by turning the shift solenoid valves "ON/OFF". According to the input shaft revolution, intermediate (counter) shaft revolution and output shaft revolution, the ECM detects the actual gear position (1st, 2nd, 3rd, 4th or 5th gear position). When the gear position commanded by the ECM and the actual gear position are not the same, the ECM illuminates the MIL and stores the DTC.

MONITOR STRATEGY

Related DTCs	P0796: Shift solenoid valve SL3/OFF malfunction Shift solenoid valve SL3/ON malfunction
Required sensors/Components	Shift solenoid valve SL3, Speed sensor (NT), Speed sensor (NC), Crankshaft position sensor (NE)
Frequency of operation	Continuous
Duration	OFF malfunction (A) 0.8 sec. OFF malfunction (B)

	1 sec. ON malfunction (A) and (B) 0.8 sec. ON malfunction (C) 0.4 sec.
MIL operation	2 driving cycles
Sequence of operation	None

TYPICAL ENABLING CONDITIONS

All:

The monitor will run whenever this DTC is not present. (Not circuit malfunction)	P0712, P0713 (ATF temperature sensor circuit) P0115, P0117, P0118 (ECT sensor circuit) P0717 (Turbine speed sensor circuit) P0793 (Intermediate shaft speed sensor circuit) P0500 (Vehicle speed sensor circuit) P0748 (Shift solenoid valve SL1 circuit) P0778 (Shift solenoid valve SL2 circuit) P0798 (Shift solenoid valve SL3 circuit) P0982, P0983 (Shift solenoid valve S4 circuit) P0985, P0986 (Shift solenoid valve SR circuit) P2769, P2770 (Shift solenoid valve DSL circuit) P0120, P0121, P0122, P0123, P0220, P0222, P0223, P0604, P0606, P060A, P060D, P060E, P0657, P1607, P2102, P2103, P2111, P2112, P2118, P2119, P2135 (Electronic throttle system)
ECT (Engine coolant temperature)	10°C (50°F) or more
Transmission range	"D"
TFT (Transmission fluid temperature)	-20°C (-4°F) or more

OFF malfunction (A):

ECM selected gear	4th or 5th
Throttle valve opening angle	4.5% or more at engine speed 1900 rpm (Varies with engine speed)

OFF malfunction (B):

ECM selected gear	4th
Throttle valve opening angle	5% or more
Vehicle speed	10 km/h (6 mph) or more

ON malfunction (A):

ECM selected gear	1st
Vehicle speed	Less than 40 km/h (25 mph)
Throttle valve opening angle	4.5% or more at engine speed 1900 rpm (Varies with engine speed)

ON malfunction (B):

ECM selected gear	3rd
Throttle valve opening angle	7.0% or more at output speed 1400 rpm (Varies with engine speed)
Malfunction of pressure control solenoid "B" (SL2) and "C" (SL3)	Not detected

ON malfunction (C):

Throttle valve opening angle	7.0% or more at output speed 1050 rpm (Varies with engine speed)
Malfunction of pressure control solenoid "B" (SL2)	Not detected

TYPICAL MALFUNCTION THRESHOLDS

Either of the following conditions is met: OFF malfunction (A) and (B), or ON malfunctions (A), (B) and (C)

2 detections are necessary per driving cycle:

1st detection; temporary flag ON

OFF malfunction (A):

Input (turbine) speed/Intermediate shaft speed	0.93 to 1.07

OFF malfunction (B):

Intermediate shaft speed/Output speed	0.95 to 1.09

ON malfunction (A):

Input (turbine) speed/Intermediate shaft speed	0.93 to 1.07

ON malfunction (B):

Input (turbine) speed - Intermediate shaft speed	700 rpm or more

ON malfunction (C):

Input (turbine) speed - Intermediate shaft speed	Less than -500 rpm or 700 rpm or more

INSPECTION PROCEDURE

NOTICE:

Perform the universal trip to clear permanent DTCs INFO **.**

HINT:

Using Techstream to perform Active Test allows relays, VSVs, actuators and other items to be operated without removing any parts. This non-intrusive functional inspection can be very useful because intermittent operation may be discovered before parts or wiring is disturbed. Performing Active Test early in troubleshooting is one way to save diagnostic time. Data List information can be displayed while performing Active Test.

1. PERFORM ACTIVE TEST

(a) Warm up the engine.

(b) Turn the ignition switch off.

(c) Connect Techstream to the DLC3.

(d) Turn the ignition switch to the on position.

(e) Turn on the tester.

(f) Select the item "Powertrain / Engine and ECT / Active Test / Shift Status".

(g) According to the display on the tester, perform the "Active Test".

HINT:

While driving, the shift position can be forcibly changed with Techstream.

Comparing the shift position commanded by the Active Test with the actual shift position enables you to confirm the problem INFO **.**

TESTER DISPLAY	TEST PART	CONTROL RANGE	DIAGNOSTIC NOTE
Control the Shift Position	[Test Details] Operate the shift solenoid valve and set each shift position by yourself. [Vehicle Condition] • IDL: ON • Less than 50 km/h (31 mph)	1st/2nd /3rd/4th/5th	Possible to check the operation of the shift solenoid valves.

TESTER DISPLAY	TEST PART	CONTROL RANGE	DIAGNOSTIC NOTE
	[Others] • Press "→" button: Shift up • Press "←" button: Shift down		

HINT:

- This test can be conducted when the vehicle speed is 50 km/h (31 mph) or less.
- The shift position commanded by the ECM is shown in the Data List / Shift Status display on Techstream.

PROCEDURE

1.	**CHECK OTHER DTCS OUTPUT (IN ADDITION TO DTC P0796)**

(a) Connect Techstream to the DLC3.

(b) Turn the ignition switch to the on position and turn the Techstream main switch ON.

(c) When you use Techstream:

Select the item "Powertrain / Engine and ECT / Trouble Codes".

(d) Read the DTCs using Techstream.

Result:

DISPLAY (DTC OUTPUT)	PROCEED TO
Only "P0796" is output	A
"P0796" and other DTCs	B

HINT:

If any other codes besides "P0796" are output, perform the troubleshooting for those DTCs first.

B ▶ **GO TO DTC CHART**

A ▼

2.	INSPECT SHIFT SOLENOID VALVE SL3

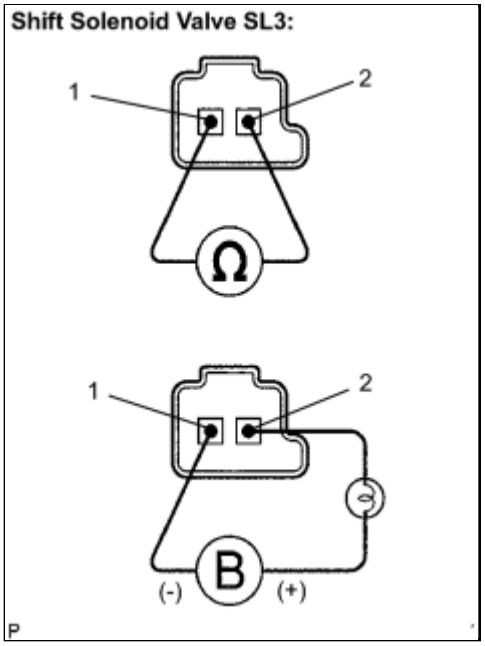

(a) Remove the shift solenoid valve SL3.

(b) Measure the resistance according to the value(s) in the table below.

Standard resistance:

TESTER CONNECTION	CONDITION	SPECIFIED CONDITION
1 - 2	20°C (68°F)	5.0 to 5.6 Ω

(c) Connect the positive (+) lead with a 21 W bulb to terminal 2 and the negative (-) lead to terminal 1 of the solenoid valve connector, then check the movement of the valve.

OK:

The solenoid makes an operating sound.

NG ▶ REPLACE SHIFT SOLENOID VALVE SL3

OK ▼

3.	INSPECT TRANSMISSION VALVE BODY ASSEMBLY

OK:

There are no foreign objects on each valve and they operate smoothly.

NG → REPAIR OR REPLACE TRANSMISSION VALVE BODY ASSEMBLY

OK ↓

4.	INSPECT TORQUE CONVERTER CLUTCH ASSEMBLY

OK:
The torque converter clutch operates normally.

NG → REPLACE TORQUE CONVERTER CLUTCH ASSEMBLY

OK → REPAIR OR REPLACE AUTOMATIC TRANSAXLE ASSEMBLY

Last Modified: 3-10-2010	6.4 C	**From:** 200901
Model Year: 2010	**Model:** Corolla	**Doc ID:** RM0000015W802NX
Title: U250E AUTOMATIC TRANSMISSION / TRANSAXLE: AUTOMATIC TRANSAXLE SYSTEM: P0798: Pressure Control Solenoid "C" Electrical (Shift Solenoid Valve SL3) (2010 Corolla)		

DTC	**P0798**	**Pressure Control Solenoid "C" Electrical (Shift Solenoid Valve SL3)**

DESCRIPTION

Shifting from 1st to 5th is performed in combination with "ON" and "OFF" operation of the shift solenoid valves SL1, SL2, SL3, S4 and SR which are controlled by the ECM. If an open or short circuit occurs in either of the shift solenoid valves, the ECM controls the remaining normal shift solenoid valves to allow the vehicle to be operated smoothly (Fail safe function).

DTC NO.	DTC DETECTION CONDITION	TROUBLE AREA
P0798	• The ECM checks for an open or short in the shift solenoid valve SL3 circuit while driving and shifting gears. (1-trip detection logic) • Output signal duty equals to 100 %. (NOTE: SL3 output signal duty is less than 100 % under normal condition.)	• Open or short in shift solenoid valve SL3 circuit • Shift solenoid valve SL3 • ECM

MONITOR DESCRIPTION

The ECM commands gear shifts by turning the shift solenoid valves "ON/OFF". When there is an open or short circuit in any shift solenoid valve circuit, the ECM detects the problem and illuminates the MIL and stores the DTC. And the ECM performs the fail-safe function and turns the other normal shift solenoid valves "ON/OFF" (In case of an open or short circuit, the ECM stops sending current to the circuit.)

INFO .

MONITOR STRATEGY

Related DTCs	P0798: Shift solenoid valve SL3/Range check
Required sensors/Components	Shift solenoid valve SL3
Frequency of operation	Continuous
Duration	1 sec.

MIL operation	Immediate
Sequence of operation	None

TYPICAL ENABLING CONDITIONS

The monitor will run whenever this DTC is not present.	None
Solenoid current cut status	Non cut
CPU commanded duty ratio to SL3	19% or more
Battery voltage	11 V or more
Ignition switch	ON
Starter	OFF

TYPICAL MALFUNCTION THRESHOLDS

Solenoid status from IC	Fail (Open or short)

COMPONENT OPERATING RANGE

Output signal duty	Less than 100%

WIRING DIAGRAM

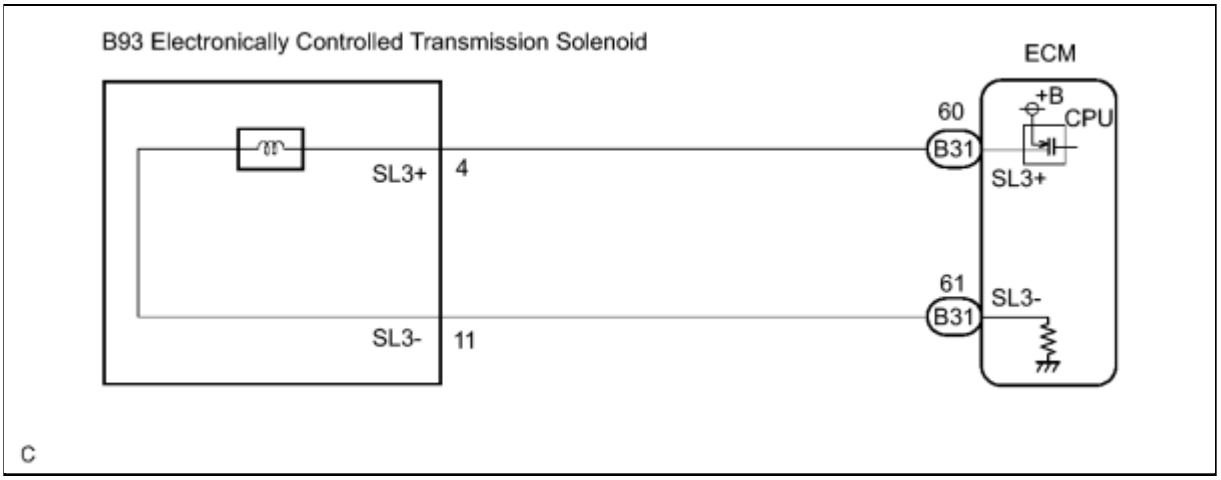

INSPECTION PROCEDURE

NOTICE:

Perform the universal trip to clear permanent DTCs INFO .

PROCEDURE

1.	**INSPECT TRANSMISSION WIRE (SL3)**

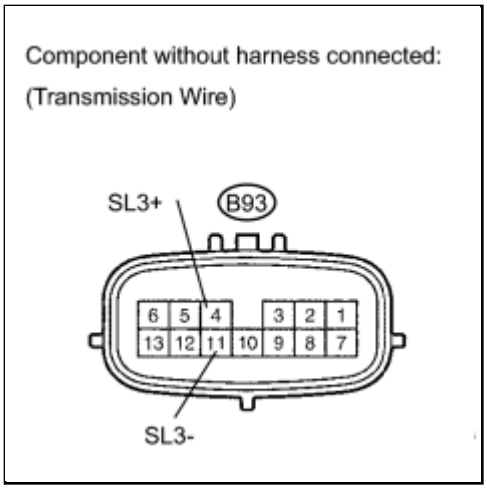

(a) Disconnect the transmission wire connector from the transaxle.

(b) Measure the resistance according to the value(s) in the table below.

Standard resistance:

TESTER CONNECTION	CONDITION	SPECIFIED CONDITION
4 (SL3+) - 11 (SL3-)	20°C (68°F)	5.0 to 5.6 Ω

(c) Measure the resistance according to the value(s) in the table below.

Standard resistance (Check for short):

TESTER CONNECTION	CONDITION	SPECIFIED CONDITION
4 (SL3+) - Body ground	Always	10 kΩ or higher
11 (SL3-) - Body ground	Always	

NG ▶ **INSPECT SHIFT SOLENOID VALVE SL3**

OK ▼

2.	CHECK HARNESS AND CONNECTOR (TRANSMISSION WIRE - ECM)

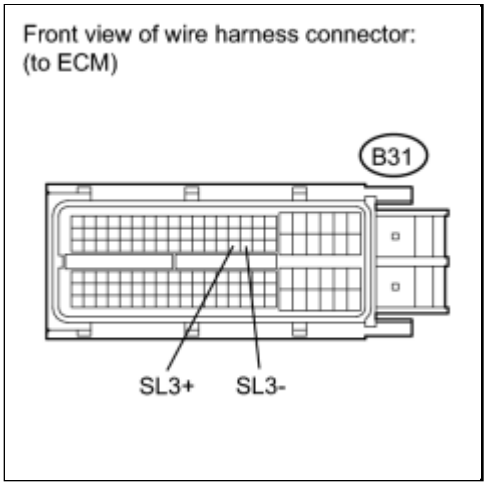

(a) Connect the transmission connector to the transaxle.

(b) Disconnect the connector from the ECM.

(c) Measure the resistance according to the value(s) in the table below.

Standard resistance:

TESTER CONNECTION	CONDITION	SPECIFIED CONDITION
B31-60 (SL3+) - B31-61 (SL3-)	20°C (68°F)	5.0 to 5.6 Ω

(d) Measure the resistance according to the value(s) in the table below.

Standard resistance (Check for short):

TESTER CONNECTION	CONDITION	SPECIFIED CONDITION
B31-60 (SL3+) - Body ground	Always	10 kΩ or higher
B31-61 (SL3-) - Body ground	Always	

NG ▶ **REPAIR OR REPLACE HARNESS OR CONNECTOR**

OK ▶ **REPLACE ECM**

3.	INSPECT SHIFT SOLENOID VALVE SL3

(a) Remove the shift solenoid valve SL3.

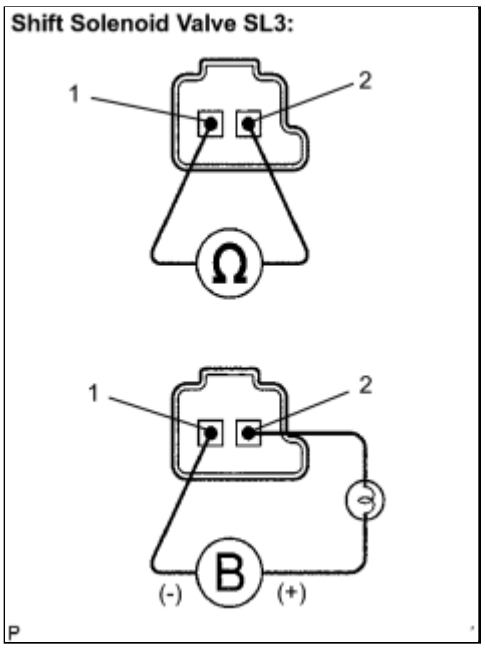

(b) Measure the resistance according to the value(s) in the table below.

Standard resistance:

TESTER CONNECTION	CONDITION	SPECIFIED CONDITION
1 - 2	20°C (68°F)	5.0 to 5.6 Ω

(c) Connect the positive (+) lead with a 21 W bulb to terminal 2 and the negative (-) lead to terminal 1 of the solenoid valve connector, then check the movement of the valve.

OK:

The solenoid makes an operating sound.

NG ▶ **REPLACE SHIFT SOLENOID VALVE SL3**

OK ▶ **REPAIR OR REPLACE TRANSMISSION WIRE**

Last Modified: 3-10-2010	6.4 C	**From:** 200901
Model Year: 2010	**Model:** Corolla	**Doc ID:** RM0000015W202HX
Title: U250E AUTOMATIC TRANSMISSION / TRANSAXLE: AUTOMATIC TRANSAXLE SYSTEM: P0982,P0983: Shift Solenoid "D" Control Circuit Low (Shift Solenoid Valve S4) (2010 Corolla)		

DTC	**P0982**	**Shift Solenoid "D" Control Circuit Low (Shift Solenoid Valve S4)**

DTC	**P0983**	**Shift Solenoid "D" Control Circuit High (Shift Solenoid Valve S4)**

DESCRIPTION

Shifting from 1st to 5th is performed in combination with "ON" and "OFF" operation of the shift solenoid valves SL1, SL2, SL3, S4 and SR which are controlled by the ECM. If an open or short circuit occurs in either of the shift solenoid valves, the ECM controls the remaining normal shift solenoid valves to allow the vehicle to be operated smoothly (Fail safe function).

DTC NO.	DTC DETECTION CONDITION	TROUBLE AREA
P0982	ECM detects short in solenoid valve S4 circuit 2 times when solenoid valve S4 is operated (1-trip detection logic)	• Short in shift solenoid valve S4 circuit • Shift solenoid valve S4 • ECM
P0983	ECM detects open in solenoid valve S4 circuit 2 times when solenoid valve S4 is not operated (1-trip detection logic)	• Open in shift solenoid valve S4 circuit • Shift solenoid valve S4 • ECM

MONITOR DESCRIPTION

The ECM commands gear shifts by turning the shift solenoid valves "ON/OFF". When there is an open or short circuit in any shift solenoid valve circuit, the ECM detects the problem and illuminates the MIL and stores the DTC. And the ECM performs the fail-safe function and turns the other normal shift solenoid valves "ON/OFF" (In case of an open or short circuit, the ECM stops sending current to the circuit.)



.

MONITOR STRATEGY

Related DTCs	P0982: Shift solenoid valve S4/Range check (Low resistance) P0983: Shift solenoid valve S4/Range check (High resistance)
Required sensors/Components	Shift solenoid valve S4
Frequency of operation	Continuous
Duration	0.064 sec. or more
MIL operation	Immediate
Sequence of operation	None

TYPICAL ENABLING CONDITIONS

P0982: Range check (Low resistance):

The monitor will run whenever this DTC is not present.	None
Shift solenoid valve S4	ON
Battery voltage	8 V or more
Ignition switch	ON
Starter	OFF

P0983: Range check (High resistance):

The monitor will run whenever this DTC is not present.	None
Shift solenoid valve S4	OFF
Battery voltage	8 V or more
Ignition switch	ON
Starter	OFF

TYPICAL MALFUNCTION THRESHOLDS

P0982: Range check (Low resistance):

Shift solenoid valve S4 resistance	8 Ω or less

P0983: Range check (High resistance):

Shift solenoid valve S4 resistance	100 kΩ or more

COMPONENT OPERATING RANGE

Shift solenoid valve S4	Resistance: 11 to 15 Ω at 20°C (68°F)

WIRING DIAGRAM

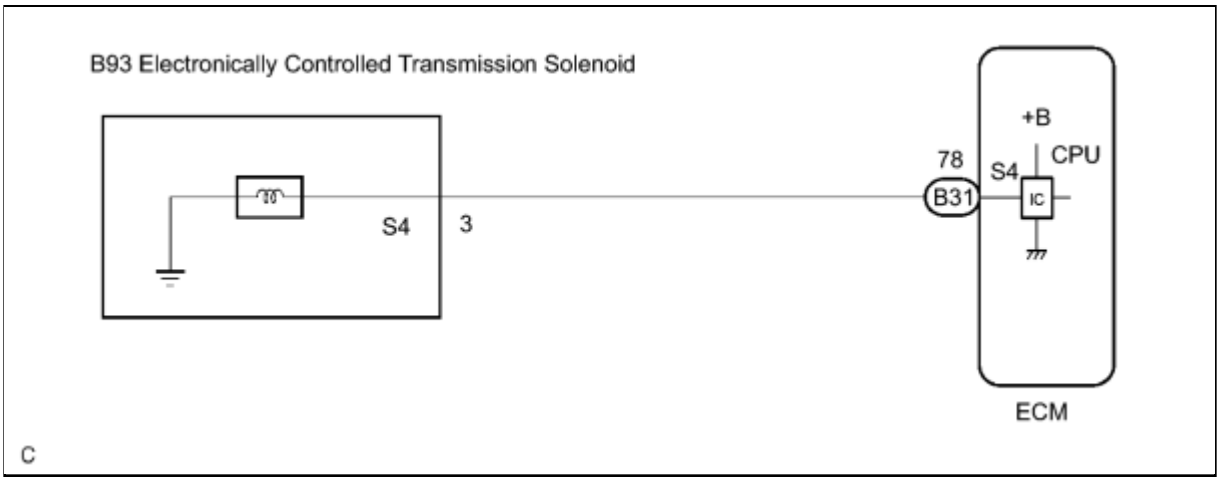

INSPECTION PROCEDURE

NOTICE:

Perform the universal trip to clear permanent DTCs INFO **.**

PROCEDURE

1.	**INSPECT TRANSMISSION WIRE (S4)**

Component without harness connected:
(Transmission Wire)

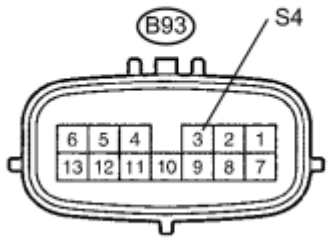

(a) Disconnect the transmission wire connector from the transaxle.

(b) Measure the resistance according to the value(s) in the table below.

Standard resistance:

TESTER CONNECTION	CONDITION	SPECIFIED CONDITION
3 - Body ground	20°C (68°F)	11 to 15 Ω

NG ▶ **INSPECT SHIFT SOLENOID VALVE S4**

OK ▼

2.	CHECK HARNESS AND CONNECTOR (TRANSMISSION WIRE - ECM)

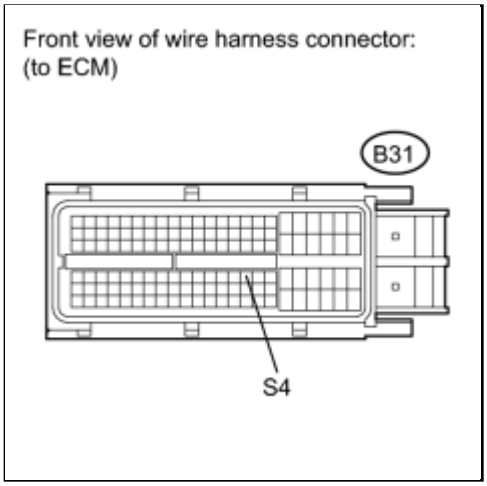

(a) Connect the transmission connector to the transaxle.

(b) Disconnect the connector from the ECM.

(c) Measure the resistance according to the value(s) in the table below.

Standard resistance:

TESTER CONNECTION	CONDITION	SPECIFIED CONDITION
B31-78 (S4) - Body ground	20°C (68°F)	11 to 15 Ω

NG ▶ **REPAIR OR REPLACE HARNESS OR CONNECTOR**

OK ▶ **REPLACE ECM**

3.	INSPECT SHIFT SOLENOID VALVE S4

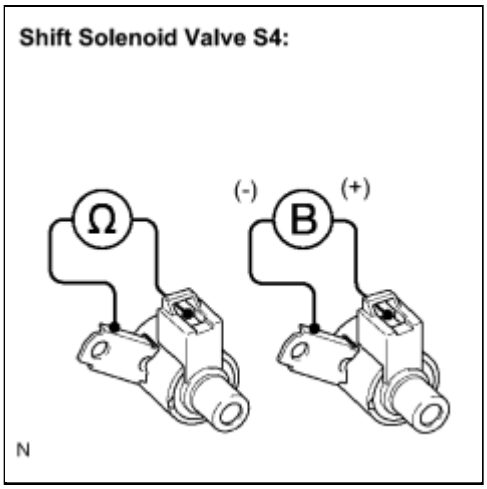

(a) Remove the shift solenoid valve S4.

(b) Measure the resistance according to the value(s) in the table below.

Standard resistance:

TESTER CONNECTION	CONDITION	SPECIFIED CONDITION
Solenoid Connector (S4) - Solenoid Body (S4)	20°C (68°F)	11 to 15 Ω

(c) Connect the positive (+) lead to the terminal of the solenoid connector, and the negative (-) lead to the solenoid body.

OK:

The solenoid makes an operating sound.

NG ▶ **REPLACE SHIFT SOLENOID VALVE S4**

OK ▶ **REPAIR OR REPLACE TRANSMISSION WIRE**

Last Modified: 3-10-2010	6.4 C	**From:** 200901
Model Year: 2010	**Model:** Corolla	**Doc ID:** RM0000015W6022X
Title: U250E AUTOMATIC TRANSMISSION / TRANSAXLE: AUTOMATIC TRANSAXLE SYSTEM: P0985,P0986: Shift Solenoid "E" Control Circuit Low (Shift Solenoid Valve SR) (2010 Corolla)		

DTC	**P0985**	**Shift Solenoid "E" Control Circuit Low (Shift Solenoid Valve SR)**

DTC	**P0986**	**Shift Solenoid "E" Control Circuit High (Shift Solenoid Valve SR)**

DESCRIPTION

Shifting from 1st to 5th is performed in combination with "ON" and "OFF" operation of the shift solenoid valves SL1, SL2, SL3, S4 and SR which are controlled by the ECM. If an open or short circuit occurs in either of the shift solenoid valves, the ECM controls the remaining normal shift solenoid valves to allow the vehicle to be operated smoothly (Fail safe function).

DTC NO.	DTC DETECTION CONDITION	TROUBLE AREA
P0985	ECM detects short in solenoid valve SR circuit 2 times when solenoid valve SR is operated (1-trip detection logic)	• Short in shift solenoid valve SR circuit • Shift solenoid valve SR • ECM
P0986	ECM detects open in solenoid valve SR circuit 2 times when solenoid valve SR is not operated (1-trip detection logic)	• Open in shift solenoid valve SR circuit • Shift solenoid valve SR • ECM

MONITOR DESCRIPTION

The ECM commands gear shifts by turning the shift solenoid valves "ON/OFF". When there is an open or short circuit in any shift solenoid valve circuit, the ECM detects the problem and illuminates the MIL and stores the DTC. And the ECM performs the fail-safe function and turns the other normal shift solenoid valves "ON/OFF" (In case of an open or short circuit, the ECM stops sending current to the circuit.)

INFO .

MONITOR STRATEGY

Related DTCs	P0985: Shift solenoid valve SR/Range check (Low resistance) P0986: Shift solenoid valve SR/Range check (High resistance)
Required sensors/Components	Shift solenoid valve SR
Frequency of operation	Continuous
Duration	0.064 sec.
MIL operation	Immediate
Sequence of operation	None

TYPICAL ENABLING CONDITIONS

P0985: Range check (Low resistance):

The monitor will run whenever this DTC is not present.	None
Shift solenoid valve SR	ON
Battery voltage	8 V or more
Ignition switch	ON
Starter	OFF

P0986: Range check (High resistance):

The monitor will run whenever this DTC is not present.	None
Shift solenoid valve SR	OFF
Battery voltage	8 V or more
Ignition switch	ON
Starter	OFF

TYPICAL MALFUNCTION THRESHOLDS

P0985: Range check (Low resistance):

Shift solenoid valve SR resistance	8 Ω or less

P0986: Range check (High resistance):

Shift solenoid valve SR resistance	100 kΩ or more

COMPONENT OPERATING RANGE

Shift solenoid valve SR	Resistance: 11 to 15 Ω at 20°C (68°F)

WIRING DIAGRAM

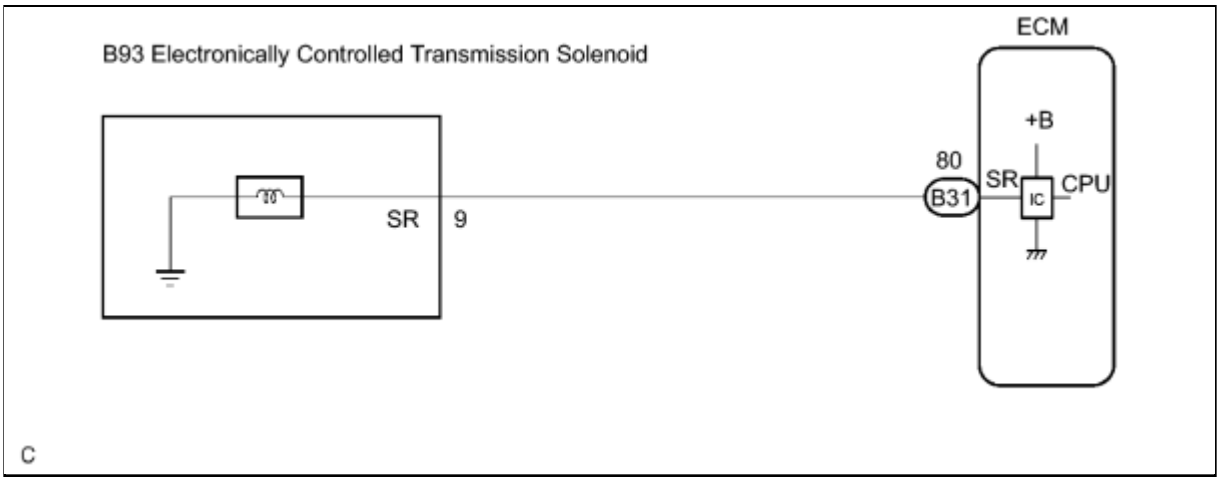

INSPECTION PROCEDURE

NOTICE:

Perform the universal trip to clear permanent DTCs INFO **.**

PROCEDURE

1.	**INSPECT TRANSMISSION WIRE (SR)**

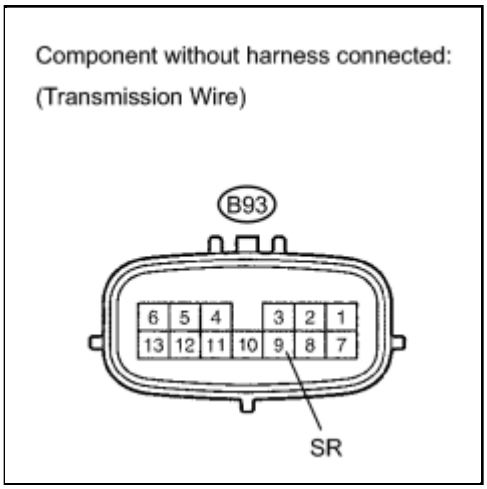

(a) Disconnect the transmission wire connector from the transaxle.

(b) Measure the resistance according to the value(s) in the table below.

Standard resistance:

TESTER CONNECTION	CONDITION	SPECIFIED CONDITION
9 - Body ground	20°C (68°F)	11 to 15 Ω

NG ▶ **INSPECT SHIFT SOLENOID VALVE SR**

OK ▼

2.	CHECK HARNESS AND CONNECTOR (TRANSMISSION - ECM)

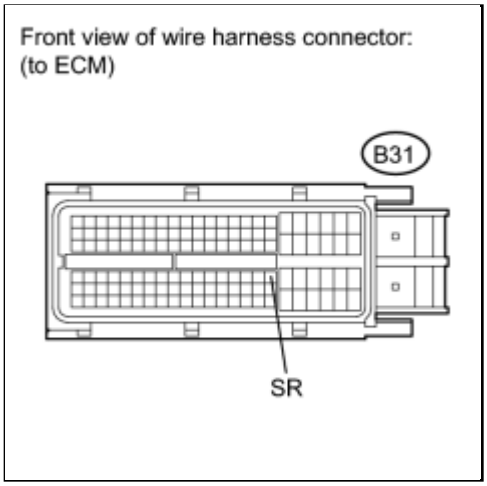

(a) Connect the transmission connector to the transaxle.

(b) Disconnect the connector from the ECM.

(c) Measure the resistance according to the value(s) in the table below.

Standard resistance:

TESTER CONNECTION	SPECIFIED CONDITION	SPECIFIED CONDITION
B31-80 (SR) - Body ground	20°C (68°F)	11 to 15 Ω

NG ▶ **REPAIR OR REPLACE HARNESS OR CONNECTOR**

OK ▶ **REPLACE ECM**

3.	INSPECT SHIFT SOLENOID VALVE SR

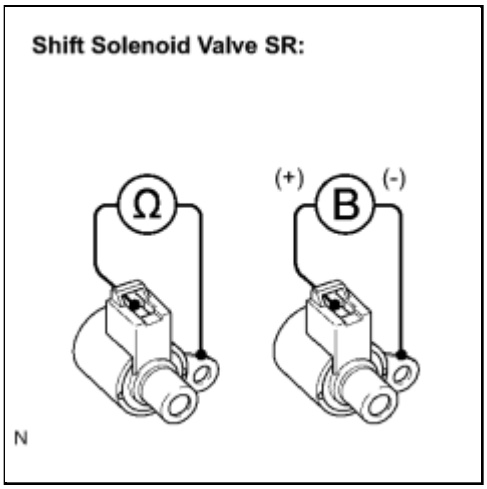

(a) Remove the shift solenoid valve SR.

(b) Measure the resistance according to the value(s) in the table below.

Standard resistance:

TESTER CONNECTION	CONDITION	SPECIFIED CONDITION
Solenoid Connector (SR) - Solenoid Body (SR)	20°C (68°F)	11 to 15 Ω

(c) Connect the positive (+) lead to the terminal of the solenoid connector, and the negative (-) lead to the solenoid body.

OK:

The solenoid makes an operating sound.

NG ▶ **REPLACE SHIFT SOLENOID VALVE SR**

OK ▶ **REPAIR OR REPLACE TRANSMISSION WIRE**

Last Modified: 3-10-2010	6.4 C	**From:** 200901
Model Year: 2010	**Model:** Corolla	**Doc ID:** RM000002OCX006X
Title: U250E AUTOMATIC TRANSMISSION / TRANSAXLE: AUTOMATIC TRANSAXLE SYSTEM: P2714: Pressure Control Solenoid "D" Performance (Shift Solenoid Valve SLT) (2010 Corolla)		

DTC	**P2714**	**Pressure Control Solenoid "D" Performance (Shift Solenoid Valve SLT)**

SYSTEM DESCRIPTION

The linear solenoid valve (SLT) controls the transmission line pressure for smooth transmission operation based on signals from the throttle position sensor and the vehicle speed sensor. The ECM adjusts the duty ratio (*) of the SLT solenoid valve to control hydraulic line pressure coming from the primary regulator valve. Appropriate line pressure assures smooth shifting with varying engine outputs.

(*): Duty Ratio

The duty ratio is the ratio of the period of continuity in one cycle. For example, if A is the period of continuity in one cycle, and B is the period of non-continuity, then

Duty Ratio=A/(A+B) x 100(%)

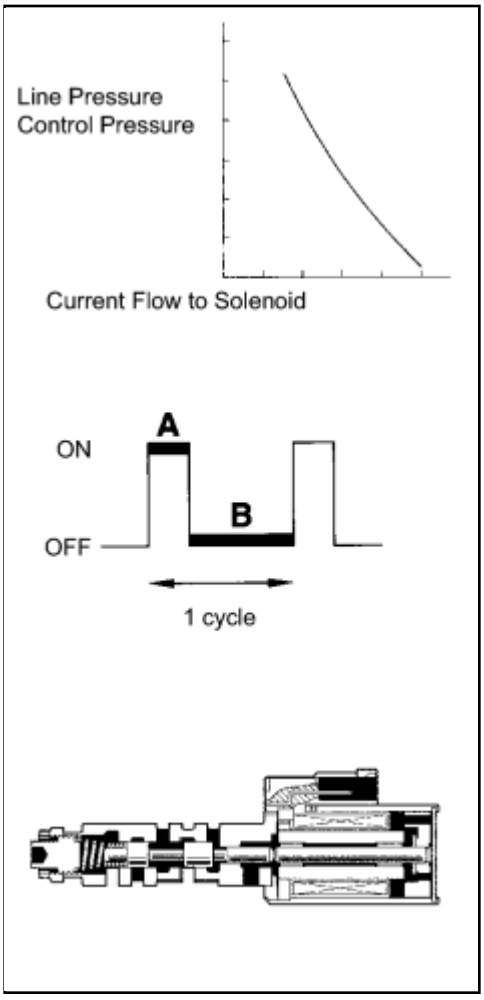

DTC NO.	DTC DETECTION CONDITION	TROUBLE AREA
P2714	ECM detects a malfunction on SLT (ON side) according to the revolution difference of the turbine, intermediate and the output shaft, and also by the oil pressure. (2-trip detection logic)	• Shift solenoid valve SLT remains closed • Valve body is blocked • Automatic transaxle (clutch, brake or gear, etc.)

MONITOR DESCRIPTION

In any forward position, when the difference in the revolutions of the turbine, Intermediate and output shaft exceeds the specified value (varies with Intermediate and output speed) determined by the ECM, the ECM illuminates the MIL and store the DTC.

When shift solenoid valve SLT remains on, the oil pressure goes down and the clutch engagement force decreases.

NOTICE:

If you continue driving under these conditions, the clutch will burn out and the vehicle will no longer be drivable.

MONITOR STRATEGY

Related DTCs	P2714: Shift solenoid valve SLT/ON malfunction
Required sensors/Components	Shift solenoid valve SLT, Speed sensor (NT), Speed sensor (NC), Crankshaft position sensor (NE)
Frequency of operation	Continuous
Duration	1 sec.
MIL operation	2 driving cycles
Sequence of operation	None

TYPICAL ENABLING CONDITIONS

ON malfunction:

The monitor will run whenever this DTC is not present. (Not circuit malfunction)	P0712, P0713 (ATF temperature sensor circuit) P0717 (Turbine speed sensor circuit) P0793 (Intermediate shaft speed sensor circuit) P0500 (Vehicle speed sensor circuit) P0748 (Shift solenoid valve SL1 circuit) P0778 (Shift solenoid valve SL2 circuit) P0798 (Shift solenoid valve SL3 circuit)

	P0982, P0983 (Shift solenoid valve S4 circuit) P0985, P0986 (Shift solenoid valve SR circuit) P2769, P2770 (Shift solenoid valve DSL circuit) P2716 (Shift solenoid valve SLT circuit) P0120, P0121, P0122, P0123, P0220, P0222, P0223, P0604, P0606, P060A, P060D, P060E, P0657, P1607, P2102, P2103, P2111, P2112, P2118, P2119, P2135 (Electronic throttle system)
Transmission range	"D"
TFT (Transmission fluid temperature)	-20°C (-4°F) or more

ON malfunction (A):

ECM selected gear	4th
Temporary MAIN gear	1st or 2nd or 3rd or 4th
NT - NC x Temporary MAIN gear ratio NT: Input (turbine) speed NC: Intermediate shaft speed	More than 100 rpm at Intermediate shaft speed 1,000 rpm
Temporary U/D gear	Low or High
NC - NO x Temporary U/D gear ratio NO: Output speed	More than 300 rpm at Output speed 1,000 rpm
TT TT: Turbine Torque	142 Nm or more
NT	250 rpm or more
NC	250 rpm or more
NO	250 rpm or more

ON malfunction (B):

ECM selected gear	5th
Temporary MAIN gear	1st or 2nd or 3rd or 4th
NT - NC x Temporary MAIN gear ratio NT: Input (turbine) speed NC: Intermediate shaft speed	More than 100 rpm at Intermediate shaft speed 1,000 rpm
Temporary U/D gear	Low or High
NC - NO x Temporary U/D gear ratio NO: Output speed	More than 300 rpm at Output speed 1,000 rpm
TT TT: Turbine Torque	142 Nm or more
NT	250 rpm or more

NC	250 rpm or more
NO	250 rpm or more

TYPICAL MALFUNCTION THRESHOLDS

[ON malfunction]

Detection condition: Total accumulated time of ON malfunctions (a) and (b) is 1 second or more

ON malfunction (a):

NT - NC x 4th gear ratio	More than 100 rpm at Intermediate shaft speed 1,000 rpm
NC - NO x Low gear ratio	More than 300 rpm at Output speed 1,000 rpm
Duration	0.85 sec. or more
Shift Solenoid valve SL1 Performance	Not performance malfunction

ON malfunction (b):

NT - NC x 4th gear ratio	More than 100 rpm at Intermediate shaft speed 1,000 rpm
NC - NO x High gear ratio	More than 300 rpm at Output speed 1,000 rpm
Duration	0.85 sec. or more
Shift Solenoid valve SL1 Performance	Not performance malfunction

INSPECTION PROCEDURE

NOTICE:

Perform the universal trip to clear permanent DTCs INFO **.**

PROCEDURE

1.	**CHECK OTHER DTCS OUTPUT (IN ADDITION TO DTC P2714)**

(a) Connect Techstream to the DLC3.

(b) Turn the ignition switch to the on position and turn the Techstream main switch ON.

(c) When you use Techstream:

Select the item "Powertrain / Engine and ECT / Trouble Codes".

(d) Read the DTCs using Techstream.

Result:

DISPLAY (DTC OUTPUT)	PROCEED TO
Only P2714 is output	A
P2714 and other DTCs	B

HINT:

If any other codes besides "P2714" are output, perform troubleshooting for those DTCs first.

B ▶ **GO TO DTC CHART**

A ▼

2.	INSPECT SHIFT SOLENOID VALVE SLT

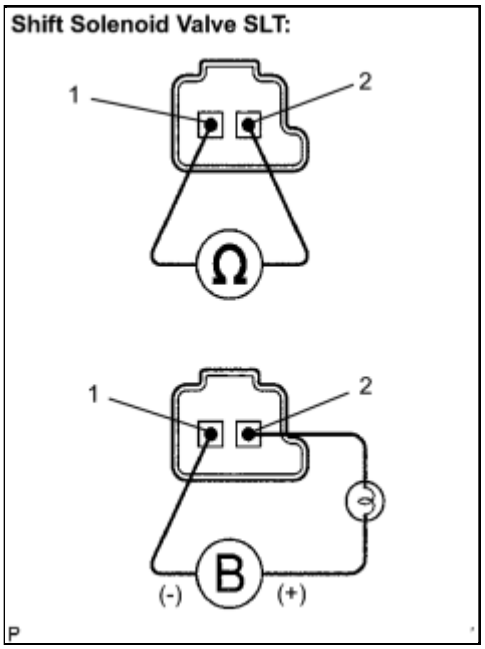

(a) Remove the shift solenoid valve SLT.

(b) Measure the resistance according to the value(s) in the table below.

Standard resistance:

TESTER CONNECTION	CONDITION	SPECIFIED CONDITION
1 - 2	20°C (68°F)	5.0 to 5.6 Ω

(c) Connect the positive (+) lead with a 21 W bulb to terminal 2 and the negative (-) lead to

terminal 1 of the solenoid valve connector, then check the movement of the valve.

OK:

The solenoid makes an operating sound.

NG ▶ **REPLACE SHIFT SOLENOID VALVE SLT**

OK ▼

3.	**INSPECT TRANSMISSION VALVE BODY ASSEMBLY**

OK:

There are no foreign objects on each valve.

NG ▶ **REPAIR OR REPLACE TRANSMISSION VALVE BODY ASSEMBLY**

OK ▼

4.	**INSPECT TORQUE CONVERTER CLUTCH ASSEMBLY**

OK:

The torque converter clutch operates normally.

NG ▶ **REPLACE TORQUE CONVERTER CLUTCH ASSEMBLY**

OK ▶ **REPAIR OR REPLACE AUTOMATIC TRANSAXLE ASSEMBLY**

Last Modified: 3-10-2010	6.4 C	**From:** 200901
Model Year: 2010	**Model:** Corolla	**Doc ID:** RM0000015W104AX
Title: U250E AUTOMATIC TRANSMISSION / TRANSAXLE: AUTOMATIC TRANSAXLE SYSTEM: P2716: Pressure Control Solenoid "D" Electrical (Shift Solenoid Valve SLT) (2010 Corolla)		

DTC	**P2716**	**Pressure Control Solenoid "D" Electrical (Shift Solenoid Valve SLT)**

DESCRIPTION

The linear solenoid valve (SLT) controls the transmission line pressure for smooth transmission operation based on signals from the throttle position sensor and the vehicle speed sensor. The ECM adjusts the duty cycle of the SLT solenoid valve to control hydraulic line pressure coming from the primary regulator valve. Appropriate line pressure assures smooth shifting with varying engine outputs.

(*): Duty Ratio

The duty ratio is the ratio of the period of continuity in one cycle.

For example, if A is the period of continuity in one cycle, and B is the period of non-continuity, then

Duty Ratio=A/(A + B) x 100(%)

DTC NO.	DTC DETECTION CONDITION	TROUBLE AREA
P2716	Open or short is detected in shift solenoid valve SLT circuit for 1 second or more while driving (1-trip detecting logic).	• Open or short in shift solenoid valve SLT circuit • Shift solenoid valve SLT • ECM

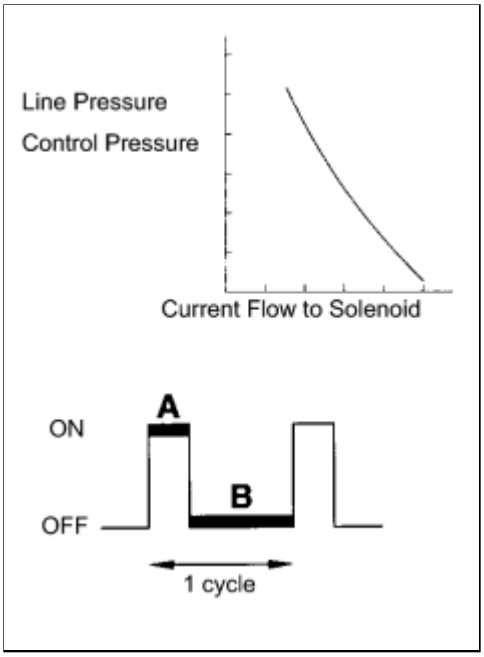

MONITOR DESCRIPTION

When an open or short in the linear solenoid valve (SLT) circuit is detected, the ECM interprets this as a fault. The ECM will turn on the MIL and store the DTC.

MONITOR STRATEGY

Related DTCs	P2716: Shift solenoid valve SLT/Range check
Required sensors/Components	Shift solenoid valve SLT
Frequency of operation	Continuous
Duration	1 sec.
MIL operation	Immediate
Sequence of operation	None

TYPICAL ENABLING CONDITIONS

The monitor will run whenever this DTC is not present.	None
Solenoid current cut status	Not cut
Battery voltage	11 V or more
Ignition switch	ON
Starter	OFF
CPU commanded duty ratio to SLT	19% or more

TYPICAL MALFUNCTION THRESHOLDS

Solenoid status from IC	Fail (Open or short)

COMPONENT OPERATING RANGE

Shift solenoid valve SLT	Resistance: 5.0 to 5.6 Ω at 20°C (68°F)

WIRING DIAGRAM

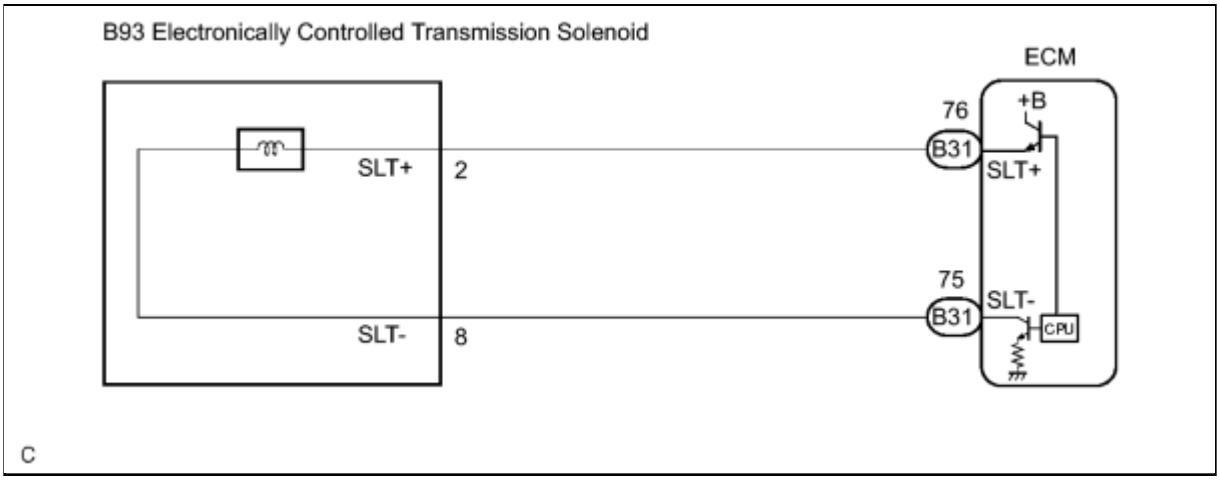

INSPECTION PROCEDURE

NOTICE:

Perform the universal trip to clear permanent DTCs INFO **.**

PROCEDURE

1.	**INSPECT TRANSMISSION WIRE (SLT)**

(a) Disconnect the transmission wire connector from the transaxle.

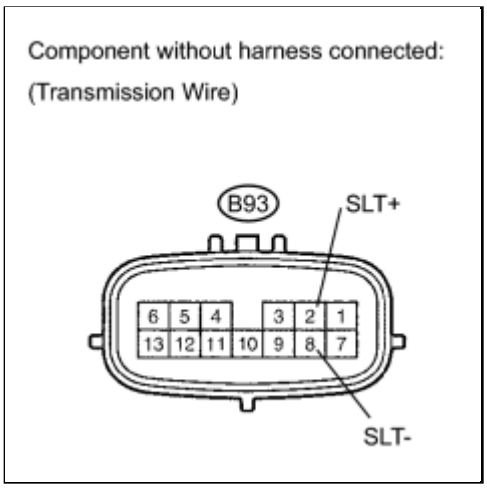

(b) Measure the resistance according to the value(s) in the table below.

Standard resistance:

TESTER CONNECTION	CONDITION	SPECIFIED CONDITION
2 (SLT+) - 8 (SLT-)	20°C (68°F)	5.0 to 5.6 Ω

(c) Measure the resistance according to the value(s) in the table below.

Standard resistance (Check for short):

TESTER CONNECTION	CONDITION	SPECIFIED CONDITION
2 (SLT+) - Body ground	Always	10 kΩ or higher
8 (SLT-) - Body ground	Always	

NG ▶ **INSPECT SHIFT SOLENOID VALVE SLT**

OK ▼

2.	**CHECK HARNESS AND CONNECTOR (TRANSMISSION WIRE - ECM)**

(a) Connect the transmission wire connector to the transaxle.

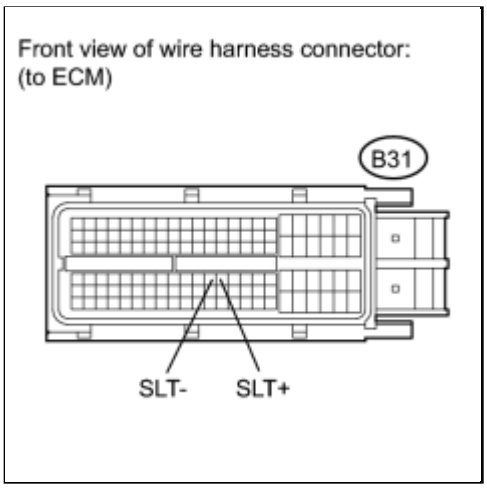

(b) Disconnect the ECM connector.

(c) Measure the resistance according to the value(s) in the table below.

Standard resistance:

TESTER CONNECTION	CONDITION	SPECIFIED CONDITION
B31-76 (SLT+) - B31-75 (SLT-)	20°C (68°F)	5.0 to 5.6 Ω

(d) Measure the resistance according to the value(s) in the table below.

Standard resistance (Check for short):

TESTER CONNECTION	CONDITION	SPECIFIED CONDITION
B31-76 (SLT+) - Body ground	Always	10 kΩ or higher
B31-75 (SLT-) - Body ground	Always	↑

NG ▶ **REPAIR OR REPLACE HARNESS OR CONNECTOR**

OK ▶ **REPLACE ECM**

3.	**INSPECT SHIFT SOLENOID VALVE SLT**

(a) Remove the shift solenoid valve (SLT).

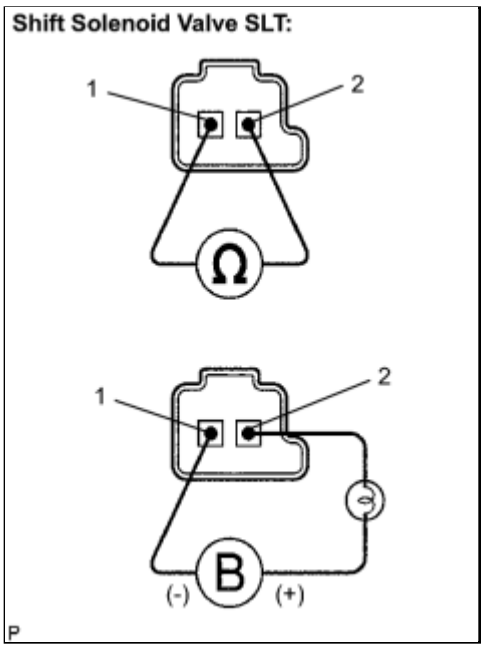

(b) Measure the resistance according to the value(s) in the table below.

Standard resistance :

TESTER CONNECTION	CONDITION	SPECIFIED CONDITION
1 - 2	20°C (68°F)	5.0 to 5.6 Ω

(c) Connect the positive (+) lead with a 21 W bulb to terminal 2 and the negative (-) lead to terminal 1 of the solenoid valve connector, then check the movement of the valve.

OK:

The solenoid makes an operating sound.

NG ▶ **REPLACE SHIFT SOLENOID VALVE SLT**

OK ▶ **REPAIR OR REPLACE TRANSMISSION WIRE**

Last Modified: 3-10-2010	6.4 C	**From:** 200901
Model Year: 2010	**Model:** Corolla	**Doc ID:** RM0000015W9029X
Title: U250E AUTOMATIC TRANSMISSION / TRANSAXLE: AUTOMATIC TRANSAXLE SYSTEM: P2769,P2770: Torque Converter Clutch Solenoid Circuit Low (Shift Solenoid Valve DSL) (2010 Corolla)		

DTC	**P2769**	**Torque Converter Clutch Solenoid Circuit Low (Shift Solenoid Valve DSL)**

DTC	**P2770**	**Torque Converter Clutch Solenoid Circuit High (Shift Solenoid Valve DSL)**

DESCRIPTION

The shift solenoid valve DSL is turned "ON" and "OFF" by signals from the ECM in order to control the hydraulic pressure operation, the lock-up relay valve, which then controls operation of the lock-up clutch.

DTC NO.	DTC DETECTION CONDITION	TROUBLE AREA
P2769	ECM detects short in solenoid valve DSL circuit (0.1 sec.) when solenoid valve DSL is operated (2-trip detection logic)	• Short in shift solenoid valve DSL circuit • Shift solenoid valve DSL • ECM
P2770	ECM detects open in solenoid valve DSL circuit (0.1 sec.) when solenoid valve DSL is not operated (2-trip detection logic)	• Open in shift solenoid valve DSL circuit • Shift solenoid valve DSL • ECM

MONITOR DESCRIPTION

Torque converter lock-up is controlled by the ECM based on engine rpm, engine load, engine temperature, vehicle speed, transmission temperature, and shift range selection. The ECM determines the lock-up status of the torque converter by comparing the engine rpm (NE) to the input turbine rpm (NT). The ECM calculates the actual transmission gear by comparing input turbine rpm (NT) to counter gear rpm (NC). When conditions are appropriate, the ECM requests "lock-up" by applying control voltage to the shift solenoid DSL. When the DSL is opened, it applies pressure to the lock-up relay valve and locks the torque converter clutch. If the ECM detects an open or short in the DSL solenoid circuit, the ECM interprets this as a fault in the DSL solenoid or circuit. The ECM will turn on the MIL

and store the DTC.

MONITOR STRATEGY

Related DTCs	P2769: Shift solenoid valve DSL/Range check (Low resistance) P2770: Shift solenoid valve DSL/Range check (High resistance)
Required sensors/Components	Shift solenoid valve DSL
Frequency of operation	Continuous
Duration	0.064 sec. or more
MIL operation	2 driving cycles
Sequence of operation	None

TYPICAL ENABLING CONDITIONS

P2769: Range check (Low resistance):

The monitor will run whenever this DTC is not present.	None
Shift solenoid valve DSL	ON
Solenoid current cut status	Not cut
Battery voltage	8 V or more
Ignition switch	ON
Starter	OFF

P2770: Range check (High resistance):

The monitor will run whenever this DTC is not present.	None
Shift solenoid valve DSL	ON
Battery voltage	8 V or more
Ignition switch	ON
Starter	OFF

TYPICAL MALFUNCTION THRESHOLDS

P2769: Range check (Low resistance):

Shift solenoid valve DSL resistance	8 Ω or less

P2770: Range check (High resistance):

Shift solenoid valve DSL resistance	100 kΩ or more

COMPONENT OPERATING RANGE

Shift solenoid valve DSL	Resistance: 11 to 13 Ω at 20°C (68°F)

WIRING DIAGRAM

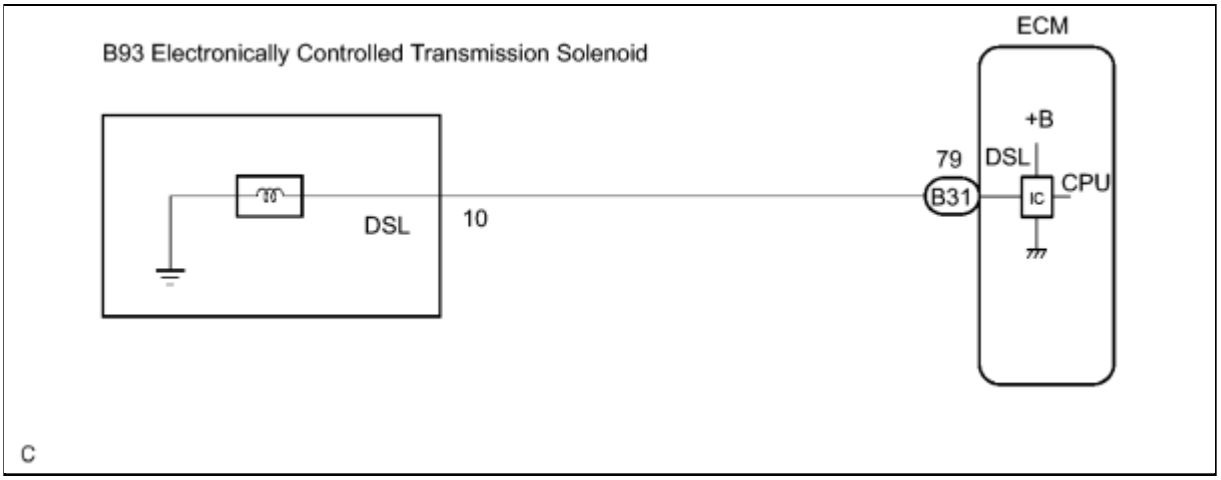

INSPECTION PROCEDURE

NOTICE:

Perform the universal trip to clear permanent DTCs INFO **.**

PROCEDURE

1.	**INSPECT TRANSMISSION WIRE (DSL)**

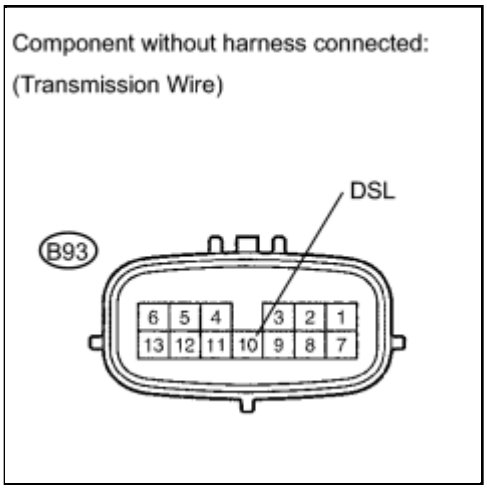

(a) Disconnect the transmission wire connector from the transaxle.

(b) Measure the resistance according to the value(s) in the table below.

Standard resistance:

TESTER CONNECTION	CONDITION	SPECIFIED CONDITION
10 (DSL) - Body ground	20°C (68°F)	11 to 13 Ω

NG ▶ **INSPECT SHIFT SOLENOID VALVE DSL**

OK ▼

2.	CHECK HARNESS AND CONNECTOR (TRANSMISSION WIRE - ECM)

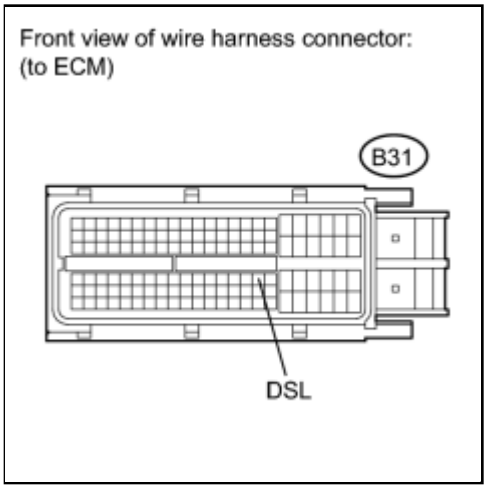

(a) Connect the transmission wire connector.

(b) Disconnect the ECM connector.

(c) Measure the resistance according to the value(s) in the table below.

Standard resistance:

TESTER CONNECTION	CONDITION	SPECIFIED CONDITION
C24-79 (DSL) - Body ground	20°C (68°F)	11 to 13 Ω

NG ▶ **REPAIR OR REPLACE HARNESS OR CONNECTOR**

OK ▶ **REPLACE ECM**

3.	INSPECT SHIFT SOLENOID VALVE DSL

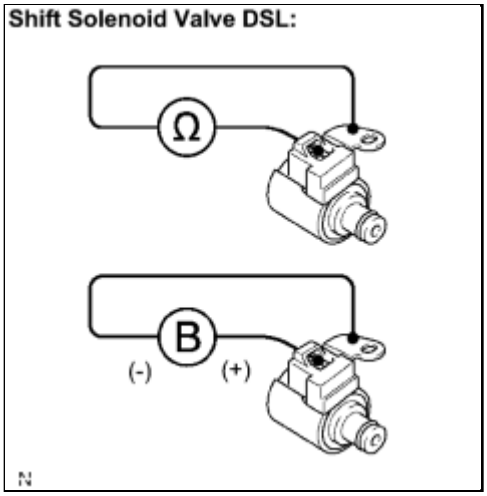

(a) Remove the shift solenoid valve DSL.

(b) Measure the resistance according to the value(s) in the table below.

Standard resistance:

TESTER CONNECTION	CONDITION	SPECIFIED CONDITION
Solenoid Connector (DSL) - Solenoid Body (DSL)	20°C (68°F)	11 to 13 Ω

(c) Connect the positive (+) lead to the terminal of the solenoid connector, and the negative (-) lead to the solenoid body.

OK:

The solenoid valve makes an operating sound.

NG ▶ **REPLACE SHIFT SOLENOID VALVE DSL**

OK ▶ **REPAIR OR REPLACE TRANSMISSION WIRE**

Last Modified: 3-10-2010	6.4 J	**From:** 200901
Model Year: 2010	**Model:** Corolla	**Doc ID:** RM0000015Y101GX
Title: U250E AUTOMATIC TRANSMISSION / TRANSAXLE: AUTOMATIC TRANSAXLE SYSTEM: Transmission Control Switch Circuit (2010 Corolla)		

Transmission Control Switch Circuit

DESCRIPTION

When moving the shift lever into the S position using the transmission control switch, it is possible to switch the shift range position between "1" (first range) and "5" (fifth range).

Shifting up "+" once raises one shift range position, and shifting down "-" lowers one shift range position.

WIRING DIAGRAM

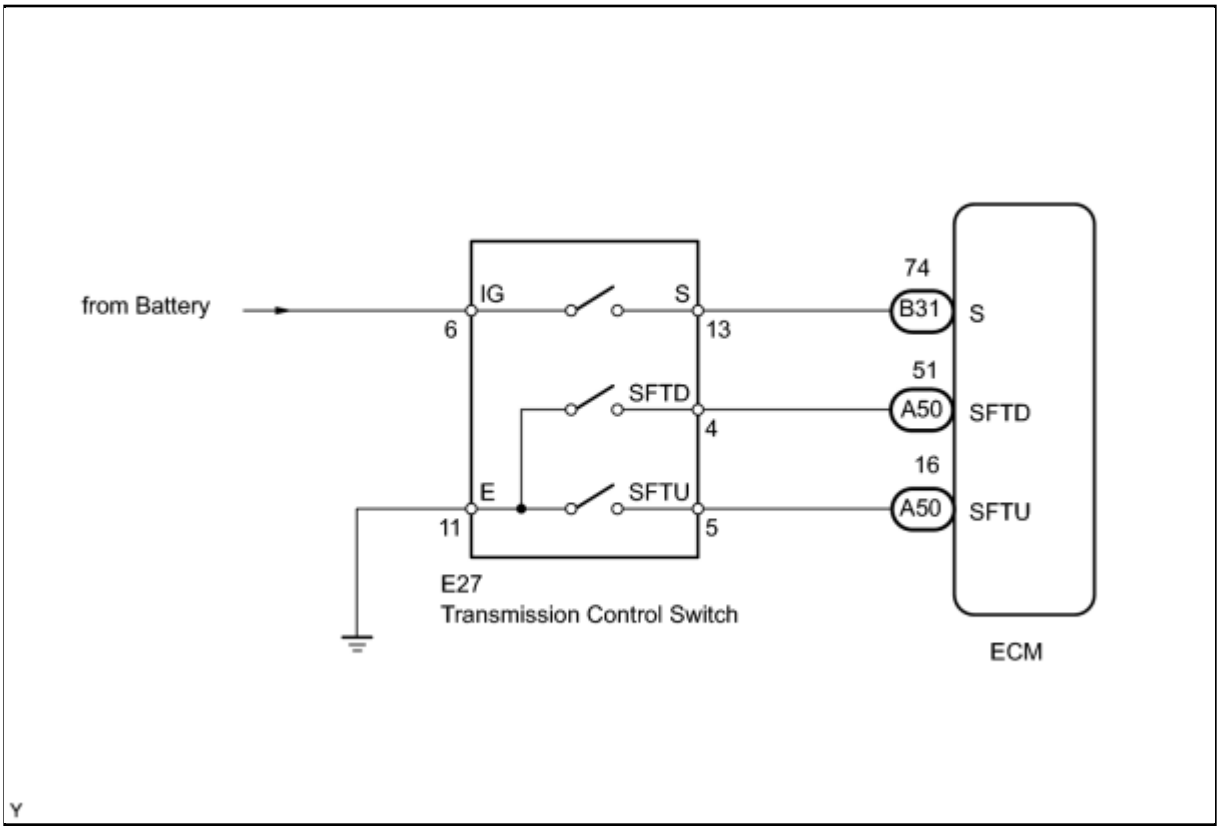

INSPECTION PROCEDURE

PROCEDURE

1.	CHECK HARNESS AND CONNECTOR (BATTERY - TRANSMISSION CONTROL SWITCH)

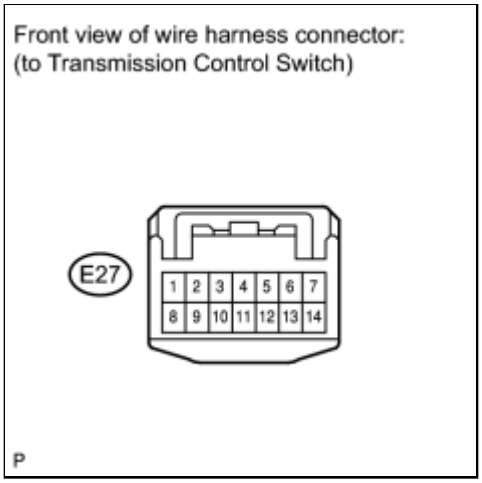

(a) Disconnect the transmission control switch connector of shift lock control unit assembly.

(b) Measure the voltage according to the value(s) in the table below.

Standard voltage:

TESTER CONNECTION	SWITCH CONDITION	SPECIFIED CONDITION
6 - Body ground	IG switch ON	11 to 14 V
	IG switch OFF	Below 1 V

NG ▶ **REPAIR OR REPLACE HARNESS OR CONNECTOR**

OK ▼

2.	CHECK HARNESS AND CONNECTOR (TRANSMISSION CONTROL SWITCH - BODY GROUND)

(a) Measure the resistance according to the value(s) in the table below.

Standard resistance:

TESTER CONNECTION	CONDITION	SPECIFIED CONDITION
11 - Body ground	Always	Below 1 Ω

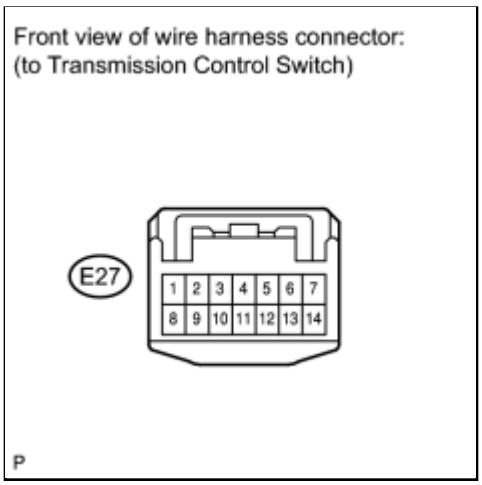

NG ▶ **REPAIR OR REPLACE HARNESS OR CONNECTOR**

OK ▼

3.	**INSPECT SHIFT LOCK CONTROL UNIT (TRANSMISSION CONTROL SWITCH)**

(a) Measure resistance between each terminal of shift lock control unit assembly when the shift lever is moved to each position.

Standard resistance (Check for short):

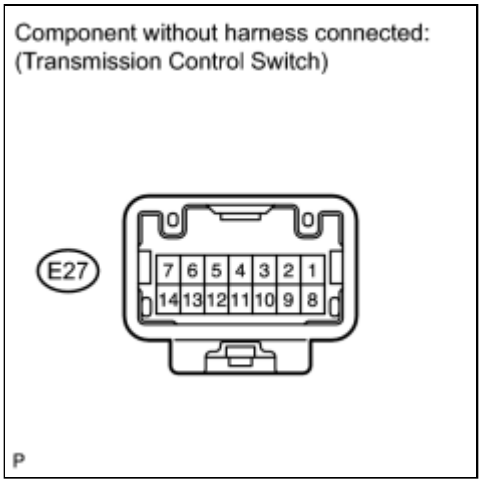

TESTER CONNECTION	SHIFT POSITION	SPECIFIED CONDITION
6 - 13	S, "+" and "-"	Below 1 Ω
	Except S, "+" and "-"	10 kΩ or higher
5 - 11	Press continuously "+" (Up shift)	Below 1 Ω
	S	10 kΩ or higher
4 - 11	Press continuously "-" (Down shift)	Below 1 Ω
	S	10 kΩ or higher

NG ▶ REPLACE SHIFT LOCK CONTROL UNIT (TRANSMISSION CONTROL SWITCH)

OK ▼

4.	CHECK HARNESS AND CONNECTOR (TRANSMISSION CONTROL SWITCH - ECM)

(a) Connect the transmission control switch connector of shift lock control unit assembly.

(b) Disconnect the ECM connector.

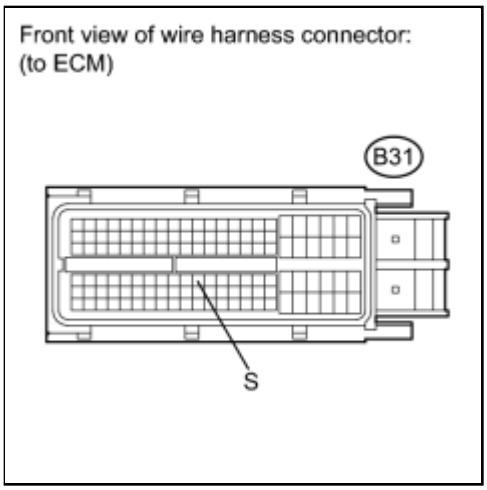

(c) Turn the ignition switch to ON, and measure the voltage according to the value(s) in the table below when the shift lever is moved to each position.

Standard voltage:

TESTER CONNECTION	SHIFT POSITION	SPECIFIED CONDITION
B31-74 (S) - Body ground	S, "+" and "-"	11 to 14 V
	Except S, "+" and "-"	Below 1 V

(d) Turn the ignition switch off.

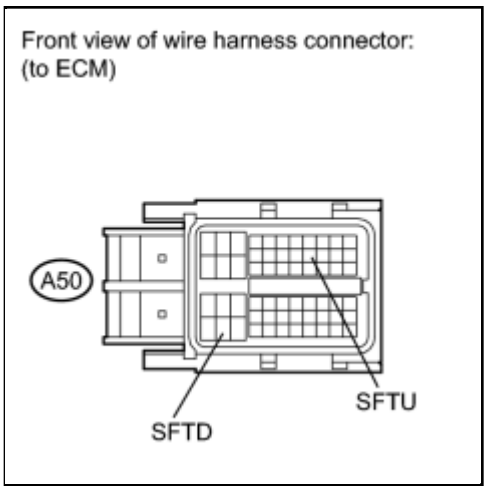

(e) Disconnect the ECM connector.

(f) Measure the resistance according to the value(s) in the table below when the shift lever is

moved to each position.

Standard resistance (Check for short):

TESTER CONNECTION	SHIFT POSITION	SPECIFIED CONDITION
A50-16 (SFTU) - Body ground	Press continuously "+" (Up shift)	Below 1 Ω
	S	10 kΩ or higher
A50-51 (SFTD) - Body ground	Press continuously "-" (Down shift)	Below 1 Ω
	S	10 kΩ or higher

NG ▶ **REPAIR OR REPLACE HARNESS OR CONNECTOR**

OK ▶ **PROCEED TO NEXT CIRCUIT INSPECTION SHOWN IN PROBLEM SYMPTOMS TABLE**

Last Modified: 3-10-2010	6.4 L	**From:** 200901
Model Year: 2010	**Model:** Corolla	**Doc ID:** RM000000U9U07WX
Title: U341E AUTOMATIC TRANSMISSION / TRANSAXLE: AUTOMATIC TRANSAXLE SYSTEM: PRECAUTION (2010 Corolla)		

PRECAUTION

NOTICE:

- Perform the RESET MEMORY (AT initialization) when replacing the automatic transaxle assembly, engine assembly or ECM INFO .
- Perform the REGISTRATION (VIN registration) when replacing the ECM INFO

HINT:

RESET MEMORY can not be completed by only disconnecting the battery cable.

1. EXPRESSIONS OF IGNITION SWITCH

(a) The type of ignition switch used on this model differs according to the specifications of the vehicle. The expressions listed in the table below are used in this section.

SWITCH TYPE		IGNITION SWITCH (POSITION)	ENGINE SWITCH (CONDITION)
Expression	Ignition switch off	LOCK	Off
	Ignition switch ON	ON	On (IG)
	Ignition switch ACC	ACC	On (ACC)
	Engine start	START	Start

2. REMOVAL AND INSTALLATION PROCEDURE PRECAUTIONS

(a) The automatic transaxle is composed of highly precision-finished parts which need careful inspection before reassembly. Even a small nick could cause fluid leakage or affect the performance. The instructions here are organized so that you work on only one component group at a time. This will help avoid confusion caused by similar-looking parts of different sub-assemblies being on your workbench at the same time. The component groups are inspected and repaired from the converter housing side. Complete the inspection, repair and reassembly before proceeding to the next component group as much as possible. If a defect is found in a certain component group during reassembly, inspect and repair this group immediately. If a component group cannot be assembled because some parts are being ordered, be sure to keep all parts of the group in a separate container while proceeding with disassembly, inspection, repair and reassembly of other component groups. Recommended: Toyota Genuine ATF WS

(b) All disassembled parts should be washed clean and any fluid passages and holes should be blown through with compressed air.

(c) Dry all parts with compressed air. Never use a piece of cloth to dry them.

(d) When using compressed air, always aim away from yourself to prevent accidentally spraying ATF or kerosene in your face.

(e) Only recommended automatic transaxle fluid or kerosene should be used for cleaning.

(f) After cleaning, the parts should be arranged in the correct order for efficient inspection, repair, and reassembly.

(g) New discs for the brakes and clutches that are to be used for replacement must be soaked in ATF for at least 15 minutes before reassembly.

(h) All oil seal rings, clutch discs, clutch plates, rotating parts, and sliding surfaces should be coated with ATF prior to reassembly.

(i) All gaskets and rubber O-rings should be replaced with new ones.

(j) Do not apply adhesive cements to gaskets and similar parts.

(k) Make sure that the ends of a snap ring are not aligned with one of the cutouts and are installed in the groove correctly.

(l) When replacing a worn bushing, the sub-assembly containing the bushing must also be replaced.

(m) Check thrust bearings and races for wear or damage. Replace them as necessary.

(n) When working with FIPG material, you must observe the following:

- Using a razor blade and a gasket scraper, remove all the old packing (FIPG) material from the gasket surface.
- Thoroughly clean all components to remove any loose material.
- Clean both sealing surfaces with a non-residue solvent.
- Parts must be reassembled within 10 minutes of application. Otherwise, the packing (FIPG) material must be removed and reapplied.

Last Modified: 3-10-2010	6.4 D	**From:** 200901
Model Year: 2010	**Model:** Corolla	**Doc ID:** RM000000W7I0BNX
Title: U341E AUTOMATIC TRANSMISSION / TRANSAXLE: AUTOMATIC TRANSAXLE SYSTEM: DEFINITION OF TERMS (2010 Corolla)		

DEFINITION OF TERMS

TERM	DEFINITION
Monitor description	Description of what the ECM monitors and how it detects malfunctions (monitoring purpose and its details).
Related DTCs	Diagnostic code
Typical enabling condition	Preconditions that allow the ECM to detect malfunctions. With all preconditions satisfied, the ECM sets the DTC when the monitored value(s) exceeds the malfunction threshold(s).
Sequence of operation	The priority order that is applied to monitoring, if multiple sensors and components are used to detect the malfunction. While another sensor is being monitored, the next sensor or component will not be monitored until the previous monitoring has concluded.
Required sensor/components	The sensors and components that are used by the ECM to detect malfunctions.
Frequency of operation	The number of times that the ECM checks for malfunctions per driving cycle. "Once per driving cycle" means that the ECM detects malfunction only one time during a single driving cycle. "Continuous" means that the ECM detects malfunction every time when enabling condition is met.
Duration	The minimum time that the ECM must sense a continuous deviation in the monitored value(s) before setting a DTC. This timing begins after the "typical enabling conditions" are met.
Malfunction thresholds	Beyond this value, the ECM will conclude that there is a malfunction and set a DTC.
MIL operation	MIL illumination timing after a defect is detected. "Immediately" means that the ECM illuminates MIL the instant the ECM determines that there is a malfunction. "2 driving cycle" means that the ECM illuminates MIL if the same malfunction is detected again in the 2nd driving cycle.
Component operating range	Normal operation range of sensors and solenoids under normal driving conditions. Use these ranges as a reference. They cannot be used to judge if a sensor or solenoid is defective or not.

Last Modified: 3-10-2010	6.4 R	**From:** 200901
Model Year: 2010	**Model:** Corolla	**Doc ID:** RM000000W720AJX
Title: U341E AUTOMATIC TRANSMISSION / TRANSAXLE: AUTOMATIC TRANSAXLE SYSTEM: PARTS LOCATION (2010 Corolla)		

PARTS LOCATION

ILLUSTRATION

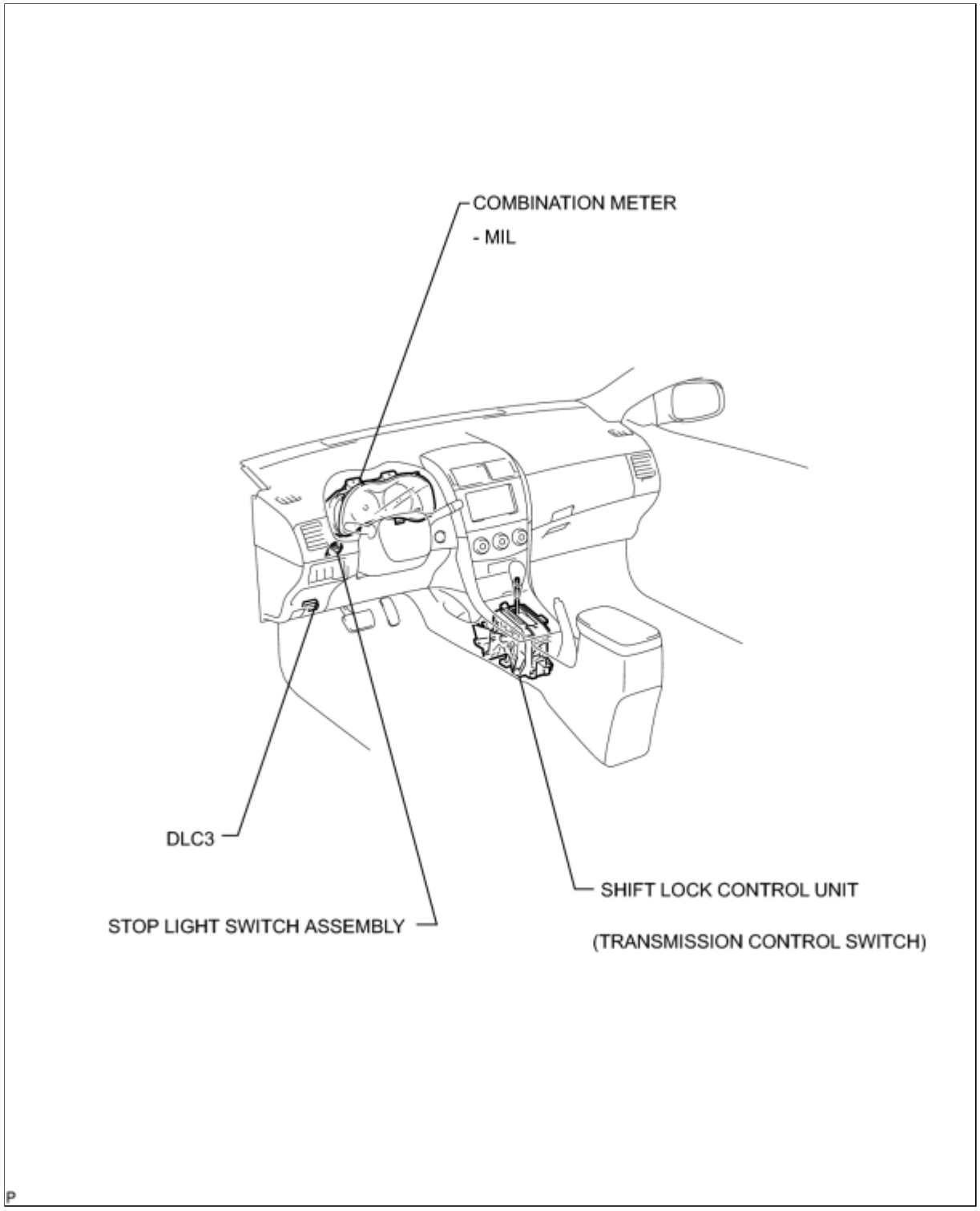

P

ILLUSTRATION

VALVE BODY ASSEMBLY:

SHIFT SOLENOID VALVE (S1, S2, ST, SLT, SLU, NT)

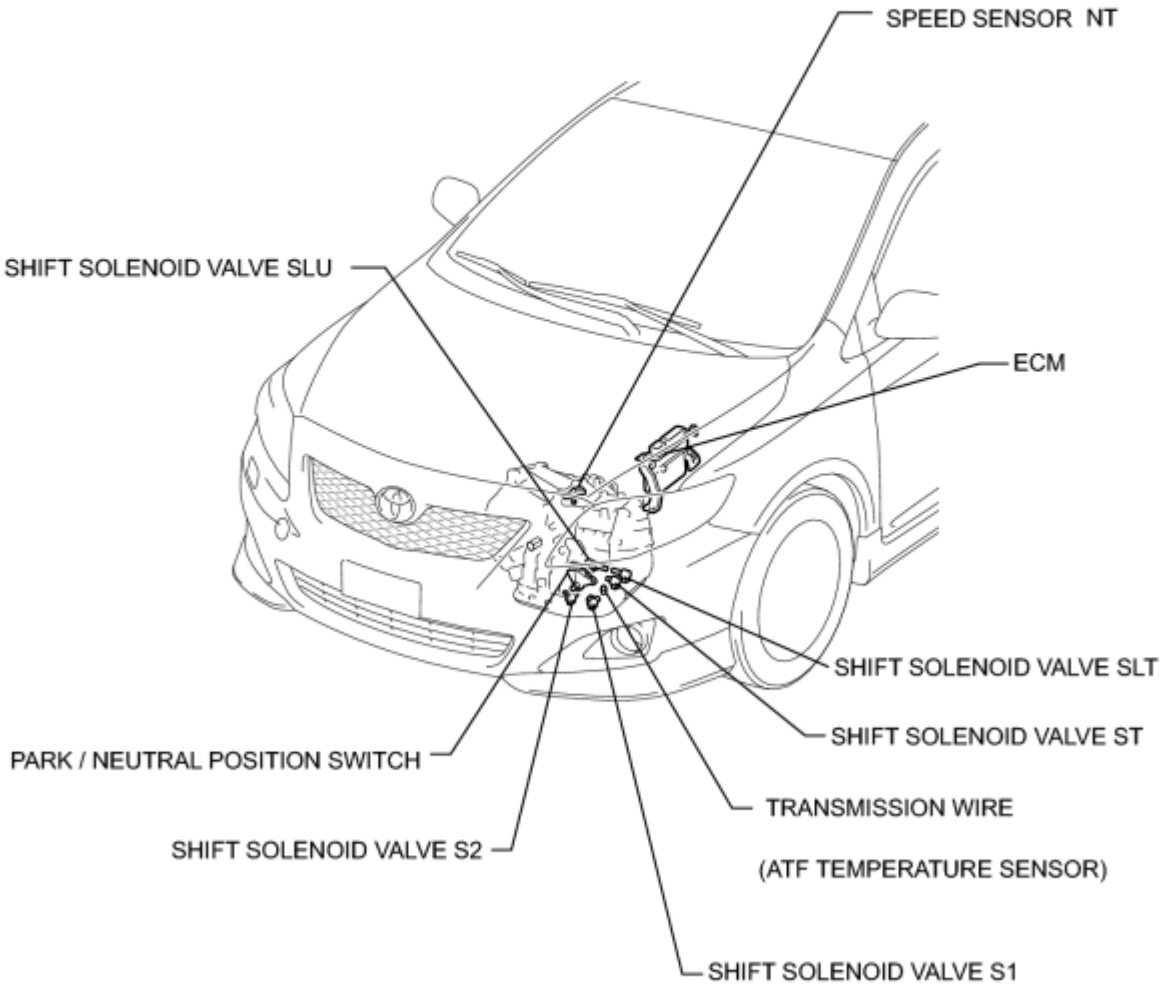

P

Last Modified: 3-10-2010	6.4 U	**From:** 200901
Model Year: 2010	**Model:** Corolla	**Doc ID:** RM000000W7D09GX
Title: U341E AUTOMATIC TRANSMISSION / TRANSAXLE: AUTOMATIC TRANSAXLE SYSTEM: SYSTEM DIAGRAM (2010 Corolla)		

SYSTEM DIAGRAM

The configuration of the electronic control system in the U341E automatic transaxle is as shown in the following chart.

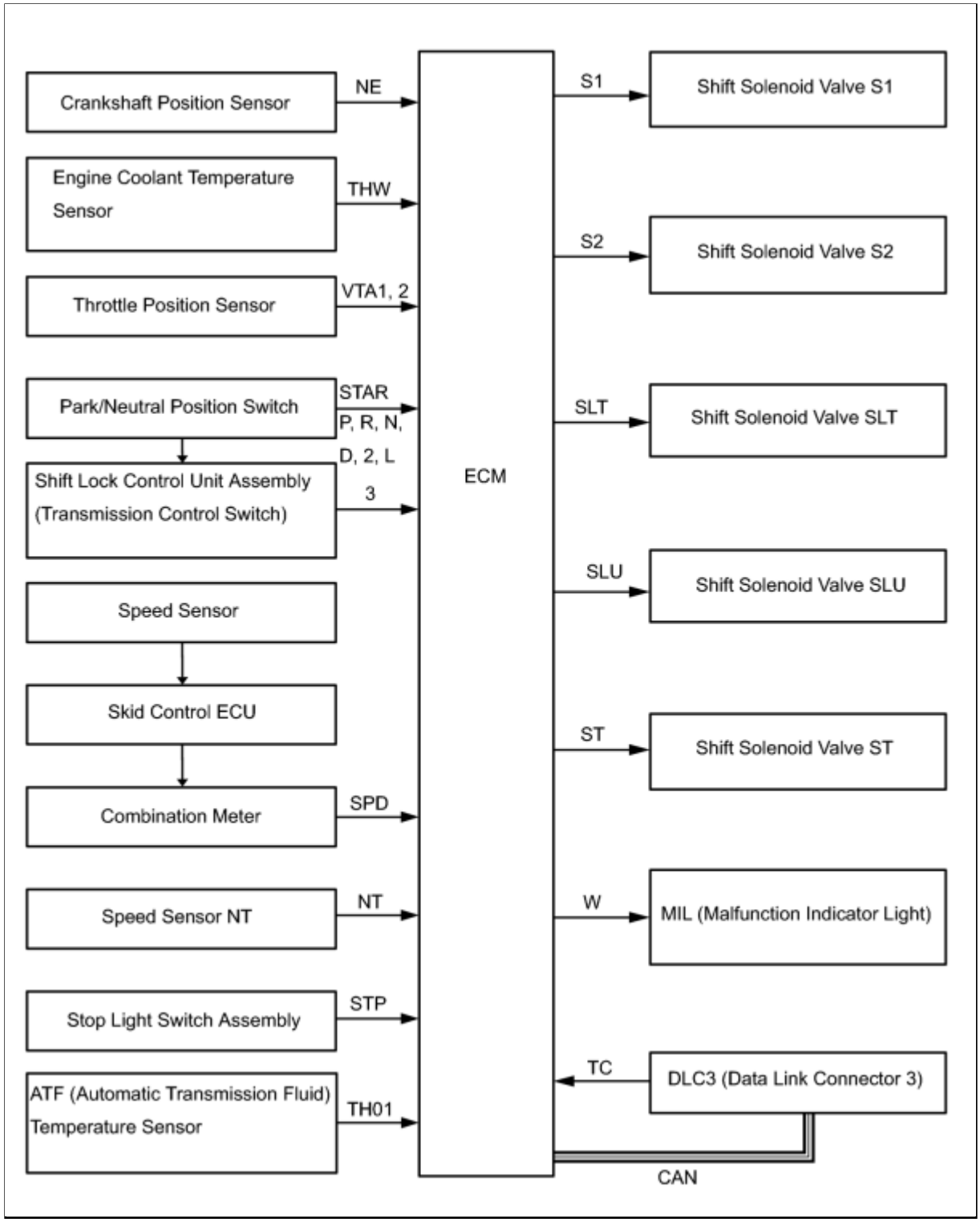
Crankshaft Position Sensor
NE
Engine Coolant Temperature Sensor
THW
Throttle Position Sensor
VTA1, 2
Park/Neutral Position Switch
STAR
P, R, N, D, 2, L
Shift Lock Control Unit Assembly (Transmission Control Switch)
3
Speed Sensor
Skid Control ECU
Combination Meter
SPD
Speed Sensor NT
NT
Stop Light Switch Assembly
STP
ATF (Automatic Transmission Fluid) Temperature Sensor
TH01
ECM
S1
Shift Solenoid Valve S1
S2
Shift Solenoid Valve S2
SLT
Shift Solenoid Valve SLT
SLU
Shift Solenoid Valve SLU
ST
Shift Solenoid Valve ST
W
MIL (Malfunction Indicator Light)
TC
DLC3 (Data Link Connector 3)
CAN

Last Modified: 3-10-2010	6.4 D	**From:** 200901
Model Year: 2010	**Model:** Corolla	**Doc ID:** RM000000W6Z0DIX
Title: U341E AUTOMATIC TRANSMISSION / TRANSAXLE: AUTOMATIC TRANSAXLE SYSTEM: HOW TO PROCEED WITH TROUBLESHOOTING (2010 Corolla)		

HOW TO PROCEED WITH TROUBLESHOOTING

HINT:

- The ECM of this system is connected to the CAN and multiplex communication system. Therefore, before starting troubleshooting, make sure to check that there is no trouble in the CAN and multiplex communication.
- *: Use the Techstream.

1.	**Vehicle Brought to Workshop**

NEXT

2.	**Customer Problem Analysis**

NEXT

3.	**Inspect Battery Voltage**

Standard voltage:
11 to 14 V

If the voltage is below 11 V, recharge or replace the battery before proceeding.

NEXT

4.	Connect the Techstream to the DLC3*

NEXT

5.	Check and Clear DTCs and Freeze Frame Data*

HINT: INFO

NEXT

6.	Visual Inspection

NEXT

7.	Setting the Check Mode Diagnosis*

HINT: INFO

NEXT

8.	Problem Symptom Confirmation

HINT: INFO

Result:

RESULT	PROCEED TO
Symptom does not occur	A
Symptom occurs	B

B ▶ **Go to step 10**

A
▼

9.	**Symptom Simulation**

HINT: INFO

NEXT
▼

10.	**DTC Check***

HINT: INFO

Result:

RESULT	PROCEED TO
DTC is not output	A
DTC is output	B

B ▶ **Go to step 18**

A
▼

11.	Basic Inspection

HINT: INFO , INFO and INFO

NG ▶ Go to step 21

OK ▼

12.	Mechanical System Test

HINT: INFO

NG ▶ Go to step 17

OK ▼

13.	Hydraulic Test

HINT: INFO

NG ▶ Go to step 17

OK ▼

14.	Manual Shifting Test

HINT: INFO

NG ▶ Go to step 16

OK ▼

15.	Problem Symptoms Table Chapter 1

HINT: INFO

NG ▶ Go to step 19

OK ▼

16.	Problem Symptoms Table Chapter 2

HINT: INFO

NEXT ▼

17.	Part Inspection

NEXT ▶ Go to step 21

18.	DTC Chart

HINT: INFO

NEXT

19.	Circuit Inspection

NEXT

20.	Identification of Problem

NEXT

21.	Repair or Replace

NEXT

22.	Confirmation Test

NEXT End

Last Modified: 3-10-2010	6.4 D	**From:** 200901
Model Year: 2010	**Model:** Corolla	**Doc ID:** RM000000W750BLX
Title: U341E AUTOMATIC TRANSMISSION / TRANSAXLE: AUTOMATIC TRANSAXLE SYSTEM: SYSTEM DESCRIPTION (2010 Corolla)		

SYSTEM DESCRIPTION

1. SYSTEM DESCRIPTION

(a) The ECT (Electronic controlled automatic transmission/transaxle) is an automatic transmission/transaxle that electronically controls shift timing using the ECM. The ECM detects electrical signals that indicate engine and driving conditions, and controls the shift point, based on driver habits and road conditions. As a result, fuel efficiency and power transaxle performance are improved.

Shift shock has been reduced by controlling the engine and transaxle simultaneously.

In addition, the ECT has features such as follows:

- Diagnostic function
- Fail-safe function when a malfunction occurs

Last Modified: 3-10-2010	6.4 D	**From:** 200901
Model Year: 2010	**Model:** Corolla	**Doc ID:** RM000000W790AWX
Title: U341E AUTOMATIC TRANSMISSION / TRANSAXLE: AUTOMATIC TRANSAXLE SYSTEM: ROAD TEST (2010 Corolla)		

ROAD TEST

1. PROBLEM SYMPTOM CONFIRMATION

(a) Based on the result of the customer problem analysis, try to reproduce the symptoms. If the problem is that the transaxle does not shift up, shift down, or the shift point is too high or too low, conduct the following road test referring to the automatic shift schedule and simulate the problem symptoms.

2. ROAD TEST

NOTICE:

Perform the test at the ATF (Automatic Transmission Fluid) temperature 50 to 80°C (122 to 176°F) in the normal operation.

(a) D position test:

Shift into the D position and fully depress the accelerator pedal and check the following points.

(1) Check up-shift operation.

Check that 1 → 2, 2 → 3 and 3 → 4th up-shifts take place, and that the shift points conform to the automatic shift schedule INFO.

HINT:

4th Gear Up-shift Prohibition Control

- Engine coolant temperature is 40°C (104°F) or less and vehicle speed is at 70 km/h (43 mph) or less.
- ATF temperature is 0°C (32°F) or less.

4th Gear Lock-up Prohibition Control

- Brake pedal is depressed.
- Accelerator pedal is released.
- Engine coolant temperature is 60°C (140°F) or less.
- ATF temperature is 10°C (50°F) or less.

(2) Check for shift shock and slip.

Check for shock and slip at the 1 → 2, 2 → 3 and 3 → 4th up-shifts.

(3) Check for abnormal noise and vibration.

Check for abnormal noise and vibration when up-shifting from 1 → 2, 2 → 3 and 3 → 4th while driving with the shift lever in the D position, and check while driving in the lock-up condition.

HINT:

The check for the cause of abnormal noise and vibration must be done thoroughly as it could also be due to loss of balance in the differential, torque converter clutch, etc.

(4) Check kick-down operation.

Check vehicle speeds when the 2nd to 1st, 3rd to 2nd and 4th to 3rd kick-downs take place

while driving with the shift lever in the D position. Confirm that each speed is within the applicable vehicle speed range indicated in the automatic shift schedule INFO .

(5) Check abnormal shock and slip at kick-down.

(6) Check the lock-up mechanism.

- Drive in D position (4th gear), at a steady speed (lock-up ON).
- Lightly depress the accelerator pedal and check that the engine speed does not change abruptly.

HINT:

If there is a big jump in engine speed, there is no lock-up.

(b) 3 position test:

Shift into the 3 position and fully depress the accelerator pedal and check the following points.

(1) Check up-shift operation.

Check that the 1 → 2 and 2 → 3 up-shift take place and that the shift point conforms to the automatic shift schedule INFO .

HINT:

There is no 4th up-shift in the 3 position.

(2) Check engine braking.

While running in the 3 position and 3rd gear, release the accelerator pedal and check the engine braking effect.

(3) Check for abnormal noise during acceleration and deceleration, and for shock at up-shift and down-shift.

(c) 2 position test:

Shift into the 2 position and fully depress the accelerator pedal and check the following points.

(1) Check up-shift operation.

Check that the 1 → 2 up-shift takes place and that the shift point conforms to the automatic shift schedule INFO .

HINT:

There is no 3rd up-shift and lock-up in the 2 position.

(2) Check engine braking.

While running in the 2 position and 2nd gear, release the accelerator pedal and check the engine braking effect.

(3) Check for abnormal noise during acceleration and deceleration, and for shock at up-shift and down-shift.

(d) L position test:

Shift into the L position and fully depress the accelerator pedal and check the following points.

(1) Check no up-shift.

While running in the L position, check that there is no up-shift to 2nd gear.

HINT:

There is no lock-up in the L position.

(2) Check engine braking.

While running in the L position, release the accelerator pedal and check the engine braking effect.

(3) Check for abnormal noise during acceleration and deceleration.

(e) R position test:

Shift into the R position, lightly depress the accelerator pedal, and check that the vehicle moves backward without any abnormal noise or vibration.

CAUTION:

Before conducting this test ensure that the test area is free from people and obstruction.

(f) P position test:

Stop the vehicle on the grade (more than 5°) and after shifting into the P position, release the parking brake. Then, check that the parking lock pawl holds the vehicle in place.

Last Modified: 3-10-2010	6.4 D	**From:** 200901
Model Year: 2010	**Model:** Corolla	**Doc ID:** RM000000W7A0C6X
Title: U341E AUTOMATIC TRANSMISSION / TRANSAXLE: AUTOMATIC TRANSAXLE SYSTEM: MECHANICAL SYSTEM TESTS (2010 Corolla)		

MECHANICAL SYSTEM TESTS

1. PERFORM MECHANICAL SYSTEM TESTS

(a) Measure the stall speed.

The object of this test is to check the overall performance of the transaxle and engine by measuring the stall speeds in the D position.

NOTICE:

- Driving test should be done on a paved road (a nonskid road).
- Perform the test at the normal operating ATF (Automatic Transmission Fluid) temperature 50 to 80°C (122 to 176°F).
- Do not continuously run this test for longer than 5 seconds.
- To ensure safety, do this test in a wide, clear level area which provides good traction.
- The stall test should always be carried out in pairs. One technician should observe the conditions of wheels or wheel stoppers outside the vehicle while the other is doing the test.

(1) Chock the 4 wheels.

(2) Connect the Techstream to the DLC3.

(3) Fully apply the parking brake.

(4) Keep your left foot pressed firmly on the brake pedal.

(5) Start the engine.

(6) Shift into the D position. Press all the way down on the accelerator pedal with your right foot.

(7) Quickly read the stall speed at this time.

Stall speed:
2410 +- 300 rpm

Evaluation:

PROBLEM	POSSIBLE CAUSE
(a) Stall engine speed is low in D position	• Engine power output may be insufficient • Stator one-way clutch not operating properly **HINT:** **If the value is less than the specified value by 600 rpm or more, the torque converter could be faulty.**
(b) Stall engine speed is high in D position	• Line pressure is too low • Forward clutch slipping • No. 2 one-way clutch not operating properly • Improper fluid level

(b) Measure the time lag.

(1) When the shift lever is shifted while the engine is idling, there will be a certain time lapse or lag before the shock can be felt. This is used for checking the condition of the clutch and brake.

NOTICE:

- Perform the test at the normal operating ATF (Automatic Transmission Fluid) temperature: 50 to 80°C (122 to 176°F).
- Be sure to allow 1 minute interval between tests.
- Perform the test three times, and measure the time lags. Calculate the average value of the three time lags.

(2) Connect the Techstream to the DLC3.

(3) Fully apply the parking brake.

(4) Start and warm up the engine and check idle speed.

Idle speed:

approx. 700 rpm (In N position and A/C OFF)

(5) Shift the lever from N to D position. Using a stop watch, measure the time from when the lever is shifted until the shock is felt.

Time lag:

N → D less than 1.2 seconds

(6) In the same way, measure the time lag for N → R.

Time lag:

N → R less than 1.5 seconds

Evaluation (If N → D or N → R time lag is longer than the specified):

PROBLEM	POSSIBLE CAUSE
N → D time lag is longer	• Line pressure is too low • Forward clutch worn • No. 2 one-way clutch is not operating properly
N → R time lag is longer	• Line pressure is too low • Reverse clutch worn • 1st and reverse brake worn

Last Modified: 3-10-2010	6.4 D	**From:** 200901
Model Year: 2010	**Model:** Corolla	**Doc ID:** RM000000W7B0BWX
Title: U341E AUTOMATIC TRANSMISSION / TRANSAXLE: AUTOMATIC TRANSAXLE SYSTEM: HYDRAULIC TEST (2010 Corolla)		

HYDRAULIC TEST

1. PERFORM HYDRAULIC TEST

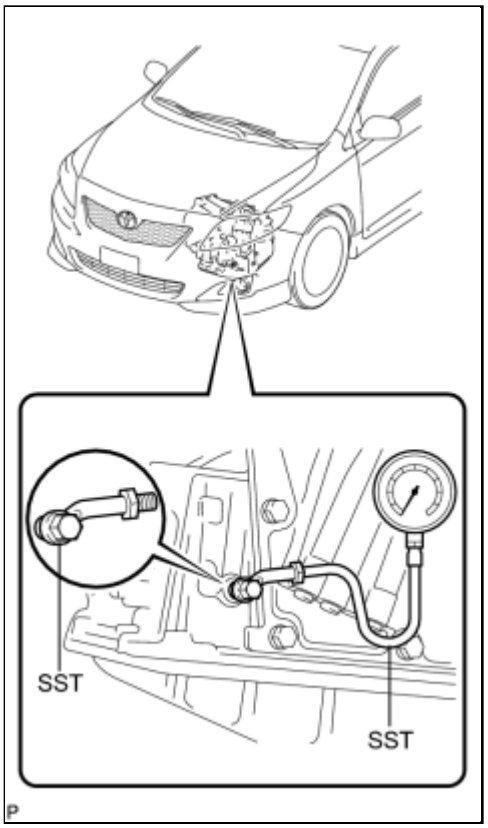

(a) Measure the line pressure.

NOTICE:

- Perform the test at the normal operating ATF (Automatic Transmission Fluid) temperature: 50 to 80°C (122 to 176°F).
- The line pressure test should always be carried out in pairs. One technician should observe the conditions of wheels or wheel stoppers outside the vehicle while the other is performing the test.
- Be careful to prevent SST hose from interfering with the exhaust pipe.
- This Check must be conducted after checking and adjusting engine.
- Perform under condition that A/C is OFF.
- When conducting stall test, do not continue more than 5 seconds.

(1) Warm up the ATF.

(2) Remove the test plug on the front left side of the transaxle case and connect SST.

SST: 09992-00095

09992-00231

09992-00271

(3) Fully apply the parking brake and chock the 4 wheels.

(4) Connect the Techstream to the DLC3.

(5) Start the engine and check idling speed.

(6) Keep your left foot pressing firmly on the brake pedal and shift into D position.

(7) Measure the line pressure when the engine is idling.

(8) Depress the accelerator pedal all the way down. Quickly read the highest line pressure when engine speed reaches stall speed.

(9) In the same way, do the test in R position.

Specified line pressure:

CONDITION	D POSITION KPA (KGF/CM^2, PSI)	R POSITION KPA (KGF/CM^2, PSI)
Idling	372 to 412 kPa (3.8 to 4.2 kgf/cm^2, 54 to 60 psi)	553 to 623 kPa (5.6 to 6.4 kgf/cm^2, 80 to 100 psi)
Stall test	1120 to 1230 kPa (11.4 to 12.5 kgf/cm^2, 162 to 178 psi)	1660 to 1870 kPa (16.9 to 19.1 kgf/cm^2, 241 to 271 psi)

Evaluation:

PROBLEM	POSSIBLE CAUSE
If the measured values at all positions are higher	• Shift solenoid valve SLT defective • Regulator valve detective
If the measured values at all positions are lower	• Shift solenoid valve SLT defective • Regulator valve detective • Oil pump defective
If pressure is low in the D position only	• D position circuit fluid leak • Forward clutch defective
If pressure is low in the R position only	• R position circuit fluid leak • Reverse clutch defective • 1st and reverse brake defective

Last Modified: 3-10-2010	6.4 D	**From:** 200901
Model Year: 2010	**Model:** Corolla	**Doc ID:** RM000000W7C0CWX
Title: U341E AUTOMATIC TRANSMISSION / TRANSAXLE: AUTOMATIC TRANSAXLE SYSTEM: MANUAL SHIFTING TEST (2010 Corolla)		

MANUAL SHIFTING TEST

1. MANUAL SHIFTING TEST

The purpose of this manual shifting test is to determine whether a problem is caused by either mechanical or electrical factors. Disconnecting the transmission wire disables electrically-controlled automatic gear shifting. In this case, operating the shift lever is the only way to shift the transaxle gear. If the gear is not changed by shift lever operation, it is assumed that there is a mechanical problem.

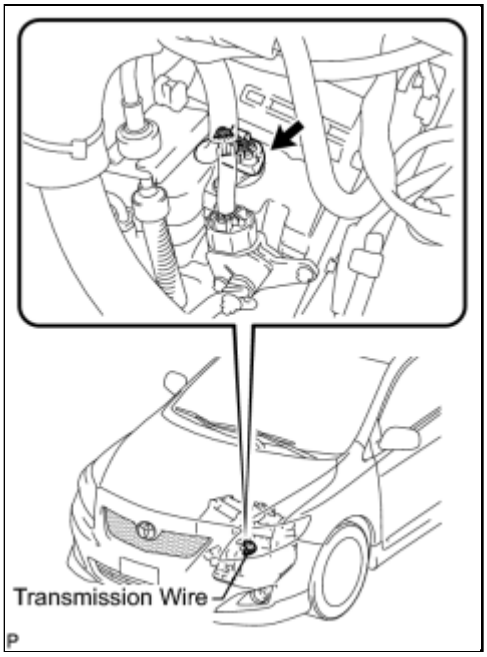

(a) Turn the ignition switch off.

(b) Disconnect the transmission wire connector.

(c) Warm up the engine.

(d) Drive the vehicle.

(e) Check the transaxle operation when the shift lever is moved into L, 2, 3 and D positions.

Standard:

SHIFT LEVER	OPERATION
L to 2	No Shift (Not Change)
2 to 3	No Shift (Not Change)
3 to D	No Shift (Not Change)
D to 3	No Shift (Not Change)

SHIFT LEVER	OPERATION
3 to 2	No Shift (Not Change)
2 to L	No Shift (Not Change)

(f) Turn the ignition switch off.

(g) Connect the transmission wire connector.

(h) Clear DTCs INFO .

HINT:

When the transmission wire is disconnected, the transaxle gear will be set as listed below.

SHIFT LEVER	GEAR
P	Parking
R	Reverse
N	Neutral
D	3rd
3	3rd
2	3rd
L	3rd

Last Modified: 3-10-2010	6.4 D	**From:** 200901
Model Year: 2010	**Model:** Corolla	**Doc ID:** RM000000W7F0B1X
Title: U341E AUTOMATIC TRANSMISSION / TRANSAXLE: AUTOMATIC TRANSAXLE SYSTEM: INITIALIZATION (2010 Corolla)		

INITIALIZATION

1. RESET MEMORY

NOTICE:

- Perform the RESET MEMORY (AT initialization) when replacing the automatic transaxle assembly, engine assembly or ECM.
- The RESET MEMORY can be performed only with the Techstream.

HINT:

The ECM memorizes the condition that the ECT controls the automatic transaxle assembly and engine assembly according to those characteristics. Therefore, when the automatic transaxle assembly, engine assembly, or ECM has been replaced, it is necessary to reset the memory so that the ECM can memorize the new information.

Reset procedure is as follows.

(a) Turn the ignition switch off.

(b) Connect the Techstream to the DLC3.

(c) Turn the ignition switch to ON and the Techstream main switch on.

(d) Enter the following menus: Powertrain / Engine and ECT / Utility / Reset Memory. Then, press "Next".

CAUTION:

After performing the RESET MEMORY, be sure to perform the ROAD TEST INFO **described earlier.**

HINT:

The ECM is learned by performing the ROAD TEST.

Last Modified: 3-10-2010	6.4 D	**From:** 200901
Model Year: 2010	**Model:** Corolla	**Doc ID:** RM000000W7K0BOX
Title: U341E AUTOMATIC TRANSMISSION / TRANSAXLE: AUTOMATIC TRANSAXLE SYSTEM: MONITOR DRIVE PATTERN (2010 Corolla)		

MONITOR DRIVE PATTERN

1. MONITOR DRIVE PATTERN FOR ECT TEST

(a) Perform this drive pattern as one method to simulate the detection conditions of the ECT malfunctions. (The DTCs may not be detected due the actual driving conditions. And some codes may not be detected through this drive pattern.)

HINT:

Preparation for driving

- Warm up the engine sufficiently. (Engine coolant temperature is 60°C (140°F) or higher)
- Drive the vehicle when the atmospheric temperature is -10°C (14°F) or higher. (Malfunction is not detected when the atmospheric temperature is less than -10°C (14°F))

Driving note

- Drive the vehicle through all gears.

  Stop → 1st → 2nd → 3rd → 4th → 4th (lock-up ON).
- Repeat the above driving pattern three times or more.

NOTICE:

- When using the Techstream, monitor status can be found in the "Powertrain / Engine and ECT / Data List".
- In the event that the drive pattern must be interrupted (possibly due to traffic conditions or other factors), the drive pattern can be resumed and, in most cases, the monitor can be completed.
- Perform this drive pattern on a level road as much as possible and strictly observe the posted speed limits and traffic laws while driving.

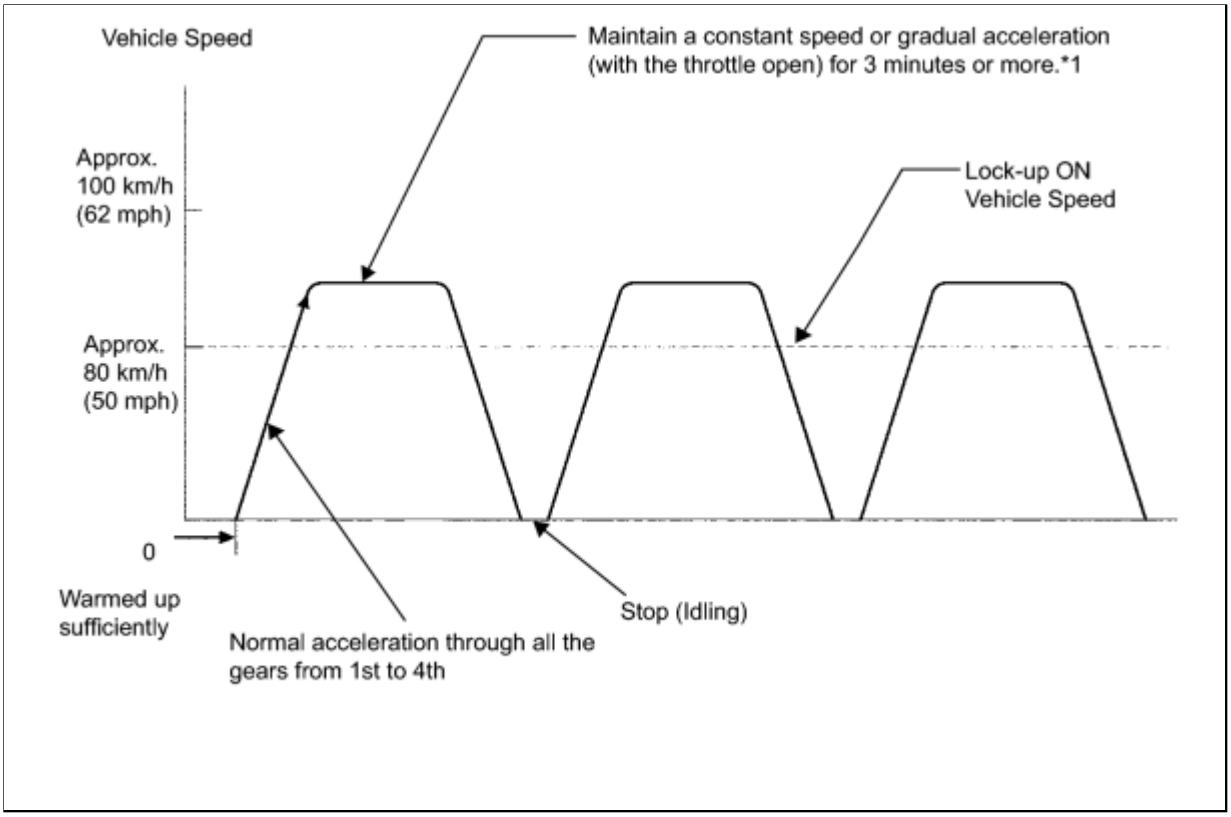

HINT:

***1: Drive at such a speed in the uppermost gear, to engage lock-up. The vehicle can be driven at a speed lower than that in the above diagram under the lock-up condition.**

NOTICE:

If necessary to drive the vehicle for approximately 30 minutes to detect DTC P0711 (ATF temperature sensor malfunction).

Last Modified: 3-10-2010	6.4 T	**From:** 200901
Model Year: 2010	**Model:** Corolla	**Doc ID:** RM000000W730DDX
Title: U341E AUTOMATIC TRANSMISSION / TRANSAXLE: AUTOMATIC TRANSAXLE SYSTEM: PROBLEM SYMPTOMS TABLE (2010 Corolla)		

PROBLEM SYMPTOMS TABLE

HINT:

- If a normal code is displayed during the diagnostic trouble code check although the trouble still occurs, check the electrical circuits for each symptom in the order given in the charts on the following pages and proceed to the page given for troubleshooting.
- The Matrix Chart is divided into 2 chapters.
- When the circuit on which mark *1 is attached is a malfunction, DTC could be output.

Chapter 1:

Refer to the table below when the trouble cause is considered to be electrical. If the instruction PROCEED TO NEXT CIRCUIT INSPECTION SHOWN IN PROBLEM SYMPTOMS TABLE is given in the flowchart of each circuit, inspect the suspected areas in descending order for each symptom. If the trouble still occurs even though there are no abnormalities in the inspections listed for the symptoms, check and replace the ECM.

Chapter 1: Electronic Circuit Matrix Chart:

SYMPTOM	SUSPECTED AREA	SEE PAGE
No up-shift (A particular gear, from 1st to 3rd gear, is not up-shifted)	ECM	INFO
No up-shift (3rd to 4th)	Transmission control switch circuit*1	INFO
	ECM	INFO
No down-shift (4th to 3rd)	Transmission control switch circuit*1	INFO
	ECM	INFO
No down-shift (A particular gear, from 3rd to 1st gear, is not down-shifted)	ECM	INFO
No lock-up or No lock-up off	Stop light switch circuit*1	INFO
	Engine coolant temp. sensor circuit*1 (for 2ZR-FE)	INFO
	ECM	INFO
Shift point too high or too low	Throttle position sensor circuit*1 (for 2ZR-FE)	INFO
	Engine coolant temp. sensor circuit*1 (for 2ZR-FE)	INFO

SYMPTOM	SUSPECTED AREA	SEE PAGE
	ECM	INFO
Up-shift to 4th from 3rd while shift lever is 3 position	Transmission control switch circuit*1	INFO
	ECM	INFO
Up-shift to 4th from 3rd while engine is cold	Engine coolant temp. sensor circuit*1 (for 2ZR-FE)	INFO
	ECM	INFO
Harsh engagement (N to D)	ECM	INFO
Harsh engagement (Lock-up)	ECM	INFO
Harsh engagement (Any driving position)	ECM	INFO
Poor acceleration	ECM	INFO
Engine stalls when starting off or stopping	ECM	INFO
No kick-down	ECM	INFO
Malfunction in shifting	Park/neutral position switch circuit*1	INFO
	ECM	INFO

Chapter 2: On-Vehicle Repair and Off-Vehicle Repair.

SYMPTOM	SUSPECTED AREA	SEE PAGE
Vehicle does not move in any forward position and reverse position	Manual valve	INFO
	Valve body assembly	INFO
	Planetary gear unit	INFO
	Forward clutch	INFO
	No. 2 one-way clutch	INFO
	Reverse clutch	INFO
	1st and reverse brake	INFO
Vehicle does not move in R position	Manual valve	INFO
	Planetary gear unit	INFO
	Reverse Clutch	INFO

SYMPTOM	SUSPECTED AREA	SEE PAGE
	1st and reverse brake	INFO
No up-shift (1st to 2nd)	Valve body assembly	INFO
	2nd brake	INFO
	No. 1 one-way clutch	INFO
No up-shift (2nd to 3rd)	Valve body assembly	INFO
	Direct clutch	INFO
No up-shift (3rd to 4th)	Valve body assembly	INFO
	O/D and 2nd brake	INFO
No down-shift (4th to 3rd)	Valve body assembly	INFO
No down-shift (3rd to 2nd)	Valve body assembly	INFO
No down-shift (2nd to 1st)	Valve body assembly	INFO
No lock-up or No lock-up off	Shift solenoid valve SL	INFO
	Valve body assembly	INFO
	Torque converter clutch	INFO
Harsh engagement (N to D)	Valve body assembly	INFO
	Forward clutch	INFO
	No. 2 one-way clutch	INFO
Harsh engagement (N to R)	C3 accumulator	INFO
	Valve body assembly	INFO
	Reverse clutch	INFO
	1st and reverse brake	INFO
Harsh engagement (Lock-up)	Valve body assembly	INFO
	Torque converter clutch	INFO
Harsh engagement (1st to 2nd)	B2 accumulator	INFO
	Valve body assembly	INFO
	2nd brake	INFO
	No. 1 one-way clutch	INFO

SYMPTOM	SUSPECTED AREA	SEE PAGE
Harsh engagement (2nd to 3rd)	C2 accumulator	INFO
	Valve body assembly	INFO
	Direct clutch	INFO
Harsh engagement (3rd to 4th)	Shift solenoid valve ST	INFO
	Valve body assembly	INFO
	O/D and 2nd brake	INFO
Harsh engagement (4th to 3rd)	Valve body assembly	INFO
	Shift solenoid valve ST	INFO
Harsh engagement (D, 2, L position)	Shift solenoid valve SLT	INFO
	Valve body assembly	INFO
Slip or shudder (Forward position)	Valve body assembly	INFO
	Oil strainer	INFO
	Torque converter clutch	INFO
	Forward clutch	INFO
	Direct clutch	INFO
	O/D and 2nd brake	INFO
	2nd brake	INFO
	No. 1 one-way clutch	INFO
	No. 2 one-way clutch	INFO
Slip or shudder (Reverse position)	Oil strainer	INFO
	Valve body assembly	INFO
	Reverse clutch	INFO
	1st and reverse brake	INFO
Slip or shudder (1st)	No. 2 one-way clutch	INFO
Slip or shudder (2nd)	2nd brake	INFO
	No. 1 one-way clutch	INFO
Slip or shudder (3rd)	Direct clutch	INFO

SYMPTOM	SUSPECTED AREA	SEE PAGE
Slip or shudder (4th)	O/D and 2nd brake	INFO
Shift point too high or too low	Shift solenoid valve SLT	INFO
No engine braking (1st: L position)	Valve body assembly	INFO
	1st and reverse brake	INFO
No engine braking (2nd: 2 position)	Valve body assembly	INFO
	O/D and 2nd brake	INFO
No kick-down	Valve body assembly	INFO
Poor acceleration (All position)	Shift solenoid valve SLT	INFO
	Valve body assembly	INFO
	Torque converter clutch	INFO
Large shift shock or engine stalls when starting off or stopping	Torque converter clutch	INFO
Engine stalls when starting off or stopping	Shift solenoid valve SL	INFO
	Torque converter clutch	INFO

Last Modified: 3-10-2010	6.4 U	**From:** 200901
Model Year: 2010	**Model:** Corolla	**Doc ID:** RM000000W740A1X
Title: U341E AUTOMATIC TRANSMISSION / TRANSAXLE: AUTOMATIC TRANSAXLE SYSTEM: TERMINALS OF ECM (2010 Corolla)		

TERMINALS OF ECM

1. ECM

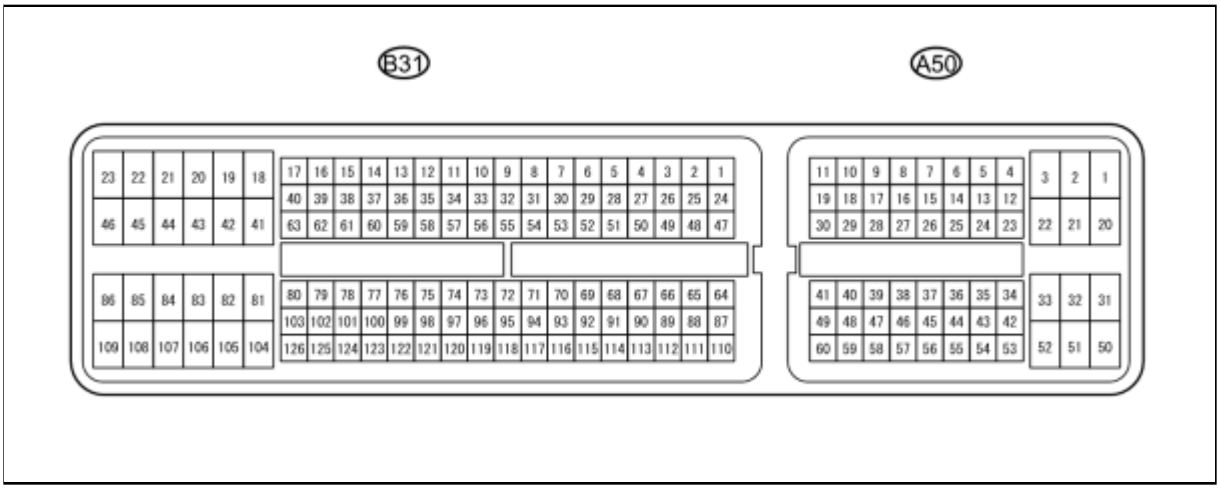

HINT:

Each ECM terminal's standard voltage is shown in the table below.

In the table, first follow the information under "Condition". Look under "Terminal No. (Symbols)" for the terminals to inspected. The standard voltage between the terminals is shown under "Specific Condition".

Use the illustration above as a reference for the ECM terminals.

TERMINAL NO. (SYMBOLS)	TERMINAL DESCRIPTION	CONDITION	SPECIFIED CONDITION
A50-36 (STP) - B31-104 (E1)	Stop light switch signal	Brake pedal is depressed	7.5 to 14 V
		Brake pedal is released	Below 1.5 V
B31-52 (STAR) - B31-104 (E1)	Park neutral switch signal	Ignition switch ON and shift lever P and N position	Below 2 V
		Ignition switch ON and shift lever except P and N position	11 to 14 V
B31-73 (P) - B31-104 (E1)	Park position switch signal	Ignition switch ON and shift lever P position	11 to 14 V
		Ignition switch ON and shift lever except P position	Below 1 V
B31-53 (R) - B31-104 (E1)	R shift position switch signal	Ignition switch ON and shift lever R position	11 to 14 V

TERMINAL NO. (SYMBOLS)	TERMINAL DESCRIPTION	CONDITION	SPECIFIED CONDITION
		Ignition switch ON and shift lever except R position	Below 1 V
B31-54 (N) - B31-104 (E1)	Neutral position switch signal	Ignition switch ON and shift lever N position	11 to 14 V
		Ignition switch ON and shift lever except N position	Below 1 V
B31-56 (D) - B31-104 (E1)	D shift position switch signal	Ignition switch ON and shift lever D and 3 position	11 to 14 V
		Ignition switch ON and shift lever except D and 3 position	Below 1 V
A50-26 (3) - B31-104 (E1)	3 shift position switch signal	Ignition switch ON and shift lever 3 position	11 to 14 V
		Ignition switch ON and shift lever except 3 position	Below 1 V
B31-55 (2) - B31-104 (E1)	2 shift position switch signal	Ignition switch ON and shift lever 2 position	11 to 14 V
		Ignition switch ON and shift lever except 2 position	Below 1 V
B31-74 (L) - B31-104 (E1)	L shift position switch signal	Ignition switch ON and shift lever L position	11 to 14 V
		Ignition switch ON and shift lever except L position	Below 1 V
B31-79 (S1) - B31-104 (E1)	S1 solenoid signal	Ignition switch ON	11 to 14 V
		1st or 2nd gear	11 to 14 V
		3rd or 4th gear	Below 1 V
B31-78 (S2) - B31-104 (E1)	S2 solenoid signal	Ignition switch ON	11 to 14 V
		1st or 4th gear	11 to 14 V
		2nd or 3rd gear	Below 1 V
B31-57 (SLU+) - B31-77 (SLU-)	SLU solenoid signal	Ignition switch ON	Below 1 V
B31-80 (ST) - B31-104 (E1)	ST solenoid signal	Ignition switch ON	Below 1 V
		Ignition switch ON and R gear	11 to 14 V
B31-40 (SLT+) - B31-39 (SLT-)	SLT solenoid signal	Ignition switch ON	Pulse generation (See waveform 1)
B31-125 (NT+) - B31-124 (NT-)	Speed sensor (NT) signal	Engine is running	Pulse generation (See waveform 2)

TERMINAL NO. (SYMBOLS)	TERMINAL DESCRIPTION	CONDITION	SPECIFIED CONDITION
B31-72 (THO1) - B31-95 (ETHO)	ATF temperature sensor signal	ATF temperature: 115°C (239°F) or more	Below 1.5 V

(a) Waveform 1

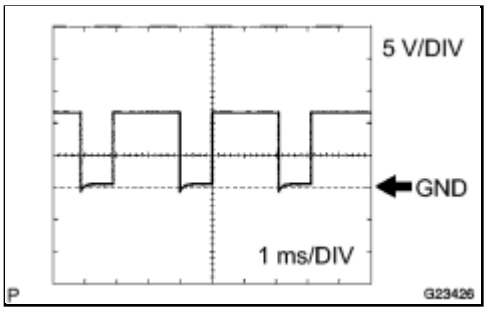

Reference:

Terminal	SLT+ - SLT-
Tool setting	5 V/DIV, 1ms/DIV
Vehicle condition	Engine idle speed

(b) Waveform 2

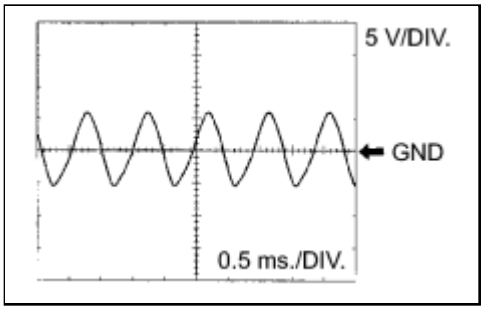

Reference:

Terminal	NT+ - NT-
Tool setting	5 V/DIV, 0.5ms/DIV
Vehicle condition	Vehicle speed 20 km/h (12 mph)

Last Modified: 3-10-2010	6.4 D	**From:** 200901
Model Year: 2010	**Model:** Corolla	**Doc ID:** RM000000W760D7X
Title: U341E AUTOMATIC TRANSMISSION / TRANSAXLE: AUTOMATIC TRANSAXLE SYSTEM: DIAGNOSIS SYSTEM (2010 Corolla)		

DIAGNOSIS SYSTEM

1. DESCRIPTION

When troubleshooting OBD II (On-Board Diagnostics) vehicles, a Techstream (complying with SAE J1987) must be connected to the DLC3 (Data Link Connector 3) of the vehicle. Various data in the vehicle's ECM (Engine Control Module) can be then read.

OBD II regulations require that the vehicle's on-board computer illuminate the MIL (Malfunction Indicator Lamp) on the instrument panel when the computer detects a malfunction in:



a. The emission control systems and components.
b. The powertrain control components (which affect vehicle emissions).
c. The computer itself.

In addition, the applicable DTCs prescribed by SAE J2012 are recorded in the ECM memory. If the malfunction does not recur in 3 consecutive trips, the MIL turns off automatically but the DTCs remain recorded in the ECM memory.

To check the DTCs, connect the Techstream to the DLC3. The Techstream displays DTCs, freeze frame data, and a variety of the engine data. The DTCs and freeze frame data can be erased with the Techstream. In order to enhance OBD function on vehicles and develop the Off-Board diagnosis system, Controller Area Network (CAN) communication is used in this system. CAN is a network which uses a pair of data transmission lines spanning multiple computers and sensors. It allows for high speed communications between the systems and simplification of the wire harness connections.

2. NORMAL MODE AND CHECK MODE

The diagnosis system operates in "normal mode" during normal vehicle use. In normal mode, "2 trip detection logic" is used to ensure accurate detection of malfunctions. "Check mode" is also available to technicians as an option. In check mode, "1-trip detection logic" is used for simulating malfunction symptoms and increasing the system's ability to detect malfunctions, including intermittent malfunctions (Techstream only).

3. 2-TRIP DETECTION LOGIC

(a) When a malfunction is first detected, the malfunction is temporarily stored in the ECM memory (1st trip). If the ignition switch is turned off and then turned to ON again, and the same malfunction is detected again, the MIL will illuminate.

4. FREEZE FRAME DATA

(a) The ECM records vehicle and driving condition information as freeze frame data the moment a DTC is stored. When troubleshooting, freeze frame data can be helpful in determining whether the vehicle was running or stopped, whether the engine was warmed up or not, whether the air/fuel ratio was lean or rich, as well as other data recorded at the time of a malfunction.

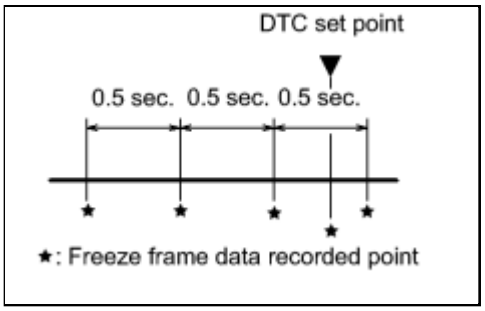

(b) The Techstream displays freeze frame data recorded at five different points: 1) 3 times before the DTC is set, 2) once when the DTC is set, and 3) once after the DTC is set. The data can be used to simulate the vehicle's condition around the time of the malfunction. The data may be helpful in determining the cause of a malfunction. It may also be helpful in determining whether a DTC is being caused by a temporary malfunction.

5. CHECK DLC3

(a) Check the DLC3 INFO .

6. CHECK BATTERY VOLTAGE

(a) Measure the battery voltage.

Battery voltage:
11 to 14 V

If voltage is below 11 V, replace the battery before proceeding.

7. CHECK MIL

(a) Check that the MIL illuminates when turning the ignition switch to ON.

HINT:

If the MIL does not light up, troubleshoot the combination meter.

(b) When the engine is started, the MIL should go off. If the lamp remains on, it means that the diagnosis system has detected a malfunction or abnormality in the system.

Last Modified: 3-10-2010	6.4 D	**From:** 200901
Model Year: 2010	**Model:** Corolla	**Doc ID:** RM000000W770CLX
Title: U341E AUTOMATIC TRANSMISSION / TRANSAXLE: AUTOMATIC TRANSAXLE SYSTEM: DTC CHECK / CLEAR (2010 Corolla)		

DTC CHECK / CLEAR

1. CHECK DTC

(a) DTCs which are stored in the ECM can be displayed with the Techstream.

These scan tools can display pending DTCs and current DTCs. Some DTC are not stored if the ECM does not detect a malfunction during consecutive driving. However, the detected malfunction during once driving is stored as pending DTC.

(1) Connect the Techstream to the DLC3.

(2) Turn the ignition switch to ON.

(3) Enter the following menus: Powertrain / Engine and ECT / Trouble Codes.

(4) Confirm the DTCs and freeze frame data and then write them down.

(5) Confirm the details of the DTCs INFO.

NOTICE:

When simulating a symptom with the scan tool to check the DTCs, use normal mode. For codes on DIAGNOSTIC TROUBLE CODE CHART which are subject to "2-trip detection logic", perform the following actions.

Turn the ignition switch off after the symptom is simulated once. Then repeat the simulation process again. When the problem has been simulated twice, the MIL illuminates and the DTCs are recorded in the ECM.

2. CLEAR DTC WITH TECHSTREAM

(a) Connect the Techstream to the DLC3.

(b) Turn the ignition switch to ON.

(c) Enter the following menus: Powertrain / Engine and ECT / Trouble Codes.

Last Modified: 3-10-2010	6.4 D	**From:** 200901
Model Year: 2010	**Model:** Corolla	**Doc ID:** RM000000W780BQX
Title: U341E AUTOMATIC TRANSMISSION / TRANSAXLE: AUTOMATIC TRANSAXLE SYSTEM: CHECK MODE PROCEDURE (2010 Corolla)		

CHECK MODE PROCEDURE

1. DESCRIPTION

(a) Check mode has a higher sensitivity to malfunctions and can detect malfunctions that normal mode cannot detect. Check mode can also detect all the malfunctions that normal mode can detect. In check mode, DTCs are detected with 1-trip detection logic.

2. CHECK MODE PROCEDURE

(a) Make sure that the items below are true:

(1) Battery positive voltage 11 V or more

(2) Throttle valve fully closed

(3) Transaxle in the P or N position

(4) A/C switched OFF

(b) Turn the ignition switch off.

(c) Connect the Techstream to the DLC3.

(d) Turn the ignition switch to ON.

(e) Enter the following menus: Powertrain / Engine and ECT / Utility / Check Mode.

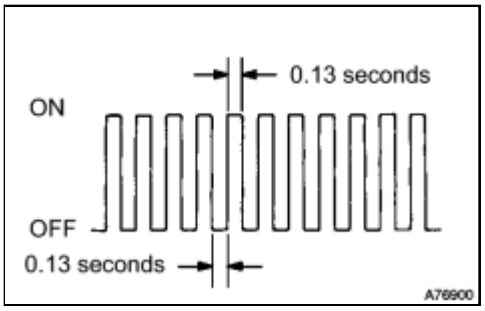

(f) Change the ECM to check mode. Make sure the MIL flashes as shown in the illustration.

NOTICE:

All DTCs and freeze frame data recorded will be erased if: 1) the Techstream is used to change the ECM from normal mode to check mode or vice versa; or 2) during check mode, the ignition switch is turned from to ON to to ACC or off.

Before check mode, make notes of the DTCs and freeze frame data.

(g) Start the engine. The MIL should turn off after the engine starts.

(h) Perform "MONITOR DRIVE PATTERN" for the ECT test INFO .

(Or, simulate the conditions of the malfunction described by the customer).

(i) After simulating the malfunction conditions, use the Techstream diagnosis selector to check the DTC and freeze frame data.

Last Modified: 3-10-2010	6.4 U	**From:** 200901
Model Year: 2010	**Model:** Corolla	**Doc ID:** RM000000O8L0BTX
Title: U341E AUTOMATIC TRANSMISSION / TRANSAXLE: AUTOMATIC TRANSAXLE SYSTEM: FAIL-SAFE CHART (2010 Corolla)		

FAIL-SAFE CHART

1. FAIL-SAFE

This function minimizes the loss of the ECT functions when any malfunction occurs in each sensor or solenoid.

(a) Vehicle speed signal (SPD):

When there are problems with vehicle speed signals, 4th upshift is prohibited.

(b) Input turbine speed sensor NT (Speed sensor NT):

When the input turbine speed sensor has a malfunction, 4th upshift is prohibited.

(c) ATF (Automatic Transmission Fluid) temperature sensor:

When the ATF temperature sensor has a malfunction, 4th upshift is prohibited.

(d) Shift solenoid valve SLU:

If the ECM detects a malfunction in the solenoid valve SLU, it turns the valve off.

(e) Shift solenoid valve SLT:

When the solenoid valve SLT has a malfunction, 4th upshift is prohibited.

(f) Engine coolant temperature sensor:

When the engine coolant temperature sensor has a malfunction, 4th upshift is prohibited.

(g) Knock sensor:

When the knock sensor has a malfunction, 4th upshift is prohibited.

(h) Throttle position sensor:

When the throttle position sensor has a malfunction, 4th upshift is prohibited.

(i) Shift solenoid valve S1 and S2:

Fail safe function:

If either of the shift solenoid valve circuits develops an open or short, the ECM turns the other shift solenoid "ON" and "OFF" in order to shift into the gear positions shown in the table below.

The ECM also turns the shift solenoid valve ST OFF at the same time. If both solenoids malfunction, hydraulic control cannot be performed electronically and must be done manually.

Manual shifting as shown in the following table must be done (In case of a short circuit, the ECM stops sending current to the short circuit solenoid).

Even if starting the engine in the fail-safe mode, the gear position remains in the same position.

Normal	Solenoid Valve	S1	ON	ON	OFF	OFF
		S2	ON	OFF	OFF	ON
	Gear Position		1st	2nd	3rd	4th (O/D)

S1 Malfunction	Solenoid Valve	S1	X			
		S2	ON → OFF	OFF	OFF	ON
	Gear Position *1		3rd	3rd	3rd	4th (O/D)
S2 Malfunction	Solenoid Valve	S1	ON	ON	OFF	OFF
		S2	X			
	Gear Position *1		2nd	2nd	3rd	3rd
S1 and S2 Malfunction	Solenoid Valve	S1	X			
		S2	X			
	Gear Position *1		3rd	3rd	3rd	3rd

- *1: Actual gear shift (gear position) under fail-safe operation.
- X: OFF (the ECM stops sending current to a malfunctioning solenoid valve)
- →: Condition in the electrical malfunction is shown on the left of "→".

Condition in the fail-safe mode is shown on the right of "→".



Last Modified: 3-10-2010	6.4 U	**From:** 200901
Model Year: 2010	**Model:** Corolla	**Doc ID:** RM000000W7E0CGX
Title: U341E AUTOMATIC TRANSMISSION / TRANSAXLE: AUTOMATIC TRANSAXLE SYSTEM: DATA LIST / ACTIVE TEST (2010 Corolla)		

DATA LIST / ACTIVE TEST

1. DATA LIST

HINT:

Using the Techstream to read the Data List allows the values or states of switches, sensors, actuators and other items to be read without removing any parts. This non-intrusive inspection can be very useful because intermittent conditions or signals may be discovered before parts or wiring is disturbed. Reading the Data List information early in troubleshooting is one way to save diagnostic time.

NOTICE:

In the table below, the values listed under "Normal Condition" are reference values. Do not depend solely on these reference values when deciding whether a part is faulty or not.

(a) Warm up the engine.

(b) Turn the ignition switch off.

(c) Connect the Techstream to the DLC3.

(d) Turn the ignition switch to ON.

(e) Turn on the Techstream.

(f) Select the item "Powertrain / Engine and ECT / Data List".

(g) According to the display on the Techstream, read the "Data List".

TESTER DISPLAY	MEASUREMENT ITEM/RANGE	NORMAL CONDITION	DIAGNOSTIC NOTE
Stop Light Switch	Stop light switch Status/ON or OFF	• Brake Pedal is depressed: ON • Brake Pedal is released: OFF	-
Neutral Position SW Signal	PNP switch Status/ON or OFF	Shift lever position is: P and N: ON Except P and N: OFF	When the shift lever position displayed on the Techstream differs from the actual position, adjustment of the PNP switch or the shift cable may be incorrect. **HINT:** **When the failure still occurs even after adjusting these parts,** INFO .
Shift SW Status (R Range)	PNP switch Status/ON or OFF	Shift lever position is: P: ON Except P: OFF	↑
Shift SW		Shift lever position is:	

2. ACTIVE TEST

HINT:

Using the Techstream to perform Active Tests allows relays, VSVs, actuators and other items to be operated without removing any parts. This non-intrusive functional inspection can be very useful because intermittent operation may be discovered before parts or wiring is disturbed. Performing Active Tests early in troubleshooting is one way to save diagnostic time. Data List information can be displayed while performing Active Tests.

(a) Warm up the engine.

(b) Turn the ignition switch off.

(c) Connect the Techstream to the DLC3.

(d) Turn the ignition switch to ON.

(e) Turn on the Techstream.

(f) Select the item "Powertrain / Engine and ECT / Active Test".

(g) According to the display on Techstream, perform the "Active Test".

TESTER DISPLAY	TEST PART	CONTROL RANGE	DIAGNOSTIC NOTE
Control the Shift Position	[Test Details] Operate the shift solenoid valve and set the each shift position by yourself. [Vehicle Condition] • IDL: ON • Less than 50 km/h (31 mph) [Others] • Press "→" button: Shift up • Press "←" button: Shift down	1st/2nd /3rd/4th	Possible to check the operation of the shift solenoid valves.
Activate the Lock Up	[Test Details] Control the shift solenoid SLU to set the automatic transaxle to the lock-up condition. [Vehicle Condition] Vehicle Speed: 60 km/h (36 mph) or more, and 4th gear	ON/OFF	Possible to check the SLU operation.
Activate the Solenoid (S1)	[Test Details] Operate the shift solenoid S1. [Vehicle Condition] • Vehicle Stopped. • IDL: ON	ON/OFF	-
Activate the Solenoid (S2)	[Test Details] Operate the shift solenoid S2. [Vehicle Condition] • Vehicle Stopped. • IDL: ON	ON/OFF	-

TESTER DISPLAY	TEST PART	CONTROL RANGE	DIAGNOSTIC NOTE
Activate the Solenoid (SLU)	[Test Details] Operate the shift solenoid SLU. [Vehicle Condition] • Vehicle Stopped. • Shift lever P or N position.	ON/OFF	-
Activate the Solenoid (ST)	[Test Details] Operate the shift solenoid ST. [Vehicle Condition] • Vehicle Stopped. • IDL: ON	ON/OFF	-
Activate the Solenoid (SLT)*	[Test Details] Operate the shift solenoid SLT and raise the line pressure. [Vehicle Condition] • Vehicle Stopped. • IDL: ON **HINT:** **OFF: Line pressure up (When the active test of "Activate the Solenoid (SLT)" is performed, the ECM commands the SLT solenoid to turn off).** ON: No action (normal operation)	ON/OFF	-

*: "Activate the Solenoid (SLT)" in the Active Test is performed to check the line pressure changes by connecting the SST to the automatic transaxle, which is used in the HYDRAULIC TEST INFO as well.

HINT:

The pressure values in Active Test and HYDRAULIC TEST are different from each other.

Last Modified: 3-10-2010	6.4 S	**From:** 200901
Model Year: 2010	**Model:** Corolla	**Doc ID:** RM000000W710BCX
Title: U341E AUTOMATIC TRANSMISSION / TRANSAXLE: AUTOMATIC TRANSAXLE SYSTEM: DIAGNOSTIC TROUBLE CODE CHART (2010 Corolla)		

DIAGNOSTIC TROUBLE CODE CHART

If a DTC is displayed during the DTC check, check the parts listed in the table below and proceed to the page given.

HINT:

- *1: Comes on MIL (Malfunction Indicator Lamp) light up
- *2: "DTC stored" mark means ECM memorizes the malfunction code if the ECM detects the DTC detection condition.
- This DTC may be output when the clutch, brake and gear components etc. inside the automatic transaxle are damaged.

AUTOMATIC TRANSAXLE SYSTEM:

DTC CODE	DETECTION ITEM	TROUBLE AREA	MIL *1	MEMORY *2	SEE PAGE
P0705	Transmission Range Sensor Circuit Malfunction (PRNDL Input)	1. Open or short in park/neutral position switch circuit 2. Park/neutral position switch 3. ECM	Come on	DTC stored	INFO
P0710	Transmission Fluid Temperature Sensor "A" Circuit	1. Open or short in ATF temperature sensor circuit 2. Transmission wire (ATF temperature sensor) 3. ECM	Come on	DTC stored	INFO
P0711	Transmission Fluid Temperature Sensor "A" Performance	1. Transmission wire (ATF temperature sensor)	Come on	DTC stored	INFO
P0712	Transmission Fluid Temperature Sensor "A" Circuit Low Input	1. Short in ATF temperature sensor circuit 2. Transmission wire (ATF temperature sensor) 3. ECM	Come on	DTC stored	INFO
P0713	Transmission Fluid Temperature Sensor "A" Circuit High Input	1. Open in ATF temperature sensor circuit 2. Transmission wire (ATF temperature sensor) 3. ECM	Come on	DTC stored	INFO
P0717	Turbine Speed Sensor Circuit No Signal	1. Open or short in transmission revolution	Come on	DTC stored	INFO

DTC CODE	DETECTION ITEM	TROUBLE AREA	MIL *1	MEMORY *2	SEE PAGE
		sensor NT (speed sensor NT) circuit 2. Transmission revolution sensor NT (speed sensor NT) 3. ECM 4. Automatic transaxle assembly			
P0724	Brake Switch "B" Circuit High	1. Short in stop light switch circuit 2. Stop light switch 3. ECM	Come on	DTC stored	INFO
P0751	Shift Solenoid "A" Performance (Shift Solenoid Valve S1)	1. Shift solenoid valve S1 remains open or closed 2. Valve body is blocked 3. Shift solenoid valve S1 4. Automatic transaxle (clutch, brake or gear etc.)	Come on	DTC stored	INFO
P0756	Shift Solenoid "B" Performance (Shift Solenoid Valve S2)	1. Shift solenoid valve S2 remains open or closed 2. Valve body is blocked 3. Shift solenoid valve S2 4. Automatic transaxle (clutch, brake or gear etc.)	Come on	DTC stored	INFO
P0787	Shift / Timing Solenoid Low (Shift Solenoid Valve ST)	1. Short in shift solenoid valve ST circuit 2. Shift solenoid valve ST 3. ECM	Come on	DTC stored	INFO
P0788	Shift / Timing Solenoid High (Shift Solenoid Valve ST)	1. Open in shift solenoid valve ST circuit 2. Shift solenoid valve ST 3. ECM	Come on	DTC stored	INFO
P0973	Shift Solenoid "A" Control Circuit Low (Shift Solenoid Valve S1)	1. Short in shift solenoid valve S1 circuit 2. Shift solenoid valve S1 3. ECM	Come on	DTC stored	INFO
P0974	Shift Solenoid "A" Control Circuit High (Shift Solenoid Valve S1)	1. Open in shift solenoid valve S1 circuit 2. Shift solenoid valve S1 3. ECM	Come on	DTC stored	INFO
P0976	Shift Solenoid "B" Control Circuit Low (Shift Solenoid Valve S2)	1. Short in shift solenoid valve S2 circuit	Come on	DTC stored	INFO

DTC CODE	DETECTION ITEM	TROUBLE AREA	MIL *1	MEMORY *2	SEE PAGE
		2. Shift solenoid valve S2 3. ECM			
P0977	Shift Solenoid "B" Control Circuit High (Shift Solenoid Valve S2)	1. Open in shift solenoid valve S2 circuit 2. Shift solenoid valve S2 3. ECM	Come on	DTC stored	INFO
P2714	Pressure Control Solenoid "D" Performance (Shift Solenoid Valve SLT)	1. Shift solenoid valve SLT remains closed 2. Valve body is blocked 3. Torque converter clutch 4. Automatic transaxle (clutch, brake or gear etc.)	Come on	DTC stored	INFO
P2716	Pressure Control Solenoid "D" Electrical (Shift Solenoid Valve SLT)	1. Open or short in shift solenoid valve SLT circuit 2. Shift solenoid valve SLT 3. ECM	Come on	DTC stored	INFO
P2757	Torque Converter Clutch Pressure Control Solenoid Performance (Shift Solenoid Valve SLU)	1. Shift solenoid valve SLU remains open or closed 2. Valve body is blocked 3. Shift solenoid valve SLU 4. Torque converter clutch 5. Automatic transaxle (clutch, brake or gear etc.) 6. Line pressure is too low	Come on	DTC stored	INFO
P2759	Torque Converter Clutch Pressure Control Solenoid Control Circuit Electrical (Shift Solenoid Valve SLU)	1. Open or short in shift solenoid valve SLU circuit 2. Shift solenoid valve SLU 3. ECM	Come on	DTC stored	INFO

Last Modified: 3-10-2010	6.4 C	**From:** 200901
Model Year: 2010	**Model:** Corolla	**Doc ID:** RM000000W840EKX
Title: U341E AUTOMATIC TRANSMISSION / TRANSAXLE: AUTOMATIC TRANSAXLE SYSTEM: P0705: Transmission Range Sensor Circuit Malfunction (PRNDL Input) (2010 Corolla)		

DTC	**P0705**	**Transmission Range Sensor Circuit Malfunction (PRNDL Input)**

DESCRIPTION

The park/neutral position switch detects the shift lever position and sends signals to the ECM.

DTC NO.	DTC DETECTION CONDITION	TROUBLE AREA
P0705	(A) Any 2 or more signals of the following are ON simultaneously (2-trip detection logic) • STAR input signal is ON. • R input signal is ON. • D input signal is ON. • 2 input signal is ON. • L input signal is ON. (B) Any 2 or more signals of the following are ON simultaneously (2-trip detection logic) • P input signal is ON. • R input signal is ON. • N input signal is ON. • D input signal is ON. • 2 input signal is ON. • L input signal is ON. (C) All switches are OFF simultaneously for P, R, N, D, 2 and L positions (2-trip detection logic) (D) Both 1 and 2 are met (2-trip detection logic) 1. One of following is met a. STAR input signal is ON. b. P input signal is ON. c. R input signal is ON. d. N input signal is ON. 2. One of following is ON. a. 3 input signal is ON.	• Open or short in park/neutral position switch circuit • Park/neutral position switch • ECM

MONITOR DESCRIPTION

The park/neutral position switch detects the gearshift position and sends a signal to the ECM.

For security, the park/neutral position switch detects the gearshift position so that engine can be started only when the vehicle is in P or N shift position.

When the park/neutral position switch sends more than one signal at a time from switch positions P, R, N, D, 3, 2 or L the ECM interprets this as a fault in the switch. The ECM will turn on the MIL.

MONITOR STRATEGY

Related DTCs	P0705: Park/neutral position switch/Verify switch input
Required sensors/Components	Park/neutral position switch
Frequency of operation	Continuous
Duration	Condition (a) and (c): 2 seconds Condition (b): 60 seconds
MIL operation	2 driving cycles
Sequence of operation	None

TYPICAL ENABLING CONDITIONS

The monitor runs whenever the following DTCs are not present.	None
Ignition switch	ON
Battery voltage	10.5 V or more

TYPICAL MALFUNCTION THRESHOLDS

One of the following conditions is met: Condition (a), (b), (c) or (d)

Condition (a):

Number of following signals input simultaneously	2 or more
STAR switch	ON
R switch	ON
D switch	ON
2 switch	ON
L switch	ON

Condition (b):

Number of following signals input simultaneously	2 or more
P switch	ON

R switch	ON
N switch	ON
D switch	ON
2 switch	ON
L switch	ON

Condition (c):
All of the following conditions are met.

P switch	OFF
R switch	OFF
N switch	OFF
D switch	OFF
2 switch	OFF
L switch	OFF

Condition (d):
When shift lever is in P, R or N position, either of following conditions is met.

3 switch	ON
L switch	ON

COMPONENT OPERATING RANGE

Park/neutral position switch	The park/neutral position switch sends only one signal to the ECM.

WIRING DIAGRAM

w/ Smart Key System:

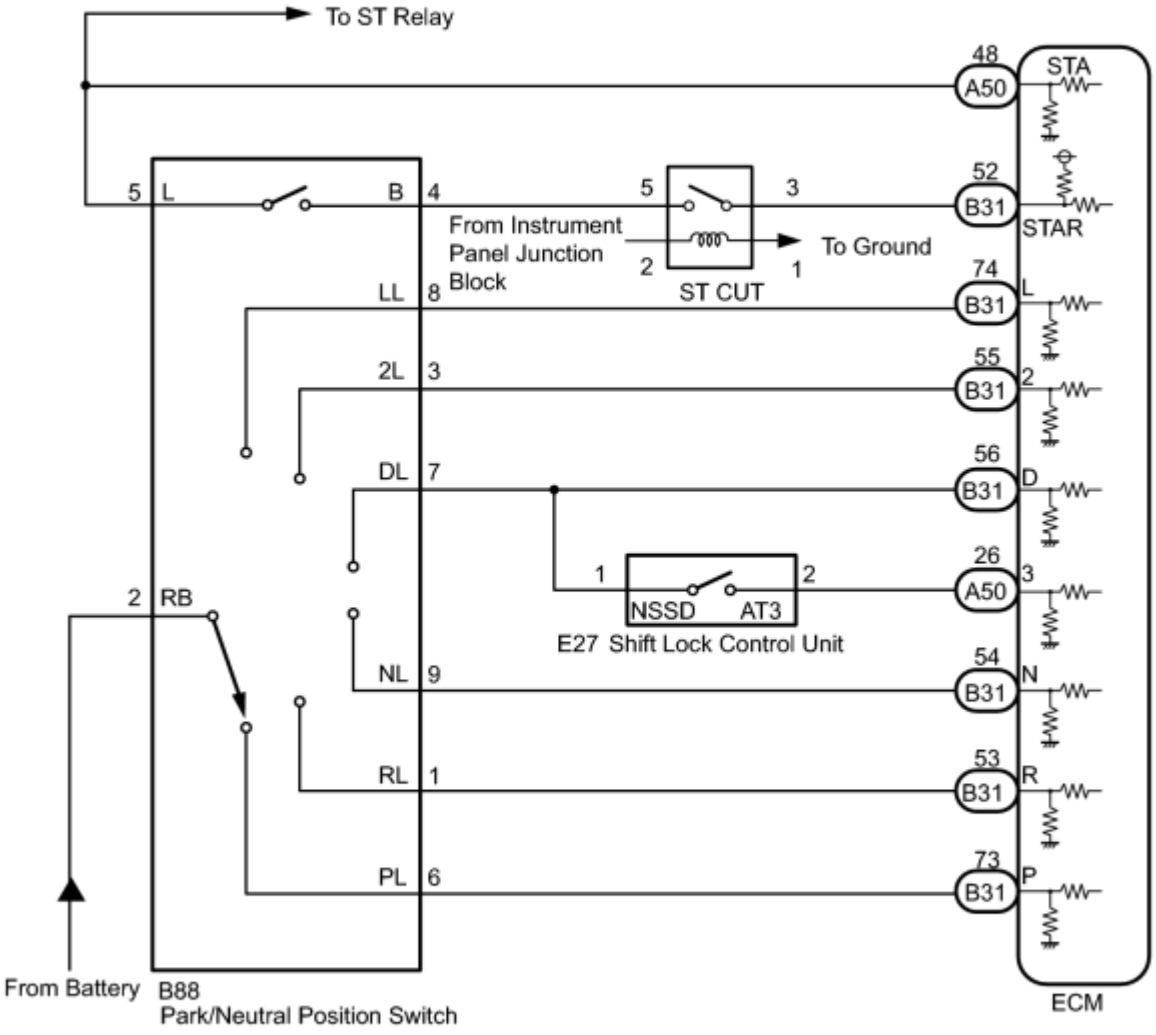

P

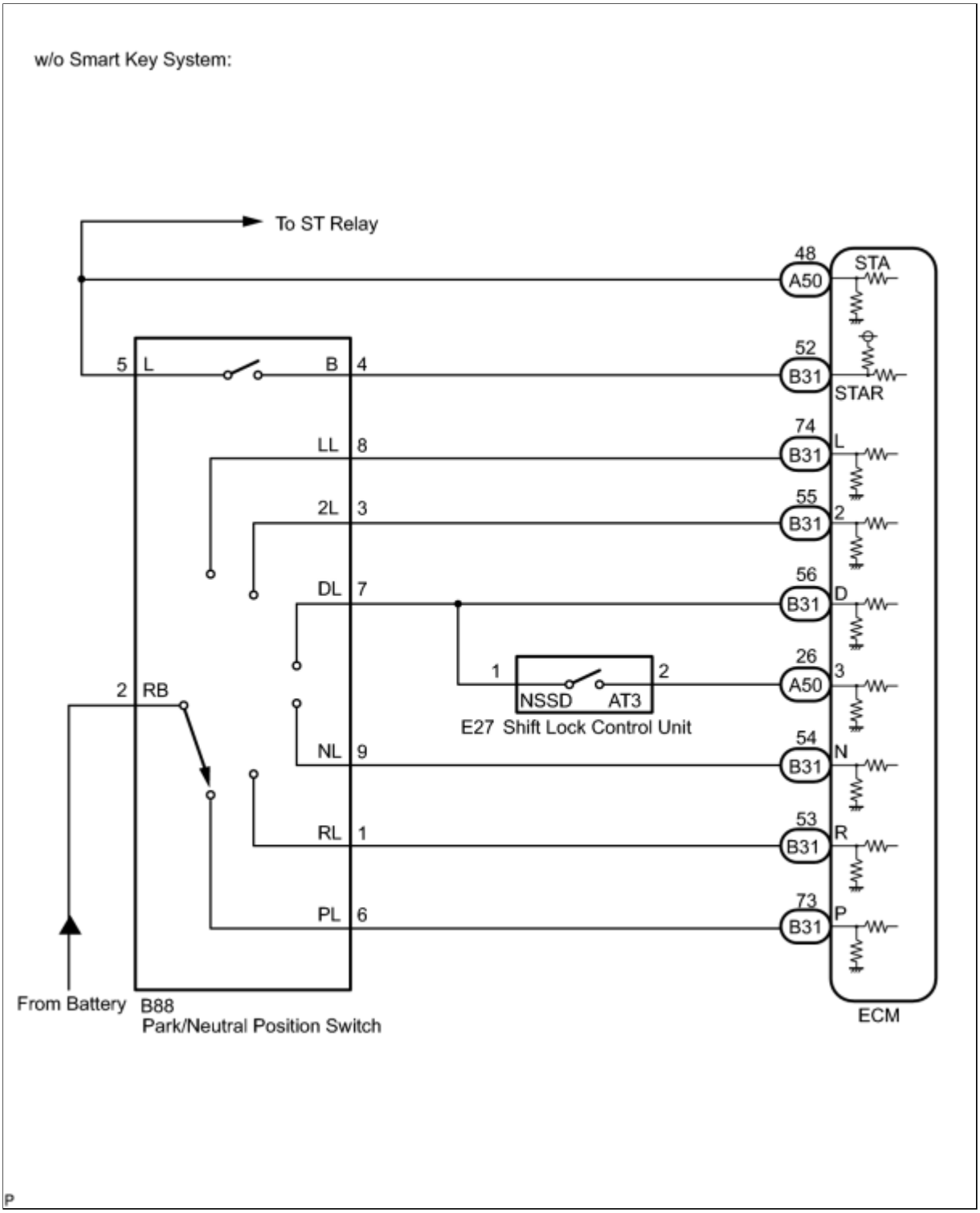

INSPECTION PROCEDURE

PROCEDURE

1.	**CHECK HARNESS AND CONNECTOR (BATTERY - PARK/NEUTRAL POSITION SWITCH)**

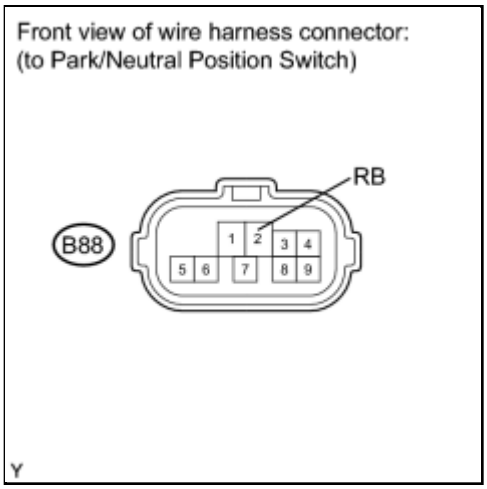

(a) Disconnect the park/neutral position switch connector.

(b) Turn the ignition switch to ON.

(c) Measure the voltage according to the value(s) in the table below.

Standard voltage:

TESTER CONNECTION	SWITCH CONDITION	SPECIFIED CONDITION
B88-2 (RB) - Body ground	Ignition switch ON	11 to 14 V

NG ▶ **REPAIR OR REPLACE HARNESS OR CONNECTOR**

OK ▼

2.	**CHECK HARNESS AND CONNECTOR (OUTPUT SIGNAL)**

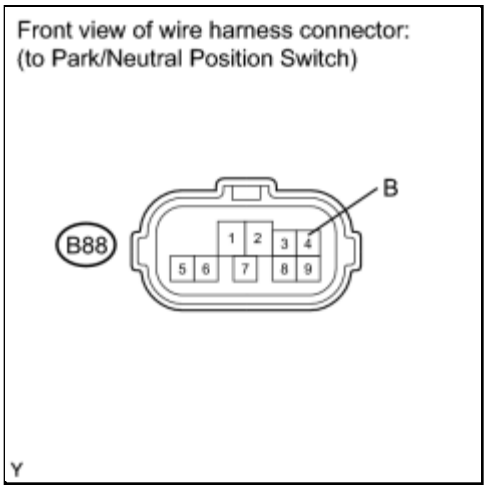

(a) Turn the ignition switch to ON.

(b) Measure the voltage according to the value(s) in the table below.

Standard voltage:

TESTER CONNECTION	SWITCH CONDITION	SPECIFIED CONDITION
B88-4 (B) - Body ground	Ignition switch ON	11 to 14 V

Result:

RESULT	PROCEED TO
OK	A
NG	B

B ▶ **CHECK HARNESS AND CONNECTOR (PARK/NEUTRAL POSITION SWITCH - ECM)**

A ▼

3.	**INSPECT PARK/NEUTRAL POSITION SWITCH ASSEMBLY**

(a) Measure the resistance according to the value(s) in the table below when the shift lever is moved to each position.

Standard resistance:

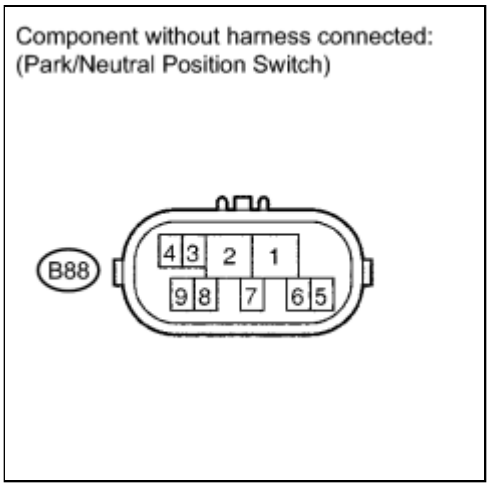

TESTER CONNECTION	SHIFT POSITION	SPECIFIED CONDITION
4 - 5	P and N	Below 1 Ω
	Except P and N	10 kΩ or higher
2 - 6	P	Below 1 Ω
	Except P	10 kΩ or higher
2 - 1	R	Below 1 Ω
	Except R	10 kΩ or higher
2 - 9	N	Below 1 Ω
	Except N	10 kΩ or higher
2 - 7	D and 3	Below 1 Ω

	Except D and 3	10 kΩ or higher
2 - 3	2	Below 1 Ω
	Except 2	10 kΩ or higher
2 - 8	L	Below 1 Ω
	Except L	10 kΩ or higher

NG ▶ **REPLACE PARK/NEUTRAL POSITION SWITCH ASSEMBLY**

OK ▼

4.	CHECK HARNESS AND CONNECTOR (PARK/NEUTRAL POSITION SWITCH - ECM)

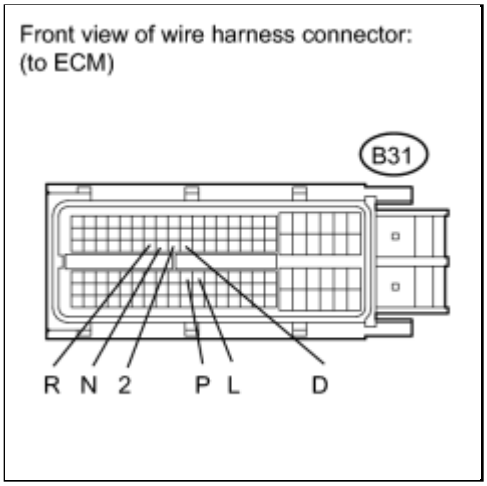

(a) Connect the park/neutral position switch connector.

(b) Disconnect the ECM connectors.

(c) Turn the ignition switch to ON, and measure the voltage according to the value(s) in the table below when the shift lever is moved to each position.

Standard voltage:

TESTER CONNECTION	SHIFT POSITION	SPECIFIED CONDITION
B31-73 (P) - Body ground	P	11 to 14 V
	Except P	Below 1 V
B31-54 (N) - Body ground	N	11 to 14 V

TESTER CONNECTION	SHIFT POSITION	SPECIFIED CONDITION
	Except N	Below 1 V
B31-53 (R) - Body ground	R	11 to 14 V*
	Except R	Below 1 V
B31-56 (D) - Body ground	D and 3	11 to 14 V
	Except D and 3	Below 1 V
B31-55 (2) - Body ground	2	11 to 14 V
	Except 2	Below 1 V
B31-74 (L) - Body ground	L	11 to 14 V
	Except L	Below 1 V

HINT:

***: The voltage will drop slightly due to lighting up of the back up light.**

NG ▶ **REPAIR OR REPLACE HARNESS OR CONNECTOR**

OK ▼

5.	**CHECK HARNESS AND CONNECTOR (PARK/NEUTRAL POSITION SWITCH - TRANSMISSION CONTROL SWITCH)**

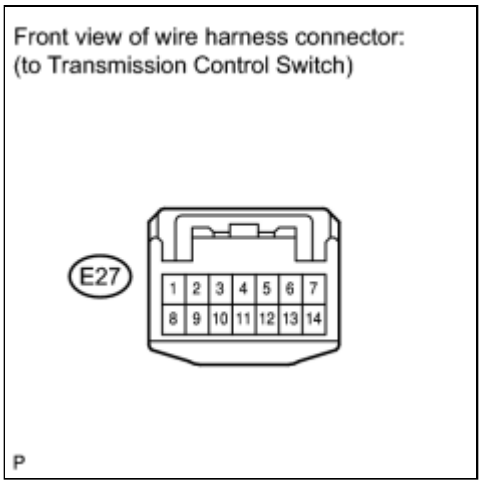

(a) Disconnect the transmission control switch connector of shift lock control unit assembly.

(b) Turn the ignition switch to ON, and measure the voltage according to the value(s) in the table below when the shift lever is moved to each position.

Standard voltage:

TESTER CONNECTION	SHIFT POSITION	SPECIFIED CONDITION
1 - Body ground	D and 3	11 to 14 V
	Except D and 3	Below 1 V

NG ▶ **REPAIR OR REPLACE HARNESS OR CONNECTOR**

OK ▼

6.	**INSPECT SHIFT LOCK CONTROL UNIT ASSEMBLY (TRANSMISSION CONTROL SWITCH)**

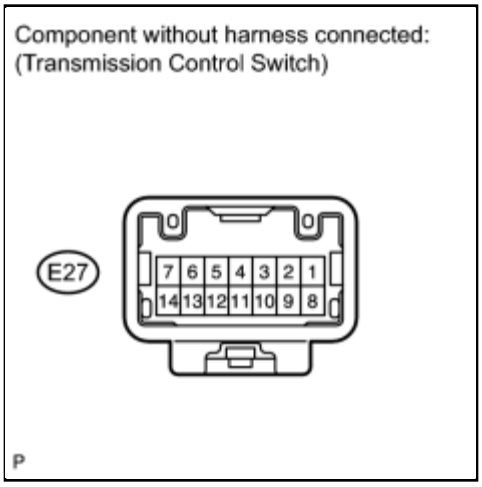

(a) Measure the resistance according to the value(s) in the table below when the shift lever is moved to each position.

Standard resistance:

TESTER CONNECTION	SHIFT POSITION	SPECIFIED CONDITION
1 - 2	3 and 2	Below 1 Ω
	Except 3 and 2	10 kΩ or higher

Result:

RESULT	PROCEED TO
OK	A
NG	B

B ▶ **REPLACE SHIFT LOCK CONTROL UNIT ASSEMBLY**

A ▼

7.	CHECK HARNESS AND CONNECTOR (TRANSMISSION CONTROL SWITCH - ECM)

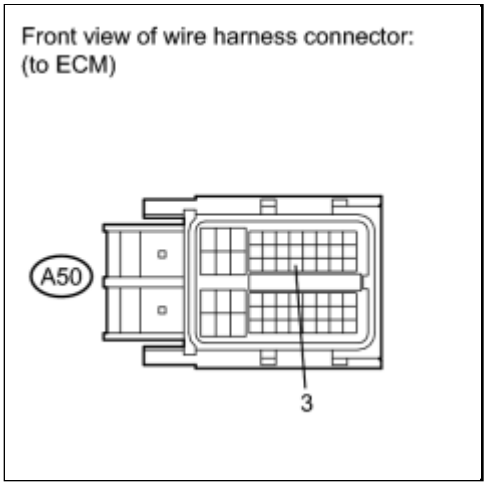

(a) Connect the transmission control switch connector of shift lock control unit assembly.

(b) Turn the ignition switch to ON, and measure the voltage according to the value(s) in the table below when the shift lever is moved to each position.

Standard voltage:

TESTER CONNECTION	SHIFT POSITION	SPECIFIED CONDITION
A50-26 (3) - Body ground	3	11 to 14 V
	Except 3	Below 1 V

NG ▶ **REPAIR OR REPLACE HARNESS OR CONNECTOR**

OK ▶ **REPLACE ECM (for 2ZR-FE)**

8.	CHECK HARNESS AND CONNECTOR (PARK/NEUTRAL POSITION SWITCH - ECM)

(a) Turn the ignition switch off.

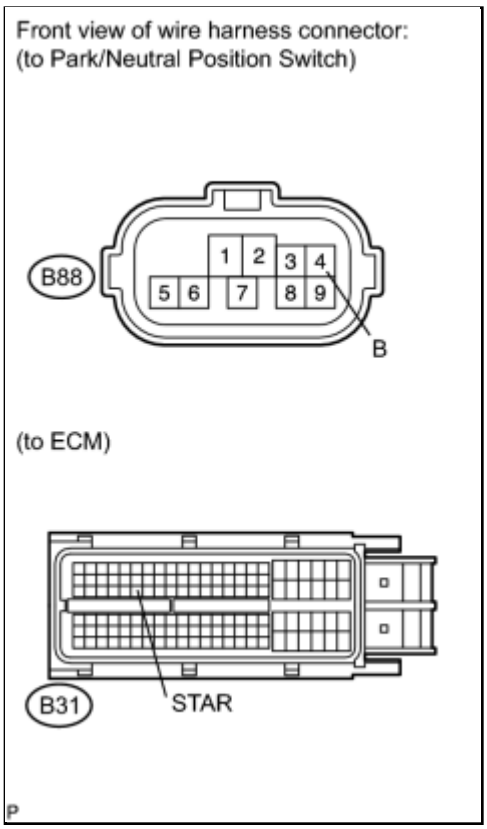

(b) Disconnect the ECM connectors.

(c) Measure the resistance according to the value(s) in the table below.

Standard resistance (Check for open):

TESTER CONNECTION	CONDITION	SPECIFIED CONDITION
B88-4 (B) - B31-52 (STAR)	Always	Below 1 Ω

Standard resistance (Check for short):

TESTER CONNECTION	CONDITION	SPECIFIED CONDITION
B88-4 (B) or B31-52 (STAR) - Body ground	Always	10 kΩ or higher

NG ▶ **REPAIR OR REPLACE HARNESS OR CONNECTOR**

OK ▶ **REPLACE ECM (for 2ZR-FE)**

Last Modified: 3-10-2010	6.4 C	**From:** 200901
Model Year: 2010	**Model:** Corolla	**Doc ID:** RM000000W850AZX
Title: U341E AUTOMATIC TRANSMISSION / TRANSAXLE: AUTOMATIC TRANSAXLE SYSTEM: P0710,P0712,P0713: Transmission Fluid Temperature Sensor "A" Circuit (2010 Corolla)		

DTC	**P0710**	**Transmission Fluid Temperature Sensor "A" Circuit**

DTC	**P0712**	**Transmission Fluid Temperature Sensor "A" Circuit Low Input**

DTC	**P0713**	**Transmission Fluid Temperature Sensor "A" Circuit High Input**

DESCRIPTION

The ATF (Automatic Transmission Fluid) temperature sensor converts the fluid temperature into a resistance value which is input into the ECM.

The ECM applies a voltage to the temperature sensor through ECM terminal THO1 (THO).

The sensor resistance changes with the transmission fluid temperature. As the temperature becomes higher, the sensor resistance decreases.

One terminal of the sensor is grounded so that the sensor resistance decreases and the voltage goes down as the temperature becomes higher.

The ECM calculates the fluid temperature based on the voltage signal.

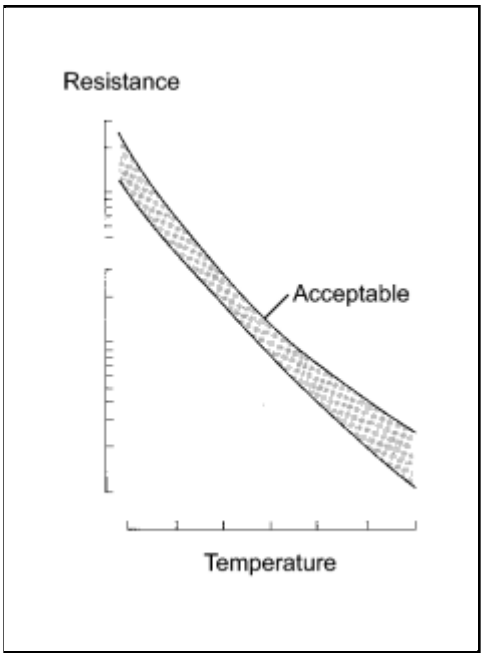

DTC NO.	DTC DETECTION CONDITION	TROUBLE AREA
P0710	(a) and (b) are detected momentarily within 0.5 sec. when neither P0712 nor P0713 is detected (1-trip detection logic) (a) ATF temperature sensor resistance is less than 79 Ω. (b) ATF temperature sensor resistance is more than 156 kΩ. HINT: Within 0.5 sec., the malfunction switches from (a) to (b) or from (b) to (a)	• Open or short in ATF temperature sensor circuit • Transmission wire (ATF temperature sensor) • ECM
P0712	ATF temperature sensor resistance is less than 79 Ω for 0.5 sec. or more (1-trip detection logic)	• Short in ATF temperature sensor circuit • Transmission wire (ATF temperature sensor) • ECM
P0713	ATF temperature sensor resistance is more than 156 kΩ when 15 minutes or more have elapsed after the engine start DTC is detected for 0.5 sec. or more (1-trip detection logic)	• Open in ATF temperature sensor circuit • Transmission wire (ATF temperature sensor) • ECM

MONITOR DESCRIPTION

These DTCs indicate an open or short in the automatic transmission fluid (ATF) temperature sensor (TFT sensor) circuit. The automatic transmission fluid (ATF) temperature sensor converts ATF temperature to an electrical resistance value. Based on the resistance, the ECM determines the ATF temperature, and the ECM detects an opens or shorts in the ATF temperature circuit. If the resistance value of the ATF temperature is less than 79 Ω *1 or more than 156 kΩ *2, the ECM interprets this as a fault in the ATF sensor or wiring. The ECM will turn on the MIL and store the DTC.

*1: 150°C (302°F) or more is indicated regardless of the actual ATF temperature.

*2: -40°C (-40°F) is indicated regardless of the actual ATF temperature.

HINT:

The ATF temperature can be checked on the Techstream display.

MONITOR STRATEGY

Related DTCs	P0710: ATF temperature sensor/Range check (Fluttering) P0712: ATF temperature sensor/Range check (Low resistance) P0713: ATF temperature sensor/Range check (High resistance)

Required sensors/Components	ATF temperature sensor (TFT*1 sensor)
Frequency of operation	Continuous
Duration	0.45 seconds
MIL operation	Immediate
Sequence of operation	None

*1: Transmission Fluid Temperature

TYPICAL ENABLING CONDITIONS

P0710: Range check (Fluttering)

The monitor runs whenever the following DTCs are not present.	None
The typical enabling conditions are not available.	-

P0712: Range check (Low resistance)

The monitor runs whenever the following DTCs are not present.	None
The typical enabling conditions are not available.	-

P0713: Range check (High resistance)

The monitor runs whenever the following DTCs are not present.	None
Time after engine start	15 minutes or more

TYPICAL MALFUNCTION THRESHOLDS

P0710: Range check (Fluttering)

ATF temperature sensor (TFT sensor) resistance	Less than 79 Ω or More than 156 kΩ

P0712: Range check (Low resistance)

ATF temperature sensor (TFT sensor) resistance	Less than 79 Ω

P0713: Range check (High resistance)

ATF temperature sensor (TFT sensor) resistance	More than 156 kΩ

COMPONENT OPERATING RANGE

ATF temperature sensor (TFT sensor) resistance	Resistance: 79 Ω to 156 kΩ

WIRING DIAGRAM

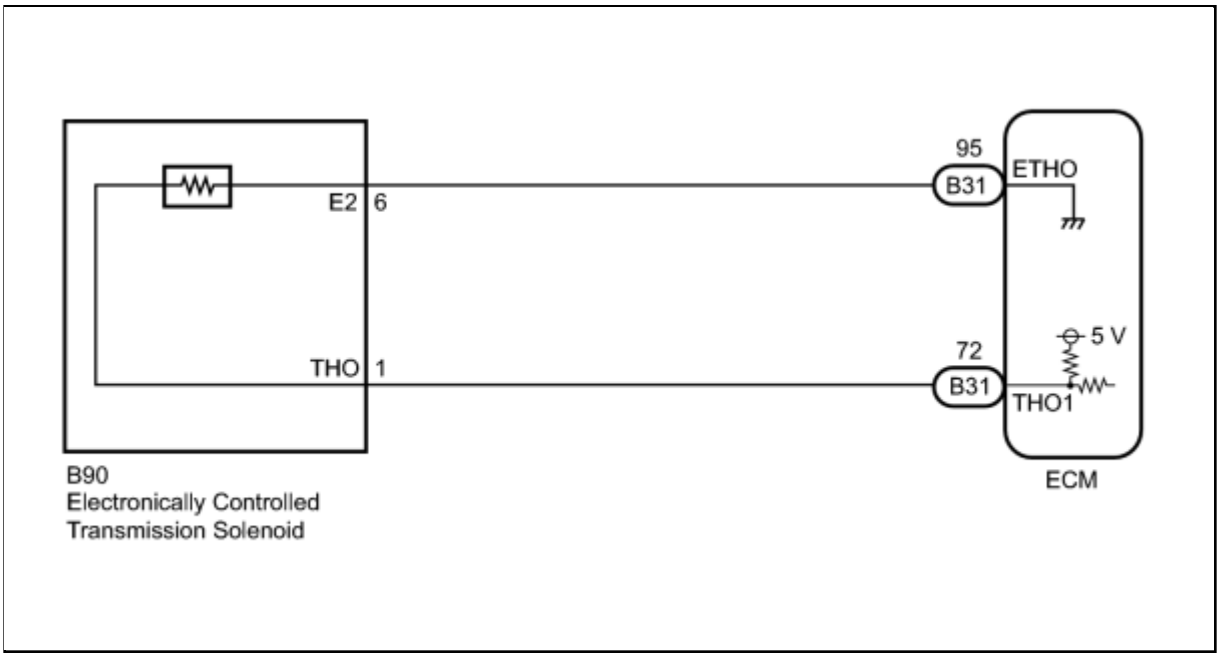

INSPECTION PROCEDURE

HINT:

Using the Techstream to read the Data List allows the values or states of switches, sensors, actuators and other items to be read without removing any parts. This non-intrusive inspection can be very useful because intermittent conditions or signals may be discovered before parts or wiring is disturbed. Reading the Data List information early in troubleshooting is one way to save diagnostic time.

NOTICE:

In the table below, the value listed under "Normal Condition" are reference values. Do not depend solely on these reference values when deciding whether a part is faulty or not.

1. READ DATA LIST

(a) Warm up the engine.

(b) Turn the ignition switch off.

(c) Connect the Techstream to the DLC3.

(d) Turn the ignition switch to ON.

(e) Turn on the Techstream.

(f) Select the item "Powertrain / Engine and ECT / Data List".

(g) According to the display on the Techstream, read the "Data List".

TESTER	MEASUREMENT	NORMAL CONDITION	DIAGNOSTIC NOTE

DISPLAY	ITEM/RANGE		
A/T Oil Temperature 1	ATF Temp. Sensor Value/ min.: -40°C (-40°F) max.: 215°C (419°F)	• After Stall Test: Approx. 80°C (176°F) • Equal to ambient temperature when cold soak	If the value is "-40°C (-40°F)" or "215°C (419°F)", ATF temp. sensor circuit is opened or shorted.

HINT:

When DTC P0712 is output and Techstream output is 150°C (302°F), there is a short circuit.

When DTC P0713 is output and Techstream output is -40°C (-40°F), there is an open circuit.

Measure the resistance between terminal THO1 (THO) and body ground.

TEMPERATURE DISPLAYED	MALFUNCTION
-40°C (-40°F)	Open circuit
150°C (302°F) or more	Short circuit

HINT:

If a circuit related to the ATF temperature sensor become open, P0713 is immediately set (in 0.5 second).

When P0713 is set, P0711 cannot be detected.

It is not necessary to inspect the circuit when P0711 is set.

PROCEDURE

1.	**INSPECT TRANSMISSION WIRE (ATF TEMPERATURE SENSOR)**

(a) Disconnect the transmission wire connector from the transaxle.

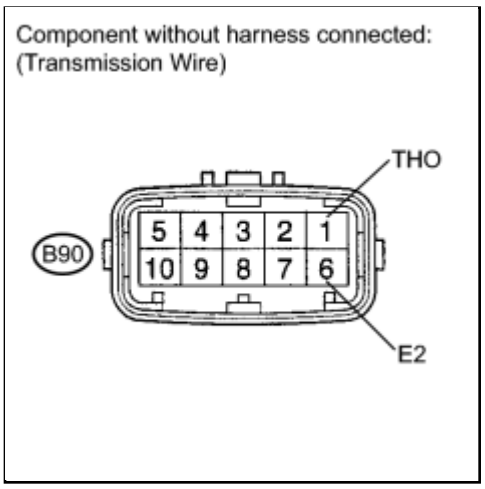

(b) Measure the resistance according to the value(s) in the table below.

Standard resistance:

TESTER CONNECTION	CONDITION	SPECIFIED CONDITION
1 (THO) - 6 (E2)	Always	79 Ω to 156 kΩ
1 (THO) - Body ground	Always	10 kΩ or higher
6 (E2) - Body ground	Always	↑

HINT:

If the resistance is out of the specified range with either the ATF temperature shown in the table below, the driveability of the vehicle may decrease.

ATF Temperature	Specified Condition
10°C (50°F)	5 to 8 kΩ
25°C (77°F)	2.5 to 4.5 kΩ
110°C (230°F)	0.22 to 0.28 kΩ

NG ▶ **REPAIR OR REPLACE TRANSMISSION WIRE**

OK ▼

2.	**CHECK HARNESS AND CONNECTOR (TRANSMISSION WIRE - ECM)**

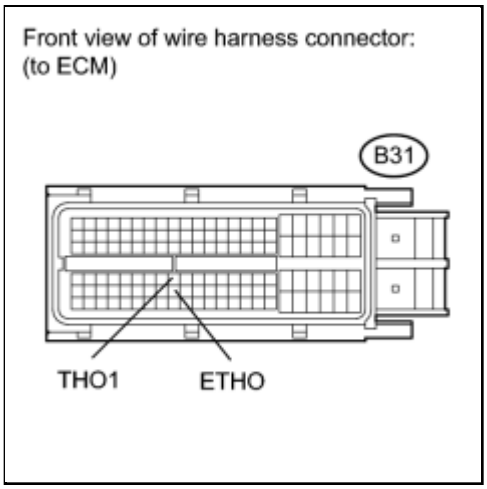

(a) Connect the transmission wire connector to the transaxle.

(b) Disconnect the ECM connectors.

(c) Measure the resistance according to the value(s) in the table below.

Standard resistance:

TESTER CONNECTION	CONDITION	SPECIFIED CONDITION
B31-72 (THO1) - B31-95 (ETHO)	Always	79 Ω to 156 kΩ

(d) Measure the resistance according to the value(s) in the table below.

Standard resistance (Check for short):

TESTER CONNECTION	CONDITION	SPECIFIED CONDITION
B31-72 (THO1) - Body ground	Always	10 kΩ or higher
B31-95 (ETHO) - Body ground	Always	↑

NG ▶ **REPAIR OR REPLACE HARNESS OR CONNECTOR**

OK ▶ **REPLACE ECM (for 2ZR-FE)**

Last Modified: 3-10-2010	6.4 C	**From:** 200901
Model Year: 2010	**Model:** Corolla	**Doc ID:** RM000000W7Z09QX
Title: U341E AUTOMATIC TRANSMISSION / TRANSAXLE: AUTOMATIC TRANSAXLE SYSTEM: P0711: Transmission Fluid Temperature Sensor "A" Performance (2010 Corolla)		

DTC	**P0711**	**Transmission Fluid Temperature Sensor "A" Performance**

SYSTEM DESCRIPTION

The ATF (Automatic Transmission Fluid) temperature sensor converts the fluid temperature into a resistance value which is input into the ECM.

DTC NO.	DTC DETECTION CONDITION	TROUBLE AREA
P0711	Either of the following Condition (A) or (B) is met: Condition (A): All of (a), (b) and (c) are detected (2-trip detection logic): (a) Intake air and engine coolant temperatures are more than -10°C (14°F) at engine start. (b) After normal driving for over 5 minutes and 5.6 miles (9 km) or more, ATF temperature is less than 20°C (68°F). (c) 19 minutes or more have elapsed after engine start. Condition (B): Both (a) and (b) are detected (2-trip detection logic) (a) Engine coolant temperature is less than 35°C (95°F) at engine start. (b) ATF temperature is 100°C (212°F) or more when engine coolant temperature reaches 60°C (140°F).	Transmission wire (ATF temperature sensor)

MONITOR DESCRIPTION

The ATF temperature sensor converts the ATF temperature to an electrical resistance value. Based on the resistance, the ECM determines the ATF temperature and detects opens or shorts in the ATF temperature circuit or a fault of the ATF temperature sensor.

After running the vehicle for a certain period, the ATF temperature should increase. If the ATF temperature is below 20°C (68°F) after running the vehicle for a certain period, the ECM interprets this as a fault, and turns on the MIL.

When the ATF temperature is 100°C (212°F) or more and engine coolant temperature reaches 60°C (140°F) after cold start, the ECM also determines this as a fault, turns on the MIL, and stores the DTC.

MONITOR STRATEGY

Related DTCs	P0711: ATF temperature sensor/Rationality check
Required sensors/Components	ATF temperature sensor (TFT* sensor)
Frequency of operation	Continuous
Duration	Condition (A): 3 seconds Condition (B): 10 seconds
MIL operation	2 driving cycles
Sequence of operation	None

*: Transmission Fluid Temperature

TYPICAL ENABLING CONDITIONS

The following conditions are common to Condition (A) and (B).

The monitor will run whenever this DTC is not present. (Not circuit malfunction)	P0710, P0712, P0713 (ATF temperature sensor circuit (TFT sensor)) P0115, P0117, P0118 (ECT sensor circuit) P0112, P0113 (IAT sensor circuit) P0120, P0121, P0122, P0123, P0220, P0222, P0223, P0604, P0606, P060A, P060D, P060E, P0657, P1607, P2102, P2103, P2111, P2112, P2118, P2119, P2135 (Electronic throttle control system)
ATF temperature sensor (TFT sensor) circuit	No circuit malfunction
ECT (Engine Coolant Temperature) sensor circuit	No circuit malfunction
IAT (Intake Air Temperature) sensor circuit	No circuit malfunction
Electronic Throttle Control System (if applicable)	No circuit malfunction

Condition (A):

Time after engine start	18 minutes and 20 seconds or more
Driving distance after engine start	5.6 mile (9 km) or more
Accumulated driving time	4 minutes and 10 seconds or more
ECT	-15°C (5°F) or more
IAT (12 seconds after engine start)	-10°C (14°F) or more
ECT (12 seconds after engine start)	-10°C (14°F) or more

Condition (B):

ECT (Current temperature)	60°C (140°F) or more
ECT (12 seconds after engine start)	Less than 35°C (95°F)
ATF temperature (12 seconds after engine start)	100°C (212°F) or more

TYPICAL MALFUNCTION THRESHOLDS

Either of the following conditions is met: Condition (A) or (B)

Condition (A):

ATF temperature	Less than 20°C (68°F)

Condition (B):

ATF temperature	100°C (212°F) or more

COMPONENT OPERATING RANGE

ATF temperature	Atmospheric temperature to approx. 130°C (266°F)

WIRING DIAGRAM

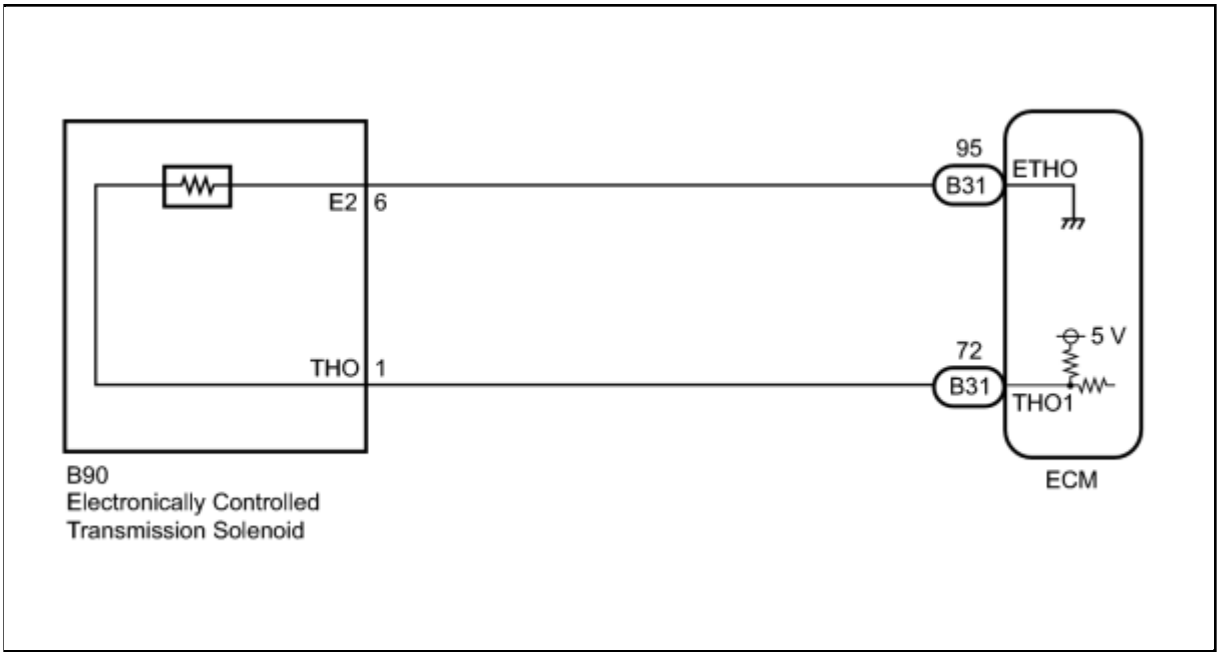

INSPECTION PROCEDURE

HINT:

Using the Techstream to read the Data List allows the values or states of switches, sensors, actuators and other items to be read without removing any parts. This non-intrusive inspection can be very useful because intermittent conditions or signals may be discovered before parts or wiring is disturbed. Reading the Data List information early in troubleshooting is one way to save diagnostic time.

NOTICE:

In the table below, the value listed under "Normal Condition" are reference values. Do not depend solely on these reference values when deciding whether apart is faulty or not.

1. READ DATA LIST

(a) Warm up the engine.

(b) Turn the ignition switch off.

(c) Connect the Techstream to the DLC3.

(d) Turn the ignition switch to ON.

(e) Turn on the Techstream.

(f) Select the item "Powertrain / Engine and ECT / Data List".

(g) According to the display on the Techstream, read the "Data List".

TESTER DISPLAY	MEASUREMENT ITEM/RANGE	NORMAL CONDITION	DIAGNOSTIC NOTE
A/T Oil Temperature 1	ATF Temp. Sensor Value/ min.: -40°C (-40°F) max.: 215°C (419°F)	• After Stall Test: Approx. 80°C (176°F) • Equal to ambient temperature when cold soak	If the value is "-40°C (-40°F)" or "215°C (419°F)", ATF temp. sensor circuit is opened or shorted.

HINT:

When DTC P0712 is output and the Techstream output is 150°C (302°F), there is a short circuit.

When DTC P0713 is output and the Techstream output is -40°C (-40°F), there is an open circuit.

Measure the resistance between terminal THO (TH01) and body ground.

TEMPERATURE DISPLAYED	MALFUNCTION
-40°C (-40°F)	Open circuit
150°C (302°F) or more	Short circuit

HINT:

If a circuit related to the ATF temperature sensor becomes open, P0713 is immediately set (in 0.5 second).

When P0713 is set, P0711 cannot be detected.

It is not necessary to inspect the circuit when P0711 is set.

PROCEDURE

1.	**CHECK OTHER DTCS OUTPUT (IN ADDITION TO DTC P0711)**

(a) Connect the Techstream to the DLC3.

(b) Turn the ignition switch to ON and the Techstream main switch on.

(c) When you use Techstream:

Select the item "Powertrain / Engine and ECT / Trouble Codes".

(d) Read the DTCs using the Techstream.

Result:

RESULT	PROCEED TO
P0711	A
P0711 and other DTCs	B

HINT:

If any other codes besides "P0711" are output, perform troubleshooting for those DTCs first.

B ▶ **GO TO DTC CHART**

A ▼

2.	**CHECK TRANSMISSION FLUID LEVEL**

OK:

Automatic transmission fluid level is correct.

NG ▶ **ADD FLUID**

OK ▶ **REPLACE TRANSMISSION WIRE (ATF TEMPERATURE SENSOR)**

Last Modified: 3-10-2010	6.4 C	**From:** 200901
Model Year: 2010	**Model:** Corolla	**Doc ID:** RM0000015VR043X
Title: U341E AUTOMATIC TRANSMISSION / TRANSAXLE: AUTOMATIC TRANSAXLE SYSTEM: P0717: Turbine Speed Sensor Circuit No Signal (2010 Corolla)		

DTC	**P0717**	**Turbine Speed Sensor Circuit No Signal**

DESCRIPTION

This sensor detects the rotation speed of the input turbine. By comparing the input turbine speed signal (NT) with the output shaft speed, the ECM detects the shift timing of the gears and appropriately controls the engine torque and hydraulic pressure according to various conditions. Thus, providing smooth gear shift.

DTC NO.	DTC DETECTION CONDITION	TROUBLE AREA
P0717	ECM detects conditions (a), (b) and (c) continuously for 5 sec. or more: (1-trip detection logic) (a) Vehicle speed: 50 km/h (31 mph) or more (b) Park/neutral position switch (STAR, R and L) is OFF (c) Speed sensor (NT): less than 300 rpm	• Open or short in transmission revolution sensor NT (speed sensor NT) circuit • Transmission revolution sensor NT (speed sensor NT) • ECM • Automatic transaxle assembly

MONITOR DESCRIPTION

The input speed sensor detects the transmission input shaft speed. The ECM determines the gear shift timing based on a comparison of the input speed sensor (input shaft speed) with the output speed sensor (output shaft speed).

When the output shaft speed is higher than the expected value and the input shaft speed is 300 rpm or less while running with the shift in the D position, the ECM will conclude that there is malfunction of the input turbine speed sensor (NT). The ECM will illuminate the MIL.

MONITOR STRATEGY

Related DTCs	P0717: Turbine speed sensor/Verify pulse input
Required sensors/Components	Transmission revolution sensor (Speed sensor (NT))
Frequency of operation	Continuous
Duration	5 seconds
MIL operation	Immediate

Sequence of operation	None

TYPICAL ENABLING CONDITIONS

The monitor runs whenever the following DTCs are not present.	P0500 (VSS) P0748 - P0798 (Trans solenoid (range))
Shift change	After shift change is completed and before starting next shift change operation
ECM selected gear	2nd, 3rd or 4th
Output shaft rpm	1000 rpm or more
Park/neutral position switch	OFF
R switch	OFF
L switch	OFF
Transmission range switch fail	Not detected
Battery voltage	8 V or more
Ignition switch	ON
Starter	OFF
Engine	Running

TYPICAL MALFUNCTION THRESHOLDS

Sensor signal rpm	Less than 300 rpm

COMPONENT OPERATING RANGE

Transmission revolution sensor (speed sensor (NT))	Input turbine speed is equal to engine speed when lock-up ON

WIRING DIAGRAM

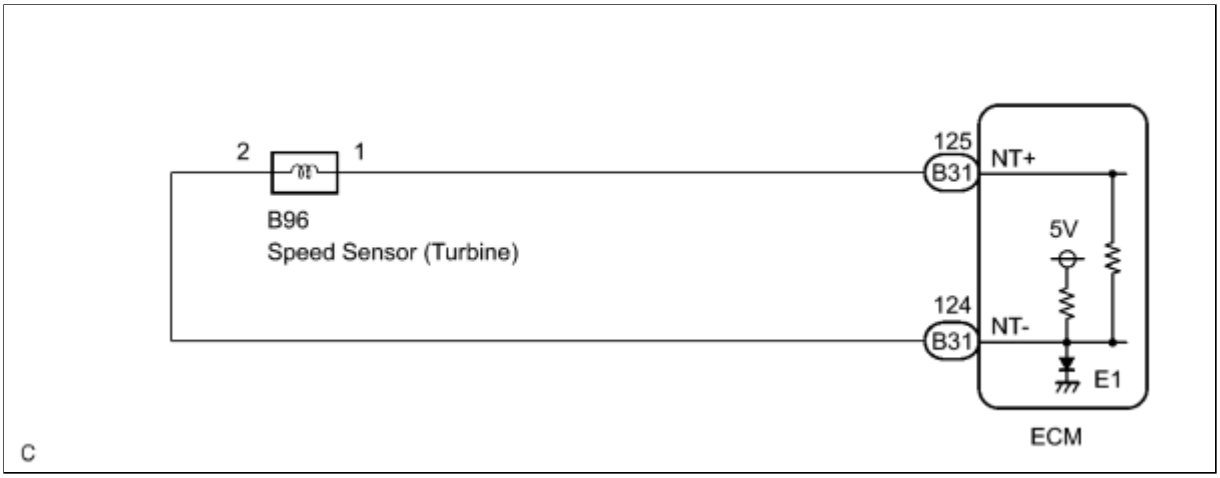

INSPECTION PROCEDURE

PROCEDURE

1.	**INSPECT SPEED SENSOR INSTALLATION**

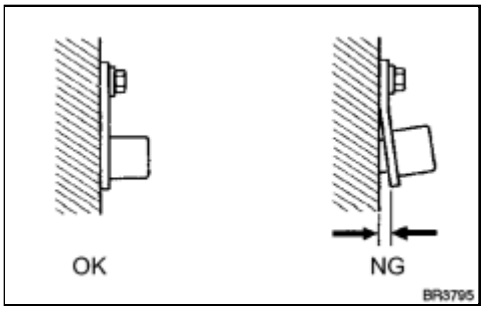

(a) Check the speed sensor installation.

OK:

The installation bolt is tightened properly and there is no clearance between the sensor and transaxle case.

NG ▶ **REPLACE SPEED SENSOR (NT)**

OK
▼

2.	**INSPECT SPEED SENSOR (NT)**

(a) Disconnect the speed sensor connector from the transaxle.

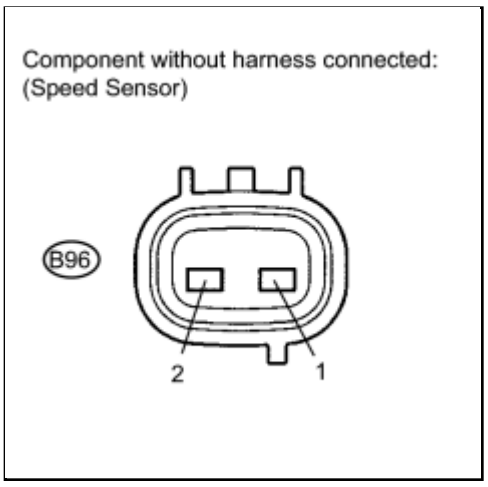

(b) Measure the resistance according to the value(s) in the table below.

Standard resistance:

TESTER CONNECTION	CONDITION	SPECIFIED CONDITION
1 - 2	20°C (68°F)	560 to 680 Ω

NG ▶ **REPLACE SPEED SENSOR (NT)**

OK ▼

3.	**CHECK HARNESS AND CONNECTOR (SPEED SENSOR - ECM)**

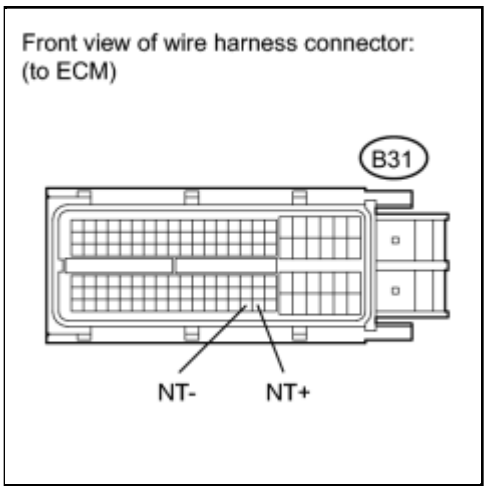

(a) Connect the speed sensor connector.

(b) Disconnect the ECM connector.

(c) Measure the resistance according to the value(s) in the table below.

Standard resistance:

TESTER CONNECTION	CONDITION	SPECIFIED CONDITION
B31-125 (NT+) - B31-124 (NT-)	20°C (68°F)	560 to 680 Ω

(d) Measure the resistance according to the value(s) in the table below.

Standard resistance (Check for short):

TESTER CONNECTION	CONDITION	SPECIFIED CONDITION
B31-125 (NT+) - Body ground	Always	10 kΩ or higher
B31-124 (NT-) - Body ground	Always	↑

NG ▶ **REPAIR OR REPLACE HARNESS OR CONNECTOR**

OK ▶ **REPLACE ECM (for 2ZR-FE)**

Last Modified: 3-10-2010	6.4 C	**From:** 200901
Model Year: 2010	**Model:** Corolla	**Doc ID:** RM0000015W003GX
Title: U341E AUTOMATIC TRANSMISSION / TRANSAXLE: AUTOMATIC TRANSAXLE SYSTEM: P0724: Brake Switch "B" Circuit High (2010 Corolla)		

DTC	**P0724**	**Brake Switch "B" Circuit High**

DESCRIPTION

The purpose of this circuit is to prevent the engine from stalling while driving in lock-up condition when brakes are suddenly applied.

When the brake pedal is depressed, this switch sends a signals to the ECM. Then the ECM cancels the operation of the lock-up clutch while braking is in progress.

DTC NO.	DTC DETECTION CONDITION	TROUBLE AREA
P0724	The stop light switch remains ON even when the vehicle is driven in a STOP (less than 3 km/h (2 mph) and GO (30 km/h (19 mph) or more) fashion 5 times. (2-trip detection logic).	• Short in stop light switch circuit • Stop light switch • ECM

MONITOR DESCRIPTION

This DTC indicates that the stop light switch remains on. When the stop light switch remains ON during "stop and go" driving, the ECM interprets this as a fault in the stop light switch and the MIL comes on and the ECM stores the DTC. The vehicle must stop (less than 3 km/h (2 mph)) and go (30 km/h (19 mph) or more) 5 times for two driving cycles in order to detect a malfunction.

MONITOR STRATEGY

Related DTCs	P0724: Stop light switch/Verify switch input
Required sensors/Components	Stop light switch, Vehicle speed sensor
Frequency of operation	Continuous
Duration	GO and STOP 5 times
MIL operation	2 driving cycles
Sequence of operation	None

TYPICAL ENABLING CONDITIONS

The monitor will run whenever this DTC is not present.	None
Ignition switch	ON
Starter	OFF
Battery voltage	8 V or more
GO (Vehicle speed is 30 km/h (18.63 mph) or more)	Once
STOP (Vehicle speed is less than 3 km/h (1.86 mph))	Once

TYPICAL MALFUNCTION THRESHOLDS

Brake switch	Remain ON during GO and STOP 5 times

WIRING DIAGRAM

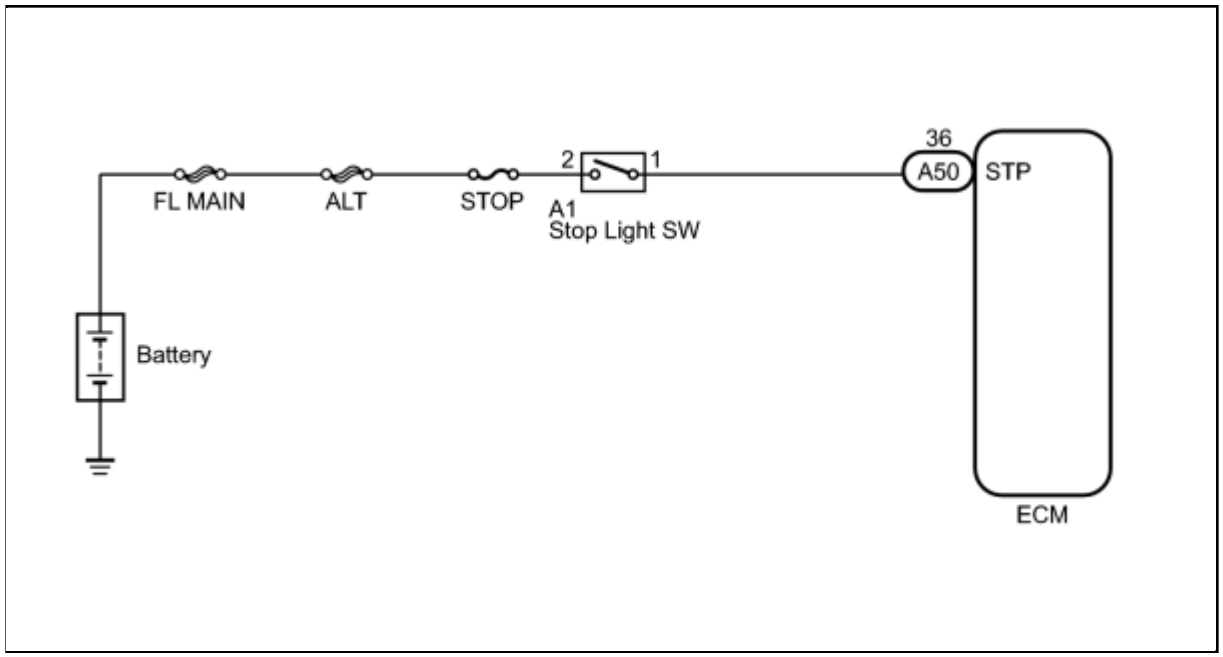

INSPECTION PROCEDURE

PROCEDURE

1.	**READ VALUE USING DATA LIST**

HINT:

Using the Techstream to read the Data List allows the values or states of switches, sensors, actuators and

other items to be read without removing any parts. This non-intrusive inspection can be very useful because intermittent conditions or signals may be discovered before parts or wiring is disturbed. Reading the Data List information early in troubleshooting is one way to save diagnostic time.

(a) Warm up the engine.

(b) Turn the ignition switch off.

(c) Connect the Techstream to the DLC3.

(d) Turn the ignition switch to ON.

(e) Turn on the Techstream.

(f) Select the item "Powertrain / Engine and ECT / Data List".

(g) According to the display on the Techstream, read the "Data List".

Standard:

TESTER DISPLAY	MEASUREMENT ITEM/RANGE	NORMAL CONDITION	DIAGNOSTIC NOTE
Stop Light Switch	Stop light switch Status/ON or OFF	• Brake Pedal is depressed: ON • Brake Pedal is released: OFF	-

NOTICE:

In the table above, the value listed under "Normal Condition" are reference values. Do not depend solely on these reference values when deciding whether a part is faulty or not.

Result:

RESULT	PROCEED TO
NG	A
OK	B

B ▶ **CHECK HARNESS AND CONNECTOR (STOP LIGHT SWITCH ASSEMBLY - ECM)**

A ▼

2.	**INSPECT STOP LIGHT SWITCH ASSEMBLY**

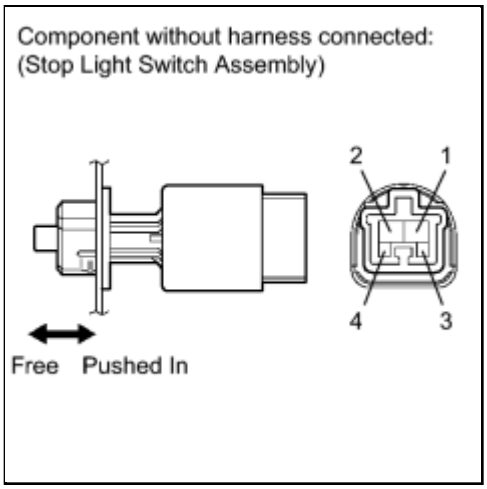

(a) Remove the stop light switch assembly.

(b) Measure the resistance according to the value(s) in the table below.

Standard resistance:

TESTER CONNECTION	SWITCH POSITION	SPECIFIED CONDITION
1 - 2	Switch pin free	Below 1 Ω
↑	Switch pin pushed in	10 kΩ or higher
3 - 4	Switch pin free	10 kΩ or higher
↑	Switch pin pushed in	Below 1 Ω

NG ▶ **REPLACE STOP LIGHT SWITCH ASSEMBLY**

OK ▼

3.	**CHECK HARNESS AND CONNECTOR (STOP LIGHT SWITCH ASSEMBLY - ECM)**

(a) Install the stop light switch assembly.

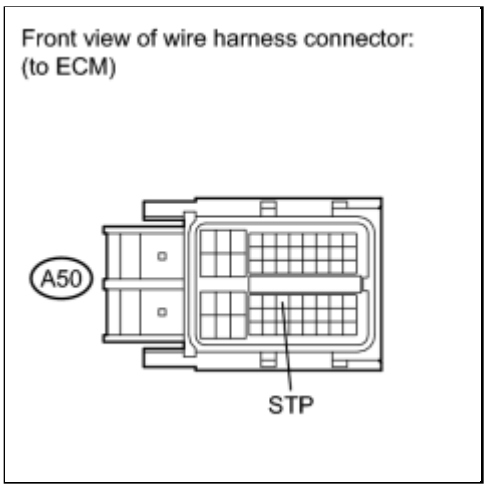

(b) Disconnect the ECM connector.

(c) Measure the voltage according to the value(s) in the table below when the brake pedal is depressed and released.

Standard voltage:

TESTER CONNECTION	CONDITION	SPECIFIED CONDITION
A50-36 (STP) - Body ground	Brake pedal is depressed	11 to 14 V
	Brake pedal is released	Below 1 V

NG ▶ **REPAIR OR REPLACE HARNESS OR CONNECTOR**

OK ▶ **REPLACE ECM (for 2ZR-FE)**

Last Modified: 3-10-2010	6.4 C	**From:** 200901
Model Year: 2010	**Model:** Corolla	**Doc ID:** RM0000026F7015X
Title: U341E AUTOMATIC TRANSMISSION / TRANSAXLE: AUTOMATIC TRANSAXLE SYSTEM: P0751: Shift Solenoid "A" Performance (Shift Solenoid Valve S1) (2010 Corolla)		

DTC	**P0751**	**Shift Solenoid "A" Performance (Shift Solenoid Valve S1)**

SYSTEM DESCRIPTION

The ECM uses signals from the vehicle speed sensor and speed sensor NT to detect the actual gear position (1st, 2nd, 3rd or 4th gear).

Then the ECM compares the actual gear with the shift schedule in the ECM memory to detect the mechanical problems of the shift solenoid valves, the valve body or automatic transaxle (clutch, brake or gear etc.).

DTC NO.	DTC DETECTION CONDITION	TROUBLE AREA
P0751	The gear required by the ECM does not match the actual gear when driving (2-trip detection logic)	• Shift solenoid valve S1 remains open or closed • Valve body is blocked • Shift solenoid valve S1 • Automatic transaxle (clutch, brake or gear etc.)

MONITOR DESCRIPTION

The ECM commands gear shifts by turning the shift solenoid valves "ON/OFF". According to the input shaft revolution, intermediate (counter) shaft revolution and output shaft revolution, the ECM detects the actual gear position (1st, 2nd, 3rd or 4th gear position). When the gear position commanded by the ECM and the actual gear position are not same, the ECM illuminates the MIL and stores the DTC.

MONITOR STRATEGY

Related DTCs	P0751: Shift solenoid valve S1/OFF malfunction Shift solenoid valve S1/ON malfunction
Required sensors/Components	Shift solenoid valve S1, Speed sensor (NT), Speed sensor (SPD), Engine coolant temperature sensor (ECT)
Frequency of operation	Continuous

Duration	OFF malfunction (a): 0.85 seconds OFF malfunction (b): 0.8 seconds ON malfunction (a): 0.8 seconds ON malfunction (b): 0.8 seconds
MIL operation	2 driving cycle
Sequence of operation	None

TYPICAL ENABLING CONDITIONS

The following conditions are common to all OFF malfunctions and ON malfunctions.

The monitor will run whenever this DTC is not present. (Not circuit malfunction)	P0500 (Vehicle speed sensor circuit) P0115, P0117, P0118 (ECT sensor circuit) P0717 (Turbine speed sensor circuit) P0973, P0974 (Shift solenoid valve S1 circuit) P0976, P0977 (Shift solenoid valve S2 circuit) P0120, P0121, P0122, P0123, P0220, P0222, P0223, P0604, P0606, P060A, P060D, P060E, P0657, P1607, P2102, P2103, P2111, P2112, P2118, P2119, P2135 (Electronic throttle control system)
ECT (Engine Coolant Temperature)	60°C (140°F) or more
Time after shifting N to D	4.5 seconds or more
Transmission shift position	D
Shift solenoid valve S1 circuit	No circuit malfunction
Shift solenoid valve S2 circuit	No circuit malfunction
ECT sensor circuit	No circuit malfunction
Electronic Throttle Control System (if applicable)	No circuit malfunction
Speed sensor (NT) circuit	No circuit malfunction
Speed sensor (SPD) circuit	No circuit malfunction

OFF malfunction (a):

ECM gearshift command	1st
Vehicle speed	5.6 mph (9 km/h) or more and

	Less than 24.9 mph (40 km/h)
Throttle valve opening angle	7.0 % or more and 4.0 % or more at engine speed of 1900 rpm (Conditions vary with engine speed)

OFF malfunction (b):

ECM gearshift command	4th
Last ECM selected gear	3rd

ON malfunction (a):

ECM gearshift command	4th
Last ECM selected gear	3rd

ON malfunction (b):

ECM gearshift command	4th
V current - V last V current: Vehicle speed at current ECM selected gear V last: Vehicle speed at last ECM selected gear	Less than 9.3 mph (15 km/h)
TH current - TH last TH current: Throttle valve opening angle at current ECM selected gear TH last: Throttle valve opening angle at last ECM selected gear	Less than 20 %
Vehicle speed (current)	Less than 52.8 mph (85 km/h)
Throttle valve opening angle (current)	Less than 35 %
Engine speed (current)	3200 rpm or more

TYPICAL MALFUNCTION THRESHOLDS

[OFF malfunction]

Both of the following conditions met: OFF malfunctions (a) and (b)

2 detections are necessary per driving cycle.

1st detection: Temporary flag ON

2nd detection: Pending fault code ON

OFF malfunction (a):

Input speed/Output speed (NT/NO) NT: Input (turbine) speed NO: Internal counter shaft speed	0.64 or more and less than 0.78 (Current) (This means actual gear is 4th)

OFF malfunction (b):

Input speed/Output speed (NT/NO)	Changes as follows 0.95 or more and less than 1.09 (Last) (This means actual gear is 3rd) to 0.64 or more and less than 0.78 (Current) (This means actual gear is 4th)

[ON malfunction]

Both of the following conditions met: ON malfunctions (a) and (b)

ON malfunction (a):

Input speed/Output speed (NT/NO)	No change as follows 0.95 or more and less than 1.09 (Last) (This means actual gear is 3rd) to 0.64 or more and less than 0.78 (Current) (This means actual gear is 4th)

ON malfunction (b):

NE change **HINT:** **NE current - NE last** NE current: Engine speed at current ECM selected gear NE last: Engine speed at last ECM selected gear	1100 rpm or more

INSPECTION PROCEDURE

HINT:

Using the Techstream to perform Active Tests allows relays, VSVs, actuators and other items to be operated without removing any parts. This non-intrusive functional inspection can be very useful because intermittent operation may be discovered before parts or wiring is disturbed. Performing Active Tests early in troubleshooting is one way to save diagnostic time. Data List information can be displayed while performing Active Tests.

1. PERFORM ACTIVE TEST

(a) Warm up the engine.

(b) Turn the ignition switch off.

(c) Connect the Techstream to the DLC3.

(d) Turn the ignition switch to ON.

(e) Turn on the Techstream.

(f) Select the item "Powertrain / Engine and ECT / Active Test".

(g) According to the display on the Techstream, perform the "Active Test".

HINT:

While driving, the shift position can be forcibly changed with the Techstream.

Comparing the shift position commanded by the Active Test with the actual shift position enables you to confirm the problem INFO .

TESTER DISPLAY	TEST PART	CONTROL RANGE	DIAGNOSTIC NOTE
Control the Shift Position	[Test Details] Operate the shift solenoid valve and set the each shift position by yourself. [Vehicle Condition] • IDL: ON • Less than 50 km/h (31 mph) [Others] • Press "→" button: Shift up • Press "←" button: Shift down	1st/2nd /3rd/4th	Possible to check the operation of the shift solenoid valves.

HINT:

- This test can be conducted when the vehicle speed is 50 km/h (31 mph) or less.
- The shift position commanded by the ECM is shown in the Data List/Shift Status display on the Techstream.

PROCEDURE

1.	**CHECK OTHER DTCS OUTPUT (IN ADDITION TO DTC P0751)**

(a) Connect the Techstream to the DLC3.

(b) Turn the ignition switch to ON and the Techstream main switch on.

(c) Select the item "Powertrain / Engine and ECT / Trouble Codes".

(d) Read the DTCs using the Techstream.

Result:

RESULT	PROCEED TO
P0751	A
P0751 and other DTCs	B

HINT:

If any other codes besides "P0751" are output, perform the troubleshooting for those DTCs first.

B ▶ **GO TO DTC CHART**

A ▼

2.	**INSPECT SHIFT SOLENOID VALVE S1**

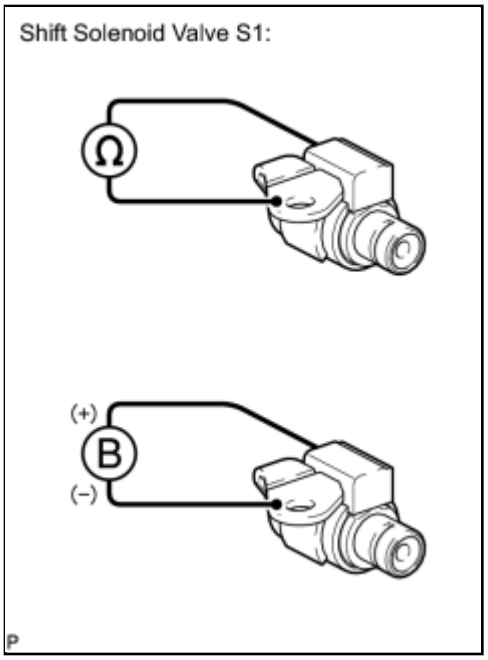

(a) Remove the shift solenoid valve S1.

(b) Measure the resistance according to the value(s) in the table below.

Standard resistance:

TESTER CONNECTION	CONDITION	SPECIFIED CONDITION

TESTER CONNECTION	CONDITION	SPECIFIED CONDITION
Solenoid Connector (S1) - Solenoid Body (S1)	20°C (68°F)	11 to 15 Ω

(c) Connect the positive (+) lead to the terminal of the solenoid connector, and the negative (-) lead to the solenoid body.

OK:

The solenoid makes an operating sound.

NG ▶ **REPLACE SHIFT SOLENOID VALVE S1**

OK ▼

3.	INSPECT TRANSMISSION VALVE BODY ASSEMBLY

OK:

There are no foreign objects on each valve and they operate smoothly.

NG ▶ **REPAIR OR REPLACE TRANSMISSION VALVE BODY ASSEMBLY**

OK ▶ **REPAIR OR REPLACE AUTOMATIC TRANSAXLE ASSEMBLY**

Last Modified: 3-10-2010	6.4 C	**From:** 200901
Model Year: 2010	**Model:** Corolla	**Doc ID:** RM0000026F8015X
Title: U341E AUTOMATIC TRANSMISSION / TRANSAXLE: AUTOMATIC TRANSAXLE SYSTEM: P0756: Shift Solenoid "B" Performance (Shift Solenoid Valve S2) (2010 Corolla)		

DTC	**P0756**	**Shift Solenoid "B" Performance (Shift Solenoid Valve S2)**

SYSTEM DESCRIPTION

The ECM uses signals from the vehicle speed sensor and speed sensor NT to detect the actual gear position (1st, 2nd, 3rd or 4th gear).

Then the ECM compares the actual gear with the shift schedule in the ECM memory to detect the mechanical problems of the shift solenoid valves, the valve body or automatic transaxle (clutch, brake or gear etc.).

DTC NO.	DTC DETECTION CONDITION	TROUBLE AREA
P0756	The gear required by the ECM does not match the actual gear when driving (2-trip detection logic)	• Shift solenoid valve S2 remains open or closed • Valve body is blocked • Shift solenoid valve S2 • Automatic transaxle (clutch, brake or gear etc.)

MONITOR DESCRIPTION

The ECM commands gear shifts by turning the shift solenoid valves "ON/OFF". According to the input shaft revolution, intermediate (counter) shaft revolution and output shaft revolution, the ECM detects the actual gear position (1st, 2nd, 3rd or 4th gear position). When the gear position commanded by the ECM and the actual gear position are not same, the ECM illuminates the MIL and stores the DTC.

MONITOR STRATEGY

Related DTCs	P0756: Shift solenoid valve S2/OFF malfunction Shift solenoid valve S2/ON malfunction
Required sensors/Components	Shift solenoid valve S2, Speed sensor (NT), Speed sensor (SPD), Engine coolant temperature sensor (ECT)
Frequency of operation	Continuous
Duration	0.85 seconds

MIL operation	2 driving cycle
Sequence of operation	None

TYPICAL ENABLING CONDITIONS

The following conditions are common to all OFF malfunctions and ON malfunctions.

The monitor will run whenever this DTC is not present. (Not circuit malfunction)	P0500 (Vehicle speed sensor circuit) P0115, P0117, P0118 (ECT sensor circuit) P0717 (Turbine speed sensor circuit) P0973, P0974 (Shift solenoid valve S1 circuit) P0976, P0977 (Shift solenoid valve S2 circuit) P0120, P0121, P0122, P0123, P0220, P0222, P0223, P0604, P0606, P060A, P060D, P060E, P0657, P1607, P2102, P2103, P2111, P2112, P2118, P2119, P2135 (Electronic throttle control system)
ECT (Engine Coolant Temperature)	60°C (140°F) or more
Transmission shift position	D
Time after shifting N to D	4.5 seconds or more
Shift solenoid valve S1 circuit	No circuit malfunction
Shift solenoid valve S2 circuit	No circuit malfunction
ECT sensor circuit	No circuit malfunction
Electronic Throttle Control System (if applicable)	No circuit malfunction
Speed sensor (NT) circuit	No circuit malfunction
Speed sensor (SPD) circuit	No circuit malfunction

OFF malfunction (a):

ECM gearshift command	1st
Vehicle speed	5.6 mph (9 km/h) or more and less than 24.9 mph (40 km/h)
Throttle valve opening angle	4.0 % or more at engine speed of 1900 rpm (Conditions vary with engine speed)

OFF malfunction (b):

ECM gearshift command	3rd
Vehicle speed	5.6 mph (9 km/h) or more
Throttle valve opening angle	4.0 % or more at engine speed of 1900 rpm (Conditions vary with engine speed)

OFF malfunction (c):

ECM gearshift command	4th
Vehicle speed	5.6 mph (9 km/h) or more
Throttle valve opening angle	4.0 % or more at engine speed of 1900 rpm (Conditions vary with engine speed)

ON malfunction (a):

ECM gearshift command	2nd
Vehicle speed	5.6 mph (9 km/h) or more
Throttle valve opening angle	4.0 % or more at engine speed of 1900 rpm (Conditions vary with engine speed)

ON malfunction (b):

ECM gearshift command	3rd
Vehicle speed	5.6 mph (9 km/h) or more
Throttle valve opening angle	4.0 % or more at engine speed of 1900 rpm (Conditions vary with engine speed)

ON malfunction (c):

ECM gearshift command	4th
Vehicle speed	5.6 mph (9 km/h) or more
Throttle valve opening angle	4.0 % or more at engine speed of 1900 rpm (Conditions vary with engine speed)

TYPICAL MALFUNCTION THRESHOLDS

[OFF malfunction]

All of the following conditions met: OFF malfunctions (a), (b) and (c)

2 detections are necessary per driving cycle.

1st detection: Temporary flag ON

2nd detection: Pending fault code ON

OFF malfunction (a):

Input speed/Output speed (NT/NO) NT: Input (turbine) speed NO: Internal counter shaft speed	1.50 or more and less than 1.80 (This means actual gear is 2nd)

OFF malfunction (b):

Input speed/Output speed (NT/NO)	0.95 or more and less than 1.09 (This means actual gear is 3rd)

OFF malfunction (c):

Input speed/Output speed (NT/NO)	0.95 or more and less than 1.09 (This means actual gear is 3rd)

[ON malfunction]

All of the following conditions met: ON malfunctions (a), (b) and (c)

ON malfunction (a):

Input speed/Output speed (NT/NO)	2.75 or more and less than 3.51 (This means actual gear is 1st)

ON malfunction (b):

Input speed/Output speed (NT/NO)	0.64 or more and less than 0.78 (This means actual gear is 4th)

ON malfunction (c):

Input speed/Output speed (NT/NO)	0.64 or more and less than 0.78 (This means actual gear is 4th)

INSPECTION PROCEDURE

HINT:

Using the Techstream to perform Active Tests allows relays, VSVs, actuators and other items to be operated without removing any parts. This non-intrusive functional inspection can be very useful because intermittent operation may be discovered before parts or wiring is disturbed. Performing Active Tests early in troubleshooting is one way to save diagnostic time. Data List information can be displayed while performing Active Tests.

1. PERFORM ACTIVE TEST

(a) Warm up the engine.

(b) Turn the ignition switch off.

(c) Connect the Techstream to the DLC3.

(d) Turn the ignition switch to ON.

(e) Turn on the Techstream.

(f) Select the item "Powertrain / Engine and ECT / Active Test".

(g) According to the display on the Techstream, perform the "Active Test".

HINT:

While driving, the shift position can be forcibly changed with the Techstream.

Comparing the shift position commanded by the Active Test with the actual shift position enables you to confirm the problem INFO **.**

TESTER DISPLAY	TEST PART	CONTROL RANGE	DIAGNOSTIC NOTE
Control the Shift Position	[Test Details] Operate the shift solenoid valve and set the each shift position by yourself. [Vehicle Condition] • IDL: ON • Less than 50 km/h (31 mph) [Others] • Press "→" button: Shift up • Press "←" button: Shift down	1st/2nd /3rd/4th	Possible to check the operation of the shift solenoid valves.

HINT:

- This test can be conducted when the vehicle speed is 50 km/h (31 mph) or less.
- The shift position commanded by the ECM is shown in the Data List/Shift Status display on the Techstream.

PROCEDURE

1.	**CHECK OTHER DTCS OUTPUT (IN ADDITION TO DTC P0756)**

(a) Connect the Techstream to the DLC3.

(b) Turn the ignition switch to ON and the Techstream main switch on.

(c) Select the item "Powertrain / Engine and ECT / Trouble Codes".

(d) Read the DTCs using the Techstream.

Result:

RESULT	PROCEED TO
P0756	A
P0756 and other DTCs	B

HINT:

If any other codes besides "P0756" are output, perform the troubleshooting for those DTCs first.

B ▶ **GO TO DTC CHART**

A ▼

2.	**INSPECT SHIFT SOLENOID VALVE S2**

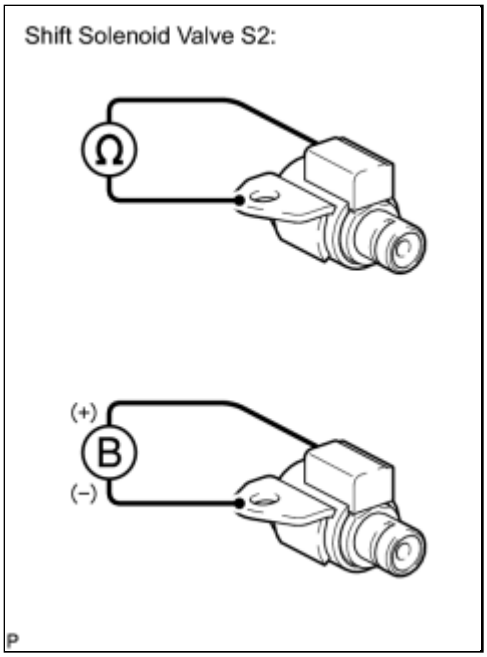

(a) Remove the shift solenoid valve S2.

(b) Measure the resistance according to the value(s) in the table below.

Standard resistance:

TESTER CONNECTION	CONDITION	SPECIFIED CONDITION
Solenoid Connector (S2) - Solenoid Body (S2)	20°C (68°F)	11 to 15 Ω

(c) Connect the positive (+) lead to the terminal of the solenoid connector, and the negative (-) lead to the solenoid body.

OK:

The solenoid makes an operating sound.

NG ▶ **REPLACE SHIFT SOLENOID VALVE S2**

OK ▼

3.	**INSPECT TRANSMISSION VALVE BODY ASSEMBLY**

OK:

There are no foreign objects on each valve and they operate smoothly.

NG ▶ **REPAIR OR REPLACE TRANSMISSION VALVE BODY ASSEMBLY**

OK ▶ **REPAIR OR REPLACE AUTOMATIC TRANSAXLE ASSEMBLY**

Last Modified: 3-10-2010	6.4 C	**From:** 200901
Model Year: 2010	**Model:** Corolla	**Doc ID:** RM0000026FB013X
Title: U341E AUTOMATIC TRANSMISSION / TRANSAXLE: AUTOMATIC TRANSAXLE SYSTEM: P0787,P0788: Shift / Timing Solenoid Low (Shift Solenoid Valve ST) (2010 Corolla)		

DTC	**P0787**	**Shift / Timing Solenoid Low (Shift Solenoid Valve ST)**

DTC	**P0788**	**Shift / Timing Solenoid High (Shift Solenoid Valve ST)**

DESCRIPTION

Shift solenoid valve ST is switched ON-OFF by a signal from ECM so that let in or out timing of 2nd brake is adjusted by operating orifice control valve. Therefore, shift solenoid valve ST operates when letting in or out reverse clutch.

If the shift solenoid valve ST is broken, the shift shock becomes big.

DTC NO.	DTC DETECTION CONDITION	TROUBLE AREA
P0787	ECM detects short in solenoid valve ST circuit 2 times when solenoid valve ST is operated (1-trip detection logic)	• Short in shift solenoid valve ST circuit • Shift solenoid valve ST • ECM
P0788	ECM detects open in solenoid valve ST circuit 2 times when solenoid valve ST is not operated (1-trip detection logic)	• Open in shift solenoid valve ST circuit • Shift solenoid valve ST • ECM

MONITOR DESCRIPTION

The ECM commands gearshift by turning the shift solenoid valves "ON/OFF". When there is an open or short circuit in any shift solenoid valve circuit, the ECM detects the problem and the MIL comes on. Illuminating the MIL, the ECM performs the fail-safe and turns the other shift solenoid valves in good condition "ON/OFF" (In case of an open or short circuit, the ECM stops sending current to the circuit.).

MONITOR STRATEGY

Related DTCs	P0787: Shift timing solenoid/Range check (Low resistance) P0788: Shift timing solenoid/Range check (High resistance)
Required sensors/Components	Shift solenoid valve ST
Frequency of operation	Continuous
Duration	0.128 seconds
MIL operation	Immediate
Sequence of operation	None

TYPICAL ENABLING CONDITIONS

P0787: Range check (Low resistance)

The monitor runs whenever the following DTCs are not present	None
Solenoid	ON
Time after solenoid OFF to ON	More than 0.008 seconds
Battery voltage	8 V or more
Ignition switch	ON
Starter	OFF

P0788: Range check (High resistance)

The monitor runs whenever the following DTCs are not present	None
Solenoid	OFF
Time after solenoid ON to OFF	More than 0.008 seconds
Battery voltage	8 V or more
Ignition switch	ON
Starter	OFF

TYPICAL MALFUNCTION THRESHOLDS

P0787: Range check (Low resistance)

Shift solenoid valve ST resistance	8 Ω or less

P0788: Range check (High resistance)

Shift solenoid valve ST resistance	100 kΩ or more

COMPONENT OPERATING RANGE

Shift solenoid valve ST resistance	11 to 15 Ω at 20°C (68°F)

WIRING DIAGRAM

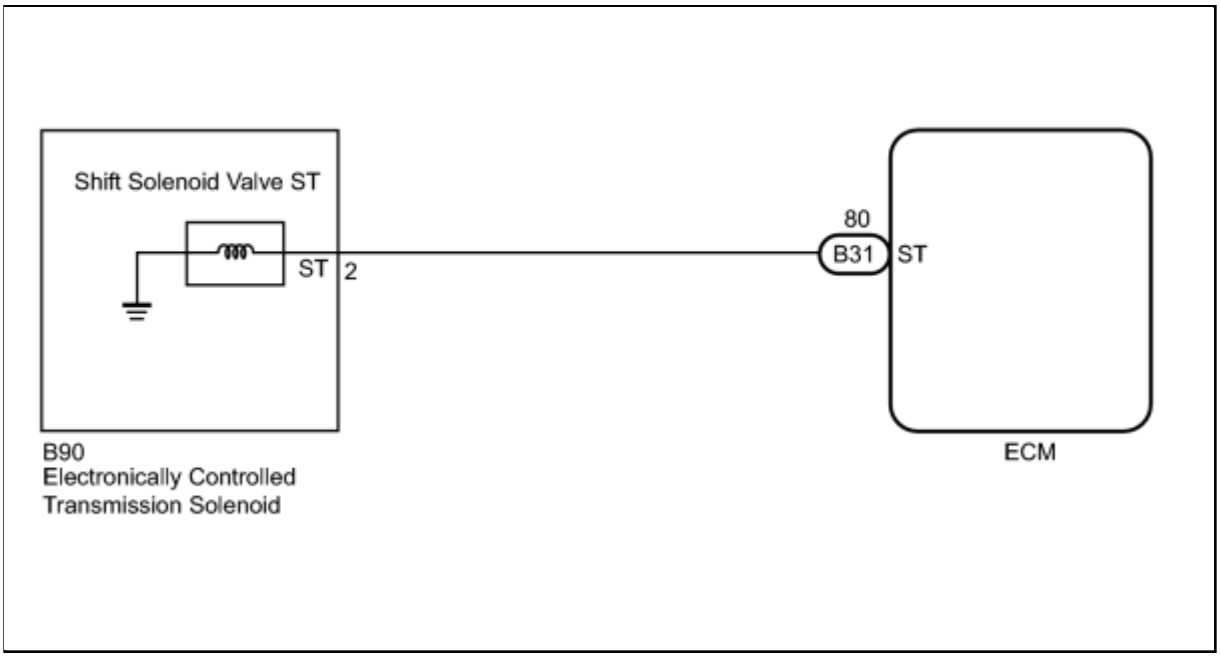

INSPECTION PROCEDURE

PROCEDURE

1.	**INSPECT TRANSMISSION WIRE (ST)**

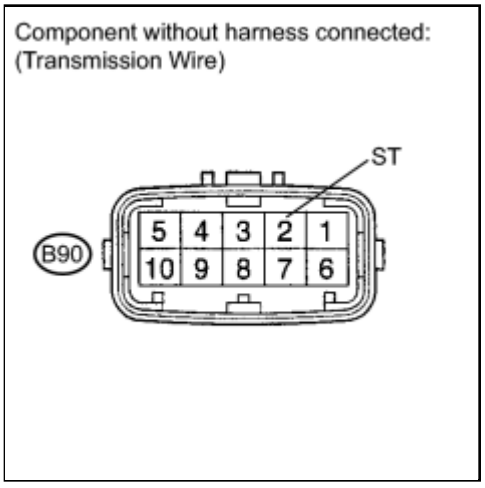

(a) Disconnect the transmission wire connector from the transaxle.

(b) Measure the resistance according to the value(s) in the table below.

Standard resistance:

TESTER CONNECTION	CONDITION	SPECIFIED CONDITION
2 - Body ground	20°C (68°F)	11 to 15 Ω

NG ▶ **INSPECT SHIFT SOLENOID VALVE ST**

OK ▼

2.	**CHECK HARNESS AND CONNECTOR (TRANSMISSION WIRE - ECM)**

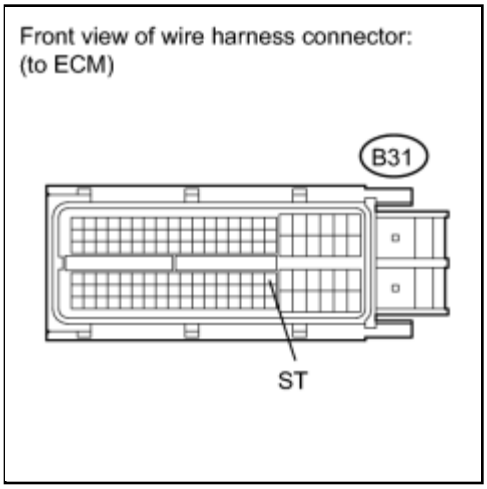

(a) Connect the transmission wire connector to the transaxle.

(b) Disconnect the ECM connectors.

(c) Measure the resistance according to the value(s) in the table below.

Standard resistance:

TESTER CONNECTION	CONDITION	SPECIFIED CONDITION
B31-80 (ST) - Body ground	20°C (68°F)	11 to 15 Ω

NG ▶ **REPAIR OR REPLACE HARNESS OR CONNECTOR**

OK ▶ **REPLACE ECM (for 2ZR-FE)**

3.	**INSPECT SHIFT SOLENOID VALVE ST**

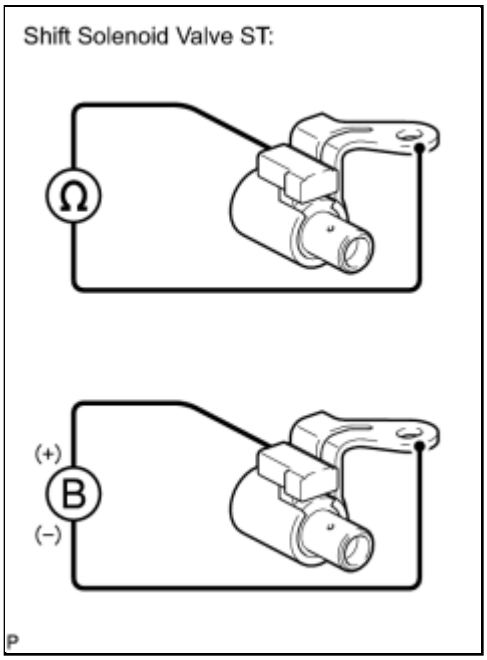

(a) Remove the shift solenoid valve ST.

(b) Measure the resistance according to the value(s) in the table below.

Standard resistance:

TESTER CONNECTION	CONDITION	SPECIFIED CONDITION
Solenoid Connector (ST) - Solenoid Body (ST)	20°C (68°F)	11 to 15 Ω

(c) Connect the positive (+) lead to the terminal of the solenoid connector, and the negative (-) lead to the solenoid body.

OK:

The solenoid makes an operating sound.

NG ▶ **REPLACE SHIFT SOLENOID VALVE ST**

OK ▶ **REPAIR OR REPLACE TRANSMISSION WIRE**

Last Modified: 3-10-2010	6.4 C	**From:** 200901
Model Year: 2010	**Model:** Corolla	**Doc ID:** RM0000026F9018X
Title: U341E AUTOMATIC TRANSMISSION / TRANSAXLE: AUTOMATIC TRANSAXLE SYSTEM: P0973,P0974: Shift Solenoid "A" Control Circuit Low (Shift Solenoid Valve S1) (2010 Corolla)		

DTC	**P0973**	**Shift Solenoid "A" Control Circuit Low (Shift Solenoid Valve S1)**

DTC	**P0974**	**Shift Solenoid "A" Control Circuit High (Shift Solenoid Valve S1)**

DESCRIPTION

Shifting from 1st to 4th is performed in combination with "ON" and "OFF" of the shift solenoid valve S1 and S2 controlled by ECM. If an open or short circuit occurs in either of the solenoid valves, the ECM controls the remaining normal solenoid valve to allow the vehicle to be operated smoothly (Fail safe function).

DTC NO.	DTC DETECTION CONDITION	TROUBLE AREA
P0973	ECM detects short in solenoid valve S1 circuit 2 times when solenoid valve S1 is operated (1-trip detection logic)	• Short in shift solenoid valve S1 circuit • Shift solenoid valve S1 • ECM
P0974	ECM detects open in solenoid valve S1 circuit 2 times when solenoid valve S1 is not operated (1-trip detection logic)	• Open in shift solenoid valve S1 circuit • Shift solenoid valve S1 • ECM

MONITOR DESCRIPTION

The ECM commands gear shifts by turning the shift solenoid valves "ON/OFF". When there is an open or short circuit in any shift solenoid valve circuit, the ECM detects the problem and illuminates the MIL and stores the DTC. And the ECM performs the fail-safe function and turns the other shift solenoid valves in good condition "ON/OFF" (In case of an open or short circuit, the ECM stops sending current to the circuit.) INFO .

MONITOR STRATEGY

Related DTCs	P0973: Shift solenoid valve S1/Range check (Low resistance) P0974: Shift solenoid valve S1/Range check (High resistance)
Required sensors/Components	Shift solenoid valve S1
Frequency of operation	Continuous
Duration	0.128 seconds or more
MIL operation	Immediate
Sequence of operation	None

TYPICAL ENABLING CONDITIONS

P0973: Range check (Low resistance)

The monitor runs whenever the following DTCs are not present.	None
Solenoid	ON
Time after solenoid OFF to ON	More than 0.008 seconds

P0974: Range check (High resistance)

The monitor runs whenever the following DTCs are not present.	None
Solenoid	OFF
Time after solenoid ON to OFF	More than 0.008 seconds

TYPICAL MALFUNCTION THRESHOLDS

P0973: Range check (Low resistance)

Shift solenoid valve S1 resistance	8 Ω or less

P0974: Range check (High resistance)

Shift solenoid valve S1 resistance	100 kΩ or more

COMPONENT OPERATING RANGE

Shift solenoid valve S1 resistance	11 to 15 Ω at 20°C (68°F)

WIRING DIAGRAM

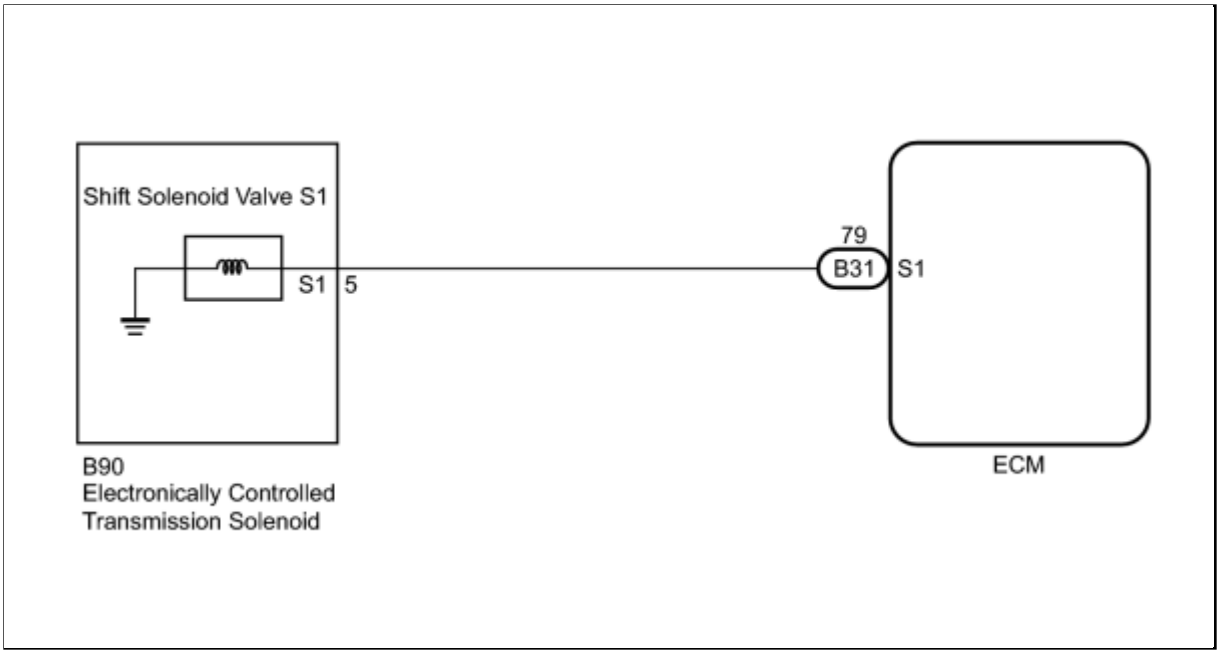

INSPECTION PROCEDURE

PROCEDURE

1.	**INSPECT TRANSMISSION WIRE (S1)**

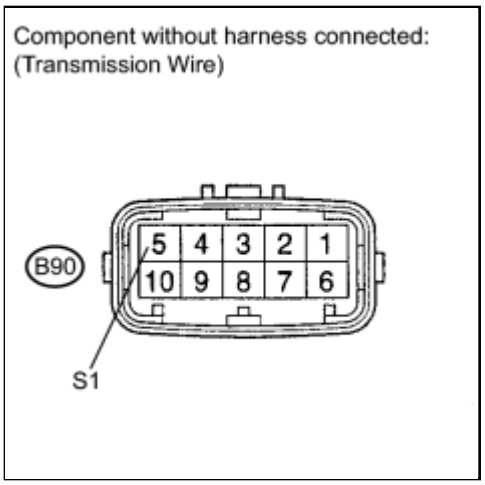

(a) Disconnect the transmission wire connector from the transaxle.

(b) Measure the resistance according to the value(s) in the table below.

Standard resistance:

TESTER CONNECTION	CONDITION	SPECIFIED CONDITION
5 - Body ground	20°C (68°F)	11 to 15 Ω

NG ▶ INSPECT SHIFT SOLENOID VALVE S1

OK ▼

2.	CHECK HARNESS AND CONNECTOR (TRANSMISSION WIRE - ECM)

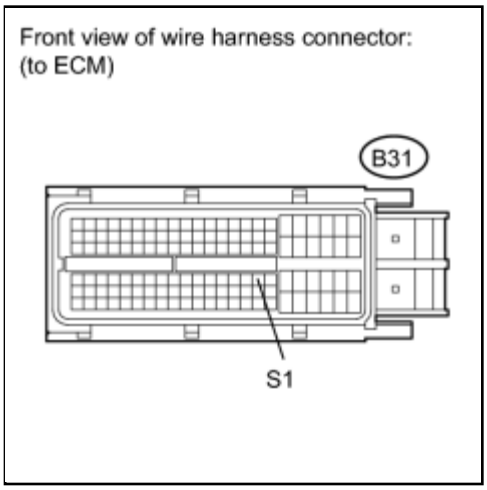

(a) Connect the transmission wire connector to the transaxle.

(b) Disconnect the ECM connectors.

(c) Measure the resistance according to the value(s) in the table below.

Standard resistance:

TESTER CONNECTION	CONDITION	SPECIFIED CONDITION
B31-79 (S1) - Body ground	20°C (68°F)	11 to 15 Ω

NG ▶ REPAIR OR REPLACE HARNESS OR CONNECTOR

OK ▶ REPLACE ECM (for 2ZR-FE)

3.	INSPECT SHIFT SOLENOID VALVE S1

(a) Remove the shift solenoid valve S1.

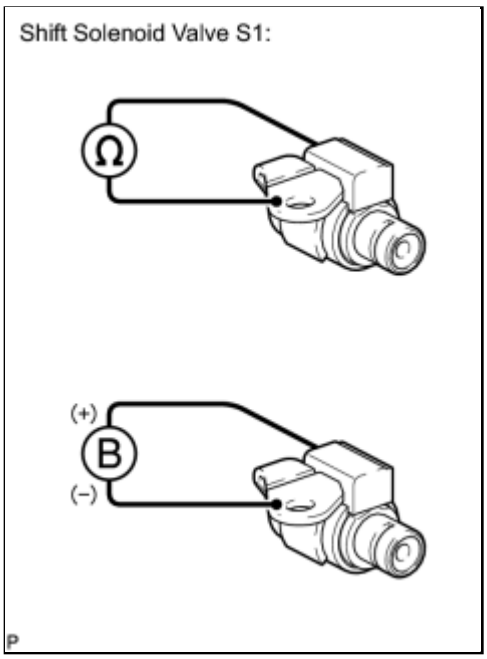

(b) Measure the resistance according to the value(s) in the table below.

Standard resistance:

TESTER CONNECTION	CONDITION	SPECIFIED CONDITION
Solenoid Connector (S1) - Solenoid Body (S1)	20°C (68°F)	11 to 15 Ω

(c) Connect the positive (+) lead to the terminal of the solenoid connector, and the negative (-) lead to the solenoid body.

OK:

The solenoid makes an operating sound.

NG ▶ **REPLACE SHIFT SOLENOID VALVE S1**

OK ▶ **REPAIR OR REPLACE TRANSMISSION WIRE**

Last Modified: 3-10-2010	6.4 C	**From:** 200901
Model Year: 2010	**Model:** Corolla	**Doc ID:** RM0000026FA018X
Title: U341E AUTOMATIC TRANSMISSION / TRANSAXLE: AUTOMATIC TRANSAXLE SYSTEM: P0976,P0977: Shift Solenoid "B" Control Circuit Low (Shift Solenoid Valve S2) (2010 Corolla)		

DTC	**P0976**	**Shift Solenoid "B" Control Circuit Low (Shift Solenoid Valve S2)**

DTC	**P0977**	**Shift Solenoid "B" Control Circuit High (Shift Solenoid Valve S2)**

DESCRIPTION

Shifting from 1st to 4th is performed in combination with "ON" and "OFF" of the shift solenoid valve S1 and S2 controlled by ECM. If an open or short circuit occurs in either of the solenoid valves, the ECM controls the remaining normal solenoid valve to allow the vehicle to be operated smoothly (Fail safe function).

DTC NO.	DTC DETECTION CONDITION	TROUBLE AREA
P0976	ECM detects short in solenoid valve S2 circuit 2 times when solenoid valve S2 is operated (1-trip detection logic)	• Short in shift solenoid valve S2 circuit • Shift solenoid valve S2 • ECM
P0977	ECM detects open in solenoid valve S2 circuit 2 times when solenoid valve S2 is not operated (1-trip detection logic)	• Open in shift solenoid valve S2 circuit • Shift solenoid valve S2 • ECM

MONITOR DESCRIPTION

The ECM commands gear shifts by turning the shift solenoid valves "ON/OFF". When there is an open or short circuit in any shift solenoid valve circuit, the ECM detects the problem and illuminates the MIL and stores the DTC. And the ECM performs the fail-safe function and turns the other shift solenoid valves in good condition "ON/OFF" (In case of an open or short circuit, the ECM stops sending current to the circuit.) INFO .

MONITOR STRATEGY

Related DTCs	P0976: Shift solenoid valve S2/Range check (Low resistance) P0977: Shift solenoid valve S2/Range check (High resistance)
Required sensors/Components	Shift solenoid valve S2
Frequency of operation	Continuous
Duration	0.128 seconds or more
MIL operation	Immediate
Sequence of operation	None

TYPICAL ENABLING CONDITIONS

P0976: Range check (Low resistance)

The monitor runs whenever the following DTCs are not present.	None
Solenoid	ON
Time after solenoid OFF to ON	More than 0.008 seconds

P0977: Range check (High resistance)

The monitor runs whenever the following DTCs are not present.	None
Solenoid	OFF
Time after solenoid ON to OFF	More than 0.008 seconds

TYPICAL MALFUNCTION THRESHOLDS

P0976: Range check (Low resistance)

Shift solenoid valve S2 resistance	8 Ω or less

P0977: Range check (High resistance)

Shift solenoid valve S2 resistance	100 kΩ or more

COMPONENT OPERATING RANGE

Shift solenoid valve S2 resistance	11 to 15 Ω at 20°C (68°F)

WIRING DIAGRAM

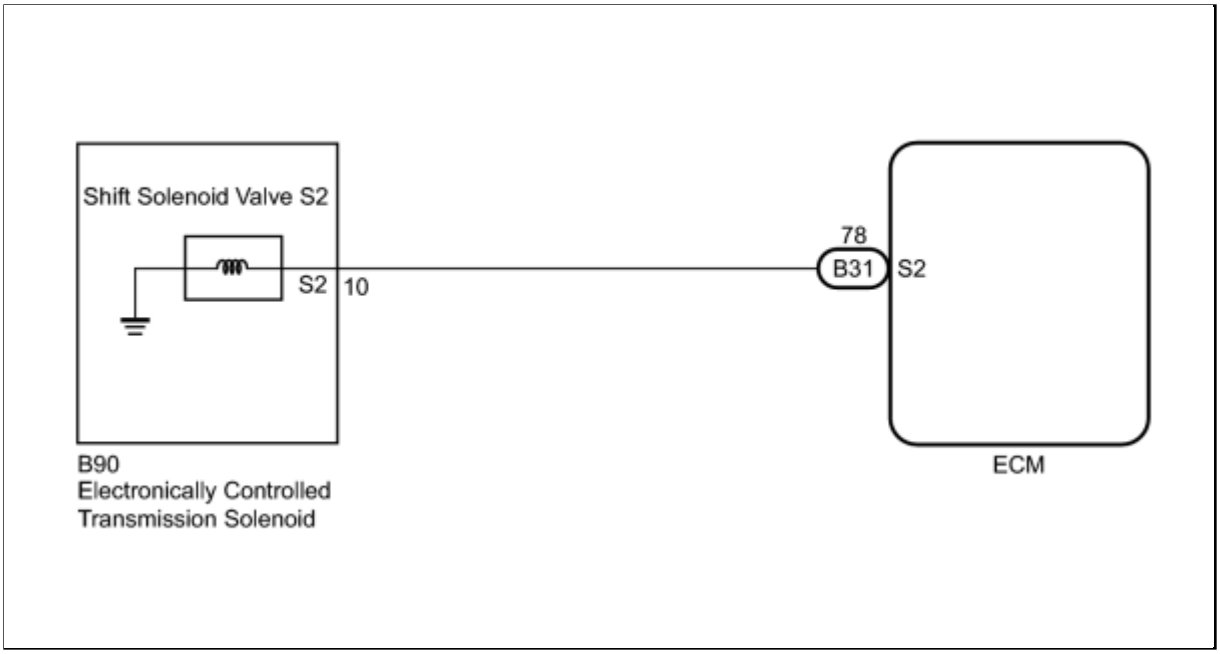

INSPECTION PROCEDURE

PROCEDURE

1.	**INSPECT TRANSMISSION WIRE (S2)**

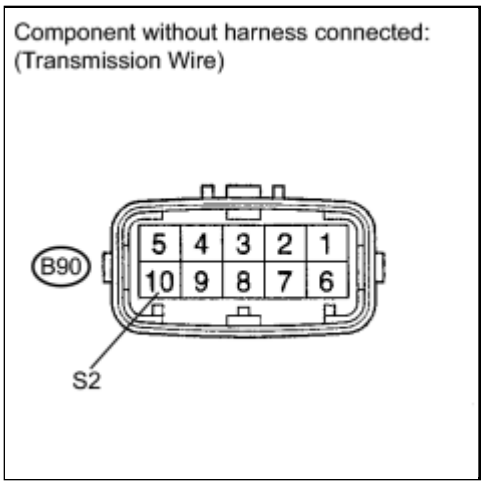

(a) Disconnect the transmission wire connector from the transaxle.

(b) Measure the resistance according to the value(s) in the table below.

Standard resistance:

TESTER CONNECTION	CONDITION	SPECIFIED CONDITION
10 - Body ground	20°C (68°F)	11 to 15 Ω

NG ▶ INSPECT SHIFT SOLENOID VALVE S2

OK ▼

2.	CHECK HARNESS AND CONNECTOR (TRANSMISSION WIRE - ECM)

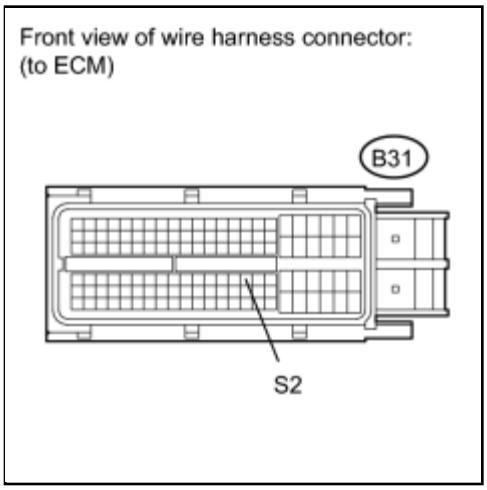

(a) Connect the transmission wire connector to the transaxle.

(b) Disconnect the ECM connectors.

(c) Measure the resistance according to the value(s) in the table below.

Standard resistance:

TESTER CONNECTION	CONDITION	SPECIFIED CONDITION
B31-78 (S2) - Body ground	20°C (68°F)	11 to 15 Ω

NG ▶ REPAIR OR REPLACE HARNESS OR CONNECTOR

OK ▶ REPLACE ECM (for 2ZR-FE)

3.	INSPECT SHIFT SOLENOID VALVE S2

(a) Remove the shift solenoid valve S2.

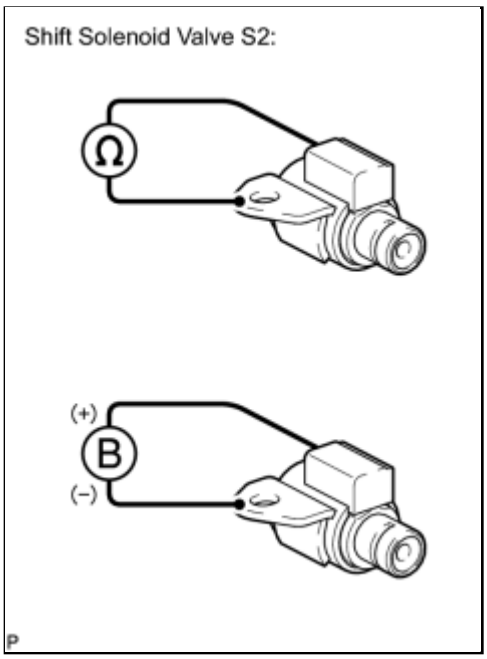

(b) Measure the resistance according to the value(s) in the table below.

Standard resistance:

TESTER CONNECTION	CONDITION	SPECIFIED CONDITION
Solenoid Connector (S2) - Solenoid Body (S2)	20°C (68°F)	11 to 15 Ω

(c) Connect the positive (+) lead to the terminal of the solenoid connector, and the negative (-) lead to the solenoid body.

OK:

The solenoid makes an operating sound.

NG ▶ **REPLACE SHIFT SOLENOID VALVE S2**

OK ▶ **REPAIR OR REPLACE TRANSMISSION WIRE**

Last Modified: 3-10-2010	6.4 C	**From:** 200901
Model Year: 2010	**Model:** Corolla	**Doc ID:** RM000002QVF00YX
Title: U341E AUTOMATIC TRANSMISSION / TRANSAXLE: AUTOMATIC TRANSAXLE SYSTEM: P2714: Pressure Control Solenoid "D" Performance (Shift Solenoid Valve SLT) (2010 Corolla)		

DTC	**P2714**	**Pressure Control Solenoid "D" Performance (Shift Solenoid Valve SLT)**

SYSTEM DESCRIPTION

The shift solenoid valve SLT controls the transmission line pressure for smooth transmission operation based on signals from the throttle position sensor and the vehicle speed sensor. The ECM adjusts the duty ratio (*) of the shift solenoid valve SLT to control hydraulic line pressure coming from the primary regulator valve. Appropriate line pressure assures smooth shifting with varying engine outputs.

(*): Duty Ratio

The duty ratio is the ratio of the period of continuity in one cycle. For example, if A is the period of continuity in one cycle, and B is the period of non-continuity, then

Duty Ratio = A/(A + B) x 100 (%)

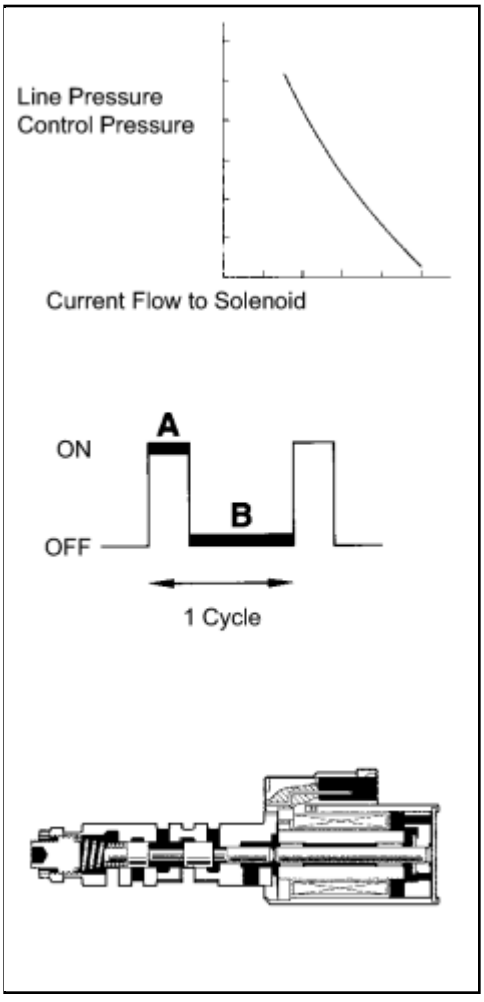

DTC NO.	DTC DETECTION CONDITION	TROUBLE AREA
P2714	ECM detects a malfunction on SLT (ON side) according to the revolution difference of the turbine, intermediate and the output shaft, and also by the oil pressure. (2-trip detection logic)	• Shift solenoid valve SLT remains closed • Valve body is blocked • Torque converter clutch • Automatic transaxle (clutch, brake or gear, etc.)

MONITOR DESCRIPTION

In any forward position, when the difference between the revolutions of the turbine, Intermediate and output shaft exceeds the specified value (varies with Intermediate, output speed) determined by the ECM, the ECM illuminates the MIL and store the DTC.

When shift solenoid valve SLT remains on, the oil pressure goes down and the clutch engagement force decreases.

NOTICE:

If you continue driving under these conditions, the clutch will burn out and the vehicle will no longer be drivable.

MONITOR STRATEGY

Related DTCs	P2714: Shift solenoid valve SLT/ON malfunction
Required sensors/Components	Shift solenoid valve SLT, Speed sensor (NT), Speed sensor (SPD)
Frequency of operation	Continuous
Duration	1.0 second
MIL operation	2 driving cycles
Sequence of operation	None

TYPICAL ENABLING CONDITIONS

The following conditions are common to ON malfunctions (a), (b), (c) and (d).

The monitor will run whenever this DTC is not present. (Not circuit malfunction)	P0500 (Vehicle speed sensor circuit) P0710, P0712, P0713 (ATF temperature sensor circuit (TFT sensor)) P0717 (Turbine speed sensor circuit) P0973, P0974 (Shift solenoid valve S1 circuit) P0976, P0977 (Shift solenoid valve S2 circuit)

	P2759 (Shift solenoid valve SLU circuit) P2716 (Shift solenoid valve SLT circuit) P0120, P0121, P0122, P0123, P0220, P0222, P0223, P0604, P0606, P060A, P060D, P060E, P0657, P1607, P2102, P2103, P2111, P2112, P2118, P2119, P2135 ((Electronic throttle control system)
Transmission shift position	D
Time after shifting N to D	4.5 seconds or more
ATF (Automatic Transmission Fluid) temperature	-10°C (14°F) or more
ATF temperature sensor (TFT sensor) circuit	No circuit malfunction
Electronic Throttle Control System (if applicable)	No circuit malfunction
Shift solenoid valve S1 circuit	No circuit malfunction
Shift solenoid valve S2 circuit	No circuit malfunction
Shift solenoid valve SLU circuit	No circuit malfunction
Shift solenoid valve SLT circuit	No circuit malfunction
Speed sensor (NT) circuit	No circuit malfunction
Speed sensor (SPD) circuit	No circuit malfunction

ON malfunction (a):

ECM gearshift command	1st
Input (turbine) speed	200 rpm or more
Output speed	300 rpm or more

ON malfunction (b):

ECM gearshift command	2nd
Input (turbine) speed	200 rpm or more
Output speed	300 rpm or more

ON malfunction (c):

ECM gearshift command	3rd
Input (turbine) speed	200 rpm or more
Output speed	300 rpm or more

ON malfunction (d):

ECM gearshift command	4th
Input (turbine) speed	200 rpm or more
Output speed	300 rpm or more

TYPICAL MALFUNCTION THRESHOLDS

[ON malfunction]

Detection condition: Total accumulated time of ON malfunctions (a), (b), (c) and (d) is 1 second or more

ON malfunction (a):

NT - NO x 1st gear ratio NT: Input (turbine) speed NO: Internal counter shaft speed	More than 300 rpm at output speed of 1000 rpm (Conditions vary with output speed)
Duration	0.85 seconds or more

ON malfunction (b):

NT - NO x 2nd gear ratio	More than 300 rpm at output speed of 1000 rpm (Conditions vary with output speed)
Duration	0.85 seconds or more

ON malfunction (c):

NT - NO x 3rd gear ratio	More than 300 rpm at output speed of 1000 rpm (Conditions vary with output speed)
Duration	0.85 seconds or more

ON malfunction (d):

NT - NO x 4th gear ratio	More than 300 rpm at output speed of 1000 rpm (Conditions vary with output speed)
Duration	0.85 seconds or more

INSPECTION PROCEDURE

PROCEDURE

1.	**CHECK OTHER DTCS OUT PUT (IN ADDITION TO DTC P2714)**

(a) Connect the Techstream to the DLC3.

(b) Turn the ignition switch to ON and the Techstream main switch on.

(c) When you use Techstream:

Select the item "Powertrain / Engine and ECT / Trouble Codes".

(d) Read the DTCs using the Techstream.

Result:

RESULT	PROCEED TO
P2714	A
P2714 and other DTCs	B

HINT:

If any other codes besides "P2714" are output, perform the troubleshooting for those DTCs first.

B ▶ **GO TO DTC CHART**

A ▼

2.	**INSPECT SHIFT SOLENOID VALVE SLT**

(a) Remove the shift solenoid valve SLT.

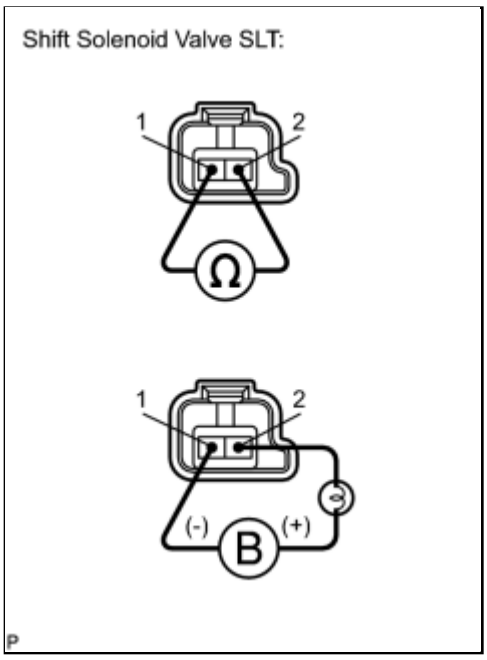

(b) Measure the resistance according to the value(s) in the table below.

Standard resistance:

TESTER CONNECTION	CONDITION	SPECIFIED CONDITION
1 - 2	20°C (68°F)	5.0 to 5.6 Ω

(c) Connect the positive (+) lead with a 21 W bulb to terminal 2 and negative (-) lead to terminal 1 of the solenoid valve connector, then check the movement of the valve.

OK:

The solenoid makes an operating sound.

NG ▶ **REPLACE SHIFT SOLENOID VALVE SLT**

OK ▼

3.	**INSPECT TRANSMISSION VALVE BODY ASSEMBLY**

OK:

There are no foreign objects on each valve.

NG ▶ **REPAIR OR REPLACE TRANSMISSION VALVE BODY ASSEMBLY**

OK

4.	**INSPECT TORQUE CONVERTER CLUTCH ASSEMBLY**

OK:
The torque converter clutch operates normally.

NG ▶ **REPLACE TORQUE CONVERTER CLUTCH ASSEMBLY**

OK ▶ **REPAIR OR REPLACE AUTOMATIC TRANSAXLE ASSEMBLY**

Last Modified: 3-10-2010	6.4 C	**From:** 200901
Model Year: 2010	**Model:** Corolla	**Doc ID:** RM0000015W1049X
Title: U341E AUTOMATIC TRANSMISSION / TRANSAXLE: AUTOMATIC TRANSAXLE SYSTEM: P2716: Pressure Control Solenoid "D" Electrical (Shift Solenoid Valve SLT) (2010 Corolla)		

DTC	**P2716**	**Pressure Control Solenoid "D" Electrical (Shift Solenoid Valve SLT)**

DESCRIPTION

The shift solenoid valve SLT controls the transmission line pressure for smooth transmission operation based on signals from the throttle position sensor and the vehicle speed sensor. The ECM adjusts the duty cycle of the shift solenoid valve SLT to control hydraulic line pressure coming from the primary regulator valve. Appropriate line pressure assures smooth shifting with varying engine outputs.

(*): Duty Ratio

The duty ratio is the ratio of the period of continuity in one cycle.

For example, if A is the period of continuity in one cycle, and B is the period of non-continuity, then

Duty Ratio = A/(A + B) x 100 (%)

DTC NO.	DTC DETECTION CONDITION	TROUBLE AREA
P2716	Open or short is detected in shift solenoid valve SLT circuit for 1 second or more while driving (1-trip detecting logic).	• Open or short in shift solenoid valve SLT circuit • Shift solenoid valve SLT • ECM

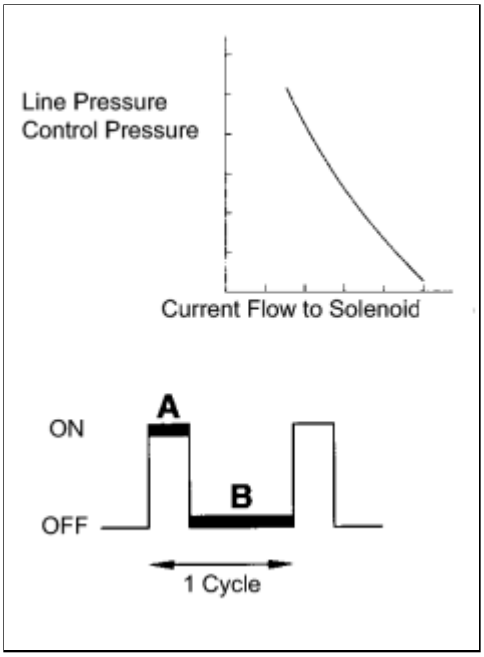

MONITOR DESCRIPTION

When an open or short in the shift solenoid valve SLT circuit is detected, the ECM interprets this as a fault. The ECM will turn on the MIL and store the DTC.

MONITOR STRATEGY

Related DTCs	P2716: Shift solenoid valve SLT/Range check
Required sensors/Components	Shift solenoid valve SLT
Frequency of operation	Continuous
Duration	1.0 second
MIL operation	Immediate
Sequence of operation	None

TYPICAL ENABLING CONDITIONS

The monitor runs whenever the following DTCs are not present	None
Solenoid current cut status	Not cut
Battery voltage	11 V or more
CPU commanded duty ratio	19 % or more
Ignition switch	ON
Starter	OFF

TYPICAL MALFUNCTION THRESHOLDS

Solenoid status (SLT) from MIC	Fail

COMPONENT OPERATING RANGE

Shift solenoid valve SLT	Resistance: 5.0 Ω to 5.6 Ω at 20°C (68°F)

WIRING DIAGRAM

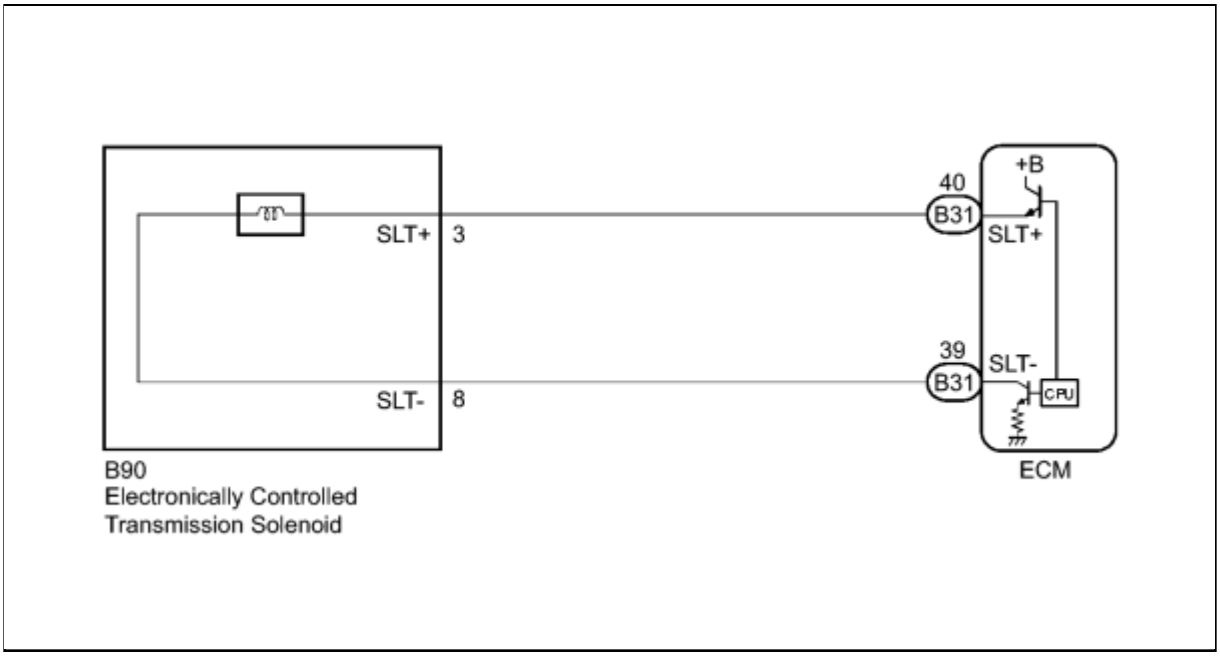

INSPECTION PROCEDURE

PROCEDURE

1.	**INSPECT TRANSMISSION WIRE (SLT)**

(a) Disconnect the transmission wire connector from the transaxle.

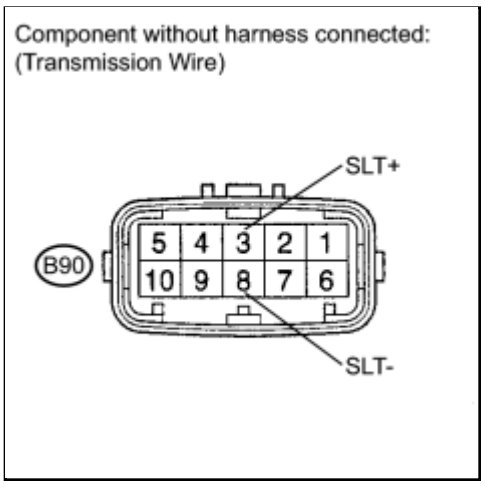

(b) Measure the resistance according to the value(s) in the table below.

Standard resistance:

TESTER CONNECTION	CONDITION	SPECIFIED CONDITION
3 (SLT+) - 8 (SLT-)	20°C (68°F)	5.0 to 5.6 Ω

(c) Measure the resistance according to the value(s) in the table below.

Standard resistance (Check for short):

TESTER CONNECTION	CONDITION	SPECIFIED CONDITION
3 (SLT+) - Body ground	Always	10 kΩ or higher
8 (SLT-) - Body ground	Always	↑

NG ▶ **INSPECT SHIFT SOLENOID VALVE SLT**

OK ▼

2.	**CHECK HARNESS AND CONNECTOR (TRANSMISSION WIRE - ECM)**

(a) Connect the transmission wire connector to the transaxle.

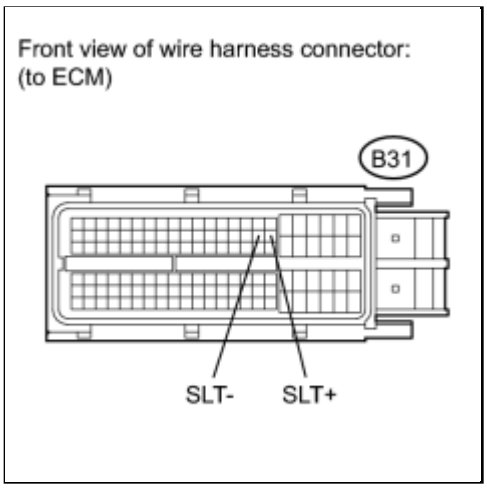

(b) Disconnect the ECM connectors.

(c) Measure the resistance according to the value(s) in the table below.

Standard resistance:

TESTER CONNECTION	CONDITION	SPECIFIED CONDITION
B31-40 (SLT+) - B31-39 (SLT-)	20°C (68°F)	5.0 to 5.6 Ω

(d) Measure the resistance according to the value(s) in the table below.

Standard resistance (Check for short):

TESTER CONNECTION	CONDITION	SPECIFIED CONDITION
B31-40 (SLT+) - Body ground	Always	10 kΩ or higher
B31-39 (SLT-) - Body ground	Always	↑

NG ▶ **REPAIR OR REPLACE HARNESS OR CONNECTOR**

OK ▶ **REPLACE ECM (for 2ZR-FE)**

3.	**INSPECT SHIFT SOLENOID VALVE SLT**

(a) Remove the shift solenoid valve SLT.

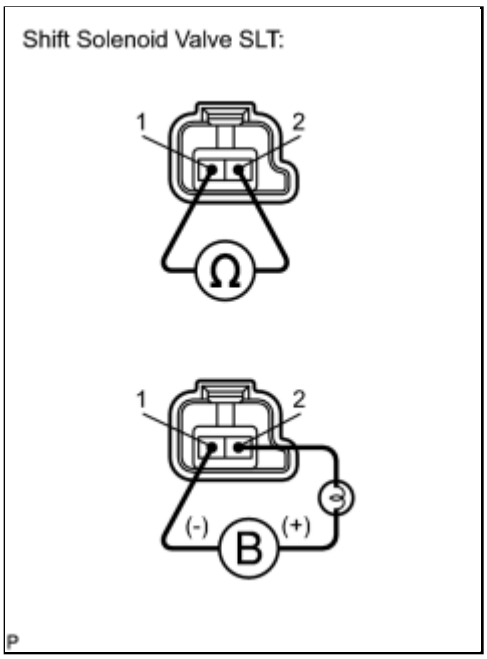

(b) Measure the resistance according to the value(s) in the table below.

Standard resistance :

TESTER CONNECTION	CONDITION	SPECIFIED CONDITION
1 - 2	20°C (68°F)	5.0 to 5.6 Ω

(c) Connect the positive (+) lead with a 21 W bulb to terminal 2 and the negative (-) lead to terminal 1 of the solenoid valve connector, then check the movement of the valve.

OK:

The solenoid makes an operating sound.

NG ▶ **REPLACE SHIFT SOLENOID VALVE SLT**

OK ▶ **REPAIR OR REPLACE TRANSMISSION WIRE**

Last Modified: 3-10-2010	6.4 C	**From:** 200901
Model Year: 2010	**Model:** Corolla	**Doc ID:** RM000000W8D05BX
Title: U341E AUTOMATIC TRANSMISSION / TRANSAXLE: AUTOMATIC TRANSAXLE SYSTEM: P2757: Torque Converter Clutch Pressure Control Solenoid Performance (Shift Solenoid Valve SLU) (2010 Corolla)		

DTC	**P2757**	**Torque Converter Clutch Pressure Control Solenoid Performance (Shift Solenoid Valve SLU)**

SYSTEM DESCRIPTION

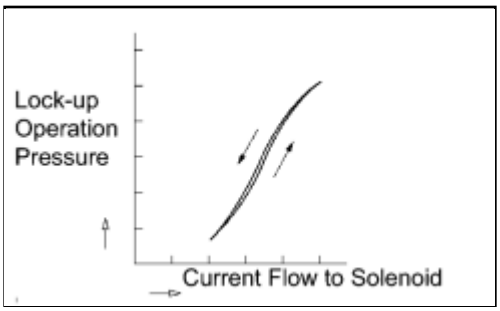

The ECM uses the signals from the throttle position sensor, turbine (input) speed sensor, vehicle speed sensor and crankshaft position sensor to monitor the engagement condition of the lock-up clutch.

Then the ECM compares the engagement condition of the lock-up clutch with the lock-up schedule in the ECM memory to detect mechanical problems of shift solenoid valve SLU, valve body and torque converter clutch.

DTC NO.	DTC DETECTION CONDITION	TROUBLE AREA
P2757	Lock-up does not occur when driving in lock-up range or lock-up remains ON in lock-up OFF range. (2-trip detection logic)	• Shift solenoid valve SLU remains open or closed • Valve body is blocked • Shift solenoid valve SLU • Torque converter clutch • Automatic transaxle (clutch, brake or gear etc.) • Line pressure is too low

MONITOR DESCRIPTION

Torque converter lock-up is controlled by the ECM based on the speed sensor (NT), engine rpm (NE), engine load, engine coolant temperature, vehicle speed, transmission fluid temperature, and gear selection. The ECM determines the lock-up status of the torque converter by comparing the engine rpm (NE) to the input turbine rpm (NT). The ECM calculates the actual transmission gear by comparing

input turbine rpm (NT) to output shaft speed. When conditions are appropriate, the ECM requests lock-up by applying the control voltage to shift solenoid valve SLU. When SLU is turned on, it applies pressure to the lock-up relay valve and locks the torque converter clutch.

If the ECM detects no lock-up after lock-up has been requested or if it detects lock-up when it is not requested, the ECM interprets this as a fault in shift solenoid valve SLU or lock-up system performance. The ECM turns on the MIL and stores the DTC.

Example:

When either of the following is met, the system judges it as a malfunction.

- There is a difference in the rotations of the input side (engine speed) and output side (input turbine speed) of the torque converter when the ECM commands lock-up.

  (Engine speed is at least 100 rpm greater than input turbine speed.)
- There is no difference in the rotations of the input side (engine speed) and output side (input turbine speed) of the torque converter when the ECM commands lock-up off.

  (The difference between engine speed and input turbine speed is less than 35 rpm.)

MONITOR STRATEGY

Related DTCs	P2757: Shift solenoid valve SLU/OFF malfunction Shift solenoid valve SLU/ON malfunction
Required sensors/Components	Shift solenoid valve SLU, Speed sensor (NT), Crankshaft position sensor (NE), Engine coolant temperature sensor (ECT)
Frequency of operation	Continuous
Duration	OFF malfunction: 3.5 seconds ON malfunction: 1.8 seconds
MIL operation	2 driving cycles
Sequence of operation	None

TYPICAL ENABLING CONDITIONS

The following conditions are common to OFF malfunction and ON malfunction.

The monitor will run whenever this DTC is not present. (Not circuit malfunction)	P0500 (Vehicle speed sensor circuit) P0115, P0117, P0118 (ECT sensor circuit) P0717 (Turbine speed sensor circuit) P0973, P0974 (Shift solenoid valve S1 circuit) P0976, P0977 (Shift solenoid valve S2 circuit) P2759 (Shift solenoid valve SLU circuit) P0120, P0121, P0122, P0123, P0220, P0222, P0223, P0604, P0606, P060A, P060D, P060E, P0657, P1607, P2102, P2103, P2111, P2112, P2118, P2119, P2135 (Electronic throttle control system)

Time after shifting N to D	4.5 seconds or more
ECT (Engine Coolant Temperature)	60°C (140°F) or more
Transmission shift position	D
ECM selected gear	3rd or 4th
Vehicle speed	15.5 mph (25 km/h) or more
Shift solenoid valve S1 circuit	No circuit malfunction
Shift solenoid valve S2 circuit	No circuit malfunction
Shift solenoid valve SLU circuit	No circuit malfunction
ECT sensor circuit	No circuit malfunction
Electronic Throttle Control System (if applicable)	No circuit malfunction
Speed sensor (NT) circuit	No circuit malfunction
Speed sensor (SPD) circuit	No circuit malfunction

OFF malfunction:

ECM lock-up command	ON
Duration time from lock-up on command	3 seconds or more
Actual gear	3rd or 4th

ON malfunction:

ECM lock-up command	OFF
Throttle valve opening angle	8 % or more
Vehicle speed	Less than 37.3 mph (60 km/h)
Actual gear	3rd
Calculated load value	22 % or more

TYPICAL MALFUNCTION THRESHOLDS

OFF malfunction:

Engine speed - Input (turbine) speed (NE - NT)	100 rpm or more

[ON malfunction]

2 detections are necessary per driving cycle.

1st detection: Temporary flag ON

2nd detection: Pending fault code ON

Vehicle speed must be under 6.2 mph (10 km/h) once before 2nd detection.

ON malfunction:

Difference between engine speed and Input (turbine) speed	Less than 35 rpm

INSPECTION PROCEDURE

HINT:

Using the Techstream to perform Active Tests allows relays, VSVs, actuators and other items to be operated without removing any parts. This non-intrusive functional inspection can be very useful because intermittent operation may be discovered before parts or wiring is disturbed. Performing Active Tests early in troubleshooting is one way to save diagnostic time. Data List information can be displayed while performing Active Tests.

1. PERFORM ACTIVE TEST

(a) Warm up the engine.

(b) Turn the ignition switch off.

(c) Connect the Techstream to the DLC3.

(d) Turn the ignition switch to ON.

(e) Turn on the Techstream.

(f) Select the item: "Powertrain / Engine and ECT / Active Test".

(g) According to the display on the Techstream, perform the Active Test.

TESTER DISPLAY	TEST PART	CONTROL RANGE	DIAGNOSTIC NOTE
Activate the Lock Up	[Test Details] Control the shift solenoid SLU to set the automatic transaxle to the lock-up condition. [Vehicle Condition] Vehicle Speed: 60 km/h (36 mph) or more, and 4th gear	ON/OFF	Possible to check the SLU operation.

HINT:

- This test can be conducted when the vehicle speed is 60 km/h (36 mph) or more.
- This test can be conducted in the 4th gear.

(h) Lightly depress the accelerator pedal and check that the engine speed does not change abruptly.

HINT:

- When changing the accelerator pedal opening angle while driving, if the engine speed does not change, lock-up is on.
- Slowly release, but not fully, the accelerator pedal in order to decelerate. (Fully releasing the pedal will close the throttle valve and lock-up may be turned off.)

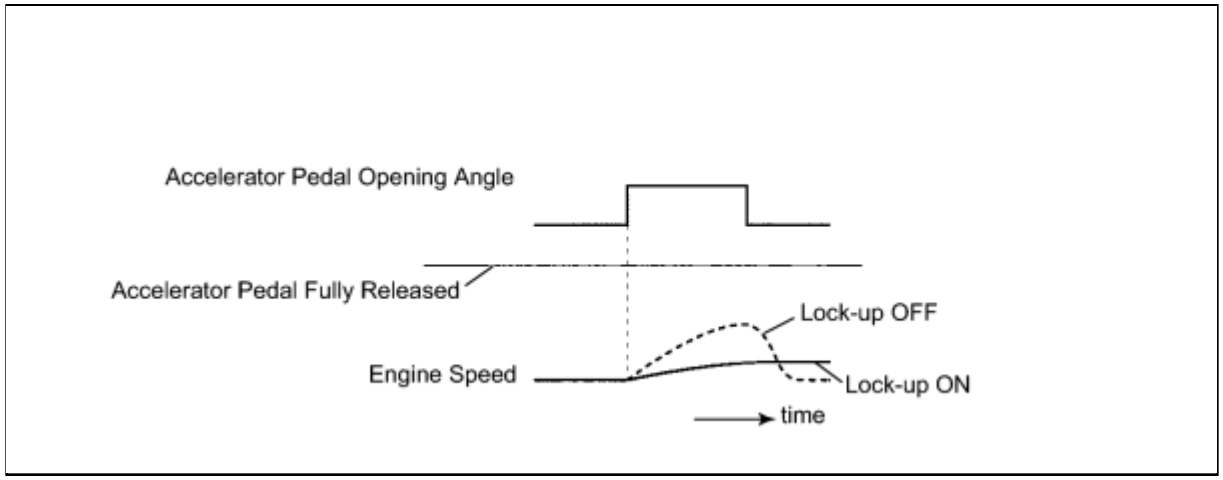

PROCEDURE

1.	**CHECK OTHER DTCS OUTPUT (IN ADDITION TO DTC P2757)**

(a) Connect the Techstream to the DLC3.

(b) Turn the ignition switch to ON and the Techstream main switch on.

(c) Select the item: "Powertrain / Engine and ECT / Trouble Codes".

(d) Read the DTCs using the Techstream.

Result:

RESULT	PROCEED TO
P2757	A
P2757 and other DTCs	B

HINT:

If any other codes besides "P2757" are output, perform the troubleshooting for those DTCs first.

B ▶ **GO TO DTC CHART**

A

2.	INSPECT SHIFT SOLENOID VALVE SLU

(a) Remove the shift solenoid valve SLU.

(b) Measure the resistance according to the value(s) in the table below.

Standard resistance:

TESTER CONNECTION	CONDITION	SPECIFIED CONDITION
1 - 2	20°C (68°F)	5.0 to 5.6 Ω

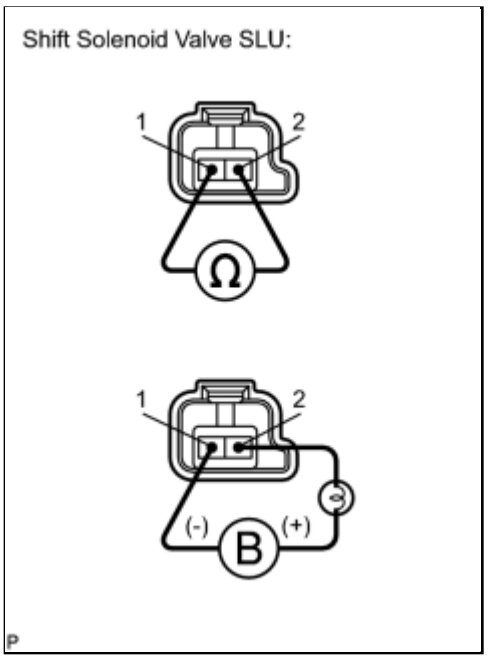

(c) Connect the positive (+) lead with a 21 W bulb to terminal 2 and negative (-) lead to terminal 1 of the solenoid valve connector, then check the movement of the valve.

OK:

The solenoid makes an operating sound.

NG ▶ **REPLACE SHIFT SOLENOID VALVE SLU**

OK

3.	INSPECT TRANSMISSION VALVE BODY ASSEMBLY

OK:

There are no foreign objects on each valve and they operate smoothly.

NG ▶ **REPAIR OR REPLACE TRANSMISSION VALVE BODY ASSEMBLY**

OK

4.	**INSPECT TORQUE CONVERTER CLUTCH ASSEMBLY**

OK:
The torque converter clutch operates normally.

NG ▶ **REPLACE TORQUE CONVERTER CLUTCH ASSEMBLY**

OK ▶ **REPAIR OR REPLACE AUTOMATIC TRANSAXLE ASSEMBLY**

Last Modified: 3-10-2010	6.4 C	**From:** 200901
Model Year: 2010	**Model:** Corolla	**Doc ID:** RM000000W8905UX
Title: U341E AUTOMATIC TRANSMISSION / TRANSAXLE: AUTOMATIC TRANSAXLE SYSTEM: P2759: Torque Converter Clutch Pressure Control Solenoid Control Circuit Electrical (Shift Solenoid Valve SLU) (2010 Corolla)		

DTC	**P2759**	**Torque Converter Clutch Pressure Control Solenoid Control Circuit Electrical (Shift Solenoid Valve SLU)**

DESCRIPTION

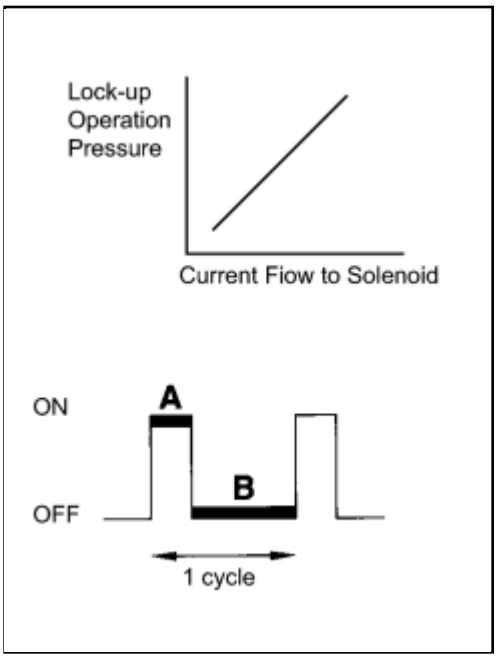

The amount of current flowing to the solenoid is controlled by the duty ratio* of the ECM output signal. The higher the duty ratio* becomes, the higher the lock-up hydraulic pressure becomes during the lock-up operation.

*: The duty ratio is the ratio of the current ON time (A) to the total of the current ON and OFF times (A + B).

Duty Ratio = A / (A + B) x 100 (%)

DTC NO.	DTC DETECTION CONDITION	TROUBLE AREA
P2759	Open or short is detected in shift solenoid valve SLU circuit for 1 second or more while driving. (1-trip detection logic)	• Open or short in shift solenoid valve SLU circuit • Shift solenoid valve SLU

DTC NO.	DTC DETECTION CONDITION	TROUBLE AREA
		• ECM

MONITOR DESCRIPTION

When an open or short in the shift solenoid valve SLU circuit is detected, the ECM interprets this as a fault. The ECM will turn on the MIL and stores the DTC.

MONITOR STRATEGY

Related DTCs	P2759: Shift solenoid valve SLU/Range check
Required sensors/Components	Shift solenoid valve SLU
Frequency of operation	Continuous
Duration	1.0 second
MIL operation	Immediate
Sequence of operation	None

TYPICAL ENABLING CONDITIONS

The monitor runs whenever the following DTCs are not present.	None
Solenoid current cut status	Not cut
Battery voltage	11 V or more
CPU commanded duty ratio	19 % or more
Ignition switch	ON
Starter	OFF

TYPICAL MALFUNCTION THRESHOLDS

Solenoid status (SLU) from MIC	Fail

COMPONENT OPERATING RANGE

Solenoid status (SLU)	Resistance: 5.0 to 5.6 Ω at 20°C (68°F)

WIRING DIAGRAM

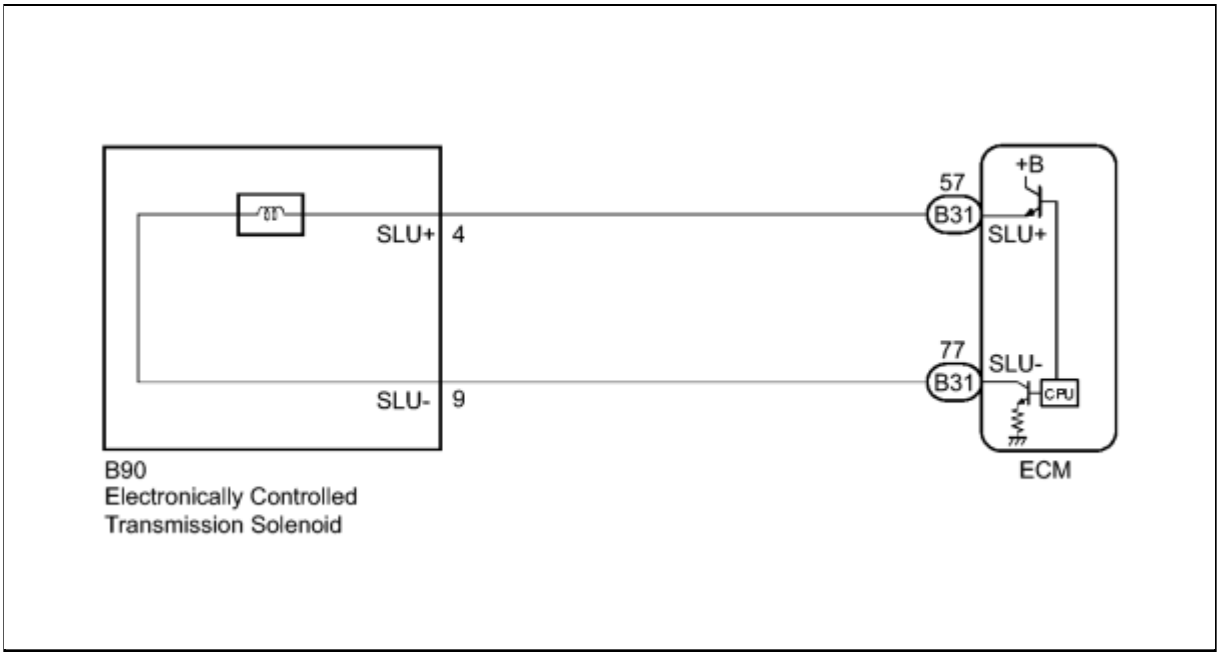

INSPECTION PROCEDURE

PROCEDURE

1.	**INSPECT TRANSMISSION WIRE (SLU)**

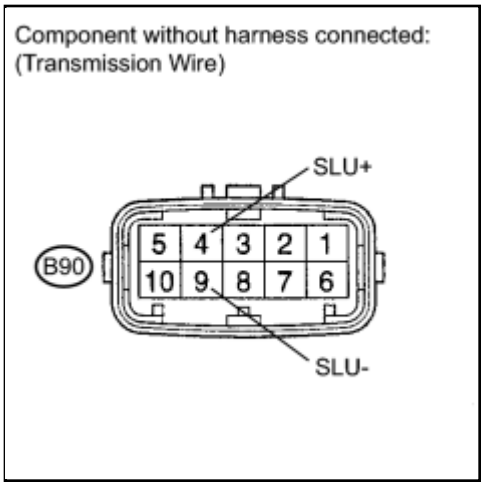

(a) Disconnect the transmission wire connector from the transaxle.

(b) Measure the resistance according to the value(s) in the table below.

Standard resistance:

TESTER CONNECTION	CONDITION	SPECIFIED CONDITION
4 (SLU+) - 9 (SLU-)	20°C (68°F)	5.0 to 5.6 Ω

(c) Measure the resistance according to the value(s) in the table below.

Standard resistance (Check for short):

TESTER CONNECTION	CONDITION	SPECIFIED CONDITION
4 (SLU+) - Body ground	Always	10 kΩ or higher
9 (SLU-) - Body ground	Always	↑

NG ▶ INSPECT SHIFT SOLENOID VALVE SLU

OK ▼

2.	CHECK HARNESS AND CONNECTOR (TRANSMISSION WIRE - ECM)

(a) Connect the transmission wire connector to the transaxle.

(b) Disconnect the ECM connectors.

(c) Measure the resistance according to the value(s) in the table below.

Standard resistance:

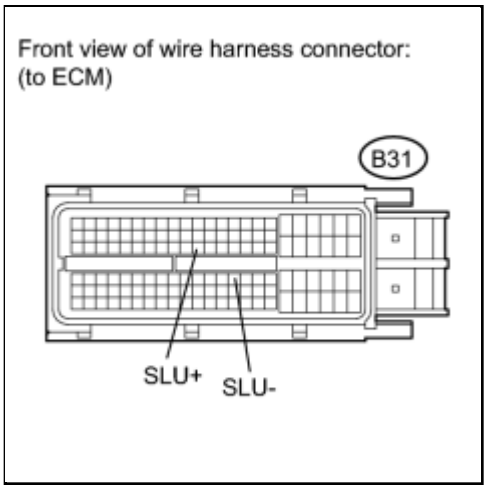

TESTER CONNECTION	CONDITION	SPECIFIED CONDITION
B31-57 (SLU+) - B31-77 (SLU-)	20°C (68°F)	5.0 to 5.6 Ω

(d) Measure the resistance according to the value(s) in the table below.

Standard resistance (Check for short):

TESTER CONNECTION	CONDITION	SPECIFIED CONDITION
B31-57 (SLU+) - Body ground	Always	10 kΩ or higher

TESTER CONNECTION	CONDITION	SPECIFIED CONDITION
B31-77 (SLU-) - Body ground	Always	↑

NG ▶ **REPAIR OR REPLACE HARNESS OR CONNECTOR**

OK ▶ **REPLACE ECM (for 2ZR-FE)**

3.	**INSPECT SHIFT SOLENOID VALVE SLU**

(a) Remove the shift solenoid valve SLU.

(b) Measure the resistance according to the value(s) in the table below.

Standard resistance:

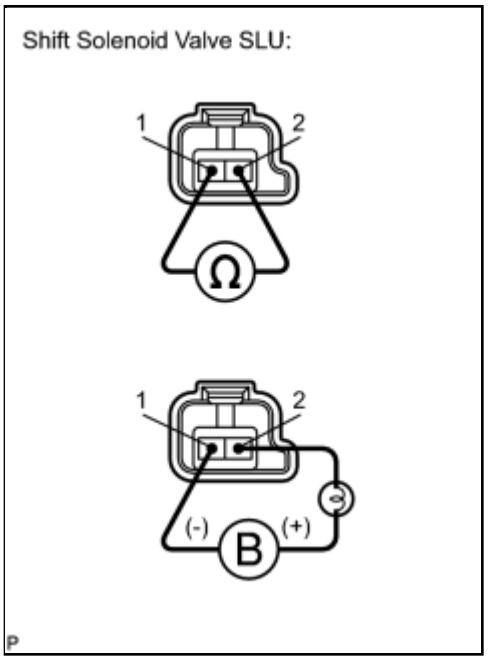

TESTER CONNECTION	CONDITION	SPECIFIED CONDITION
1 - 2	20°C (68°F)	5.0 to 5.6 Ω

(c) Connect the positive (+) lead with a 21 W bulb to terminal 2 and the negative (-) lead to terminal 1 of the solenoid valve connector, then check the movement of the valve.

OK:

The solenoid makes an operating sound.

NG ▶ **REPLACE SHIFT SOLENOID VALVE SLU**

OK ▶ **REPAIR OR REPLACE TRANSMISSION WIRE**

Last Modified: 3-10-2010	6.4 T	**From:** 200901
Model Year: 2010	**Model:** Corolla	**Doc ID:** RM000001IWD01CX
Title: AXLE AND DIFFERENTIAL: AXLE SYSTEM: PROBLEM SYMPTOMS TABLE (2010 Corolla)		

PROBLEM SYMPTOMS TABLE

HINT:

Use the table below to help determine the cause of problem symptoms. If multiple suspected areas are listed, the potential causes of the symptoms are listed in order of probability in the "Suspected Area" column of the table. Check each symptom by checking the suspected areas in the order they are listed. Replace parts as necessary.

Axle System

SYMPTOM	SUSPECTED AREA	SEE PAGE
Wander or pulls	Tire (worn or improperly inflated)	INFO
	Front wheel alignment (incorrect)	INFO
	Rear wheel alignment (incorrect)	INFO
	Front axle hub bearing (loose or worn)	INFO
	Rear axle hub and bearing (loose or worn)	INFO
	Suspension parts (worn out)	-
Front wheel shimmy	Tire (worn or improperly inflated)	INFO
	Wheel (out of balance)	INFO
	Front shock absorber (worn out)	INFO
	Front wheel alignment (incorrect)	INFO
	Front lower ball joint (worn)	INFO
	Front axle hub bearing (loose or worn)	INFO
Rear wheel shimmy	Tire (worn or improperly inflated)	INFO
	Wheel (out of balance)	INFO

Last Modified: 3-10-2010	6.4 K	**From:** 200901
Model Year: 2010	**Model:** Corolla	**Doc ID:** RM000001IWY01MX
Title: AXLE AND DIFFERENTIAL: FRONT AXLE HUB: COMPONENTS (2010 Corolla)		

COMPONENTS

ILLUSTRATION

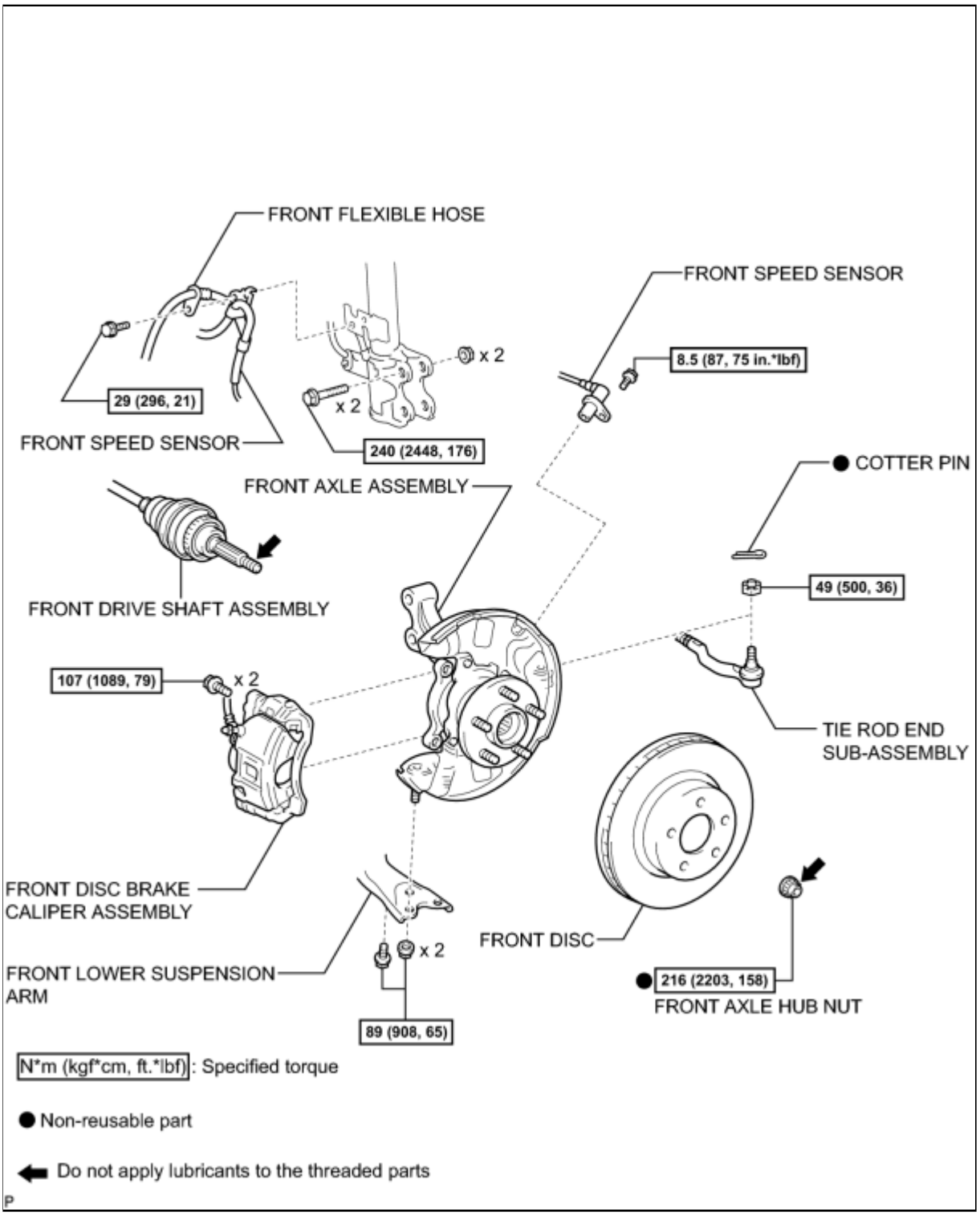

ILLUSTRATION

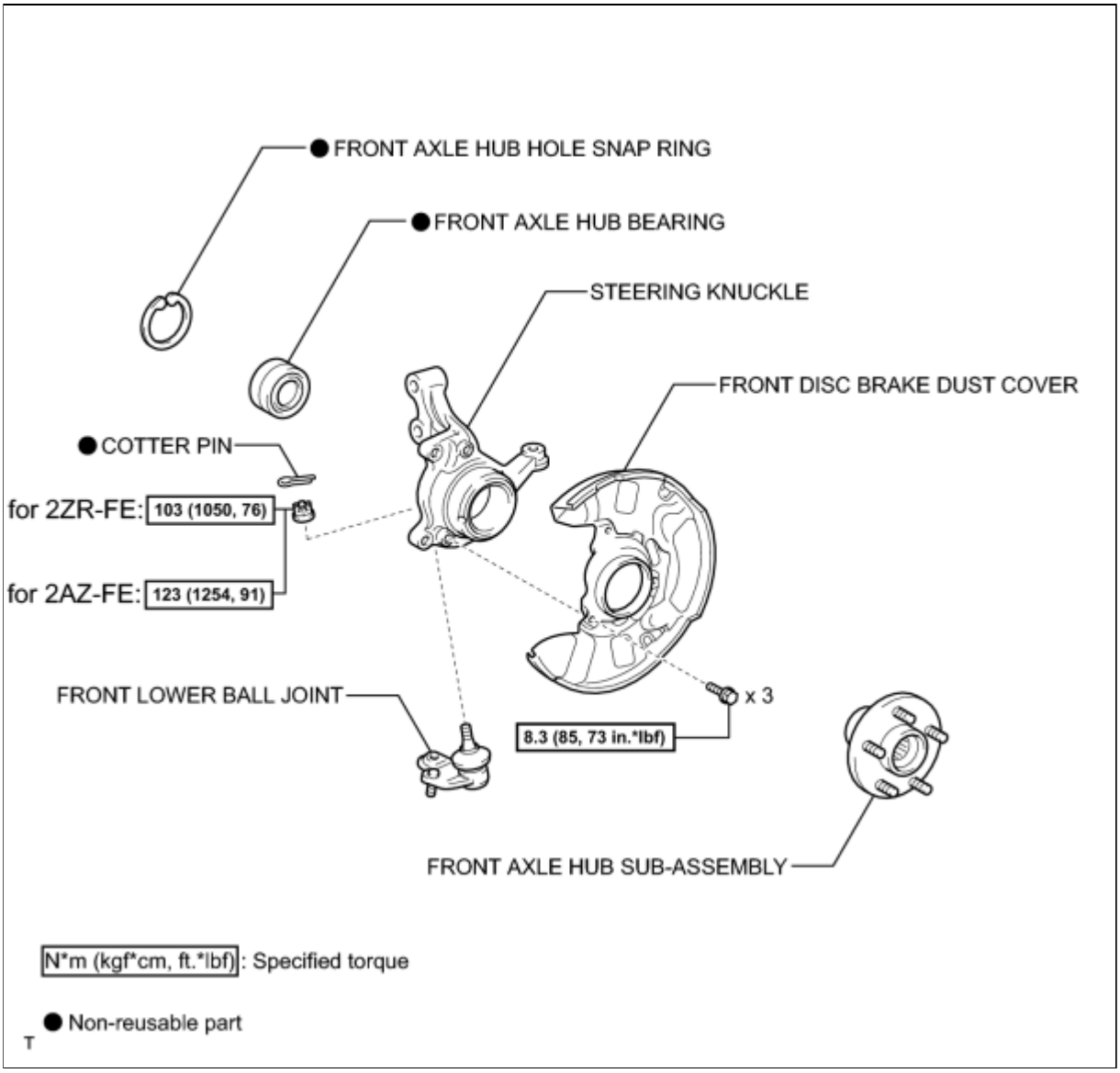

Last Modified: 3-10-2010	6.4 G	**From:** 200901
Model Year: 2010	**Model:** Corolla	**Doc ID:** RM000001IX201IX
Title: AXLE AND DIFFERENTIAL: FRONT AXLE HUB: ON-VEHICLE INSPECTION (2010 Corolla)		

ON-VEHICLE INSPECTION

HINT:

- Use the same procedure for the RH side and LH side.
- The procedure listed below is for the LH side.

1. REMOVE FRONT WHEEL

2. SEPARATE FRONT DISC BRAKE CALIPER ASSEMBLY INFO

3. REMOVE FRONT DISC INFO

4. INSPECT FRONT AXLE HUB BEARING LOOSENESS

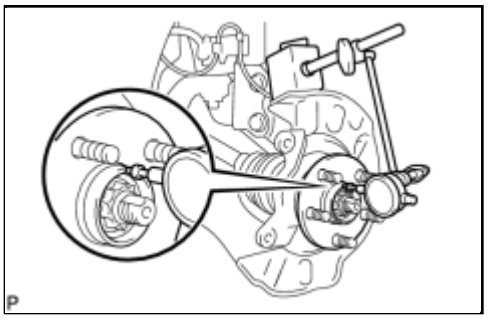

(a) Using a dial indicator, check for looseness near the center of the axle hub.

Maximum looseness:
0.05 mm (0.00196 in.)

NOTICE:

Ensure that the dial indicator is set perpendicular to the measurement surface.

If looseness exceeds the maximum, replace the front axle hub bearing.

5. INSPECT FRONT AXLE HUB RUNOUT

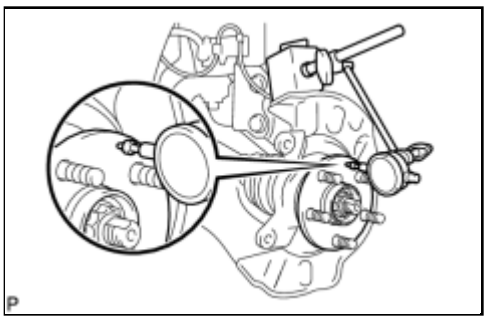

(a) Using a dial indicator, check for runout on the surface of the axle hub outside the hub bolt.

Maximum runout:
0.03 mm (0.00118 in.)

NOTICE:

Ensure that the dial indicator is set perpendicular to the measurement surface.

If runout exceeds the maximum, replace the front axle hub sub-assembly.

6. INSTALL FRONT DISC INFO

7. INSTALL FRONT DISC BRAKE CALIPER ASSEMBLY INFO

8. INSTALL FRONT WHEEL

Torque: 103 N·m (1050 kgf·cm, 76ft·lbf)

Last Modified: 3-10-2010	6.4 A	**From:** 200901
Model Year: 2010	**Model:** Corolla	**Doc ID:** RM000001IWZ022X
Title: AXLE AND DIFFERENTIAL: FRONT AXLE HUB: REMOVAL (2010 Corolla)		

REMOVAL

HINT:

- Use the same procedure for the RH side and LH side.
- The procedure listed below is for the LH side.

1. REMOVE FRONT WHEEL

2. REMOVE FRONT AXLE HUB NUT (for 2AZ-FE) INFO

3. REMOVE FRONT AXLE HUB NUT (for 2ZR-FE) INFO

4. SEPARATE FRONT SPEED SENSOR (for TMC Made) INFO

5. SEPARATE FRONT SPEED SENSOR (except TMC Made) INFO

6. SEPARATE FRONT DISC BRAKE CALIPER ASSEMBLY INFO

7. REMOVE FRONT DISC INFO

8. SEPARATE TIE ROD END SUB-ASSEMBLY INFO

9. SEPARATE FRONT LOWER SUSPENSION ARM INFO

10. REMOVE FRONT AXLE ASSEMBLY

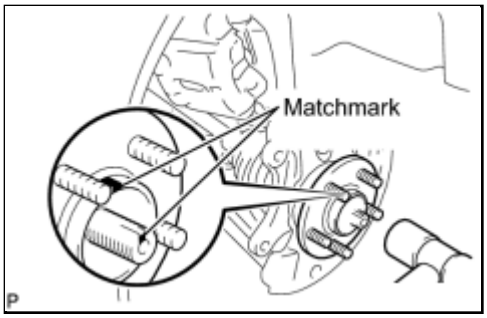

(a) Put matchmarks on the front drive shaft assembly and the front axle hub sub-assembly.

(b) Using a plastic hammer, separate the front drive shaft assembly from the front axle assembly.

NOTICE:

Be careful not to damage the drive shaft boot or speed sensor rotor.

(c) Remove the 2 bolts, 2 nuts, and front axle assembly.

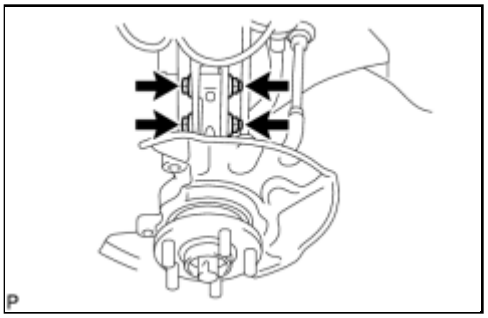

11. REMOVE FRONT LOWER BALL JOINT INFO

12. REMOVE FRONT AXLE HUB HOLE SNAP RING

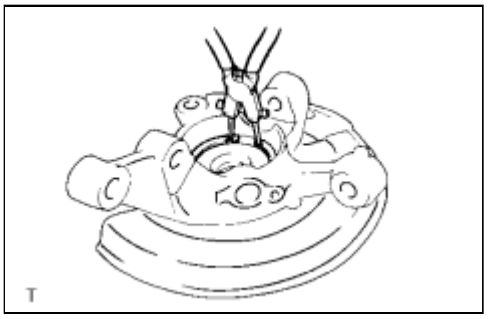

(a) Using snap ring pliers, remove the front axle hub hole snap ring.

13. REMOVE FRONT AXLE HUB SUB-ASSEMBLY

(a) Secure the front axle assembly between aluminium plates in a vise.

NOTICE:

Do not overtighten the vise.

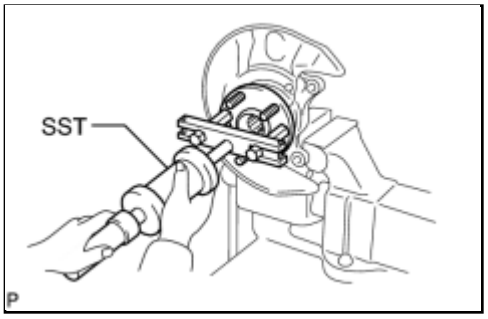

(b) Using SST, remove the front axle hub sub-assembly.

SST: 09520-00031

(c) Using SST, remove the bearing inner race (outside) from the front axle hub sub-assembly.

SST: 09950-40011

09951-04020

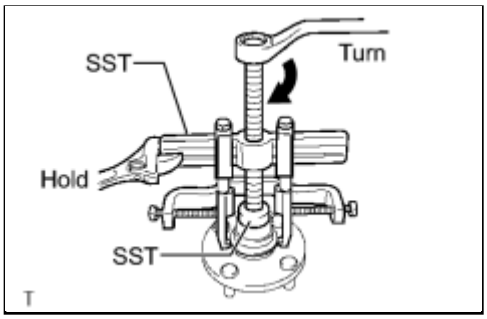

09952-04010
09953-04030
09954-04010
09955-04061
09957-04010
09958-04011
SST: 09950-60010
09951-00370

NOTICE:

Apply a small amount of grease to the threads and tip of SST (09953-04020) before use.

14. REMOVE FRONT DISC BRAKE DUST COVER

(a) Remove the 3 bolts and the front disc brake dust cover from the steering knuckle.

15. REMOVE FRONT AXLE HUB BEARING

(a) Place the front axle hub bearing inner race (outside) on the front axle hub bearing.

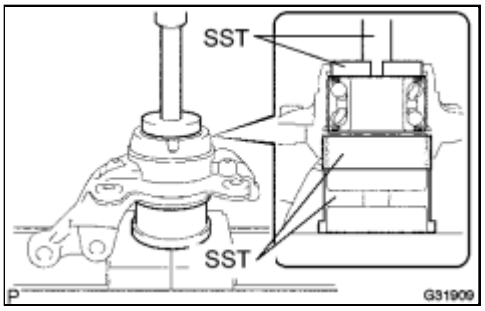

(b) Using SST and a press, remove the front axle hub bearing from the steering knuckle.

SST: 09223-15020
SST: 09387-02010
SST: 09950-60010
09951-00640
SST: 09950-70010
09951-07100

Last Modified: 3-10-2010	6.4 A	**From:** 200901
Model Year: 2010	**Model:** Corolla	**Doc ID:** RM000001IWX022X
Title: AXLE AND DIFFERENTIAL: FRONT AXLE HUB: INSTALLATION (2010 Corolla)		

INSTALLATION

1. INSTALL FRONT AXLE HUB BEARING

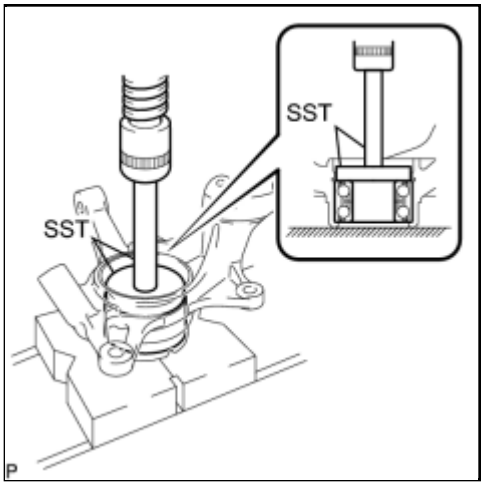

(a) Using SST and a press, install a new front axle hub bearing to the steering knuckle.

SST: 09950-60020

09951-00720

SST: 09950-70010

09951-07100

2. INSTALL FRONT DISC BRAKE DUST COVER

(a) Install the disc brake dust cover to the steering knuckle with the 3 bolts.

Torque: 8.3 N·m (85 kgf·cm, 73in·lbf)

3. INSTALL FRONT AXLE HUB SUB-ASSEMBLY

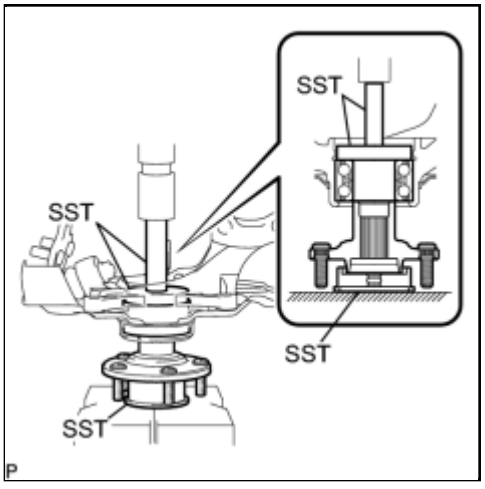

(a) Using SST and a press, install the front axle hub sub-assembly.

SST: 09608-32010

SST: 09950-60010

09951-00600

SST: 09950-70010

09951-07100

4. INSTALL FRONT AXLE HUB HOLE SNAP RING

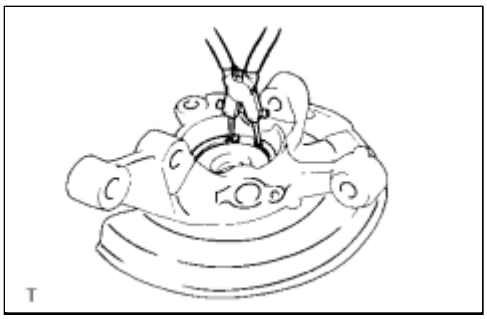

(a) Using snap ring pliers, install a new front axle hub hole snap ring.

5. INSTALL FRONT LOWER BALL JOINT INFO

6. INSTALL FRONT AXLE ASSEMBLY

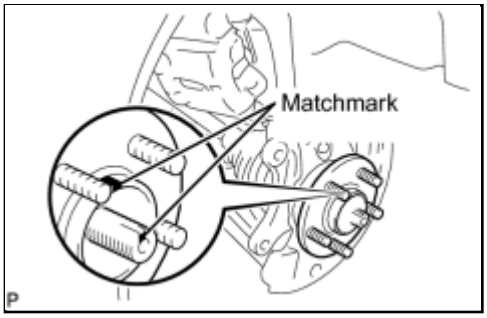

(a) Align the matchmarks and install the front drive shaft assembly to the front axle hub sub-assembly.

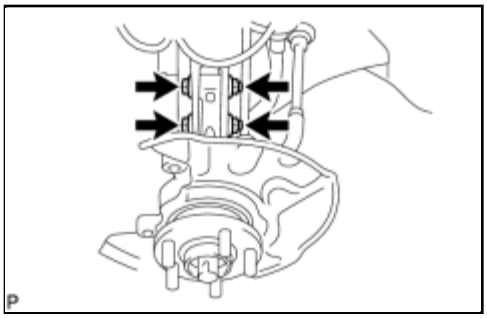

(b) Install the front axle assembly to the front shock absorber with the 2 bolts and the 2 nuts.

Torque: 240 N·m (2448 kgf·cm, 176ft·lbf)

NOTICE:

Be careful not to damage the drive shaft boot or speed sensor rotor.

7. INSTALL FRONT LOWER SUSPENSION ARM INFO

8. INSTALL TIE ROD END SUB-ASSEMBLY INFO

9. INSTALL FRONT DISC INFO

10. INSTALL FRONT DISC BRAKE CALIPER ASSEMBLY INFO

11. TEMPORARILY INSTALL FRONT AXLE HUB NUT

(a) Clean the threaded parts on the drive shaft and axle hub nut using a non-residue solvent.

NOTICE:

- Be sure to perform this work when installing a new drive shaft.
- Keep the threaded parts free of oil and foreign objects.

(b) Using a socket wrench (30 mm), while applying the brakes, temporarily install a new axle hub nut.

Torque: 216 N·m (2203 kgf·cm, 158ft·lbf)

HINT:

- Stake the axle hub nut after inspecting for looseness and runout in the following steps.
- Tighten the axle hub nut while the brakes are applied to prevent the front axle from rotating.

12. SEPARATE FRONT DISC BRAKE CALIPER ASSEMBLY INFO

13. REMOVE FRONT DISC INFO

14. INSPECT FRONT AXLE HUB BEARING LOOSENESS INFO

15. INSPECT FRONT AXLE HUB RUNOUT INFO

16. INSTALL FRONT DISC INFO

17. INSTALL FRONT DISC BRAKE CALIPER ASSEMBLY INFO

18. CONNECT FRONT SPEED SENSOR (for TMC Made) INFO

19. CONNECT FRONT SPEED SENSOR (except TMC Made) INFO

20. INSTALL FRONT AXLE HUB NUT

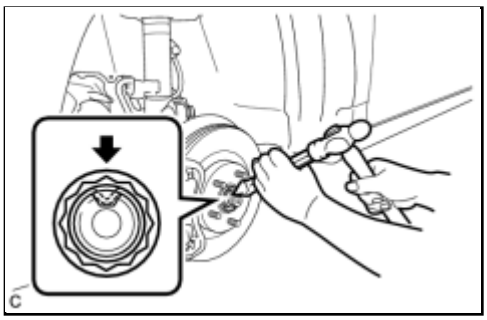

(a) Using a chisel and hammer, stake the axle hub nut.

21. INSTALL FRONT WHEEL

Torque: 103 N·m (1050 kgf·cm, 76ft·lbf)

22. INSPECT AND ADJUST FRONT WHEEL ALIGNMENT

HINT: INFO

23. CHECK FOR SPEED SENSOR SIGNAL

HINT: INFO

Last Modified: 3-10-2010	6.4 K	**From:** 200901
Model Year: 2010	**Model:** Corolla	**Doc ID:** RM0000014NA01IX
Title: AXLE AND DIFFERENTIAL: FRONT AXLE HUB BOLT: COMPONENTS (2010 Corolla)		

COMPONENTS

ILLUSTRATION

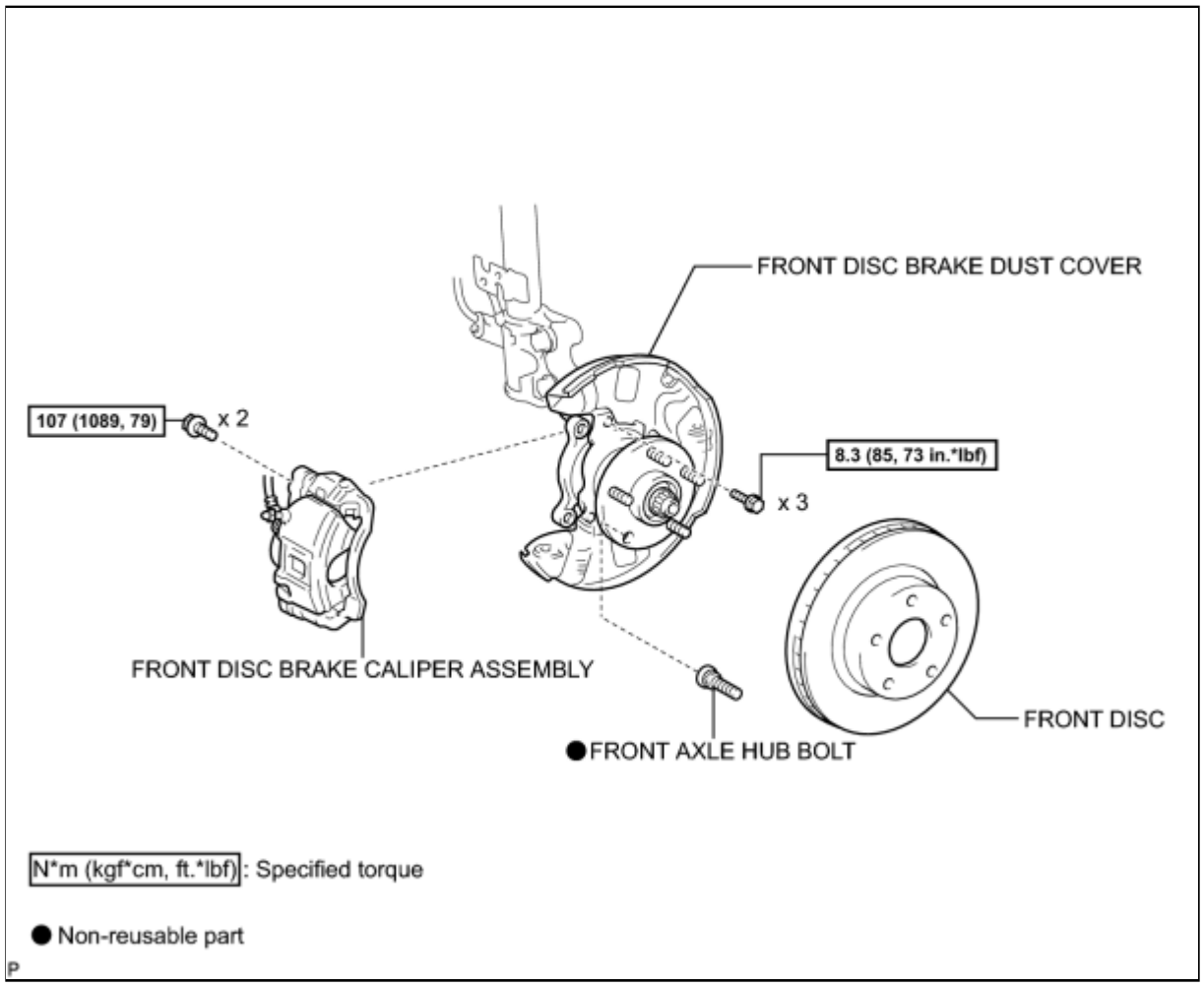

Last Modified: 3-10-2010	6.4 A	**From:** 200901
Model Year: 2010	**Model:** Corolla	**Doc ID:** RM0000012L001UX
Title: AXLE AND DIFFERENTIAL: FRONT AXLE HUB BOLT: REPLACEMENT (2010 Corolla)		

REPLACEMENT

HINT:

- Use the same procedure for the RH side and LH side.
- The procedure listed below is for the LH side.

1. REMOVE FRONT WHEEL

2. SEPARATE FRONT DISC BRAKE CALIPER ASSEMBLY

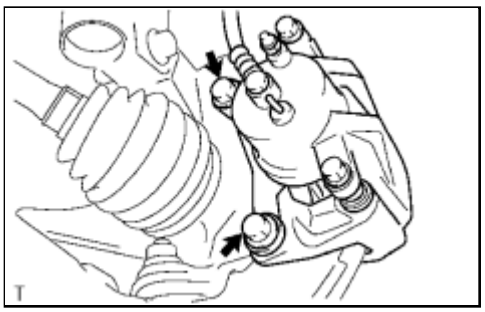

(a) Remove the 2 bolts and separate the front disc brake caliper assembly from the steering knuckle.

NOTICE:

Use wire or an equivalent tool to keep the brake caliper from hanging down by the flexible hose.

3. REMOVE FRONT DISC INFO

4. SEPARATE FRONT DISC BRAKE DUST COVER

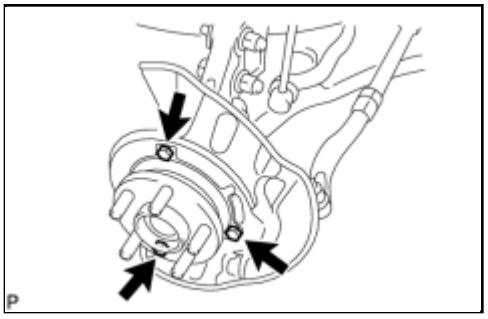

(a) Remove the 3 bolts and separate the front disc brake dust cover.

5. REMOVE FRONT AXLE HUB BOLT

(a) Temporarily install the 2 nuts and washers to the front axle hub bolt as shown in the illustration.

Recommended service nut:

Thread diameter

12.0 mm (0.472 in.)

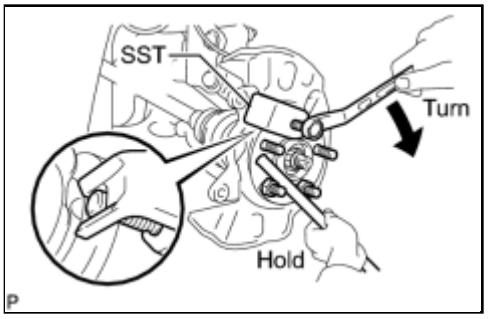

Thread pitch
1.5 mm (0.0591 in.)

(b) Using SST and a brass bar or an equivalent tool to hold the front axle, remove the front axle hub bolt.

SST: 09611-12010

6. INSTALL FRONT AXLE HUB BOLT

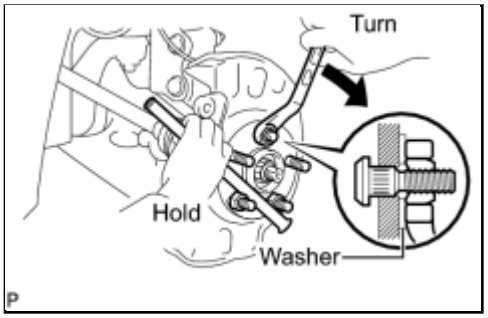

(a) Install a washer and nut to a new front axle hub bolt as shown in the illustration.

Recommended service nut:

Thread diameter
12.0 mm (0.472 in.)

Thread pitch
1.5 mm (0.0591 in.)

HINT:

Recommended thickness of the washer is 5 mm (0.197 in.) or more.

(b) Using a brass bar to hold the front axle, install the hub bolt by tightening the nut.

7. INSTALL FRONT DISC BRAKE DUST COVER

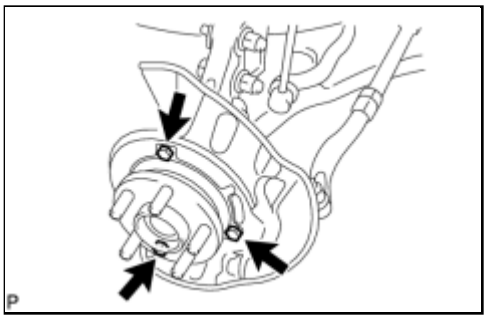

(a) Install the front disc brake dust cover with the 3 bolts.

Torque: 8.3 N·m (85 kgf·cm, 73in·lbf)

8. INSTALL FRONT DISC INFO

9. INSTALL FRONT DISC BRAKE CALIPER ASSEMBLY

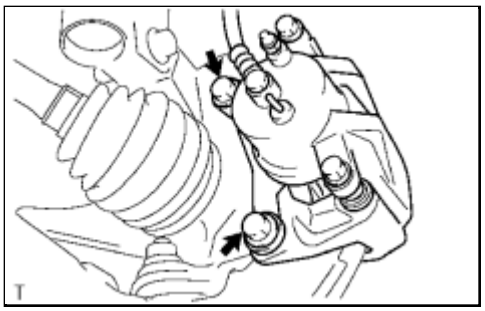

(a) Install the front disc brake caliper assembly to the steering knuckle with the 2 bolts.

Torque: 107 N·m (1089 kgf·cm, 79ft·lbf)

NOTICE:

Do not twist the brake hose when installing the front disc brake caliper assembly.

10. INSTALL FRONT WHEEL

Torque: 103 N·m (1050 kgf·cm, 76ft·lbf)

Last Modified: 3-10-2010	6.4 K	**From:** 200901
Model Year: 2010	**Model:** Corolla	**Doc ID:** RM000001Y1Q011X
Title: AXLE AND DIFFERENTIAL: REAR AXLE HUB: COMPONENTS (2010 Corolla)		

COMPONENTS

ILLUSTRATION

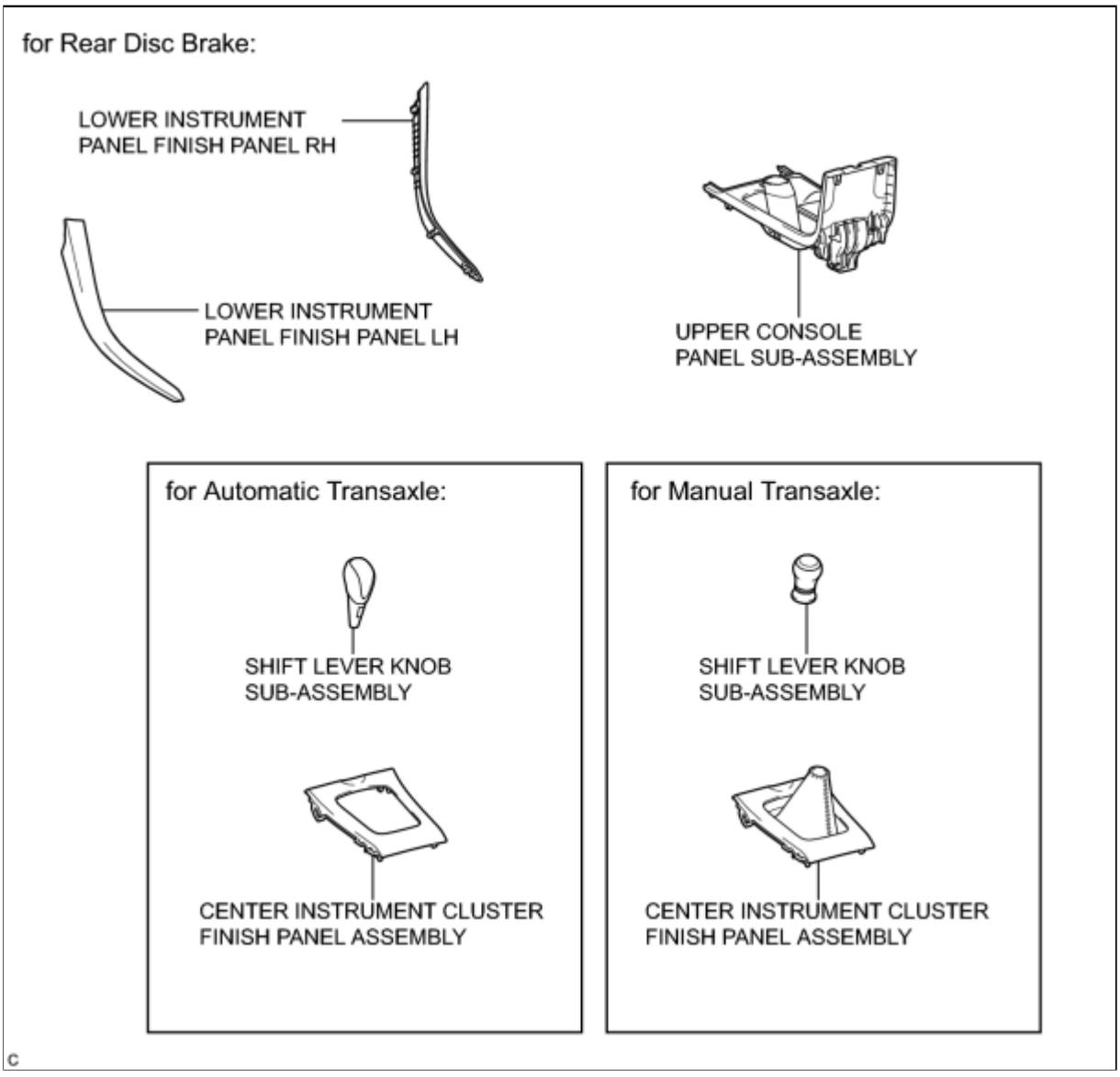

ILLUSTRATION

for Rear Drum Brake:

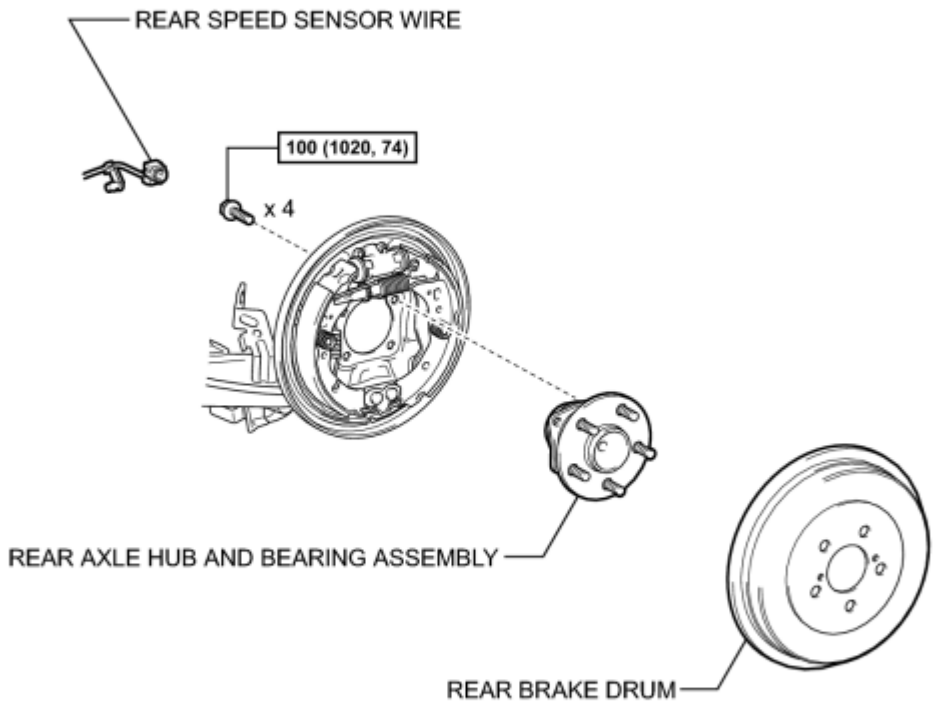

N*m (kgf*cm, ft.*lbf): Specified torque

ILLUSTRATION

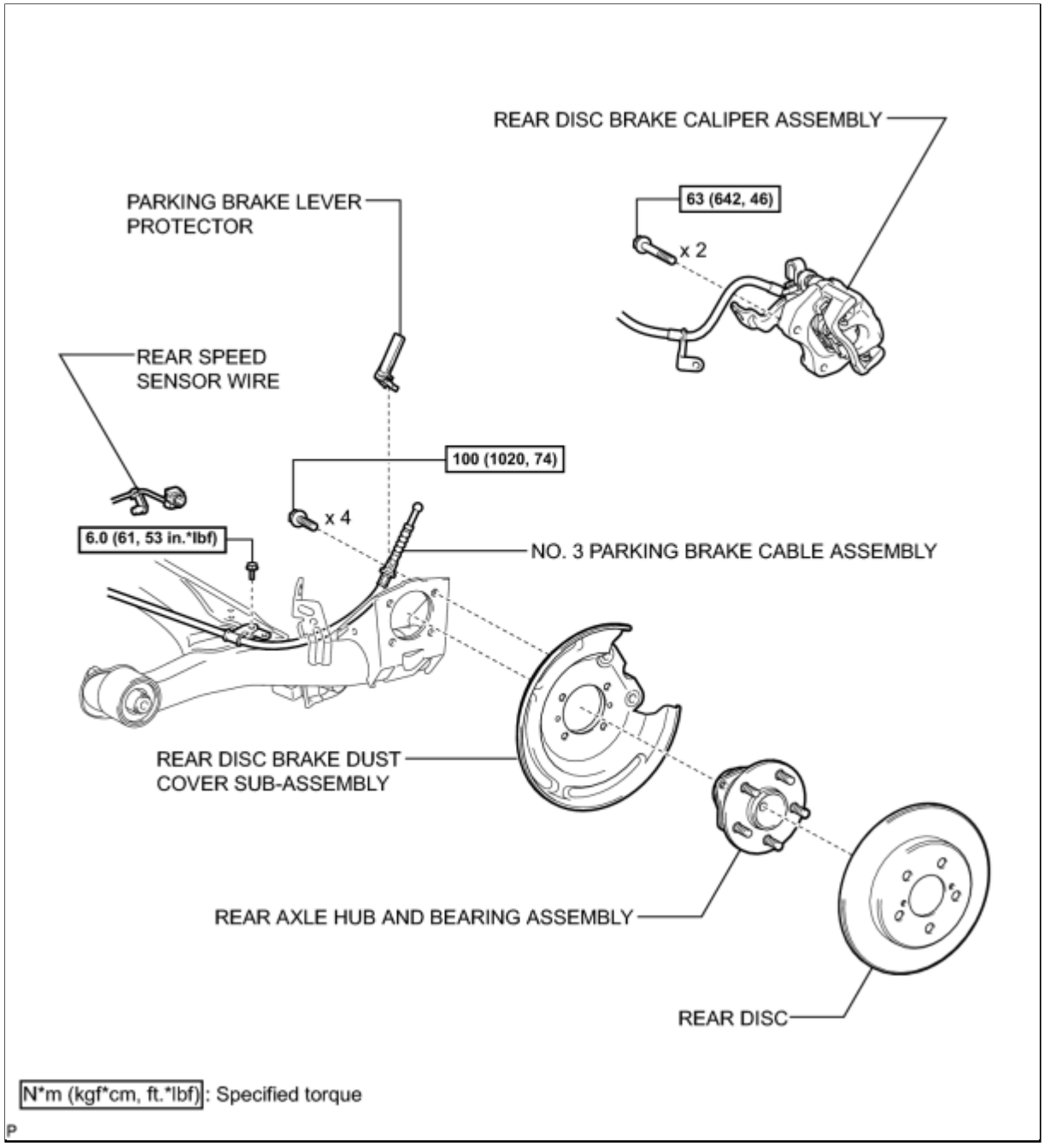
REAR DISC BRAKE CALIPER ASSEMBLY
63 (642, 46)
x 2
PARKING BRAKE LEVER PROTECTOR
REAR SPEED SENSOR WIRE
100 (1020, 74)
x 4
6.0 (61, 53 in.*lbf)
NO. 3 PARKING BRAKE CABLE ASSEMBLY
REAR DISC BRAKE DUST COVER SUB-ASSEMBLY
REAR AXLE HUB AND BEARING ASSEMBLY
REAR DISC
N*m (kgf*cm, ft.*lbf): Specified torque

P

Last Modified: 3-10-2010	6.4 G	**From:** 200901
Model Year: 2010	**Model:** Corolla	**Doc ID:** RM000001Y1S011X
Title: AXLE AND DIFFERENTIAL: REAR AXLE HUB: ON-VEHICLE INSPECTION (2010 Corolla)		

ON-VEHICLE INSPECTION

HINT:

- Use the same procedure for the RH side and LH side.
- The procedure listed below is for the LH side.

1. REMOVE REAR WHEEL

2. REMOVE LOWER INSTRUMENT PANEL FINISH PANEL LH (for Rear Disc Brake) INFO

3. REMOVE LOWER INSTRUMENT PANEL FINISH PANEL RH (for Rear Disc Brake) INFO

4. REMOVE SHIFT LEVER KNOB SUB-ASSEMBLY (for Rear Disc Brake)

HINT:

- for Manual Transaxle INFO
- for Automatic Transaxle INFO

5. REMOVE CENTER INSTRUMENT CLUSTER FINISH PANEL ASSEMBLY (for Rear Disc Brake)

HINT:

- for Manual Transaxle INFO
- for Automatic Transaxle INFO

6. REMOVE UPPER CONSOLE PANEL SUB-ASSEMBLY (for Rear Disc Brake) INFO

7. LOOSEN PARKING BRAKE CABLE (for Rear Disc Brake) INFO

8. REMOVE PARKING BRAKE LEVER PROTECTOR (for Rear Disc Brake) INFO

9. SEPARATE NO. 3 PARKING BRAKE CABLE ASSEMBLY (for Rear Disc Brake) INFO

10. SEPARATE REAR DISC BRAKE CALIPER ASSEMBLY (for Rear Disc Brake) INFO

11. REMOVE REAR DISC (for Rear Disc Brake) INFO

12. REMOVE REAR BRAKE DRUM (for Rear Drum Brake) INFO

13. INSPECT REAR AXLE HUB BEARING LOOSENESS (for Rear Drum Brake)

(a) Using a dial indicator, check for looseness near the center of the axle hub.

Maximum looseness:
0.05 mm (0.00196 in.)

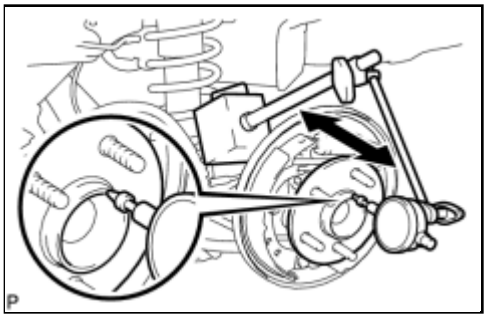

NOTICE:

Ensure that the dial indicator is set perpendicular to the measurement surface.

If the looseness exceeds the maximum, replace the rear axle hub and bearing assembly.

14. INSPECT REAR AXLE HUB RUNOUT (for Rear Drum Brake)

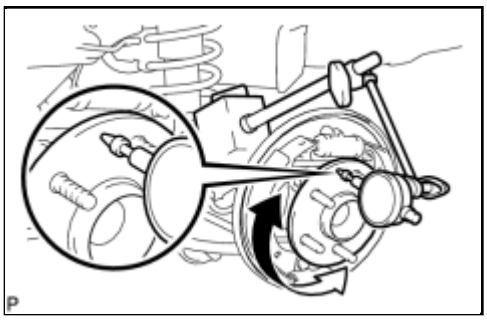

(a) Using a dial indicator, check for runout on the surface of the axle hub outside the hub bolt.

Maximum runout:
0.06 mm (0.00236 in.)

NOTICE:

Ensure that the dial indicator is set perpendicular to the measurement surface.

If the runout exceeds the maximum, replace the rear axle hub and bearing assembly.

15. INSPECT REAR AXLE HUB BEARING LOOSENESS (for Rear Disc Brake)

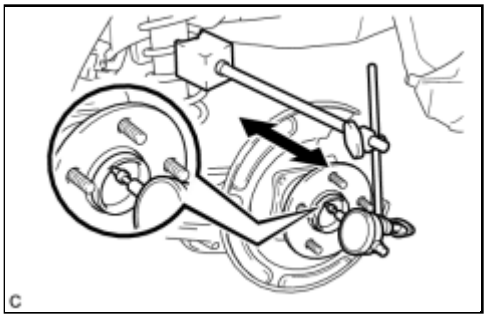

(a) Using a dial indicator, check for looseness near the center of the axle hub.

Maximum looseness:
0.05 mm (0.00196 in.)

NOTICE:

Ensure that the dial indicator is set perpendicular to the measurement surface.

If the looseness exceeds the maximum, replace the rear axle hub and bearing assembly.

16. INSPECT REAR AXLE HUB RUNOUT (for Rear Disc Brake)

(a) Using a dial indicator, check for runout on the surface of the axle hub outside the hub bolt.

Maximum runout:
0.06 mm (0.00236 in.)

NOTICE:

Ensure that the dial indicator is set perpendicular to the measurement surface.

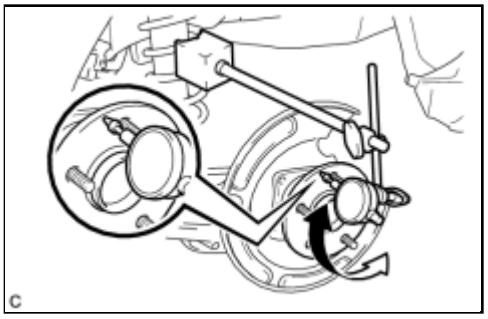

If the runout exceeds the maximum, replace the rear axle hub and bearing assembly.

17. INSTALL REAR BRAKE DRUM (for Rear Drum Brake) INFO

18. ADJUST REAR DRUM BRAKE SHOE CLEARANCE (for Rear Drum Brake) INFO

19. INSTALL REAR DISC (for Rear Disc Brake) INFO

20. INSTALL REAR DISC BRAKE CALIPER ASSEMBLY (for Rear Disc Brake) INFO

21. CONNECT NO. 3 PARKING BRAKE CABLE ASSEMBLY (for Rear Disc Brake) INFO

22. ADJUST PARKING BRAKE LEVER TRAVEL (for Rear Disc Brake) INFO

23. INSTALL PARKING BRAKE LEVER PROTECTOR INFO

24. INSPECT REAR DISC BRAKE CYLINDER OPERATION LEVER AND STOPPER CLEARANCE (for Rear Disc Brake) INFO

25. INSTALL UPPER CONSOLE PANEL SUB-ASSEMBLY (for Rear Disc Brake) INFO

26. INSTALL CENTER INSTRUMENT CLUSTER FINISH PANEL ASSEMBLY (for Rear Disc Brake)

HINT:

- for Manual Transaxle INFO
- for Automatic Transaxle INFO

27. INSTALL SHIFT LEVER KNOB SUB-ASSEMBLY (for Rear Disc Brake)

HINT:

- for Manual Transaxle INFO
- for Automatic Transaxle INFO

28. INSTALL LOWER INSTRUMENT PANEL FINISH PANEL LH (for Rear Disc Brake) INFO

29. INSTALL LOWER INSTRUMENT PANEL FINISH PANEL RH (for Rear Disc Brake) INFO

30. INSTALL REAR WHEEL

Torque: 103 N·m (1050 kgf·cm, 76ft·lbf)

Last Modified: 3-10-2010	6.4 A	**From:** 200901
Model Year: 2010	**Model:** Corolla	**Doc ID:** RM000001Y1R014X
Title: AXLE AND DIFFERENTIAL: REAR AXLE HUB: REMOVAL (2010 Corolla)		

REMOVAL

HINT:

- Use the same procedure for the RH side and LH side.
- The procedure listed below is for the LH side.

1. DISCONNECT CABLE FROM NEGATIVE BATTERY TERMINAL

2. REMOVE LOWER INSTRUMENT PANEL FINISH PANEL LH (for Rear Disc Brake) INFO

3. REMOVE LOWER INSTRUMENT PANEL FINISH PANEL RH (for Rear Disc Brake) INFO

4. REMOVE SHIFT LEVER KNOB SUB-ASSEMBLY (for Rear Disc Brake)

HINT:

- for Manual Transaxle INFO
- for Automatic Transaxle INFO

5. REMOVE CENTER INSTRUMENT CLUSTER FINISH PANEL ASSEMBLY (for Rear Disc Brake)

HINT:

- for Manual Transaxle INFO
- for Automatic Transaxle INFO

6. REMOVE UPPER CONSOLE PANEL SUB-ASSEMBLY (for Rear Disc Brake) INFO

7. LOOSEN PARKING BRAKE CABLE (for Rear Disc Brake) INFO

8. REMOVE REAR WHEEL

9. DISCONNECT REAR SPEED SENSOR WIRE (for Rear Drum Brake) INFO

10. DISCONNECT REAR SPEED SENSOR WIRE (for Rear Disc Brake) INFO

11. REMOVE PARKING BRAKE LEVER PROTECTOR (for Rear Disc Brake) INFO

12. SEPARATE NO. 3 PARKING BRAKE CABLE ASSEMBLY (for Rear Disc Brake) INFO

13. SEPARATE REAR DISC BRAKE CALIPER ASSEMBLY (for Rear Disc Brake) INFO

14. REMOVE REAR DISC (for Rear Disc Brake) INFO

15. REMOVE REAR BRAKE DRUM (for Rear Drum Brake) INFO

16. REMOVE REAR AXLE HUB AND BEARING ASSEMBLY (for Rear Drum Brake)

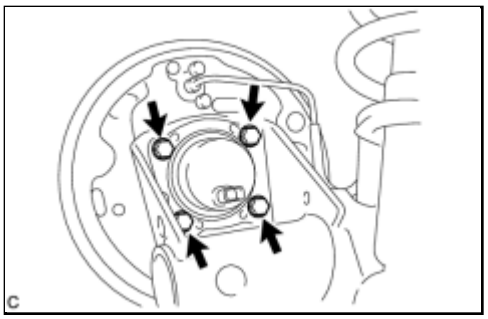

(a) Remove the 4 bolts and the rear axle hub and bearing assembly.

17. REMOVE REAR AXLE HUB AND BEARING ASSEMBLY (for Rear Disc Brake)

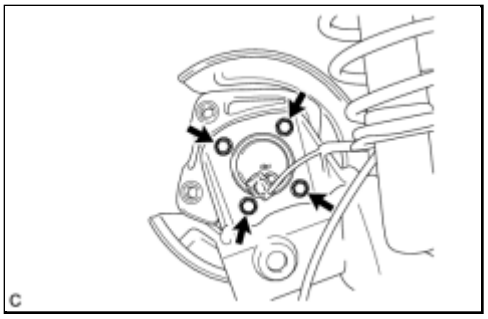

(a) Remove the 4 bolts and the rear axle hub and bearing assembly.

Last Modified: 3-10-2010	6.4 A	**From:** 200901
Model Year: 2010	**Model:** Corolla	**Doc ID:** RM000001Y1P014X
Title: AXLE AND DIFFERENTIAL: REAR AXLE HUB: INSTALLATION (2010 Corolla)		

INSTALLATION

1. INSTALL REAR AXLE HUB AND BEARING ASSEMBLY (for Rear Drum Brake)

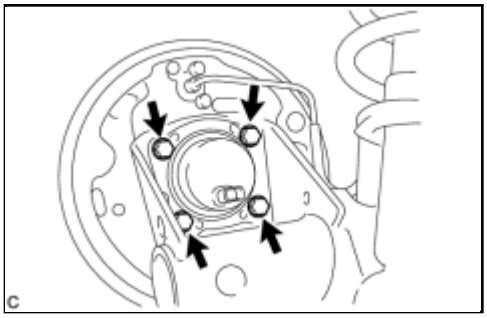

(a) Install the rear axle hub and bearing assembly with the 4 bolts.

Torque: 100 N·m (1020 kgf·cm, 74ft·lbf)

2. INSTALL REAR AXLE HUB AND BEARING ASSEMBLY (for Rear Disc Brake)

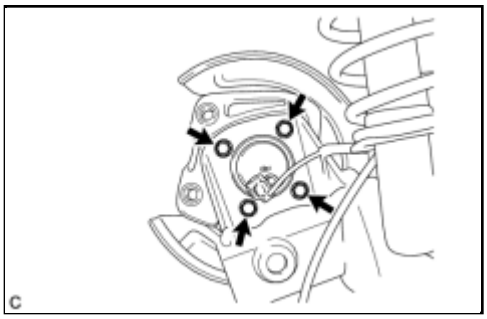

(a) Install the rear axle hub and bearing assembly with the 4 bolts.

Torque: 100 N·m (1020 kgf·cm, 74ft·lbf)

3. INSPECT REAR AXLE HUB BEARING LOOSENESS (for Rear Drum Brake) INFO

4. INSPECT REAR AXLE HUB RUNOUT (for Rear Drum Brake) INFO

5. INSTALL REAR AXLE HUB BEARING LOOSENESS (for Rear Disc Brake) INFO

6. INSTALL REAR AXLE HUB RUNOUT (for Rear Disc Brake) INFO

7. INSTALL REAR BRAKE DRUM (for Rear Drum Brake) INFO

8. ADJUST REAR DRUM BRAKE SHOE CLEARANCE (for Rear Drum Brake) INFO

9. INSTALL REAR DISC (for Rear Disc Brake) INFO

10. INSTALL REAR DISC BRAKE CALIPER ASSEMBLY (for Rear Disc Brake) INFO

11. CONNECT NO. 3 PARKING BRAKE CABLE ASSEMBLY (for Rear Disc Brake) INFO

12. ADJUST PARKING BRAKE LEVER TRAVEL (for Rear Disc Brake) INFO

13. INSPECT REAR DISC BRAKE CYLINDER OPERATION LEVER AND STOPPER CLEARANCE (for Rear Disc Brake) INFO

14. INSTALL PARKING BRAKE LEVER PROTECTOR (for Rear Disc Brake) INFO

15. INSTALL UPPER CONSOLE PANEL SUB-ASSEMBLY (for Rear Disc Brake) INFO

16. INSTALL CENTER INSTRUMENT CLUSTER FINISH PANEL ASSEMBLY (for Rear Disc Brake)

HINT:

- for Manual Transaxle INFO
- for Automatic Transaxle INFO

17. INSTALL SHIFT LEVER KNOB SUB-ASSEMBLY (for Rear Disc Brake)

HINT:

- for Manual Transaxle INFO
- for Automatic Transaxle INFO

18. INSTALL LOWER INSTRUMENT PANEL FINISH PANEL LH (for Rear Disc Brake) INFO

19. INSTALL LOWER INSTRUMENT PANEL FINISH PANEL RH (for Rear Disc Brake) INFO

20. CONNECT REAR SPEED SENSOR WIRE (for Rear Drum Brake) INFO

21. CONNECT REAR SPEED SENSOR WIRE (for Rear Disc Brake) INFO

22. CONNECT CABLE TO NEGATIVE BATTERY TERMINAL

23. INSTALL REAR WHEEL

Torque: 103 N·m (1050 kgf·cm, 76ft·lbf)

24. INSPECT REAR WHEEL ALIGNMENT

HINT: INFO

25. CHECK FOR SPEED SENSOR SIGNAL (w/ ABS)

HINT: INFO

26. CHECK FOR SPEED SENSOR SIGNAL (w/ VSC)

HINT: INFO

Last Modified: 3-10-2010	6.4 K	**From:** 200901
Model Year: 2010	**Model:** Corolla	**Doc ID:** RM000001Y1U00YX
Title: AXLE AND DIFFERENTIAL: REAR AXLE HUB BOLT: COMPONENTS (2010 Corolla)		

COMPONENTS

ILLUSTRATION

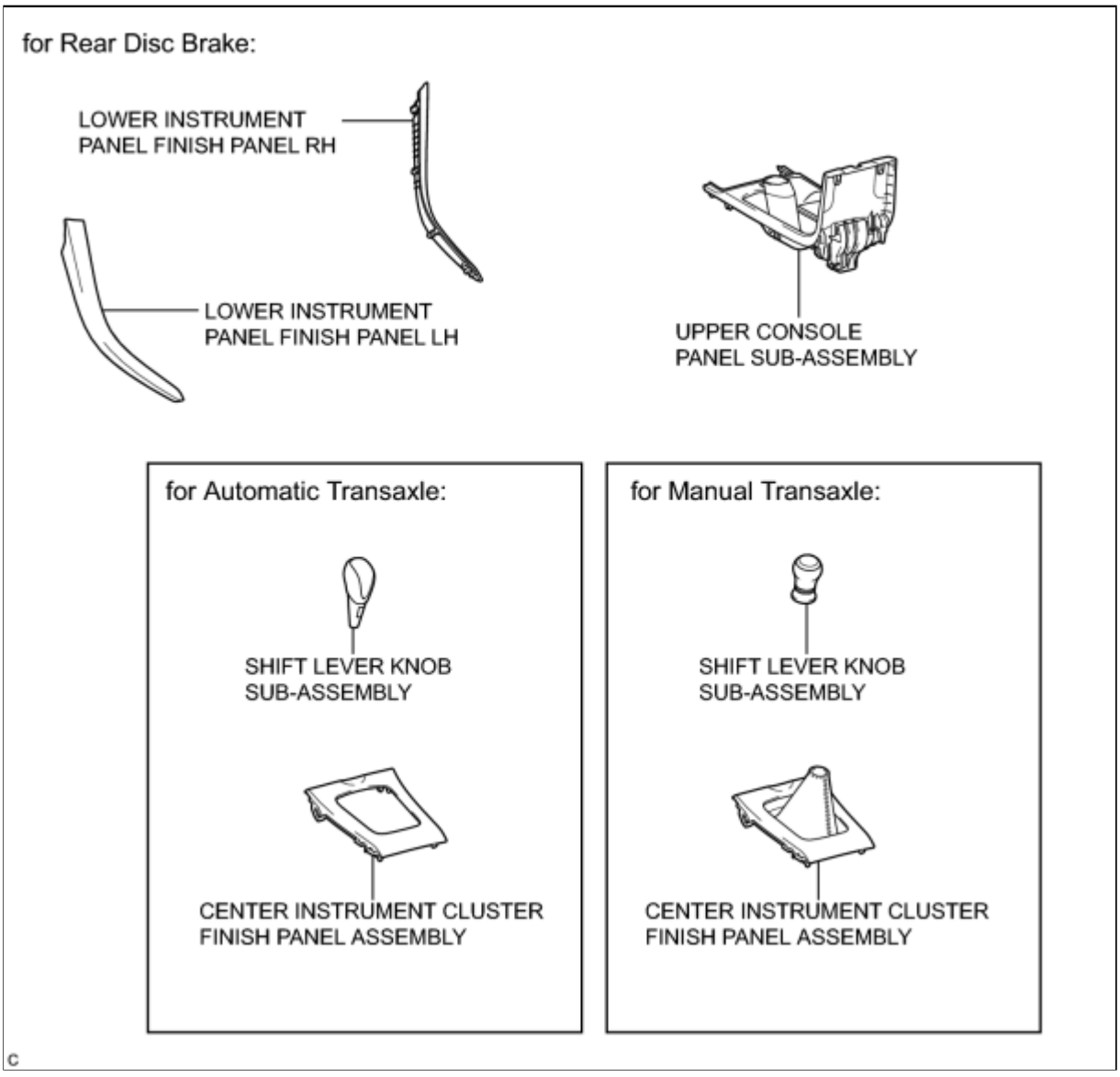

ILLUSTRATION

for Rear Drum Brake:

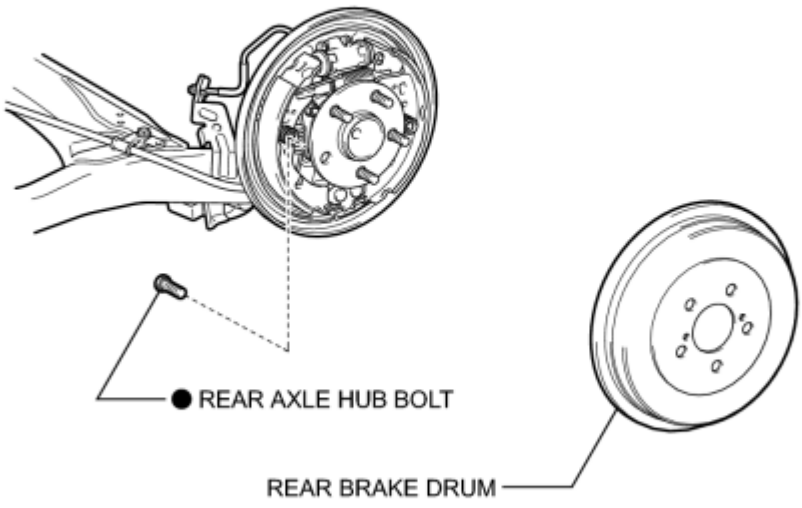

● Non-reusable part

P

ILLUSTRATION

for Rear Disc Brake:

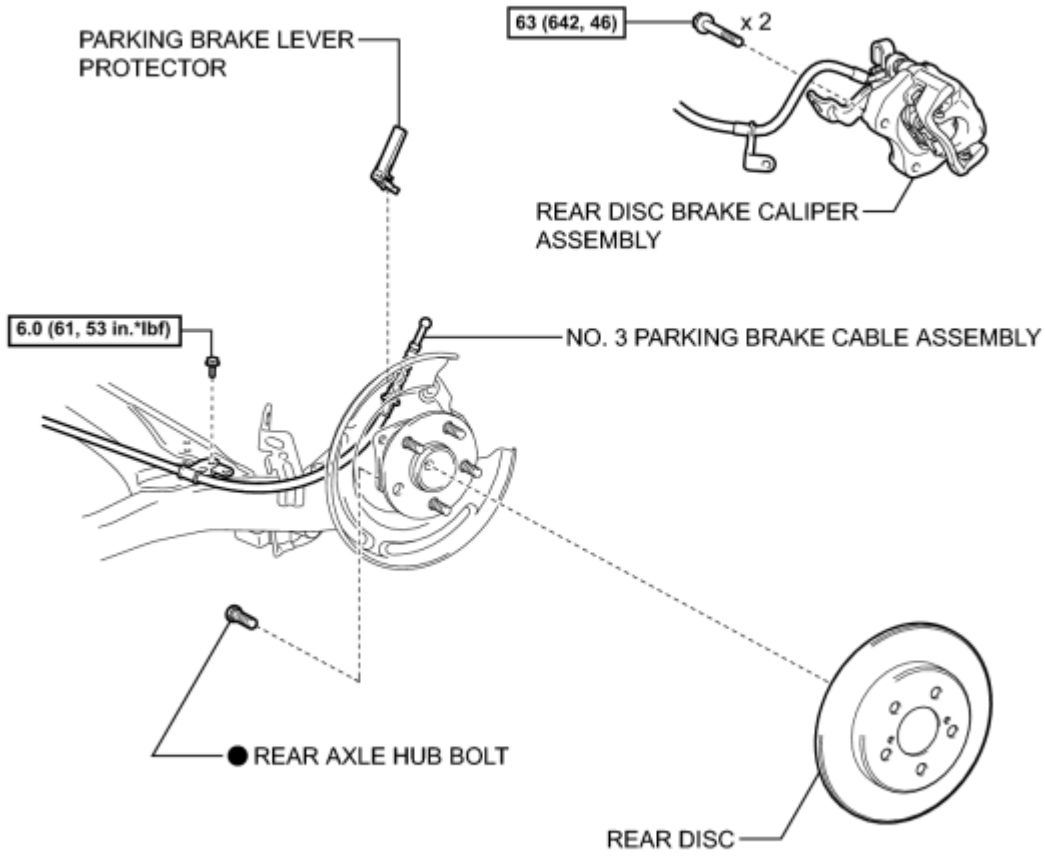

N*m (kgf*cm, ft.*lbf): Specified torque

● Non-reusable part

P

Last Modified: 3-10-2010	6.4 A	**From:** 200901
Model Year: 2010	**Model:** Corolla	**Doc ID:** RM0000024EC010X
Title: AXLE AND DIFFERENTIAL: REAR AXLE HUB BOLT: REPLACEMENT (2010 Corolla)		

REPLACEMENT

HINT:

- Use the same procedure for the RH side and LH side.
- The procedure listed below is for the LH side.

1. REMOVE REAR WHEEL

2. REMOVE LOWER INSTRUMENT PANEL FINISH PANEL LH (for Rear Disc Brake) INFO

3. REMOVE LOWER INSTRUMENT PANEL FINISH PANEL RH (for Rear Disc Brake) INFO

4. REMOVE SHIFT LEVER KNOB SUB-ASSEMBLY (for Rear Disc Brake)

HINT:

- for Manual Transaxle INFO
- for Automatic Transaxle INFO

5. REMOVE CENTER INSTRUMENT CLUSTER FINISH PANEL ASSEMBLY (for Rear Disc Brake)

HINT:

- for Manual Transaxle INFO
- for Automatic Transaxle INFO

6. REMOVE UPPER CONSOLE PANEL SUB-ASSEMBLY (for Rear Disc Brake) INFO

7. LOOSEN PARKING BRAKE CABLE (for Rear Disc Brake) INFO

8. REMOVE PARKING BRAKE LEVER PROTECTOR (for Rear Disc Brake) INFO

9. SEPARATE NO. 3 PARKING BRAKE CABLE ASSEMBLY (for Rear Disc Brake) INFO

10. REMOVE REAR BRAKE DRUM (for Rear Drum Brake) INFO

11. SEPARATE REAR DISC BRAKE CALIPER ASSEMBLY (for Rear Disc Brake)

(a) Remove the 2 bolts, and separate the rear disc brake caliper assembly.

NOTICE:

Use wire or an equivalent tool to keep the brake caliper from hanging down by the flexible hose.

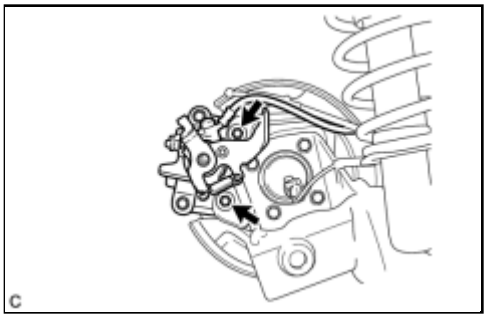

12. REMOVE REAR DISC (for Rear Disc Brake) INFO

13. REMOVE REAR AXLE HUB BOLT (for Rear Drum Brake)

(a) Temporarily install the 2 nuts and 2 washers to the rear axle hub bolt as shown in the illustration.

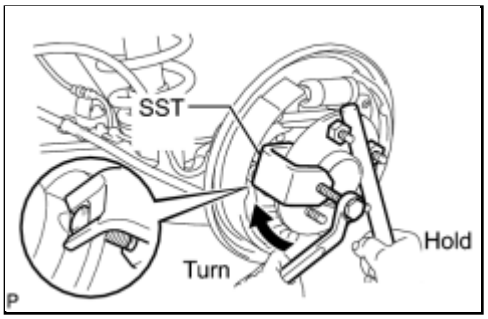

(b) Using SST and a brass bar or an equivalent tool to hold the hub and bearing assembly, remove the rear axle hub bolt.

SST: 09611-12010

14. REMOVE REAR AXLE HUB BOLT (for Rear Disc Brake)

(a) Temporarily install the 2 nuts and 2 washers to the rear axle hub bolt as shown in the illustration.

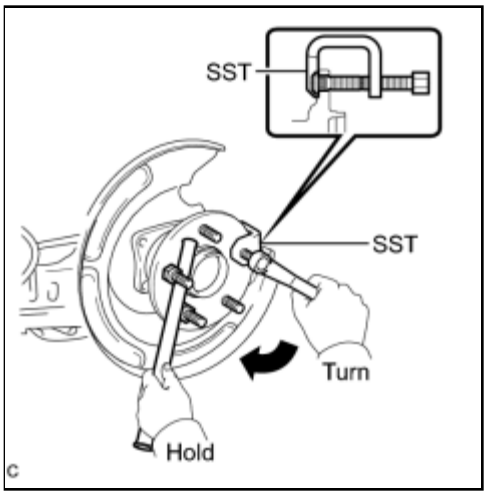

(b) Using SST and a brass bar or an equivalent tool to hold the hub and bearing assembly, remove the rear axle hub bolt.

SST: 09628-10011

15. INSTALL REAR AXLE HUB BOLT (for Rear Drum

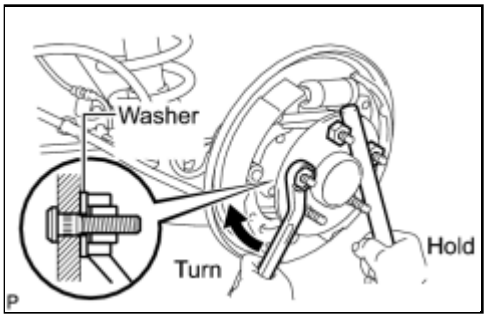

Brake)

(a) Install a washer and nut to a new rear axle hub bolt as shown in the illustration.

(b) Using a brass bar or an equivalent tool to hold the hub and bearing assembly, install the rear axle hub bolt by tightening the nut.

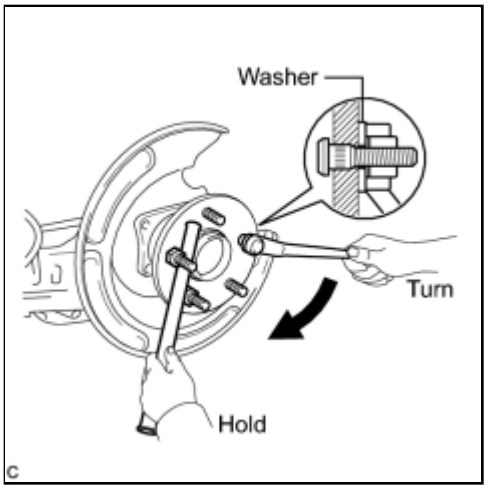

16. INSTALL REAR AXLE HUB BOLT (for Rear Disc Brake)

(a) Install a washer and nut to a new rear axle hub bolt as shown in the illustration.

(b) Using a brass bar or an equivalent tool to hold the hub and bearing assembly, install the rear axle hub bolt by tightening the nut.

17. INSTALL REAR BRAKE DRUM (for Rear Drum Brake) INFO

18. ADJUST REAR DRUM BRAKE SHOE CLEARANCE (for Rear Drum Brake) INFO

19. INSTALL REAR DISC (for Rear Disc Brake) INFO

20. INSTALL REAR DISC BRAKE CALIPER ASSEMBLY (for Rear Disc Brake)

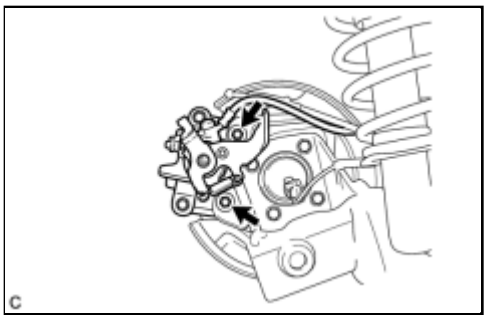

(a) Install the rear disc brake caliper assembly with the 2 bolts.

Torque: 63 N·m (642 kgf·cm, 46ft·lbf)

21. CONNECT NO. 3 PARKING BRAKE CABLE ASSEMBLY (for Rear Disc Brake) INFO

22. ADJUST PARKING BRAKE LEVER TRAVEL (for Rear Disc Brake) INFO

23. INSPECT REAR DISC BRAKE CYLINDER OPERATION LEVER AND STOPPER CLEARANCE (for Rear Disc Brake) INFO

24. INSTALL PARKING BRAKE LEVER PROTECTOR (for Rear Disc Brake) INFO

25. INSTALL UPPER CONSOLE PANEL SUB-ASSEMBLY (for Rear Disc Brake) INFO

26. INSTALL CENTER INSTRUMENT CLUSTER FINISH PANEL ASSEMBLY (for Rear Disc Brake)

HINT:

- for Manual Transaxle INFO
- for Automatic Transaxle INFO

27. INSTALL SHIFT LEVER KNOB SUB-ASSEMBLY (for Rear Disc Brake)

HINT:

- for Manual Transaxle INFO
- for Automatic Transaxle INFO

28. INSTALL LOWER INSTRUMENT PANEL FINISH PANEL LH (for Rear Disc Brake) INFO

29. INSTALL LOWER INSTRUMENT PANEL FINISH PANEL RH (for Rear Disc Brake) INFO

30. INSTALL REAR WHEEL

Torque: 103 N·m (1050 kgf·cm, 76ft·lbf)

Last Modified: 3-10-2010	6.4 K	**From:** 200901
Model Year: 2010	**Model:** Corolla	**Doc ID:** RM000001IWY01NX
Title: AXLE AND DIFFERENTIAL: STEERING KNUCKLE: COMPONENTS (2010 Corolla)		

COMPONENTS

ILLUSTRATION

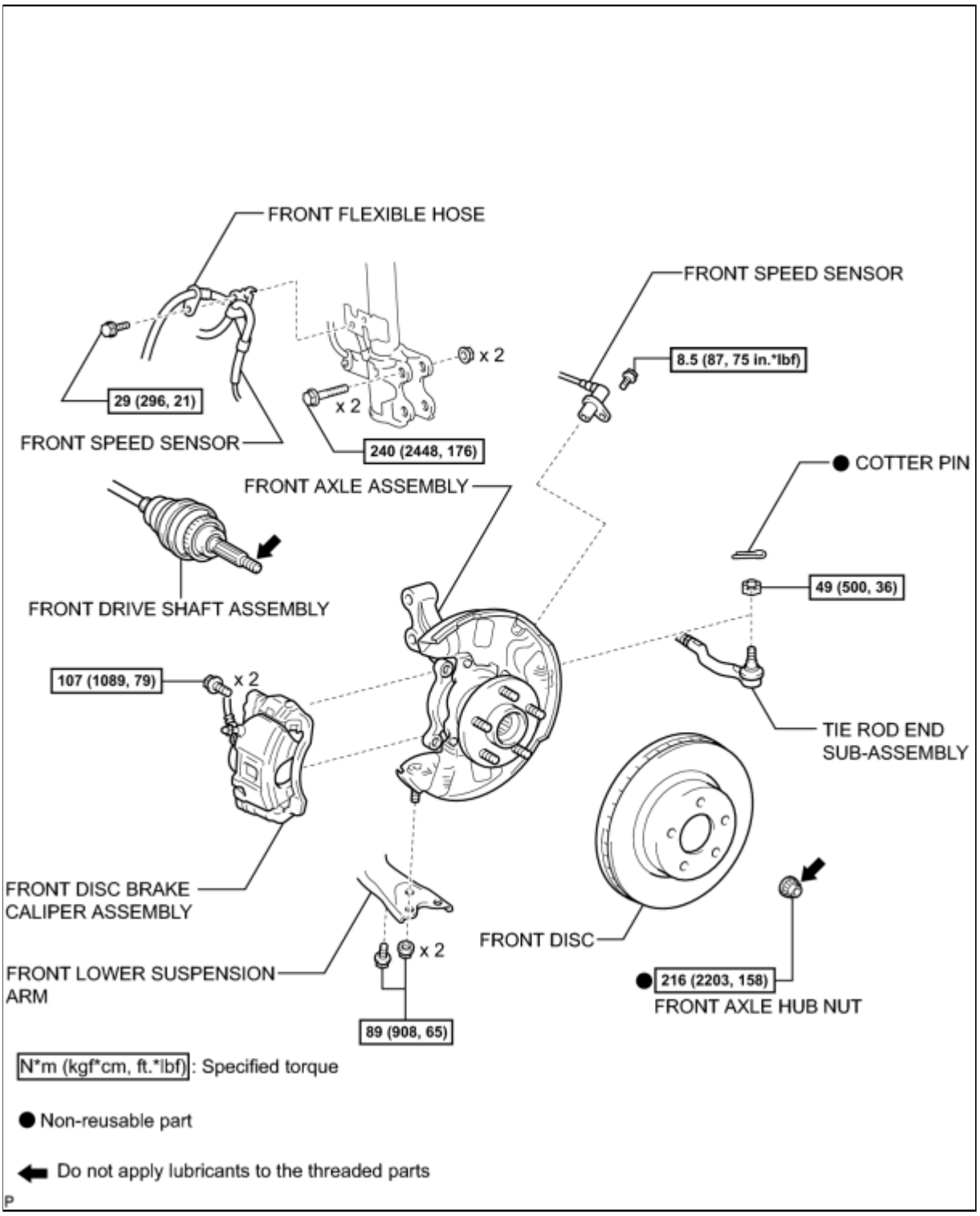

ILLUSTRATION

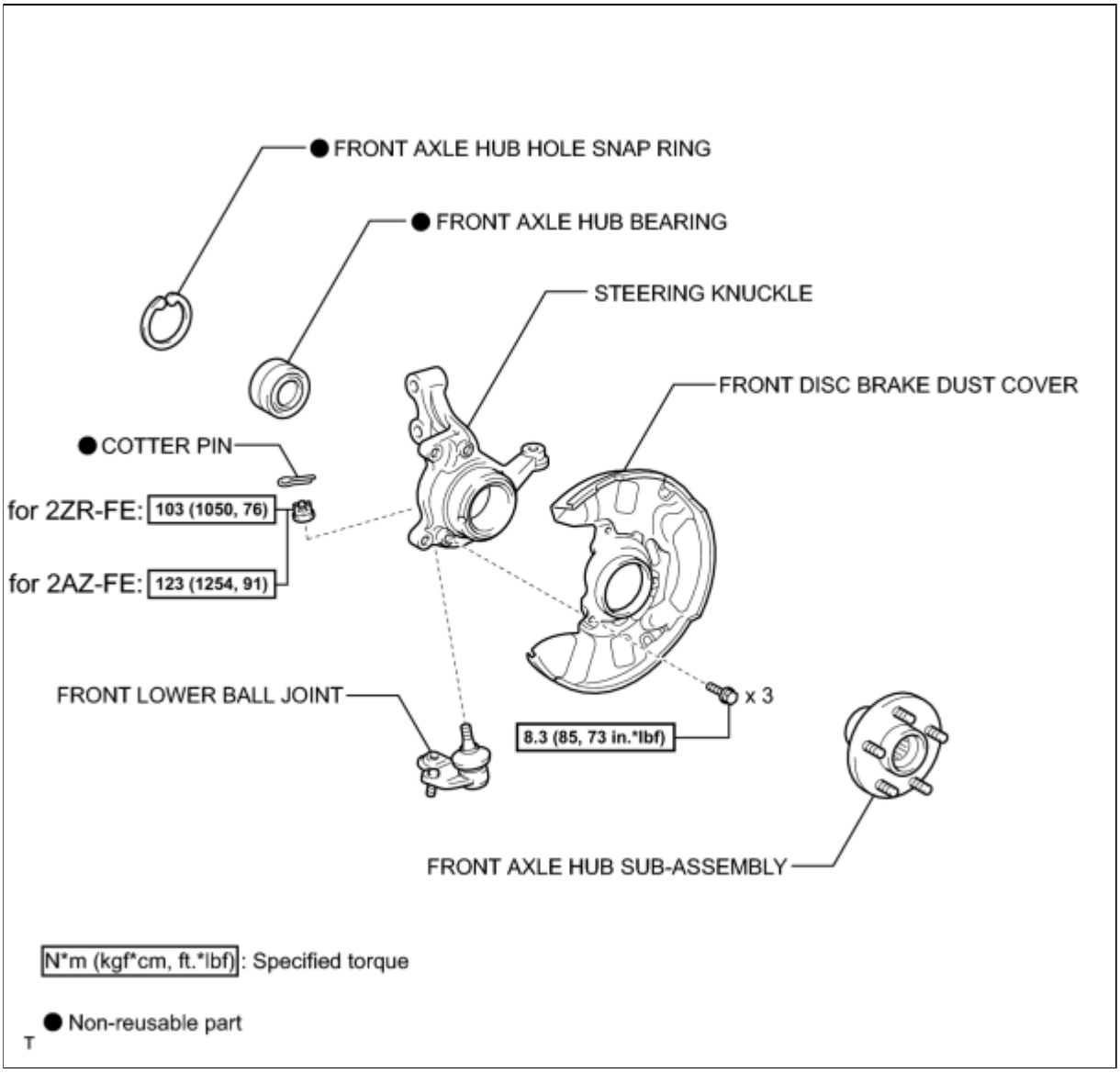

T

Last Modified: 3-10-2010	6.4 A	**From:** 200901
Model Year: 2010	**Model:** Corolla	**Doc ID:** RM000001IWZ023X
Title: AXLE AND DIFFERENTIAL: STEERING KNUCKLE: REMOVAL (2010 Corolla)		

REMOVAL

HINT:

- Use the same procedure for the RH side and LH side.
- The procedure listed below is for the LH side.

1. REMOVE FRONT WHEEL

2. REMOVE FRONT AXLE HUB NUT (for 2AZ-FE) INFO

3. REMOVE FRONT AXLE HUB NUT (for 2ZR-FE) INFO

4. SEPARATE FRONT SPEED SENSOR (for TMC Made) INFO

5. SEPARATE FRONT SPEED SENSOR (except TMC Made) INFO

6. SEPARATE FRONT DISC BRAKE CALIPER ASSEMBLY INFO

7. REMOVE FRONT DISC INFO

8. SEPARATE TIE ROD END SUB-ASSEMBLY INFO

9. SEPARATE FRONT LOWER SUSPENSION ARM INFO

10. REMOVE FRONT AXLE ASSEMBLY INFO

11. REMOVE FRONT LOWER BALL JOINT INFO

12. REMOVE FRONT AXLE HUB HOLE SNAP RING INFO

13. REMOVE FRONT AXLE HUB SUB-ASSEMBLY INFO

14. REMOVE FRONT DISC BRAKE DUST COVER INFO

15. REMOVE STEERING KNUCKLE

(a) Place the front axle hub bearing inner race (outside) on the front axle hub bearing.

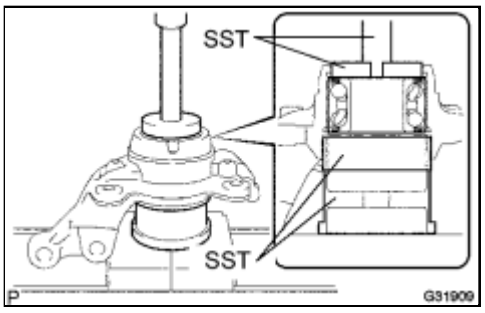

(b) Using SST and a press, remove the front axle hub bearing from the steering knuckle.

SST: 09223-15020
SST: 09387-02010
SST: 09950-60010
09951-00640
SST: 09950-70010
09951-07100

Last Modified: 3-10-2010	6.4 A	**From:** 200901
Model Year: 2010	**Model:** Corolla	**Doc ID:** RM000001IWX023X
Title: AXLE AND DIFFERENTIAL: STEERING KNUCKLE: INSTALLATION (2010 Corolla)		

INSTALLATION

1. INSTALL STEERING KNUCKLE

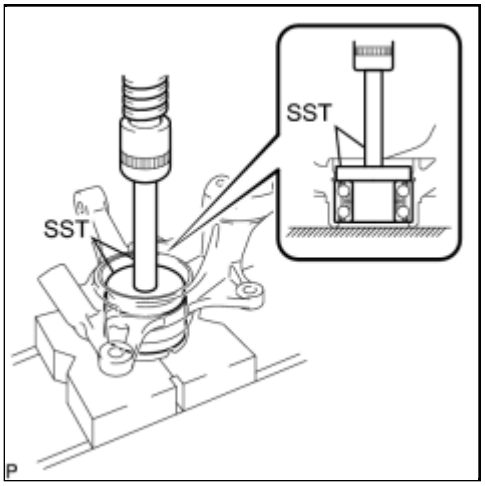

(a) Using SST and a press, install a new front axle hub bearing to the steering knuckle.

SST: 09950-60020

09951-00720

SST: 09950-70010

09951-07100

2. INSTALL FRONT DISC BRAKE DUST COVER INFO

3. INSTALL FRONT AXLE HUB SUB-ASSEMBLY INFO

4. INSTALL FRONT AXLE HUB HOLE SNAP RING INFO

5. INSTALL FRONT LOWER BALL JOINT INFO

6. INSTALL FRONT AXLE ASSEMBLY INFO

7. INSTALL FRONT LOWER SUSPENSION ARM INFO

8. INSTALL TIE ROD END SUB-ASSEMBLY INFO

9. INSTALL FRONT DISC INFO

10. INSTALL FRONT DISC BRAKE CALIPER ASSEMBLY INFO

11. INSTALL FRONT AXLE HUB NUT INFO

12. SEPARATE FRONT DISC BRAKE CALIPER ASSEMBLY INFO

13. REMOVE FRONT DISC INFO

14. INSPECT FRONT AXLE HUB BEARING LOOSENESS INFO

15. INSPECT FRONT AXLE HUB RUNOUT INFO

16. INSTALL FRONT DISC INFO

17. INSTALL FRONT DISC BRAKE CALIPER ASSEMBLY INFO

18. CONNECT FRONT SPEED SENSOR (for TMC Made) INFO

19. CONNECT FRONT SPEED SENSOR (except TMC Made) INFO

20. INSTALL FRONT AXLE HUB NUT INFO

21. INSTALL FRONT WHEEL

Torque: 103 N·m (1050 kgf·cm, 76ft·lbf)

22. INSPECT AND ADJUST FRONT WHEEL ALIGNMENT

HINT: INFO

23. CHECK FOR SPEED SENSOR SIGNAL

HINT: INFO

Last Modified: 3-10-2010	6.4 K	**From:** 200901
Model Year: 2010	**Model:** Corolla	**Doc ID:** RM000000Z1500CX
Title: CLUTCH: CLUTCH ACCUMULATOR (for E351): COMPONENTS (2010 Corolla)		

COMPONENTS

ILLUSTRATION

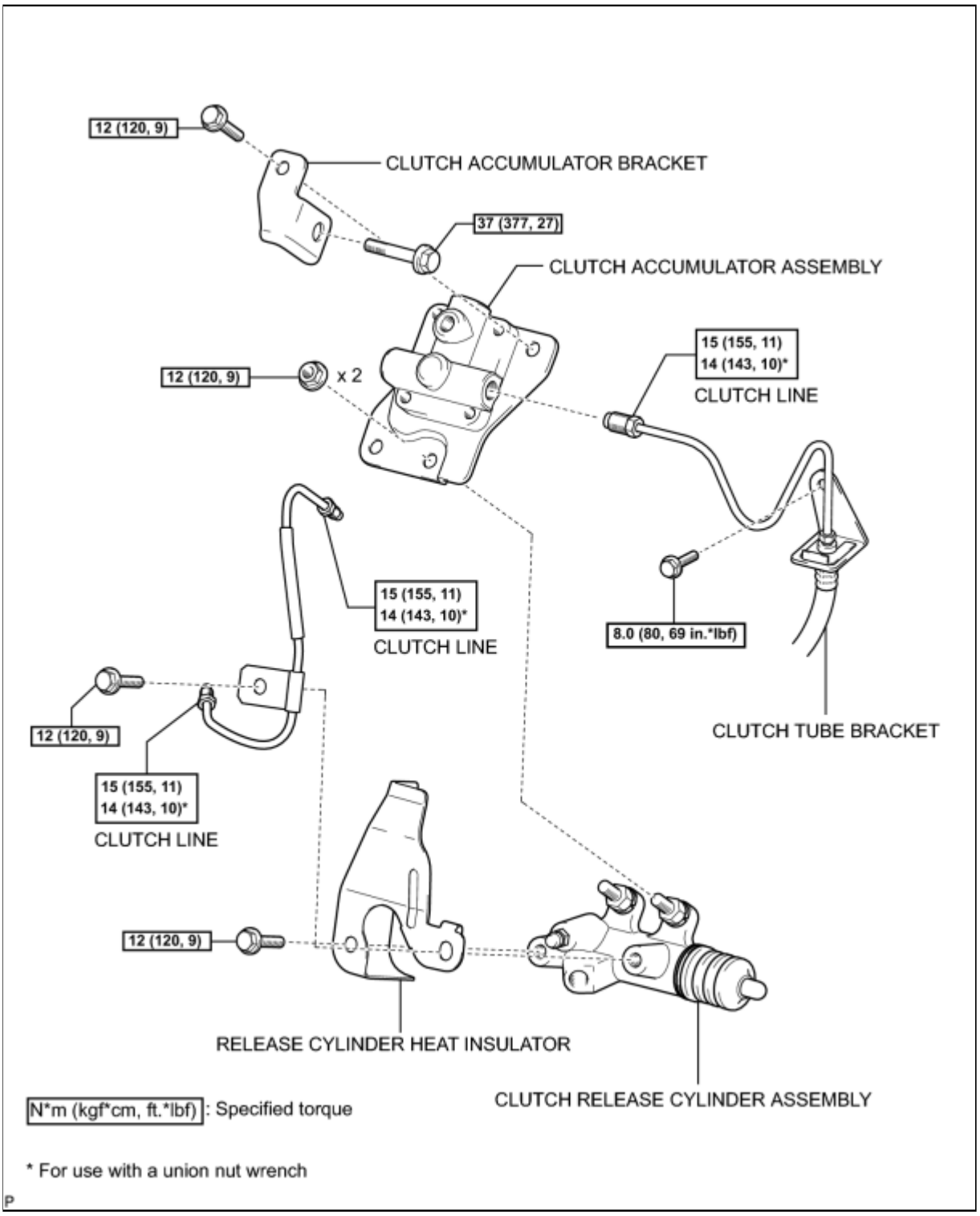

Last Modified: 3-10-2010	6.4 A	**From:** 200901
Model Year: 2010	**Model:** Corolla	**Doc ID:** RM000000Z1600EX
Title: CLUTCH: CLUTCH ACCUMULATOR (for E351): REMOVAL (2010 Corolla)		

REMOVAL

1. REMOVE RELEASE CYLINDER HEAT INSULATOR

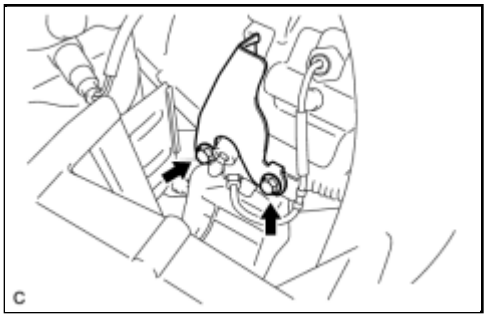

(a) Remove the 2 bolts and release cylinder heat insulator.

2. REMOVE CLUTCH ACCUMULATOR BRACKET

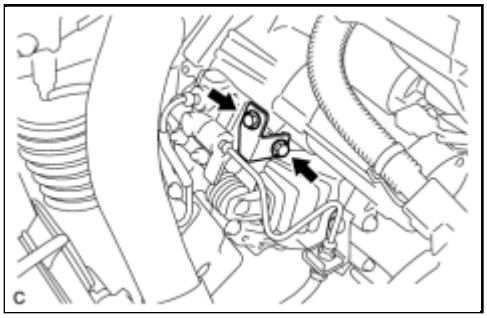

(a) Remove the 2 bolts and clutch accumulator bracket.

3. DISCONNECT CLUTCH LINE

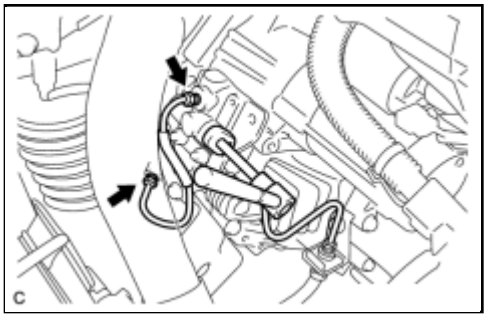

(a) Using a union nut wrench (10 mm), remove the clutch line.

HINT:

Use a container to catch the fluid.

(b) Remove the bolt and disconnect the clutch tube bracket.

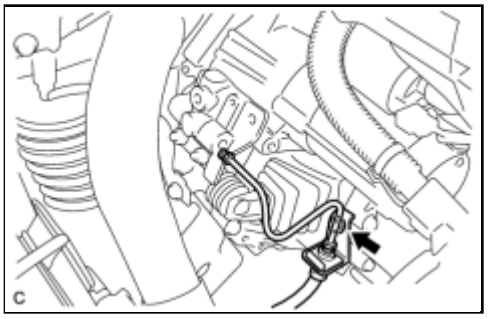

4. REMOVE CLUTCH ACCUMULATOR ASSEMBLY

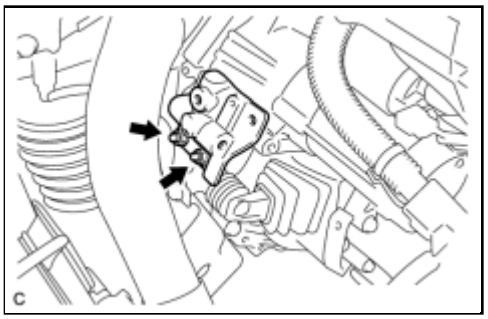

(a) Remove the 2 nuts and clutch accumulator assembly.

Last Modified: 3-10-2010	6.4 A	**From:** 200901
Model Year: 2010	**Model:** Corolla	**Doc ID:** RM000000Z1400EX
Title: CLUTCH: CLUTCH ACCUMULATOR (for E351): INSTALLATION (2010 Corolla)		

INSTALLATION

1. INSTALL CLUTCH ACCUMULATOR ASSEMBLY

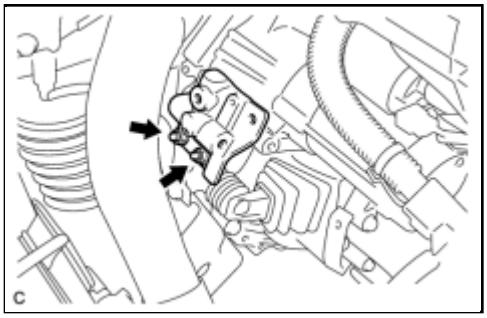

(a) Install the clutch accumulator assembly with the 2 nuts.

Torque: 12 N·m (120 kgf·cm, 9ft·lbf)

2. CONNECT CLUTCH LINE

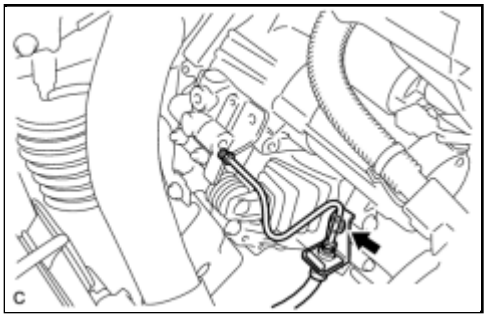

(a) Connect the clutch tube bracket with the bolt.

Torque: 8.0 N·m (80 kgf·cm, 69in·lbf)

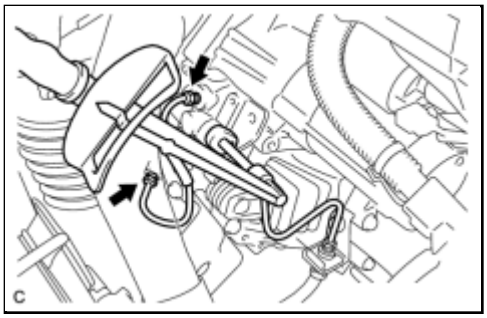

(b) Using a union nut wrench (10 mm), install the clutch line to the clutch accumulator assembly.

without a union nut wrench - Torque: 15 N·m (155 kgf·cm, 11ft·lbf)

with a union nut wrench - Torque: 14 N·m (143 kgf·cm, 10ft·lbf)

NOTICE:

- Use a torque wrench with a fulcrum length of 250 mm (9.84 in.).
- This torque value is effective when union nut wrench is parallel to the torque wrench.

3. INSTALL CLUTCH ACCUMULATOR BRACKET

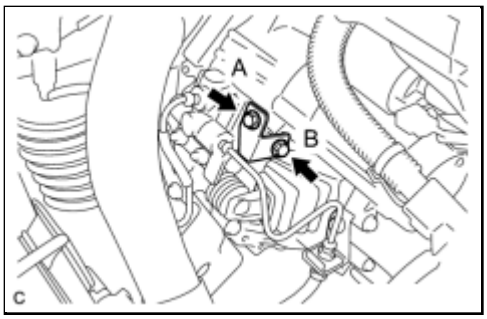

(a) Install the clutch accumulator bracket with the 2 bolts.

Bolt A - Torque: 12 N·m (120 kgf·cm, 9ft·lbf)
Bolt B - Torque: 37 N·m (377 kgf·cm, 27ft·lbf)

4. INSTALL RELEASE CYLINDER HEAT INSULATOR

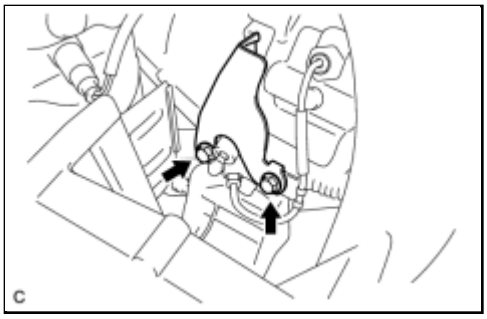

(a) Install the release cylinder heat insulator with the 2 bolts.

Torque: 12 N·m (120 kgf·cm, 9ft·lbf)

5. FILL BRAKE FLUID RESERVOIR INFO

6. BLEED CLUTCH LINE INFO

7. INSPECT FLUID LEVEL INFO

8. INSPECT FOR FLUID LEAK

HINT:

Check for leaks from the clutch system.

Last Modified: 3-10-2010	6.4 K	**From:** 200901
Model Year: 2010	**Model:** Corolla	**Doc ID:** RM000001B2Z010X
Title: CLUTCH: CLUTCH MASTER CYLINDER: COMPONENTS (2010 Corolla)		

COMPONENTS

ILLUSTRATION

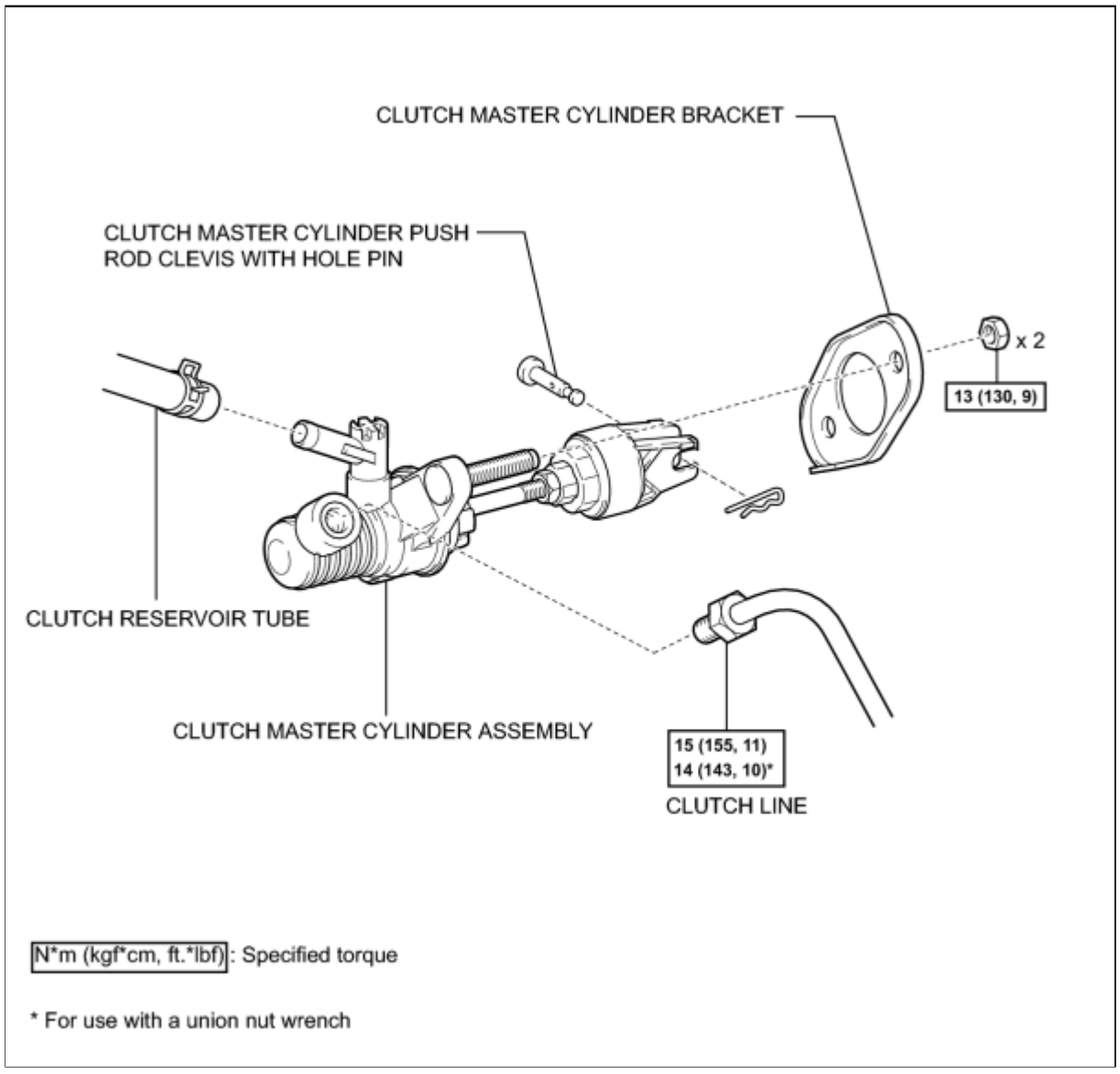

Last Modified: 3-10-2010	6.4 A	**From:** 200901
Model Year: 2010	**Model:** Corolla	**Doc ID:** RM000001B30016X
Title: CLUTCH: CLUTCH MASTER CYLINDER: REMOVAL (2010 Corolla)		

REMOVAL

1. DISCONNECT CLUTCH RESERVOIR TUBE

(a) Loosen the clip and disconnect the clutch reservoir tube from the clutch master cylinder assembly.

NOTICE:

Wash off clutch fluid immediately if it comes in contact with any painted surface.

HINT:

Use a container to catch the fluid.

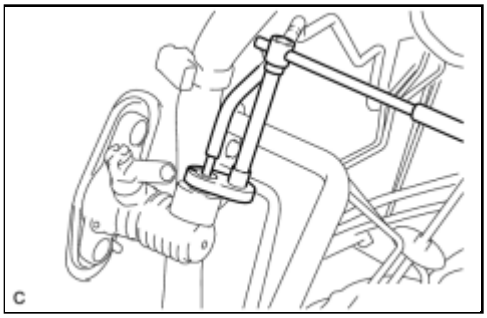

2. DISCONNECT CLUTCH LINE

(a) Using a union nut wrench (10 mm), disconnect the clutch line.

HINT:

Use a container to catch the fluid.

3. REMOVE CLUTCH MASTER CYLINDER ASSEMBLY

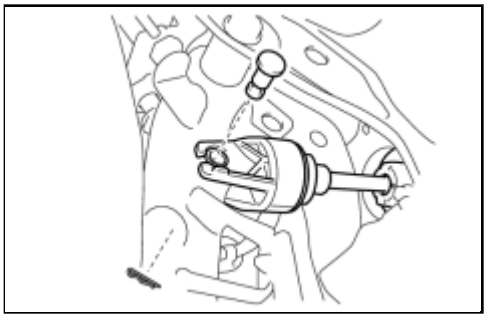

(a) Remove the clip and hole pin.

(b) Remove the 2 nuts and clutch master cylinder.

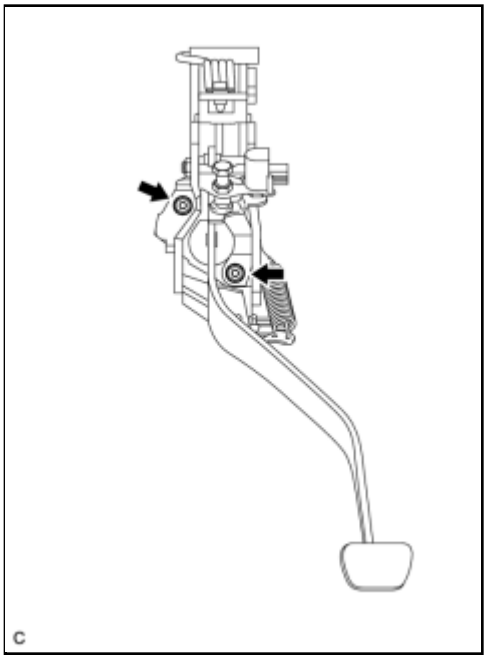

(c) Remove the clutch master cylinder bracket.

Last Modified: 3-10-2010	6.4 A	**From:** 200901
Model Year: 2010	**Model:** Corolla	**Doc ID:** RM000001B2Y016X
Title: CLUTCH: CLUTCH MASTER CYLINDER: INSTALLATION (2010 Corolla)		

INSTALLATION

1. INSTALL CLUTCH MASTER CYLINDER ASSEMBLY

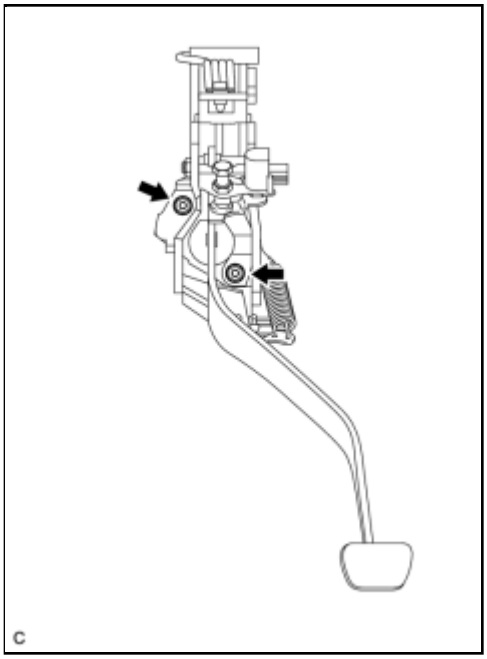

(a) Install the clutch master cylinder bracket.

(b) Install the clutch master cylinder with the 2 nuts.

Torque: 13 N·m (130 kgf·cm, 9ft·lbf)

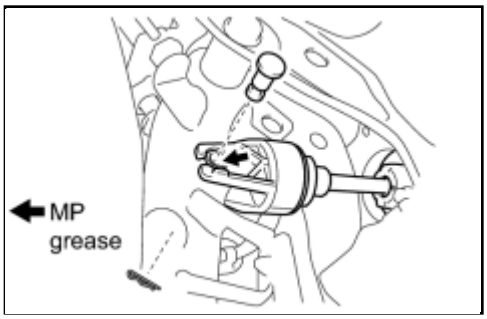

(c) Apply MP grease to the contact surface of the clevis bushing.

(d) Connect the clevis to the clutch pedal sub-assembly with the hole pin.

HINT:

Install the hole pin from the right side of the vehicle.

(e) Install the clip to the hole pin.

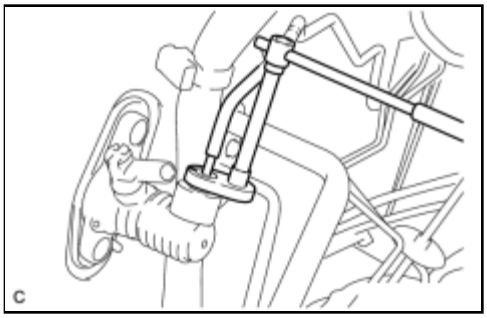

2. CONNECT CLUTCH LINE

(a) Using a union nut wrench (10 mm), connect the clutch line.

without a union nut wrench - Torque: 15 N·m (155 kgf·cm, 11ft·lbf)

with a union nut wrench - Torque: 14 N·m (143 kgf·cm, 10ft·lbf)

NOTICE:

- Use a torque wrench with a fulcrum length of 250 mm (9.84 in.).
- This torque value is effective when the union nut wrench is parallel to the torque wrench.

3. INSTALL CLUTCH RESERVOIR TUBE

(a) Connect the clutch reservoir tube to the clutch master cylinder assembly with the clip.

4. FILL BRAKE FLUID RESERVOIR INFO

5. BLEED CLUTCH LINE INFO

6. INSPECT FLUID LEVEL INFO

7. INSPECT FOR FLUID LEAK

HINT:

Check for leaks from the clutch system.

Last Modified: 3-10-2010	6.4 K	**From:** 200901
Model Year: 2010	**Model:** Corolla	**Doc ID:** RM000002414013X
Title: CLUTCH: CLUTCH PEDAL: COMPONENTS (2010 Corolla)		

COMPONENTS

ILLUSTRATION

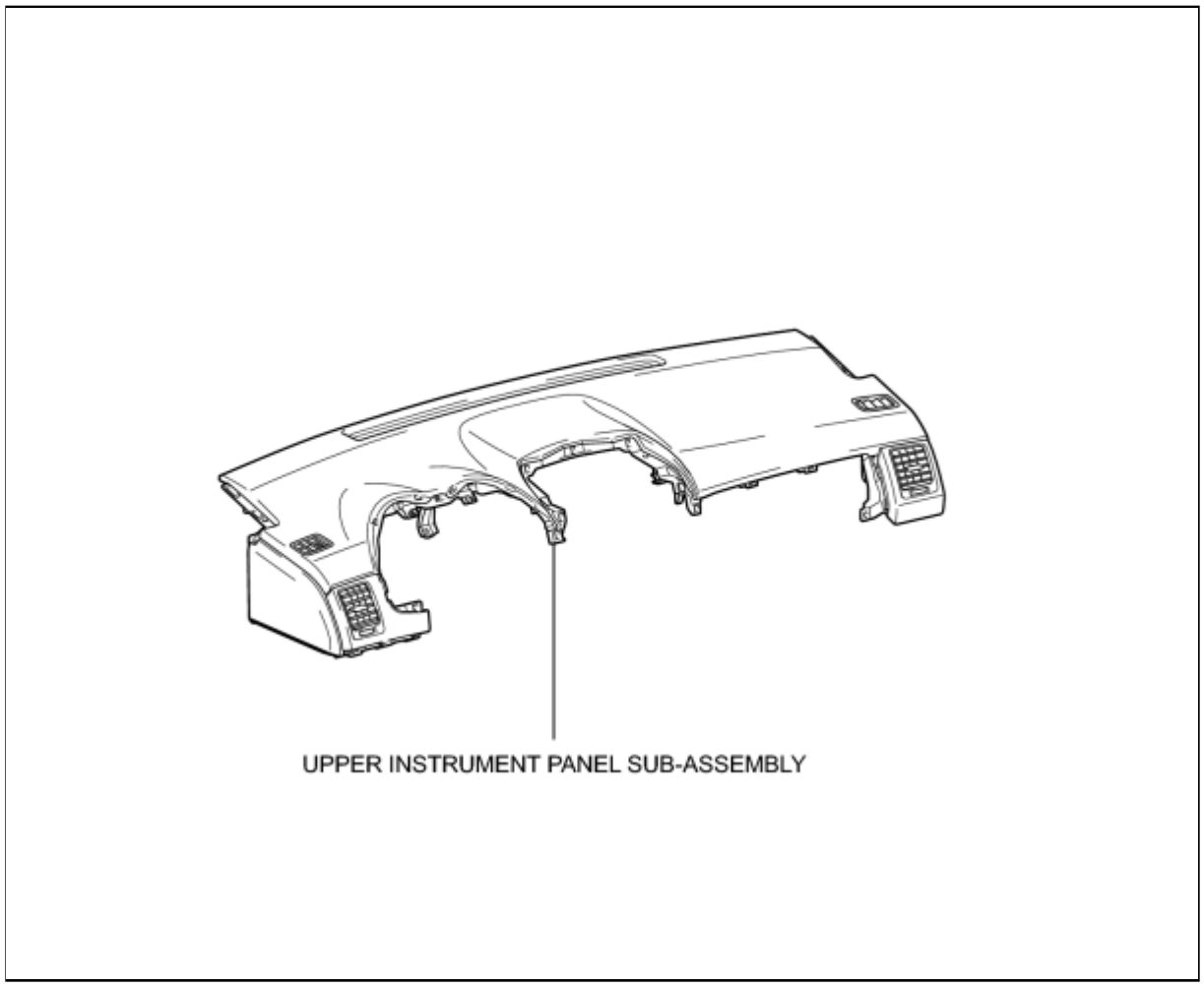

ILLUSTRATION

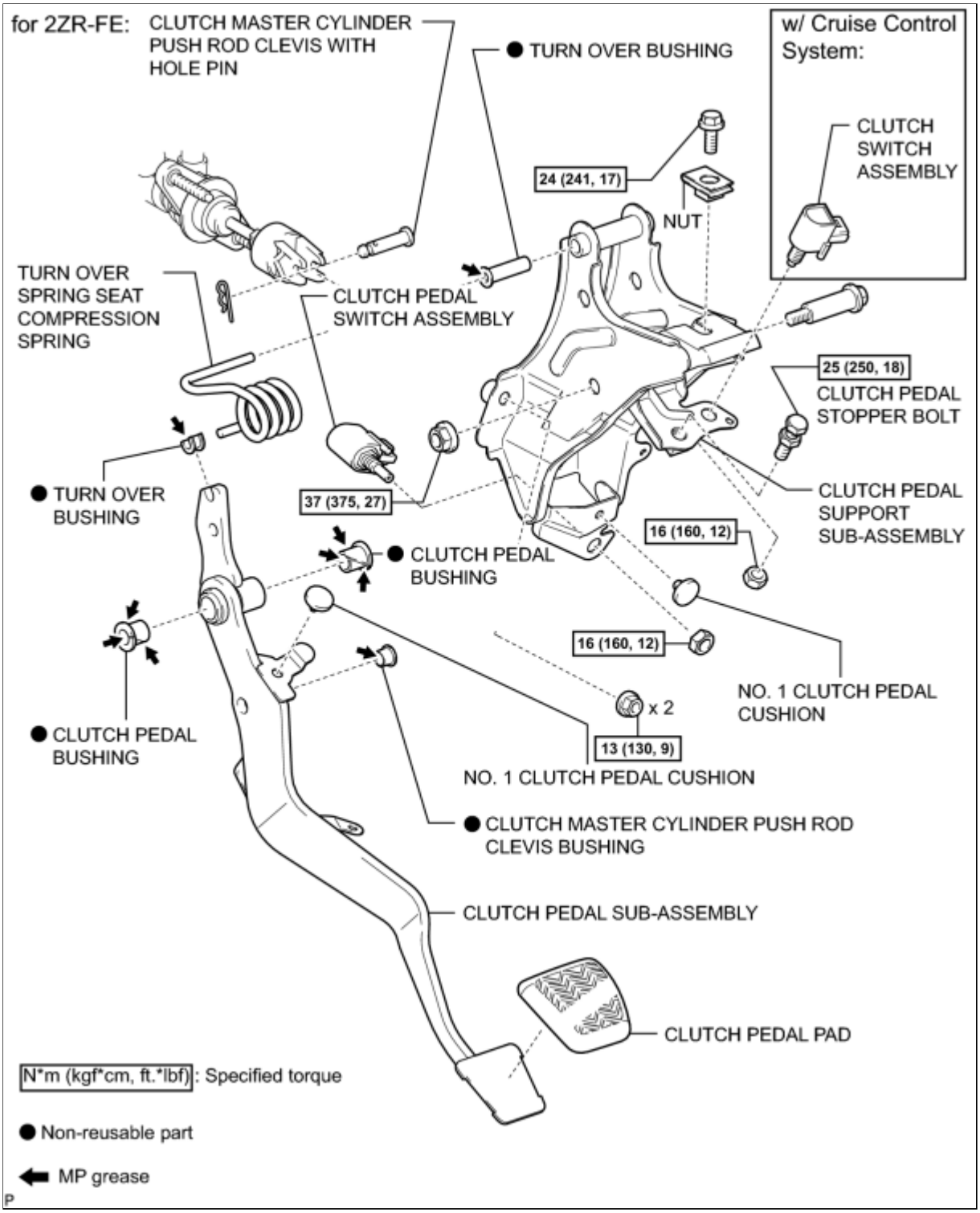

ILLUSTRATION

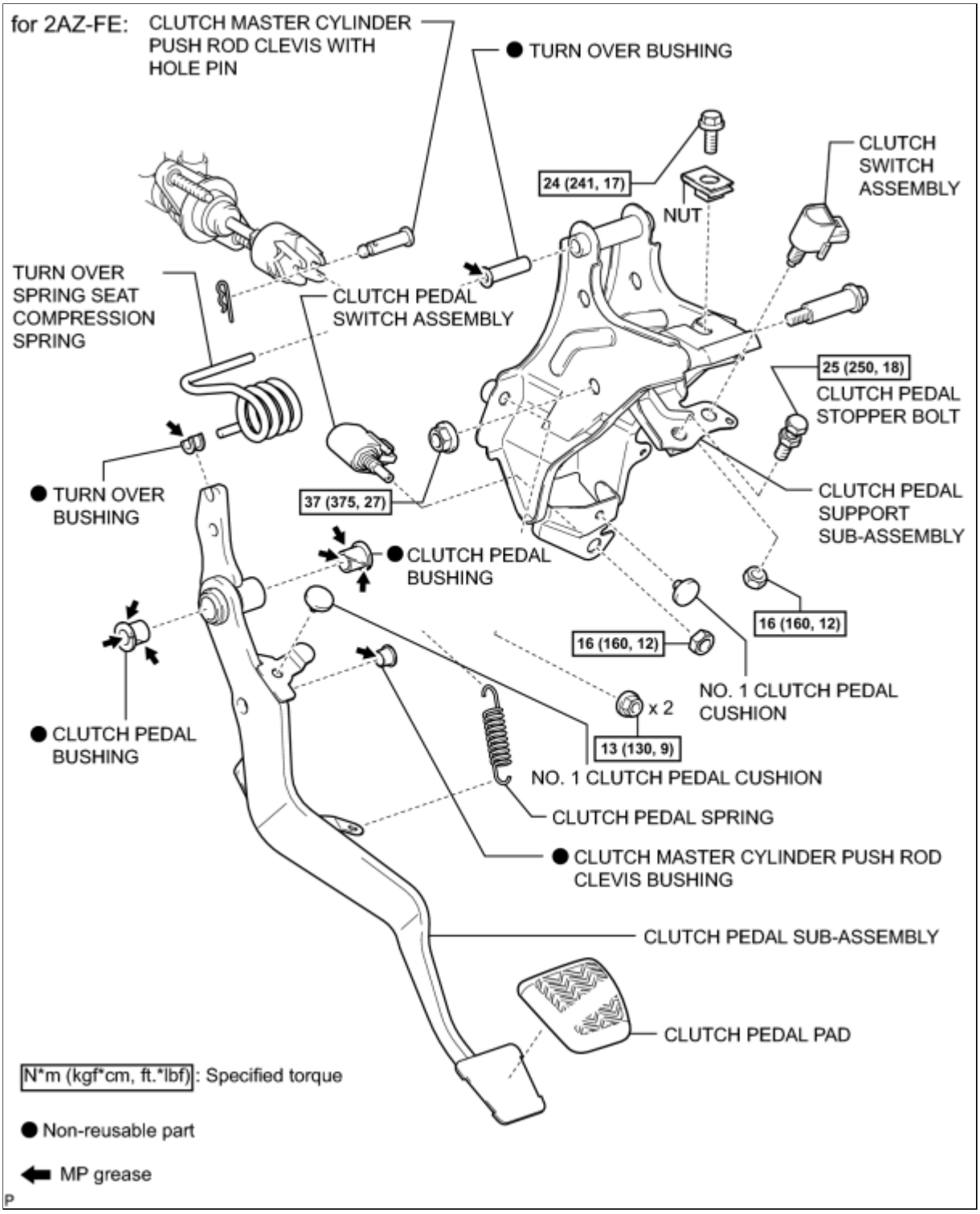
for 2AZ-FE:
CLUTCH MASTER CYLINDER PUSH ROD CLEVIS WITH HOLE PIN
● TURN OVER BUSHING
24 (241, 17)
NUT
CLUTCH SWITCH ASSEMBLY
TURN OVER SPRING SEAT COMPRESSION SPRING
CLUTCH PEDAL SWITCH ASSEMBLY
25 (250, 18)
CLUTCH PEDAL STOPPER BOLT
● TURN OVER BUSHING
37 (375, 27)
CLUTCH PEDAL SUPPORT SUB-ASSEMBLY
● CLUTCH PEDAL BUSHING
16 (160, 12)
16 (160, 12)
NO. 1 CLUTCH PEDAL CUSHION
x 2
● CLUTCH PEDAL BUSHING
13 (130, 9)
NO. 1 CLUTCH PEDAL CUSHION
CLUTCH PEDAL SPRING
● CLUTCH MASTER CYLINDER PUSH ROD CLEVIS BUSHING
CLUTCH PEDAL SUB-ASSEMBLY
CLUTCH PEDAL PAD
N*m (kgf*cm, ft.*lbf): Specified torque
● Non-reusable part
MP grease
P

Last Modified: 3-10-2010	6.4 A	**From:** 200901
Model Year: 2010	**Model:** Corolla	**Doc ID:** RM000002415016X
Title: CLUTCH: CLUTCH PEDAL: REMOVAL (2010 Corolla)		

REMOVAL

1. DISCONNECT CABLE FROM NEGATIVE BATTERY TERMINAL

CAUTION:

Wait at least 90 seconds after disconnecting the cable from the negative (-) battery terminal to disable the SRS system.

2. REMOVE UPPER INSTRUMENT PANEL SUB-ASSEMBLY

INFO

3. SEPARATE MAIN BODY ECU (INSTRUMENT PANEL JUNCTION BLOCK)

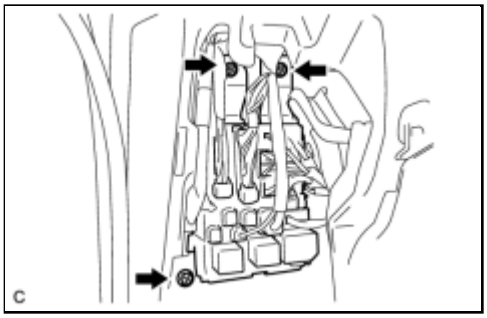

(a) Remove the 3 screws and separate the main body ECU.

4. DISCONNECT CONNECTORS

(a) Disconnect the clutch pedal switch connector.

(b) Disconnect the clutch switch connector.

5. REMOVE CLUTCH MASTER CYLINDER PUSH ROD CLEVIS WITH HOLE PIN

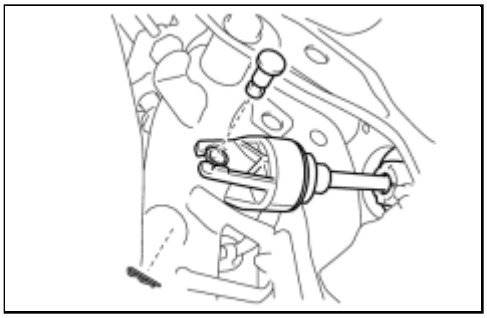

(a) Remove the clip and hole pin.

6. REMOVE CLUTCH PEDAL SUPPORT SUB-ASSEMBLY

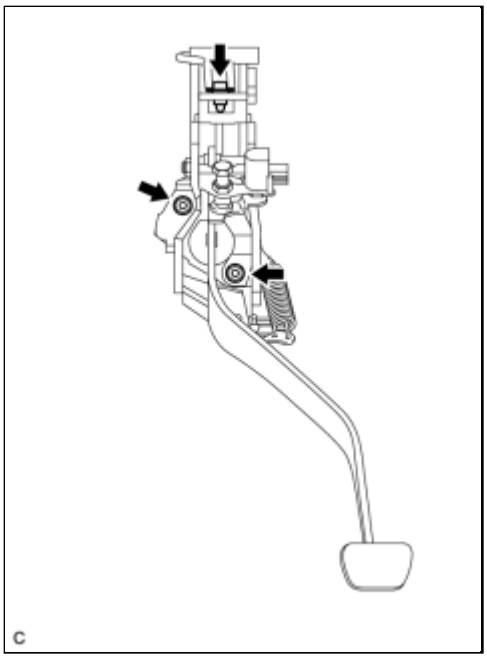

(a) Remove the 2 nuts, bolt and clutch pedal support sub-assembly.

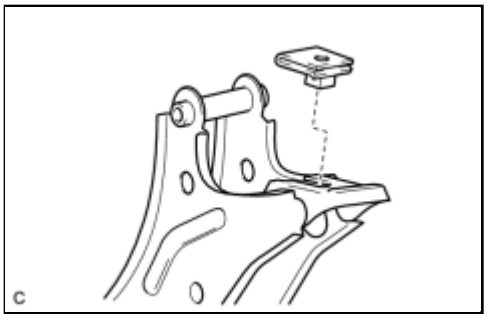

(b) Remove the nut from the clutch pedal support sub-assembly.

7. REMOVE CLUTCH PEDAL STOPPER BOLT

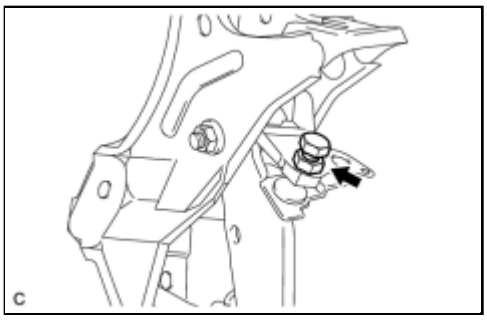

(a) Remove the clutch pedal stopper bolt from the clutch pedal support sub-assembly.

8. REMOVE CLUTCH PEDAL SPRING (for 2AZ-FE)

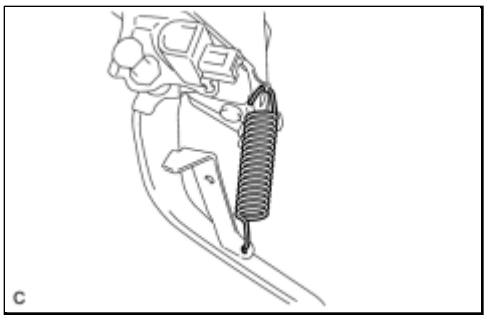

(a) Remove the clutch pedal spring.

9. REMOVE TURN OVER SPRING SEAT COMPRESSION SPRING

(a) Mount the clutch pedal in a soft jaw vise.

(b) While the clutch pedal is fully depressed, remove the turn over spring.

(c) Remove the 2 turn over bushings from the clutch pedal sub-assembly and clutch pedal support sub-assembly.

10. REMOVE CLUTCH PEDAL SUB-ASSEMBLY

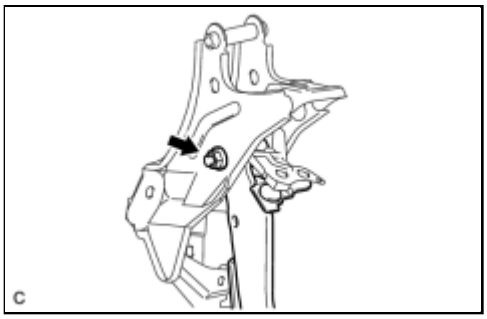

(a) Remove the bolt, nut and clutch pedal sub-assembly from the clutch pedal support sub-assembly.

11. REMOVE CLUTCH PEDAL PAD

(a) Remove the clutch pedal pad from the clutch pedal sub-assembly.

12. REMOVE CLUTCH PEDAL BUSHING

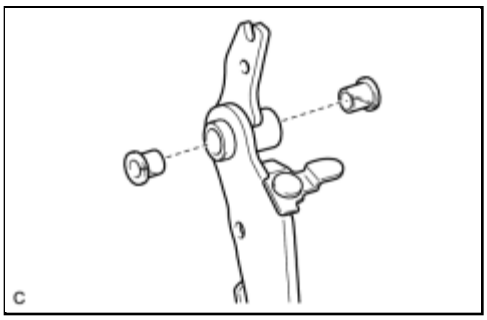

(a) Remove the 2 bushings from the clutch pedal sub-assembly.

13. REMOVE NO. 1 CLUTCH PEDAL CUSHION

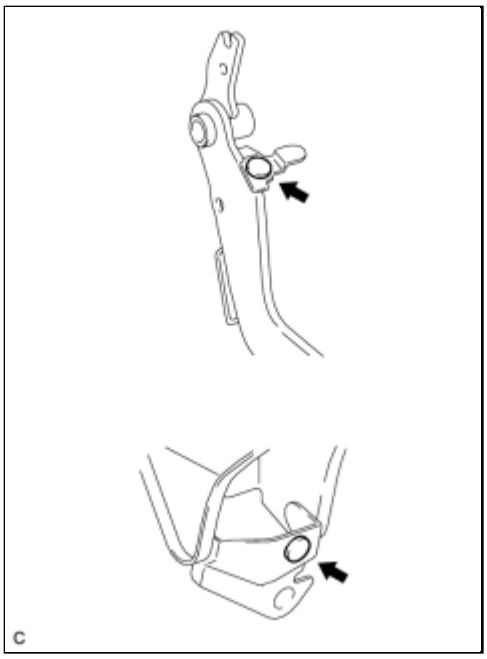

(a) Remove the 2 No. 1 clutch pedal cushions from the clutch pedal sub-assembly and clutch pedal support sub-assembly.

14. REMOVE CLUTCH MASTER CYLINDER PUSH ROD CLEVIS BUSHING

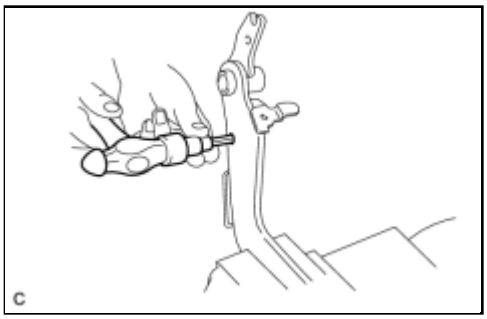

(a) Using an 8 mm hexagon wrench and a hammer, remove the clevis bushing from the clutch pedal sub-assembly.

15. REMOVE CLUTCH SWITCH ASSEMBLY (w/ Cruise Control System)

(a) Remove the nut and clutch switch assembly from the clutch pedal support sub-assembly.

16. REMOVE CLUTCH PEDAL SWITCH ASSEMBLY

(a) Remove the nut and clutch pedal switch assembly from the clutch pedal support sub-assembly.

Last Modified: 3-10-2010	6.4 N	**From:** 200901
Model Year: 2010	**Model:** Corolla	**Doc ID:** RM000000ERC01GX
Title: CLUTCH: CLUTCH PEDAL: ADJUSTMENT (2010 Corolla)		

ADJUSTMENT

1. INSPECT AND ADJUST CLUTCH PEDAL HEIGHT

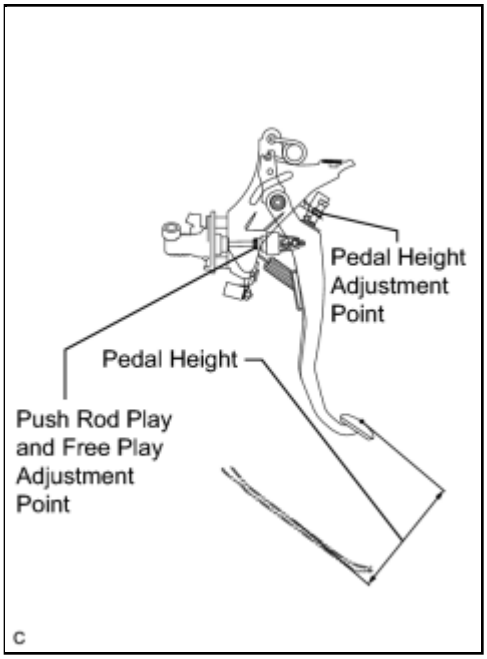

(a) Turn back the floor carpet.

(b) Check that the pedal height is correct.

Pedal Height from Floor:

ENGINE TYPE	PEDAL HEIGHT: MM (IN.)
2AZ-FE	166.4 to 176.4 (6.551 to 6.945)
2ZR-FE	157.7 to 167.7 (6.209 to 6.602)

(c) Loosen the lock nut and turn the stopper bolt until the correct height is obtained.

(d) Tighten the lock nut.

Torque: 25 N·m (250 kgf·cm, 18ft·lbf)

(e) Install the floor carpet.

2. INSPECT CLUTCH PEDAL FREE PLAY AND PUSH ROD PLAY

(a) Check that pedal free play and push rod play are correct.

(1) Depress the pedal until clutch resistance begins to be felt.

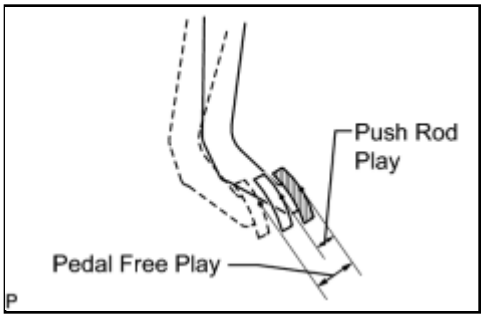

Pedal free play:

5.0 to 15.0 mm (0.197 to 0.591 in.)

(2) Gently depress the pedal until resistance begins to increase a little.

Push rod play at pedal top:

1.0 to 5.0 mm (0.0394 to 0.197 in.)

(b) If necessary, adjust the pedal free play and push rod play.

(1) Loosen the lock nut and turn the push rod until correct free play and push rod play are obtained.

(2) Tighten the lock nut.

Torque: 12 N·m (120 kgf·cm, 9ft·lbf)

(3) After adjusting the pedal free play, check the pedal height.

3. INSPECT CLUTCH RELEASE POINT

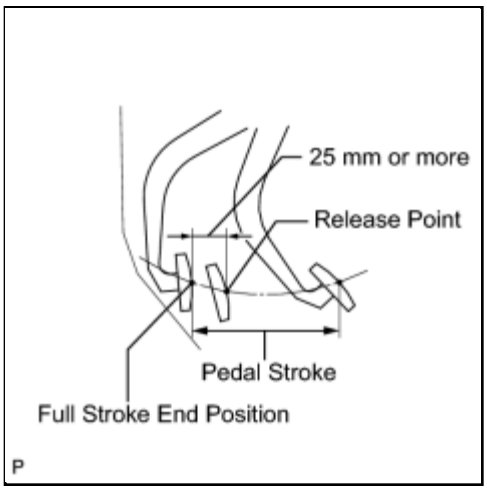

(a) Check the clutch release point.

(1) Pull the parking brake lever and install wheel chocks.

(2) Start the engine and run it at idle.

(3) Without depressing the clutch pedal, slowly move the shift lever into reverse until the gears contact.

(4) Gradually depress the clutch pedal and measure the stroke distance from the point that the gear noise stops (release point) up to the full stroke end position.

Standard distance:

25 mm (0.984 in.) or more (from pedal stroke end position to release point)

If the distance is not as specified, perform the following procedure:

- Check the pedal height.
- Check the push rod play and pedal free play.
- Bleed the clutch line.
- Check the clutch cover and disc.

Last Modified: 3-10-2010	6.4 A	**From:** 200901
Model Year: 2010	**Model:** Corolla	**Doc ID:** RM000002413016X
Title: CLUTCH: CLUTCH PEDAL: INSTALLATION (2010 Corolla)		

INSTALLATION

1. INSTALL CLUTCH PEDAL SWITCH ASSEMBLY

(a) Install the clutch pedal switch assembly to the clutch pedal support sub-assembly with the nut.

Torque: 16 N·m (160 kgf·cm, 12ft·lbf)

2. INSTALL CLUTCH SWITCH ASSEMBLY (w/ Cruise Control System)

(a) Install the clutch switch assembly to the clutch pedal support sub-assembly with the nut.

Torque: 16 N·m (160 kgf·cm, 12ft·lbf)

3. INSTALL CLUTCH MASTER CYLINDER PUSH ROD CLEVIS BUSHING

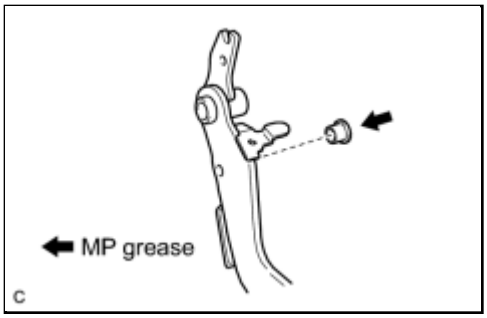

(a) Apply MP grease to the inside of a new clevis bushing.

(b) Install the clevis bushing to the clutch pedal sub-assembly.

HINT:

Install the clevis bushing from the right side of the vehicle.

4. INSTALL NO. 1 CLUTCH PEDAL CUSHION

(a) Install the 2 No. 1 clutch pedal cushions to the clutch pedal sub-assembly and clutch pedal support sub-assembly.

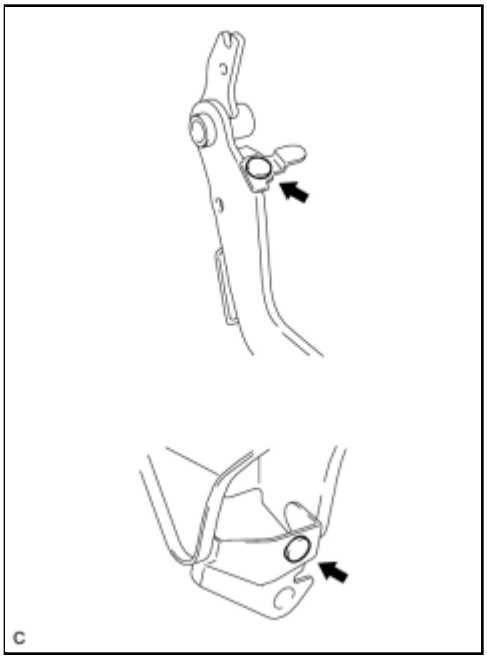

5. INSTALL CLUTCH PEDAL BUSHING

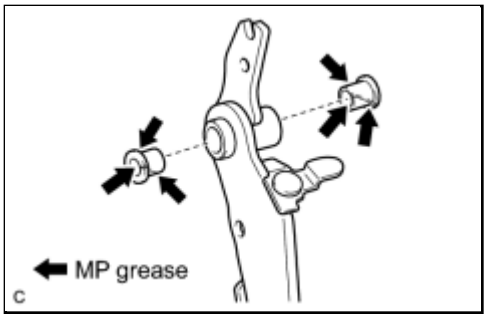

(a) Apply MP grease to both sides and end surface of 2 new bushings.

(b) Install the 2 bushings to the clutch pedal.

6. INSTALL CLUTCH PEDAL PAD

(a) Install the clutch pedal pad to the clutch pedal sub-assembly.

7. INSTALL CLUTCH PEDAL SUB-ASSEMBLY

(a) Install the clutch pedal sub-assembly to the clutch pedal support sub-assembly with the bolt and nut.

Torque: 37 N·m (375 kgf·cm, 27ft·lbf)

HINT:

Install the bolt from the right side of the vehicle.

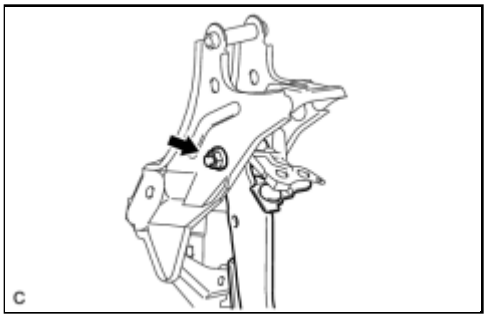

8. INSTALL TURN OVER SPRING SEAT COMPRESSION SPRING

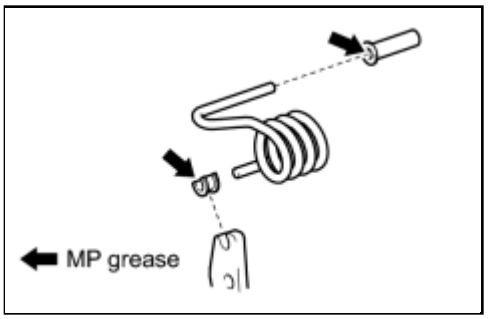

(a) Apply MP grease to the sliding portion of the 2 turn over bushings.

(b) Install a 2 new turn over bushings to the clutch pedal sub-assembly and clutch pedal support sub-assembly.

(c) Install the turn over spring.

9. INSTALL CLUTCH PEDAL SPRING (for 2AZ-FE)

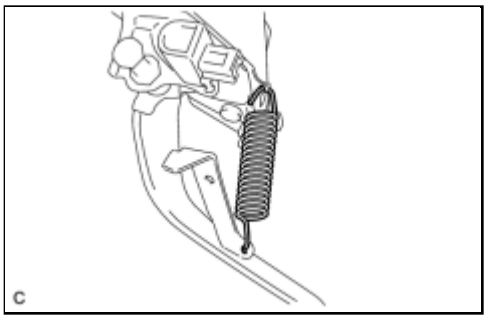

(a) Install the clutch pedal spring.

10. INSTALL CLUTCH PEDAL STOPPER BOLT

(a) Install the clutch pedal stopper bolt so that its end touches the clutch pedal cushion.

HINT:

Tighten the lock nut to the specified torque when adjusting the

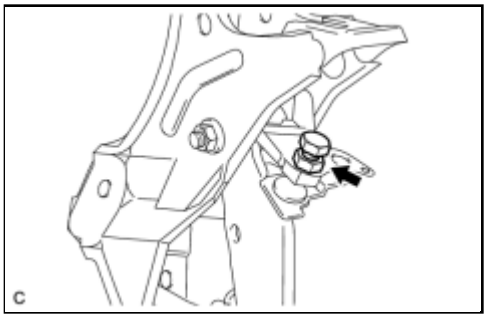

clutch pedal.

11. INSTALL CLUTCH PEDAL SUPPORT SUB-ASSEMBLY

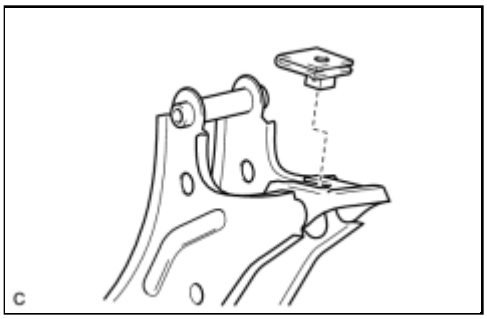

(a) Install the nut to the clutch pedal support sub-assembly.

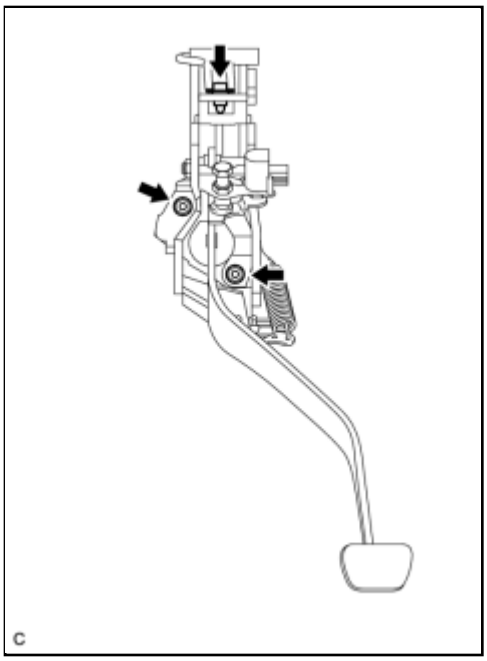

(b) Install the clutch pedal support sub-assembly with the 2 nuts and bolt.

Bolt - Torque: 24 N·m (241 kgf·cm, 17ft·lbf)
Nut - Torque: 13 N·m (130 kgf·cm, 9ft·lbf)

12. INSTALL CLUTCH MASTER CYLINDER PUSH ROD CLEVIS WITH HOLE PIN

(a) Connect the clevis to the clutch pedal sub-assembly with

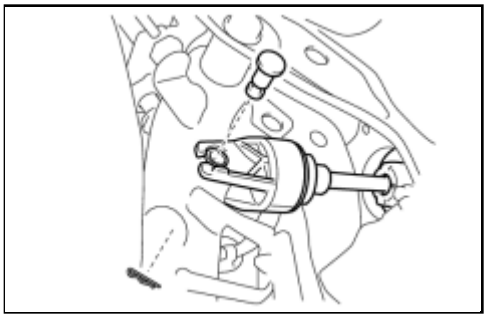

the hole pin.

HINT:

Install the hole pin from the right side of the vehicle.

(b) Install the clip to the hole pin.

13. CONNECT CONNECTORS

(a) Connect the clutch pedal switch connector.

(b) Connect the clutch switch assembly connector.

14. INSTALL MAIN BODY ECU (INSTRUMENT PANEL JUNCTION BLOCK)

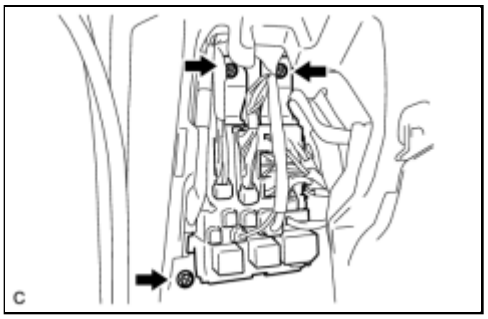

(a) Install the main body ECU with the 3 screws.

15. INSPECT CLUTCH PEDAL SWITCH ASSEMBLY INFO

16. INSTALL UPPER INSTRUMENT PANEL SUB-ASSEMBLY

INFO

17. CONNECT CABLE TO NEGATIVE BATTERY TERMINAL

18. INSPECT SRS WARNING LIGHT

INFO

Last Modified: 3-10-2010	6.4 K	**From:** 200901
Model Year: 2010	**Model:** Corolla	**Doc ID:** RM00000241P00JX
Title: CLUTCH: CLUTCH PEDAL SWITCH: COMPONENTS (2010 Corolla)		

COMPONENTS

ILLUSTRATION



Last Modified: 3-10-2010	6.4 A	**From:** 200901
Model Year: 2010	**Model:** Corolla	**Doc ID:** RM00000241N00JX
Title: CLUTCH: CLUTCH PEDAL SWITCH: REMOVAL (2010 Corolla)		

REMOVAL

1. REMOVE CLUTCH PEDAL SWITCH ASSEMBLY

(a) Disconnect the clutch pedal switch assembly connector.

(b) Remove the nut and clutch pedal switch assembly from the clutch pedal support sub-assembly.

Last Modified: 3-10-2010	6.4 G	**From:** 200901
Model Year: 2010	**Model:** Corolla	**Doc ID:** RM00000241M00JX
Title: CLUTCH: CLUTCH PEDAL SWITCH: INSPECTION (2010 Corolla)		

INSPECTION

1. INSPECT CLUTCH PEDAL SWITCH ASSEMBLY

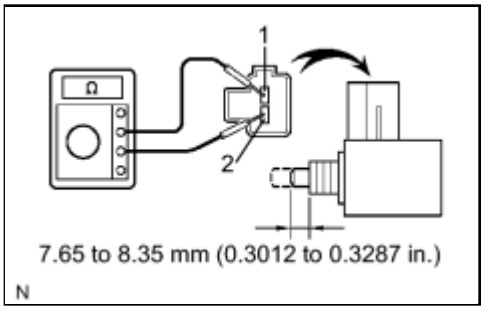

(a) Measure the resistance between the terminals when the switch is ON and OFF.

Standard Resistance:

TESTER CONNECTION	SWITCH CONDITION	SPECIFIED CONDITION
1 - 2	ON (pushed)	Below 1 Ω
	OFF (free)	10 kΩ or higher

Last Modified: 3-10-2010	6.4 A	**From:** 200901
Model Year: 2010	**Model:** Corolla	**Doc ID:** RM00000241L00JX
Title: CLUTCH: CLUTCH PEDAL SWITCH: INSTALLATION (2010 Corolla)		

INSTALLATION

1. INSTALL CLUTCH PEDAL SWITCH ASSEMBLY

(a) Install the clutch pedal switch assembly to the clutch pedal support sub-assembly with the nut.

Torque: 16 N·m (160 kgf·cm, 12ft·lbf)

(b) Connect the clutch pedal switch assembly connector.

2. INSPECT CLUTCH PEDAL SWITCH ASSEMBLY INFO

Last Modified: 3-10-2010	6.4 K	**From:** 200901
Model Year: 2010	**Model:** Corolla	**Doc ID:** RM000001B3201AX
Title: CLUTCH: CLUTCH RELEASE CYLINDER (for C59): COMPONENTS (2010 Corolla)		

COMPONENTS

ILLUSTRATION

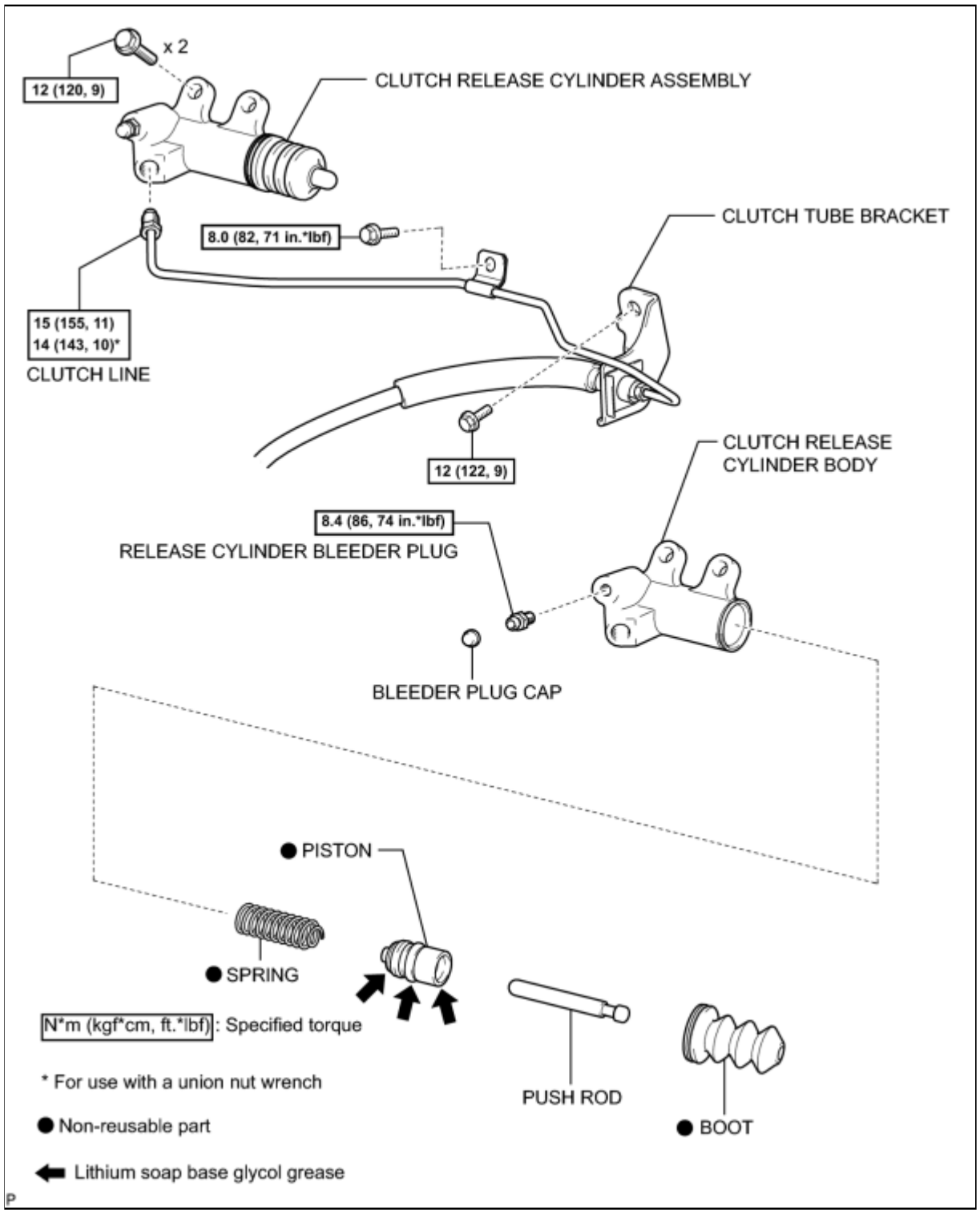

Last Modified: 3-10-2010	6.4 A	**From:** 200901
Model Year: 2010	**Model:** Corolla	**Doc ID:** RM000001B3301AX
Title: CLUTCH: CLUTCH RELEASE CYLINDER (for C59): REMOVAL (2010 Corolla)		

REMOVAL

1. REMOVE CLUTCH RELEASE CYLINDER ASSEMBLY

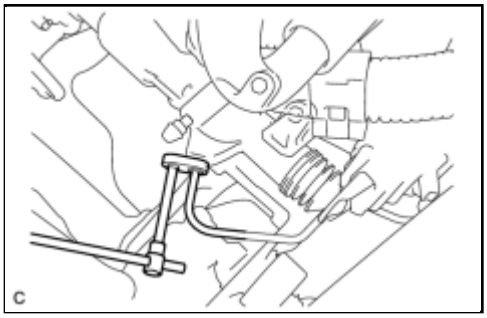

(a) Using a union nut wrench (10 mm), disconnect the clutch line.

HINT:

Use a container to catch the fluid.

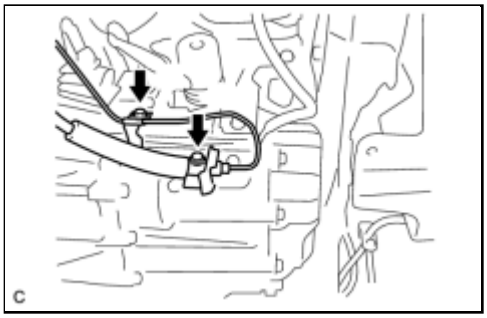

(b) Remove the 2 bolts and disconnect the clutch tube bracket.

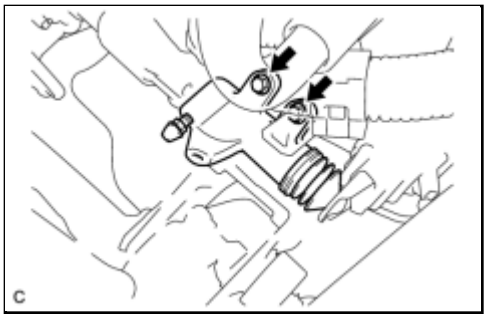

(c) Remove the 2 bolts and the clutch release cylinder.

Last Modified: 3-10-2010	6.4 A	**From:** 200901
Model Year: 2010	**Model:** Corolla	**Doc ID:** RM000001B3401HX
Title: CLUTCH: CLUTCH RELEASE CYLINDER (for C59): DISASSEMBLY (2010 Corolla)		

DISASSEMBLY

1. REMOVE RELEASE CYLINDER BLEEDER PLUG

(a) Remove the bleeder plug cap from the bleeder plug.

(b) Remove the bleeder plug from the cylinder body.

2. REMOVE CLUTCH RELEASE CYLINDER KIT

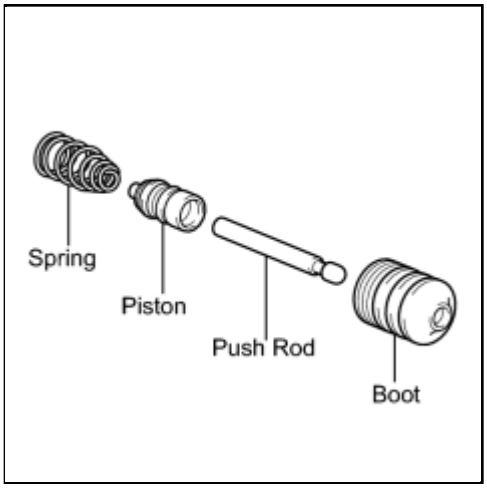

(a) Remove the boot from the cylinder body.

(b) Remove the push rod from the cylinder body.

(c) Remove the piston and spring from the cylinder body.

NOTICE:

Do not damage the inside of the cylinder body.

Last Modified: 3-10-2010	6.4 A	**From:** 200901
Model Year: 2010	**Model:** Corolla	**Doc ID:** RM000001B3501HX
Title: CLUTCH: CLUTCH RELEASE CYLINDER (for C59): REASSEMBLY (2010 Corolla)		

REASSEMBLY

1. INSTALL CLUTCH RELEASE CYLINDER KIT

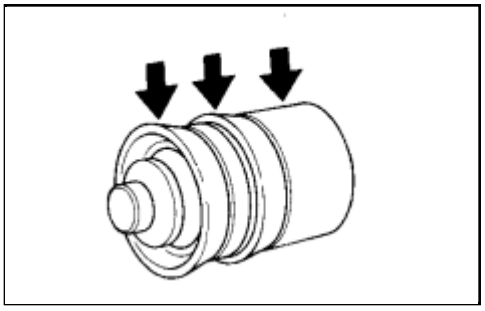

(a) Coat a new piston with lithium soap base glycol grease as shown in the illustration.

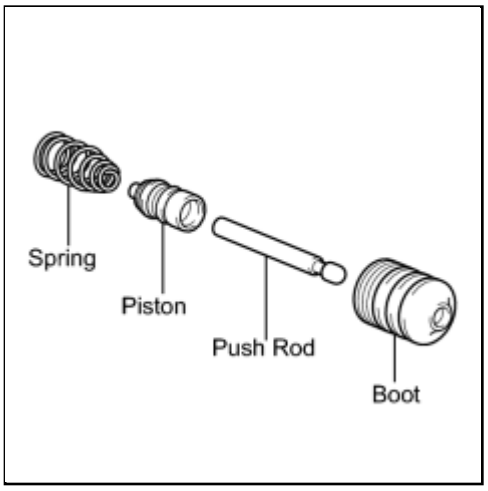

(b) Install the piston and a new spring to the cylinder body.

NOTICE:

Do not damage the inside of the cylinder body.

HINT:

Install the smaller end of the spring to the piston.

(c) Install a new boot to the push rod.

(d) Install the push rod to the cylinder body.

2. INSTALL RELEASE CYLINDER BLEEDER PLUG

(a) Install the bleeder plug to the cylinder body.

Torque: 8.4 N·m (86 kgf·cm, 74in·lbf)

(b) Install the bleeder plug cap to the bleeder plug.

Last Modified: 3-10-2010	6.4 A	**From:** 200901
Model Year: 2010	**Model:** Corolla	**Doc ID:** RM000001B3101AX
Title: CLUTCH: CLUTCH RELEASE CYLINDER (for C59): INSTALLATION (2010 Corolla)		

INSTALLATION

1. INSTALL CLUTCH RELEASE CYLINDER ASSEMBLY

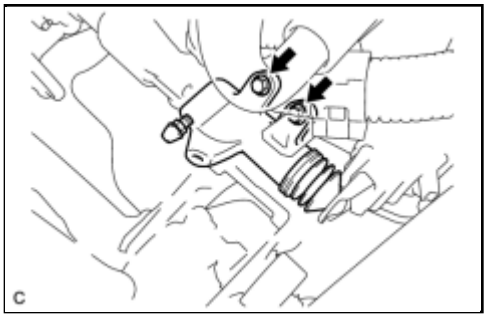

(a) Install the clutch release cylinder with the 2 bolts.

Torque: 12 N·m (120 kgf·cm, 9ft·lbf)

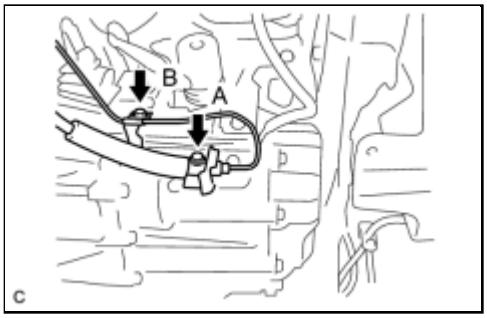

(b) Connect the clutch tube bracket with the 2 bolts.

Bolt A - Torque: 12 N·m (122 kgf·cm, 9ft·lbf)

Bolt B - Torque: 8.0 N·m (82 kgf·cm, 71in·lbf)

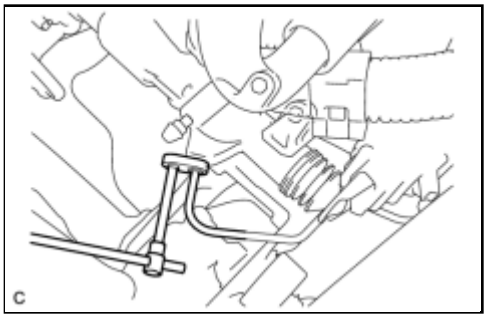

(c) Using a union nut wrench (10 mm), connect the clutch line.

without a union nut wrench - Torque: 15 N·m (155 kgf·cm, 11ft·lbf)

with a union nut wrench - Torque: 14 N·m (143 kgf·cm, 10ft·lbf)

NOTICE:

- Use a torque wrench with a fulcrum length of 250 mm (9.84 in.).
- This torque value is effective when the union nut wrench is parallel to the torque wrench.

2. FILL BRAKE FLUID RESERVOIR INFO

3. BLEED CLUTCH LINE INFO

4. INSPECT FLUID LEVEL INFO

5. INSPECT FOR FLUID LEAK

HINT:

Check for leaks from the clutch system.



Last Modified: 3-10-2010	6.4 K	**From:** 200901
Model Year: 2010	**Model:** Corolla	**Doc ID:** RM000000Z1100CX
Title: CLUTCH: CLUTCH RELEASE CYLINDER (for E351): COMPONENTS (2010 Corolla)		

COMPONENTS

ILLUSTRATION

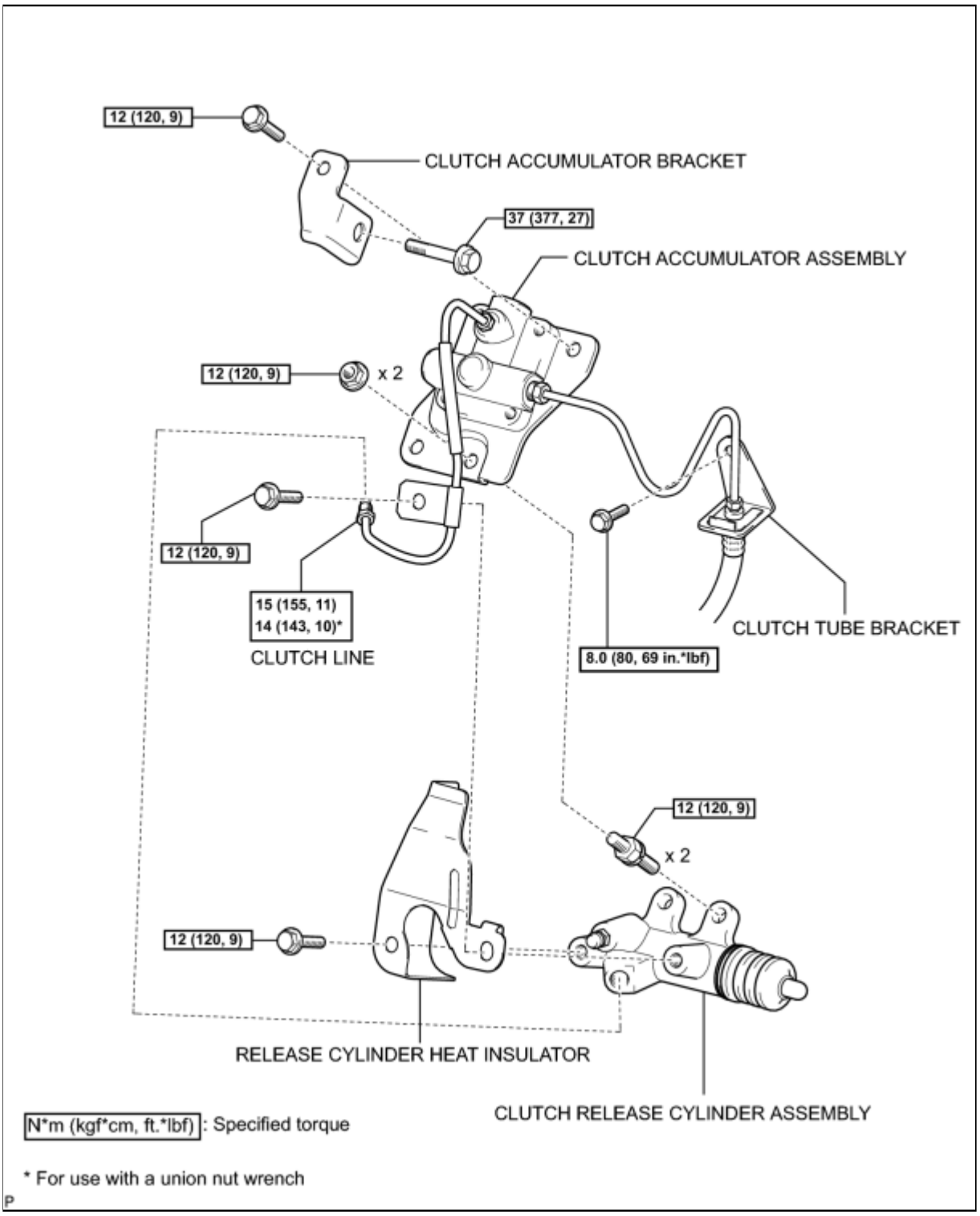

ILLUSTRATION

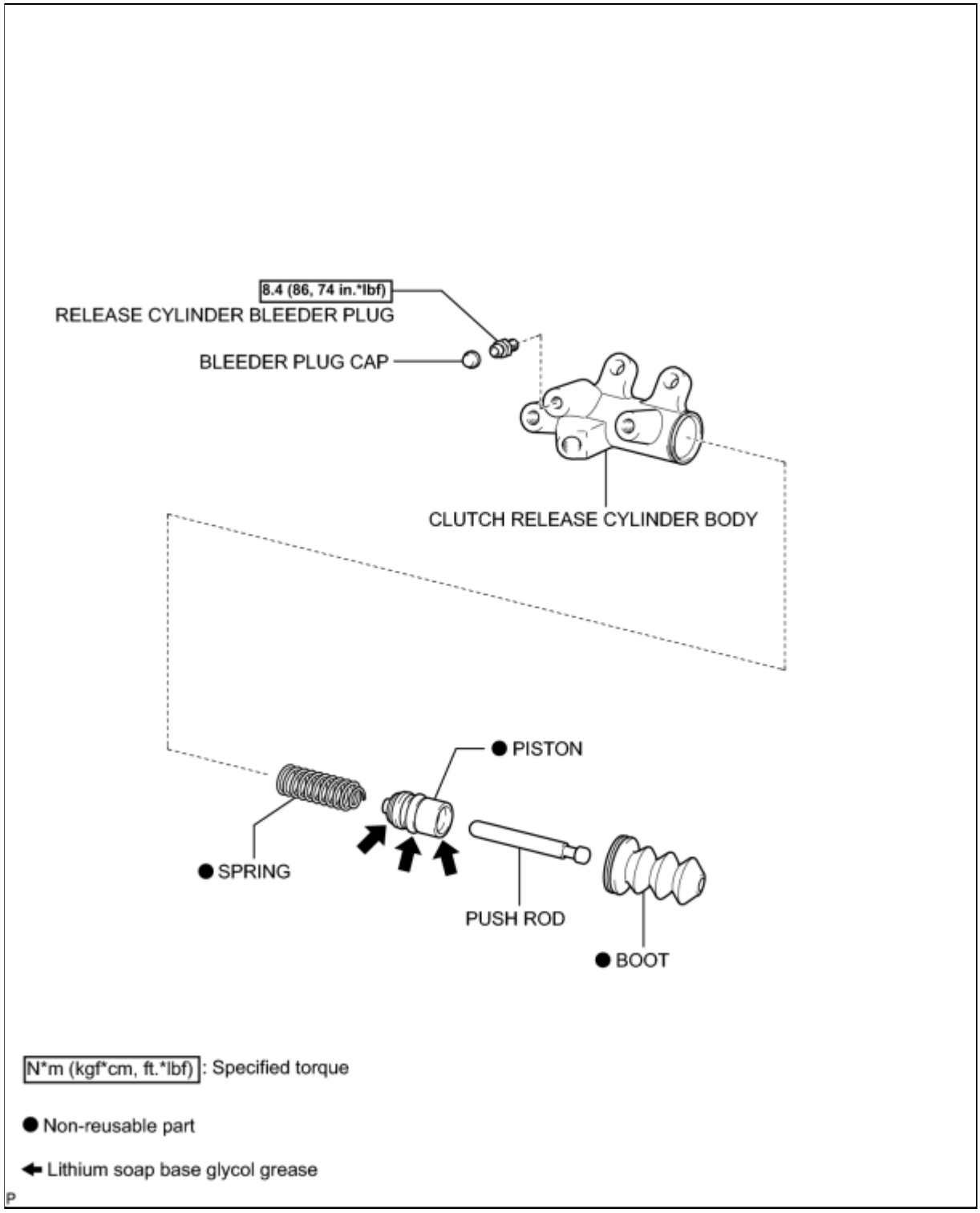

Last Modified: 3-10-2010	6.4 A	**From:** 200901
Model Year: 2010	**Model:** Corolla	**Doc ID:** RM0000015N600MX
Title: CLUTCH: CLUTCH RELEASE CYLINDER (for E351): REMOVAL (2010 Corolla)		

REMOVAL

1. REMOVE RELEASE CYLINDER HEAT INSULATOR INFO

2. REMOVE CLUTCH ACCUMULATOR BRACKET INFO

3. DISCONNECT CLUTCH LINE

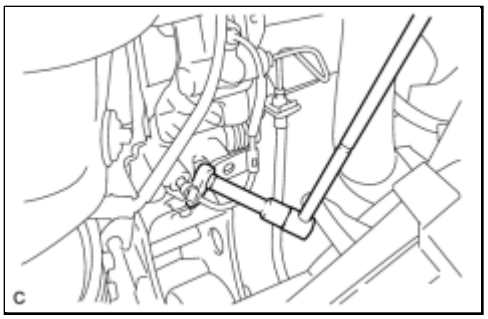

(a) Using a union nut wrench (10 mm), disconnect the clutch line.

4. DISCONNECT CLUTCH ACCUMULATOR ASSEMBLY

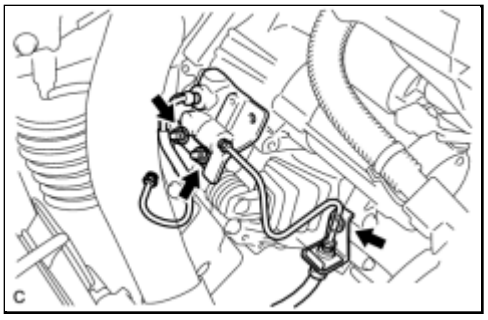

(a) Remove the bolt and 2 nuts, and disconnect the clutch accumulator assembly and clutch tube bracket.

5. REMOVE CLUTCH RELEASE CYLINDER ASSEMBLY

(a) Remove the 2 bolts and clutch release cylinder assembly.

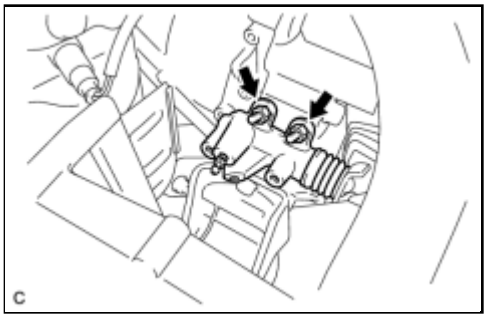
C

Last Modified: 3-10-2010	6.4 A	**From:** 200901
Model Year: 2010	**Model:** Corolla	**Doc ID:** RM000000Z1200CX
Title: CLUTCH: CLUTCH RELEASE CYLINDER (for E351): DISASSEMBLY (2010 Corolla)		

DISASSEMBLY

1. REMOVE RELEASE CYLINDER BLEEDER PLUG

(a) Remove the bleeder plug from the cylinder body.

(b) Remove the bleeder plug cap from the bleeder plug.

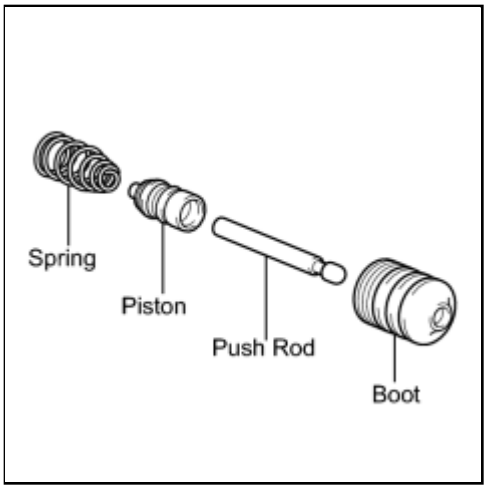

2. REMOVE CLUTCH RELEASE CYLINDER KIT

(a) Remove the boot from the cylinder body.

(b) Remove the push rod from the cylinder body.

(c) Remove the piston and spring from the cylinder body.

NOTICE:

Do not damage the inside of the cylinder body.

Last Modified: 3-10-2010	6.4 A	**From:** 200901
Model Year: 2010	**Model:** Corolla	**Doc ID:** RM000000Z1300CX
Title: CLUTCH: CLUTCH RELEASE CYLINDER (for E351): REASSEMBLY (2010 Corolla)		

REASSEMBLY

1. INSTALL CLUTCH RELEASE CYLINDER KIT

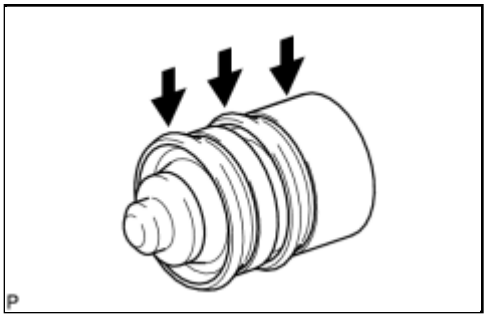

(a) Coat a new piston with lithium soap base glycol grease as shown in the illustration.

(b) Install the piston and a new spring to the cylinder body.

NOTICE:

Do not damage the inside of the cylinder body.

HINT:

Install the smaller end of the spring to the piston.

(c) Install a new boot to the push rod.

(d) Install the push rod to the cylinder body.

2. INSTALL RELEASE CYLINDER BLEEDER PLUG

(a) Install the bleeder plug to the cylinder body.

Torque: 8.4 N·m (86 kgf·cm, 74in·lbf)

(b) Install the bleeder plug cap to the bleeder plug.

Last Modified: 3-10-2010	6.4 A	**From:** 200901
Model Year: 2010	**Model:** Corolla	**Doc ID:** RM0000015N400MX
Title: CLUTCH: CLUTCH RELEASE CYLINDER (for E351): INSTALLATION (2010 Corolla)		

INSTALLATION

1. INSTALL CLUTCH RELEASE CYLINDER ASSEMBLY

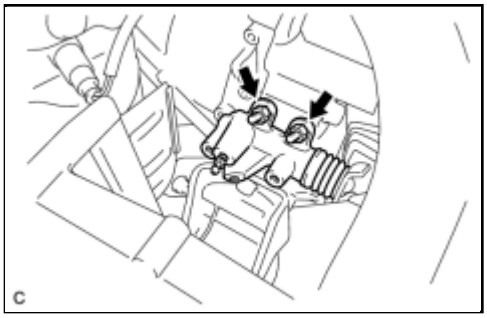

(a) Install the clutch release cylinder with the 2 bolts.

Torque: 12 N·m (120 kgf·cm, 9ft·lbf)

2. CONNECT CLUTCH ACCUMULATOR ASSEMBLY

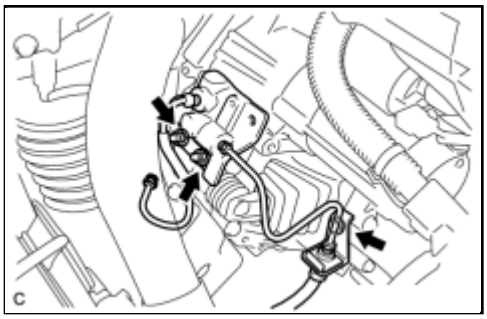

(a) Connect the accumulator assembly and clutch tube bracket with the bolt and 2 nuts.

Nut - Torque: 12 N·m (120 kgf·cm, 9ft·lbf)

Bolt - Torque: 8.0 N·m (80 kgf·cm, 69in·lbf)

3. CONNECT CLUTCH LINE

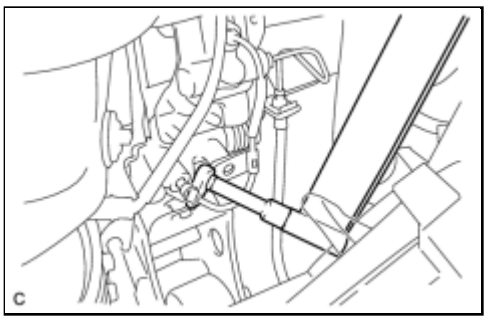

(a) Using a union nut wrench (10 mm), connect the clutch line.

without a union nut wrench - Torque: 15 N·m (155 kgf·cm, 11ft·lbf)

with a union nut wrench - Torque: 14 N·m (143 kgf·cm, 10ft·lbf)

NOTICE:

- Use a torque wrench with a fulcrum length of 250 mm (9.84 in.).
- This torque value is effective when the union nut wrench is parallel to the torque wrench.

4. INSTALL CLUTCH ACCUMULATOR BRACKET INFO

5. INSTALL RELEASE CYLINDER HEAT INSULATOR INFO

6. FILL BRAKE FLUID RESERVOIR INFO

7. BLEED CLUTCH LINE INFO

8. INSPECT FLUID LEVEL INFO

9. INSPECT FOR FLUID LEAK

HINT:

Check for leaks from the clutch system.

Last Modified: 3-10-2010	6.4 T	**From:** 200901
Model Year: 2010	**Model:** Corolla	**Doc ID:** RM000001B3E00SX
Title: CLUTCH: CLUTCH SYSTEM (for C59): PROBLEM SYMPTOMS TABLE (2010 Corolla)		

PROBLEM SYMPTOMS TABLE

Use the table below to help determine the cause of problem symptoms. If multiple suspected areas are listed, the potential causes of the symptoms are listed in order of probability in the "Suspected Area" column of the table. Check each symptom by checking the suspected areas in the order they are listed. Replace parts as necessary.

Clutch System

SYMPTOM	SUSPECTED AREA	SEE PAGE
Clutch grabs/chatters	Engine mounting (Loose)	-
	Clutch disc assembly (Excessive runout)	INFO
	Clutch disc assembly (Oily)	INFO
	Clutch disc assembly (Worn out)	INFO
	Clutch disc torsion spring (Damaged)	INFO
	Clutch disc assembly (Glazed)	INFO
	Diaphragm spring (Tip out of alignment)	INFO
Clutch pedal spongy	Clutch line (Air in line)	INFO
	Master cylinder (Damaged)	INFO
	Release cylinder piston (Damaged)	INFO
Clutch noisy	Clutch release bearing assembly (Worn, dirty or damaged)	INFO
	Clutch disc torsion spring (Damaged)	INFO
Clutch slips	Clutch pedal (Free play out of adjustment)	INFO
	Clutch disc assembly (Oily)	INFO
	Clutch disc assembly (Worn out)	INFO
	Diaphragm spring (Damaged)	INFO
	Pressure plate (Distorted)	INFO
	Flywheel sub-assembly (Distorted)	INFO
Clutch does not disengage fully	Clutch pedal (Free play out of adjustment)	INFO
	Clutch line (Air in line)	INFO

SYMPTOM	SUSPECTED AREA	SEE PAGE
	Master cylinder (Damaged)	INFO
	Release cylinder piston (Damaged)	INFO
	Clutch disc assembly (Out of line)	INFO
	Clutch disc assembly (Excessive runout)	INFO
	Clutch disc assembly (Lining broken)	INFO
	Clutch disc assembly (Dirty or burned)	INFO
	Clutch disc assembly (Oily)	INFO
	Clutch disc assembly (Lack of spline grease)	INFO

Last Modified: 3-10-2010	6.4 G	**From:** 200901
Model Year: 2010	**Model:** Corolla	**Doc ID:** RM00000241O00OX
Title: CLUTCH: CLUTCH SYSTEM (for C59): ON-VEHICLE INSPECTION (2010 Corolla)		

ON-VEHICLE INSPECTION

1. INSPECT CLUTCH PEDAL SWITCH ASSEMBLY

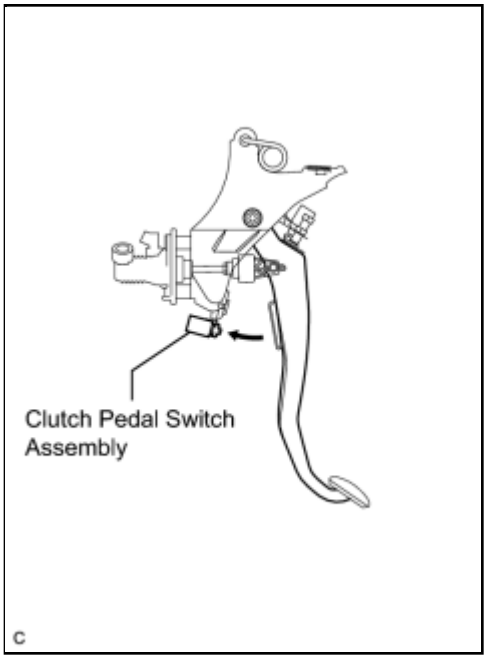

(a) Check that the engine does not start when the clutch pedal is released.

(b) Check that the engine starts when the clutch pedal is fully depressed.

If necessary, inspect and replace the clutch pedal switch assembly.

Last Modified: 3-10-2010	6.4 N	**From:** 200901
Model Year: 2010	**Model:** Corolla	**Doc ID:** RM0000010R701VX
Title: CLUTCH: CLUTCH SYSTEM (for C59): BLEEDING (2010 Corolla)		

BLEEDING

NOTICE:

Wash off clutch fluid immediately if it comes in contact with any painted surface.

HINT:

If any work is performed on the clutch system or if air in the clutch lines is suspected, bleed air from the clutch hydraulic system.

1. FILL BRAKE FLUID RESERVOIR INFO

2. BLEED CLUTCH LINE

(a) Remove the bleeder plug cap.

(b) Connect a vinyl tube to the bleeder plug.

(c) Depress the clutch pedal several times, and then loosen the bleeder plug while the pedal is depressed.

(d) When fluid no longer comes out, tighten the bleeder plug, and then release the clutch pedal.

(e) Repeat the previous 2 steps until all the air in the fluid is completely bled.

(f) Tighten the bleeder plug.

Torque: 8.4 N·m (86 kgf·cm, 74in·lbf)

(g) Install the bleeder plug cap.

(h) Check that all the air has been bled from the clutch line.

3. INSPECT BRAKE FLUID LEVEL IN RESERVOIR INFO

Last Modified: 3-10-2010	6.4 T	**From:** 200901
Model Year: 2010	**Model:** Corolla	**Doc ID:** RM000001B3E00TX
Title: CLUTCH: CLUTCH SYSTEM (for E351): PROBLEM SYMPTOMS TABLE (2010 Corolla)		

PROBLEM SYMPTOMS TABLE

Use the table below to help determine the cause of problem symptoms. If multiple suspected areas are listed, the potential causes of the symptoms are listed in order of probability in the "Suspected Area" column of the table. Check each symptom by checking the suspected areas in the order they are listed. Replace parts as necessary.

Clutch System

SYMPTOM	SUSPECTED AREA	SEE PAGE
Clutch grabs/chatters	Engine mounting (Loose)	-
	Clutch disc assembly (Excessive runout)	INFO
	Clutch disc assembly (Oily)	INFO
	Clutch disc assembly (Worn out)	INFO
	Clutch disc torsion spring (Damaged)	INFO
	Clutch disc assembly (Glazed)	INFO
	Diaphragm spring (Tip out of alignment)	INFO
Clutch pedal spongy	Clutch line (Air in line)	INFO
	Master cylinder (Damaged)	INFO
	Release cylinder piston (Damaged)	INFO
Clutch noisy	Clutch release bearing assembly (Worn, dirty or damaged)	INFO
	Clutch disc torsion spring (Damaged)	INFO
Clutch slips	Clutch pedal (Free play out of adjustment)	INFO
	Clutch disc assembly (Oily)	INFO
	Clutch disc assembly (Worn out)	INFO
	Diaphragm spring (Damaged)	INFO
	Pressure plate (Distorted)	INFO
	Flywheel sub-assembly (Distorted)	INFO
Clutch does not disengage fully	Clutch pedal (Free play out of adjustment)	INFO
	Clutch line (Air in line)	INFO

SYMPTOM	SUSPECTED AREA	SEE PAGE
	Master cylinder (Damaged)	INFO
	Release cylinder piston (Damaged)	INFO
	Clutch disc assembly (Out of line)	INFO
	Clutch disc assembly (Excessive runout)	INFO
	Clutch disc assembly (Lining broken)	INFO
	Clutch disc assembly (Dirty or burned)	INFO
	Clutch disc assembly (Oily)	INFO
	Clutch disc assembly (Lack of spline grease)	INFO

Last Modified: 3-10-2010	6.4 G	**From:** 200901
Model Year: 2010	**Model:** Corolla	**Doc ID:** RM0000024IO00PX
Title: CLUTCH: CLUTCH SYSTEM (for E351): ON-VEHICLE INSPECTION (2010 Corolla)		

ON-VEHICLE INSPECTION

1. INSPECT CLUTCH PEDAL SWITCH ASSEMBLY

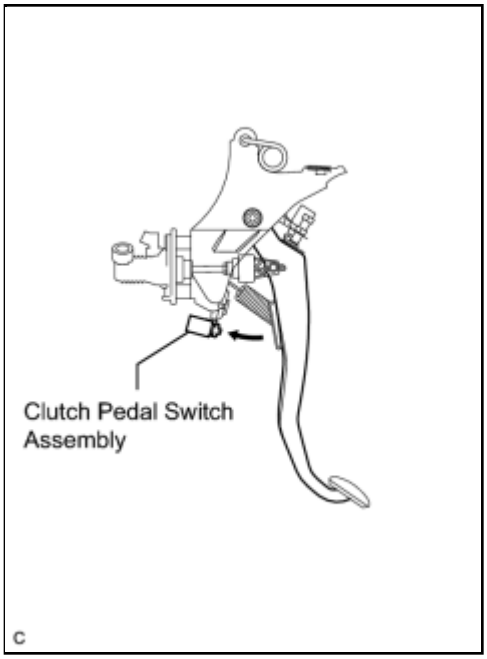

(a) Check that the engine does not start when the clutch pedal is released.

(b) Check that the engine starts when the clutch pedal is fully depressed.

If necessary, inspect and replace the clutch pedal switch assembly.

Last Modified: 3-10-2010	6.4 N	**From:** 200901
Model Year: 2010	**Model:** Corolla	**Doc ID:** RM0000010R701WX
Title: CLUTCH: CLUTCH SYSTEM (for E351): BLEEDING (2010 Corolla)		

BLEEDING

NOTICE:

Wash off clutch fluid immediately if it comes in contact with any painted surface.

HINT:

If any work is performed on the clutch system or if air in the clutch lines is suspected, bleed air from the clutch hydraulic system.

1. FILL BRAKE FLUID RESERVOIR

INFO

2. BLEED CLUTCH LINE

(a) Remove the bleeder plug cap.

(b) Connect a vinyl tube to the bleeder plug.

(c) Depress the clutch pedal several times, and then loosen the bleeder plug while the pedal is depressed.

(d) When fluid no longer comes out, tighten the bleeder plug, and then release the clutch pedal.

(e) Repeat the previous 2 steps until all the air in the fluid is completely bled.

(f) Tighten the bleeder plug.

Torque: 8.4 N·m (86 kgf·cm, 74in·lbf)

(g) Install the bleeder plug cap.

(h) Check that all the air has been bled from the clutch line.

3. INSPECT BRAKE FLUID LEVEL IN RESERVOIR

INFO

Last Modified: 3-10-2010	6.4 K	**From:** 200901
Model Year: 2010	**Model:** Corolla	**Doc ID:** RM000001B3801JX
Title: CLUTCH: CLUTCH UNIT (for C59): COMPONENTS (2010 Corolla)		

COMPONENTS

ILLUSTRATION

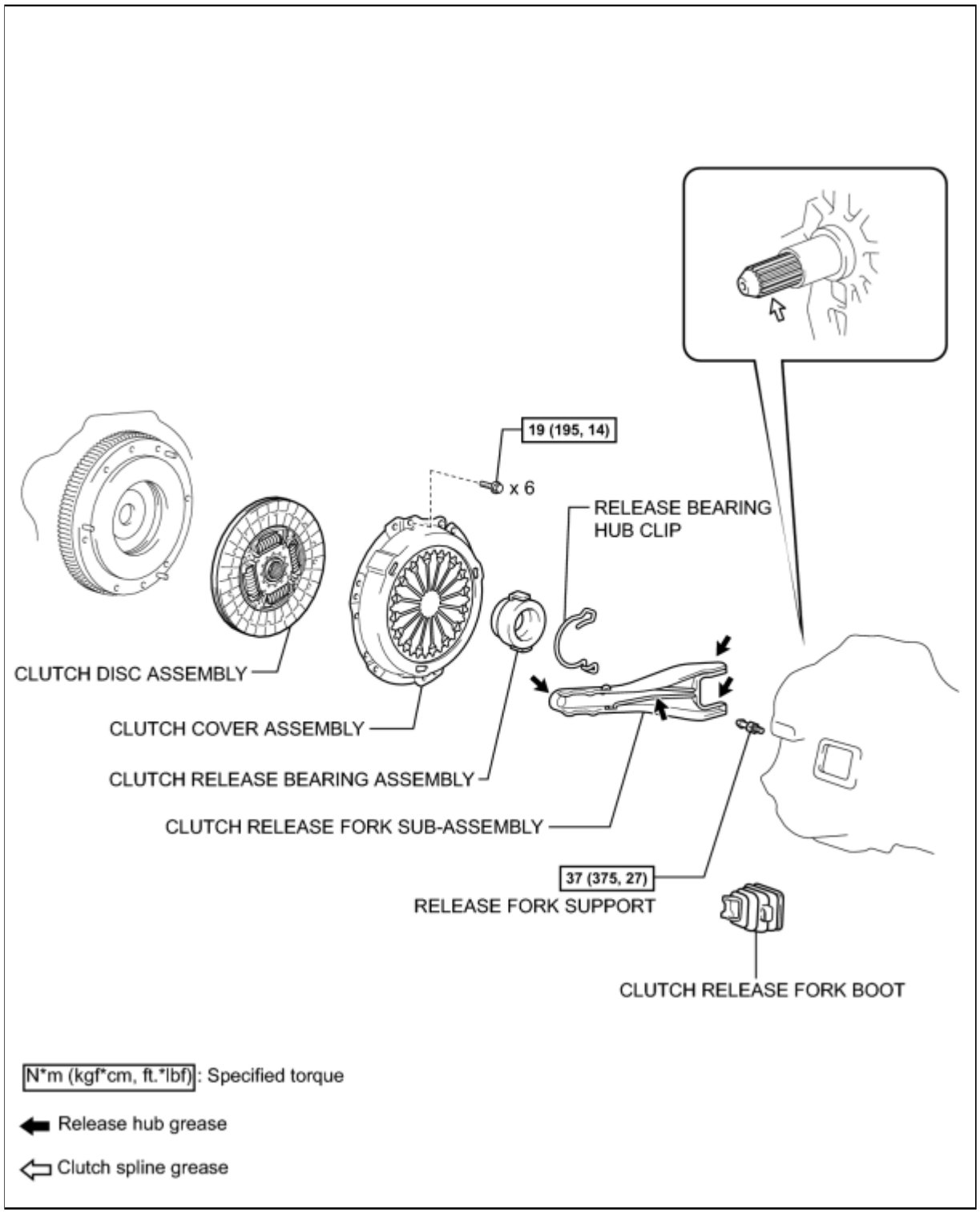

Last Modified: 3-10-2010	6.4 A	**From:** 200901
Model Year: 2010	**Model:** Corolla	**Doc ID:** RM000001B3901QX
Title: CLUTCH: CLUTCH UNIT (for C59): REMOVAL (2010 Corolla)		

REMOVAL

1. REMOVE MANUAL TRANSAXLE ASSEMBLY

INFO .

2. REMOVE CLUTCH RELEASE FORK SUB-ASSEMBLY

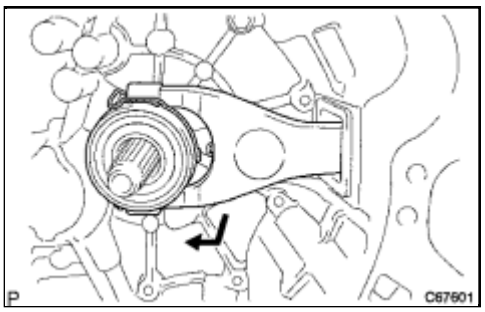

(a) Remove the clutch release fork with the clutch release bearing from the manual transaxle.

3. REMOVE CLUTCH RELEASE FORK BOOT

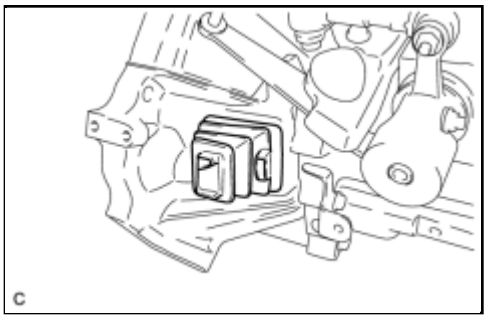

(a) Remove the clutch release fork boot from the manual transaxle.

4. REMOVE CLUTCH RELEASE BEARING ASSEMBLY

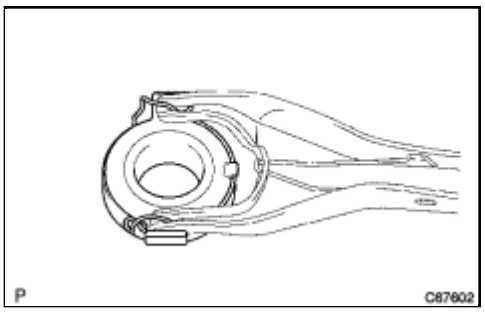

(a) Remove the release bearing and clip from the clutch release fork.

5. REMOVE RELEASE FORK SUPPORT

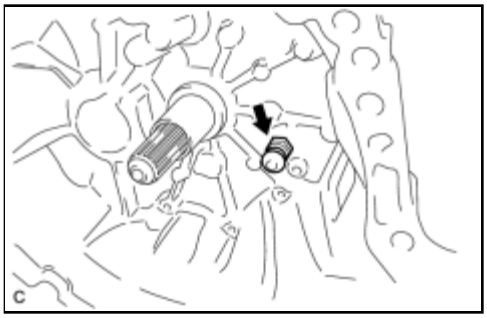

(a) Remove the release fork support from the manual transaxle.

6. REMOVE CLUTCH COVER ASSEMBLY

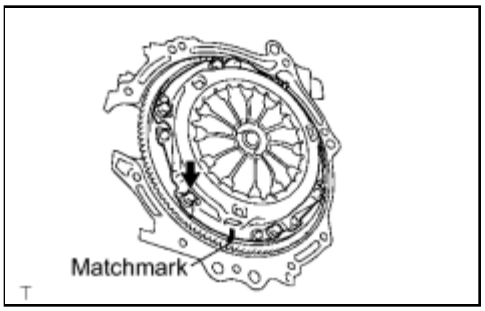

(a) Put matchmarks on the clutch cover assembly and the flywheel sub-assembly.

(b) Loosen each set bolt one turn at a time until the spring tension is released.

(c) Remove the set bolts and pull off the clutch cover.

NOTICE:

Do not drop the clutch disc.

7. REMOVE CLUTCH DISC ASSEMBLY

NOTICE:

Keep the parts clutch disc lining, the pressure plate, and the surface of the flywheel sub-assembly free of oil and foreign matter.

Last Modified: 3-10-2010	6.4 G	**From:** 200901
Model Year: 2010	**Model:** Corolla	**Doc ID:** RM000001B37020X
Title: CLUTCH: CLUTCH UNIT (for C59): INSPECTION (2010 Corolla)		

INSPECTION

1. INSPECT CLUTCH DISC ASSEMBLY

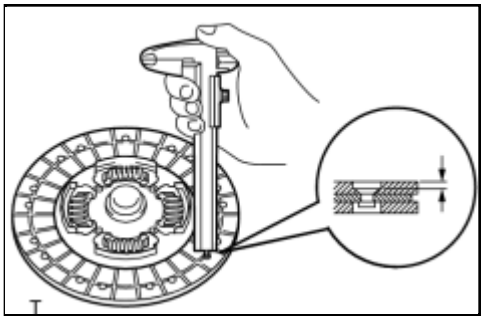

(a) Using a vernier caliper, measure the rivet head depth.

Minimum rivet depth:
0.3 mm (0.0118 in.)

If necessary, replace the clutch disc assembly.

(b) Install the clutch disc assembly onto the transaxle assembly.

NOTICE:
Insert the clutch disc assembly in the correct direction.

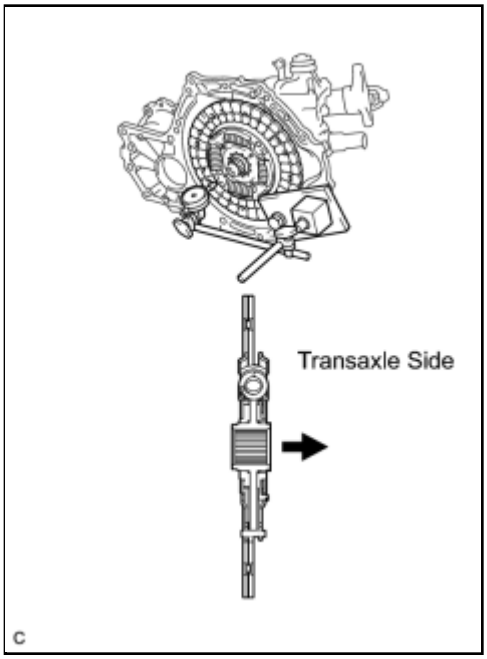

(c) Using a dial indicator, measure the clutch disc assembly runout.

Maximum runout:
0.8 mm (0.0315 in.)

If necessary, replace the clutch disc assembly.

2. INSPECT CLUTCH COVER ASSEMBLY

(a) Using a vernier caliper, measure the depth and width of the

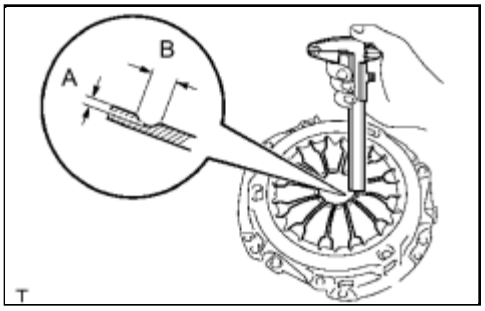

diaphragm spring wear.

Maximum:

A (DEPTH)	B (WIDTH)
0.5 mm (0.0197 in.)	6.0 mm (0.236 in.)

If necessary, replace the clutch cover assembly.

3. INSPECT FLYWHEEL SUB-ASSEMBLY

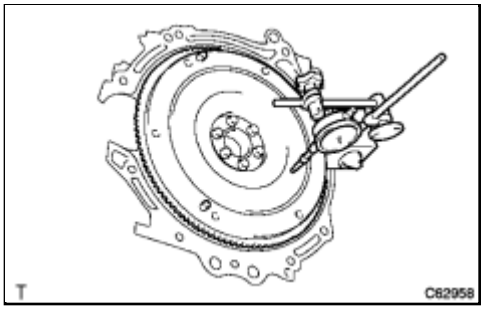

(a) Using a dial indicator, measure the flywheel sub-assembly runout.

Maximum runout:
0.1 mm (0.00394 in.)

If necessary, replace the flywheel sub-assembly.

4. INSPECT CLUTCH RELEASE BEARING ASSEMBLY

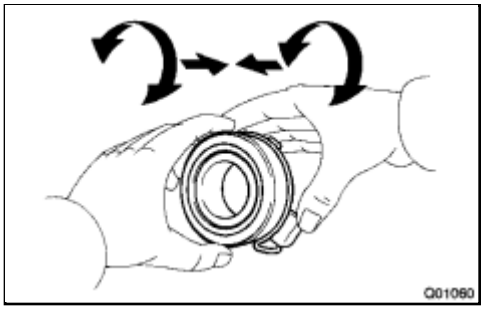

(a) Check that the clutch release bearing assembly moves smoothly without abnormal resistance by turning the sliding parts of the clutch release bearing assembly (contact surfaces with the clutch cover) while applying force in the axial direction.

(b) Inspect the clutch release bearing assembly for damage and wear.

If necessary, replace the release bearing assembly.

Last Modified: 3-10-2010	6.4 A	**From:** 200901
Model Year: 2010	**Model:** Corolla	**Doc ID:** RM000001B3601QX
Title: CLUTCH: CLUTCH UNIT (for C59): INSTALLATION (2010 Corolla)		

INSTALLATION

1. INSTALL CLUTCH DISC ASSEMBLY

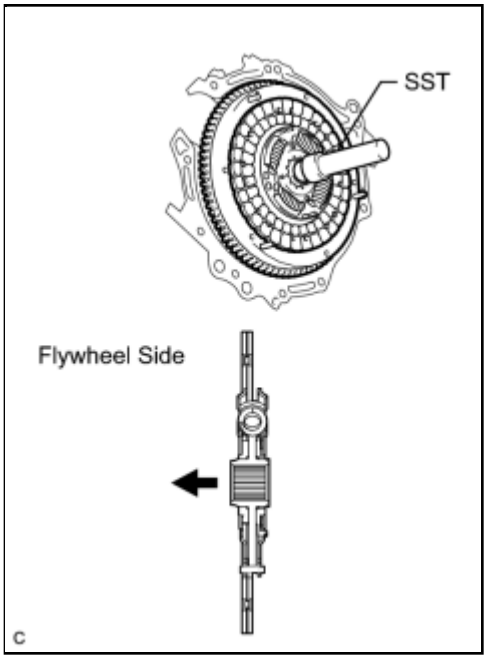

(a) Insert SST into the clutch disc assembly, then insert them both into the flywheel sub-assembly.

SST: 09301-00110

NOTICE:

Insert the clutch disc assembly in the correct direction.

2. INSTALL CLUTCH COVER ASSEMBLY

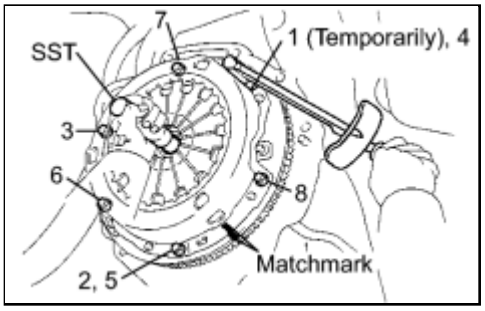

(a) Align the matchmark on the clutch cover assembly with the one on the flywheel sub-assembly.

(b) Following the procedure shown in the illustration, tighten the 6 bolts in order, starting with the bolt located near the knock pin at the top.

Torque: 19 N·m (195 kgf·cm, 14ft·lbf)

HINT:

- Following the order in the illustration, tighten the bolts evenly one at a time.
- Move SST up and down, right and left lightly after checking that the disc is in the center, and

tighten the bolts.

SST: 09301-00110

3. INSPECT AND ADJUST CLUTCH COVER ASSEMBLY

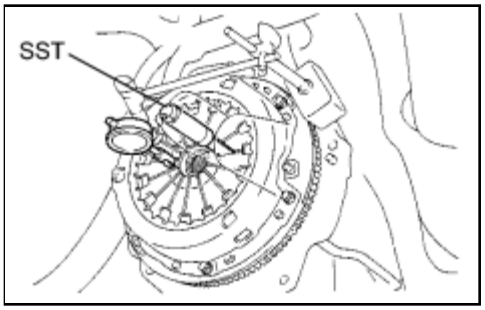

(a) Using a dial indicator with a roller instrument, check the diaphragm spring tip alignment.

Maximum non-alignment:
0.9 mm (0.0354 in.)

(b) If the alignment is not as specified, adjust the diaphragm spring tip alignment using SST.

SST: 09333-00013

4. INSTALL RELEASE FORK SUPPORT

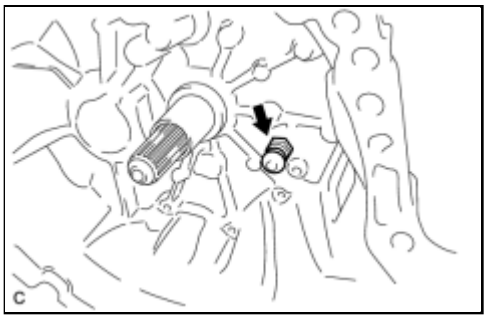

(a) Install the release fork support onto the transaxle assembly.

Torque: 37 N·m (375 kgf·cm, 27ft·lbf)

5. INSTALL CLUTCH RELEASE FORK BOOT

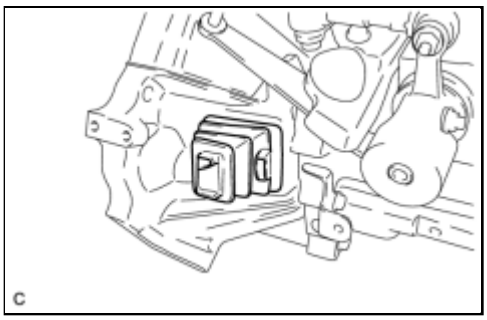

(a) Install the clutch release fork boot to the manual transaxle.

6. INSTALL CLUTCH RELEASE FORK SUB-ASSEMBLY

(a) Apply release hub grease to the contact surfaces between

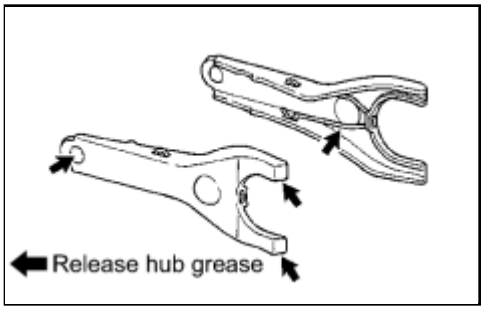

the release fork and release bearing assembly, release fork and push rod, and release fork and fork support.

Grease:
Toyota Genuine Release Hub Grease or equivalent

(b) Install the release fork onto the release bearing assembly with the clip.

7. INSTALL CLUTCH RELEASE BEARING ASSEMBLY

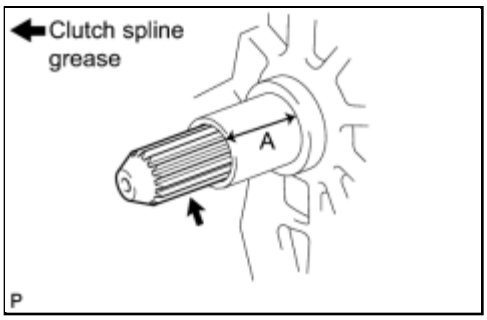

(a) Apply clutch spline grease to the input shaft spline.

Grease:
Toyota Genuine Clutch Spline Grease or equivalent

NOTICE:
Do not apply grease to portion A shown in the illustration.

(b) Install the clutch release bearing with the release fork onto the transaxle assembly.

NOTICE:
After installation, move the fork back and forth to check that the release bearing slides smoothly.

8. INSTALL MANUAL TRANSAXLE ASSEMBLY

INFO .

Last Modified: 3-10-2010	6.4 K	**From:** 200901
Model Year: 2010	**Model:** Corolla	**Doc ID:** RM000000Z1800HX
Title: CLUTCH: CLUTCH UNIT (for E351): COMPONENTS (2010 Corolla)		

COMPONENTS

ILLUSTRATION

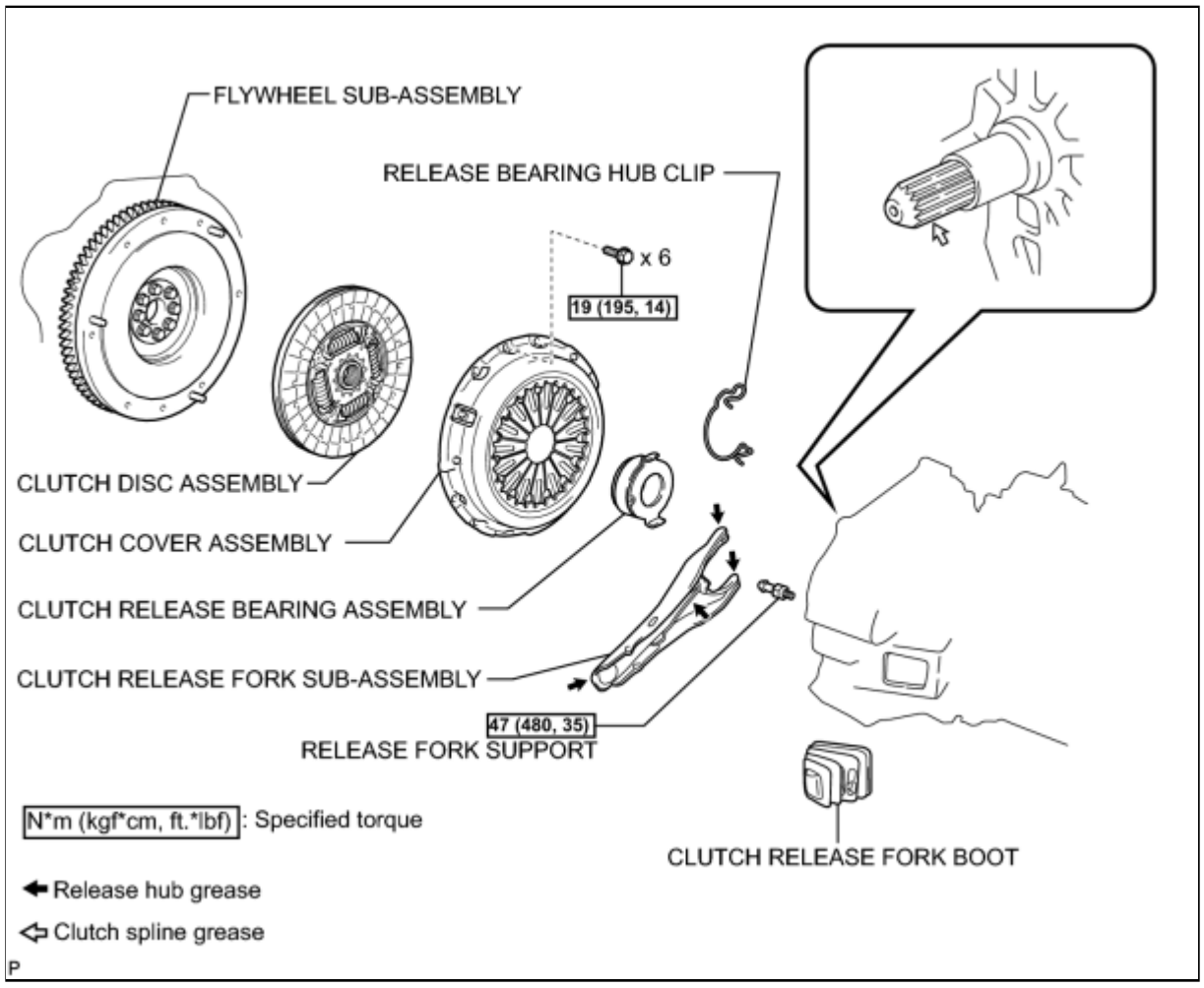

Last Modified: 3-10-2010	6.4 G	**From:** 200901
Model Year: 2010	**Model:** Corolla	**Doc ID:** RM000000Z1700HX
Title: CLUTCH: CLUTCH UNIT (for E351): INSPECTION (2010 Corolla)		

INSPECTION

1. INSPECT CLUTCH DISC ASSEMBLY

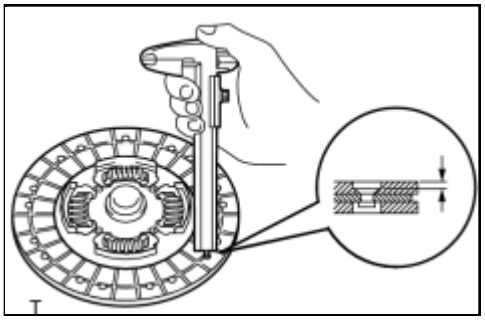

(a) Using a vernier caliper, measure the rivet head depth.

Minimum rivet depth:
0.3 mm (0.0118 in.)

If necessary, replace the clutch disc assembly.

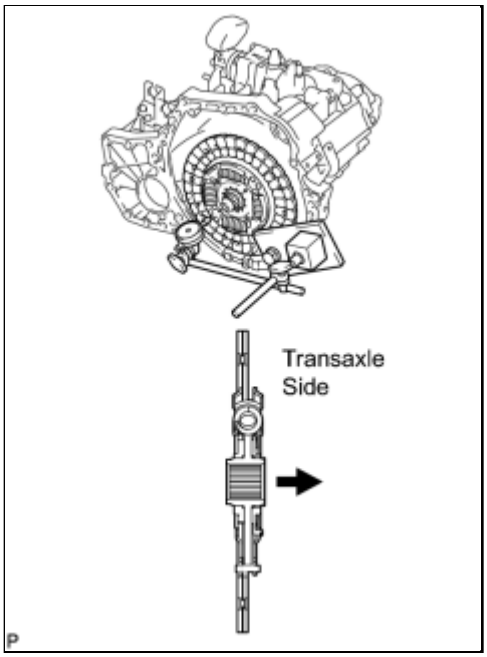

(b) Install the clutch disc assembly to the transaxle assembly.

NOTICE:

Take care not to insert the clutch disc assembly in the wrong direction.

(c) Using a dial indicator with a roller instrument, measure the clutch disc assembly runout.

Maximum runout:
0.8 mm (0.0315 in.)

If necessary, replace the clutch disc assembly.

2. INSPECT CLUTCH COVER ASSEMBLY

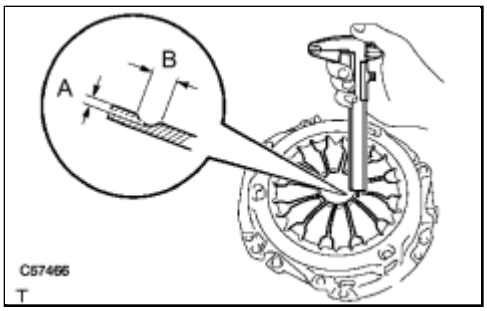

(a) Using a vernier caliper, inspect the diaphragm spring for depth and width of wear.

Maximum:

A (Depth)

0.5 mm (0.0197 in.)

B (Width)

6.0 mm (0.236 in.)

If necessary, replace the clutch cover assembly.

3. INSPECT FLYWHEEL SUB-ASSEMBLY

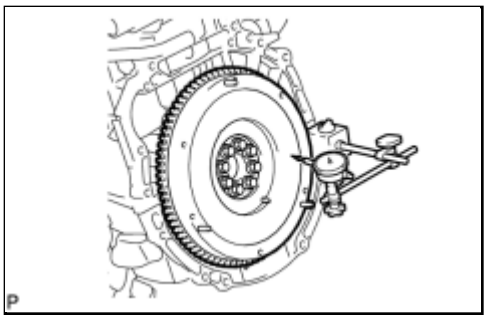

(a) Using a dial indicator, measure the flywheel runout.

Maximum runout:

0.1 mm (0.00394 in.)

If necessary, replace the flywheel sub-assembly.

4. INSPECT CLUTCH RELEASE BEARING ASSEMBLY

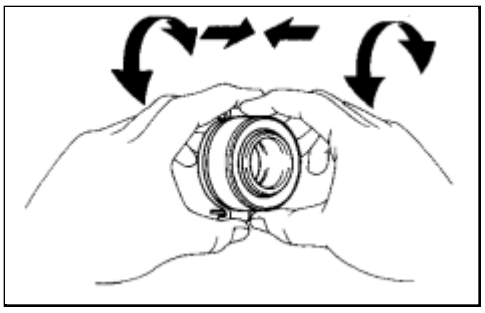

(a) Check that the bearing moves smoothly without abnormal resistance by turning the sliding parts of the bearing (contact surfaces with the clutch cover) while applying force in the axial direction.

(b) Inspect the bearing for damage or wear. If necessary, replace the release bearing assembly.

5. INSPECT AND ADJUST CLUTCH COVER ASSEMBLY

(a) Using a dial indicator with a roller instrument, check the diaphragm spring tip alignment.

Maximum variation:

0.9 mm (0.0354 in.)

If the alignment is not as specified, adjust the diaphragm spring tip alignment with SST.

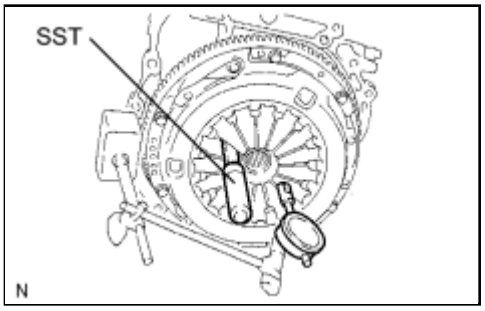

SST: 09333-00013

Last Modified: 3-10-2010	6.4 A	**From:** 200901
Model Year: 2010	**Model:** Corolla	**Doc ID:** RM000000Z1900JX
Title: CLUTCH: CLUTCH UNIT (for E351): REMOVAL (2010 Corolla)		

REMOVAL

1. REMOVE MANUAL TRANSAXLE ASSEMBLY

INFO .

2. REMOVE CLUTCH RELEASE FORK SUB-ASSEMBLY

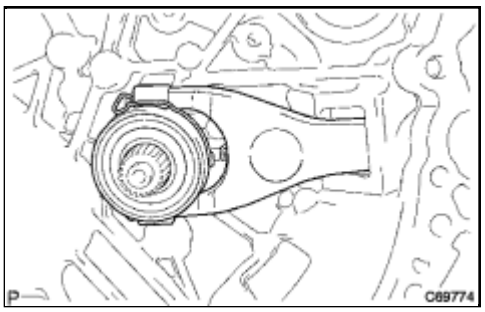

(a) Remove the clutch release fork with the clutch release bearing from the transaxle assembly.

3. REMOVE CLUTCH RELEASE BEARING ASSEMBLY

(a) Remove the release bearing hub clip and clutch release bearing assembly from the clutch release fork.

4. REMOVE RELEASE FORK SUPPORT

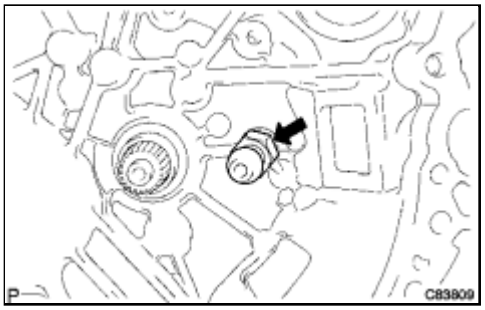

(a) Remove the release fork support from the manual transaxle assembly.

5. REMOVE CLUTCH RELEASE FORK BOOT

6. REMOVE CLUTCH COVER ASSEMBLY

(a) Put matchmarks on the clutch cover assembly and flywheel sub-assembly.

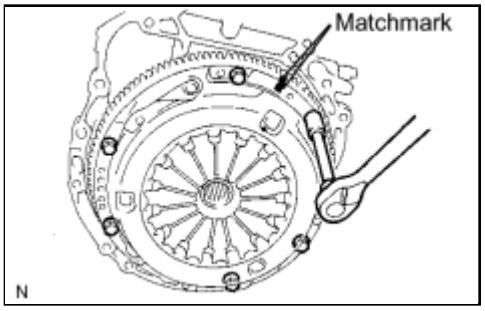

(b) Loosen the 6 bolts one turn at a time until spring tension is released.

(c) Remove the 6 bolts and pull off the clutch cover assembly.

NOTICE:

Do not drop the clutch disc assembly.

7. REMOVE CLUTCH DISC ASSEMBLY

NOTICE:

Keep the parts clutch disc lining, the pressure plate and surface of the flywheel sub-assembly free of oil and foreign matter.

Last Modified: 3-10-2010	6.4 A	**From:** 200901
Model Year: 2010	**Model:** Corolla	**Doc ID:** RM000000Z1A00JX
Title: CLUTCH: CLUTCH UNIT (for E351): INSTALLATION (2010 Corolla)		

INSTALLATION

1. INSTALL CLUTCH DISC ASSEMBLY

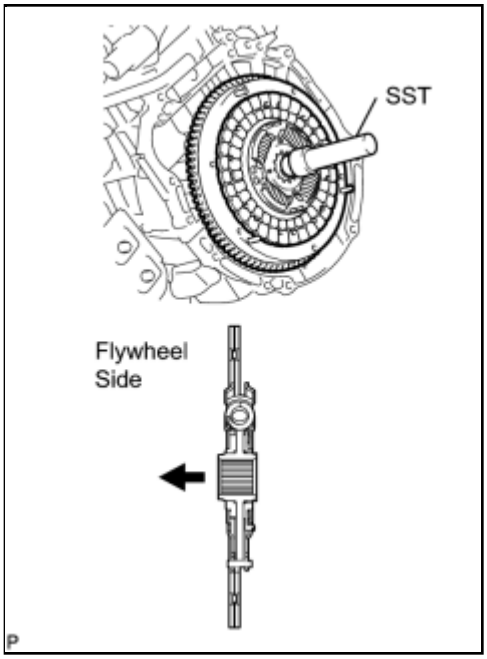

(a) Insert SST into the clutch disc assembly, then insert them into the flywheel sub-assembly.

SST: 09301-00220

NOTICE:

Take care not to insert the clutch disc assembly in the wrong direction.

2. INSTALL CLUTCH COVER ASSEMBLY

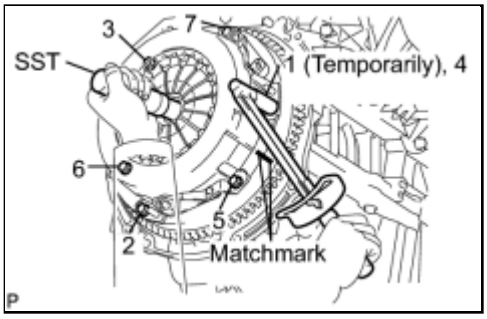

(a) Align the matchmarks on the clutch cover assembly with the one on the flywheel sub-assembly.

(b) Following the procedure shown in the illustration, tighten the 6 bolts in order, starting with the bolt located near the knock pin on the top.

Torque: 19 N·m (195 kgf·cm, 14ft·lbf)

HINT:

- Following the order in the illustration, evenly tighten the bolts one turn at a time.
- Lightly move SST up and down, and right and left after checking that the disc is in the center to

tighten the bolts.

SST: 09301-00210

3. INSTALL RELEASE FORK SUPPORT

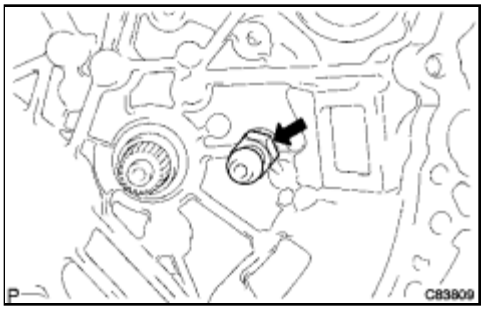

(a) Install the release fork support to the manual transaxle assembly.

Torque: 47 N·m (480 kgf·cm, 35ft·lbf)

4. INSTALL RELEASE BEARING HUB CLIP

(a) Install the release bearing hub clip to the release bearing assembly.

5. INSTALL CLUTCH RELEASE FORK SUB-ASSEMBLY

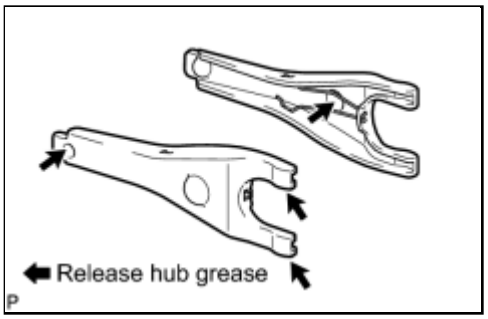

(a) Apply release hub grease to the contact surfaces between the release fork and release bearing, fork and push rod, and fork and fork support.

Grease:
Toyota Genuine Release Hub Grease or equivalent

(b) Install the release fork to the release bearing assembly.

6. INSTALL CLUTCH RELEASE BEARING ASSEMBLY

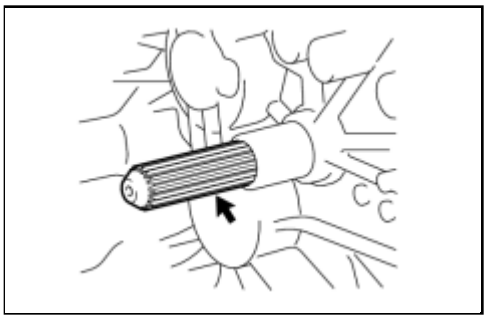

(a) Apply clutch spline grease to the input shaft spline as shown in the illustration.

Grease:
Toyota Genuine Clutch Spline Grease or equivalent

(b) Install the release fork with the release bearing assembly

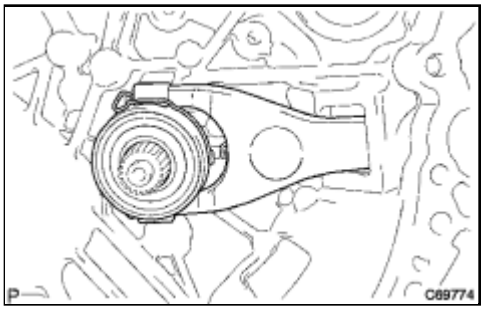

to the manual transaxle assembly.

NOTICE:

After installation, move the fork back and forth to check that the release bearing slides smoothly.

7. INSTALL CLUTCH RELEASE FORK BOOT

8. INSTALL MANUAL TRANSAXLE ASSEMBLY

INFO .

Last Modified: 3-10-2010	6.4 K	**From:** 200901
Model Year: 2010	**Model:** Corolla	**Doc ID:** RM000003CY2006X
Title: DRIVE SHAFT / PROPELLER SHAFT: FRONT DRIVE SHAFT ASSEMBLY (for 2AZ-FE): COMPONENTS (2010 Corolla)		

COMPONENTS

ILLUSTRATION

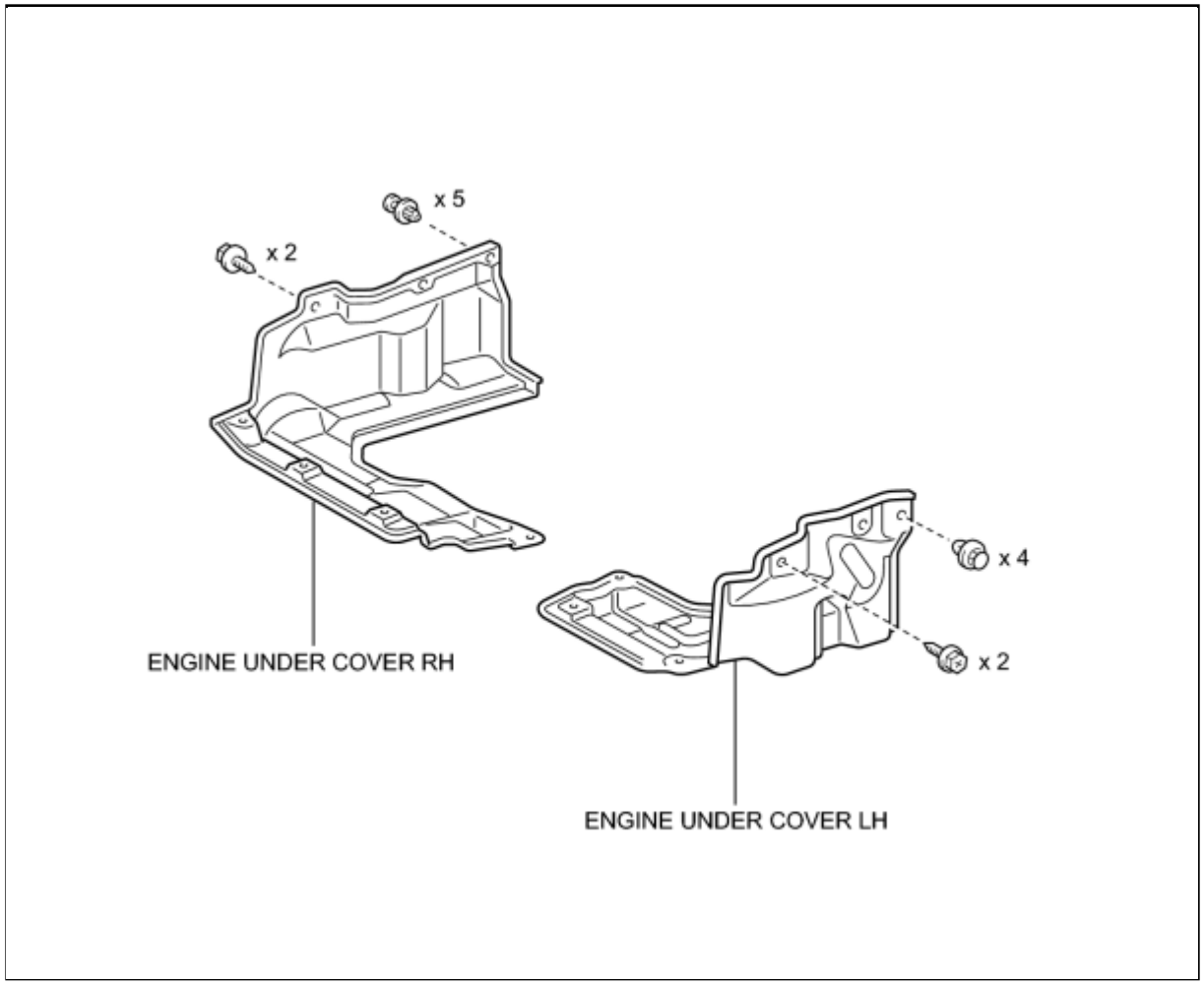

ILLUSTRATION

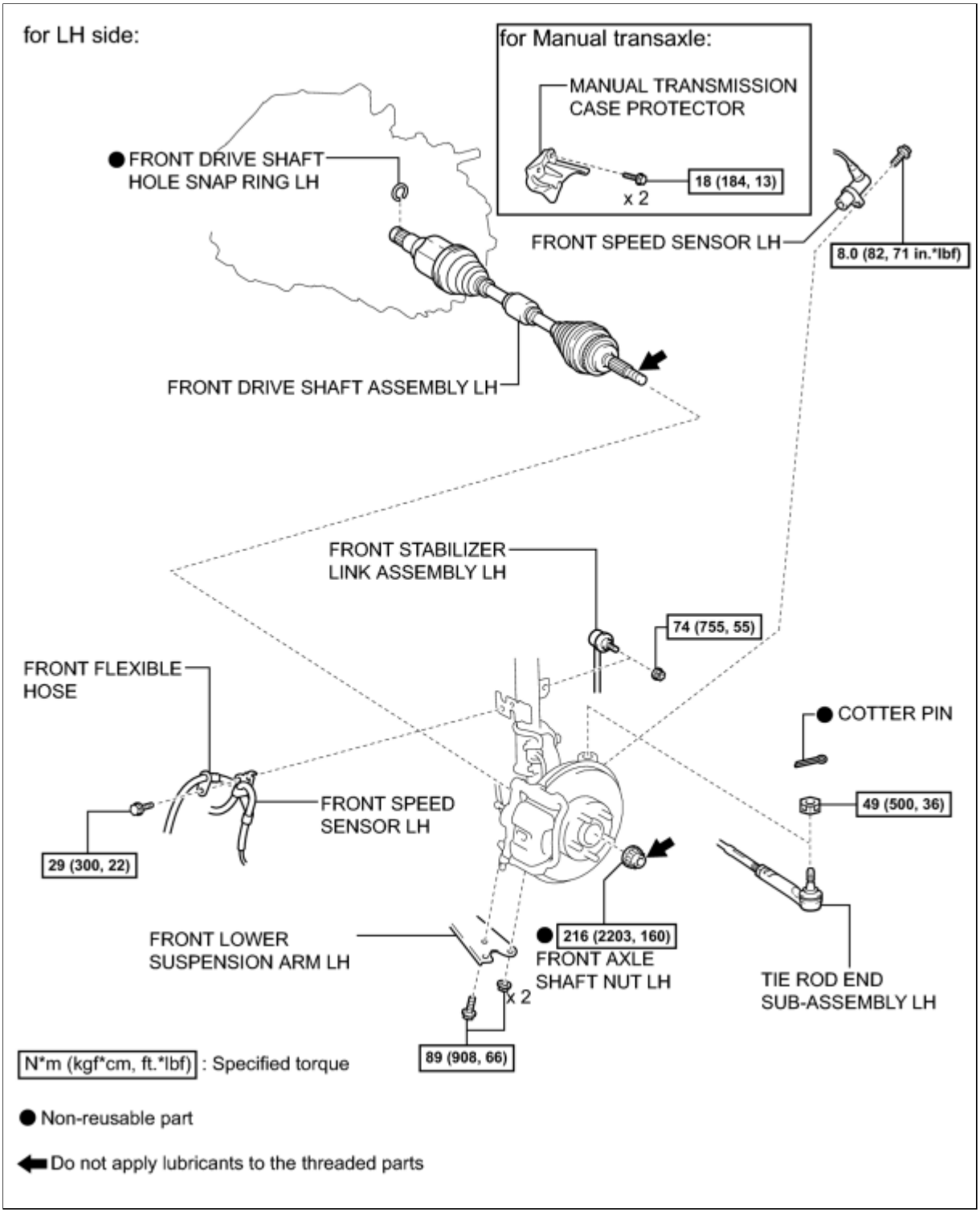

ILLUSTRATION

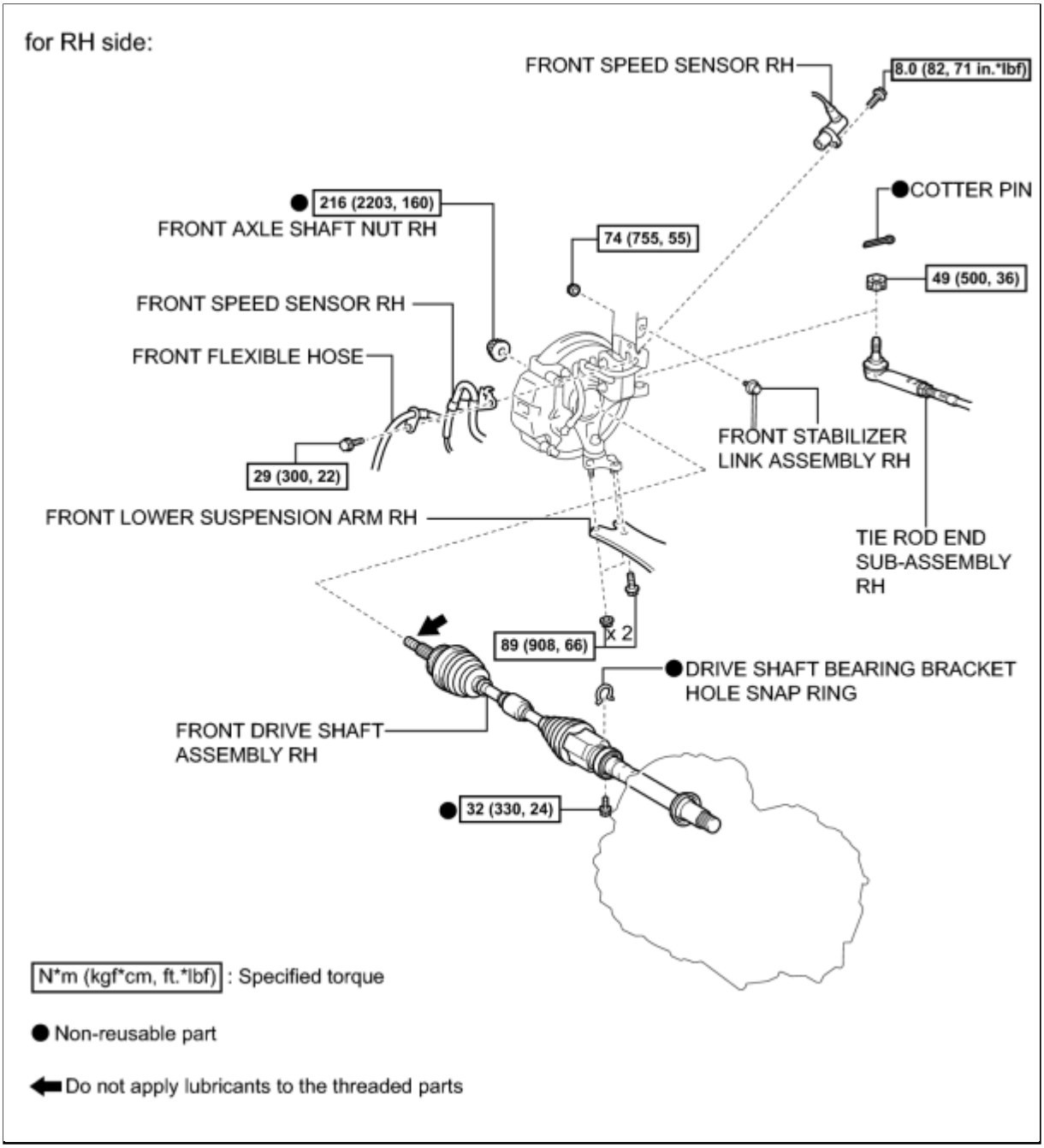

ILLUSTRATION

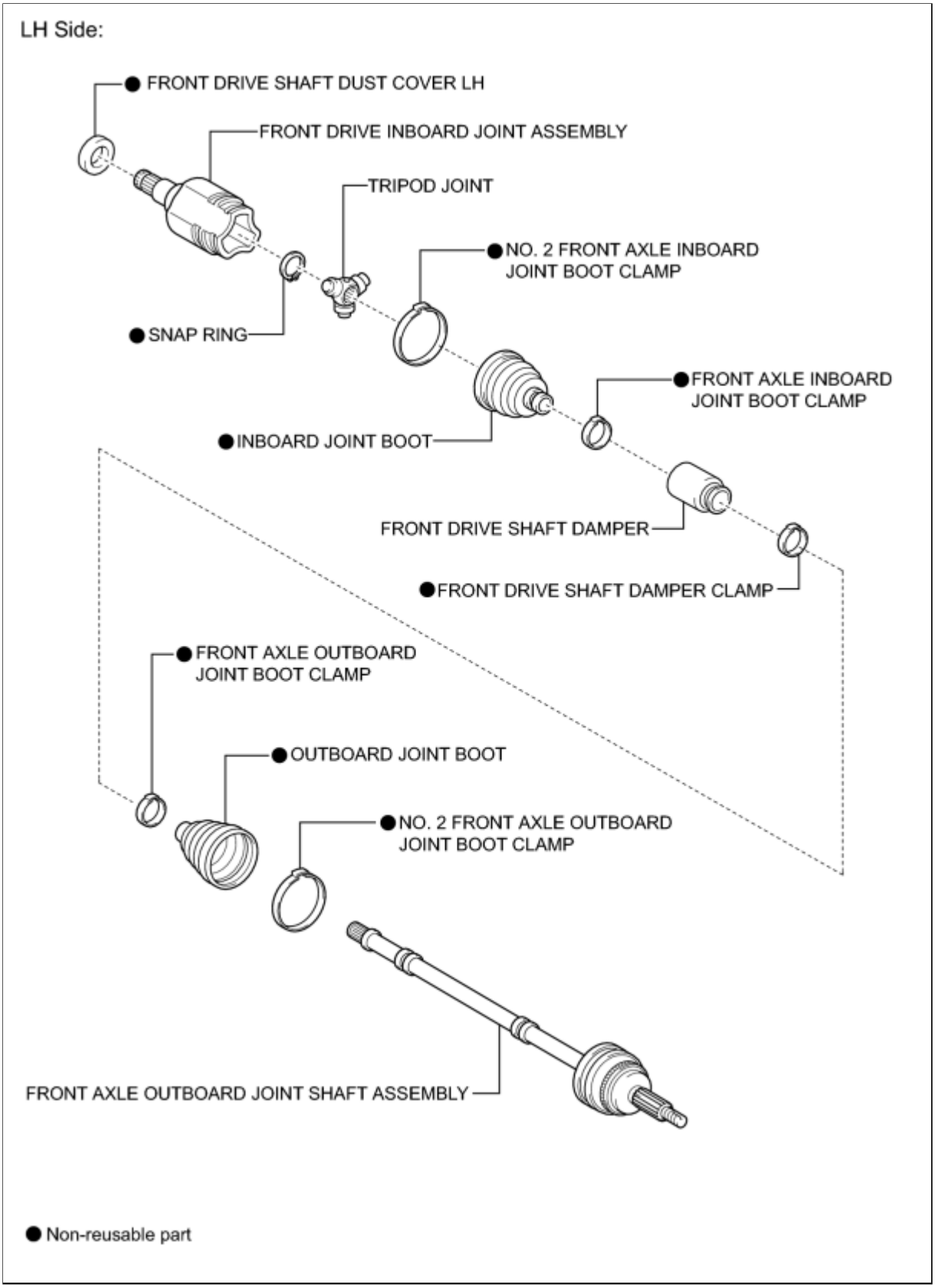

ILLUSTRATION

for RH side:

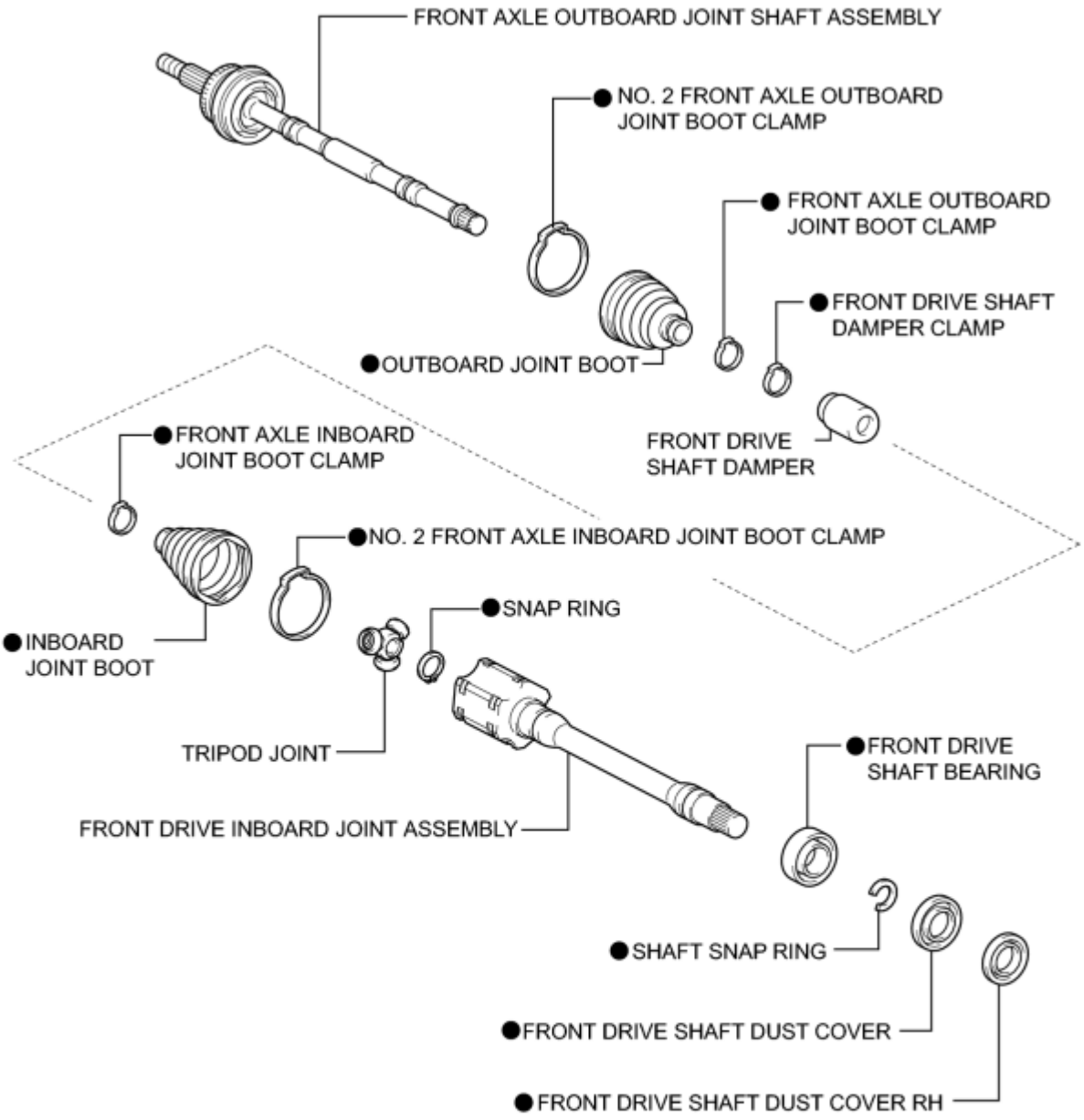

● Non-reusable part

Last Modified: 3-10-2010	6.4 T	**From:** 200901
Model Year: 2010	**Model:** Corolla	**Doc ID:** RM000002YRL00GX
Title: DRIVE SHAFT / PROPELLER SHAFT: DRIVE SHAFT SYSTEM: PROBLEM SYMPTOMS TABLE (2010 Corolla)		

PROBLEM SYMPTOMS TABLE

HINT:

Use the table below to help determine the cause of the problem symptoms. If multiple suspected areas are listed, the potential causes of the symptoms are listed in order of probability in the "Suspected Area" column of the table. Check each symptom by checking the suspected areas in the order they are listed. Replace parts as necessary.

FRONT DRIVE SHAFT

SYMPTOM	SUSPECTED AREA	SEE PAGE
Front wheel shimmy	Front drive shaft (worn) (for 2AZ-FE)	INFO
	Front drive shaft (worn) (for 2ZR-FE)	INFO

Last Modified: 3-10-2010	6.4 A	**From:** 200901
Model Year: 2010	**Model:** Corolla	**Doc ID:** RM000001HAY01JX
Title: DRIVE SHAFT / PROPELLER SHAFT: FRONT DRIVE SHAFT ASSEMBLY (for 2AZ-FE): REMOVAL (2010 Corolla)		

REMOVAL

1. REMOVE ENGINE UNDER COVER LH

2. REMOVE ENGINE UNDER COVER RH

3. DRAIN MANUAL TRANSAXLE OIL (for Manual Transaxle) INFO

4. DRAIN AUTOMATIC TRANSAXLE FLUID (for Automatic Transaxle) INFO

5. REMOVE FRONT WHEELS

6. REMOVE FRONT AXLE SHAFT NUT LH

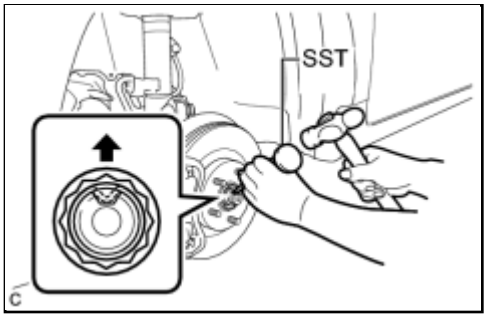

(a) Using SST and a hammer, release the staked part of the front axle shaft nut LH.

SST: 09930-00010

NOTICE:

- Insert SST into the groove with the flat surface facing up.
- Do not damage the tip of SST using grinders.
- Completely unstake the staked part before removing the axle hub nut.
- Do not damage the threads of the drive shaft.

(b) Using a socket wrench (30 mm), remove the front axle shaft nut LH.

7. REMOVE FRONT AXLE SHAFT NUT RH

HINT:

Perform the same procedure as for the LH side.

8. SEPARATE FRONT SPEED SENSOR LH (for TMC Made) INFO

9. SEPARATE FRONT SPEED SENSOR RH (for TMC Made)

HINT:

Perform the same procedure as for the LH side.

10. SEPARATE FRONT SPEED SENSOR LH (except TMC Made) INFO

11. SEPARATE FRONT SPEED SENSOR RH (except TMC Made)

HINT:

Perform the same procedure as for the LH side.

12. SEPARATE FRONT STABILIZER LINK ASSEMBLY LH INFO

13. SEPARATE FRONT STABILIZER LINK ASSEMBLY RH

HINT:

Perform the same procedure as for the LH side.

14. SEPARATE TIE ROD END SUB-ASSEMBLY LH INFO

15. SEPARATE TIE ROD END SUB-ASSEMBLY RH

HINT:

Perform the same procedure as for the LH side.

16. SEPARATE FRONT LOWER SUSPENSION ARM LH INFO

17. SEPARATE FRONT LOWER SUSPENSION ARM RH

HINT:

Perform the same procedure as for the LH side.

18. SEPARATE FRONT AXLE ASSEMBLY LH

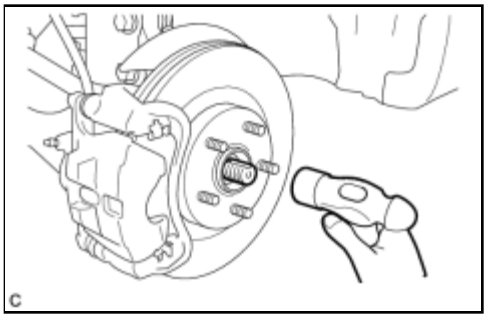

(a) Using a plastic hammer, tap the end of the drive shaft and disengage the fitting between the drive shaft and front axle assembly LH.

HINT:

If it is difficult to disengage the fitting, tap the end of the drive shaft with a brass bar and hammer.

(b) Push the front axle assembly LH out of the vehicle to remove the drive shaft from the front axle assembly LH.

NOTICE:

- Do not push out the front axle further than necessary.
- Do not damage the outboard joint boot.
- Do not damage the speed sensor rotor.

19. SEPARATE FRONT AXLE ASSEMBLY RH

HINT:

Perform the same procedure as for the LH side.

20. REMOVE MANUAL TRANSMISSION CASE PROTECTOR (for Manual Transaxle)

(a) Remove the 2 bolts and the manual transmission case

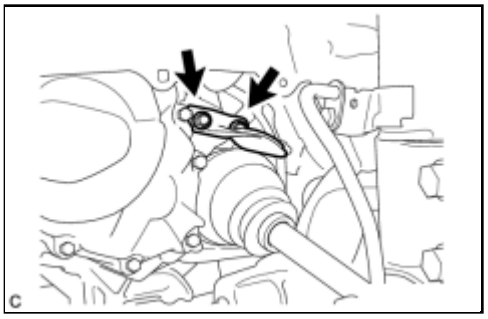

protector.

21. REMOVE FRONT DRIVE SHAFT ASSEMBLY LH

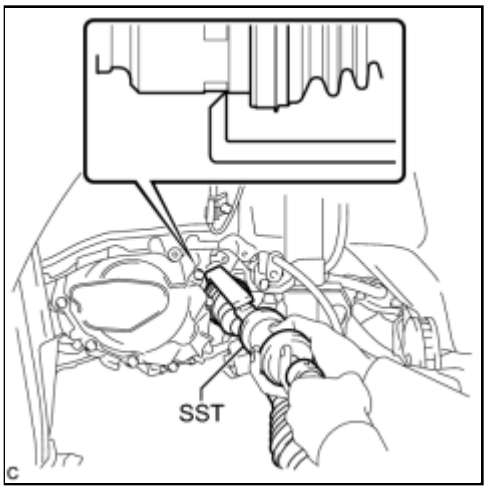

(a) Using SST, remove the front drive shaft assembly LH.

SST: 09520-01010

SST: 09520-24010

09520-32040

NOTICE:

- Do not damage the oil seal.
- Do not damage the inboard joint boot.
- Do not drop the drive shaft.

22. REMOVE FRONT DRIVE SHAFT ASSEMBLY RH

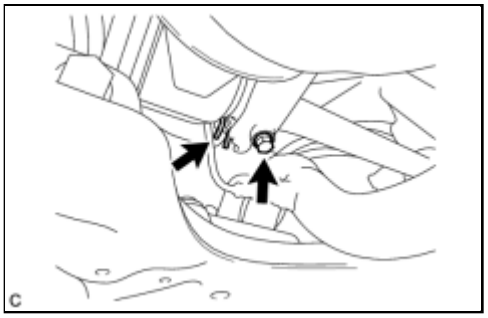

(a) Remove the bearing bracket hole snap ring.

(b) Remove the bolt and front drive shaft assembly RH from the drive shaft bearing bracket.

NOTICE:

Do not damage the boot or oil seal.

23. REMOVE FRONT DRIVE SHAFT HOLE SNAP RING LH (for LH Side)

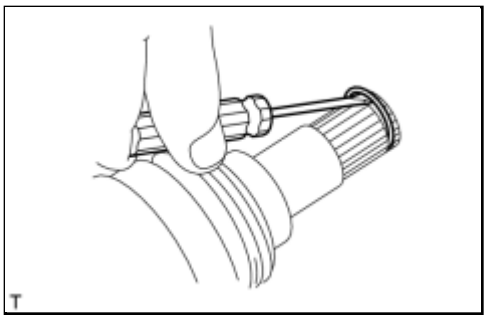

(a) Using a screwdriver, remove the snap ring from the front drive inboard joint assembly.

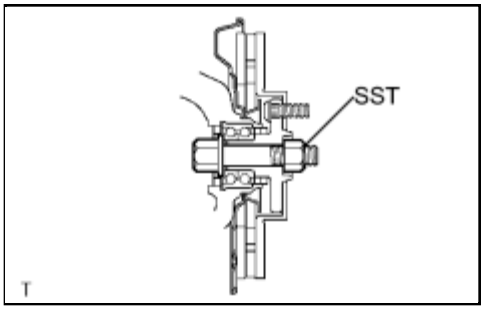

24. FIX FRONT AXLE ASSEMBLY

SST: 09608-16042

09608-02021

09608-02041

NOTICE:

The hub bearing could be damaged if it is subjected to the vehicle weight, such as when moving the vehicle with the drive shaft removed. Therefore, make sure to support the hub bearing with SST when the vehicle weight is applied.

Last Modified: 3-10-2010	6.4 A	**From:** 200901
Model Year: 2010	**Model:** Corolla	**Doc ID:** RM000001HAZ01EX
Title: DRIVE SHAFT / PROPELLER SHAFT: FRONT DRIVE SHAFT ASSEMBLY (for 2AZ-FE): DISASSEMBLY (2010 Corolla)		

DISASSEMBLY

1. REMOVE NO. 2 FRONT AXLE INBOARD JOINT BOOT CLAMP

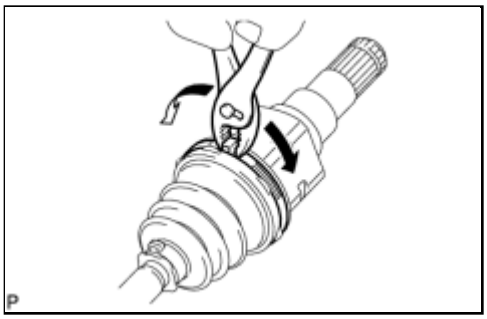

(a) Using pliers, remove the boot clamp as shown in the illustration.

2. REMOVE FRONT AXLE INBOARD JOINT BOOT CLAMP

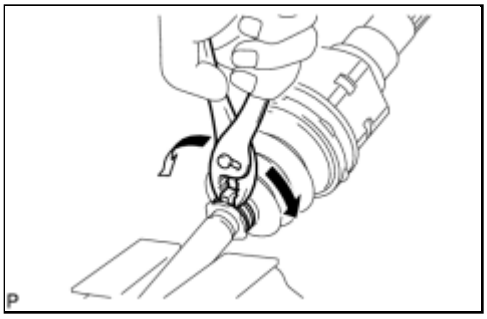

(a) Using pliers, remove the boot clamp as shown in the illustration.

3. SEPARATE INBOARD JOINT BOOT

(a) Separate the inboard joint boot from the inboard joint.

4. REMOVE FRONT DRIVE INBOARD JOINT ASSEMBLY

(a) Remove the old grease from the inboard joint.

(b) Place matchmarks on the inboard joint and outboard joint shaft.

NOTICE:

Do not damage any part when placing the marks.

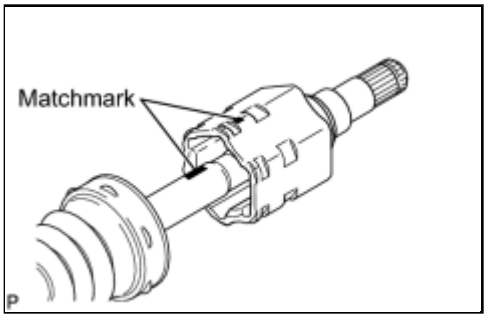

(c) Remove the inboard joint from the front axle outboard joint shaft assembly.

(d) Secure the outboard joint shaft in a vise using aluminum plates.

NOTICE:

Do not overtighten the vise.

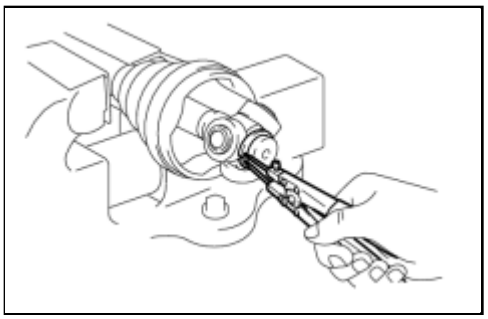

(e) Using a snap ring expander, remove the snap ring from the front axle outboard joint shaft assembly.

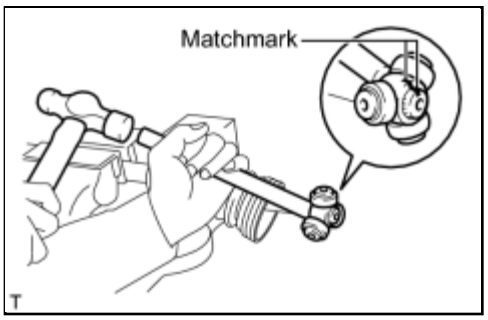

(f) Place matchmarks on the tripod joint and outboard joint shaft.

NOTICE:

Do not damage any part when placing the marks.

(g) Using a brass bar and hammer, remove the tripod joint from the front axle outboard joint shaft assembly.

NOTICE:

Do not tap the roller.

(h) Remove the No. 2 inboard joint boot clamp, the inboard joint boot and the inboard joint boot clamp.

5. REMOVE FRONT DRIVE SHAFT DAMPER CLAMP

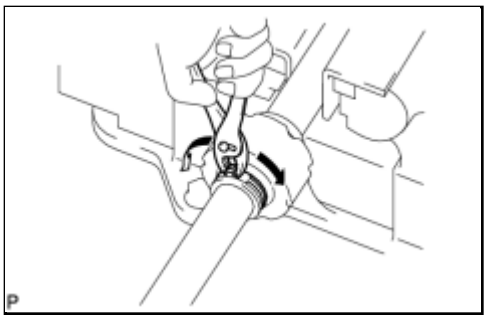

(a) Using pliers, remove the damper clamp as shown in the illustration.

6. REMOVE FRONT DRIVE SHAFT DAMPER

(a) Remove the drive shaft damper from the front axle outboard joint shaft assembly.

7. REMOVE NO. 2 FRONT AXLE OUTBOARD JOINT BOOT CLAMP

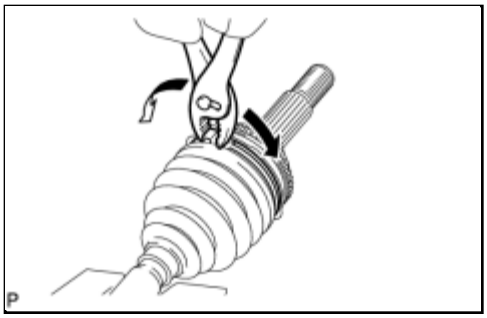

(a) Using pliers, remove the boot clamp as shown in the illustration.

8. REMOVE FRONT AXLE OUTBOARD JOINT BOOT CLAMP

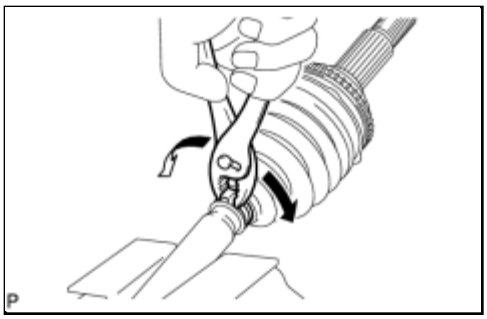

(a) Using pliers, remove the boot clamp as shown in the illustration.

9. REMOVE OUTBOARD JOINT BOOT

(a) Remove the outboard joint boot from the front axle outboard joint shaft assembly.

(b) Remove the old grease from the outboard joint.

10. REMOVE FRONT DRIVE SHAFT DUST COVER LH

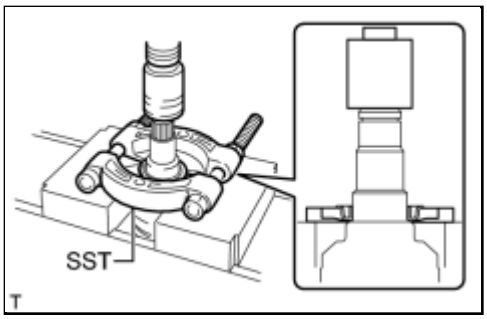

(a) Using SST and a press, remove the dust cover from the front drive inboard joint assembly.

SST: 09950-00020

NOTICE:

Do not drop the inboard joint.

11. REMOVE FRONT DRIVE SHAFT DUST COVER RH

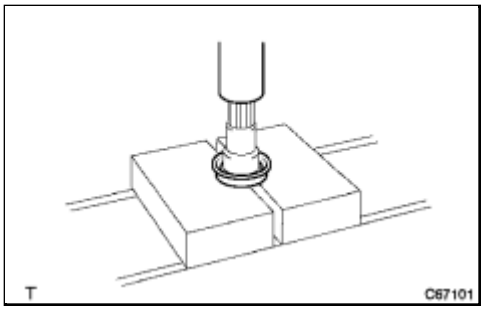

(a) Using a press, remove the drive shaft dust cover RH.

12. REMOVE FRONT DRIVE SHAFT DUST COVER

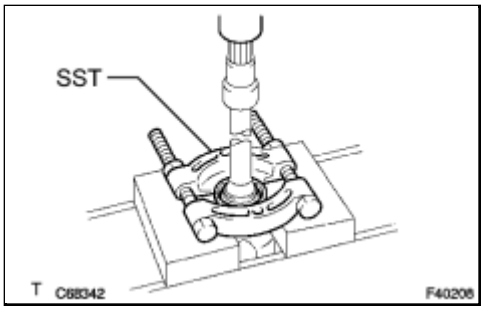

(a) Using SST and a press, remove the drive shaft dust cover.

SST: 09950-00020

13. REMOVE FRONT DRIVE SHAFT BEARING

(a) Using a snap ring expander, remove the drive shaft hole snap ring.

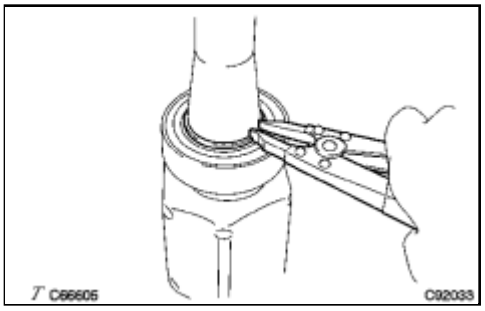

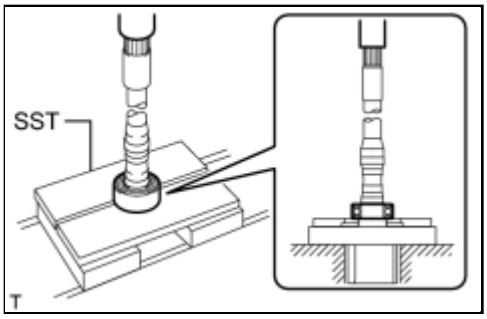

(b) Using SST and a press, remove the bearing.

SST: 09527-10011

(c) Remove the bearing bracket hole snap ring.

NOTICE:

Be careful not to drop the inboard joint assembly.

Last Modified: 3-10-2010	6.4 A	**From:** 200901
Model Year: 2010	**Model:** Corolla	**Doc ID:** RM000001HB001EX
Title: DRIVE SHAFT / PROPELLER SHAFT: FRONT DRIVE SHAFT ASSEMBLY (for 2AZ-FE): REASSEMBLY (2010 Corolla)		

REASSEMBLY

1. INSTALL FRONT DRIVE SHAFT BEARING

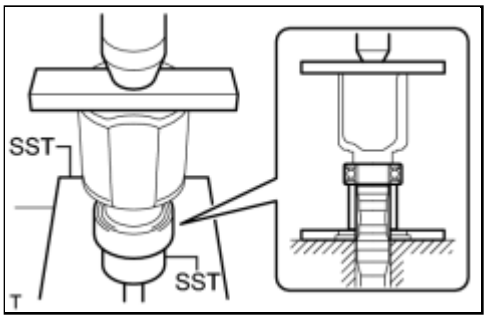

(a) Using SST and a steel plate, install a new front drive shaft bearing.

SST: 09527-30010
SST: 09527-10011
SST: 09630-24014
09620-24051

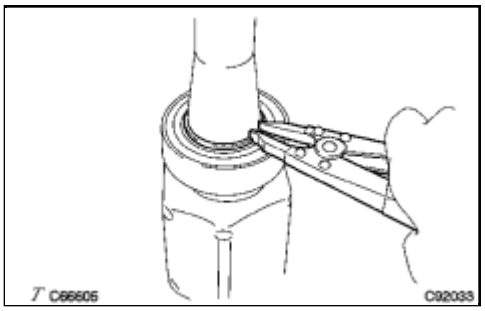

(b) Install a new bearing bracket hole snap ring to the front driver shaft assembly RH.

NOTICE:
The bearing should be completely installed.

2. INSTALL FRONT DRIVE SHAFT DUST COVER (for 2WD)

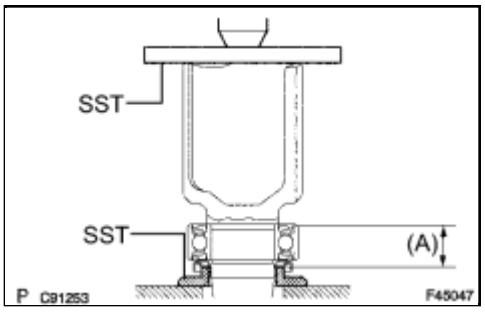

(a) Using SST and a press, install a new drive shaft dust cover.

SST: 09527-10011
SST: 09726-40010
Distance (A):
27.1 mm (1.067 in.)

3. INSTALL FRONT DRIVE SHAFT DUST COVER RH (for 2WD)

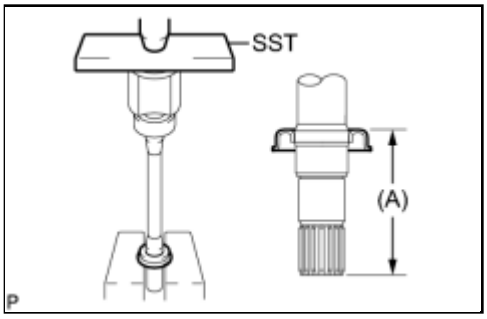

(a) Using SST and a press, install a new drive shaft dust cover RH until the distance from the tip of the center drive shaft to the drive shaft dust cover RH meets the specification, as shown in the illustration.

SST: 09527-10011

Distance (A):
90.07 to 90.93 mm (3.5460 to 3.5799 in.)

NOTICE:

- The dust cover should be completely installed.
- Be careful not to damage the dust cover.

4. INSTALL FRONT DRIVE SHAFT DUST COVER LH

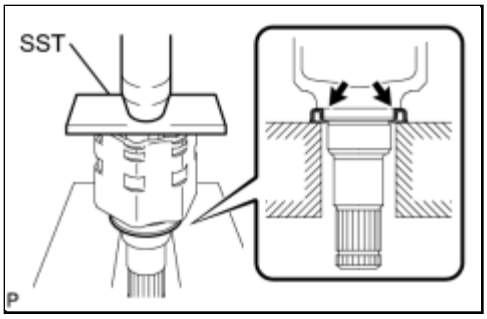

(a) Using SST and a press, install a new dust cover into the front drive inboard joint assembly until it is flush with the end.

SST: 09527-10011

NOTICE:

- Install the dust cover in the correct direction.
- Do not deform the dust cover.

5. INSTALL OUTBOARD JOINT BOOT

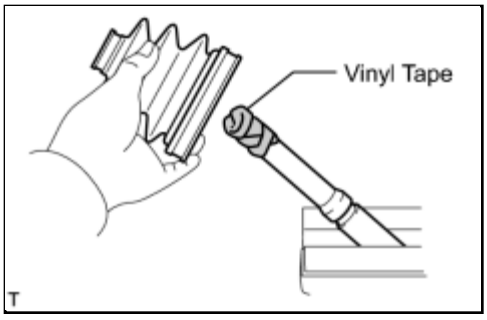

(a) Wrap the splines of the outboard joint shaft with vinyl tape to prevent the boot from being damaged.

(b) Install new parts onto the outboard joint shaft in the following order.

(1) No. 2 front axle outboard joint boot clamp

(2) Front axle outboard joint boot

(3) Front axle outboard joint boot clamp

(c) Pack the joint portion of the outboard joint shaft and outboard joint boot with grease.

Standard Quantity:
97 to 107 g (3.4 to 3.8 oz.)

(d) Install the outboard joint boot onto the outboard joint shaft groove.

NOTICE:

Keep the groove free of grease.

6. INSTALL NO. 2 FRONT AXLE OUTBOARD JOINT BOOT CLAMP

(a) Hold the outboard joint shaft in a vise using aluminum plates.

NOTICE:

Do not overtighten the vise.

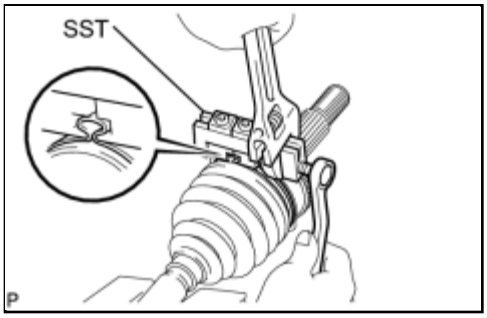

(b) Place SST onto the boot clamp, press it against the boot and slightly tighten SST.

SST: 09521-24010

(c) Tighten SST so that the clearance comes within the specified range.

Standard Clearance:
0.5 to 1.5 mm (0.0197 to 0.0591 in.)

(d) Remove SST.

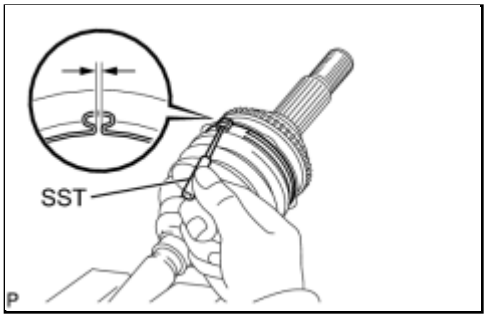

(e) Using SST, measure the clearance of the boot clamp as shown in the illustration.

SST: 09240-00020

Standard Clearance:
0.5 to 1.5 mm (0.0197 to 0.0591 in.)

NOTICE:

If the clearance is outside the specified range, retighten SST.

7. INSTALL FRONT AXLE OUTBOARD JOINT BOOT CLAMP

(a) Place SST onto the boot clamp, press it against the boot and slightly tighten SST.

SST: 09521-24010

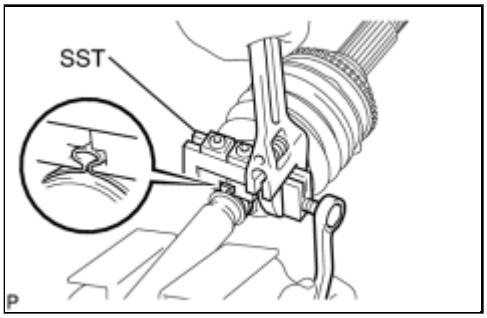

(b) Tighten SST so that the clearance comes within the specified range.

Standard Clearance:
0.5 to 1.5 mm (0.0197 to 0.0591 in.)

(c) Remove SST.

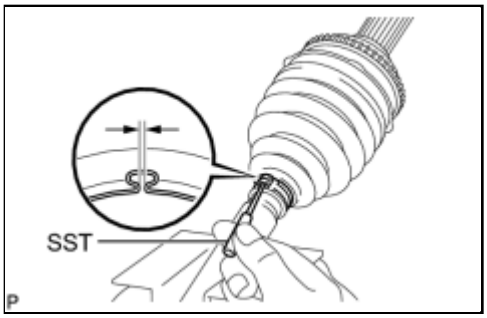

(d) Using SST, measure the clearance of the boot clamp as shown in the illustration.

SST: 09240-00020

Standard Clearance:
0.5 to 1.5 mm (0.0197 to 0.0591 in.)

NOTICE:

If the clearance is outside the specified range, retighten SST.

8. INSTALL FRONT DRIVE SHAFT DAMPER

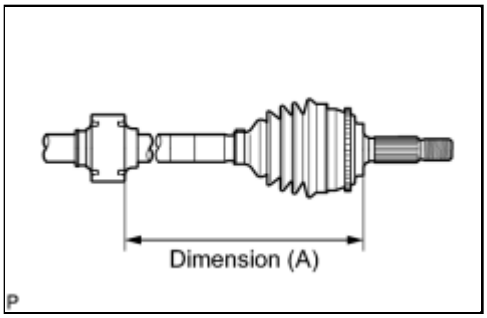

(a) Install the drive shaft damper onto the front axle outboard shaft assembly as shown in the illustration.

Dimension (A)

LH side	210.0 to 214.0 mm (8.27 to 8.43 in.)
RH side	213.1 to 217.1 mm (8.39 to 8.55 in.)

9. INSTALL FRONT DRIVE SHAFT DAMPER CLAMP

(a) Place SST onto the damper clamp, press it against the boot and slightly tighten SST.

SST: 09521-24010

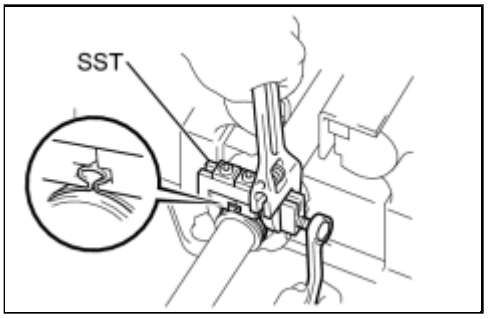

(b) Hold SST and tighten it so that the clearance comes within the specified range.

Standard Clearance:
0.5 to 1.5 mm (0.0197 to 0.0591 in.)

(c) Remove SST.

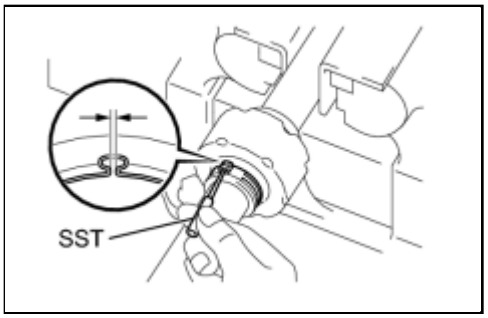

(d) Using SST, measure the clearance of the damper clamp as shown in the illustration.

SST: 09240-00020

Standard Clearance:
0.5 to 1.5 mm (0.0197 to 0.0591 in.)

NOTICE:

If the clearance is outside the specified range, retighten SST.

10. INSTALL FRONT DRIVE INBOARD JOINT ASSEMBLY

(a) Install new parts onto the outboard joint shaft in the following order.

(1) Front axle inboard joint boot clamp

(2) Front axle inboard joint boot

(3) No. 2 front axle inboard joint boot clamp

(b) Secure the outboard joint shaft in a vise using aluminum plates.

NOTICE:

Do not overtighten the vise.

(c) Remove the protective tape.

(d) Align the matchmarks and install the tripod joint onto the front axle outboard joint shaft assembly.

NOTICE:

Face the serrated side of the tripod joint outward and install it onto the outboard joint end.

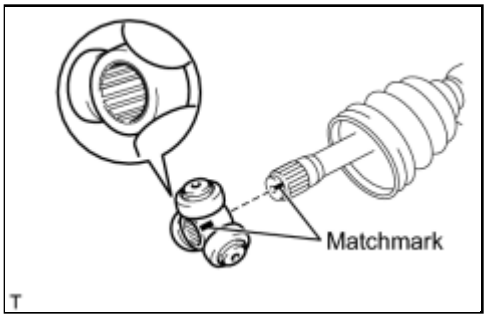

(e) Using a brass bar and hammer, install the tripod joint to the front axle outboard joint shaft assembly.

NOTICE:

- Do not hit the roller portion.
- Keep the tripod joint free of foreign matter.

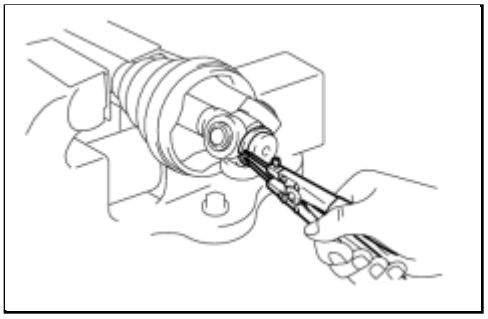

(f) Using a snap ring expander, install a new snap ring to the front axle outboard joint shaft assembly.

(g) Pack the inboard joint with grease.

Standard Quantity:
111 to 121 g (3.9 to 4.3 oz.)

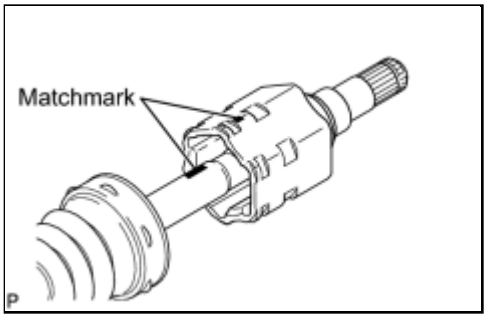

(h) Align the matchmarks and install the inboard joint onto the front axle outboard joint shaft assembly.

11. INSTALL INBOARD JOINT BOOT

(a) Install the inboard joint boot into the grooves of the inboard joint and outboard joint shaft.

NOTICE:

Keep the grooves free of grease.

12. INSTALL NO. 2 FRONT AXLE INBOARD JOINT BOOT CLAMP

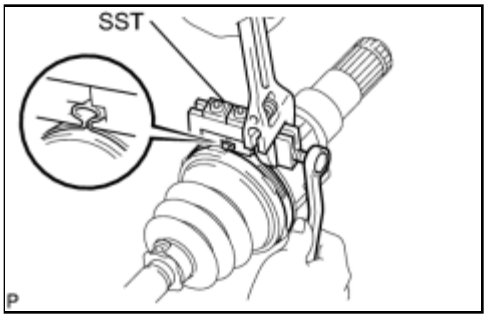

(a) Place SST onto the boot clamp, press it against the boot and slightly tighten SST.

SST: 09521-24010

(b) Tighten SST so that the clearance comes within the specified range.

Standard Clearance:
0.5 to 1.5 mm (0.0197 to 0.0591 in.)

(c) Remove SST.

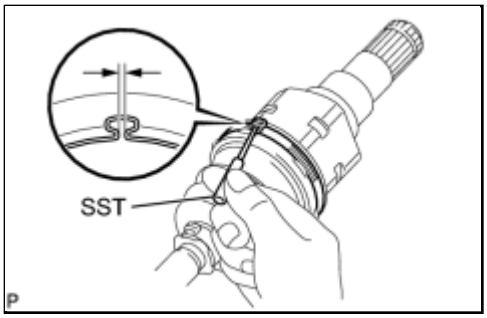

(d) Using SST, measure the clearance of the boot clamp as shown in the illustration.

SST: 09240-00020

Standard Clearance:
0.5 to 1.5 mm (0.0197 to 0.0591 in.)

NOTICE:

If the clearance is outside the specified range, retighten SST.

13. INSTALL FRONT AXLE INBOARD JOINT BOOT CLAMP

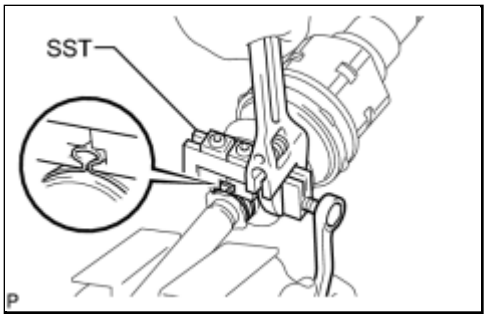

(a) Place SST onto the boot clamp, press it against the boot and slightly tighten SST.

SST: 09521-24010

(b) Tighten SST so that the clearance comes within the specified range.

Standard Clearance:
0.5 to 1.5 mm (0.0197 to 0.0591 in.)

(c) Remove SST.

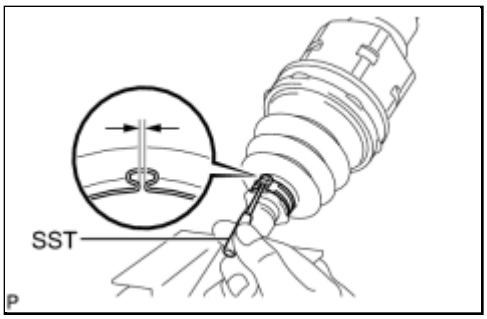

(d) Using SST, measure the clearance of the boot clamp as shown in the illustration.

SST: 09240-00020

Standard Clearance:

0.5 to 1.5 mm (0.0197 to 0.0591 in.)

NOTICE:

If the clearance is outside the specified range, retighten SST.

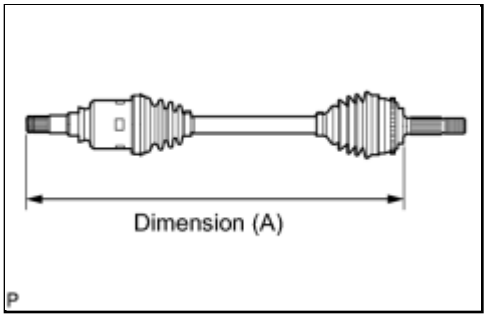

(e) Check whether the drive shaft dimensions are within the following specifications.

Dimension (A)

LH side	557.1 mm (1.83 ft.)
RH side	873.9 mm (2.87 ft.)

14. INSPECT FRONT DRIVE SHAFT

TOYOTA

Last Modified: 3-10-2010	6.4 G	**From:** 200901
Model Year: 2010	**Model:** Corolla	**Doc ID:** RM000001IW701GX
Title: DRIVE SHAFT / PROPELLER SHAFT: FRONT DRIVE SHAFT ASSEMBLY (for 2AZ-FE): INSPECTION (2010 Corolla)		

INSPECTION

1. INSPECT FRONT DRIVE SHAFT ASSEMBLY

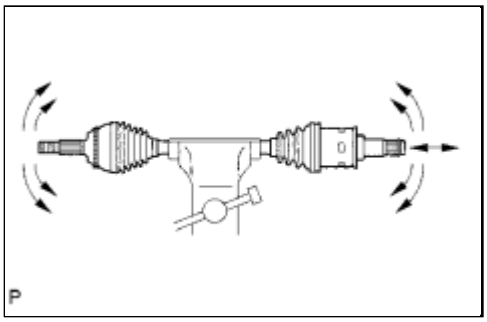

(a) Check that there is no excessive play in the outboard joint.

(b) Check that the inboard joint slides smoothly in the thrust direction.

(c) Check that there is no excessive play in the radial directions of the inboard joint.

(d) Check the boots for damage.

Last Modified: 3-10-2010	6.4 A	**From:** 200901
Model Year: 2010	**Model:** Corolla	**Doc ID:** RM000001HAW01JX
Title: DRIVE SHAFT / PROPELLER SHAFT: FRONT DRIVE SHAFT ASSEMBLY (for 2AZ-FE): INSTALLATION (2010 Corolla)		

INSTALLATION

1. INSTALL FRONT DRIVE SHAFT HOLE SNAP RING LH (for LH Side)

(a) Install a new front drive shaft hole snap ring LH to the front drive inboard joint assembly.

2. INSTALL FRONT DRIVE SHAFT ASSEMBLY LH

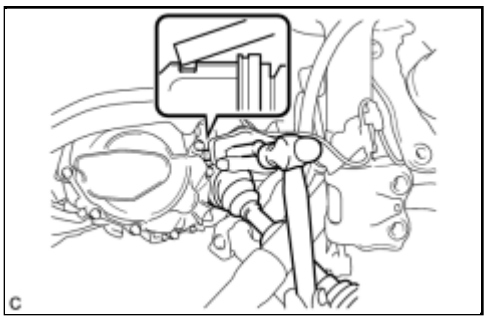

(a) Align the inboard joint splines, and using a brass bar and a hammer, install the front drive shaft assembly LH.

NOTICE:

- Face the end gap of the front drive inboard joint hole snap ring downward.
- Do not damage the oil seal.
- Do not damage the inboard joint boot.

HINT:

Confirm whether the drive shaft is securely driven in by checking the reaction force and sound.

3. INSTALL FRONT DRIVE SHAFT ASSEMBLY RH

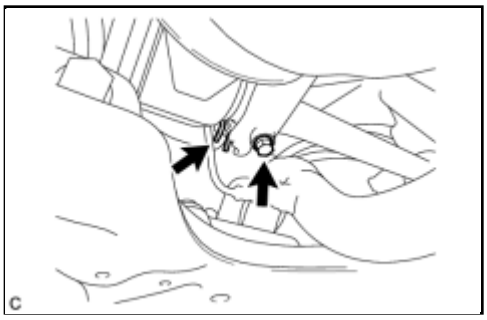

(a) Install the front drive shaft assembly RH.

(b) Using a screwdriver, install a new bearing bracket hole snap ring.

NOTICE:

- Do not damage the boot or oil seal.
- Move the drive shaft assembly while keeping it level.

(c) Install a new bolt.

Torque: 32 N·m (330 kgf·cm, 24ft·lbf)

4. INSTALL MANUAL TRANSMISSION CASE PROTECTOR (for Manual Transaxle)

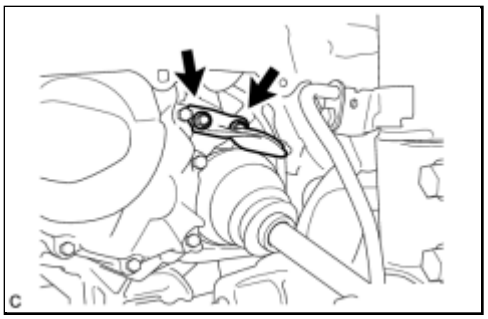

(a) Install the manual transmission case protector with the 2 bolts.

Torque: 18 N·m (184 kgf·cm, 13ft·lbf)

5. INSTALL FRONT AXLE ASSEMBLY LH INFO

6. INSTALL FRONT AXLE ASSEMBLY RH

HINT:

Perform the same procedure as for the LH side.

7. CONNECT FRONT LOWER SUSPENSION ARM LH INFO

8. CONNECT FRONT LOWER SUSPENSION ARM RH

HINT:

Perform the same procedure as for the LH side.

9. INSTALL TIE ROD END SUB-ASSEMBLY LH INFO

10. INSTALL TIE ROD END SUB-ASSEMBLY RH

HINT:

Perform the same procedure as for the LH side.

11. INSTALL FRONT STABILIZER LINK ASSEMBLY LH INFO

12. INSTALL FRONT STABILIZER LINK ASSEMBLY RH

HINT:

Perform the same procedure as for the LH side.

13. CONNECT FRONT SPEED SENSOR LH (for TMC Made) INFO

14. CONNECT FRONT SPEED SENSOR RH (for TMC Made)

HINT:

Perform the same procedure as for the LH side.

15. CONNECT FRONT SPEED SENSOR LH (except TMC Made) INFO

16. CONNECT FRONT SPEED SENSOR RH (except TMC Made)

HINT:

Perform the same procedure as for the LH side.

17. INSTALL FRONT AXLE SHAFT NUT LH

(a) Clean the threaded parts on the drive shaft and axle shaft nut using a non-residue solvent.

NOTICE:

- Be sure to perform this work for a new drive shaft.
- Keep the threaded parts free of oil and foreign matter.

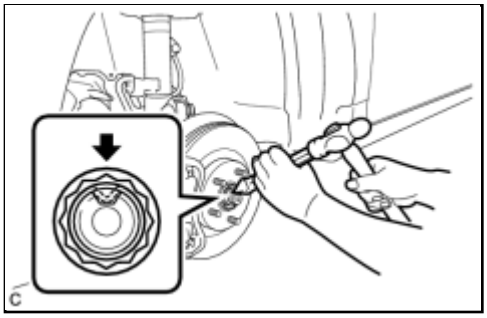

(b) Using a socket wrench (30 mm), install a new axle shaft nut.

Torque: 216 N·m (2203 kgf·cm, 160ft·lbf)

(c) Using a chisel and hammer, caulk the axle shaft nut.

18. INSTALL FRONT AXLE SHAFT NUT RH

HINT:

Perform the same procedure as for the LH side.

19. INSTALL FRONT WHEELS

Torque: 103 N·m (1050 kgf·cm, 76ft·lbf)

20. ADD MANUAL TRANSAXLE OIL (for Manual Transaxle) INFO

21. ADD AUTOMATIC TRANSAXLE FLUID (for Automatic Transaxle)

22. INSPECT MANUAL TRANSAXLE OIL (for Manual Transaxle) INFO

23. INSPECT AUTOMATIC TRANSAXLE FLUID (for Automatic Transaxle) INFO

24. INSPECT FOR OIL LEAK (for Manual Transaxle)

25. INSPECT FOR FLUID LEAK (for Automatic Transaxle)

26. INSTALL ENGINE UNDER COVER LH

27. INSTALL ENGINE UNDER COVER RH

28. INSPECT AND ADJUST FRONT WHEEL ALIGNMENT

HINT: INFO .

29. INSPECT SPEED SENSOR SIGNAL (w/o VSC)

HINT: INFO .

30. INSPECT SPEED SENSOR SIGNAL (w/ VSC)

HINT: INFO .

Last Modified: 3-10-2010	6.4 K	**From:** 200901
Model Year: 2010	**Model:** Corolla	**Doc ID:** RM000003CY3006X
Title: DRIVE SHAFT / PROPELLER SHAFT: FRONT DRIVE SHAFT ASSEMBLY (for 2ZR-FE): COMPONENTS (2010 Corolla)		

COMPONENTS

ILLUSTRATION

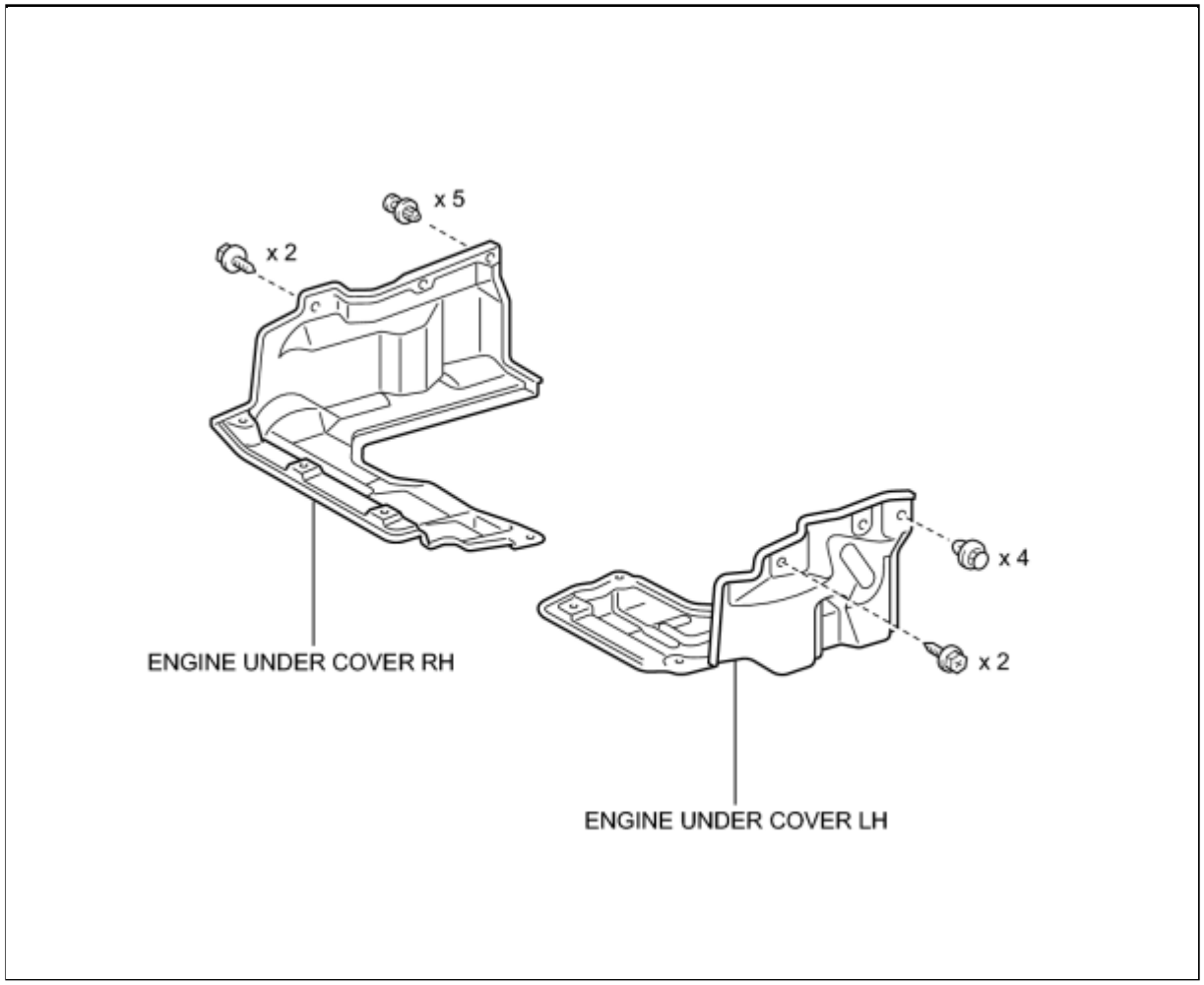

ILLUSTRATION

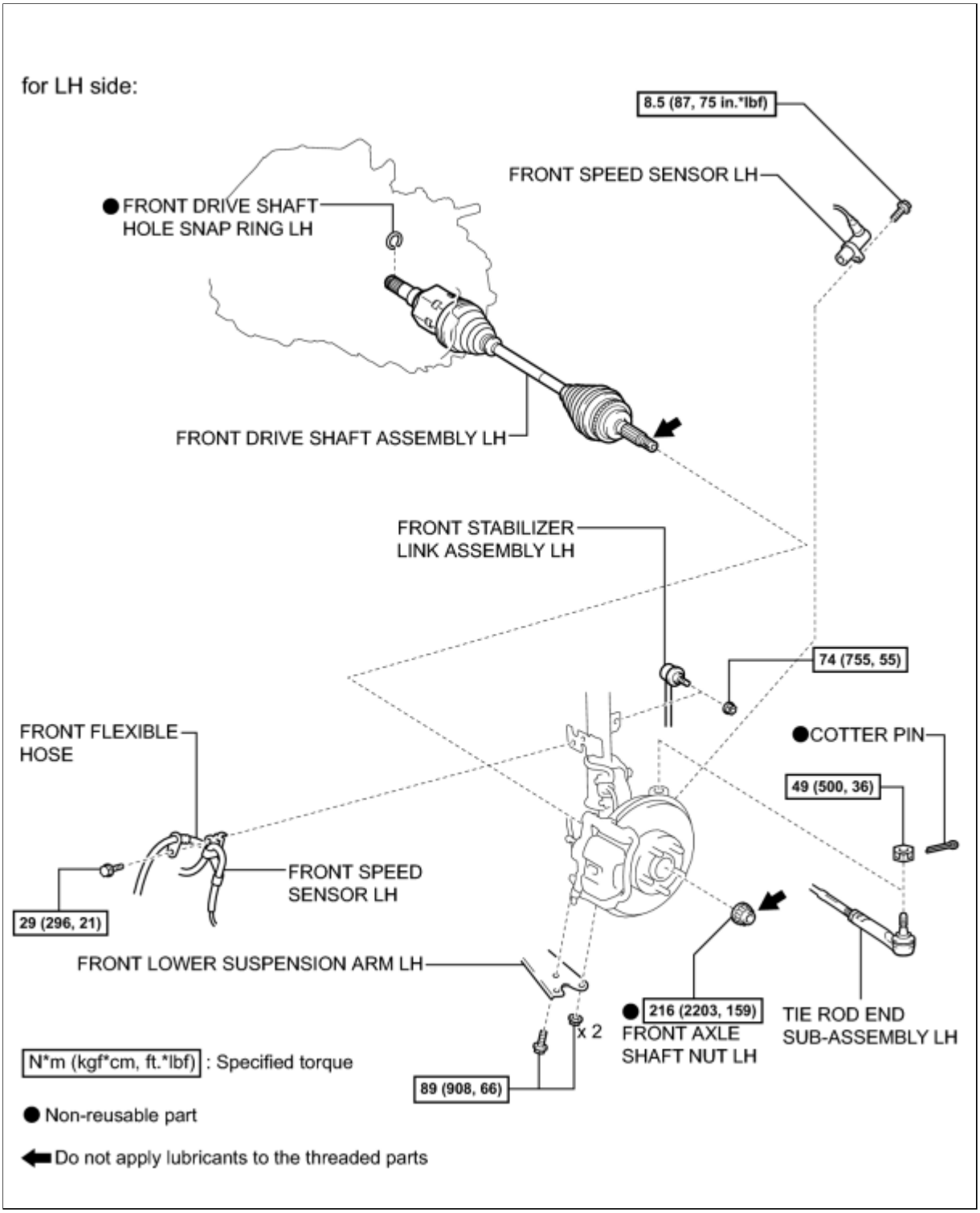

ILLUSTRATION

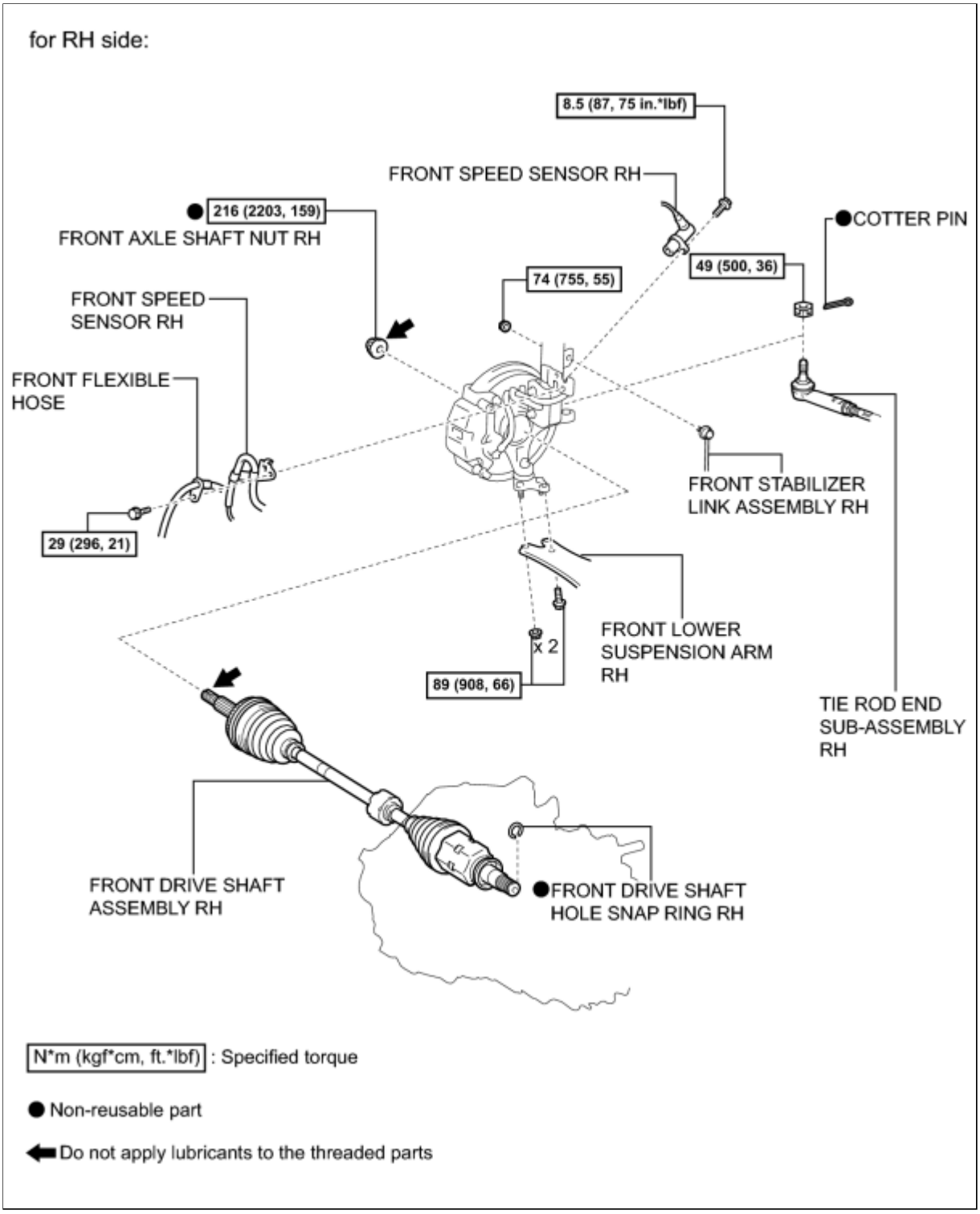

ILLUSTRATION

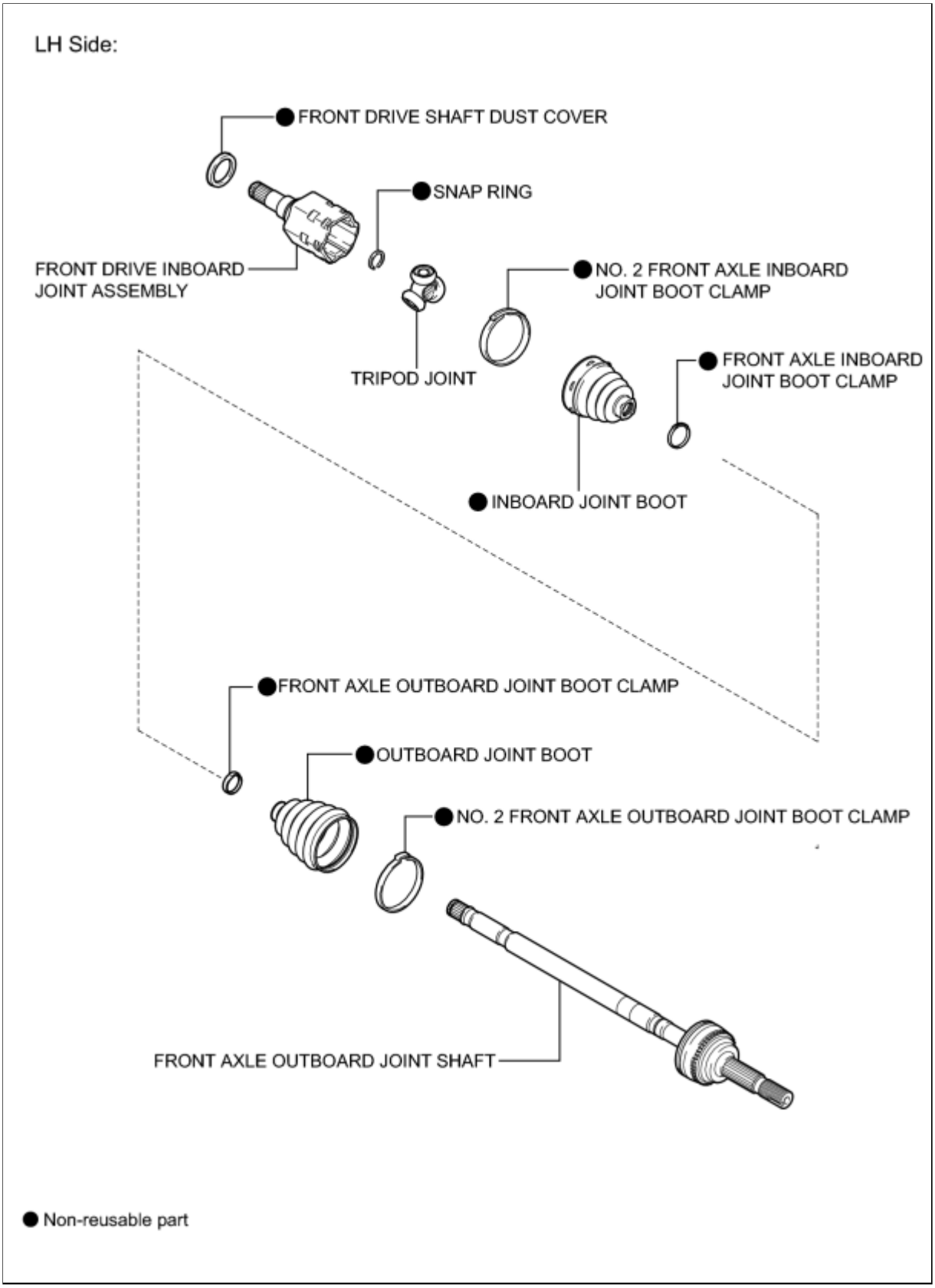

ILLUSTRATION

RH Side:

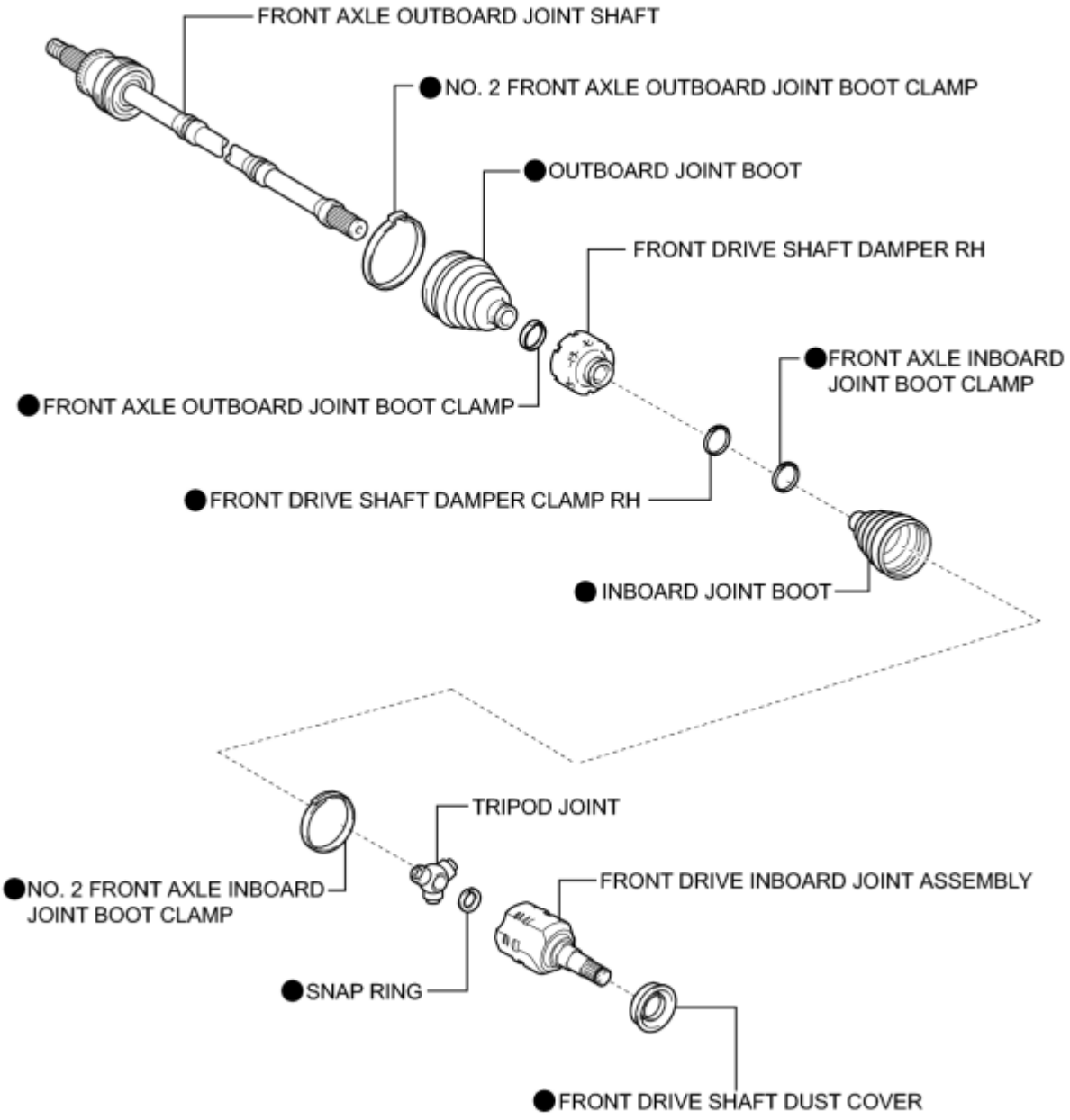

● Non-reusable part

Last Modified: 3-10-2010	6.4 A	**From:** 200901
Model Year: 2010	**Model:** Corolla	**Doc ID:** RM000001HAY01KX
Title: DRIVE SHAFT / PROPELLER SHAFT: FRONT DRIVE SHAFT ASSEMBLY (for 2ZR-FE): REMOVAL (2010 Corolla)		

REMOVAL

1. REMOVE ENGINE UNDER COVER LH

2. REMOVE ENGINE UNDER COVER RH

3. DRAIN MANUAL TRANSAXLE OIL (for Manual Transaxle) INFO

4. DRAIN AUTOMATIC TRANSAXLE FLUID (for Automatic Transaxle) INFO

5. REMOVE FRONT WHEELS

6. REMOVE FRONT AXLE SHAFT NUT LH

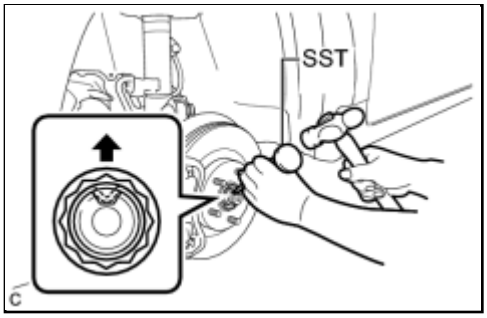

(a) Using SST and a hammer, release the staked part of the front axle shaft nut LH.

SST: 09930-00010

NOTICE:

- Insert SST into the groove with the flat surface facing up.
- Do not damage the tip of SST using grinders.
- Completely unstake the staked part before removing the front axle shaft nut.
- Do not damage the threads of the drive shaft.

(b) Using a socket wrench (30 mm), remove the front axle shaft nut LH.

7. REMOVE FRONT AXLE SHAFT NUT RH

HINT:

Perform the same procedure as for the LH side.

8. SEPARATE FRONT SPEED SENSOR LH (for TMC Made) INFO

9. SEPARATE FRONT SPEED SENSOR RH (for TMC Made)

HINT:

Perform the same procedure as for the LH side.

10. SEPARATE FRONT SPEED SENSOR LH (except TMC Made) INFO

11. SEPARATE FRONT SPEED SENSOR RH (except TMC Made)

HINT:

Perform the same procedure as for the LH side.

12. SEPARATE FRONT STABILIZER LINK ASSEMBLY LH INFO

13. SEPARATE FRONT STABILIZER LINK ASSEMBLY RH

HINT:

Perform the same procedure as for the LH side.

14. SEPARATE TIE ROD END SUB-ASSEMBLY LH INFO

15. SEPARATE TIE ROD END SUB-ASSEMBLY RH

HINT:

Perform the same procedure as for the LH side.

16. SEPARATE FRONT LOWER SUSPENSION ARM LH INFO

17. SEPARATE FRONT LOWER SUSPENSION ARM RH

HINT:

Perform the same procedure as for the LH side.

18. SEPARATE FRONT AXLE ASSEMBLY LH

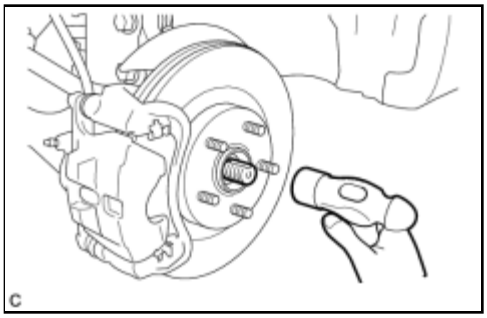

(a) Using a plastic hammer, tap the end of the drive shaft and disengage the fitting between the drive shaft and front axle assembly LH.

HINT:

If it is difficult to disengage the fitting, tap the end of the drive shaft with a brass bar and hammer.

(b) Push the front axle assembly LH out of the vehicle to remove the drive shaft from the front axle assembly LH.

NOTICE:

- Do not push out the front axle further than necessary.
- Do not damage the outboard joint boot.
- Do not damage the speed sensor rotor.

19. SEPARATE FRONT AXLE ASSEMBLY RH

HINT:

Perform the same procedure as for the LH side.

20. REMOVE FRONT DRIVE SHAFT ASSEMBLY LH

(a) Using SST, remove the front drive shaft assembly LH.

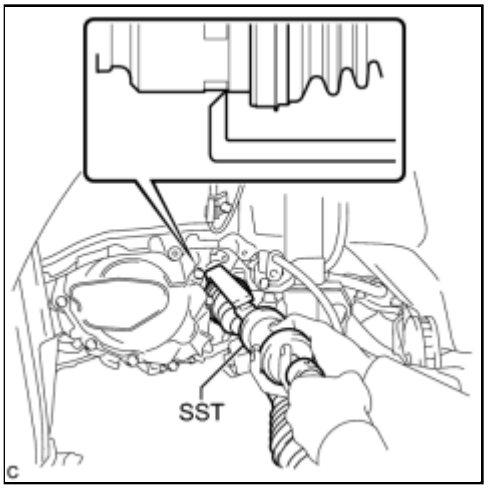

SST: 09520-01010
SST: 09520-24010
09520-32040

NOTICE:

- Do not damage the oil seal.
- Do not damage the inboard joint boot.
- Do not drop the drive shaft.

21. REMOVE FRONT DRIVE SHAFT ASSEMBLY RH

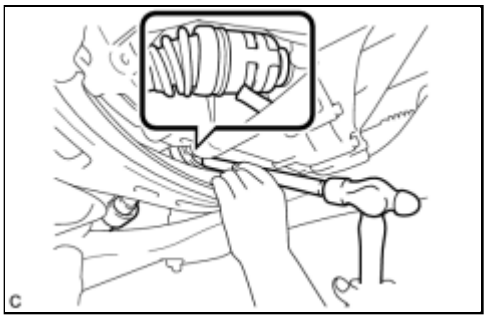

(a) Using a brass bar and hammer, remove the front drive shaft assembly RH.

NOTICE:

- Do not damage the oil seal.
- Do not damage the inboard joint boot.
- Do not drop the drive shaft.

22. REMOVE FRONT DRIVE SHAFT HOLE SNAP RING LH

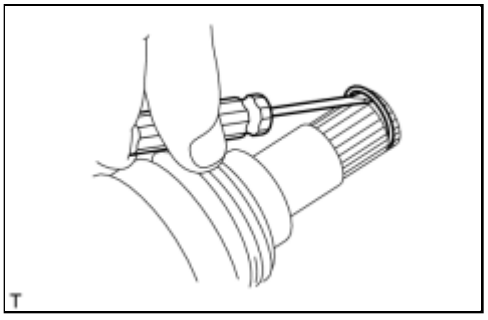

(a) Using a screwdriver, remove the front drive shaft hole snap ring LH from the front drive inboard joint assembly LH.

23. REMOVE FRONT DRIVE SHAFT HOLE SNAP RING RH

HINT:

Perform the same procedure as for the LH side.

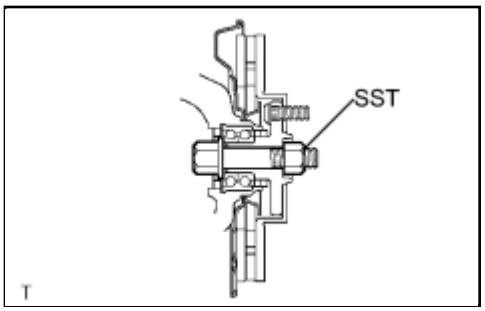

24. FIX FRONT AXLE ASSEMBLY LH

SST: 09608-16042

09608-02021

09608-02041

NOTICE:

The hub bearing could be damaged if it is subjected to the vehicle weight, such as when moving the vehicle with the drive shaft removed. Therefore, make sure to support the hub bearing with SST when the vehicle weight is applied.

Last Modified: 3-10-2010	6.4 A	**From:** 200901
Model Year: 2010	**Model:** Corolla	**Doc ID:** RM000001IWA01DX
Title: DRIVE SHAFT / PROPELLER SHAFT: FRONT DRIVE SHAFT ASSEMBLY (for 2ZR-FE): DISASSEMBLY (2010 Corolla)		

DISASSEMBLY

1. REMOVE NO. 2 FRONT AXLE INBOARD JOINT BOOT CLAMP

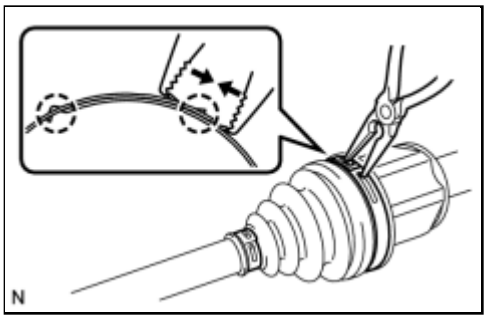

(a) Using pliers, remove the No. 2 front axle inboard joint boot clamp as shown in the illustration.

2. REMOVE FRONT AXLE INBOARD JOINT BOOT CLAMP

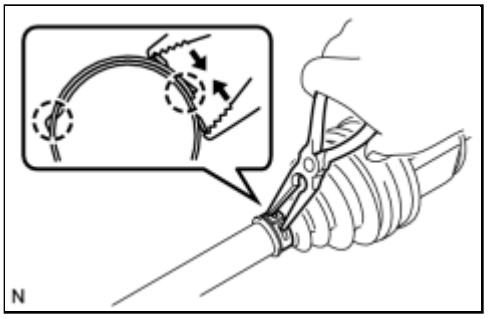

(a) Using pliers, remove the front axle inboard joint boot clamp as shown in the illustration.

3. SEPARATE INBOARD JOINT BOOT

(a) Separate the inboard joint boot from the front axle inboard joint assembly.

4. REMOVE FRONT DRIVE INBOARD JOINT ASSEMBLY

(a) Put matchmarks on the front axle inboard joint assembly and front axle outboard joint shaft.

NOTICE:

Do not use a punch for the marks.

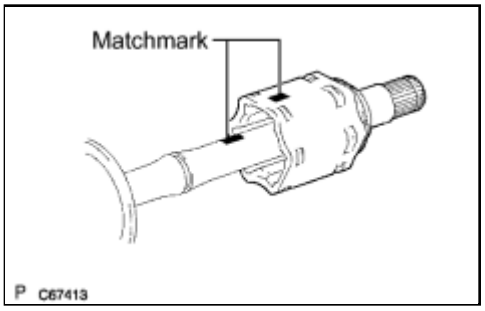

(b) Remove the front axle inboard joint assembly from the front axle outboard joint shaft.

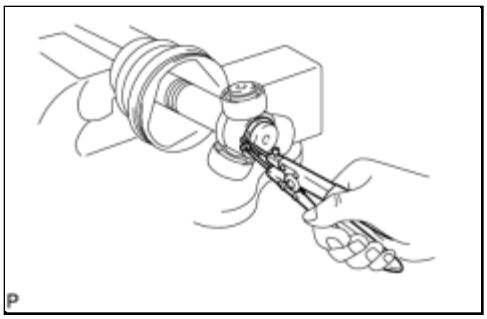

(c) Using a snap ring expander, remove the shaft snap ring.

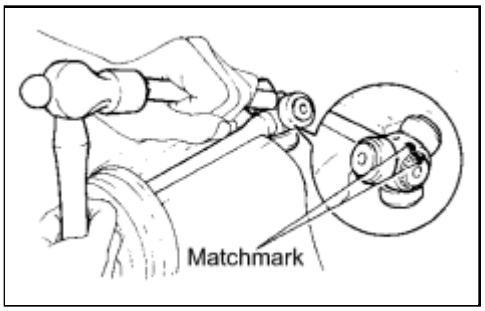

(d) Put matchmarks on the outboard joint shaft and tripod joint.

NOTICE:

Do not use a punch for the marks.

(e) Using a brass bar and a hammer, remove the tripod joint from the front axle outboard joint shaft.

NOTICE:

Do not tap the roller.

(f) Remove the inboard joint boot from the front axle outboard joint shaft.

5. REMOVE FRONT DRIVE SHAFT DAMPER CLAMP RH (for RH Side)

(a) Using pliers, remove the front drive shaft damper clamp RH, as shown in the illustration.

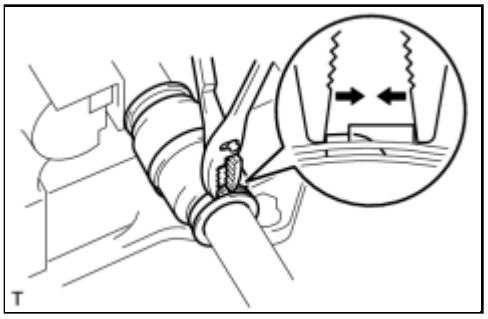

6. REMOVE FRONT DRIVE SHAFT DAMPER RH (for RH Side)

(a) Remove the front drive shaft damper RH from the front axle outboard joint shaft.

7. REMOVE NO. 2 FRONT AXLE OUTBOARD JOINT BOOT CLAMP

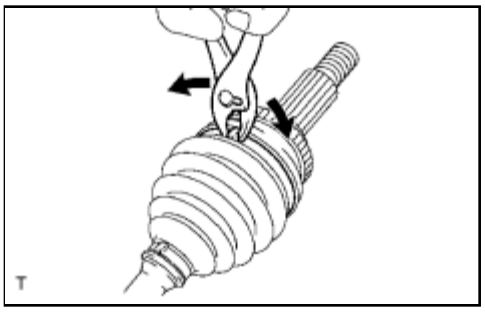

(a) Using pliers, remove the No. 2 front axle outboard joint boot clamp as shown in the illustration.

8. REMOVE FRONT AXLE OUTBOARD JOINT BOOT CLAMP

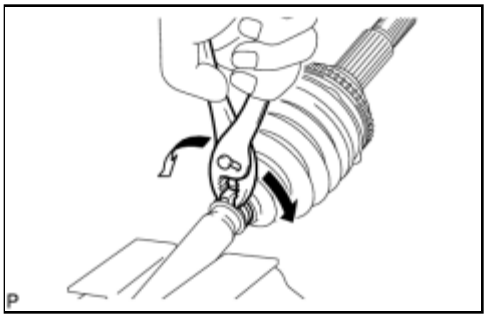

(a) Using pliers, remove the front axle outboard joint boot clamp as shown in the illustration.

9. REMOVE OUTBOARD JOINT BOOT

(a) Remove the outboard joint boot from the front axle outboard joint shaft.

(b) Remove the grease from the outboard joint.

10. REMOVE FRONT DRIVE SHAFT DUST COVER

(a) Using SST and a press, remove the front drive shaft dust

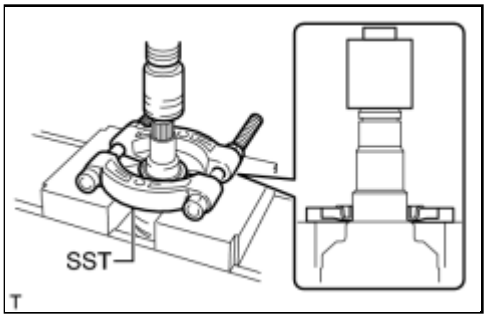

cover.

SST: 09950-00020

NOTICE:

Be careful not to drop the inboard joint assembly.

Last Modified: 3-10-2010	6.4 A	**From:** 200901
Model Year: 2010	**Model:** Corolla	**Doc ID:** RM000001IWB01DX
Title: DRIVE SHAFT / PROPELLER SHAFT: FRONT DRIVE SHAFT ASSEMBLY (for 2ZR-FE): REASSEMBLY (2010 Corolla)		

REASSEMBLY

1. INSTALL FRONT DRIVE SHAFT DUST COVER

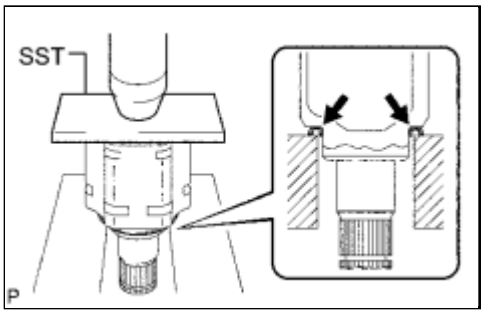

(a) Using SST and a press, install a new dust cover into the front drive inboard joint assembly until it is flush with the end.

SST: 09527-10011

NOTICE:

- Install the dust cover in the correct direction.
- Do not deform the dust cover.

2. INSTALL OUTBOARD JOINT BOOT

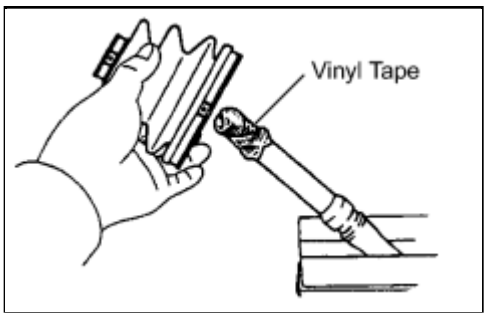

(a) Wrap the splines of the outboard joint shaft with vinyl tape to prevent the boot from being damaged.

(b) Install new parts onto the outboard joint shaft in the following order.

(1) No. 2 front axle outboard joint boot clamp

(2) Outboard joint boot

(3) Front axle outboard joint boot clamp

(c) Pack the joint portion of the front axle outboard joint shaft and outboard joint boot with grease.

Grease capacity:
85 to 105 g (3.0 to 3.7 oz.)

(d) Install the outboard joint boot onto the outboard joint shaft groove.

NOTICE:

Keep the groove free of grease.

3. INSTALL NO. 2 FRONT AXLE OUTBOARD JOINT BOOT CLAMP

(a) Hold the outboard joint shaft in a vise using aluminum plates.

NOTICE:

Do not overtighten the vise.

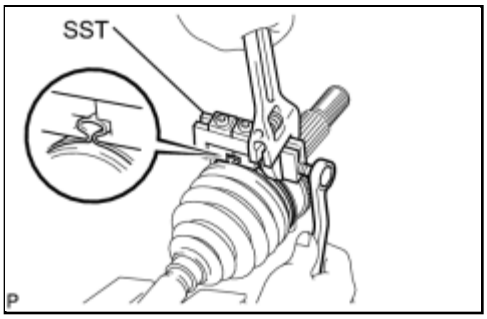

(b) Place SST onto the boot clamp, press it against the boot and slightly tighten SST.

SST: 09521-24010

(c) Tighten SST so that the clearance comes within the specified range.

NOTICE:

Do not overtighten SST.

(d) Remove SST.

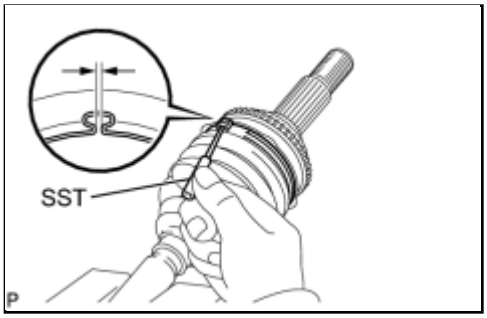

(e) Using SST, measure the clearance of the boot clamp as shown in the illustration.

SST: 09240-00020

Standard Clearance:

1.2 to 4.0 mm (0.0473 to 0.157 in.)

NOTICE:

If the clearance is outside the specified range, retighten SST.

4. INSTALL FRONT AXLE OUTBOARD JOINT BOOT CLAMP

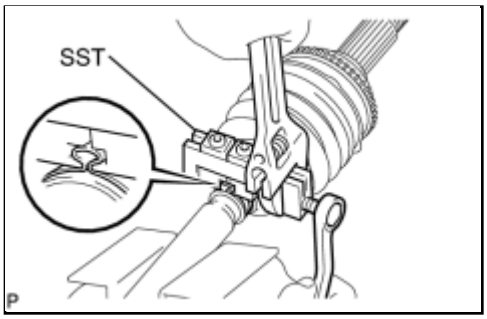

(a) Place SST onto the boot clamp, press it against the boot and slightly tighten SST.

SST: 09521-24010

(b) Tighten SST so that the clearance comes within the specified range.

NOTICE:

Do not overtighten SST.

(c) Remove SST.

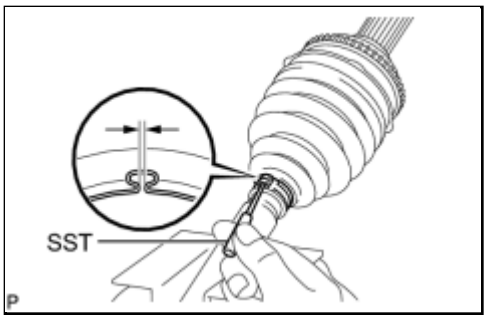

(d) Using SST, measure the clearance of the boot clamp as shown in the illustration.

SST: 09240-00020

Standard Clearance:
1.2 to 4.0 mm (0.0473 to 0.157 in.)

NOTICE:

If the clearance is outside the specified range, retighten SST.

5. INSTALL FRONT DRIVE SHAFT DAMPER RH

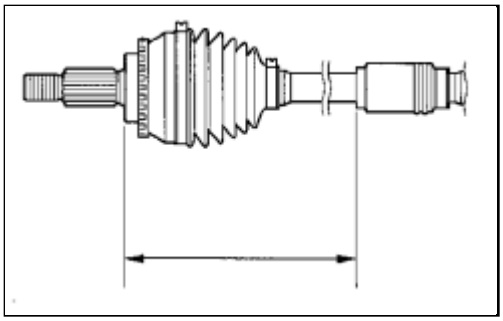

(a) Install the drive shaft damper onto the front axle outboard shaft assembly as shown in the illustration.

Distance:
412.5 to 416.5 mm (1.3535 to 1.3665 ft.)

6. INSTALL FRONT DRIVE SHAFT DAMPER CLAMP RH (for RH Side)

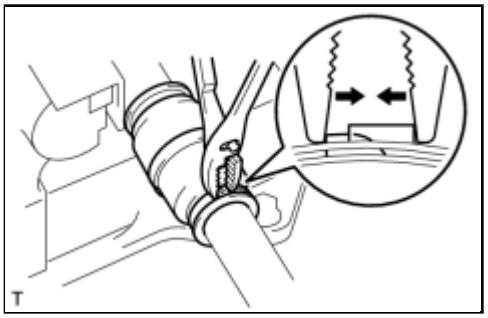

(a) Using pliers, install a new drive shaft damper clamp, as shown in the illustration.

7. INSTALL FRONT DRIVE INBOARD JOINT ASSEMBLY

(a) Install new parts onto the outboard joint shaft in the following order.

(1) Front axle inboard joint boot clamp

(2) Inboard joint boot

(3) No. 2 front axle inboard joint boot clamp

(b) Secure the front axle outboard joint shaft in a vise using aluminum plates.

NOTICE:

Do not overtighten the vise.

(c) Remove the protective tape.

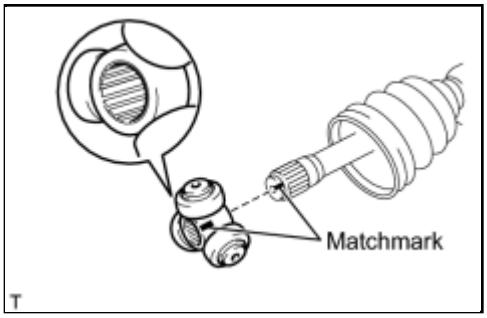

(d) Align the matchmarks and install the tripod joint onto the front axle outboard joint shaft.

NOTICE:

Face the serrated side of the tripod joint outward and install it onto the outboard joint end.

(e) Using a brass bar and hammer, install the tripod joint to the front axle outboard joint shaft.

NOTICE:

- Do not hit the roller portion.
- Keep the tripod joint free of foreign matter.

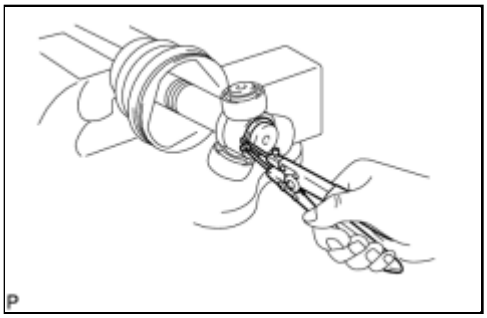

(f) Using a snap ring expander, install a new snap ring to the front axle outboard joint shaft.

(g) Pack the inboard joint with grease.

Grease Capacity

for MEXICO LH side	155 to 175 g (5.5 to 6.2 oz.)
except MEXICO LH side	110 to 130 g (3.9 to 4.6 oz.)

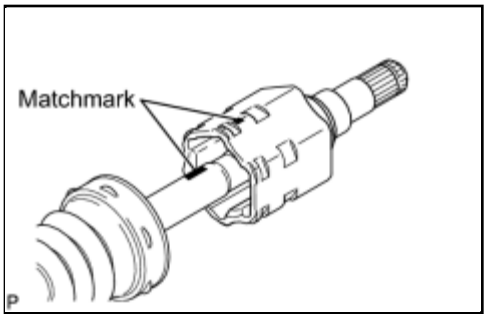

(h) Align the matchmarks and install the inboard joint onto the front axle outboard joint shaft.

8. INSTALL INBOARD JOINT BOOT

(a) Install the inboard joint boot to the inboard joint assembly.

9. INSTALL NO. 2 FRONT AXLE INBOARD JOINT BOOT CLAMP

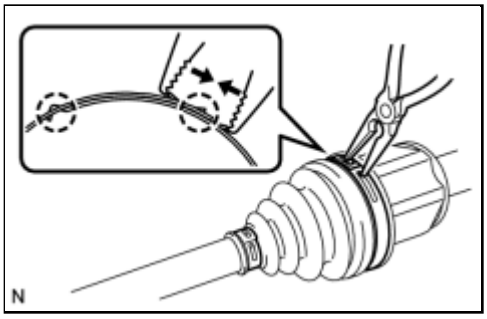

(a) Using pliers, install a new No. 2 front axle inboard joint boot clamp as shown in the illustration.

10. INSTALL FRONT AXLE INBOARD JOINT BOOT CLAMP

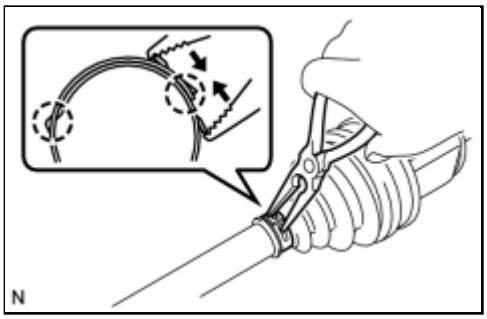

(a) Using pliers, install the new front axle inboard joint boot clamp as shown in the illustration.

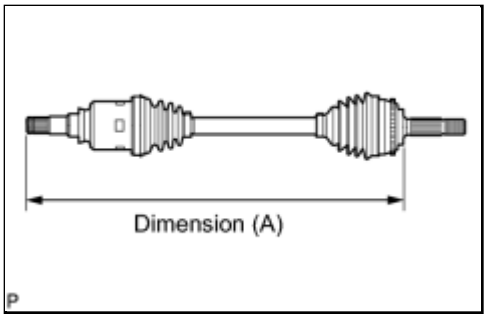

(b) Check whether the drive shaft dimensions are within the following specifications.

Dimension (A)

LH side (for MEXICO)	582.5 mm (1.91 ft.)
LH side (except MEXICO)	580.3 mm (1.90 ft.)
RH side	856.3 mm (2.81 ft.)

11. INSPECT FRONT DRIVE SHAFT INFO

Last Modified: 3-10-2010	6.4 G	**From:** 200901
Model Year: 2010	**Model:** Corolla	**Doc ID:** RM000001IW701HX
Title: DRIVE SHAFT / PROPELLER SHAFT: FRONT DRIVE SHAFT ASSEMBLY (for 2ZR-FE): INSPECTION (2010 Corolla)		

INSPECTION

1. INSPECT FRONT DRIVE SHAFT ASSEMBLY

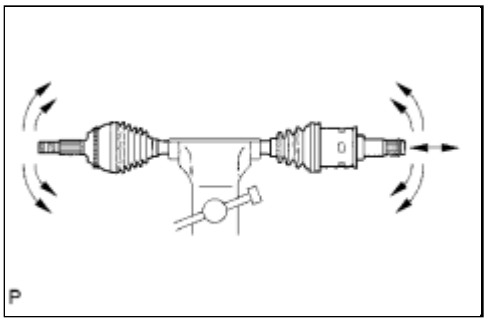

(a) Check that there is no excessive play in the outboard joint.

(b) Check that the inboard joint slides smoothly in the thrust direction.

(c) Check that there is no excessive play in the radial directions of the inboard joint.

(d) Check the boots for damage.

Last Modified: 3-10-2010	6.4 A	**From:** 200901
Model Year: 2010	**Model:** Corolla	**Doc ID:** RM000001HAW01KX
Title: DRIVE SHAFT / PROPELLER SHAFT: FRONT DRIVE SHAFT ASSEMBLY (for 2ZR-FE): INSTALLATION (2010 Corolla)		

INSTALLATION

1. INSTALL FRONT DRIVE SHAFT HOLE SNAP RING LH

(a) Install a new front drive shaft hole snap ring LH to the front drive inboard joint assembly.

2. INSTALL FRONT DRIVE SHAFT HOLE SNAP RING RH

HINT:

Perform the same procedure as for the LH side.

3. INSTALL FRONT DRIVE SHAFT ASSEMBLY LH

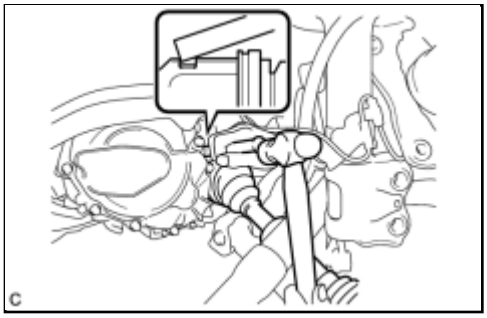

(a) Align the inboard joint splines, and using a brass bar and a hammer, install the front drive shaft assembly LH.

NOTICE:

- Face the end gap of the front drive inboard joint hole snap ring downward.
- Do not damage the oil seal.
- Do not damage the inboard joint boot.

HINT:

Confirm whether the drive shaft is securely driven in by checking the reaction force and sound.

4. INSTALL FRONT DRIVE SHAFT ASSEMBLY RH

HINT:

Perform the same procedure as for the LH side.

5. INSTALL FRONT AXLE ASSEMBLY LH

(a) Push the front axle assembly LH out of the vehicle to align the spline of the drive shaft with the front axle assembly LH and insert the front axle assembly LH.

NOTICE:

- Do not push out the front axle further than necessary.
- Do not damage the outboard joint boot.
- Check for any foreign matter on the speed sensor rotor and insertion part.
- Do not damage the speed sensor rotor.

6. INSTALL FRONT AXLE ASSEMBLY RH

HINT:

Perform the same procedure as for the LH side.

7. INSTALL FRONT LOWER SUSPENSION ARM LH INFO

8. INSTALL FRONT LOWER SUSPENSION ARM RH

HINT:

Perform the same procedure as for the LH side.

9. CONNECT TIE ROD END SUB-ASSEMBLY LH INFO

10. CONNECT TIE ROD END SUB-ASSEMBLY RH

HINT:

Perform the same procedure as for the LH side.

11. INSTALL FRONT STABILIZER LINK ASSEMBLY LH INFO

12. INSTALL FRONT STABILIZER LINK ASSEMBLY RH

HINT:

Perform the same procedure as for the LH side.

13. CONNECT FRONT SPEED SENSOR LH (for TMC Made) INFO

14. CONNECT FRONT SPEED SENSOR RH (for TMC Made)

HINT:

Perform the same procedure as for the LH side.

15. CONNECT FRONT SPEED SENSOR LH (except TMC Made) INFO

16. CONNECT FRONT SPEED SENSOR RH (except TMC Made)

HINT:

Perform the same procedure as for the LH side.

17. INSTALL FRONT AXLE SHAFT NUT LH

(a) Clean the threaded parts on the drive shaft and front axle shaft nut using a non-residue solvent.

NOTICE:

- Be sure to perform this work for a new drive shaft.
- Keep the threaded parts free of oil and foreign matter.

(b) Using a socket wrench (30 mm), install a new front axle shaft nut.

Torque: 216 N·m (2203 kgf·cm, 160ft·lbf)

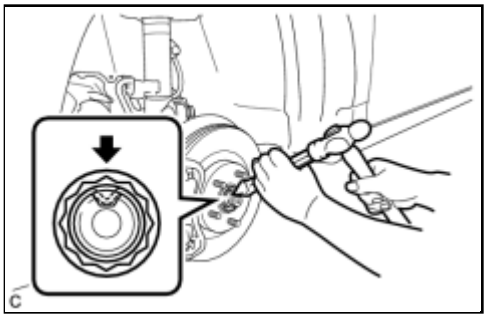

(c) Using a chisel and hammer, caulk the axle hub nut.

18. INSTALL FRONT AXLE SHAFT NUT RH

HINT:

Perform the same procedure as for the LH side.

19. INSTALL FRONT WHEELS

Torque: 103 N·m (1050 kgf·cm, 76ft·lbf)

20. ADD MANUAL TRANSAXLE OIL (for Manual Transaxle) INFO

21. ADD AUTOMATIC TRANSAXLE FLUID (for Automatic Transaxle)

22. INSPECT MANUAL TRANSAXLE OIL (for Manual Transaxle) INFO

23. INSPECT AUTOMATIC TRANSAXLE FLUID (for Automatic Transaxle) INFO

24. INSPECT FOR OIL LEAK (for Manual Transaxle)

25. INSPECT FOR FLUID LEAK (for Automatic Transaxle)

26. INSTALL ENGINE UNDER COVER LH

27. INSTALL ENGINE UNDER COVER RH

28. INSPECT AND ADJUST FRONT WHEEL ALIGNMENT

HINT: INFO .

29. INSPECT SPEED SENSOR SIGNAL (w/o VSC)

HINT: INFO .

30. INSPECT SPEED SENSOR SIGNAL (w/ VSC)

HINT: INFO .

Last Modified: 3-10-2010	6.4 K	**From:** 200901
Model Year: 2010	**Model:** Corolla	**Doc ID:** RM0000032KE016X
Title: C59 MANUAL TRANSMISSION / TRANSAXLE: BACK-UP LIGHT SWITCH: COMPONENTS (2010 Corolla)		

COMPONENTS

ILLUSTRATION

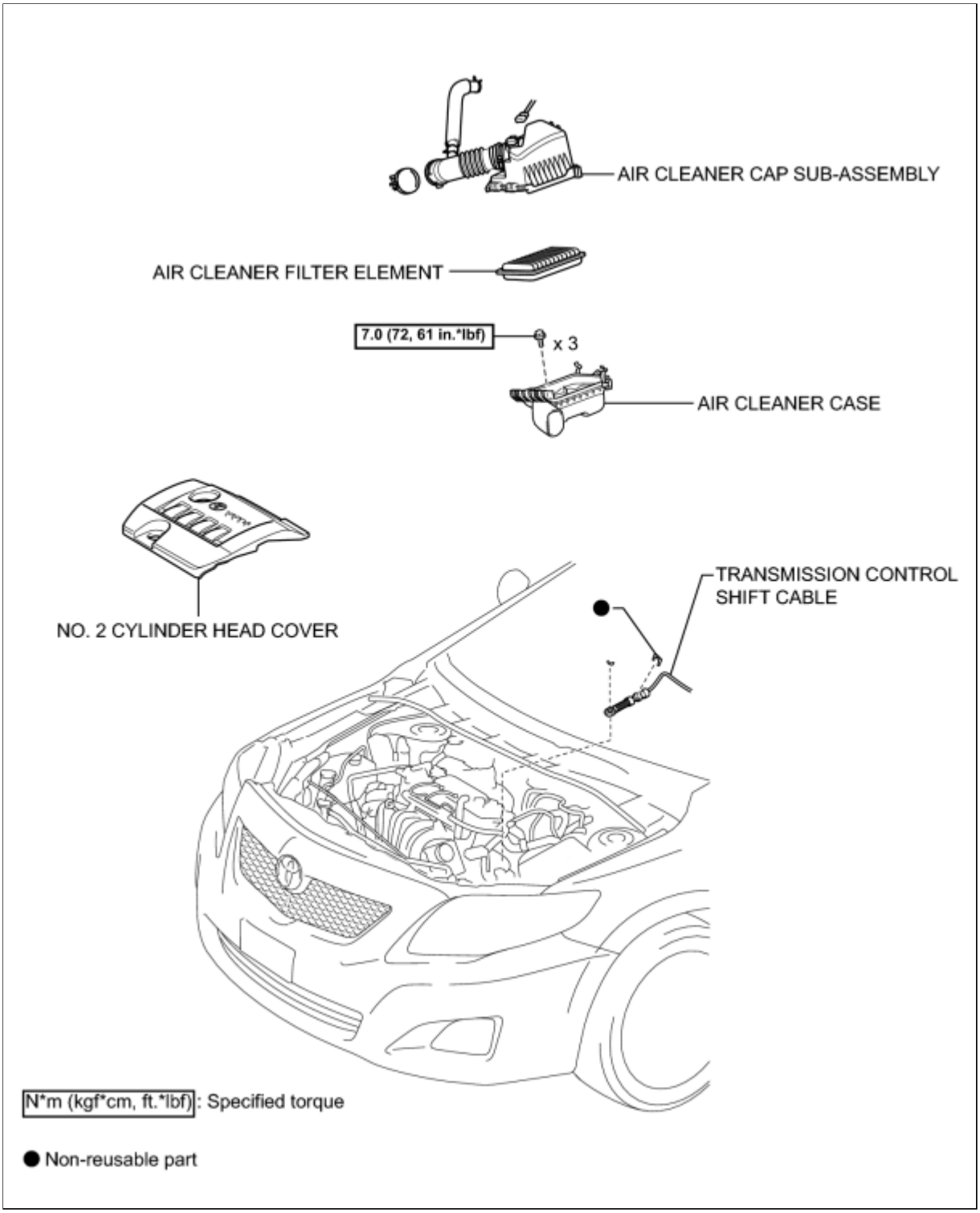

ILLUSTRATION

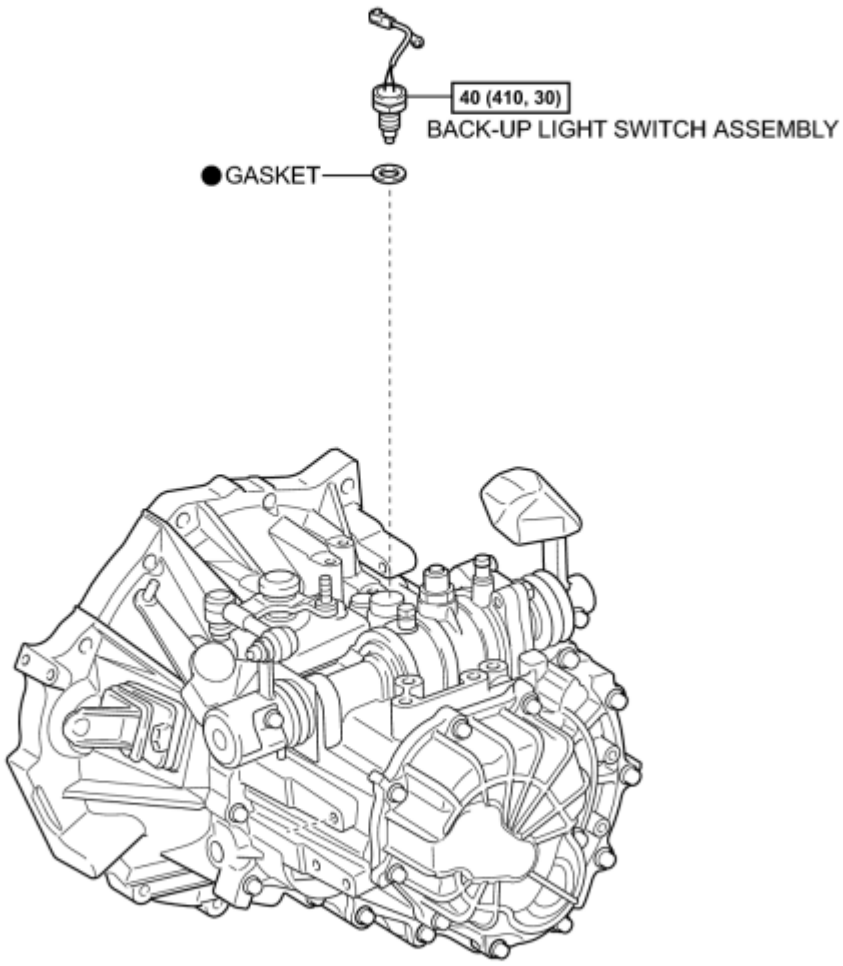

N*m (kgf*cm, ft.*lbf): Specified torque

● Non-reusable part

C

Last Modified: 3-10-2010	6.4 A	**From:** 200901
Model Year: 2010	**Model:** Corolla	**Doc ID:** RM000001YVL01PX
Title: C59 MANUAL TRANSMISSION / TRANSAXLE: BACK-UP LIGHT SWITCH: REMOVAL (2010 Corolla)		

REMOVAL

1. REMOVE NO. 2 CYLINDER HEAD COVER INFO

2. REMOVE AIR CLEANER CAP SUB-ASSEMBLY INFO

3. REMOVE AIR CLEANER CASE INFO

4. DISCONNECT TRANSMISSION CONTROL SHIFT CABLE

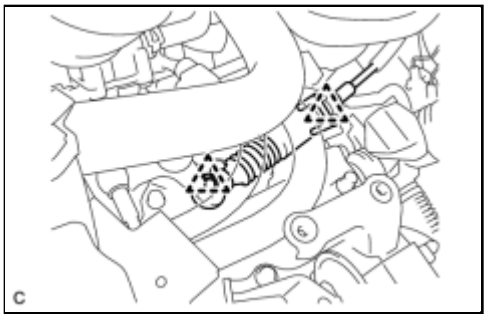

(a) Remove the 2 clips, and disconnect the transmission control shift cable.

5. REMOVE BACK-UP LIGHT SWITCH ASSEMBLY

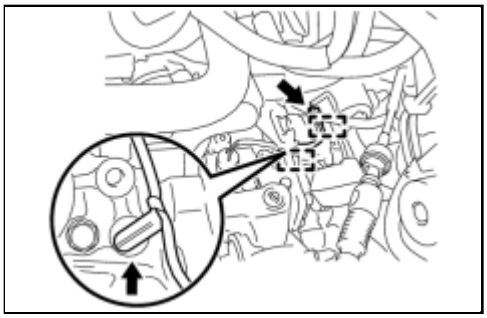

(a) Disconnect the back-up light switch connector and 2 clamps.

(b) Using SST, remove the back-up light switch and gasket from the transaxle case.

SST: 09817-16011

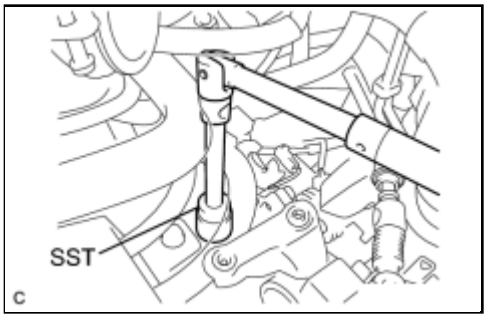
SST
C

Last Modified: 3-10-2010	6.4 G	**From:** 200901
Model Year: 2010	**Model:** Corolla	**Doc ID:** RM0000017MP01OX
Title: C59 MANUAL TRANSMISSION / TRANSAXLE: BACK-UP LIGHT SWITCH: INSPECTION (2010 Corolla)		

INSPECTION

1. INSPECT BACK-UP LIGHT SWITCH ASSEMBLY

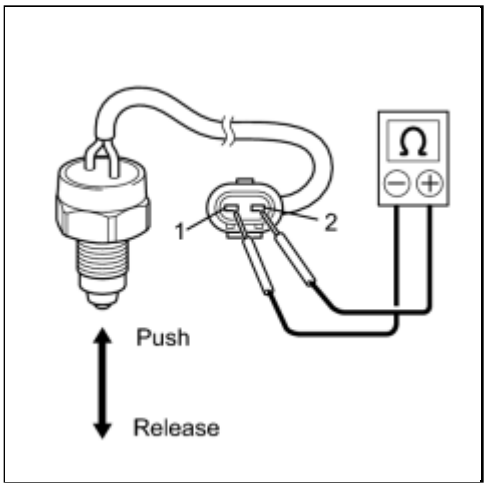

(a) Measure the resistance of the switch.

Standard Resistance:

TESTER CONNECTION	SWITCH CONDITION	SPECIFIED CONDITION
1 - 2	Pushed	Below 1 Ω
1 - 2	Released	10 kΩ or higher

If the result is not as specified, replace the back-up light switch assembly.

Last Modified: 3-10-2010	6.4 A	**From:** 200901
Model Year: 2010	**Model:** Corolla	**Doc ID:** RM000001YVJ01PX
Title: C59 MANUAL TRANSMISSION / TRANSAXLE: BACK-UP LIGHT SWITCH: INSTALLATION (2010 Corolla)		

INSTALLATION

1. INSTALL BACK-UP LIGHT SWITCH ASSEMBLY

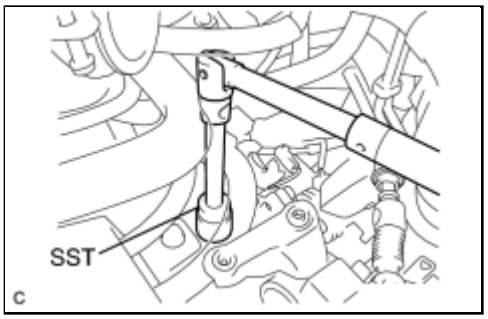

(a) Using SST, install the back-up light switch and a new gasket to the transaxle case.

SST: 09817-16011

Torque: 40 N·m (410 kgf·cm, 30ft·lbf)

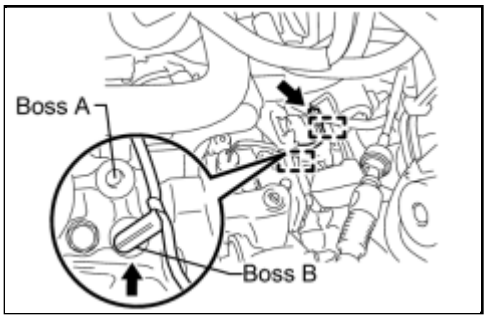

(b) Install the 2 clamps.

NOTICE:

Be sure to use boss B.

(c) Connect the back-up light switch connector.

2. CONNECT TRANSMISSION CONTROL SHIFT CABLE

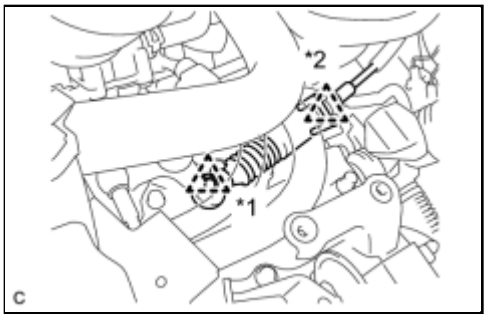

(a) Connect the transmission control shift cable with the clip*1.

(b) Connect the transmission control shift cable with a new clip*2.

3. INSTALL AIR CLEANER CASE INFO

4. INSTALL AIR CLEANER CAP SUB-ASSEMBLY INFO

5. INSTALL NO. 2 CYLINDER HEAD COVER INFO

Last Modified: 3-10-2010	6.4 K	**From:** 200901
Model Year: 2010	**Model:** Corolla	**Doc ID:** RM0000032KE017X
Title: E351 MANUAL TRANSMISSION / TRANSAXLE: BACK-UP LIGHT SWITCH: COMPONENTS (2010 Corolla)		

COMPONENTS

ILLUSTRATION

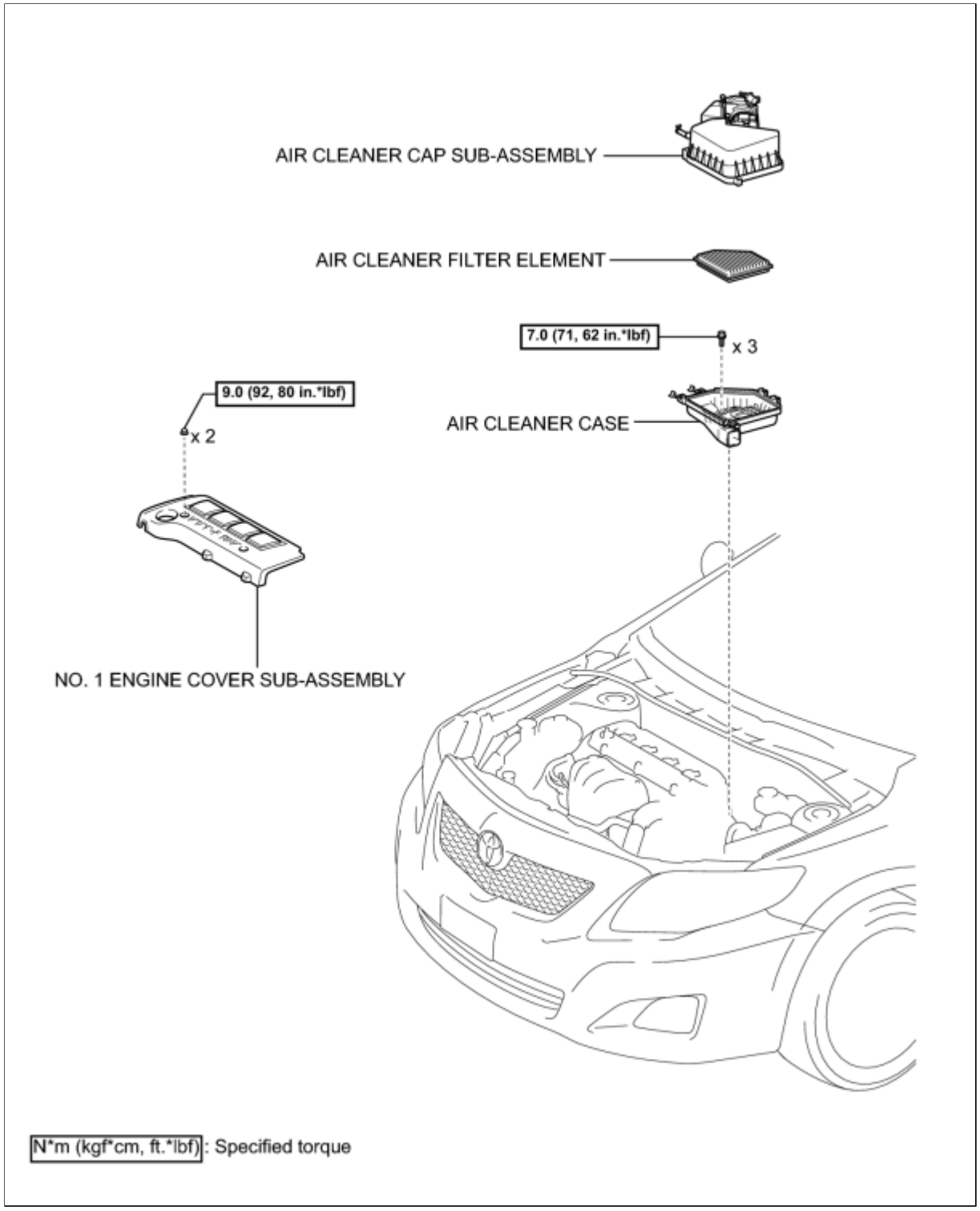

ILLUSTRATION

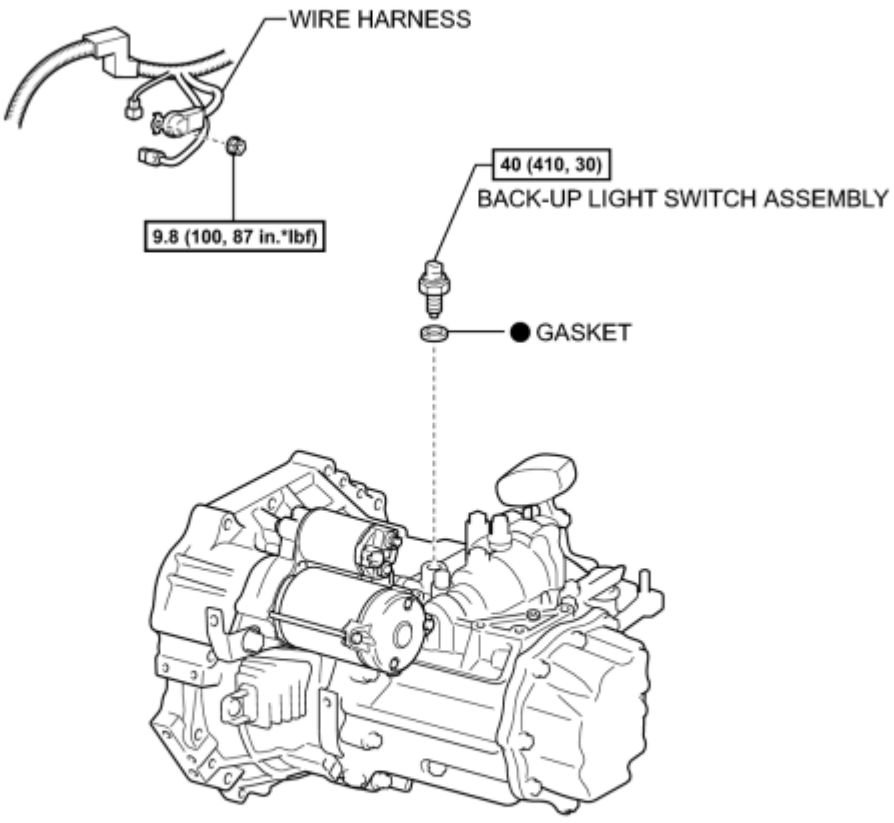

N*m (kgf*cm, ft.*lbf): Specified torque

● Non-reusable part

c

Last Modified: 3-10-2010	6.4 A	**From:** 200901
Model Year: 2010	**Model:** Corolla	**Doc ID:** RM000001YVL01QX
Title: E351 MANUAL TRANSMISSION / TRANSAXLE: BACK-UP LIGHT SWITCH: REMOVAL (2010 Corolla)		

REMOVAL

1. REMOVE NO. 1 ENGINE COVER SUB-ASSEMBLY INFO

2. REMOVE AIR CLEANER CAP SUB-ASSEMBLY INFO

3. REMOVE AIR CLEANER CASE INFO

4. DISCONNECT WIRE HARNESS

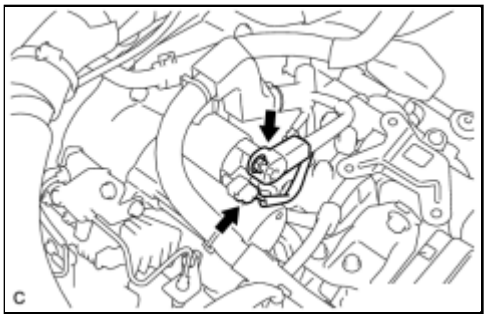

(a) Disconnect the terminal 50 connector from the starter assembly.

(b) Remove the nut and disconnect the wire harness from terminal 30.

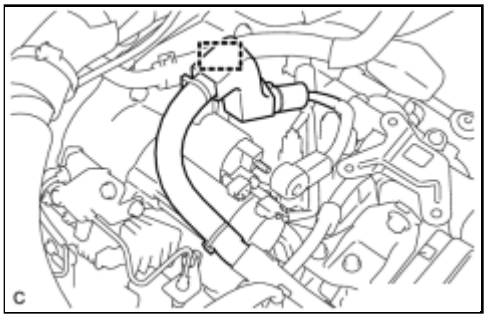

(c) Disconnect the wire harness clamp.

5. REMOVE BACK-UP LIGHT SWITCH ASSEMBLY

(a) Disconnect the back-up light switch connector.

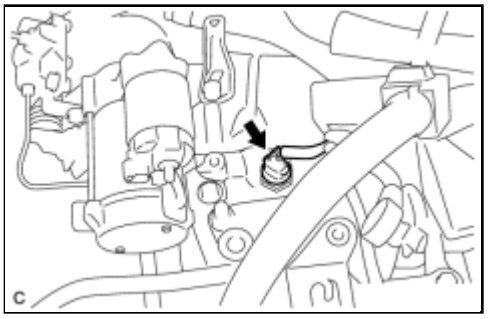

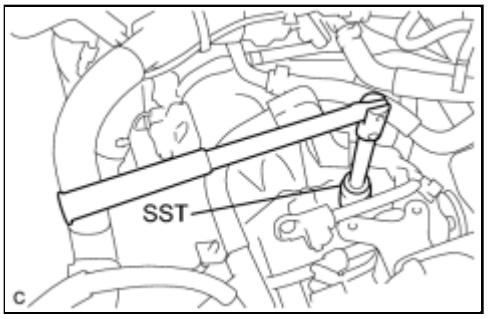

(b) Using SST, remove the back-up light switch and gasket from the transaxle case.

SST: 09817-16011

Last Modified: 3-10-2010	6.4 G	**From:** 200901
Model Year: 2010	**Model:** Corolla	**Doc ID:** RM0000017MP01PX
Title: E351 MANUAL TRANSMISSION / TRANSAXLE: BACK-UP LIGHT SWITCH: INSPECTION (2010 Corolla)		

INSPECTION

1. INSPECT BACK-UP LIGHT SWITCH ASSEMBLY

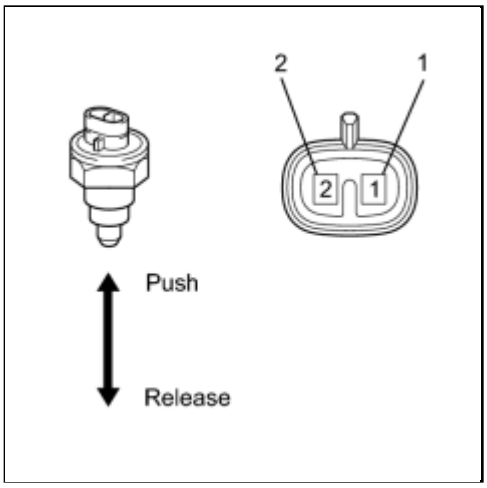

(a) Measure the resistance of the switch.

Standard Resistance:

TESTER CONNECTION	SWITCH CONDITION	SPECIFIED CONDITION
1 - 2	Pushed	Below 1 Ω
1 - 2	Released	10 kΩ or higher

If the result is not as specified, replace the switch assembly.

Last Modified: 3-10-2010	6.4 A	**From:** 200901
Model Year: 2010	**Model:** Corolla	**Doc ID:** RM000001YVJ01QX
Title: E351 MANUAL TRANSMISSION / TRANSAXLE: BACK-UP LIGHT SWITCH: INSTALLATION (2010 Corolla)		

INSTALLATION

1. INSTALL BACK-UP LIGHT SWITCH ASSEMBLY

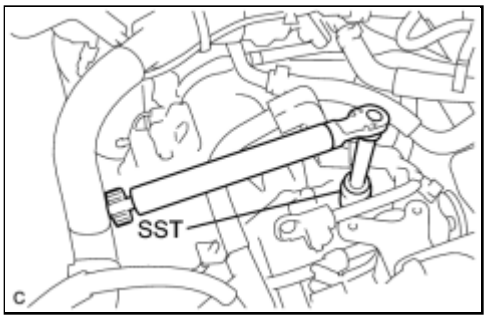

(a) Using SST, install the back-up light switch and a new gasket to the transaxle case.

SST: 09817-16011

Torque: 40 N·m (410 kgf·cm, 30ft·lbf)

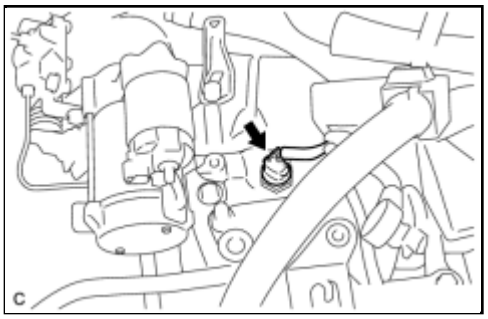

(b) Connect the back-up light switch connector.

2. CONNECT WIRE HARNESS

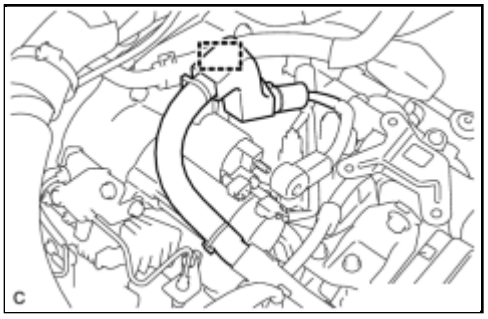

(a) Connect the wire harness to the wire harness clamp.

(b) Connect the terminal 50 connector to the starter assembly.

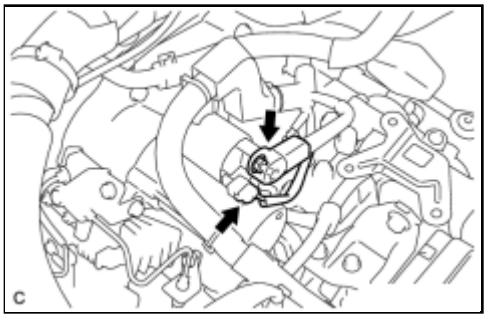

(c) Connect the wire harness to terminal 30 and install the nut. Then, attach the terminal cap.

Torque: 9.8 N·m (100 kgf·cm, 87in·lbf)

3. INSTALL AIR CLEANER CASE INFO

4. INSTALL AIR CLEANER CAP SUB-ASSEMBLY INFO

5. INSTALL NO. 1 ENGINE COVER SUB-ASSEMBLY INFO

Last Modified: 3-10-2010	6.4 K	**From:** 200901
Model Year: 2010	**Model:** Corolla	**Doc ID:** RM000001B3H01XX
Title: C59 MANUAL TRANSMISSION / TRANSAXLE: DIFFERENTIAL CASE: COMPONENTS (2010 Corolla)		

COMPONENTS

ILLUSTRATION

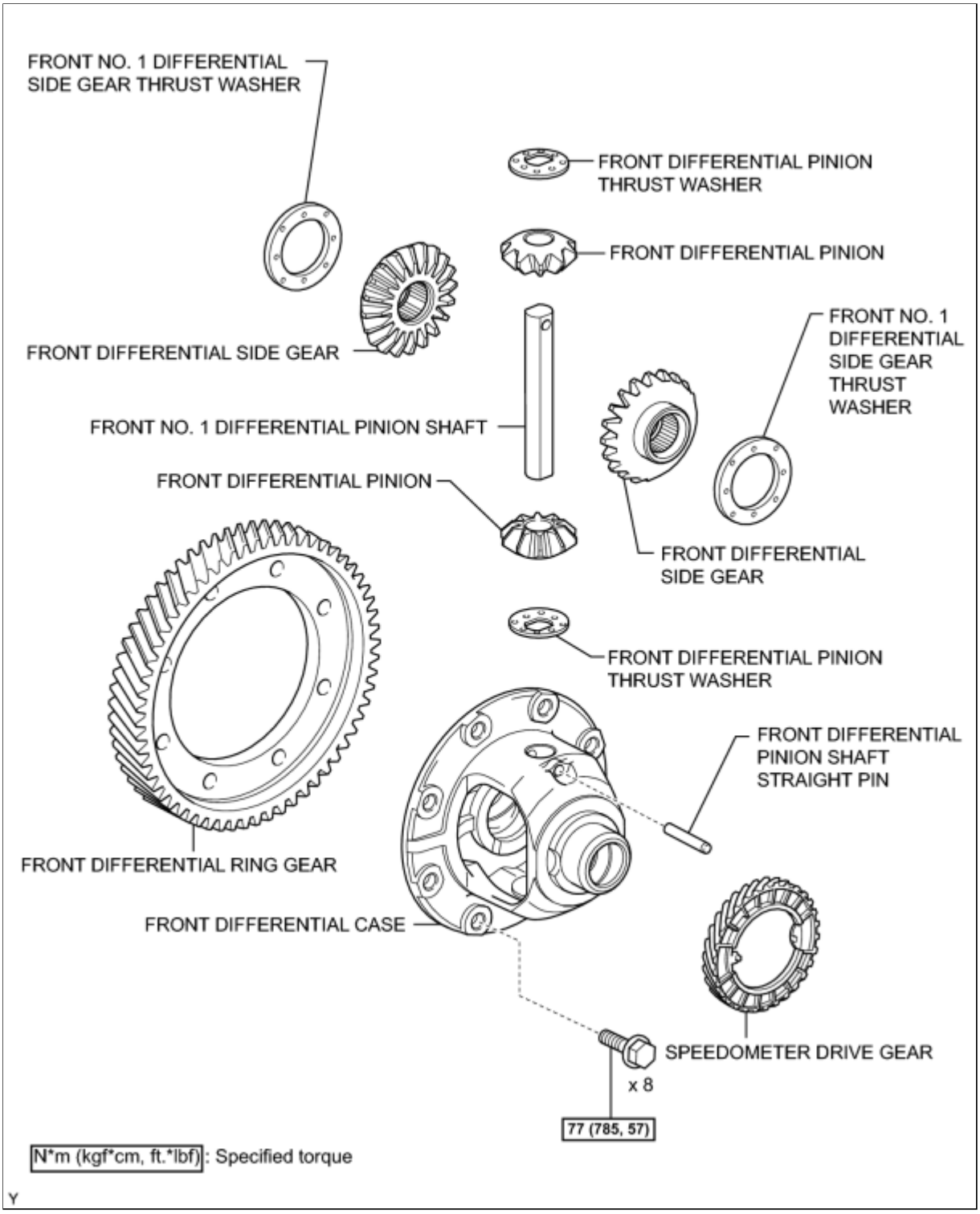
FRONT NO. 1 DIFFERENTIAL SIDE GEAR THRUST WASHER
FRONT DIFFERENTIAL PINION THRUST WASHER
FRONT DIFFERENTIAL PINION
FRONT DIFFERENTIAL SIDE GEAR
FRONT NO. 1 DIFFERENTIAL SIDE GEAR THRUST WASHER
FRONT NO. 1 DIFFERENTIAL PINION SHAFT
FRONT DIFFERENTIAL PINION
FRONT DIFFERENTIAL SIDE GEAR
FRONT DIFFERENTIAL PINION THRUST WASHER
FRONT DIFFERENTIAL PINION SHAFT STRAIGHT PIN
FRONT DIFFERENTIAL RING GEAR
FRONT DIFFERENTIAL CASE
SPEEDOMETER DRIVE GEAR
x 8
77 (785, 57)
N*m (kgf*cm, ft.*lbf): Specified torque
Y

Last Modified: 3-10-2010	6.4 A	**From:** 200901
Model Year: 2010	**Model:** Corolla	**Doc ID:** RM000001A1001XX
Title: C59 MANUAL TRANSMISSION / TRANSAXLE: DIFFERENTIAL CASE: DISASSEMBLY (2010 Corolla)		

DISASSEMBLY

1. REMOVE SPEEDOMETER DRIVE GEAR

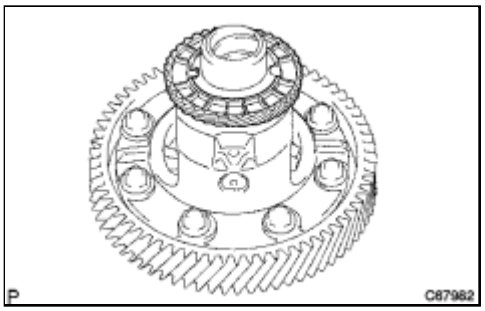

(a) Remove the speedometer drive gear from the front differential case.

2. REMOVE FRONT DIFFERENTIAL RING GEAR

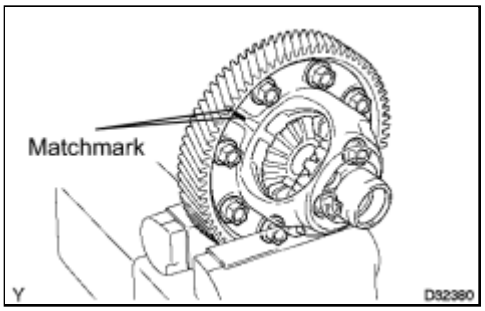

(a) Place matchmarks on the front differential ring gear and the front differential case.

(b) Remove the 8 bolts.

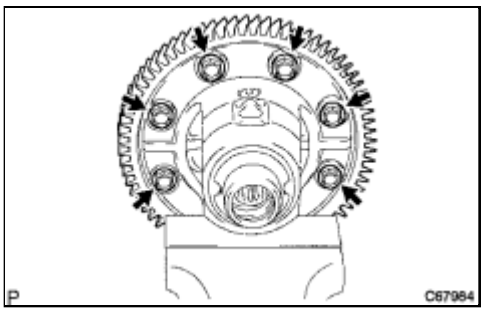

(c) Using a plastic hammer, remove the front differential ring gear from the front differential case.

3. INSPECT FRONT DIFFERENTIAL SIDE GEAR BACKLASH

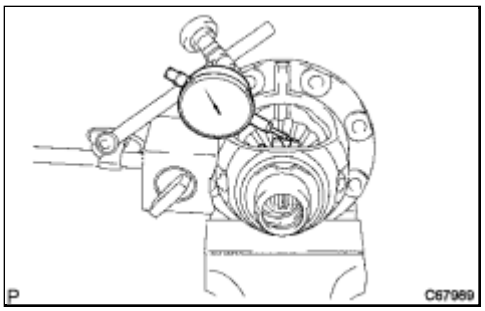

(a) Secure the front differential pinion to the front differential case side. Using a dial indicator, measure the front differential side gear backlash.

Standard backlash:
0.05 to 0.20 mm (0.00197 to 0.00787 in.)

If the backlash is out of specification, adjust it using new side gear thrust washers INFO .

4. REMOVE FRONT DIFFERENTIAL PINION SHAFT STRAIGHT PIN

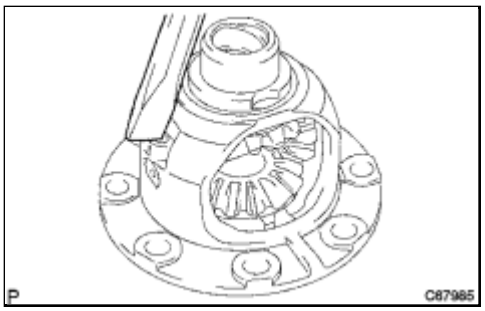

(a) Using a chisel and a hammer, loosen the staked part of the front differential case.

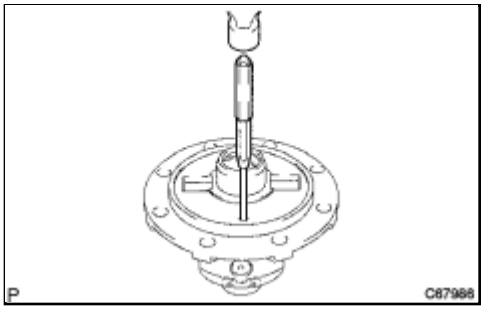

(b) Using a pin punch (φ3 mm) and a hammer, remove the front differential pinion shaft straight pin from the front differential case.

5. REMOVE FRONT NO. 1 DIFFERENTIAL PINION SHAFT

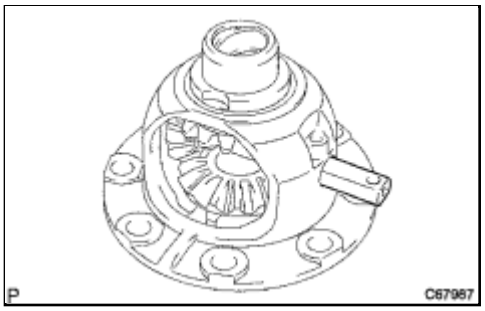

(a) Remove the front No. 1 differential pinion shaft from the front differential case.

6. REMOVE FRONT DIFFERENTIAL SIDE GEAR

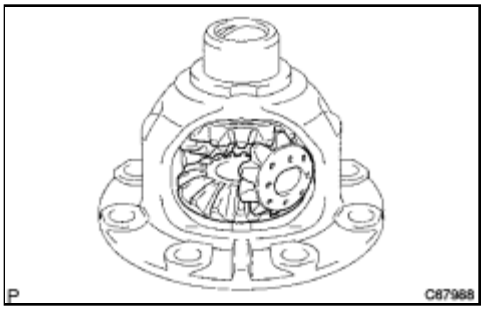

(a) Remove the 2 front differential pinions, 2 front differential pinion thrust washers, 2 No. 1 front differential side gear thrust washers, and 2 front differential side gears from the front differential case.

HINT:

While rotating the front differential pinion, remove the 2 pinions and 2 side gears.

Last Modified: 3-10-2010	6.4 A	**From:** 200901
Model Year: 2010	**Model:** Corolla	**Doc ID:** RM000001A1101XX
Title: C59 MANUAL TRANSMISSION / TRANSAXLE: DIFFERENTIAL CASE: REASSEMBLY (2010 Corolla)		

REASSEMBLY

1. INSTALL FRONT DIFFERENTIAL SIDE GEAR

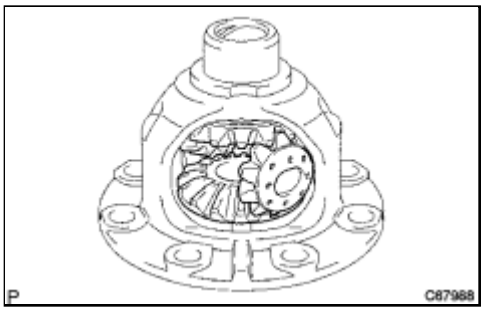

(a) Coat the contact surfaces of the front differential side gears with gear oil.

(b) Install the 2 front No. 1 differential side gear thrust washers onto the 2 front differential side gears.

(c) Install the 2 front differential side gears, 2 front differential pinions, and 2 front differential pinion thrust washers onto the front differential case.

HINT:

While rotating the front differential side gears, install the 2 front differential pinions and 2 front differential pinion thrust washers.

2. INSTALL FRONT NO. 1 DIFFERENTIAL PINION SHAFT

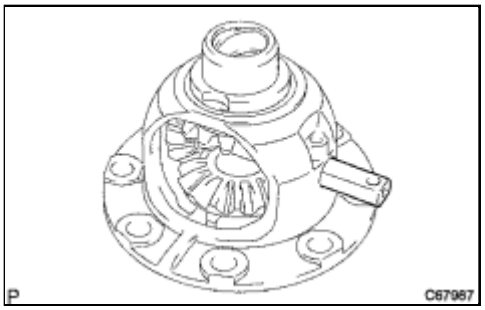

(a) Coat the front No. 1 differential pinion shaft with MP grease.

(b) Install the front No. 1 differential pinion shaft onto the front differential case so that the hole for the front differential pinion shaft straight pin is aligned with the hole in the front differential case.

3. ADJUST FRONT DIFFERENTIAL SIDE GEAR BACKLASH

(a) Install the front differential pinion to the front differential

case side. Using a dial indicator, measure the front differential side gear backlash.

Standard backlash:
0.05 to 0.20 mm (0.00197 to 0.00787 in.)

If the backlash is out of specification, replace the side gear thrust washers.

Thrust Washer Thickness:

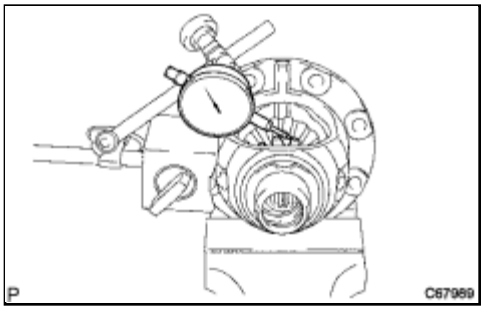

PARTS NO.	THICKNESS MM (IN.)
41361-22140	0.95 (0.0374)
41361-22020	1.00 (0.0394)
41361-22150	1.05 (0.0413)
41361-22030	1.10 (0.0433)
41361-22160	1.15 (0.0452)
41361-22040	1.20 (0.0472)

HINT:

- Measure the thickness with a micrometer to select a proper thrust washer because the thrust washers do not have any distinguishing marks.
- Select washers of the same thickness for both the right and left sides.

4. INSTALL FRONT DIFFERENTIAL PINION SHAFT STRAIGHT PIN

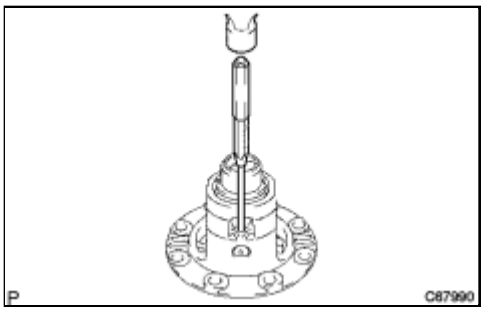

(a) Using a pin punch (φ3 mm) and a hammer, install the front differential pinion shaft straight pin onto the front differential case.

(b) Using a chisel and a hammer, stake the front differential case hole.

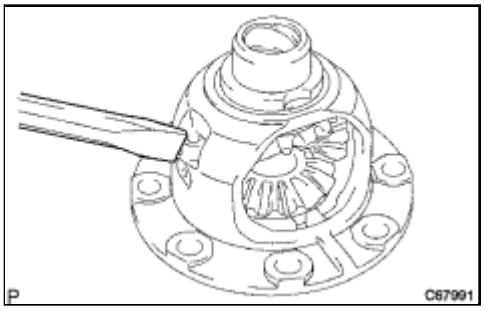

5. INSTALL FRONT DIFFERENTIAL RING GEAR

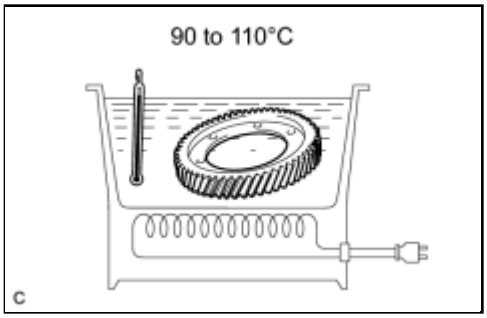

(a) Clean the contact surfaces of the front differential case and ring gear.

(b) Using a heater, heat the front differential ring gear to 90 to 110°C (194 to 230°F).

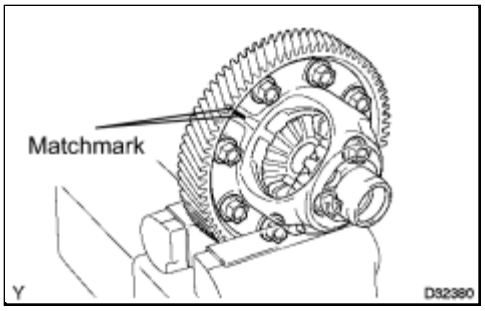

(c) After moisture on the ring gear has completely evaporated, align the matchmarks quickly install the front differential case with quickly install the front differential ring gear

(d) Install the 8 bolts.

Torque: 77 N·m (785 kgf·cm, 57ft·lbf)

6. INSTALL SPEEDOMETER DRIVE GEAR

(a) Install the speedometer drive gear onto the front differential case.

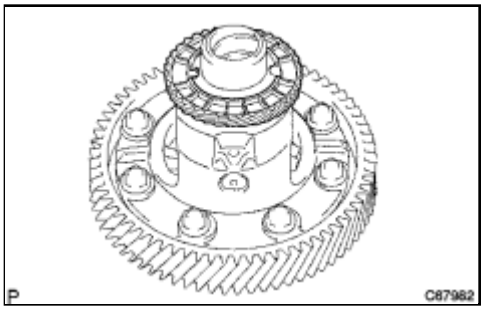
P
C87982

Last Modified: 3-10-2010	6.4 G	**From:** 200901
Model Year: 2010	**Model:** Corolla	**Doc ID:** RM000001A0Z01XX
Title: C59 MANUAL TRANSMISSION / TRANSAXLE: DIFFERENTIAL CASE: INSPECTION (2010 Corolla)		

INSPECTION

1. INSPECT FRONT DIFFERENTIAL PINION THRUST WASHER

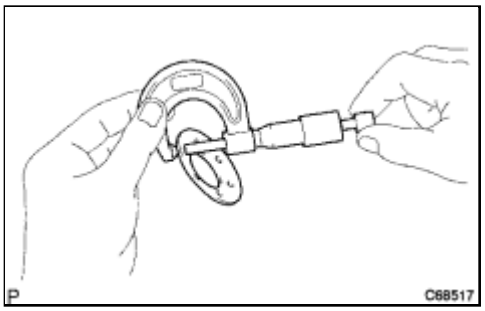

(a) Using a micrometer, measure the thickness of the front differential pinion thrust washer.

Minimum thickness:
0.92 mm (0.0362 in.)

If the thickness is less than the minimum, replace the front differential pinion thrust washer.

2. INSPECT FRONT NO. 1 DIFFERENTIAL PINION SHAFT

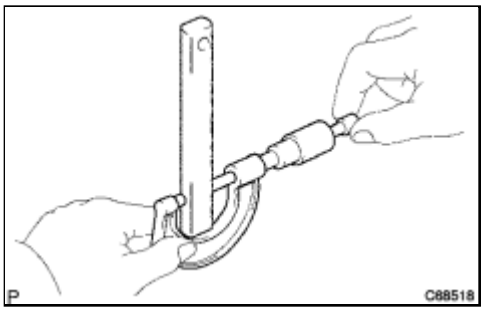

(a) Using a micrometer, measure the outer diameter of the front No. 1 differential pinion shaft.

Minimum outer diameter:
16.982 mm (0.6685 in.)

If the outer diameter is less than the minimum, replace the front No. 1 differential pinion shaft.

Last Modified: 3-10-2010	6.4 K	**From:** 200901
Model Year: 2010	**Model:** Corolla	**Doc ID:** RM000000Z2600QX
Title: E351 MANUAL TRANSMISSION / TRANSAXLE: DIFFERENTIAL CASE: COMPONENTS (2010 Corolla)		

COMPONENTS

ILLUSTRATION

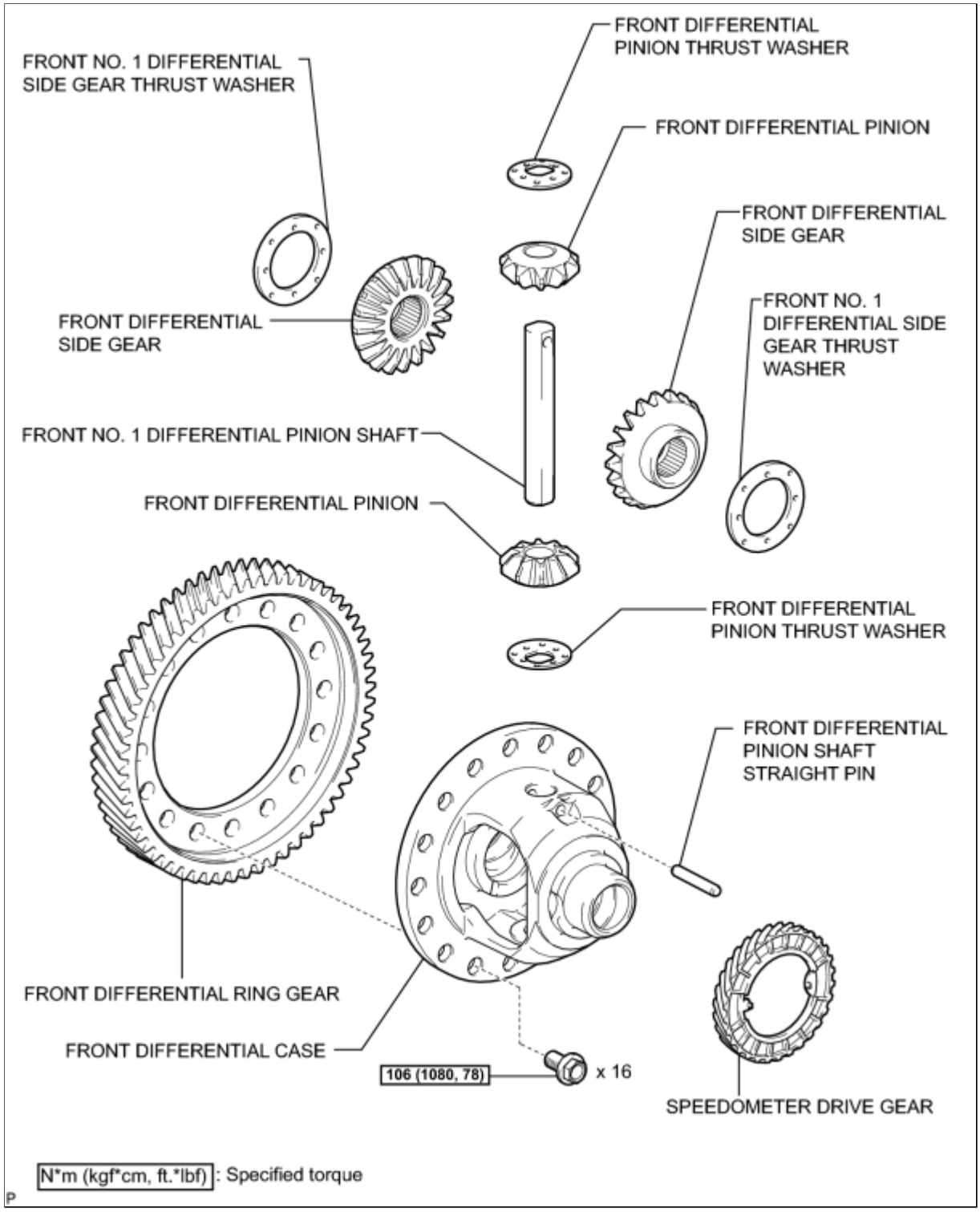
FRONT DIFFERENTIAL PINION THRUST WASHER
FRONT NO. 1 DIFFERENTIAL SIDE GEAR THRUST WASHER
FRONT DIFFERENTIAL PINION
FRONT DIFFERENTIAL SIDE GEAR
FRONT DIFFERENTIAL SIDE GEAR
FRONT NO. 1 DIFFERENTIAL SIDE GEAR THRUST WASHER
FRONT NO. 1 DIFFERENTIAL PINION SHAFT
FRONT DIFFERENTIAL PINION
FRONT DIFFERENTIAL PINION THRUST WASHER
FRONT DIFFERENTIAL PINION SHAFT STRAIGHT PIN
FRONT DIFFERENTIAL RING GEAR
FRONT DIFFERENTIAL CASE
106 (1080, 78)
x 16
SPEEDOMETER DRIVE GEAR
N*m (kgf*cm, ft.*lbf): Specified torque

Last Modified: 3-10-2010	6.4 A	**From:** 200901
Model Year: 2010	**Model:** Corolla	**Doc ID:** RM000000Z2700EX
Title: E351 MANUAL TRANSMISSION / TRANSAXLE: DIFFERENTIAL CASE: DISASSEMBLY (2010 Corolla)		

DISASSEMBLY

1. REMOVE SPEEDOMETER DRIVE GEAR

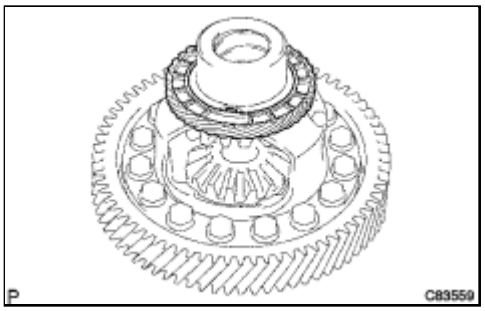

(a) Remove the speedometer drive gear from the front differential case assembly.

2. INSPECT FRONT DIFFERENTIAL SIDE GEAR BACKLASH

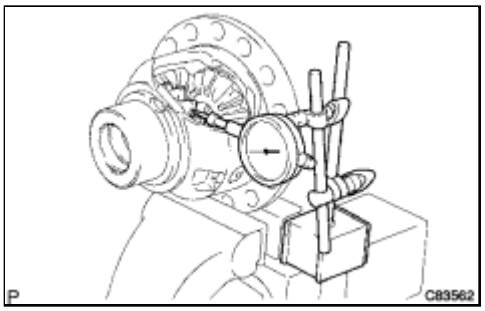

(a) Hold the front differential pinion to the front differential case side. Using a dial indicator, measure the front differential side gear backlash.

Standard backlash:
0.05 to 0.20 mm (0.00197 to 0.00787 in.)

If the backlash is out of specification, adjust it using new side gear thrust washers INFO .

3. REMOVE FRONT DIFFERENTIAL RING GEAR

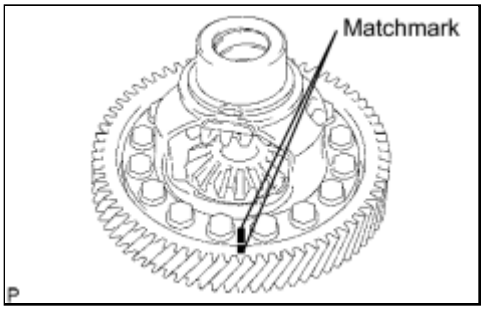

(a) Put matchmarks on the front differential ring gear and the front differential case.

(b) Remove the 16 bolts.

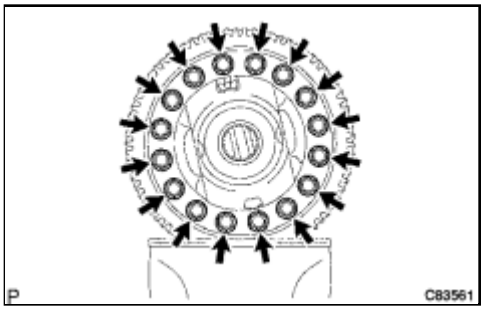

(c) Using a plastic hammer, remove the front differential case.

4. REMOVE FRONT DIFFERENTIAL PINION SHAFT STRAIGHT PIN

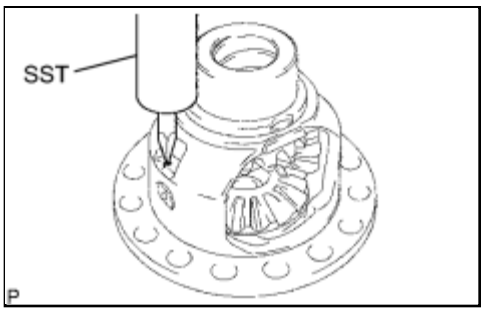

(a) Using SST and a hammer, unstake the staked part of the front differential case.

SST: 09930-00010

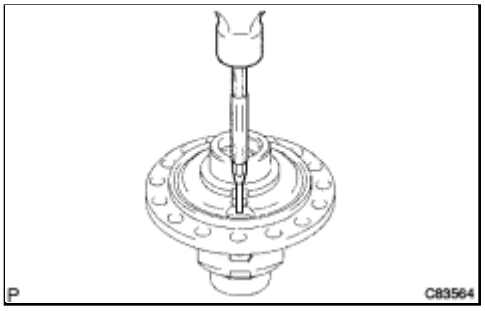

(b) Using a pin punch and a hammer, remove the front differential pinion shaft straight pin from the front differential case.

5. REMOVE FRONT NO. 1 DIFFERENTIAL PINION SHAFT

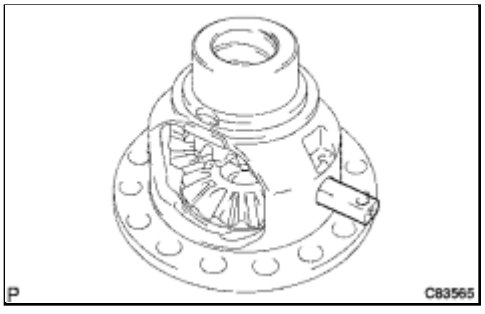

(a) Remove the front No. 1 differential pinion shaft from the front differential case.

6. REMOVE FRONT DIFFERENTIAL SIDE GEAR

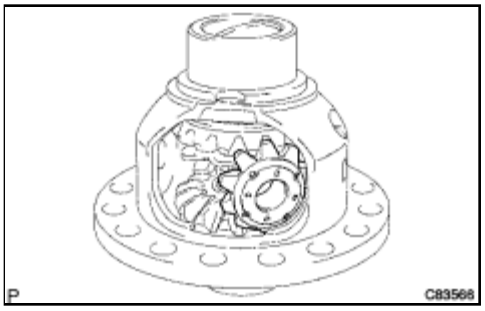

(a) Remove the 2 front differential pinions, 2 front differential pinion thrust washers, 2 front differential side gears, and 2 front differential side gear thrust washers from the front differential case.

HINT:

Remove the 2 pinion thrust washers and side gear thrust washers while turning the front differential pinion.

Last Modified: 3-10-2010	6.4 A	**From:** 200901
Model Year: 2010	**Model:** Corolla	**Doc ID:** RM000000Z2800EX
Title: E351 MANUAL TRANSMISSION / TRANSAXLE: DIFFERENTIAL CASE: REASSEMBLY (2010 Corolla)		

REASSEMBLY

1. INSTALL FRONT DIFFERENTIAL SIDE GEAR

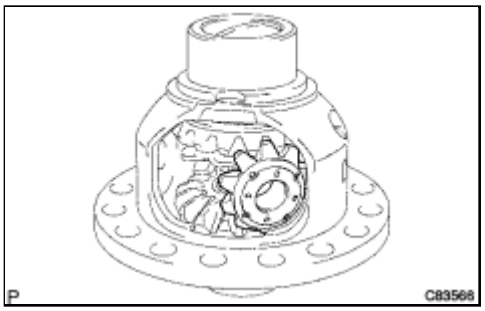

(a) Coat the rotating surface of the front differential side gear with gear oil.

(b) Install the 2 front differential side gear thrust washers to the 2 front differential side gears.

(c) Install the 2 front differential side gears, 2 front differential pinions, and 2 front differential side gear thrust washers to the front differential case.

HINT:

Install the 2 front differential pinions with the front differential washers while turning the front differential pinion.

2. INSTALL FRONT NO. 1 DIFFERENTIAL PINION SHAFT

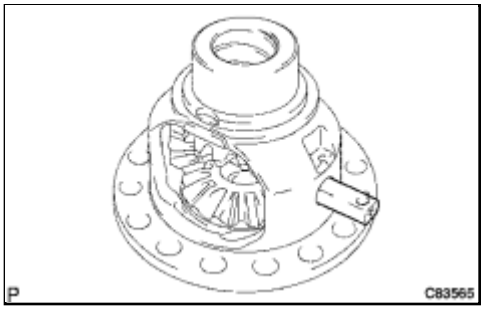

(a) Coat the rotating surface of the front No. 1 differential pinion shaft with gear oil.

(b) Install the front No. 1 differential pinion shaft to the front differential case so that the hole for the front differential pinion shaft straight pin is aligned with the hole in the front differential case.

3. INSTALL FRONT DIFFERENTIAL PINION SHAFT STRAIGHT PIN

(a) Using a pin punch and a hammer, install the front differential pinion shaft straight pin to the front differential

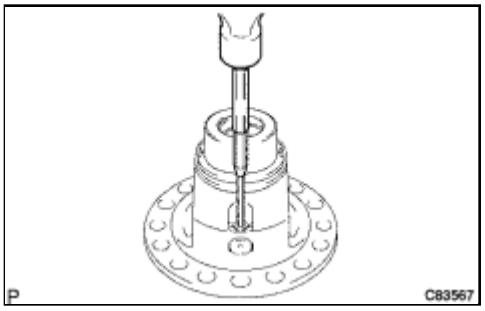

case.

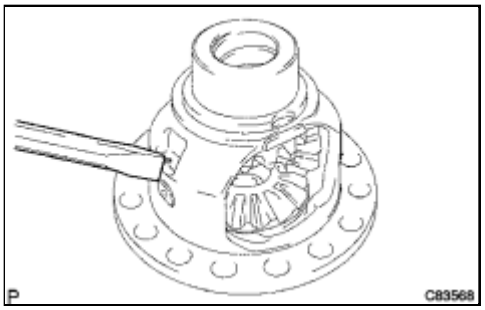

(b) Using a chisel and hammer, stake the front differential case hole.

4. ADJUST FRONT DIFFERENTIAL SIDE GEAR BACKLASH

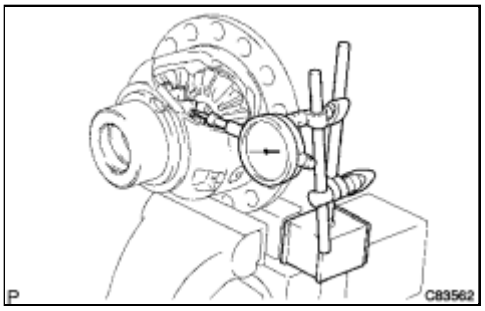

(a) Hold the front differential pinion to the front differential case side. Using a dial indicator, measure the front differential side gear backlash.

Standard backlash:
0.05 to 0.20 mm (0.00197 to 0.00787 in.)

(b) If backlash is out of specification, select another front differential side gear thrust washer and adjust backlash.

Thrust Washer:

PART NO.	THICKNESS: MM (IN.)	MARK
41361-28230	1.00 (0.0394)	1
41361-28240	1.10 (0.0433)	2
41361-28250	1.20 (0.0472)	3

PART NO.	THICKNESS: MM (IN.)	MARK
41361-28260	1.30 (0.0512)	4

5. INSTALL FRONT DIFFERENTIAL RING GEAR

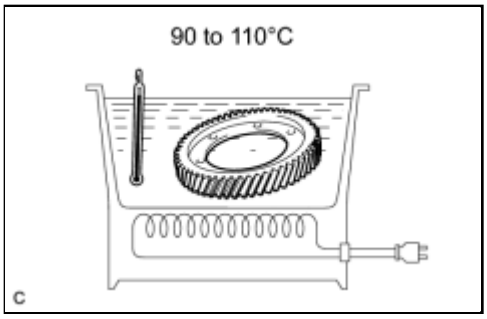

(a) Clean the surface that contacts the differential case.

(b) Using a heater, heat the front differential ring gear to 90 to 110°C (194 to 230°F).

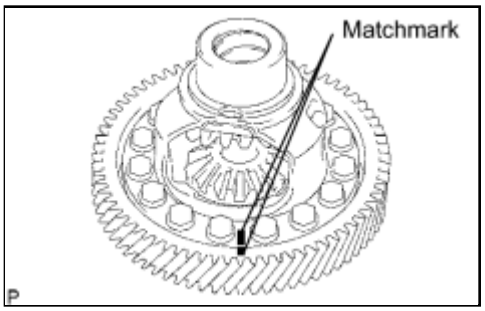

(c) After moisture on the ring gear has completely evaporated, align the matchmarks and quickly install the front differential ring gear to the front differential case with the 16 bolts.

Torque: 106 N·m (1081 kgf·cm, 78ft·lbf)

6. INSTALL SPEEDOMETER DRIVE GEAR

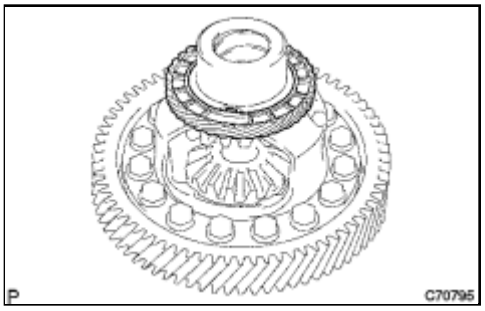

(a) Install the speedometer drive gear to the front differential case.

Last Modified: 3-10-2010	6.4 G	**From:** 200901
Model Year: 2010	**Model:** Corolla	**Doc ID:** RM000000Z2500QX
Title: E351 MANUAL TRANSMISSION / TRANSAXLE: DIFFERENTIAL CASE: INSPECTION (2010 Corolla)		

INSPECTION

1. INSPECT FRONT DIFFERENTIAL PINION THRUST WASHER

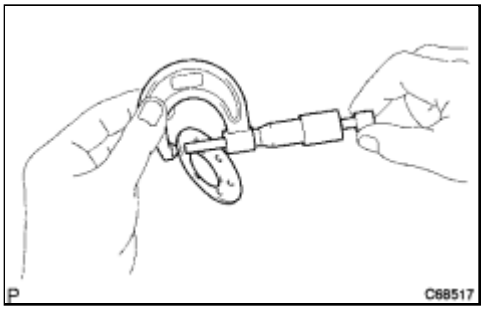

(a) Using a micrometer, measure the thickness of the front differential pinion thrust washer.

Minimum thickness:
0.9 mm (0.0354 in.)

If the thickness is less than the minimum, replace the front differential pinion thrust washer.

2. INSPECT NO. 1 FRONT DIFFERENTIAL PINION SHAFT

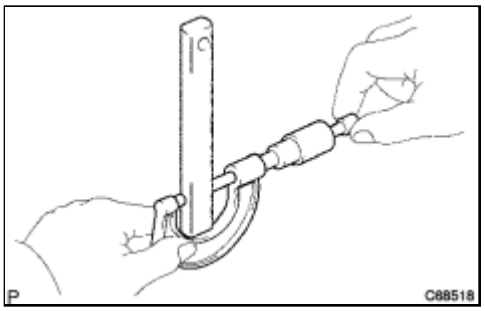

(a) Using a micrometer, measure the outside diameter of the No. 1 front differential pinion shaft.

Minimum diameter:
17.975 mm (0.70768 in.)

If the outer diameter is less than the minimum, replace the No. 1 front differential pinion shaft.

Last Modified: 3-10-2010	6.4 K	**From:** 200901
Model Year: 2010	**Model:** Corolla	**Doc ID:** RM000001B3M01QX
Title: C59 MANUAL TRANSMISSION / TRANSAXLE: DIFFERENTIAL OIL SEAL: COMPONENTS (2010 Corolla)		

COMPONENTS

ILLUSTRATION

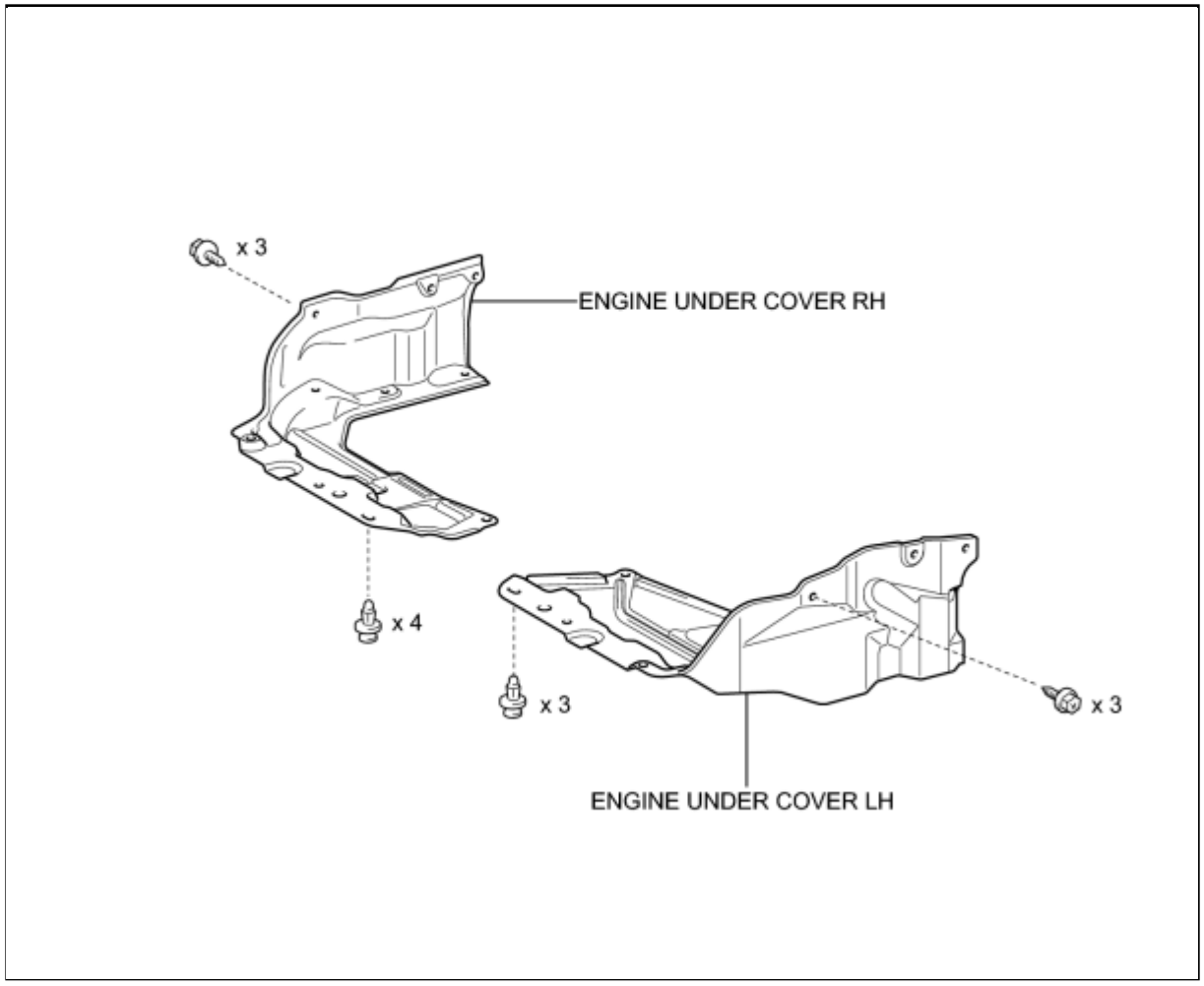

ILLUSTRATION

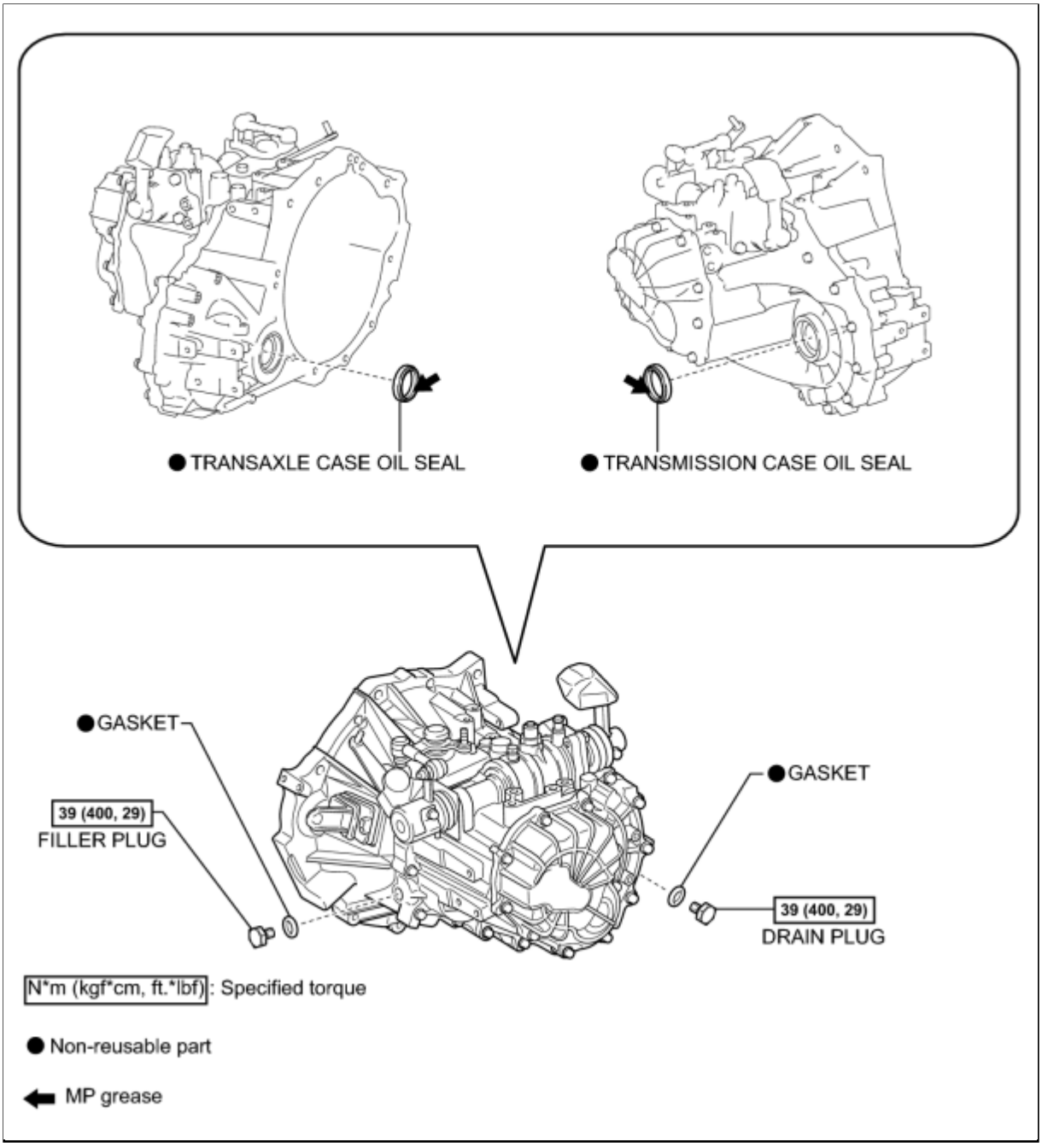
● TRANSAXLE CASE OIL SEAL
● TRANSMISSION CASE OIL SEAL
● GASKET
39 (400, 29)
FILLER PLUG
● GASKET
39 (400, 29)
DRAIN PLUG
N*m (kgf*cm, ft.*lbf): Specified torque
● Non-reusable part
MP grease

Last Modified: 3-10-2010	6.4 A	**From:** 200901
Model Year: 2010	**Model:** Corolla	**Doc ID:** RM000001STW02SX
Title: C59 MANUAL TRANSMISSION / TRANSAXLE: DIFFERENTIAL OIL SEAL: REPLACEMENT (2010 Corolla)		

REPLACEMENT

1. REMOVE ENGINE UNDER COVER LH

2. REMOVE ENGINE UNDER COVER RH

3. DRAIN MANUAL TRANSAXLE OIL INFO

4. REMOVE FRONT DRIVE SHAFT ASSEMBLY

INFO .

5. REMOVE TRANSMISSION CASE OIL SEAL

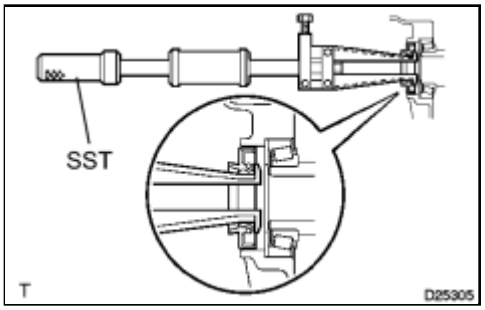

(a) Using SST, remove the transmission case oil seal.

SST: 09308-00010

6. REMOVE TRANSAXLE CASE OIL SEAL

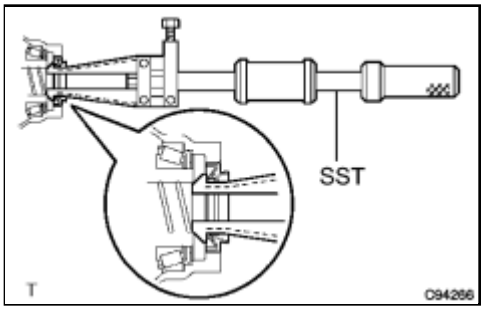

(a) Using SST, remove the transaxle case oil seal.

SST: 09308-00010

7. INSTALL TRANSMISSION CASE OIL SEAL

(a) Coat the lip of a new oil seal with MP grease.

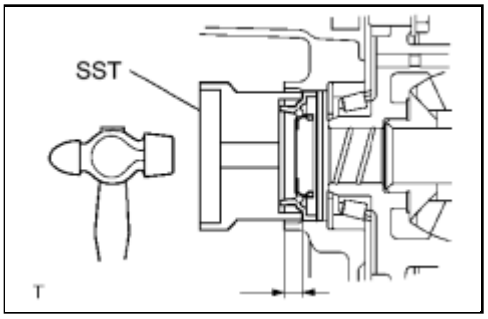

(b) Using SST and a hammer, tap in the oil seal.

SST: 09710-26011

09710-05061

Standard depth:

9.6 to 10.2 mm (0.378 to 0.402 in.)

NOTICE:

Do not damage the oil seal lip.

8. INSTALL TRANSAXLE CASE OIL SEAL

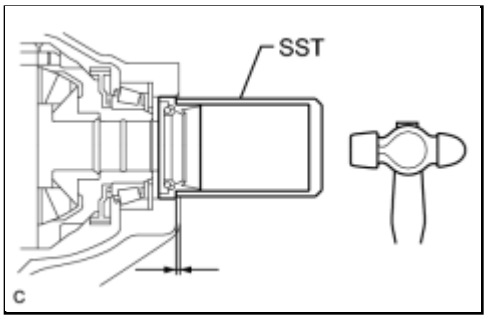

(a) Coat the lip of a new oil seal with MP grease.

(b) Using SST and a hammer, tap in the oil seal.

SST: 09636-20010

Standard depth:

1.6 to 2.2 mm (0.0630 to 0.0866 in.)

NOTICE:

Do not damage the oil seal lip.

9. INSTALL FRONT DRIVE SHAFT ASSEMBLY

INFO .

10. ADD MANUAL TRANSAXLE OIL INFO

11. INSPECT MANUAL TRANSAXLE OIL INFO

12. INSTALL ENGINE UNDER COVER LH

13. INSTALL ENGINE UNDER COVER RH

Last Modified: 3-10-2010	6.4 K	**From:** 200901
Model Year: 2010	**Model:** Corolla	**Doc ID:** RM000001COS00EX
Title: E351 MANUAL TRANSMISSION / TRANSAXLE: DIFFERENTIAL OIL SEAL: COMPONENTS (2010 Corolla)		

COMPONENTS

ILLUSTRATION

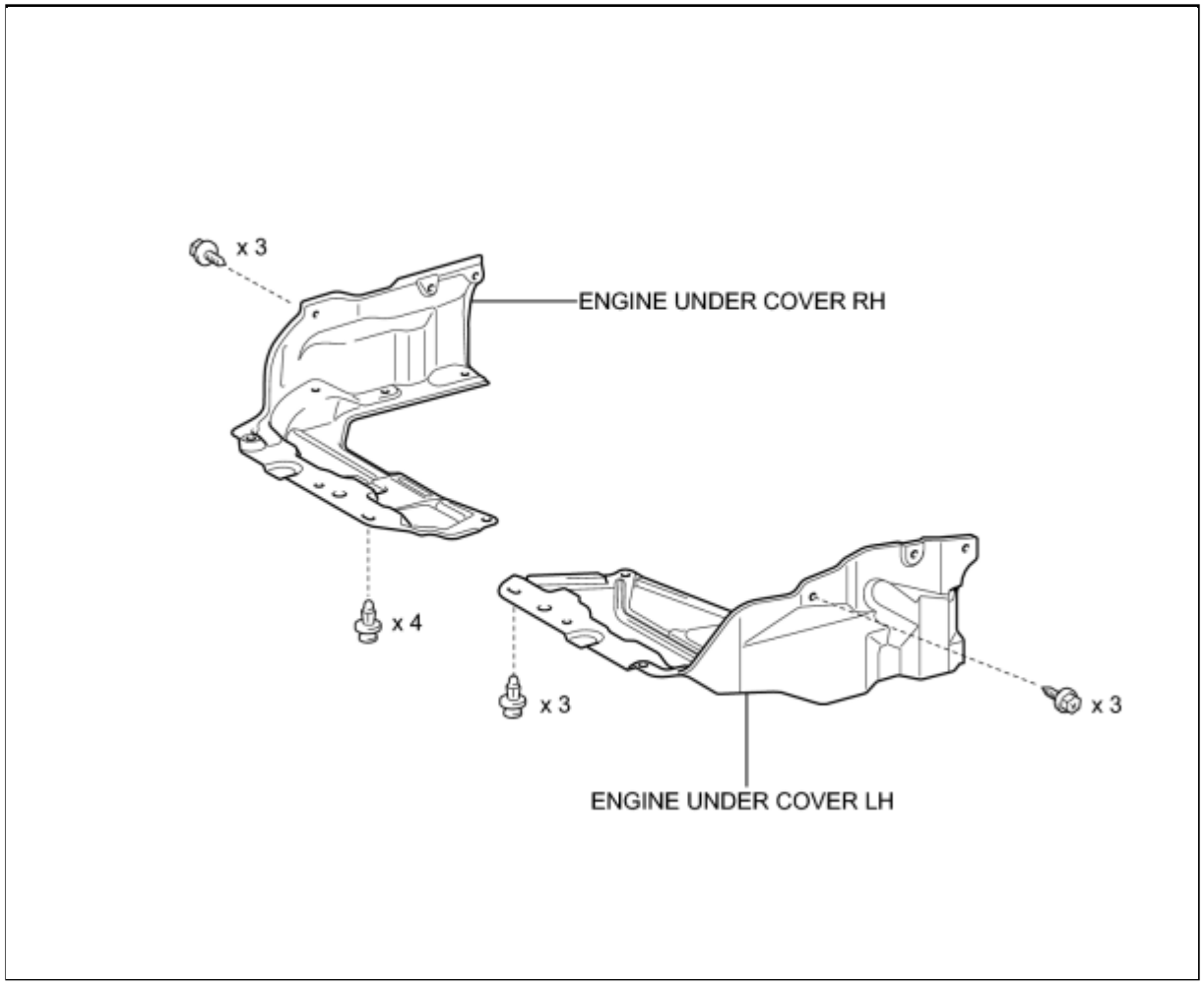

ILLUSTRATION

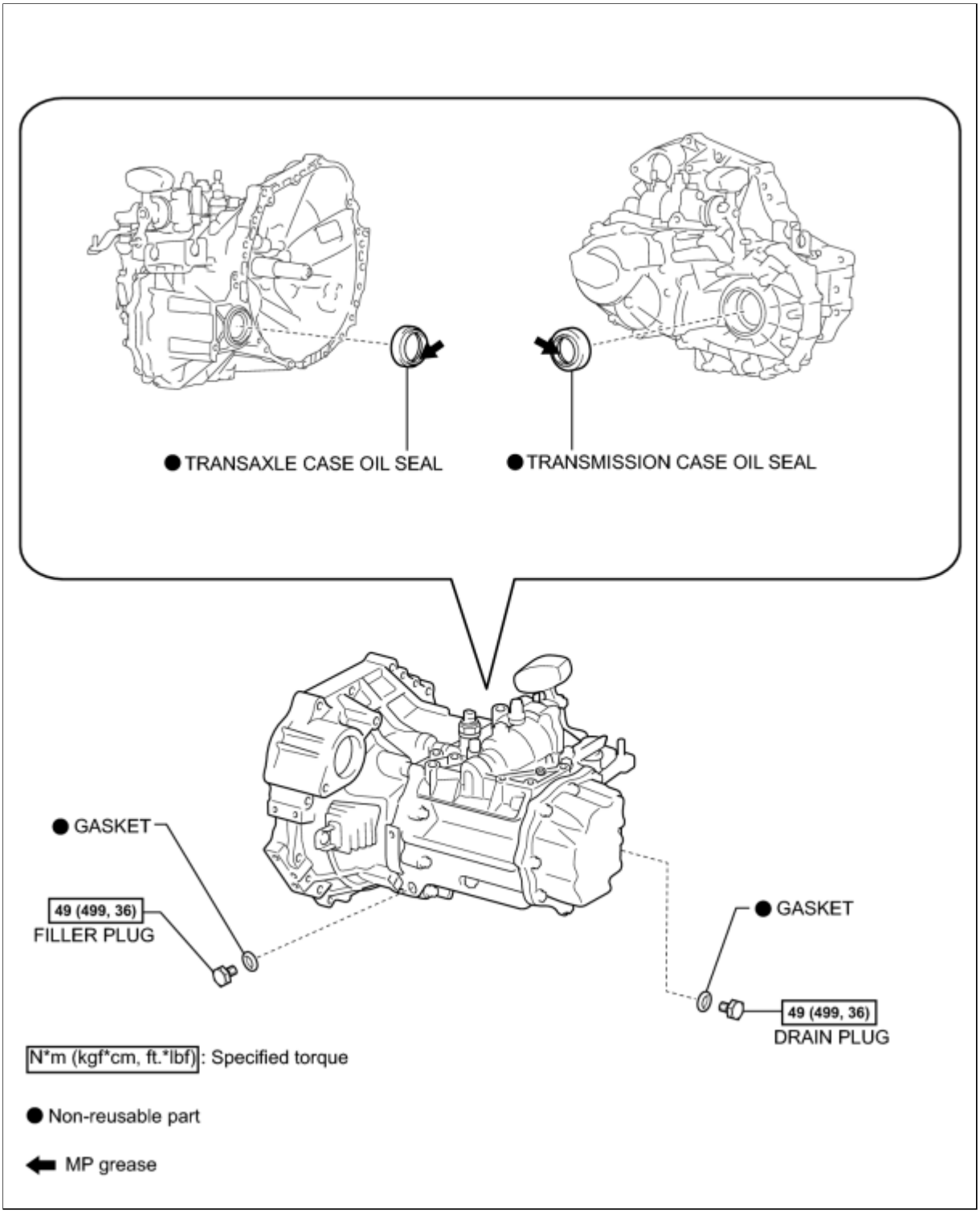
● TRANSAXLE CASE OIL SEAL
● TRANSMISSION CASE OIL SEAL
● GASKET
49 (499, 36)
FILLER PLUG
● GASKET
49 (499, 36)
DRAIN PLUG
N*m (kgf*cm, ft.*lbf): Specified torque
● Non-reusable part
MP grease

Last Modified: 3-10-2010	6.4 A	**From:** 200901
Model Year: 2010	**Model:** Corolla	**Doc ID:** RM000003BHS005X
Title: E351 MANUAL TRANSMISSION / TRANSAXLE: DIFFERENTIAL OIL SEAL: REPLACEMENT (2010 Corolla)		

REPLACEMENT

1. REMOVE ENGINE UNDER COVER LH

2. REMOVE ENGINE UNDER COVER RH

3. DRAIN MANUAL TRANSAXLE OIL INFO

4. REMOVE FRONT DRIVE SHAFT ASSEMBLY

INFO .

5. REMOVE TRANSAXLE CASE OIL SEAL

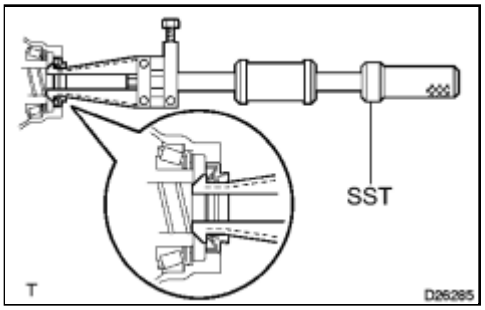

(a) Using SST, remove the transaxle case oil seal.

SST: 09308-00010

6. REMOVE TRANSMISSION CASE OIL SEAL

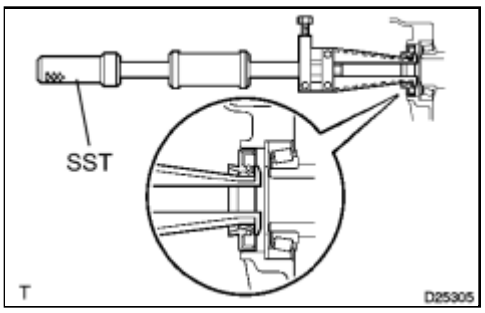

(a) Using SST, remove the transmission case oil seal.

SST: 09308-00010

7. INSTALL TRANSAXLE CASE OIL SEAL

(a) Coat the lip of a new oil seal with MP grease.

(b) Using SST and a hammer, tap in the oil seal.

SST: 09608-10010

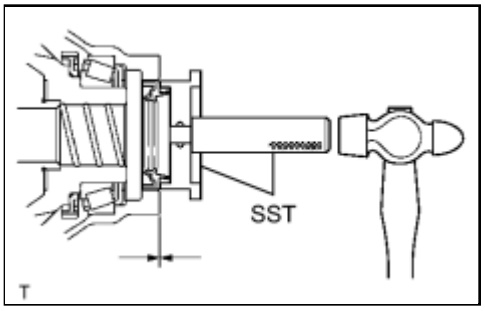

SST: 09950-70010

09951-07200

Standard depth:

-0.5 to 0.5 mm (-0.0197 to 0.0197 in.)

NOTICE:

Do not damage the oil seal lip.

8. INSTALL TRANSMISSION CASE OIL SEAL

(a) Coat the lip of a new oil seal with MP grease.

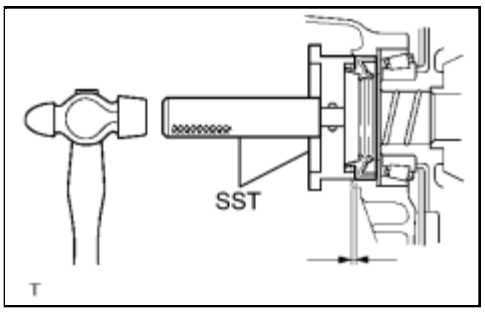

(b) Using SST and a hammer, tap in the oil seal.

SST: 09608-32010

SST: 09950-70010

09951-07200

Standard depth:

3.0 to 4.0 mm (0.118 to 0.158 in.)

NOTICE:

Do not damage the oil seal lip.

9. INSTALL FRONT DRIVE SHAFT ASSEMBLY

INFO .

10. ADD MANUAL TRANSAXLE OIL INFO

11. INSPECT MANUAL TRANSAXLE OIL INFO

12. INSTALL ENGINE UNDER COVER LH

13. INSTALL ENGINE UNDER COVER RH

Last Modified: 3-10-2010	6.4 K	**From:** 200901
Model Year: 2010	**Model:** Corolla	**Doc ID:** RM000001B3G01UX
Title: C59 MANUAL TRANSMISSION / TRANSAXLE: INPUT SHAFT: COMPONENTS (2010 Corolla)		

COMPONENTS

ILLUSTRATION

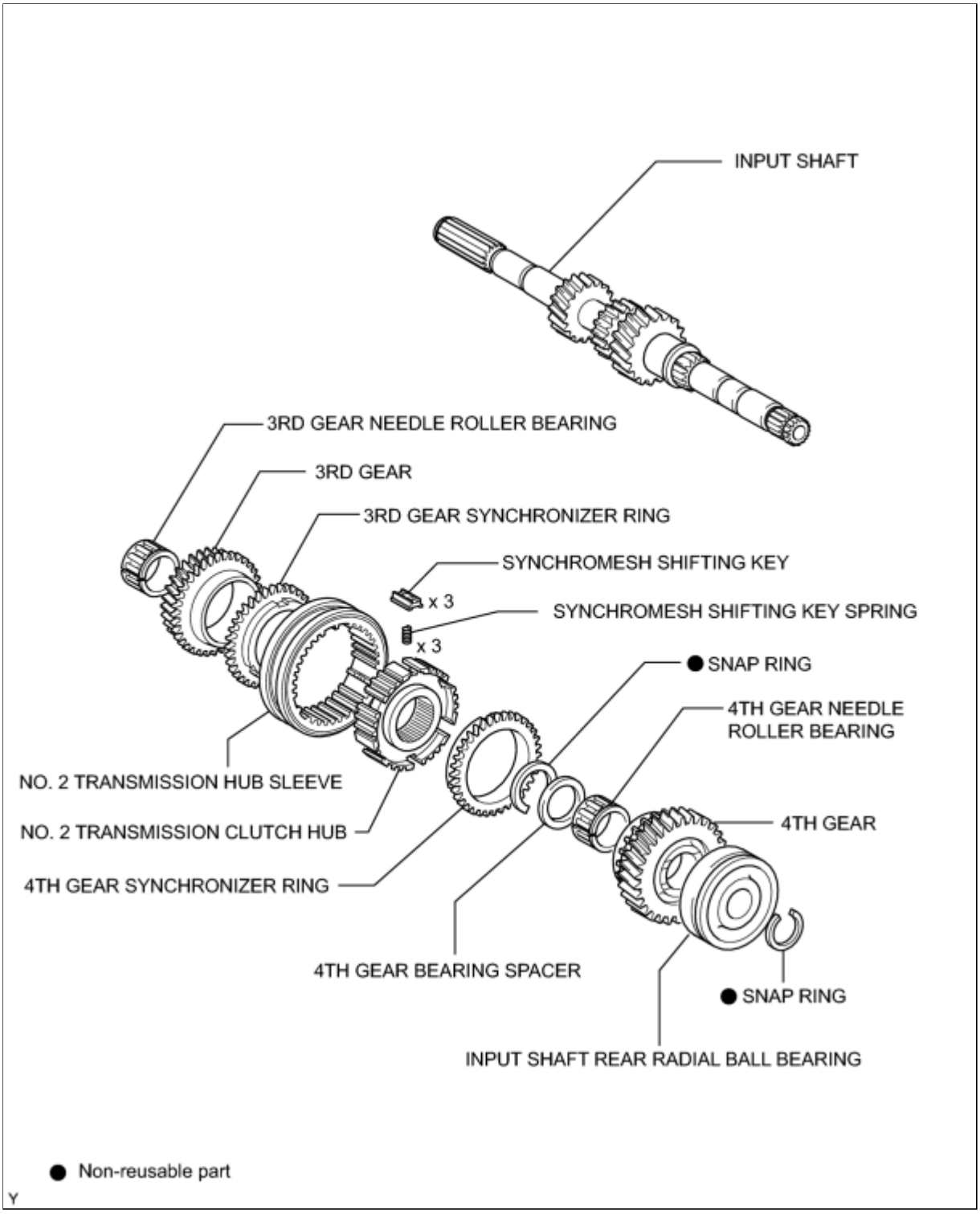
INPUT SHAFT
3RD GEAR NEEDLE ROLLER BEARING
3RD GEAR
3RD GEAR SYNCHRONIZER RING
SYNCHROMESH SHIFTING KEY
x 3
SYNCHROMESH SHIFTING KEY SPRING
x 3
● SNAP RING
4TH GEAR NEEDLE ROLLER BEARING
NO. 2 TRANSMISSION HUB SLEEVE
NO. 2 TRANSMISSION CLUTCH HUB
4TH GEAR
4TH GEAR SYNCHRONIZER RING
4TH GEAR BEARING SPACER
● SNAP RING
INPUT SHAFT REAR RADIAL BALL BEARING
● Non-reusable part

Y

Last Modified: 3-10-2010	6.4 A	**From:** 200901
Model Year: 2010	**Model:** Corolla	**Doc ID:** RM000001A0X01UX
Title: C59 MANUAL TRANSMISSION / TRANSAXLE: INPUT SHAFT: DISASSEMBLY (2010 Corolla)		

DISASSEMBLY

1. INSPECT 4TH GEAR THRUST CLEARANCE

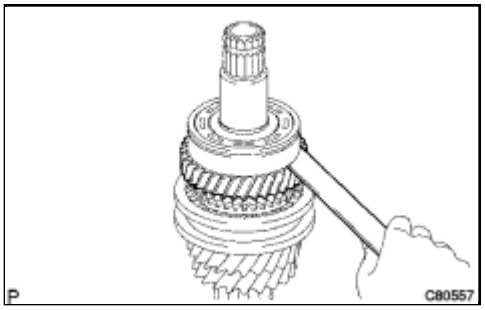

(a) Using a feeler gauge, measure the 4th gear thrust clearance.

Standard clearance:
0.10 to 0.55 mm (0.00394 to 0.0217 in.)
Maximum clearance:
0.55 mm (0.0217 in.)

If the clearance exceeds the maximum, replace the No. 2 transmission clutch hub, 4th gear or input shaft rear radial ball bearing.

2. INSPECT 3RD GEAR THRUST CLEARANCE

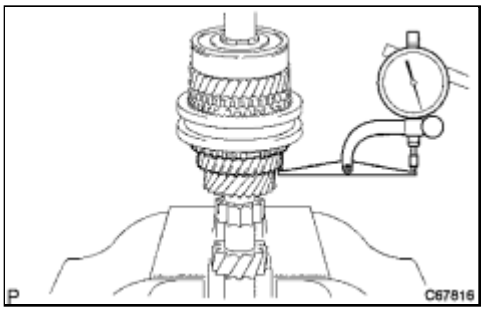

(a) Using a dial indicator, measure the 3rd gear thrust clearance.

Standard clearance:
0.10 to 0.35 mm (0.00394 to 0.0138 in.)
Maximum clearance:
0.35 mm (0.0138 in.)

If the clearance exceeds the maximum, replace the No. 2 transmission clutch hub, 3rd gear or input shaft.

3. INSPECT 4TH GEAR RADIAL CLEARANCE

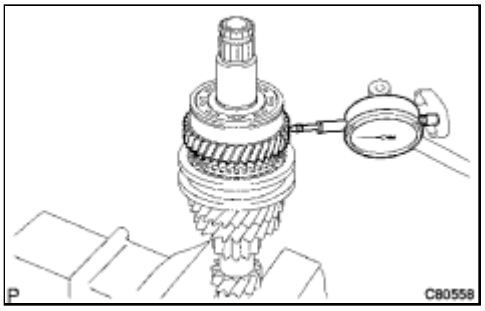

(a) Using a dial indicator, measure the 4th gear radial clearance between the gear and shaft.

Standard clearance:
NSK made bearing
0.009 to 0.050 mm (0.000354 to 0.00197 in.)
JTEKT made bearing
0.009 to 0.050 mm (0.000354 to 0.00197 in.)
Maximum clearance:
NSK made bearing
0.050 mm (0.00197 in.)
JTEKT made bearing

0.050 mm (0.00197 in.)

If the clearance exceeds the maximum, replace the 4th gear, 4th gear needle roller bearing or input shaft.

4. INSPECT 3RD GEAR RADIAL CLEARANCE

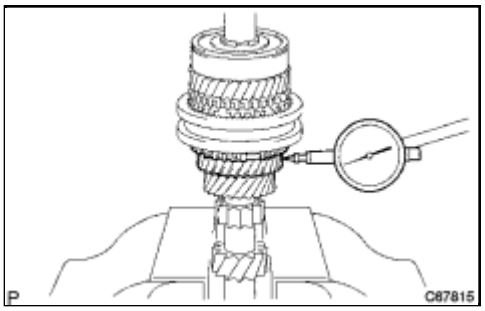

(a) Using a dial indicator, measure the 3rd gear radial clearance.

Standard clearance:

NSK made bearing

0.015 to 0.056 mm (0.000591 to 0.00220 in.)

JTEKT made bearing

0.015 to 0.058 mm (0.000591 to 0.00228 in.)

Maximum clearance:

NSK made bearing

0.056 mm (0.00220 in.)

JTEKT made bearing

0.058 mm (0.00228 in.)

If the clearance exceeds the maximum, replace the 3rd gear, 3rd gear needle roller bearing or input shaft.

5. REMOVE 4TH GEAR

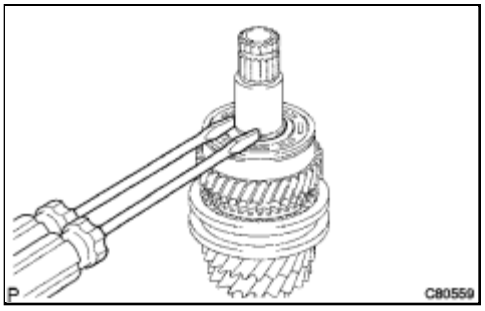

(a) Using 2 screwdrivers and a hammer, remove the input shaft rear bearing shaft snap ring from the input shaft.

HINT:

Use a piece of cloth to keep the snap ring from flying off.

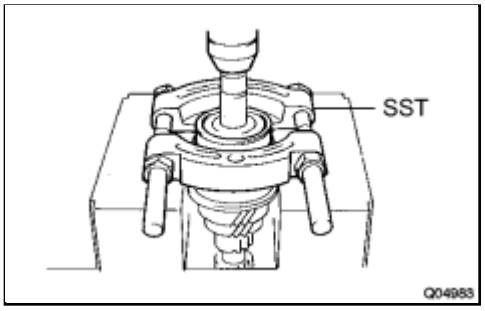

(b) Using SST and a press, remove the input shaft rear radial ball bearing and 4th gear from the input shaft.

SST: 09950-00020

HINT:

- Do not tighten SST excessively.
- Support the input shaft assembly by hand to prevent it from dropping off.

6. REMOVE 4TH GEAR NEEDLE ROLLER BEARING

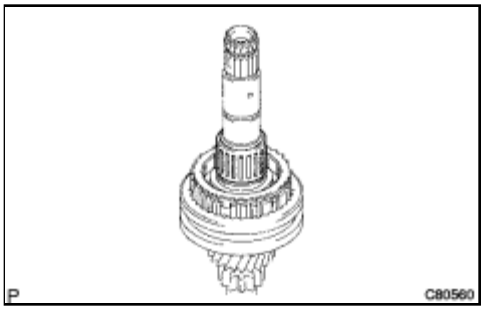

(a) Remove the 4th gear needle roller bearing and 4th gear bearing spacer from the input shaft.

7. REMOVE 4TH GEAR SYNCHRONIZER RING

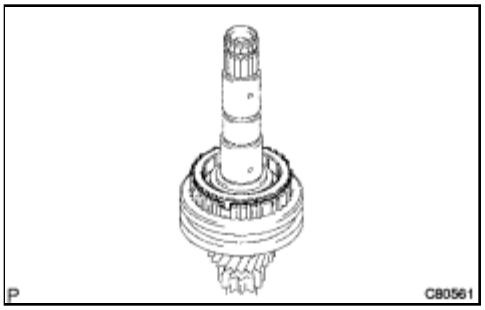

(a) Remove the 4th gear synchronizer ring from the No. 2 transmission clutch hub.

8. REMOVE 3RD GEAR

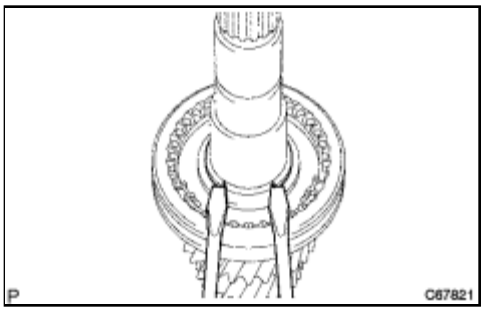

(a) Using 2 screwdrivers and a hammer, remove the No. 2 clutch hub setting shaft snap ring from the input shaft.

HINT:

Use a piece of cloth to keep the snap ring from flying off.

(b) Using SST and a press, remove the No. 2 transmission clutch hub and 3rd gear from the input shaft.

SST: 09950-00020

NOTICE:

- Do not tighten SST excessively.
- Support the input shaft by hand to prevent it from dropping off.

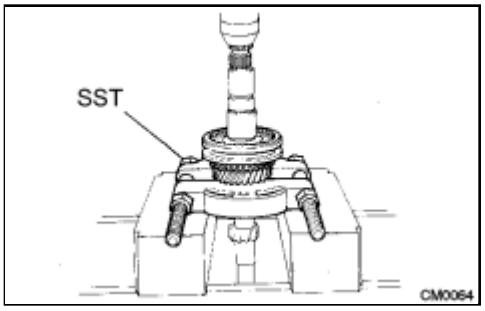

9. REMOVE 3RD GEAR SYNCHRONIZER RING

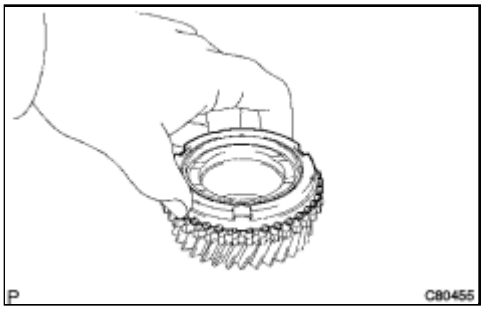

(a) Remove the 3rd gear synchronizer ring from the 3rd gear.

10. REMOVE 3RD GEAR NEEDLE ROLLER BEARING

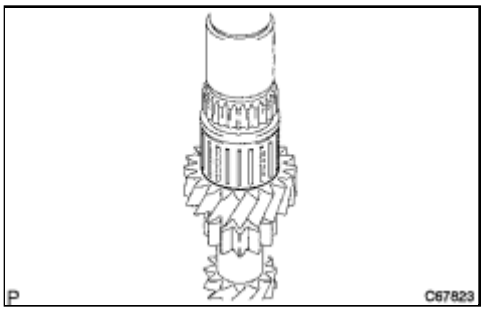

(a) Remove the 3rd gear needle roller bearing from the input shaft.

11. REMOVE NO. 2 TRANSMISSION HUB SLEEVE

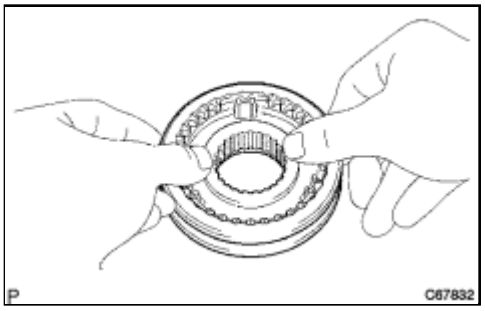

(a) Remove the No. 2 transmission hub sleeve, 3 shifting keys, and 3 shifting key springs from the No. 2 transmission clutch hub.

NOTICE:

Use a piece of cloth to keep the shifting keys and shifting key springs from flying off.

Last Modified: 3-10-2010	6.4 G	**From:** 200901
Model Year: 2010	**Model:** Corolla	**Doc ID:** RM000001A0W01UX
Title: C59 MANUAL TRANSMISSION / TRANSAXLE: INPUT SHAFT: INSPECTION (2010 Corolla)		

INSPECTION

1. INSPECT INPUT SHAFT

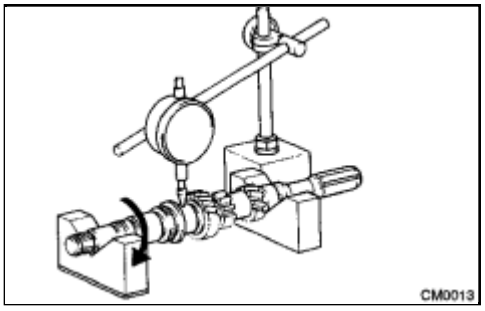

(a) Using a dial indicator, check the input shaft runout.

Maximum runout:
0.015 mm (0.000591 in.)

If the runout exceeds the maximum, replace the input shaft.

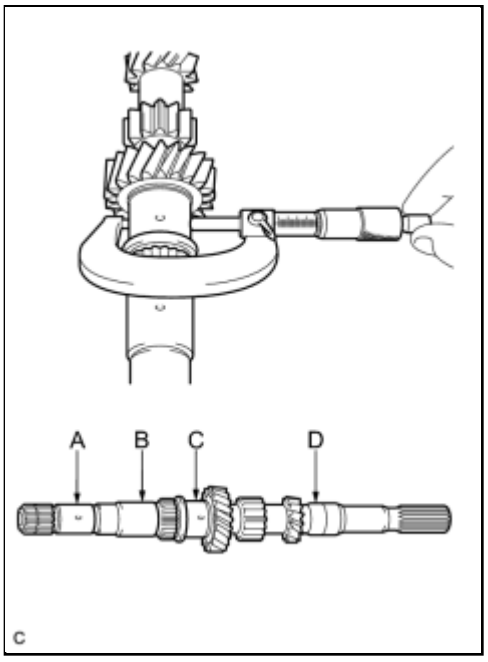

(b) Using a micrometer, measure the outer diameter of the input shaft journal surface at the locations indicated.

Standard outer diameter:

Part A
24.885 to 24.900 mm (0.9797 to 0.9803 in.)
Part B
28.991 to 29.006 mm (1.1414 to 1.1420 in.)
Part C
30.985 to 31.000 mm (1.2198 to 1.2204 in.)
Part D
24.985 to 25.000 mm (0.9836 to 0.9842 in.)

Minimum outer diameter:

Part A
24.885 mm (0.9797 in.)
Part B
28.991 mm (1.1414 in.)
Part C
30.985 mm (1.2198 in.)
Part D
24.985 mm (0.9836 in.)

If any of the outer diameters are less than the minimum, replace the input shaft.

2. INSPECT 4TH GEAR

(a) Using a cylinder gauge, measure the inside diameter of the

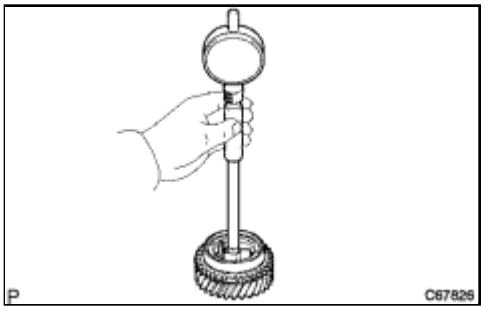

4th gear.

Standard inside diameter:
34.015 to 34.031 mm (1.3391 to 1.3398 in.)
Maximum inside diameter:
34.031 mm (1.3398 in.)

If the inside diameter exceeds the maximum, replace the 4th gear.

3. INSPECT 3RD GEAR

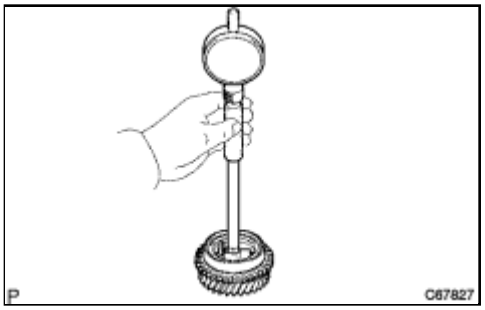

(a) Using a cylinder gauge, measure the inside diameter of the 3rd gear.

Standard inside diameter:
36.015 to 36.031 mm (1.4179 to 1.4185 in.)
Maximum inside diameter:
36.031 mm (1.4185 in.)

If the inside diameter exceeds the maximum, replace the 3rd gear.

4. INSPECT 4TH GEAR SYNCHRONIZER RING

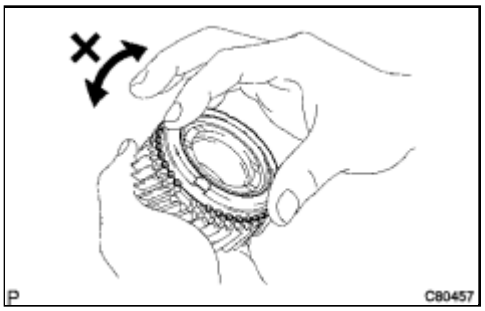

(a) Check for wear and damage.

(b) Coat the 4th gear cone with gear oil.

(c) Turn the synchronizer ring in one direction while pushing it against the 4th gear cone.

(d) Check that the ring locks.

If the synchronizer ring does not lock, replace the synchronizer ring.

(e) Using a feeler gauge, measure the clearance between the synchronizer ring and the gear spline end.

Standard clearance:
0.75 to 1.65 mm (0.0295 to 0.0649 in.)
Minimum clearance:

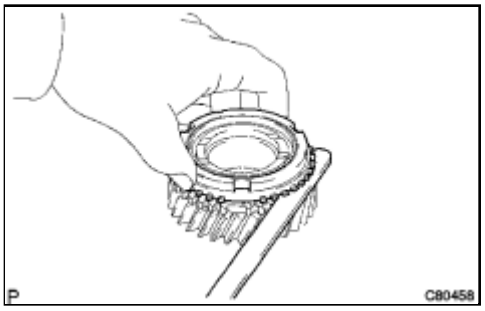

0.75 mm (0.0295 in.)

If the clearance is less than the minimum, replace the synchronizer ring.

5. INSPECT 3RD GEAR SYNCHRONIZER RING

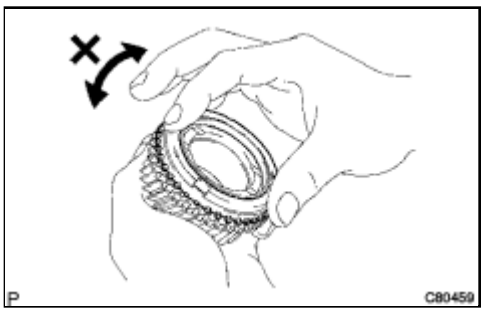

(a) Check for wear and damage.

(b) Coat the 3rd gear cone with gear oil.

(c) Turn the synchronizer ring in one direction while pushing it against the 3rd gear cone.

(d) Check that the ring locks.

If the synchronizer ring does not lock, replace the synchronizer ring.

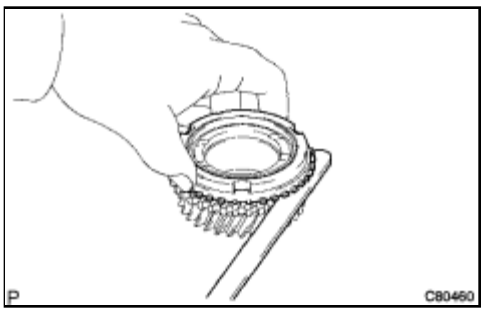

(e) Using a feeler gauge, measure the clearance between the synchronizer ring and the gear spline end.

Standard clearance:
0.65 to 1.75 mm (0.0256 to 0.0689 in.)
Minimum clearance:
0.65 mm (0.0256 in.)

If the clearance is less than the minimum, replace the synchronizer ring.

6. INSPECT NO. 2 TRANSMISSION HUB SLEEVE

(a) Check the sliding condition between the No. 2 transmission hub sleeve and the No. 2 transmission clutch hub.

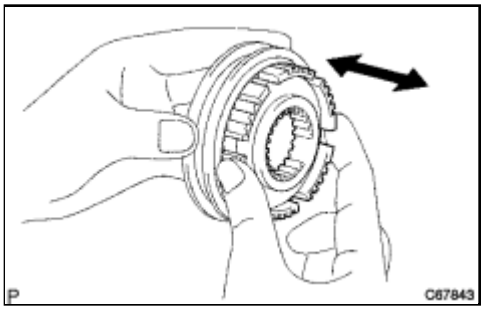

(b) Check that the edges of the No. 2 transmission hub sleeve spline gear are not worn down.

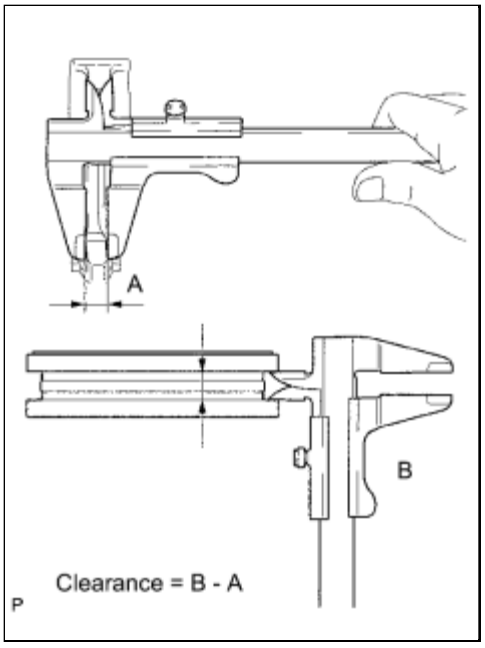

(c) Using a vernier caliper, measure the width of the No. 2 transmission hub sleeve groove (B) and the thickness of the claw part on the No. 2 gear shift fork (A), and calculate the clearance.

Standard clearance (B - A):
0.15 to 0.35 mm (0.00591 to 0.0137 in.)

If the clearance is out of the specification, replace the No. 2 transmission hub sleeve and No. 2 gear shift fork.

Last Modified: 3-10-2010	6.4 A	**From:** 200901
Model Year: 2010	**Model:** Corolla	**Doc ID:** RM000001A0Y01UX
Title: C59 MANUAL TRANSMISSION / TRANSAXLE: INPUT SHAFT: REASSEMBLY (2010 Corolla)		

REASSEMBLY

1. INSTALL NO. 2 TRANSMISSION HUB SLEEVE

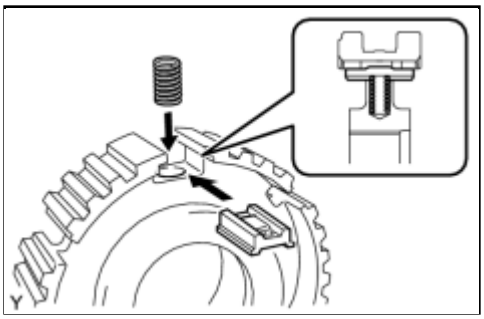

(a) Coat the No. 2 transmission hub sleeve with gear oil.

(b) Install the 3 synchromesh shifting key springs and 3 synchromesh shifting keys to the No. 2 transmission clutch hub.

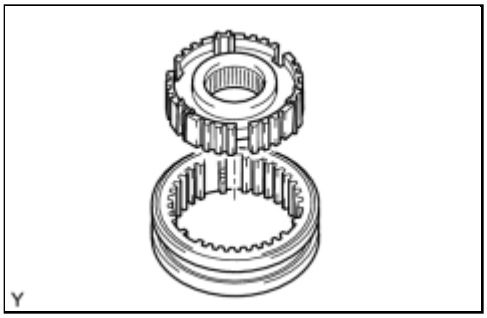

(c) Install the No. 2 transmission clutch hub onto the No. 2 transmission hub sleeve.

NOTICE:

Position the No. 2 transmission hub sleeve and No. 2 transmission clutch hub correctly as shown in the illustration.

2. INSTALL 3RD GEAR NEEDLE ROLLER BEARING

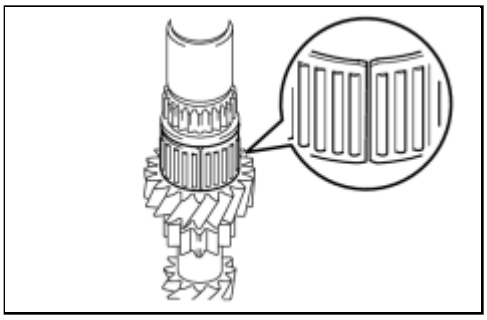

(a) Coat the 3rd gear needle roller bearing with gear oil and install it onto the input shaft.

3. INSTALL 3RD GEAR

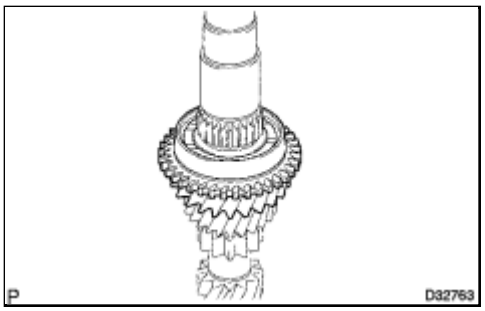

(a) Coat the 3rd gear with gear oil and install it onto the input shaft.

4. INSTALL 3RD GEAR SYNCHRONIZER RING

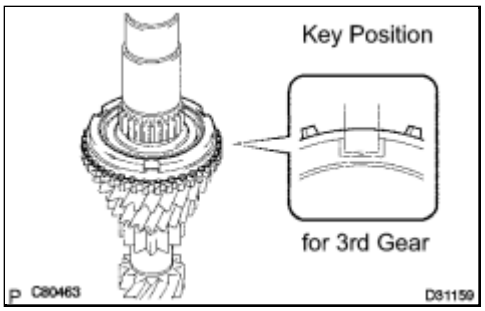

(a) Coat the 3rd gear synchronizer ring with gear oil and install it onto the 3rd gear.

5. INSTALL NO. 2 TRANSMISSION CLUTCH HUB

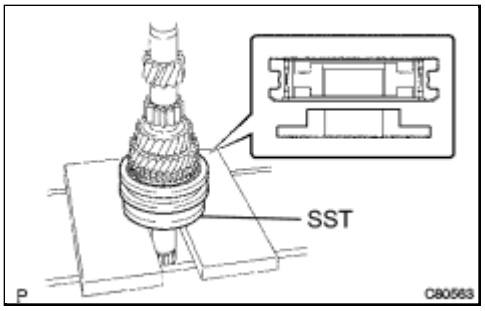

(a) Using SST and a press, install the No. 2 transmission clutch hub onto the input shaft.

SST: 09316-60011

09316-00021

NOTICE:

Fit the synchromesh shifting keys into the grooves of the synchronizer ring correctly.

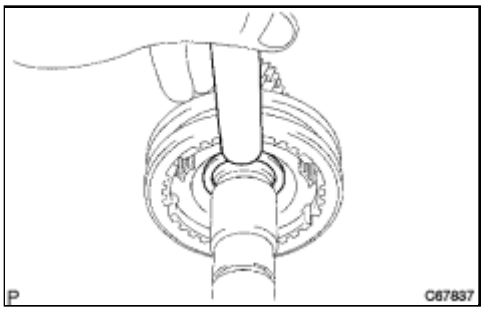

(b) Select a snap ring that will allow minimal axial play.

Standard clearance:
0.1 mm (0.00394 in.) or less
Snap Ring Thickness:

MARK	THICKNESS MM (IN.)	MARK	THICKNESS MM (IN.)
0	2.30 (0.0906)	3	2.48 (0.0976)

1	2.36 (0.0929)	4	2.54 (0.1000)
2	2.42 (0.0953)	5	2.60 (0.1024)

(c) Using a brass bar and a hammer, install the snap ring onto the input shaft.

6. INSTALL 4TH GEAR SYNCHRONIZER RING

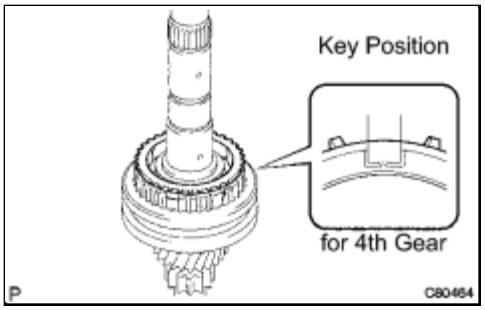

(a) Coat the 4th gear synchronizer ring with gear oil and install it onto the No. 2 transmission clutch hub.

7. INSTALL 4TH GEAR NEEDLE ROLLER BEARING

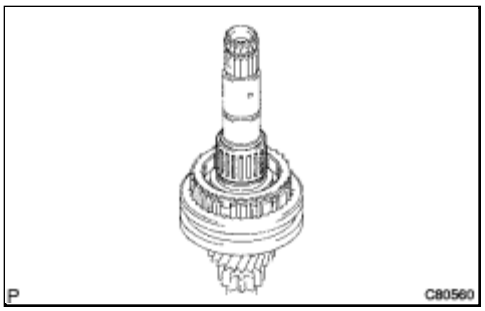

(a) Coat the 4th gear needle roller bearing and 4th gear bearing spacer with gear oil and install them onto the No. 2 transmission clutch hub.

8. INSTALL 4TH GEAR

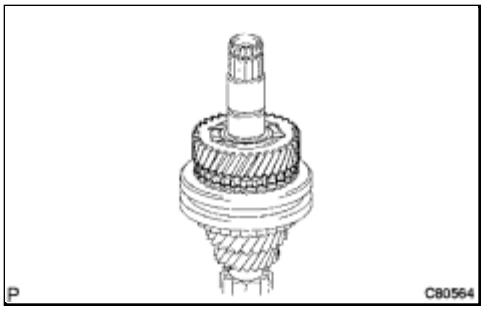

(a) Coat the 4th gear with gear oil and install it onto the input shaft.

9. INSTALL INPUT SHAFT REAR RADIAL BALL BEARING

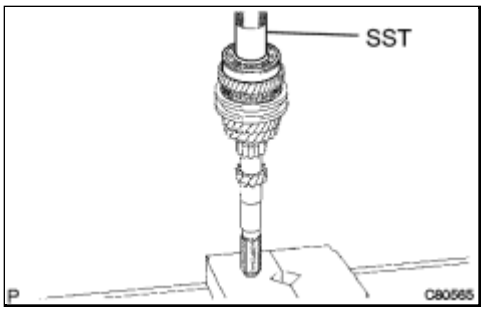

(a) Using SST and a press, install the input shaft rear radial ball bearing onto the input shaft.

SST: 09608-04031

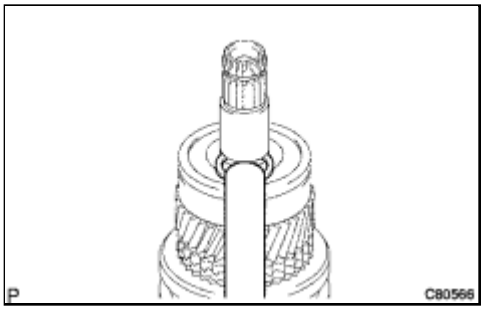

(b) Select a snap ring that will allow minimum axial play.

Standard clearance:
0.1 mm (0.00394 in.) or less
Snap Ring Thickness:

MARK	THICKNESS MM (IN.)	MARK	THICKNESS MM (IN.)
A	2.29 (0.0901)	D	2.47 (0.0972)
B	2.35 (0.0925)	E	2.53 (0.0996)
C	2.41 (0.0948)	F	2.59 (0.1019)

(c) Using a brass bar and a hammer, install the snap ring onto the input shaft.

NOTICE:
Do not damage the journal surface of the snap ring.

10. INSPECT 3RD GEAR RADIAL CLEARANCE

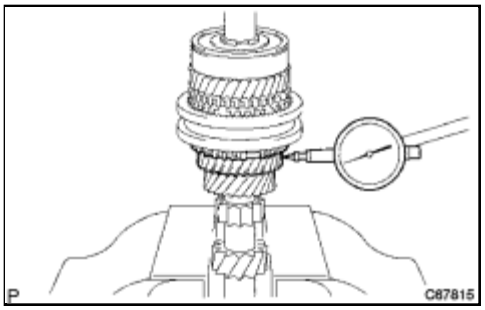

(a) Using a dial indicator, measure the 3rd gear radial clearance.

Standard clearance:
NSK made bearing
0.015 to 0.056 mm (0.000591 to 0.00220 in.)
JTEKT made bearing
0.015 to 0.058 mm (0.000591 to 0.00228 in.)
Maximum clearance:
NSK made bearing
0.056 mm (0.00220 in.)
JTEKT made bearing
0.058 mm (0.00228 in.)

If the clearance exceeds the maximum, replace the 3rd gear, 3rd gear needle roller bearing or input shaft.

11. INSPECT 4TH GEAR RADIAL CLEARANCE

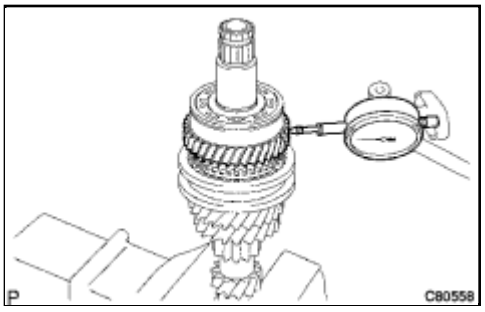

(a) Using a dial indicator, measure the 4th gear radial clearance between the gear and shaft.

Standard clearance:

NSK made bearing

0.009 to 0.050 mm (0.000354 to 0.00197 in.)

JTEKT made bearing

0.009 to 0.050 mm (0.000354 to 0.00197 in.)

Maximum clearance:

NSK made bearing

0.050 mm (0.00197 in.)

JTEKT made bearing

0.050 mm (0.00197 in.)

If the clearance exceeds the maximum, replace the 4th gear, 4th gear needle roller bearing or input shaft.

12. INSPECT 3RD GEAR THRUST CLEARANCE

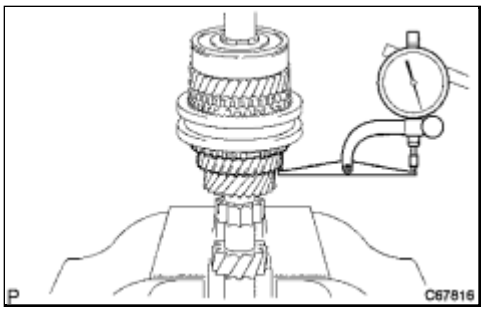

(a) Using a dial indicator, measure the 3rd gear thrust clearance.

Standard clearance:

0.10 to 0.35 mm (0.00394 to 0.0138 in.)

Maximum clearance:

0.35 mm (0.0138 in.)

If the clearance exceeds the maximum, replace the No. 2 transmission clutch hub, 3rd gear or input shaft.

13. INSPECT 4TH GEAR THRUST CLEARANCE

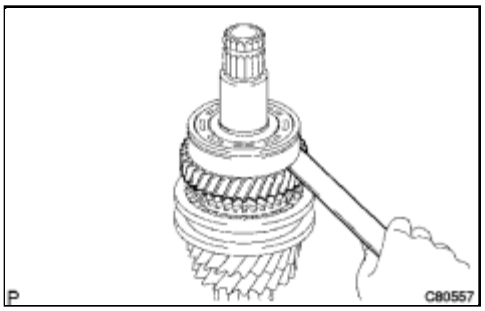

(a) Using a feeler gauge, measure the 4th gear thrust clearance.

Standard clearance:

0.10 to 0.55 mm (0.00394 to 0.0217 in.)

Maximum clearance:

0.55 mm (0.0217 in.)

If the clearance exceeds the maximum, replace the No. 2 transmission clutch hub, 4th gear or input shaft rear radial ball bearing.

Last Modified: 3-10-2010	6.4 K	**From:** 200901
Model Year: 2010	**Model:** Corolla	**Doc ID:** RM000000Z1V00DX
Title: E351 MANUAL TRANSMISSION / TRANSAXLE: INPUT SHAFT: COMPONENTS (2010 Corolla)		

COMPONENTS

ILLUSTRATION

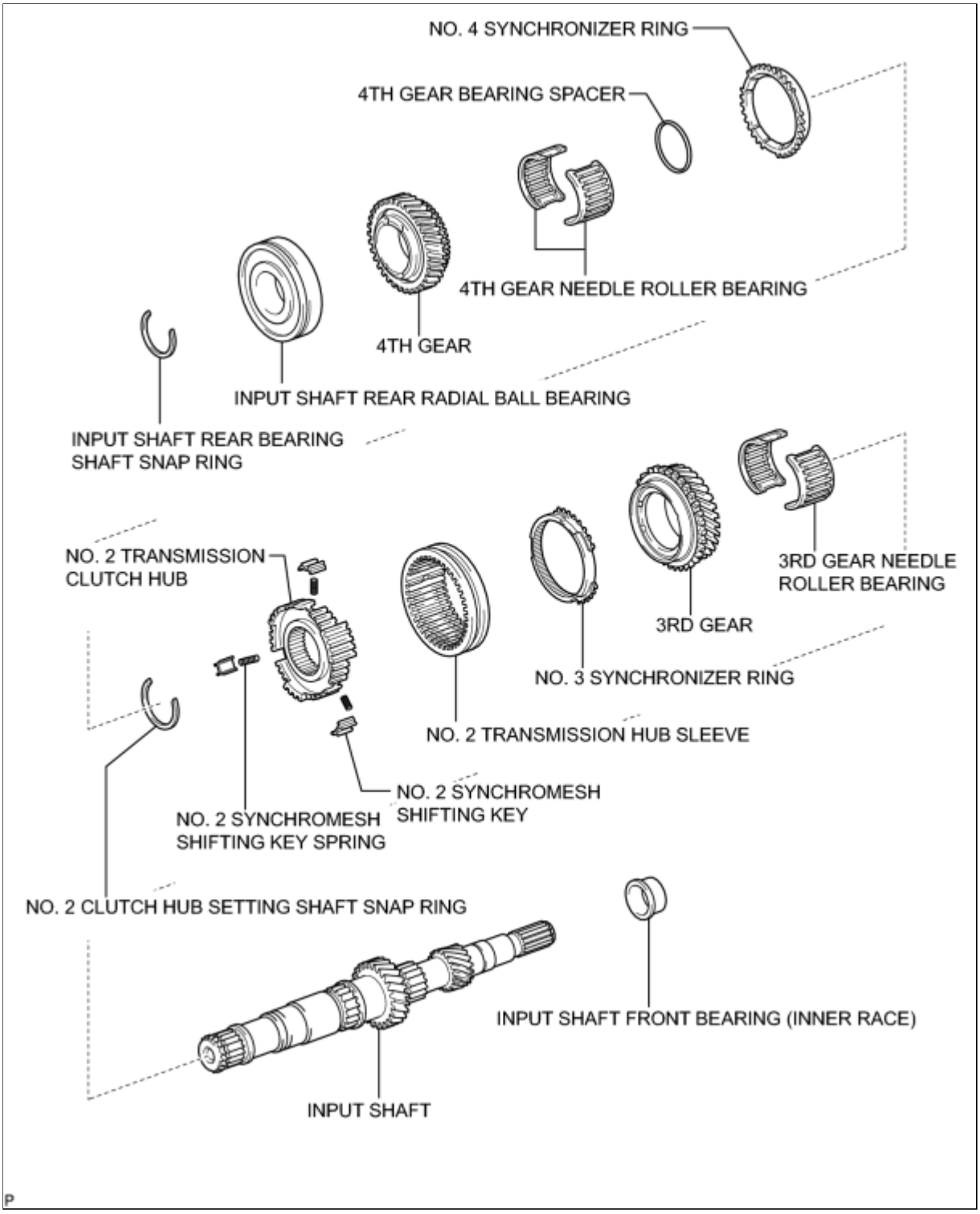
NO. 4 SYNCHRONIZER RING
4TH GEAR BEARING SPACER
4TH GEAR NEEDLE ROLLER BEARING
4TH GEAR
INPUT SHAFT REAR RADIAL BALL BEARING
INPUT SHAFT REAR BEARING SHAFT SNAP RING
NO. 2 TRANSMISSION CLUTCH HUB
3RD GEAR NEEDLE ROLLER BEARING
3RD GEAR
NO. 3 SYNCHRONIZER RING
NO. 2 TRANSMISSION HUB SLEEVE
NO. 2 SYNCHROMESH SHIFTING KEY
NO. 2 SYNCHROMESH SHIFTING KEY SPRING
NO. 2 CLUTCH HUB SETTING SHAFT SNAP RING
INPUT SHAFT FRONT BEARING (INNER RACE)
INPUT SHAFT

Last Modified: 3-10-2010	6.4 A	**From:** 200901
Model Year: 2010	**Model:** Corolla	**Doc ID:** RM000000Z1W00DX
Title: E351 MANUAL TRANSMISSION / TRANSAXLE: INPUT SHAFT: DISASSEMBLY (2010 Corolla)		

DISASSEMBLY

1. REMOVE 4TH GEAR

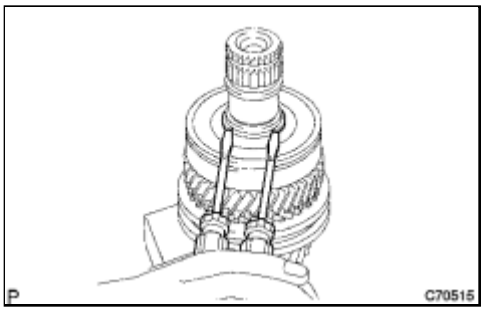

(a) Hold the input shaft assembly in a vise using aluminum plates.

(b) Using 2 screwdrivers and a hammer, remove the input shaft rear bearing shaft snap ring from the input shaft.

HINT:

Use a piece of cloth to keep the snap ring from flying.

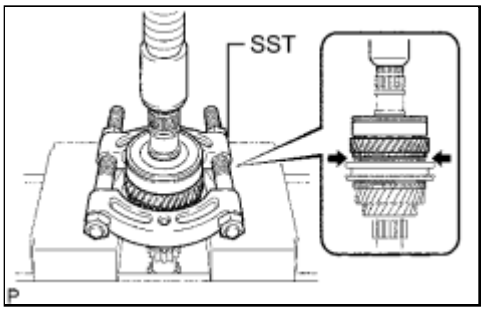

(c) Using SST and a press, remove the input shaft rear bearing and 4th gear.

SST: 09950-00020

NOTICE:

Do not overtighten SST.

2. REMOVE 4TH GEAR NEEDLE ROLLER BEARING

(a) Remove the 4th gear needle roller bearing from the input shaft.

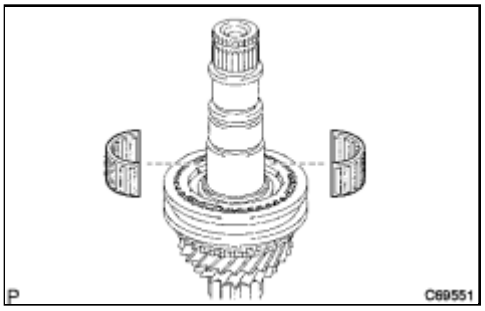

3. REMOVE NO. 4 SYNCHRONIZER RING

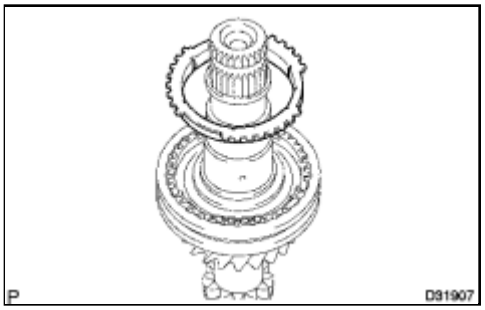

(a) Remove the No. 4 synchronizer ring from the No. 2 transmission clutch hub.

4. REMOVE 4TH GEAR BEARING SPACER

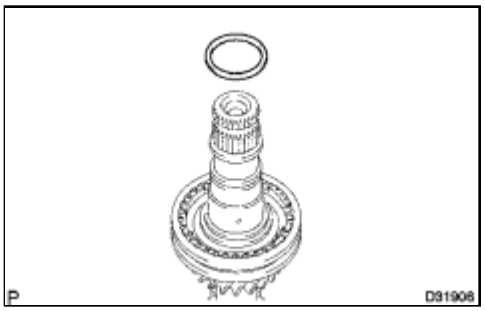

(a) Remove the 4th gear bearing spacer from the No. 2 transmission clutch hub.

5. REMOVE 3RD GEAR

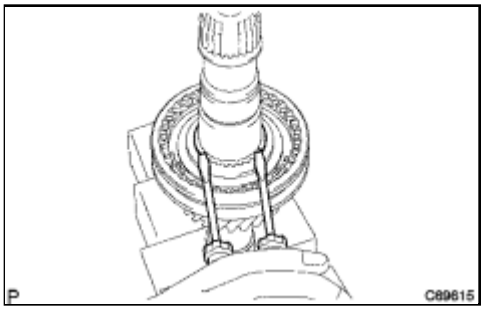

(a) Using 2 screwdrivers and a hammer, remove the No. 2 clutch hub setting shaft snap ring from the input shaft.

HINT:

Use a piece of cloth to keep the snap ring from flying.

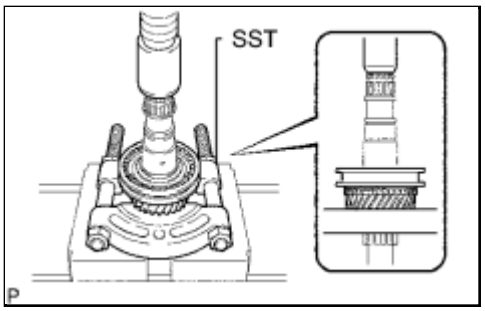

(b) Using SST and a press, remove the No. 2 transmission clutch hub and 3rd gear from the input shaft.

SST: 09950-00020

NOTICE:

Do not overtighten SST.

6. REMOVE 3RD GEAR NEEDLE ROLLER BEARING

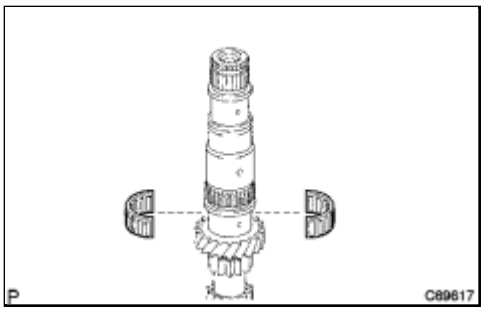

(a) Remove the 3rd gear needle roller bearing from the input shaft.

7. REMOVE NO. 3 SYNCHRONIZER RING

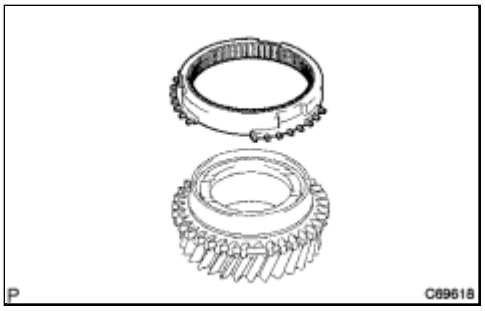

(a) Remove the No. 3 synchronizer ring from the 3rd gear.

8. REMOVE NO. 2 TRANSMISSION HUB SLEEVE

(a) Remove the No. 2 transmission hub sleeve, 3 No. 2 synchromesh shifting keys, and 3 No. 2 synchromesh shifting key springs from the No. 2 transmission clutch hub.

HINT:

Use a cloth to keep the shifting keys and shifting key springs from flying.

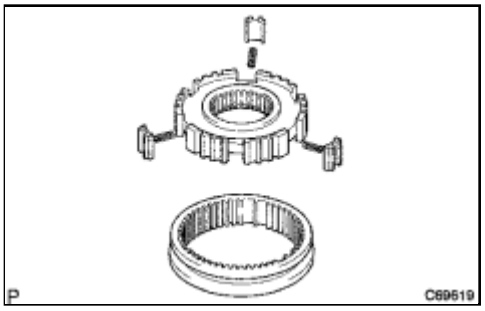

9. REMOVE INPUT SHAFT FRONT BEARING

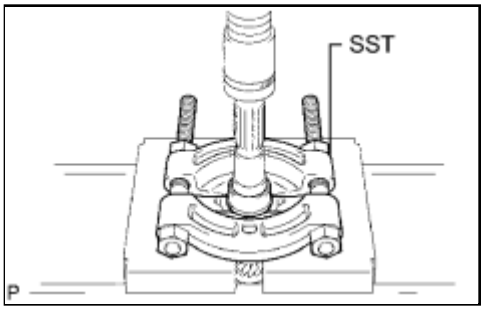

(a) Using SST and a press, remove the input shaft front bearing (inner race) from the input shaft.

SST: 09950-00020

NOTICE:

Do not overtighten SST.

Last Modified: 3-10-2010	6.4 G	**From:** 200901
Model Year: 2010	**Model:** Corolla	**Doc ID:** RM000000Z1U00DX
Title: E351 MANUAL TRANSMISSION / TRANSAXLE: INPUT SHAFT: INSPECTION (2010 Corolla)		

INSPECTION

1. INSPECT 4TH GEAR THRUST CLEARANCE

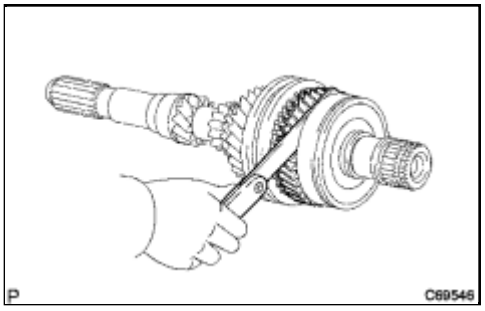

(a) Using a feeler gauge, measure the 4th gear thrust clearance.

Standard clearance:
0.10 to 0.57 mm (0.00393 to 0.0224 in.)

If the clearance is out of specification, replace the No. 2 transmission clutch hub, 4th gear, or input shaft rear radial ball bearing.

2. INSPECT 3RD GEAR THRUST CLEARANCE

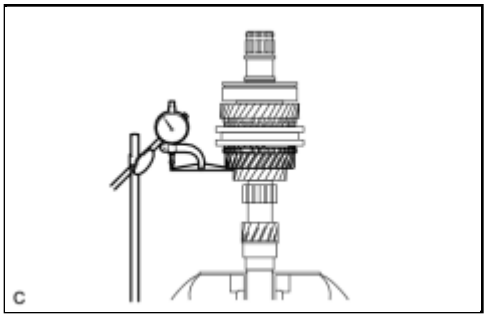

(a) Using a dial indicator, measure the 3rd gear thrust clearance.

Standard clearance:
0.10 to 0.35 mm (0.00393 to 0.0138 in.)

If the clearance is out of specification, replace the No. 2 transmission clutch hub, 3rd gear, or input shaft.

3. INSPECT 4TH GEAR RADIAL CLEARANCE

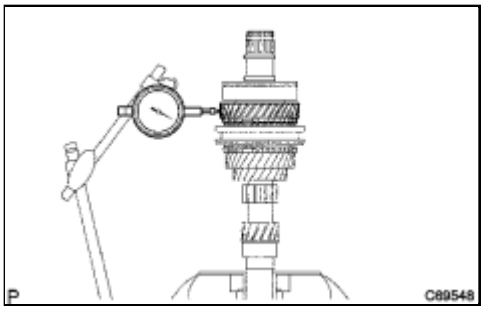

(a) Using a dial indicator, measure the 4th gear radial clearance.

Standard Clearance:

BEARING	STANDARD CLEARANCE MM (IN.)
KOYO made	0.009 to 0.053 (0.000354 to 0.00208)
NSK made	0.009 to 0.051 (0.000354 to 0.00201)

If the clearance is out of specification, replace the 4th gear, needle roller bearing, or input shaft.

4. INSPECT 3RD GEAR RADIAL CLEARANCE

(a) Using a dial indicator, measure the 3rd gear radial clearance.

Standard Clearance:

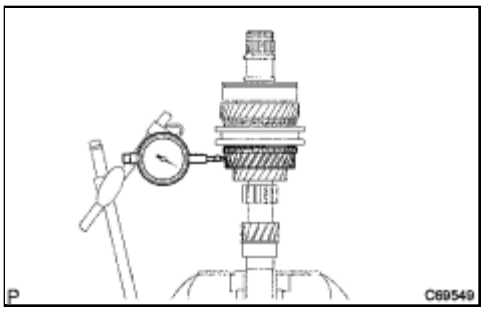

BEARING	STANDARD CLEARANCE MM (IN.)
KOYO made	0.009 to 0.053 (0.000354 to 0.00208)
NSK made	0.009 to 0.051 (0.000354 to 0.00201)

If the clearance is out of specification, replace the 3rd gear, needle roller bearing, or input shaft.

5. INSPECT INPUT SHAFT

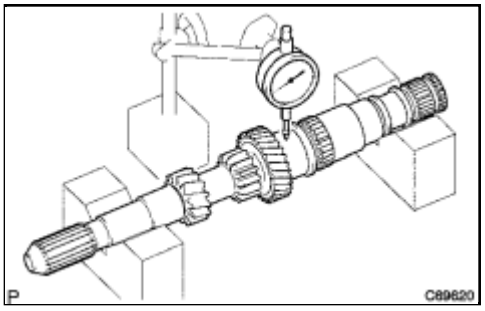

(a) Using V-blocks and a dial indicator, inspect the shaft for runout.

Maximum runout:
0.03 mm (0.00118 in.)

If the runout exceeds the maximum, replace the input shaft.

(b) Using a micrometer, measure the outside diameter of the input shaft journal surface.

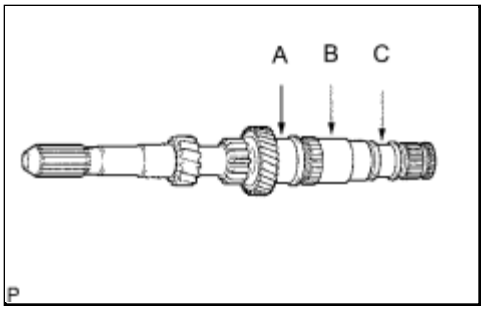

Outside Diameter:

PART	STANDARD OUTSIDE DIAMETER MM (IN.)	MINIMUM OUTSIDE DIAMETER MM (IN.)
A	35.984 to 36.000 (1.4167 to 1.4173)	35.984 (1.4167)

B	35.984 to 36.000 (1.4167 to 1.4173)	35.984 (1.4167)
C	27.957 to 27.972 (1.1007 to 1.1013)	27.957 (1.1007)

If the outside diameter is less than the minimum, replace the input shaft.

6. INSPECT 4TH GEAR

(a) Using a cylinder gauge, measure the inside diameter of the 4th gear.

Inside diameter:

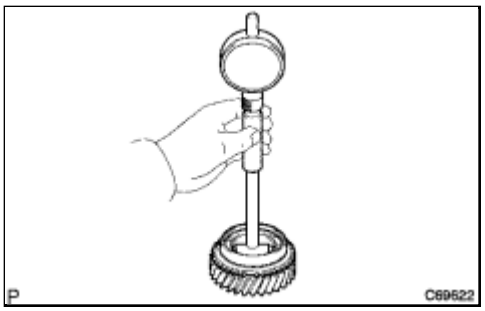

STANDARD INSIDE DIAMETER MM (IN.)	MAXIMUM INSIDE DIAMETER MM (IN.)
42.009 to 42.025 (1.6539 to 1.6545)	42.025 (1.6545)

If the inside diameter exceeds the maximum, replace the 4th gear.

7. INSPECT 3RD GEAR

(a) Using a cylinder gauge, measure the inside diameter of the 3rd gear.

Inside Diameter:

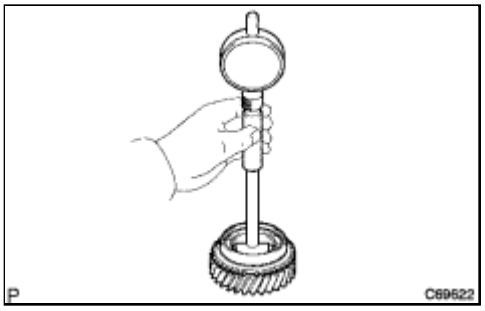

STANDARD INSIDE DIAMETER MM (IN.)	MAXIMUM INSIDE DIAMETER MM (IN.)
43.009 to 43.025 (1.6933 to 1.6939)	43.025 (1.6939)

If the inside diameter exceeds the maximum, replace the 3rd gear.

8. INSPECT NO. 4 SYNCHRONIZER RING

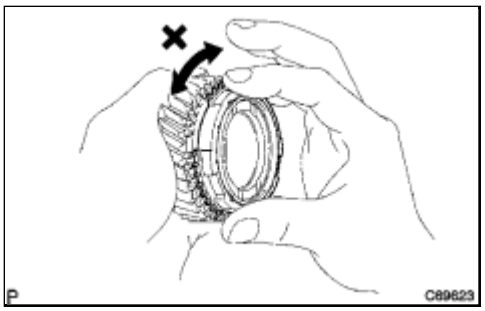

(a) Coat the 4th gear cone with gear oil. Turn the No. 4 synchronizer ring in one direction while pushing it against the 4th gear cone. Check that the ring locks.

If the No. 4 synchronizer ring does not lock, replace the ring or the 4th gear.

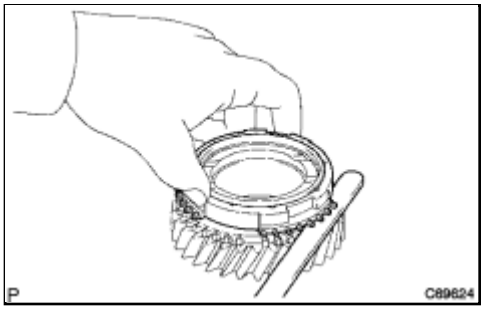

(b) Using a feeler gauge, measure the clearance between the No. 4 synchronizer ring back and 4th gear spline end.

Standard clearance:
0.75 to 1.65 mm (0.0295 to 0.0650 in.)

If the clearance is out of specification, replace the synchronizer ring.

9. INSPECT NO. 3 SYNCHRONIZER RING

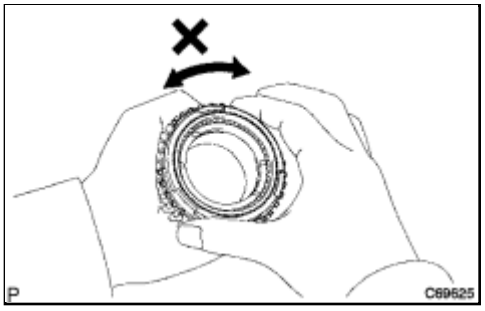

(a) Coat the 3rd gear cone with gear oil. Turn the synchronizer outer ring in one direction while pushing it against the 3rd gear cone. Check that the ring locks.

If the synchronizer outer ring does not lock, replace the ring or the 3rd gear.

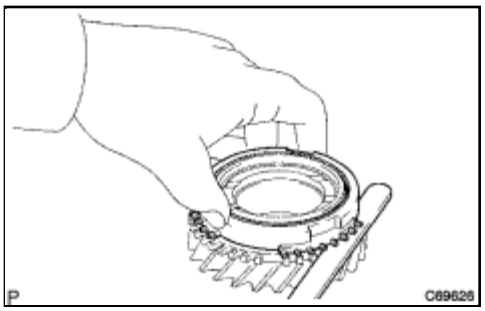

(b) Using a feeler gauge, measure the clearance between the No. 3 synchronizer ring back and 3rd gear spline end.

Standard clearance:
0.65 to 1.75 mm (0.0256 to 0.0689 in.)

If the clearance is out of specification, replace the No. 3 synchronizer ring.

10. INSPECT NO. 2 TRANSMISSION HUB SLEEVE

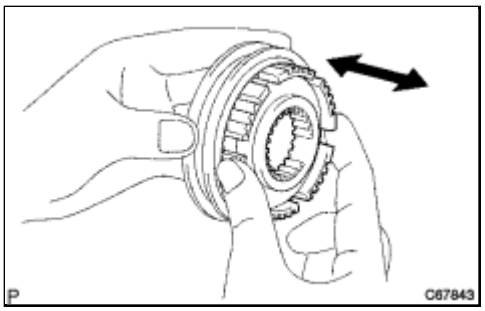

(a) Inspect the sliding condition between the No. 2 transmission hub sleeve and No. 2 transmission clutch hub.

(b) Inspect the tip of the spline gear on the No. 2 transmission hub sleeve for wear.

If any defects are found, replace the transmission hub sleeve or the transmission clutch hub.

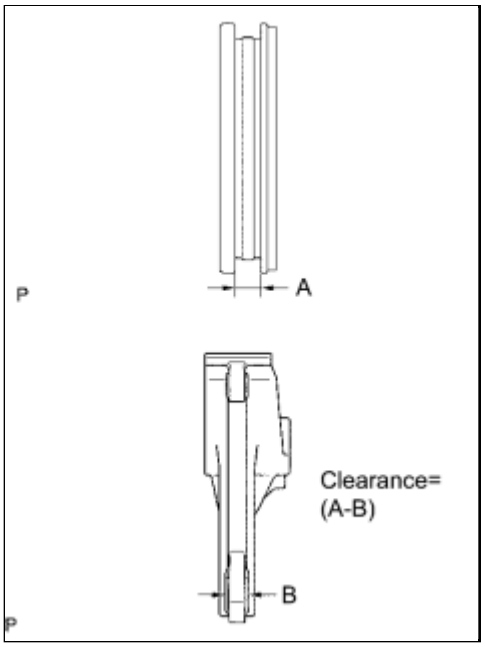

(c) Using a vernier caliper, measure the width of the No. 3 transmission hub sleeve groove and the thickness of the claw part on the No. 1 gear shift fork, and calculate the clearance.

Standard clearance:

0.11 to 0.69 mm (0.00433 to 0.0272 in.) {A - B}

If the clearance is out of specification, replace the No. 2 transmission hub sleeve and No. 2 gear shift fork with new ones.

Last Modified: 3-10-2010	6.4 A	**From:** 200901
Model Year: 2010	**Model:** Corolla	**Doc ID:** RM000000Z1X00DX
Title: E351 MANUAL TRANSMISSION / TRANSAXLE: INPUT SHAFT: REASSEMBLY (2010 Corolla)		

REASSEMBLY

1. INSTALL INPUT SHAFT FRONT BEARING

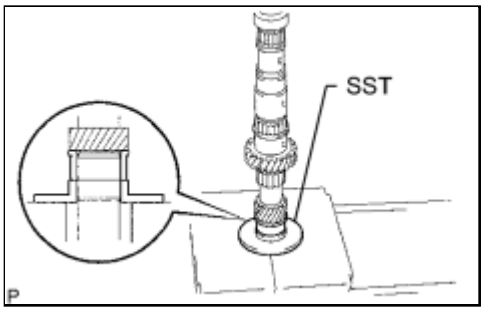

(a) Using SST and a press, install the input shaft front bearing (inner race).

SST: 09608-00071

2. INSTALL NO. 2 TRANSMISSION HUB SLEEVE

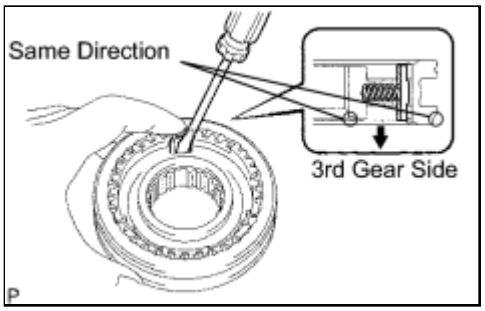

(a) Coat the No. 2 transmission hub sleeve with gear oil.

(b) Install the 3 synchromesh key springs with the No. 2 transmission hub sleeve.

NOTICE:

Install the No. 2 transmission clutch hub sleeve and the No. 2 transmission clutch hub in the correct direction.

(c) Using a screwdriver, install the synchromesh shifting key to the input shaft.

3. INSTALL 3RD GEAR NEEDLE ROLLER BEARING

(a) Coat the 3rd gear bearing with gear oil and install it to the input shaft.

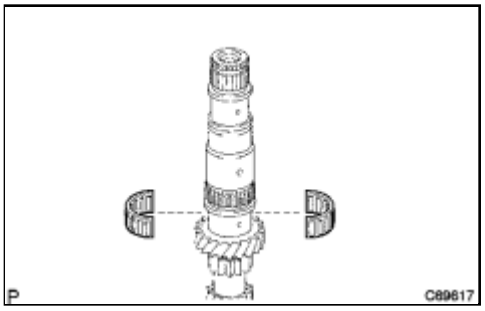

4. INSTALL 3RD GEAR

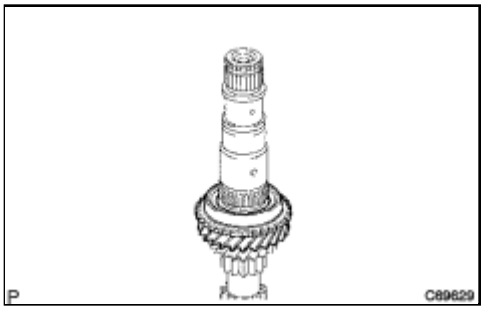

(a) Coat the 3rd gear with gear oil and install it to the input shaft.

5. INSTALL NO. 3 SYNCHRONIZER RING

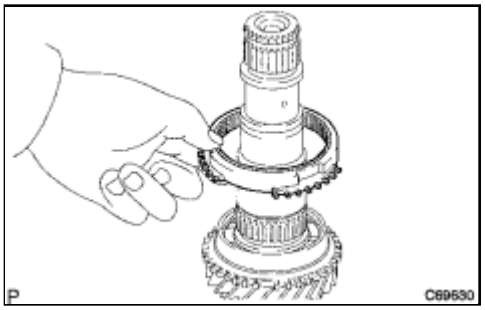

(a) Coat the No. 3 synchronizer ring with gear oil and install it to the 3rd gear.

6. INSTALL NO. 2 TRANSMISSION CLUTCH HUB

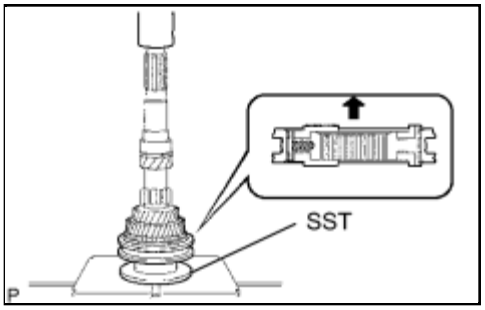

(a) Using SST and a press, install the No. 2 transmission clutch hub to the input shaft.

SST: 09316-60011

09316-00041

NOTICE:

- Align the claw of the clutch hub No. 2 with the notch of the No. 3 synchronizer ring.
- Make sure that the 3rd gear can rotate.

(b) Select a snap ring so that clearance between the No. 2 transmission clutch hub and the No. 2 clutch hub shaft snap ring will be within the specified range. Using a brass bar and a hammer, install the snap ring.

Standard clearance:
0.1 mm (0.00394 in.) or less
Snap Ring Thickness:

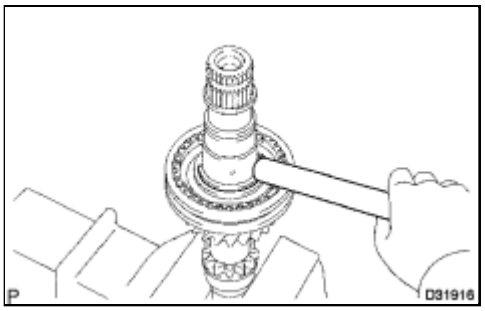

PART NO.	THICKNESS: MM (IN.)	MARK
90520-34003	2.30 to 2.35 (0.0906 to 0.0925)	H
90520-34004	2.35 to 2.40 (0.0925 to 0.0945)	J
90520-34005	2.40 to 2.45 (0.0945 to 0.0965)	K
90520-34006	2.45 to 2.50 (0.0965 to 0.0984)	L
90520-34007	2.50 to 2.55 (0.0984 to 0.1004)	M
90520-34008	2.55 to 2.60 (0.1004 to 0.1024)	N
90520-34009	2.60 to 2.65 (0.1024 to 0.1043)	P

7. INSTALL 4TH GEAR BEARING SPACER

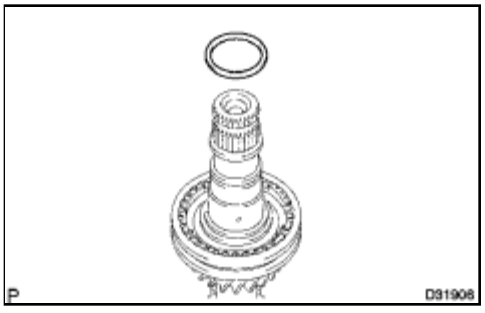

(a) Coat the 4th gear bearing spacer with gear oil and install it to the input shaft.

8. INSTALL NO. 4 SYNCHRONIZER RING

(a) Coat the No. 4 synchronizer ring with gear oil and install it to the No. 2 transmission clutch hub.

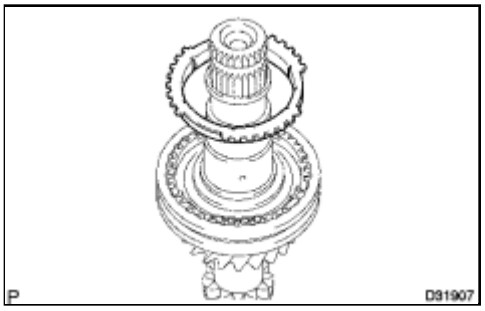

NOTICE:

Align the claw of the No. 2 clutch hub with the notch of the No. 4 synchronizer ring.

9. INSTALL 4TH GEAR NEEDLE ROLLER BEARING

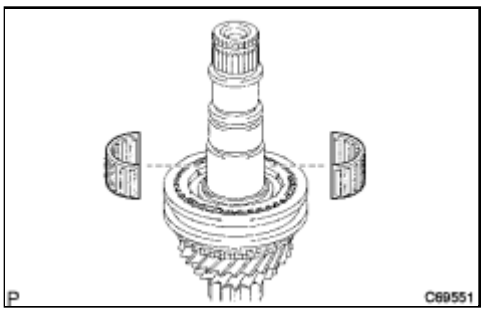

(a) Coat the 4th gear needle roller bearing with gear oil and install it to the input shaft.

10. INSTALL 4TH GEAR

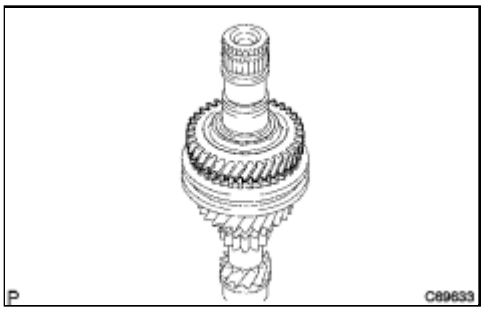

(a) Coat the 4th gear with gear oil and install it to the input shaft.

11. INSTALL INPUT SHAFT REAR RADIAL BALL BEARING

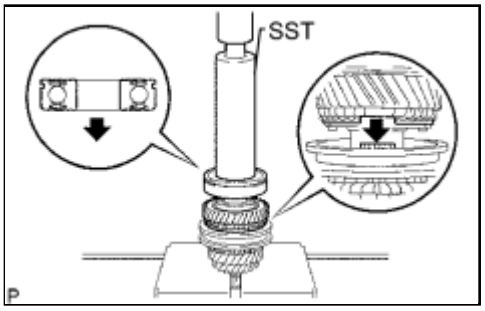

(a) Using SST and a press, install the input shaft rear radial ball bearing to the input shaft.

SST: 09608-06041

NOTICE:

- Install the bearing with its groove facing rearward.
- Make sure that the 3rd gear can rotate.

(b) Select a snap ring so that the clearance between the input shaft radial ball rear bearing and the input shaft rear bearing snap ring will be within the specified range. Using a brass bar and a hammer, install the snap ring.

Standard clearance:
0.1 mm (0.00394 in.) or less
Snap Ring Thickness:

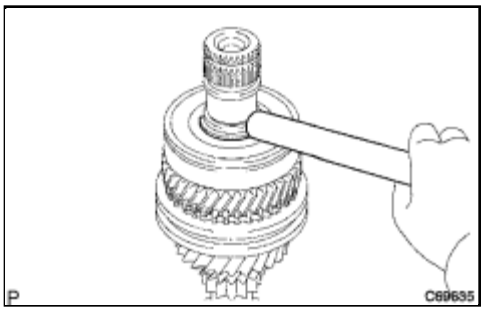

PART NO.	THICKNESS: MM (IN.)	MARK
90520-30008	2.35 to 2.40 (0.0925 to 0.0945)	1
90520-30009	2.40 to 2.45 (0.0945 to 0.0965)	2
90520-30010	2.45 to 2.50 (0.0965 to 0.0984)	3
90520-30011	2.50 to 2.55 (0.0984 to 0.1004)	4
90520-30012	2.55 to 2.60 (0.1004 to 0.1024)	5
90520-30013	2.60 to 2.65 (0.1024 to 0.1043)	6
90520-30021	2.65 to 2.70 (0.1043 to 0.1063)	7
90520-30022	2.70 to 2.75 (0.1063 to 0.1083)	8

Last Modified: 3-10-2010	6.4 K	**From:** 200901
Model Year: 2010	**Model:** Corolla	**Doc ID:** RM000001B3V02HX
Title: C59 MANUAL TRANSMISSION / TRANSAXLE: MANUAL TRANSAXLE ASSEMBLY: COMPONENTS (2010 Corolla)		

COMPONENTS

ILLUSTRATION

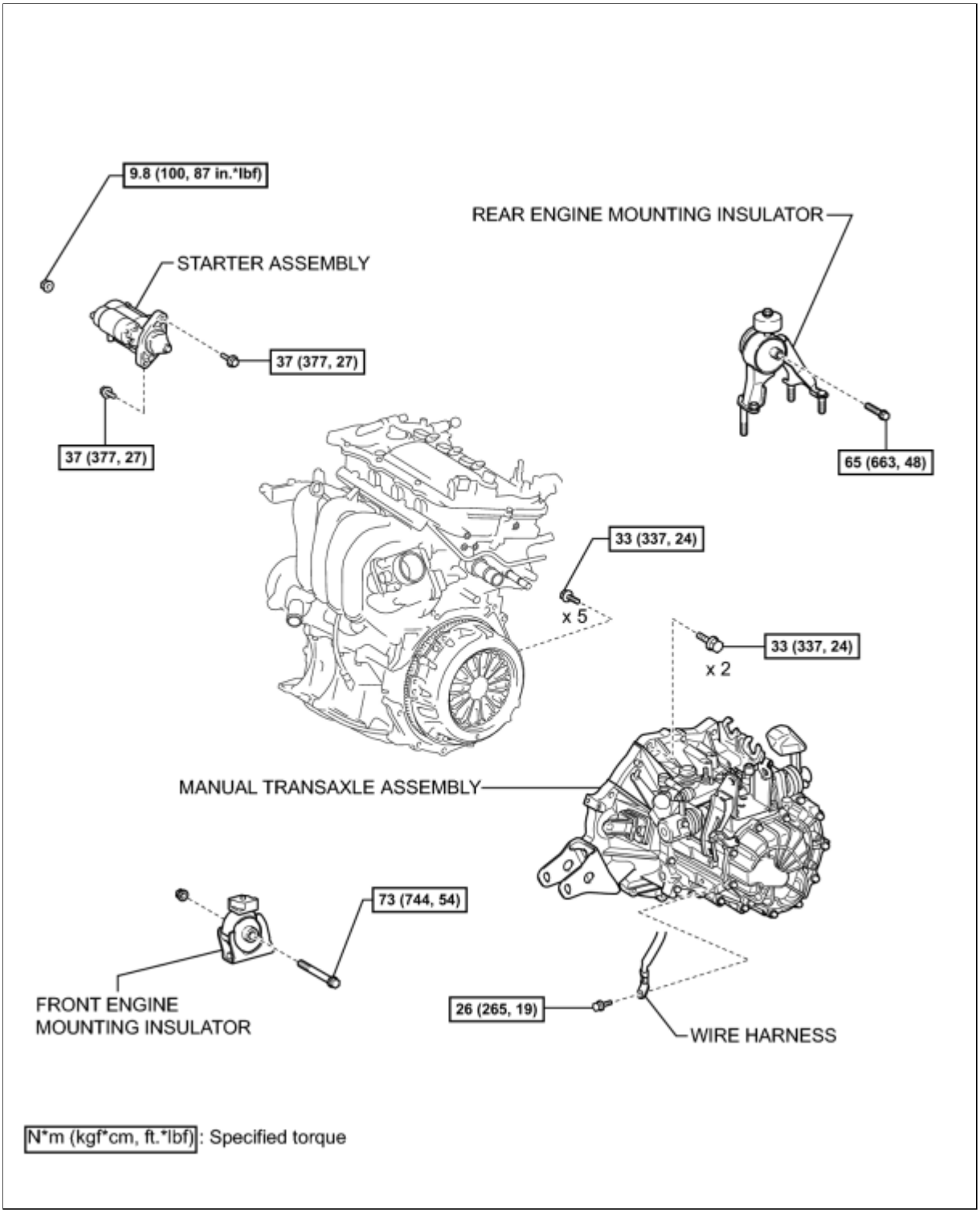

ILLUSTRATION

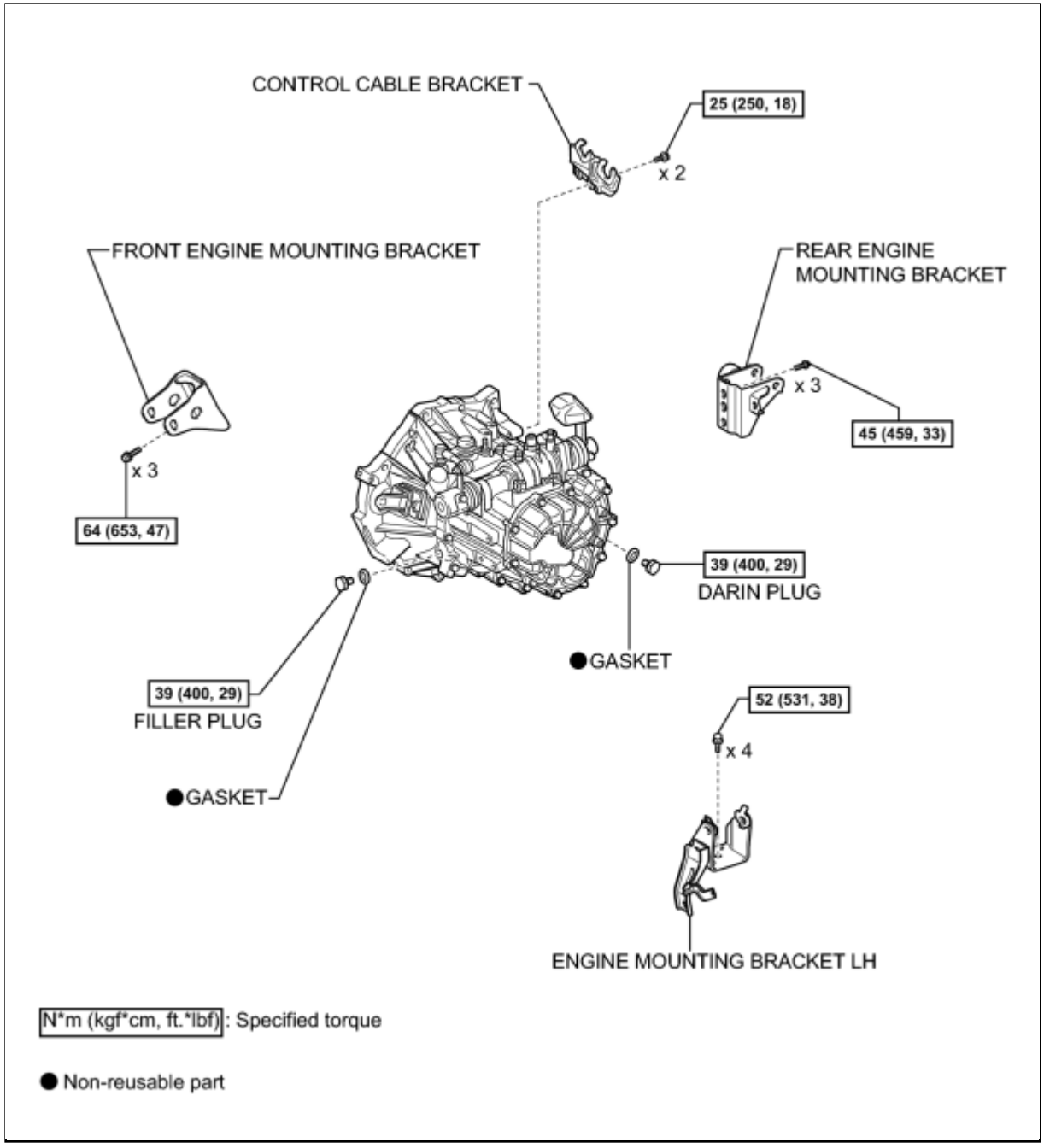
CONTROL CABLE BRACKET
25 (250, 18)
x 2
FRONT ENGINE MOUNTING BRACKET
REAR ENGINE MOUNTING BRACKET
x 3
45 (459, 33)
x 3
64 (653, 47)
39 (400, 29)
DARIN PLUG
GASKET
39 (400, 29)
FILLER PLUG
52 (531, 38)
x 4
GASKET
ENGINE MOUNTING BRACKET LH
N*m (kgf*cm, ft.*lbf): Specified torque
Non-reusable part

Last Modified: 3-10-2010	6.4 A	**From:** 200901
Model Year: 2010	**Model:** Corolla	**Doc ID:** RM000001B3W02OX
Title: C59 MANUAL TRANSMISSION / TRANSAXLE: MANUAL TRANSAXLE ASSEMBLY: REMOVAL (2010 Corolla)		

REMOVAL

1. REMOVE ENGINE ASSEMBLY WITH TRANSAXLE

HINT:

See the steps from "Discharge Fuel System Pressure" through "Remove Engine Assembly With Transaxle" INFO

.

2. REMOVE REAR ENGINE MOUNTING INSULATOR INFO

3. REMOVE FRONT ENGINE MOUNTING INSULATOR INFO

4. INSTALL ENGINE HANGER INFO

5. REMOVE STARTER ASSEMBLY INFO

6. REMOVE MANUAL TRANSAXLE ASSEMBLY

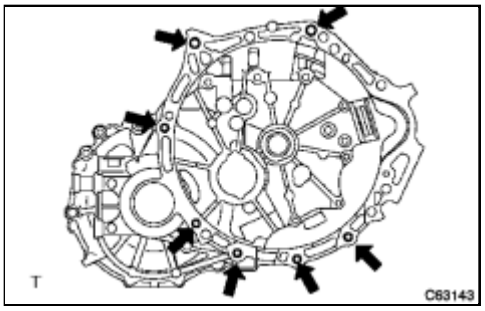

(a) Remove the 7 bolts and the manual transaxle.

7. REMOVE CONTROL CABLE BRACKET

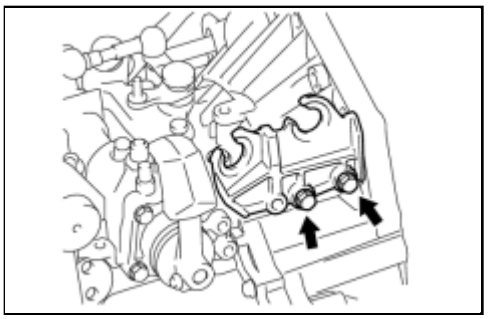

(a) Remove the 2 bolts and the control cable bracket.

8. REMOVE ENGINE MOUNTING BRACKET LH

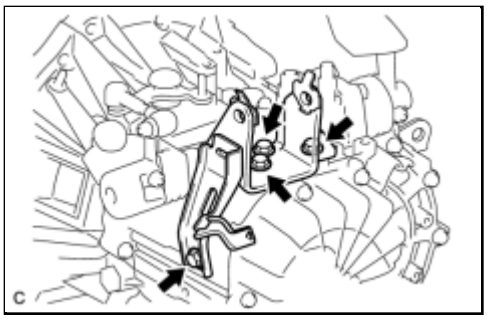

(a) Remove the 4 bolts and the engine mounting bracket LH.

9. REMOVE FRONT ENGINE MOUNTING BRACKET

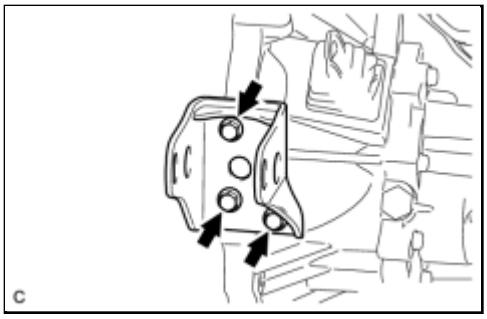

(a) Remove the 3 bolts and the front engine mounting bracket.

10. REMOVE REAR ENGINE MOUNTING BRACKET

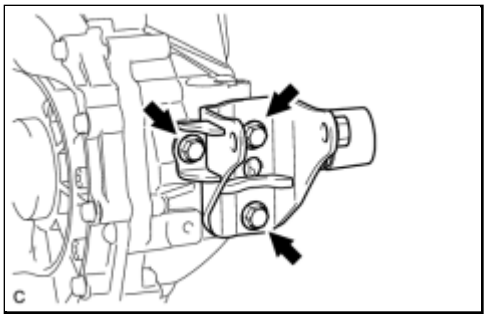

(a) Remove the 3 bolts and the rear engine mounting bracket.

Last Modified: 3-10-2010	6.4 A	**From:** 200901
Model Year: 2010	**Model:** Corolla	**Doc ID:** RM000001B3U02OX
Title: C59 MANUAL TRANSMISSION / TRANSAXLE: MANUAL TRANSAXLE ASSEMBLY: INSTALLATION (2010 Corolla)		

INSTALLATION

1. INSTALL REAR ENGINE MOUNTING BRACKET

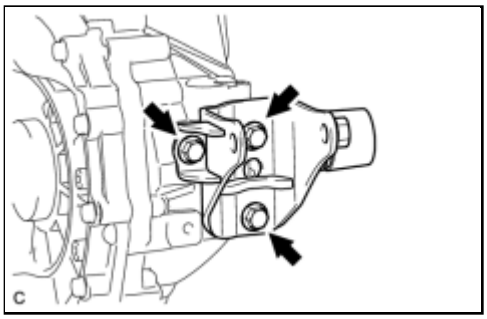

(a) Install the rear engine mounting bracket with the 3 bolts.

Torque: 45 N·m (459 kgf·cm, 33ft·lbf)

2. INSTALL FRONT ENGINE MOUNTING BRACKET

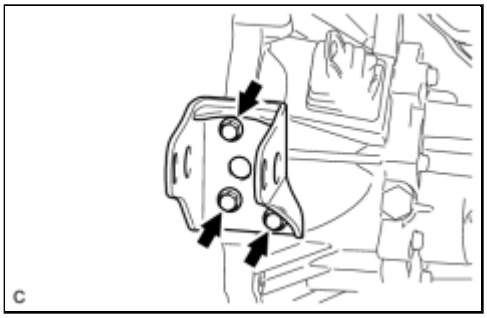

(a) Install the front engine mounting bracket with the 3 bolts.

Torque: 64 N·m (653 kgf·cm, 47ft·lbf)

3. INSTALL ENGINE MOUNTING BRACKET LH

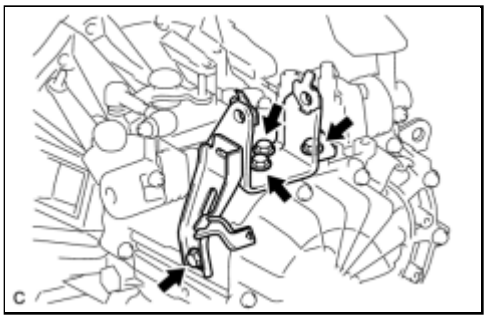

(a) Temporarily install the engine mounting bracket LH with the 4 bolts.

(b) Tighten the 4 bolts.

Torque: 52 N·m (531 kgf·cm, 38ft·lbf)

4. INSTALL CONTROL CABLE BRACKET

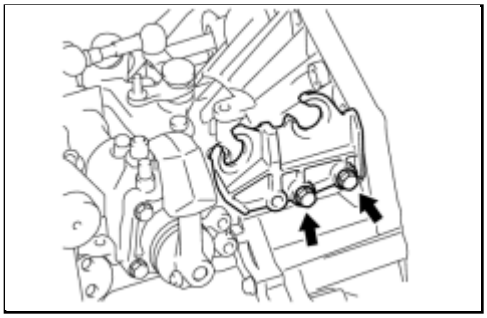

(a) Install the control cable bracket with the 2 bolts.

Torque: 25 N·m (250 kgf·cm, 18ft·lbf)

5. INSTALL MANUAL TRANSAXLE ASSEMBLY

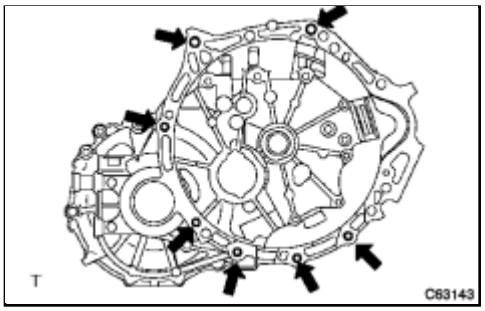

(a) Align the input shaft with the clutch disc and install the manual transaxle onto the engine.

(b) Install the 7 bolts.

Torque: 33 N·m (337 kgf·cm, 24ft·lbf)

NOTICE:

- Insert dowel pins into the dowel holes securely so that the end face of the transaxle assembly fits close against the engine assembly before tightening the bolts.
- Make sure that the dowel pins are not loose, bent, damaged or scratched and then install the transaxle onto the engine with the contact surfaces of the engine and transaxle flat against each other.

6. INSTALL STARTER ASSEMBLY INFO

7. INSTALL REAR ENGINE MOUNTING INSULATOR INFO

8. INSTALL FRONT ENGINE MOUNTING INSULATOR INFO

9. INSTALL ENGINE ASSEMBLY WITH TRANSAXLE

HINT:

See the steps from "Install Engine Assembly With Transaxle" through "Check ABS Speed Sensor Signa" INFO .

Last Modified: 3-10-2010	6.4 K	**From:** 200901
Model Year: 2010	**Model:** Corolla	**Doc ID:** RM000001B3V02IX
Title: E351 MANUAL TRANSMISSION / TRANSAXLE: MANUAL TRANSAXLE ASSEMBLY: COMPONENTS (2010 Corolla)		

COMPONENTS

ILLUSTRATION

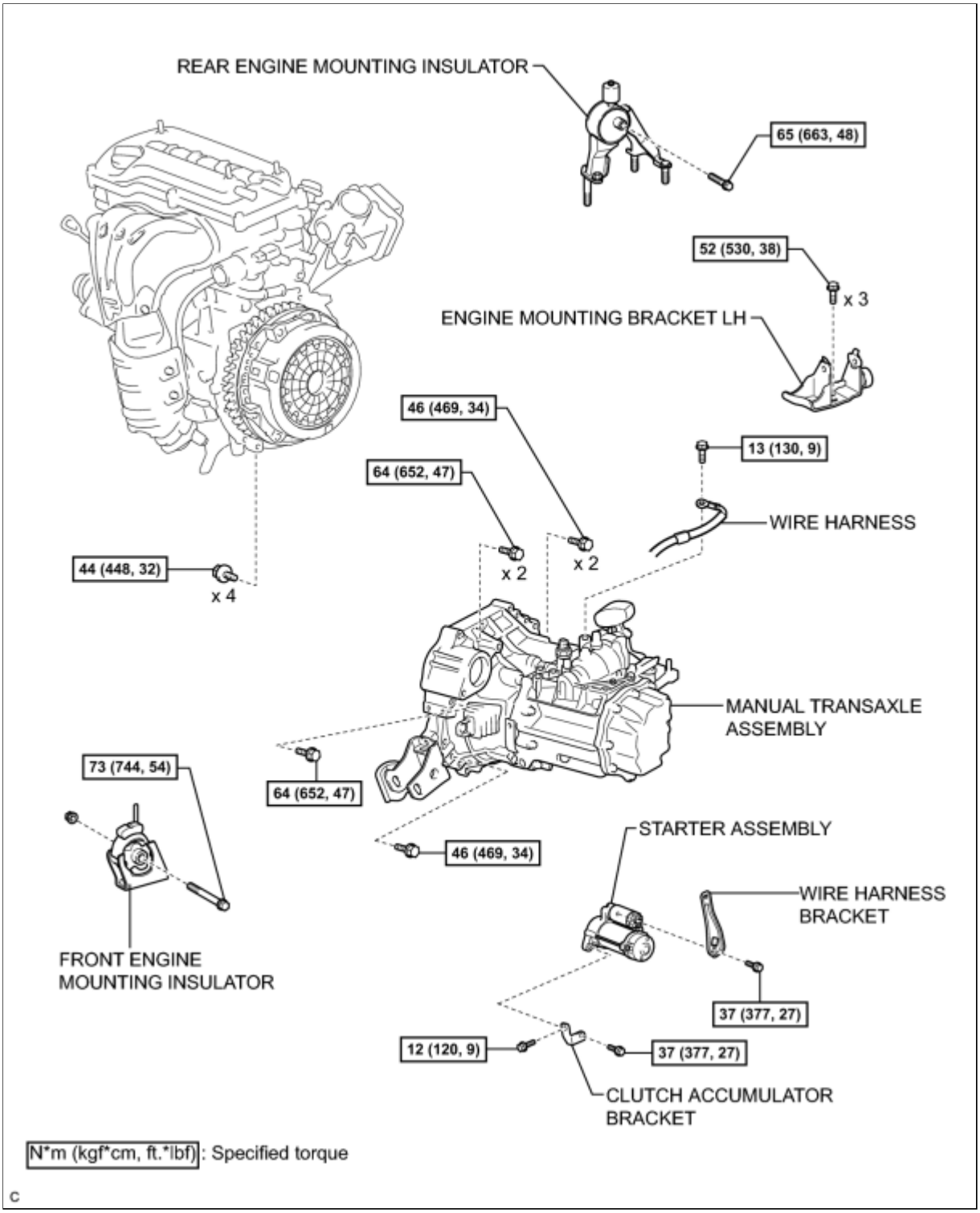

ILLUSTRATION

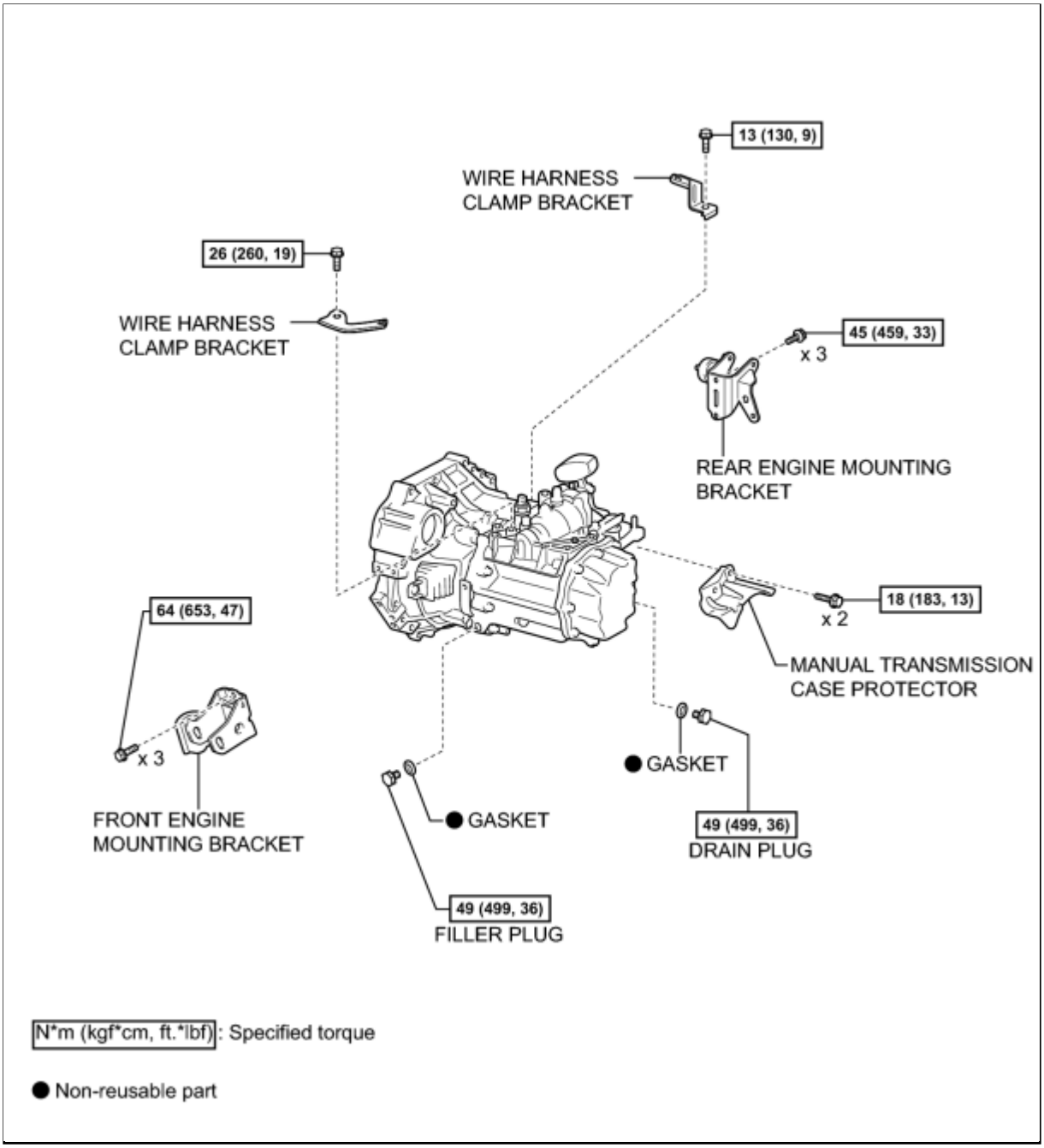
13 (130, 9)
WIRE HARNESS CLAMP BRACKET
26 (260, 19)
WIRE HARNESS CLAMP BRACKET
45 (459, 33)
x 3
REAR ENGINE MOUNTING BRACKET
18 (183, 13)
x 2
MANUAL TRANSMISSION CASE PROTECTOR
64 (653, 47)
x 3
FRONT ENGINE MOUNTING BRACKET
GASKET
49 (499, 36)
FILLER PLUG
GASKET
49 (499, 36)
DRAIN PLUG
N*m (kgf*cm, ft.*lbf): Specified torque
Non-reusable part

Last Modified: 3-10-2010	6.4 A	**From:** 200901
Model Year: 2010	**Model:** Corolla	**Doc ID:** RM000001B3W02PX
Title: E351 MANUAL TRANSMISSION / TRANSAXLE: MANUAL TRANSAXLE ASSEMBLY: REMOVAL (2010 Corolla)		

REMOVAL

1. REMOVE ENGINE ASSEMBLY WITH TRANSAXLE

HINT:

See the steps from "Discharge Fuel System Pressure" through "Remove Engine Assembly With Transaxle" INFO

.

2. INSTALL ENGINE HANGER INFO

3. REMOVE FRONT ENGINE MOUNTING INSULATOR INFO

4. REMOVE REAR ENGINE MOUNTING INSULATOR INFO

5. REMOVE STARTER ASSEMBLY INFO

6. REMOVE MANUAL TRANSAXLE ASSEMBLY

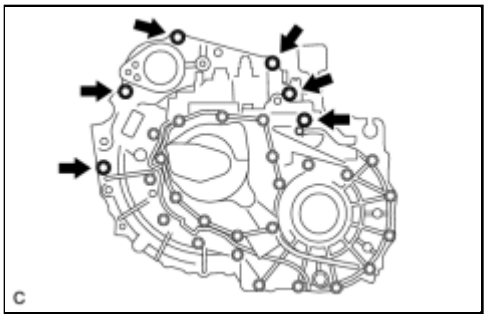

(a) Remove the 6 bolts.

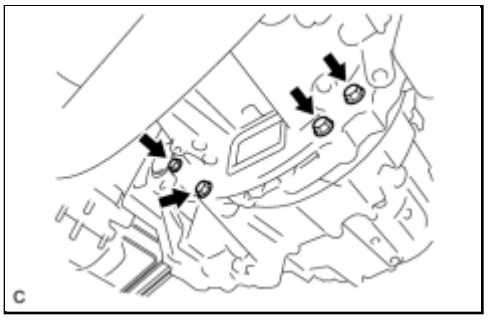

(b) Remove the 4 bolts and the manual transaxle.

7. REMOVE ENGINE MOUNTING BRACKET LH

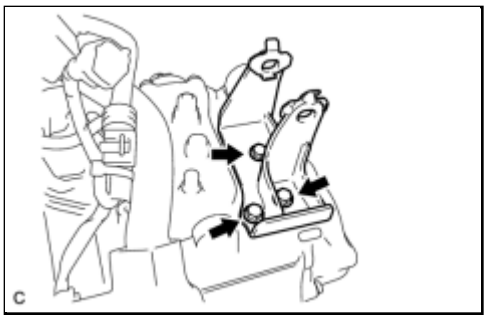

(a) Remove the 3 bolts and the engine mounting bracket LH.

8. REMOVE FRONT ENGINE MOUNTING BRACKET

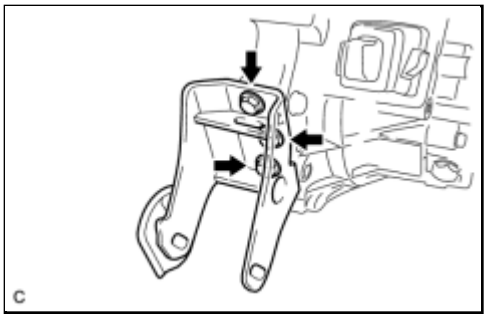

(a) Remove the 3 bolts and the front engine mounting bracket.

9. REMOVE REAR ENGINE MOUNTING BRACKET

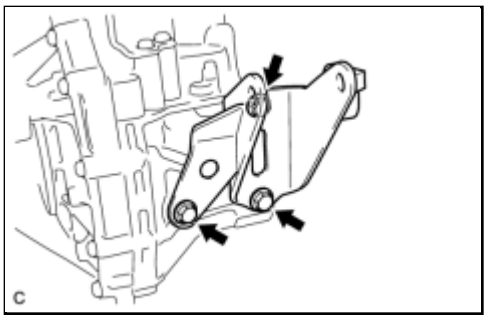

(a) Remove the 3 bolts and the rear engine mounting bracket.

10. REMOVE MANUAL TRANSMISSION CASE PROTECTOR

(a) Remove the 2 bolts and the manual transmission case protector.

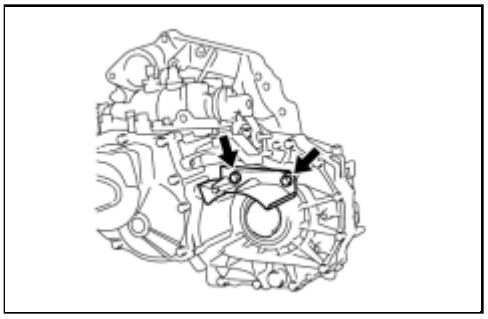

11. REMOVE WIRE HARNESS CLAMP BRACKET

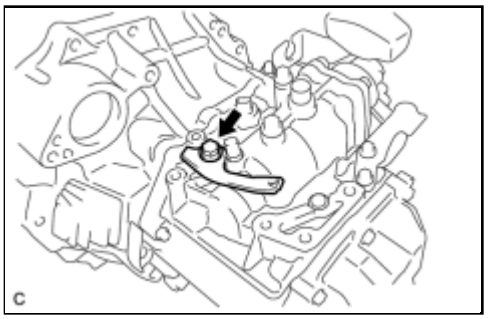

(a) Remove the bolt and wire harness clamp bracket.

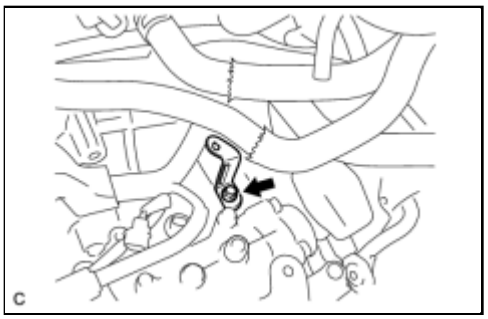

(b) Remove the bolt and wire harness clamp bracket.

Last Modified: 3-10-2010	6.4 A	**From:** 200901
Model Year: 2010	**Model:** Corolla	**Doc ID:** RM000001B3U02PX
Title: E351 MANUAL TRANSMISSION / TRANSAXLE: MANUAL TRANSAXLE ASSEMBLY: INSTALLATION (2010 Corolla)		

INSTALLATION

1. INSTALL WIRE HARNESS CLAMP BRACKET

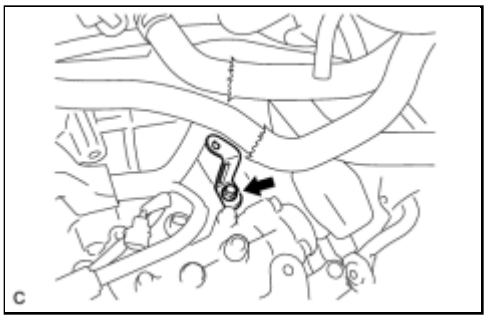

(a) Install the wire harness clamp with the bolt.

Torque: 13 N·m (130 kgf·cm, 9ft·lbf)

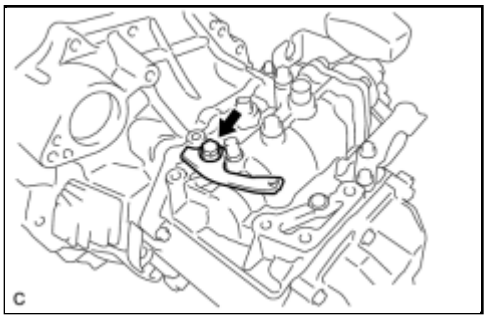

(b) Install the wire harness clamp bracket with the bolt.

Torque: 26 N·m (260 kgf·cm, 19ft·lbf)

2. INSTALL MANUAL TRANSMISSION CASE PROTECTOR

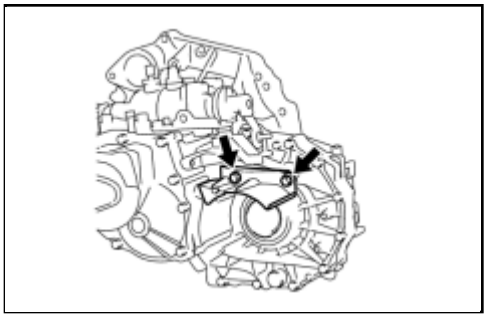

(a) Install the manual transmission case protector with the 2 bolts.

Torque: 18 N·m (183 kgf·cm, 13ft·lbf)

3. INSTALL REAR ENGINE MOUNTING BRACKET

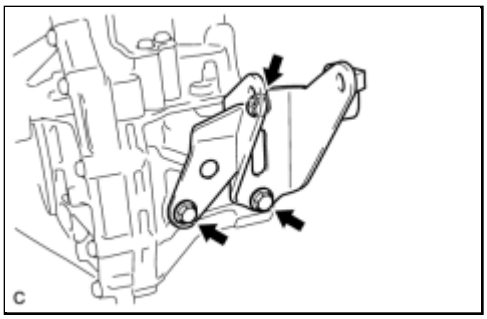

(a) Install the rear engine mounting bracket with the 3 bolts.

Torque: 45 N·m (459 kgf·cm, 33ft·lbf)

4. INSTALL FRONT ENGINE MOUNTING BRACKET

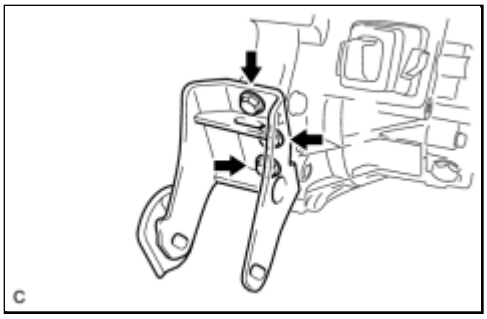

(a) Install the front engine mounting bracket with the 3 bolts.

Torque: 64 N·m (653 kgf·cm, 47ft·lbf)

5. INSTALL ENGINE MOUNTING BRACKET LH

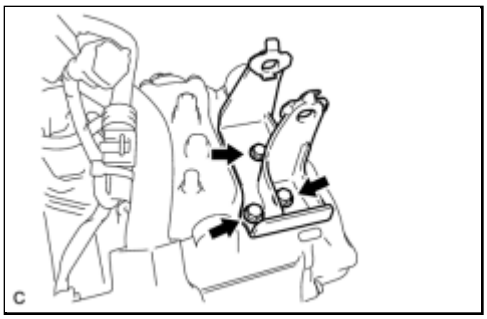

(a) Temporarily install the engine mounting bracket LH with the 3 bolts.

(b) Tighten the 3 bolts.

Torque: 52 N·m (530 kgf·cm, 38ft·lbf)

6. INSTALL MANUAL TRANSAXLE ASSEMBLY

(a) Align the input shaft with the clutch disc and install the manual transaxle onto the engine.

(b) Install the 6 bolts.

Bolt A - Torque: 64 N·m (652 kgf·cm, 47ft·lbf)

Bolt B - Torque: 64 N·m (652 kgf·cm, 47ft·lbf)

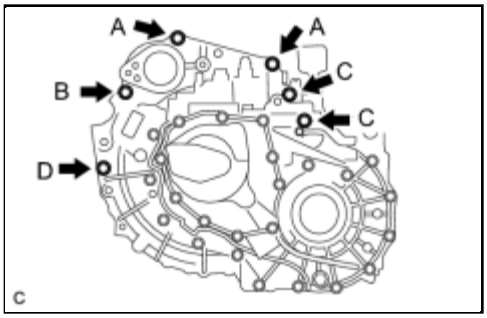

Bolt C - Torque: 46 N·m (469 kgf·cm, 34ft·lbf)

Bolt D - Torque: 46 N·m (469 kgf·cm, 34ft·lbf)

NOTICE:

- Insert dowel pins into the dowel holes securely so that the end face of the transaxle assembly fits close against the engine assembly before tightening the bolts.
- Make sure that the dowel pins are not loose, bent, damaged or scratched and then install the transaxle onto the engine with the contact surfaces of the engine and transaxle flat against each other.

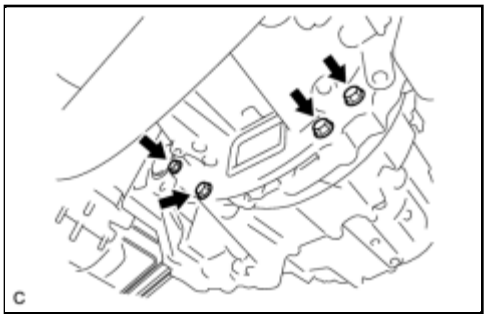

(c) Install the 4 bolts.

Torque: 44 N·m (448 kgf·cm, 32ft·lbf)

7. INSTALL STARTER ASSEMBLY INFO

8. TEMPORARILY TIGHTEN FRONT ENGINE MOUNTING INSULATOR INFO

9. TEMPORARILY TIGHTEN REAR ENGINE MOUNTING INSULATOR INFO

10. INSTALL ENGINE ASSEMBLY WITH TRANSAXLE

HINT:

See the steps from "Install Engine Assembly With Transaxle" through "Check ABS Speed Sensor Signal" INFO **.**

Last Modified: 3-10-2010	6.4 G	**From:** 200901
Model Year: 2010	**Model:** Corolla	**Doc ID:** RM000001B3K01NX
Title: C59 MANUAL TRANSMISSION / TRANSAXLE: MANUAL TRANSAXLE OIL: ON-VEHICLE INSPECTION (2010 Corolla)		

ON-VEHICLE INSPECTION

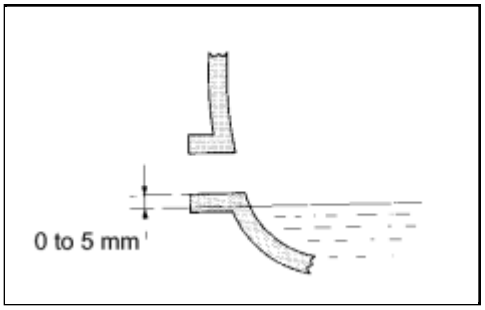

1. INSPECT TRANSAXLE OIL

(a) Stop the vehicle in a level place.

(b) Remove the transmission filler plug and the gasket.

(c) Check that the oil surface is within 5 mm (0.197 in.) of the bottom of the transmission filler plug opening.

NOTICE:

- Excessively large or small amounts of oil may cause problems.
- After replacing the oil, drive the vehicle and check the oil level again.

(d) Check for oil leakage when the oil level is low.

(e) Install the transmission filler plug and a new gasket.

Torque: 39 N·m (400 kgf·cm, 29ft·lbf)

Last Modified: 3-10-2010	6.4 A	**From:** 200901
Model Year: 2010	**Model:** Corolla	**Doc ID:** RM000002Z2L019X
Title: C59 MANUAL TRANSMISSION / TRANSAXLE: MANUAL TRANSAXLE OIL: REPLACEMENT (2010 Corolla)		

REPLACEMENT

1. REMOVE ENGINE UNDER COVER LH

2. DRAIN MANUAL TRANSAXLE OIL

(a) Remove the filler plug and the gasket.

(b) Remove the drain plug and gasket, and then drain the manual transaxle oil.

3. ADD MANUAL TRANSAXLE OIL

(a) Install a new gasket and the drain plug.

Torque: 39 N·m (400 kgf·cm, 29ft·lbf)

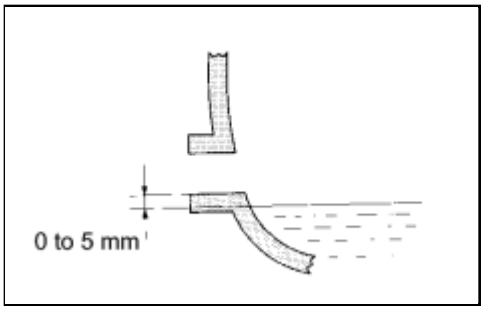

(b) Add manual transaxle oil.

(c) Install the transmission filler plug and a new gasket.

Torque: 39 N·m (400 kgf·cm, 29ft·lbf)

4. INSPECT MANUAL TRANSAXLE OIL INFO

5. INSTALL ENGINE UNDER COVER LH

Last Modified: 3-10-2010	6.4 A	**From:** 200901
Model Year: 2010	**Model:** Corolla	**Doc ID:** RM000001A1501QX
Title: C59 MANUAL TRANSMISSION / TRANSAXLE: MANUAL TRANSAXLE UNIT: DISASSEMBLY (2010 Corolla)		

DISASSEMBLY

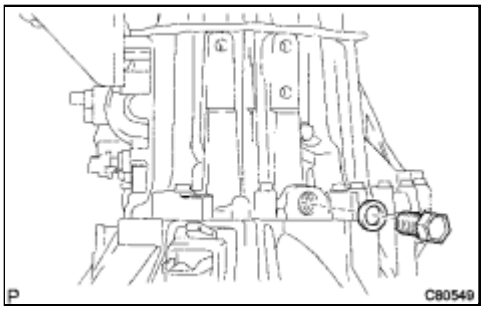

1. REMOVE MANUAL TRANSMISSION FILLER PLUG

(a) Remove the manual transmission filler plug and gasket from the manual transmission case.

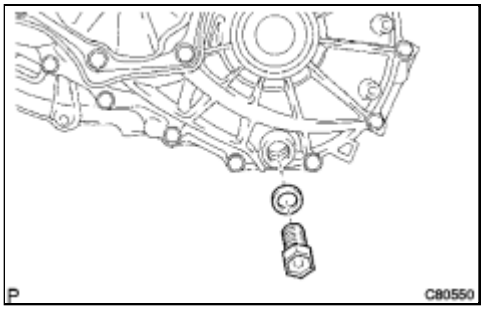

2. REMOVE DRAIN PLUG SUB-ASSEMBLY

(a) Remove the drain plug sub-assembly and gasket from the manual transmission case.

3. REMOVE SPEEDOMETER DRIVEN HOLE COVER SUB-ASSEMBLY

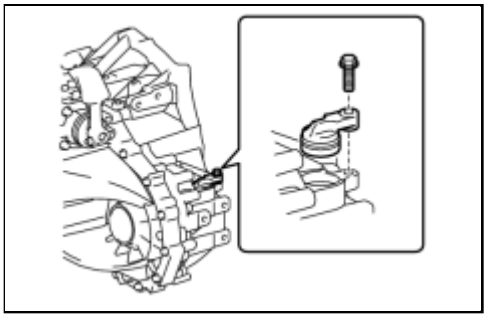

(a) Remove the bolt and speedometer driven hole cover sub-assembly from the transaxle case.

(b) Remove the O-ring from the speedometer driven hole cover sub-assembly.

4. REMOVE BACK-UP LIGHT SWITCH ASSEMBLY

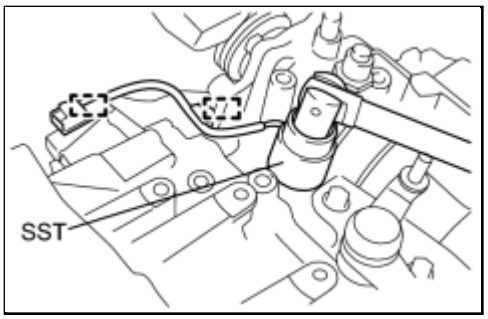

(a) Separate the back-up light switch wire harness from the 2 clamps.

(b) Using SST, remove the back-up light switch assembly and gasket from the manual transmission case.

SST: 09817-16011

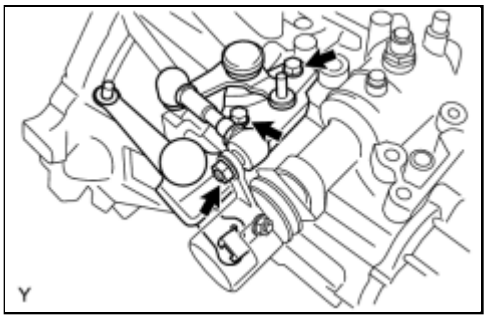

5. REMOVE SELECTING BELLCRANK ASSEMBLY

(a) Remove the 2 bolts, nut and selecting bellcrank assembly from the manual transmission case.

(b) Remove the control bellcrank dust cover.

6. REMOVE FLOOR SHIFT CONTROL SHIFT LEVER

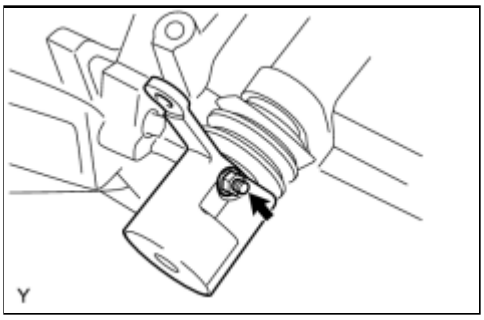

(a) Remove the nut and washer.

(b) Using a brass bar and a hammer, remove the lock pin.

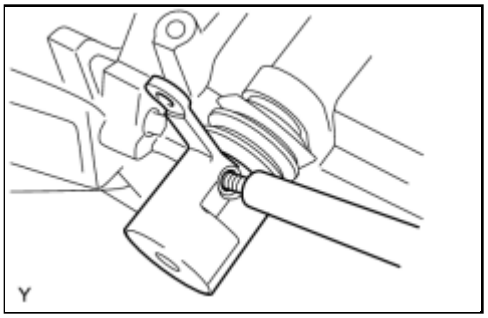

(c) Remove the floor shift control shift lever and dust boot.

7. REMOVE SHIFT LEVER DAMPER

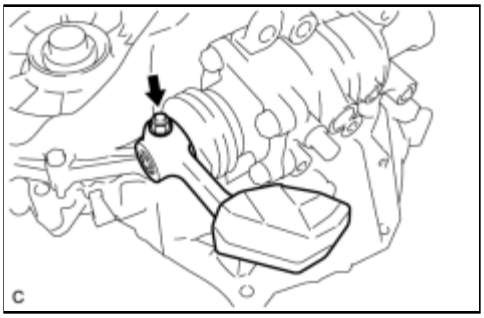

(a) Remove the nut and washer.

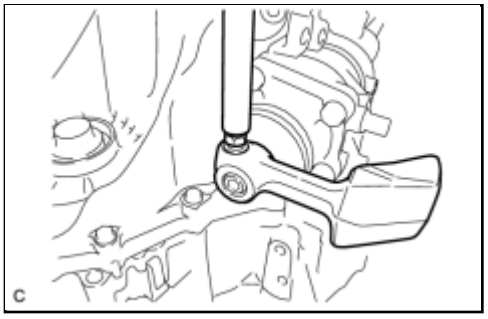

(b) Using a brass bar and a hammer, remove the lock pin.

(c) Remove the shift lever damper and dust boot.

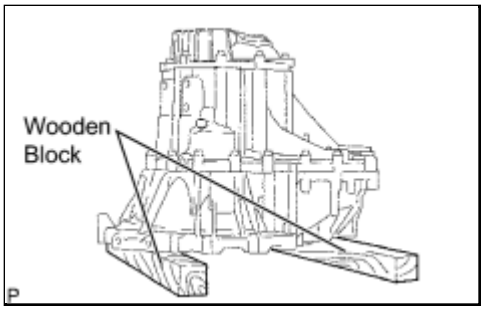

8. PREPARE MANUAL TRANSAXLE ASSEMBLY

(a) Place the manual transaxle assembly on wooden blocks.

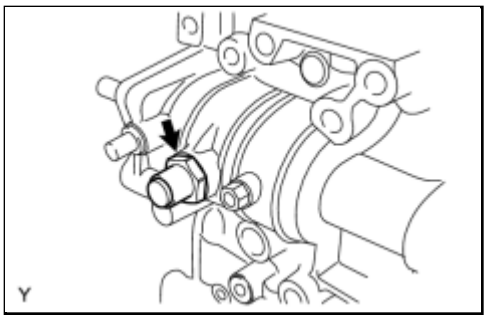

9. REMOVE NO. 1 LOCK BALL ASSEMBLY

(a) Remove the No. 1 lock ball assembly from the manual transmission case.

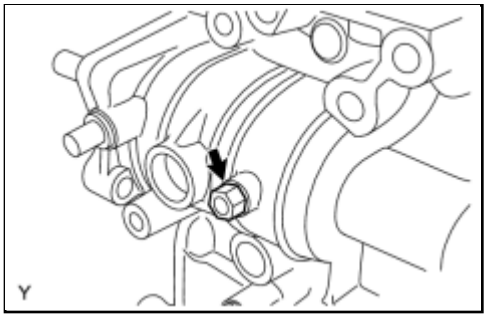

10. REMOVE SHIFT GUIDE PIN

(a) Remove the shift guide pin and washer from the manual transmission case.

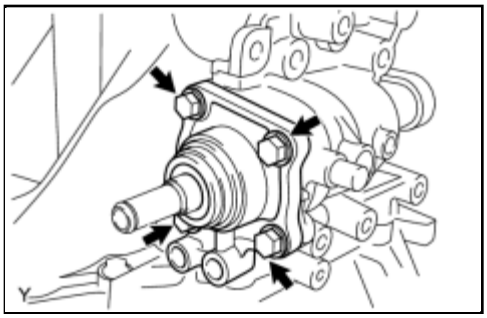

11. REMOVE CONTROL SHAFT COVER

(a) Remove the 4 bolts, control shaft cover and gasket from the manual transmission case.

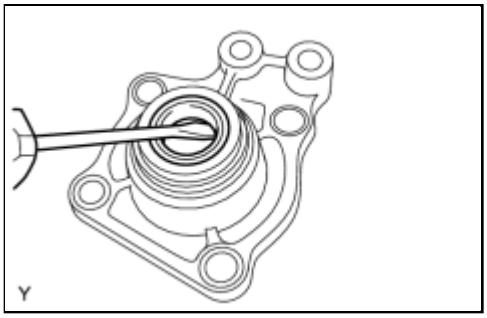

12. REMOVE CONTROL SHAFT COVER OIL SEAL

(a) Using a screwdriver, remove the control shaft cover oil seal from the control shaft cover.

13. REMOVE SHIFT AND SELECT LEVER SHAFT ASSEMBLY

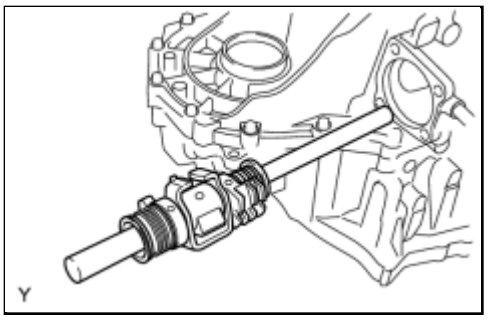

(a) Remove the shift and select lever shaft assembly from the manual transmission case.

14. REMOVE MANUAL TRANSMISSION CASE COVER SUB-ASSEMBLY

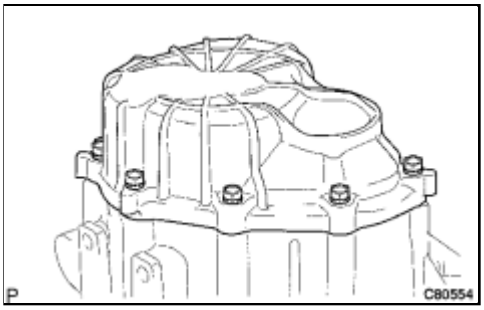

(a) Remove the 9 bolts.

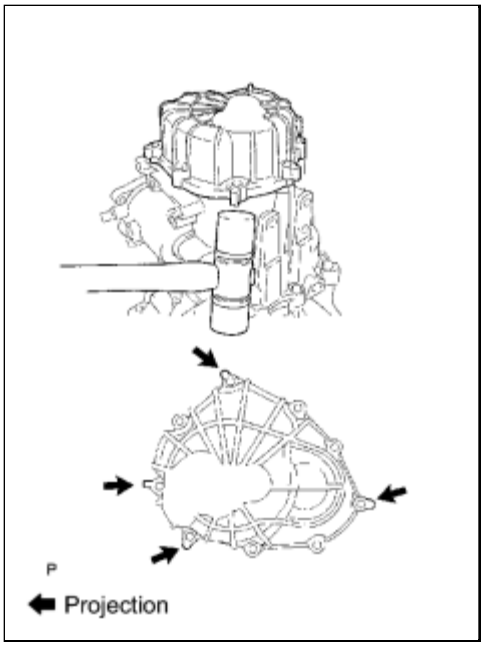

(b) Using a plastic hammer, carefully tap the projections of the manual transmission case cover sub-assembly to remove the manual transmission case cover from the manual transmission case.

NOTICE:

Do not damage the manual transmission case.

15. REMOVE MANUAL TRANSMISSION OUTPUT SHAFT REAR SET NUT

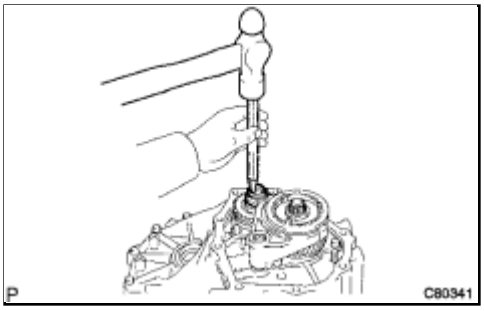

(a) Using a chisel and a hammer, loosen the staked part of the manual transmission output shaft rear set nut.

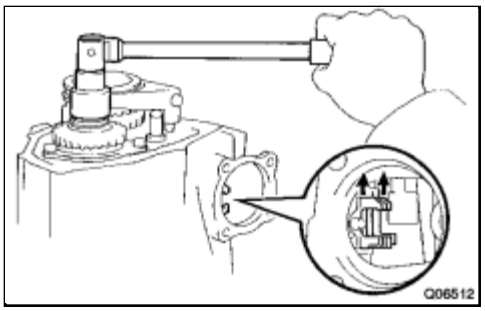

(b) Engage 2 gears simultaneously to lock the transmission.

(c) Remove the manual transmission output shaft rear set nut.

(d) Disengage the 2 gears.

16. REMOVE NO. 3 GEAR SHIFT FORK

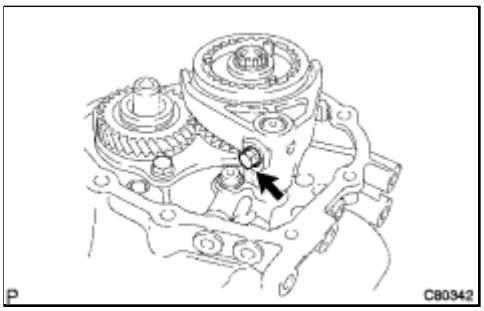

(a) Remove the gear shift fork lock bolt from the No. 3 gear shift fork.

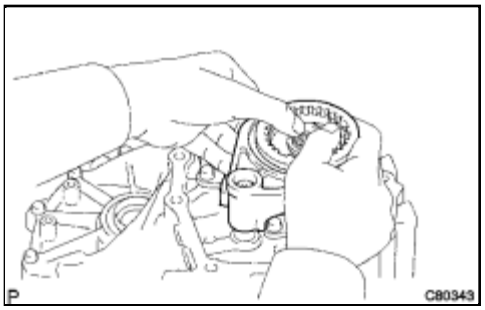

(b) Remove the No. 3 transmission hub sleeve with the No. 3 gear shift fork from the No. 3 transmission clutch hub.

17. INSPECT 5TH GEAR THRUST CLEARANCE

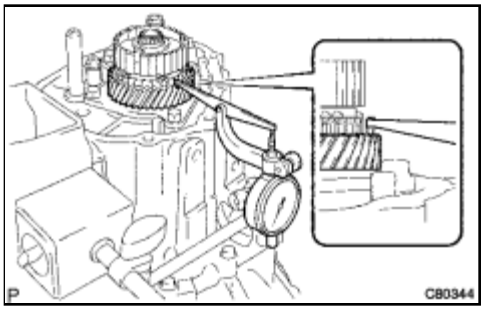

(a) Using a dial indicator, measure the 5th gear thrust clearance.

Standard clearance:
0.10 to 0.55 mm (0.00394 to 0.0217 in.)
Maximum clearance:
0.55 mm (0.0217 in.)

If the clearance exceeds the maximum, replace the No. 3 transmission clutch hub, 5th gear or input shaft rear radial ball bearing.

18. INSPECT 5TH GEAR RADIAL CLEARANCE

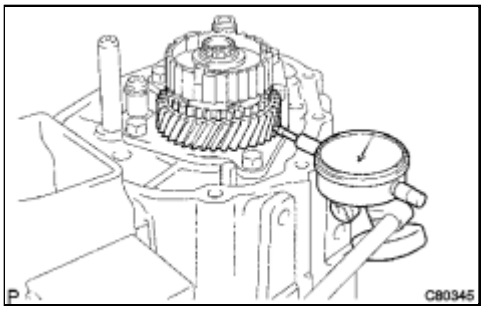

(a) Using a dial indicator, measure the 5th gear radial clearance.

Standard clearance:
NSK made bearing
0.015 to 0.056 mm (0.000591 to 0.00220 in.)
JTEKT made bearing
0.015 to 0.058 mm (0.000591 to 0.00228 in.)
Maximum clearance:
NSK made bearing
0.056 mm (0.00220 in.)
JTEKT made bearing
0.058 mm (0.00228 in.)

If the clearance exceeds the maximum, replace the 5th gear, 5th gear needle roller bearing or input shaft.

19. REMOVE NO. 3 TRANSMISSION CLUTCH HUB

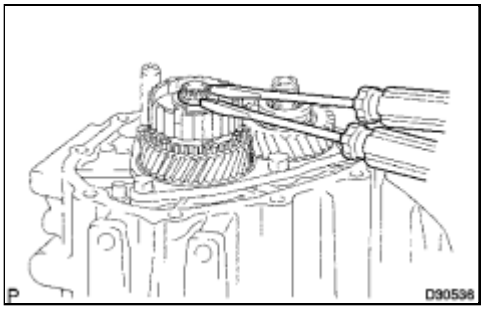

(a) Using 2 screwdrivers and a hammer, tap out the snap ring.

HINT:

Use a piece of cloth to keep the snap ring from flying off.

(b) Using a screwdriver, remove the synchromesh shifting key spring from the No. 3 transmission clutch hub.

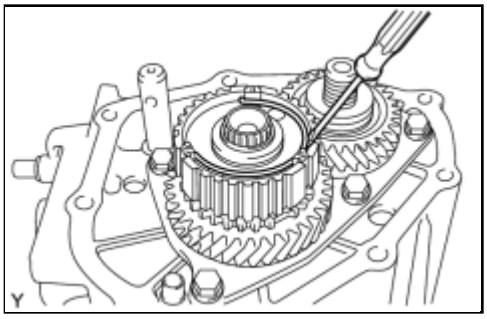

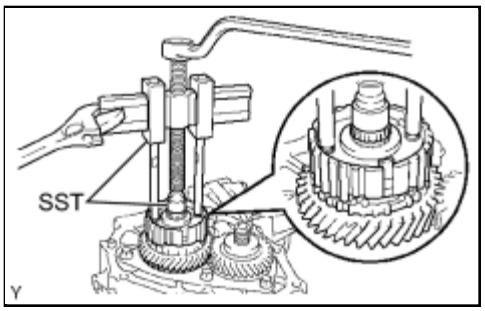

(c) Using SST, remove the No. 3 transmission clutch hub, 5th gear, and No. 3 synchronizer ring from the input shaft.

SST: 09950-50013

09951-05010
09952-05010
09953-05020
09954-05031
09957-04010

SST: 09950-60010

09951-00200

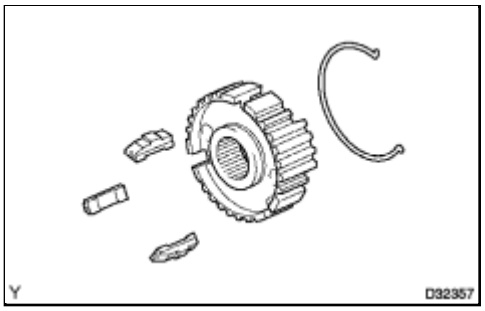

(d) Remove the 3 synchromesh shifting keys and synchromesh shifting key spring from the No. 3 transmission clutch hub.

20. REMOVE 5TH GEAR NEEDLE ROLLER BEARING

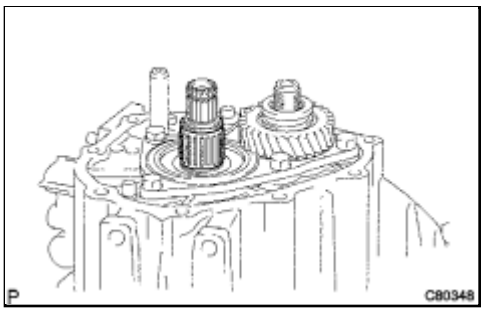

(a) Remove the 5th gear needle roller bearing and 5th gear bearing spacer from the input shaft.

21. REMOVE 5TH DRIVEN GEAR

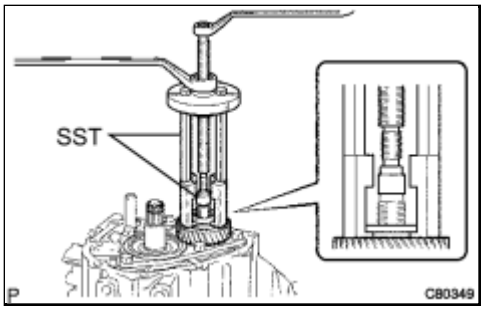

(a) Using SST, remove the 5th driven gear from the output shaft.

SST: 09950-30012

09951-03010
09953-03010
09954-03010
09955-03021

SST: 09950-60010

09951-00180
09952-06010

22. REMOVE REAR BEARING RETAINER

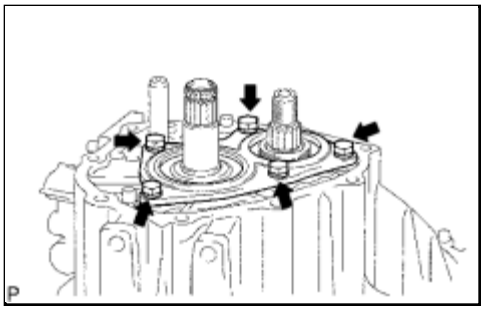

(a) Remove the 5 bolts and rear bearing retainer from the manual transmission case.

23. REMOVE OUTPUT SHAFT REAR BEARING HOLE SNAP RING

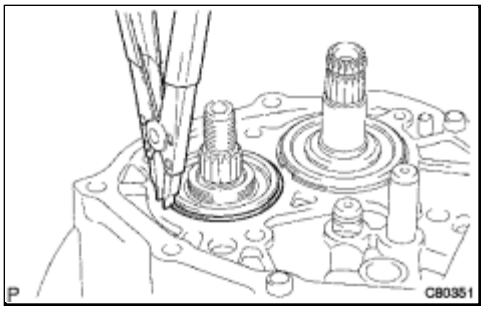

(a) Using a snap ring expander, remove the output shaft rear bearing hole snap ring from the output shaft.

24. REMOVE INPUT SHAFT REAR BEARING HOLE SNAP RING

(a) Using a snap ring expander, remove the input shaft rear bearing hole snap ring from the input shaft.

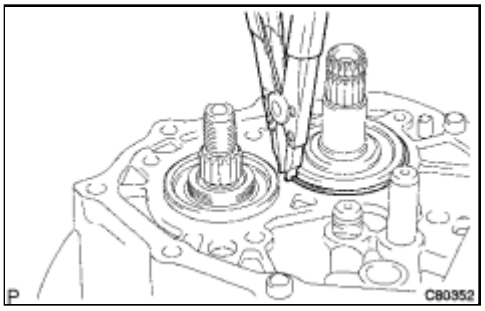

25. REMOVE REVERSE IDLER GEAR SHAFT BOLT

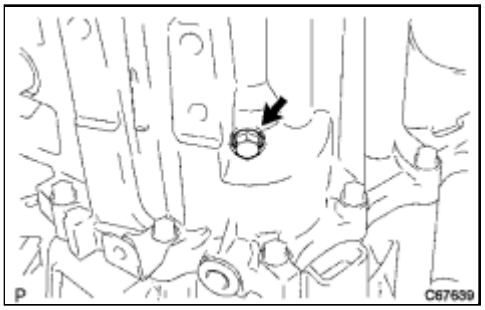

(a) Remove the reverse idler gear shaft bolt and gasket from the manual transmission case.

26. REMOVE SHIFT FORK SHAFT SNAP RING

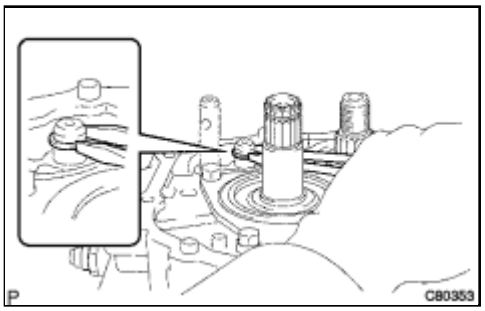

(a) Using 2 screwdrivers and a hammer, tap out the snap ring from the No. 2 gear shift fork shaft.

HINT:

Use a piece of cloth to keep the snap ring from flying off.

27. REMOVE SHIFT DETENT BALL

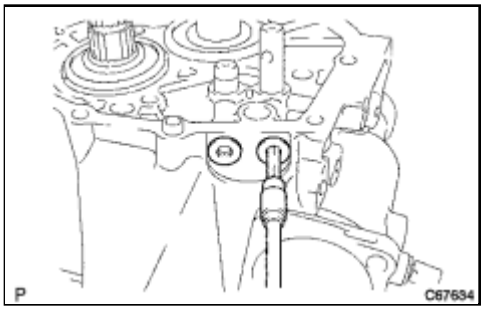

(a) Using a hexagon wrench, remove the 2 shift detent ball plugs from the manual transmission case.

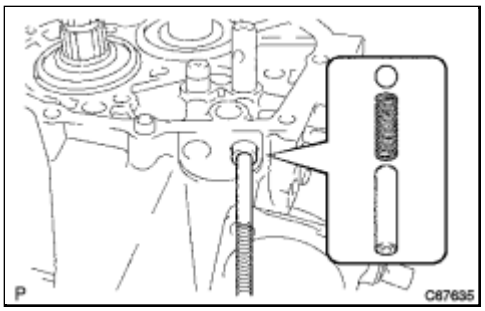

(b) Using a magnetic pick-up tool, remove the 2 shift spring seats, 2 shift detent ball springs, and 2 shift detent balls from the manual transmission case.

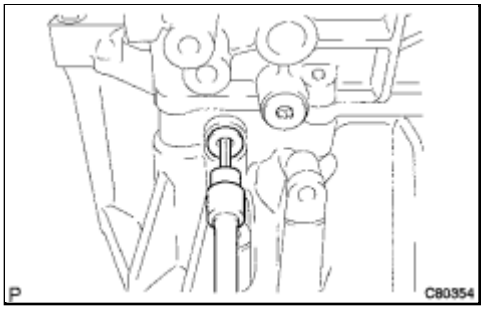

(c) Using a hexagon wrench, remove the shift detent ball plug from the transaxle case.

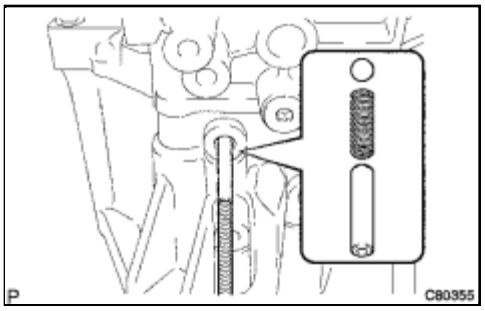

(d) Using a magnetic pick-up tool, remove the seat, spring and ball from the transaxle case.

28. REMOVE NO. 2 LOCK BALL ASSEMBLY

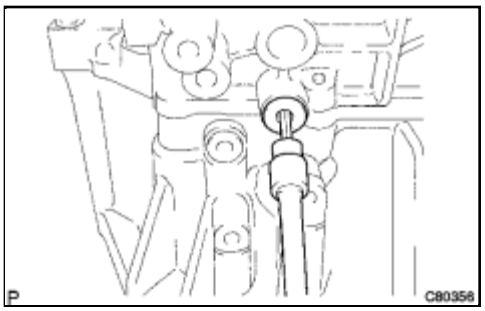

(a) Using a hexagon wrench, remove the No. 2 lock ball assembly from the manual transmission case.

29. REMOVE MANUAL TRANSMISSION CASE

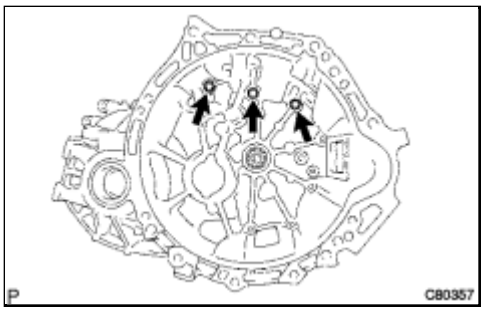

(a) Remove the 3 bolts from the transaxle case.

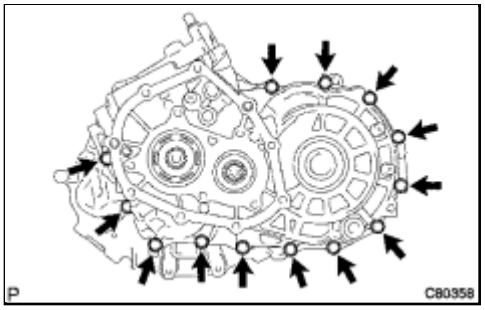

(b) Remove the 13 bolts from the manual transmission case.

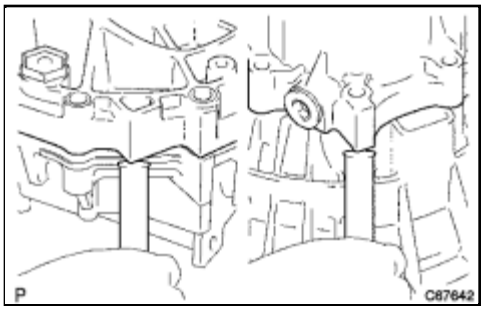

(c) Using a brass bar and a hammer, carefully tap the projections of the manual transmission case to remove the transmission case from the transaxle case.

NOTICE:

Do not damage the manual transmission case or transaxle case.

30. REMOVE REVERSE IDLER GEAR SUB-ASSEMBLY

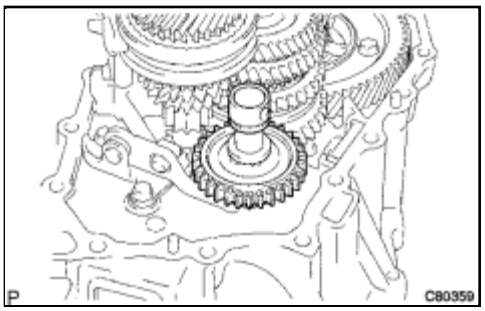

(a) Remove the reverse idler gear sub-assembly, thrust washer, and reverse idler gear shaft from the transaxle case.

31. REMOVE REVERSE SHIFT ARM BRACKET ASSEMBLY

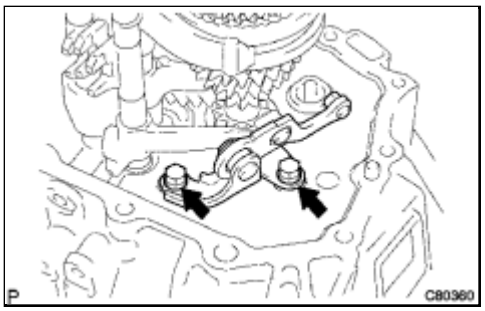

(a) Remove the 2 bolts and reverse shift arm bracket assembly from the transaxle case.

32. REMOVE NO. 2 GEAR SHIFT FORK SHAFT

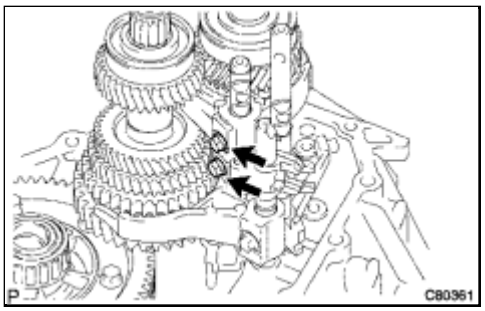

(a) Remove the 2 bolts from the No. 2 gear shift fork and No. 1 gear shift head.

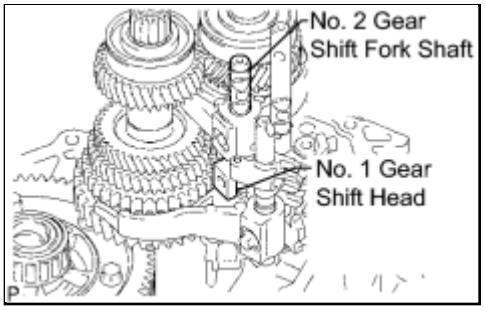

(b) Remove the No. 2 gear shift fork shaft and No. 1 gear shift head from the transaxle case.

33. REMOVE NO. 1 GEAR SHIFT FORK SHAFT

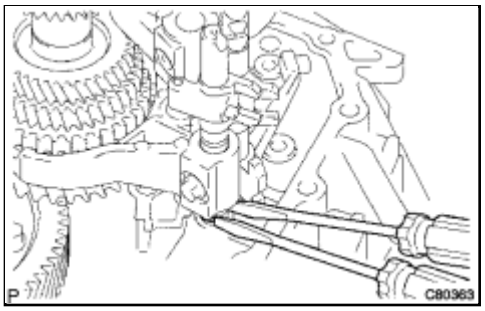

(a) Using 2 screwdrivers and a hammer, tap out the snap ring.

HINT:

Use a piece of cloth to keep the snap ring from flying off.

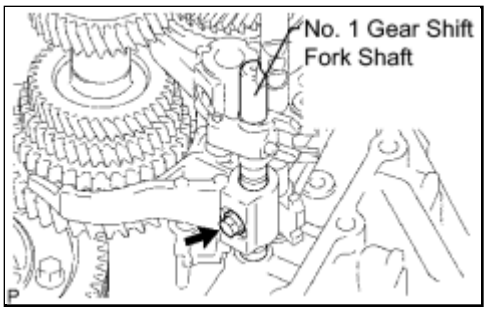

(b) Remove the shift fork set bolt and No. 1 gear shift fork shaft from the No. 1 gear shift fork.

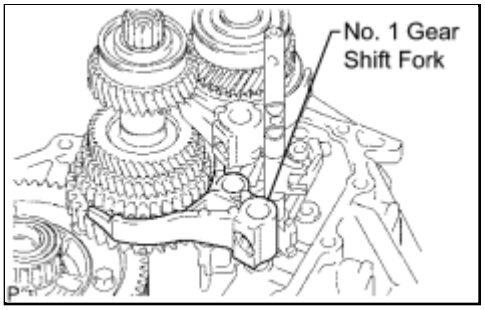

(c) Remove the No. 1 gear shift fork.

34. REMOVE NO. 3 GEAR SHIFT FORK SHAFT

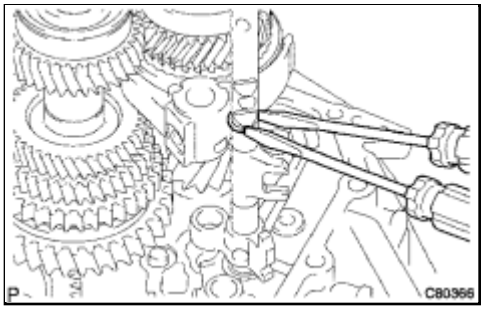

(a) Using 2 screwdrivers and a hammer, tap out the snap ring from the No. 3 gear shift fork shaft.

HINT:

Use a piece of cloth to keep the snap ring from flying off.

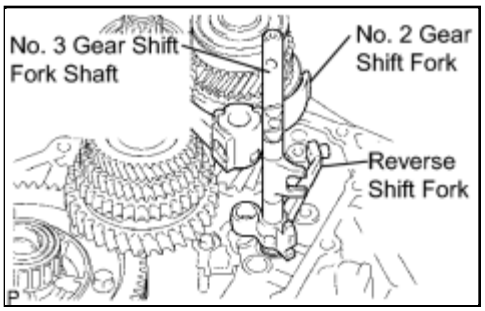

(b) Remove the No. 3 gear shift fork shaft together with the reverse shift fork and No. 2 gear shift fork from the manual transaxle case.

(c) Using a magnetic pick-up tool, remove the 2 reverse shift

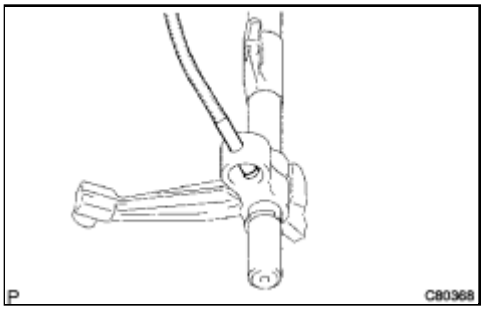

fork balls from the reverse shift fork.

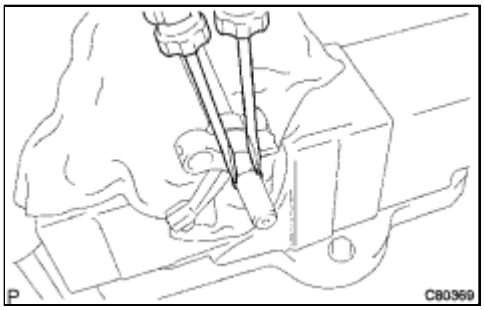

(d) Using 2 screwdrivers and a hammer, tap the snap ring out of the No. 3 shift fork shaft.

HINT:

Use a piece of cloth to keep the snap ring from flying off.

(e) Remove the reverse shift fork from the No. 3 gear shift fork shaft.

35. REMOVE INPUT SHAFT ASSEMBLY

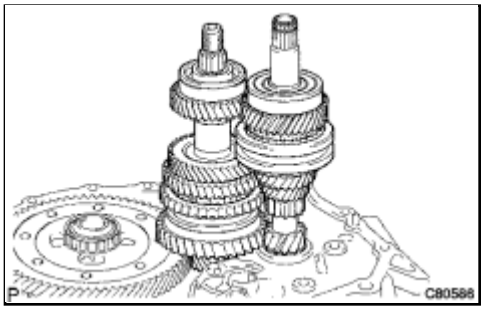

(a) Remove the input shaft assembly and output shaft assembly from the transaxle case.

36. REMOVE DIFFERENTIAL CASE ASSEMBLY

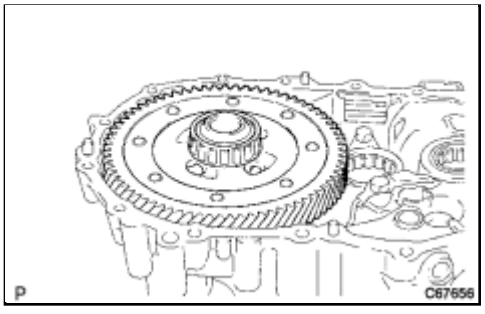

(a) Remove the differential case assembly from the transaxle case.

37. REMOVE MANUAL TRANSAXLE CASE RECEIVER

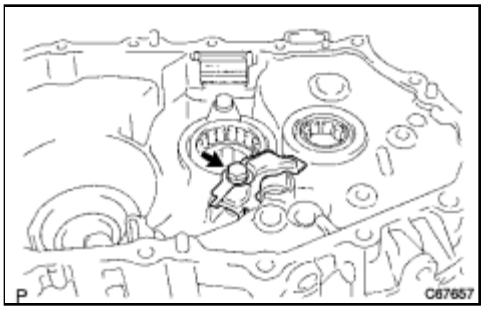

(a) Remove the bolt and manual transaxle case receiver from the transaxle case.

38. REMOVE REVERSE RESTRICT PIN ASSEMBLY

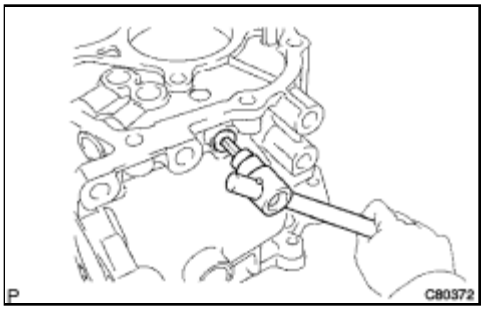

(a) Using a hexagon wrench, remove the reverse restrict pin assembly from the manual transmission case.

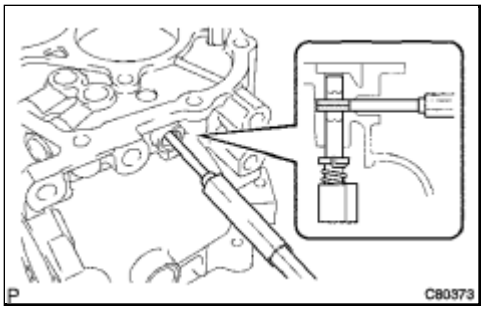

(b) Using a pin punch (φ5 mm) and a hammer, drive out the slotted spring pin and remove the reverse restrict pin assembly from the manual transmission case.

39. REMOVE NO. 1 OIL RECEIVER PIPE

(a) Remove the bolt and No. 1 oil receiver pipe from the manual transmission case.

NOTICE:

Do not damage the No. 1 oil receiver pipe.

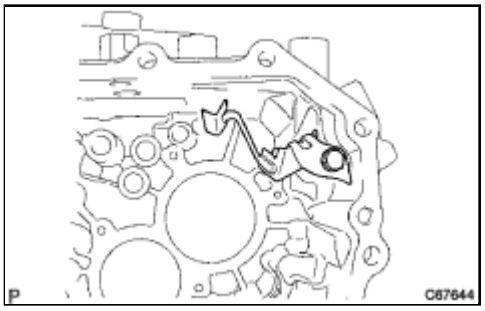

40. REMOVE NO. 2 OIL RECEIVER PIPE

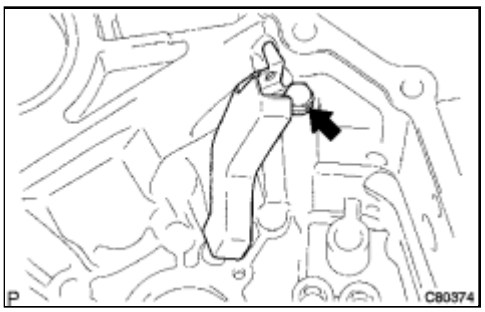

(a) Remove the bolt and No. 2 oil receiver pipe from the manual transmission case.

NOTICE:

Do not damage the No. 2 oil receiver pipe.

41. REMOVE BEARING LOCK PLATE

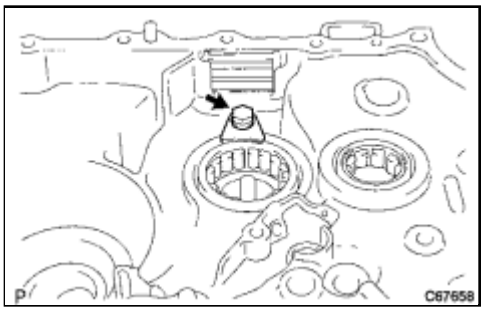

(a) Remove the bolt and bearing lock plate from the transaxle case.

42. REMOVE TRANSMISSION MAGNET

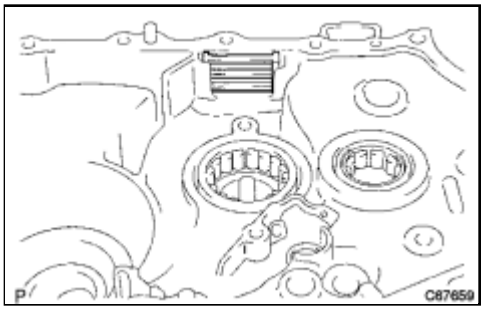

(a) Remove the transmission magnet from the transaxle case.

43. REMOVE INPUT SHAFT FRONT BEARING

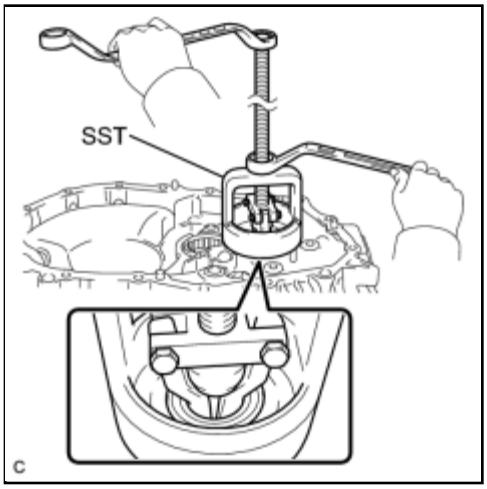

(a) Using SST, remove the input shaft front bearing from the transaxle case.

SST: 09612-65014

09612-01050

09612-01060

44. REMOVE FRONT TRANSAXLE CASE OIL SEAL

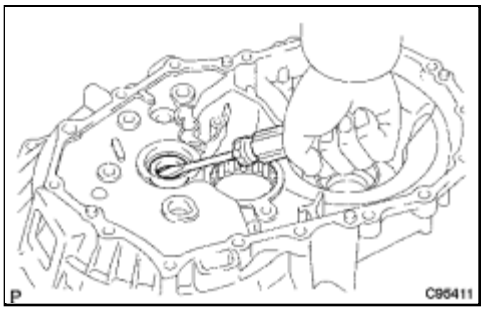

(a) Using a screwdriver, remove the front transaxle case oil seal from the transaxle case.

45. REMOVE OUTPUT SHAFT FRONT BEARING

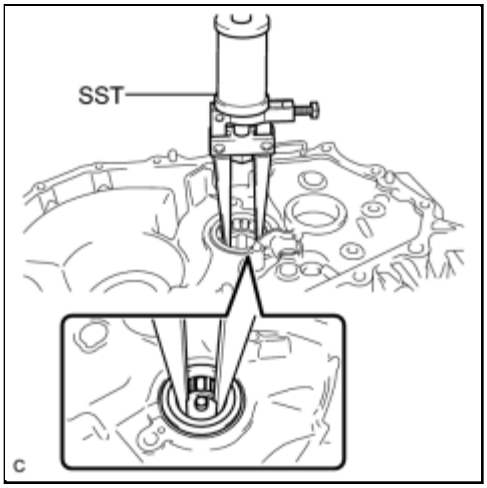

(a) Using SST, remove the output shaft front bearing from the transaxle case.

SST: 09308-00010

NOTICE:

Do not apply excessive force to the front transaxle case when installing SST.

46. REMOVE OUTPUT SHAFT COVER

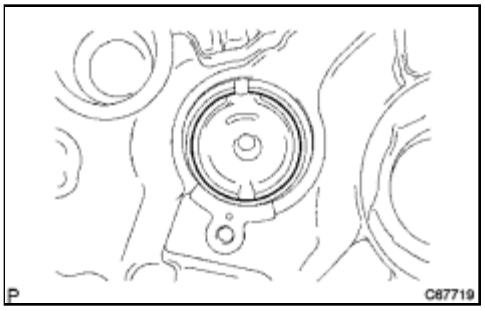

(a) Remove the output shaft cover from the transaxle case.

47. REMOVE FRONT DIFFERENTIAL CASE FRONT TAPERED ROLLER BEARING

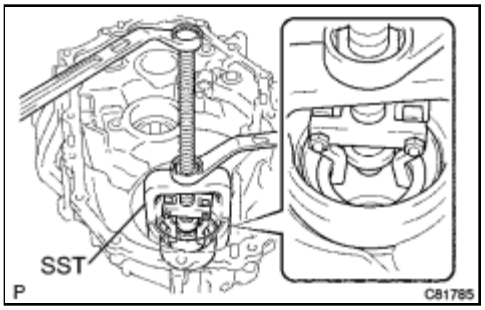

(a) Using SST, remove the front differential case front tapered roller bearing (outer race) and plate washer from the transaxle case.

SST: 09612-65014

09612-01040

09612-01050

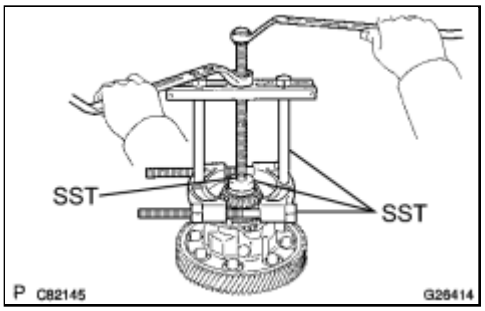

(b) Using SST, remove the front differential case front tapered roller bearing (inner race) from the differential case assembly.

SST: 09950-00020

SST: 09950-00030

SST: 09950-40011

09957-04010

SST: 09950-60010

09951-00360

48. REMOVE TRANSAXLE CASE OIL SEAL

(a) Using SST and a hammer, remove the transaxle case oil seal from the transaxle case.

SST: 09950-60010

09951-00530

SST: 09950-70010

09951-07150

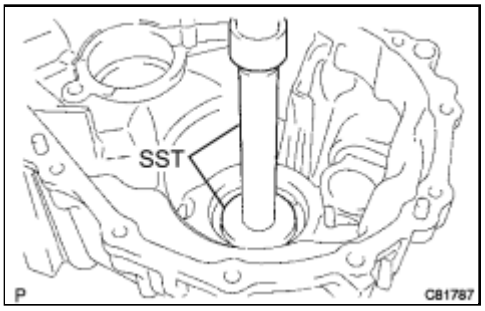

49. REMOVE FRONT DIFFERENTIAL CASE REAR TAPERED ROLLER BEARING

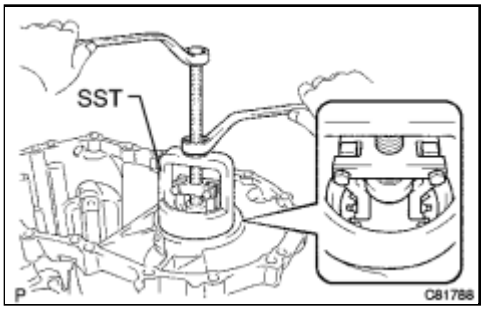

(a) Using SST, remove the front differential case rear tapered roller bearing (outer race) and plate washer from the transmission case.

SST: 09612-65014

09612-01040

09612-01050

(b) Using SST, remove the front differential case rear tapered roller bearing (inner race) from the front differential case.

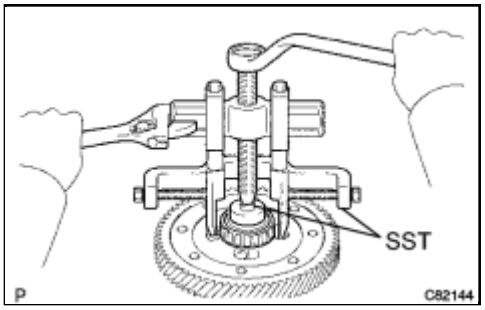

SST: 09950-40011

09951-04010

09952-04010

09953-04020

09954-04010

09955-04061

09957-04010

09958-04011

SST: 09950-60010

09951-00360

50. REMOVE TRANSMISSION CASE OIL SEAL

(a) Using SST and a hammer, drive out the transmission case oil seal from the manual transmission case.

SST: 09950-60010

09951-00530

SST: 09950-70010

09951-07150

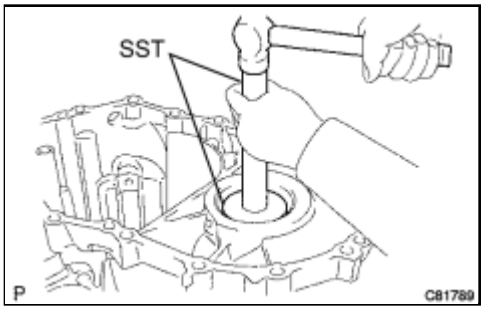

51. REMOVE SHIFT AND SELECT LEVER SHAFT OIL SEAL

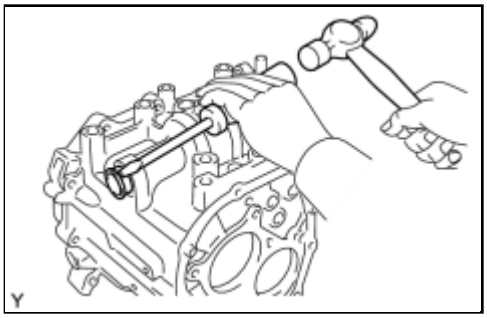

(a) Using a screwdriver and a hammer, remove the shift and select lever shaft oil seal.

52. REMOVE SHIFT AND SELECT LEVER SHAFT SLIDE BALL BEARING

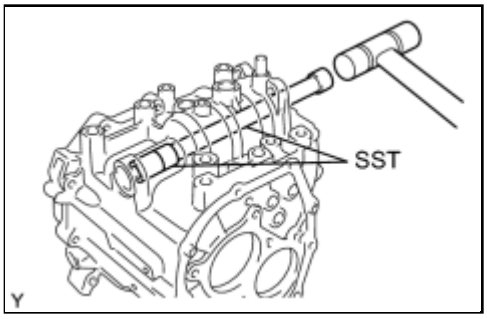

(a) Using SST and a plastic hammer, remove the shift and select lever shaft slide ball bearing.

SST: 09950-60010

09951-00220

SST: 09950-70010

09951-07200

Last Modified: 3-10-2010	6.4 G	**From:** 200901
Model Year: 2010	**Model:** Corolla	**Doc ID:** RM000001B3K01OX
Title: E351 MANUAL TRANSMISSION / TRANSAXLE: MANUAL TRANSAXLE OIL: ON-VEHICLE INSPECTION (2010 Corolla)		

ON-VEHICLE INSPECTION

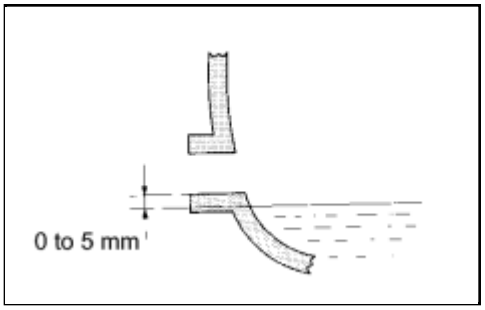

1. INSPECT TRANSAXLE OIL

(a) Stop the vehicle in a level place.

(b) Remove the transmission filler plug and the gasket.

(c) Check that the oil surface is within 5 mm (0.197 in.) of the bottom of the transmission filler plug opening.

NOTICE:

- Excessively large or small amounts of oil may cause problems.
- After replacing the oil, drive the vehicle and check the oil level again.

(d) Check for oil leakage when the oil level is low.

(e) Install the transmission filler plug and a new gasket.

Torque: 49 N·m (499 kgf·cm, 36ft·lbf)

Last Modified: 3-10-2010	6.4 A	**From:** 200901
Model Year: 2010	**Model:** Corolla	**Doc ID:** RM000002Z2L01AX
Title: E351 MANUAL TRANSMISSION / TRANSAXLE: MANUAL TRANSAXLE OIL: REPLACEMENT (2010 Corolla)		

REPLACEMENT

1. REMOVE ENGINE UNDER COVER LH

2. DRAIN MANUAL TRANSAXLE OIL

(a) Remove the filler plug and the gasket.

(b) Remove the drain plug and gasket, and then drain the manual transaxle oil.

3. ADD MANUAL TRANSAXLE OIL

(a) Install a new gasket and the drain plug.

Torque: 49 N·m (499 kgf·cm, 36ft·lbf)

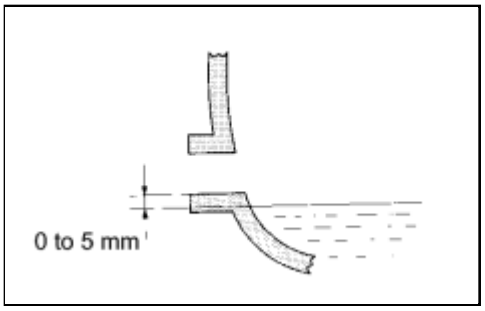

(b) Add manual transaxle oil.

(c) Install the transmission filler plug and a new gasket.

Torque: 49 N·m (499 kgf·cm, 36ft·lbf)

4. INSPECT MANUAL TRANSAXLE OIL INFO

5. INSTALL ENGINE UNDER COVER LH

Last Modified: 3-10-2010	6.4 A	**From:** 200901
Model Year: 2010	**Model:** Corolla	**Doc ID:** RM000001A1601QX
Title: C59 MANUAL TRANSMISSION / TRANSAXLE: MANUAL TRANSAXLE UNIT: REASSEMBLY (2010 Corolla)		

REASSEMBLY

1. INSTALL OUTPUT SHAFT COVER

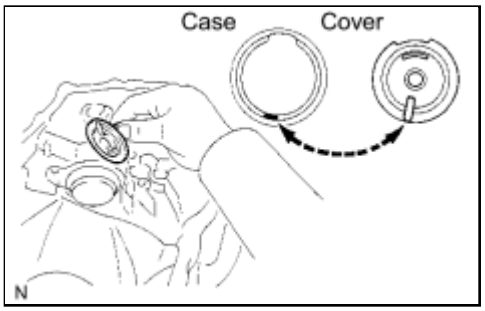

(a) Coat the output shaft cover with MP grease and install it onto the transaxle case.

NOTICE:

Insert the output shaft cover key into the case groove.

2. INSTALL OUTPUT SHAFT FRONT BEARING

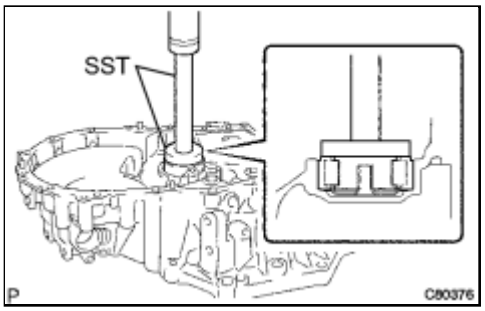

(a) Coat a new output shaft front bearing with gear oil.

(b) Using SST and a press, install it onto the transaxle case.

SST: 09950-60010

09951-00550

SST: 09950-70010

09951-07150

NOTICE:

- Install the new bearing in the correct direction as shown in the illustration.
- When replacing the output shaft front bearing, replace the output shaft front bearing inner race at the same time.

3. INSTALL FRONT TRANSAXLE CASE OIL SEAL

(a) Using SST and a hammer, install a new front transaxle case oil seal onto the transaxle case.

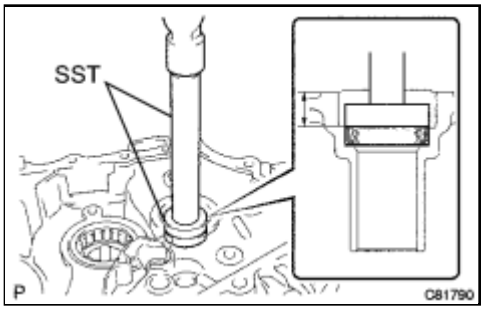

SST: 09950-60010
09951-00370
SST: 09950-70010
09951-07150
Driven in depth:
15.6 to 16.0 mm (0.6141 to 0.6299 in.)

(b) Coat the lip of the front transaxle case oil seal with MP grease.

4. INSTALL INPUT SHAFT FRONT BEARING

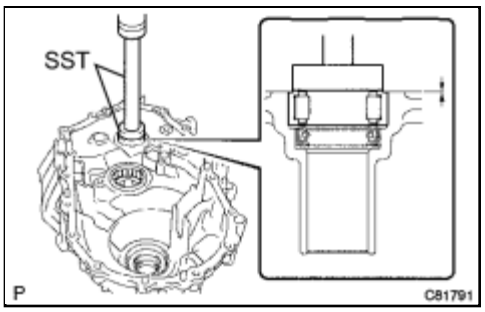

(a) Coat a new input shaft front bearing with gear oil, and using SST and a press, install it onto the transaxle case.

SST: 09950-60010
09951-00420
SST: 09950-70010
09951-07150
Driven in depth:
0 to 0.3 mm (0 to 0.0118 in.)

5. INSTALL SHIFT AND SELECT LEVER SHAFT SLIDE BALL BEARING

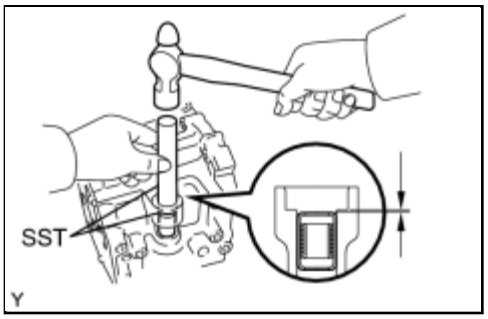

(a) Using SST and a hammer, install a new shift and select lever shaft slide ball bearing onto the manual transmission case.

SST: 09950-60010
09951-00220
SST: 09950-70010
09951-07100
Driven in depth:
0 to 0.5 mm (0 to 0.0197 in.)

6. INSTALL SHIFT AND SELECT LEVER SHAFT OIL SEAL

(a) Using SST, install a new shift and select lever shaft oil seal onto the manual transmission case.

SST: 09950-70010
09951-07150
SST: 09950-60010
09951-00240
Driven in depth:

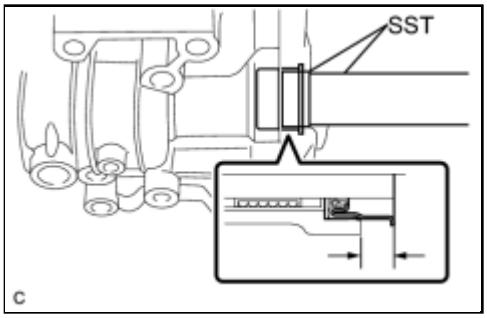

9.7 to 10.3 mm (0.382 to 0.406 in.)

7. INSTALL FRONT DIFFERENTIAL CASE FRONT TAPERED ROLLER BEARING

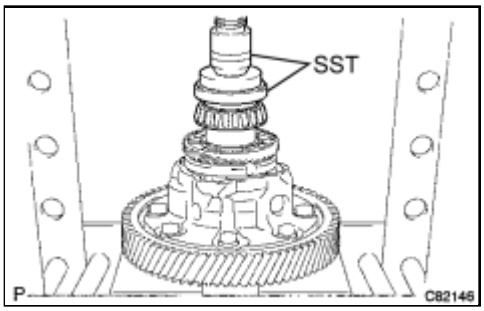

(a) Using SST and a press, install a new front differential case front tapered roller bearing (inner race) onto the front differential case.

SST: 09350-32014

09351-32120

SST: 09950-60010

09951-00530

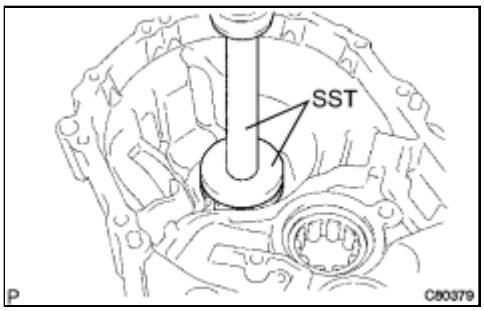

(b) Using SST and a press, install the front differential case front tapered roller bearing (outer race) together with the plate washer onto the transaxle case.

SST: 09950-60020

09951-00680

SST: 09950-70010

09951-07150

8. INSTALL FRONT DIFFERENTIAL CASE REAR TAPERED ROLLER BEARING

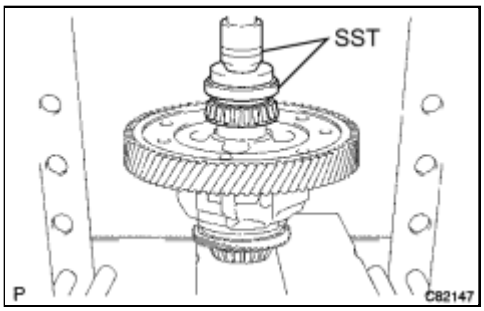

(a) Using SST and a press, install a new front differential case rear tapered roller bearing (inner race) to the differential case.

SST: 09350-32014

09351-32120

SST: 09950-60010

09951-00530

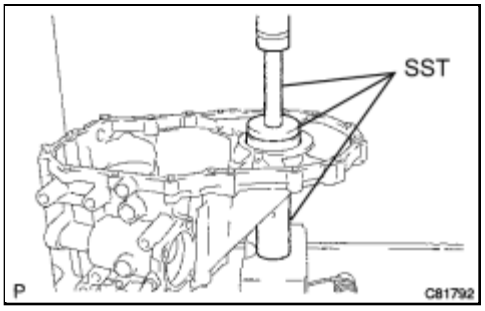

(b) Using SST and a press, install the front differential case rear tapered roller bearing (outer race) with the plate washer onto the manual transmission case.

SST: 09309-36010

SST: 09950-60020

09951-00710

SST: 09950-70010

09951-07150

HINT:

Use a plate washer of the same thickness as the removed one.

9. ADJUST DIFFERENTIAL SIDE BEARING PRELOAD

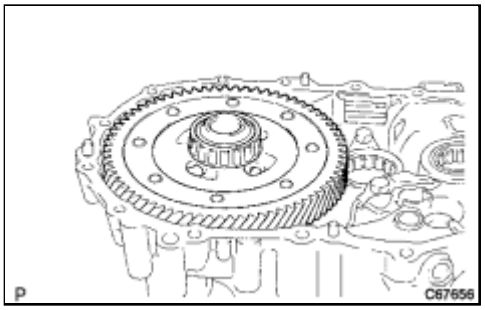

(a) Coat the differential case assembly with gear oil and install it onto the transaxle case.

(b) Install the manual transmission case with the 16 bolts.

Torque: 29 N·m (300 kgf·cm, 22ft·lbf)

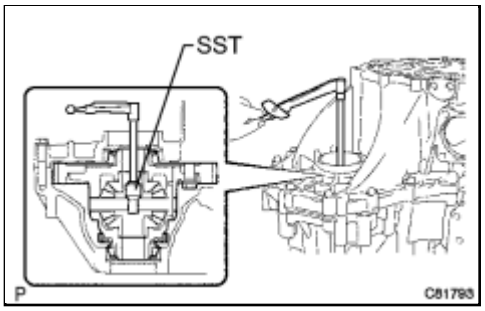

(c) Using SST and a torque wrench, turn the differential case assembly clockwise and counterclockwise 2 or 3 times to allow the bearings to settle.

SST: 09564-32011

(d) Using SST and a torque wrench, measure the preload.

SST: 09564-32011

Preload (at starting):

New bearing

0.8 to 1.5 N*m (8 to 16 kgf*cm, 7 to 13 in.*lbf)

Used bearing

0.5 to 0.9 N*m (5 to 10 kgf*cm, 5 to 8 in.*lbf)

If the preload is out of the specification, select a different plate washer.

Plate Washer Thickness:

MARK	THICKNESS MM (IN.)	MARK	THICKNESS MM (IN.)
AA	2.10 (0.0827)	LL	2.60 (0.102)
BB	2.15 (0.0846)	MM	2.65 (0.104)
CC	2.20 (0.0866)	NN	2.70 (0.106)
DD	2.25 (0.0886)	PP	2.75 (0.108)
EE	2.30 (0.0906)	QQ	2.80 (0.110)
FF	2.35 (0.0925)	RR	2.85 (0.112)
GG	2.40 (0.0945)	SS	2.90 (0.114)
HH	2.45 (0.0965)	TT	2.95 (0.1161)
JJ	2.50 (0.0984)	UU	3.00 (0.118)
KK	2.55 (0.1004)	-	-

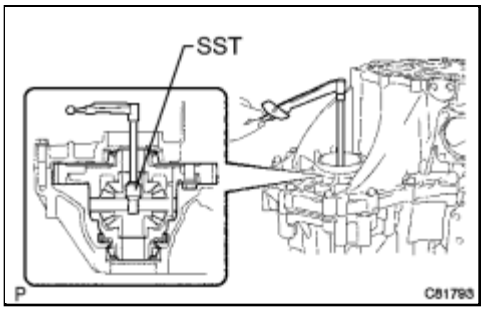

HINT:

The preload changes by approximately 0.3 to 0.4 N*m (3 to 4 kgf*cm, 3 to 4 in.*lbf) per each 0.05 mm (0.0020 in.) change in the plate washer thickness.

(e) Remove the 16 bolts and the manual transmission case.

(f) Remove the differential case assembly from the transaxle case.

10. INSTALL TRANSMISSION CASE OIL SEAL

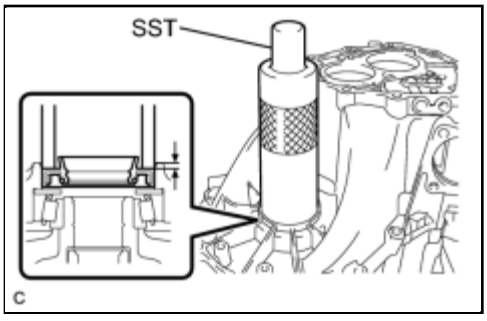

(a) Using SST and a hammer, install a new transmission case oil seal onto the manual transmission case.

SST: 09316-60011

09316-00011

Driven in depth:

9.6 to 10.2 mm (0.378 to 0.402 in.)

(b) Coat the lip of the front transmission case oil seal with MP grease.

11. INSTALL TRANSAXLE CASE OIL SEAL

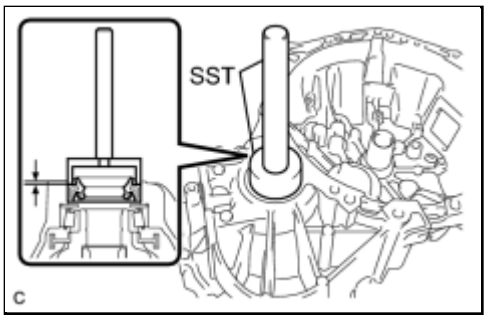

(a) Using SST and a hammer, install a new transaxle case oil seal onto the transaxle case.

SST: 09710-20011

09710-06071

SST: 09950-70010

09951-07150

Driven in depth:

1.6 to 2.2 mm (0.0630 to 0.0866 in.)

(b) Coat the lip of the transaxle case oil seal with MP grease.

12. INSTALL TRANSMISSION MAGNET

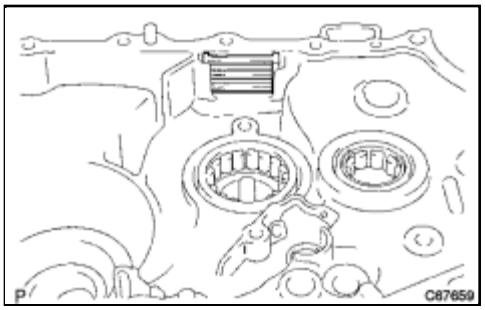

(a) Clean the transmission magnet and install it onto the transaxle case.

13. INSTALL BEARING LOCK PLATE

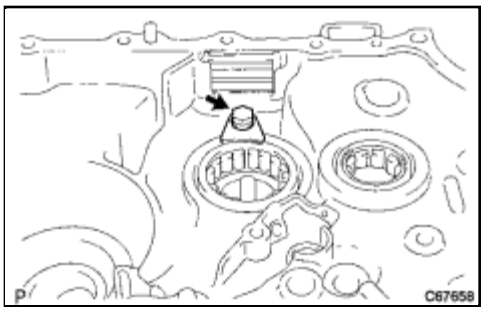

(a) Install the bearing lock plate onto the transaxle case with the bolt.

Torque: 11 N·m (115 kgf·cm, 8ft·lbf)

14. INSTALL NO. 1 OIL RECEIVER PIPE

(a) Install the No. 1 oil receiver pipe onto the manual transmission case with the bolt.

Torque: 17 N·m (175 kgf·cm, 13ft·lbf)

NOTICE:

- Do not deform the No. 1 oil receiver pipe.
- Install the No. 1 oil receiver pipe while holding it against

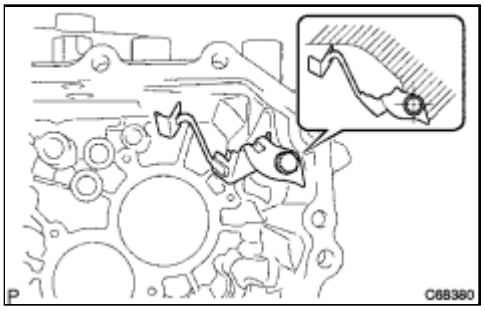

the manual transmission case as shown in the illustration.

15. INSTALL NO. 2 OIL RECEIVER PIPE

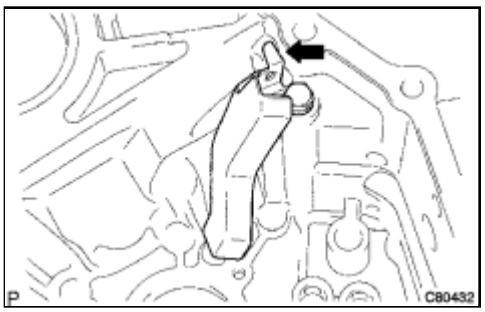

(a) Install the No. 2 oil receiver pipe onto the manual transmission case with the bolt.

Torque: 17 N·m (175 kgf·cm, 13ft·lbf)

NOTICE:

- Do not deform the No. 2 oil receiver pipe.
- Install the No. 2 oil receiver pipe while holding it against the manual transmission case as shown in the illustration.

16. INSTALL REVERSE RESTRICT PIN ASSEMBLY

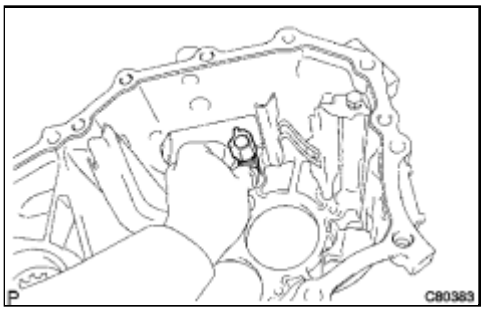

(a) Install the reverse restrict pin assembly onto the manual transmission case.

NOTICE:

Set the reverse restrict pin assembly in the correct direction.

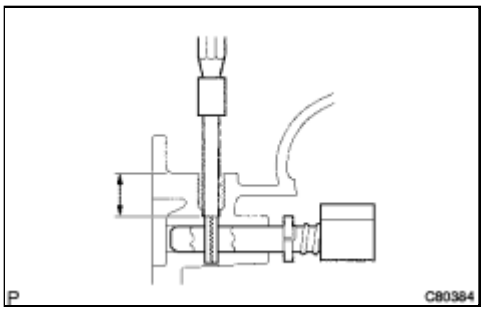

(b) Using a pin punch (φ5 mm) and a hammer, install the slotted spring pin onto the reverse restrict pin assembly.

Drive in depth:

15.5 to 16.5 mm (0.6102 to 0.6496 in.)

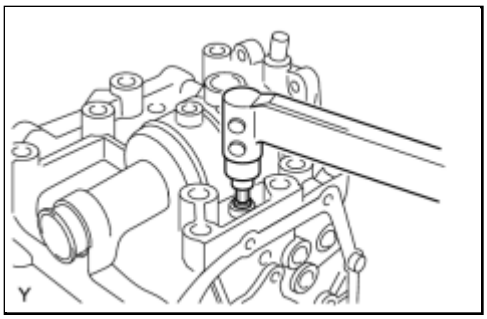

(c) Apply sealant to the reverse restrict pin plug.

Sealant:
Toyota Genuine Adhesive 1344, Three Bond 1344 or equivalent

(d) Using a hexagon wrench and a torque wrench, install the reverse restrict pin plug onto the manual transmission case.

Torque: 13 N·m (130 kgf·cm, 9ft·lbf)

17. INSTALL MANUAL TRANSAXLE CASE RECEIVER

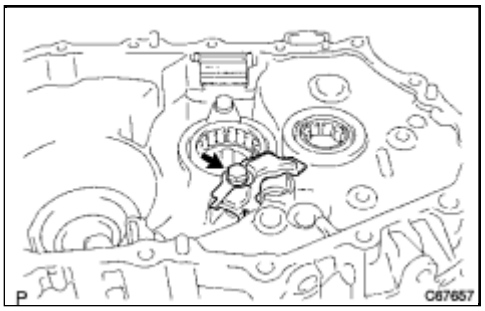

(a) Install the manual transaxle case receiver onto the transaxle case with the bolt.

Torque: 11 N·m (115 kgf·cm, 8ft·lbf)

18. INSTALL DIFFERENTIAL CASE ASSEMBLY

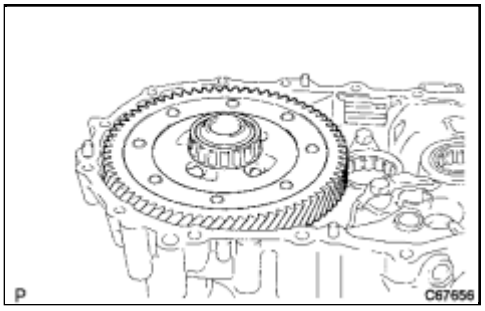

(a) Coat the differential case tapered roller bearing with gear oil and install the differential case assembly onto the transaxle case.

19. INSTALL INPUT SHAFT ASSEMBLY

(a) Coat the sliding and rotating surfaces of the input and output shafts with gear oil and install them onto the transaxle case.

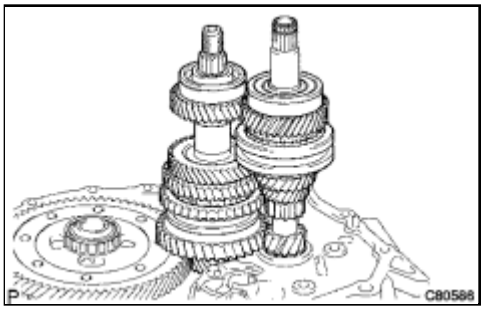

20. INSTALL REVERSE IDLER GEAR SUB-ASSEMBLY

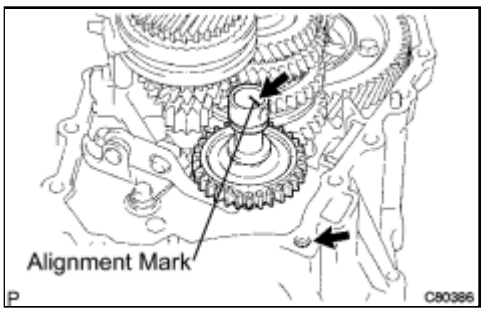

(a) Coat the reverse idler gear sub-assembly, thrust washer and reverse idler gear shaft with gear oil, and install them as shown in the illustration.

HINT:

Align the mark on the reverse idler gear shaft with the bolt hole as shown in the illustration.

21. INSTALL NO. 1 GEAR SHIFT FORK SHAFT

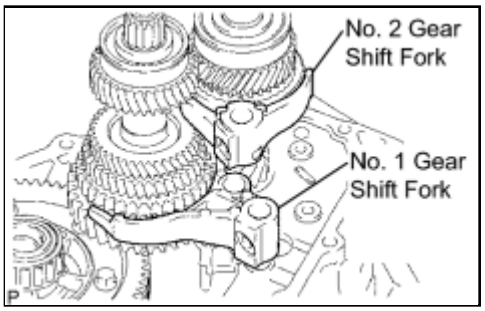

(a) Coat the No. 1 gear shift fork and No. 2 gear shift fork with gear oil and install them.

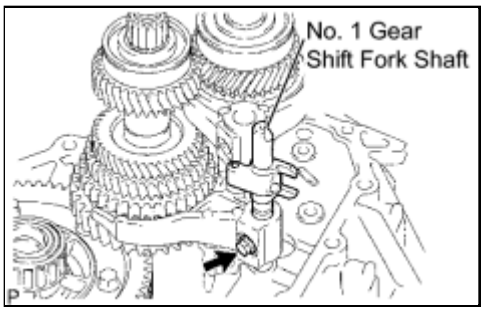

(b) Coat the No. 1 gear shift fork shaft with gear oil and install it.

(c) Apply sealant to the shift fork set bolt.

Sealant:
Toyota Genuine Adhesive 1344, Three Bond 1344 or equivalent

(d) Install the shift fork set bolt.

Torque: 16 N·m (160 kgf·cm, 12ft·lbf)

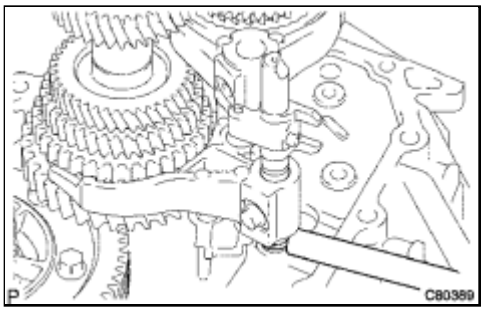

(e) Using a brass bar and a hammer, install a new shaft snap ring onto the No. 1 gear shift fork shaft.

22. INSTALL NO. 3 GEAR SHIFT FORK SHAFT

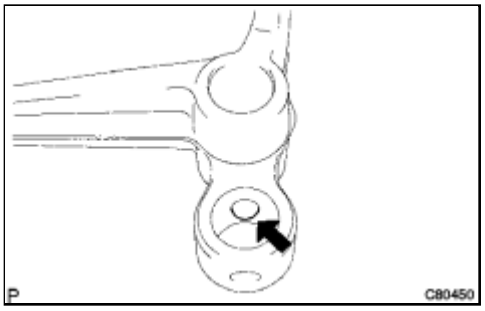

(a) Coat the 2 shift fork balls with MP grease and install them onto the reverse shift fork.

(b) Install the reverse shift fork onto the No. 3 gear shift fork shaft.

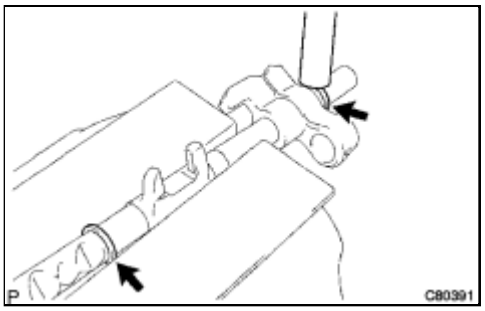

(c) Using a brass bar and a hammer, install 2 new shift fork shaft snap rings onto the No. 3 shift fork shaft.

(d) Coat the No. 3 gear shift fork shaft with gear oil and install it.

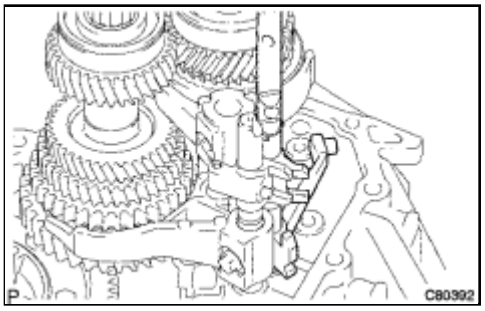

23. INSTALL NO. 2 GEAR SHIFT FORK SHAFT

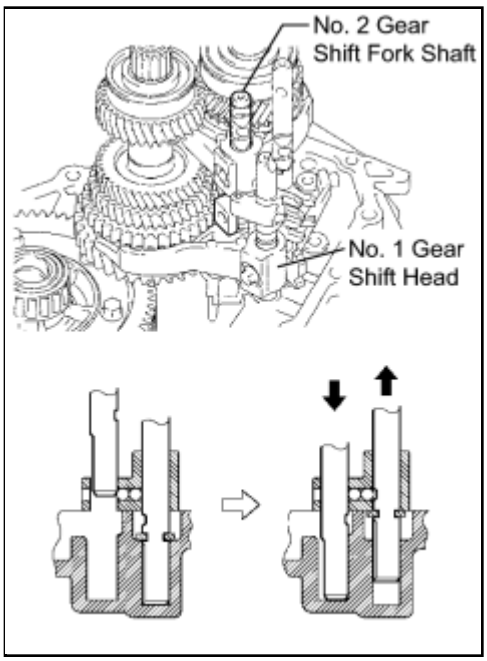

(a) Coat the No. 1 gear shift head and No. 2 gear shift fork shaft with gear oil and install them.

NOTICE:

To avoid interference from the 2 shift fork balls, lift up the No. 3 gear shift fork shaft to the position shown in the illustration.

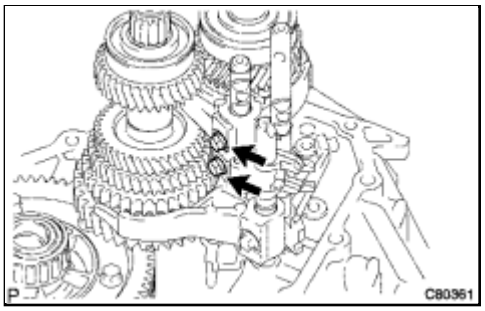

(b) Coat the 2 shift lock bolts with sealant and install them onto the No. 2 gear shift fork and No. 1 shift head.

Sealant:

Toyota Genuine Adhesive 1344, Three Bond 1344 or equivalent

Torque: 16 N·m (160 kgf·cm, 12ft·lbf)

24. INSTALL REVERSE SHIFT ARM BRACKET ASSEMBLY

(a) Install the reverse shift arm bracket assembly onto the front transaxle case with the 2 bolts.

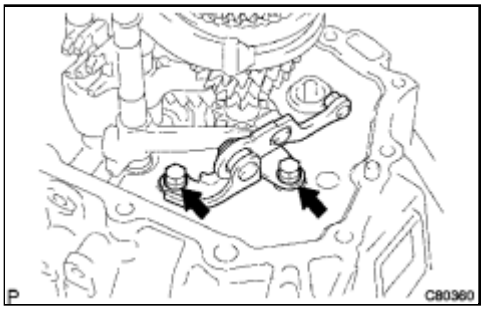

Torque: 17 N·m (175 kgf·cm, 13ft·lbf)

25. INSTALL MANUAL TRANSMISSION CASE

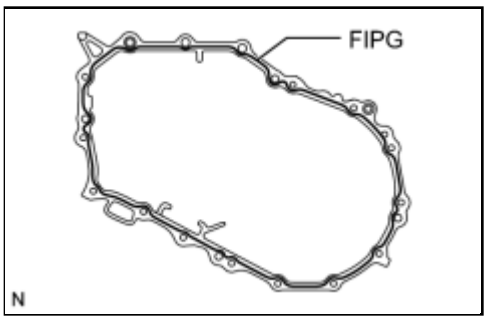

(a) Apply FIPG to the manual transmission case as shown in the illustration.

FIPG:

Toyota Genuine Seal Packing 1281, Three Bond 1281 or equivalent

NOTICE:

Assemble the parts within 10 minutes of application. Otherwise, the packing (FIPG) material must be removed and reapplied.

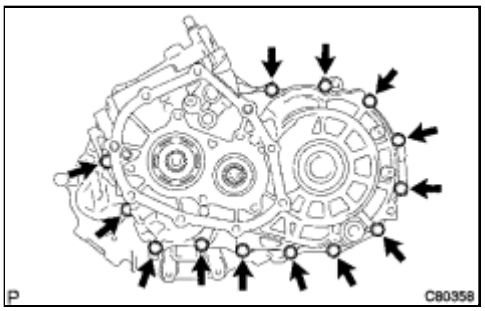

(b) Install the 13 bolts onto the manual transmission side.

Torque: 29 N·m (300 kgf·cm, 22ft·lbf)

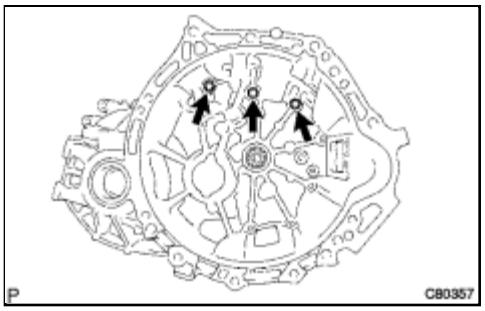

(c) Coat the 3 bolts with sealant and install them onto the manual transaxle side.

Sealant:

Toyota Genuine Adhesive 1344, Three Bond 1344 or equivalent

Torque: 29 N·m (300 kgf·cm, 22ft·lbf)

26. INSTALL REVERSE IDLER GEAR SHAFT BOLT

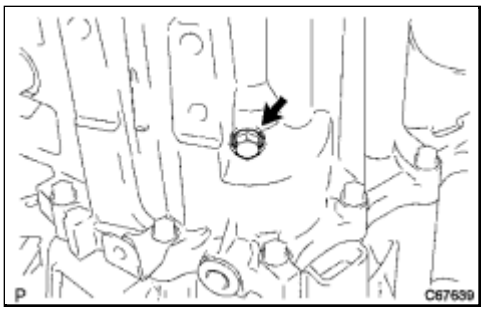

(a) Coat the reverse idler gear shaft bolt with sealant and install it with a new gasket.

Sealant:

Toyota Genuine Adhesive 1344, Three Bond 1344 or equivalent

Torque: 29 N·m (300 kgf·cm, 22ft·lbf)

27. INSTALL NO. 2 LOCK BALL ASSEMBLY

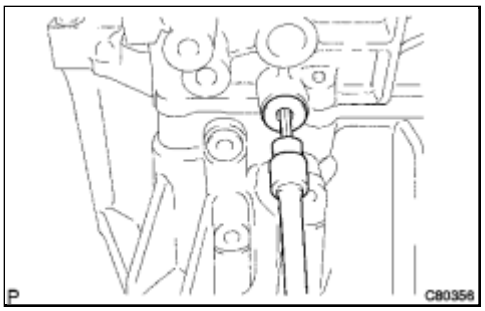

(a) Coat the No. 2 lock ball assembly with sealant and install it using a hexagon wrench.

Sealant:

Toyota Genuine Adhesive 1344, Three Bond 1344 or equivalent

Torque: 29 N·m (300 kgf·cm, 22ft·lbf)

28. INSTALL SHIFT DETENT BALL

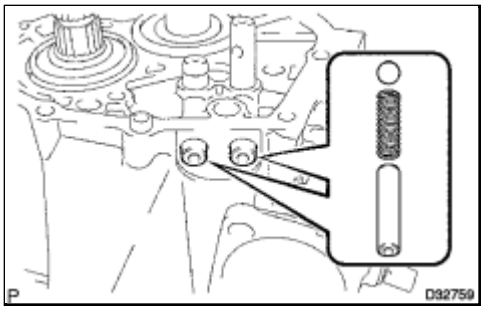

(a) Install the 2 shift detent balls, 2 shift detent ball springs, and 2 shift spring seats onto the manual transmission case.

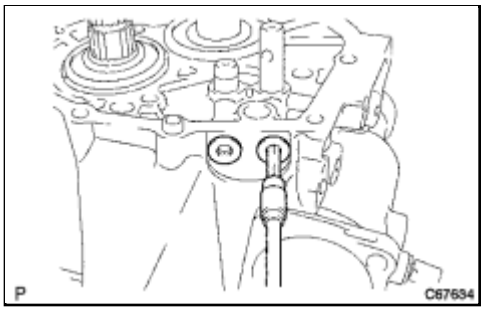

(b) Coat the threads of the 2 shift detent ball plugs with sealant and install them using a hexagon wrench.

Sealant:

Toyota Genuine Adhesive 1344, Three Bond 1344 or equivalent

Torque: 22 N·m (224 kgf·cm, 16ft·lbf)

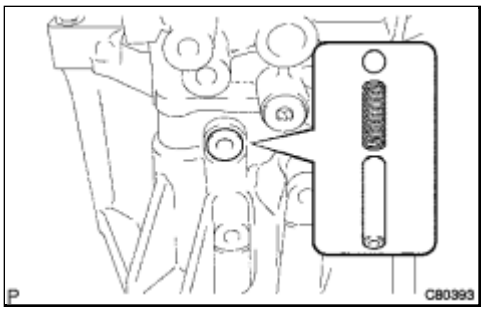

(c) Install the shift detent ball, shift detent ball compression spring, and spring seat onto the transaxle case.

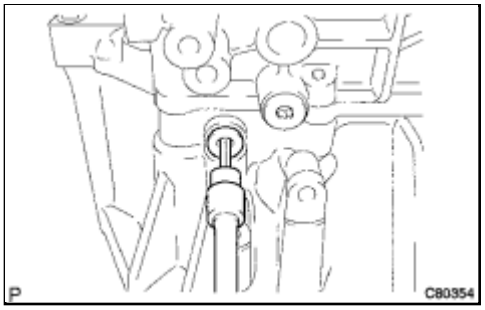

(d) Coat the threads of the shift detent ball plug with sealant and install it using a hexagon wrench.

Sealant:

Toyota Genuine Adhesive 1344, Three Bond 1344 or equivalent

Torque: 22 N·m (224 kgf·cm, 16ft·lbf)

29. INSTALL INPUT SHAFT REAR BEARING HOLE SNAP RING

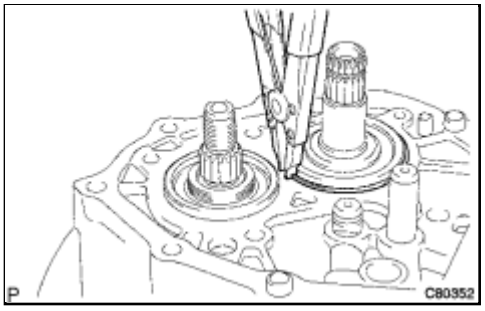

(a) Using a snap ring expander, install a new input shaft rear bearing hole snap ring onto the input shaft.

30. INSTALL OUTPUT SHAFT REAR BEARING HOLE SNAP RING

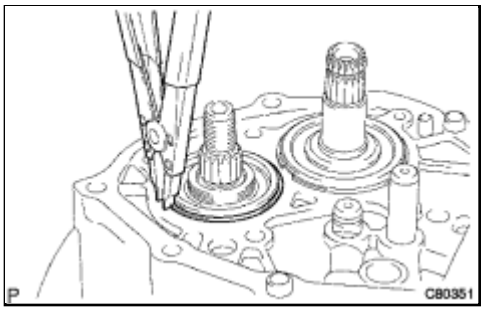

(a) Using a snap ring expander, install a new output shaft rear bearing hole snap ring onto the output shaft.

31. INSTALL SHIFT FORK SHAFT SNAP RING

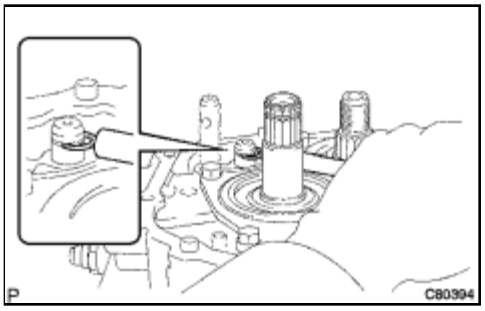

(a) Using a brass bar and a hammer, install a new shift fork shaft snap ring onto the No. 2 shift fork shaft.

32. INSTALL REAR BEARING RETAINER

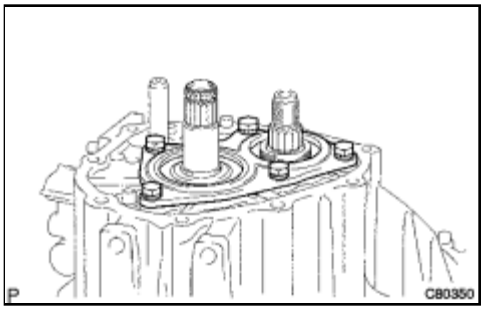

(a) Coat the 5 bolts with sealant and install the rear bearing retainer onto the manual transmission case with the 5 bolts.

Sealant:
Toyota Genuine Adhesive 1344, Three Bond 1344 or equivalent

Torque: 27 N·m (280 kgf·cm, 20ft·lbf)

33. INSTALL 5TH DRIVEN GEAR

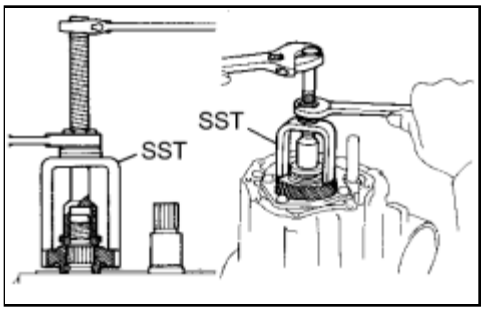

(a) Using SST, install the 5th driven gear onto the output shaft.

SST: 09309-12020

34. INSTALL 5TH GEAR NEEDLE ROLLER BEARING

(a) Coat the 5th gear needle roller bearing and 5th gear bearing spacer with gear oil, and install them onto the input shaft.

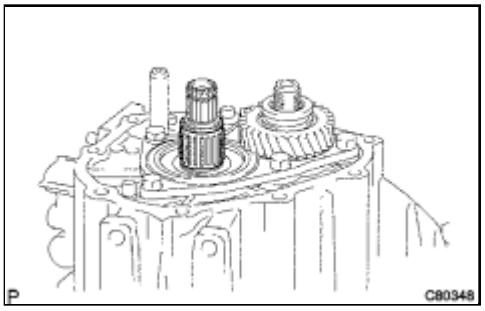

35. INSTALL 5TH GEAR

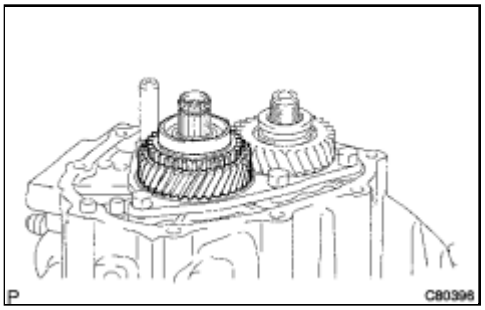

(a) Coat the 5th gear with gear oil and install it onto the input shaft.

36. INSTALL NO. 3 SYNCHRONIZER RING

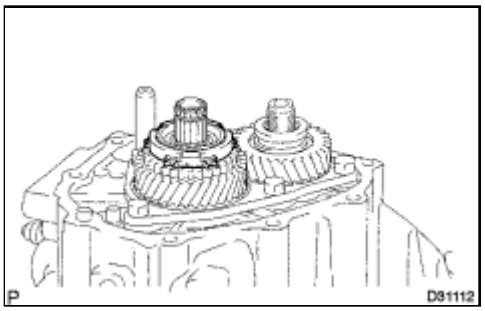

(a) Coat the No. 3 synchronizer ring with gear oil and install it onto the 5th gear.

37. INSTALL NO. 3 TRANSMISSION CLUTCH HUB

(a) Install the 3 synchromesh shifting keys and 2 synchromesh shifting key springs onto the No. 3 transmission clutch hub as shown in the illustration.

NOTICE:

Do not set the 2 shifting key spring openings in the same position.

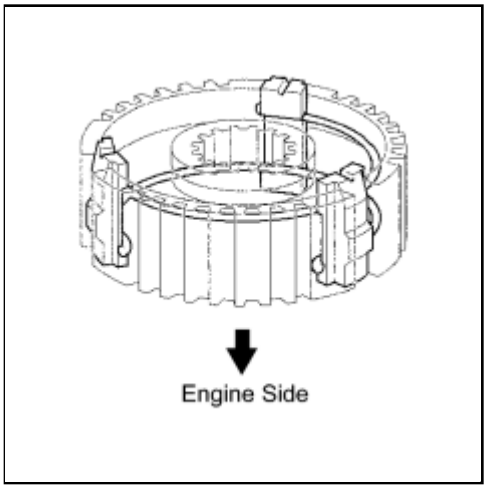

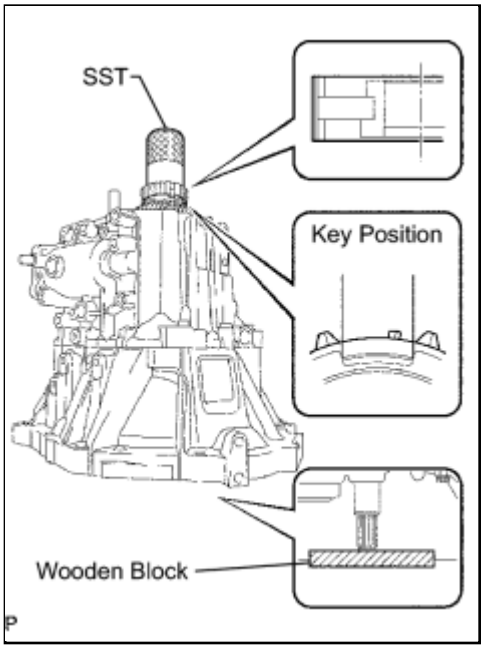

(b) Using SST and a hammer, install the No. 3 transmission clutch hub onto the input shaft.

SST: 09636-20010

NOTICE:

- Do not install the No. 3 transmission clutch hub in the wrong direction.
- Install the No. 3 transmission clutch hub with the No. 3 synchronizer ring key groove and the No. 3 synchromesh shifting key aligned.
- Check that the 5th gear can rotate smoothly.
- Place a suitable sized wooden block to support the input shaft.

(c) Select a snap ring that will allow minimum axial play.

Clearance:
0.1 mm (0.00394 in.) or less
Snap Ring Thickness:

MARK	THICKNESS MM (IN.)	MARK	THICKNESS MM (IN.)
A	2.25 (0.0886)	E	2.49 (0.0980)
B	2.31 (0.0909)	F	2.55 (0.1004)
C	2.37 (0.0933)	G	2.61 (0.1028)
D	2.43 (0.0957)	-	-

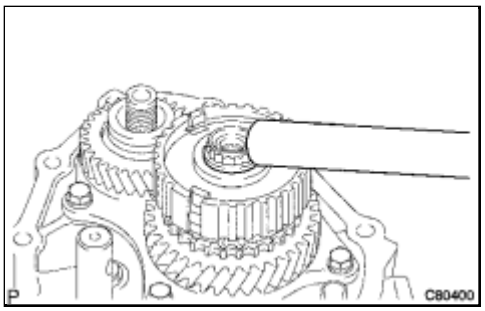

(d) Using a brass bar and a hammer, install a new snap ring onto the input shaft.

38. INSPECT 5TH GEAR THRUST CLEARANCE

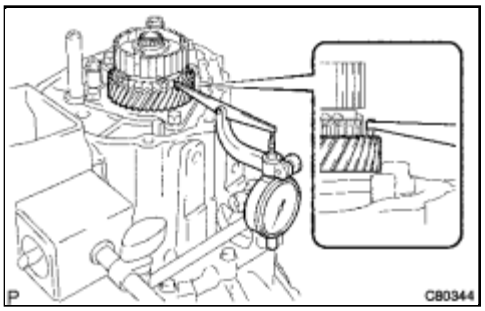

(a) Using a dial indicator, measure the 5th gear thrust clearance.

Standard clearance:
0.10 to 0.55 mm (0.00394 to 0.0217 in.)
Maximum clearance:
0.55 mm (0.0217 in.)

If the clearance exceeds the maximum, replace the No. 3 transmission clutch hub, 5th gear or input shaft rear radial ball bearing.

39. INSPECT 5TH GEAR RADIAL CLEARANCE

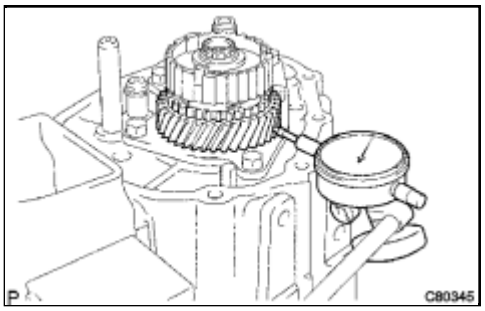

(a) Using a dial indicator, measure the 5th gear radial clearance.

Standard clearance:
NSK made bearing
0.015 to 0.056 mm (0.000591 to 0.00220 in.)
JTEKT made bearing
0.015 to 0.058 mm (0.000591 to 0.00228 in.)
Maximum clearance:
NSK made bearing
0.056 mm (0.00220 in.)
JTEKT made bearing
0.058 mm (0.00228 in.)

If the clearance exceeds the maximum, replace the 5th gear, 5th gear needle roller bearing or input shaft.

40. INSTALL NO. 3 GEAR SHIFT FORK

(a) Coat the No. 3 transmission clutch hub sleeve with gear oil and install it together with the No. 3 gear shift fork onto

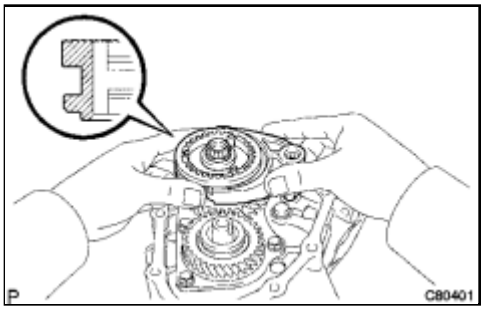

the No. 3 transmission clutch hub.

HINT:

Set the No. 3 transmission clutch hub in the correct direction.

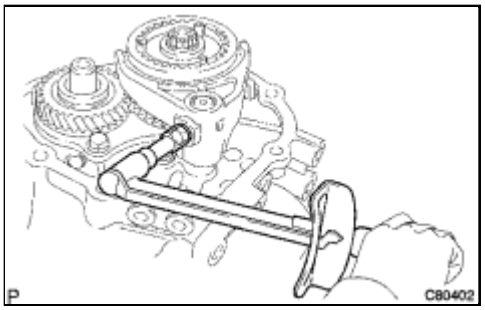

(b) Coat the gear shift fork lock bolt with sealant and install it onto the No. 3 gear shift fork.

Sealant:

Toyota Genuine Adhesive 1344, Three Bond 1344 or equivalent

Torque: 16 N·m (160 kgf·cm, 12ft·lbf)

41. INSTALL MANUAL TRANSMISSION OUTPUT SHAFT REAR SET NUT

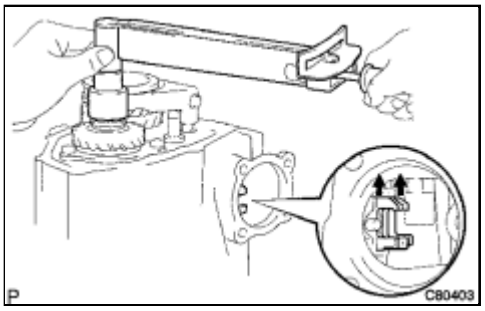

(a) Engage 2 gears simultaneously to lock the transmission.

(b) Install a new manual transmission output shaft rear set nut.

Torque: 118 N·m (1200 kgf·cm, 87ft·lbf)

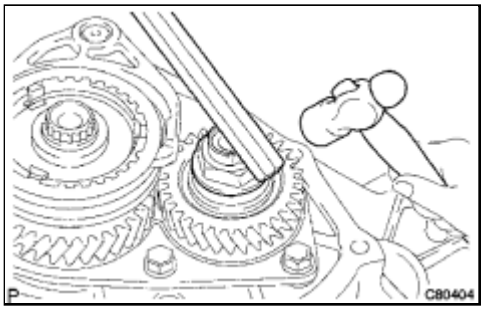

(c) Using a chisel and a hammer, stake the manual transmission output shaft rear set nut.

(d) Disengage the 2 gears.

42. INSTALL MANUAL TRANSMISSION CASE COVER SUB-ASSEMBLY

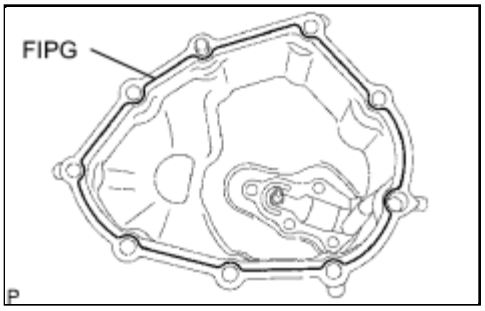

(a) Apply FIPG to the manual transmission case cover sub-assembly as shown in the illustration.

FIPG:

Toyota Genuine Seal Packing 1281, Three Bond 1281 or equivalent

NOTICE:

Assemble the parts within 10 minutes of application. Otherwise, the packing (FIPG) material must be removed and reapplied.

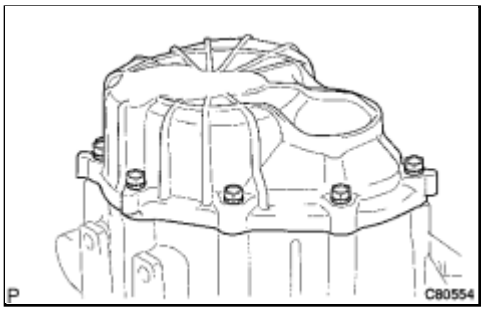

(b) Install the manual transmission case cover sub-assembly onto the manual transmission case with the 9 bolts.

Torque: 21 N·m (214 kgf·cm, 15ft·lbf)

43. INSTALL SHIFT AND SELECT LEVER SHAFT ASSEMBLY

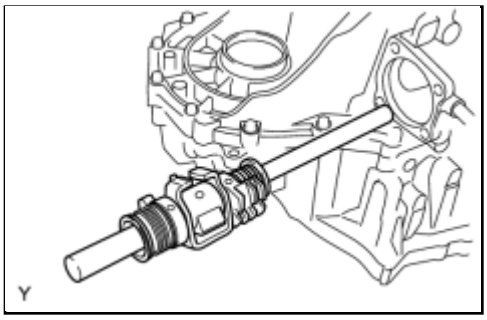

(a) Coat the shift and select lever shaft assembly with gear oil and install it onto the transmission case.

44. INSTALL CONTROL SHAFT COVER OIL SEAL

(a) Using SST and a hammer, install a new control shaft cover oil seal onto the control shaft cover.

SST: 09950-60010

09951-00280

SST: 09950-70010

09951-07150

Driven in depth:

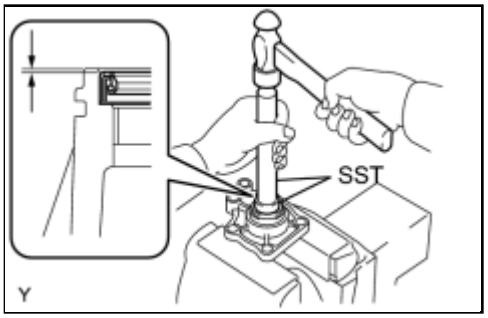

0.2 to 1.2 mm (0.00787 to 0.0472 in.)

(b) Coat the control shaft cover oil seal with MP grease.

45. INSTALL CONTROL SHAFT COVER

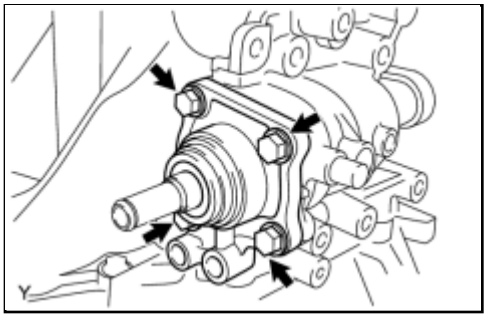

(a) Coat the threads of the 4 bolts with sealant. Install a new gasket and the control shaft cover onto the manual transmission case with the 4 bolts.

Sealant:
Toyota Genuine Adhesive 1344, Three Bond 1344 or equivalent

Torque: 20 N·m (200 kgf·cm, 14ft·lbf)

NOTICE:

Set the claws of the shift interlock plate into the shift head part of the gear shift fork shaft securely.

46. INSTALL SHIFT GUIDE PIN

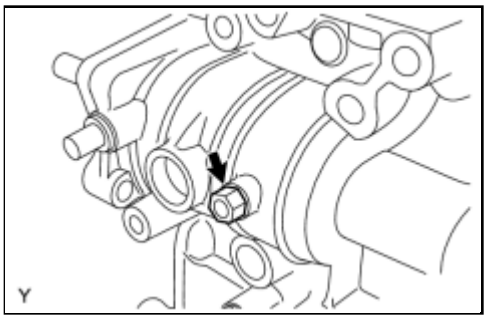

(a) Coat the threads of the shift guide pin with sealant.

Sealant:
Toyota Genuine Adhesive 1344, Three Bond 1344 or equivalent

(b) Install the washer and shift guide pin.

Torque: 11 N·m (112 kgf·cm, 8ft·lbf)

47. INSTALL NO. 1 LOCK BALL ASSEMBLY

(a) Coat the threads of the No. 1 lock ball assembly with sealant and install it onto the manual transmission case.

Sealant:

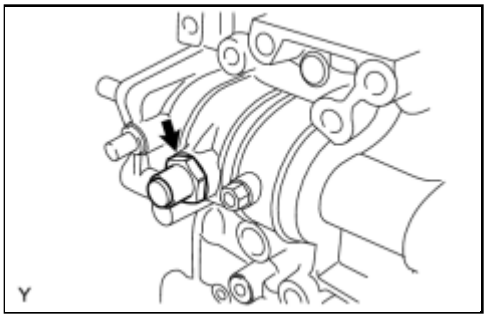

Toyota Genuine Adhesive 1344, Three Bond 1344 or equivalent

Torque: 29 N·m (300 kgf·cm, 22ft·lbf)

48. INSTALL SHIFT LEVER DAMPER

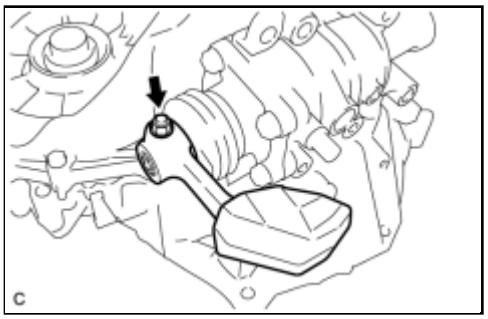

(a) Install the dust boot onto the control shaft cover.

(b) Install the shift lever damper with the lock pin onto the shift and select lever shaft assembly.

(c) Install the washer with the nut.

Torque: 12 N·m (120 kgf·cm, 9ft·lbf)

49. INSTALL FLOOR SHIFT CONTROL SHIFT LEVER

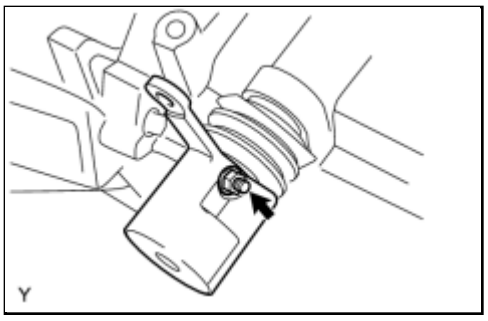

(a) Install the dust boot onto the shift and select lever shaft oil seal.

(b) Install the floor shift control shift lever with the lock pin onto the shift and select lever shaft assembly.

(c) Install the washer with the nut.

Torque: 12 N·m (120 kgf·cm, 9ft·lbf)

50. INSTALL SELECTING BELLCRANK ASSEMBLY

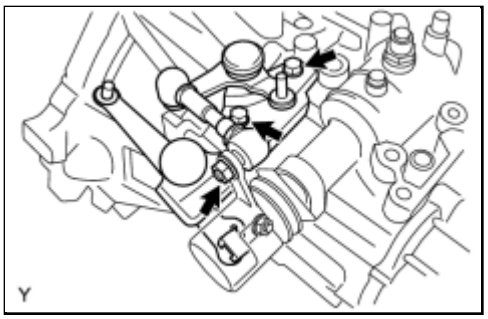

(a) Install the selecting bellcrank assembly together with the control bellcrank dust cover onto the manual transmission case with the 2 bolts and nut.

Torque: 25 N·m (250 kgf·cm, 18ft·lbf) for bolt

Torque: 12 N·m (120 kgf·cm, 9ft·lbf) for nut

NOTICE:

Apply MP grease to the inside surface of the control shift lever bush.

51. INSTALL BACK-UP LIGHT SWITCH ASSEMBLY

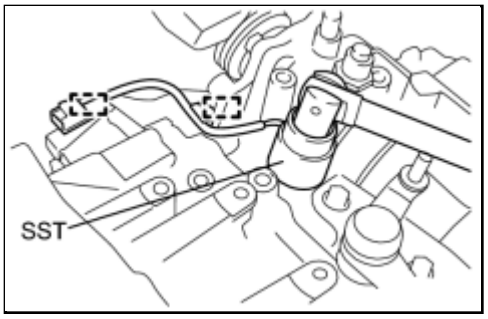

(a) Using SST, install the back-up light switch assembly onto the manual transmission case with a new gasket.

SST: 09817-16011

Torque: 40 N·m (410 kgf·cm, 30ft·lbf)

(b) Install the back-up light switch wire harness into the 2 clamps.

52. INSTALL SPEEDOMETER DRIVEN HOLE COVER SUB-ASSEMBLY

(a) Install a new O-ring onto the speedometer driven hole cover sub-assembly.

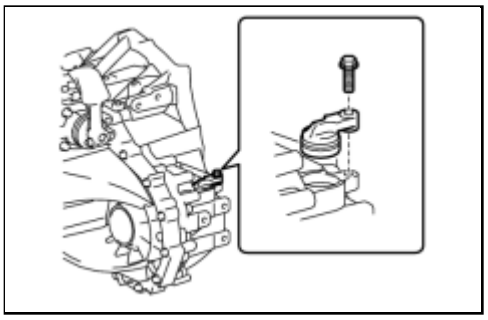

(b) Install the speedometer driven hole cover sub-assembly onto the manual transaxle case with the bolt.

Torque: 11 N·m (115 kgf·cm, 8ft·lbf)

53. INSTALL MANUAL TRANSMISSION FILLER PLUG

(a) Install the manual transmission filler plug onto the manual transmission case with a new gasket.

Torque: 39 N·m (400 kgf·cm, 29ft·lbf)

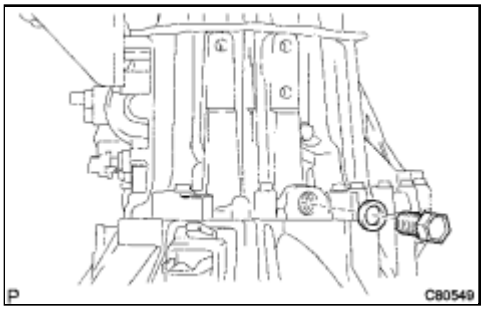

54. INSTALL DRAIN PLUG SUB-ASSEMBLY

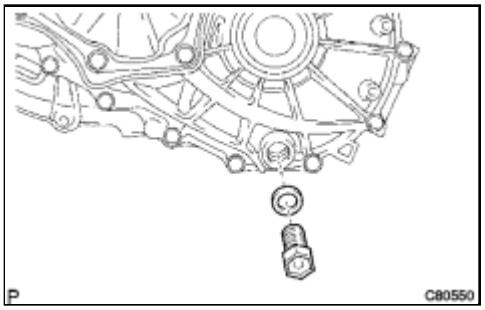

(a) Install the drain plug onto the manual transmission case with a new gasket.

Torque: 39 N·m (400 kgf·cm, 29ft·lbf)

Last Modified: 3-10-2010	6.4 T	**From:** 200901
Model Year: 2010	**Model:** Corolla	**Doc ID:** RM000001R1G01FX
Title: C59 MANUAL TRANSMISSION / TRANSAXLE: MANUAL TRANSAXLE SYSTEM: PROBLEM SYMPTOMS TABLE (2010 Corolla)		

PROBLEM SYMPTOMS TABLE

Use the table below to help determine the cause of problem symptoms. If multiple suspected areas are listed, the potential causes of the symptoms are listed in order of probability in the "Suspected Area" column of the table. Check each symptom by checking the suspected areas in the order they are listed. Replace parts as necessary.

HINT:

If possible, perform a road test as part of diagnosis. Note any unusual behavior, and conditions that cause the problem to occur. Based on the power flow and configuration of the gears in the transaxle, determine what parts require special attention if inspection and disassembly is necessary.

Manual Transaxle System

SYMPTOM	SUSPECTED AREA	SEE PAGE
Abnormal noise	Oil level (Low)	INFO
	Oil (Wrong)	-
	Clutch release bearing (Worn or damaged)	INFO
	Clutch disc (Worn or damaged)*1	INFO
	Synchronizer ring (Input shaft) (Worn or damaged)	INFO
	Synchronizer ring (Output shaft) (Worn or damaged)	INFO
	Gear (Input shaft) (Worn or damaged)	INFO
	Gear (Output shaft) (Worn or damaged)	INFO
	Bearing (Input shaft) (Worn or damaged)	INFO
	Bearing (Output shaft) (Worn or damaged)	INFO
	Bearing (Differential case) (Worn or damaged)	INFO
Oil leak	Oil level (High)	INFO
	Gasket (Damaged)	INFO
	Oil seal (Worn or damaged)	INFO
Hard shifting or impossible to shift	Oil (Wrong)	-

SYMPTOM	SUSPECTED AREA	SEE PAGE
	Clutch (Dragging)	INFO
	Shift and select lever assembly (Worn or damaged)	INFO
	Control cable (Faulty)	INFO
	Shift fork (Worn)	INFO
	Synchronizer ring (Input shaft) (Worn or damaged)	INFO
	Synchronizer ring (Output shaft) (Worn or damaged)	INFO
	Shift key spring (Input shaft) (Worn or damaged)	INFO
	Shift key spring (Output shaft) (Worn or damaged)	INFO
	Gear (Input shaft) (Worn or damaged)	INFO
	Gear (Output shaft) (Worn or damaged)	INFO
	Hub sleeve (Input shaft) (Worn or damaged)	INFO
	Hub sleeve (Output shaft) (Worn or damaged)	INFO
Jumps out of gear or shift lever moves excessively	Shift fork (Worn)	INFO
	Hub sleeve (Input shaft) (Worn or damaged)	INFO
	Hub sleeve (Output shaft) (Worn or damaged)	INFO
	Gear (Input shaft) (Worn or damaged)	INFO
	Gear (Output shaft) (Worn or damaged)	INFO
	Bearing (Input shaft) (Worn or damaged)	INFO
	Bearing (Output shaft) (Worn or damaged)	INFO

*1: If the clutch torsional damper springs are worn, they can produce a load-related noise similar to a bad bearing or gear rattle.

Last Modified: 3-10-2010	6.4 K	**From:** 200901
Model Year: 2010	**Model:** Corolla	**Doc ID:** RM000001B3J01OX
Title: C59 MANUAL TRANSMISSION / TRANSAXLE: MANUAL TRANSAXLE UNIT: COMPONENTS (2010 Corolla)		

COMPONENTS

ILLUSTRATION

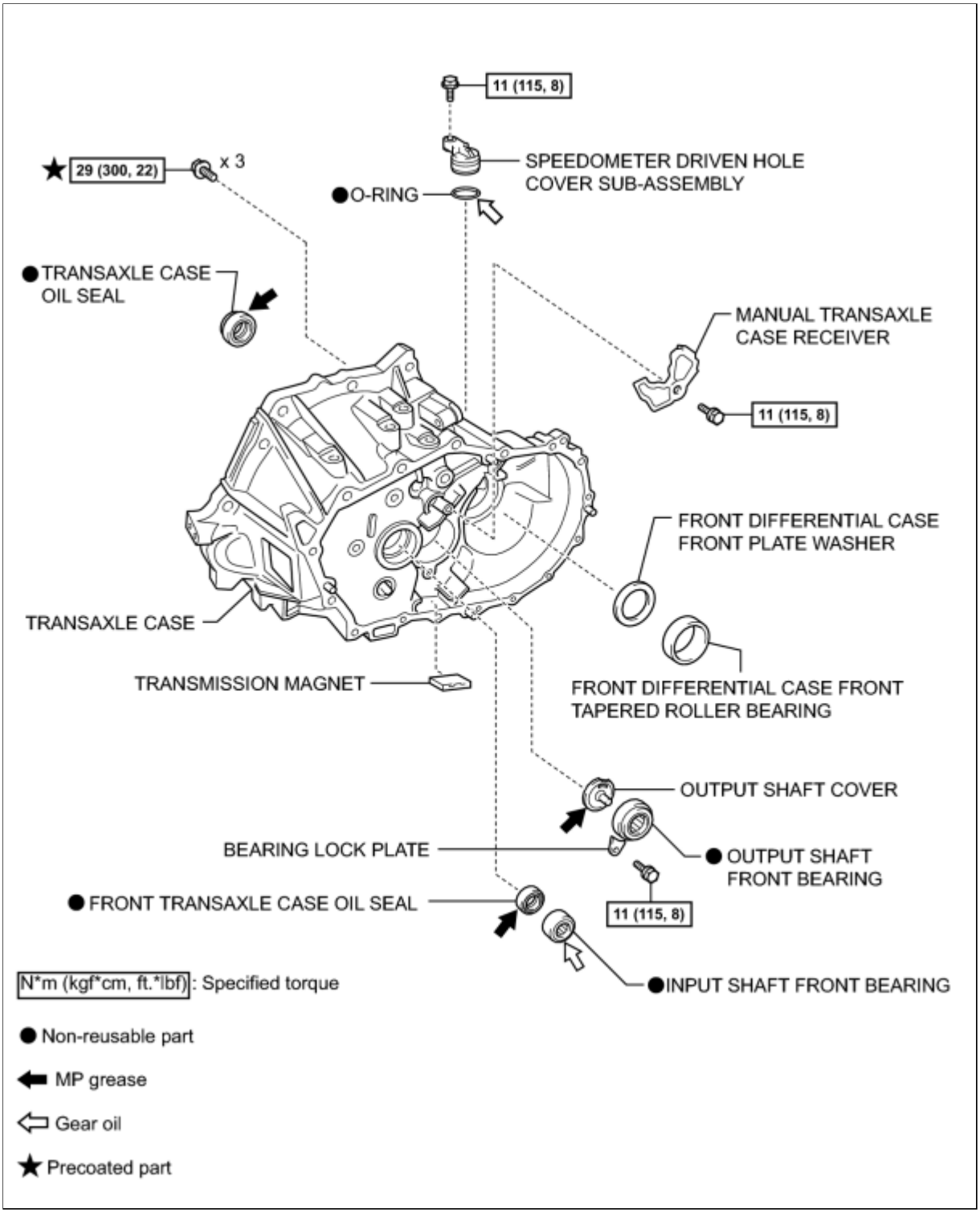

ILLUSTRATION

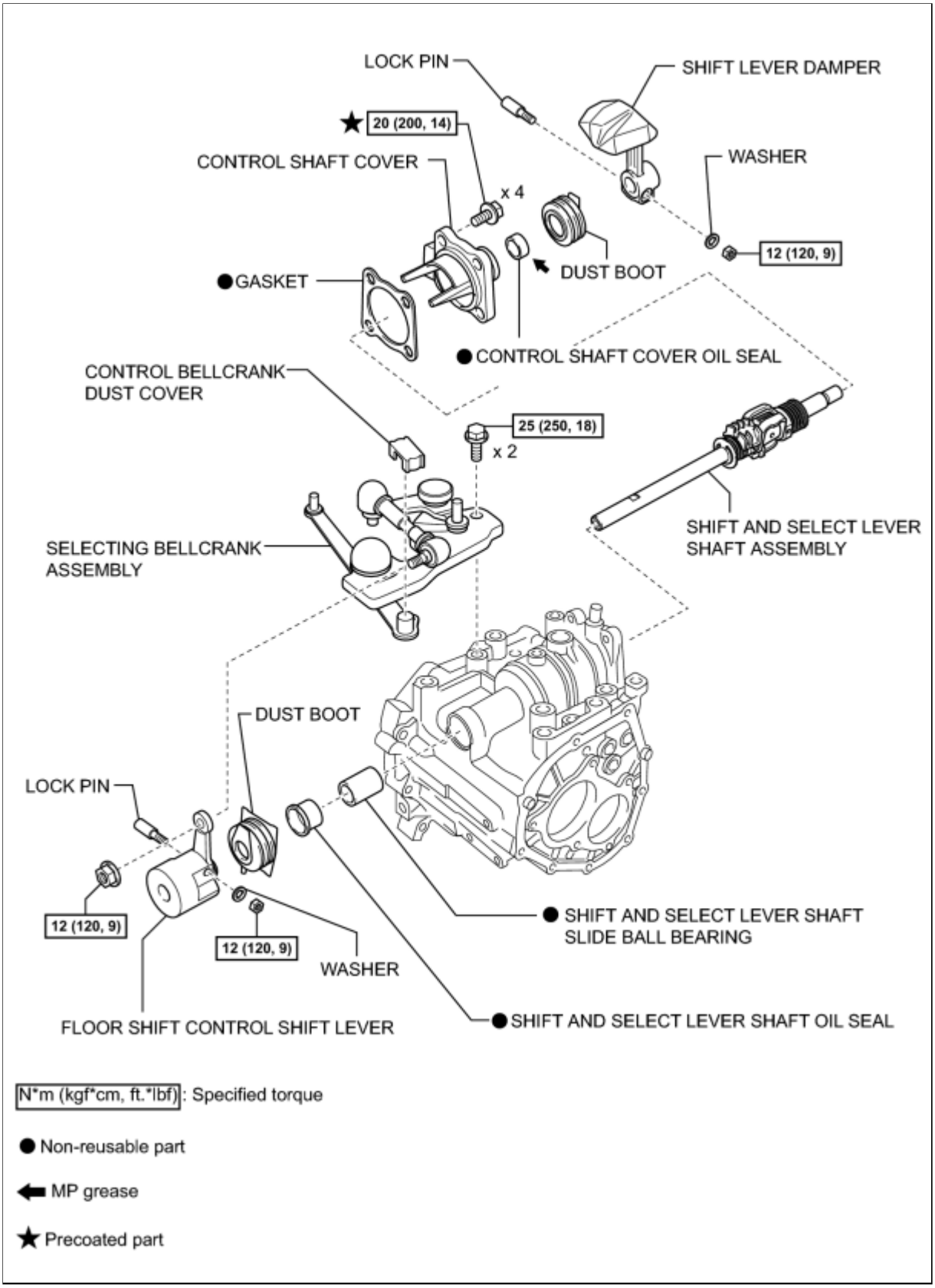

ILLUSTRATION

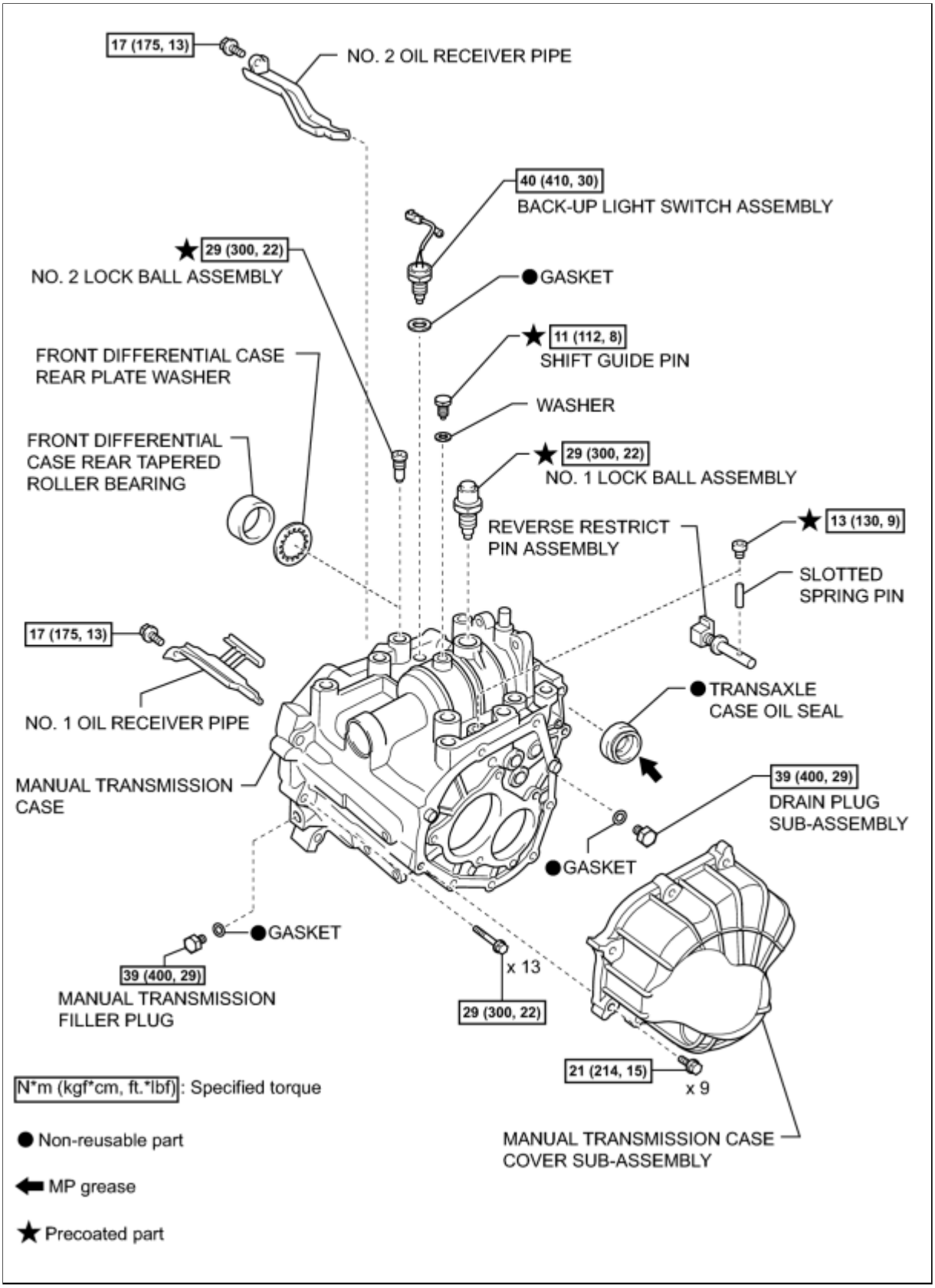

ILLUSTRATION

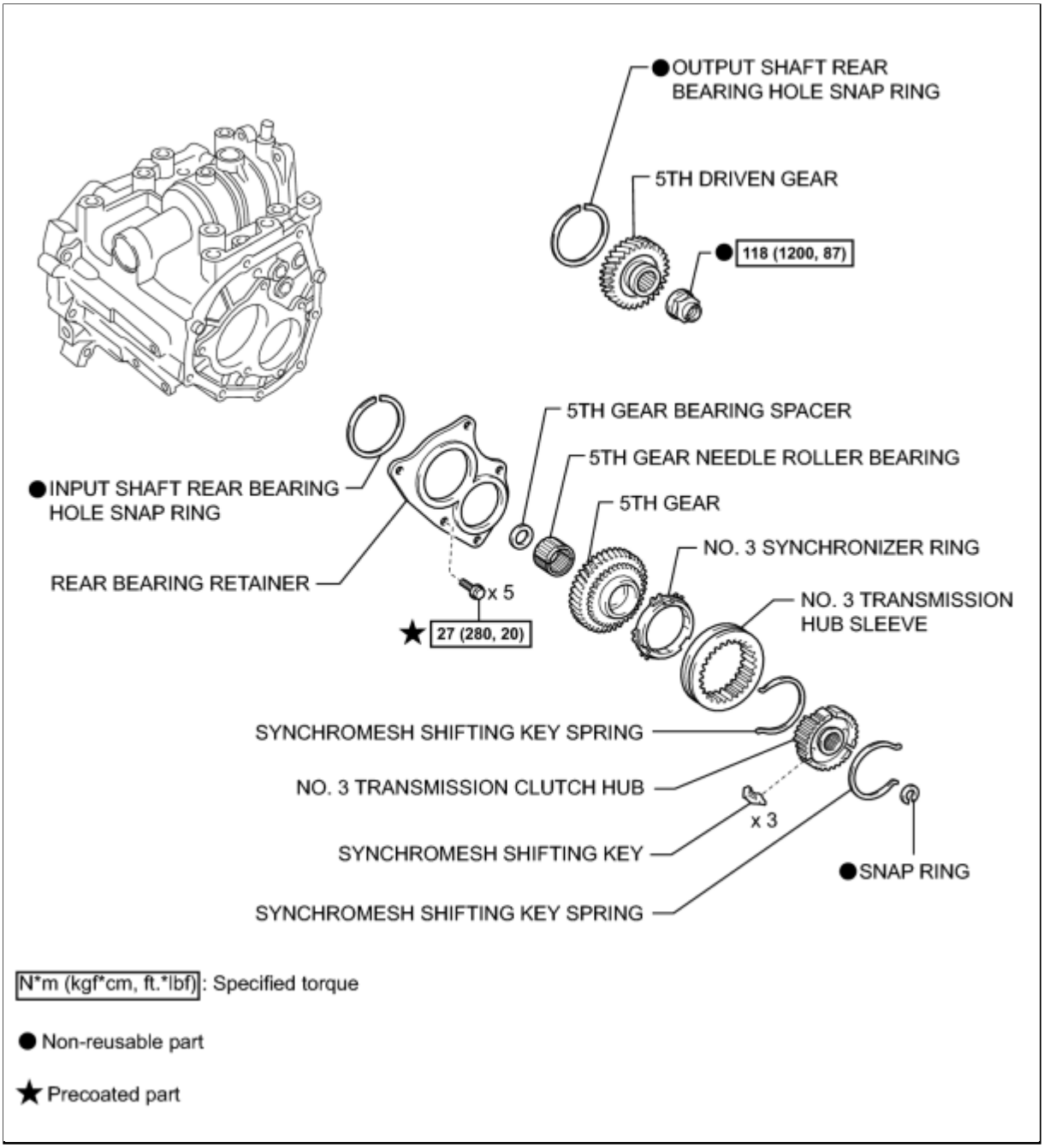

ILLUSTRATION

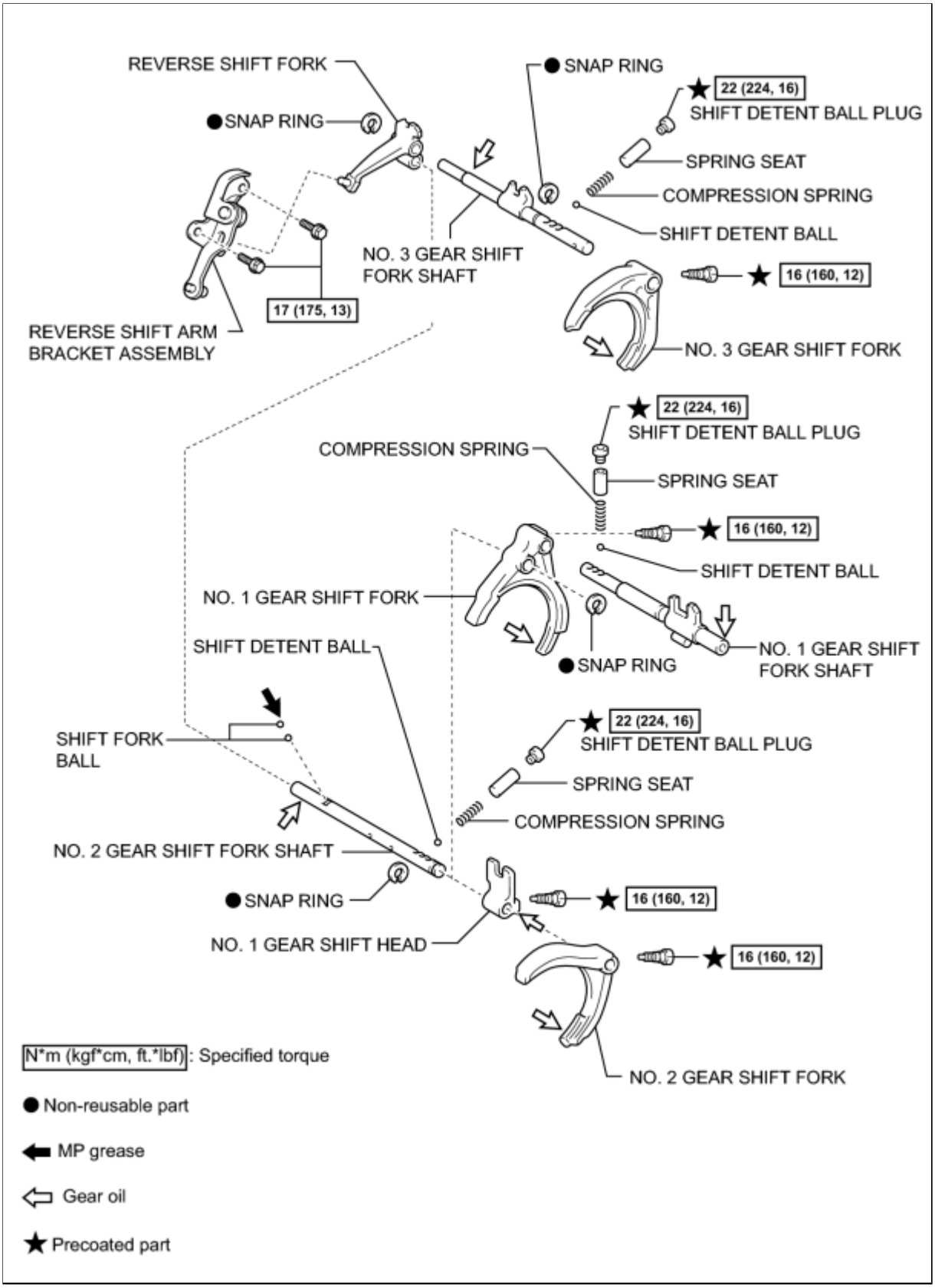

ILLUSTRATION

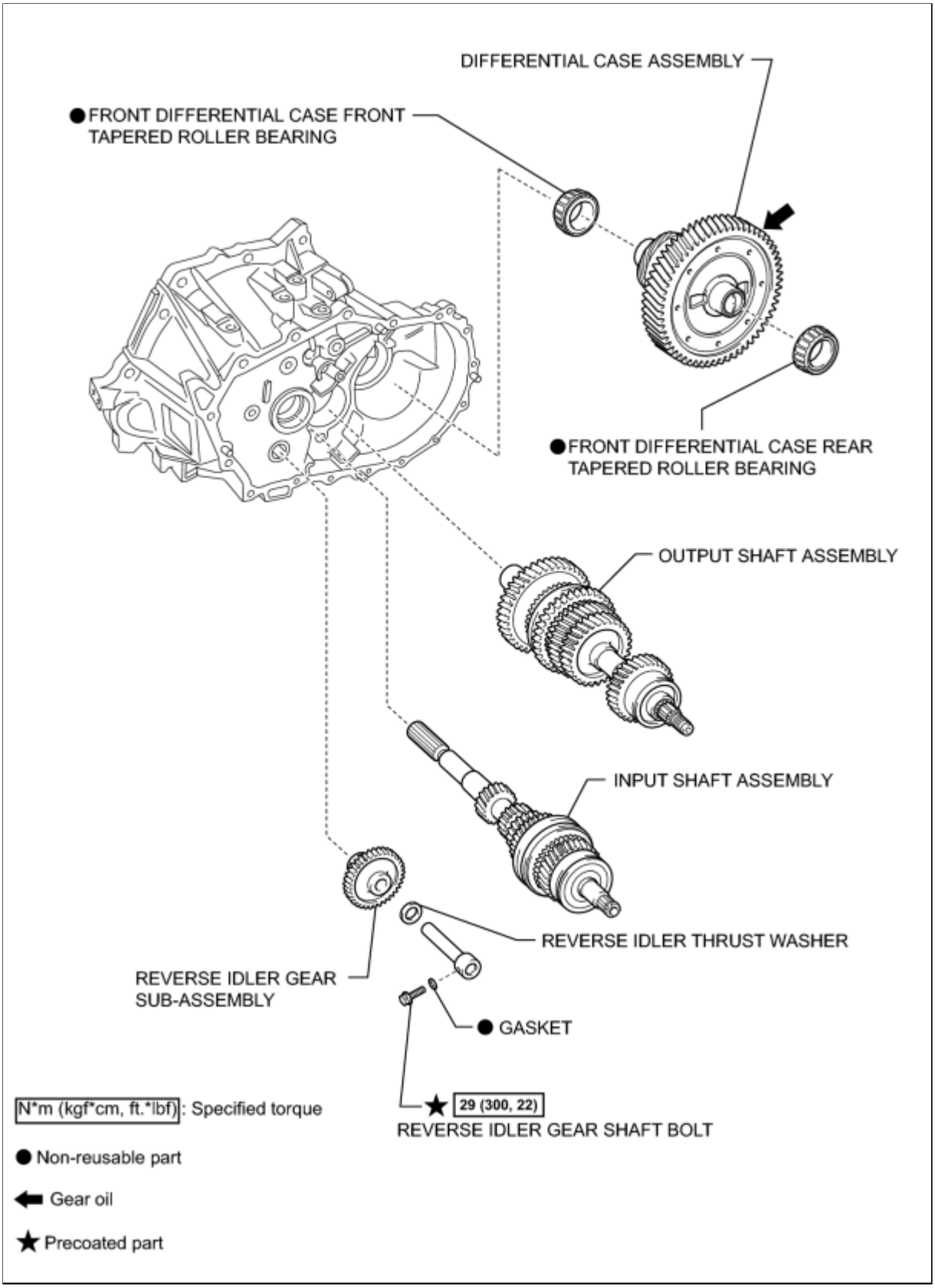
DIFFERENTIAL CASE ASSEMBLY
● FRONT DIFFERENTIAL CASE FRONT TAPERED ROLLER BEARING
● FRONT DIFFERENTIAL CASE REAR TAPERED ROLLER BEARING
OUTPUT SHAFT ASSEMBLY
INPUT SHAFT ASSEMBLY
REVERSE IDLER THRUST WASHER
REVERSE IDLER GEAR SUB-ASSEMBLY
● GASKET
★ 29 (300, 22)
REVERSE IDLER GEAR SHAFT BOLT
N*m (kgf*cm, ft.*lbf): Specified torque
● Non-reusable part
Gear oil
★ Precoated part

Last Modified: 3-10-2010	6.4 T	**From:** 200901
Model Year: 2010	**Model:** Corolla	**Doc ID:** RM000001R1G01GX
Title: E351 MANUAL TRANSMISSION / TRANSAXLE: MANUAL TRANSAXLE SYSTEM: PROBLEM SYMPTOMS TABLE (2010 Corolla)		

PROBLEM SYMPTOMS TABLE

Use the table below to help determine the cause of problem symptoms. If multiple suspected areas are listed, the potential causes of the symptoms are listed in order of probability in the "Suspected Area" column of the table. Check each symptom by checking the suspected areas in the order they are listed. Replace parts as necessary.

HINT:

If possible, perform a road test as part of diagnosis. Note any unusual behavior, and conditions that cause the problem to occur. Based on the power flow and configuration of the gears in the transaxle, determine what parts require special attention if inspection and disassembly is necessary.

MANUAL TRANSAXLE SYSTEM:

SYMPTOM	SUSPECTED AREA	SEE PAGE
Abnormal noise	Oil level (Low)	INFO
	Oil (Wrong)	-
	Clutch release bearing (Worn or damaged)	INFO
	Clutch disc (Worn or damaged)*1	INFO
	Synchronizer ring (Input shaft) (Worn or damaged)	INFO
	Synchronizer ring (Output shaft) (Worn or damaged)	INFO
	Gear (Input shaft) (Worn or damaged)	INFO
	Gear (Output shaft) (Worn or damaged)	INFO
	Bearing (Input shaft) (Worn or damaged)	INFO
	Bearing (Output shaft) (Worn or damaged)	INFO
	Bearing (Differential case) (Worn or damaged)	INFO
Oil leak	Oil level (High)	INFO
	Gasket (Damaged)	INFO
	Oil seal (Worn or damaged)	INFO
Hard shifting or impossible to shift	Oil (Wrong)	-

SYMPTOM	SUSPECTED AREA	SEE PAGE
	Clutch (Dragging)	INFO
	Shift and select lever assembly (Worn or damaged)	INFO
	Control cable (Faulty)	INFO
	Shift fork (Worn)	INFO
	Synchronizer ring (Input shaft) (Worn or damaged)	INFO
	Synchronizer ring (Output shaft) (Worn or damaged)	INFO
	Shift key spring (Input shaft) (Worn or damaged)	INFO
	Shift key spring (Output shaft) (Worn or damaged)	INFO
	Gear (Input shaft) (Worn or damaged)	INFO
	Gear (Output shaft) (Worn or damaged)	INFO
	Hub sleeve (Input shaft) (Worn or damaged)	INFO
	Hub sleeve (Output shaft) (Worn or damaged)	INFO
Jumps out of gear or shift lever moves excessively	Shift fork (Worn)	INFO
	Hub sleeve (Input shaft) (Worn or damaged)	INFO
	Hub sleeve (Output shaft) (Worn or damaged)	INFO
	Gear (Input shaft) (Worn or damaged)	INFO
	Gear (Output shaft) (Worn or damaged)	INFO
	Bearing (Input shaft) (Worn or damaged)	INFO
	Bearing (Output shaft) (Worn or damaged)	INFO

*1: If the clutch torsional damper springs are worn, they can produce a load-related noise similar to a bad bearing or gear rattle.

Last Modified: 3-10-2010	6.4 A	**From:** 200901
Model Year: 2010	**Model:** Corolla	**Doc ID:** RM000000Z1T00FX
Title: E351 MANUAL TRANSMISSION / TRANSAXLE: MANUAL TRANSAXLE UNIT: REASSEMBLY (2010 Corolla)		

REASSEMBLY

1. INSTALL SYNCHRONIZER PULL RING

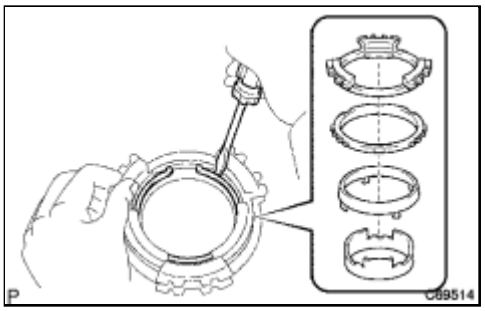

(a) Install the No. 5 synchronizer ring middle, No. 5 synchronizer ring outer, and synchronizer pull ring to the No. 5 synchronizer ring inner. Using a screwdriver, secure them with the snap ring.

2. INSTALL NO. 3 SYNCHROMESH SHIFTING KEY SPRING

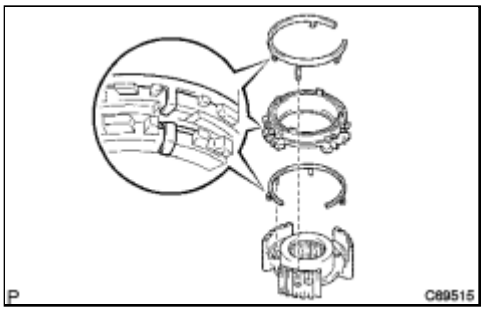

(a) Install the No. 3 synchromesh shifting key spring to the No. 3 transmission clutch hub.

NOTICE:

Align the projection of the shifting key spring with the hole of the No. 3 clutch hub.

(b) Install the synchronizer ring set and No. 3 synchromesh shifting key spring to the No. 3 transmission clutch hub.

NOTICE:

- Engage the shifting key spring claw to the center of the teeth of the synchronizer ring.
- Align the projection of the shifting key spring with the hole of the No. 3 clutch hub.

3. INSTALL TRANSAXLE CASE OIL SEAL

(a) Coat the new transaxle case oil seal lip with MP grease.

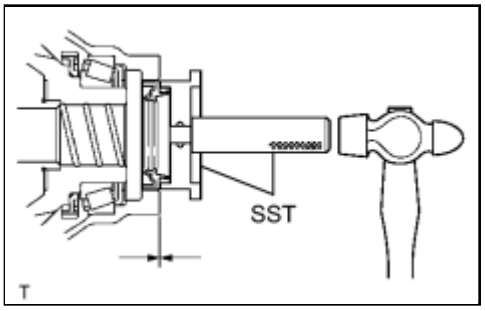

(b) Using SST and a hammer, install a transaxle case oil seal.

SST: 09608-10010

SST: 09950-70010

09951-07200

Oil seal installation depth:

-0.5 to 0.5 mm (-0.0197 to 0.0197 in.)

4. INSTALL FRONT DIFFERENTIAL CASE FRONT TAPERED ROLLER BEARING

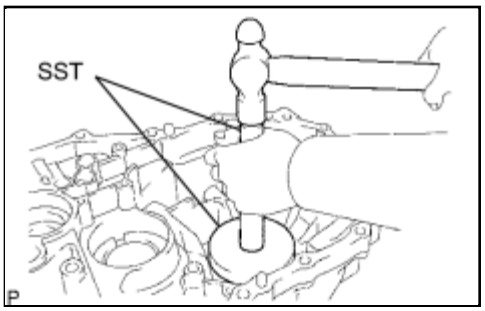

(a) Using SST and a hammer, install the front differential case front tapered roller bearing (outer race) to the manual transaxle case.

SST: 09950-60020

09951-00910

SST: 09950-70010

09951-07100

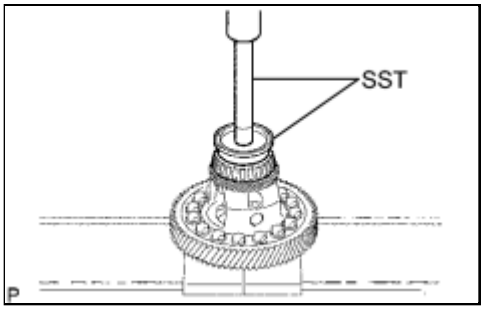

(b) Using SST and a press, install the front differential case front tapered roller bearing (inner race) to the front differential case.

SST: 09950-70010

09951-07100

09951-07150

SST: 09608-10010

5. INSTALL FRONT DIFFERENTIAL CASE REAR TAPERED ROLLER BEARING

(a) Install the front differential case rear shim.

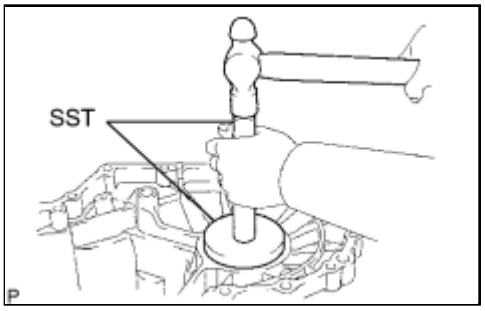

(b) Using SST and a hammer, install the front differential case rear tapered roller bearing (outer race).

SST: 09950-60020

09951-00890

SST: 09950-70010

09951-07100

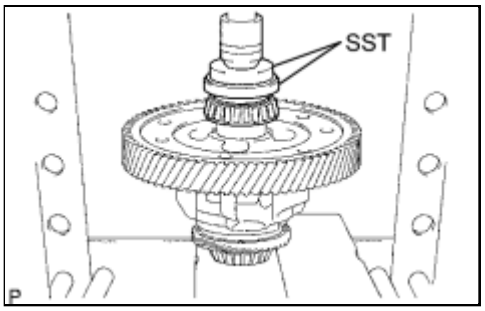

(c) Using SST and a press, install the front differential case rear tapered roller bearing (inner race).

SST: 09631-12090

SST: 09950-60010

09951-00600

SST: 09950-70010

09951-07100

6. INSTALL TRANSMISSION CASE OIL SEAL

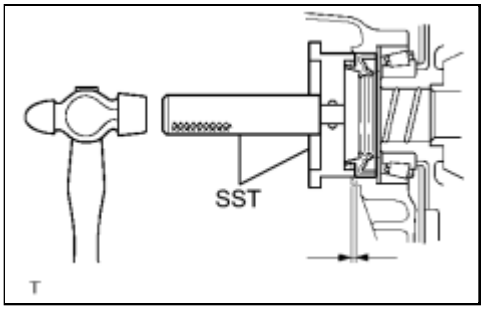

(a) Using SST and a hammer, install a new transmission case oil seal to the manual transmission case.

SST: 09608-32010

SST: 09950-70010

09951-07150

Oil seal installation depth:
3.0 to 4.0 mm (0.118 to 0.156 in.)

(b) Coat the transmission case oil seal lip with MP grease.

7. INSTALL OUTPUT SHAFT REAR BEARING

(a) Using SST and a hammer, install the output shaft rear bearing (outer race) to the manual transmission case.

SST: 09950-60020

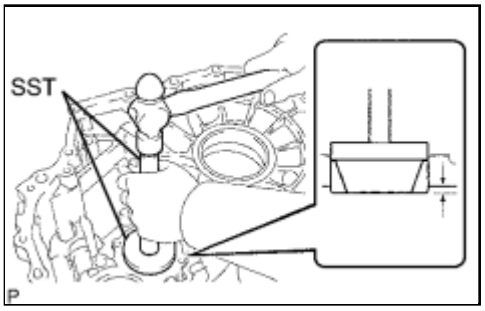

09951-00680

SST: 09950-70010

09951-07100

Clearance:

3.8 to 4.4 mm (0.150 to 0.173 in.)

8. INSTALL OUTPUT SHAFT COVER

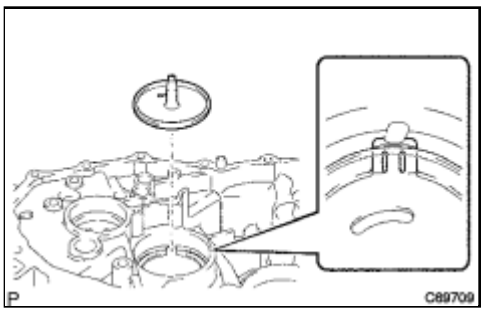

(a) Coat the output shaft cover with MP grease, and install it to the manual transaxle case.

NOTICE:

Align the projection of the output shaft cover with the transmission groove.

9. INSTALL OUTPUT SHAFT FRONT BEARING

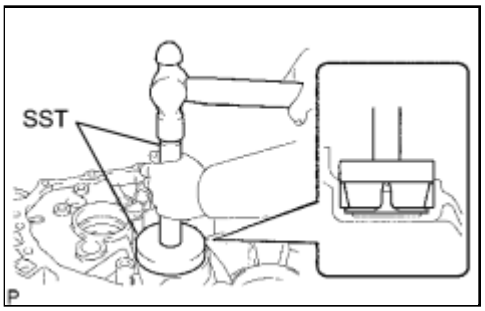

(a) Using SST and a hammer, install the new output shaft front bearing (outer race).

SST: 09950-60020

09951-00730

SST: 09950-70010

09951-07100

10. ADJUST OUTPUT SHAFT BEARING PRELOAD

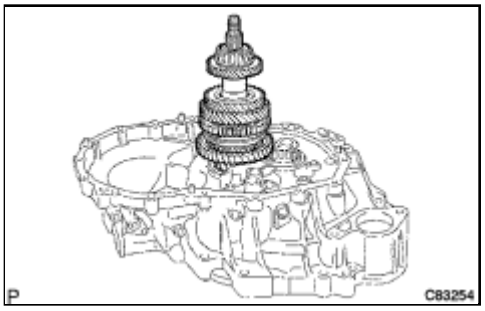

(a) Install the output shaft to the manual transaxle case.

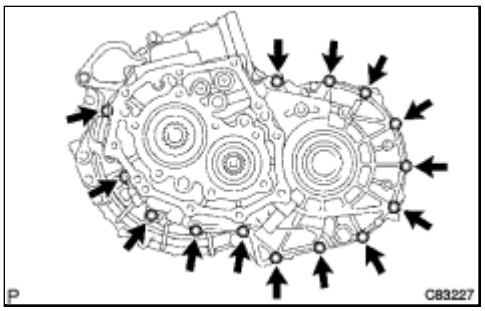

(b) Install the transmission case to the manual transaxle case with the 14 bolts.

Torque: 29 N·m (296 kgf·cm, 21ft·lbf)

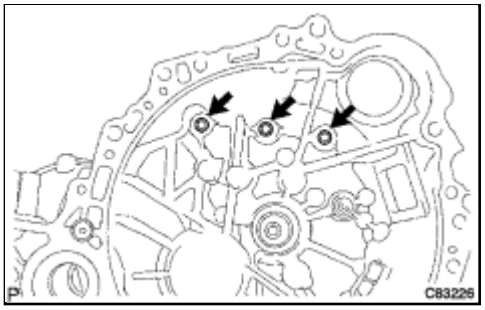

(c) Install the 3 bolts to the manual transaxle case.

Torque: 29 N·m (296 kgf·cm, 21ft·lbf)

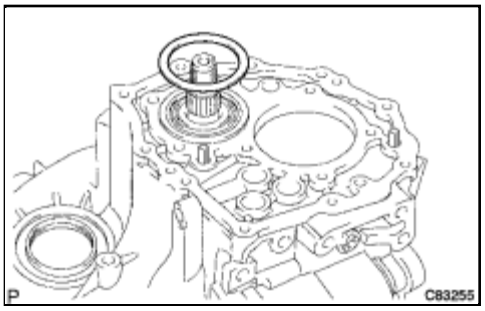

(d) Install the output shaft rear bearing case shim to the output shaft.

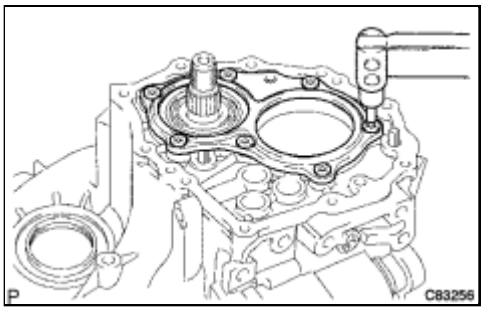

(e) Using a "TORX" socket wrench (T45), install the rear bearing retainer to the manual transmission case with the 7 screws.

Torque: 43 N·m (438 kgf·cm, 32ft·lbf)

(f) Turn the output shaft in both directions to make sure that it turns smoothly.

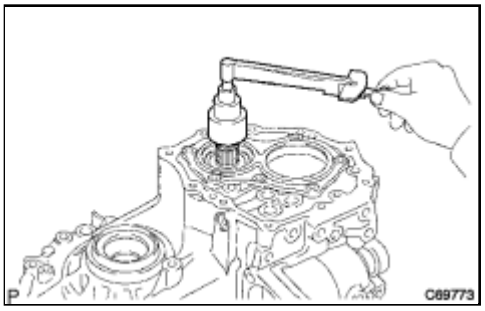

(g) Using a socket wrench and torque wrench, inspect the preload.

Preload:

BEARING	PRELOAD N*M (KGF*CM, IN.*LBF)
New	0.8 to 1.6 (8.16 to 16.32, 7.1 to 14.2)
Used	0.5 to 1.0 (5.10 to 10.20, 4.4 to 8.9)

(h) If preload is not as specified, select a proper output shaft rear bearing shim and adjust it.

HINT:

The preload of all the output shaft rear bearing shim varies in torque from about 0.04 to 0.06 N*m (0.408 to 0.612 kgf*cm, 0.35 to 0.53 in.*lbf).

Shim:

PART NO.	THICKNESS MM (IN.)	MARK
90564-59001	1.30 (0.0512)	0
90564-59002	1.35 (0.0531)	1
90564-59003	1.40 (0.0551)	2
90564-59004	1.45 (0.0571)	3
90564-59005	1.50 (0.0591)	4
90564-59006	1.55 (0.0610)	5
90564-59007	1.60 (0.0630)	6
90564-59008	1.65 (0.0650)	7
90564-59009	1.70 (0.0669)	8
90564-59010	1.75 (0.0689)	9
90564-59011	1.80 (0.0709)	A
90564-59012	1.85 (0.0728)	B

PART NO.	THICKNESS MM (IN.)	MARK
90564-59013	1.90 (0.0748)	C
90564-59014	1.95 (0.0768)	D
90564-59015	2.00 (0.0787)	E
90564-59016	2.05 (0.0807)	F
90564-59017	2.10 (0.0827)	G
90564-59018	2.15 (0.0846)	H
90564-59019	2.20 (0.0866)	J
90564-59020	2.25 (0.0886)	K
90564-59021	2.30 (0.0906)	L
90564-59022	2.35 (0.0925)	M
90564-59023	2.40 (0.0945)	N
90564-59024	2.45 (0.0965)	P
90564-59025	2.50 (0.0984)	Q

(i) Remove the output shaft rear set nut from the output shaft.

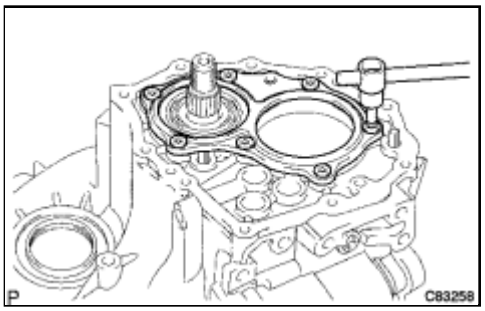

(j) Using a "TORX" socket wrench (T45), remove the 7 screws and rear bearing retainer from the manual transmission case.

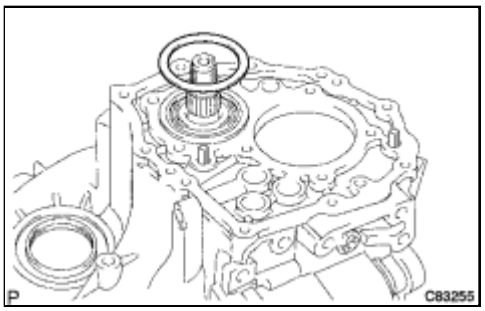

(k) Remove the output shaft rear bearing shim from the output shaft.

(l) Remove the 3 bolts.

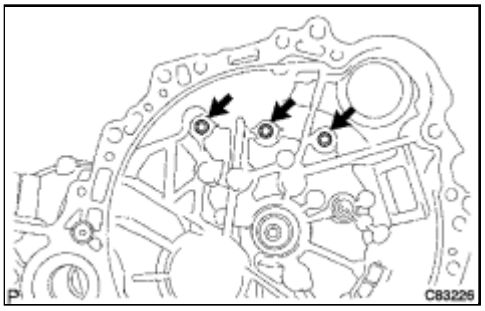

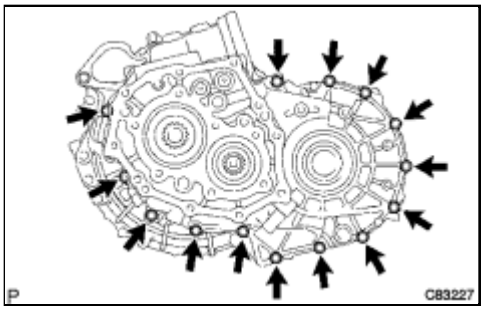

(m) Remove the 14 bolts and manual transmission case from the manual transaxle case.

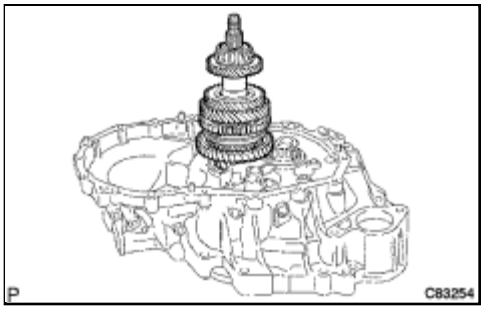

(n) Remove the output shaft assembly from the front manual transaxle case.

11. ADJUST TAPERED ROLLER BEARING PRELOAD

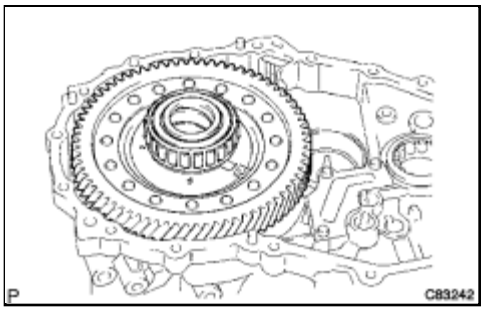

(a) Install the differential case assembly to the manual transaxle case.

(b) Install the 14 bolts and manual transmission case to the manual transaxle case.

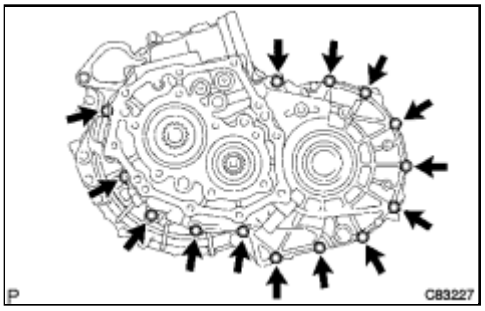

Torque: 29 N·m (296 kgf·cm, 21ft·lbf)

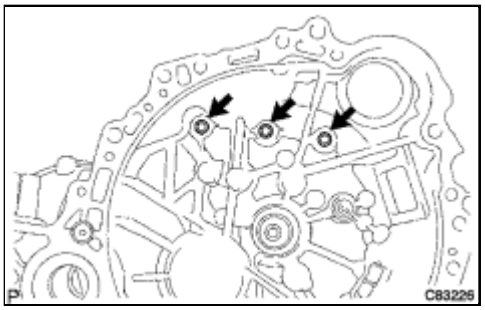

(c) Install the 3 bolts to the manual transaxle case.

Torque: 29 N·m (296 kgf·cm, 21ft·lbf)

(d) Using SST, turn the differential in both directions to make sure that it turns smoothly.

SST: 09564-32011

(e) Using SST and a torque wrench, inspect preload.

SST: 09564-32011

Preload:

BEARING	PRELOAD N*M (KGF*CM, IN.*LBF)
New	0.8 to 1.6 (8.16 to 16.32, 7.1 to 14.2)
Used	0.5 to 1.0 (5.10 to 10.2, 4.4 to 8.9)

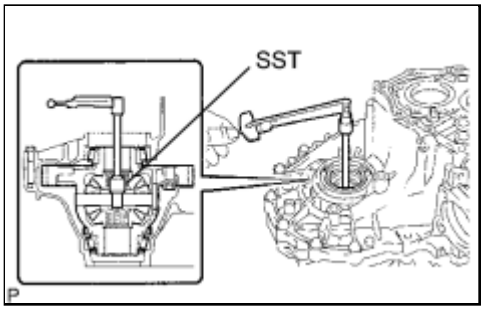

If preload is not as specified, select a proper front differential case rear shim and adjust it.

HINT:

The preload of all the front differential case rear shims varies in torque from about 0.04 to 0.06 N*m (0.408 to 0.612 kgf*cm, 0.35 to 0.53 in.*lbf).

Shim:

PART NO.	THICKNESS MM (IN.)	MARK

90564-56055	2.00 (0.0787)	0
90564-56056	2.05 (0.0807)	1
90564-56057	2.10 (0.0827)	2
90564-56058	2.15 (0.0846)	3
90564-56059	2.20 (0.0866)	4
90564-56060	2.25 (0.0886)	5
90564-56061	2.30 (0.0906)	6
90564-56062	2.35 (0.0925)	7
90564-56063	2.40 (0.0945)	8
90564-56064	2.45 (0.0965)	9
90564-56065	2.50 (0.0984)	A
90564-56066	2.55 (0.1004)	B
90564-56067	2.60 (0.1024)	C
90564-56068	2.65 (0.1043)	D
90564-56069	2.70 (0.1063)	E
90564-56070	2.75 (0.1083)	F
90564-56071	2.80 (0.1102)	G
90564-56072	2.85 (0.1122)	H

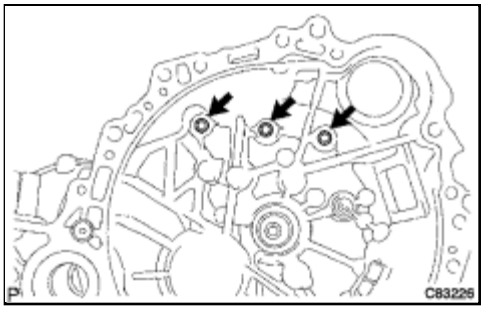

(f) Remove the 3 bolts.

(g) Remove the 14 bolts and manual transmission case from the manual transaxle case.

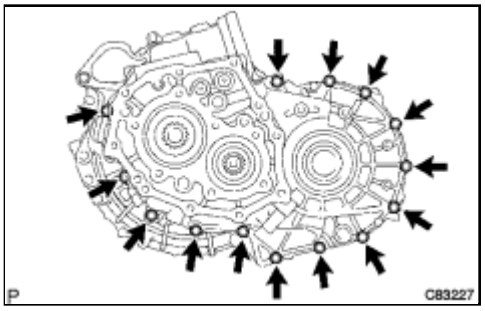

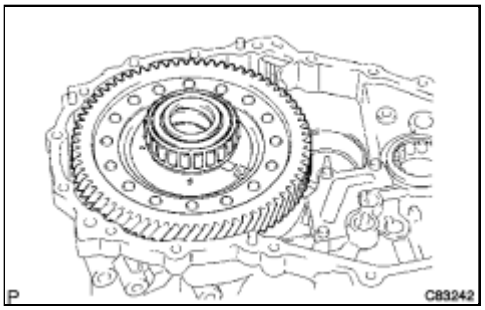

(h) Remove the differential case assembly from the manual transaxle case.

12. INSTALL FRONT TRANSAXLE CASE COVER OIL SEAL

(a) Coat the lip of a new front transaxle case cover oil seal with MP grease.

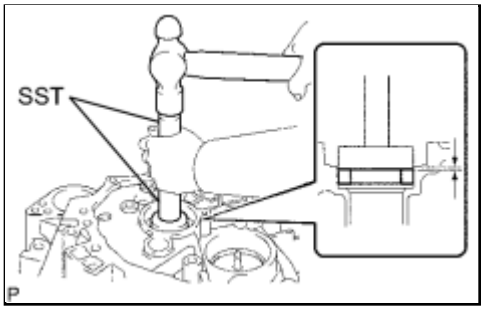

(b) Using SST and a hammer, install the new front transaxle case cover oil seal to the manual transaxle case.

SST: 09950-60010

09951-00420

SST: 09950-70010

09951-07150

Clearance:

1.0 to 2.0 mm (0.0394 to 0.0787 in.)

13. INSTALL INPUT SHAFT FRONT BEARING

(a) Coat a new input shaft front bearing with gear oil.

(b) Using SST and a hammer, install the bearing to the manual transaxle case.

SST: 09950-60010

09951-00570

SST: 09950-70010

09951-07150

Clearance:

4.28 to 4.6 mm (0.169 to 0.181 in.)

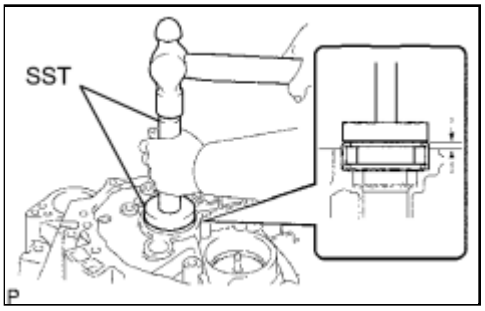

14. INSTALL MANUAL TRANSAXLE CASE RECEIVER

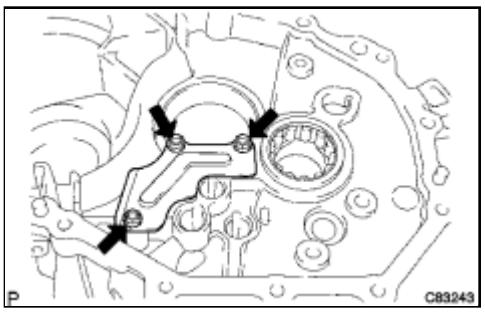

(a) Install the manual transaxle case receiver to the manual transaxle case with the 3 bolts.

Torque: 7.0 N·m (71 kgf·cm, 62in·lbf)

15. INSTALL DIFFERENTIAL CASE ASSEMBLY

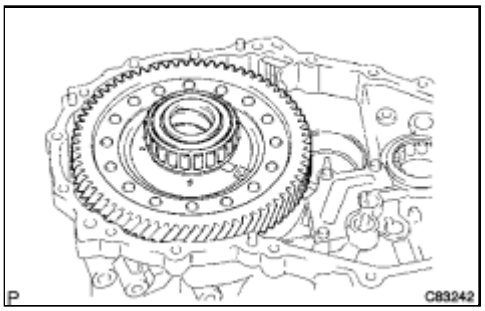

(a) Coat the differential case tapered roller bearing with gear oil, and install the differential case assembly to the manual transaxle case.

16. INSTALL OUTPUT SHAFT ASSEMBLY

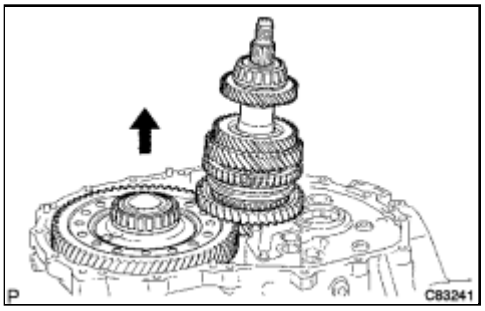

(a) Apply gear oil to each sliding part of the output shaft assembly.

(b) Lift the differential case assembly while tilting output shaft assembly, and install it to the manual transaxle case.

17. INSTALL INPUT SHAFT ASSEMBLY

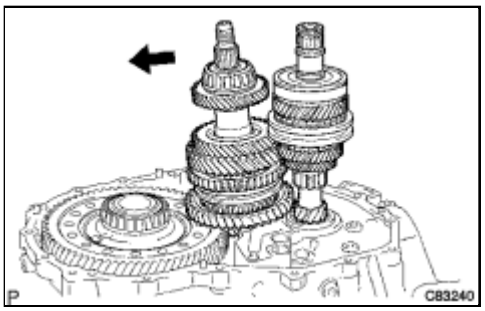

(a) Apply gear oil to each sliding part of the input shaft assembly.

(b) Install the input shaft assembly to the manual transaxle case while tilting the output shaft assembly.

18. INSTALL NO. 2 GEAR SHIFT FORK

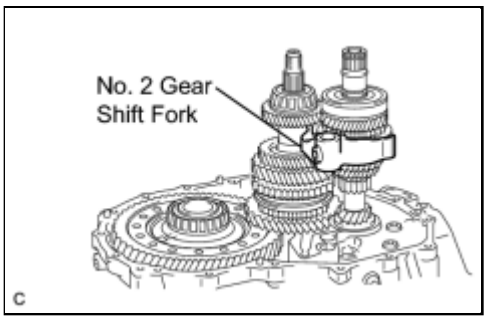

(a) Coat the No. 2 gear shift fork with gear oil, and install it to the input shaft assembly.

19. INSTALL NO. 3 GEAR SHIFT FORK

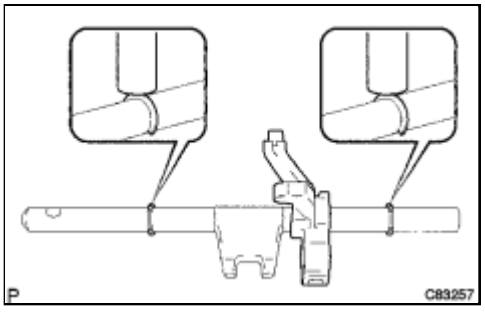

(a) Install the No. 3 gear shift fork to the No. 3 gear shift fork shaft.

(b) Using a brass bar and a hammer, install the 2 shift fork shaft snap rings to the gear shift fork shaft.

(c) Apply gear oil to each sliding part of the No. 3 gear shift

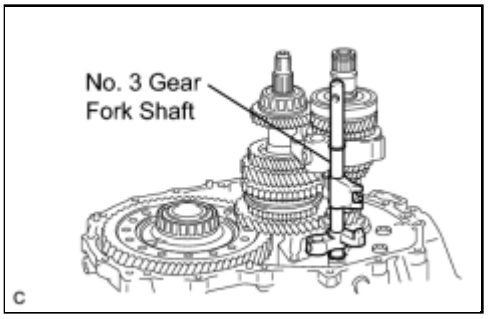

fork shaft, and install it to the manual transaxle case.

20. INSTALL NO. 1 GEAR SHIFT FORK

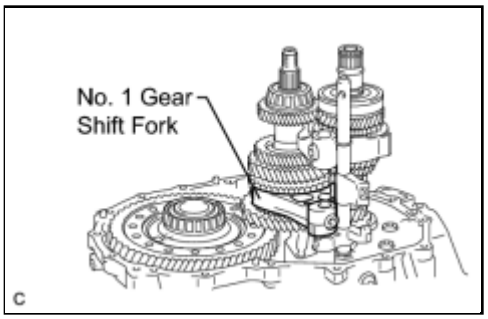

(a) Apply gear oil to each sliding part of the No. 1 gear shift fork, and install it to the output shaft assembly.

21. INSTALL NO. 2 GEAR SHIFT FORK SHAFT

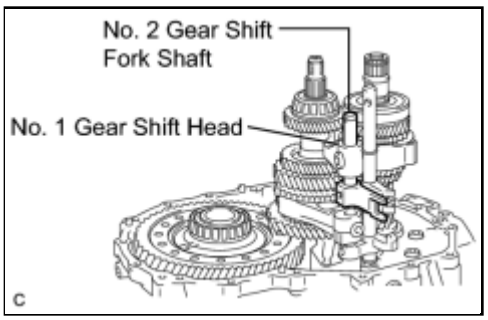

(a) Install the No. 1 gear shift head to the No. 2 gear shift fork shaft.

(b) Apply gear oil to each sliding part of the No. 2 gear shift fork shaft, and install it to the manual transaxle case.

(c) Install the shift fork set bolt and shift head set bolt to the No. 1 gear shift head.

Torque: 24 N·m (245 kgf·cm, 18ft·lbf)

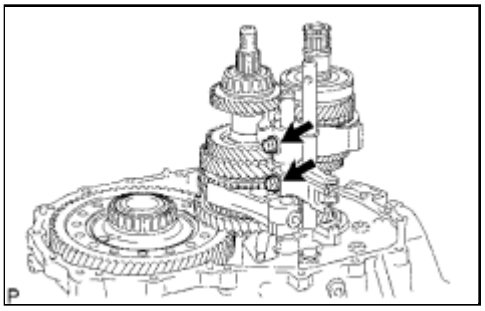

22. INSTALL REVERSE SHIFT FORK ROLLER

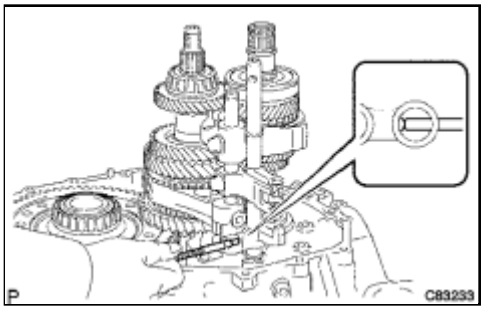

(a) Using a magnetic pick-up tool, install the reverse shift fork roller to the reverse shift fork.

23. INSTALL NO. 1 GEAR SHIFT FORK SHAFT

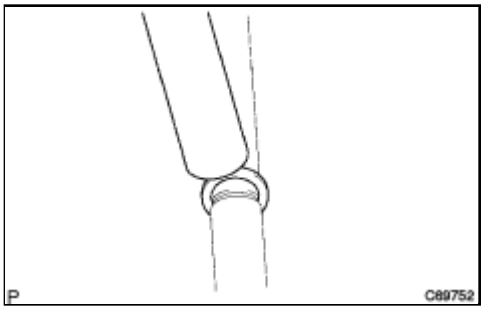

(a) Using a brass bar and a hammer, install the shift fork shaft snap ring to the No. 1 shift fork shaft.

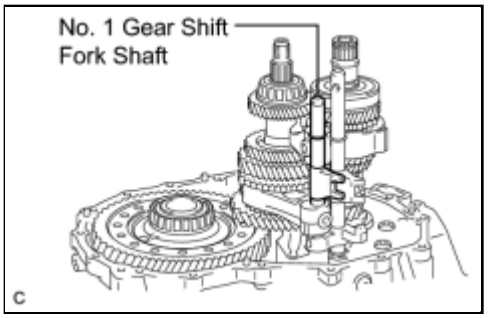

(b) Install the No. 1 gear shift fork shaft to the manual transaxle case.

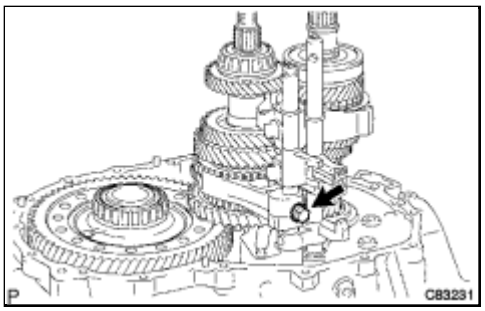

(c) Install the shift fork set bolt to the No. 1 gear shift fork.

Torque: 24 N·m (245 kgf·cm, 18ft·lbf)

24. INSTALL REVERSE SHIFT ARM BRACKET ASSEMBLY

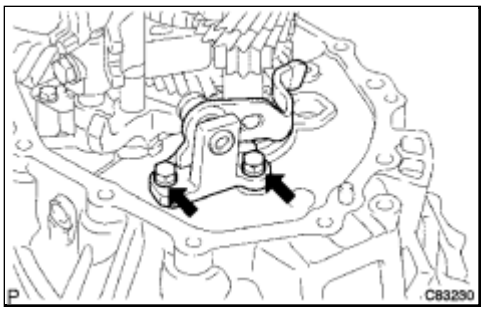

(a) Install the reverse shift arm bracket assembly to the manual transaxle case with the 2 bolts.

Torque: 17 N·m (173 kgf·cm, 13ft·lbf)

25. INSTALL REVERSE IDLER GEAR SUB-ASSEMBLY

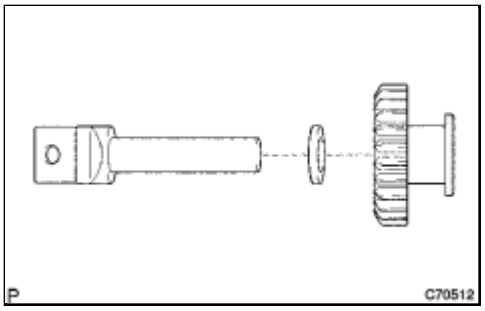

(a) Coat the reverse idler gear and reverse idler thrust washer with MP grease, and install them to the reverse idler gear shaft.

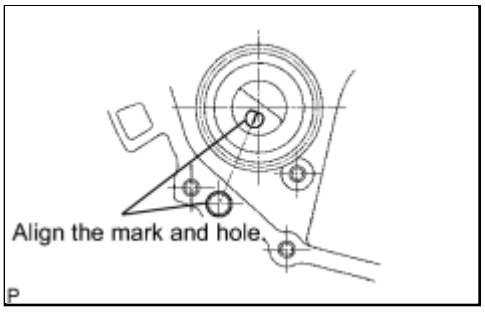

(b) Install the reverse idler gear to the manual transaxle case.

HINT:

Align the mark of the reverse idler gear shaft with the bolt hole.

26. INSTALL TRANSMISSION MAGNET

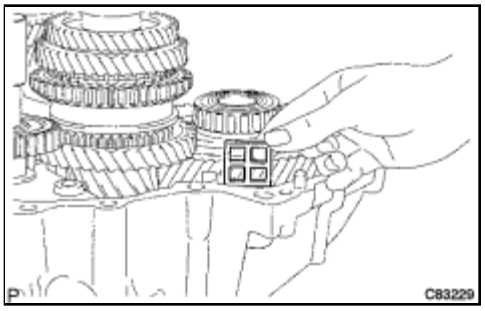

(a) Clean the transmission magnet and install it to the manual transaxle case.

27. INSTALL NO. 1 OIL RECEIVER PIPE

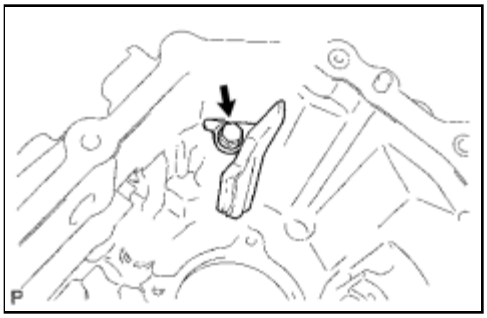

(a) Install the No. 1 oil receiver pipe to the manual transmission case with the bolt.

Torque: 17 N·m (173 kgf·cm, 13ft·lbf)

NOTICE:

Do not damage the pipe.

28. INSTALL NO. 2 OIL RECEIVER PIPE

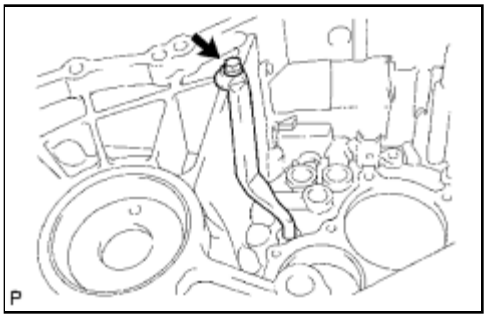

(a) Install the No. 2 oil receiver pipe to the manual transmission case with the bolt.

Torque: 17 N·m (173 kgf·cm, 13ft·lbf)

NOTICE:

Do not damage the pipe.

29. INSTALL REVERSE RESTRICT PIN ASSEMBLY

(a) Install the transmission oil baffle and reverse restrict pin with the bolt.

Torque: 17 N·m (173 kgf·cm, 13ft·lbf)

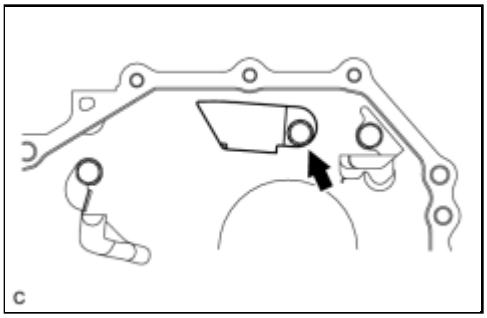

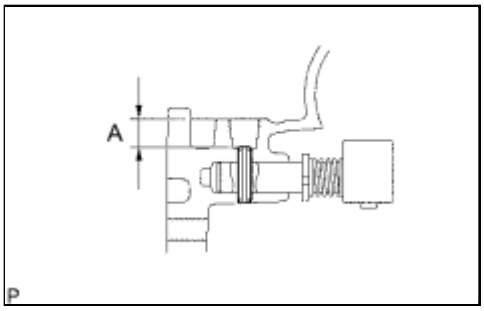

(b) Using a pin punch (φ 5 mm), install the slotted pin to the reverse restrict pin assembly.

Clearance A:
12.5 to 13.5 mm (0.492 to 0.531 in.)

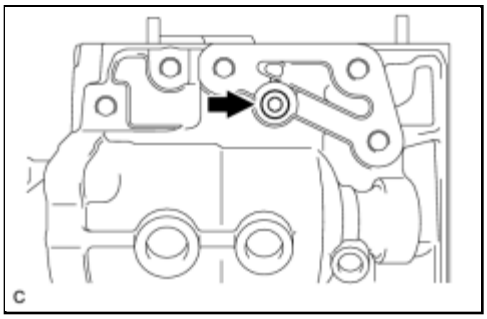

(c) Coat the reverse restrict pin plug with adhesive. Using a hexagon wrench (6 mm), install the manual transmission case.

Torque: 13 N·m (133 kgf·cm, 10ft·lbf)

Adhesive:
Toyota Genuine Adhesive 1324, Three Bond 1324 or equivalent

30. INSTALL MANUAL TRANSMISSION CASE

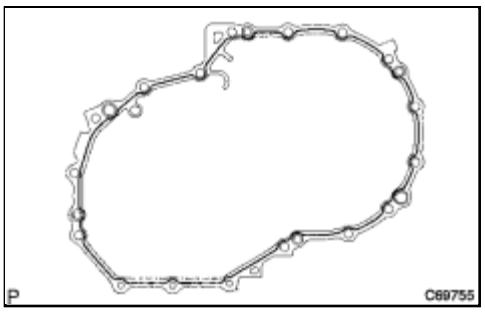

(a) Apply a bead of FIPG to the manual transmission case as shown in the illustration.

HINT:

Install the manual transmission case within 10 minutes after applying FIPG.

(b) Install the manual transmission case to the manual

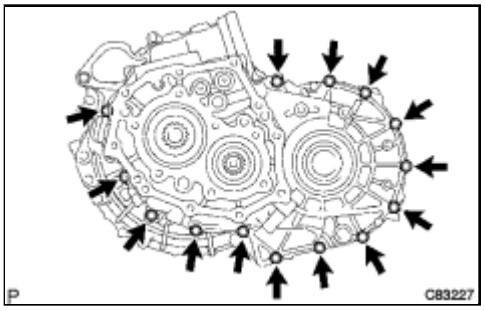

transaxle case with the 14 bolts.

Torque: 29 N·m (296 kgf·cm, 21ft·lbf)

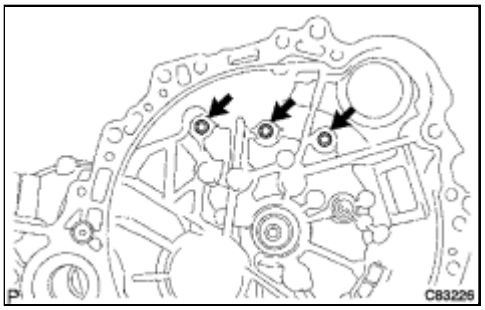

(c) Coat the 3 bolts with adhesive.

Adhesive:
Toyota Genuine Adhesive 1324, Three Bond 1324 or equivalent

(d) Install the 3 bolts to the manual transaxle case.

Torque: 29 N·m (296 kgf·cm, 21ft·lbf)

31. INSTALL REVERSE IDLER GEAR SHAFT BOLT

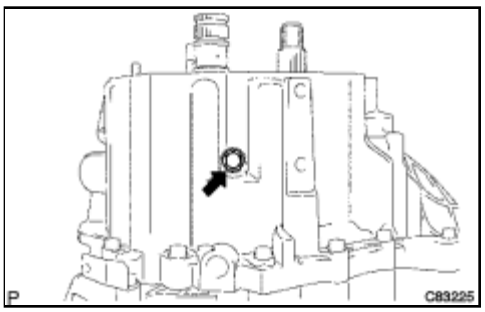

(a) Coat the bolt with adhesive. Install a new gasket to the manual transmission case with the bolt.

Torque: 30 N·m (306 kgf·cm, 22ft·lbf)

Adhesive:
Toyota Genuine Adhesive 1344, Three Bond 1344 or equivalent

32. INSTALL SHIFT FORK SHAFT SNAP RING

(a) Using a brass bar and a hammer, install the shift fork shaft snap ring to the No. 1 gear shift fork shaft.

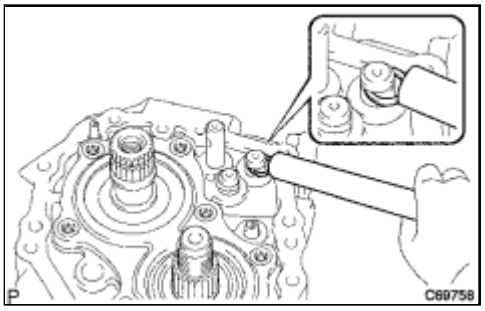

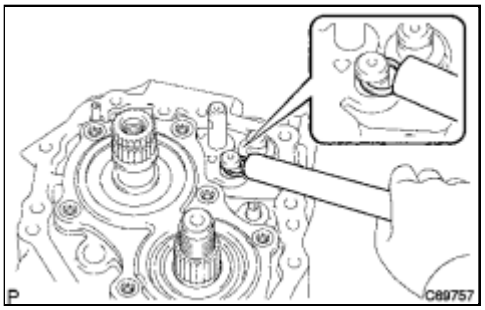

(b) Using a brass bar and a hammer, install the shift fork shaft snap ring to the No. 2 gear shift fork shaft.

33. INSTALL INPUT SHAFT REAR BEARING SHAFT SNAP RING

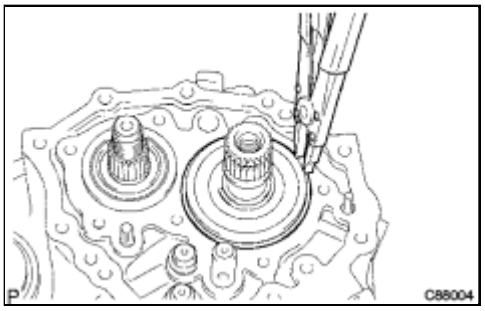

(a) Using a snap ring expander, install the input shaft rear bearing shaft snap ring.

34. INSTALL OUTPUT SHAFT REAR BEARING SHIM

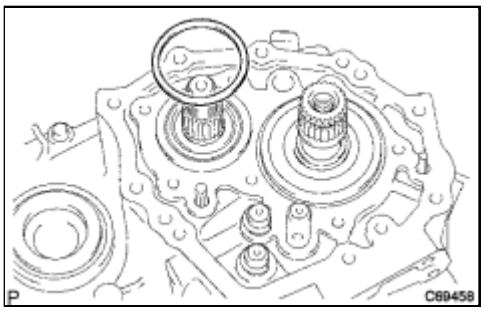

(a) Install the output shaft rear bearing shim to the output shaft.

35. INSTALL REAR BEARING RETAINER

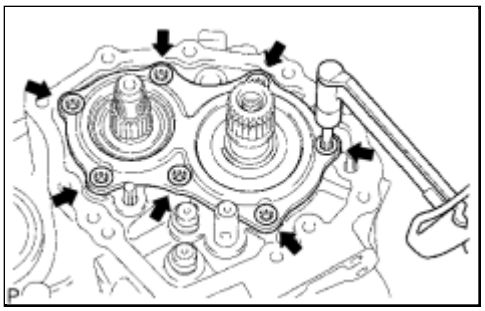

(a) Coat the 7 screws with adhesive.

Adhesive:
Toyota Genuine Adhesive 1344, Three Bond 1344 or equivalent

(b) Using a "TORX" socket wrench (T45), install the rear bearing retainer to the manual transmission case with the 7 screws.

Torque: 43 N·m (438 kgf·cm, 32ft·lbf)

36. INSTALL 5TH DRIVEN GEAR

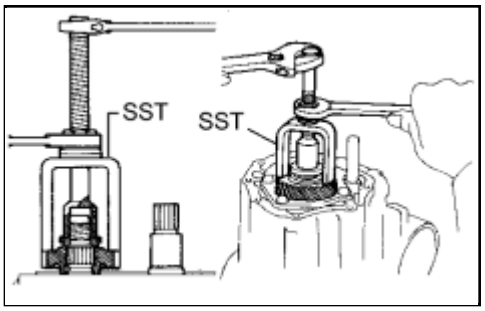

(a) Using SST, install the 5th driven gear to the output shaft.

SST: 09309-12020

37. INSTALL 5TH GEAR NEEDLE ROLLER BEARING

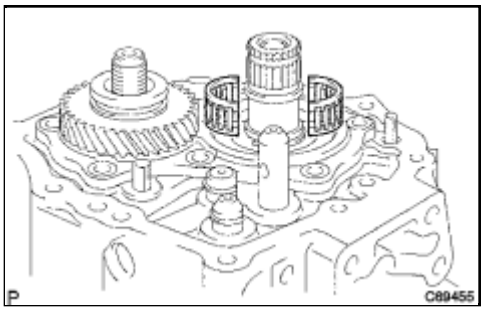

(a) Coat the 5th gear needle roller bearing with gear oil and install it to the input shaft.

38. INSTALL 5TH GEAR

(a) Coat the 5th gear with gear oil and install it to the input shaft.

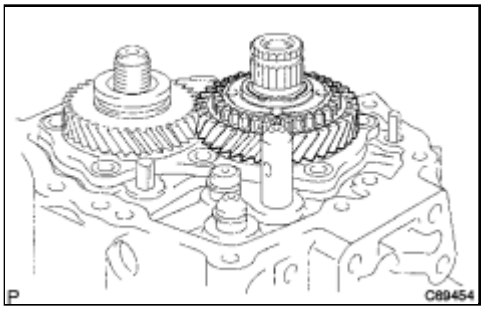

39. INSTALL NO. 3 TRANSMISSION CLUTCH HUB

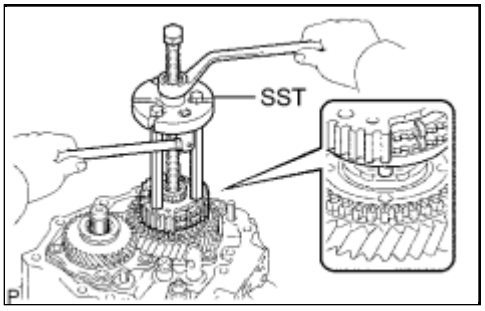

(a) Using SST, install the No. 3 transmission clutch hub to the input shaft.

SST: 09950-30012

09951-03010

09953-03010

09954-03010

NOTICE:

Align the projection of the synchronizer ring with the hole in the 5th gear.

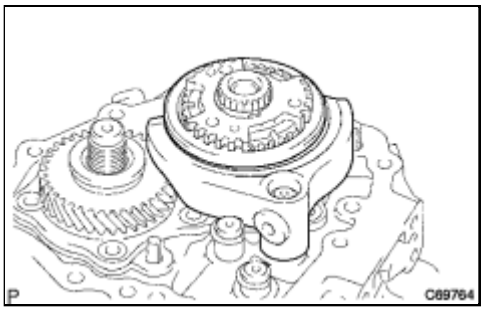

(b) Install the No. 3 transmission hub sleeve and No. 3 gear shift fork to the No. 3 transmission clutch hub.

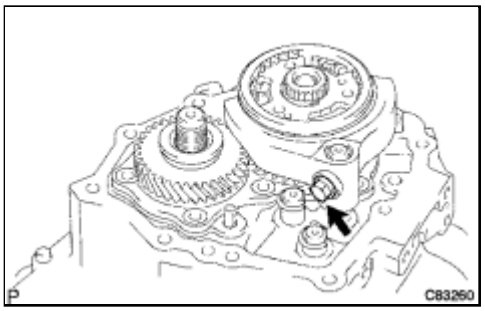

(c) Coat the shift fork set bolt with adhesive and install it to the No. 3 gear shift fork.

Torque: 24 N·m (245 kgf·cm, 18ft·lbf)

Adhesive:

Toyota Genuine Adhesive 1344, Three Bond 1344 or equivalent

(d) Select a snap ring that will allow minimal axial play. Using

a brass bar and a hammer, install the shaft snap ring.

Clearance:
0.1 mm (0.00394 in.) or less
Snap Ring:

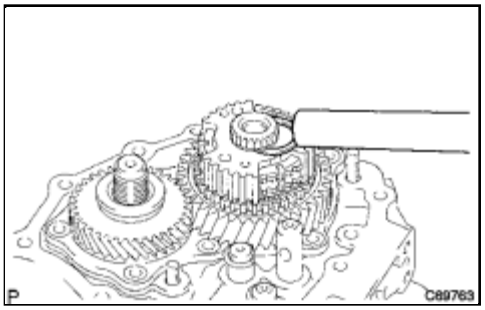

PART NO.	THICKNESS: MM (IN.)	MARK
90520-27061	1.75 to 1.80 (0.0689 to 0.0709)	a
90520-27062	1.80 to 1.85 (0.0709 to 0.0728)	b
90520-27063	1.85 to 1.90 (0.0728 to 0.0748)	c
90520-27064	1.90 to 1.95 (0.0748 to 0.0768)	d
90520-27065	1.95 to 2.00 (0.0768 to 0.0787)	e
90520-27066	2.00 to 2.05 (0.0787 to 0.0807)	f
90520-27067	2.05 to 2.10 (0.0807 to 0.0827)	g
90520-27068	2.10 to 2.15 (0.0827 to 0.0846)	h
90520-27069	2.15 to 2.20 (0.0846 to 0.0866)	j

40. INSTALL MANUAL TRANSMISSION OUTPUT SHAFT REAR SET NUT

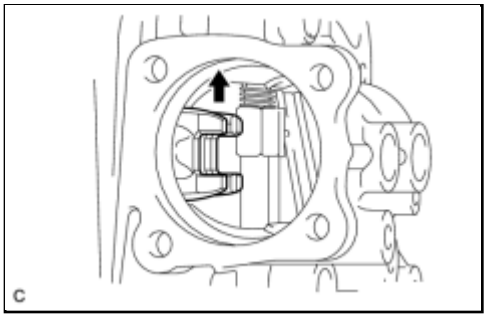

(a) Engage the 1st and 2nd gears simultaneously.

(b) Install a new manual transmission output shaft rear set nut.

Torque: 123 N·m (1254 kgf·cm, 90ft·lbf)

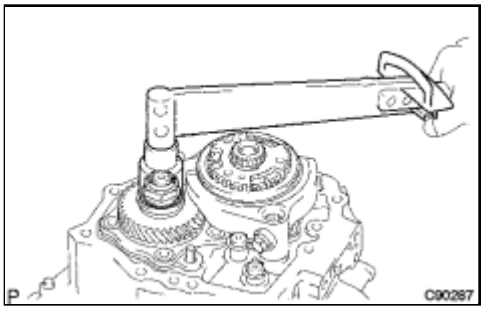

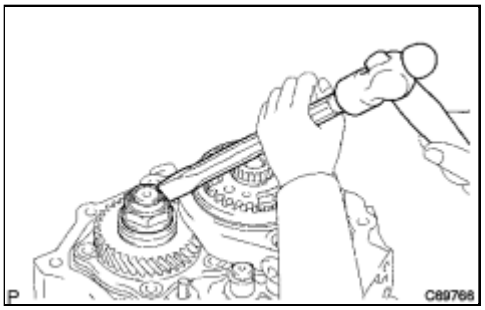

(c) Using a chisel and a hammer, stake the manual transmission output shaft rear set nut.

(d) Disengage the gears.

41. INSTALL MANUAL TRANSMISSION CASE COVER SUB-ASSEMBLY

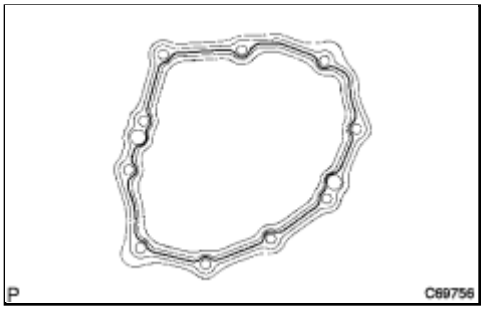

(a) Apply FIPG to the manual transmission case cover sub-assembly as shown in the installation.

FIPG:

Toyota Genuine Seal Packing 1281, Three Bond 1281 or equivalent

NOTICE:

Install the part within 10 minutes after applying packing material (FIPG).

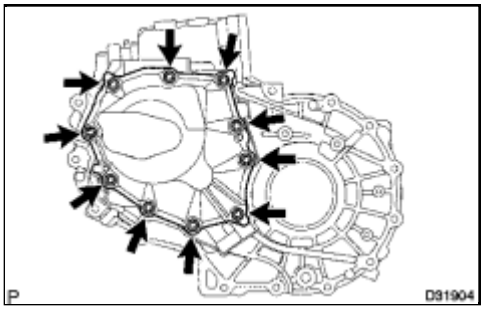

(b) Install the manual transmission case cover sub-assembly to the manual transaxle case with the 10 bolts.

Torque: 29 N·m (296 kgf·cm, 21ft·lbf)

42. INSTALL DRAIN PLUG SUB-ASSEMBLY

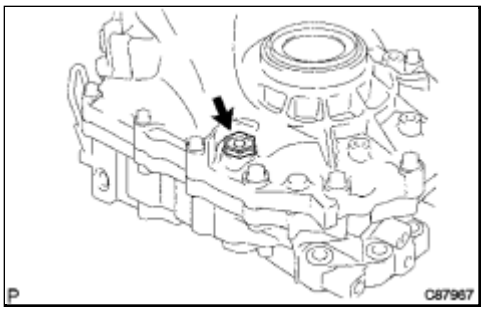

(a) Install the drain plug sub-assembly to the manual transmission case with a new gasket.

Torque: 49 N·m (500 kgf·cm, 36ft·lbf)

43. INSTALL MANUAL TRANSMISSION FILLER PLUG

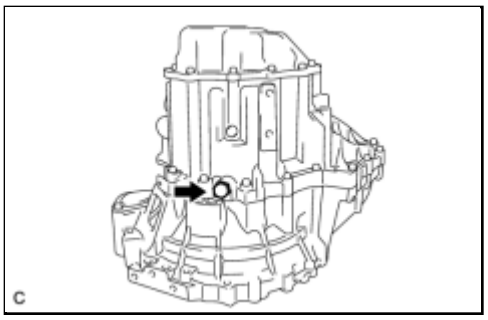

(a) Install the manual transmission filler plug to the transaxle case with a new gasket.

Torque: 49 N·m (500 kgf·cm, 36ft·lbf)

44. INSTALL SHIFT AND SELECT LEVER SHAFT ASSEMBLY

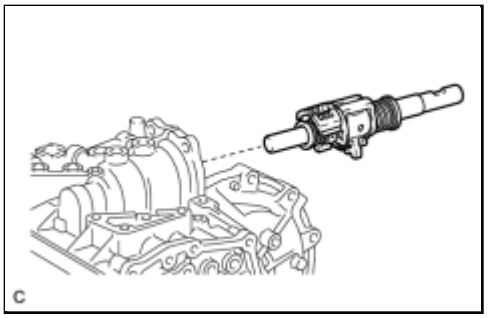

(a) Coat the shift and select lever shaft assembly with gear oil, and install it to the manual transmission case.

45. INSTALL CONTROL SHAFT COVER

(a) Coat the 4 bolts with adhesive. Install a new gasket and the control shaft cover with the bolts.

Torque: 20 N·m (204 kgf·cm, 15ft·lbf)

Adhesive:

Toyota Genuine Adhesive 1344, Three Bond 1344 or equivalent

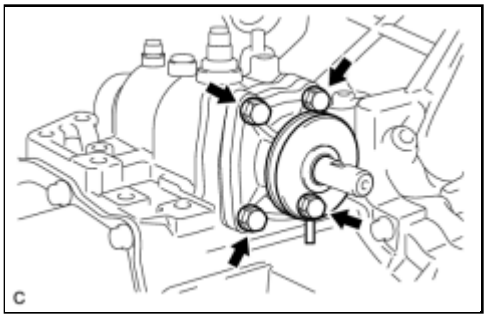

46. INSTALL BACK-UP LIGHT SWITCH ASSEMBLY

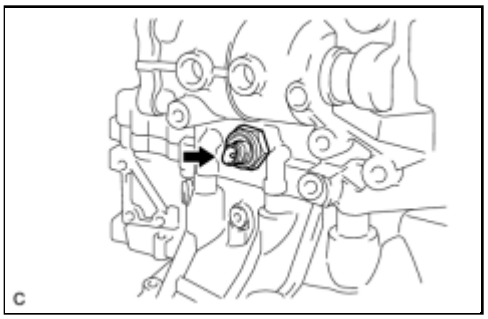

(a) Install the back-up light switch assembly to the manual transmission case with a new gasket.

Torque: 40 N·m (408 kgf·cm, 30ft·lbf)

47. INSTALL MANUAL TRANSMISSION BREATHER PLUG

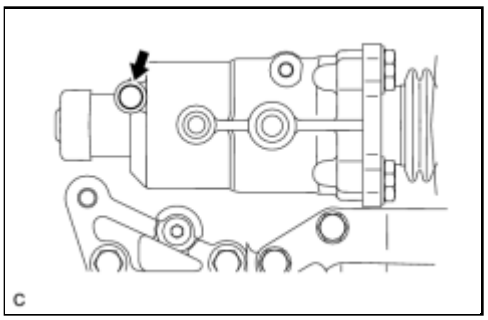

(a) Install the manual transmission breather plug to the manual transmission case.

48. INSTALL SHIFT GATE PIN

(a) Install the shift gate pin to the manual transmission case.

Torque: 29 N·m (296 kgf·cm, 21ft·lbf)

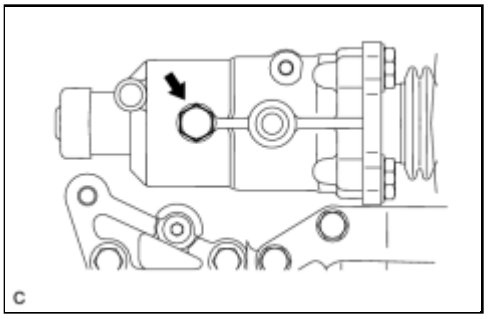

49. INSTALL NO. 1 LOCK BALL ASSEMBLY

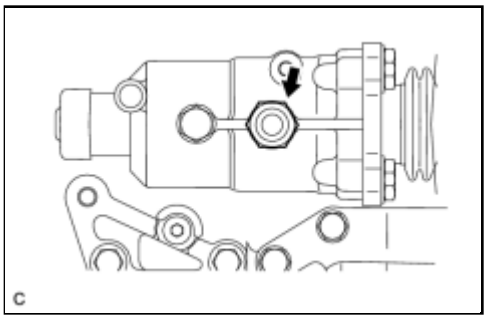

(a) Install the No. 1 lock ball assembly to the manual transmission case.

Torque: 29 N·m (296 kgf·cm, 21ft·lbf)

50. INSTALL NO. 2 CLUTCH TUBE BRACKET

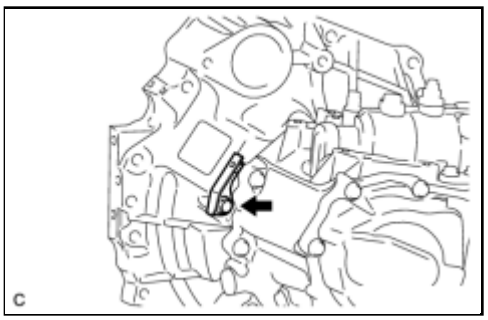

(a) Install the No. 2 clutch tube bracket with the bolt.

Torque: 15 N·m (153 kgf·cm, 11ft·lbf)

51. INSTALL CONTROL SHIFT LEVER

(a) Install the control shift lever with the shift outer lever lock pin to the shift and select lever shaft.

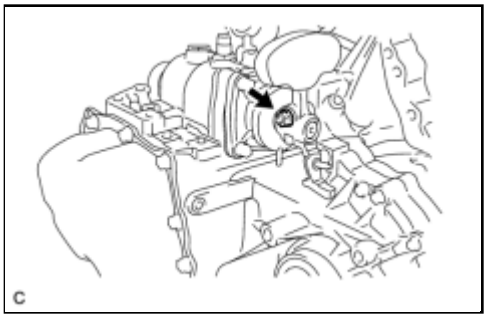

(b) Install the spring washer with the nut.

Torque: 12 N·m (120 kgf·cm, 9ft·lbf)

52. INSTALL SELECTING BELLCRANK ASSEMBLY

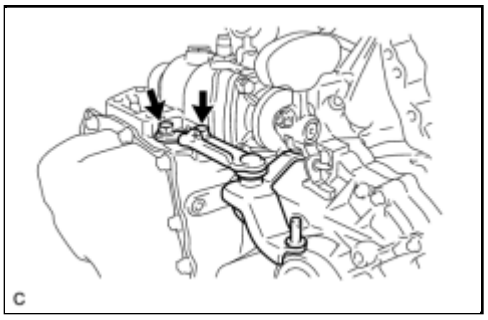

(a) Coat the 2 bolts with adhesive. Install the selecting bellcrank assembly to the manual transmission case with the bolts.

Torque: 20 N·m (204 kgf·cm, 15ft·lbf)

Adhesive:
Toyota Genuine Adhesive 1344, Three Bond 1344 or equivalent

53. INSTALL CONTROL CABLE BRACKET

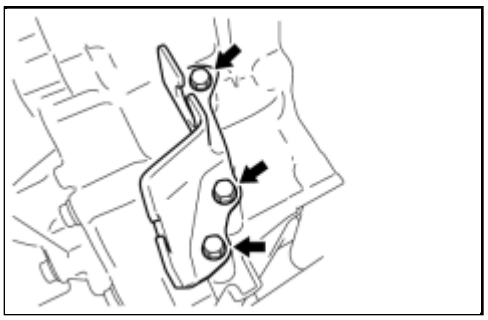

(a) Install the control cable bracket to the manual transaxle case with the 3 bolts.

Torque: 17 N·m (173 kgf·cm, 12ft·lbf)

54. INSTALL SPEEDOMETER DRIVEN HOLE COVER SUB-ASSEMBLY

(a) Install a new O-ring and the speedometer driven hole cover sub-assembly to the transmission case with the bolt.

Torque: 5.5 N·m (56 kgf·cm, 48in·lbf)

55. INSTALL CLUTCH RELEASE FORK BOOT

(a) Install the clutch release fork boot to the manual transaxle case.

56. INSTALL RELEASE FORK SUPPORT

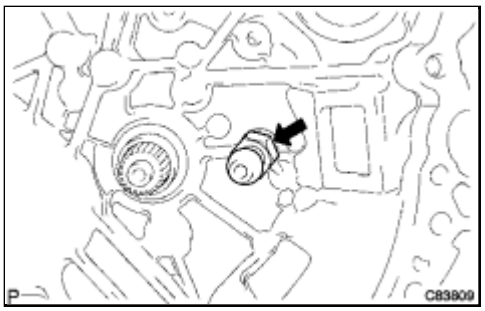

(a) Using a deep socket wrench, install the release fork support to the manual transaxle case.

Torque: 47 N·m (480 kgf·cm, 36ft·lbf)

57. INSTALL CLUTCH RELEASE BEARING ASSEMBLY

(a) Coat the clutch release bearing assembly with release hub grease, and install it to the clutch release fork sub-assembly.

Sealant:
Toyota Genuine Release Hub Grease or equivalent

(b) Apply clutch spline grease to the input shaft spline.

58. INSTALL CLUTCH RELEASE FORK SUB-ASSEMBLY

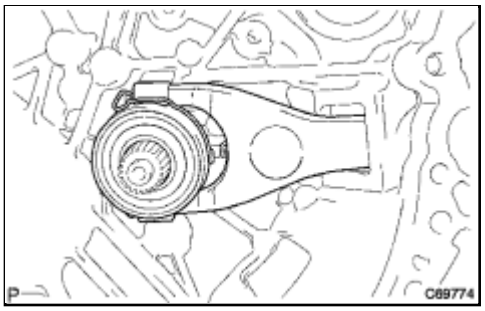

(a) Install the clutch release fork sub-assembly to the input shaft.

Last Modified: 3-10-2010	6.4 A	**From:** 200901
Model Year: 2010	**Model:** Corolla	**Doc ID:** RM000000Z1S00FX
Title: E351 MANUAL TRANSMISSION / TRANSAXLE: MANUAL TRANSAXLE UNIT: DISASSEMBLY (2010 Corolla)		

DISASSEMBLY

1. REMOVE CLUTCH RELEASE FORK SUB-ASSEMBLY

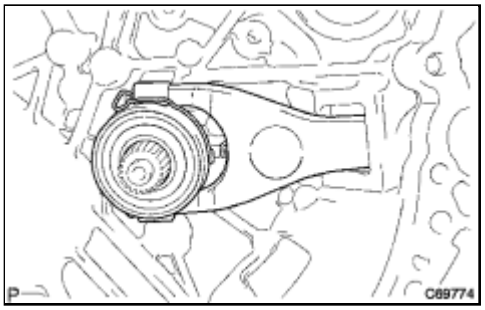

(a) Remove the clutch release fork sub-assembly together with the clutch release bearing assembly from the manual transaxle case.

2. REMOVE CLUTCH RELEASE BEARING ASSEMBLY

(a) Remove the clutch release bearing assembly and release bearing hub clip from the clutch release fork sub-assembly.

3. REMOVE RELEASE FORK SUPPORT

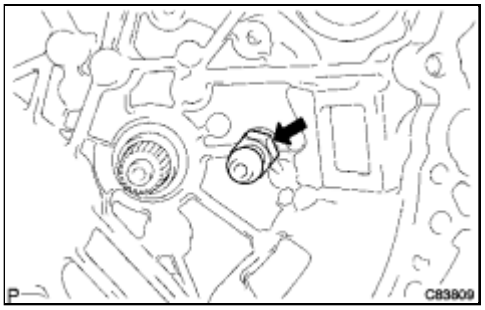

(a) Remove the release fork support from the manual transaxle case.

4. REMOVE CLUTCH RELEASE FORK BOOT

(a) Remove the clutch release fork boot from the manual transaxle case.

5. REMOVE SPEEDOMETER DRIVEN HOLE COVER SUB-ASSEMBLY

(a) Remove the bolt and speedometer driven hole cover sub-assembly.

(b) Remove the O-ring.

6. REMOVE CONTROL CABLE BRACKET

(a) Remove the 3 bolts and control cable bracket.

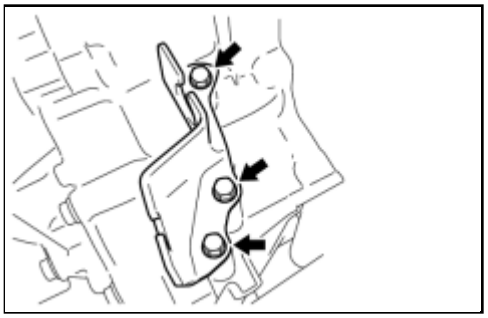

7. REMOVE SELECTING BELLCRANK ASSEMBLY

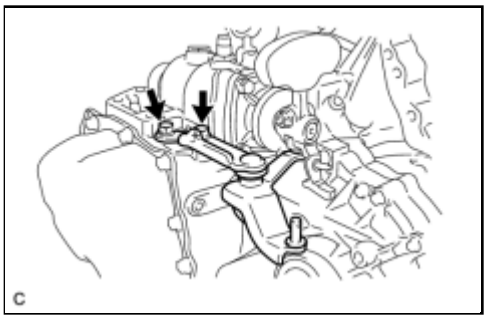

(a) Remove the 2 bolts and selecting bellcrank assembly from the manual transmission case.

8. REMOVE CONTROL SHIFT LEVER

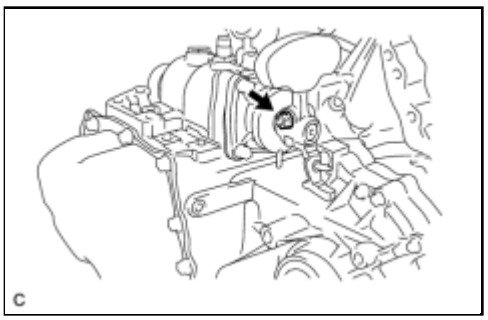

(a) Remove the nut and spring washer.

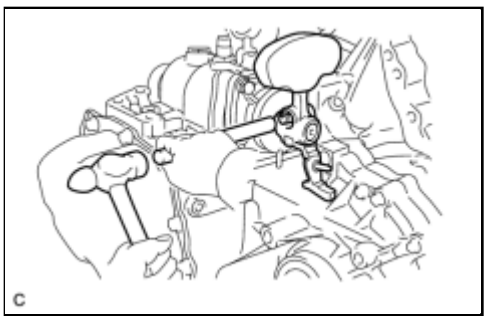

(b) Using a brass bar and hammer, remove the shift outer lever lock pin.

(c) Remove the control shift lever.

9. REMOVE NO. 2 CLUTCH TUBE BRACKET

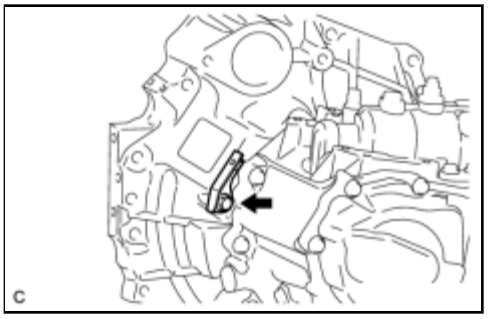

(a) Remove the bolt and No. 2 clutch tube bracket.

10. SECURE MANUAL TRANSAXLE ASSEMBLY

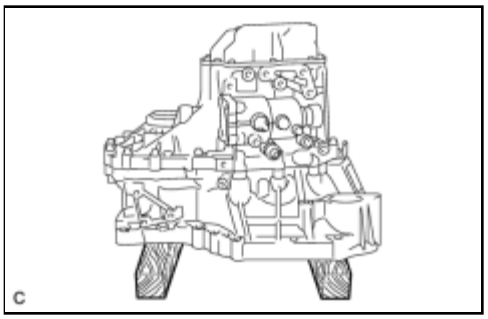

(a) Place the manual transaxle assembly on wooden blocks.

11. REMOVE NO. 1 LOCK BALL ASSEMBLY

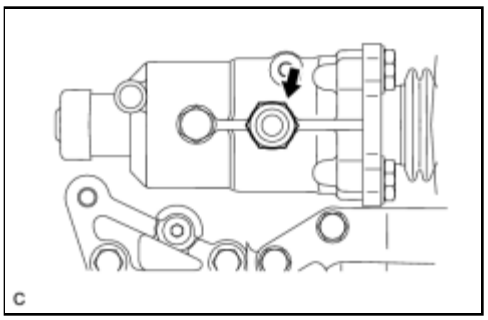

(a) Remove the No. 1 lock ball assembly from the manual transmission case.

12. REMOVE SHIFT GATE PIN

(a) Remove the shift gate pin from the manual transmission case.

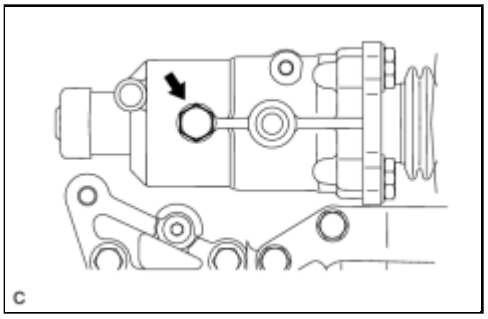

13. REMOVE MANUAL TRANSMISSION BREATHER PLUG

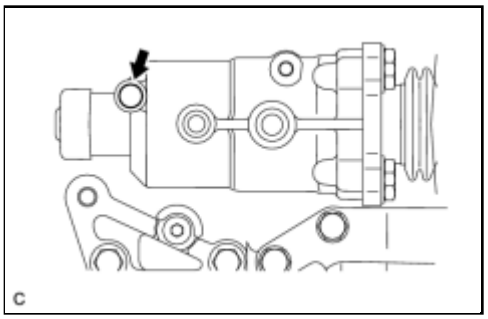

(a) Remove the manual transmission breather plug.

14. REMOVE CONTROL SHAFT COVER

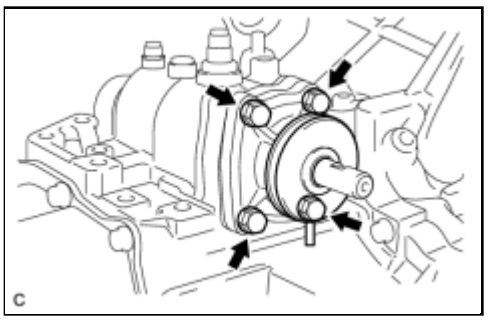

(a) Remove the 4 bolts and control shaft cover from the manual transmission case.

15. REMOVE SHIFT AND SELECT LEVER SHAFT ASSEMBLY

(a) Remove the shift and select lever shaft assembly from the manual transmission case.

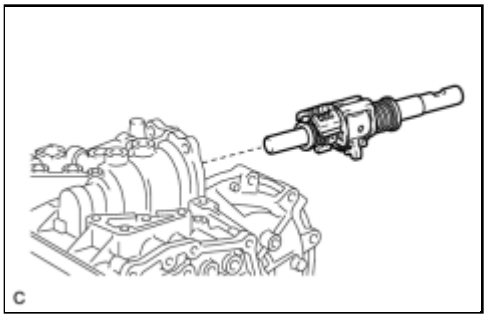

16. REMOVE BACK-UP LIGHT SWITCH ASSEMBLY

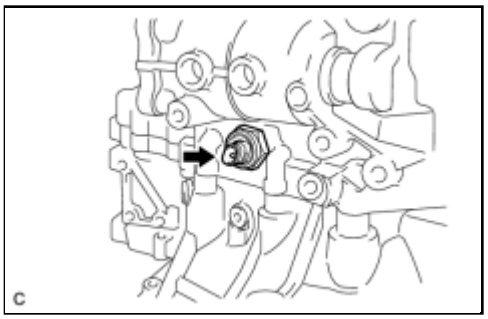

(a) Remove the back-up light switch assembly and gasket from the manual transmission case.

17. REMOVE MANUAL TRANSMISSION FILLER PLUG

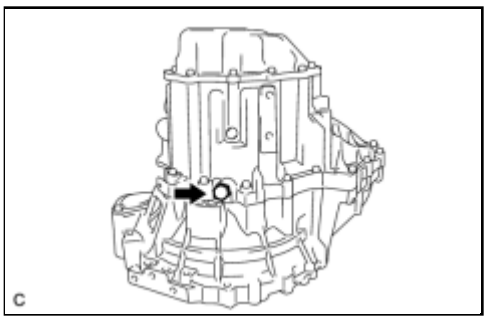

(a) Remove the manual transmission filler plug and gasket from the manual transmission case.

18. REMOVE DRAIN PLUG SUB-ASSEMBLY

(a) Remove the drain plug sub-assembly and gasket from the manual transmission case.

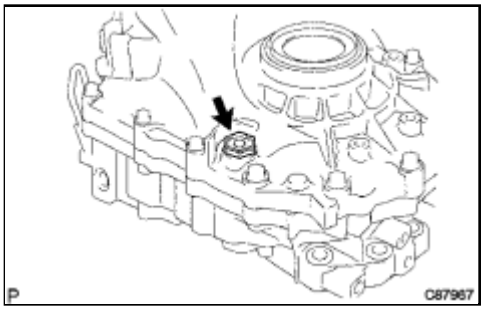

19. REMOVE MANUAL TRANSMISSION CASE COVER SUB-ASSEMBLY

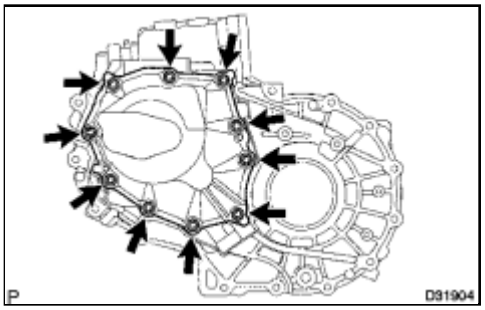

(a) Remove the 10 bolts and manual transmission case cover from the manual transmission case.

20. REMOVE MANUAL TRANSMISSION OUTPUT SHAFT REAR SET NUT

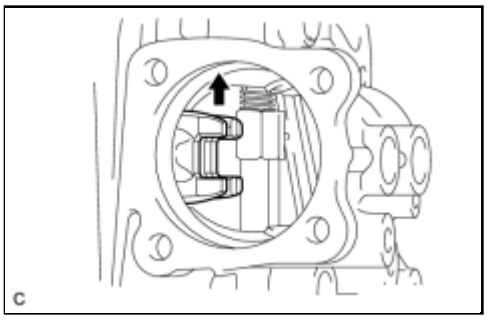

(a) Engage the 1st and 2nd gears simultaneously.

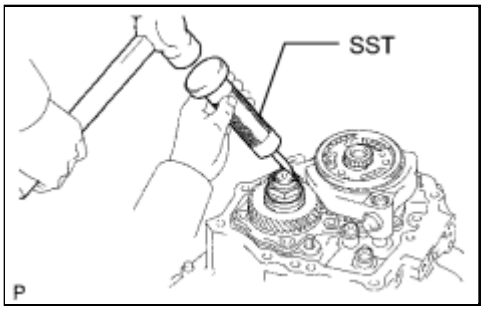

(b) Using SST and a hammer, unstake the manual transmission output shaft rear set nut.

SST: 09930-00010

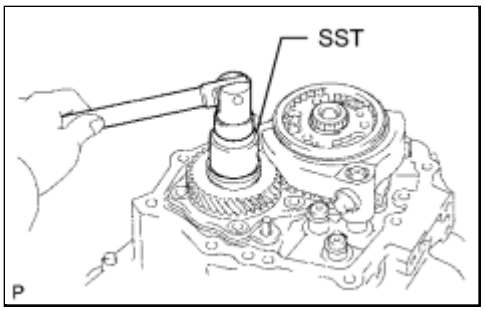

(c) Using SST, remove the manual transmission output shaft rear set nut from the output shaft.

SST: 09229-55010

(d) Disengage the gears.

21. REMOVE NO. 3 TRANSMISSION CLUTCH HUB

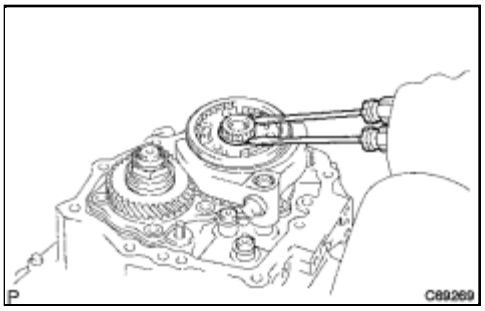

(a) Using 2 screwdrivers and a hammer, remove the transmission clutch hub No. 3 shaft snap ring from the input shaft.

HINT:

Use a piece of cloth to keep the snap ring from flying.

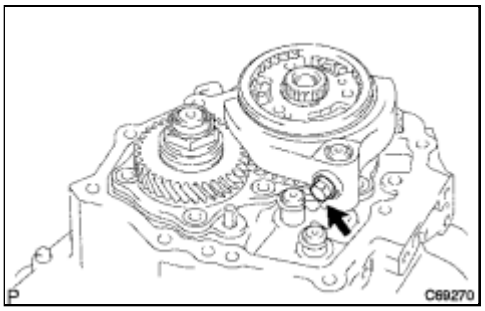

(b) Remove the shift fork set bolt from the No. 3 gear shift fork.

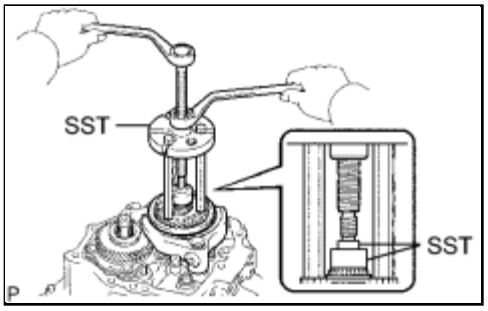

(c) Using SST, remove the No. 3 transmission clutch hub and No. 3 gear shift fork from the input shaft.

SST: 09950-30012

09951-03010

09953-03010

09954-03010

SST: 09950-50013

09957-04010

SST: 09950-60010

09951-00280

22. REMOVE 5TH GEAR

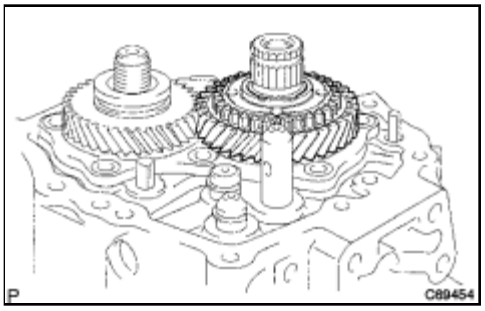

(a) Remove the 5th gear from the input shaft.

23. REMOVE 5TH GEAR NEEDLE ROLLER BEARING

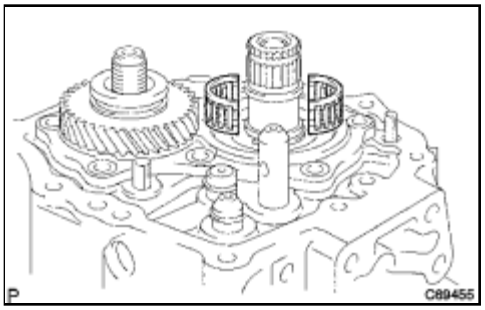

(a) Remove the 5th gear needle roller bearing from the input shaft.

24. REMOVE 5TH DRIVEN GEAR

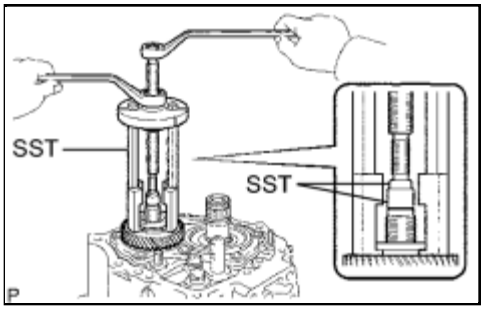

(a) Using SST, remove the 5th driven gear from the output shaft.

SST: 09950-30012

09951-03010
09953-03010
09954-03010
09957-04010

SST: 09950-60010

09951-00180
09955-03011

SST: 09950-50013

25. REMOVE REAR BEARING RETAINER

(a) Using a "TORX" socket wrench (T45), remove the 7 "TORX" screws and rear bearing retainer from the manual transmission case.

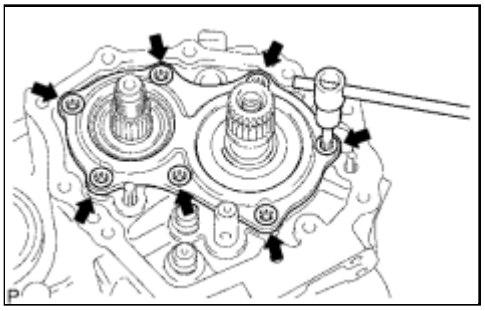

26. REMOVE OUTPUT SHAFT REAR BEARING SHIM

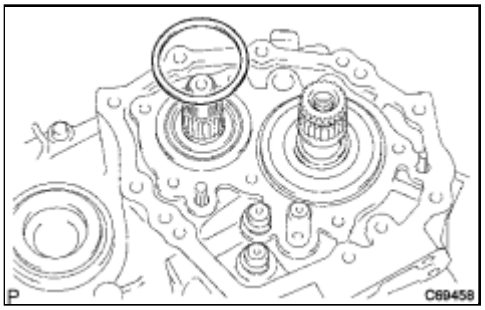

(a) Remove the output shaft rear bearing shim from the output shaft.

27. REMOVE INPUT SHAFT REAR BEARING SHAFT SNAP RING

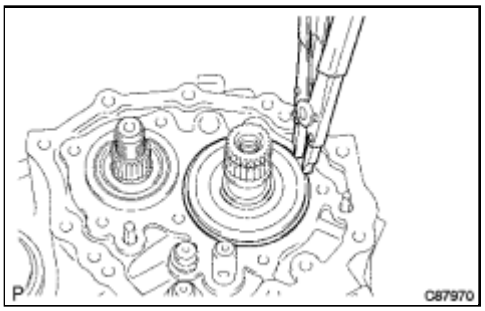

(a) Using a snap ring expander, remove the input shaft rear bearing shaft snap ring from the input shaft.

28. REMOVE SHIFT FORK SHAFT SNAP RING

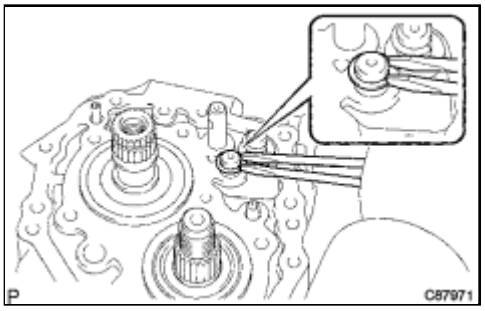

(a) Using 2 screwdrivers and a hammer, remove the shift fork shaft snap ring from the No. 1 gear shift fork shaft.

HINT:

Use a piece of cloth to keep the snap ring from flying.

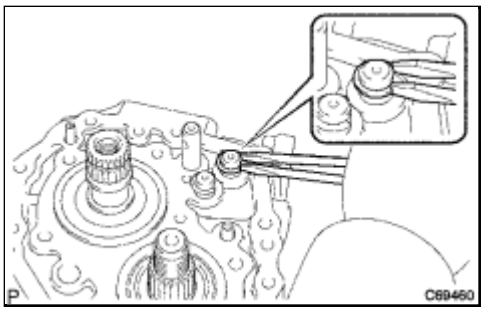

(b) Using 2 screwdrivers and a hammer, remove the shift fork shaft snap ring from the No. 2 gear shift fork shaft.

HINT:

Use a piece of cloth to keep the snap ring from flying.

29. REMOVE REVERSE IDLER GEAR SHAFT BOLT

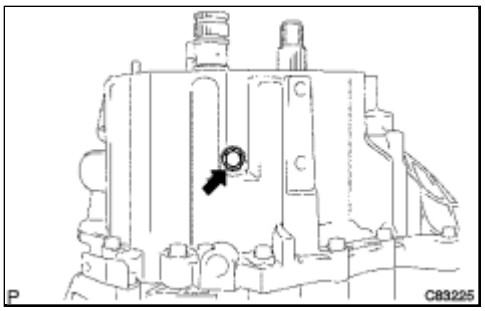

(a) Remove the reverse idler gear shaft bolt and gasket.

30. REMOVE MANUAL TRANSMISSION CASE

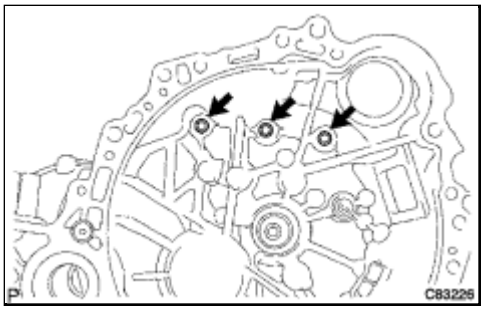

(a) Remove the 3 bolts from the manual transaxle case.

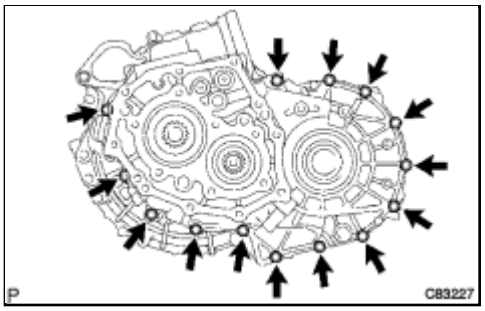

(b) Remove the 14 bolts from the manual transmission case.

(c) Using a plastic hammer, carefully tap the manual transmission case to remove it.

31. REMOVE REVERSE RESTRICT PIN ASSEMBLY

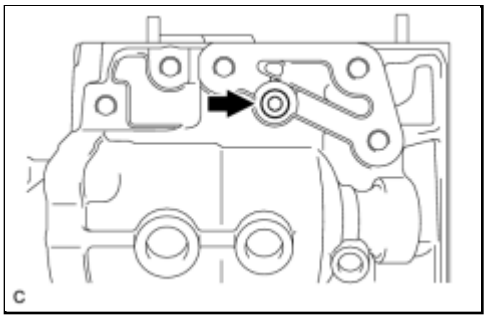

(a) Using a hexagon wrench (6 mm), remove the reverse restrict pin plug from the manual transmission case.

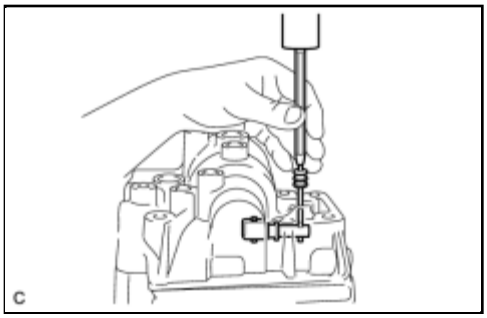

(b) Using a pin punch (φ 5 mm) and hammer, remove the slotted pin.

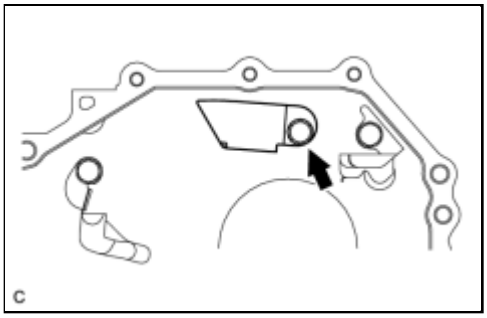

(c) Remove the bolt, transmission oil baffle and reverse restrict pin assembly.

32. REMOVE NO. 2 OIL RECEIVER PIPE

(a) Remove the bolt and No. 2 oil receiver pipe from the manual transmission case.

NOTICE:

Do not damage the pipe.

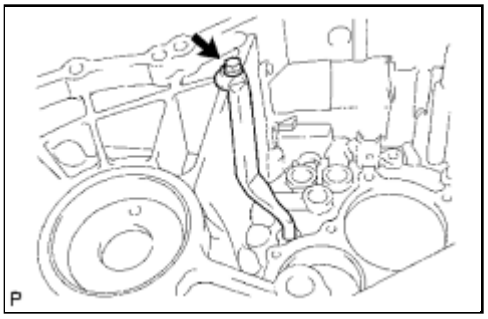

33. REMOVE NO. 1 OIL RECEIVER PIPE

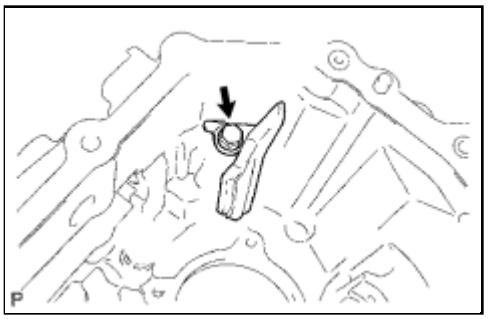

(a) Remove the bolt and No. 1 oil receiver pipe from the manual transmission case.

NOTICE:

Do not damage the pipe.

34. REMOVE TRANSMISSION MAGNET

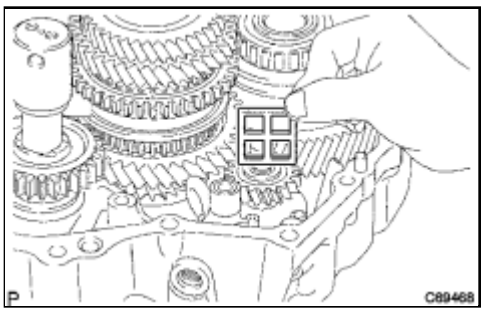

(a) Remove the transmission magnet from the manual transaxle case.

35. REMOVE REVERSE IDLER GEAR SUB-ASSEMBLY

(a) Remove the reverse idler gear sub-assembly from the manual transaxle case.

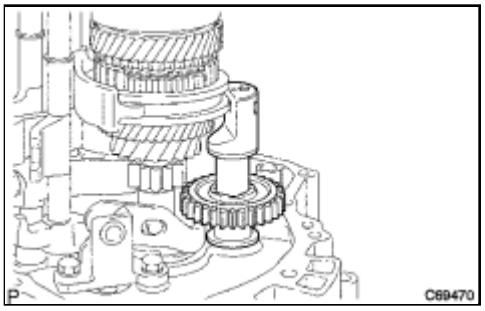

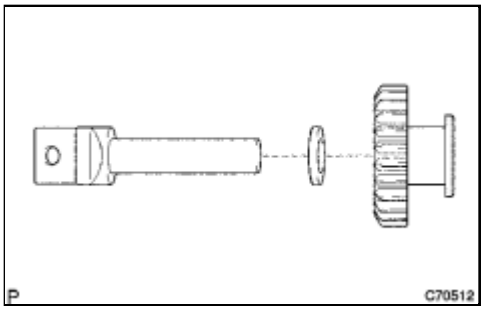

(b) Remove the reverse gear and reverse idler thrust washer from the reverse idler gear shaft.

36. REMOVE REVERSE SHIFT ARM BRACKET ASSEMBLY

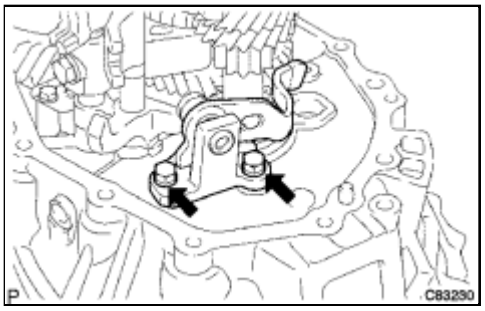

(a) Remove the 2 bolts and reverse shift arm bracket assembly from the manual transaxle case.

37. REMOVE NO. 1 GEAR SHIFT FORK SHAFT

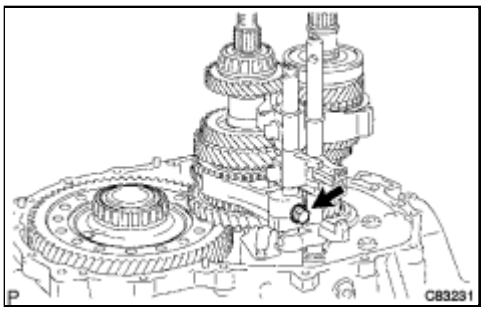

(a) Remove the shift fork set bolt from the No. 1 gear shift fork.

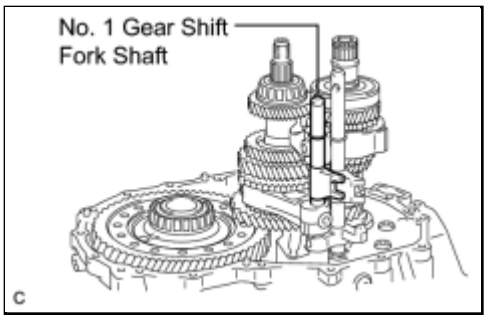

(b) Pull out the No. 1 gear shift fork shaft while pulling up the No. 3 gear shift fork shaft.

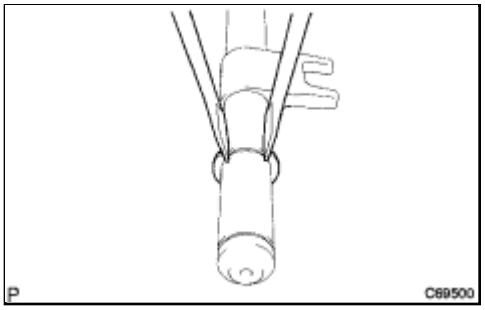

(c) Using 2 screwdrivers and a hammer, remove the shift fork shaft snap ring from the No. 1 gear shift fork shaft.

HINT:

Use a piece of cloth to keep the snap ring from flying.

38. REMOVE REVERSE SHIFT FORK ROLLER

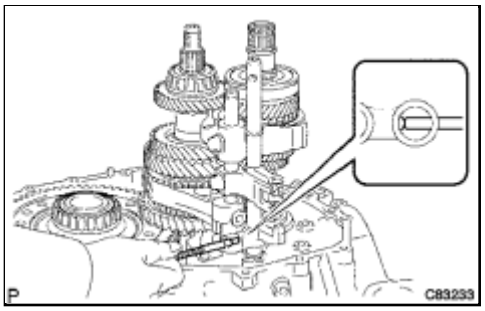

(a) Using a magnetic pick-up tool, remove the reverse shift fork roller from the reverse shift fork.

39. REMOVE NO. 2 GEAR SHIFT FORK SHAFT

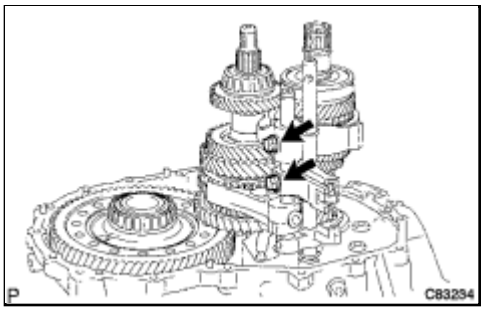

(a) Remove the shift fork set bolt and shift head set bolt from the No. 2 gear shift fork and No. 1 gear shift head.

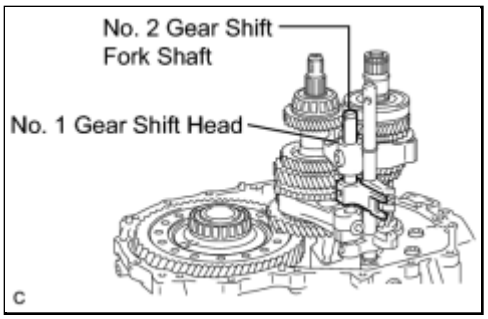

(b) Remove the No. 2 gear shift fork shaft and No. 1 gear shift head from the manual transaxle case.

40. REMOVE NO. 1 GEAR SHIFT FORK

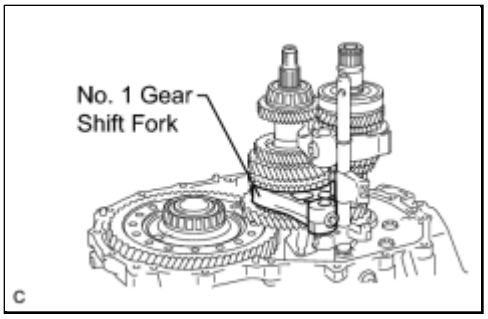

(a) Remove the No. 1 gear shift fork.

41. REMOVE NO. 3 GEAR SHIFT FORK SHAFT

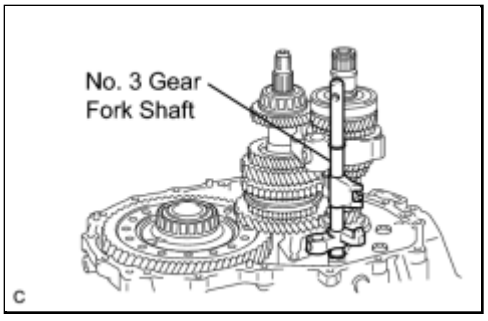

(a) Remove the No. 3 gear shift fork shaft from the manual transaxle case.

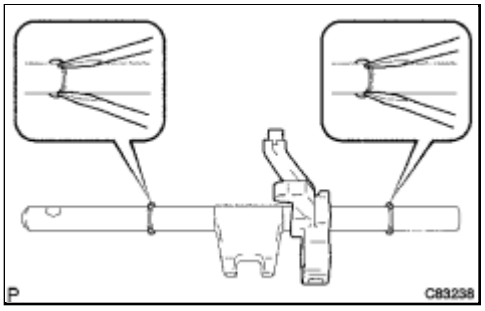

(b) Using 2 screwdrivers and a hammer, remove the 2 shift fork shaft snap rings from the No. 3 gear shift fork shaft.

(c) Remove the reverse shift fork from the No. 3 gear shift fork shaft.

42. REMOVE NO. 2 GEAR SHIFT FORK

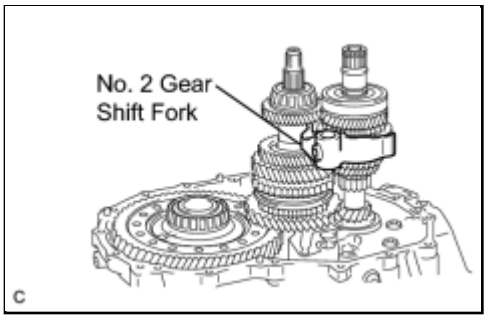

(a) Remove the No. 2 gear shift fork from the input shaft assembly.

43. REMOVE INPUT SHAFT ASSEMBLY

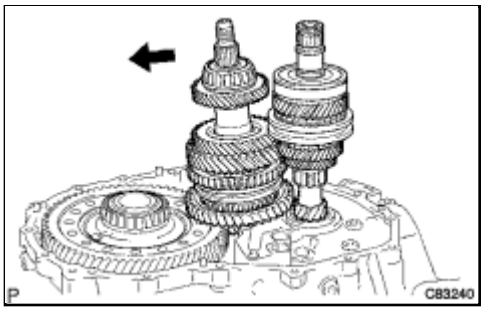

(a) Tilt the output shaft, and then remove the input shaft from the manual transaxle case.

44. REMOVE OUTPUT SHAFT ASSEMBLY

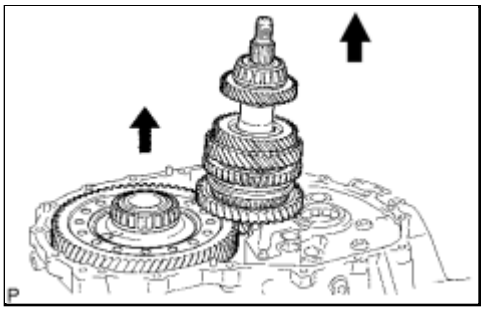

(a) Lift the differential case assembly while tilting the output shaft assembly.

(b) Remove the output shaft assembly from the manual transaxle case.

45. REMOVE DIFFERENTIAL CASE ASSEMBLY

(a) Remove the differential case assembly from the manual transaxle case.

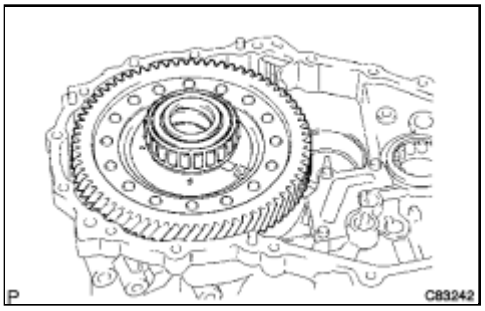

46. REMOVE MANUAL TRANSAXLE CASE RECEIVER

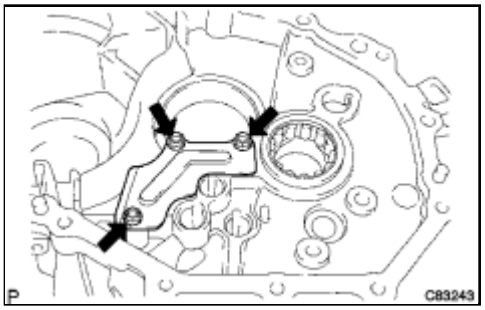

(a) Remove the 3 bolts and manual transaxle case receiver from the manual transaxle case.

47. REMOVE INPUT SHAFT FRONT BEARING

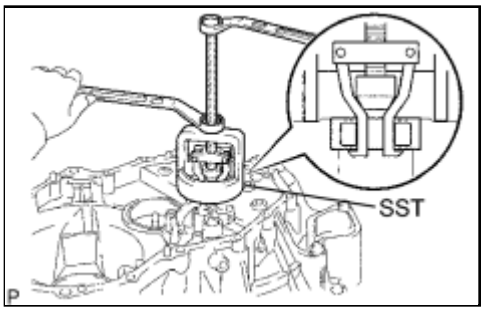

(a) Using SST, remove the input shaft front bearing (outer race) from the manual transaxle case.

SST: 09612-65014

09612-01040

09612-01050

48. REMOVE FRONT TRANSAXLE CASE COVER OIL SEAL

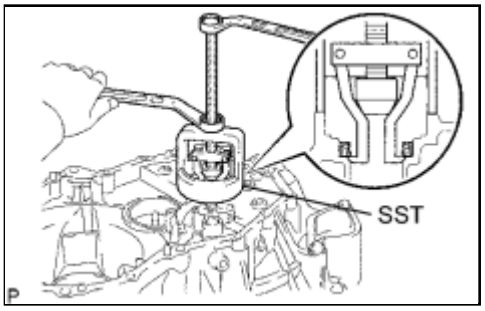

(a) Using SST, remove the front transaxle case cover oil seal from the manual transaxle case.

SST: 09612-65014

09612-01040

09612-01050

49. REMOVE OUTPUT SHAFT FRONT BEARING

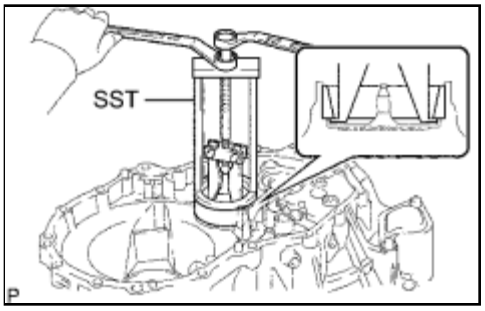

(a) Using SST, remove the output shaft front bearing (outer race) from the manual transaxle case.

SST: 09387-00041

09387-02020

09387-02010

50. REMOVE OUTPUT SHAFT COVER

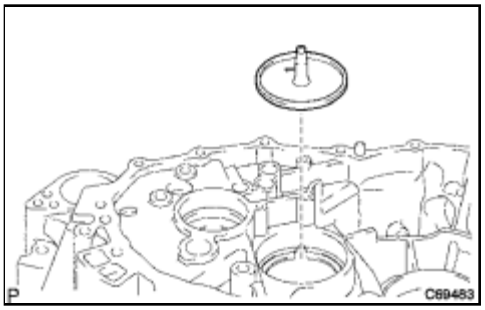

(a) Remove the output shaft cover from the manual transaxle case.

51. REMOVE OUTPUT SHAFT REAR BEARING

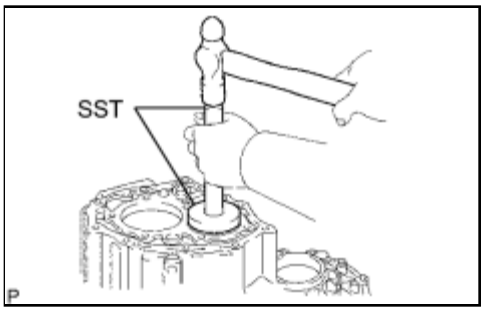

(a) Using SST and a hammer, remove the output shaft rear bearing from the manual transmission case (outer race).

SST: 09950-60010

09951-00680

SST: 09950-70010

09951-07100

52. REMOVE TRANSMISSION CASE OIL SEAL

(a) Using SST, remove the transmission case oil seal from the manual transmission case.

SST: 09308-00010

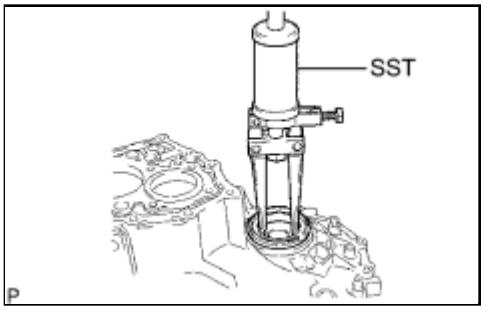

53. REMOVE TRANSAXLE CASE OIL SEAL

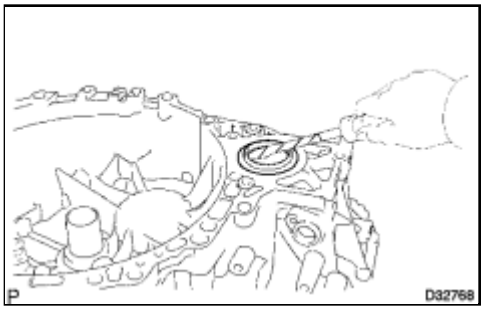

(a) Using a screwdriver, remove the transaxle case oil seal.

HINT:

Tape the screwdriver tip before use to avoid damage.

54. REMOVE FRONT DIFFERENTIAL CASE FRONT TAPERED ROLLER BEARING

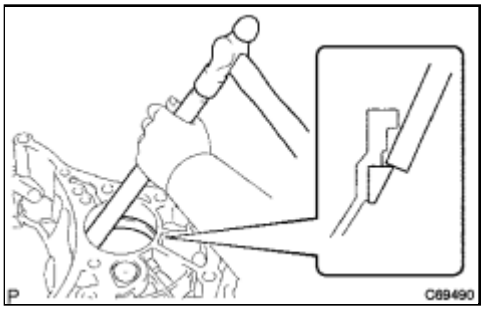

(a) Using a brass bar and a hammer, remove the front differential case front tapered roller bearing (outer race) from the manual transaxle case.

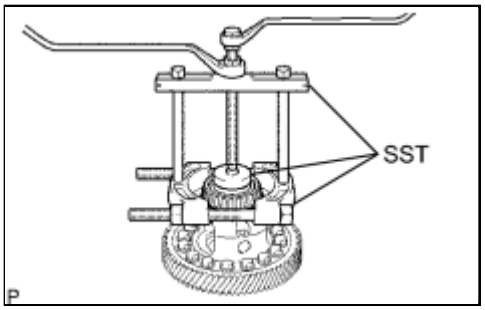

(b) Using SST, remove the front differential case front tapered roller bearing from the front differential case.

SST: 09950-00020
SST: 09950-00030
SST: 09950-40011
09957-04010
SST: 09950-60010
09951-00560

55. REMOVE FRONT DIFFERENTIAL CASE REAR TAPERED ROLLER BEARING

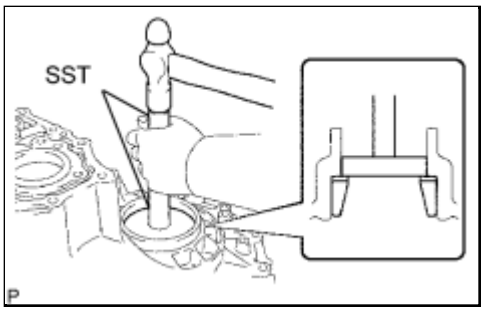

(a) Using SST and a hammer, remove the front differential case rear tapered roller bearing (outer race) and front differential case rear shim from the manual transmission case.

SST: 09950-60020
09951-00790
SST: 09950-70010
09951-07100

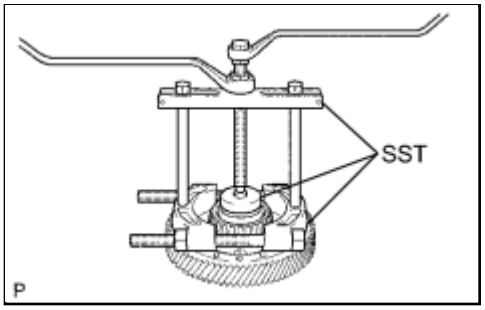

(b) Using SST, remove the front differential case rear tapered roller bearing (inner race) from the front differential case.

SST: 09950-60020
SST: 09950-00030
SST: 09950-40011
09957-04010
SST: 09950-60010
09951-00490

56. REMOVE NO. 3 TRANSMISSION HUB SLEEVE

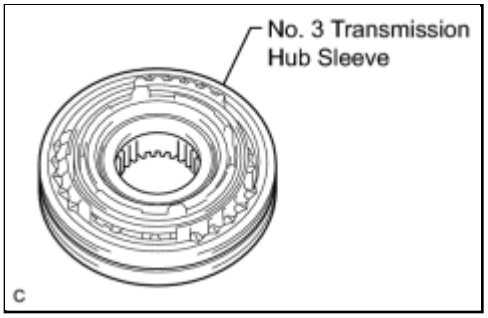

(a) Remove the No. 3 transmission hub sleeve from the No. 3 transmission clutch hub.

57. REMOVE NO. 3 SYNCHROMESH SHIFTING KEY SPRING

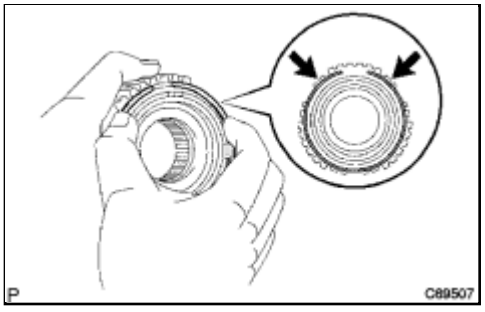

(a) Remove the 2 No. 3 synchromesh shifting key springs from the No. 3 transmission clutch hub while pushing on the No. 3 synchromesh shifting key spring.

58. REMOVE SYNCHRONIZER PULL RING

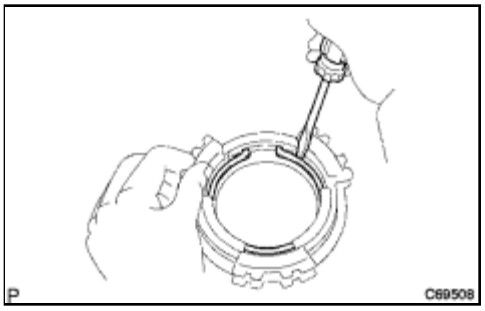

(a) Using a screwdriver, remove the synchronizer pull ring snap ring.

(b) Remove the synchronizer pull ring, No. 5 synchronizer ring outer, No. 5 synchronizer ring inner, and No. 5 synchronizer ring middle from the No. 5 synchronizer ring inner.

Last Modified: 3-10-2010	6.4 G	**From:** 200901
Model Year: 2010	**Model:** Corolla	**Doc ID:** RM000001A1401QX
Title: C59 MANUAL TRANSMISSION / TRANSAXLE: MANUAL TRANSAXLE UNIT: INSPECTION (2010 Corolla)		

INSPECTION

1. INSPECT NO. 3 SYNCHRONIZER RING

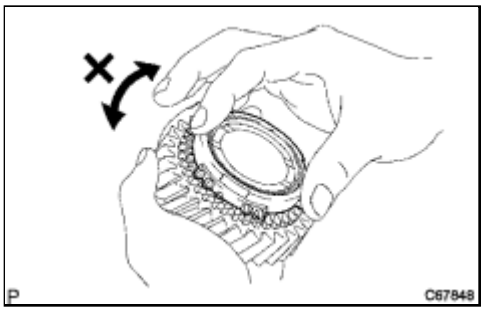

(a) Check for wear and damage.

(b) Coat the 5th gear cone with gear oil.

(c) Turn the synchronizer ring in one direction while pushing it against the 5th gear cone.

(d) Check that the ring locks.

If the synchronizer ring does not lock, replace the synchronizer ring.

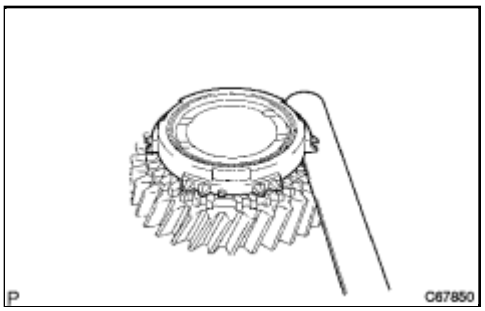

(e) Using a feeler gauge, measure the clearance between the synchronizer ring and the gear spline end.

Standard clearance:
0.75 to 1.65 mm (0.0295 to 0.0649 in.)
Minimum clearance:
0.75 mm (0.0295 in.)

If the clearance is less than the minimum, replace the synchronizer ring.

2. INSPECT NO. 3 TRANSMISSION HUB SLEEVE

(a) Check the sliding condition between the No. 3 transmission hub sleeve and the No. 3 transmission clutch hub.

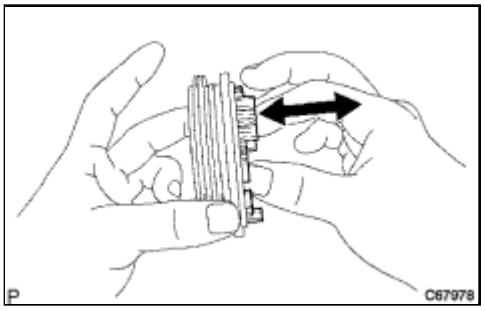

(b) Check that the edges of the No. 3 transmission hub sleeve spline gear are not worn down.

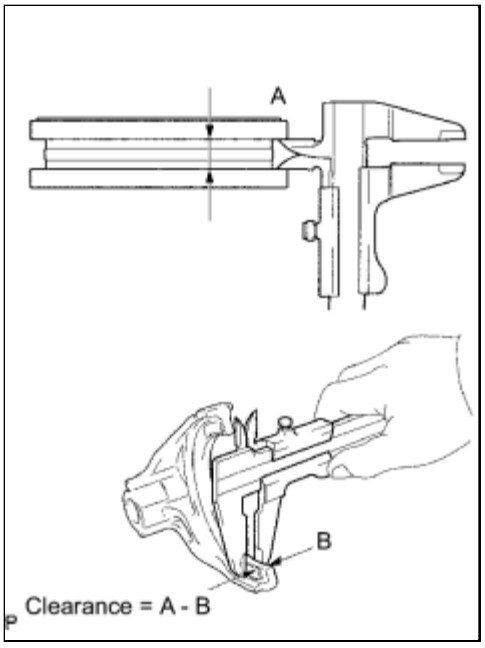

(c) Using a vernier caliper, measure the width of the No. 3 transmission hub sleeve groove (A) and the thickness of the claw part on the No. 3 gear shift fork (B), and calculate the clearance.

Standard clearance (A - B):
0.3 to 0.5 mm (0.0118 to 0.0197 in.)

If the clearance exceeds the standard, replace the No. 3 transmission hub sleeve and No. 3 gear shift fork.

3. INSPECT 5TH GEAR

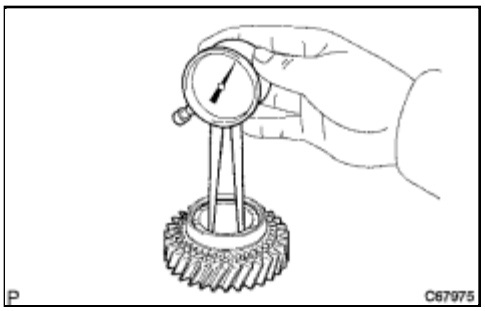

(a) Using a caliper gauge, measure the inside diameter of the 5th gear.

Standard inside diameter:
29.915 to 29.931 mm (1.1778 to 1.1783 in.)
Maximum inside diameter:
29.931 mm (1.1783 in.)

If the inside diameter exceeds the maximum, replace the 5th gear.

4. INSPECT REVERSE IDLER GEAR SUB-ASSEMBLY

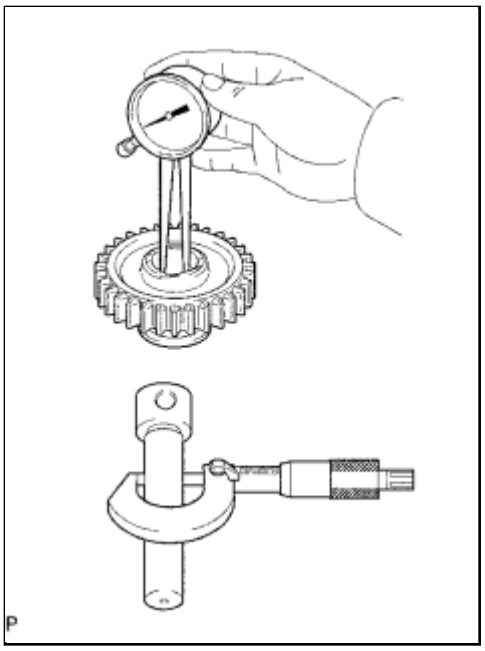

(a) Using a caliper gauge, inspect the reverse idler gear.

Standard inside diameter:
18.040 to 18.058 mm (0.7102 to 0.7109 in.)
Maximum inside diameter:
18.058 mm (0.7109 in.)

If the inside diameter exceeds the maximum, replace the reverse idler gear sub-assembly.

(b) Using a micrometer, inspect the reverse idler gear shaft.

Standard outer diameter:
17.966 to 17.984 mm (0.7073 to 0.7080 in.)
Minimum outer diameter:
17.966 mm (0.7073 in.)

If the outer diameter is less than the minimum, replace the reverse idler gear shaft.

Last Modified: 3-10-2010	6.4 K	**From:** 200901
Model Year: 2010	**Model:** Corolla	**Doc ID:** RM000000Z1R00JX
Title: E351 MANUAL TRANSMISSION / TRANSAXLE: MANUAL TRANSAXLE UNIT: COMPONENTS (2010 Corolla)		

COMPONENTS

ILLUSTRATION

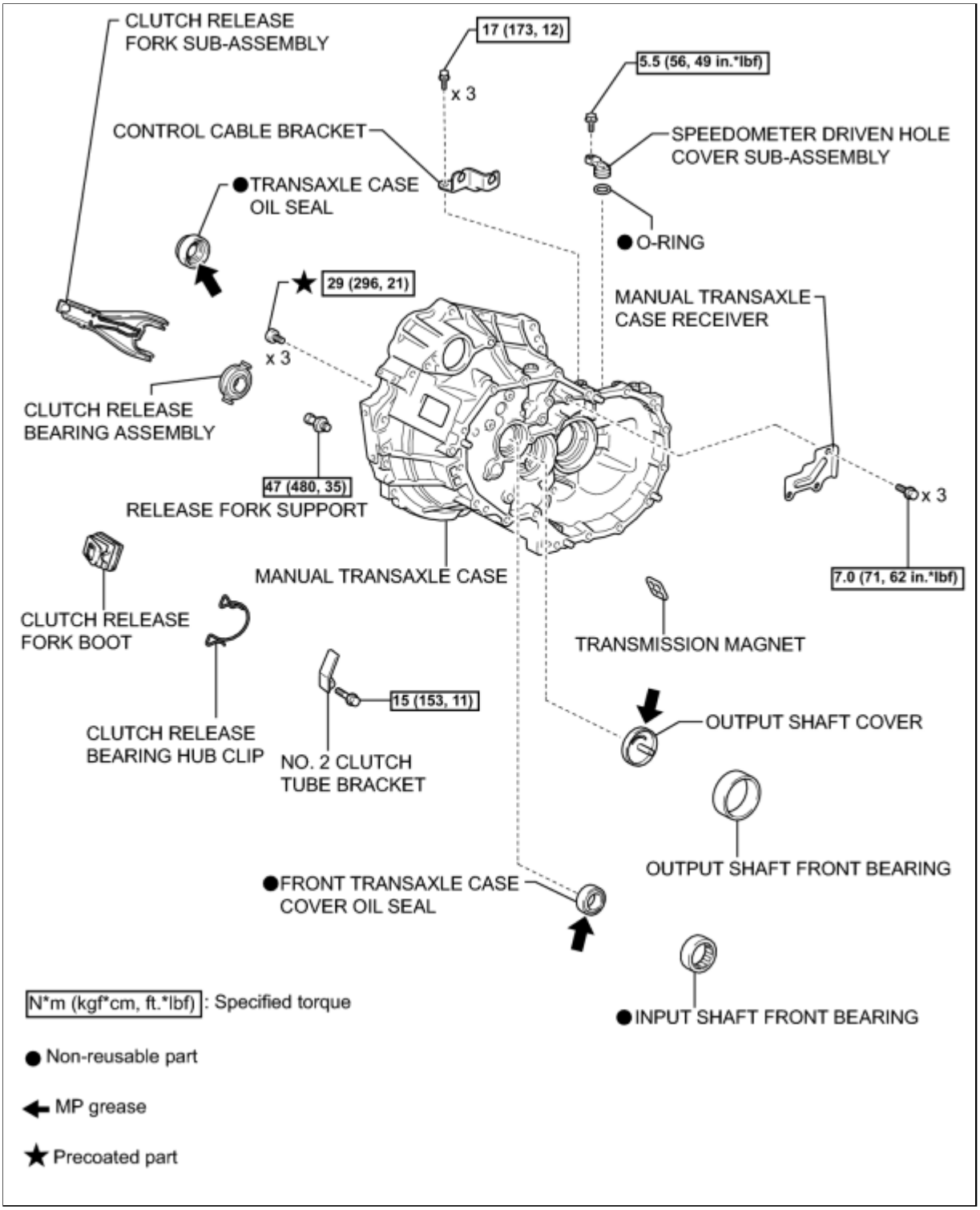

ILLUSTRATION

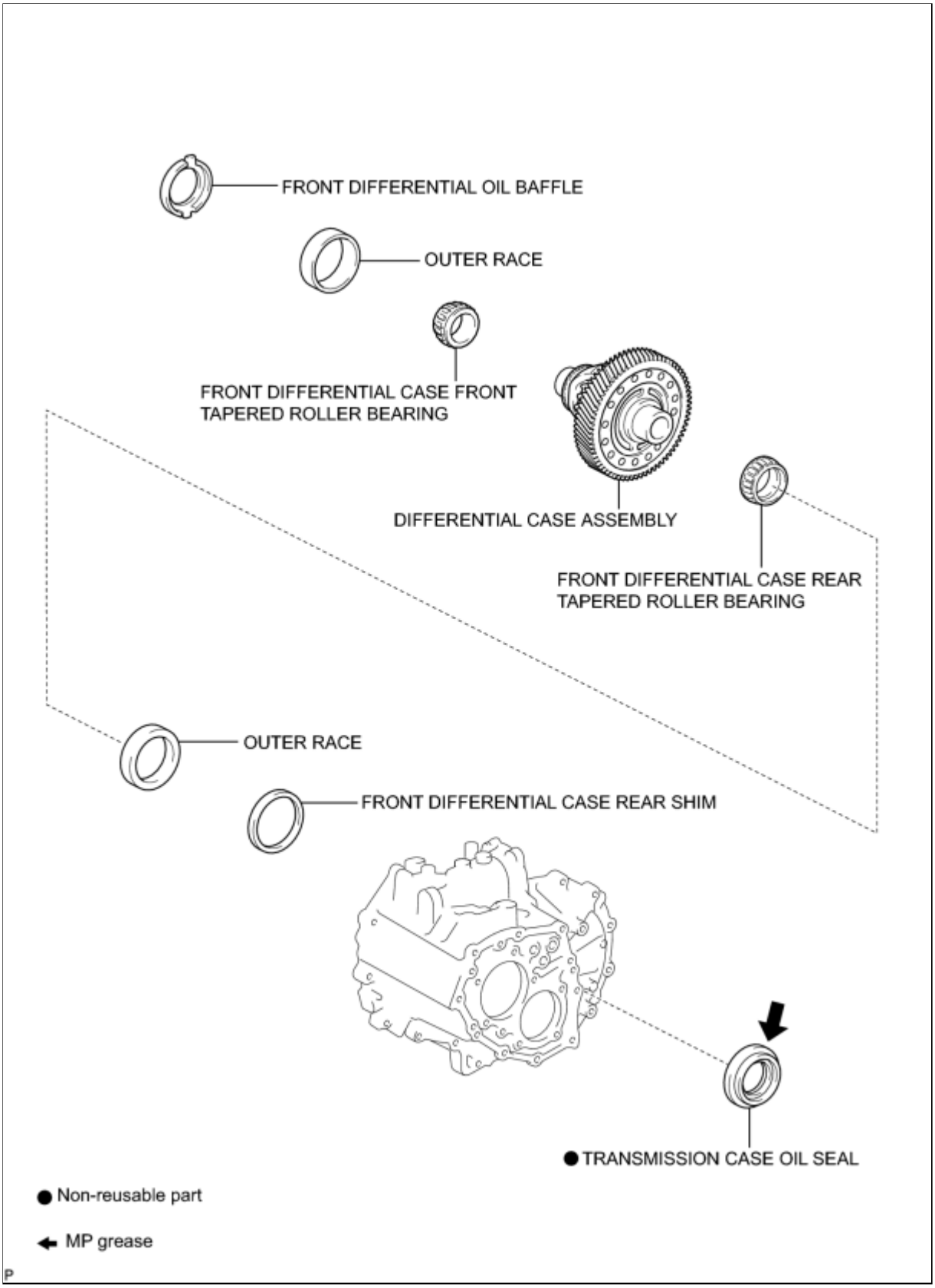

ILLUSTRATION

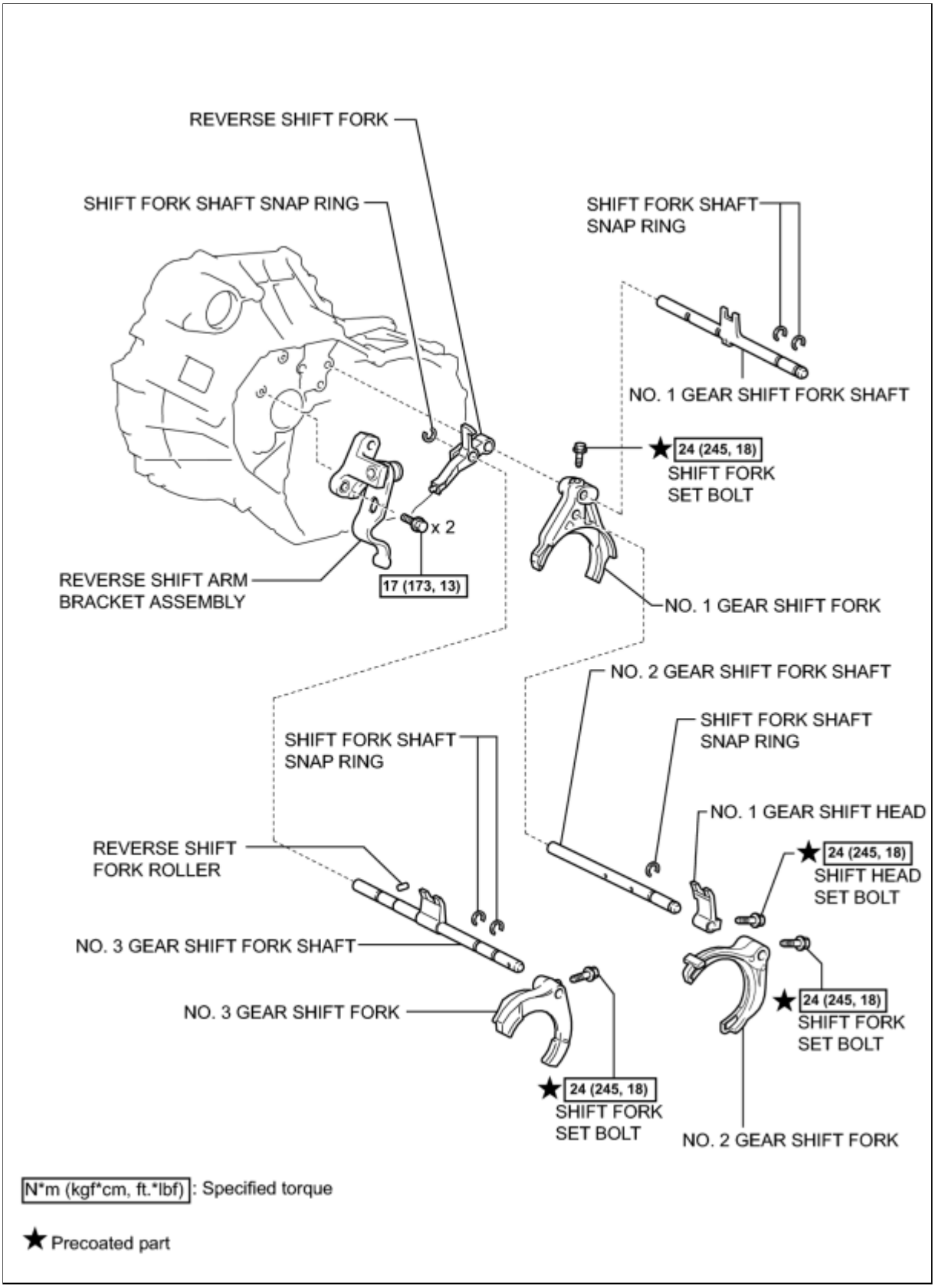

ILLUSTRATION

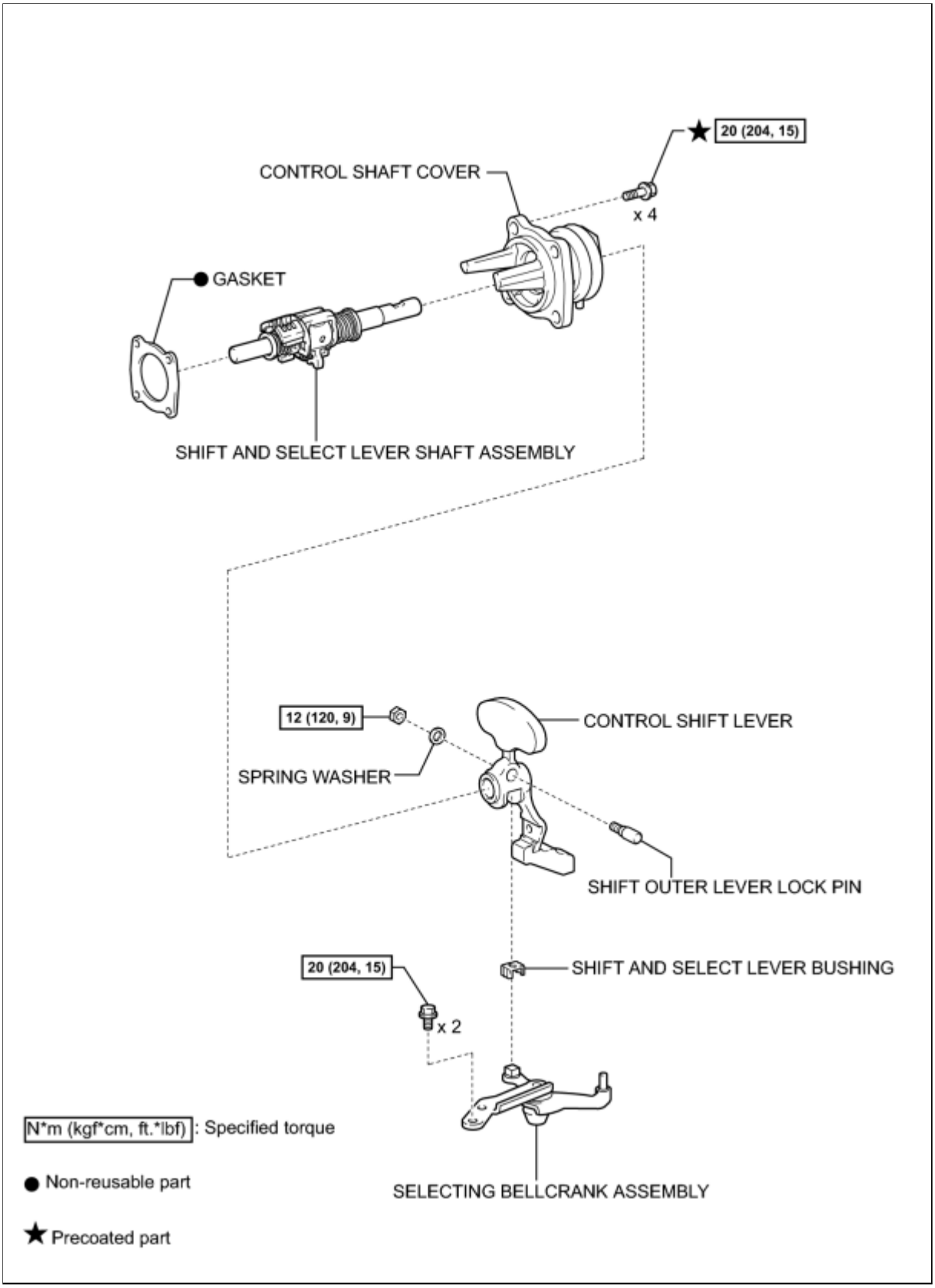

ILLUSTRATION

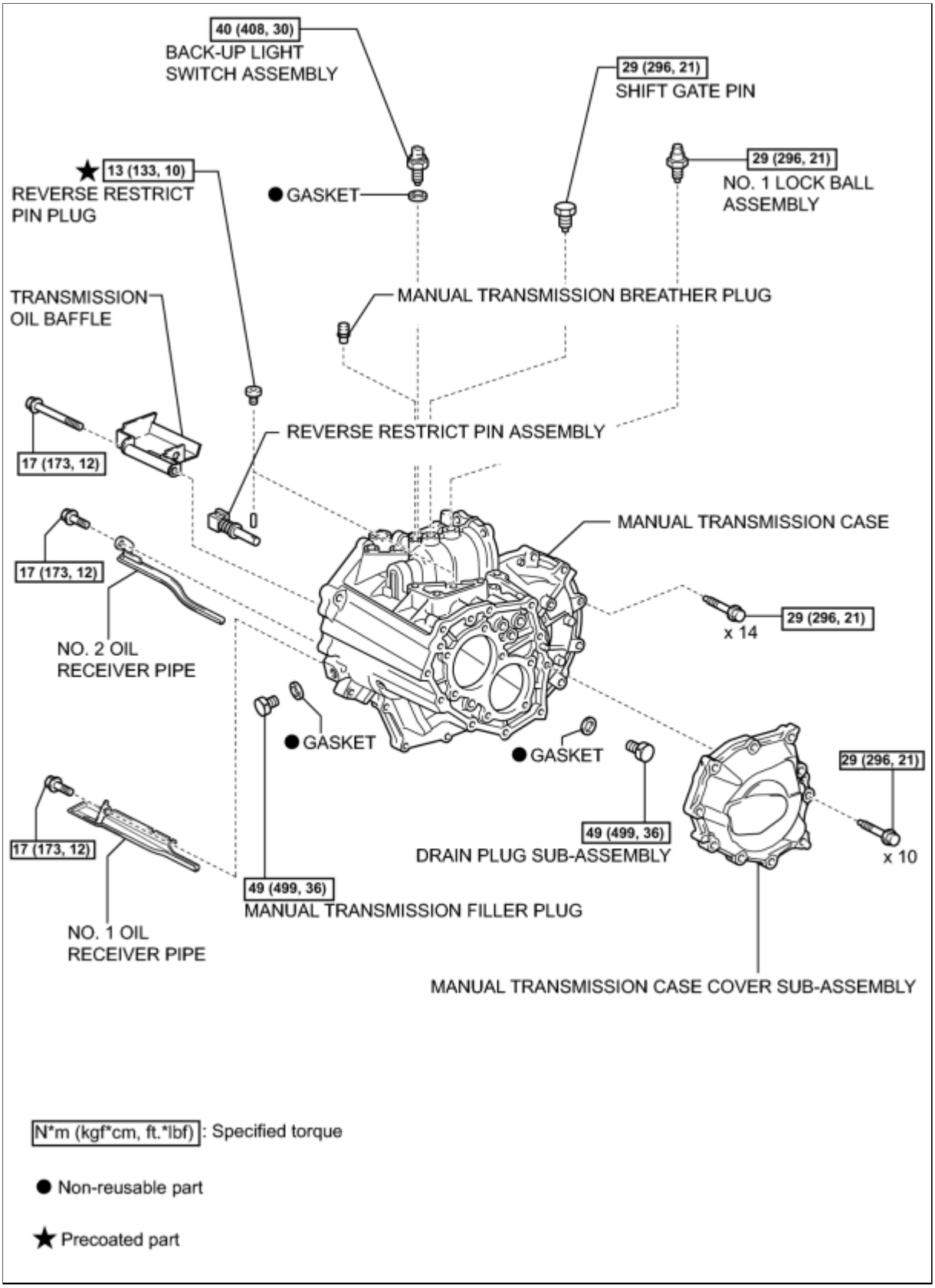

ILLUSTRATION

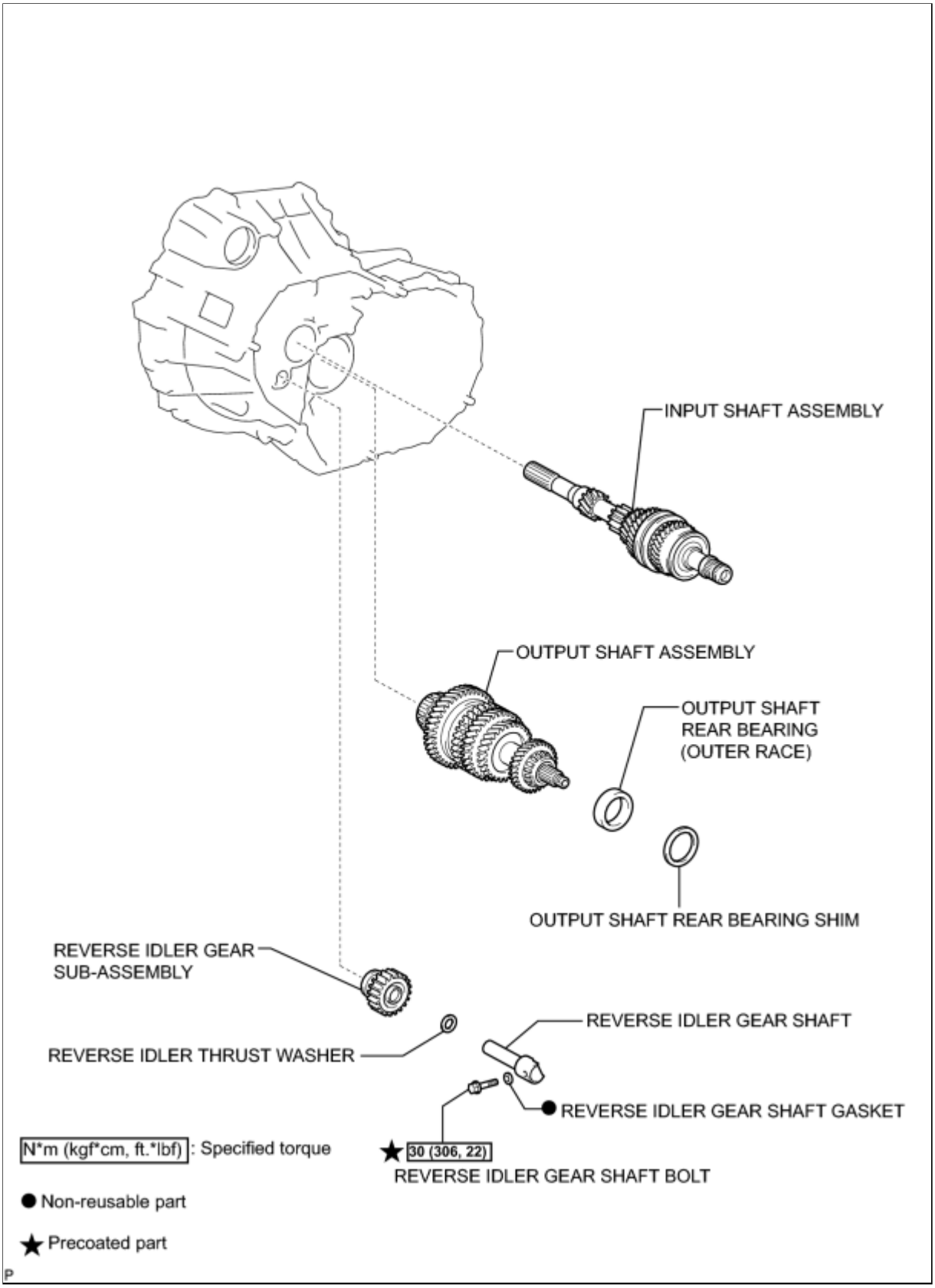

ILLUSTRATION

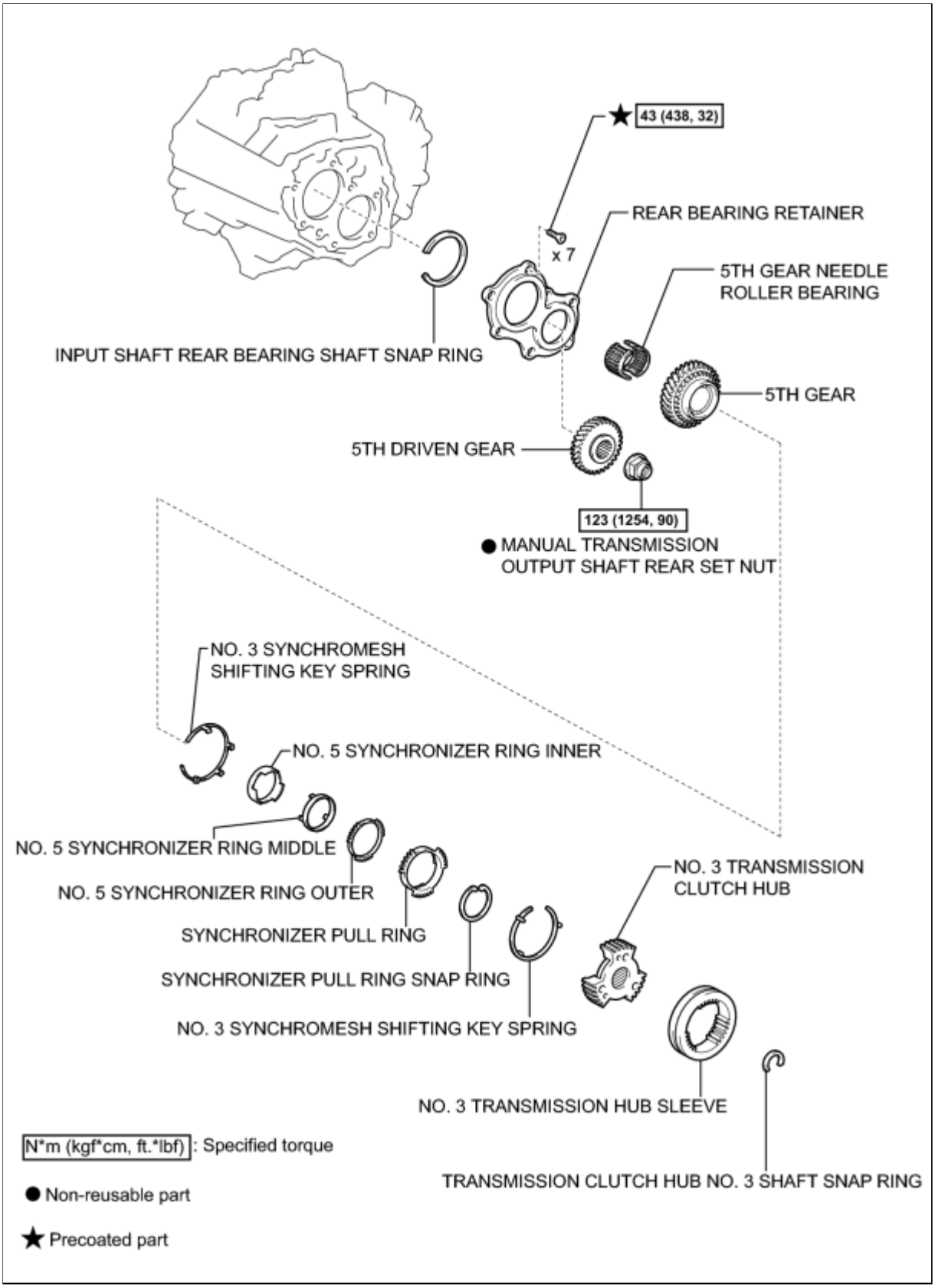
★ 43 (438, 32)
REAR BEARING RETAINER
x 7
5TH GEAR NEEDLE ROLLER BEARING
INPUT SHAFT REAR BEARING SHAFT SNAP RING
5TH GEAR
5TH DRIVEN GEAR
123 (1254, 90)
● MANUAL TRANSMISSION OUTPUT SHAFT REAR SET NUT
NO. 3 SYNCHROMESH SHIFTING KEY SPRING
NO. 5 SYNCHRONIZER RING INNER
NO. 5 SYNCHRONIZER RING MIDDLE
NO. 5 SYNCHRONIZER RING OUTER
SYNCHRONIZER PULL RING
NO. 3 TRANSMISSION CLUTCH HUB
SYNCHRONIZER PULL RING SNAP RING
NO. 3 SYNCHROMESH SHIFTING KEY SPRING
NO. 3 TRANSMISSION HUB SLEEVE
TRANSMISSION CLUTCH HUB NO. 3 SHAFT SNAP RING
N*m (kgf*cm, ft.*lbf): Specified torque
● Non-reusable part
★ Precoated part

Last Modified: 3-10-2010	6.4 G	**From:** 200901
Model Year: 2010	**Model:** Corolla	**Doc ID:** RM000000Z1Q00FX
Title: E351 MANUAL TRANSMISSION / TRANSAXLE: MANUAL TRANSAXLE UNIT: INSPECTION (2010 Corolla)		

INSPECTION

1. INSPECT 5TH GEAR THRUST CLEARANCE

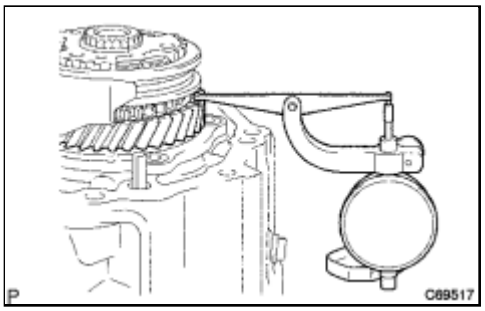

(a) Using a dial indicator, inspect the 5th gear thrust clearance.

Standard clearance:
0.10 to 0.57 mm (0.00394 to 0.0224 in.)

If the clearance is not as specified, replace the No. 3 transmission clutch hub, 5th gear, or input shaft rear radial ball bearing.

2. INSPECT 5TH GEAR RADIAL CLEARANCE

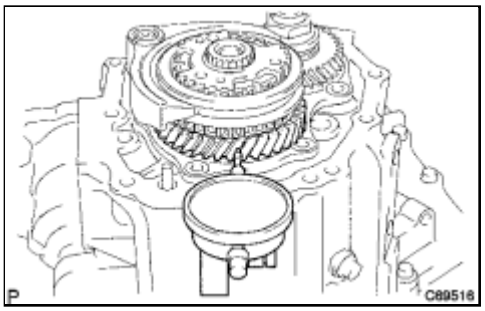

(a) Using a dial indicator, inspect the 5th gear radial clearance.

Standard clearance:
0.009 to 0.050 mm (0.000354 to 0.00197 in.)

If the clearance is not as specified, replace the 5th gear, 5th gear needle roller bearing, or input shaft.

3. INSPECT REVERSE IDLER GEAR SUB-ASSEMBLY

(a) Using a caliper gauge, measure the inside diameter of the reverse idler gear.

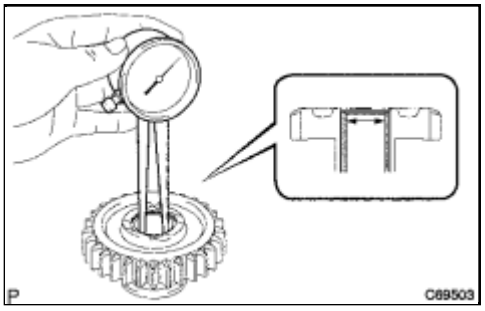

Inside Diameter:

STANDARD INSIDE DIAMETER MM (IN.)	MAXIMUM INSIDE DIAMETER MM (IN.)
20.056 to 20.074 (0.7896 to 0.7903)	20.074 (0.7903)

If the inside diameter exceeds the maximum, replace the

reverse idler gear.

(b) Using a micrometer, measure the outside diameter of the reverse idler gear shaft.

Outside Diameter:

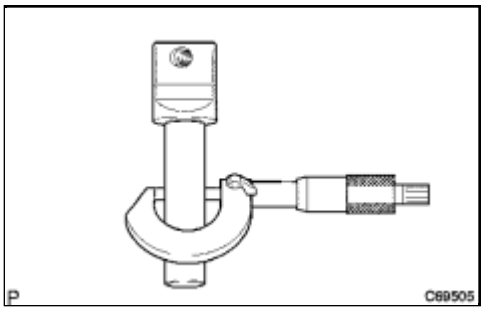

STANDARD OUTSIDE DIAMETER MM (IN.)	MINIMUM OUTSIDE DIAMETER MM (IN.)
19.984 to 20.000 (0.7868 to 0.7874)	19.984 (0.7868)

If the outside diameter is less than the minimum, replace the reverse idler gear shaft.

4. INSPECT NO. 3 TRANSMISSION CLUTCH HUB

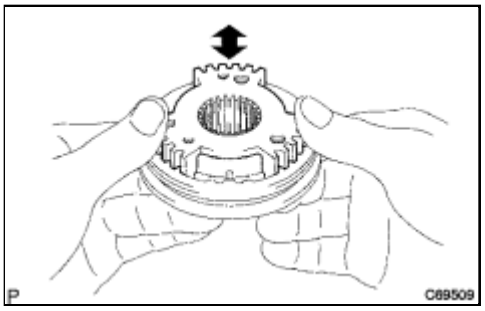

(a) Inspect the sliding condition between the No. 3 transmission clutch hub and the No. 3 transmission hub sleeve.

(b) Inspect the tip of the spline gear on the No. 3 transmission hub sleeve for wear.

5. INSPECT NO. 3 TRANSMISSION HUB SLEEVE

(a) Using a vernier caliper, measure the width of the No. 3 transmission hub sleeve groove and the thickness of the claw on the No. 3 gear shift fork, and calculate the clearance.

Standard clearance:
0.15 to 0.35 mm (0.00591 to 0.0138 in.) {A - B}

If the clearance is not as specified, replace the No. 3 transmission hub sleeve and No. 3 gear shift fork with new ones.

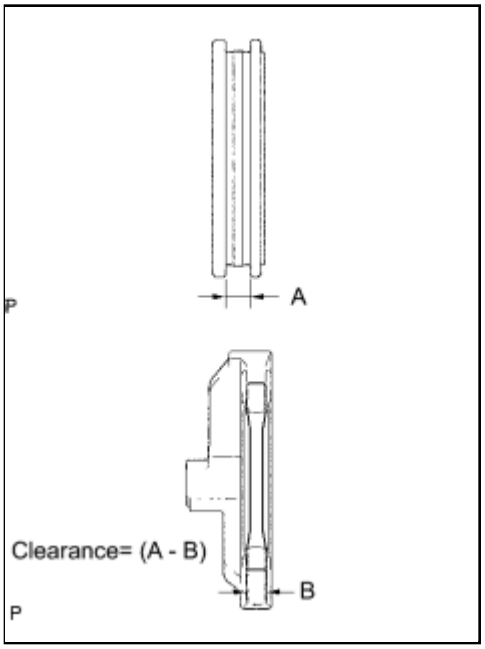

6. INSPECT 5TH GEAR

(a) Using a caliper gauge, measure the inside diameter of the 5th gear.

Inside Diameter:

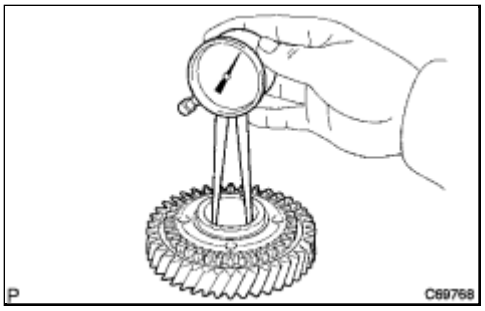

STANDARD INSIDE DIAMETER MM (IN.)	MAXIMUM INSIDE DIAMETER MM (IN.)
34.981 to 34.997 (1.3772 to 1.3778)	34.997 (1.3778)

If the inside diameter exceeds the maximum, replace the 5th gear.

7. INSPECT NO. 5 SYNCHRONIZER RING MIDDLE

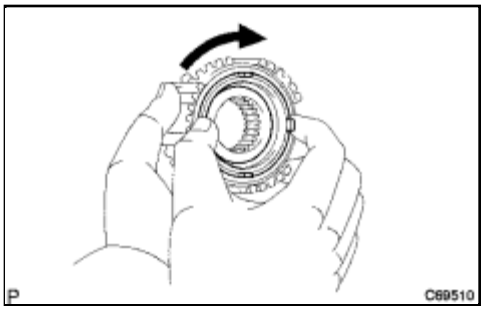

(a) Check that the No. 5 synchronizer ring middle rotates smoothly.

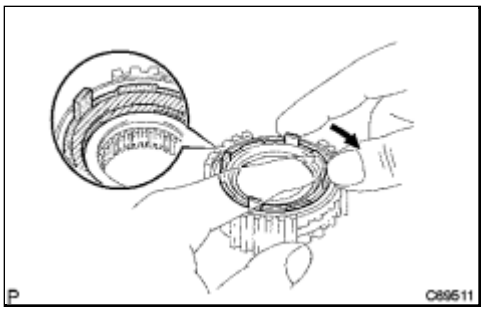

(b) Check that the No. 5 synchronizer ring middle does not rotate while pushing it against the No. 3 clutch hub.

Last Modified: 3-10-2010	6.4 K	**From:** 200901
Model Year: 2010	**Model:** Corolla	**Doc ID:** RM000001B3F01WX
Title: C59 MANUAL TRANSMISSION / TRANSAXLE: OUTPUT SHAFT: COMPONENTS (2010 Corolla)		

COMPONENTS

ILLUSTRATION

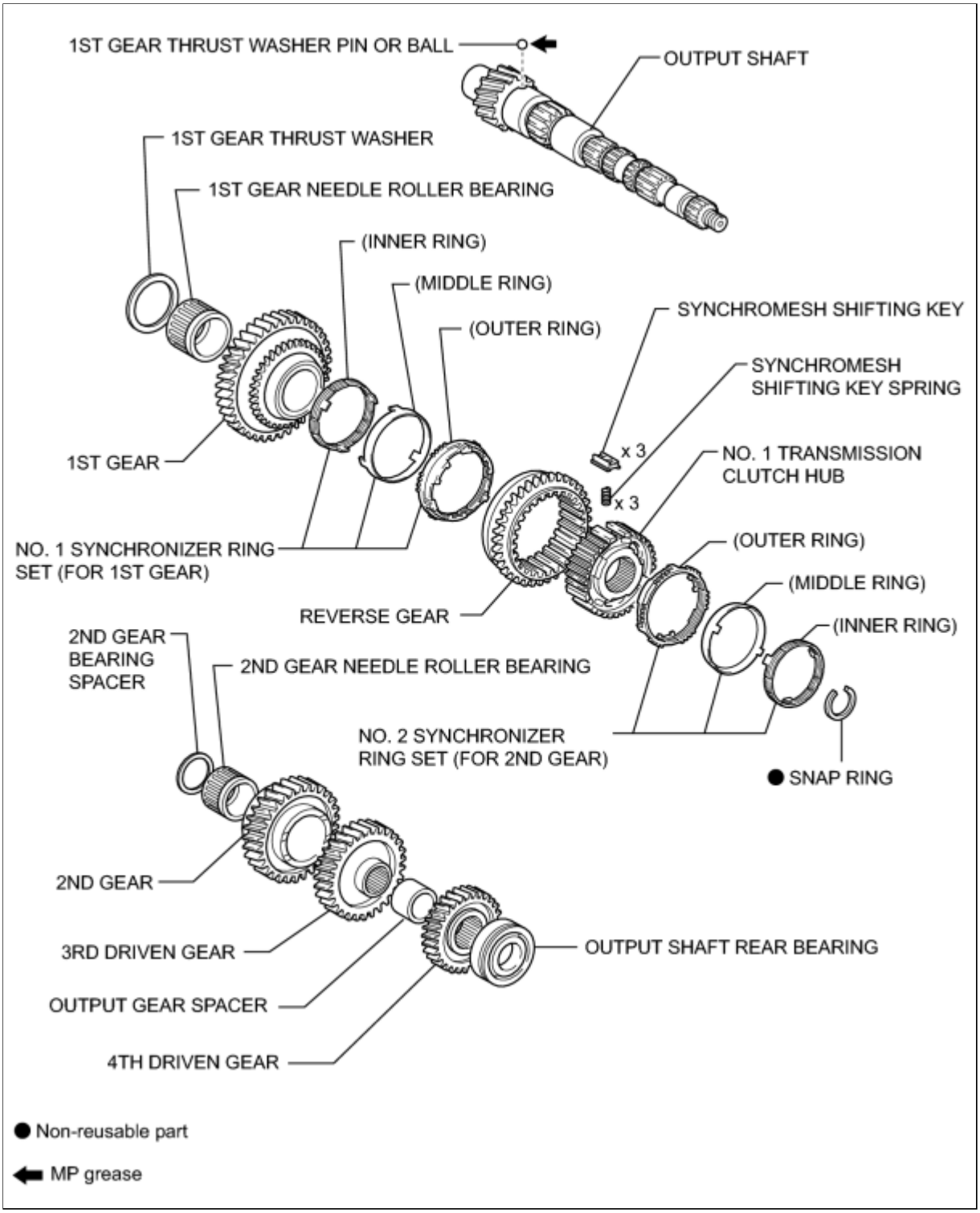
1ST GEAR THRUST WASHER PIN OR BALL
OUTPUT SHAFT
1ST GEAR THRUST WASHER
1ST GEAR NEEDLE ROLLER BEARING
(INNER RING)
(MIDDLE RING)
(OUTER RING)
SYNCHROMESH SHIFTING KEY
SYNCHROMESH SHIFTING KEY SPRING
x 3
x 3
NO. 1 TRANSMISSION CLUTCH HUB
1ST GEAR
NO. 1 SYNCHRONIZER RING SET (FOR 1ST GEAR)
REVERSE GEAR
(OUTER RING)
(MIDDLE RING)
(INNER RING)
2ND GEAR BEARING SPACER
2ND GEAR NEEDLE ROLLER BEARING
NO. 2 SYNCHRONIZER RING SET (FOR 2ND GEAR)
● SNAP RING
2ND GEAR
3RD DRIVEN GEAR
OUTPUT SHAFT REAR BEARING
OUTPUT GEAR SPACER
4TH DRIVEN GEAR
● Non-reusable part
MP grease

Last Modified: 3-10-2010	6.4 A	**From:** 200901
Model Year: 2010	**Model:** Corolla	**Doc ID:** RM000001A0U01WX
Title: C59 MANUAL TRANSMISSION / TRANSAXLE: OUTPUT SHAFT: DISASSEMBLY (2010 Corolla)		

DISASSEMBLY

1. INSPECT 1ST GEAR THRUST CLEARANCE

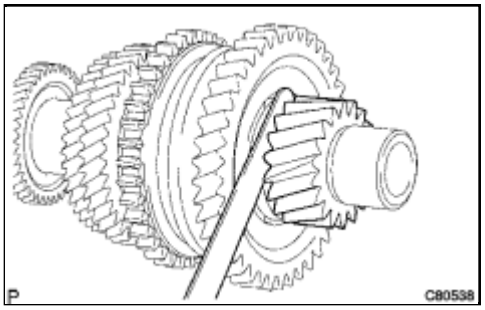

(a) Using a feeler gauge, measure the 1st gear thrust clearance.

Standard clearance:
0.10 to 0.40 mm (0.00394 to 0.0157 in.)
Maximum clearance:
0.40 mm (0.0157 in.)

If the clearance exceeds the maximum, replace the 1st gear thrust washer, 1st gear or No. 1 transmission clutch hub.

2. INSPECT 2ND GEAR THRUST CLEARANCE

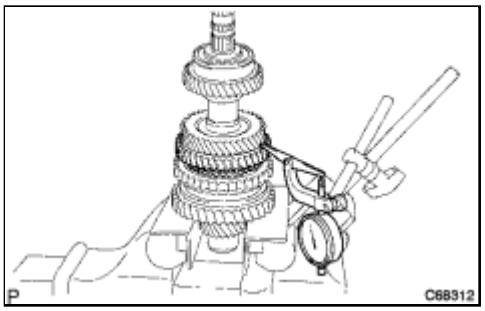

(a) Using a dial indicator, measure the 2nd gear thrust clearance.

Standard clearance:
0.10 to 0.55 mm (0.00394 to 0.0217 in.)
Maximum clearance:
0.55 mm (0.0217 in.)

If the clearance exceeds the maximum, replace the No. 1 transmission clutch hub, 2nd gear or 3rd driven gear.

3. INSPECT 1ST GEAR RADIAL CLEARANCE

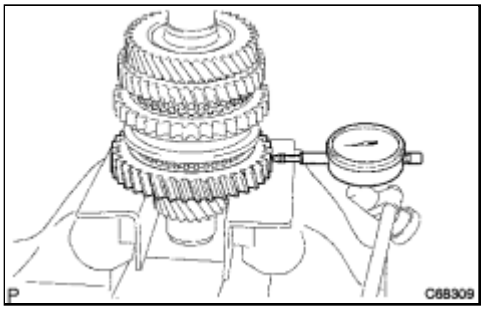

(a) Using a dial indicator, measure the 1st gear radial clearance.

Standard clearance:
NSK made bearing
0.015 to 0.056 mm (0.000591 to 0.00220 in.)
JTEKT made bearing
0.015 to 0.058 mm (0.000591 to 0.00228 in.)
Maximum clearance:
NSK made bearing
0.056 mm (0.00220 in.)
JTEKT made bearing

0.058 mm (0.00228 in.)

If the clearance exceeds the maximum, replace the 1st gear, 1st gear needle roller bearing or output shaft.

4. INSPECT 2ND GEAR RADIAL CLEARANCE

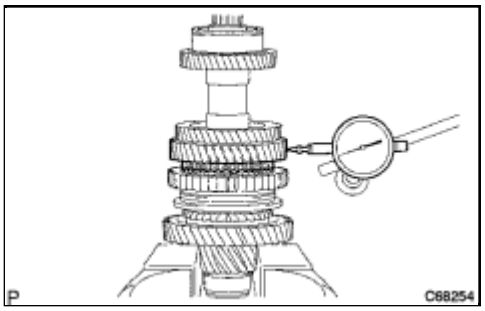

(a) Using a dial indicator, measure the 2nd gear radial clearance.

Standard clearance:

NSK made bearing

0.015 to 0.056 mm (0.000591 to 0.00220 in.)

JTEKT made bearing

0.015 to 0.058 mm (0.000591 to 0.00228 in.)

Maximum clearance:

NSK made bearing

0.056 mm (0.00220 in.)

JTEKT made bearing

0.058 mm (0.00228 in.)

If the clearance exceeds the maximum, replace the 2nd gear, 2nd gear needle roller bearing or input shaft.

5. REMOVE 4TH DRIVEN GEAR

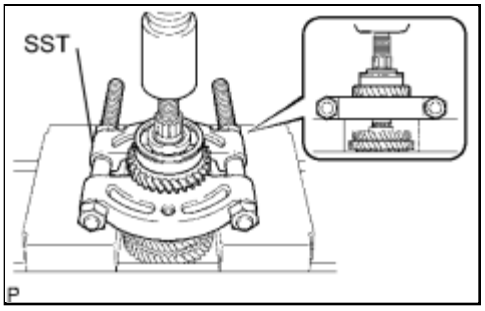

(a) Using SST and a press, remove the output shaft rear bearing and 4th driven gear from the output shaft.

SST: 09950-00020

6. REMOVE OUTPUT GEAR SPACER

(a) Remove the output gear spacer from the output shaft.

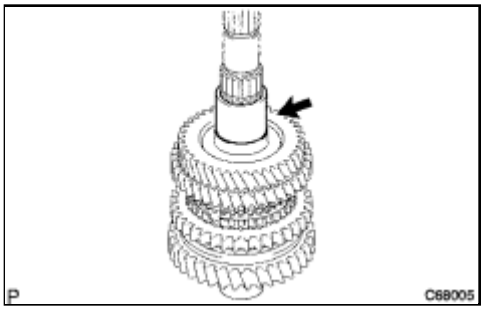

7. REMOVE 2ND GEAR

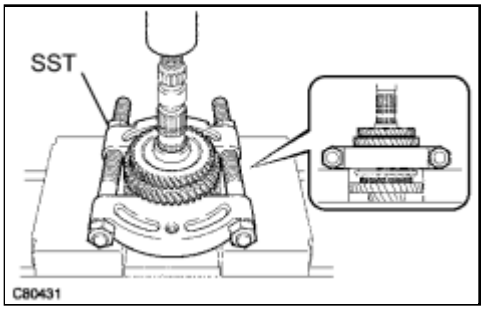

(a) Using SST and a press, remove the 3rd driven gear with the 2nd gear from the output shaft.

SST: 09950-00020

8. REMOVE 2ND GEAR NEEDLE ROLLER BEARING

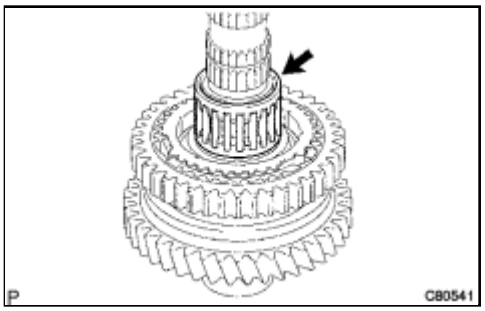

(a) Remove the 2nd gear needle roller bearing and 2nd gear bearing spacer from the output shaft.

9. REMOVE NO. 2 SYNCHRONIZER RING SET (FOR 2ND GEAR)

(a) Remove the No. 2 synchronizer ring set from the output shaft.

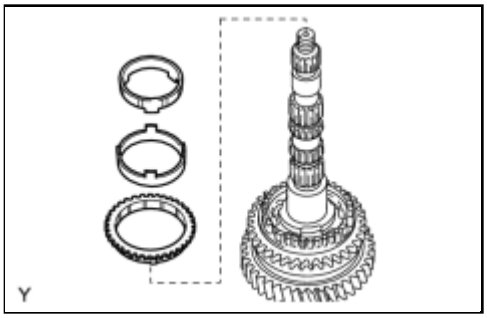

10. REMOVE 1ST GEAR

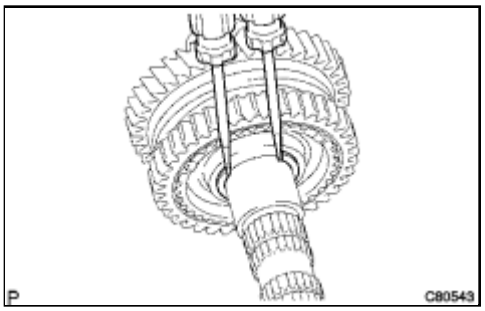

(a) Using 2 screwdrivers and a hammer, remove the No. 1 clutch hub shaft snap ring from the output shaft.

HINT:

Use a piece of cloth to keep the shaft snap ring from flying off.

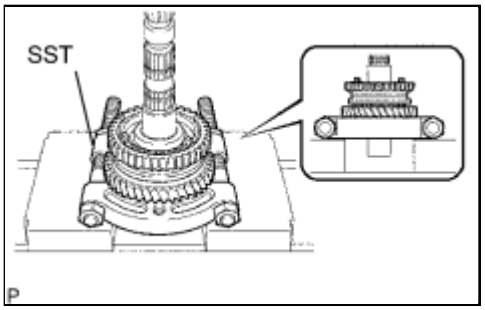

(b) Using SST and a press, remove the No. 1 clutch hub assembly and 1st gear from the output shaft.

SST: 09950-00020

NOTICE:

- Do not tighten SST excessively.
- Support the output shaft by hand to prevent it from dropping off.

11. REMOVE NO. 1 SYNCHRONIZER RING SET (FOR 1ST GEAR)

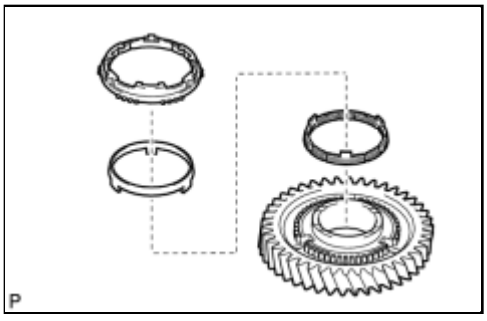

(a) Remove the No. 1 synchronizer ring set from the 1st gear.

12. REMOVE 1ST GEAR NEEDLE ROLLER BEARING

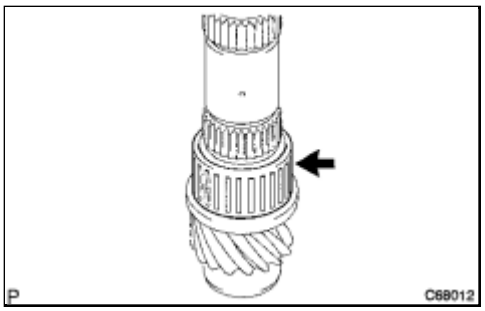

(a) Remove the 1st gear needle roller bearing from the output shaft.

13. REMOVE 1ST GEAR THRUST WASHER

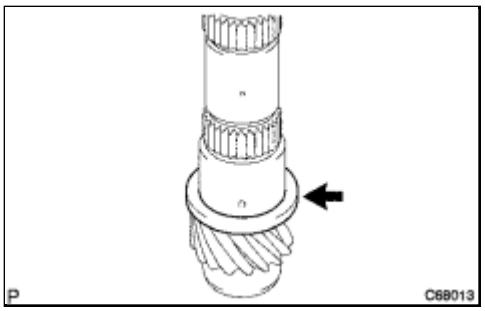

(a) Remove the 1st gear thrust washer from the output shaft.

14. REMOVE 1ST GEAR THRUST WASHER PIN OR BALL

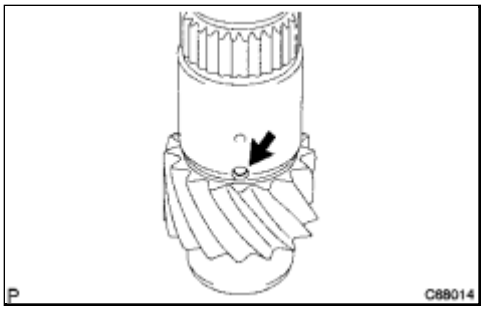

(a) Remove the 1st gear thrust washer pin or ball from the output shaft.

15. REMOVE REVERSE GEAR

(a) Remove the reverse gear, 3 synchromesh shifting keys, and 3 synchromesh shifting key springs from the No. 1 transmission clutch hub.

NOTICE:

Use a piece of cloth to keep the shifting keys and shifting key springs from flying off.

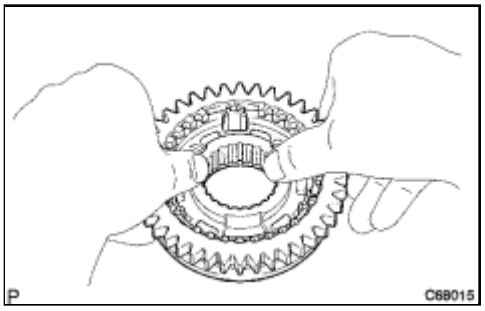
P
C68015

Last Modified: 3-10-2010	6.4 G	**From:** 200901
Model Year: 2010	**Model:** Corolla	**Doc ID:** RM000001A0T01WX
Title: C59 MANUAL TRANSMISSION / TRANSAXLE: OUTPUT SHAFT: INSPECTION (2010 Corolla)		

INSPECTION

1. INSPECT OUTPUT SHAFT

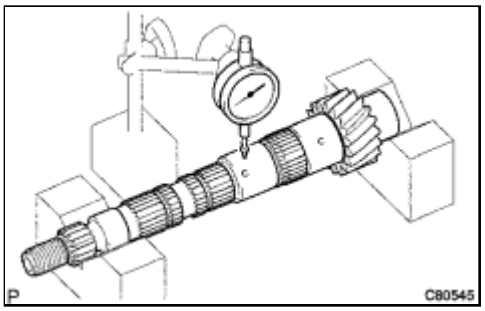

(a) Using a dial indicator and 2 V-blocks, check the output shaft runout.

Maximum runout:
0.015 mm (0.000591 in.)

If the runout exceeds the maximum, replace the output shaft.

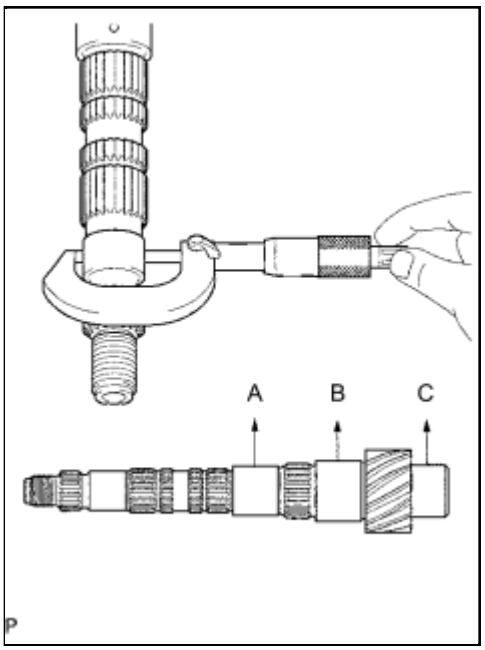

(b) Using a micrometer, measure the outer diameter of the output shaft journal surface at the locations indicated.

Standard outer diameter:

Part A

31.985 to 32.000 mm (1.2592 to 1.2598 in.)

Part B

37.985 to 38.000 mm (1.4955 to 1.4961 in.)

Part C

32.985 to 33.000 mm (1.2986 to 1.2992 in.)

If any of the outer diameters are less than the minimum, replace the output shaft.

2. INSPECT 2ND GEAR

(a) Using a cylinder gauge, measure the inside diameter of the 2nd gear.

Standard inside diameter:
38.015 to 38.031 mm (1.4967 to 1.4972 in.)
Maximum inside diameter:

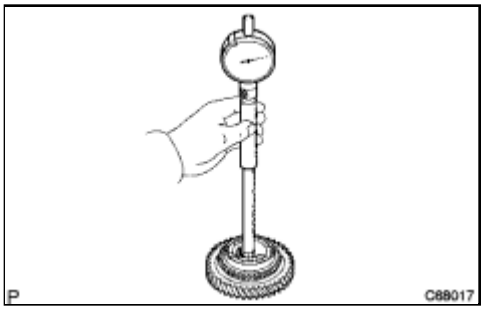

38.031 mm (1.4972 in.)

If the inside diameter exceeds the maximum, replace the 1st gear.

3. INSPECT 1ST GEAR

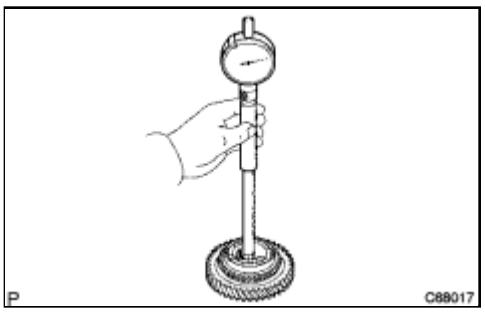

(a) Using a cylinder gauge, measure the inside diameter of the 1st gear.

Standard inside diameter:
44.015 to 44.031 mm (1.7328 to 1.7335 in.)
Maximum inside diameter:
44.031 mm (1.7335 in.)

If the inside diameter exceeds the maximum, replace the 1st gear.

4. INSPECT 1ST GEAR THRUST WASHER

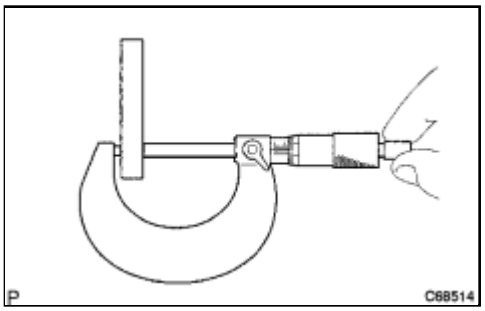

(a) Using a micrometer, measure the 1st gear thrust washer.

Standard thickness:
5.975 to 6.025 mm (0.2352 to 0.2372 in.)
Minimum thickness:
5.975 mm (0.2352 in.)

If the thickness is less than the minimum, replace the 1st gear thrust washer.

5. INSPECT NO. 2 SYNCHRONIZER RING SET (FOR 2ND GEAR)

(a) Coat the 2nd gear cone and No. 2 synchronizer ring set (inner ring, middle ring, and outer ring) with gear oil.

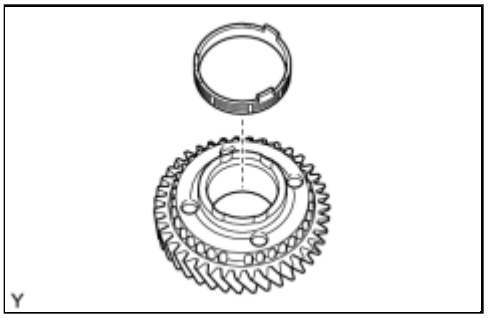

(b) Install the inner ring onto the 2nd gear.

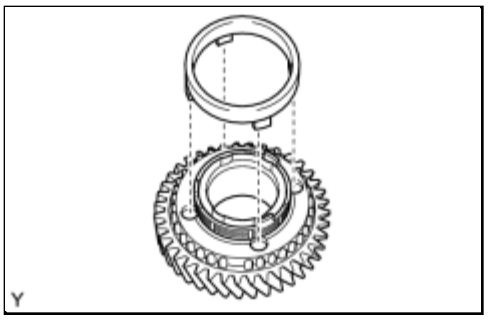

(c) Install the middle ring onto the 2nd gear.

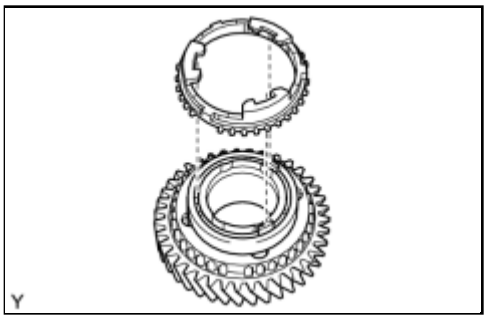

(d) Install the outer ring onto the 2nd gear.

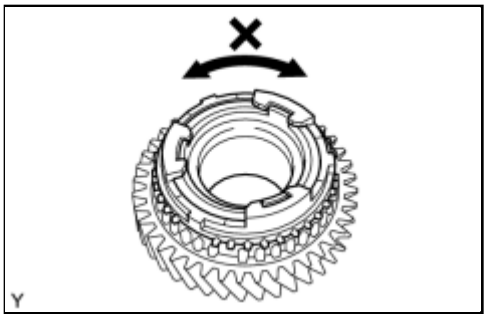

(e) Check for wear and damage.

(f) Turn the synchronizer ring set in one direction while pushing it against the 2nd gear cone.

(g) Check that the ring set locks.

If the synchronizer ring set does not lock, replace the synchronizer ring set.

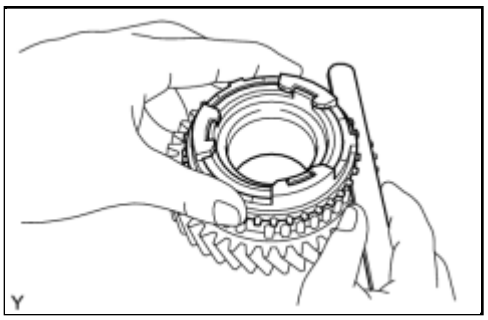

(h) Using a feeler gauge, measure the clearance between the synchronizer ring and the gear spline end.

Standard clearance:
0.60 to 1.40 mm (0.0236 to 0.0551 in.)
Minimum clearance:
0.60 mm (0.0236 in.)

If the clearance is less than the minimum, replace the synchronizer ring set.

6. INSPECT NO. 1 SYNCHRONIZER RING SET (FOR 1ST GEAR)

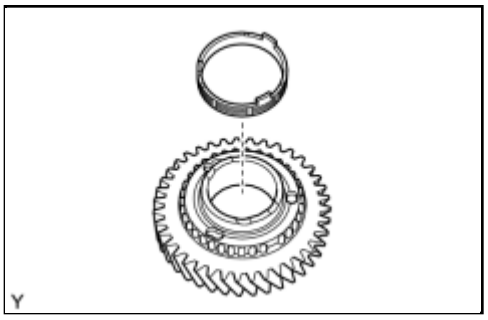

(a) Coat the 1st gear cone and No. 1 synchronizer ring set (inner ring, middle ring, and outer ring) with gear oil.

(b) Install the inner ring onto the 1st gear.

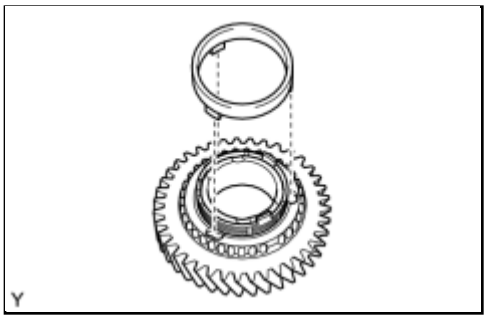

(c) Install the middle ring onto the 1st gear.

(d) Install the outer ring onto the 1st gear.

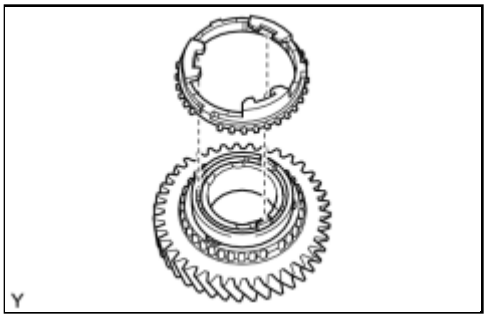

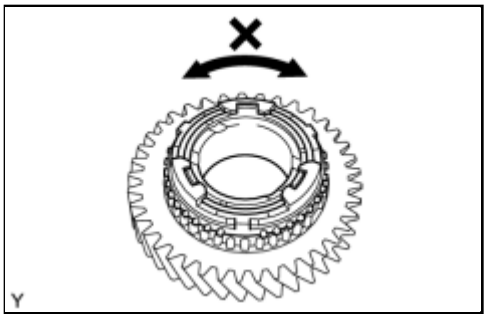

(e) Check for wear and damage.

(f) Turn the synchronizer ring set in one direction while pushing it against the 1st gear cone.

(g) Check that the ring set locks.

If the synchronizer ring set does not lock, replace the synchronizer ring set.

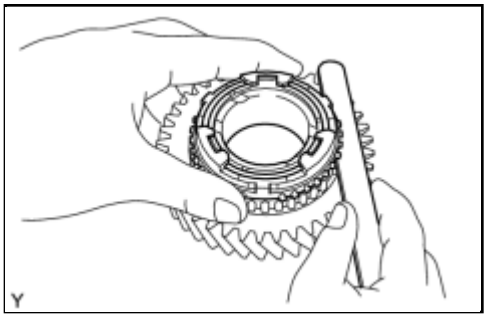

(h) Using a feeler gauge, measure the clearance between the synchronizer ring and the gear spline end.

Standard clearance:
0.60 to 1.40 mm (0.0236 to 0.0551 in.)
Minimum clearance:
0.60 mm (0.0236 in.)

If the clearance is less than the minimum, replace the synchronizer ring set.

7. INSPECT REVERSE GEAR

(a) Using a vernier caliper, measure the width of the reverse gear groove (A) and the thickness of the claw part on the reverse shift fork (B), and calculate the clearance.

Standard clearance (A - B):
0.15 to 0.35 mm (0.00591 to 0.0138 in.)

If the clearance is out of specification, replace the reverse gear and reverse shift fork.

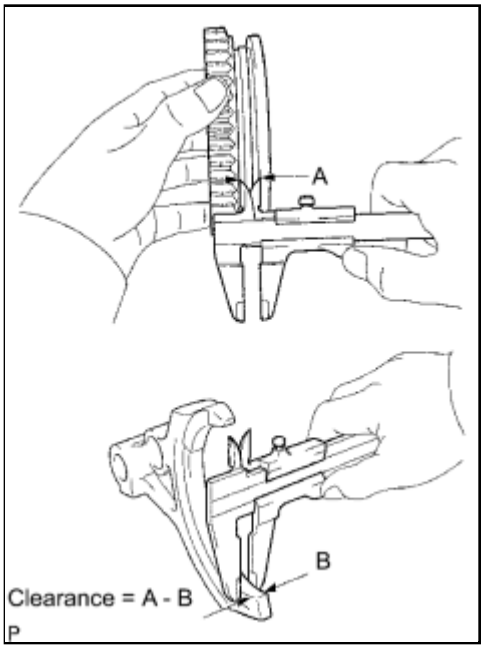

8. INSPECT NO. 1 TRANSMISSION CLUTCH HUB

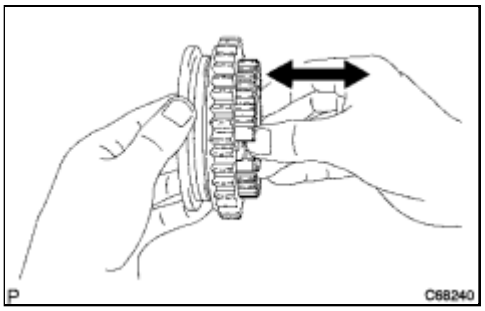

(a) Check that the No. 1 transmission clutch hub and reverse gear slide smoothly.

(b) Check that the edges of the reverse gear spline gear are not worn down.

Last Modified: 3-10-2010	6.4 A	**From:** 200901
Model Year: 2010	**Model:** Corolla	**Doc ID:** RM000001A0V01WX
Title: C59 MANUAL TRANSMISSION / TRANSAXLE: OUTPUT SHAFT: REASSEMBLY (2010 Corolla)		

REASSEMBLY

1. INSTALL REVERSE GEAR

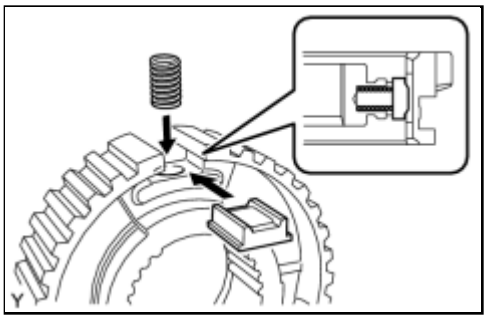

(a) Coat the reverse gear and No. 1 transmission clutch hub with gear oil.

(b) Install the 3 synchromesh shifting key springs and 3 synchromesh keys to the No. 1 transmission clutch hub.

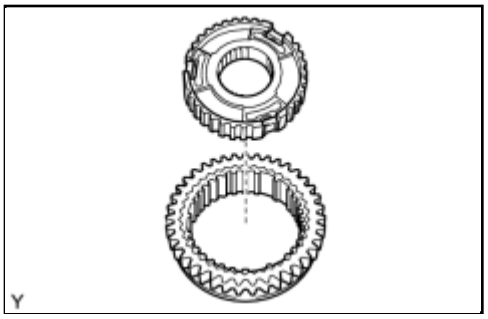

(c) Install the reverse gear onto the No. 1 transmission clutch hub assembly.

NOTICE:

Position the reverse gear and No. 1 transmission clutch hub correctly as shown in the illustration.

2. INSTALL 1ST GEAR THRUST WASHER PIN OR BALL

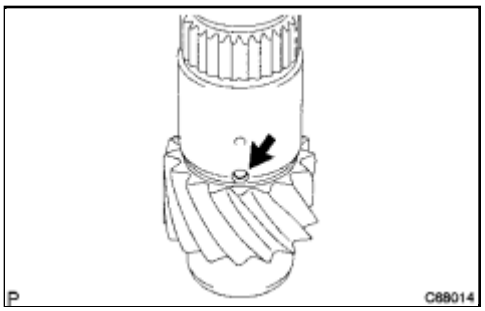

(a) Coat the 1st gear thrust washer pin or ball with MP grease and install it onto the output shaft.

3. INSTALL 1ST GEAR THRUST WASHER

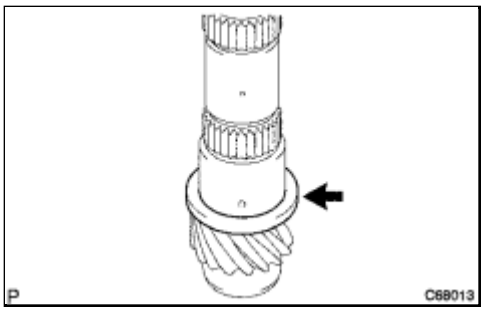

(a) Coat the 1st gear thrust washer with gear oil and install it onto the output shaft.

4. INSTALL 1ST GEAR NEEDLE ROLLER BEARING

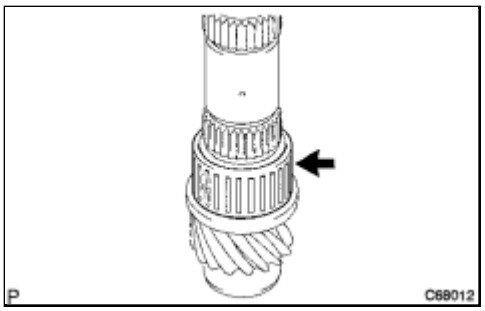

(a) Coat the 1st gear needle roller bearing with gear oil and install it onto the output shaft.

5. INSTALL NO. 1 SYNCHRONIZER RING SET (FOR 1ST GEAR)

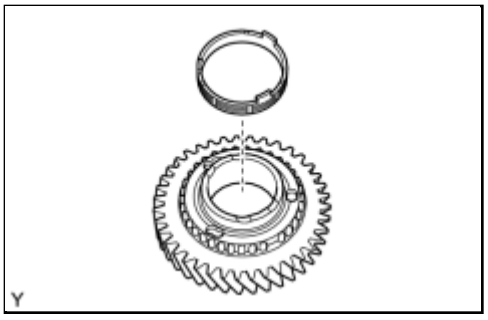

(a) Coat the 1st gear cone and No. 1 synchronizer ring set (inner ring, middle ring, and outer ring) with gear oil.

(b) Install the inner ring onto the 1st gear.

(c) Install the middle ring onto the 1st gear.

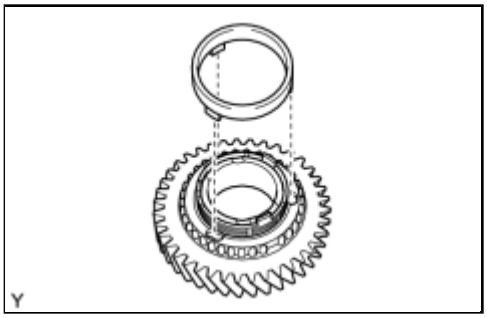

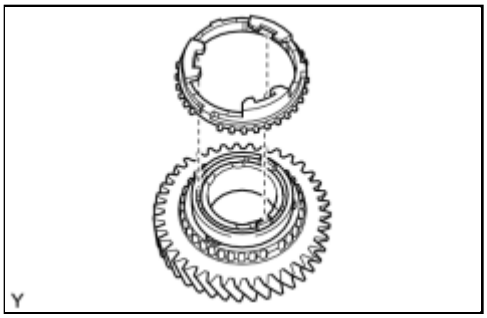

(d) Install the outer ring onto the 1st gear.

6. INSTALL 1ST GEAR

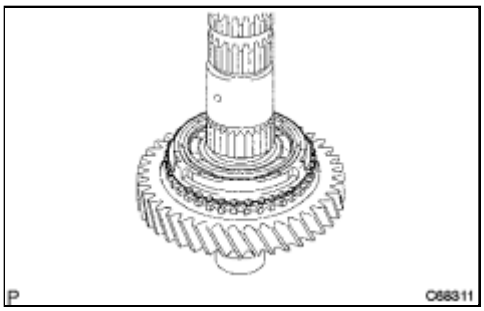

(a) Coat the 1st gear with gear oil and install it onto the output shaft.

7. INSTALL NO. 1 TRANSMISSION CLUTCH HUB

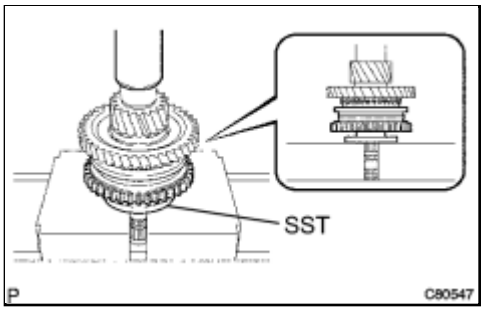

(a) Using SST and a press, install the No. 1 transmission clutch hub onto the output shaft.

SST: 09316-60011

09316-00031

HINT:

- Make sure that the 1st gear can be turned.
- While checking that the 1st gear thrust washer pin or ball is inserted into the groove of the 1st gear thrust washer, press and fit the No. 1 clutch hub.

(b) Select a snap ring that will allow minimum axial play.

Standard clearance:
0.1 mm (0.00394 in.) or less
Snap Ring Thickness:

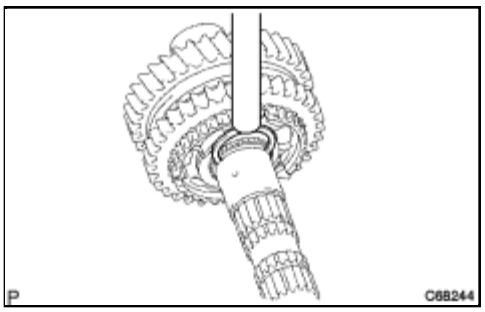

MARK	THICKNESS MM (IN.)	MARK	THICKNESS MM (IN.)
A	2.50 (0.0984)	D	2.68 (0.1055)
B	2.56 (0.1008)	E	2.74 (0.1079)
C	2.62 (0.1031)	F	2.80 (0.1102)

(c) Using a brass bar and a hammer, install the snap ring onto the output shaft.

NOTICE:

Do not damage the journal surface of the output shaft.

8. INSTALL 2ND GEAR NEEDLE ROLLER BEARING

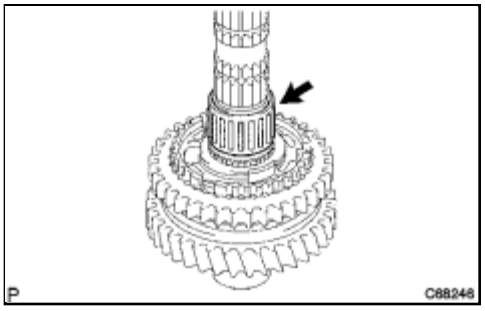

(a) Coat the 2nd gear needle roller bearing and 2nd gear bearing spacer with gear oil, and install them onto the output shaft.

9. INSTALL NO. 2 SYNCHRONIZER RING SET (FOR 2ND GEAR)

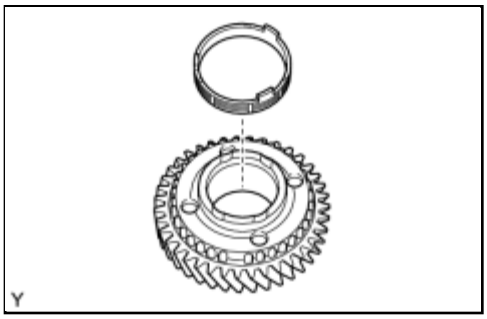

(a) Coat the 2nd gear cone and No. 2 synchronizer ring set (inner ring, middle ring, and outer ring) with gear oil.

(b) Install the inner ring onto the 2nd gear.

(c) Install the middle ring onto the 2nd gear.

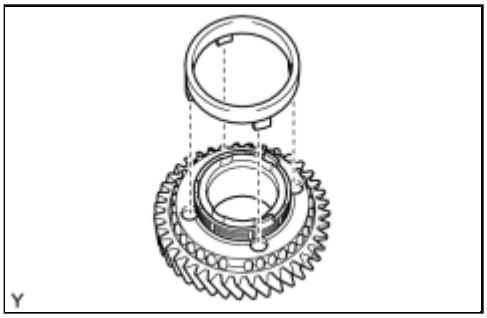

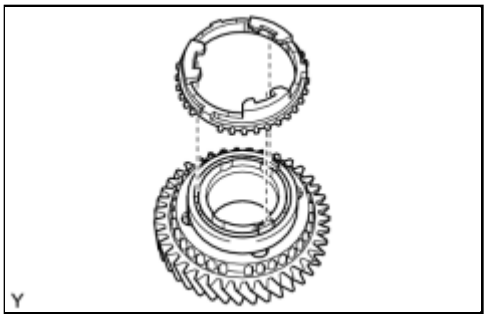

(d) Install the outer ring onto the 2nd gear.

10. INSTALL 2ND GEAR

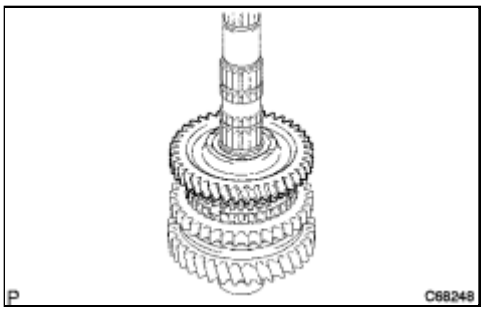

(a) Coat the 2nd gear with gear oil and install it onto the output shaft.

11. INSTALL 3RD DRIVEN GEAR

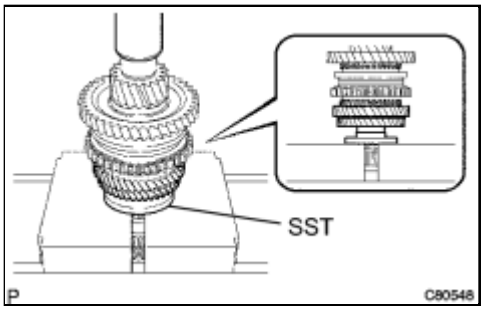

(a) Using SST and a press, install the 3rd driven gear onto the output shaft.

SST: 09316-60011

09316-00031

12. INSTALL OUTPUT GEAR SPACER

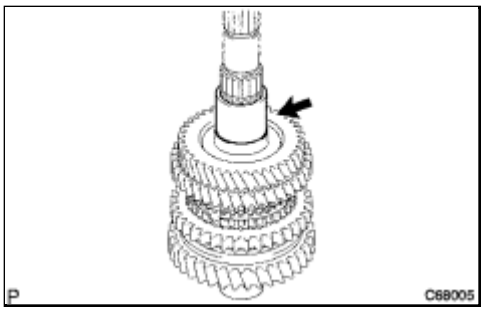

(a) Install the output gear spacer onto the output shaft.

13. INSTALL 4TH DRIVEN GEAR

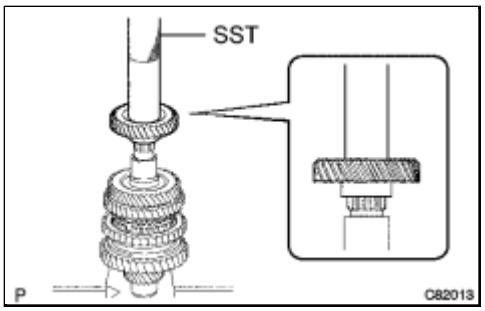

(a) Using SST and a press, install the 4th driven gear onto the output shaft.

SST: 09612-22011

14. INSTALL OUTPUT SHAFT REAR BEARING

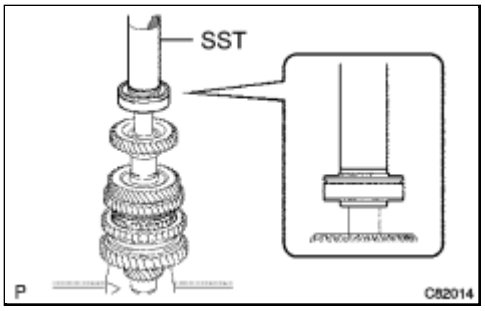

(a) Using SST and a press, install the output shaft rear bearing onto the output shaft.

SST: 09612-22011

15. INSPECT 2ND GEAR RADIAL CLEARANCE

(a) Using a dial indicator, measure the 2nd gear radial clearance.

Standard clearance:

NSK made bearing

0.015 to 0.056 mm (0.000591 to 0.00220 in.)

JTEKT made bearing

0.015 to 0.058 mm (0.000591 to 0.00228 in.)

Maximum clearance:

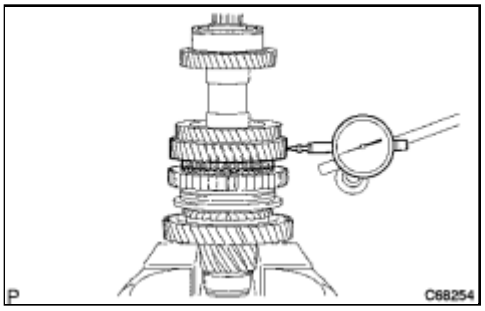

NSK made bearing

0.056 mm (0.00220 in.)

JTEKT made bearing

0.058 mm (0.00228 in.)

If the clearance exceeds the maximum, replace the 2nd gear, 2nd gear needle roller bearing or output shaft.

16. INSPECT 1ST GEAR RADIAL CLEARANCE

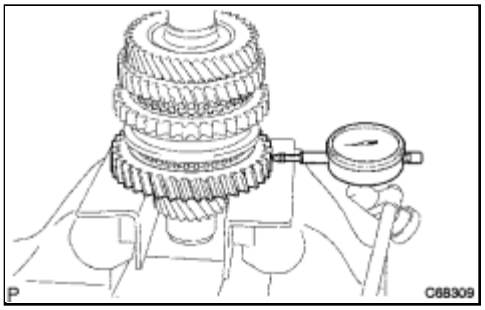

(a) Using a dial indicator, measure the 1st gear radial clearance.

Standard clearance:

NSK made bearing

0.015 to 0.056 mm (0.000591 to 0.00220 in.)

JTEKT made bearing

0.015 to 0.058 mm (0.000591 to 0.00228 in.)

Maximum clearance:

NSK made bearing

0.056 mm (0.00220 in.)

JTEKT made bearing

0.058 mm (0.00228 in.)

If the clearance exceeds the maximum, replace the 1st gear, 1st gear needle roller bearing or input shaft.

17. INSPECT 2ND GEAR THRUST CLEARANCE

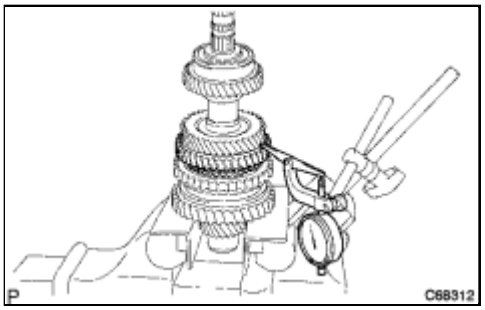

(a) Using a dial indicator, measure the 2nd gear thrust clearance.

Standard clearance:

0.10 to 0.55 mm (0.00394 to 0.0217 in.)

Maximum clearance:

0.55 mm (0.0217 in.)

If the clearance exceeds the maximum, replace the No. 1 transmission clutch hub, 2nd gear or 3rd driven gear.

18. INSPECT 1ST GEAR THRUST CLEARANCE

(a) Using a feeler gauge, measure the 1st gear thrust clearance.

Standard clearance:

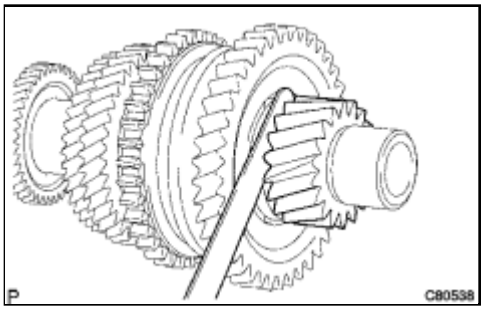

0.10 to 0.40 mm (0.00394 to 0.0157 in.)

Maximum clearance:

0.40 mm (0.0157 in.)

If the clearance exceeds the maximum, replace the 1st gear thrust washer, 1st gear or No. 1 transmission clutch hub.

Last Modified: 3-10-2010	6.4 K	**From:** 200901
Model Year: 2010	**Model:** Corolla	**Doc ID:** RM000000Z1Z00DX
Title: E351 MANUAL TRANSMISSION / TRANSAXLE: OUTPUT SHAFT: COMPONENTS (2010 Corolla)		

COMPONENTS

ILLUSTRATION

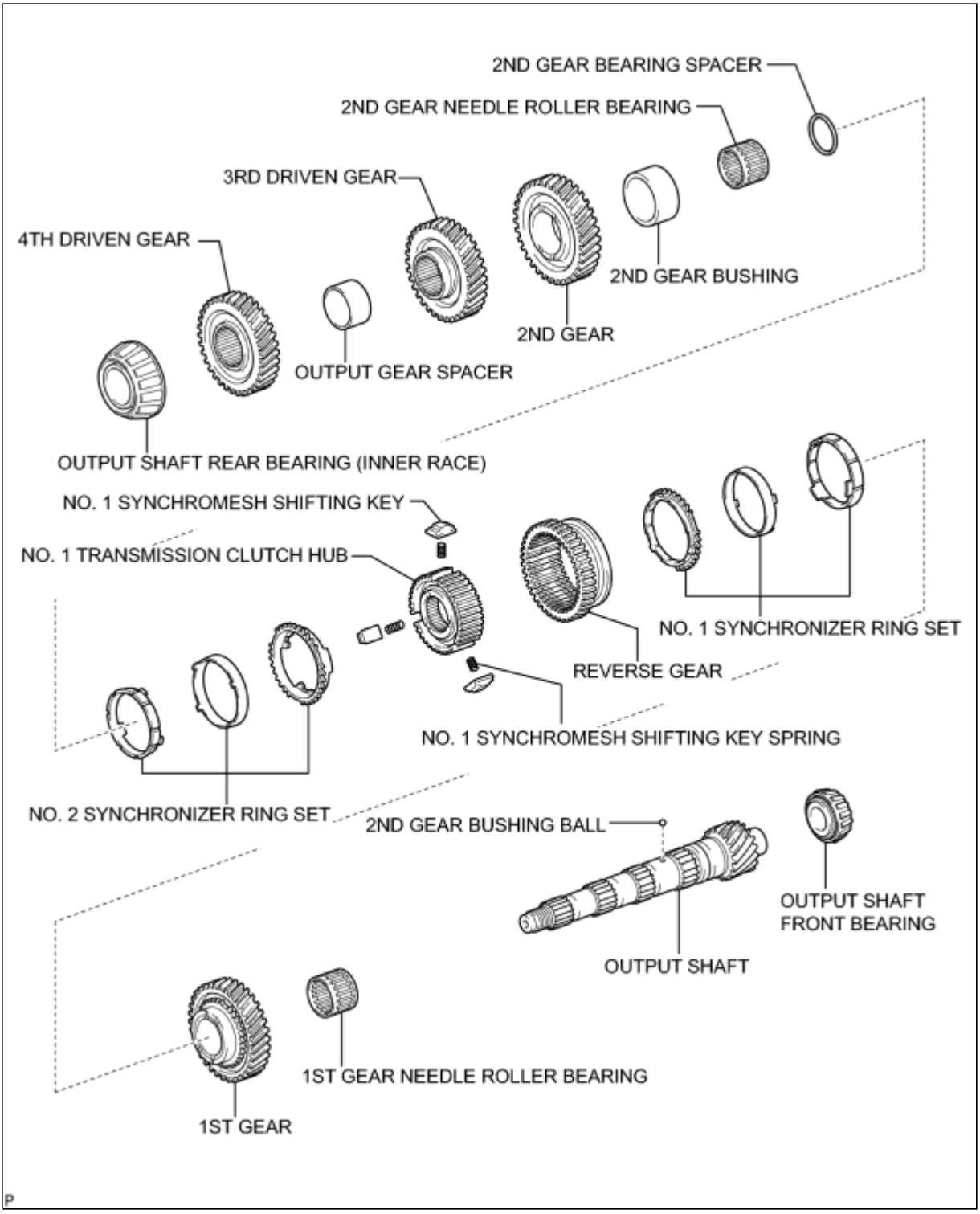
2ND GEAR BEARING SPACER
2ND GEAR NEEDLE ROLLER BEARING
3RD DRIVEN GEAR
4TH DRIVEN GEAR
2ND GEAR BUSHING
2ND GEAR
OUTPUT GEAR SPACER
OUTPUT SHAFT REAR BEARING (INNER RACE)
NO. 1 SYNCHROMESH SHIFTING KEY
NO. 1 TRANSMISSION CLUTCH HUB
NO. 1 SYNCHRONIZER RING SET
REVERSE GEAR
NO. 1 SYNCHROMESH SHIFTING KEY SPRING
NO. 2 SYNCHRONIZER RING SET
2ND GEAR BUSHING BALL
OUTPUT SHAFT FRONT BEARING
OUTPUT SHAFT
1ST GEAR NEEDLE ROLLER BEARING
1ST GEAR

Last Modified: 3-10-2010	6.4 A	**From:** 200901
Model Year: 2010	**Model:** Corolla	**Doc ID:** RM000000Z2000DX
Title: E351 MANUAL TRANSMISSION / TRANSAXLE: OUTPUT SHAFT: DISASSEMBLY (2010 Corolla)		

DISASSEMBLY

1. REMOVE 4TH DRIVEN GEAR

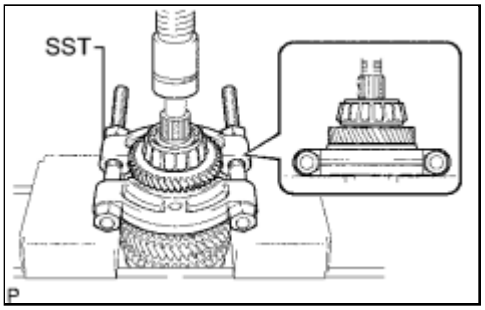

(a) Using SST and a press, remove the output shaft rear bearing (inner race) and 4th driven gear.

SST: 09950-00020

2. REMOVE OUTPUT GEAR SPACER

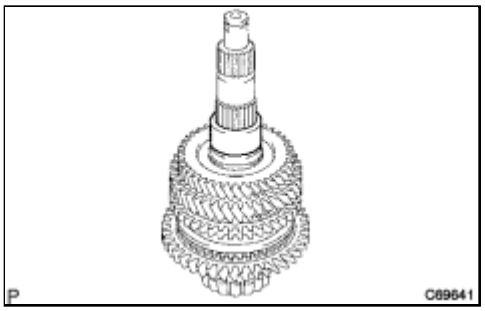

(a) Remove the output gear spacer from the output shaft.

3. REMOVE 2ND GEAR

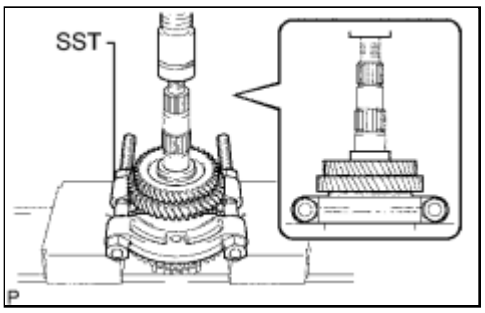

(a) Using SST and a press, remove the 3rd driven gear and 2nd gear from the output shaft.

SST: 09950-00020

4. REMOVE NO. 2 SYNCHRONIZER RING SET

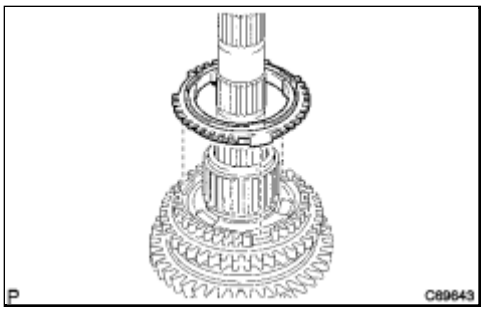

(a) Remove the No. 2 synchronizer ring set from the No. 1 transmission clutch hub.

5. REMOVE 2ND GEAR NEEDLE ROLLER BEARING

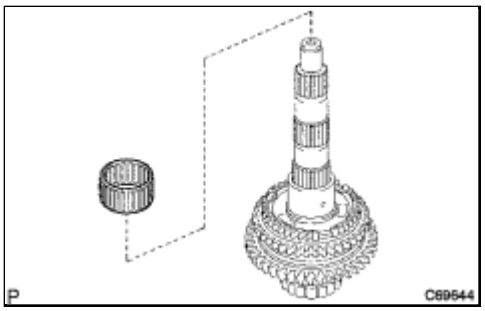

(a) Remove the 2nd gear needle roller bearing from the output shaft.

6. REMOVE 2ND GEAR BEARING SPACER

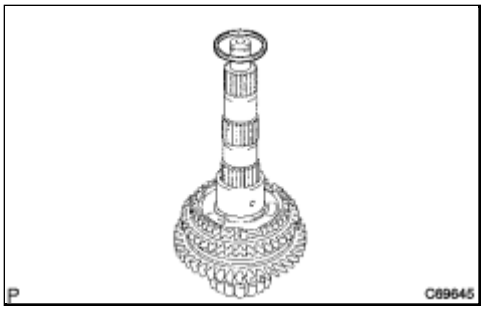

(a) Remove the 2nd gear bearing spacer from the output shaft.

7. REMOVE 2ND GEAR BUSHING

(a) Remove the 2nd gear bushing from the output shaft.

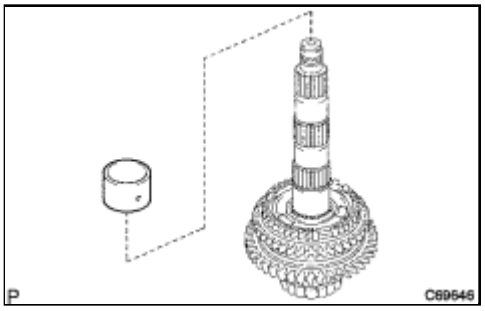

8. REMOVE 2ND GEAR BUSHING BALL

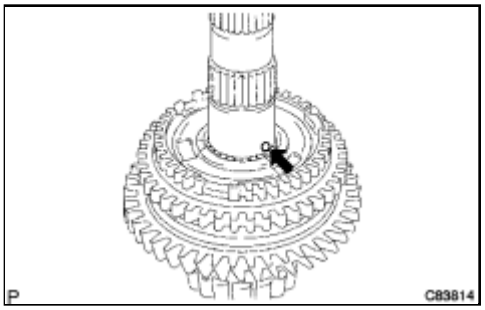

(a) Using a magnetic pick-up tool, remove the 2nd gear bushing ball from the output shaft.

9. REMOVE 1ST GEAR

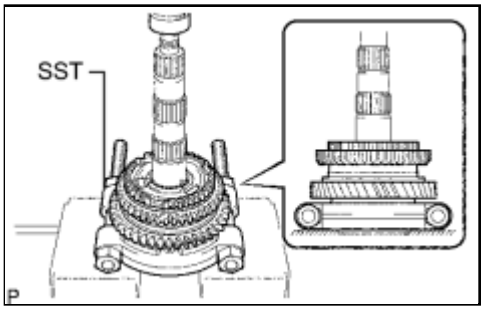

(a) Using SST and a press, remove the No. 1 transmission clutch hub and 1st gear from the output shaft.

SST: 09950-00020

10. REMOVE NO. 1 SYNCHRONIZER RING SET

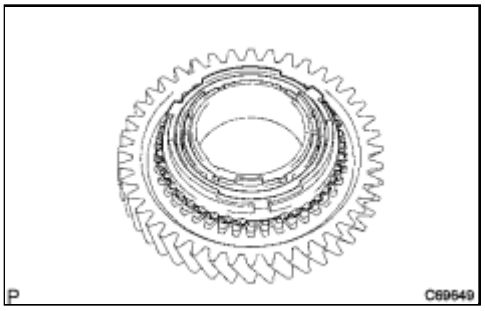

(a) Remove the No. 1 synchronizer ring set from the 1st gear.

11. REMOVE 1ST GEAR NEEDLE ROLLER BEARING

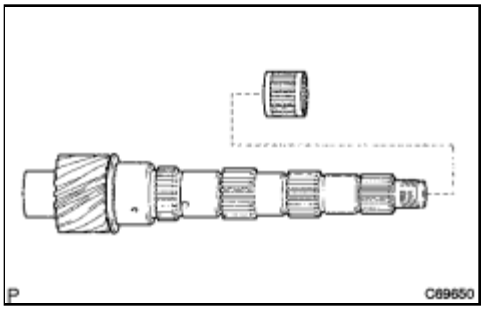

(a) Remove the 1st gear needle roller bearing from the output shaft.

12. REMOVE OUTPUT SHAFT FRONT BEARING

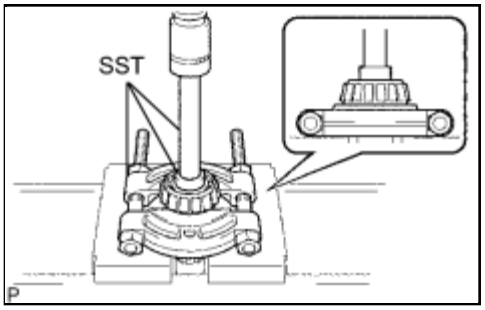

(a) Using SST and a press, remove the output shaft front bearing (inner race) from the output shaft.

SST: 09950-00020

SST: 09950-60010

09951-00320

SST: 09950-70010

09951-07150

NOTICE:

Do not overtighten SST.

13. REMOVE REVERSE GEAR

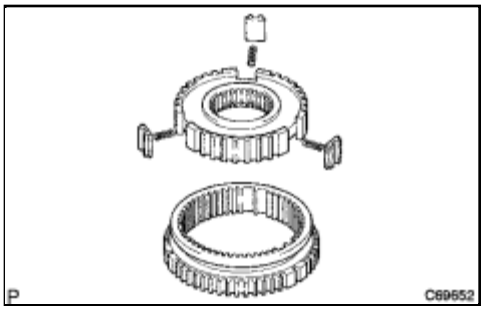

(a) Remove the No. 1 transmission clutch hub, 3 No. 1 synchromesh shifting keys, and 3 No. 1 synchromesh shifting key springs from the reverse gear.

Last Modified: 3-10-2010	6.4 G	**From:** 200901
Model Year: 2010	**Model:** Corolla	**Doc ID:** RM000000Z1Y00DX
Title: E351 MANUAL TRANSMISSION / TRANSAXLE: OUTPUT SHAFT: INSPECTION (2010 Corolla)		

INSPECTION

1. INSPECT 1ST GEAR THRUST CLEARANCE

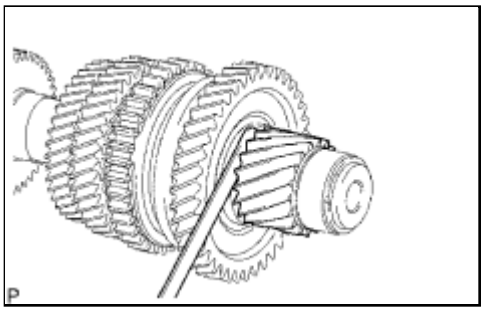

(a) Using a feeler gauge, measure the 1st gear thrust clearance.

Standard clearance:
0.25 to 0.40 mm (0.00984 to 0.0157 in.)

If the clearance is out of specification, replace the 1st gear, or No. 1 transmission clutch hub.

2. INSPECT 2ND GEAR THRUST CLEARANCE

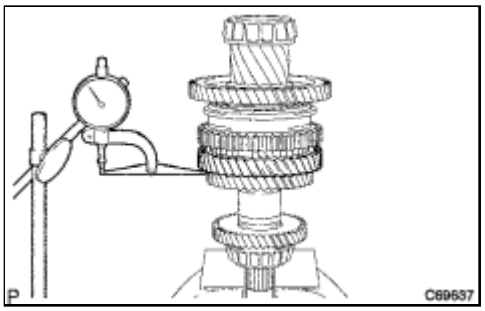

(a) Using a dial indicator, measure the 2nd gear thrust clearance.

Standard clearance:
0.10 to 0.35 mm (0.00394 to 0.0138 in.)

If the clearance is out of specification, replace the No. 1 transmission clutch hub, 2nd gear, or 3rd driven gear.

3. INSPECT 1ST GEAR RADIAL CLEARANCE

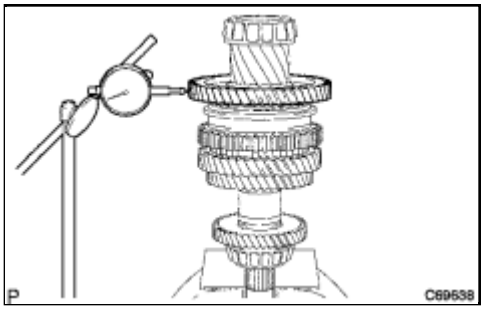

(a) Using a dial indicator, measure the 1st gear radial clearance.

Standard Clearance:

BEARING	STANDARD CLEARANCE MM (IN.)
KOYO made	0.009 to 0.053 (0.000354 to 0.00209)

NSK made	0.009 to 0.051 (0.000354 to 0.00201)

If the clearance is out of specification, replace the 1st gear and 1st gear needle roller bearing.

4. INSPECT 2ND GEAR RADIAL CLEARANCE

(a) Using a dial indicator, measure the 2nd gear radial clearance.

Standard Clearance:

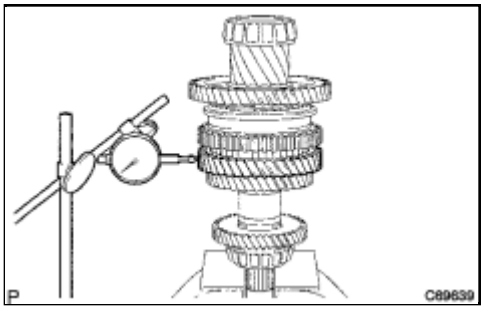

BEARING	STANDARD CLEARANCE MM (IN.)
KOYO made	0.009 to 0.053 (0.000354 to 0.00209)
NSK made	0.009 to 0.051 (0.000354 to 0.00201)

If the clearance is out of specification, replace the 2nd gear and 2nd gear needle roller bearing.

5. INSPECT OUTPUT SHAFT

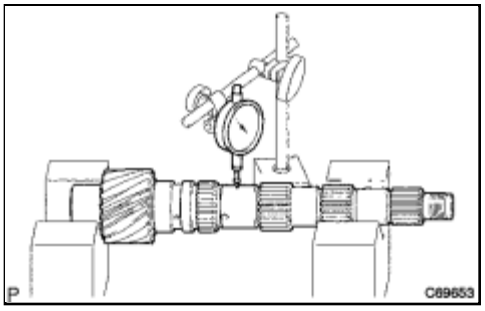

(a) Using V-blocks and a dial indicator, inspect the shaft for runout.

Maximum runout:
0.03 mm (0.00118 in.)

If runout exceeds the maximum, replace the output shaft.

(b) Using a micrometer, measure the outside diameter of the output shaft journal surface.

Outside Diameter:

PART	STANDARD OUTSIDE	MINIMUM OUTSIDE

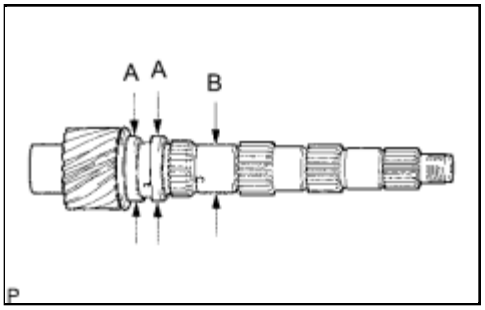

	DIAMETER MM (IN.)	DIAMETER MM (IN.)
A	37.610 to 37.626 (1.4807 to 1.4813)	37.610 (1.4807)
B	34.502 to 34.512 (1.3583 to 1.3587)	34.502 (1.3583)

If the outside diameter is less than the minimum, replace the output shaft.

6. INSPECT 2ND GEAR

(a) Using a cylinder gauge, measure the inside diameter of the 2nd gear.

Inside Diameter:

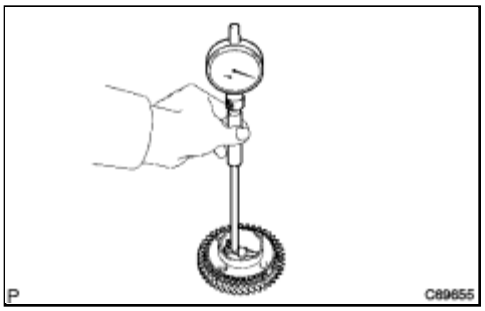

STANDARD INSIDE DIAMETER MM (IN.)	MAXIMUM INSIDE DIAMETER MM (IN.)
50.009 to 50.025 (1.9689 to 1.9695)	50.025 (1.9695)

If the inside diameter exceeds the maximum, replace the 2nd gear.

7. INSPECT 1ST GEAR

(a) Using a cylinder gauge, measure the inside diameter of the 1st gear.

Inside Diameter:

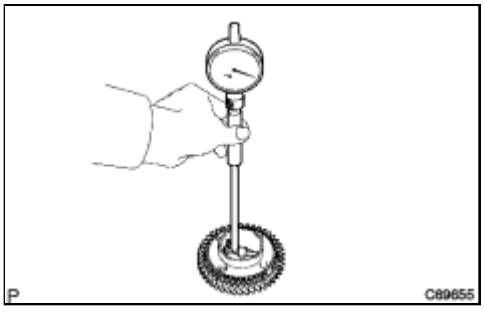

STANDARD INSIDE DIAMETER MM (IN.)	MAXIMUM INSIDE DIAMETER MM (IN.)
51.009 to 51.025 (2.0082 to 2.0089)	51.025 (2.0089)

If the inside diameter exceeds the maximum, replace the 1st gear.

8. INSPECT NO. 2 SYNCHRONIZER RING SET

(a) Coat the 2nd gear cone with gear oil.

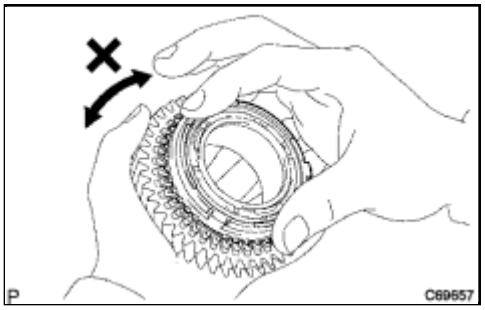

(b) Check for wear and damage.

(c) Turn the synchronizer ring set in one direction while pushing it against the 2nd gear cone.

(d) Check that the ring locks.

If the synchronizer ring set does not lock, replace the synchronizer ring set.

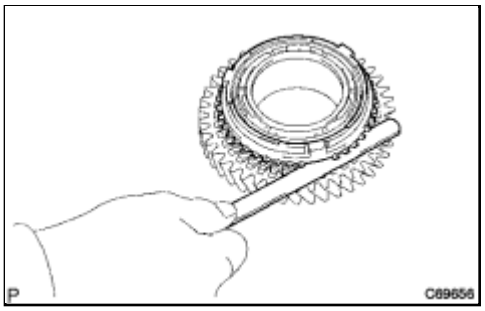

(e) Using a feeler gauge, measure the clearance between the synchronizer ring and the gear spline end.

Standard clearance:
0.70 to 1.45 mm (0.0276 to 0.0571 in.)

If the clearance is less than the minimum, replace the synchronizer ring set.

9. INSPECT NO. 1 SYNCHRONIZER RING SET

(a) Coat the 1st gear cone with gear oil.

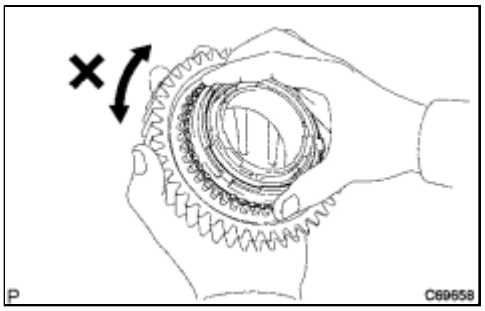

(b) Check for wear and damage.

(c) Turn the synchronizer ring set in one direction while pushing it against the 1st gear cone.

(d) Check that the ring set locks.

If the synchronizer ring set does not lock, replace the synchronizer ring set.

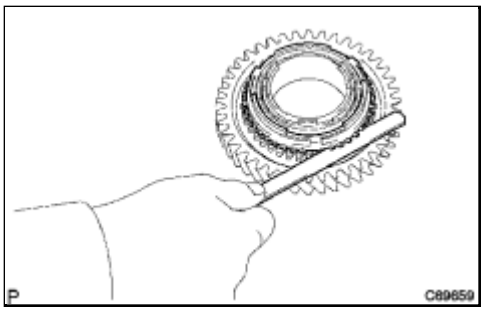

(e) Using a feeler gauge, measure the clearance between the synchronizer ring and the gear spline end.

Standard clearance:
0.70 to 1.45 mm (0.0276 to 0.0571 in.)

If the clearance is less than the minimum, replace the synchronizer ring set.

10. INSPECT REVERSE GEAR

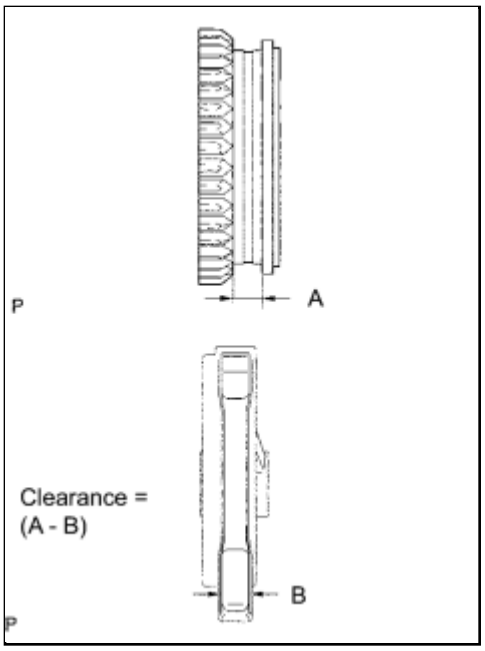

(a) Using a vernier caliper, measure the width of the reverse gear groove and thickness of the claw part on the No. 1 gear shift fork, and calculate the clearance.

Standard clearance:
0.15 to 0.35 mm (0.00591 to 0.0138 in.) {A - B}

If the clearance is out of specification, replace the reverse gear and No. 1 gear shift fork with new ones.

11. INSPECT NO. 1 TRANSMISSION CLUTCH HUB

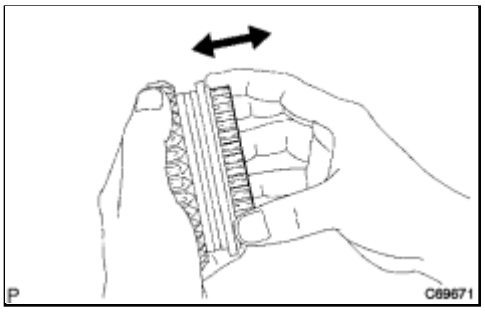

(a) Check the sliding condition between the No. 1 transmission clutch hub and the reverse gear.

(b) Check the tip of the spline gear on the sleeve of the reverse gear for wear.

If any defects are found, replace the transmission hub sleeve or the transmission clutch hub.

Last Modified: 3-10-2010	6.4 A	**From:** 200901
Model Year: 2010	**Model:** Corolla	**Doc ID:** RM000000Z2100DX
Title: E351 MANUAL TRANSMISSION / TRANSAXLE: OUTPUT SHAFT: REASSEMBLY (2010 Corolla)		

REASSEMBLY

1. INSTALL REVERSE GEAR

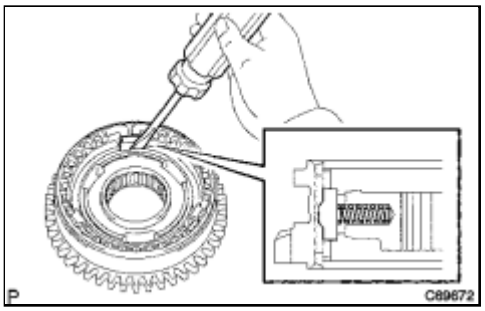

(a) Coat the reverse gear with gear oil.

(b) Install the 3 No. 1 synchromesh shifting key springs and No. 1 transmission clutch hub to the reverse gear.

NOTICE:

Assemble the reverse gear and the No. 1 transmission clutch hub in the correct direction.

(c) Using a screwdriver, install the 3 No. 1 synchromesh shifting keys to the reverse gear.

2. INSTALL OUTPUT SHAFT FRONT BEARING

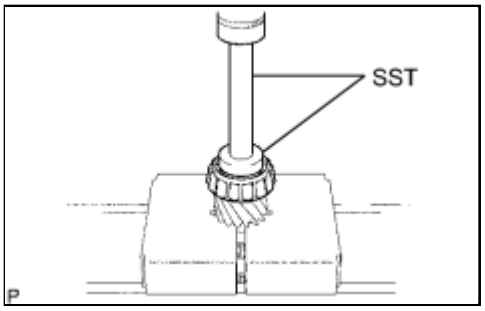

(a) Using SST and a press, install the output shaft front bearing (inner race) to the output shaft.

SST: 09950-60010

09951-00430

SST: 09950-70010

09951-07150

3. INSTALL NO. 1 SYNCHRONIZER RING SET

(a) Coat the No. 1 synchronizer ring set with gear oil and install it to the 1st gear.

NOTICE:

Align the No. 1 synchronizer ring set with the hole of the 1st gear.

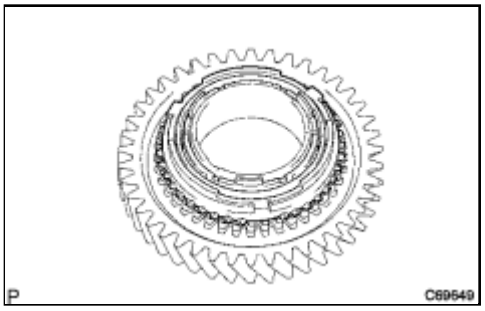

4. INSTALL 1ST GEAR NEEDLE ROLLER BEARING

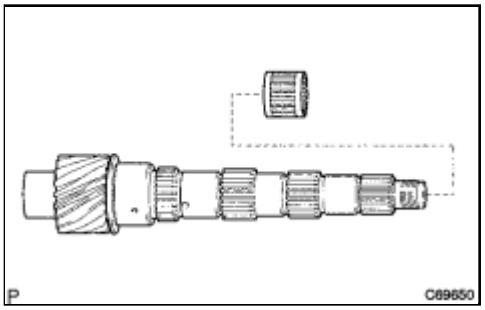

(a) Coat the 1st gear needle roller bearing with gear oil and install it to the output shaft.

5. INSTALL 1ST GEAR

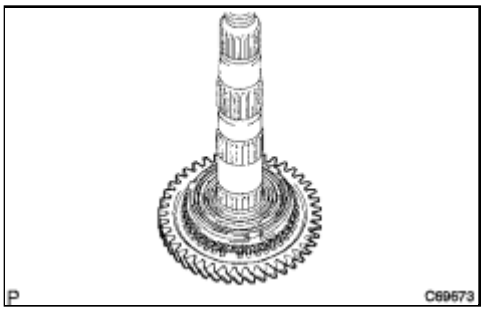

(a) Coat the 1st gear with gear oil and install it to the output shaft.

6. INSTALL NO. 1 TRANSMISSION CLUTCH HUB

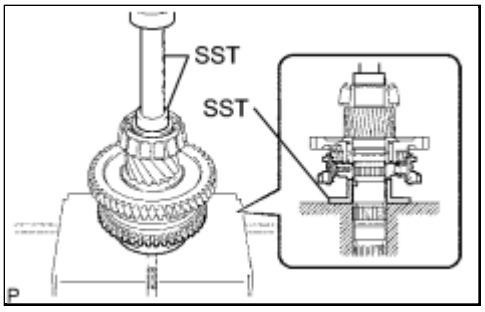

(a) Using SST and a press, install the No. 1 transmission clutch hub to the output shaft.

SST: 09316-60011

09316-00031

SST: 09950-60010

09951-00320

SST: 09950-70010

09951-07100

NOTICE:

- Align the No. 1 synchronizer ring with the No. 1 synchromesh shifting key.
- Make sure that the 1st gear rotates.

7. INSTALL 2ND GEAR BUSHING BALL

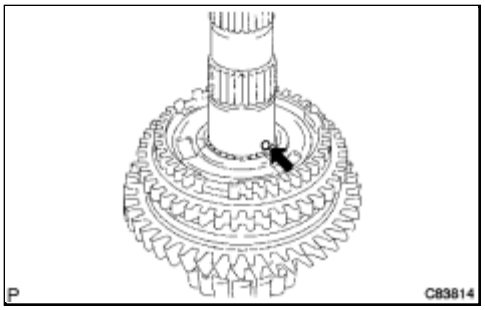

(a) Coat the gear bushing ball with MP grease, and install it to the output shaft.

8. INSTALL 2ND GEAR BUSHING

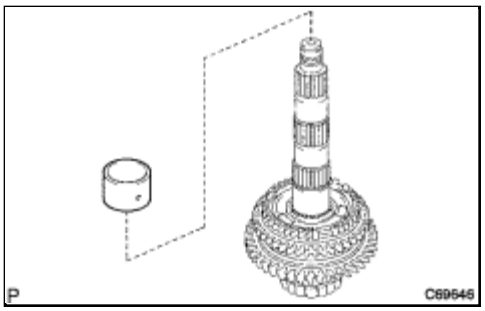

(a) Coat the 2nd gear bushing with gear oil and install it to the output shaft.

9. INSTALL 2ND GEAR BEARING SPACER

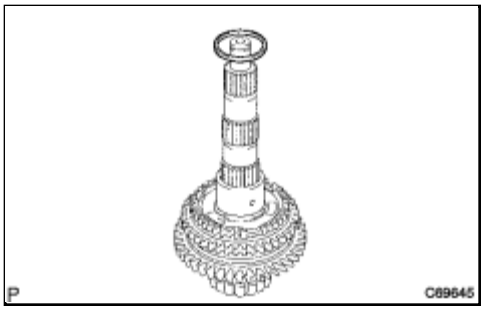

(a) Coat the 2nd gear bearing spacer with gear oil and install it to the output shaft.

10. INSTALL 2ND GEAR NEEDLE ROLLER BEARING

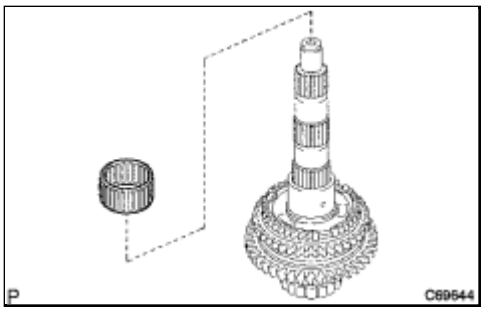

(a) Coat the 2nd gear needle roller bearing with gear oil and install it to the output shaft.

11. INSTALL NO. 2 SYNCHRONIZER RING SET

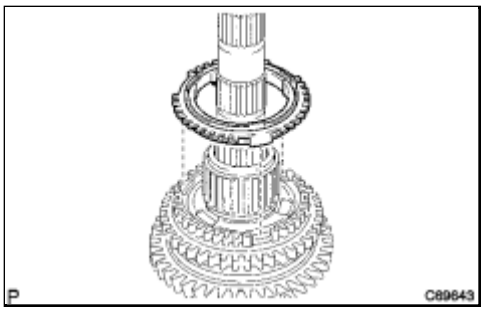

(a) Coat the No. 2 synchronizer ring set with gear oil and install it to the No. 1 transmission clutch hub.

NOTICE:

Align the key groove on the No. 2 synchronizer ring set with the No. 1 synchromesh shifting key.

12. INSTALL 2ND GEAR

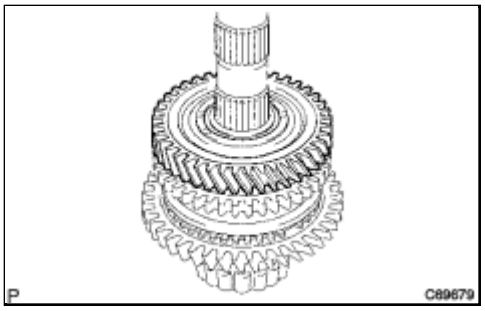

(a) Coat the 2nd gear with gear oil and install it to the output shaft.

13. INSTALL 3RD DRIVEN GEAR

(a) Using SST and a press, install the 3rd driven gear to the output shaft.

SST: 09608-00071

SST: 09950-60010

09951-00320

SST: 09950-70010

09951-07100

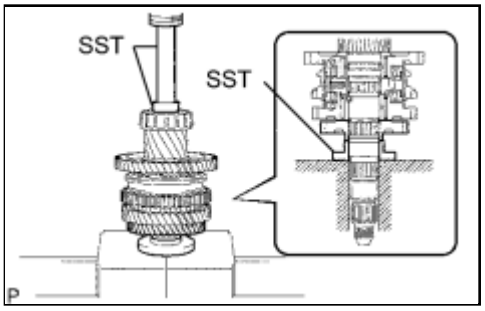

14. INSTALL OUTPUT GEAR SPACER

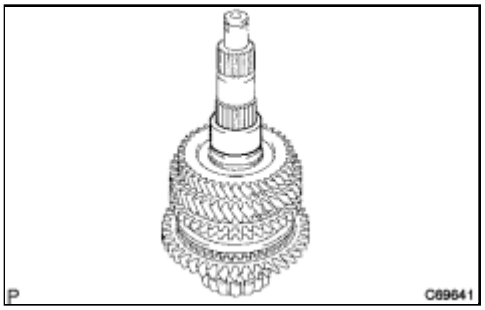

(a) Install the output gear spacer to the output shaft.

15. INSTALL 4TH DRIVEN GEAR

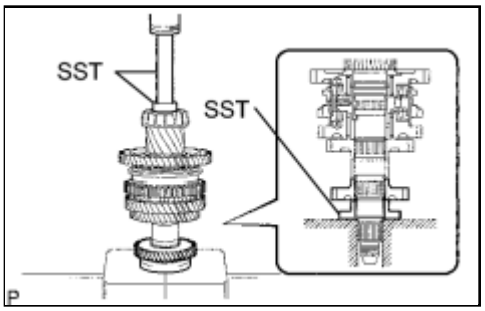

(a) Using SST and a press, install the 4th driven gear to the output shaft.

SST: 09608-00071
SST: 09950-60010
09951-00320
SST: 09950-70010
09951-07100

16. INSTALL OUTPUT SHAFT FRONT BEARING

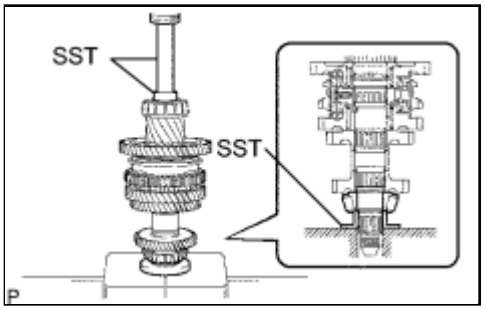

(a) Using SST and a press, install the output shaft front bearing (inner race) to the output shaft.

SST: 09506-30012
SST: 09950-60010
09951-00320
SST: 09950-70010
09951-07100

Last Modified: 3-10-2010	6.4 K	**From:** 200901
Model Year: 2010	**Model:** Corolla	**Doc ID:** RM000001B3I01RX
Title: C59 MANUAL TRANSMISSION / TRANSAXLE: SHIFT AND SELECT LEVER SHAFT: COMPONENTS (2010 Corolla)		

COMPONENTS

ILLUSTRATION

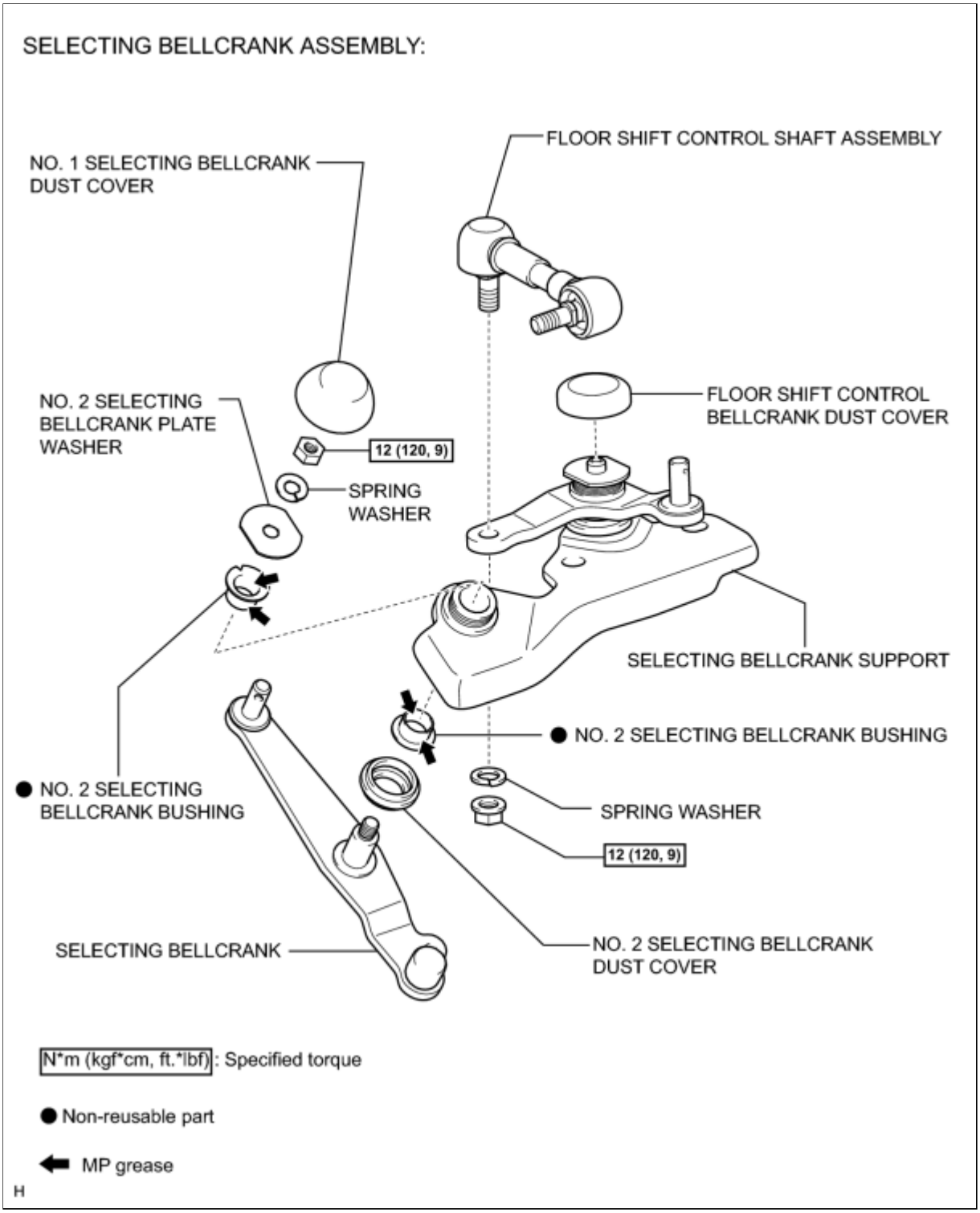

ILLUSTRATION

SHIFT AND SELECT LEVER SHAFT ASSEMBLY:

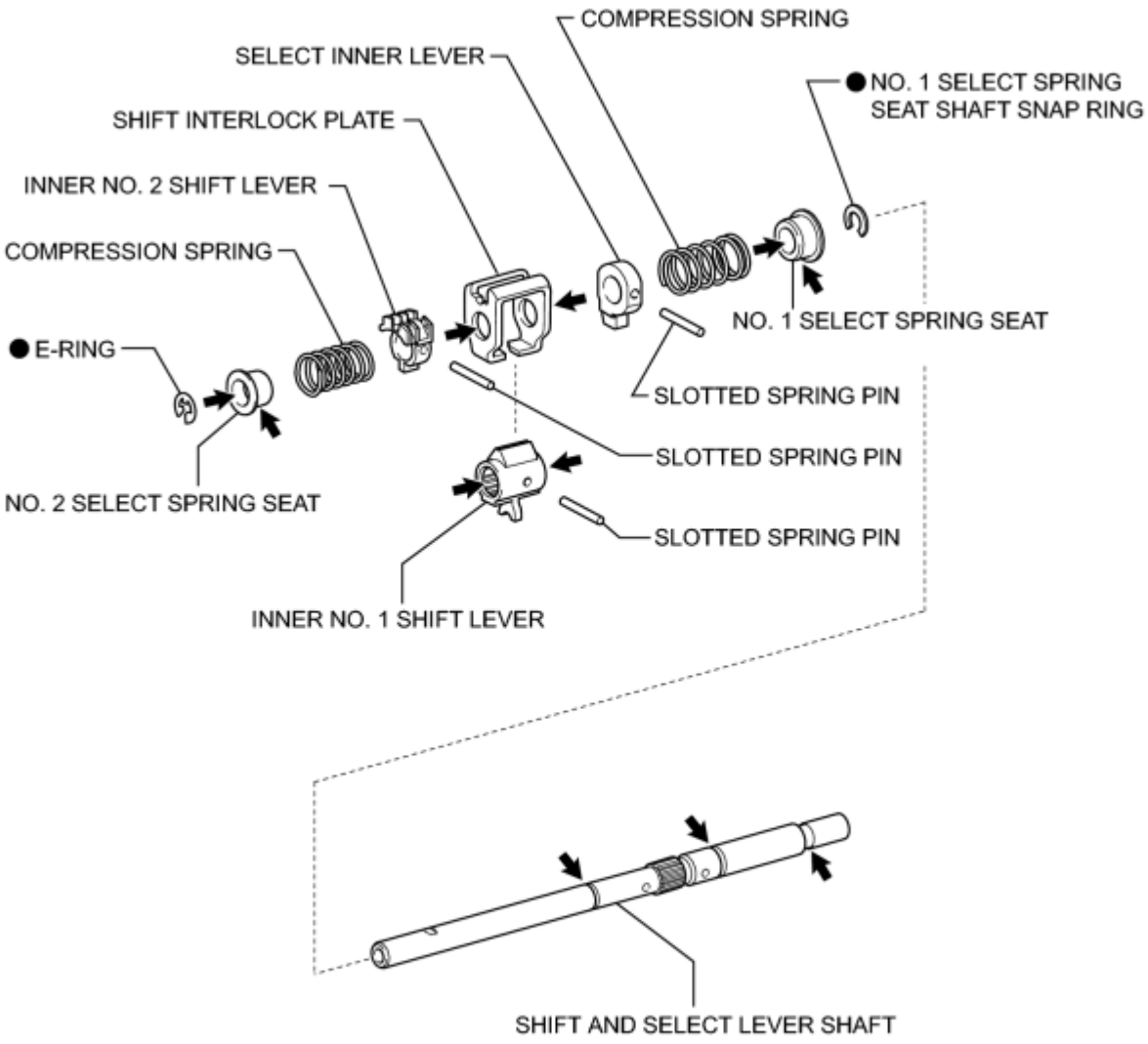

● Non-reusable part

⬅ MP grease

Y

Last Modified: 3-10-2010	6.4 A	**From:** 200901
Model Year: 2010	**Model:** Corolla	**Doc ID:** RM000001A1201RX
Title: C59 MANUAL TRANSMISSION / TRANSAXLE: SHIFT AND SELECT LEVER SHAFT: DISASSEMBLY (2010 Corolla)		

DISASSEMBLY

1. REMOVE FLOOR SHIFT CONTROL BELLCRANK DUST COVER

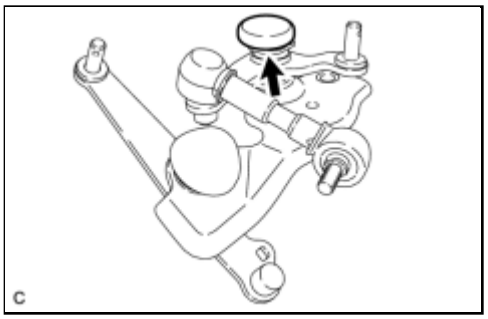

(a) Remove the floor shift control bellcrank dust cover from the selecting bellcrank assembly.

2. REMOVE NO. 1 SELECTING BELLCRANK DUST COVER

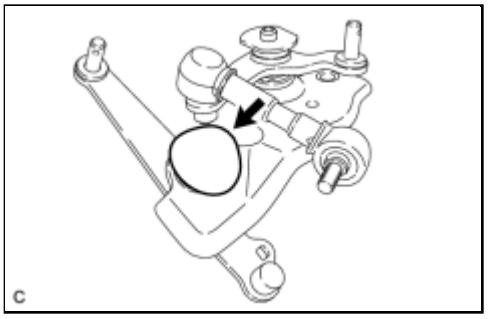

(a) Remove the No. 1 selecting bellcrank dust cover from the selecting bellcrank.

3. REMOVE NO. 2 SELECTING BELLCRANK PLATE WASHER

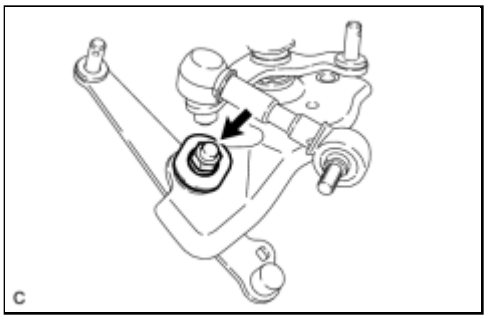

(a) Remove the nut, spring washer, and selecting bellcrank plate washer from the selecting bellcrank.

4. REMOVE SELECTING BELLCRANK

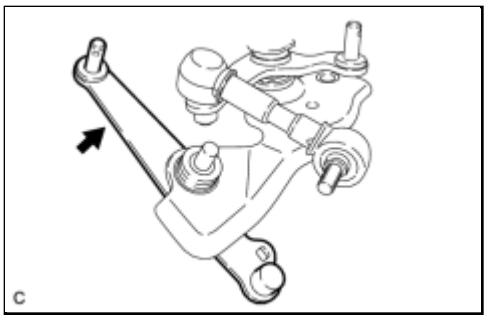

(a) Remove the selecting bellcrank from the selecting bellcrank support.

5. REMOVE NO. 2 SELECTING BELLCRANK DUST COVER

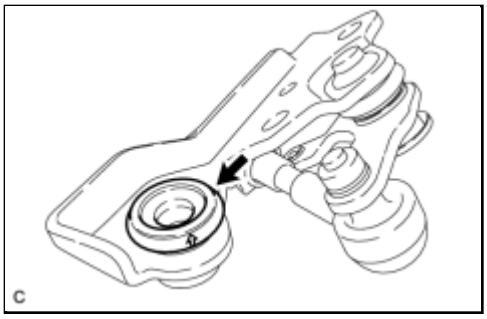

(a) Remove the No. 2 selecting bellcrank dust cover from the selecting bellcrank support.

6. REMOVE NO. 2 SELECTING BELLCRANK BUSHING

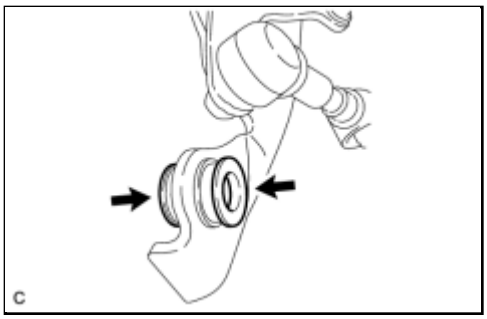

(a) Remove the 2 No. 2 selecting bellcrank bushings from the selecting bellcrank support.

7. REMOVE FLOOR SHIFT CONTROL SHAFT ASSEMBLY

(a) Remove the nut, spring washer, and floor shift control shaft assembly from the selecting bellcrank support.

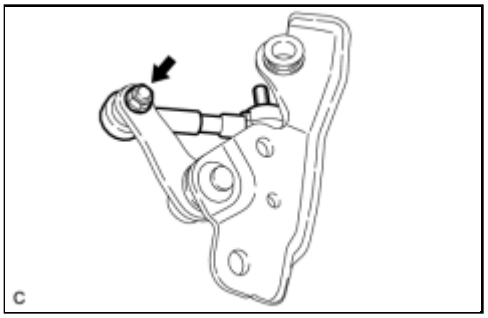

8. REMOVE NO. 2 SELECT SPRING SEAT

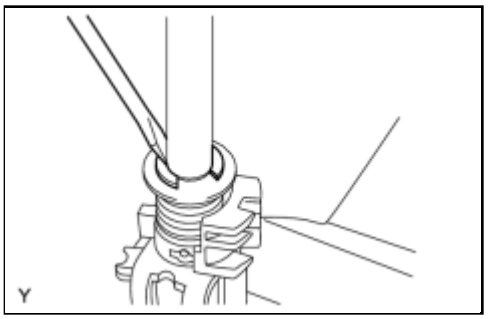

(a) Using a screwdriver, remove the E-ring, No. 2 select spring seat and compression spring from the shift and select lever shaft.

9. REMOVE INNER NO. 2 SHIFT LEVER

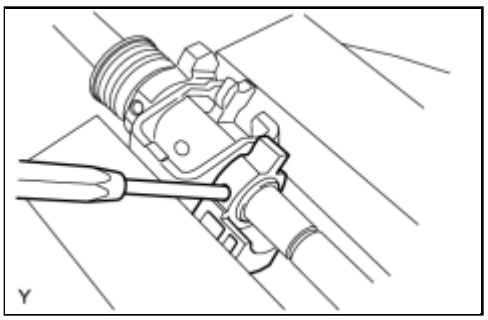

(a) Using a pin punch (φ5 mm) and a hammer, remove the shift inner lever slotted spring pin and inner No. 2 shift lever from the shift and select lever shaft.

HINT:

Check the orientation of the inner No. 2 shift lever.

10. REMOVE INNER NO. 1 SHIFT LEVER

(a) Using a pin punch (φ5 mm) and a hammer, remove the shift inner lever slotted spring pin, inner No. 1 shift lever, and shift inter lock plate from the shift and select lever shaft.

HINT:

Check the orientation of the inner No. 1 shift lever.

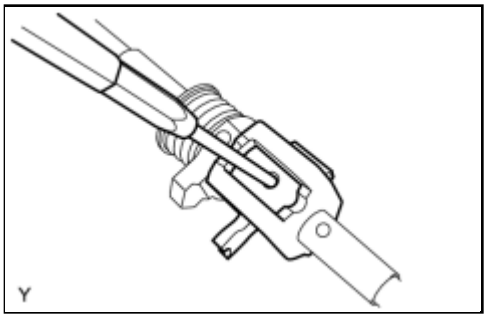

11. REMOVE SELECT INNER LEVER

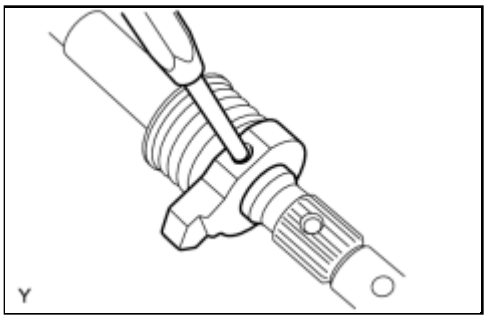

(a) Using a pin punch (φ5 mm) and a hammer, remove the select inner lever slotted spring pin, select inner lever, No. 1 select return compression spring, and No. 1 select spring seat from the shift and select lever shaft.

HINT:

Check the orientation of the select inner lever.

12. REMOVE NO. 1 SELECT SPRING SEAT SHAFT SNAP RING

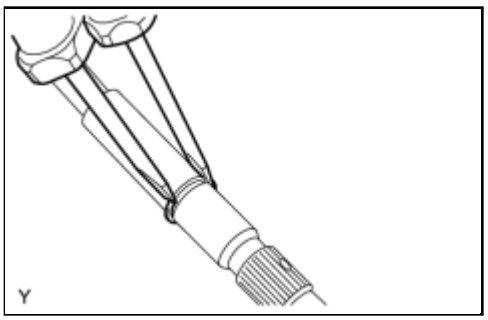

(a) Using 2 screwdrivers and a hammer, remove the No. 1 select spring seat shaft snap ring.

Last Modified: 3-10-2010	6.4 A	**From:** 200901
Model Year: 2010	**Model:** Corolla	**Doc ID:** RM000001A1301RX
Title: C59 MANUAL TRANSMISSION / TRANSAXLE: SHIFT AND SELECT LEVER SHAFT: REASSEMBLY (2010 Corolla)		

REASSEMBLY

1. INSTALL NO. 1 SELECT SPRING SEAT SHAFT SNAP RING

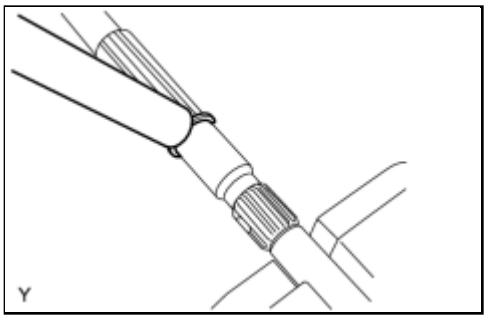

(a) Coat the shift and select lever shaft with MP grease, and install a new snap ring onto the shift and select lever shaft using a brass bar and a hammer.

2. INSTALL SELECT INNER LEVER

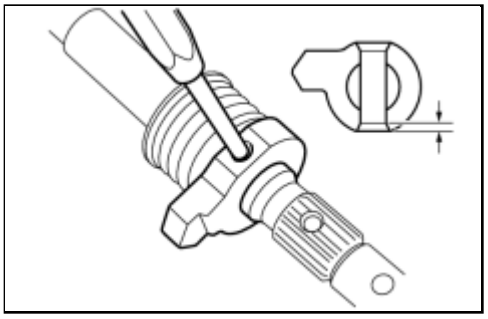

(a) Coat the No. 1 select spring seat with MP grease.

(b) Using a pin punch (φ5 mm) and a hammer, install the No. 1 select spring seat, compression spring, select inner lever, and select inner lever slotted spring pin onto the shift and select lever shaft.

Driven in depth:
3.0 to 4.0 mm (0.1181 to 0.1575 in.)

3. INSTALL INNER NO. 1 SHIFT LEVER

(a) Coat the shift interlock plate and inner No. 1 shift lever with MP grease.

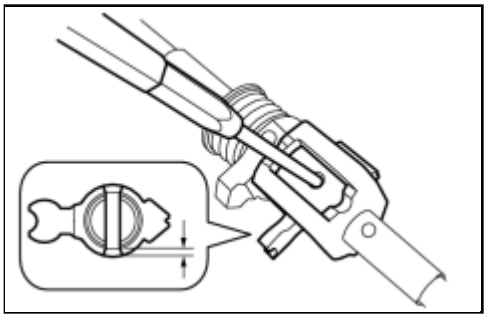

(b) Using a pin punch (φ5 mm) and a hammer, install the shift interlock plate, inner No. 1 shift lever, and shift inner lever slotted spring pin onto the shift and select lever shaft.

Driven in depth:
-0.5 to 0.5 mm (-0.0197 to 0.0197 in.)

4. INSTALL INNER NO. 2 SHIFT LEVER

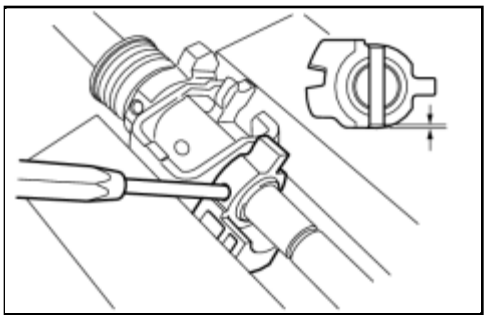

(a) Coat the inner No. 2 shift lever with MP grease.

(b) Using a pin punch (φ5 mm) and a hammer, install the inner No. 2 shift lever and shift inner lever slotted spring pin onto the shift and select lever shaft.

Driven in depth:
1.0 to 2.0 mm (0.0394 to 0.0787 in.)

5. INSTALL NO. 2 SELECT SPRING SEAT

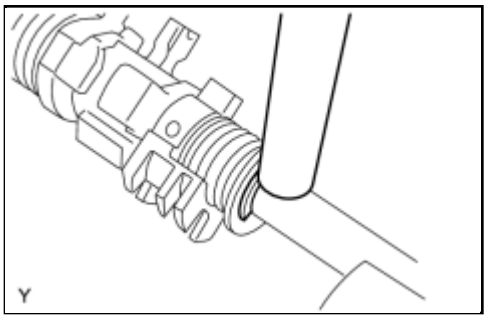

(a) Coat the No. 2 select spring seat with MP grease.

(b) Install the No. 2 select spring seat and compression spring. Using a brass bar and a hammer, install a new E-ring onto the shift and select lever shaft.

6. INSTALL FLOOR SHIFT CONTROL SHAFT ASSEMBLY

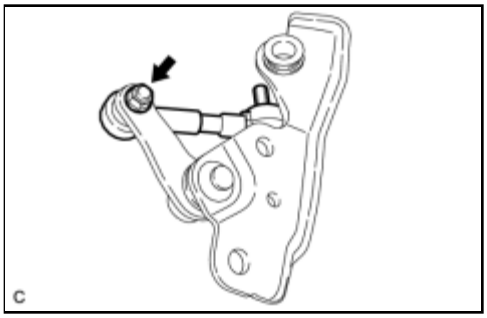

(a) Install the floor shift control shaft assembly to the selecting bellcrank support with the spring washer and nut.

Torque: 12 N·m (122 kgf·cm, 9ft·lbf)

7. INSTALL NO. 2 SELECTING BELLCRANK BUSHING

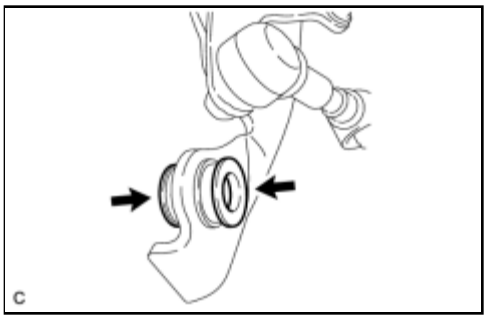

(a) Install 2 new No. 2 selecting bellcrank bushings to the selecting bellcrank support as shown in the illustration.

8. INSTALL NO. 2 SELECTING BELLCRANK DUST COVER

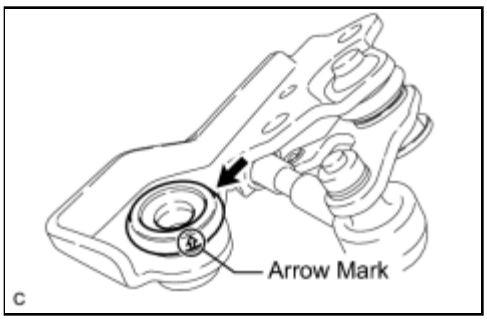

(a) Install the No. 2 selecting bellcrank dust cover to the selecting bellcrank support.

HINT:

Position the arrow mark direction as shown in the illustration.

9. INSTALL SELECTING BELLCRANK

(a) Install the selecting bellcrank to the selecting bellcrank support.

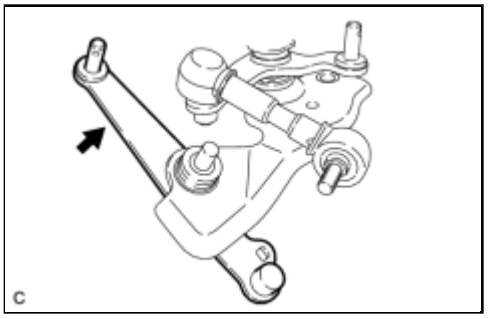

10. INSTALL NO. 2 SELECTING BELLCRANK PLATE WASHER

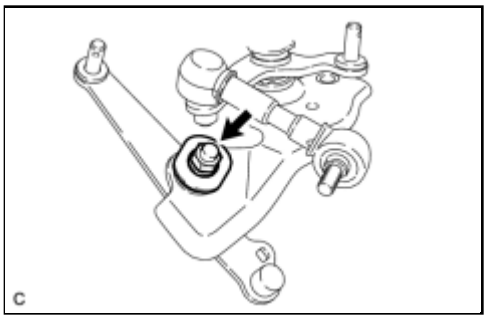

(a) Install the selecting bellcrank plate washer to the selecting bellcrank with the spring washer and nut.

Torque: 12 N·m (122 kgf·cm, 9ft·lbf)

11. INSTALL NO. 1 SELECTING BELLCRANK DUST COVER

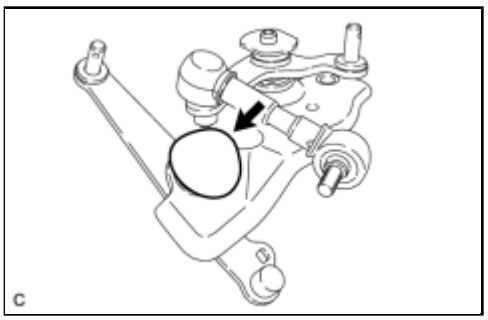

(a) Install the No. 1 selecting bellcrank dust cover to the selecting bellcrank.

12. INSTALL FLOOR SHIFT CONTROL BELLCRANK DUST COVER

(a) Install the floor shift control bellcrank dust cover to the selecting bellcrank assembly.

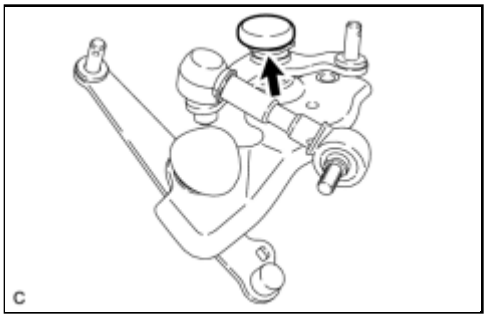
C

Last Modified: 3-10-2010	6.4 K	**From:** 200901
Model Year: 2010	**Model:** Corolla	**Doc ID:** RM000000Z2200DX
Title: E351 MANUAL TRANSMISSION / TRANSAXLE: SHIFT AND SELECT LEVER SHAFT: COMPONENTS (2010 Corolla)		

COMPONENTS

ILLUSTRATION

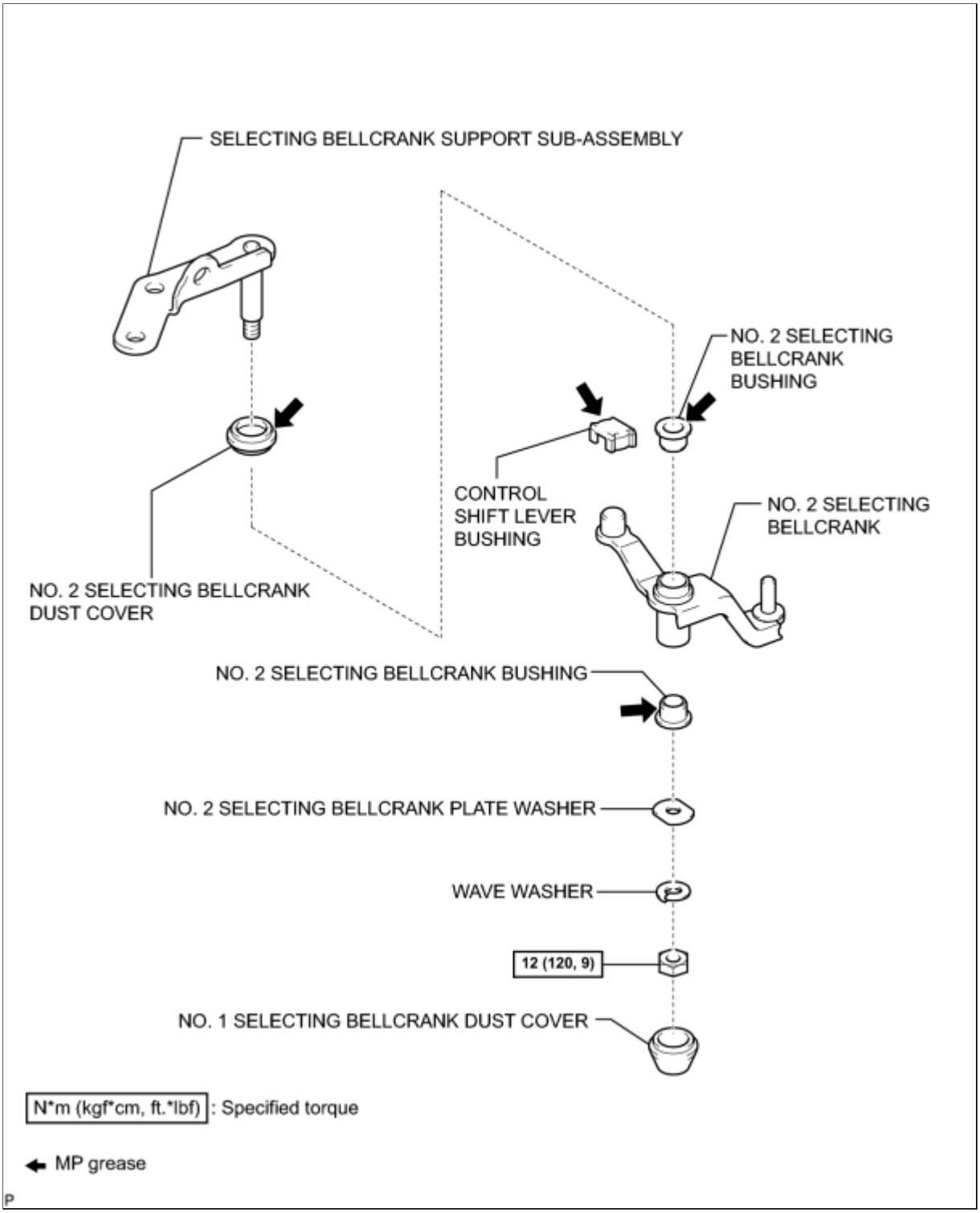

ILLUSTRATION

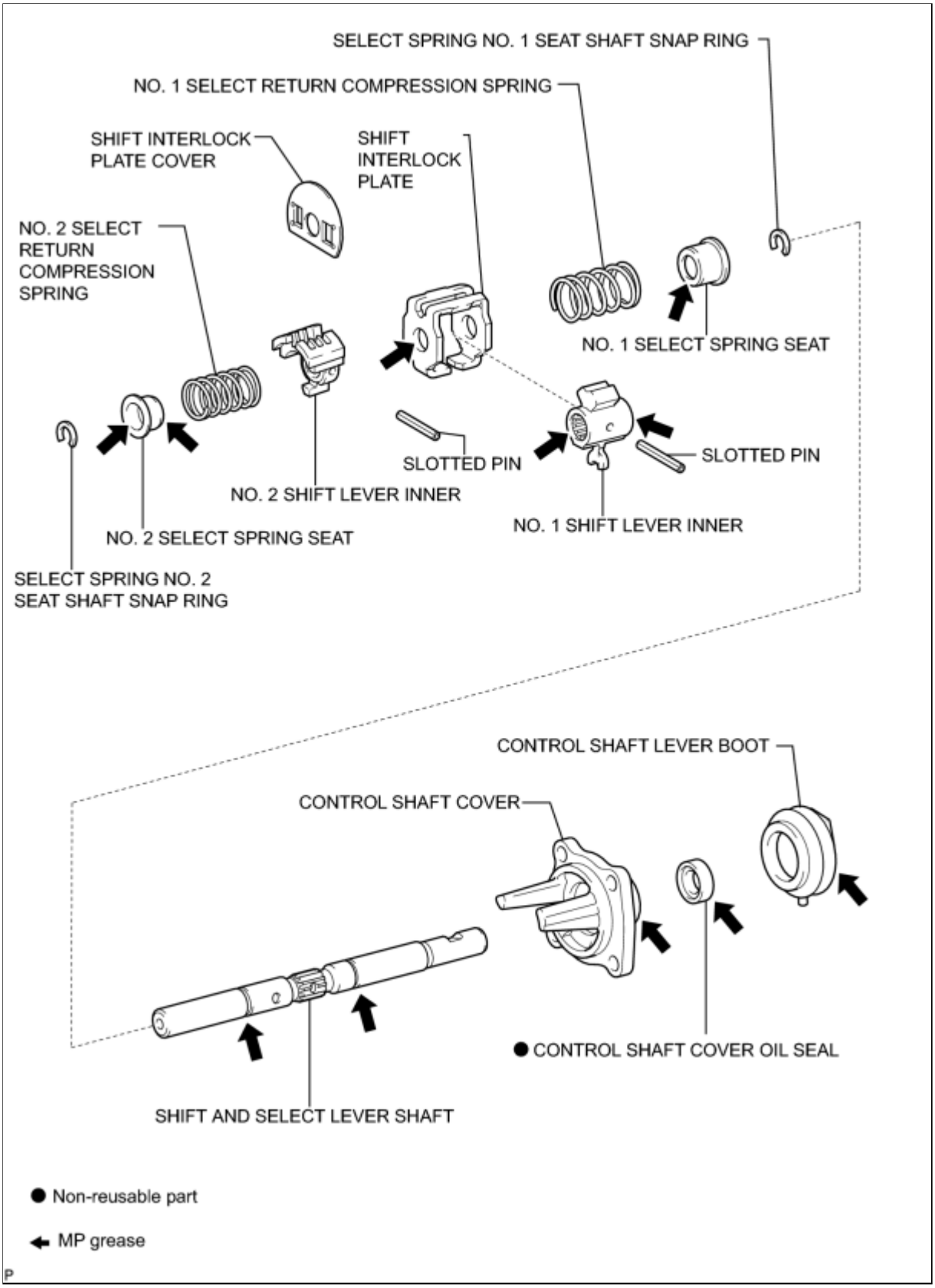
SELECT SPRING NO. 1 SEAT SHAFT SNAP RING
NO. 1 SELECT RETURN COMPRESSION SPRING
SHIFT INTERLOCK PLATE COVER
SHIFT INTERLOCK PLATE
NO. 2 SELECT RETURN COMPRESSION SPRING
NO. 1 SELECT SPRING SEAT
SLOTTED PIN
SLOTTED PIN
NO. 2 SHIFT LEVER INNER
NO. 1 SHIFT LEVER INNER
NO. 2 SELECT SPRING SEAT
SELECT SPRING NO. 2 SEAT SHAFT SNAP RING
CONTROL SHAFT LEVER BOOT
CONTROL SHAFT COVER
● CONTROL SHAFT COVER OIL SEAL
SHIFT AND SELECT LEVER SHAFT
● Non-reusable part
MP grease

Last Modified: 3-10-2010	6.4 A	**From:** 200901
Model Year: 2010	**Model:** Corolla	**Doc ID:** RM000000Z2300DX
Title: E351 MANUAL TRANSMISSION / TRANSAXLE: SHIFT AND SELECT LEVER SHAFT: DISASSEMBLY (2010 Corolla)		

DISASSEMBLY

1. REMOVE CONTROL SHIFT LEVER BUSHING

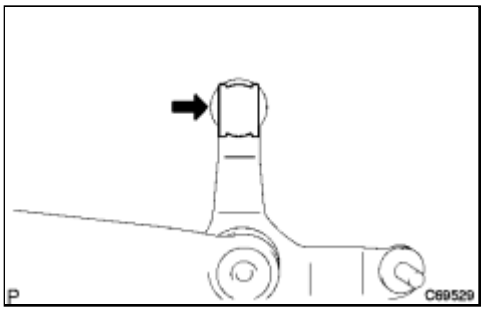

(a) Remove the control shift lever bushing from the No. 2 selecting bellcrank.

2. REMOVE NO. 1 SELECTING BELLCRANK DUST COVER

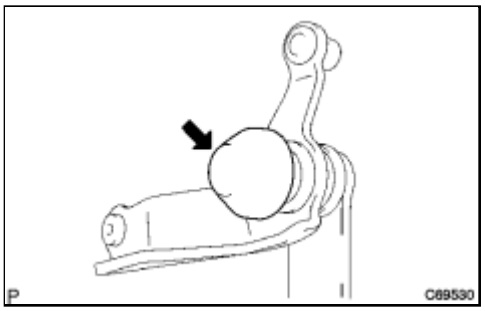

(a) Remove the No. 1 selecting bellcrank dust cover from the No. 2 selecting bellcrank.

3. REMOVE SELECTING BELLCRANK SUPPORT SUB-ASSEMBLY

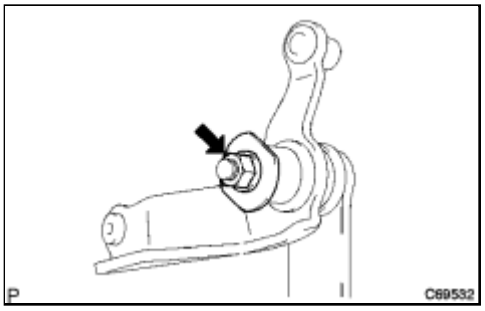

(a) Remove the nut, wave washer, and No. 2 selecting bellcrank plate washer from the No. 2 selecting bellcrank.

(b) Remove the selecting bellcrank support sub-assembly

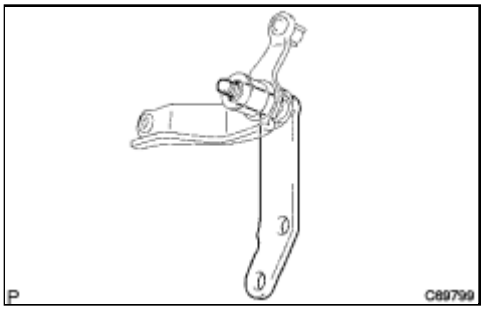

from the No. 2 selecting bellcrank.

4. REMOVE NO. 2 SELECTING BELLCRANK DUST COVER

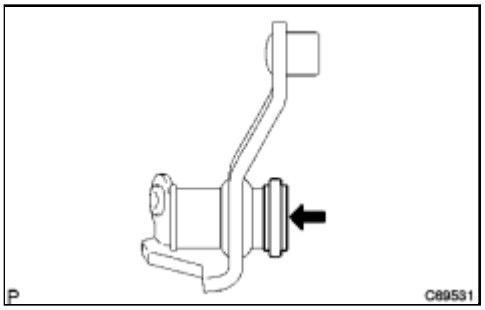

(a) Remove the No. 2 selecting bellcrank dust cover from the No. 2 selecting bellcrank.

5. REMOVE NO. 2 SELECTING BELLCRANK BUSHING

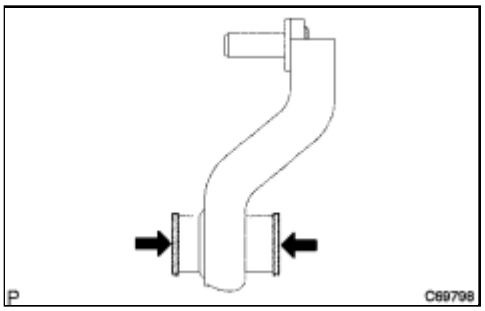

(a) Remove the No. 2 selecting bellcrank bushing from the No. 2 selecting bellcrank.

6. REMOVE NO. 2 SHIFT LEVER INNER

(a) Hold the shift and select lever shaft in a vise using aluminum plates.

NOTICE:

Do not damage the shift and select lever shaft.

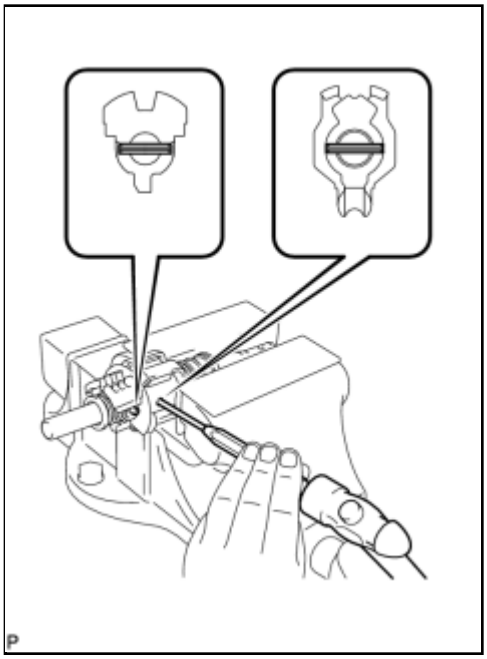

(b) Using a pin punch (φ 5 mm), remove the 2 shift inner lever slotted pins.

NOTICE:

Do not damage the shift and select lever shaft.

(c) Apply force to the No. 1 select return compression spring and No. 2 select return compression spring, then hold them in a vise using aluminum plates.

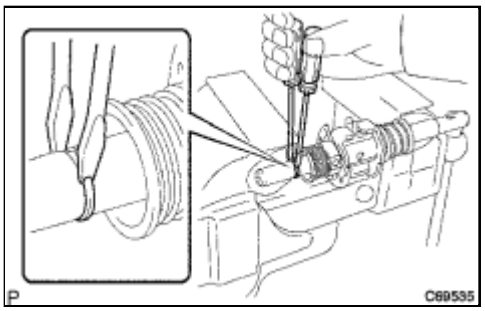

(d) Using 2 screwdrivers and a hammer, remove the select spring No. 2 seat snap ring from the shift and select lever shaft.

HINT:

Use a piece of cloth to keep the snap ring from flying.

NOTICE:

Do not damage the shift and select lever shaft.

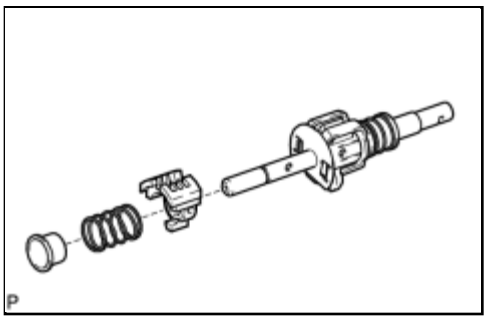

(e) Remove the No. 2 select spring seat, No. 2 select return compression spring, and No. 2 shift lever inner from the shift and select lever shaft.

7. REMOVE NO. 1 SELECT SPRING SEAT

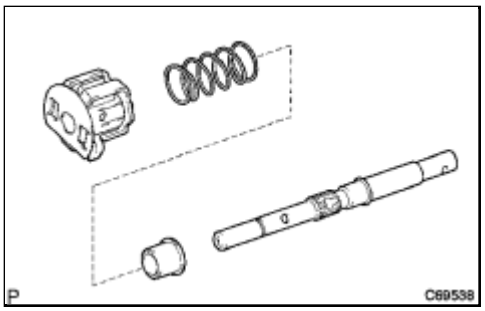

(a) Remove the shift interlock plate, No. 1 select return compression spring and No. 1 select spring seat from the shift and select lever shaft.

8. REMOVE SHIFT INTERLOCK PLATE COVER

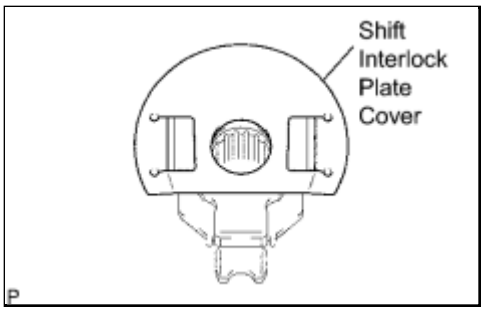

(a) Remove the shift interlock plate cover from the shift interlock plate.

9. REMOVE NO. 1 SHIFT LEVER INNER

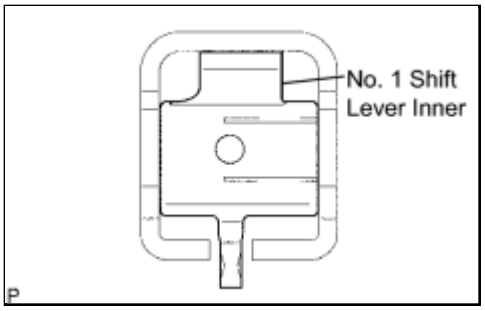

(a) Remove the No. 1 shift lever inner from the shift interlock plate.

10. REMOVE SELECT SPRING NO. 1 SEAT SHAFT SNAP RING

(a) Using 2 screwdrivers and a hammer, remove the select spring No. 1 seat shaft snap ring.

HINT:

Use a piece of cloth to keep the snap ring from flying.

NOTICE:

Do not damage the shift and select lever shaft.

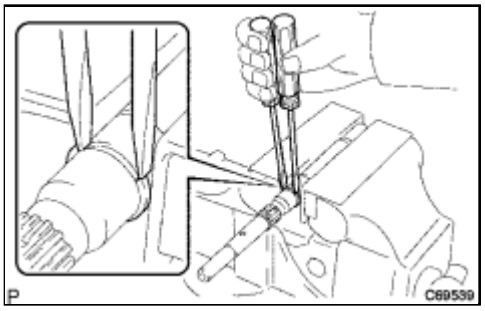

11. REMOVE CONTROL SHAFT COVER OIL SEAL

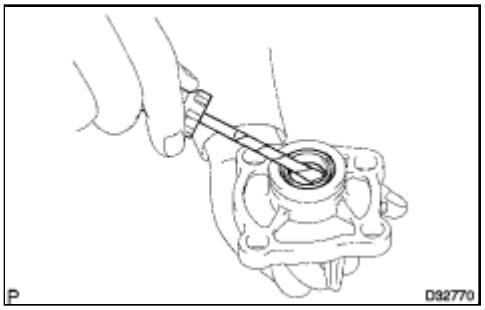

(a) Using a screwdriver, remove the control shaft cover oil seal from the control shaft cover.

HINT:

Tape the screwdriver tip before use to avoid damage.

Last Modified: 3-10-2010	6.4 A	**From:** 200901
Model Year: 2010	**Model:** Corolla	**Doc ID:** RM000000Z2400DX
Title: E351 MANUAL TRANSMISSION / TRANSAXLE: SHIFT AND SELECT LEVER SHAFT: REASSEMBLY (2010 Corolla)		

REASSEMBLY

1. INSTALL CONTROL SHAFT COVER OIL SEAL

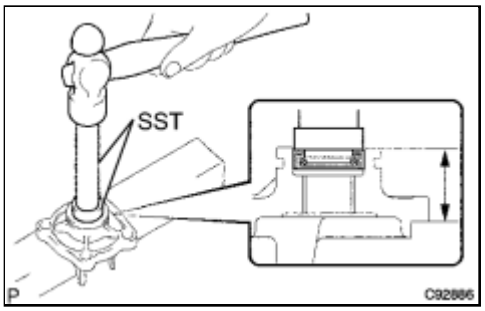

(a) Using SST and a hammer, install a new control shaft cover oil seal to the control shaft cover.

SST: 09950-60010

09951-00280

SST: 09950-70010

09951-07100

Oil seal installation depth:
28.0 to 29.0 mm (1.1024 to 1.142 in.)

2. INSTALL SELECT SPRING NO. 1 SEAT SHAFT SNAP RING

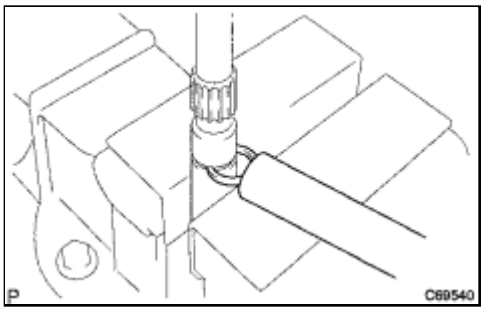

(a) Using a brass bar and a hammer, install the select spring No. 1 seat shaft snap ring.

3. INSTALL NO. 1 SHIFT LEVER INNER

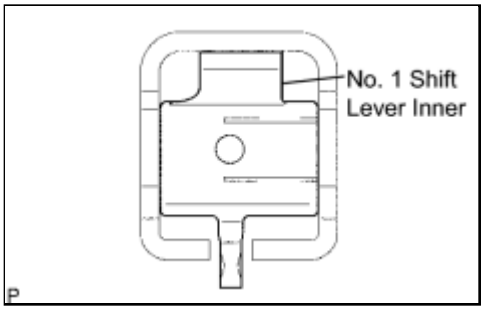

(a) Install the No. 1 shift lever inner to the shift interlock plate.

4. INSTALL SHIFT INTERLOCK PLATE COVER

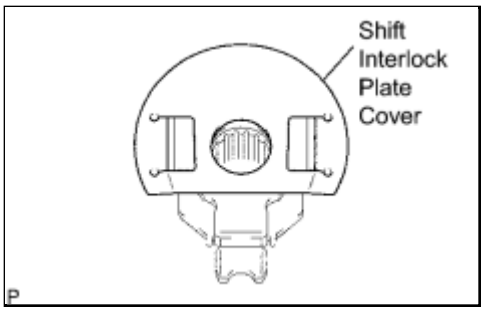

(a) Install the shift interlock plate cover to the shift interlock plate.

5. INSTALL NO. 1 SELECT SPRING SEAT

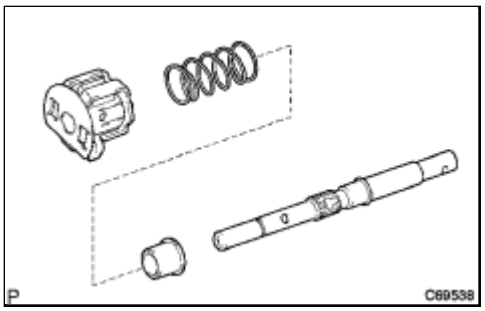

(a) Install the No. 1 select spring seat, No. 1 select return compression spring, and shift interlock plate to the shift and select lever shaft.

6. INSTALL NO. 2 SHIFT LEVER INNER

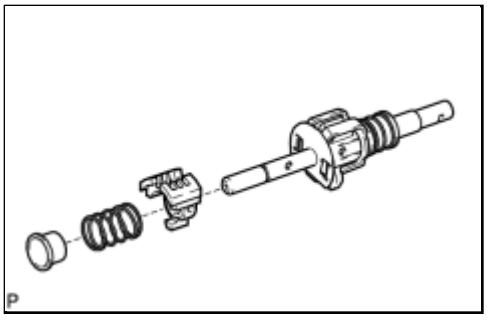

(a) Install the No. 2 shift lever inner, No. 2 select return compression spring and No. 2 select return spring seat to the shift and select lever shaft.

(b) Hold the shift and select lever in a vise using aluminum plates.

(c) Using a brass bar and a hammer, install the select seat snap ring to the shift and select lever shaft.

(d) Using a pin punch (φ 5 mm) and a hammer, install the 2 shift inner lever slotted pins to the shift and select lever shaft.

Clearance A:
0.7 to 1.7 mm (0.0276 to 0.0669 in.)
Clearance B:

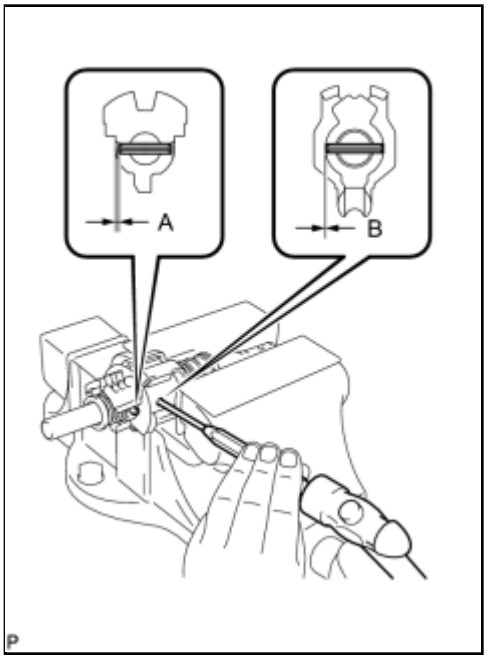

-0.4 to 0.5 mm (-0.0157 to 0.0197 in.)

7. INSTALL NO. 2 SELECTING BELLCRANK BUSHING

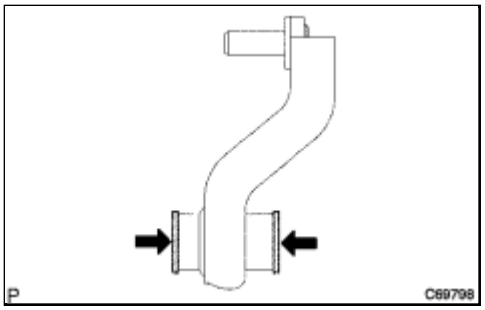

(a) Coat the 2 No. 2 selecting bellcrank bushings with MP grease and install them to the No. 2 selecting bellcrank.

8. INSTALL NO. 2 SELECTING BELLCRANK DUST COVER

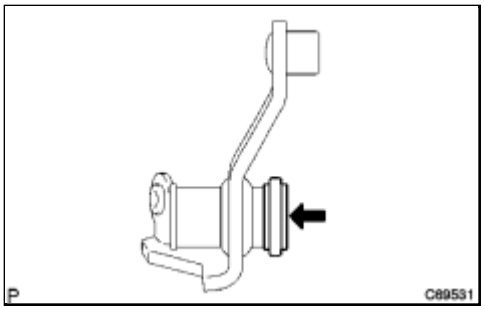

(a) Coat the No. 2 selecting bellcrank dust cover with MP grease and install it to the No. 2 selecting bellcrank.

9. INSTALL SELECTING BELLCRANK SUPPORT SUB-ASSEMBLY

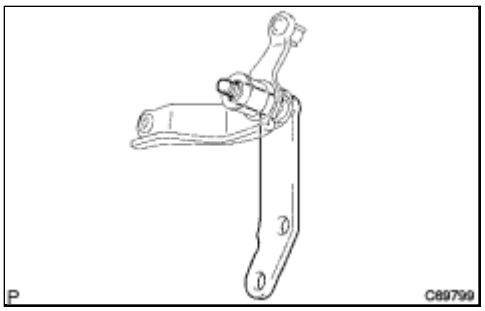

(a) Install the selecting bellcrank support sub-assembly to the No. 2 selecting bellcrank.

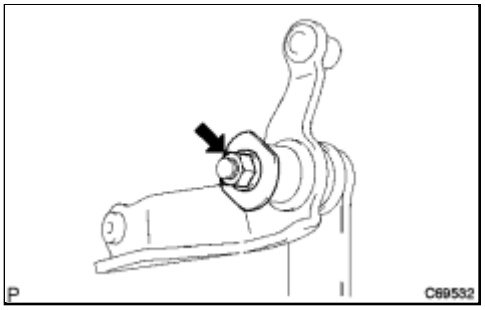

(b) Install the No. 2 selecting bellcrank plate washer, wave washer, and nut.

Torque: 12 N·m (122 kgf·cm, 9ft·lbf)

10. INSTALL NO. 1 SELECTING BELLCRANK DUST COVER

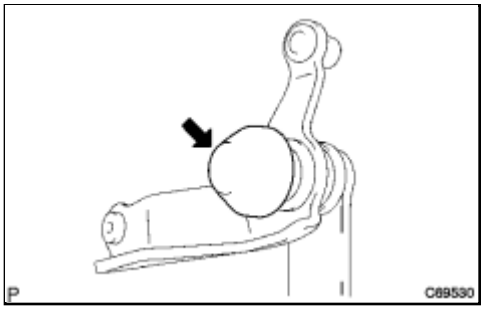

(a) Install the No. 1 selecting bellcrank dust cover to the No. 2 selecting bellcrank.

11. INSTALL CONTROL SHIFT LEVER BUSHING

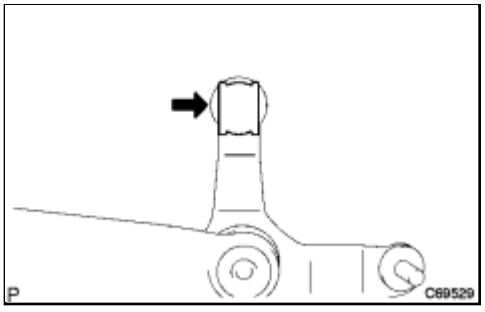

(a) Install the control shift lever bushing to the No. 2 selecting bellcrank.

Last Modified: 3-10-2010	6.4 K	**From:** 200901
Model Year: 2010	**Model:** Corolla	**Doc ID:** RM000001VZO01SX
Title: C59 MANUAL TRANSMISSION / TRANSAXLE: SHIFT LEVER ASSEMBLY: COMPONENTS (2010 Corolla)		

COMPONENTS

ILLUSTRATION

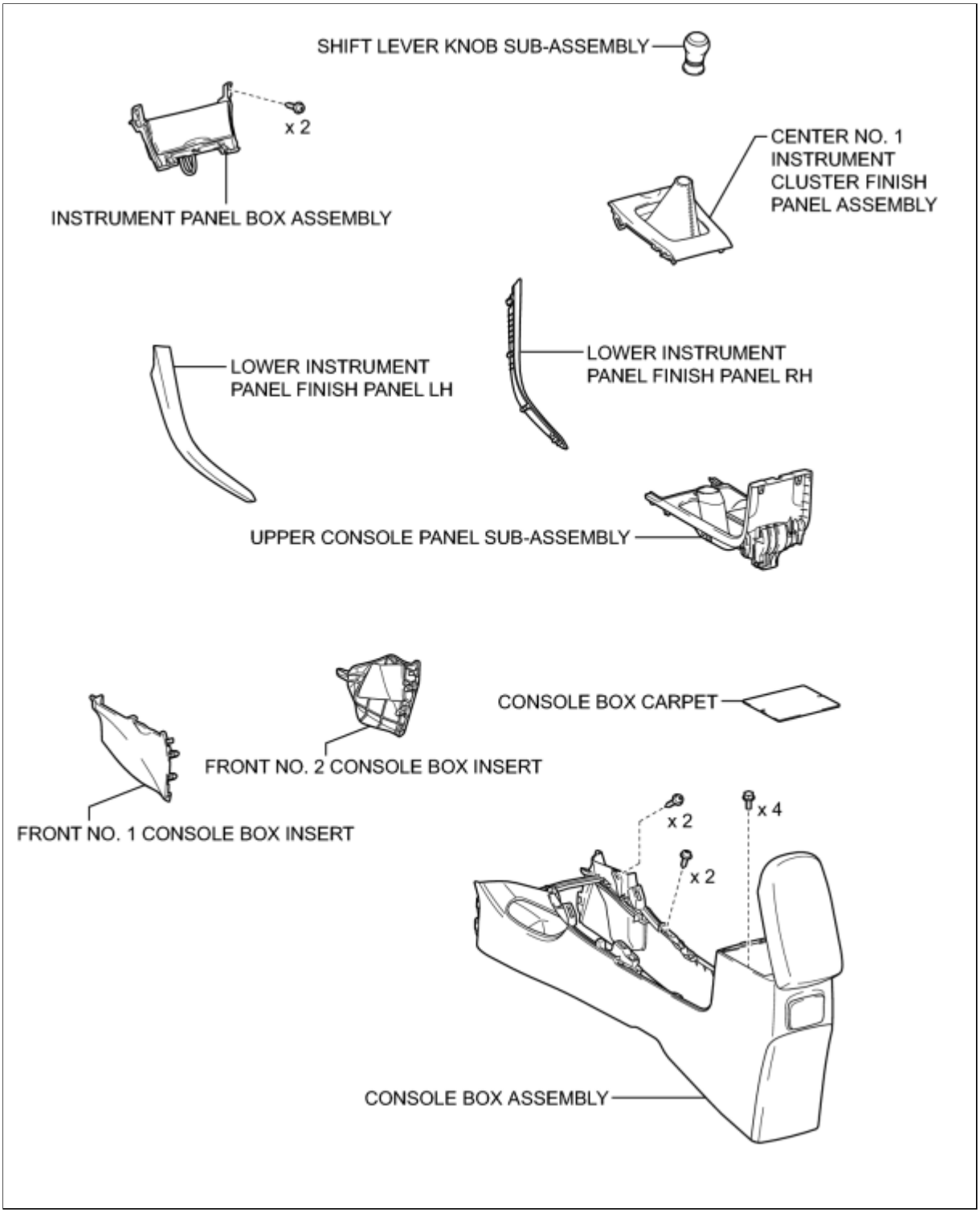

ILLUSTRATION

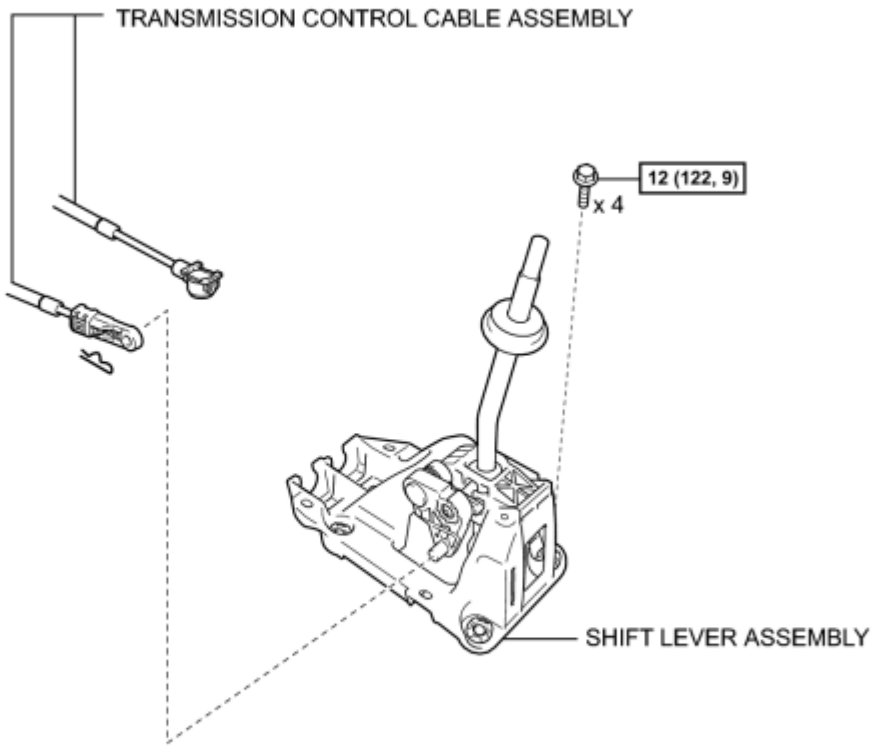

N*m (kgf*cm, ft.*lbf): Specified torque

Last Modified: 3-10-2010	6.4 A	**From:** 200901
Model Year: 2010	**Model:** Corolla	**Doc ID:** RM000001VZP01XX
Title: C59 MANUAL TRANSMISSION / TRANSAXLE: SHIFT LEVER ASSEMBLY: REMOVAL (2010 Corolla)		

REMOVAL

1. REMOVE LOWER INSTRUMENT PANEL FINISH PANEL LH INFO

2. REMOVE LOWER INSTRUMENT PANEL FINISH PANEL RH INFO

3. REMOVE SHIFT LEVER KNOB SUB-ASSEMBLY INFO

4. REMOVE CENTER NO. 1 INSTRUMENT CLUSTER FINISH PANEL ASSEMBLY INFO

5. REMOVE INSTRUMENT PANEL BOX ASSEMBLY INFO

6. REMOVE FRONT NO. 1 CONSOLE BOX INSERT INFO

7. REMOVE FRONT NO. 2 CONSOLE BOX INSERT INFO

8. REMOVE UPPER CONSOLE PANEL SUB-ASSEMBLY INFO

9. REMOVE CONSOLE BOX CARPET INFO

10. REMOVE CONSOLE BOX ASSEMBLY INFO

11. DISCONNECT TRANSMISSION CONTROL CABLE ASSEMBLY

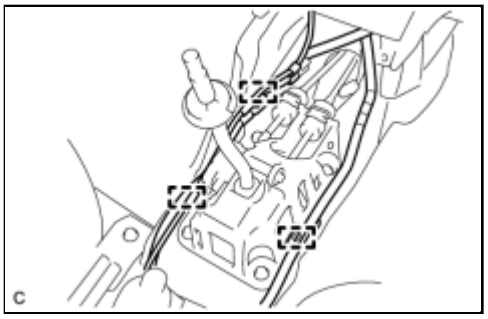

(a) Separate the 3 clamps, and disconnect the wire harness from the shift lever assembly.

(b) Remove the clip and disconnect the control select cable from the shift lever assembly.

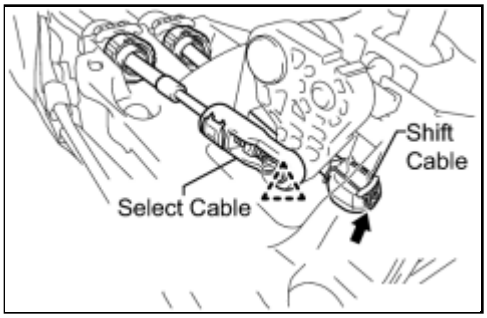

(c) Disconnect the control shift cable from the shift lever assembly.

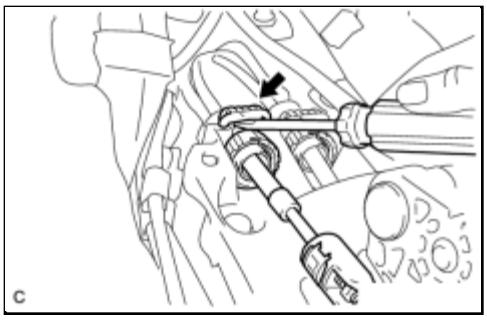

(d) Using a screwdriver, pull out the transmission control cable.

NOTICE:

Do not remove the stopper. If it is removed, reinstall it to its original position.

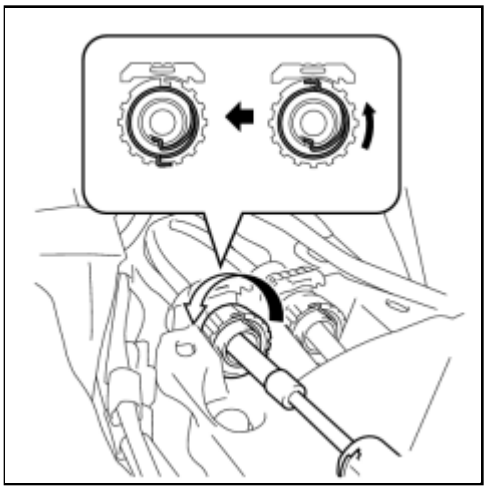

(e) Rotate the nut counterclockwise approximately 180° and, while holding the nut in that position, disconnect the transmission control cable from the shift lever retainer.

NOTICE:

Do not rotate the nut excessively as it may damage the internal spring and the transmission control cable will not be reusable.

12. REMOVE SHIFT LEVER ASSEMBLY

(a) Remove the 4 bolts and the shift lever assembly.

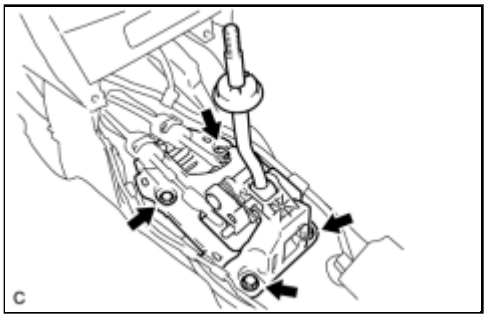
C

Last Modified: 3-10-2010	6.4 A	**From:** 200901
Model Year: 2010	**Model:** Corolla	**Doc ID:** RM000001VZN01XX
Title: C59 MANUAL TRANSMISSION / TRANSAXLE: SHIFT LEVER ASSEMBLY: INSTALLATION (2010 Corolla)		

INSTALLATION

1. INSTALL SHIFT LEVER ASSEMBLY

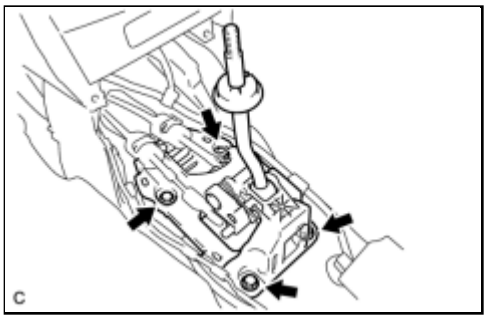

(a) Install the shift lever assembly with the 4 bolts.

Torque: 12 N·m (122 kgf·cm, 9ft·lbf)

2. INSTALL TRANSMISSION CONTROL CABLE ASSEMBLY

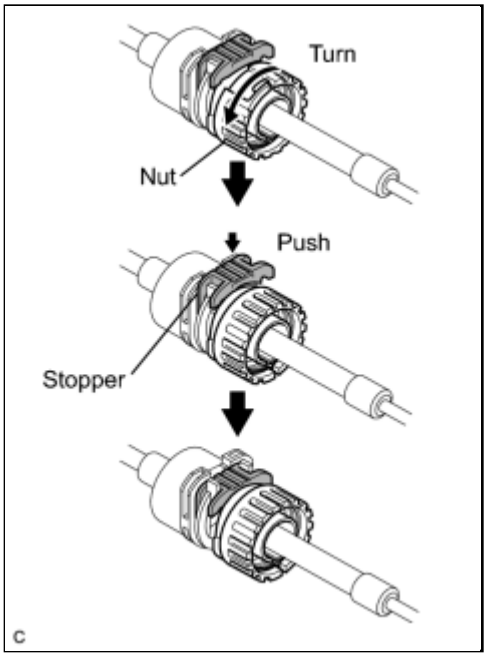

(a) Rotate the transmission control cable nut counterclockwise approximately 180° and, while holding the nut in that position, push in the stopper until it makes 2 "click" sounds.

(b) Install the outer part of the transmission control cable to the shift lever retainer, check that the position of the spring is the same as A shown in the illustration, and push in the stopper.

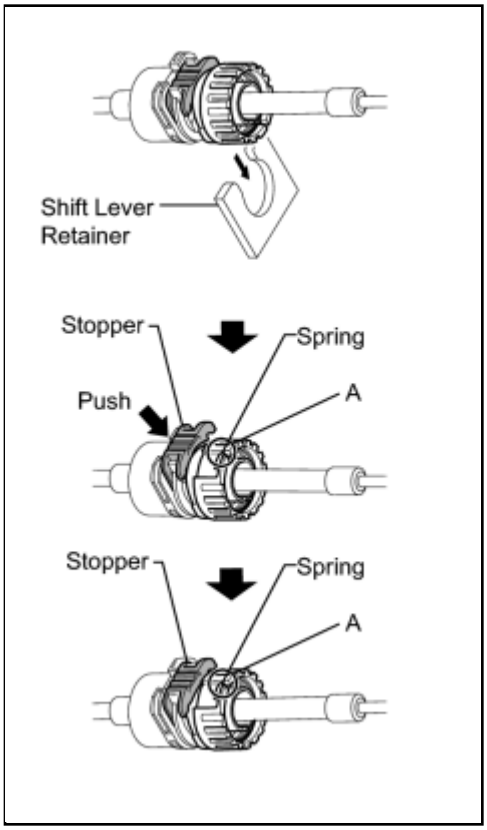

HINT:

If the stopper cannot be pushed in, slightly rotate the nut clockwise and then push in the stopper.

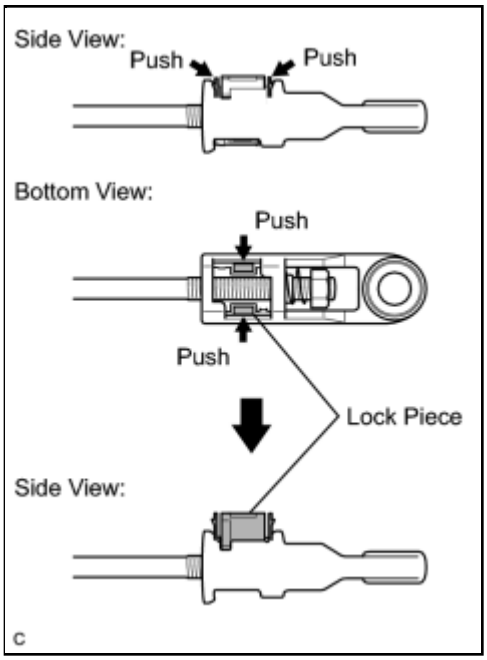

(c) Push the two claws together at the top of the transmission control cable lock piece. While holding the two claws together, push the two lugs on the bottom of the lock piece toward each other and upward to pull out the lock piece.

(d) Install the transmission control shift cable to the shift lever assembly.

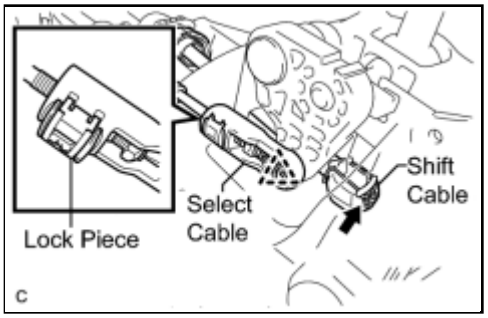

(e) Install the control select cable to the shift lever assembly.

NOTICE:

- Make sure to adjust the length at the neutral shift position.
- Make sure that the lock piece is protruding from the adjuster case.

(f) Install the clip to the shift lever assembly.

(g) Press in and lock the lock piece to the adjuster case.

NOTICE:

Securely press in the lock piece until the lock engages.

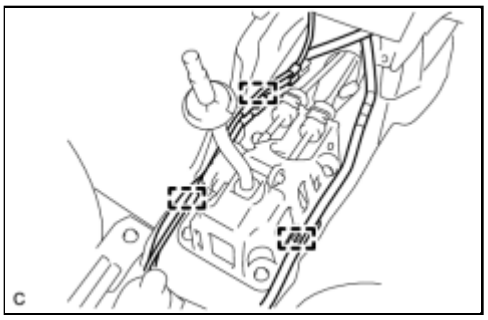

(h) Install the wire harness to the shift lever assembly with the 3 clamps.

3. ADJUST TRANSMISSION CONTROL SELECT CABLE INFO

4. INSTALL CONSOLE BOX ASSEMBLY INFO

5. INSTALL CONSOLE BOX CARPET INFO

6. INSTALL UPPER CONSOLE PANEL SUB-ASSEMBLY INFO

7. INSTALL FRONT NO. 1 CONSOLE BOX INSERT INFO

8. INSTALL FRONT NO. 2 CONSOLE BOX INSERT INFO

9. INSTALL INSTRUMENT PANEL BOX ASSEMBLY INFO

10. INSTALL CENTER NO. 1 INSTRUMENT CLUSTER FINISH PANEL ASSEMBLY INFO

11. INSTALL SHIFT LEVER KNOB SUB-ASSEMBLY INFO

12. INSTALL LOWER INSTRUMENT PANEL FINISH PANEL LH INFO

13. INSTALL LOWER INSTRUMENT PANEL FINISH PANEL RH INFO

Last Modified: 3-10-2010	6.4 K	**From:** 200901
Model Year: 2010	**Model:** Corolla	**Doc ID:** RM000001VZO01TX
Title: E351 MANUAL TRANSMISSION / TRANSAXLE: SHIFT LEVER ASSEMBLY: COMPONENTS (2010 Corolla)		

COMPONENTS

ILLUSTRATION

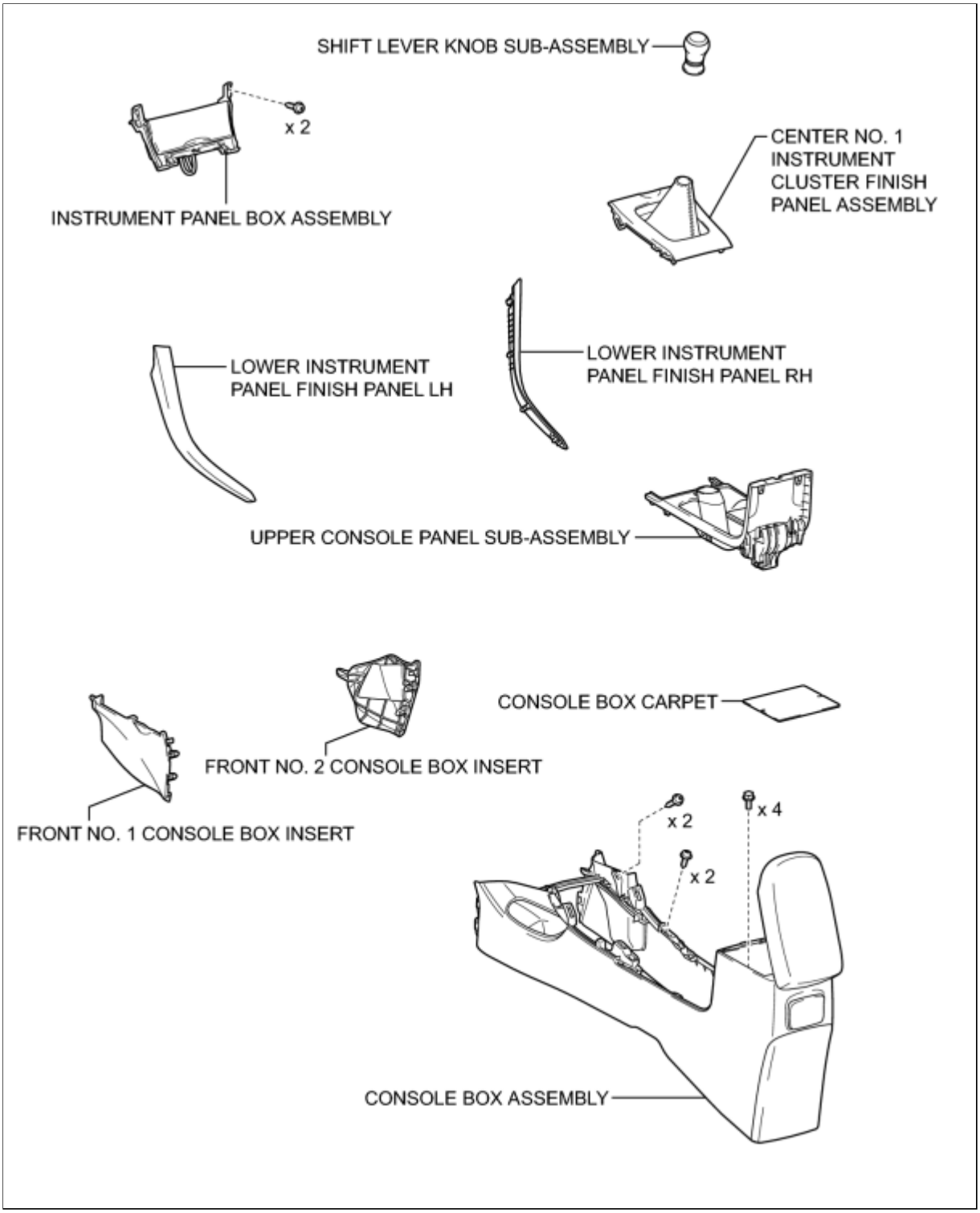

ILLUSTRATION

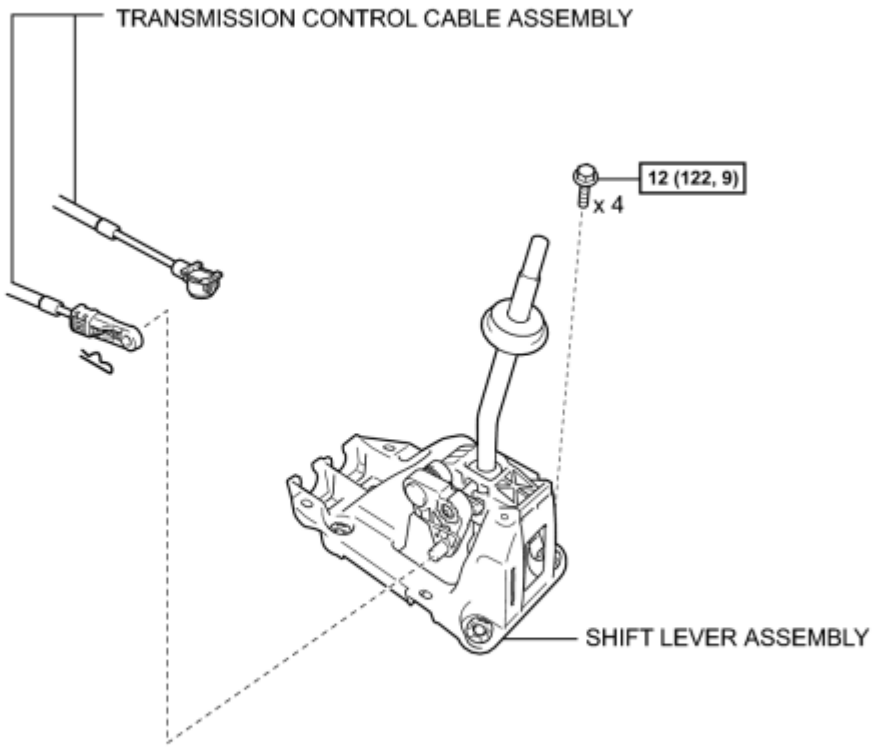

N*m (kgf*cm, ft.*lbf): Specified torque

Last Modified: 3-10-2010	6.4 A	**From:** 200901
Model Year: 2010	**Model:** Corolla	**Doc ID:** RM000001VZP01YX
Title: E351 MANUAL TRANSMISSION / TRANSAXLE: SHIFT LEVER ASSEMBLY: REMOVAL (2010 Corolla)		

REMOVAL

1. REMOVE LOWER INSTRUMENT PANEL FINISH PANEL LH INFO

2. REMOVE LOWER INSTRUMENT PANEL FINISH PANEL RH INFO

3. REMOVE SHIFT LEVER KNOB SUB-ASSEMBLY INFO

4. REMOVE CENTER NO. 1 INSTRUMENT CLUSTER FINISH PANEL ASSEMBLY INFO

5. REMOVE INSTRUMENT PANEL BOX ASSEMBLY INFO

6. REMOVE FRONT NO. 1 CONSOLE BOX INSERT INFO

7. REMOVE FRONT NO. 2 CONSOLE BOX INSERT INFO

8. REMOVE UPPER CONSOLE PANEL SUB-ASSEMBLY INFO

9. REMOVE CONSOLE BOX CARPET INFO

10. REMOVE CONSOLE BOX ASSEMBLY INFO

11. DISCONNECT TRANSMISSION CONTROL CABLE ASSEMBLY

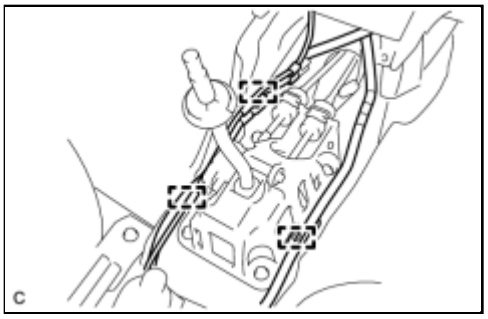

(a) Separate the 3 clamps, and disconnect the wire harness from the shift lever assembly.

(b) Remove the clip, and disconnect the control select cable from the shift lever assembly.

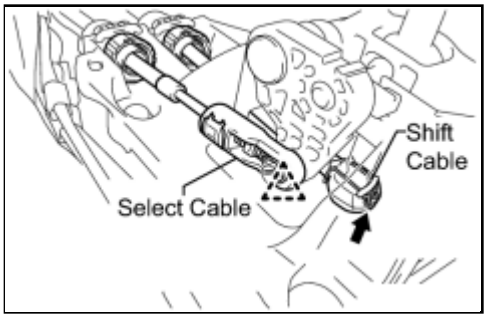

(c) Disconnect the control shift cable from the shift lever assembly.

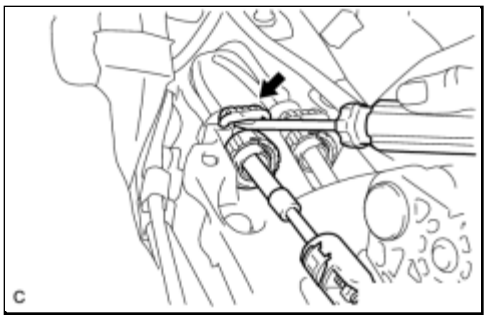

(d) Using a screwdriver, pull out the transmission control cable stopper.

NOTICE:

Do not remove the stopper. If it is removed, reinstall it to its original position.

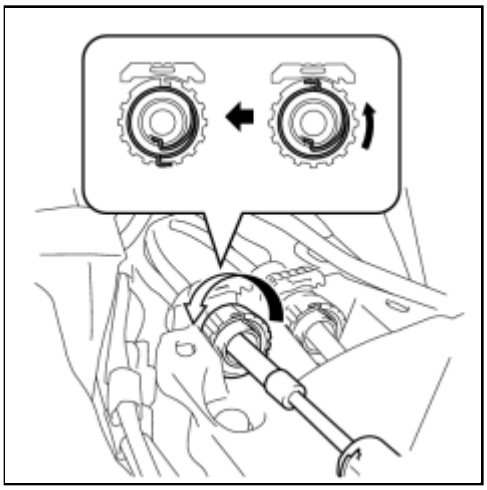

(e) Rotate the nut counterclockwise approximately 180° and, while holding the nut in that position, disconnect the transmission control cable from the shift lever retainer.

NOTICE:

Do not rotate the nut excessively as it may damage the internal spring and the transmission control cable will not be reusable.

12. REMOVE SHIFT LEVER ASSEMBLY

(a) Remove the 4 bolts and the shift lever assembly.

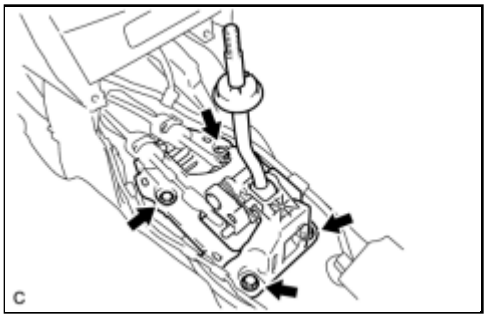
C

Last Modified: 3-10-2010	6.4 A	**From:** 200901
Model Year: 2010	**Model:** Corolla	**Doc ID:** RM000001VZN01YX
Title: E351 MANUAL TRANSMISSION / TRANSAXLE: SHIFT LEVER ASSEMBLY: INSTALLATION (2010 Corolla)		

INSTALLATION

1. INSTALL SHIFT LEVER ASSEMBLY

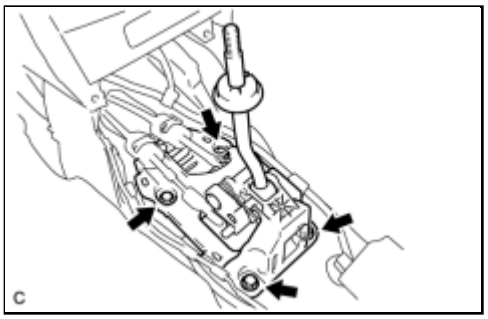

(a) Install the shift lever assembly with the 4 bolts.

Torque: 12 N·m (122 kgf·cm, 9ft·lbf)

2. INSTALL TRANSMISSION CONTROL CABLE ASSEMBLY

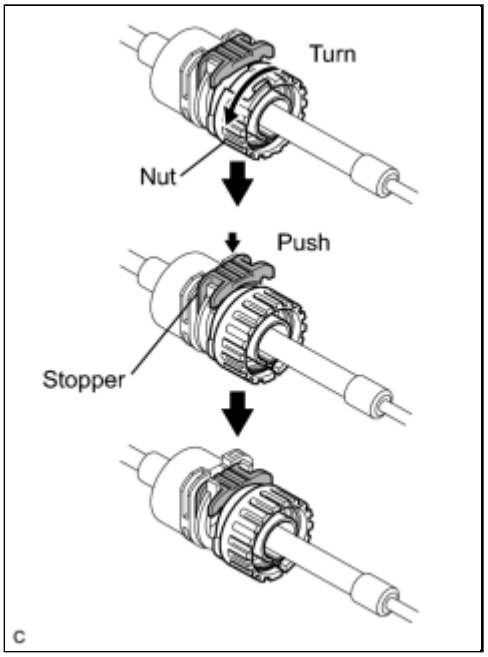

(a) Rotate the transmission control cable nut counterclockwise approximately 180° and, while holding the nut in that position, push in the stopper until it makes 2 "click" sounds.

(b) Install the outer part of the transmission control cable to the shift lever retainer, check that the position of the spring is the same as A shown in the illustration, and push in the stopper.

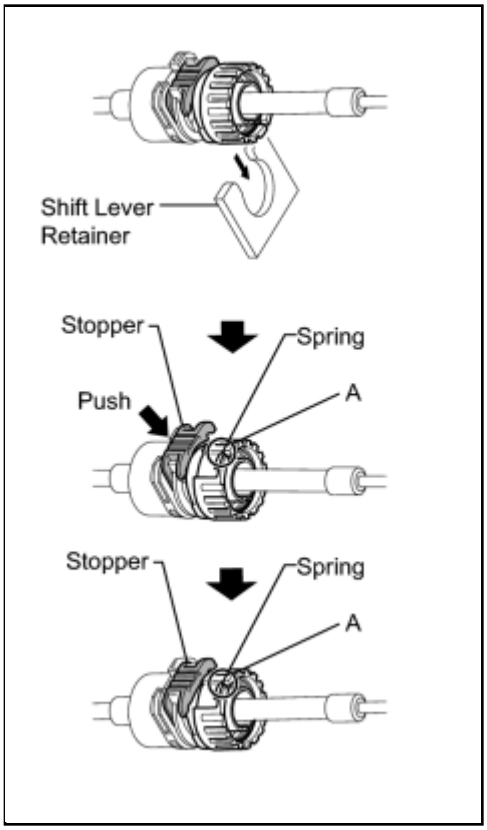

HINT:

If the stopper cannot be pushed in, slightly rotate the nut clockwise and then push in the stopper.

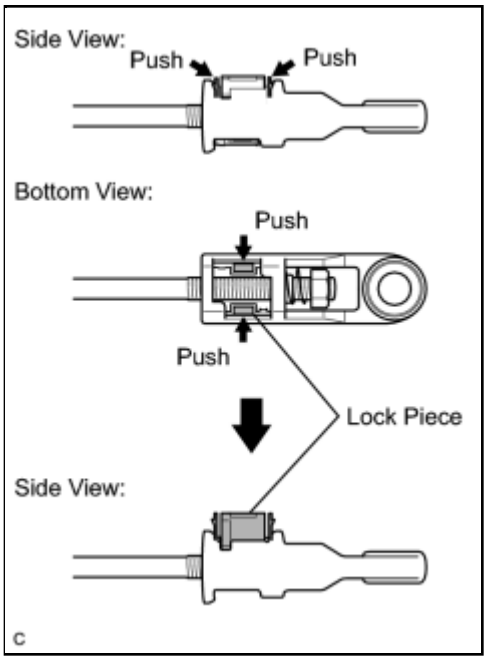

(c) Push the two claws together at the top of the transmission control cable lock piece. While holding the two claws together, push the two lugs on the bottom of the lock piece toward each other and upward to pull out the lock piece.

(d) Install the transmission control shift cable to the shift lever assembly.

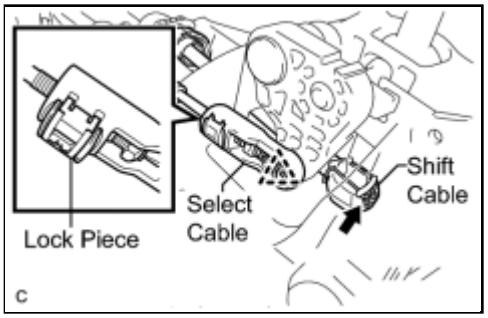

(e) Install the control select cable to the shift lever assembly.

NOTICE:

- Make sure to adjust the length at the neutral shift position.
- Make sure that the lock piece is protruding from the adjuster case.

(f) Install the clip to the shift lever assembly.

(g) Press in and lock the lock piece to the adjuster case.

NOTICE:

Securely press in the lock piece until the lock engages.

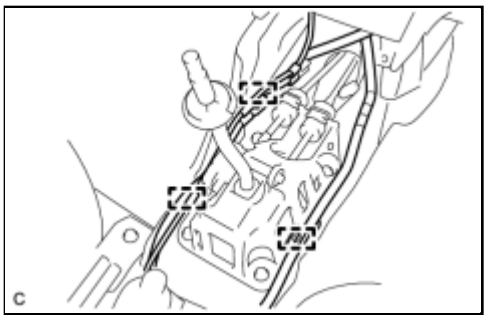

(h) Install the wire harness to the shift lever assembly with the 3 clamps.

3. ADJUST TRANSMISSION CONTROL SELECT CABLE INFO

4. INSTALL CONSOLE BOX ASSEMBLY INFO

5. INSTALL CONSOLE BOX CARPET INFO

6. INSTALL UPPER CONSOLE PANEL SUB-ASSEMBLY INFO

7. INSTALL FRONT NO. 1 CONSOLE BOX INSERT INFO

8. INSTALL FRONT NO. 2 CONSOLE BOX INSERT INFO

9. INSTALL INSTRUMENT PANEL BOX ASSEMBLY INFO

10. INSTALL CENTER NO. 1 INSTRUMENT CLUSTER FINISH PANEL ASSEMBLY INFO

11. INSTALL SHIFT LEVER KNOB SUB-ASSEMBLY INFO

12. INSTALL LOWER INSTRUMENT PANEL FINISH PANEL LH INFO

13. INSTALL LOWER INSTRUMENT PANEL FINISH PANEL RH INFO

Last Modified: 3-10-2010	6.4 K	**From:** 200901
Model Year: 2010	**Model:** Corolla	**Doc ID:** RM000001QHF01PX
Title: C59 MANUAL TRANSMISSION / TRANSAXLE: TRANSMISSION CONTROL CABLE: COMPONENTS (2010 Corolla)		

COMPONENTS

ILLUSTRATION

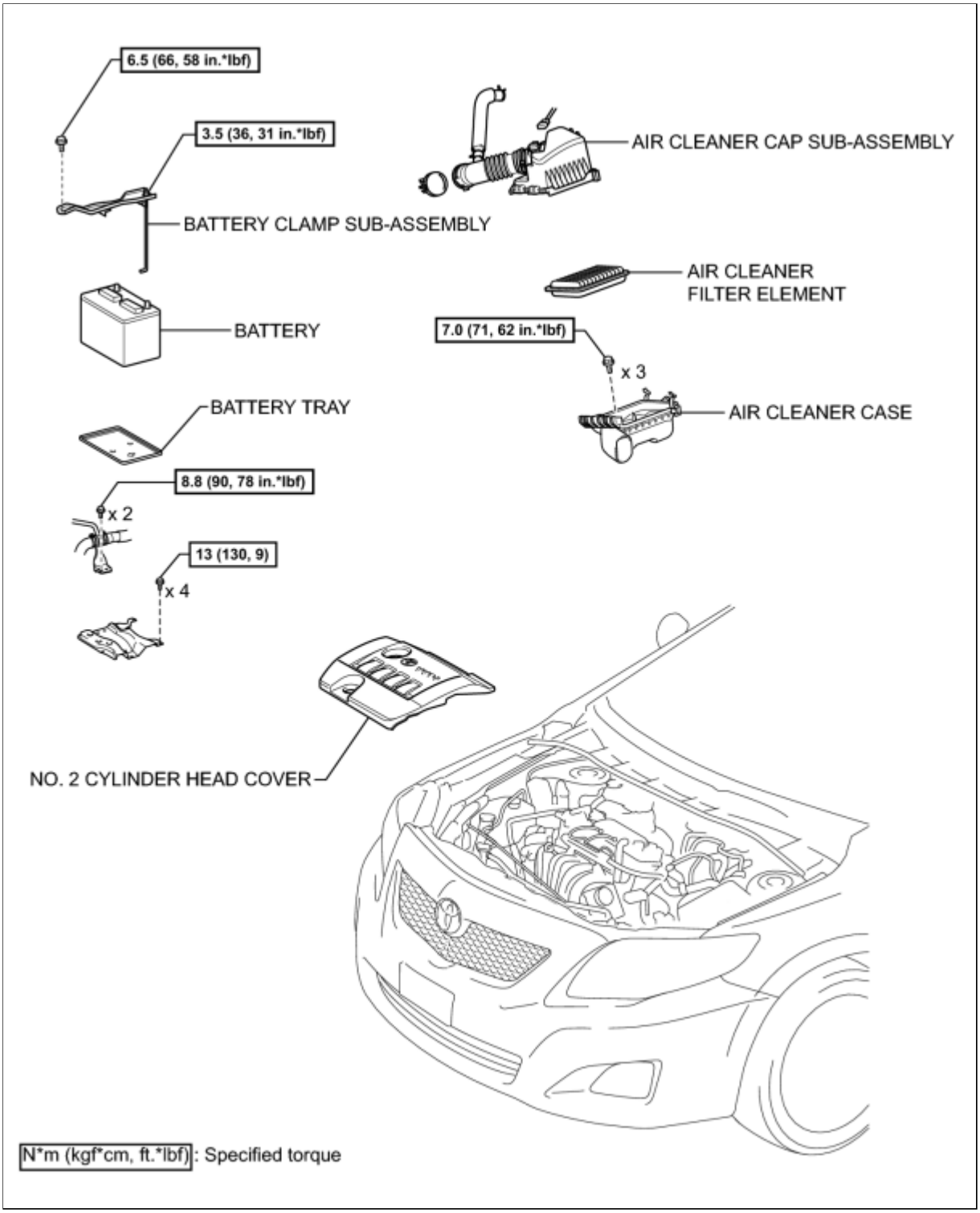

ILLUSTRATION

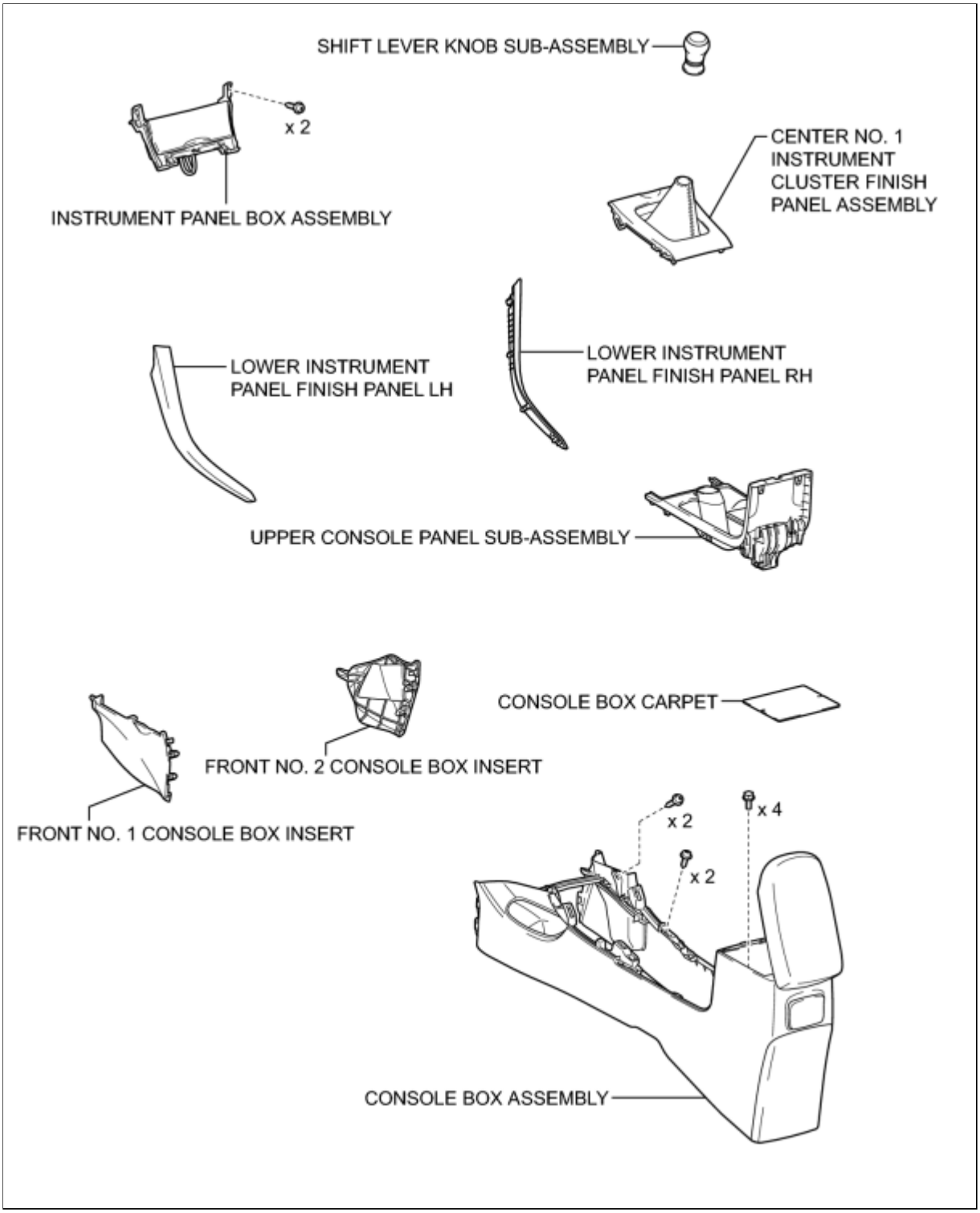

ILLUSTRATION

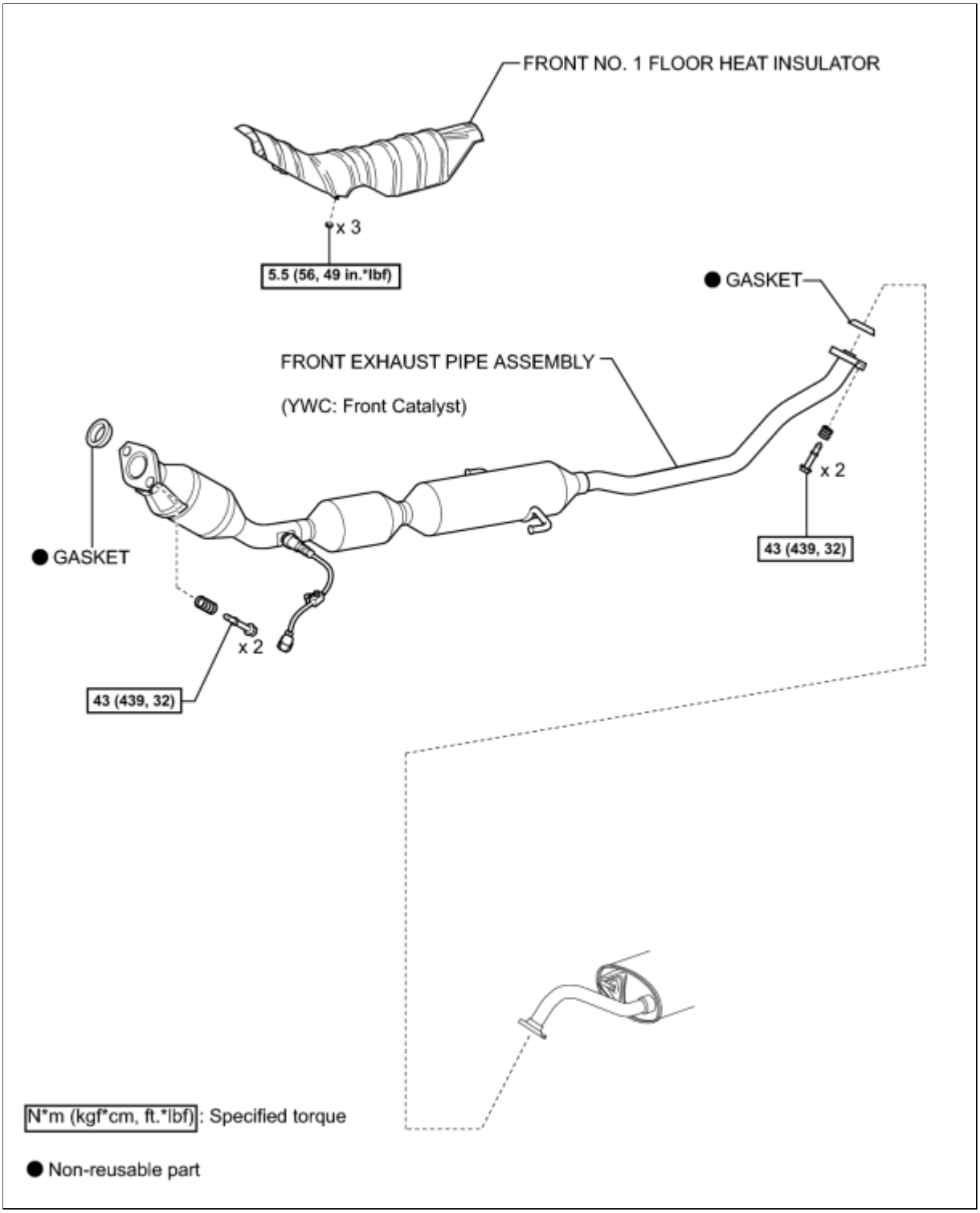

ILLUSTRATION

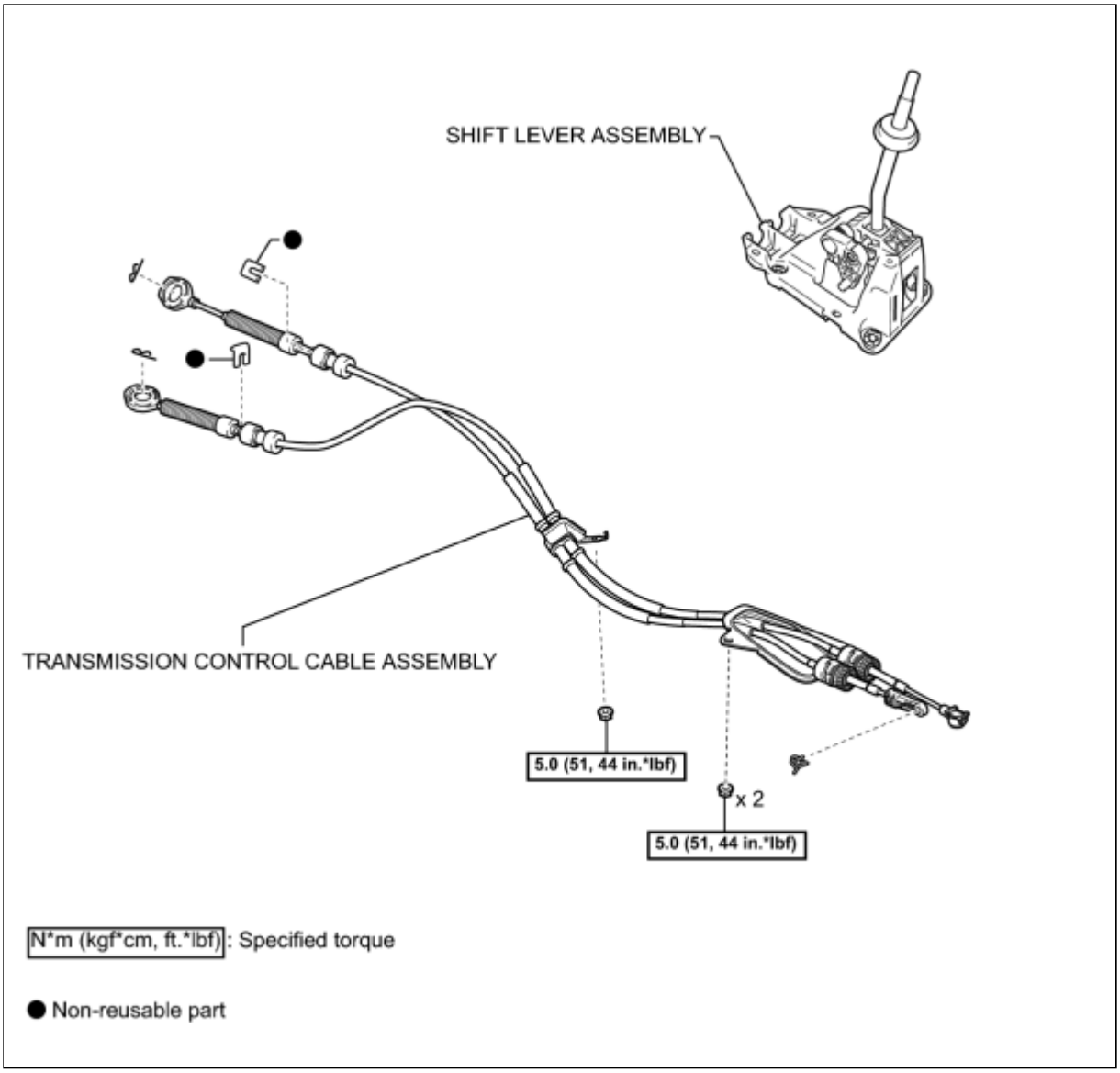
SHIFT LEVER ASSEMBLY
TRANSMISSION CONTROL CABLE ASSEMBLY
5.0 (51, 44 in.*lbf)
x 2
5.0 (51, 44 in.*lbf)
N*m (kgf*cm, ft.*lbf): Specified torque
● Non-reusable part

Last Modified: 3-10-2010	6.4 A	**From:** 200901
Model Year: 2010	**Model:** Corolla	**Doc ID:** RM000001QHG01UX
Title: C59 MANUAL TRANSMISSION / TRANSAXLE: TRANSMISSION CONTROL CABLE: REMOVAL (2010 Corolla)		

REMOVAL

1. DISCONNECT CABLE FROM NEGATIVE BATTERY TERMINAL

NOTICE:

When disconnecting the cable, some systems need to be initialized after the cable is reconnected INFO .

2. REMOVE NO. 2 CYLINDER HEAD COVER INFO

3. REMOVE BATTERY INFO

4. REMOVE BATTERY TRAY

5. REMOVE BATTERY CARRIER INFO

6. REMOVE AIR CLEANER CAP SUB-ASSEMBLY INFO

7. REMOVE AIR CLEANER CASE INFO

8. REMOVE FRONT EXHAUST PIPE ASSEMBLY INFO

9. REMOVE FRONT NO. 1 FLOOR HEAT INSULATOR

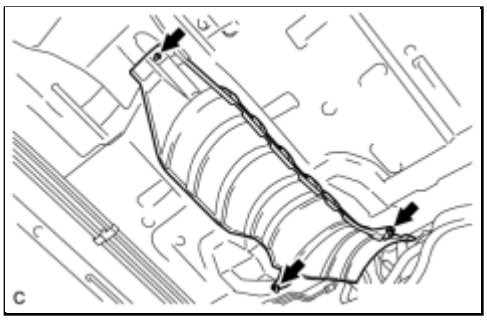

(a) Remove the 3 nuts and remove the No. 1 front floor heat insulator.

10. REMOVE LOWER INSTRUMENT PANEL FINISH PANEL LH INFO

11. REMOVE LOWER INSTRUMENT PANEL FINISH PANEL RH INFO

12. REMOVE SHIFT LEVER KNOB SUB-ASSEMBLY INFO

13. REMOVE CENTER NO. 1 INSTRUMENT CLUSTER FINISH PANEL ASSEMBLY INFO

14. REMOVE INSTRUMENT PANEL BOX ASSEMBLY INFO

15. REMOVE FRONT NO. 1 CONSOLE BOX INSERT INFO

16. REMOVE FRONT NO. 2 CONSOLE BOX INSERT INFO

17. REMOVE UPPER CONSOLE PANEL SUB-ASSEMBLY INFO

18. REMOVE CONSOLE BOX CARPET INFO

19. REMOVE CONSOLE BOX ASSEMBLY INFO

20. REMOVE TRANSMISSION CONTROL CABLE ASSEMBLY

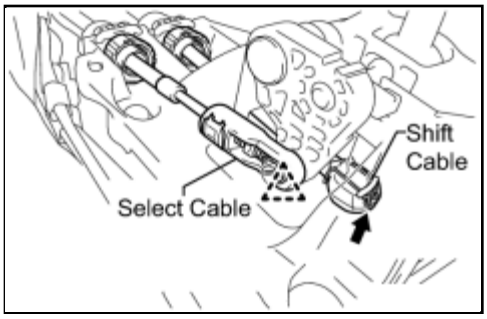

(a) Disconnect the control shift cable from the shift lever assembly.

(b) Remove the clip and disconnect the control select cable from the shift lever assembly.

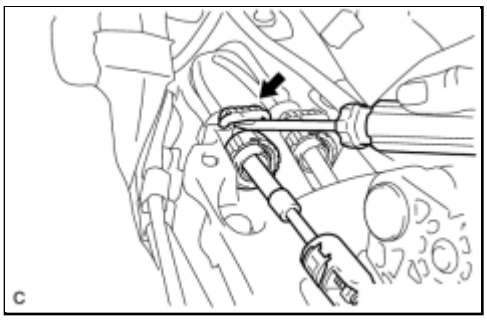

(c) Using a screwdriver, pull out the stopper of the transmission control cable.

NOTICE:

Do not remove the stopper. If it is removed, reinstall it to its original position.

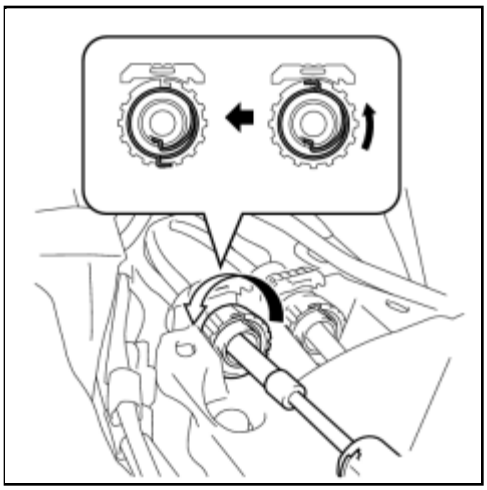

(d) Rotate the nut counterclockwise approximately 180° and, while holding the nut in that position, disconnect the transmission control cable from the shift lever retainer.

NOTICE:

Do not rotate the nut excessively as it may damage the internal spring and the transmission control cable will not be reusable.

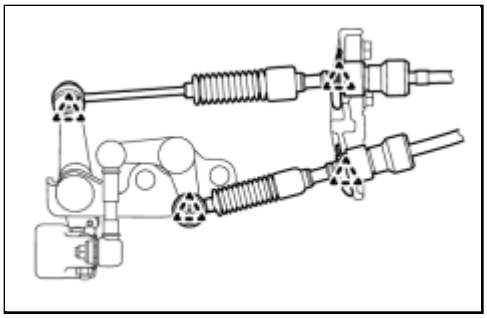

(e) Remove the 2 clips and disconnect the 2 transmission control cables from the transaxle.

(f) Remove the 2 clips and disconnect the 2 transmission control cables from the control cable bracket.

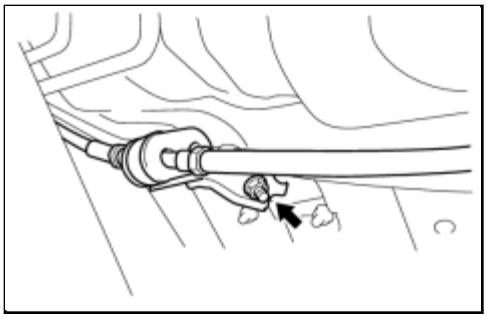

(g) Remove the nut and transmission control cable assembly.

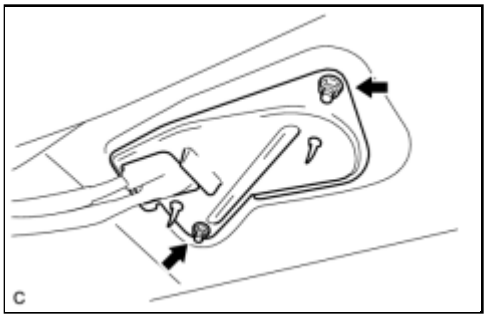

(h) Remove the 2 nuts and transmission control cable assembly.

Last Modified: 3-10-2010	6.4 N	**From:** 200901
Model Year: 2010	**Model:** Corolla	**Doc ID:** RM000002YVY00VX
Title: C59 MANUAL TRANSMISSION / TRANSAXLE: TRANSMISSION CONTROL CABLE: ADJUSTMENT (2010 Corolla)		

ADJUSTMENT

1. ADJUST TRANSMISSION CONTROL SELECT CABLE

(a) Remove the console box assembly INFO .

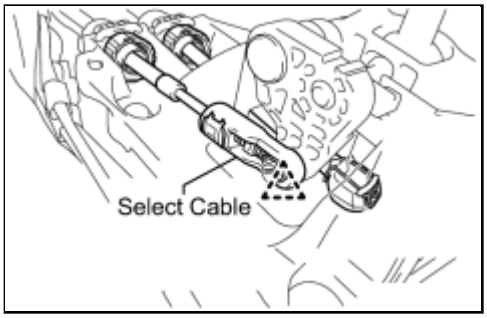

(b) Remove the clip and disconnect the control select cable from the shift lever assembly.

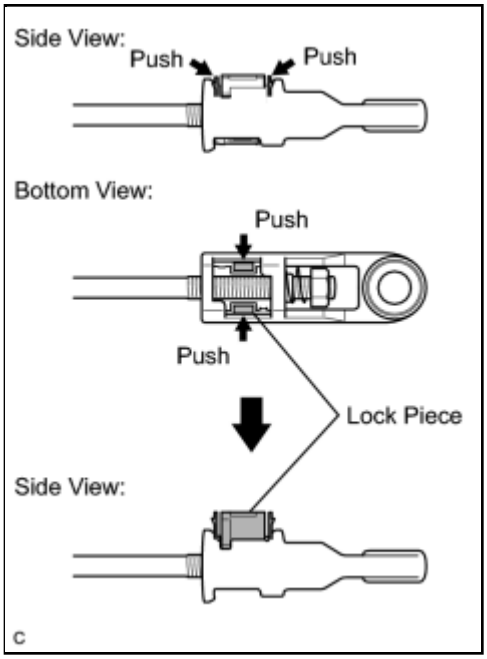

(c) Push the two claws together at the top of the transmission control cable lock piece. While holding the two claws together, push the two lugs on the bottom of the lock piece toward each other and upward to pull out the lock piece.

(d) Install the transmission control shift cable to the shift lever assembly.

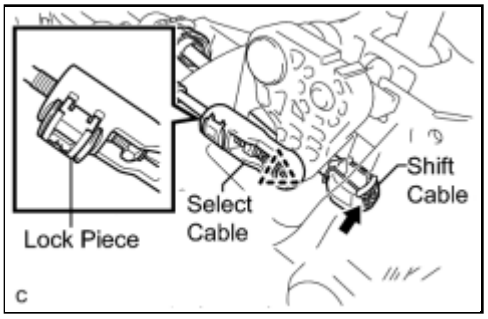

(e) Install the control select cable to the shift lever assembly.

NOTICE:

- Make sure to adjust the length at the neutral shift position.
- Make sure that the lock piece is protruding from the adjuster case.

(f) Install the clip to the shift lever assembly.

(g) Press in and lock the lock piece to the adjuster case.

NOTICE:

Securely press in the lock piece until the lock engages.

Last Modified: 3-10-2010	6.4 A	**From:** 200901
Model Year: 2010	**Model:** Corolla	**Doc ID:** RM000001QHE01UX
Title: C59 MANUAL TRANSMISSION / TRANSAXLE: TRANSMISSION CONTROL CABLE: INSTALLATION (2010 Corolla)		

INSTALLATION

1. INSTALL TRANSMISSION CONTROL CABLE ASSEMBLY

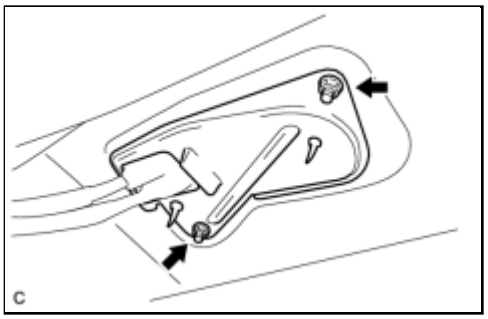

(a) Install the transmission control cable assembly with the 2 nuts.

Torque: 5.0 N·m (51 kgf·cm, 44in·lbf)

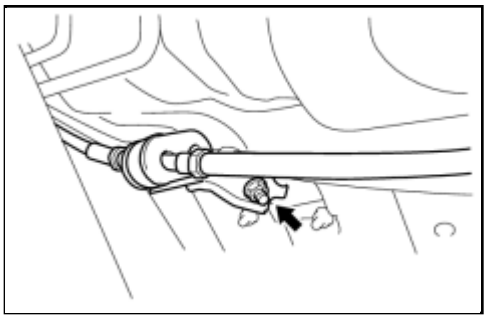

(b) Install the transmission control cable assembly with the nut.

Torque: 5.0 N·m (51 kgf·cm, 44in·lbf)

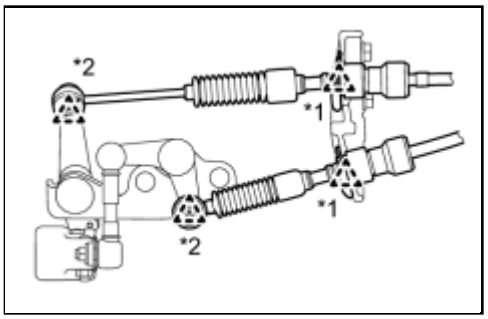

(c) Install the 2 transmission control cables to the control cable bracket with 2 new clips*1.

(d) Install the 2 transmission control cables to the transaxle with the 2 clips*2.

(e) Rotate the transmission control cable nut counterclockwise approximately 180° and, while holding

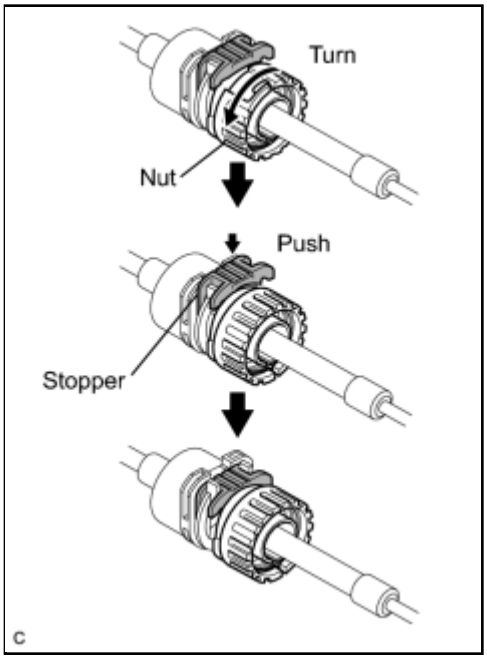

the nut in that position, press in the stopper until it makes 2 "click" sounds.

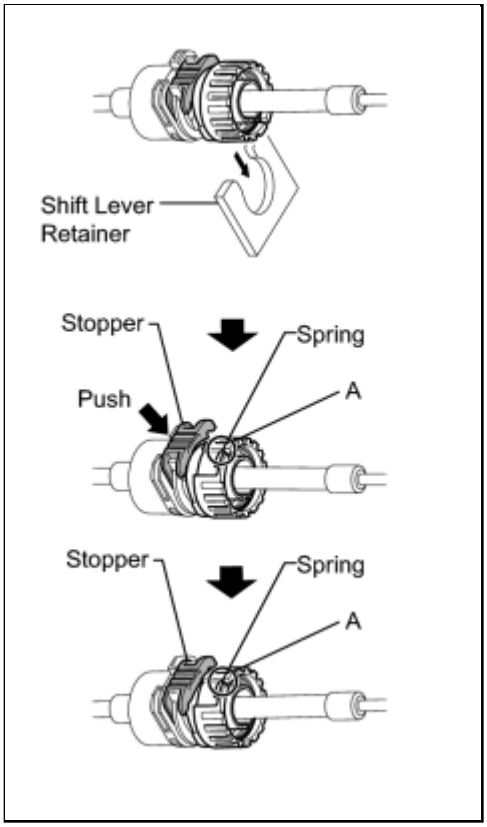

(f) Install the outer part of the transmission control cable to the shift lever retainer, check that the position of the spring is the same as A shown in the illustration, and push in the stopper.

HINT:

If the stopper cannot be pushed in, slightly rotate the nut clockwise and then push in the stopper.

(g) Push the two claws together at the top of the transmission control cable lock piece. While holding the two claws together, push the two lugs on the bottom of the lock piece

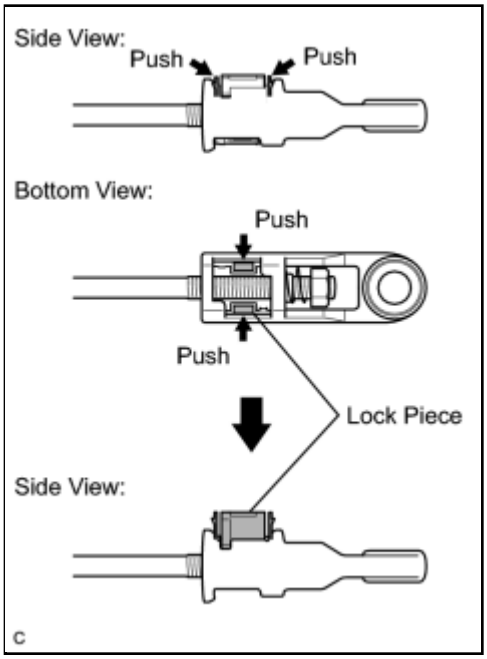

toward each other and upward to pull out the lock piece.

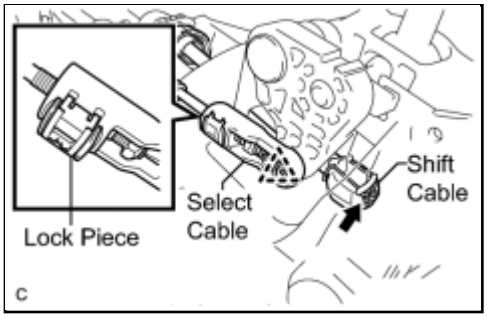

(h) Install the transmission control shift cable to the shift lever assembly.

(i) Install the control select cable to the shift lever assembly.

NOTICE:

- Make sure to adjust the length at the neutral shift position.
- Make sure that the lock piece is protruding from the adjuster case.

(j) Install the clip to the shift lever assembly.

(k) Press in and lock the lock piece to the adjuster case.

NOTICE:

Securely press in the lock piece until the lock engages.

2. ADJUST TRANSMISSION CONTROL SELECT CABLE INFO

3. INSTALL CONSOLE BOX ASSEMBLY INFO

4. INSTALL CONSOLE BOX CARPET INFO

5. INSTALL UPPER CONSOLE PANEL SUB-ASSEMBLY INFO

6. INSTALL FRONT NO. 1 CONSOLE BOX INSERT INFO

7. INSTALL FRONT NO. 2 CONSOLE BOX INSERT INFO

8. INSTALL INSTRUMENT PANEL BOX ASSEMBLY INFO

9. INSTALL CENTER NO. 1 INSTRUMENT CLUSTER FINISH PANEL ASSEMBLY INFO

10. INSTALL SHIFT LEVER KNOB SUB-ASSEMBLY INFO

11. INSTALL LOWER INSTRUMENT PANEL FINISH PANEL LH INFO

12. INSTALL LOWER INSTRUMENT PANEL FINISH PANEL RH INFO

13. INSTALL FRONT NO. 1 FLOOR HEAT INSULATOR

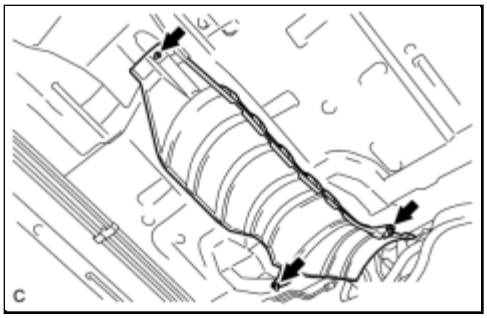

(a) Install the No. 1 front floor heat insulator with the 3 nuts.

Torque: 5.5 N·m (56 kgf·cm, 49in·lbf)

14. INSTALL FRONT EXHAUST PIPE ASSEMBLY INFO

15. INSTALL AIR CLEANER CASE INFO

16. INSTALL AIR CLEANER CAP SUB-ASSEMBLY INFO

17. INSTALL BATTERY CARRIER INFO

18. INSTALL BATTERY TRAY

19. INSTALL BATTERY INFO

20. INSPECT FOR EXHAUST GAS LEAK

21. INSTALL NO. 2 CYLINDER HEAD COVER INFO

22. CONNECT CABLE TO NEGATIVE BATTERY TERMINAL

NOTICE:

When disconnecting the cable, some systems need to be initialized after the cable is reconnected INFO **.**

Last Modified: 3-10-2010	6.4 K	**From:** 200901
Model Year: 2010	**Model:** Corolla	**Doc ID:** RM000001QHF01QX
Title: E351 MANUAL TRANSMISSION / TRANSAXLE: TRANSMISSION CONTROL CABLE: COMPONENTS (2010 Corolla)		

COMPONENTS

ILLUSTRATION

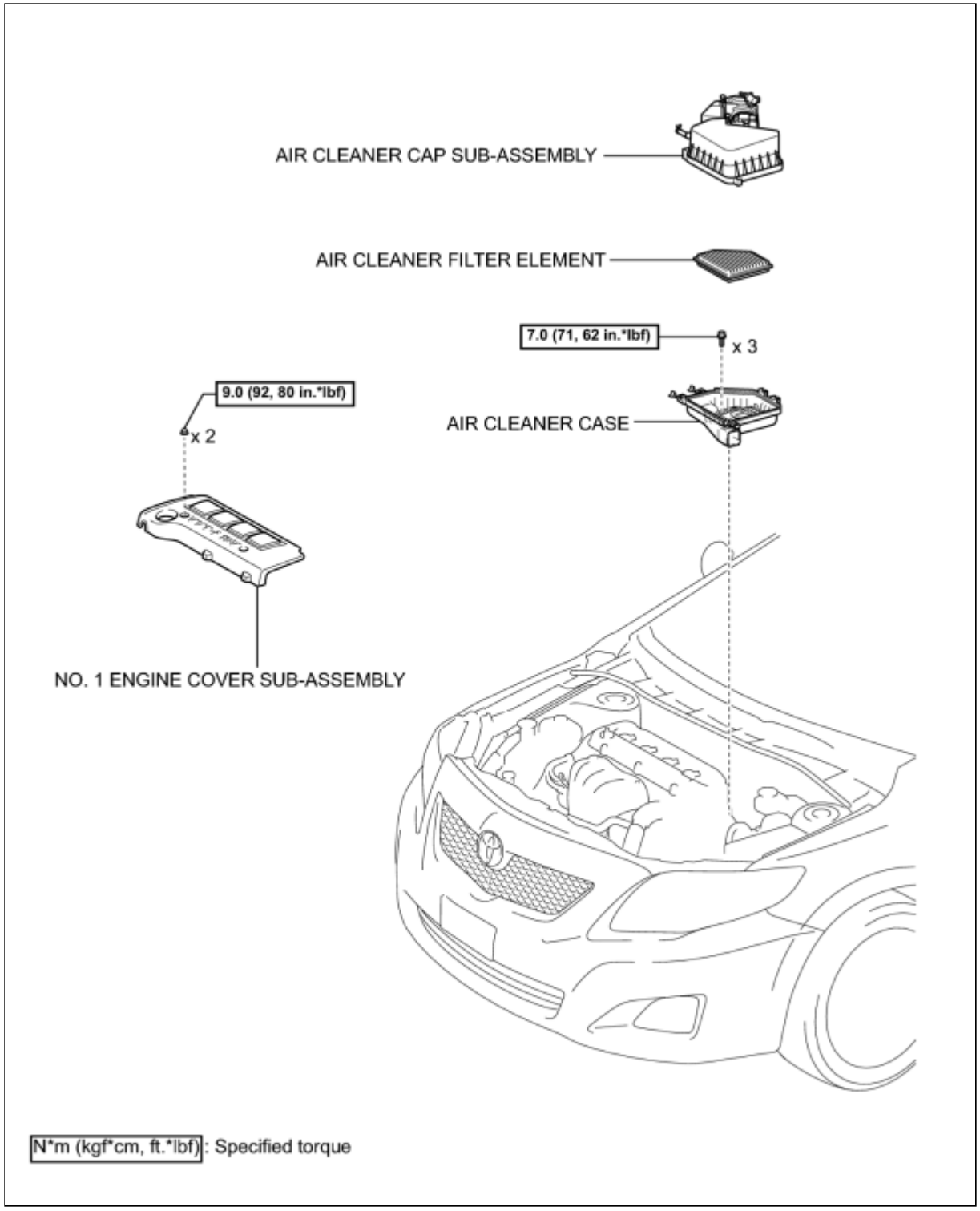

ILLUSTRATION

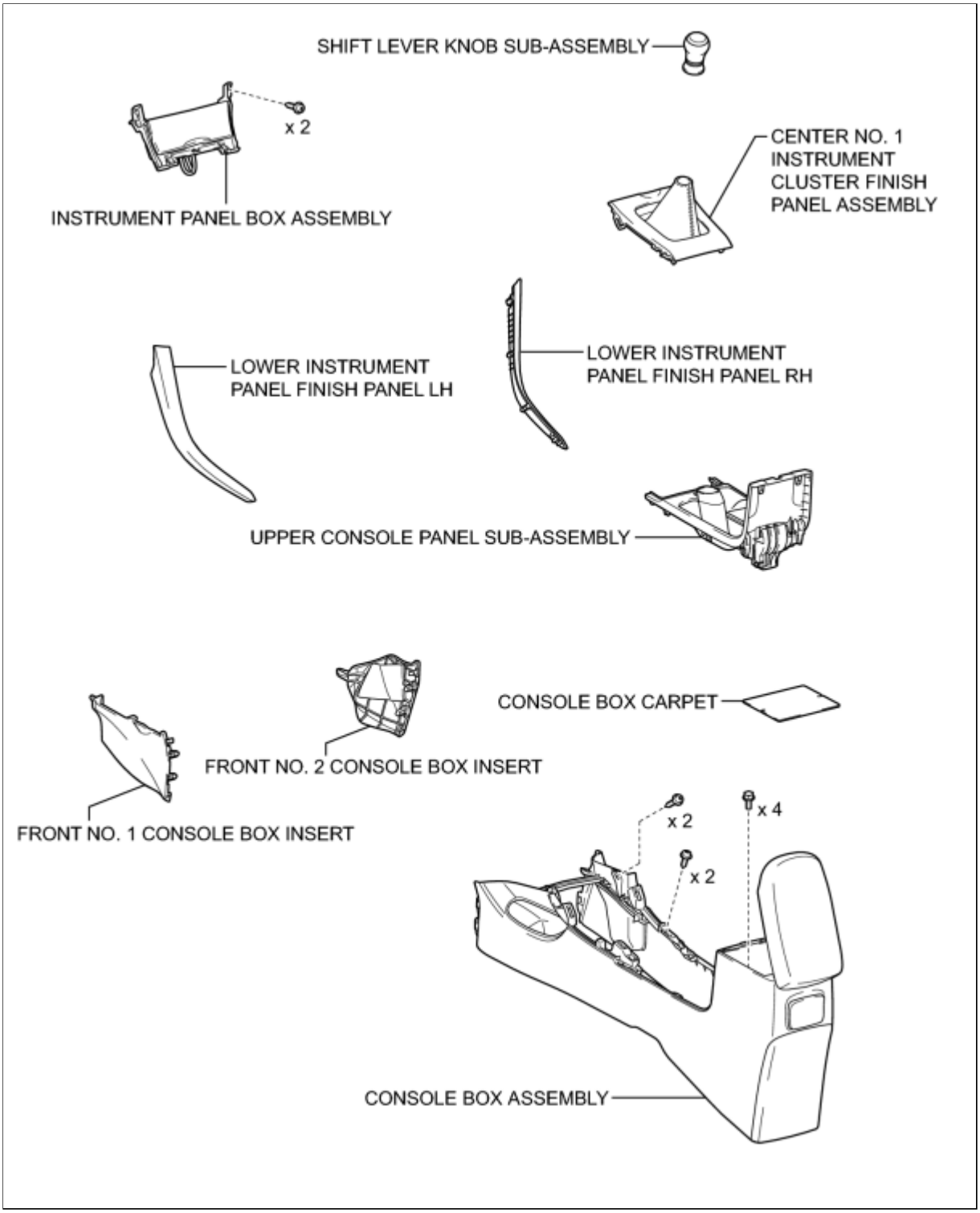

ILLUSTRATION

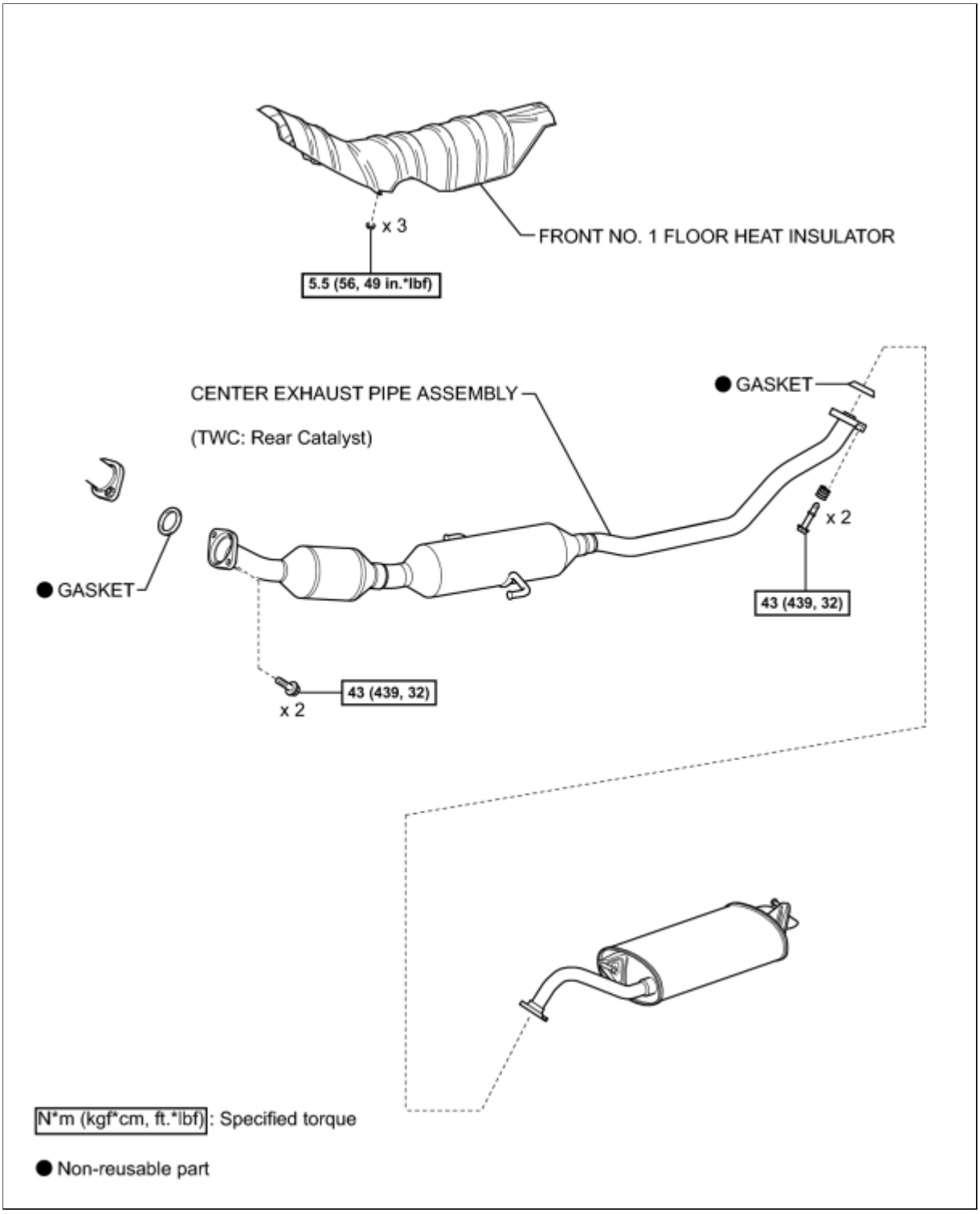

ILLUSTRATION

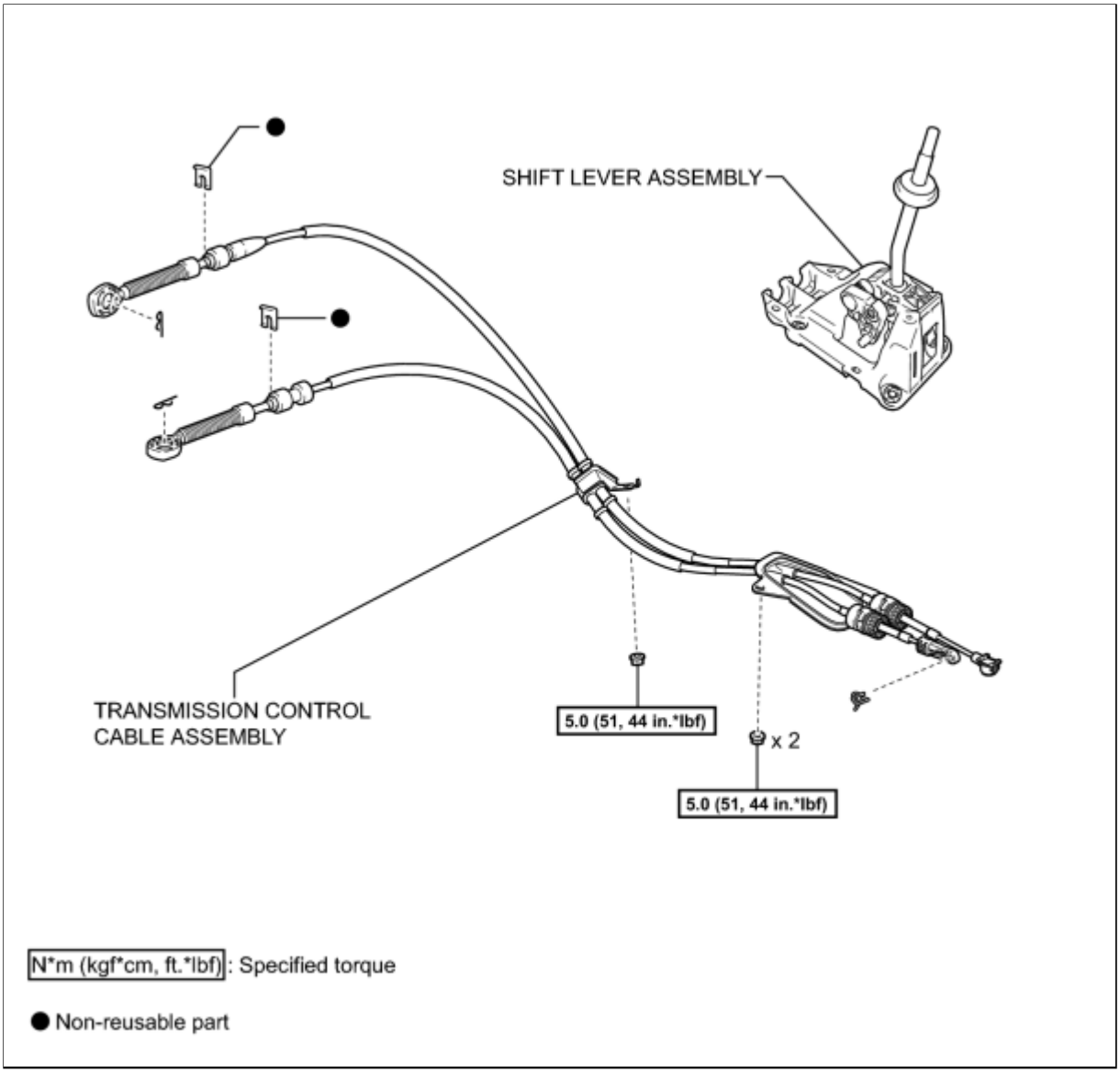

N*m (kgf*cm, ft.*lbf): Specified torque

● Non-reusable part

Last Modified: 3-10-2010	6.4 A	**From:** 200901
Model Year: 2010	**Model:** Corolla	**Doc ID:** RM000001QHG01VX
Title: E351 MANUAL TRANSMISSION / TRANSAXLE: TRANSMISSION CONTROL CABLE: REMOVAL (2010 Corolla)		

REMOVAL

1. REMOVE NO. 1 ENGINE COVER SUB-ASSEMBLY INFO

2. REMOVE AIR CLEANER CAP SUB-ASSEMBLY INFO

3. REMOVE AIR CLEANER CASE INFO

4. REMOVE CENTER EXHAUST PIPE ASSEMBLY INFO

5. REMOVE FRONT NO. 1 FLOOR HEAT INSULATOR

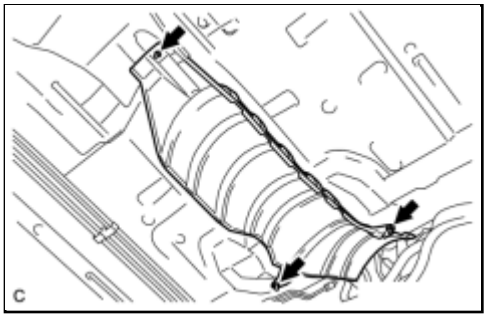

(a) Remove the 3 nuts and remove the No. 1 front floor heat insulator.

6. REMOVE LOWER INSTRUMENT PANEL FINISH PANEL LH INFO

7. REMOVE LOWER INSTRUMENT PANEL FINISH PANEL RH INFO

8. REMOVE SHIFT LEVER KNOB SUB-ASSEMBLY INFO

9. REMOVE CENTER NO. 1 INSTRUMENT CLUSTER FINISH PANEL ASSEMBLY INFO

10. REMOVE INSTRUMENT PANEL BOX ASSEMBLY INFO

11. REMOVE FRONT NO. 1 CONSOLE BOX INSERT INFO

12. REMOVE FRONT NO. 2 CONSOLE BOX INSERT INFO

13. REMOVE UPPER CONSOLE PANEL SUB-ASSEMBLY INFO

14. REMOVE CONSOLE BOX CARPET INFO

15. REMOVE CONSOLE BOX ASSEMBLY INFO

16. REMOVE TRANSMISSION CONTROL CABLE ASSEMBLY

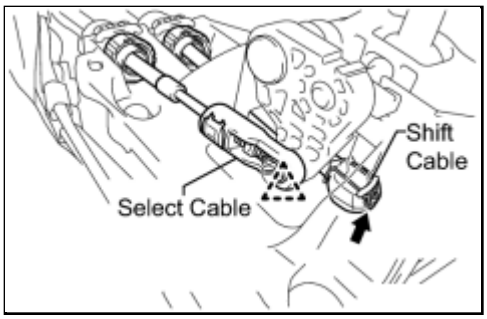

(a) Disconnect the control shift cable from the shift lever assembly.

(b) Remove the clip and disconnect the control select cable from the shift lever assembly.

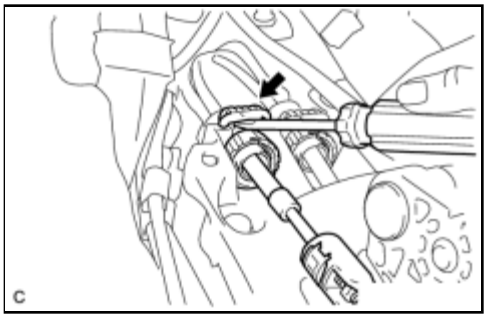

(c) Using a screwdriver, pull out the transmission control cable stopper.

NOTICE:

Do not remove the stopper. If it is removed, reinstall it to its original position.

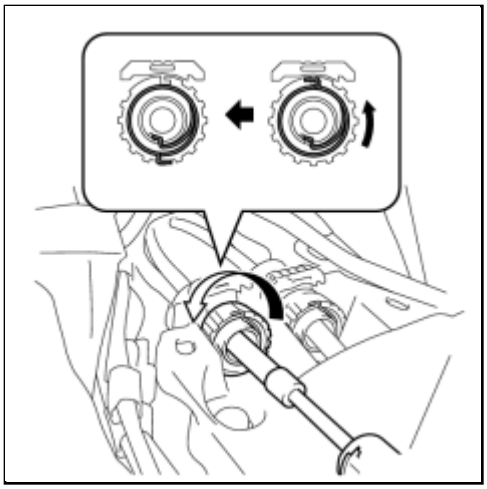

(d) Rotate the nut counterclockwise approximately 180° and, while holding the nut in that position, disconnect the transmission control cable from the shift lever retainer.

NOTICE:

Do not rotate the nut excessively as it may damage the internal spring and the transmission control cable will not be reusable.

(e) Remove the 2 clips and disconnect the 2 transmission control cables from the transaxle.

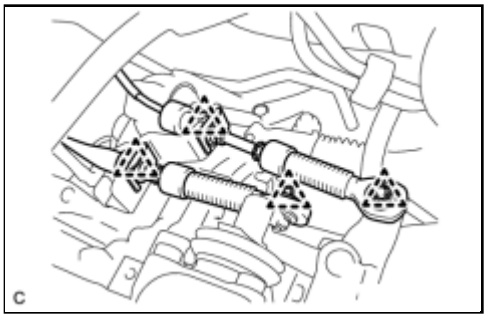

(f) Remove the 2 clips and disconnect the 2 transmission control cables from the control cable bracket.

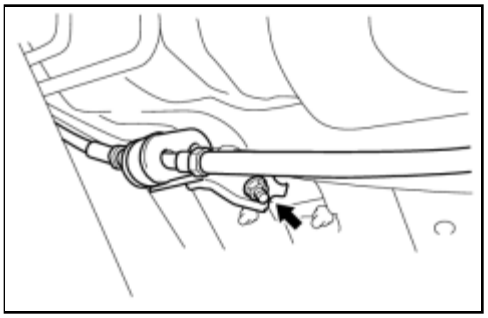

(g) Remove the nut and transmission control cable assembly.

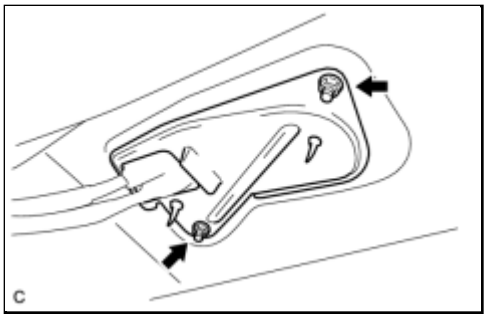

(h) Remove the 2 nuts and transmission control cable assembly.

Last Modified: 3-10-2010	6.4 N	**From:** 200901
Model Year: 2010	**Model:** Corolla	**Doc ID:** RM000002YVY00WX
Title: E351 MANUAL TRANSMISSION / TRANSAXLE: TRANSMISSION CONTROL CABLE: ADJUSTMENT (2010 Corolla)		

ADJUSTMENT

1. ADJUST TRANSMISSION CONTROL SELECT CABLE

(a) Remove the console box assembly INFO .

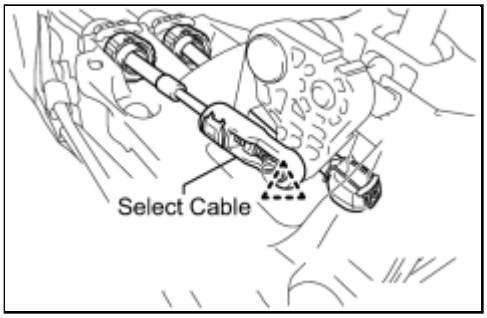

(b) Remove the clip and disconnect the control select cable from the shift lever assembly.

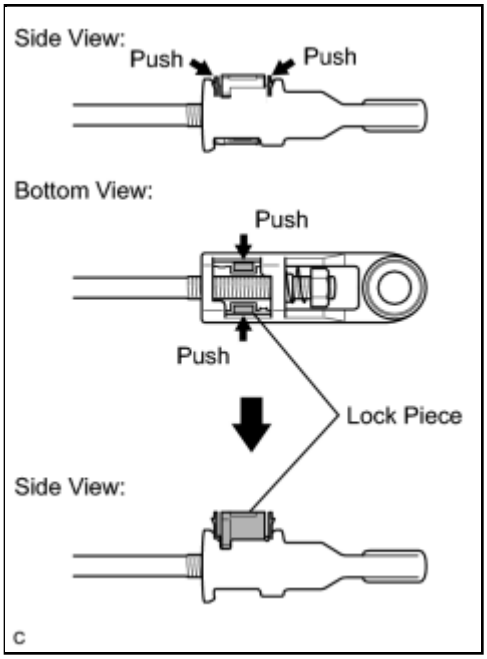

(c) Push the two claws together at the top of the transmission control cable lock piece. While holding the two claws together, push the two lugs on the bottom of the lock piece toward each other and upward to pull out the lock piece.

(d) Install the transmission control shift cable to the shift lever assembly.

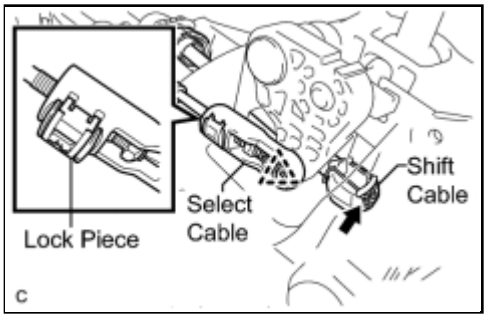

(e) Install the control select cable to the shift lever assembly.

NOTICE:

- Make sure to adjust the length at the neutral shift position.
- Make sure that the lock piece is protruding from the adjuster case.

(f) Install the clip to the shift lever assembly.

(g) Press in and lock the lock piece to the adjuster case.

NOTICE:

Securely press in the lock piece until the lock engages.

Last Modified: 3-10-2010	6.4 A	**From:** 200901
Model Year: 2010	**Model:** Corolla	**Doc ID:** RM000001QHE01VX
Title: E351 MANUAL TRANSMISSION / TRANSAXLE: TRANSMISSION CONTROL CABLE: INSTALLATION (2010 Corolla)		

INSTALLATION

1. INSTALL TRANSMISSION CONTROL CABLE ASSEMBLY

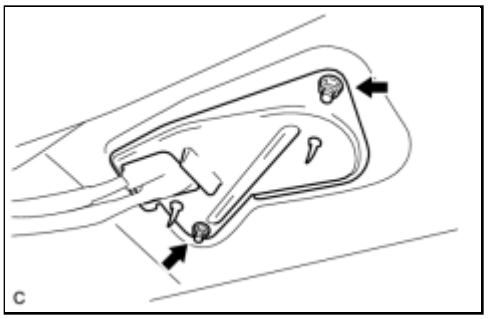

(a) Install the transmission control cable assembly with the 2 nuts.

Torque: 5.0 N·m (51 kgf·cm, 44in·lbf)

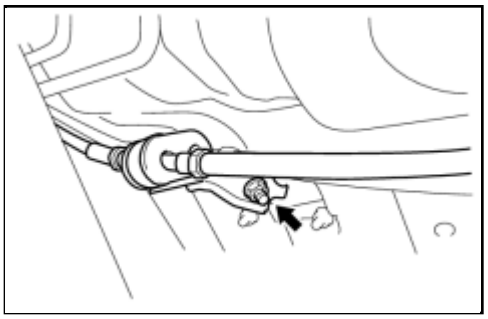

(b) Install the transmission control cable assembly with the nut.

Torque: 5.0 N·m (51 kgf·cm, 44in·lbf)

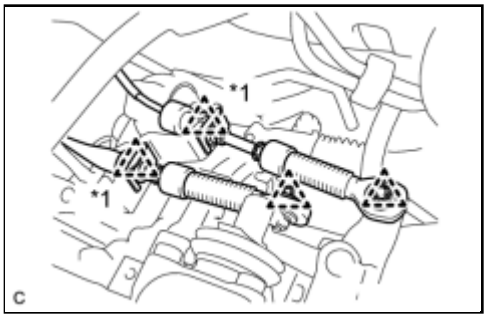

(c) Install the 2 transmission control cables to the control cable bracket with 2 new clips*1.

(d) Install the 2 transmission control cables to the transaxle with the 2 clips.

(e) Rotate the transmission control cable nut counterclockwise approximately 180° and, while holding

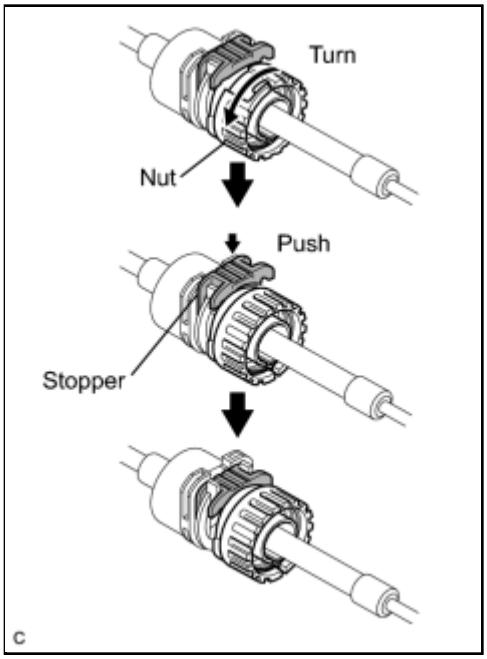

the nut in that position, press in the stopper until it makes 2 "click" sounds.

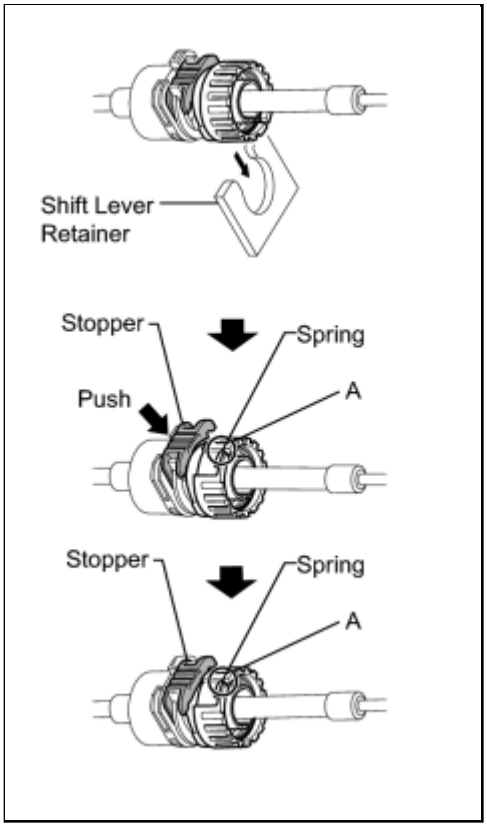

(f) Install the outer part of the transmission control cable to the shift lever retainer, check that the position of the spring is the same as A shown in the illustration, and push in the stopper.

HINT:

If the stopper cannot be pushed in, slightly rotate the nut clockwise and then push in the stopper.

(g) Push the two claws together at the top of the transmission control cable lock piece. While holding the two claws together, push the two lugs on the bottom of the lock piece

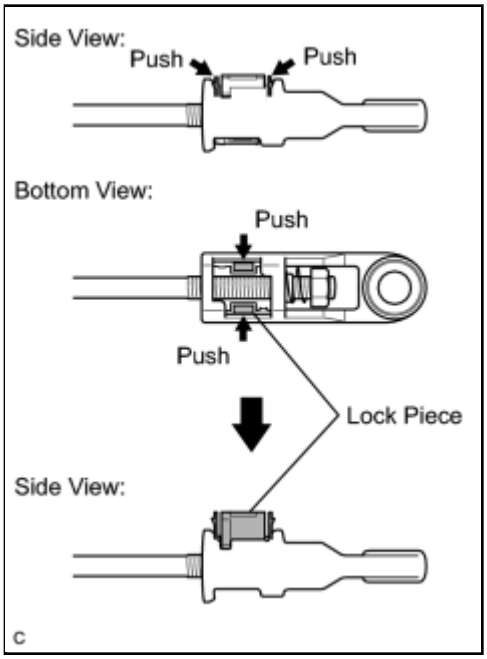

toward each other and upward to pull out the lock piece.

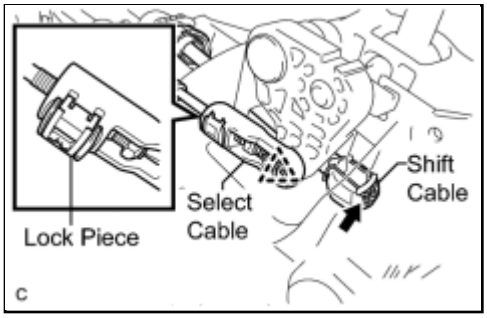

(h) Install the transmission control shift cable to the shift lever assembly.

(i) Install the control select cable to the shift lever assembly.

NOTICE:

- Make sure to adjust the length at the neutral shift position.
- Make sure that the lock piece is protruding from the adjuster case.

(j) Install the clip to the shift lever assembly.

(k) Press in and lock the lock piece to the adjuster case.

NOTICE:

Securely press in the lock piece until the lock engages.

2. ADJUST TRANSMISSION CONTROL SELECT CABLE INFO

3. INSTALL CONSOLE BOX ASSEMBLY INFO

4. INSTALL CONSOLE BOX CARPET INFO

5. INSTALL UPPER CONSOLE PANEL SUB-ASSEMBLY INFO

6. INSTALL FRONT NO. 1 CONSOLE BOX INSERT INFO

7. INSTALL FRONT NO. 2 CONSOLE BOX INSERT INFO

8. INSTALL INSTRUMENT PANEL BOX ASSEMBLY INFO

9. INSTALL CENTER NO. 1 INSTRUMENT CLUSTER FINISH PANEL ASSEMBLY INFO

10. INSTALL SHIFT LEVER KNOB SUB-ASSEMBLY INFO

11. INSTALL LOWER INSTRUMENT PANEL FINISH PANEL LH INFO

12. INSTALL LOWER INSTRUMENT PANEL FINISH PANEL RH INFO

13. INSTALL FRONT NO. 1 FLOOR HEAT INSULATOR

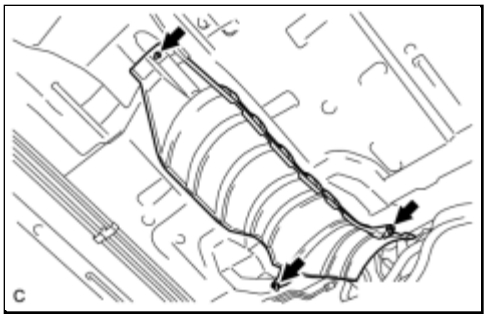

(a) Install the No. 1 front floor heat insulator with the 3 nuts.

Torque: 5.5 N·m (56 kgf·cm, 49in·lbf)

14. INSTALL CENTER EXHAUST PIPE ASSEMBLY INFO

15. INSTALL AIR CLEANER CASE INFO

16. INSTALL AIR CLEANER CAP SUB-ASSEMBLY INFO

17. INSPECT FOR EXHAUST GAS LEAK

18. INSTALL NO. 1 ENGINE COVER SUB-ASSEMBLY INFO

Last Modified: 3-10-2010	6.4 A	**From:** 200901
Model Year: 2010	**Model:** Corolla	**Doc ID:** RM000002KK801PX
Title: 2AZ-FE COOLING: COOLANT: REPLACEMENT (2010 Corolla)		

REPLACEMENT

1. DRAIN ENGINE COOLANT

(a) Loosen the lower radiator drain cock plug.

CAUTION:

Do not loosen the lower radiator drain cock plug while the engine and radiator are still hot.

Pressurized, hot engine coolant and steam may be released and cause serious burns.

HINT:

Collect the coolant in a container and dispose of it according to the regulations in your area.

(b) Remove the radiator cap.

(c) Loosen the cylinder block drain cock plug.

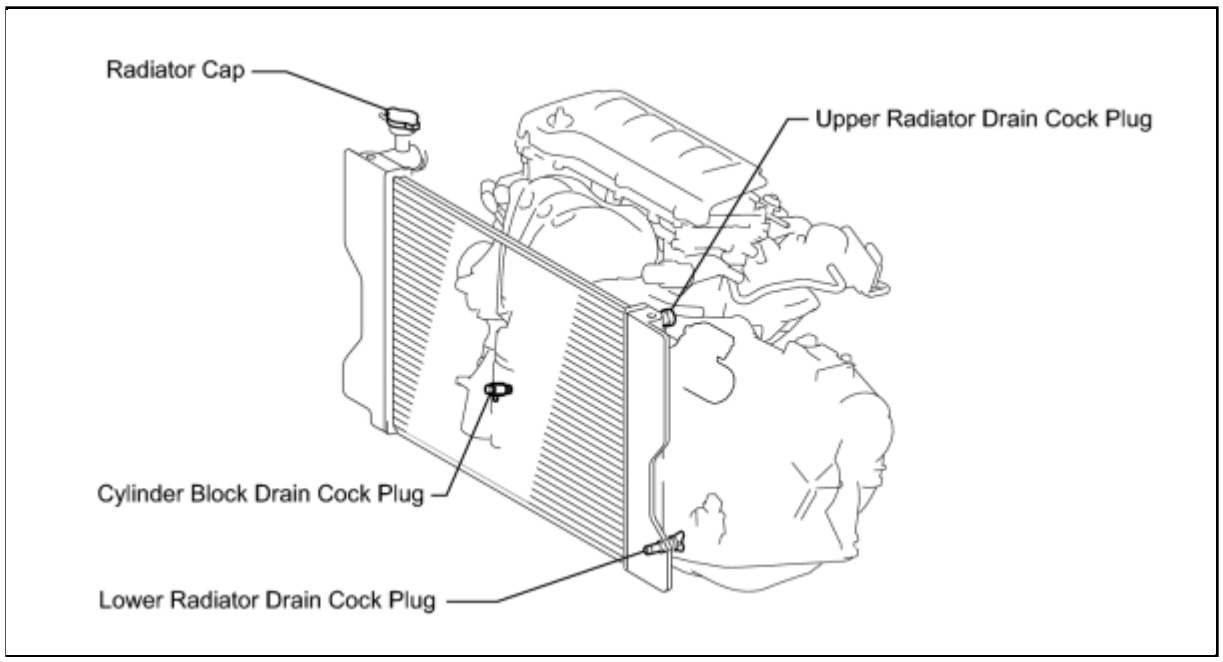

2. ADD ENGINE COOLANT

(a) Tighten the lower radiator drain cock plug.

(b) Tighten the cylinder block drain cock plug.

Torque: 13 N·m (130 kgf·cm, 9ft·lbf)

(c) Loosen the upper radiator drain cock plug.

(d) Slowly fill the radiator with TOYOTA Super Long Life Coolant (SLLC).

Standard Capacity:

ITEM	CAPACITY
Engine coolant	5.7 liters (6.0 US qts, 5.0 lmp. qts)

HINT:

- TOYOTA vehicles are filled with TOYOTA SLLC at the factory. In order to avoid damage to the engine cooling system and other technical problems, only use TOYOTA SLLC or similar high quality ethylene glycol based non-silicate, non-amine, non-nitrite, non-borate coolant with long-life hybrid organic acid technology (coolant with long-life hybrid organic acid technology consists of a combination of low phosphates and organic acids).
- Contact your TOYOTA dealer for further details.

NOTICE:

Never use water as a substitute for engine coolant.

(e) Squeeze the inlet and outlet radiator hoses several times by hand, and then check the level of the coolant.

If the coolant level is low, add coolant.

(f) Tighten the upper radiator drain cock plug.

(g) Slowly pour coolant into the radiator reservoir tank until it reaches the FULL line.

(h) Install the radiator cap sub-assembly and reservoir tank cap.

(i) Start the engine and warm it up.

(j) Bleed air from the cooling system.

NOTICE:

- Before starting the engine, turn the A/C switch off.
- Adjust the air conditioning temperature setting to MAX (HOT).
- Adjust the air conditioning blower setting to LO.

(1) Warm up the engine until the thermostat opens. While the thermostat is open, allow the coolant to circulate for several minutes.

HINT:

Thermostat opening timing can be determined by squeezing the inlet radiator hose, and sensing vibrations when the engine coolant starts to flow inside the hose.

CAUTION:

When squeezing the radiator hoses:

- Wear protective gloves.
- Be careful as the radiator hoses are hot.
- Keep your hands away from the radiator fan.

(k) Stop the engine, and wait until the engine coolant cools down.

(l) Add engine coolant to the FULL line on the radiator reservoir.

3. INSPECT FOR COOLANT LEAK INFO

Last Modified: 3-10-2010	6.4 A	**From:** 200901
Model Year: 2010	**Model:** Corolla	**Doc ID:** RM000002KK801OX
Title: 2ZR-FE COOLING: COOLANT: REPLACEMENT (2010 Corolla)		

REPLACEMENT

1. DRAIN ENGINE COOLANT

(a) Loosen the lower radiator drain cock plug.

CAUTION:

Do not loosen the lower radiator drain cock plug while the engine and radiator are still hot.

Pressurized, hot engine coolant and steam may be released and cause serious burns.

HINT:

Collect the coolant in a container and dispose of it according to the regulations in your area.

(b) Remove the radiator cap.

(c) Loosen the cylinder block drain cock plug.

HINT:

The plug is on the backside of the generator on the exhaust manifold side.

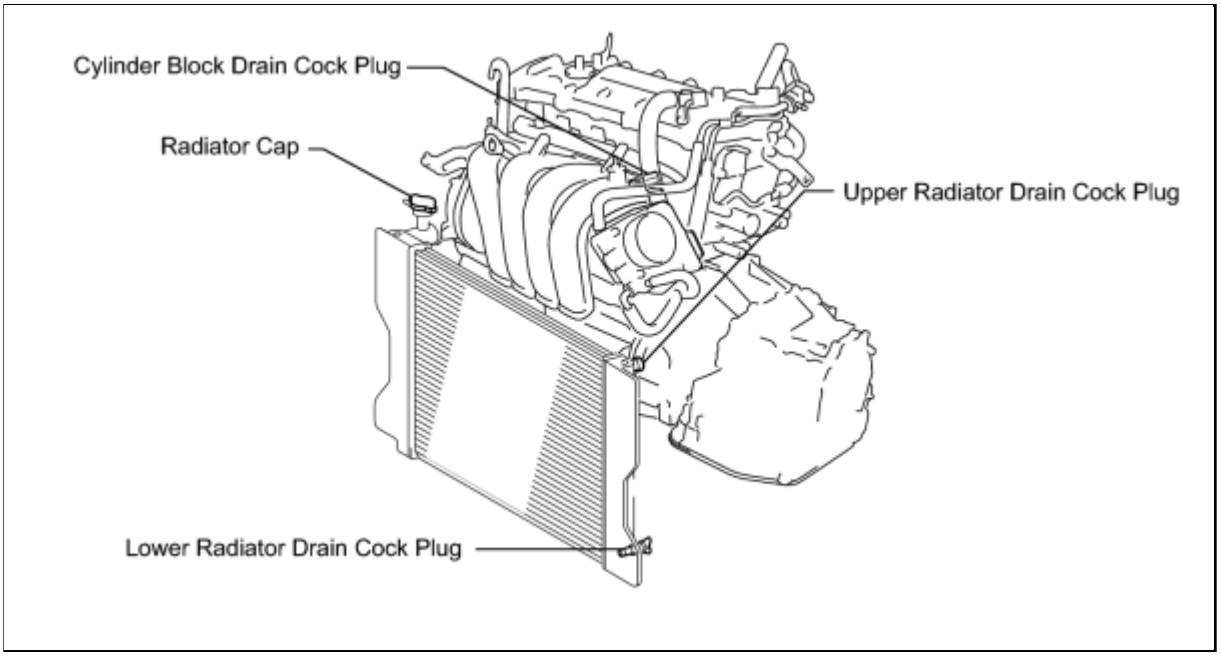

2. ADD ENGINE COOLANT

(a) Tighten the lower radiator drain cock plug.

(b) Tighten the cylinder block drain cock plug.

Torque: 13 N·m (130 kgf·cm, 9ft·lbf)

(c) Loosen the upper radiator drain cock plug.

(d) Slowly fill the radiator with TOYOTA Super Long Life Coolant (SLLC).

Standard Capacity:

ITEM	CAPACITY
Engine coolant	5.5 liters (5.8 US qts, 4.8 lmp. qts)

HINT:

- TOYOTA vehicles are filled with TOYOTA SLLC at the factory. In order to avoid damage to the engine cooling system and other technical problems, only use TOYOTA SLLC or similar high quality ethylene glycol based non-silicate, non-amine, non-nitrite, non-borate coolant with long-life hybrid organic acid technology (coolant with long-life hybrid organic acid technology consists of a combination of low phosphates and organic acids).
- Contact your TOYOTA dealer for further details.

NOTICE:

Never use water as a substitute for engine coolant.

(e) Squeeze the inlet and outlet radiator hoses several times by hand, and then check the level of the coolant.

If the coolant level is low, add coolant.

(f) Tighten the upper radiator drain cock plug.

(g) Slowly pour coolant into the radiator reservoir tank until it reaches the FULL line.

(h) Install the radiator cap sub-assembly and reservoir tank cap.

(i) Start the engine and warm it up.

(j) Bleed air from the cooling system.

NOTICE:

- Before starting the engine, turn the A/C switch off.
- Adjust the air conditioning temperature setting to MAX (HOT).
- Adjust the air conditioning blower setting to LO.

(1) Warm up the engine until the thermostat opens. While the thermostat is open, allow the coolant to circulate for several minutes.

HINT:

Thermostat opening timing can be determined by squeezing the inlet radiator hose, and sensing vibrations when the engine coolant starts to flow inside the hose.

When squeezing the radiator hoses:

- Wear protective gloves.
- Be careful as the radiator hoses are hot.
- Keep your hands away from the radiator fan.

(k) Stop the engine, and wait until the engine coolant cools down.

(l) Add engine coolant to the FULL line on the radiator reservoir.

3. INSPECT FOR COOLANT LEAK INFO

Last Modified: 3-10-2010	6.4 G	**From:** 200901
Model Year: 2010	**Model:** Corolla	**Doc ID:** RM000002YRG00WX
Title: 2ZR-FE COOLING: COOLING FAN ECU: ON-VEHICLE INSPECTION (2010 Corolla)		

ON-VEHICLE INSPECTION

1. CHECK COOLING FAN SYSTEM

(a) Put the vehicle in the following conditions:

(1) The ignition switch is off.

(2) The coolant temperature is less than 95°C (203°F).

(3) The battery voltage is between 11 and 14 V.

(4) The A/C switch is off.

(b) Connect the pickup of a clamp-on ammeter over one of the two wires for the cooling fan motor.

(c) Turn the ignition switch to ON and wait for approximately 10 seconds. Check that the fan stops.

(d) Start the engine. Check that the fan stops with the engine idling.

HINT:

- Make sure that the coolant temperature is less than 95°C (203°F).
- Turn the A/C switch off.

(e) Check that the fan operates when the A/C switch is turned on (MAX COOL and the magnetic clutch is operating).

(f) Measure the current while the motor is operating.

Standard Current:

CONNECTION	CONDITION	SPECIFIED CONDITION
Fan wire	20°C (68°F)	2 to 15.2 A

HINT:

The coolant temperature is less than 95°C (203°F).

(g) Check that the fan operates when the water temperature sensor connector is disconnected.

(h) Measure the current while the motor is operating.

Standard Current:

CONNECTION	CONDITION	SPECIFIED CONDITION
Fan wire	20°C (68°F)	2 to 15.2 A

(i) After the engine is warmed up, check that the fan operates as shown in the illustration below.

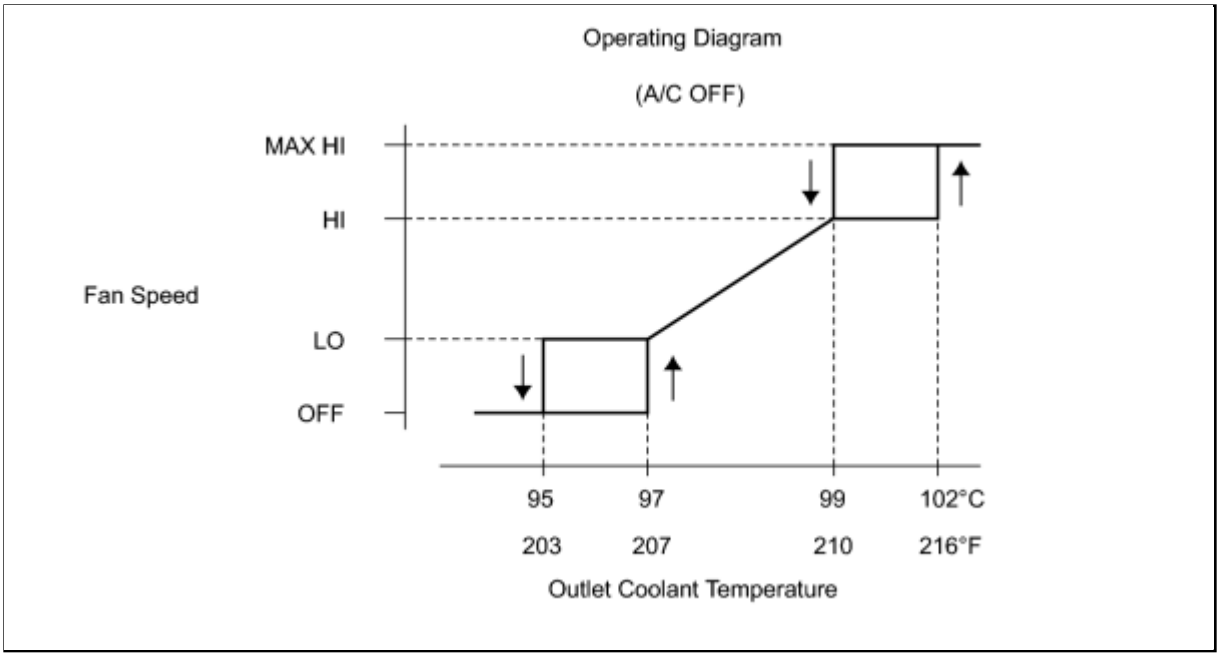

HINT:

- The coolant temperature at which the fan starts operating is approximately 97°C (207°F).
- This system can also be checked using the Techstream.
- Enter the following menus: Powertrain / Engine and ECT / Data List / Coolant Temp.

Last Modified: 3-10-2010	6.4 K	**From:** 200901
Model Year: 2010	**Model:** Corolla	**Doc ID:** RM000002GF700DX
Title: 2AZ-FE COOLING: COOLING FAN MOTOR: COMPONENTS (2010 Corolla)		

COMPONENTS

ILLUSTRATION

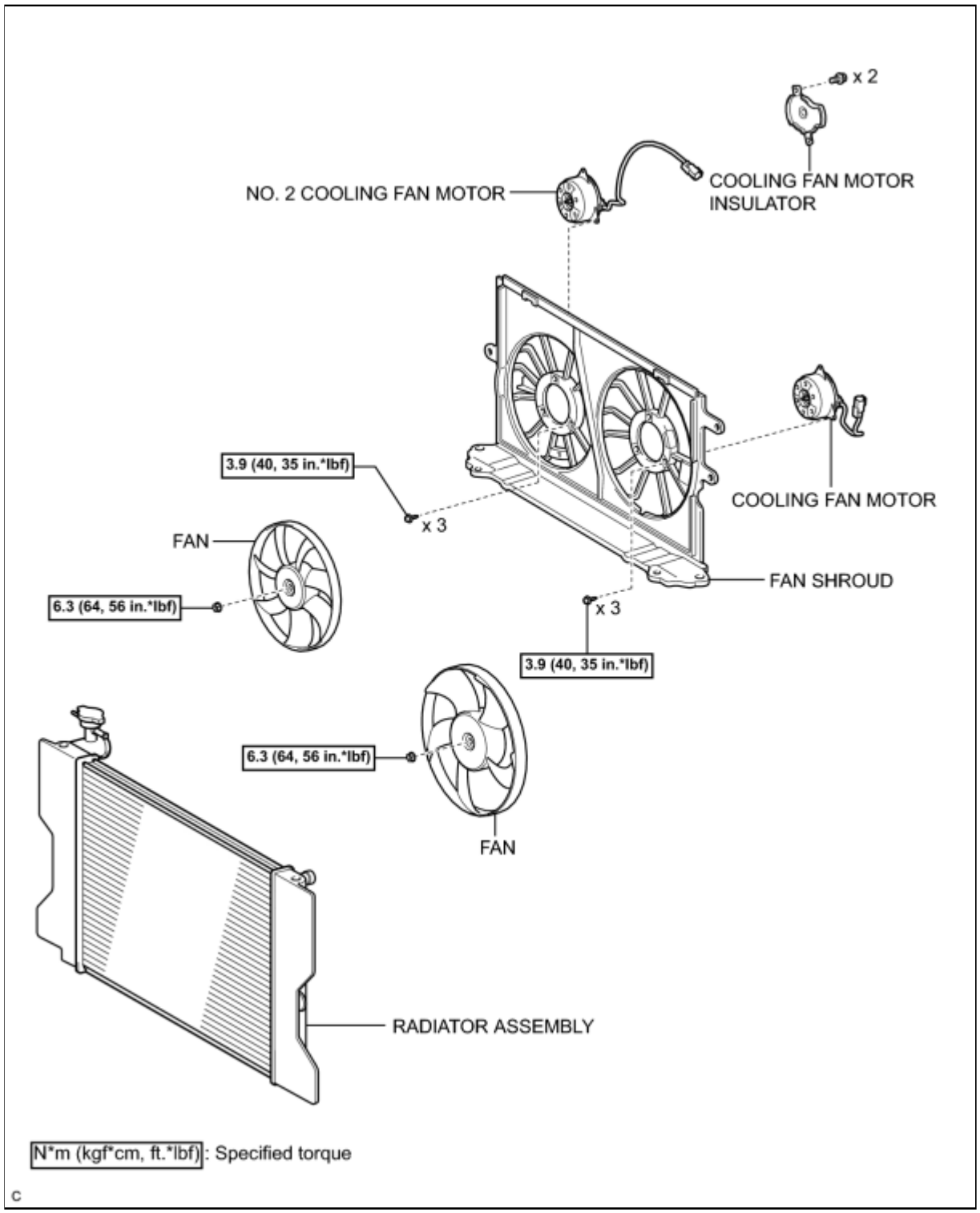

Last Modified: 3-10-2010	6.4 G	**From:** 200901
Model Year: 2010	**Model:** Corolla	**Doc ID:** RM000000YFJ04XX
Title: 2AZ-FE COOLING: COOLING FAN MOTOR: ON-VEHICLE INSPECTION (2010 Corolla)		

ON-VEHICLE INSPECTION

1. INSPECT COOLING FAN MOTOR

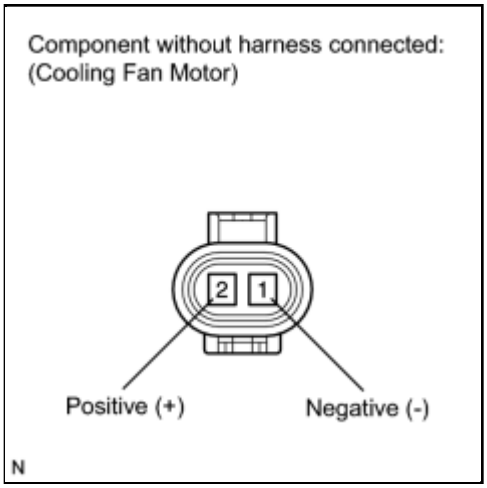

(a) Check that the motor operates smoothly when the battery is connected to the fan motor connector.

If the motor does not operate smoothly, replace the cooling fan motor.

(b) Connect the pickup of a clamp-on ammeter over one of the two wires for the cooling fan motor.

(c) Measure the current while the motor is operating.

Standard Current:

CONNECTION	CONDITION	SPECIFIED CONDITION
Fan wire	20°C (68°F)	7.4 to 11.4 A

If the result is not as specified, replace the cooling fan motor.

2. INSPECT NO. 2 COOLING FAN MOTOR

(a) Check that the motor operates smoothly when the battery is connected to the fan motor connector.

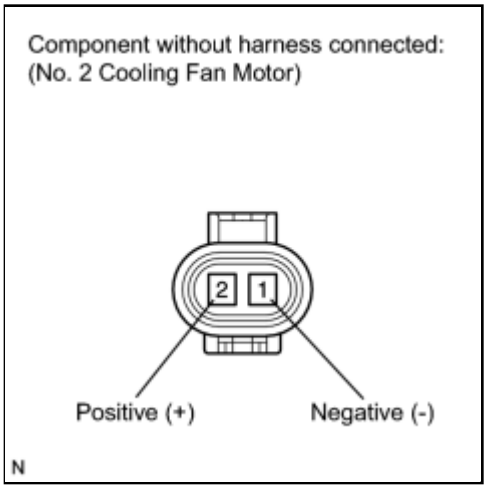

(b) Connect the pickup of a clamp-on ammeter over one of the two wires for the cooling fan motor.

(c) Measure the current while the motor is operating.

Standard Current:

CONNECTION	CONDITION	SPECIFIED CONDITION
Fan wire	20°C (68°F)	4.7 to 8.7 A

If the result is not as specified, replace the No. 2 cooling fan motor.

TOYOTA

Last Modified: 3-10-2010	6.4 A	**From:** 200901
Model Year: 2010	**Model:** Corolla	**Doc ID:** RM000002GF800EX
Title: 2AZ-FE COOLING: COOLING FAN MOTOR: REMOVAL (2010 Corolla)		

REMOVAL

1. REMOVE RADIATOR ASSEMBLY

HINT: INFO .

2. REMOVE FAN

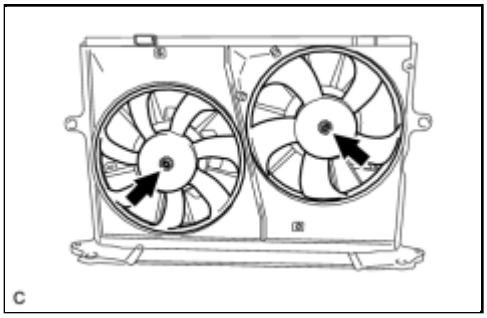

(a) Remove the 2 nuts and 2 fans.

3. REMOVE NO. 2 COOLING FAN MOTOR

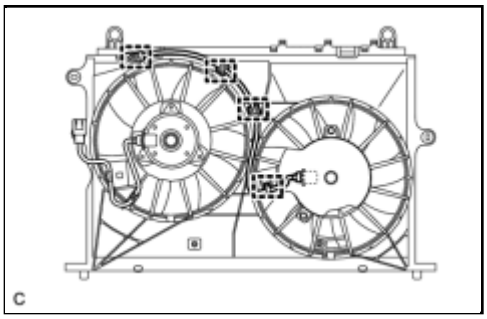

(a) Detach the 4 harness clamps from the fan shroud.

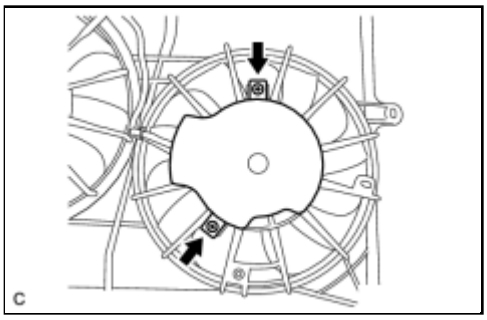

(b) Remove the 2 screws and cooling fan motor insulator.

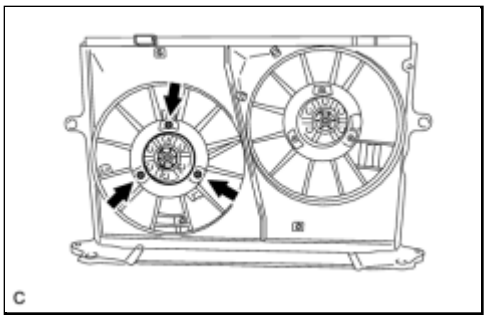

(c) Remove the 3 screws, and then remove the No. 2 cooling fan motor.

4. REMOVE COOLING FAN MOTOR

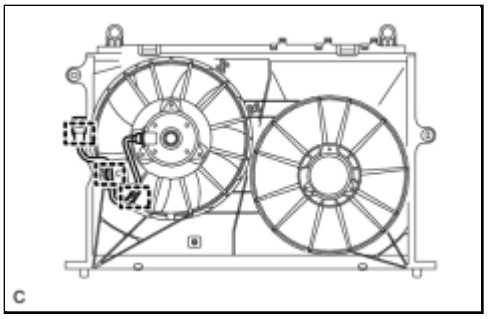

(a) Detach the 3 harness clamps from the fan shroud.

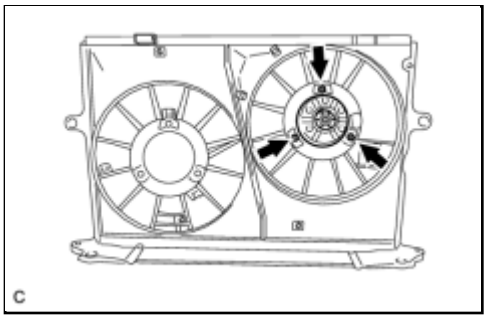

(b) Remove the 3 screws, and then remove the cooling fan motor.

Last Modified: 3-10-2010	6.4 A	**From:** 200901
Model Year: 2010	**Model:** Corolla	**Doc ID:** RM000002GF600EX
Title: 2AZ-FE COOLING: COOLING FAN MOTOR: INSTALLATION (2010 Corolla)		

INSTALLATION

1. INSTALL COOLING FAN MOTOR

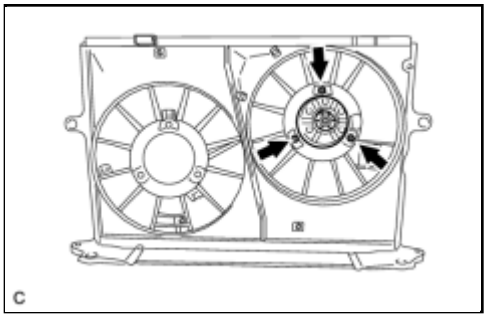

(a) Install the cooling fan motor with the 3 screws.

Torque: 3.9 N·m (40 kgf·cm, 35in·lbf)

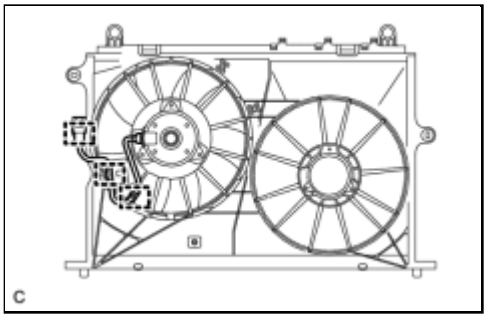

(b) Attach the 3 harness clamps to the fan shroud.

2. INSTALL NO. 2 COOLING FAN MOTOR

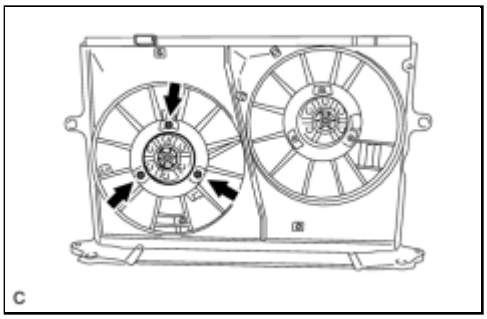

(a) Install the No. 2 cooling fan motor with the 3 screws.

Torque: 3.9 N·m (40 kgf·cm, 35in·lbf)

(b) Install the cooling fan motor insulator with the 2 screws.

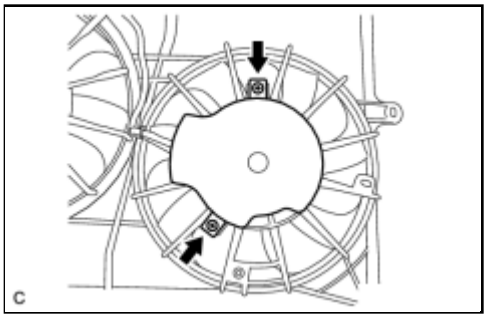

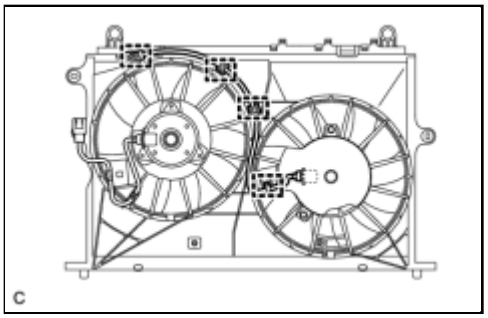

(c) Attach the 4 harness clamps to the fan shroud.

3. INSTALL FAN

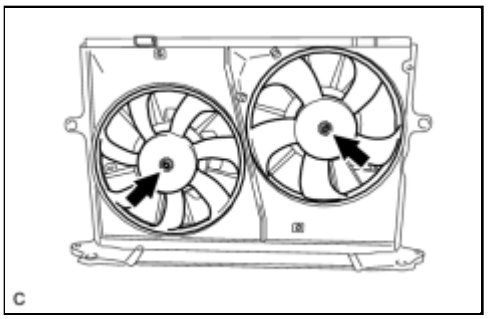

(a) Install the 2 fans with the 2 nuts.

Torque: 6.3 N·m (64 kgf·cm, 56in·lbf)

4. INSTALL RADIATOR ASSEMBLY

HINT: INFO .

Last Modified: 3-10-2010	6.4 K	**From:** 200901
Model Year: 2010	**Model:** Corolla	**Doc ID:** RM000002X0R01QX
Title: 2ZR-FE COOLING: COOLING FAN MOTOR: COMPONENTS (2010 Corolla)		

COMPONENTS

ILLUSTRATION

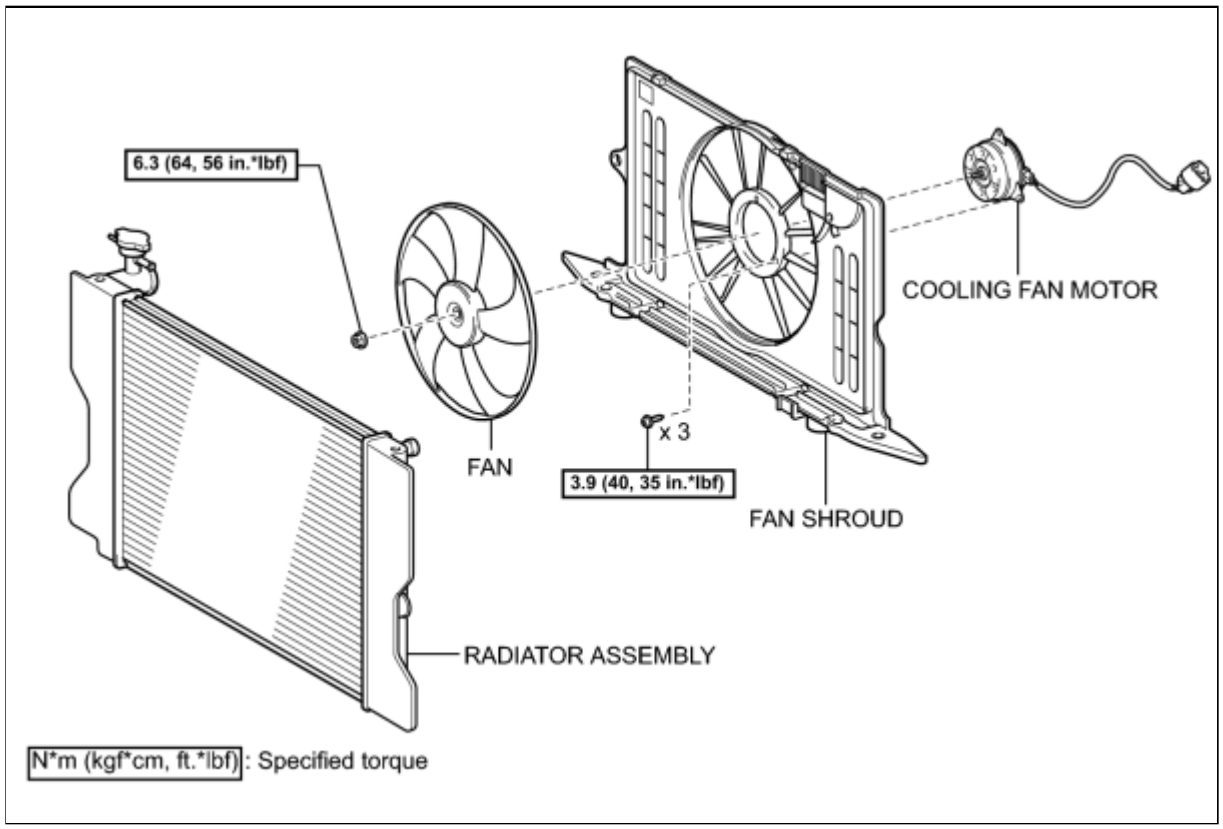

Last Modified: 3-10-2010	6.4 J	**From:** 200901
Model Year: 2010	**Model:** Corolla	**Doc ID:** RM000002YZE015X
Title: 2AZ-FE COOLING: COOLING FAN SYSTEM: Cooling Fan Circuit (2010 Corolla)		

Cooling Fan Circuit

DESCRIPTION

The ECM turns on or off the fan relays using signals calculated from the engine coolant temperature, air conditioning (ON/OFF), air conditioner refrigerant pressure, engine speed, and vehicle speed signals.

The ECM switches the circuit of the cooling fan motors between series and parallel by turning on or off the fan relays in order to control the speed of the cooling fan motors in two steps.

WIRING DIAGRAM

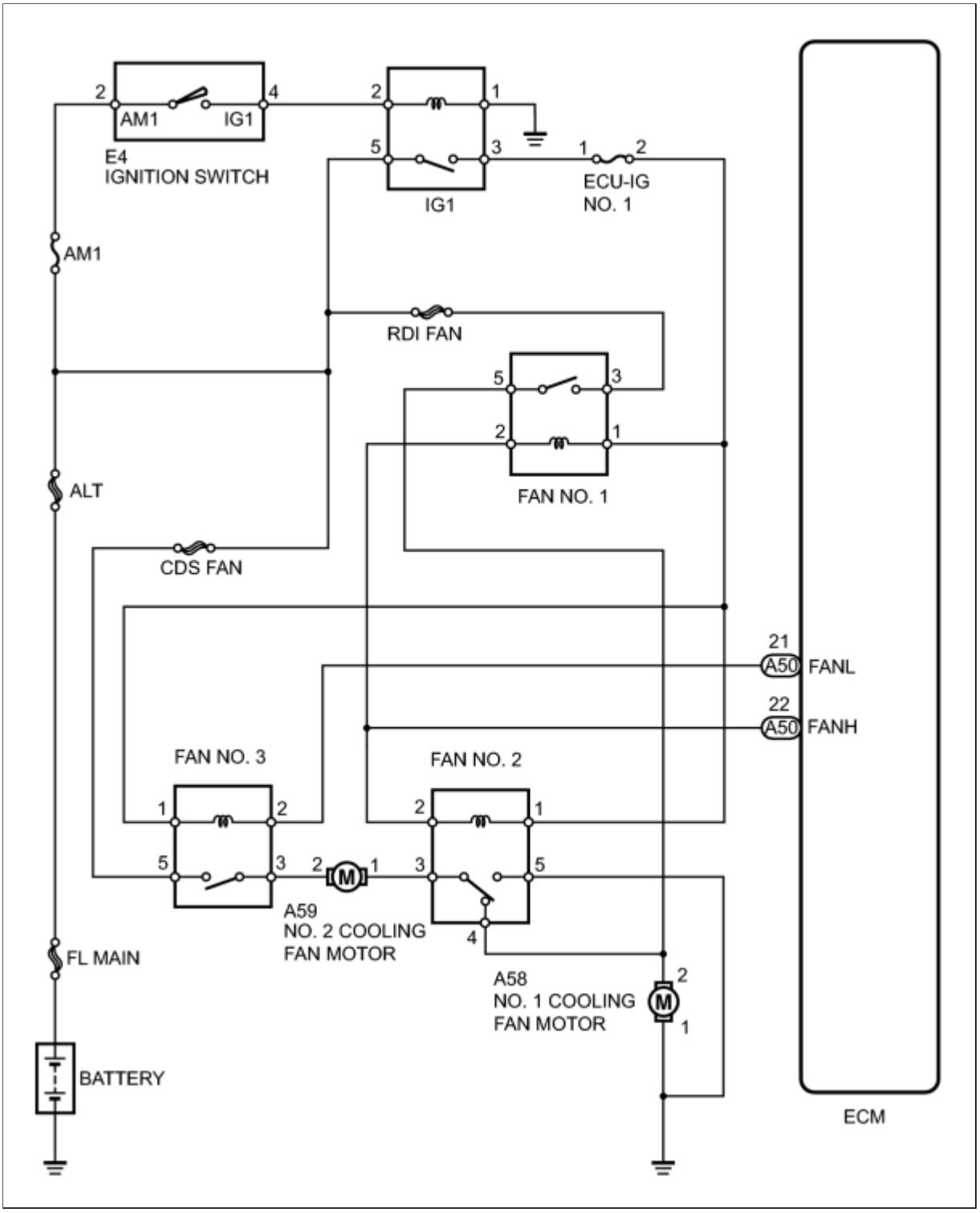

INSPECTION PROCEDURE

NOTICE:

After replacing the ECM, the new ECM needs registration INFO **.**

PROCEDURE

1.	PERFORM ACTIVE TEST USING TECHSTREAM (OPERATE ELECTRIC COOLING FAN)

(a) Connect the Techstream to the DLC3.

(b) Turn the ignition switch to ON.

(c) Turn the Techstream on.

(d) Enter the following menus: Powertrain / Engine and ECT / Active Test / Control the Electric Cooling Fan.

OK:

TESTER OPERATION	SPECIFIED CONDITION
ON	Fans operate
OFF	Fans do not operate

Result:

RESULT	PROCEED TO
OK	A
NG (Cooling fans do not operate)	B
NG (Cooling fans do not stop)	C

C ▶ **INSPECT FAN NO. 1 RELAY**

B ▶ **INSPECT ECM (FANL AND FANH VOLTAGE)**

A ▶ **PROCEED TO NEXT INSPECTION PROCEDURE SHOWN IN PROBLEM SYMPTOMS TABLE**

2.	INSPECT ECM (FANL AND FANH VOLTAGE)

(a) Disconnect the ECM connector.

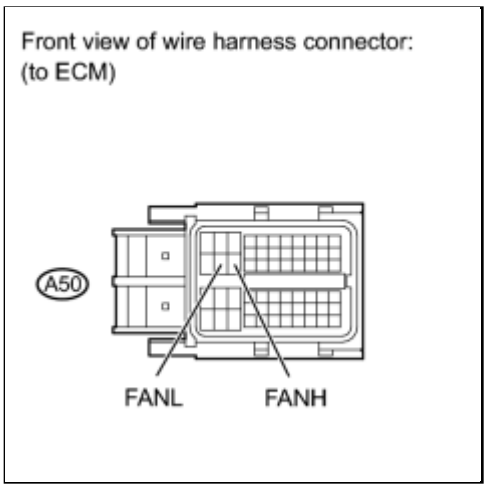

(b) Turn the ignition switch to ON.

(c) Measure the voltage according to the value(s) in the table below.

Standard Voltage:

TESTER CONNECTION	SWITCH CONDITION	SPECIFIED CONDITION
A50-21 (FANL) - Body ground	Ignition switch ON	11 to 14 V
A50-22 (FANH) - Body ground	Ignition switch ON	11 to 14 V

(d) Reconnect the ECM connector.

NG ▶ **CHECK FUSE (ECU-IG NO. 1 FUSE)**

OK ▼

3.	**INSPECT ENGINE ROOM RELAY BLOCK (FAN NO. 1 RELAY AND FAN NO. 3 RELAY VOLTAGE)**

(a) Remove the FAN No. 1 relay and FAN No. 3 relay from the engine room relay block.

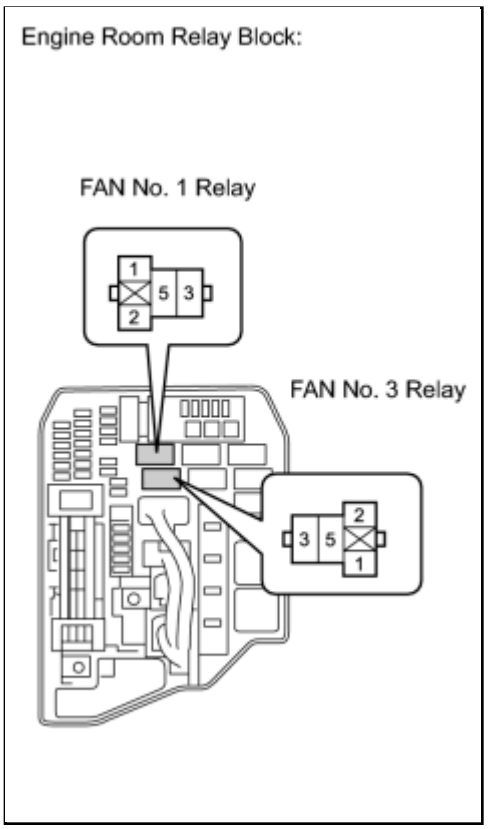

(b) Measure the voltage according to the value(s) in the table below.

Standard Voltage:

TESTER CONNECTION	CONDITION	SPECIFIED CONDITION
3 (FAN No. 1 relay) - Body ground	Always	11 to 14 V
5 (FAN No. 3 relay) - Body ground	Always	11 to 14 V

(c) Reinstall the FAN No. 1 relay and FAN No. 3 relay.

NG ▶ **REPAIR OR REPLACE HARNESS OR CONNECTOR (BATTERY - ENGINE ROOM RELAY BLOCK)**

OK ▼

4.	**INSPECT FAN NO. 1 RELAY**

(a) Inspect the FAN No. 1 relay INFO .

NG ▶ **REPLACE FAN NO. 1 RELAY**

OK

5.	**INSPECT FAN NO. 2 RELAY**

(a) Inspect the FAN No. 2 relay INFO .

NG **REPLACE FAN NO. 2 RELAY**

OK

6.	**INSPECT FAN NO. 3 RELAY**

(a) Inspect the FAN No. 3 relay INFO .

NG **REPLACE FAN NO. 3 RELAY**

OK

7.	**CHECK HARNESS AND CONNECTOR (ENGINE ROOM RELAY BLOCK - BODY GROUND)**

(a) Remove the FAN No. 2 relay from the engine room relay block.

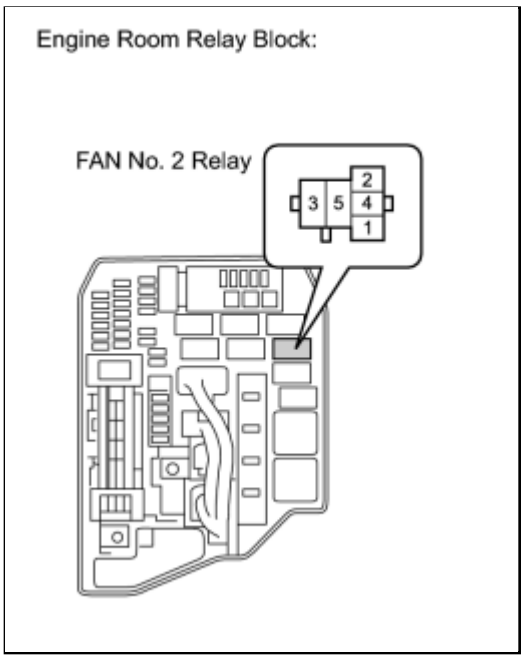

(b) Measure the resistance according to the value(s) in the table below.

Standard Resistance:

TESTER CONNECTION	CONDITION	SPECIFIED CONDITION
5 (FAN No. 2 relay) - Body ground	Always	Below 1 Ω

(c) Reinstall the FAN No. 2 relay.

NG ▶ **REPAIR OR REPLACE HARNESS OR CONNECTOR (ENGINE ROOM RELAY BLOCK - BODY GROUND)**

OK ▼

8.	INSPECT NO. 1 COOLING FAN MOTOR (RADIATOR FAN MOTOR)

(a) Inspect the No. 1 cooling fan motor INFO .

NG ▶ **REPLACE NO. 1 COOLING FAN MOTOR (RADIATOR FAN MOTOR)**

OK

9.	**CHECK HARNESS AND CONNECTOR (NO. 1 COOLING FAN MOTOR - BODY GROUND)**

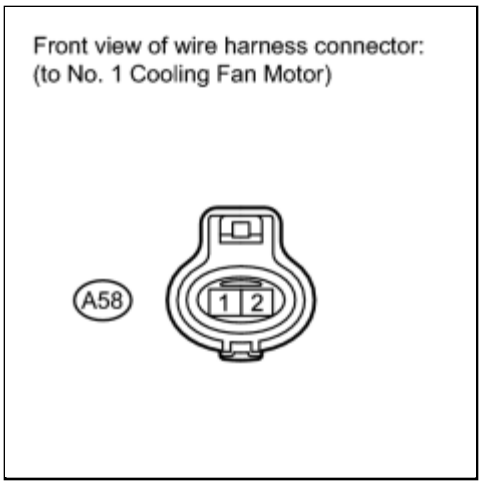

(a) Disconnect the No. 1 cooling fan motor (radiator fan motor) connector.

(b) Measure the resistance according to the value(s) in the table below.

Standard Resistance:

TESTER CONNECTION	CONDITION	SPECIFIED CONDITION
A58-1 - Body ground	Always	Below 1 Ω

(c) Reconnect the No. 1 cooling fan motor connector.

NG → **REPAIR OR REPLACE HARNESS OR CONNECTOR (NO. 1 COOLING FAN MOTOR - BODY GROUND)**

OK

10.	**CHECK HARNESS AND CONNECTOR (NO. 1 COOLING FAN MOTOR - ENGINE ROOM RELAY BLOCK)**

(a) Disconnect the No. 1 cooling fan motor (radiator fan motor) connector.

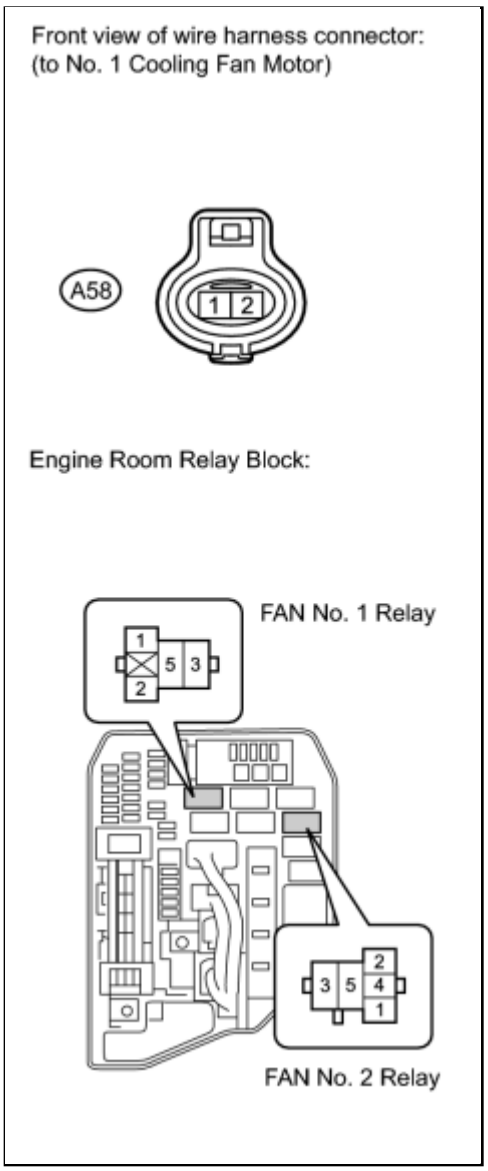

(b) Remove the FAN No. 1 relay and FAN No. 2 relay from the engine room relay block.

(c) Measure the resistance according to the value(s) in the table below.

Standard Resistance (Check for Open):

TESTER CONNECTION	CONDITION	SPECIFIED CONDITION
A58-2 - 5 (FAN No. 1 relay)	Always	Below 1 Ω
A58-2 - 4 (FAN No. 2 relay)	Always	Below 1 Ω

Standard Resistance (Check for Short):

TESTER CONNECTION	CONDITION	SPECIFIED CONDITION
A58-2 or 5 (FAN No. 1 relay) - Body ground	Always	10 kΩ or higher
A58-2 or 4 (FAN No. 2 relay) - Body ground	Always	10 kΩ or higher

(d) Reconnect the radiator fan motor connector.

(e) Reinstall the FAN No. 1 relay and FAN No. 2 relay.

NG ▶ **REPAIR OR REPLACE HARNESS OR CONNECTOR (NO. 1 COOLING FAN MOTOR - ENGINE ROOM RELAY BLOCK)**

OK ▼

11.	**INSPECT NO. 2 COOLING FAN MOTOR (AIR CONDITIONER CONDENSER FAN MOTOR)**

(a) Inspect the No. 2 cooling fan motor INFO .

NG ▶ **REPLACE NO. 2 COOLING FAN MOTOR (AIR CONDITIONER CONDENSER FAN MOTOR)**

OK ▼

12.	**CHECK HARNESS AND CONNECTOR (NO. 2 COOLING FAN MOTOR - ENGINE ROOM RELAY BLOCK)**

(a) Disconnect the No. 2 cooling fan motor (air conditioner condenser fan motor) connector.

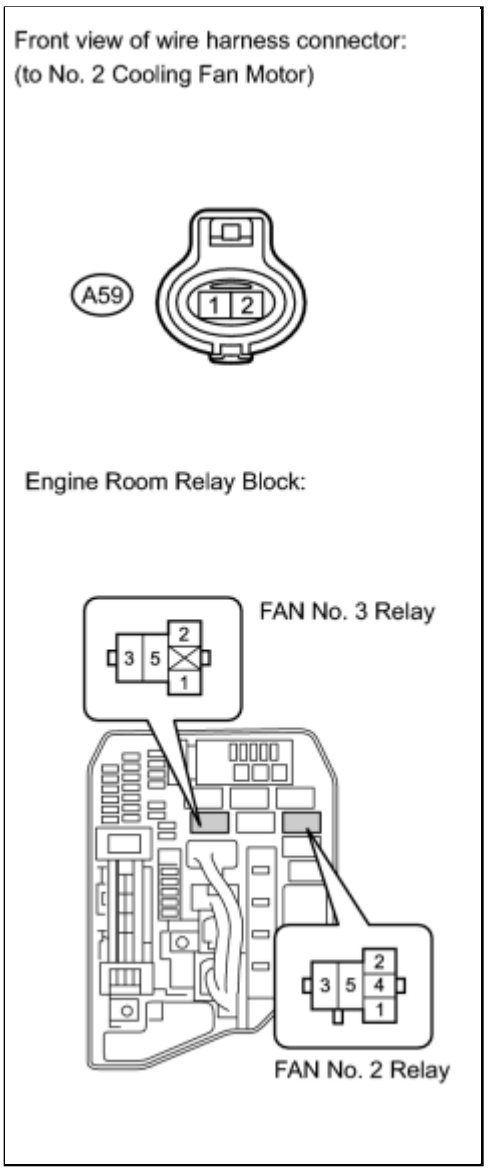

(b) Remove the FAN No. 2 relay and FAN No. 3 relay from the engine room relay block.

(c) Measure the resistance according to the value(s) in the table below.

Standard Resistance (Check for Open):

TESTER CONNECTION	CONDITION	SPECIFIED CONDITION
A59-1 - 3 (FAN No. 2 relay)	Always	Below 1 Ω
A59-2 - 3 (FAN No. 3 relay)	Always	Below 1 Ω

Standard Resistance (Check for Short):

TESTER CONNECTION	CONDITION	SPECIFIED CONDITION
A59-1 or 3 (FAN No. 2 relay) - Body ground	Always	10 kΩ or higher
A59-2 or 3 (FAN No. 3 relay) - Body ground	Always	10 kΩ or higher

(d) Reconnect the No. 2 cooling fan motor connector.

(e) Reinstall the FAN No. 2 relay and FAN No. 3 relay.

NG ▶ **REPAIR OR REPLACE HARNESS OR CONNECTOR (NO. 2 COOLING FAN MOTOR - ENGINE ROOM RELAY BLOCK)**

OK ▼

13.	INSPECT ENGINE ROOM RELAY BLOCK (FAN NO. 1 RELAY - FAN NO. 2 RELAY)

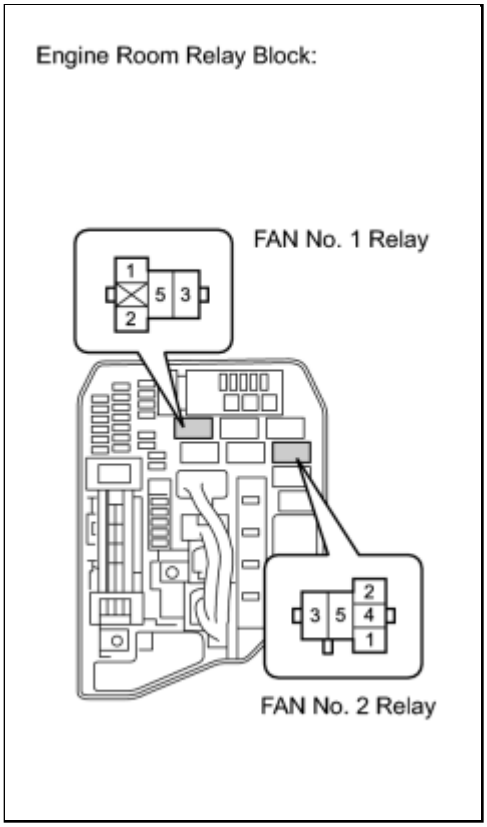

(a) Remove the FAN No. 1 relay and FAN No. 2 relay from the engine room relay block.

(b) Measure the resistance according to the value(s) in the table below.

Standard Resistance (Check for Open):

TESTER CONNECTION	CONDITION	SPECIFIED CONDITION
1 (FAN No. 1 relay) - 1 (FAN No. 2 relay)	Always	Below 1 Ω
2 (FAN No. 1 relay) - 2 (FAN No. 2 relay)	Always	Below 1 Ω

Standard Resistance (Check for Short):

TESTER CONNECTION	CONDITION	SPECIFIED CONDITION
1 (FAN No. 1 relay) or 1 (FAN No. 2 relay) - Body ground	Always	10 kΩ or higher
2 (FAN No. 1 relay) or 2 (FAN No. 2 relay) - Body ground	Always	10 kΩ or higher

(c) Reinstall the FAN No. 1 relay and FAN No. 2 relay.

NG ▶ **REPLACE ENGINE ROOM RELAY BLOCK**

OK ▶ **REPLACE ECM**

14.	**CHECK FUSE (ECU-IG NO. 1 FUSE)**

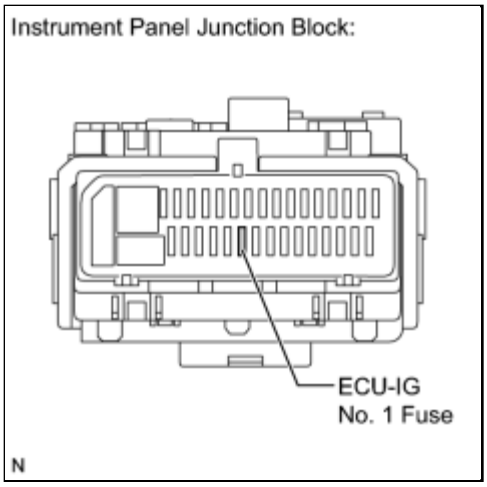

(a) Remove the ECU-IG No. 1 fuse from the instrument panel junction block.

(b) Measure the resistance according to the value(s) in the table below.

Standard Resistance:

TESTER CONNECTION	CONDITION	SPECIFIED CONDITION
ECU-IG No. 1 fuse	Always	Below 1 Ω

(c) Reinstall the ECU-IG No. 1 fuse.

NG ▶ **REPLACE FUSE (ECU-IG NO. 1 FUSE)**

OK ▼

15.	**INSPECT FAN NO. 1 RELAY**

(a) Inspect the FAN No. 1 relay INFO .

NG ▶ **REPLACE FAN NO. 1 RELAY**

OK ▼

16.	**INSPECT FAN NO. 2 RELAY**

(a) Inspect the FAN No. 2 relay INFO .

NG ▶ **REPLACE FAN NO. 2 RELAY**

OK ▼

17.	**INSPECT FAN NO. 3 RELAY**

(a) Inspect the FAN No. 3 relay INFO .

NG ▶ **REPLACE FAN NO. 3 RELAY**

OK ▼

18.	**CHECK HARNESS AND CONNECTOR (ENGINE ROOM RELAY BLOCK - ECM)**

(a) Remove the FAN No. 1 relay, FAN No. 2 relay and FAN No. 3 relay from the engine room relay block.

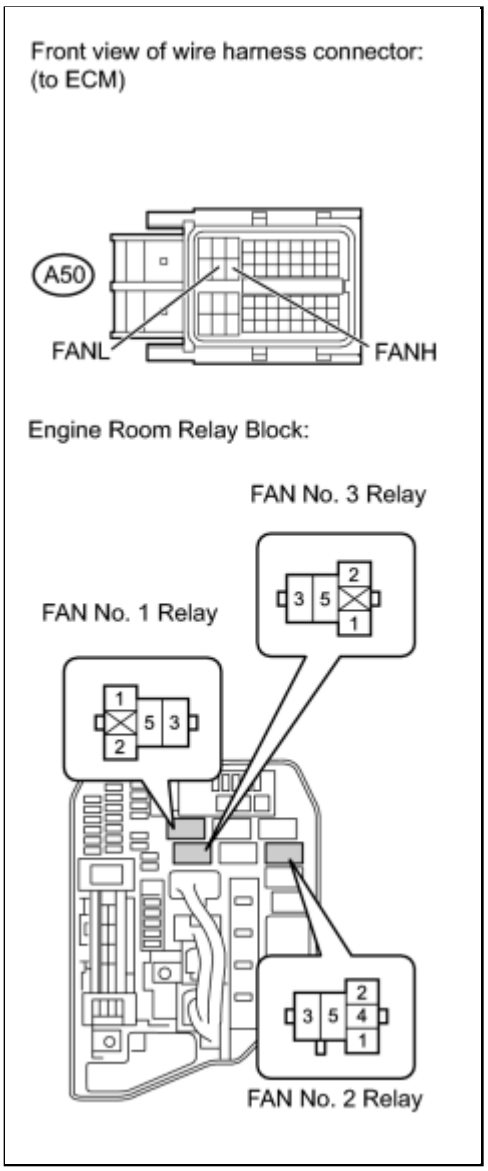

(b) Disconnect the ECM connector.

(c) Measure the resistance according to the value(s) in the table below.

Standard Resistance (Check for Open):

TESTER CONNECTION	CONDITION	SPECIFIED CONDITION
2 (FAN No. 1 relay) - A50-22 (FANH)	Always	Below 1 Ω
2 (FAN No. 2 relay) - A50-22 (FANH)	Always	Below 1 Ω
2 (FAN No. 3 relay) - A50-21 (FANL)	Always	Below 1 Ω

(d) Reinstall the FAN No. 1 relay, FAN No. 2 relay and FAN No. 3 relay.

(e) Reconnect the ECM connector.

NG ▶ **REPAIR OR REPLACE HARNESS OR CONNECTOR (ENGINE ROOM RELAY BLOCK - ECM)**

OK

19.	**CHECK HARNESS AND CONNECTOR (ECU-IG NO. 1 FUSE - ENGINE ROOM RELAY BLOCK)**

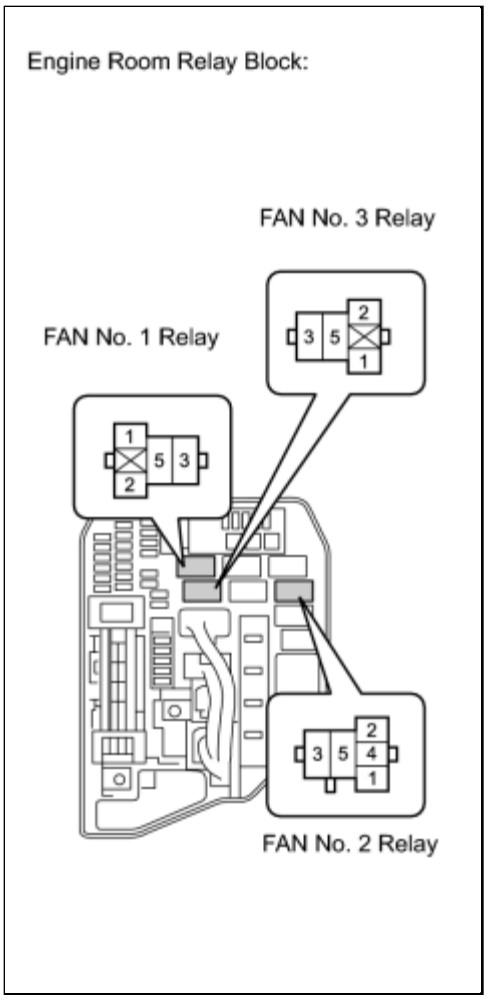

(a) Remove the FAN No. 1 relay, FAN No. 2 relay and FAN No. 3 relay from the engine room relay block.

(b) Remove the ECU-IG No. 1 fuse from the instrument panel junction block.

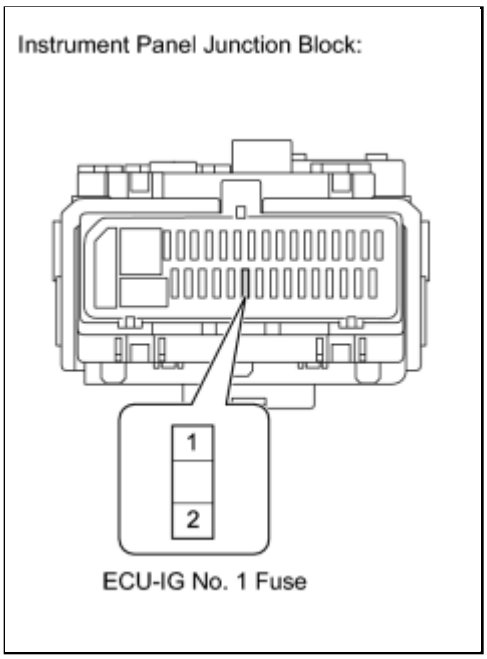

(c) Measure the resistance according to the value(s) in the table below.

Standard Resistance (Check for Open):

TESTER CONNECTION	CONDITION	SPECIFIED CONDITION
1 (FAN No. 1 relay) - 2 (ECU-IG No. 1 fuse)	Always	Below 1 Ω
1 (FAN No. 2 relay) - 2 (ECU-IG No. 1 fuse)	Always	Below 1 Ω
1 (FAN No. 3 relay) - 2 (ECU-IG No. 1 fuse)	Always	Below 1 Ω

Standard Resistance (Check for Short):

TESTER CONNECTION	CONDITION	SPECIFIED CONDITION
1 (FAN No. 1 relay) or 2 (ECU-IG No. 1 fuse) - Body ground	Always	10 kΩ or higher
1 (FAN No. 2 relay) or 2 (ECU-IG No. 1 fuse) - Body ground	Always	10 kΩ or higher
1 (FAN No. 3 relay) or 2 (ECU-IG No. 1 fuse) - Body ground	Always	10 kΩ or higher

(d) Reinstall the FAN No. 1 relay, FAN No. 2 relay and FAN No. 3 relay.

(e) Reinstall the ECU-IG No. 1 fuse.

NG ▶ **REPAIR OR REPLACE HARNESS OR CONNECTOR (ECU-IG NO. 1 FUSE - ENGINE ROOM RELAY BLOCK)**

OK ▶ **CHECK FOR INTERMITTENT PROBLEMS**

20.	**INSPECT FAN NO. 1 RELAY**

(a) Inspect the FAN No. 1 relay INFO.

NG ▶ **REPLACE FAN NO. 1 RELAY**

OK ▼

21.	**INSPECT FAN NO. 3 RELAY**

(a) Inspect the FAN No. 3 relay INFO.

NG ▶ **REPLACE FAN NO. 3 RELAY**

OK ▼

22.	**CHECK HARNESS AND CONNECTOR**

(a) Remove the FAN No. 1 relay, FAN No. 2 relay and FAN No. 3 relay from the engine room relay block.

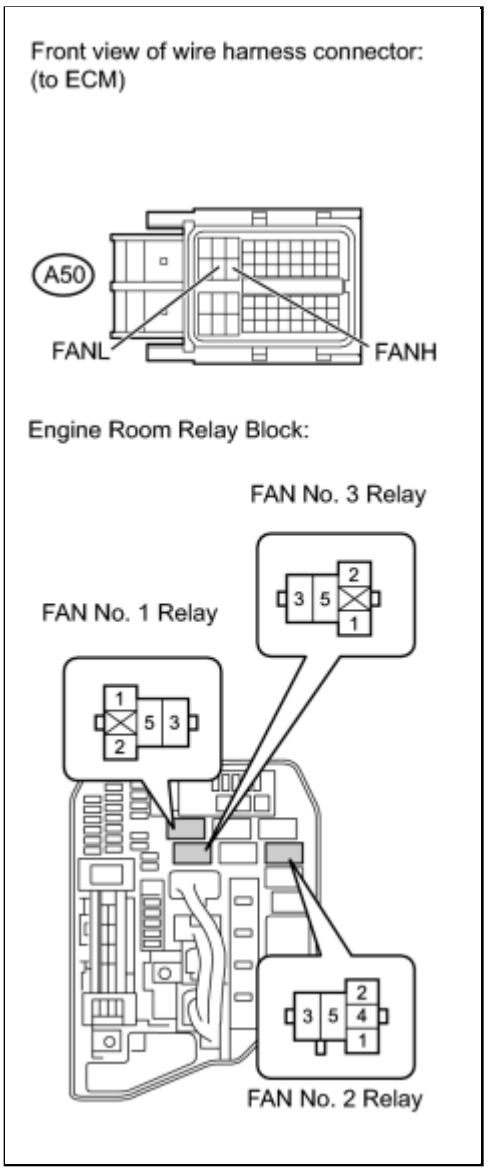

(b) Disconnect the ECM connector.

(c) Measure the resistance according to the value(s) in the table below.

Standard Resistance (Check for Short):

TESTER CONNECTION	CONDITION	SPECIFIED CONDITION
2 (FAN No. 1 relay) or A50-22 (FANH) - Body ground	Always	10 kΩ or higher
2 (FAN No. 2 relay) or A50-22 (FANH) - Body ground	Always	10 kΩ or higher
2 (FAN No. 3 relay) or A50-21 (FANL) - Body ground	Always	10 kΩ or higher

(d) Reinstall the FAN No. 1 relay, FAN No. 2 relay and FAN No. 3 relay.

(e) Reconnect the ECM connector.

NG ▶ **REPAIR OR REPLACE HARNESS OR CONNECTOR (ECU-IG NO. 1 FUSE - ENGINE ROOM RELAY**

BLOCK)

OK ▶ REPLACE ECM

Last Modified: 3-10-2010	6.4 G	**From:** 200901
Model Year: 2010	**Model:** Corolla	**Doc ID:** RM000000YFJ04WX
Title: 2ZR-FE COOLING: COOLING FAN MOTOR: ON-VEHICLE INSPECTION (2010 Corolla)		

ON-VEHICLE INSPECTION

1. INSPECT COOLING FAN MOTOR

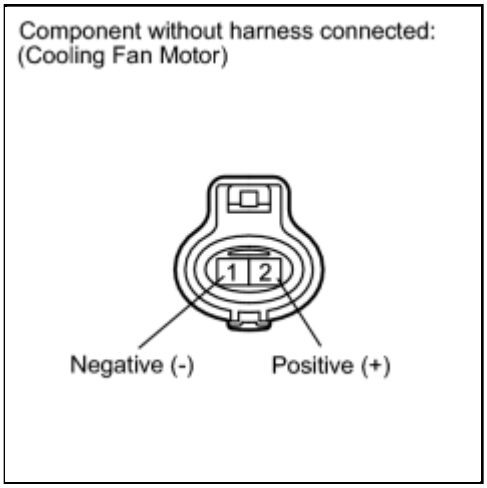

(a) Check that the motor operates smoothly when the battery is connected to the cooling fan motor connector.

If the motor does not operate smoothly, replace the cooling fan motor.

(b) Connect the pickup of a clamp-on ammeter over one of the two wires for the cooling fan motor.

(c) Measure the current while the motor is operating.

Standard Current:

CONNECTION	CONDITION	SPECIFIED CONDITION
Fan wire	20°C (68°F)	7.4 to 10.9 A

If the result is not as specified, replace the cooling fan motor.

Last Modified: 3-10-2010	6.4 A	**From:** 200901
Model Year: 2010	**Model:** Corolla	**Doc ID:** RM000002X0S01QX
Title: 2ZR-FE COOLING: COOLING FAN MOTOR: REMOVAL (2010 Corolla)		

REMOVAL

1. REMOVE RADIATOR ASSEMBLY

HINT: INFO

2. REMOVE FAN

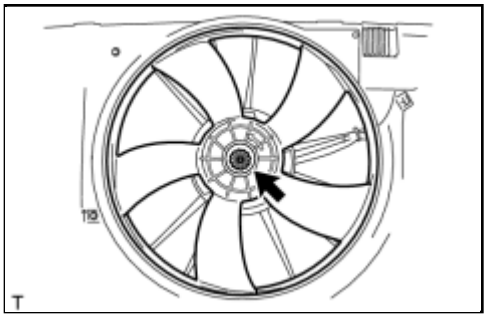

(a) Remove the nut, then remove the fan.

3. REMOVE COOLING FAN MOTOR

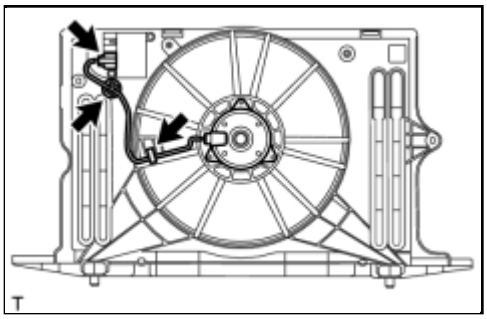

(a) Disconnect the connector and 2 clamps from the fan shroud.

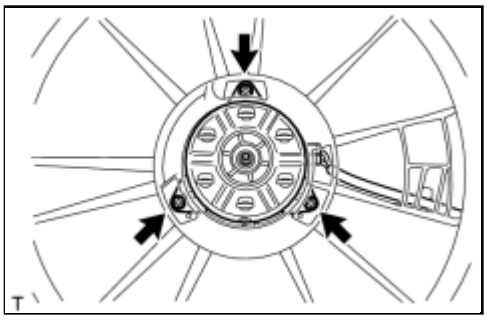

(b) Remove the 3 screws, then remove the cooling fan motor.

Last Modified: 3-10-2010	6.4 A	**From:** 200901
Model Year: 2010	**Model:** Corolla	**Doc ID:** RM000002X0Q01QX
Title: 2ZR-FE COOLING: COOLING FAN MOTOR: INSTALLATION (2010 Corolla)		

INSTALLATION

1. INSTALL COOLING FAN MOTOR

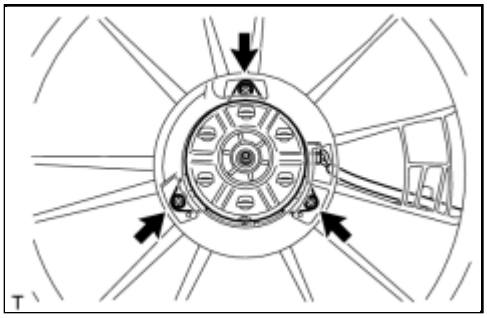

(a) Install the cooling fan motor with the 3 screws.

Torque: 3.9 N·m (40 kgf·cm, 35in·lbf)

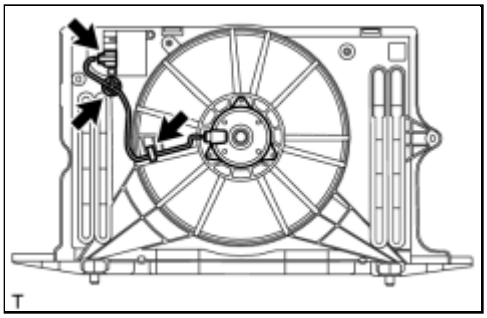

(b) Connect the connector and 2 clamps.

NOTICE:

Be careful not to damage the connector.

2. INSTALL FAN

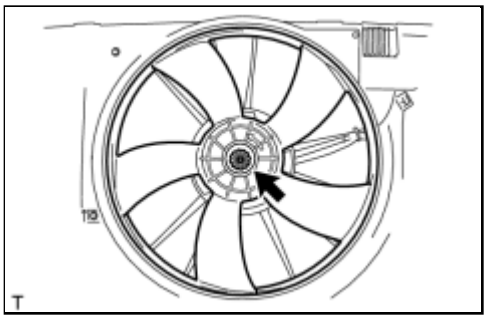

(a) Install the fan with the nut.

Torque: 6.3 N·m (64 kgf·cm, 56in·lbf)

3. INSTALL RADIATOR ASSEMBLY

HINT: INFO

Last Modified: 3-10-2010	6.4 R	**From:** 200901
Model Year: 2010	**Model:** Corolla	**Doc ID:** RM000000XVY036X
Title: 2AZ-FE COOLING: COOLING FAN SYSTEM: PARTS LOCATION (2010 Corolla)		

PARTS LOCATION

ILLUSTRATION

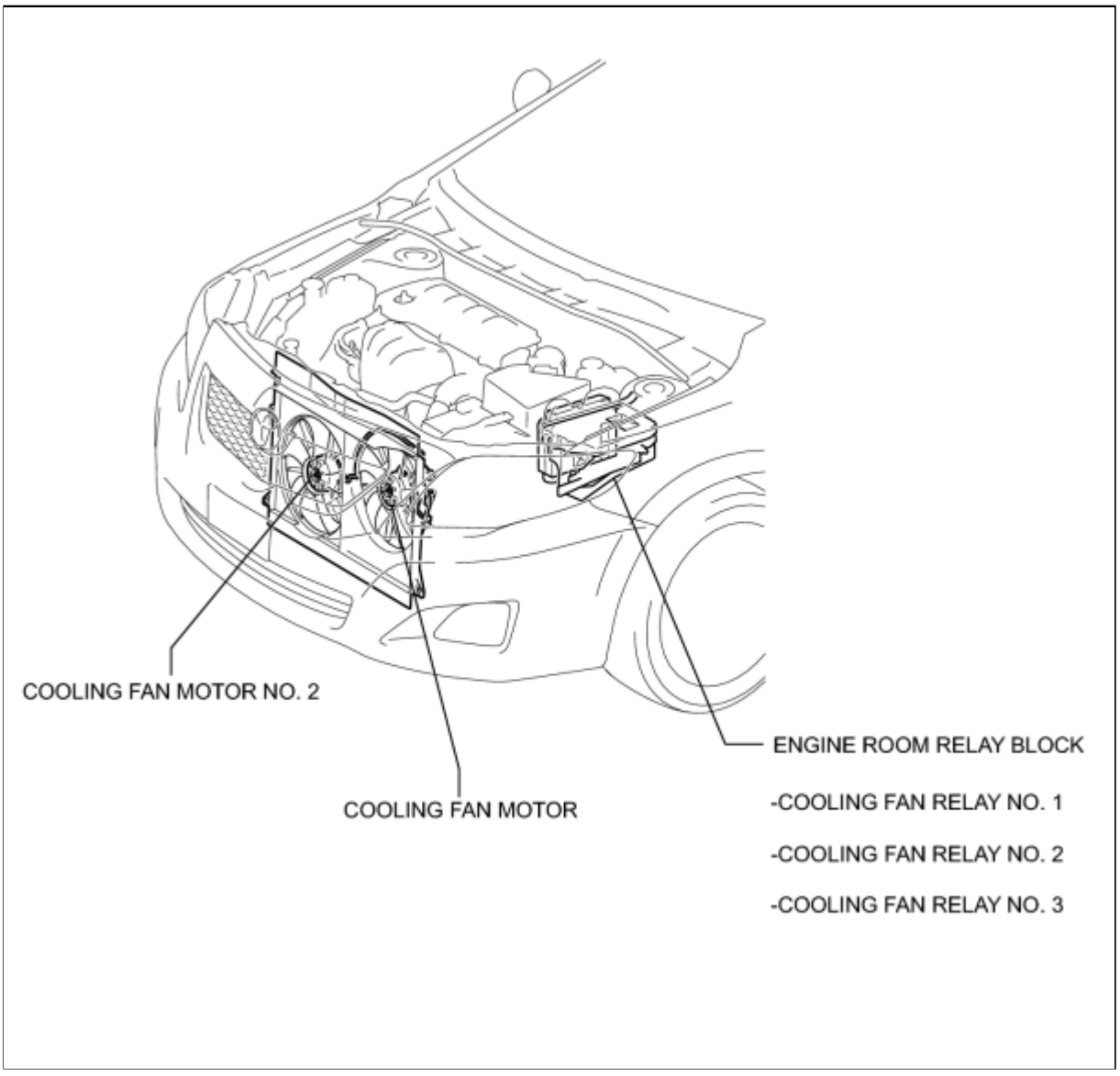

Last Modified: 3-10-2010	6.4 U	**From:** 200901
Model Year: 2010	**Model:** Corolla	**Doc ID:** RM000003D8M004X
Title: 2AZ-FE COOLING: COOLING FAN SYSTEM: SYSTEM DIAGRAM (2010 Corolla)		

SYSTEM DIAGRAM

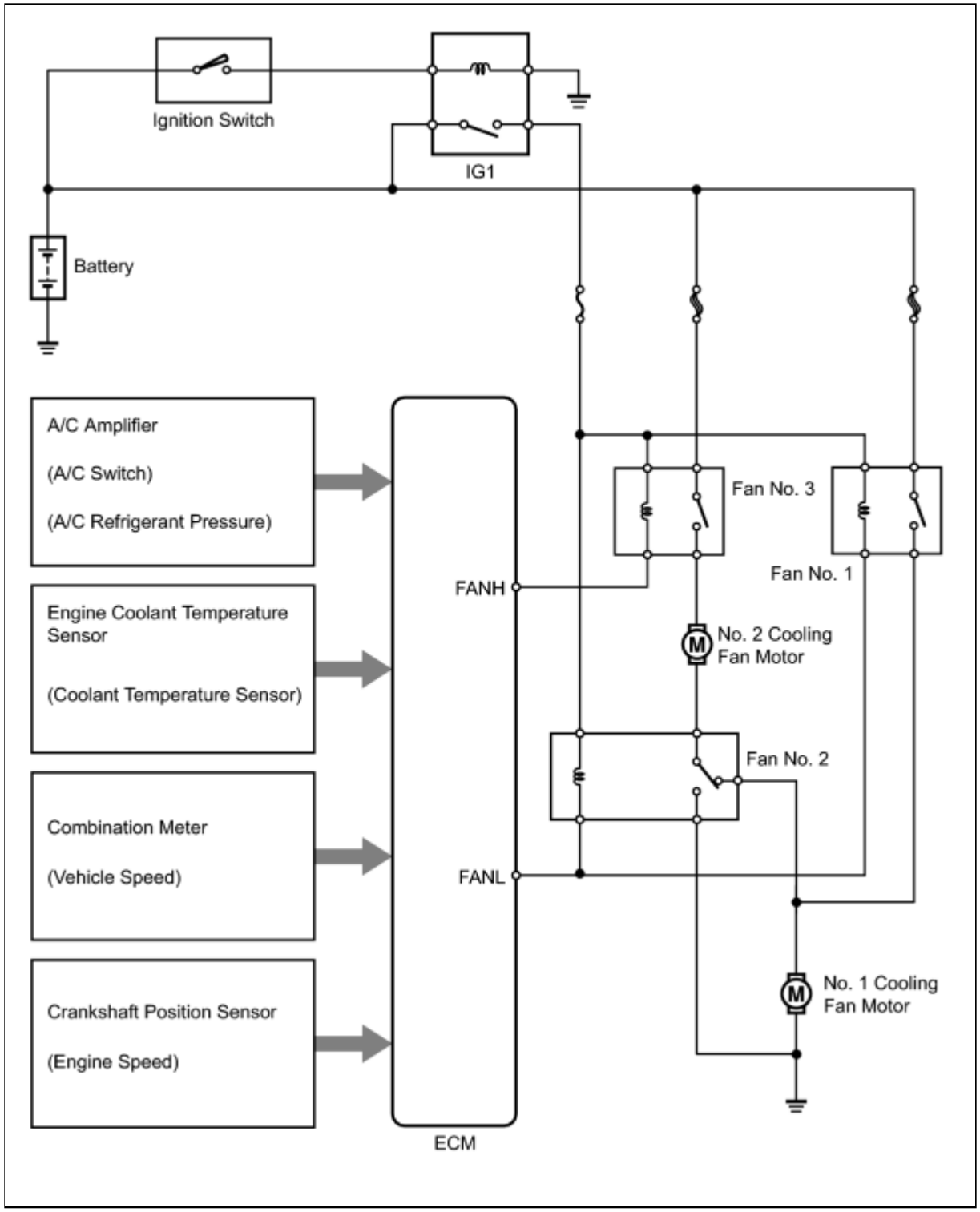

Last Modified: 3-10-2010	6.4 T	**From:** 200901
Model Year: 2010	**Model:** Corolla	**Doc ID:** RM000003E0000FX
Title: 2AZ-FE COOLING: COOLING FAN SYSTEM: PROBLEM SYMPTOMS TABLE (2010 Corolla)		

PROBLEM SYMPTOMS TABLE

Use the table below to help determine the cause of the problem symptoms. If multiple suspected areas are listed, the potential causes of the symptoms are listed in order of probability in the "Suspected area" column of the table. Check each symptom by checking the suspected areas in the order they are listed. Replace parts as necessary.

COOLING FAN SYSTEM

SYMPTOM	SUSPECTED AREA	SEE PAGE
Cooling fan does not operate	No. 1 cooling fan motor	INFO
	No. 2 cooling fan motor	INFO
	Fan No. 1 relay	INFO
	Fan No. 2 relay	INFO
	Fan No. 3 relay	INFO
	CAN communication system	INFO
	Cooling fan circuit	INFO
	ECM	-
Cooling fan does not stop	Fan No. 1 relay	INFO
	Fan No. 3 relay	INFO
	CAN communication system	INFO
	Cooling fan circuit	INFO
	ECM	-
Cooling fan speed does not change	Fan No. 2 relay	INFO
	CAN communication system	INFO
	Cooling fan circuit	INFO
	ECM	-

Last Modified: 3-10-2010	6.4 G	**From:** 200901
Model Year: 2010	**Model:** Corolla	**Doc ID:** RM000000XW0038X
Title: 2AZ-FE COOLING: COOLING FAN SYSTEM: ON-VEHICLE INSPECTION (2010 Corolla)		

ON-VEHICLE INSPECTION

HINT:

It is normal for the cooling fans to sometimes operate when the ignition switch is turned from ACC to ON.

1. INSPECT COOLING FAN OPERATION AT LOW TEMPERATURES (Below 94°C (201°F))

(a) Turn the ignition switch to ON with the A/C switch off.

(b) Check that the cooling fans stop.

If either does not, check the cooling fan relays and engine coolant temperature sensor, and then check for disconnection of the connector or a wire break between the cooling fan relay and engine coolant temperature sensor.

(c) Disconnect the engine coolant temperature sensor connector.

(d) Check that the cooling fans operate.

If either does not, check the fuses, cooling fan relays, ECM and cooling fan, and then check for an open circuit in the cooling fan relay.

(e) Reconnect the engine coolant temperature sensor connector.

2. INSPECT COOLING FAN OPERATION AT HIGH TEMPERATURES (Above 96°C (205°F))

(a) Start the engine, and then raise the coolant temperature above 96°C (205°F).

HINT:

Coolant temperature is the value detected by the engine coolant temperature sensor on the cylinder head.

(b) Check that the A/C switch is off.

(c) Check that the cooling fans operate.

If either does not, check the fuses, engine coolant temperature sensor, cooling fan, harness or connector.

Last Modified: 3-10-2010	6.4 J	**From:** 200901
Model Year: 2010	**Model:** Corolla	**Doc ID:** RM000002WE901XX
Title: 2ZR-FE COOLING: COOLING FAN SYSTEM: Cooling Fan Circuit (2010 Corolla)		

Cooling Fan Circuit

DESCRIPTION

The ECM calculates an appropriate cooling fan speed based on the engine coolant temperature, air conditioning switch condition, refrigerant pressure, engine speed, and vehicle speed and sends the signals to the cooling fan ECU to regulate the cooling fan. The cooling fan ECU controls the cooling fan speed based on the duty ratio signal sent from the ECM. By basing its control on the operating conditions, the ECM can control the fan speed optimally using the cooling fan ECU, achieving both high cooling performance and quietness. The cooling fan speed is determined based on the engine coolant temperature, air conditioner operating conditions, engine speed, and vehicle speed.

WIRING DIAGRAM

w/o Smart Key System:

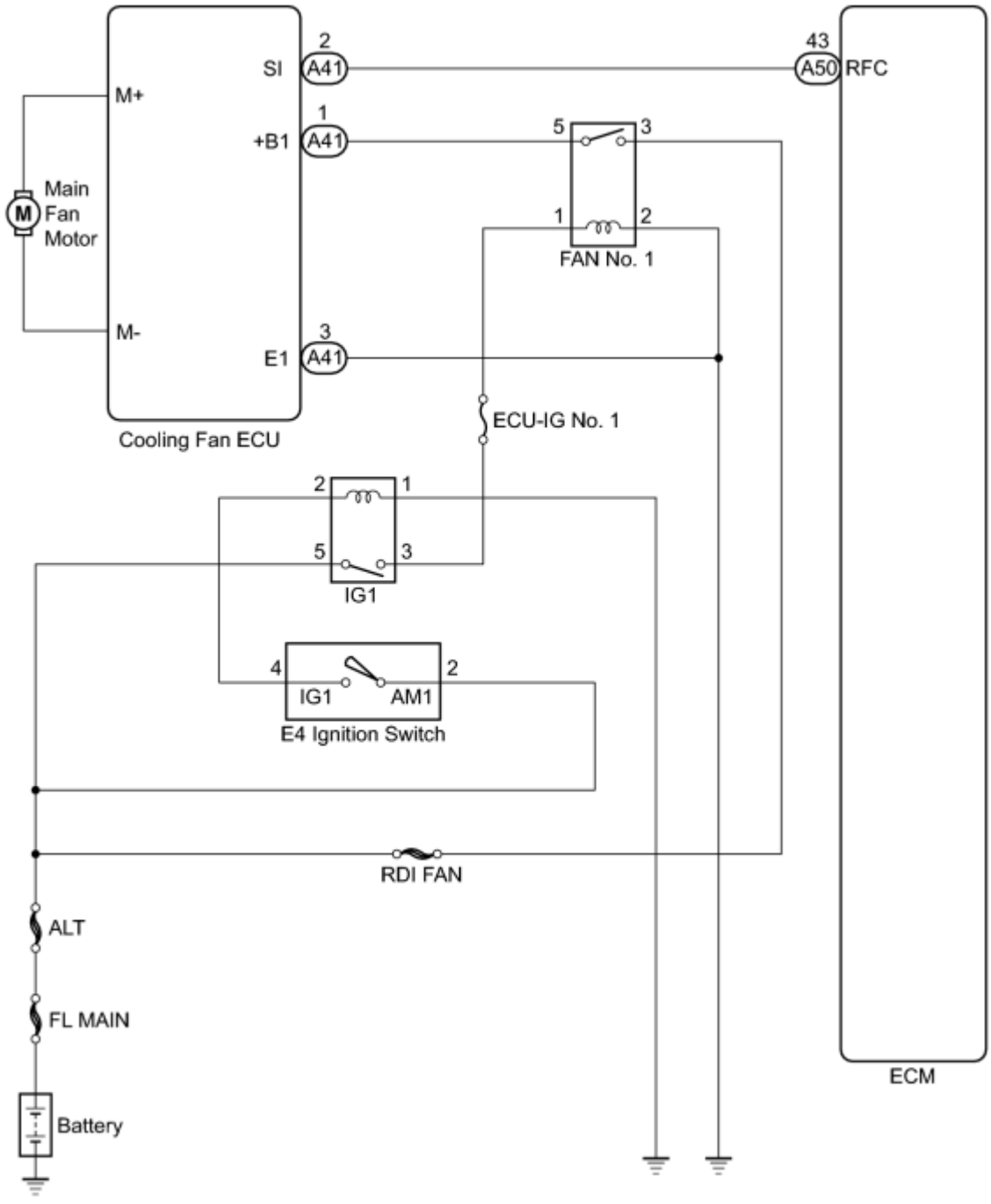

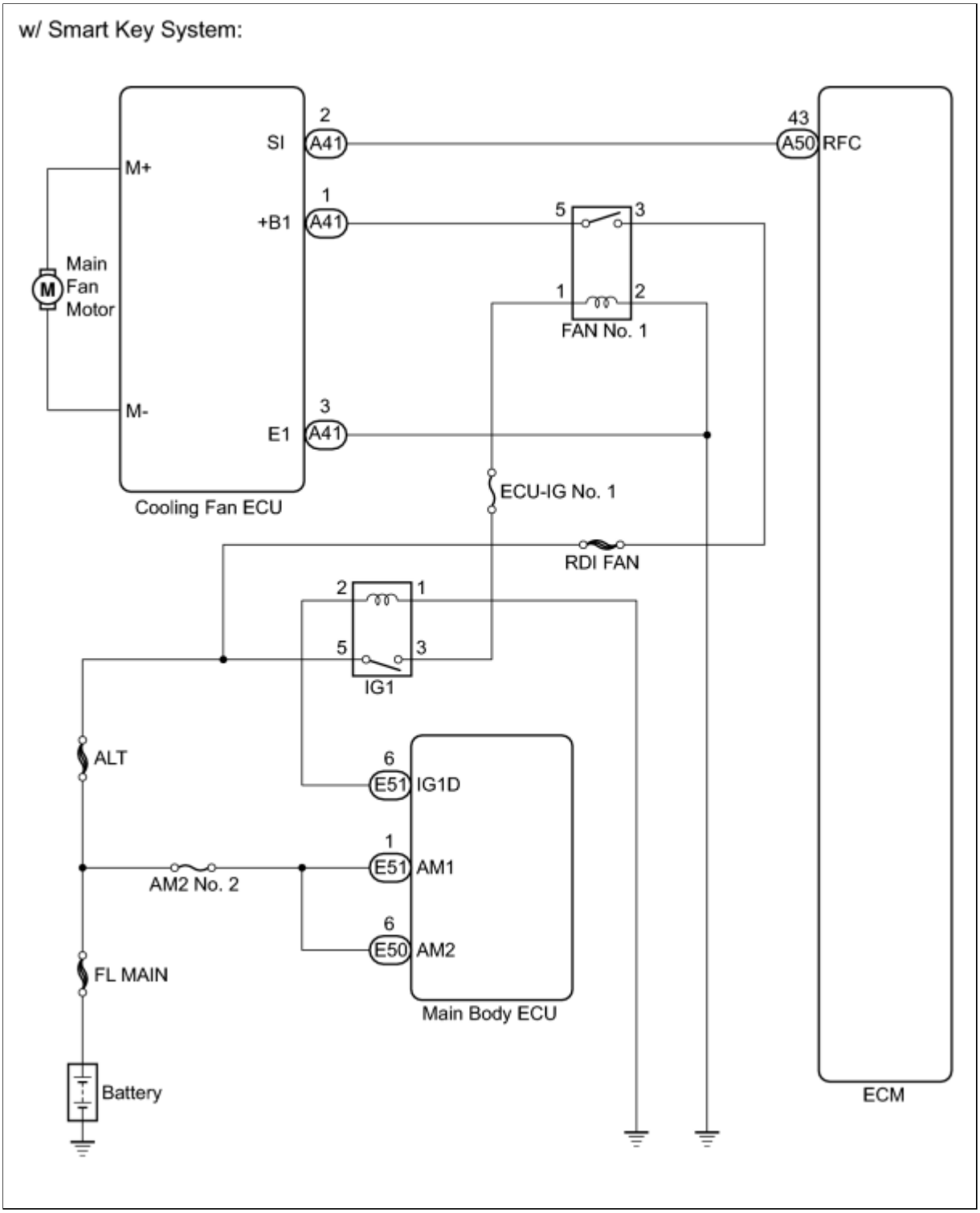

INSPECTION PROCEDURE

PROCEDURE

1.	PERFORM ACTIVE TEST USING TECHSTREAM (CONTROL COOLING FAN)

(a) Connect the Techstream to the DLC3.

(b) Turn the ignition switch to ON.

(c) Enter the following menus: Powertrain / Engine and ECT / Active Test / Control the Electric Cooling Fan.

(d) Check the operation of the cooling fan using the Techstream.

OK:

TESTER OPERATION	FAN OPERATION
ON	Cooling fan operates
OFF	Cooling fan stopped

Result:

RESULT	PROCEED TO
OK	A
NG (Cooling fan does not operate)	B
NG (Cooling fan does not stop)	C

C ▶ **CHECK HARNESS AND CONNECTOR (ECM - COOLING FAN ECU)**

B ▶ **INSPECT COOLING FAN ECU**

A ▶ **PROCEED TO NEXT INSPECTION PROCEDURE SHOWN IN PROBLEM SYMPTOMS TABLE**

2.	**INSPECT COOLING FAN ECU**

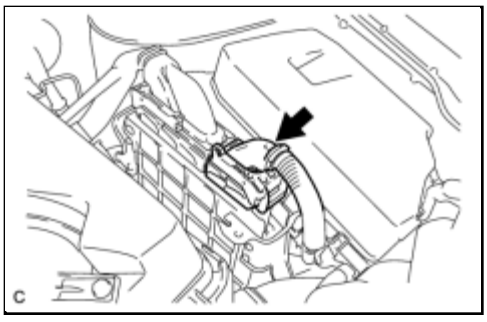

(a) Disconnect the ECM connector.

(b) Turn the ignition switch to ON.

(c) Check the operation of the cooling fan.

OK:

The cooling fan operates.

(d) Reconnect the ECM connector.

NG ▶ **CHECK HARNESS AND CONNECTOR (ECM - COOLING FAN ECU)**

OK ▶ **REPLACE ECM**

3.	CHECK HARNESS AND CONNECTOR (ECM - COOLING FAN ECU)

(a) Disconnect the cooling fan ECU connector.

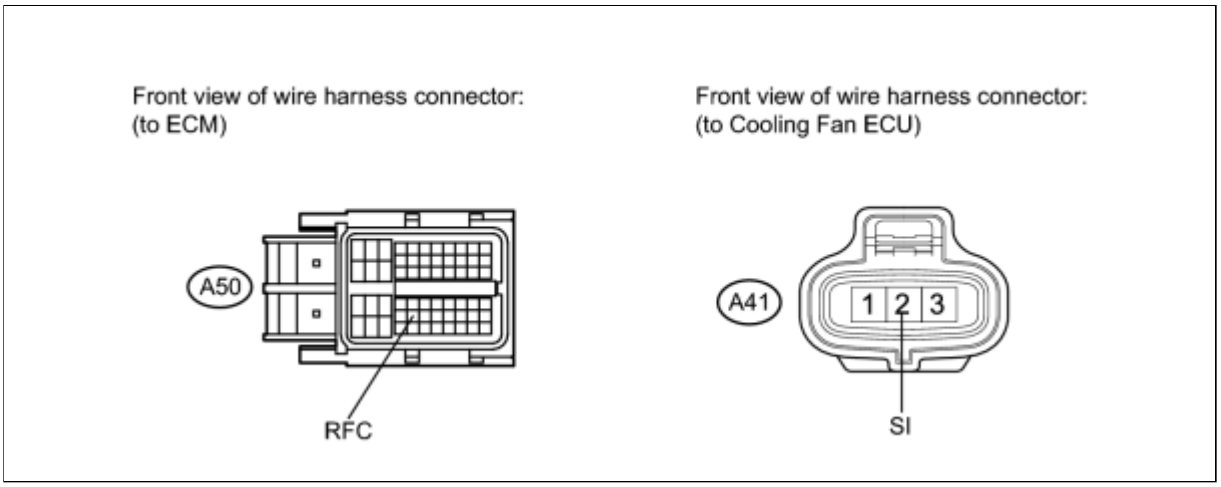

(b) Disconnect the ECM connector.

(c) Measure the resistance according to the value(s) in the table below.

Standard Resistance (Check for Open):

TESTER CONNECTION	CONDITION	SPECIFIED CONDITION
A50-43 (RFC) - A41-2 (SI)	Always	Below 1 Ω

Standard Resistance (Check for Short):

TESTER CONNECTION	CONDITION	SPECIFIED CONDITION
A50-43 (RFC) or A41-2 (SI) - Body ground	Always	10 kΩ or higher

(d) Reconnect the ECM connector.

(e) Reconnect the cooling fan ECU connector.

NG ▶ **REPAIR OR REPLACE HARNESS OR CONNECTOR (ECM - COOLING FAN ECU)**

OK ▼

4.	**INSPECT COOLING FAN MOTOR**

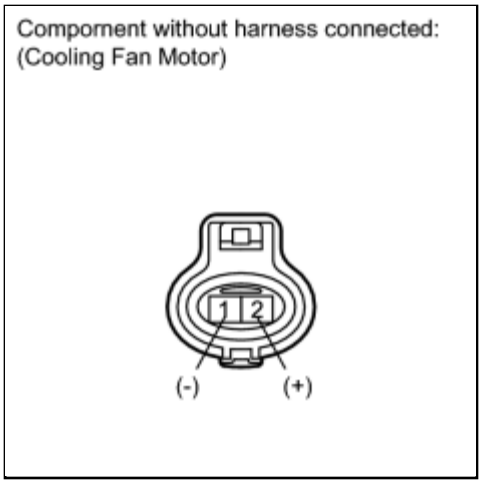

(a) Disconnect the cooling fan ECU connector.

(b) Connect a battery positive (+) lead to terminal 2 of the cooling fan motor connector, and connect a battery negative (-) lead to terminal 1 of the cooling fan motor connector.

(c) Check the cooling fan motor.

OK:

The cooling fan operates.

(d) Reconnect the cooling fan ECU connector.

NG ▶ **REPLACE COOLING FAN MOTOR**

OK ▼

5.	**CHECK COOLING FAN ECU (POWER SOURCE)**

(a) Disconnect the cooling fan ECU connector.

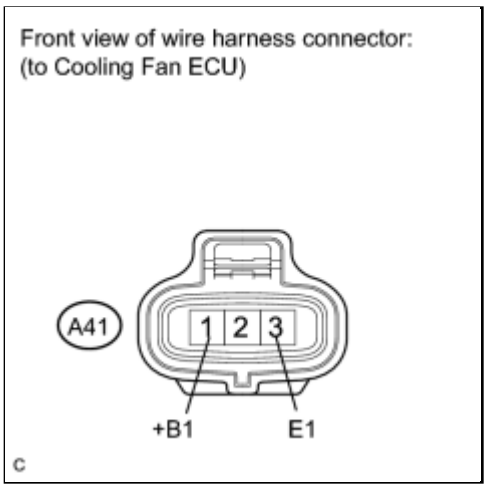

(b) Turn the ignition switch to ON.

(c) Measure the voltage according to the value(s) in the table below.

Standard Voltage:

TESTER CONNECTION	SWITCH CONDITION	SPECIFIED CONDITION
A41-1 (+B1) - A41-3 (E1)	Ignition switch ON	11 to 14 V

(d) Reconnect the cooling fan ECU connector.

NG ▶ **CHECK HARNESS AND CONNECTOR (COOLING FAN ECU - BODY GROUND)**

OK ▶ **REPLACE COOLING FAN ECU**

6.	**CHECK HARNESS AND CONNECTOR (COOLING FAN ECU - BODY GROUND)**

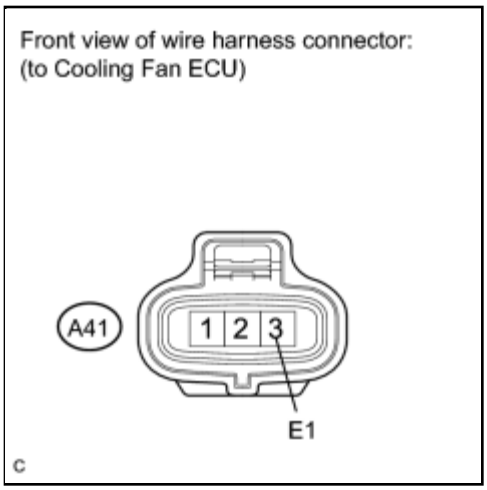

(a) Disconnect the cooling fan ECU connector.

(b) Measure the resistance according to the value(s) in the table below.

Standard Resistance:

TESTER CONNECTION	CONDITION	SPECIFIED CONDITION
A41-3 (E1) - Body ground	Always	Below 1 Ω

(c) Reconnect the cooling fan ECU connector.

NG ▶ **REPAIR OR REPLACE HARNESS OR CONNECTOR (COOLING FAN ECU - BODY GROUND)**

OK ▼

7.	**INSPECT FAN NO. 1 RELAY**

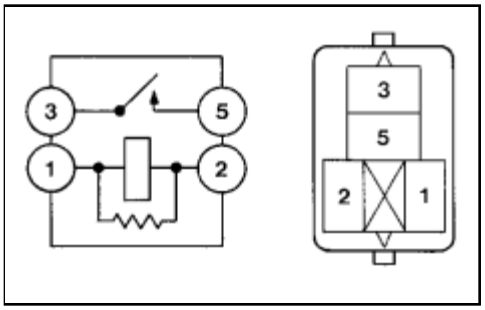

(a) Remove the FAN No. 1 relay from the engine room relay block.

(b) Measure the resistance according to the value(s) in the table below.

Standard Resistance:

TESTER CONNECTION	CONDITION	SPECIFIED CONDITION
3 - 5	Normal	10 kΩ or higher
3 - 5	Apply battery voltage between terminals 1 and 2	Below 1 Ω

(c) Reinstall the FAN No. 1 relay.

NG ▶ **REPLACE FAN NO. 1 RELAY**

OK

8.	**INSPECT FUSIBLE LINK BLOCK (RDI FAN FUSE)**

(a) Check the RDI FAN fuse.

NG **REPLACE FUSIBLE LINK BLOCK**

OK

9.	**INSPECT FUSE (ECU-IG NO. 1)**

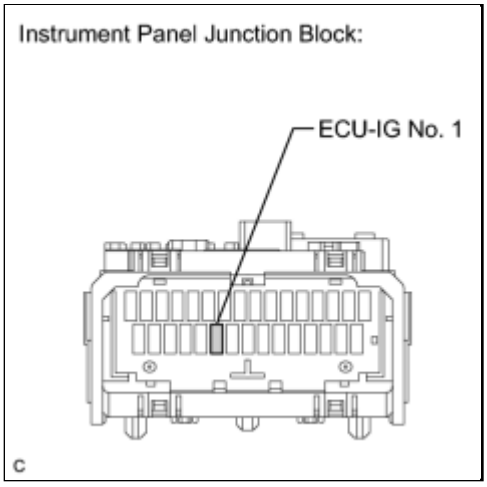

(a) Remove the ECU-IG No. 1 fuse from the instrument panel junction block.

(b) Measure the resistance according to the value(s) in the table below.

Standard Resistance:

TESTER CONNECTION	CONDITION	SPECIFIED CONDITION
ECU-IG No. 1 fuse	Always	Below 1 Ω

(c) Reinstall the ECU-IG No. 1 fuse.

NG **REPLACE FUSE (ECU-IG NO. 1 FUSE)**

OK

10.	CHECK HARNESS AND CONNECTOR (COOLING FAN ECU - FAN NO. 1 RELAY)

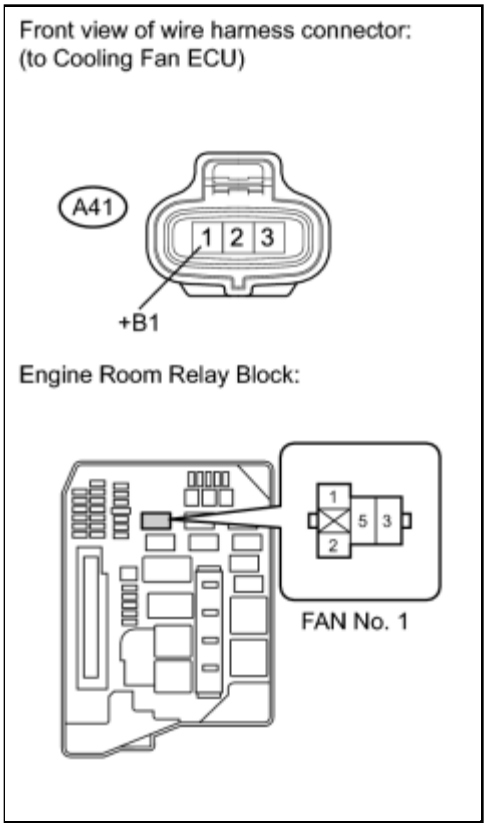

(a) Disconnect the cooling fan ECU connector.

(b) Remove the FAN No. 1 relay from the engine room relay block.

(c) Measure the resistance according to the value(s) in the table below.

Standard Resistance (Check for Open):

TESTER CONNECTION	CONDITION	SPECIFIED CONDITION
A41-1 (+B1) - 5 (FAN No.1 relay)	Always	Below 1 Ω

Standard Resistance (Check for Short):

TESTER CONNECTION	CONDITION	SPECIFIED CONDITION
A41-1 (+B1) or 5 (FAN No.1 relay) - Body ground	Always	10 kΩ or higher

(d) Reconnect the cooling fan ECU connector.

NG ▶ **REPAIR OR REPLACE HARNESS OR CONNECTOR (COOLING FAN ECU - FAN NO. 1 RELAY)**

OK ▼

11.	**CHECK HARNESS AND CONNECTOR (FAN NO. 1 RELAY - BODY GROUND)**

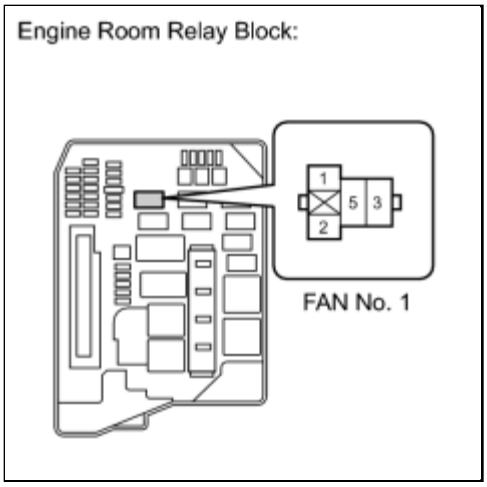

(a) Remove the FAN No. 1 relay from the engine room relay block.

(b) Measure the resistance according to the value(s) in the table below.

Standard Resistance:

TESTER CONNECTION	CONDITION	SPECIFIED CONDITION
2 (FAN No.1 relay) - Body ground	Always	Below 1 Ω

(c) Reinstall the FAN No. 1 relay.

NG ▶ **REPAIR OR REPLACE HARNESS OR CONNECTOR (FAN NO. 1 RELAY - BODY GROUND)**

OK ▼

12.	**CHECK HARNESS AND CONNECTOR (FAN NO. 1 RELAY - ECU-IG NO. 1 FUSE)**

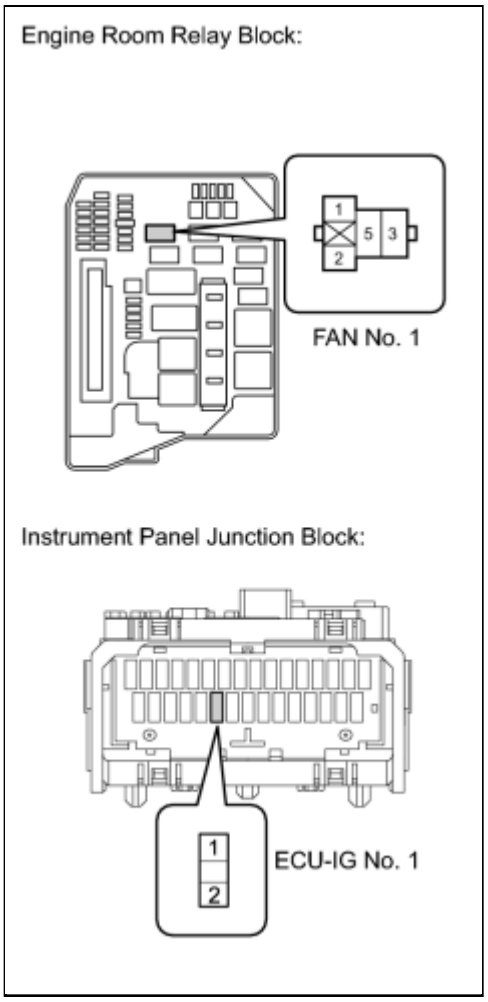

(a) Remove the ECU-IG No. 1 fuse from the instrument panel junction block.

(b) Remove the FAN No. 1 relay from the engine room relay block.

(c) Measure the resistance according to the value(s) in the table below.

Standard Resistance (Check for Open):

TESTER CONNECTION	CONDITION	SPECIFIED CONDITION
2 (ECU-IG No. 1 fuse) - 1 (FAN No.1 relay)	Always	Below 1 Ω

Standard Resistance (Check for Short):

TESTER CONNECTION	CONDITION	SPECIFIED CONDITION
2 (ECU-IG No. 1 fuse) or 1 (FAN No.1 relay) - Body ground	Always	10 kΩ or higher

(d) Reinstall the ECU-IG No. 1 fuse.

(e) Reinstall the FAN No. 1 relay.

NG ▶ **REPAIR OR REPLACE HARNESS OR CONNECTOR (FAN NO. 1 RELAY - ECU-IG NO. 1 FUSE)**

OK

13.	CHECK HARNESS AND CONNECTOR (FAN NO. 1 RELAY - RDI FAN FUSE)

(a) Remove the fusible link block assembly from the engine room relay block.

(b) Disconnect the fusible link block connector.

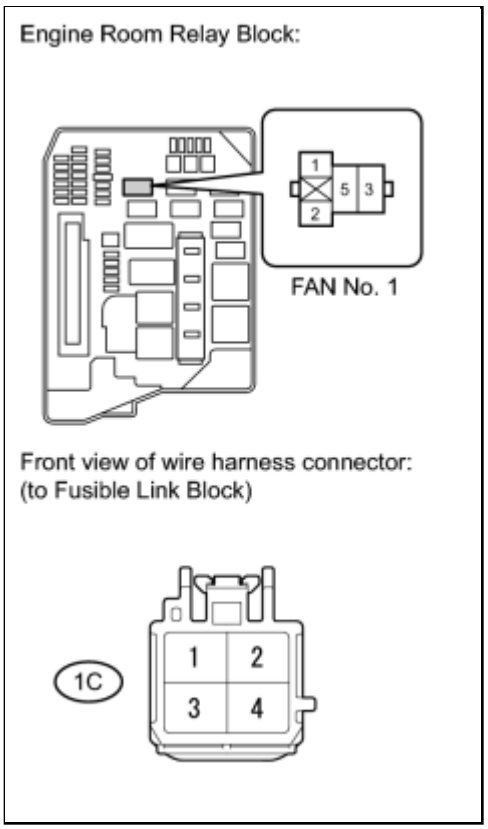

(c) Measure the resistance according to the value(s) in the table below.

Standard Resistance (Check for Open):

TESTER CONNECTION	CONDITION	SPECIFIED CONDITION
3 (FAN No. 1 relay) - 1C-2 (Fusible link block)	Always	Below 1 Ω

Standard Resistance (Check for Short):

TESTER CONNECTION	CONDITION	SPECIFIED CONDITION
3 (FAN No. 1 relay) or 1C-2 (Fusible link block) - Body ground	Always	10 kΩ or higher

(d) Reconnect the fusible link block connector.

(e) Reinstall the fusible link block assembly.

NG ▶ **REPAIR OR REPLACE HARNESS OR CONNECTOR (FAN NO. 1 RELAY - RDI FAN FUSE)**

OK ▶ **REPAIR OR REPLACE HARNESS OR CONNECTOR (BATTERY - RDI FAN FUSE)**

14.	CHECK HARNESS AND CONNECTOR (ECM - COOLING FAN ECU)

(a) Disconnect the cooling fan ECU connector.

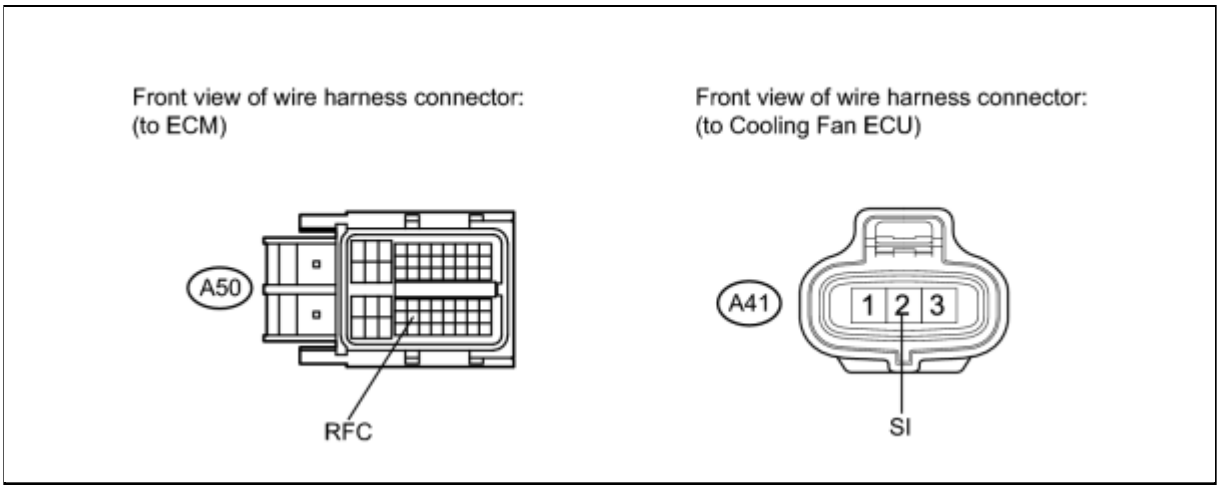

(b) Disconnect the ECM connector.

(c) Measure the resistance according to the value(s) in the table below.

Standard Resistance:

TESTER CONNECTION	CONDITION	SPECIFIED CONDITION
A50-43 (RFC) - A41-2 (SI)	Always	Below 1 Ω

(d) Reconnect the ECM connector.

(e) Reconnect the cooling fan ECU connector.

NG ▶ **REPAIR OR REPLACE HARNESS OR CONNECTOR (ECM - COOLING FAN ECU)**

OK ▶ **REPLACE COOLING FAN ECU**

Last Modified: 3-10-2010	6.4 R	**From:** 200901
Model Year: 2010	**Model:** Corolla	**Doc ID:** RM0000020WP01IX
Title: 2ZR-FE COOLING: COOLING FAN SYSTEM: PARTS LOCATION (2010 Corolla)		

PARTS LOCATION

ILLUSTRATION

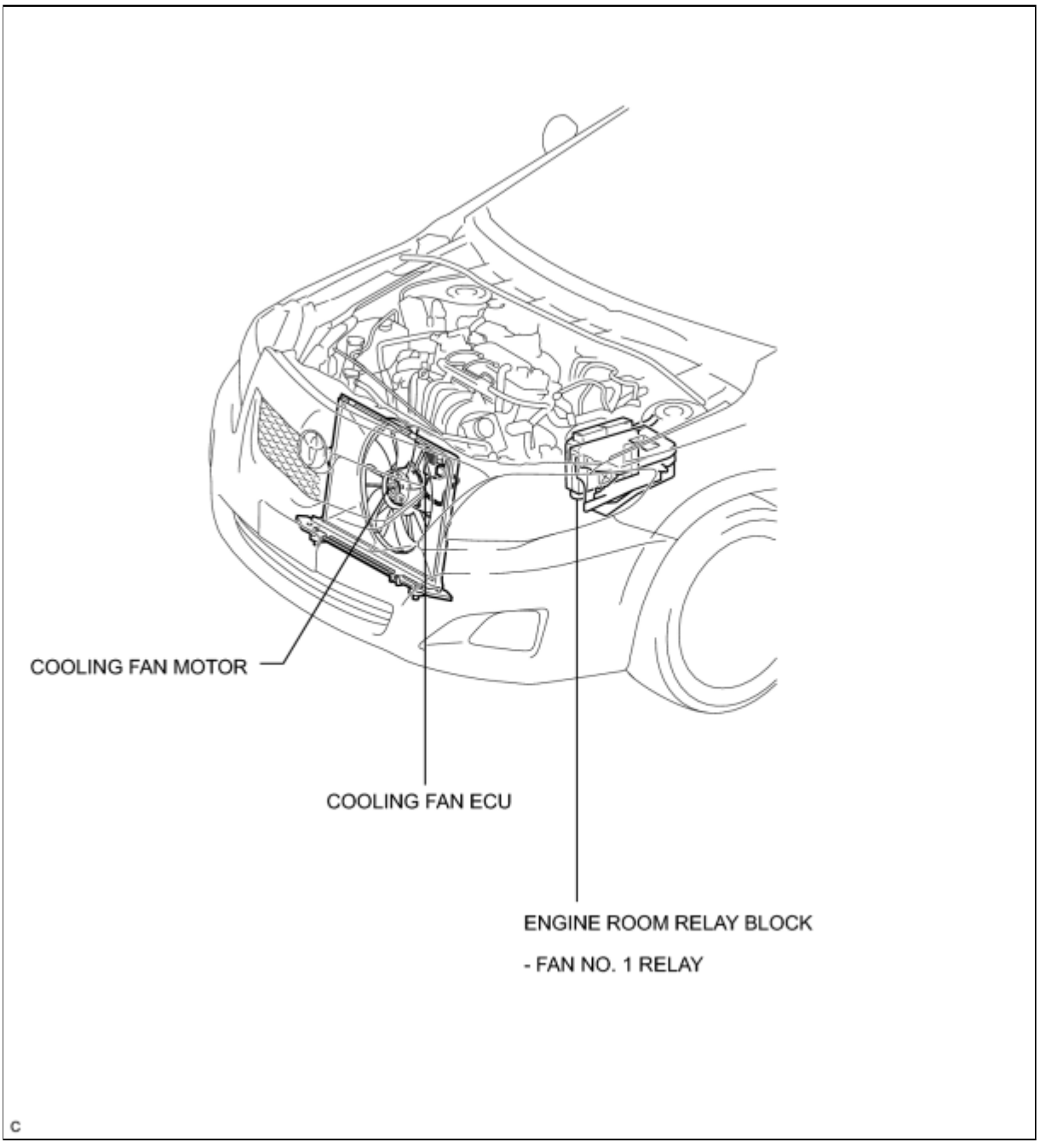

Last Modified: 3-10-2010	6.4 U	**From:** 200901
Model Year: 2010	**Model:** Corolla	**Doc ID:** RM000002ZNS00LX
Title: 2ZR-FE COOLING: COOLING FAN SYSTEM: SYSTEM DIAGRAM (2010 Corolla)		

SYSTEM DIAGRAM

Refer to Cooling Fan Circuit INFO .

Last Modified: 3-10-2010	6.4 T	**From:** 200901
Model Year: 2010	**Model:** Corolla	**Doc ID:** RM000003E0000EX
Title: 2ZR-FE COOLING: COOLING FAN SYSTEM: PROBLEM SYMPTOMS TABLE (2010 Corolla)		

PROBLEM SYMPTOMS TABLE

HINT:

- Use the table below to help determine the cause of problem symptoms. If multiple suspected areas are listed, the potential causes of the symptoms are listed in order of probability in the "Suspected Area" column of the table. Check each symptom by checking the suspected areas in the order they are listed. Replace parts as necessary.
- Inspect the fuses and relays related to this system before inspecting the suspected areas below.

Cooling Fan System

SYMPTOM	SUSPECTED AREA	SEE PAGE
Cooling fan does not operate	Engine coolant temperature sensor	INFO
	Cooling fan motor	INFO
	FAN No. 1 relay	INFO
	Cooling fan circuit	INFO
	Cooling fan ECU	INFO
	ECM	INFO
Cooling fan does not stop	Cooling fan circuit	INFO
	CAN communication system	INFO
	Cooling fan ECU	INFO
	ECM	INFO
Cooling fan speed does not change	Cooling fan circuit	INFO
	CAN communication system	INFO
	Cooling fan ECU	INFO
	ECM	INFO

Last Modified: 3-10-2010	6.4 G	**From:** 200901
Model Year: 2010	**Model:** Corolla	**Doc ID:** RM000001E6G010X
Title: 2ZR-FE COOLING: COOLING FAN SYSTEM: ON-VEHICLE INSPECTION (2010 Corolla)		

ON-VEHICLE INSPECTION

1. INSPECT COOLING FAN MOTOR

(a) Connect the Techstream to the DLC3.

(b) Turn the ignition switch to ON.

(c) Enter the following menus: Powertrain / Engine / Active Test / Control the Cooling Fan.

(d) Check the operation of the cooling fan while operating it using the Techstream.

If the cooling fan motor does not operate, check the cooling fan circuit. INFO

Last Modified: 3-10-2010	6.4 G	**From:** 200901
Model Year: 2010	**Model:** Corolla	**Doc ID:** RM000000V1Q05PX
Title: 2AZ-FE COOLING: COOLING SYSTEM: ON-VEHICLE INSPECTION (2010 Corolla)		

ON-VEHICLE INSPECTION

CAUTION:

Be sure that the ignition switch is off when working near the electric cooling fans or radiator grille. With the ignition switch ON, the electric cooling fans may automatically start to run if the engine coolant temperature becomes high and/or the air conditioning is turned on.

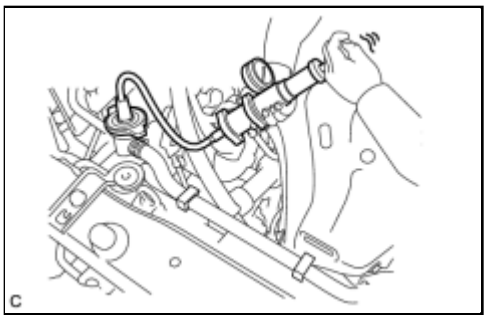

1. INSPECT FOR COOLANT LEAK

CAUTION:

To avoid the danger of being burned, do not remove the radiator cap sub-assembly while the engine and radiator assembly are still hot. Thermal expansion will cause hot engine coolant and steam to blow out from the radiator assembly.

(a) Fill the radiator assembly with engine coolant, then attach a radiator cap tester.

(b) Pump the tester to 118 kPa (1.2 kgf/cm2, 17.1 psi), then check that the pressure does not drop.

If the pressure drops, check the hoses, radiator assembly and water pump assembly for leakage. If there are no signs or traces of external engine coolant leakage, check the heater core, cylinder block and head.

2. INSPECT RESERVE TANK ENGINE COOLANT LEVEL

(a) The engine coolant should be between the LOW and FULL lines when the engine is cold.

HINT:

If it is below the LOW line, check for leakage and add Toyota Super Long Life Coolant (SLLC) or similar high quality ethylene glycol based non-silicate, non-amine, non-nitrite, and non-borate coolant with long-life hybrid organic acid technology up to the FULL line.

3. INSPECT ENGINE COOLANT QUALITY

(a) Remove the radiator cap sub-assembly.

CAUTION:

To avoid the danger of being burned, do not remove the radiator cap sub-assembly while the engine and radiator assembly are still hot. Thermal expansion will cause hot engine coolant and steam to blow out from the radiator assembly.

(b) Check for excessive deposits of rust or scale around the radiator cap sub-assembly and radiator filler hole. The engine coolant should be free of oil. If excessively dirty, replace the engine coolant.

If excessively dirty, replace the engine coolant.

(c) Reinstall the radiator cap sub-assembly.

Last Modified: 3-10-2010	6.4 G	**From:** 200901
Model Year: 2010	**Model:** Corolla	**Doc ID:** RM000001E6D01KX
Title: 2ZR-FE COOLING: COOLING SYSTEM: ON-VEHICLE INSPECTION (2010 Corolla)		

ON-VEHICLE INSPECTION

CAUTION:

Be sure that the ignition switch is off when working near the electric cooling fan or radiator grille. With the ignition switch ON, the electric cooling fan may automatically start to run if the engine coolant temperature becomes high and/or the air conditioning is turned on.

1. INSPECT FOR COOLANT LEAK

CAUTION:

To avoid the danger of being burned, do not remove the radiator cap sub-assembly while the engine and radiator assembly are still hot. Thermal expansion will cause hot engine coolant and steam to blow out from the radiator assembly.

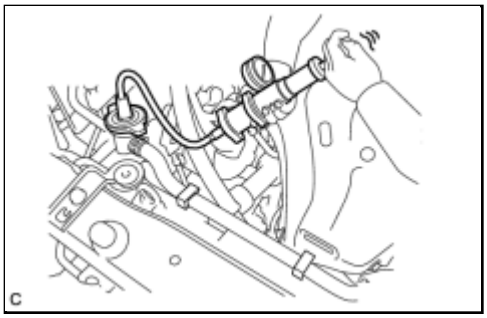

(a) Fill the radiator assembly with engine coolant, then attach a radiator cap tester.

(b) Pump it to 118 kPa (1.2 kgf/cm^2, 17.0 psi), then check that the pressure does not drop.

If the pressure drops, check the hoses, radiator assembly and water pump assembly for leakage. If there are no signs or traces of external engine coolant leakage, check the heater core, cylinder block and head.

2. INSPECT RESERVOIR TANK ENGINE COOLANT LEVEL

(a) The engine coolant should be between the LOW and FULL lines when the engine is cold.

HINT:

If it is below the LOW line, check for leakage and add Toyota Super Long Life Coolant (SLLC) or similar high quality ethylene glycol based non-silicate, non-amine, non-nitrite, and non-borate coolant with long-life hybrid organic acid technology up to the FULL line.

3. INSPECT ENGINE COOLANT QUALITY

(a) Remove the radiator cap sub-assembly.

CAUTION:

To avoid the danger of being burned, do not remove the radiator cap sub-assembly while the engine and radiator assembly are still hot.

Thermal expansion will cause hot engine coolant and steam to blow out from the radiator assembly.

(b) Check for excessive deposits of rust or scale around the radiator cap sub-assembly and radiator filler hole. The engine coolant should be free of oil.

If excessively dirty, replace the engine coolant.

(c) Reinstall the radiator cap sub-assembly.

Last Modified: 3-10-2010	6.4 K	**From:** 200901
Model Year: 2010	**Model:** Corolla	**Doc ID:** RM000001IQB01BX
Title: 2AZ-FE COOLING: RADIATOR: COMPONENTS (2010 Corolla)		

COMPONENTS

ILLUSTRATION

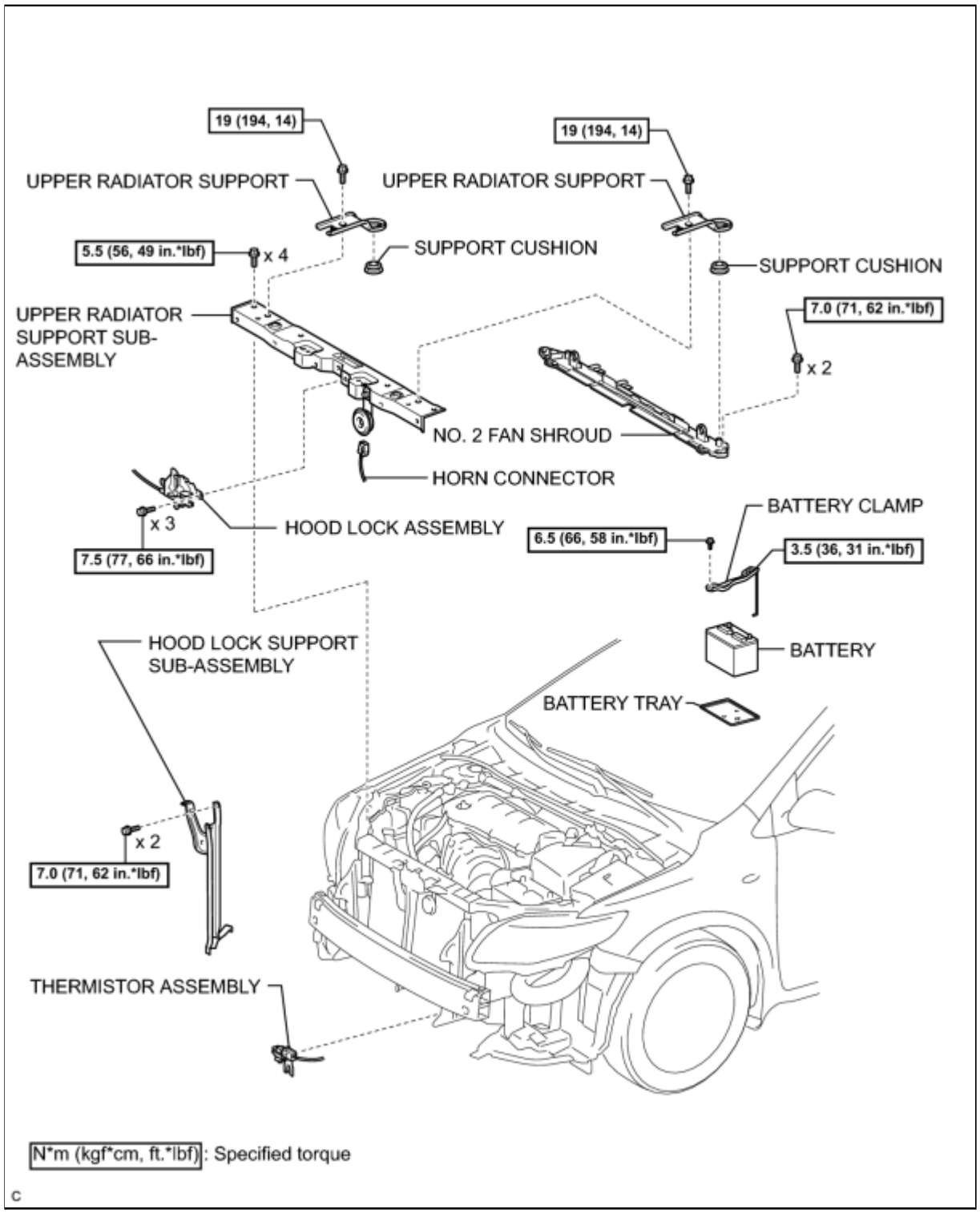

ILLUSTRATION

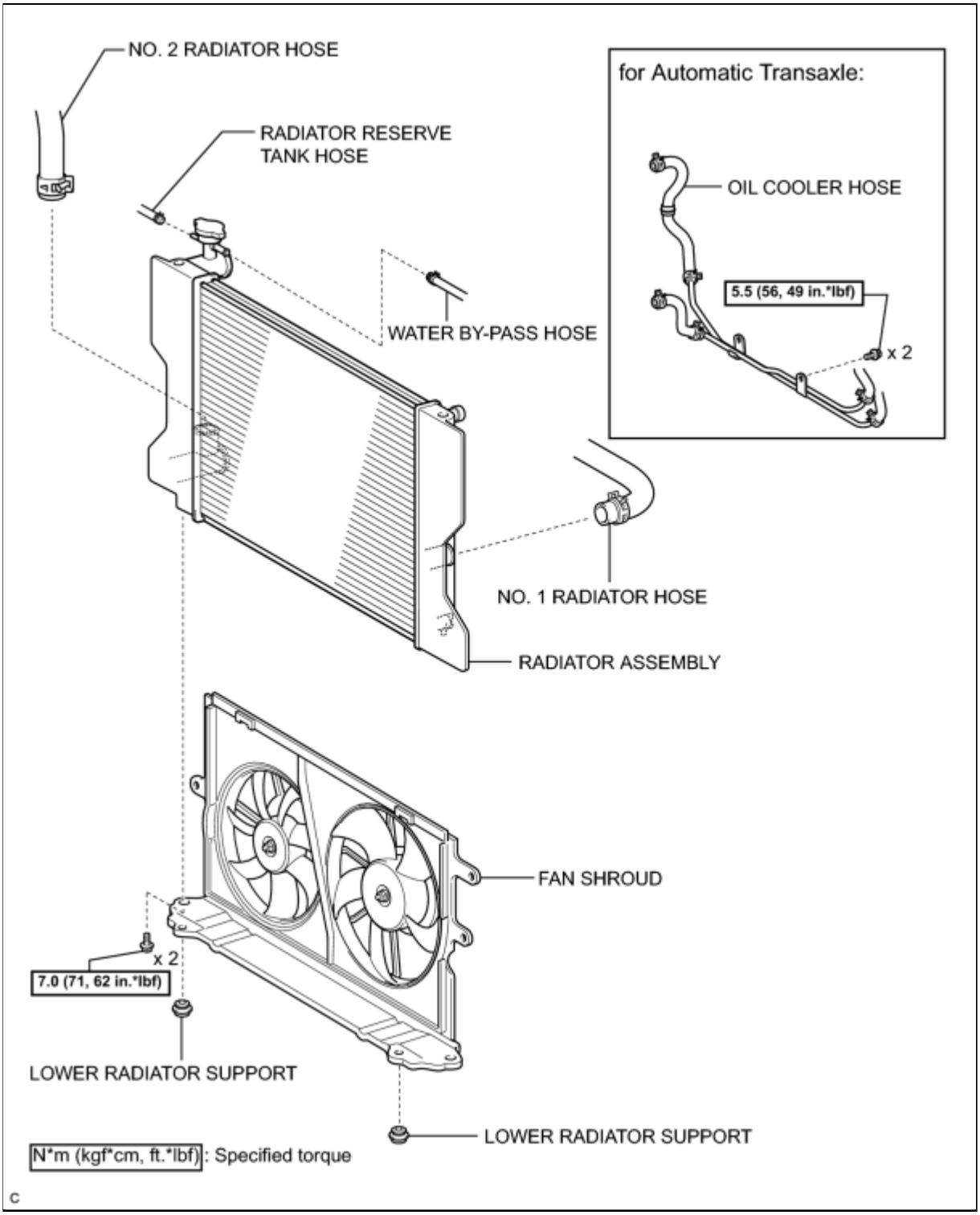

Last Modified: 3-10-2010	6.4 A	**From:** 200901
Model Year: 2010	**Model:** Corolla	**Doc ID:** RM000001IQD01TX
Title: 2AZ-FE COOLING: RADIATOR: REMOVAL (2010 Corolla)		

REMOVAL

1. DISCONNECT CABLE FROM NEGATIVE BATTERY TERMINAL

2. REMOVE ENGINE UNDER COVER LH

3. REMOVE ENGINE UNDER COVER RH

4. DRAIN ENGINE COOLANT INFO

5. REMOVE BATTERY INFO

6. REMOVE FRONT BUMPER COVER

HINT: INFO .

7. REMOVE THERMISTOR ASSEMBLY

8. DISCONNECT RADIATOR RESERVE TANK HOSE

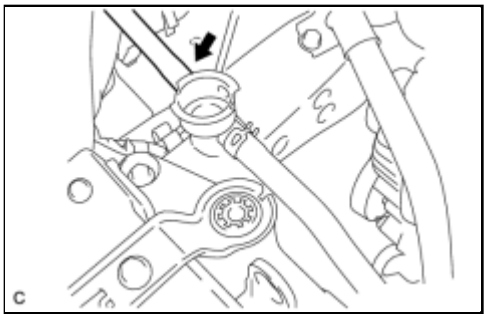

(a) Disconnect the radiator reserve tank hose from the radiator assembly.

9. DISCONNECT NO. 1 RADIATOR HOSE

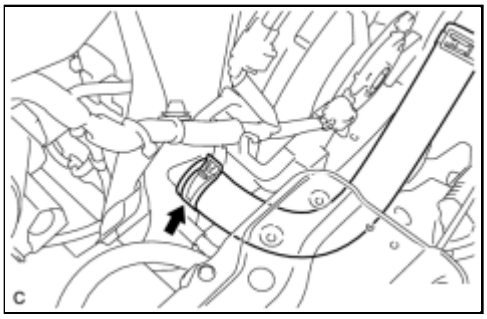

(a) Disconnect the No. 1 radiator hose from the radiator assembly.

10. DISCONNECT NO. 2 RADIATOR HOSE

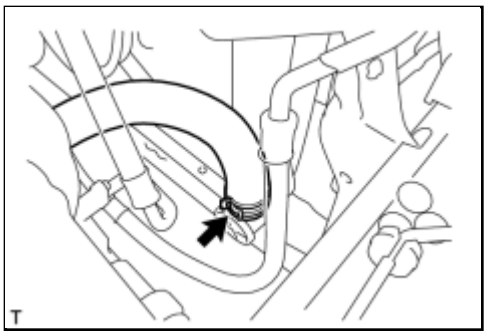

(a) Disconnect the No. 2 radiator hose from the radiator assembly.

11. DISCONNECT OIL COOLER HOSE (for Automatic Transaxle) INFO

12. REMOVE UPPER RADIATOR SUPPORT

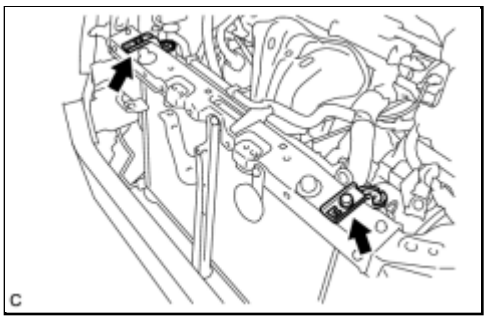

(a) Remove the 2 bolts and 2 upper radiator supports.

(b) Remove the 2 support cushions from the 2 upper radiator supports.

13. REMOVE HOOD LOCK ASSEMBLY INFO

14. SEPARATE WATER BY-PASS HOSE

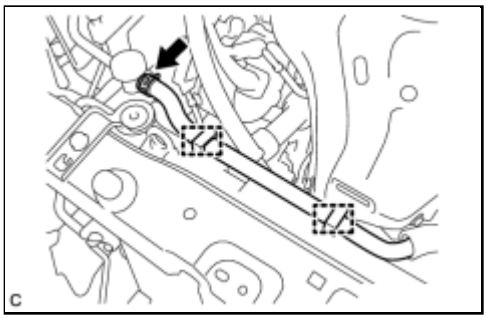

(a) Separate the water by-pass hose from the 2 clamps.

(b) Disconnect the water by-pass hose from the radiator assembly.

15. REMOVE HOOD LOCK SUPPORT SUB-ASSEMBLY

(a) Remove the 2 bolts and hood lock support sub-assembly.

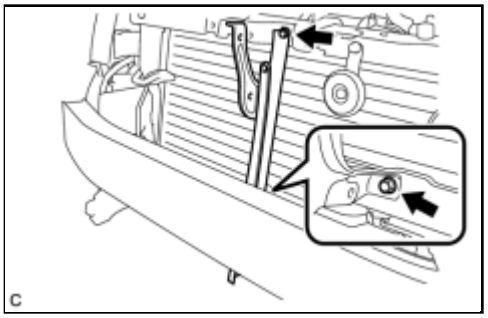

16. REMOVE UPPER RADIATOR SUPPORT SUB-ASSEMBLY

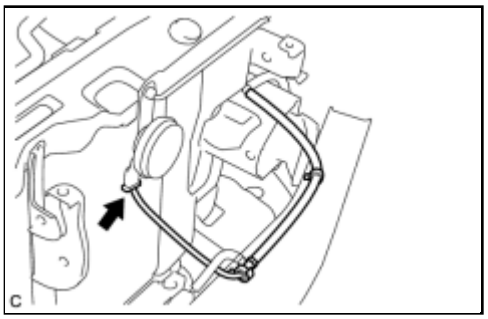

(a) Disconnect the horn connector.

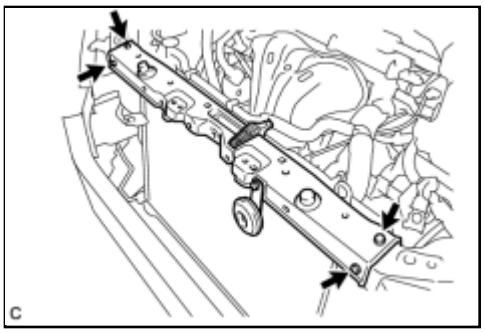

(b) Remove the 4 bolts and upper radiator support sub-assembly.

17. REMOVE NO. 2 FAN SHROUD

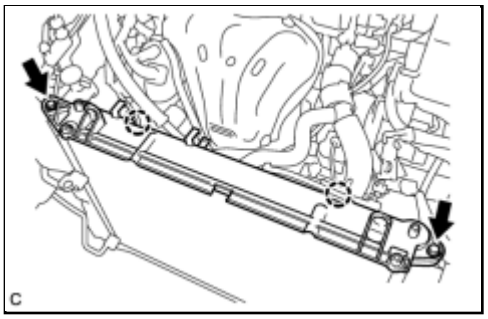

(a) Remove the 2 bolts, disengage the 2 claws, and remove the No. 2 fan shroud from the radiator assembly.

18. REMOVE RADIATOR ASSEMBLY

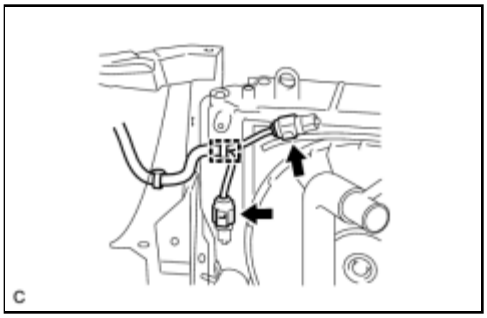

(a) Disconnect the 2 cooling fan motor connectors and wire harness clamp.

NOTICE:

Be careful not to damage the connector.

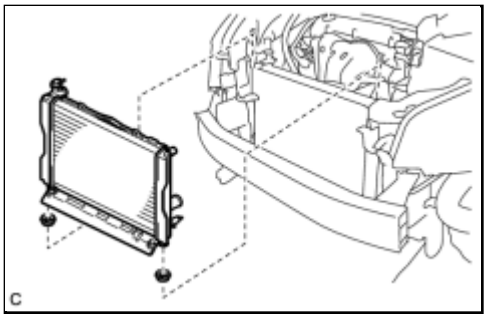

(b) Remove the radiator assembly with the fan shroud.

NOTICE:

Do not apply any excessive force to the cooler condenser assembly or pipe when removing the radiator assembly.

(c) Remove the 2 lower radiator supports.

19. REMOVE OIL COOLER HOSE (for Automatic Transaxle)

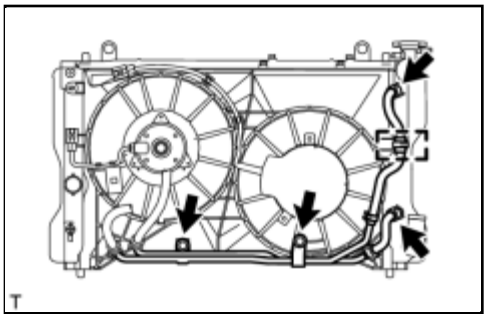

(a) Disconnect the 2 oil cooler hoses from the radiator.

(b) Disconnect the clamp from the fan shroud.

(c) Remove the 2 bolts and oil cooler hose.

20. REMOVE FAN SHROUD

(a) Remove the 2 bolts and fan shroud from the radiator assembly.

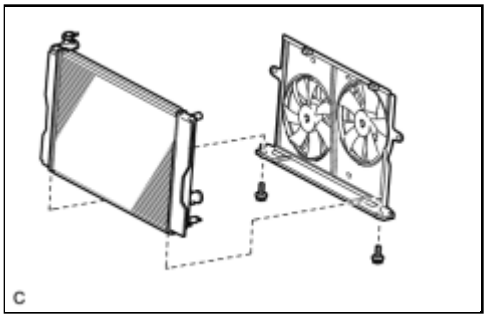
C

Last Modified: 3-10-2010	6.4 G	**From:** 200901
Model Year: 2010	**Model:** Corolla	**Doc ID:** RM000001HC801GX
Title: 2AZ-FE COOLING: RADIATOR: ON-VEHICLE INSPECTION (2010 Corolla)		

ON-VEHICLE INSPECTION

1. CHECK RADIATOR CAP SUB-ASSEMBLY

(a) Measure the valve opening pressure.

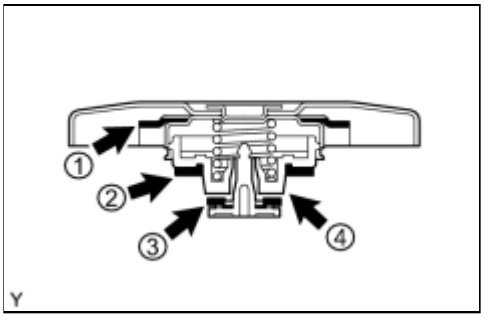

(1) If there are water stains or foreign matter on rubber seal 1, 2 or 3, clean the part(s) with water and finger scouring.

(2) Check that rubber seals 1, 2 and 3 are not deformed, cracked or swollen.

(3) Check that rubber seals 3 and 4 are not stuck together.

(4) Apply engine coolant to rubber seals 2 and 3 before using a radiator cap tester.

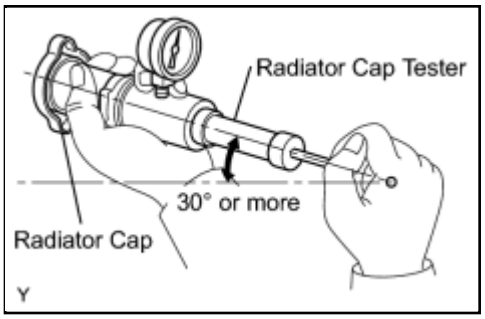

(5) When using the cap tester, tilt it upwards 30° or more.

(6) Pump the cap tester several times, and check the maximum pressure*1.

Pumping speed:
1 pump per second

HINT:

***1: Even if the cap cannot maintain the maximum pressure, it is not defective.**

Judgment Criteria:

ITEM	SPECIFIED CONDITION
Standard value	74 to 103 kPa (0.75 to 1.05 kgf/cm^2, 10.7 to 15 psi)

ITEM	SPECIFIED CONDITION
(for brand-new cap)	
Minimum standard value (for used cap)	59 kPa (0.60 kgf/cm^2, 8.6 psi)

If the maximum pressure is less than the minimum standard value, replace the radiator cap sub-assembly.

2. INSPECT FINS FOR BLOCKAGE

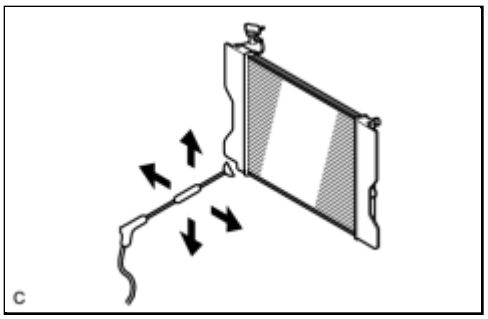

(a) If the fins are clogged, wash them with water or a steam cleaner and dry them with compressed air.

NOTICE:

- To avoid damaging the fins, the injection direction should be at right angles to the radiator core surface (Please use it for core perpendicularly).
- If the steam cleaner is too close to the radiator core, there is a possibility of damaging the fins, so keep the following injection distances.

Standard Injection Distance:

INJECTION PRESSURE	SPECIFIED CONDITION
2942 to 4903 kPa (30 to 50 kgf/cm^2, 427 to 711 psi)	300 mm (11.811 in.)
4903 to 7845 kPa (50 to 80 kgf/cm^2, 711 to 1138 psi)	500 mm (19.685 in.)

- If the fins are bent, straighten them with a screwdriver or pliers.
- Do not expose electronic components to water.

Last Modified: 3-10-2010	6.4 A	**From:** 200901
Model Year: 2010	**Model:** Corolla	**Doc ID:** RM000001IQ901TX
Title: 2AZ-FE COOLING: RADIATOR: INSTALLATION (2010 Corolla)		

INSTALLATION

1. INSTALL FAN SHROUD

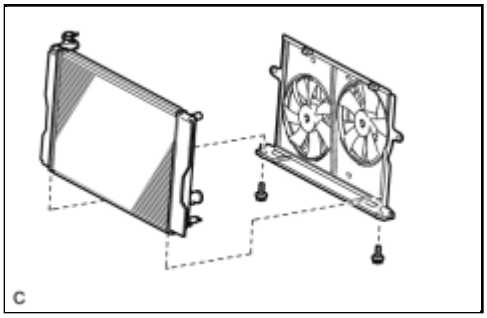

(a) Install the fan shroud to the radiator assembly with the 2 bolts.

Torque: 7.0 N·m (71 kgf·cm, 62in·lbf)

2. INSTALL OIL COOLER HOSE (for Automatic Transaxle)

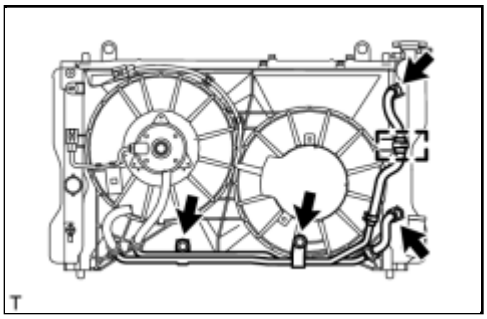

(a) Install the oil cooler hose with the 2 bolts.

Torque: 5.5 N·m (56 kgf·cm, 49in·lbf)

(b) Connect the clamp to the fan shroud.

(c) Connect the 2 oil cooler hoses to the radiator.

3. INSTALL RADIATOR ASSEMBLY

(a) Install the 2 lower radiator supports.

(b) Install the radiator assembly with the fan shroud.

NOTICE:

Do not apply any excessive force to the cooler condenser assembly or pipe when installing the radiator assembly.

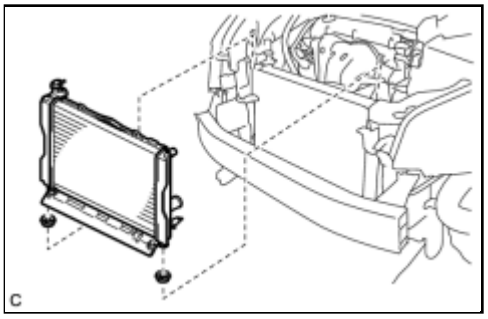

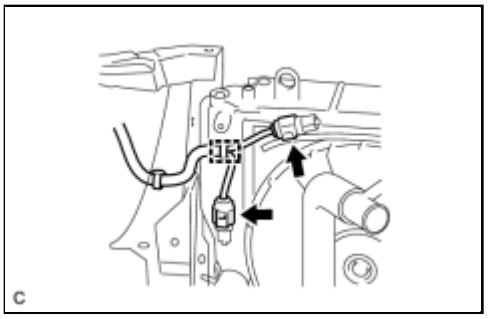

(c) Connect the 2 cooling fan motor connectors and wire harness clamp.

4. INSTALL NO. 2 FAN SHROUD

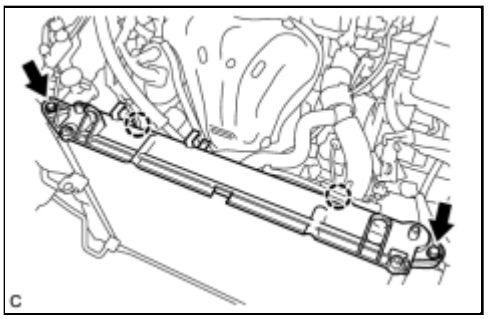

(a) Engage the 2 claws and install the No. 2 fan shroud to the radiator assembly with the 2 bolts.

Torque: 7.0 N·m (71 kgf·cm, 62in·lbf)

5. INSTALL UPPER RADIATOR SUPPORT SUB-ASSEMBLY

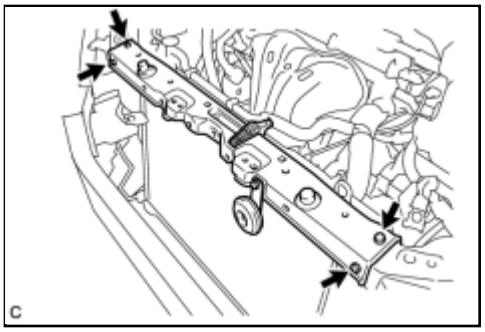

(a) Install the upper radiator support sub-assembly with the 4 bolts.

Torque: 5.5 N·m (56 kgf·cm, 49in·lbf)

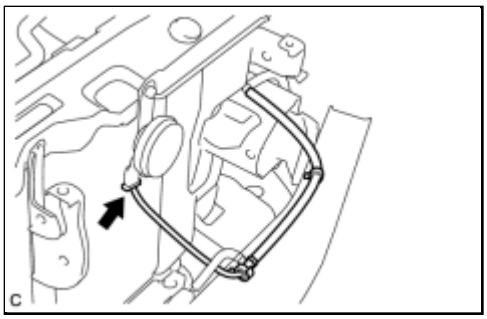

(b) Connect the horn connector.

6. INSTALL HOOD LOCK SUPPORT SUB-ASSEMBLY

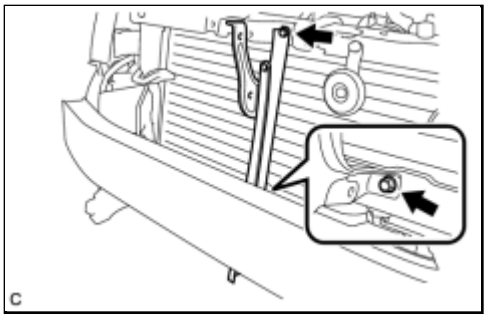

(a) Install the hood lock support sub-assembly with the 2 bolts.

Torque: 7.0 N·m (71 kgf·cm, 62in·lbf)

7. INSTALL WATER BY-PASS HOSE

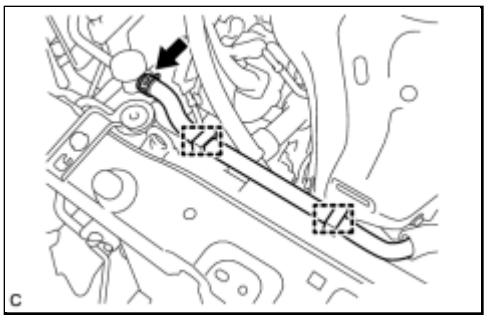

(a) Install the water by-pass hose with the 2 clamps.

(b) Connect the water by-pass hose to the radiator assembly with the clamp.

8. INSTALL HOOD LOCK ASSEMBLY INFO

9. INSTALL UPPER RADIATOR SUPPORT

(a) Install the 2 radiator support cushions to the 2 upper radiator supports.

(b) Install the 2 upper radiator supports with the 2 bolts.

Torque: 19 N·m (194 kgf·cm, 14ft·lbf)

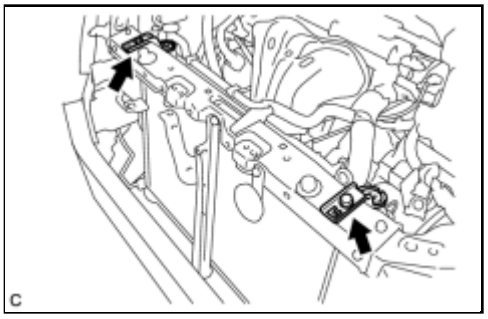

10. CONNECT OIL COOLER HOSE (for Automatic Transaxle) INFO

11. CONNECT NO. 2 RADIATOR HOSE

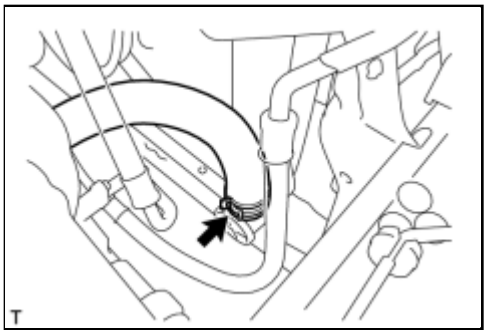

(a) Connect the No. 2 radiator hose to the radiator assembly with the clamp.

12. CONNECT NO. 1 RADIATOR HOSE

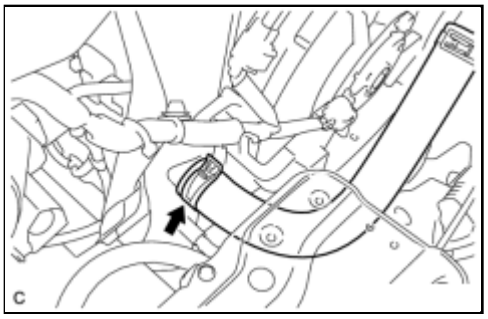

(a) Connect the No. 1 radiator hose to the radiator assembly with the clamp.

13. CONNECT RADIATOR RESERVE TANK HOSE

(a) Connect the radiator reserve tank hose to the radiator assembly with the clamp.

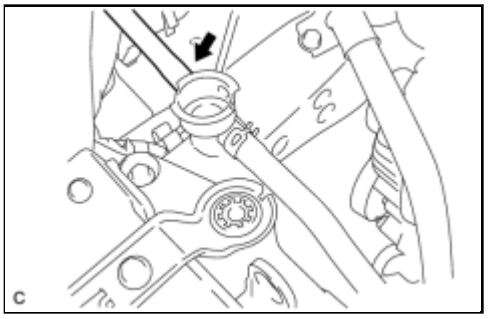

14. INSTALL THERMISTOR ASSEMBLY

15. INSTALL BATTERY INFO

16. CONNECT CABLE TO NEGATIVE BATTERY TERMINAL

Torque: 5.4 N·m (55 kgf·cm, 48in·lbf)

17. ADD ENGINE COOLANT INFO

18. INSPECT FOR COOLANT LEAK INFO

19. INSPECT RESERVOIR TANK ENGINE COOLANT LEVEL INFO

20. INSTALL FRONT BUMPER COVER

HINT: INFO .

Last Modified: 3-10-2010	6.4 K	**From:** 200901
Model Year: 2010	**Model:** Corolla	**Doc ID:** RM000000AS401TX
Title: 2ZR-FE COOLING: RADIATOR: COMPONENTS (2010 Corolla)		

COMPONENTS

ILLUSTRATION

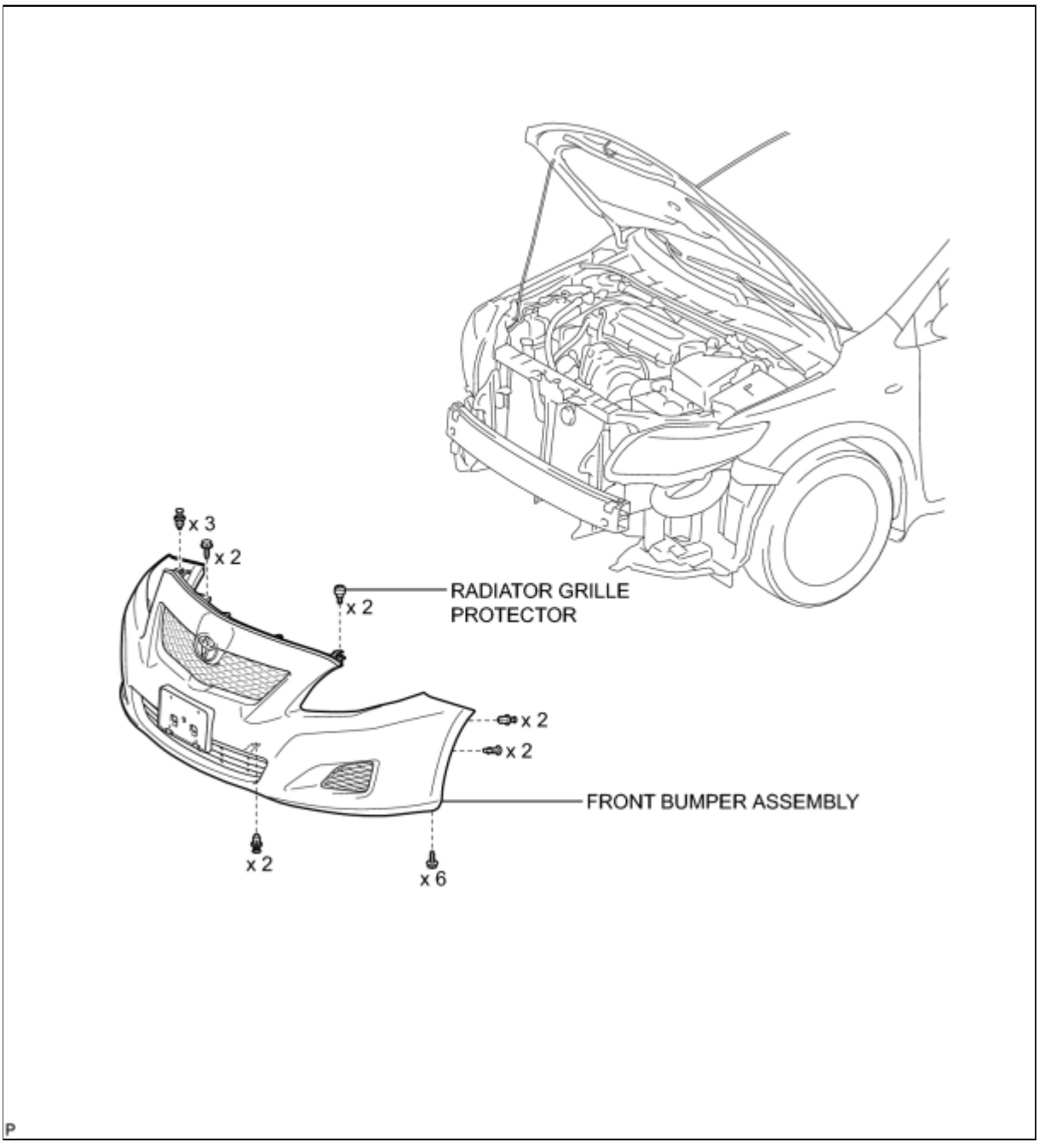

ILLUSTRATION

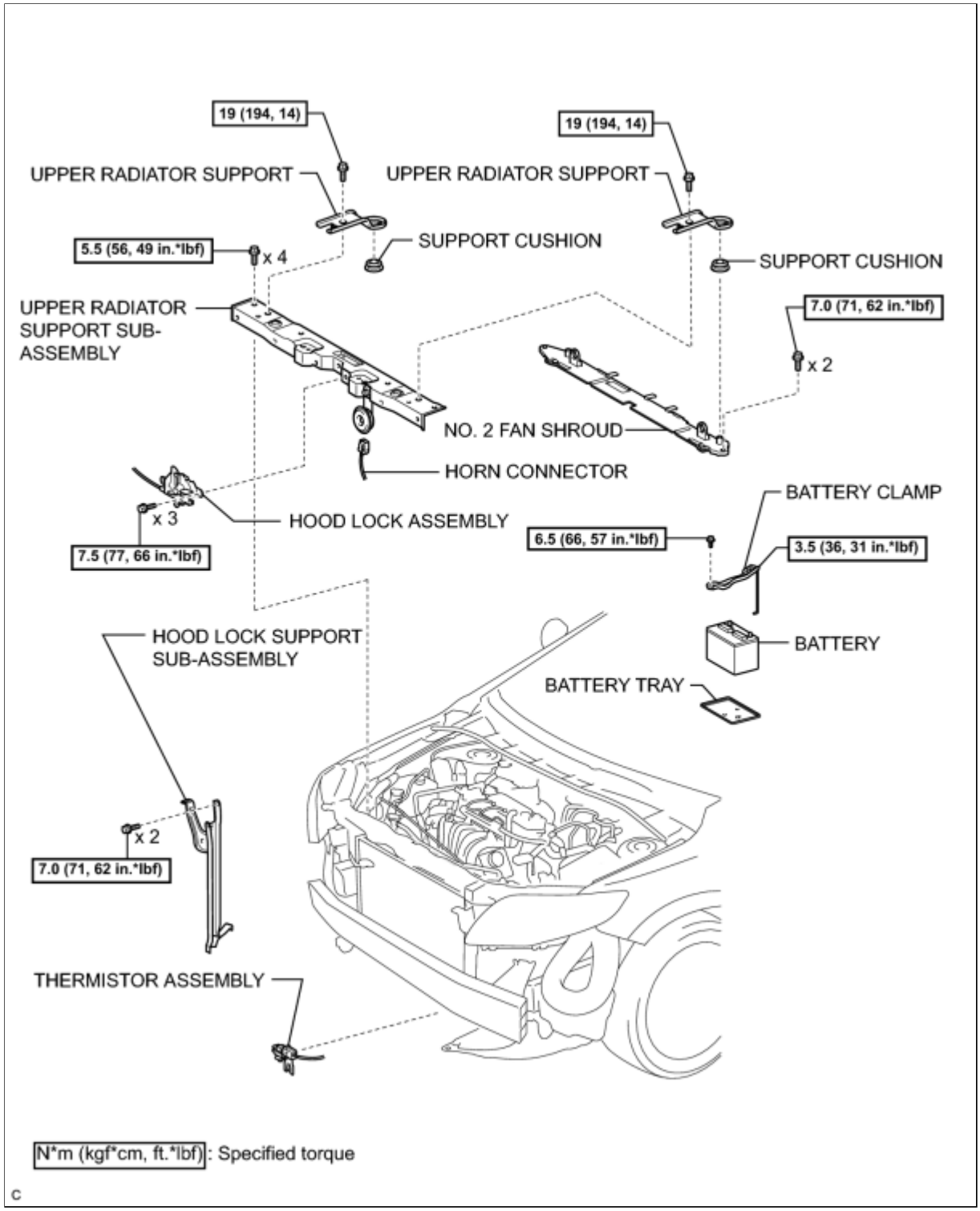

ILLUSTRATION

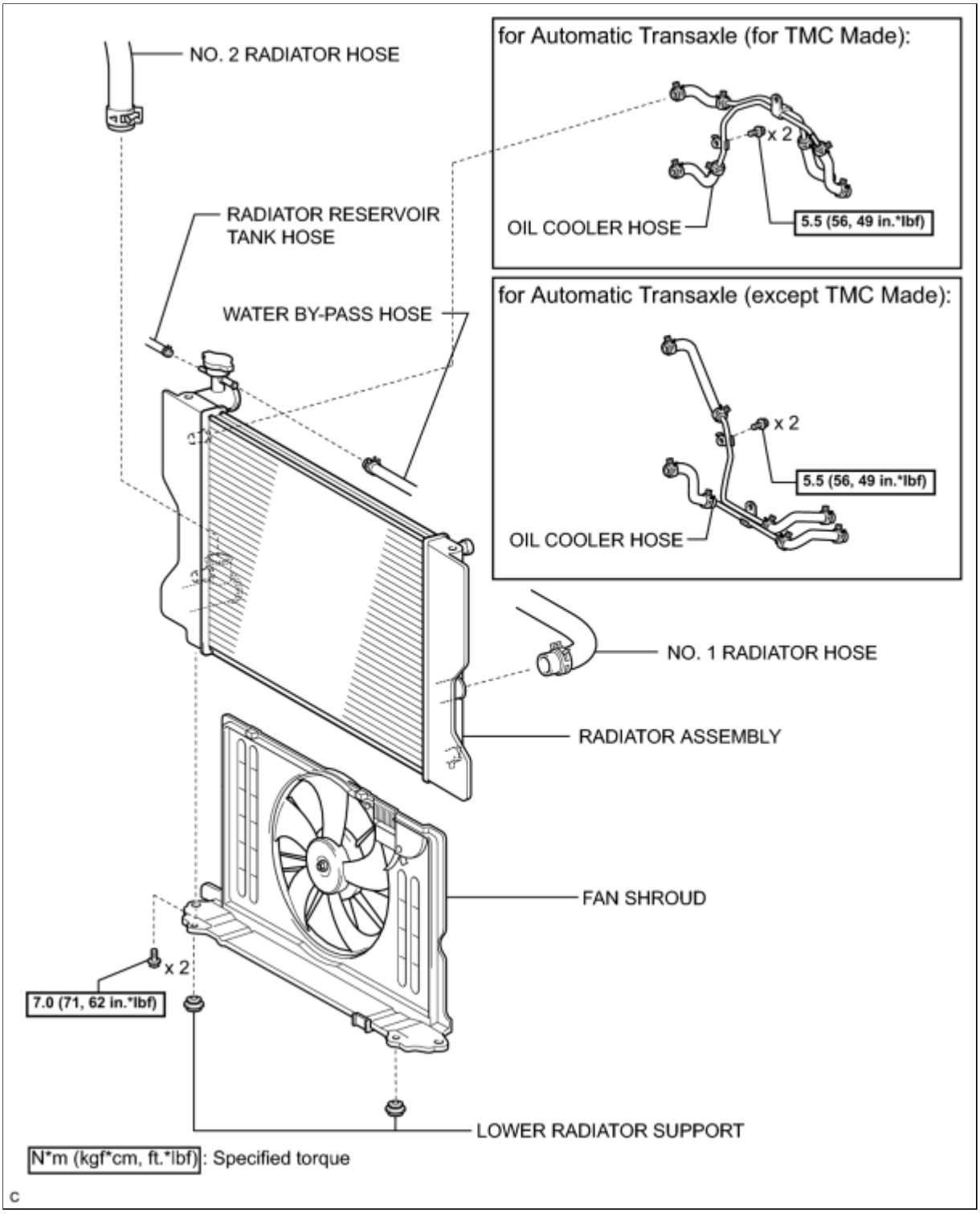
NO. 2 RADIATOR HOSE
RADIATOR RESERVOIR TANK HOSE
WATER BY-PASS HOSE
for Automatic Transaxle (for TMC Made):
x 2
OIL COOLER HOSE
5.5 (56, 49 in.*lbf)
for Automatic Transaxle (except TMC Made):
x 2
5.5 (56, 49 in.*lbf)
OIL COOLER HOSE
NO. 1 RADIATOR HOSE
RADIATOR ASSEMBLY
FAN SHROUD
x 2
7.0 (71, 62 in.*lbf)
LOWER RADIATOR SUPPORT
N*m (kgf*cm, ft.*lbf): Specified torque
C

Last Modified: 3-10-2010	6.4 G	**From:** 200901
Model Year: 2010	**Model:** Corolla	**Doc ID:** RM000001H5B01NX
Title: 2ZR-FE COOLING: RADIATOR: ON-VEHICLE INSPECTION (2010 Corolla)		

ON-VEHICLE INSPECTION

1. CHECK RESERVE TANK CAP

(a) Measure the valve opening pressure.

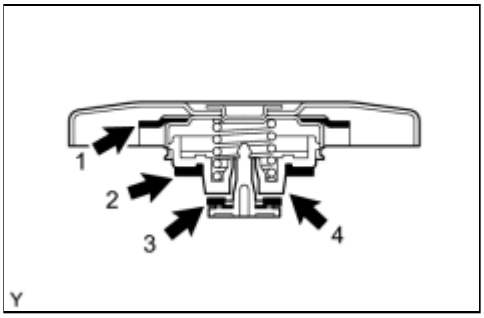

(1) If there are water stains or foreign matter on rubber seal 1, 2 or 3, clean the part(s) with water and finger scouring.

(2) Check that rubber seals 1, 2 and 3 are not deformed, cracked or swollen.

(3) Check that rubber seals 3 and 4 are not stuck together.

(4) Apply engine coolant to rubber seals 2 and 3 before using a radiator cap tester.

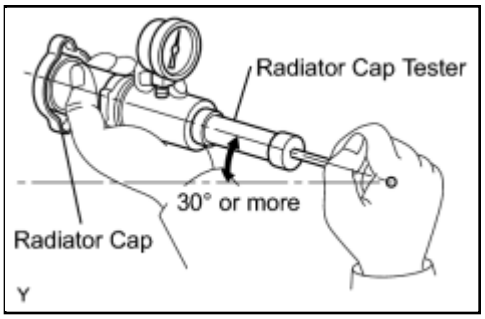

(5) When using the cap tester, tilt it upwards 30° or more.

(6) Pump the cap tester several times, and check the maximum pressure*1.

Pumping speed:
1 pump per second

HINT:

***1: Even if the cap cannot maintain the maximum pressure, it is not defective.**

Judgment Criteria:

ITEM	SPECIFIED CONDITION
Standard value	74 to 103 kPa (0.8 to 1.1 kgf/cm^2, 10.7 to 15 psi)

ITEM	SPECIFIED CONDITION
(for brand-new cap)	
Minimum standard value (for used cap)	59 kPa (0.6 kgf/cm^2, 8.6 psi)

If the maximum pressure is less than the minimum standard value, replace the radiator cap sub-assembly.

2. INSPECT FINS FOR BLOCKAGE

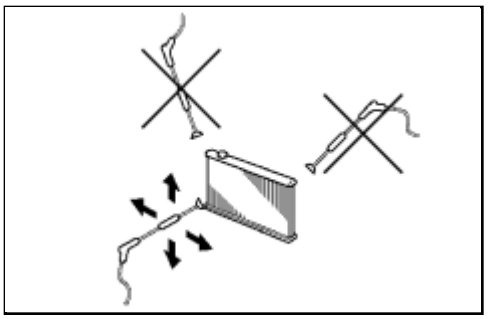

(a) If the fins are clogged, wash them with water or a steam cleaner and dry them with compressed air.

NOTICE:

- To avoid damaging the fins, the injection direction should be at right angles to the radiator core surface.
- Use it foe core perpendicularly.
- If the steam cleaner is too close to the radiator core, there is a possibility of damaging the fins, so keep the following injection distances.

Standard Injection Distance:

INJECTION PRESSURE	SPECIFIED CONDITION
2942 to 4903 kPa (30 to 50 kgf/cm^2, 427 to 711 psi)	300 mm (11.81 in.)
4903 to 7845 kPa (50 to 80 kgf/cm^2, 711 to 1138 psi)	500 mm (19.69 in.)

- If the fins are bent, straighten them with a screwdriver or pliers.
- Do not expose electronic components to water.

Last Modified: 3-10-2010	6.4 A	**From:** 200901
Model Year: 2010	**Model:** Corolla	**Doc ID:** RM000000AS502CX
Title: 2ZR-FE COOLING: RADIATOR: REMOVAL (2010 Corolla)		

REMOVAL

1. REMOVE BATTERY INFO

2. REMOVE RADIATOR GRILLE PROTECTOR INFO

3. REMOVE FRONT BUMPER ASSEMBLY INFO

4. DRAIN ENGINE COOLANT INFO

5. REMOVE THERMISTOR ASSEMBLY

6. DISCONNECT RADIATOR RESERVOIR TANK HOSE

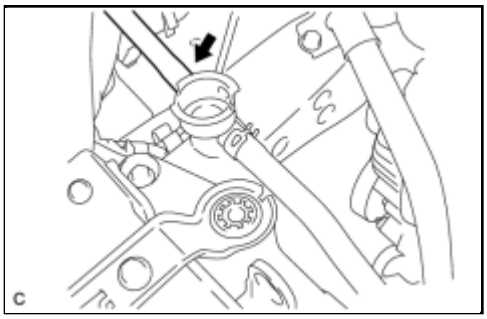

(a) Disconnect the radiator reservoir tank hose from the radiator assembly.

7. DISCONNECT NO. 1 RADIATOR HOSE

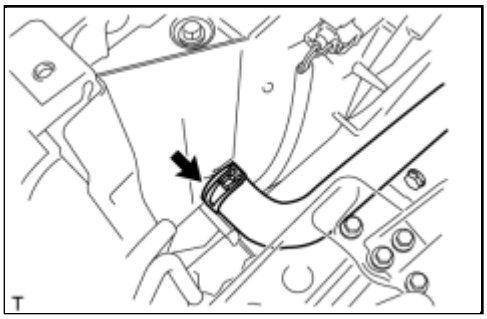

(a) Disconnect the No. 1 radiator hose from the radiator assembly.

8. DISCONNECT NO. 2 RADIATOR HOSE

(a) Disconnect the No. 2 radiator hose from the radiator assembly.

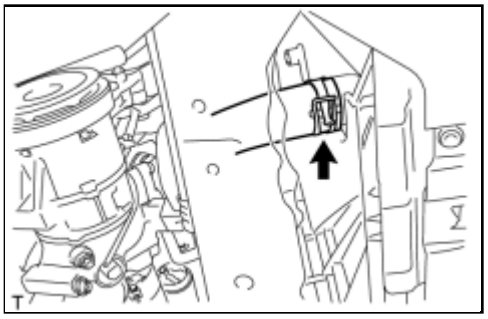

9. REMOVE UPPER RADIATOR SUPPORT

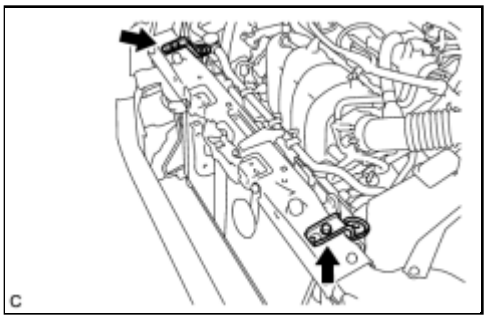

(a) Remove the 2 bolts and 2 upper radiator supports.

(b) Remove the 2 support cushions from the 2 upper radiator supports.

10. DISCONNECT HOOD LOCK ASSEMBLY INFO

11. SEPARATE WATER BY-PASS HOSE

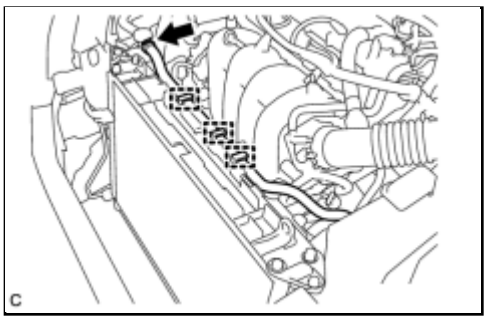

(a) Separate the water by-pass hose from the 3 clamps.

(b) Disconnect the water by-pass hose from the radiator assembly.

12. REMOVE HOOD LOCK SUPPORT SUB-ASSEMBLY

(a) Remove the 2 bolts and hood lock support sub-assembly.

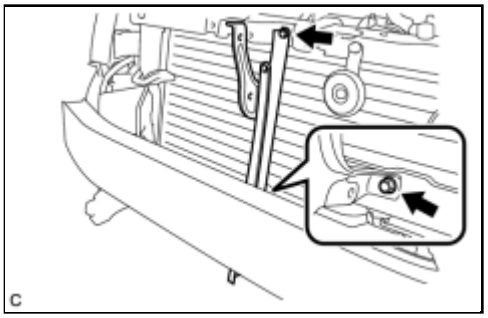

13. REMOVE UPPER RADIATOR SUPPORT SUB-ASSEMBLY

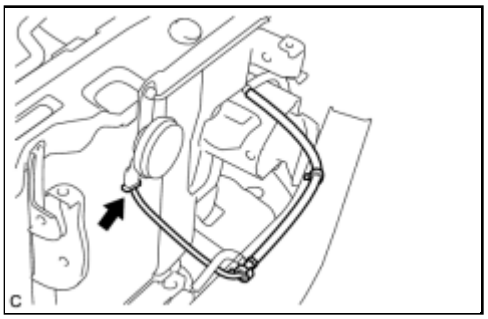

(a) Disconnect the horn connector.

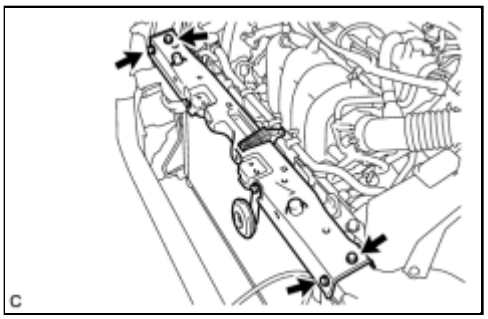

(b) Remove the 4 bolts and upper radiator support sub-assembly.

14. REMOVE NO. 2 FAN SHROUD

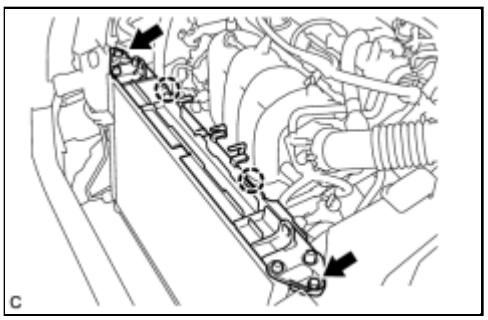

(a) Remove the 2 bolts, disengage the 2 claws, and remove the No. 2 fan shroud from the radiator assembly.

15. REMOVE RADIATOR ASSEMBLY

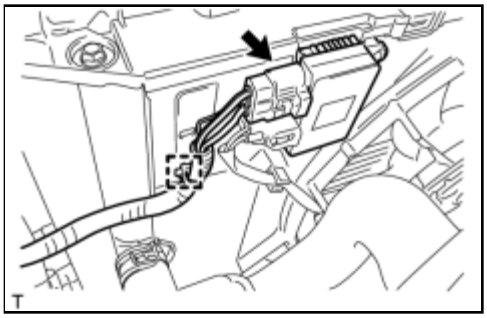

(a) Disconnect the cooling fan ECU connector and wire harness clamp.

NOTICE:

Be careful not to damage the connector.

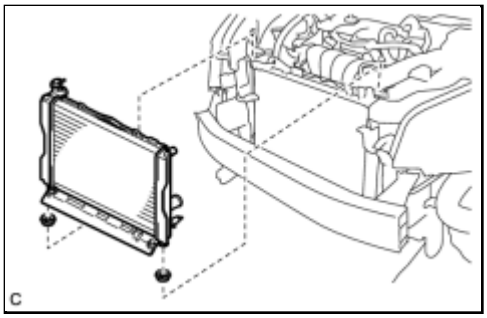

(b) Remove the radiator assembly with the fan shroud.

NOTICE:

Do not apply any excessive force to the cooler condenser assembly or pipe when removing the radiator assembly.

(c) Remove the 2 lower radiator supports.

16. REMOVE OIL COOLER HOSE (for Automatic Transaxle)

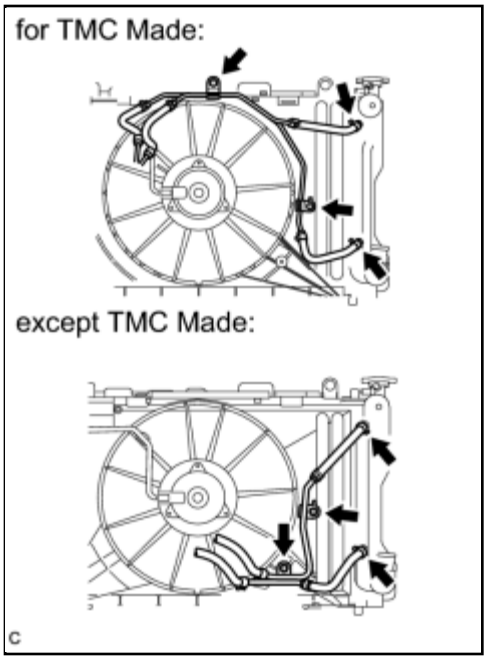

(a) Disconnect the 2 oil cooler hoses from the radiator.

(b) Remove the 2 bolts and oil cooler hose.

17. REMOVE FAN SHROUD

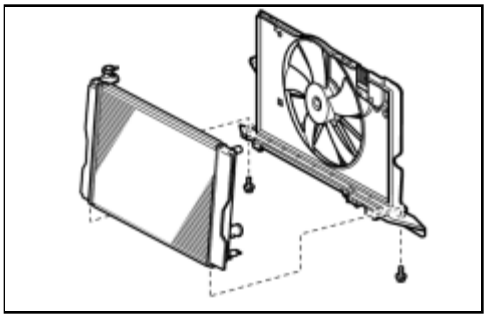

(a) Remove the 2 bolts and fan shroud from the radiator assembly.

Last Modified: 3-10-2010	6.4 A	**From:** 200901
Model Year: 2010	**Model:** Corolla	**Doc ID:** RM000000AS302DX
Title: 2ZR-FE COOLING: RADIATOR: INSTALLATION (2010 Corolla)		

INSTALLATION

1. INSTALL FAN SHROUD

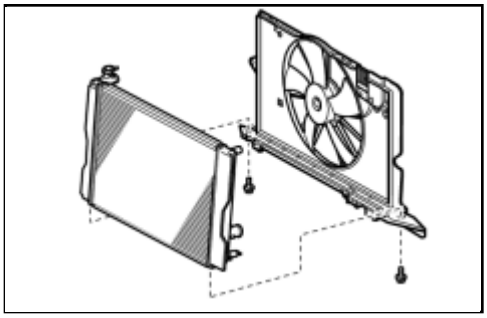

(a) Install the fan shroud to the radiator assembly with the 2 bolts.

Torque: 7.0 N·m (71 kgf·cm, 62in·lbf)

2. INSTALL OIL COOLER HOSE (for Automatic Transaxle)

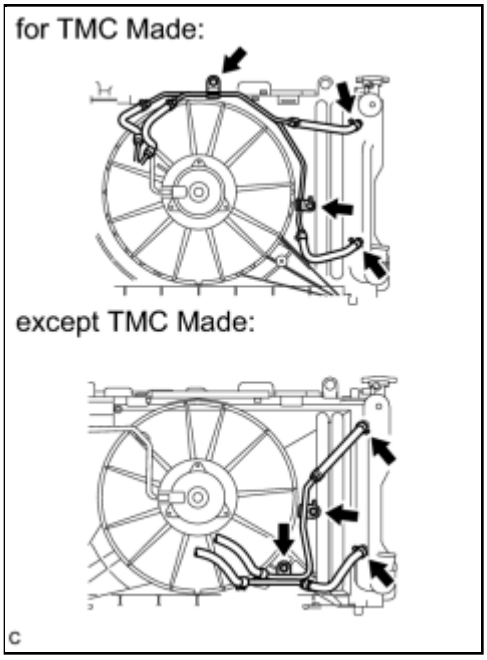

(a) Install the oil cooler hose with the 2 bolts.

Torque: 5.5 N·m (56 kgf·cm, 49in·lbf)

(b) Connect the 2 oil cooler hoses to the radiator.

3. INSTALL RADIATOR ASSEMBLY

(a) Install the 2 lower radiator supports.

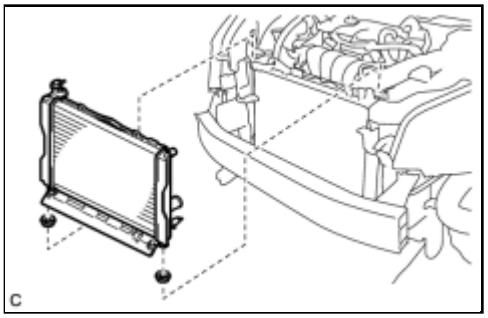

(b) Install the radiator assembly with the fan shroud.

NOTICE:

Do not apply any excessive force to the cooler condenser assembly or pipe when installing the radiator assembly.

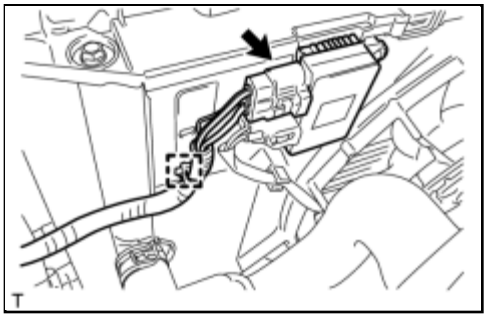

(c) Connect the cooling fan ECU connector and wire harness clamp.

4. INSTALL NO. 2 FAN SHROUD

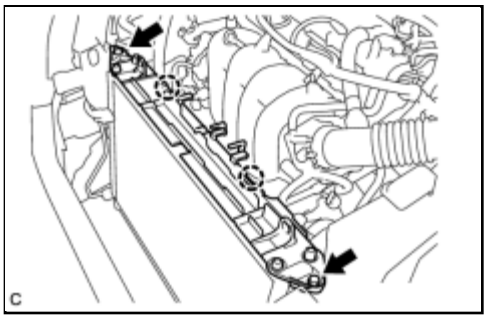

(a) Engage the 2 claws and install the No. 2 fan shroud to the radiator assembly with the 2 bolts.

Torque: 7.0 N·m (71 kgf·cm, 62in·lbf)

5. INSTALL UPPER RADIATOR SUPPORT SUB-ASSEMBLY

(a) Install the upper radiator support sub-assembly with the 4 bolts.

Torque: 5.5 N·m (56 kgf·cm, 49in·lbf)

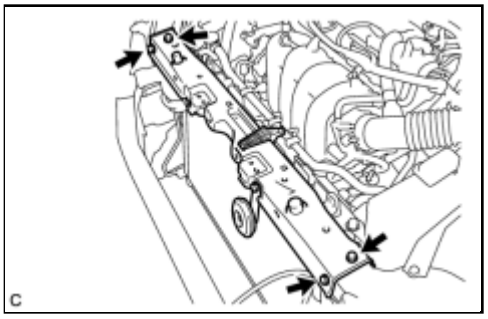

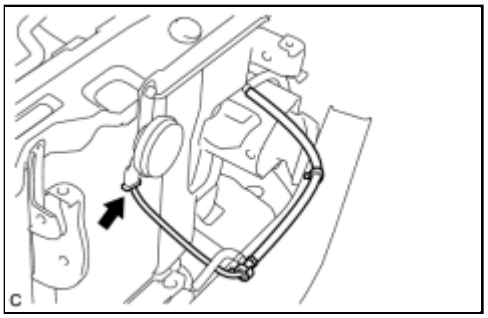

(b) Connect the horn connector.

6. INSTALL HOOD LOCK SUPPORT SUB-ASSEMBLY

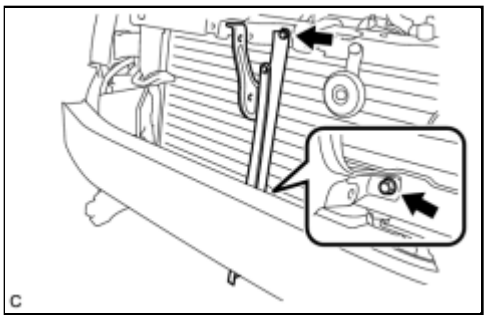

(a) Install the hood lock support sub-assembly with the 2 bolts.

Torque: 7.0 N·m (71 kgf·cm, 62in·lbf)

7. INSTALL WATER BY-PASS HOSE

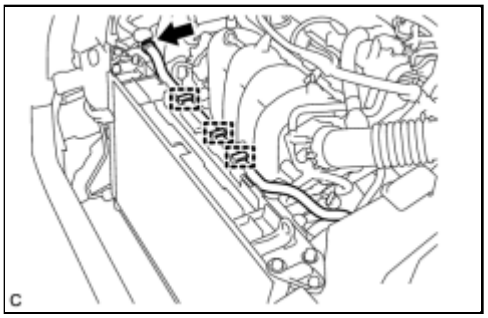

(a) Install the water by-pass hose with the 3 clamps.

(b) Connect the water by-pass hose to the radiator assembly with the clamp.

8. INSTALL HOOD LOCK ASSEMBLY INFO

9. INSTALL UPPER RADIATOR SUPPORT

(a) Install the 2 radiator support cushions to the 2 upper radiator supports.

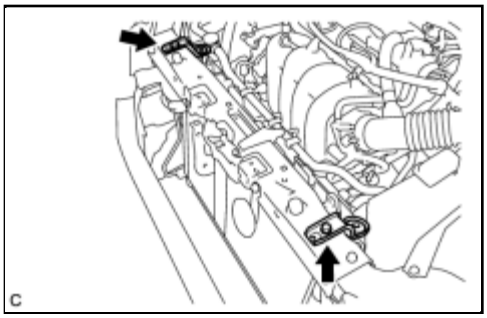

(b) Install the 2 upper radiator supports with the 2 bolts.

Torque: 19 N·m (194 kgf·cm, 14ft·lbf)

10. CONNECT NO. 2 RADIATOR HOSE

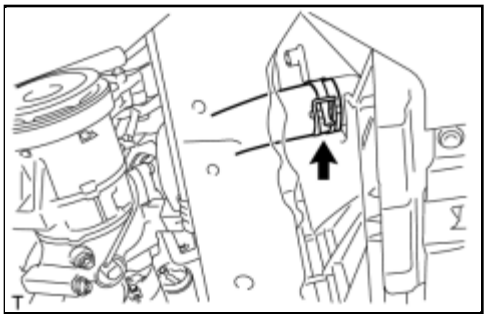

(a) Connect the No. 2 radiator hose to the radiator assembly with the clamp.

11. CONNECT NO. 1 RADIATOR HOSE

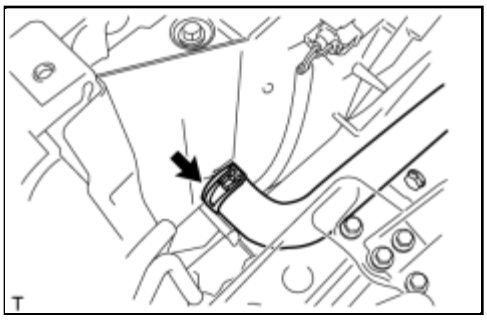

(a) Connect the No. 1 radiator hose to the radiator assembly with the clamp.

12. CONNECT RADIATOR RESERVOIR TANK HOSE

(a) Connect the radiator reservoir tank hose to the radiator assembly with the clamp.

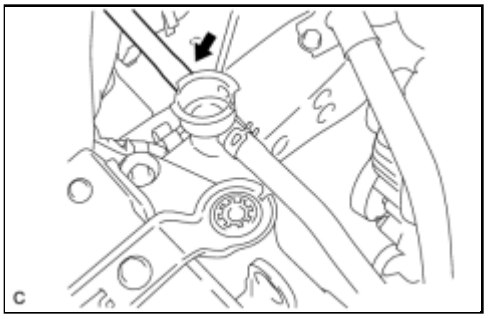

13. INSTALL THERMISTOR ASSEMBLY

14. INSTALL FRONT BUMPER ASSEMBLY INFO

15. INSTALL RADIATOR GRILLE PROTECTOR INFO

16. INSTALL BATTERY INFO

17. ADD ENGINE COOLANT INFO

18. INSPECT INSPECT FOR COOLANT LEAK INFO

19. VEHICLE PREPARATION FOR FOG LIGHT AIMING ADJUSTMENT INFO

20. PREPARATION FOR FOG LIGHT AIMING INFO

21. FOG LIGHT AIMING INSPECTION INFO

22. FOG LIGHT AIMING ADJUSTMENT INFO

Last Modified: 3-10-2010	6.4 G	**From:** 200901
Model Year: 2010	**Model:** Corolla	**Doc ID:** RM000000XX004UX
Title: 2AZ-FE COOLING: RELAY: ON-VEHICLE INSPECTION (2010 Corolla)		

ON-VEHICLE INSPECTION

1. INSPECT COOLING FAN RELAY NO. 1

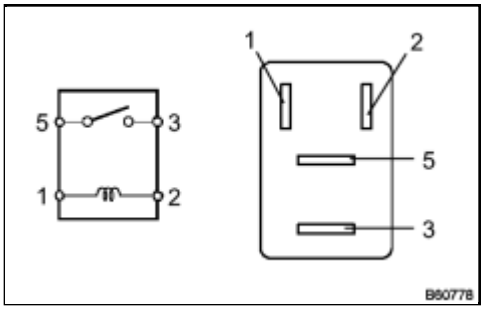

(a) Remove the relay from the engine room relay block.

(b) Measure the resistance of the relay.

Standard Resistance:

TESTER CONNECTION	CONDITION	SPECIFIED CONDITION
3 - 5	-	10 kΩ or higher
3 - 5	When battery voltage is applied to terminals 1 and 2	Below 1 Ω

- If the result is not as specified, replace the relay.

(c) Install the relay.

2. INSPECT COOLING FAN RELAY NO. 2

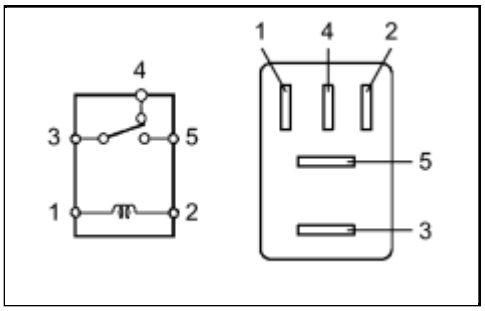

(a) Remove the relay from the engine room relay block.

(b) Measure the resistance of the relay.

Standard Resistance:

TESTER CONNECTION	CONDITION	SPECIFIED CONDITION
3 - 4	-	Below 1 Ω
3 - 4	When battery voltage is applied to terminals 1 and 2	10 kΩ or higher
3 - 5	-	10 kΩ or higher
3 - 5	When battery voltage is applied to terminals 1 and 2	Below 1 Ω

- If the result is not as specified, replace the relay.

(c) Install the relay.

3. INSPECT COOLING FAN RELAY NO. 3

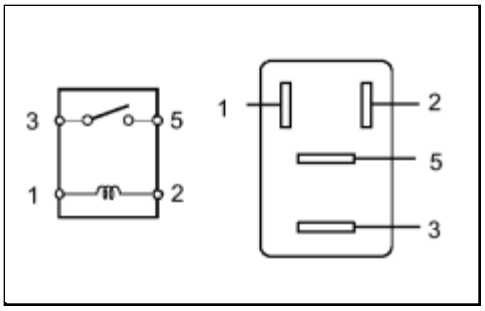

(a) Remove the relay from the engine room relay block.

(b) Measure the resistance of the relay.

Standard Resistance:

TESTER CONNECTION	CONDITION	SPECIFIED CONDITION
3 - 5	-	10 kΩ or higher
3 - 5	When battery voltage is applied to terminals 1 and 2	Below 1 Ω

- If the result is not as specified, replace the relay.

(c) Install the relay.

Last Modified: 3-10-2010	6.4 G	**From:** 200901
Model Year: 2010	**Model:** Corolla	**Doc ID:** RM000000XX004TX
Title: 2ZR-FE COOLING: RELAY: ON-VEHICLE INSPECTION (2010 Corolla)		

ON-VEHICLE INSPECTION

1. INSPECT FAN NO. 1 RELAY

(a) Remove the relay from the engine room relay block.

(b) Measure the resistance according to the value(s) in the table below.

Standard Resistance:

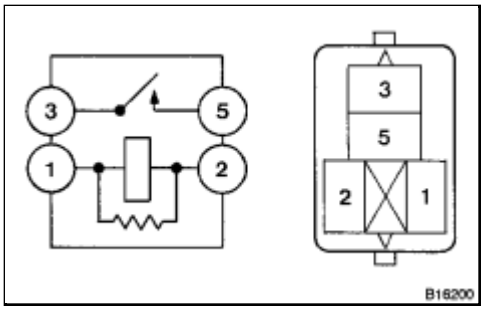

TESTER CONNECTION	CONDITION	SPECIFIED CONDITION
3 - 5	-	10 MΩ or higher
3 - 5	When battery voltage is applied to terminals 1 and 2	Below 1 Ω

If the result is not as specified, replace the fan No. 1 relay.

(c) Install the relay to the engine room relay block.

Last Modified: 3-10-2010	6.4 K	**From:** 200901
Model Year: 2010	**Model:** Corolla	**Doc ID:** RM000001X97011X
Title: 2AZ-FE COOLING: THERMOSTAT: COMPONENTS (2010 Corolla)		

COMPONENTS

ILLUSTRATION

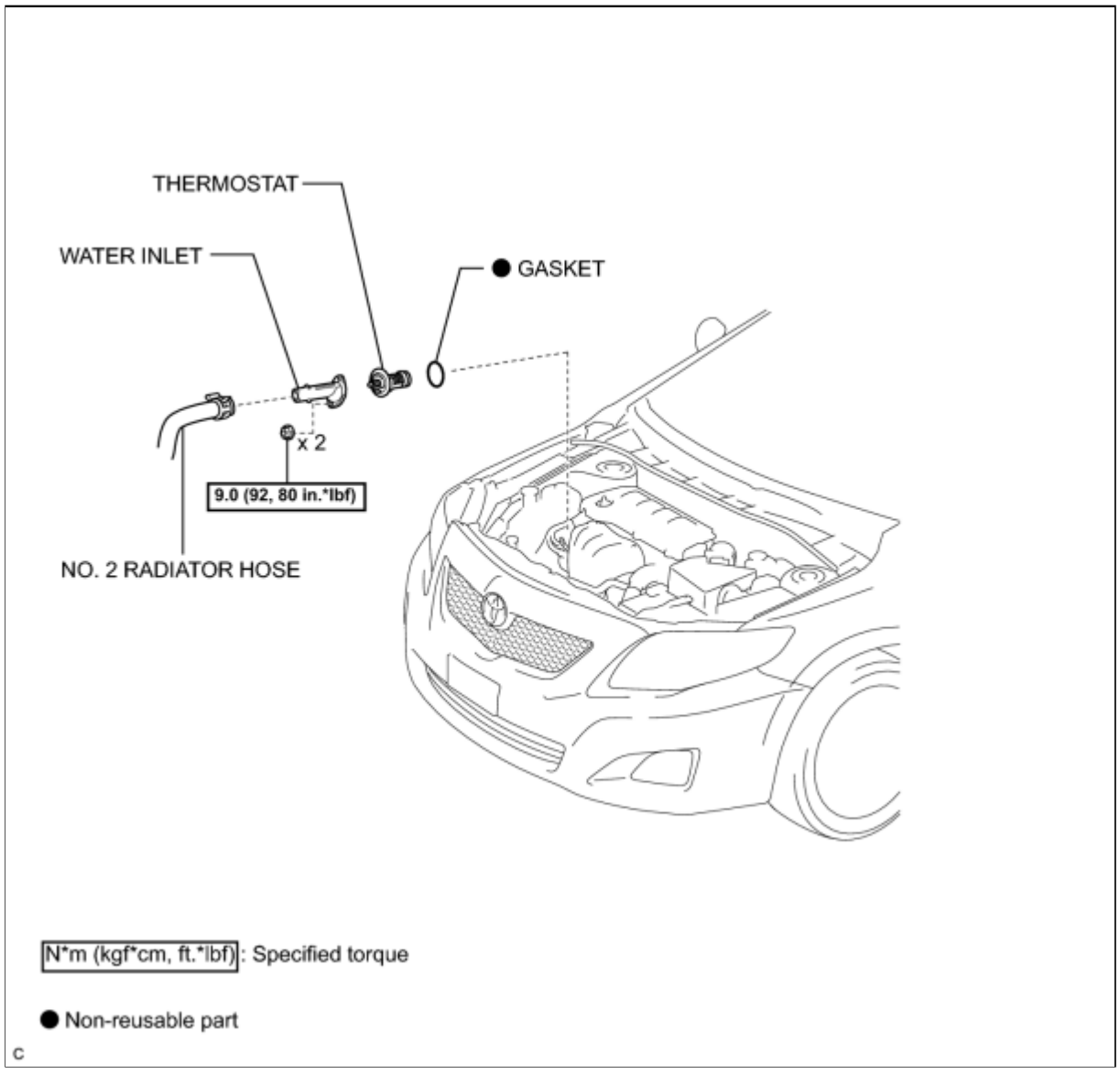

Last Modified: 3-10-2010	6.4 A	**From:** 200901
Model Year: 2010	**Model:** Corolla	**Doc ID:** RM0000017WE01JX
Title: 2AZ-FE COOLING: THERMOSTAT: REMOVAL (2010 Corolla)		

REMOVAL

1. DRAIN ENGINE COOLANT INFO

2. DISCONNECT NO. 2 RADIATOR HOSE INFO

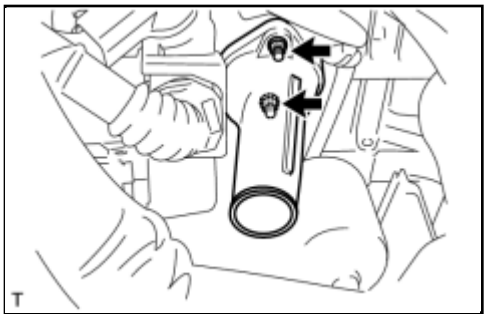

3. REMOVE WATER INLET

(a) Remove the 2 nuts and disconnect the water inlet from the cylinder block.

4. REMOVE THERMOSTAT

(a) Remove the thermostat and gasket.

Last Modified: 3-10-2010	6.4 G	**From:** 200901
Model Year: 2010	**Model:** Corolla	**Doc ID:** RM0000017WC01GX
Title: 2AZ-FE COOLING: THERMOSTAT: INSPECTION (2010 Corolla)		

INSPECTION

1. INSPECT THERMOSTAT

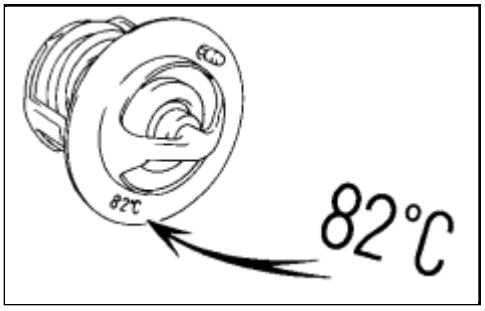

(a) The valve opening temperature is inscribed on the thermostat.

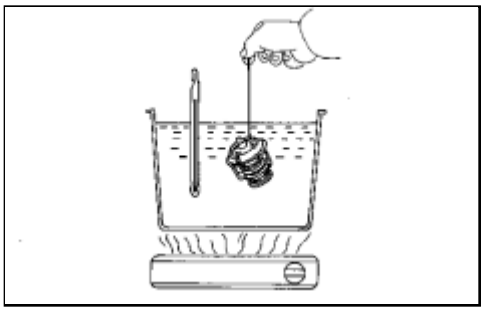

(b) Immerse the thermostat in water, and then gradually heat the water.

(c) Check the valve opening temperature of the thermostat.

Standard valve opening temperature:
80 to 84°C (176 to 183°F)

If the valve opening temperature is not as specified, replace the thermostat.

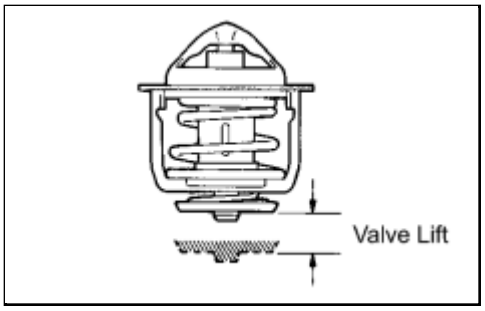

(d) Check the valve lift.

Standard valve lift:
10 mm (0.39 in.) or more at 95°C (203°F)

If the valve lift is not as specified, replace the thermostat.

(e) Check that the valve is fully closed when the thermostat is at low temperatures (below 77°C (171°F)).

If it is not fully closed, replace the thermostat.

Last Modified: 3-10-2010	6.4 A	**From:** 200901
Model Year: 2010	**Model:** Corolla	**Doc ID:** RM0000017WB01JX
Title: 2AZ-FE COOLING: THERMOSTAT: INSTALLATION (2010 Corolla)		

INSTALLATION

1. INSTALL THERMOSTAT

(a) Install a new gasket onto the thermostat.

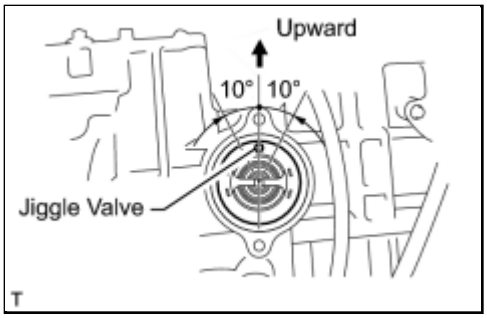

(b) Install the thermostat with the jiggle valve upward.

HINT:

The jiggle valve may be set to within 10° on either side of the indicated position.

2. INSTALL WATER INLET

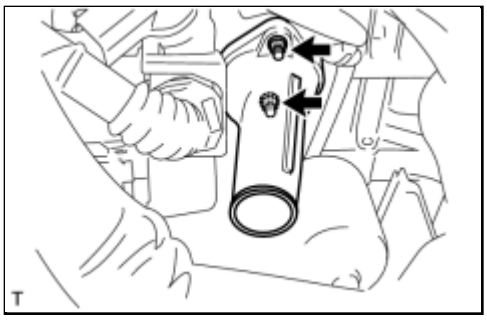

(a) Install the water inlet with the 2 nuts.

Torque: 9.0 N·m (92 kgf·cm, 80in·lbf)

3. CONNECT NO. 2 RADIATOR HOSE INFO

4. ADD ENGINE COOLANT INFO

5. INSPECT FOR COOLANT LEAK INFO

6. INSPECT RESERVOIR TANK ENGINE COOLANT LEVEL INFO

Last Modified: 3-10-2010	6.4 K	**From:** 200901
Model Year: 2010	**Model:** Corolla	**Doc ID:** RM000000RTE00ZX
Title: 2ZR-FE COOLING: THERMOSTAT: COMPONENTS (2010 Corolla)		

COMPONENTS

ILLUSTRATION

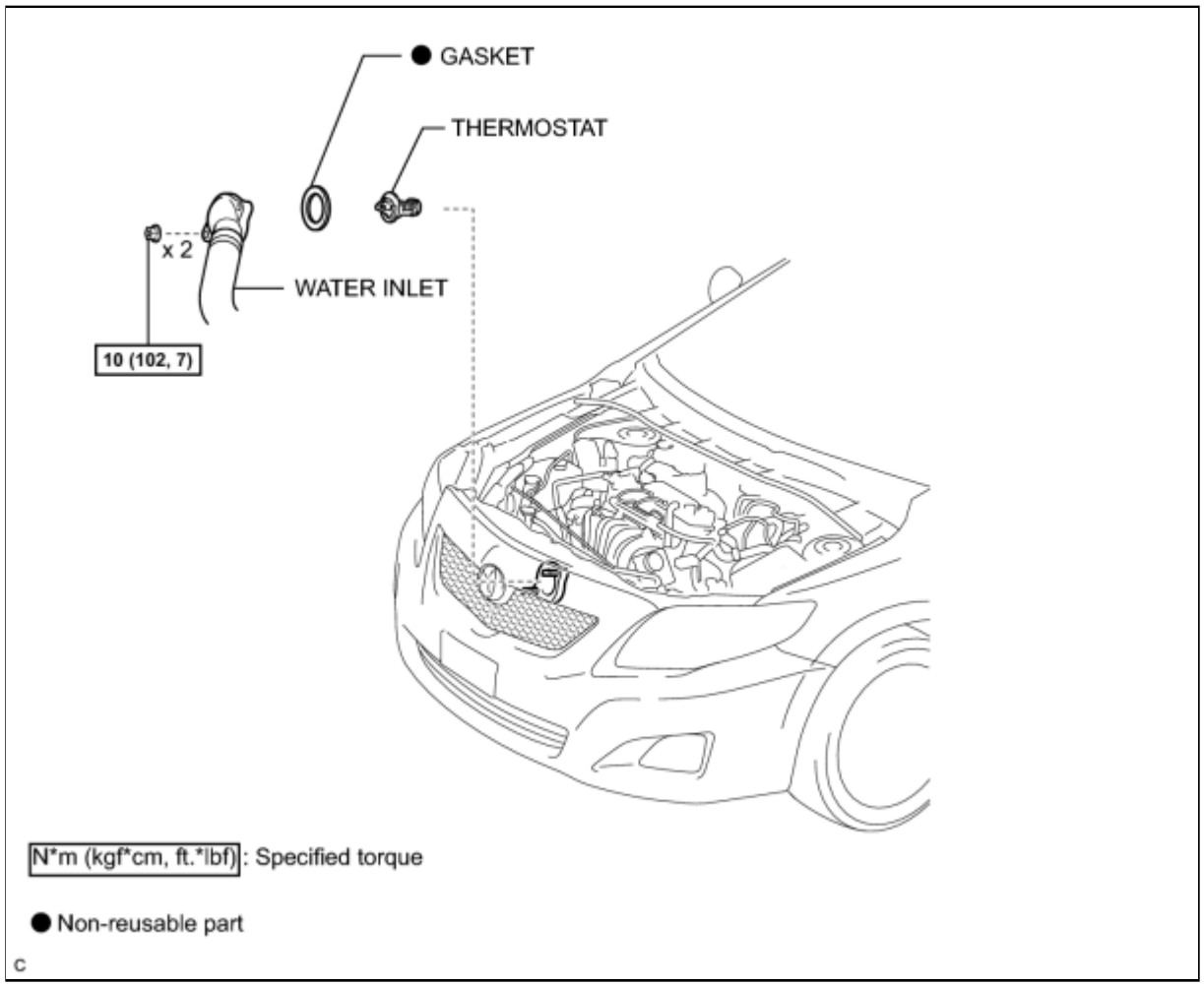

Last Modified: 3-10-2010	6.4 A	**From:** 200901
Model Year: 2010	**Model:** Corolla	**Doc ID:** RM000000RTF00ZX
Title: 2ZR-FE COOLING: THERMOSTAT: REMOVAL (2010 Corolla)		

REMOVAL

1. DRAIN ENGINE COOLANT INFO

2. REMOVE WATER INLET

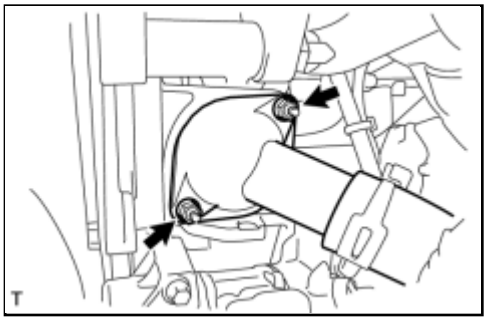

(a) Remove the 2 nuts and water inlet.

3. REMOVE THERMOSTAT

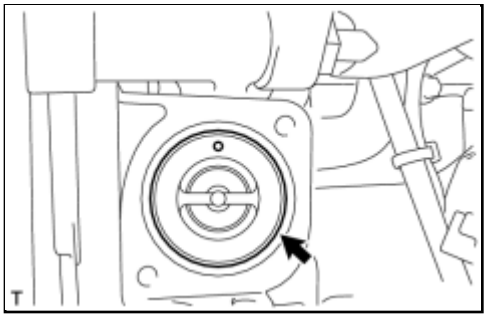

(a) Remove the thermostat.

(b) Remove the gasket from the thermostat.

Last Modified: 3-10-2010	6.4 G	**From:** 200901
Model Year: 2010	**Model:** Corolla	**Doc ID:** RM00000335X00JX
Title: 2ZR-FE COOLING: THERMOSTAT: INSPECTION (2010 Corolla)		

INSPECTION

1. INSPECT THERMOSTAT

HINT:

The valve opening temperature is inscribed on the thermostat.

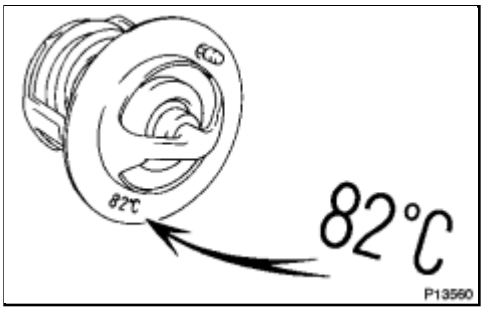

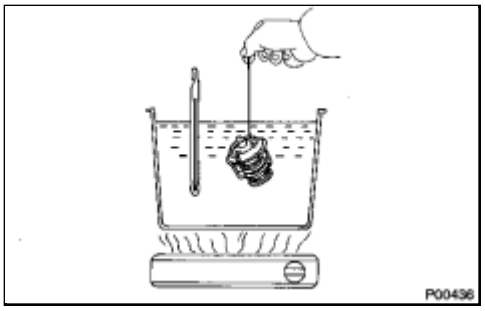

(a) Immerse the thermostat in water and then gradually heat the water.

(b) Check the valve opening temperature of the thermostat.

Standard valve opening temperature:
80 to 84°C (176 to 183°F)

HINT:

If the valve opening temperature is not as specified, replace the thermostat.

(c) Check the valve lift.

Standard valve lift:
10 mm (0.39 in.) or more at 95°C (203°F)

HINT:

If the valve lift is not as specified, replace the thermostat.

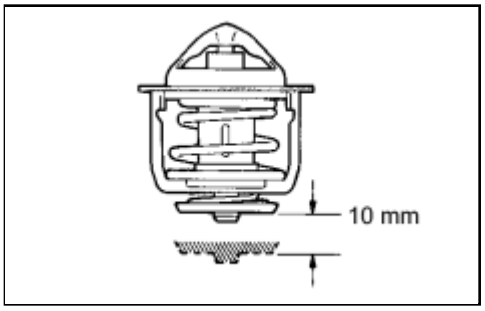

(d) Check that the valve is fully closed when the thermostat is at low temperatures (below 77°C (171°F)).

HINT:

If it is not fully closed, replace the thermostat.

Last Modified: 3-10-2010	6.4 A	**From:** 200901
Model Year: 2010	**Model:** Corolla	**Doc ID:** RM000000RTC00ZX
Title: 2ZR-FE COOLING: THERMOSTAT: INSTALLATION (2010 Corolla)		

INSTALLATION

1. INSTALL THERMOSTAT

(a) Install a new gasket on the thermostat.

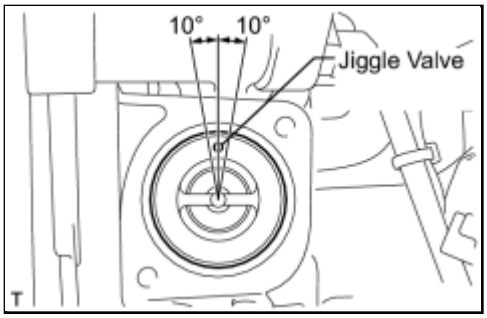

(b) Install the thermostat to the water inlet with the jiggle valve upward.

HINT:

The jiggle valve may be set to within 10° on either side of the indicated position.

2. INSTALL WATER INLET

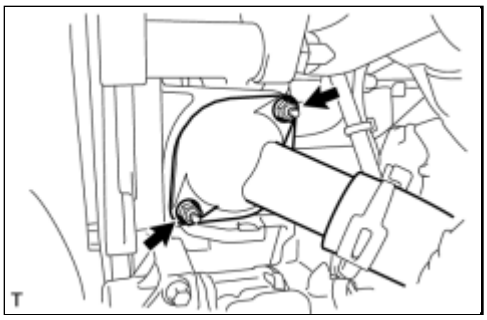

(a) Install the water inlet with the 2 nuts.

Torque: 10 N·m (102 kgf·cm, 7ft·lbf)

3. ADD ENGINE COOLANT INFO

4. INSPECT INSPECT FOR COOLANT LEAK INFO

Last Modified: 3-10-2010	6.4 K	**From:** 200901
Model Year: 2010	**Model:** Corolla	**Doc ID:** RM000001X96011X
Title: 2AZ-FE COOLING: WATER PUMP: COMPONENTS (2010 Corolla)		

COMPONENTS

ILLUSTRATION

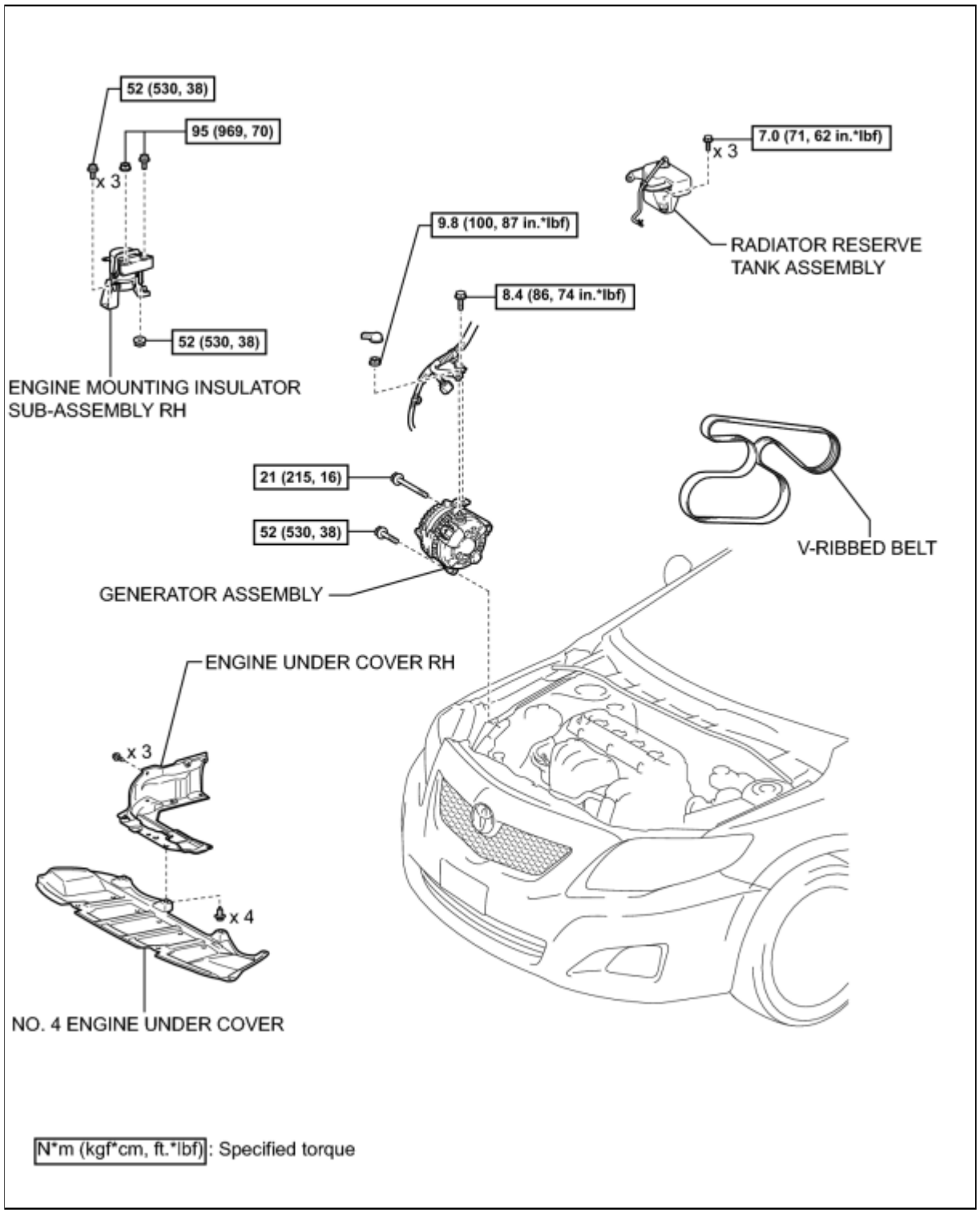

ILLUSTRATION

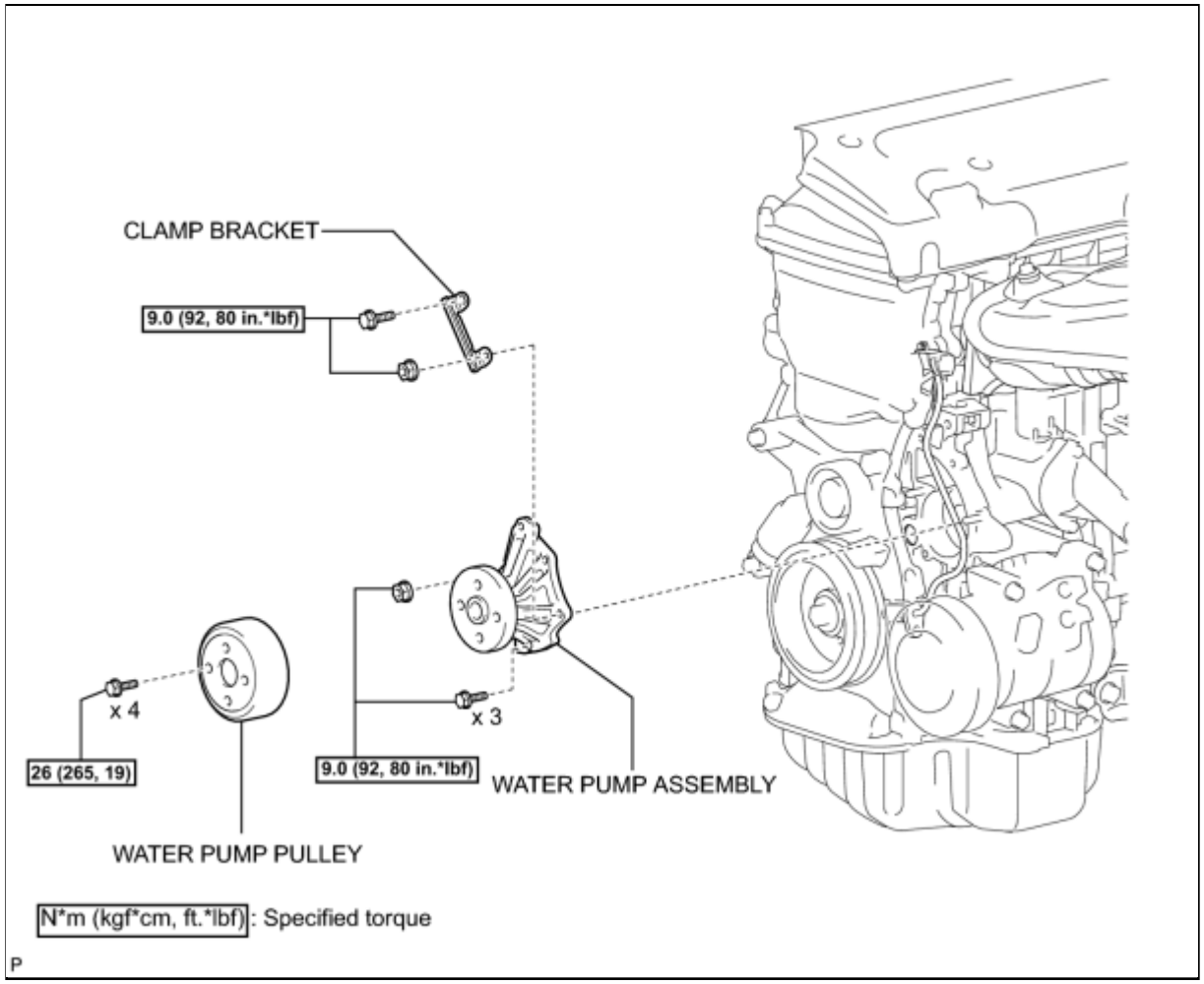

Last Modified: 3-10-2010	6.4 G	**From:** 200901
Model Year: 2010	**Model:** Corolla	**Doc ID:** RM0000017W8019X
Title: 2AZ-FE COOLING: WATER PUMP: ON-VEHICLE INSPECTION (2010 Corolla)		

ON-VEHICLE INSPECTION

1. REMOVE GENERATOR ASSEMBLY

HINT: INFO .

2. REMOVE ENGINE MOUNTING INSULATOR SUB-ASSEMBLY RH INFO

3. REMOVE WATER PUMP PULLEY INFO

4. INSPECT WATER PUMP ASSEMBLY

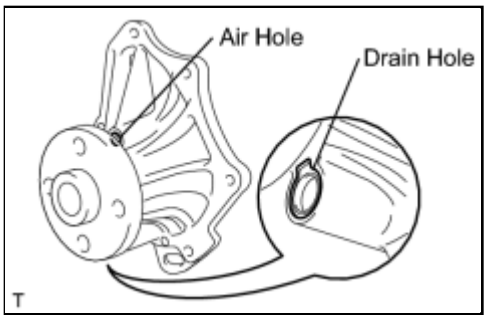

(a) Visually check the drain hole and air hole for coolant leakage.

If leakage is found, replace the water pump assembly.

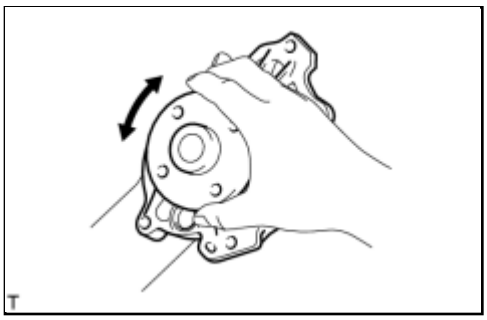

(b) Turn the pulley, then check that the water pump bearing moves smoothly without making a "click" sound.

If it does not move smoothly, replace the water pump assembly.

5. INSTALL WATER PUMP PULLEY INFO

6. INSTALL ENGINE MOUNTING INSULATOR SUB-ASSEMBLY RH INFO

7. INSTALL GENERATOR ASSEMBLY

HINT: INFO .

Last Modified: 3-10-2010	6.4 A	**From:** 200901
Model Year: 2010	**Model:** Corolla	**Doc ID:** RM0000017WA01KX
Title: 2AZ-FE COOLING: WATER PUMP: REMOVAL (2010 Corolla)		

REMOVAL

1. DISCONNECT CABLE FROM NEGATIVE BATTERY TERMINAL

2. REMOVE ENGINE UNDER COVER LH

3. REMOVE ENGINE UNDER COVER RH

4. DRAIN ENGINE COOLANT INFO

5. REMOVE V-RIBBED BELT INFO

6. REMOVE GENERATOR ASSEMBLY INFO

7. REMOVE ENGINE MOUNTING INSULATOR SUB-ASSEMBLY RH INFO

8. REMOVE WATER PUMP PULLEY

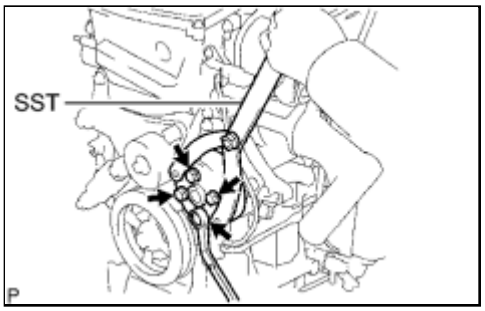

(a) Using SST, remove the 4 bolts and water pump pulley.

SST: 09960-10010

09962-01000

09963-00700

9. REMOVE WATER PUMP ASSEMBLY

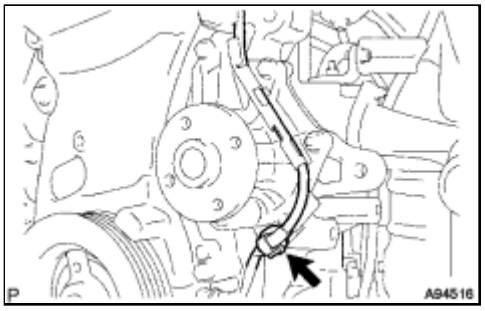

(a) Remove the clamp of the crankshaft position sensor from the water pump.

(b) Disconnect the wire of the crankshaft position sensor from the clamp bracket.

(c) Remove the 4 bolts, 2 nuts and clamp bracket.

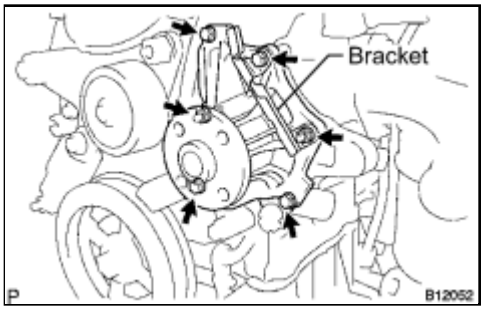

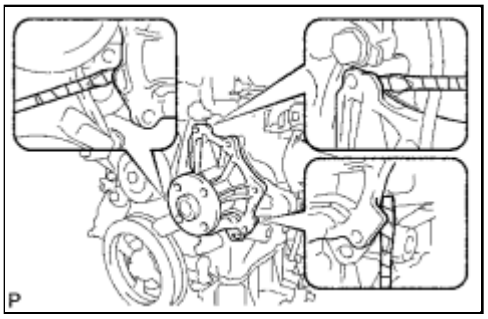

(d) Using a screwdriver, pry between the water pump and cylinder block, and then remove the water pump.

HINT:

Tape the screwdriver tip before use.

NOTICE:

Be careful not to damage the contact surfaces of the water pump and cylinder block.

Last Modified: 3-10-2010	6.4 A	**From:** 200901
Model Year: 2010	**Model:** Corolla	**Doc ID:** RM0000017W701MX
Title: 2AZ-FE COOLING: WATER PUMP: INSTALLATION (2010 Corolla)		

INSTALLATION

1. INSTALL WATER PUMP ASSEMBLY

(a) Remove any old seal packing material from the contact surface.

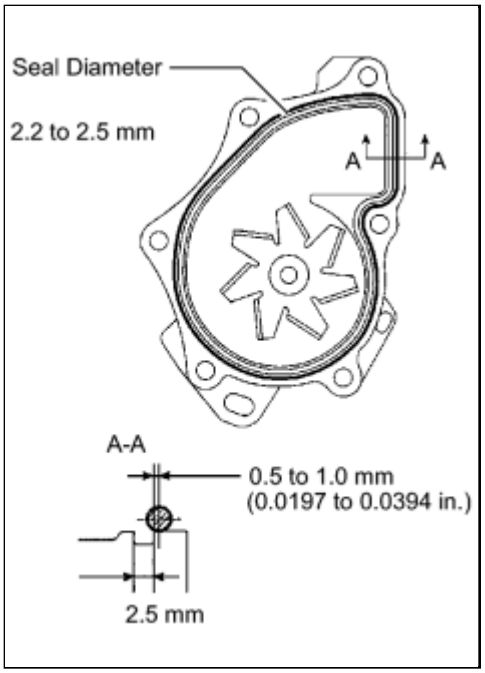

(b) Apply a continuous line of seal packing as shown in the illustration.

Seal packing:

Toyota Genuine Seal Packing Black, Three Bond 1207B or equivalent

Standard seal diameter:

2.2 to 2.5 mm (0.0866 to 0.0984 in.)

NOTICE:

- Remove any oil from the contact surface.
- The parts must be set within 3 minutes after applying seal packing. Otherwise, the material must be removed and reapplied.

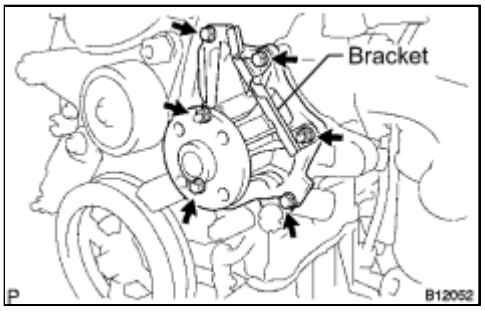

(c) Install the water pump and clamp bracket with the 4 bolts and 2 nuts.

Torque: 9.0 N·m (92 kgf·cm, 80in·lbf)

(d) Confirm that the wire harness of the crankshaft position sensor is secured to the wire harness clamp bracket through the back of the rib of the timing chain cover.

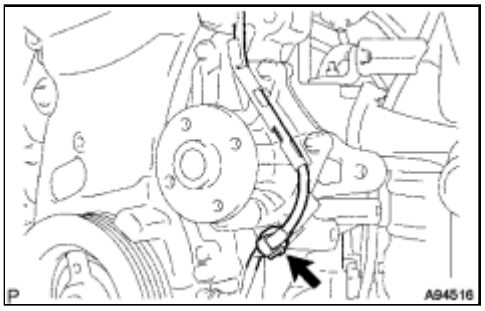

(e) Install the wire harness clamp.

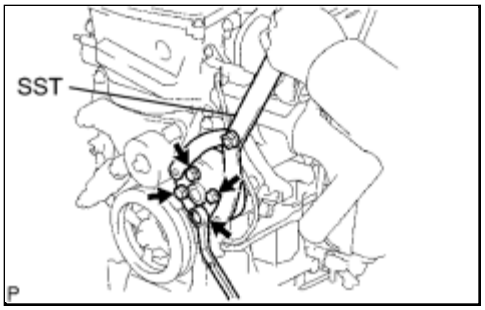

2. INSTALL WATER PUMP PULLEY

(a) Using SST, install the water pump pulley with the 4 bolts.

SST: 09960-10010

09962-01000

09963-00700

Torque: 26 N·m (265 kgf·cm, 19ft·lbf)

3. INSTALL ENGINE MOUNTING INSULATOR SUB-ASSEMBLY RH INFO

4. INSTALL GENERATOR ASSEMBLY INFO

5. INSTALL V-RIBBED BELT INFO

6. CONNECT CABLE TO NEGATIVE BATTERY TERMINAL

Torque: 5.4 N·m (55 kgf·cm, 48in·lbf)

7. ADD ENGINE COOLANT INFO

8. INSPECT FOR COOLANT LEAK INFO

9. INSPECT RESERVOIR TANK ENGINE COOLANT LEVEL INFO

10. INSTALL ENGINE UNDER COVER LH

11. INSTALL ENGINE UNDER COVER RH

Last Modified: 3-10-2010	6.4 K	**From:** 200901
Model Year: 2010	**Model:** Corolla	**Doc ID:** RM000000RT900ZX
Title: 2ZR-FE COOLING: WATER PUMP: COMPONENTS (2010 Corolla)		

COMPONENTS

ILLUSTRATION

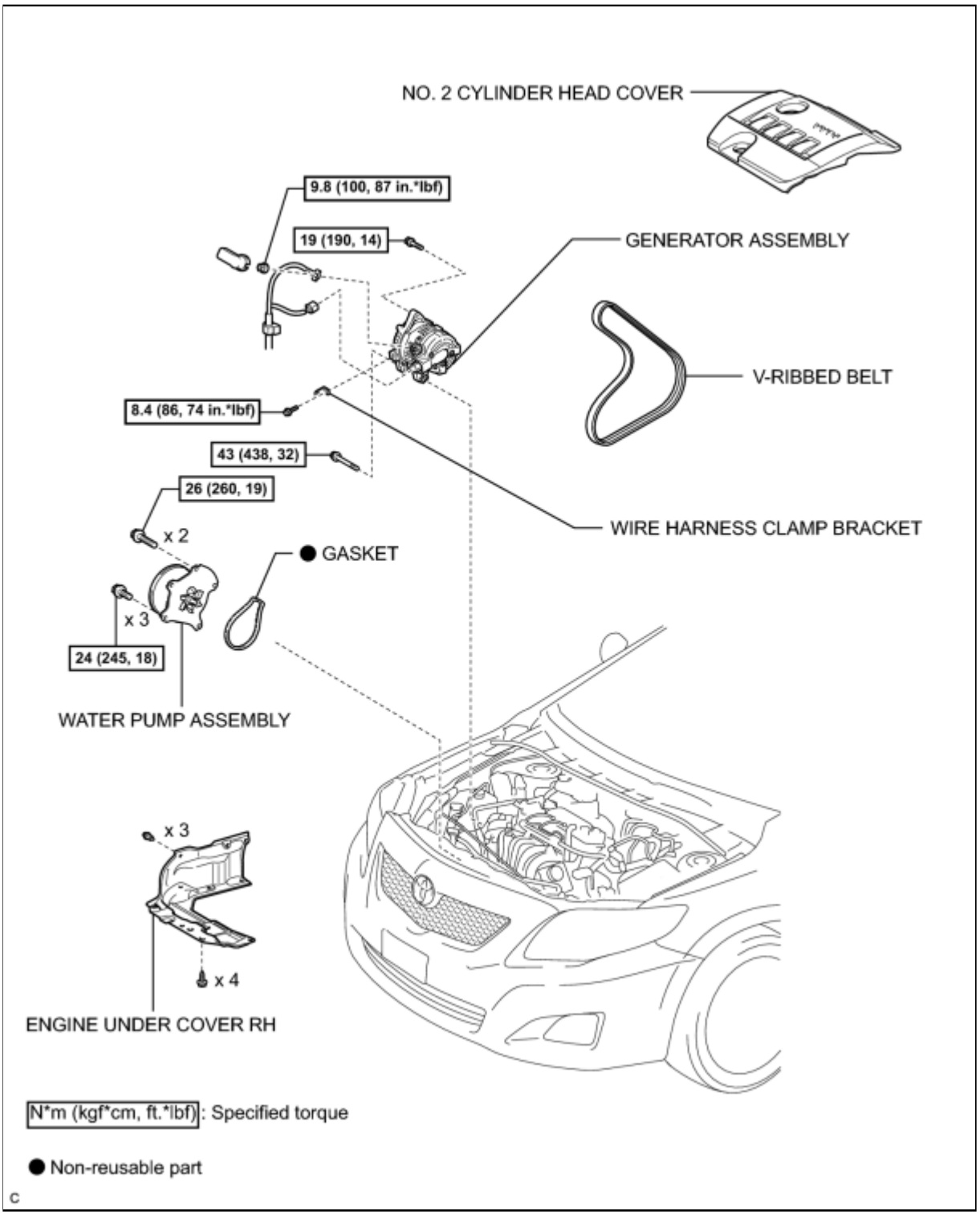

Last Modified: 3-10-2010	6.4 G	**From:** 200901
Model Year: 2010	**Model:** Corolla	**Doc ID:** RM00000253V01TX
Title: 2ZR-FE COOLING: WATER PUMP: ON-VEHICLE INSPECTION (2010 Corolla)		

ON-VEHICLE INSPECTION

1. REMOVE NO. 2 CYLINDER HEAD COVER INFO

2. REMOVE ENGINE UNDER COVER RH

3. REMOVE V-RIBBED BELT INFO

4. INSPECT WATER PUMP ASSEMBLY

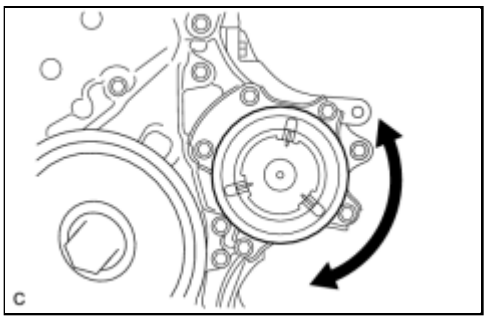

(a) Turn the pulley and check that the water pump bearing moves smoothly and quietly.

If necessary, replace the water pump assembly.

(b) Make sure that there are no drops of coolant on the water pump housing.

If necessary, replace the water pump assembly.

5. INSTALL V-RIBBED BELT INFO

6. ADJUST V-RIBBED BELT INFO

7. INSPECT V-RIBBED BELT INFO

8. INSTALL ENGINE UNDER COVER RH

9. INSTALL NO. 2 CYLINDER HEAD COVER INFO

Last Modified: 3-10-2010	6.4 A	**From:** 200901
Model Year: 2010	**Model:** Corolla	**Doc ID:** RM000000RTA010X
Title: 2ZR-FE COOLING: WATER PUMP: REMOVAL (2010 Corolla)		

REMOVAL

1. REMOVE NO. 2 CYLINDER HEAD COVER INFO

2. REMOVE ENGINE UNDER COVER RH

3. DRAIN ENGINE COOLANT INFO

4. DISCONNECT CABLE FROM NEGATIVE BATTERY TERMINAL

5. REMOVE V-RIBBED BELT INFO

6. REMOVE GENERATOR ASSEMBLY INFO

7. REMOVE WATER PUMP ASSEMBLY

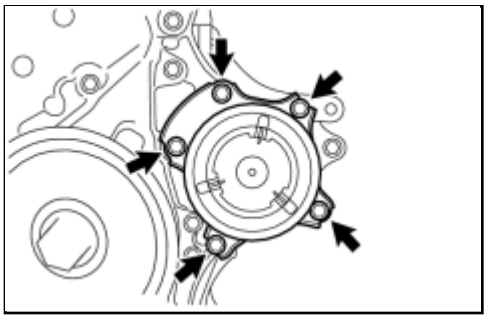

(a) Remove the 5 bolts and water pump assembly from the timing chain cover.

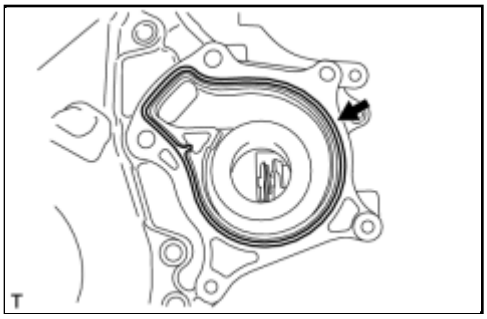

(b) Remove the water pump gasket from the timing chain cover.

Last Modified: 3-10-2010	6.4 A	**From:** 200901
Model Year: 2010	**Model:** Corolla	**Doc ID:** RM000000RT8010X
Title: 2ZR-FE COOLING: WATER PUMP: INSTALLATION (2010 Corolla)		

INSTALLATION

1. INSTALL WATER PUMP ASSEMBLY

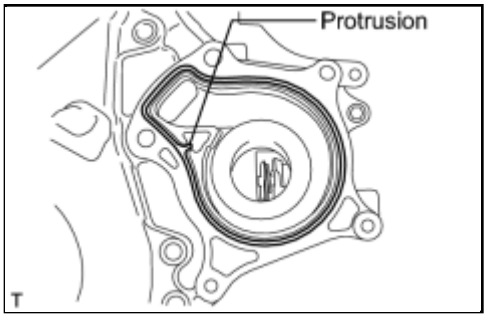

(a) Align the protrusion of a new water pump gasket with the cutout in the timing chain cover and install the gasket to the groove of the timing chain cover.

HINT:

Be sure to clean the contact surfaces.

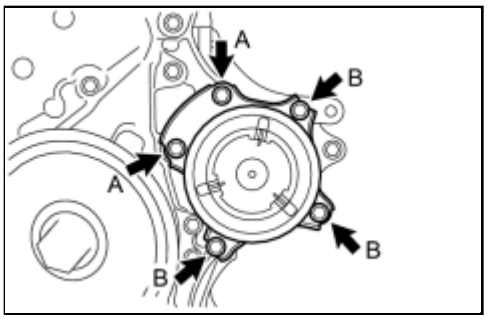

(b) Install the water pump assembly to the timing chain cover with the 5 bolts.

Bolt A - Torque: 26 N·m (260 kgf·cm, 19ft·lbf)
Bolt B - Torque: 24 N·m (245 kgf·cm, 18ft·lbf)

Bolt Length:

ITEM	LENGTH
Bolt A	35 mm (1.38 in.)
Bolt B	18 mm (0.709 in.)

2. INSTALL GENERATOR ASSEMBLY INFO

3. INSTALL V-RIBBED BELT INFO

4. ADJUST V-RIBBED BELT INFO

5. INSPECT V-RIBBED BELT INFO

6. CONNECT CABLE TO NEGATIVE BATTERY TERMINAL INFO

7. ADD ENGINE COOLANT INFO

8. INSPECT INSPECT FOR COOLANT LEAK INFO

9. INSTALL ENGINE UNDER COVER RH

10. INSTALL NO. 2 CYLINDER HEAD COVER INFO

Last Modified: 3-10-2010	6.4 K	**From:** 200901
Model Year: 2010	**Model:** Corolla	**Doc ID:** RM000001OC100YX
Title: CRUISE CONTROL: CLUTCH SWITCH: COMPONENTS (2010 Corolla)		

COMPONENTS

ILLUSTRATION

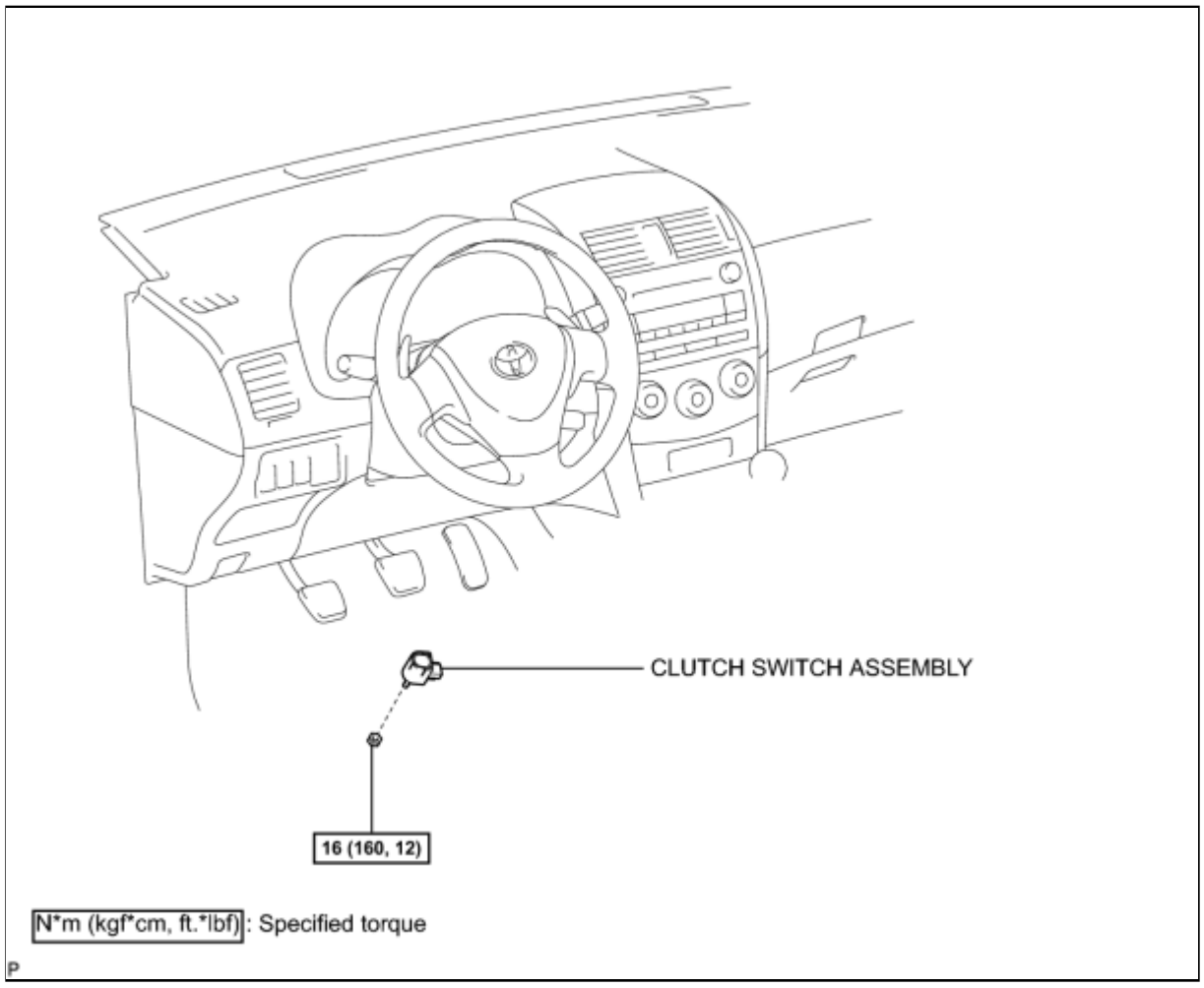

Last Modified: 3-10-2010	6.4 A	**From:** 200901
Model Year: 2010	**Model:** Corolla	**Doc ID:** RM000001OC200ZX
Title: CRUISE CONTROL: CLUTCH SWITCH: REMOVAL (2010 Corolla)		

REMOVAL

1. REMOVE CLUTCH SWITCH ASSEMBLY

(a) Disconnect the connector.

(b) Loosen the nut and remove the clutch switch assembly.

Last Modified: 3-10-2010	6.4 G	**From:** 200901
Model Year: 2010	**Model:** Corolla	**Doc ID:** RM000001Z6F011X
Title: CRUISE CONTROL: CLUTCH SWITCH: INSPECTION (2010 Corolla)		

INSPECTION

1. INSPECT CLUTCH SWITCH ASSEMBLY

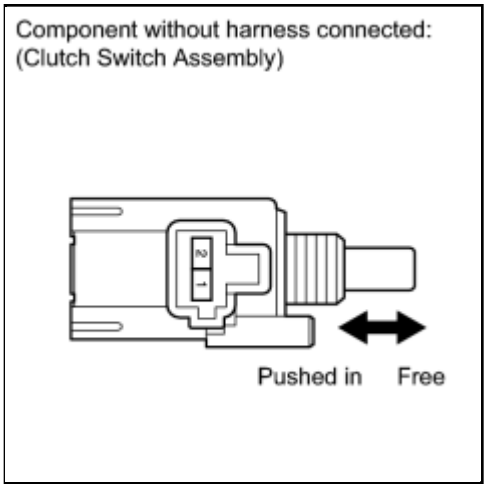

(a) Remove the clutch switch assembly INFO .

(b) Measure the resistance according to the value(s) in the table below.

Standard Resistance:

TESTER CONNECTION	SWITCH CONDITION	SPECIFIED CONDITION
1 - 2	Switch pin free	10 kΩ or higher
	Switch pin pushed in	Below 1 Ω

If the result is not as specified, replace the clutch switch.

Last Modified: 3-10-2010	6.4 A	**From:** 200901
Model Year: 2010	**Model:** Corolla	**Doc ID:** RM000001OC000ZX
Title: CRUISE CONTROL: CLUTCH SWITCH: INSTALLATION (2010 Corolla)		

INSTALLATION

1. INSTALL CLUTCH SWITCH ASSEMBLY

(a) Temporarily install the clutch switch assembly with the nut.

(b) Engage the pin and tighten the nut.

Torque: 16 N·m (160 kgf·cm, 12ft·lbf)

(c) Connect the connector.

Last Modified: 3-10-2010	6.4 K	**From:** 200901
Model Year: 2010	**Model:** Corolla	**Doc ID:** RM000000VQ2020X
Title: CRUISE CONTROL: CRUISE CONTROL MAIN SWITCH: COMPONENTS (2010 Corolla)		

COMPONENTS

ILLUSTRATION

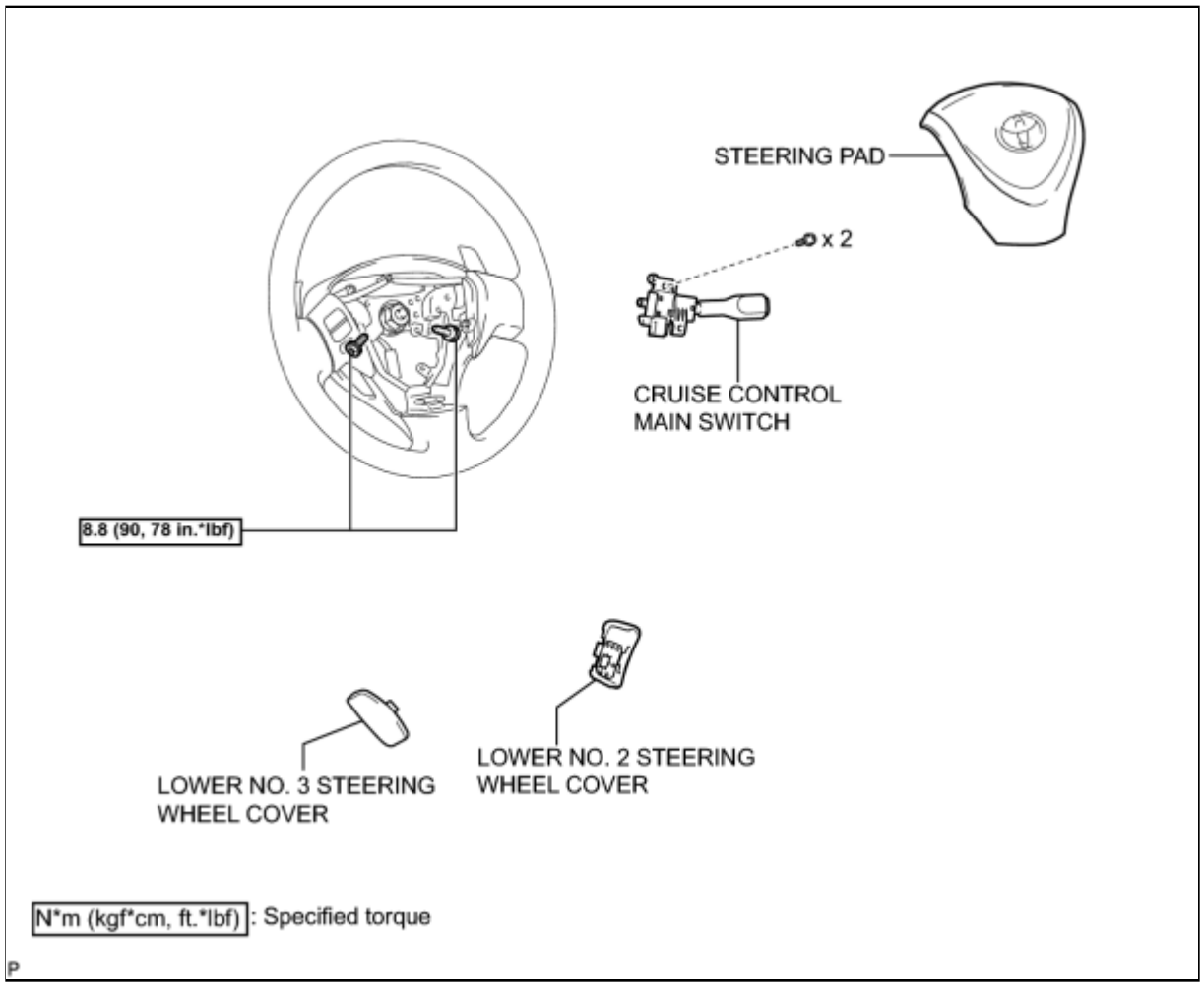

Last Modified: 3-10-2010	6.4 A	**From:** 200901
Model Year: 2010	**Model:** Corolla	**Doc ID:** RM000000VQ302LX
Title: CRUISE CONTROL: CRUISE CONTROL MAIN SWITCH: REMOVAL (2010 Corolla)		

REMOVAL

1. DISCONNECT CABLE FROM NEGATIVE BATTERY TERMINAL

CAUTION:

Wait at least 90 seconds after disconnecting the cable from the negative (-) battery terminal to disable the SRS system.

2. REMOVE LOWER NO. 3 STEERING WHEEL COVER INFO

3. REMOVE LOWER NO. 2 STEERING WHEEL COVER INFO

4. REMOVE STEERING PAD INFO

5. REMOVE CRUISE CONTROL MAIN SWITCH

(a) Disconnect the connector.

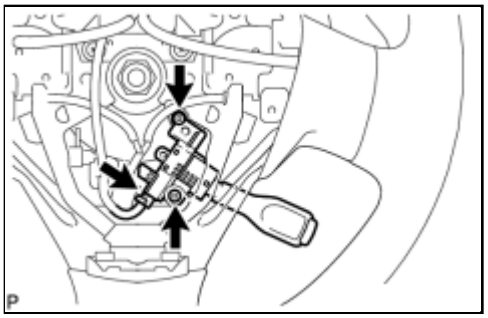

(b) Remove the 2 screws.

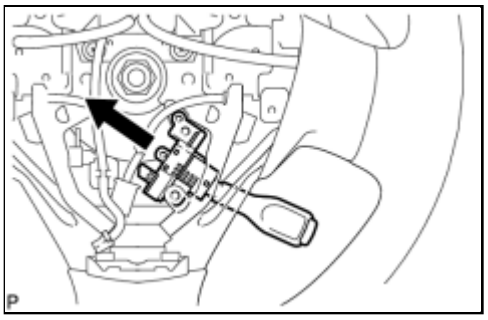

(c) Remove the switch as shown in the illustration.

Last Modified: 3-10-2010	6.4 G	**From:** 200901
Model Year: 2010	**Model:** Corolla	**Doc ID:** RM000001Z6E01JX
Title: CRUISE CONTROL: CRUISE CONTROL MAIN SWITCH: INSPECTION (2010 Corolla)		

INSPECTION

1. INSPECT CRUISE CONTROL MAIN SWITCH

(a) Remove the cruise control main switch INFO .

(b) Measure the resistance according to the value(s) in the table below.

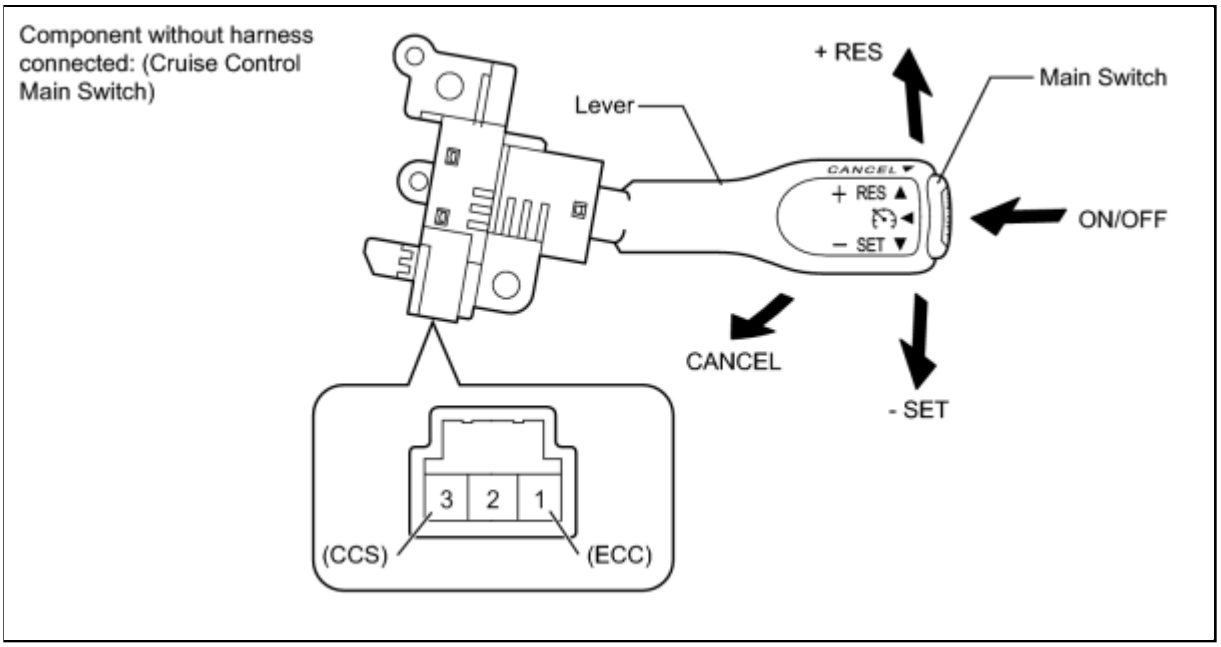

Standard Resistance:

TESTER CONNECTION	SWITCH CONDITION	SPECIFIED CONDITION
1 (ECC) - 3 (CCS)	Main Switch off*1	1 MΩ or higher
	Main Switch on	Below 2.5 Ω
	+ RES	235 to 245 Ω
	- SET	617 to 643 Ω
	CANCEL	1509 to 1571 Ω

*1: Lever is in neutral position

If the result is not as specified, replace the cruise control main switch.

Last Modified: 3-10-2010	6.4 A	**From:** 200901
Model Year: 2010	**Model:** Corolla	**Doc ID:** RM000000VQ102LX
Title: CRUISE CONTROL: CRUISE CONTROL MAIN SWITCH: INSTALLATION (2010 Corolla)		

INSTALLATION

1. INSTALL CRUISE CONTROL MAIN SWITCH

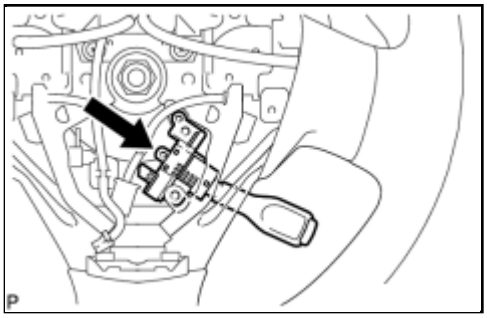

(a) Install the switch as shown in the illustration.

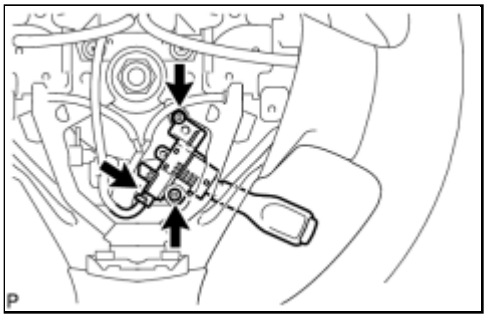

(b) Install the 2 screws.

(c) Connect the connector.

2. INSTALL STEERING PAD INFO

3. INSTALL LOWER NO. 3 STEERING WHEEL COVER INFO

4. INSTALL LOWER NO. 2 STEERING WHEEL COVER INFO

5. CONNECT CABLE TO NEGATIVE BATTERY TERMINAL

6. INSPECT STEERING PAD INFO

7. INSPECT SRS WARNING LIGHT

INFO

Last Modified: 3-10-2010	6.4 L	**From:** 200901
Model Year: 2010	**Model:** Corolla	**Doc ID:** RM000002VOG00KX
Title: CRUISE CONTROL: CRUISE CONTROL SYSTEM: PRECAUTION (2010 Corolla)		

PRECAUTION

1. EXPRESSIONS OF IGNITION SWITCH

(a) The type of ignition switch used on this model differs according to the specifications of the vehicle.

The expressions listed in the table below are used in this section.

EXPRESSION	SWITCH TYPE	
	IGNITION SWITCH (POSITION)	ENGINE SWITCH (CONDITION)
Ignition Switch off	LOCK	Off
Ignition Switch ON	ON	On (IG)
Ignition Switch ACC	ACC	On (ACC)
Engine Start	START	Start

2. HANDLING PRECAUTIONS FOR CRUISE CONTROL SYSTEM

(a) Turn the cruise control main switch off when not using the cruise control system.

(b) Be careful as the vehicle speed increases when driving downhill with the cruise control system on.

(c) The + (ACCEL)/RES (RESUME) operation changes according to the cruise control system status. When the cruise control system is operating, the + (ACCEL) function operates. When the cruise control system is not operating, the RES (RESUME) function operates.

(d) If the CRUISE main indicator light blinks while the cruise control system is operating, turn the cruise control main switch off to reset the cruise control system. After the reset, if the cruise control main switch cannot be turned on, or the cruise control system is canceled immediately after turning the cruise control main switch on, the system may have a malfunction.

(e) Do not use the cruise control system where the road conditions are as follows:

- Heavy traffic
- Steep decline
- Roads with sharp turns
- Icy or snowy roads
- Slippery roads

(f) Do not use the cruise control system while towing.

Last Modified: 3-10-2010	6.4 R	**From:** 200901
Model Year: 2010	**Model:** Corolla	**Doc ID:** RM000000SSZ03SX
Title: CRUISE CONTROL: CRUISE CONTROL SYSTEM: PARTS LOCATION (2010 Corolla)		

PARTS LOCATION

ILLUSTRATION

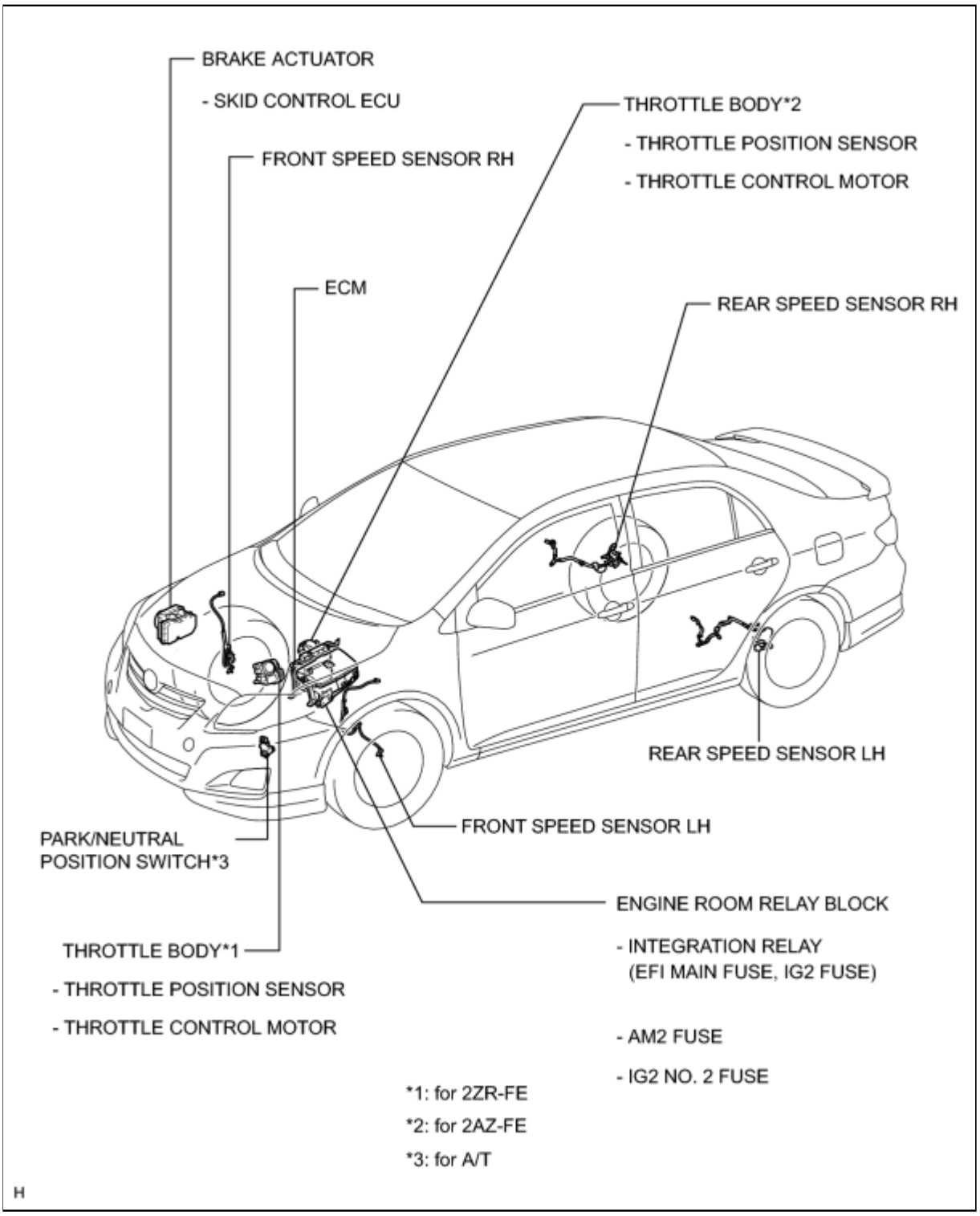

ILLUSTRATION

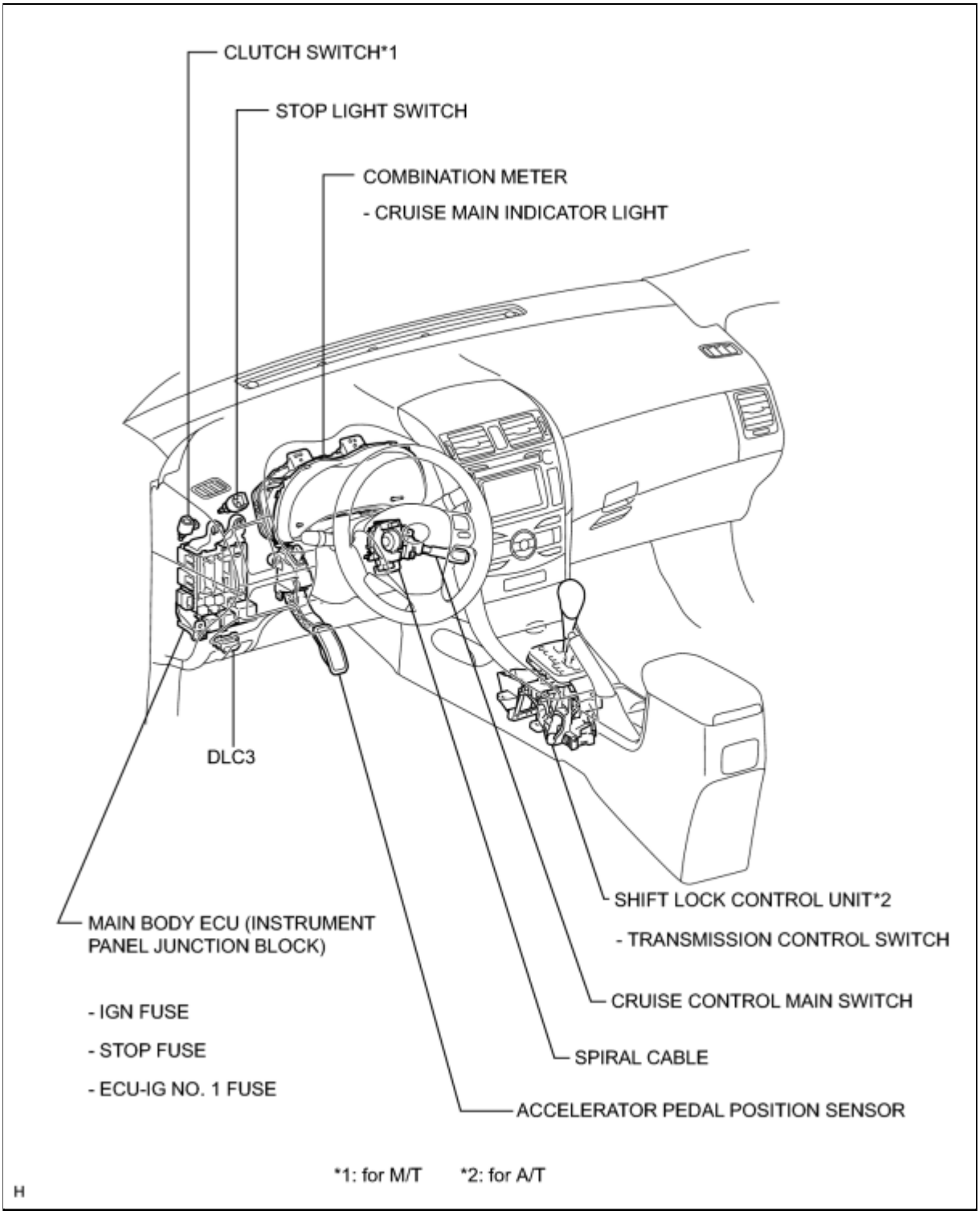

Last Modified: 3-10-2010	6.4 U	**From:** 200901
Model Year: 2010	**Model:** Corolla	**Doc ID:** RM000000PM204KX
Title: CRUISE CONTROL: CRUISE CONTROL SYSTEM: SYSTEM DIAGRAM (2010 Corolla)		

SYSTEM DIAGRAM

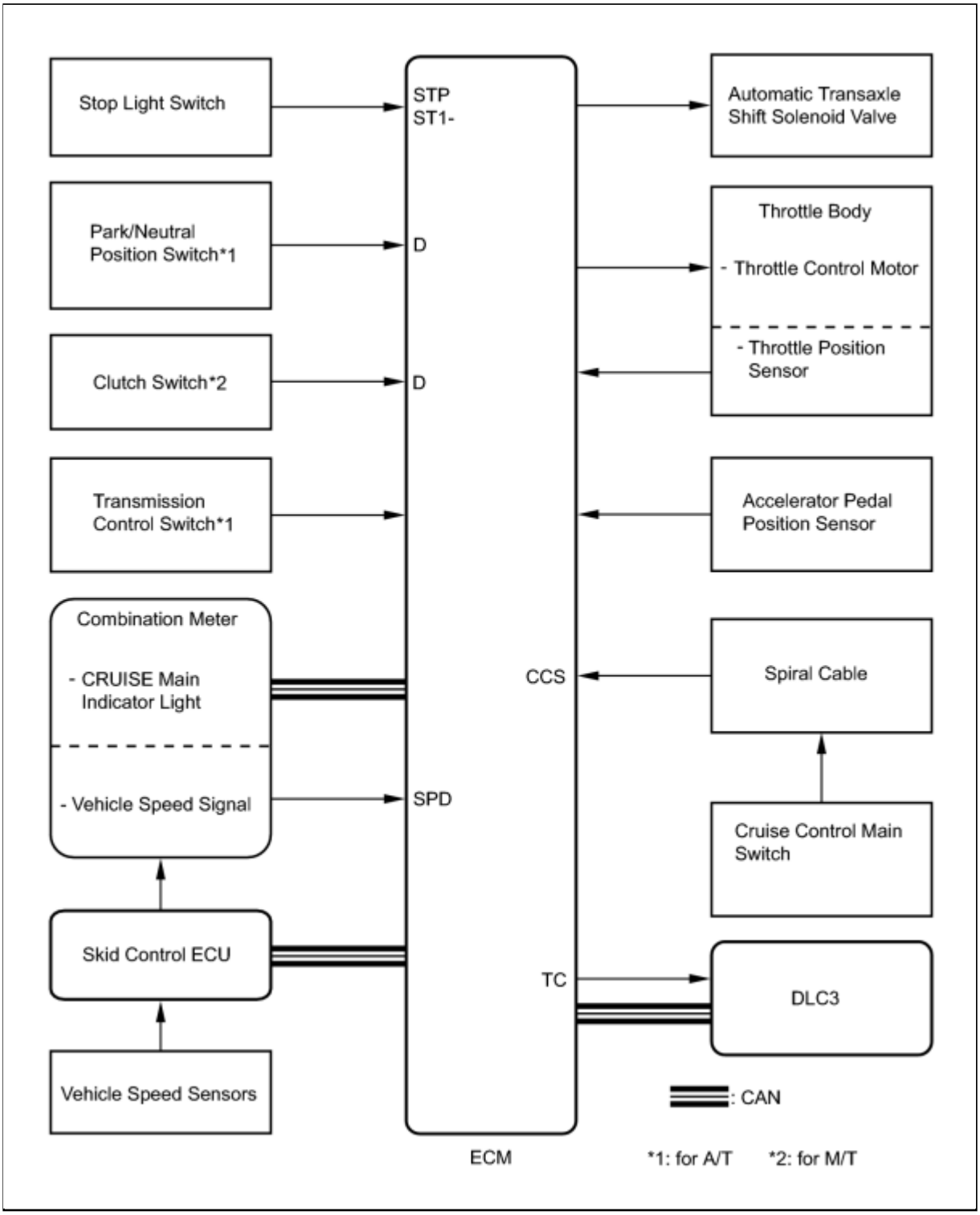

Communication Table

SENDER	RECEIVER	SIGNAL	LINE
ECM	Combination Meter ECU	CRUISE main indicator operation signal	CAN

Last Modified: 3-10-2010	6.4 D	**From:** 200901
Model Year: 2010	**Model:** Corolla	**Doc ID:** RM000000PLZ04ZX
Title: CRUISE CONTROL: CRUISE CONTROL SYSTEM: SYSTEM DESCRIPTION (2010 Corolla)		

SYSTEM DESCRIPTION

1. CRUISE CONTROL SYSTEM

This system is controlled by the ECM, and is activated by the throttle position sensor and motor. The ECM controls the following functions: ON-OFF, - (COAST)/SET, + (ACCEL)/RES (RESUME), CANCEL, vehicle speed operation, motor output control, and shift down control.

- The ECM compares the driving vehicle speed from the speed sensor with the stored vehicle speed set through the cruise control main switch. The ECM instructs the throttle valve motor of the throttle body assembly to close the valve when the driving speed is greater than the stored speed, and instructs it to open the valve when the driving speed is less than the stored speed.
- The ECM receives signals such as ON-OFF, - (COAST)/SET, + (ACCEL)/RES (RESUME), and CANCEL from the cruise control main switch and executes the command.
- The ECM illuminates the combination meter's CRUISE main indicator light when it receives a cruise control main switch ON signal.
- The ECM cancels the cruise control system when the brake pedal is depressed and the ECM receives a stop light switch signal.
- The ECM cancels the cruise control system when the shift lever is moved to except D or S (S5 and S4 range) (for U250E).
- The ECM cancels the cruise control system when the shift lever is moved to except D or 3 (for U341E).
- The ECM cancels the cruise control system when the clutch pedal is depressed and the ECM receives a clutch switch signal (for M/T).

2. LIMIT CONTROL

(a) Low speed limit

The lowest possible limit of the speed setting range is set at approximately 40 km/h (25 mph). The cruise control system cannot be set when the driving vehicle speed is below the low speed limit. Cruise control operation will be automatically canceled but the stored vehicle speed will be retained when the vehicle speed drops below the low speed limit of 40 km/h (25 mph) while the cruise control is in operation.

(b) High speed limit

The highest possible limit of the speed setting range is set at approximately 200 km/h (125 mph). The cruise control system cannot be set when the driving vehicle speed is over the high speed limit. Also, + (ACCEL)/RES (RESUME) cannot be used to increase speed beyond the high speed limit.

3. OPERATION OF CRUISE CONTROL

The cruise control main switch operates 7 functions: SET, - (COAST), TAP-DOWN, RES (RESUME), + (ACCEL), TAP-UP, and CANCEL. The SET, TAP-DOWN, and - (COAST) functions, and the RES (RESUME), TAP-UP, and + (ACCEL) functions are operated with the same switch. The cruise control main switch is an automatic return type switch which turns on only while operating it in the direction of each arrow and turns off after releasing it.

(a) SET CONTROL

The vehicle speed is stored and constant speed control is maintained when pushing the cruise control main switch to - (COAST)/SET while driving with the main switch on (the CRUISE main indicator light is on), and the vehicle speed is within the set speed range between the low and high speed limits.

(b) - (COAST) CONTROL

When the cruise control main switch is set to - (COAST)/SET and held in that position while the cruise control system is operating, the ECM sends a "throttle valve opening angle 0°" demand signal to the cruise control system. Then the vehicle speed, when the cruise control main switch is released, is stored and maintained.

HINT:

An actual throttle valve opening angle of 0° is not possible due to the idle speed control, etc.

(c) TAP-DOWN CONTROL

When tapping down the cruise control main switch to - (COAST)/SET (for approximately 0.6 seconds) while the cruise control system is in operation, the stored vehicle speed decreases each time by approximately 1.6 km/h (1.0 mph). When the cruise control main switch is released from - (COAST)/SET and the difference between the driving and stored vehicle speed is more than 5 km/h (3.1 mph), the driving vehicle speed is stored and constant speed control is maintained.

(d) ACCELERATION CONTROL

The throttle valve motor of the throttle body assembly is instructed by the ECM to open the throttle valve when + (ACCEL)/RES (RESUME) on the cruise control main switch is pressed and held while the cruise control system is in operation. When the cruise control main switch is released from + (ACCEL)/RES (RESUME), the vehicle speed is stored and the vehicle is controlled at a constant speed.

(e) TAP-UP CONTROL

When tapping up the cruise control main switch to + (ACCEL)/RES (RESUME) (for approximately 0.6 seconds) while the cruise control system is in operation, the stored vehicle speed increases each time by approximately 1.6 km/h (1.0 mph). However, when the difference between the driving speed and the stored vehicle speed is more than 5 km/h (3.1 mph), the stored vehicle speed will not be changed.

(f) RESUME CONTROL

If cruise control operation was canceled with the stop light switch, the CANCEL switch or the low speed limit control, and if driving speed is within the limit range, pushing the cruise control main switch to + (ACCEL)/RES (RESUME) restores vehicle speed memorized at the time of cancellation, and maintains constant speed control.

(g) MANUAL CANCEL CONTROL

Performing any of the following cancels the cruise control system while in operation (the stored vehicle speed in the ECM is maintained).

- Depressing the brake pedal
- Depressing the clutch pedal (for M/T)
- The shift lever is moved to except D or S (S5 and S4 range) (for U250E).
- The shift lever is moved to except D or 3 (for U341E).
- Pulling the cruise control main switch to CANCEL
- Turning the cruise control main switch off (the vehicle speed stored in the ECM is not maintained)

4. AUTO CANCEL (FAIL-SAFE)

This system has an automatic cancellation function (fail-safe) INFO .



Last Modified: 3-10-2010	6.4 D	**From:** 200901
Model Year: 2010	**Model:** Corolla	**Doc ID:** RM000000PLO05KX
Title: CRUISE CONTROL: CRUISE CONTROL SYSTEM: HOW TO PROCEED WITH TROUBLESHOOTING (2010 Corolla)		

HOW TO PROCEED WITH TROUBLESHOOTING

HINT:

- Use the following procedure to troubleshoot the cruise control system.
- *: Use the Techstream.

1.	**VEHICLE BROUGHT TO WORKSHOP**

NEXT

2.	**INSPECT BATTERY VOLTAGE**

Standard Voltage:
11 to 14 V

If the voltage is below 11 V, recharge or replace the battery before proceeding to the next step.

NEXT

3.	**CHECK CAN COMMUNICATION SYSTEM***

(a) Check for output DTCs.

Result:

RESULT	PROCEED TO
CAN DTC is not output	A
CAN DTC is output	B

HINT:

The ECM of this system is connected to the CAN communication system. Therefore, before starting troubleshooting, make sure to check that there is no trouble in the CAN communication system.

B ▶ INFO **GO TO CAN COMMUNICATION SYSTEM**

A ▼

4.	**CHECK INDICATOR LIGHT**

NEXT ▼

5.	**CHECK FOR DTC***

(a) Check for DTCs INFO .

(b) Clear the DTCs INFO .

(c) Recheck for DTCs INFO .

Result:

RESULT	PROCEED TO
DTC is not output	A
DTC is output	B

B ▶ INFO **GO TO DIAGNOSTIC TROUBLE CODE CHART**

A ▼

6.	PROBLEM SYMPTOMS TABLE

(a) Refer to Problem Symptoms Table INFO .

Result:

RESULT	PROCEED TO
There is no applicable symptom in the table	A
There is an applicable symptom in the table	B

B ▶ **Go to step 8**

A
▼

7.	OVERALL ANALYSIS AND TROUBLESHOOTING*

(a) Terminals of ECM INFO

(b) Data List / Active Test INFO

NEXT
▼

8.	REPAIR OR REPLACE

NEXT
▼

9.	CONFIRMATION TEST


TOYOTA

Last Modified: 3-10-2010	6.4 T	**From:** 200901
Model Year: 2010	**Model:** Corolla	**Doc ID:** RM000000PLS04YX
Title: CRUISE CONTROL: CRUISE CONTROL SYSTEM: PROBLEM SYMPTOMS TABLE (2010 Corolla)		

PROBLEM SYMPTOMS TABLE

HINT:

- Use the table below to help determine the cause of problem symptoms. If multiple suspected areas are listed, the potential causes of the symptoms are listed in order of probability in the "Suspected Area" column of the table. Check each symptom by checking the suspected areas in the order they are listed. Replace parts as necessary.
- Inspect the fuses and relays related to this system before inspecting the suspected areas below.

Cruise Control System

SYMPTOM	SUSPECTED AREA	SEE PAGE
Vehicle speed cannot be set. (The CRUISE main indicator light comes on.)	Cruise control switch circuit	INFO
	Vehicle speed sensor circuit	INFO
	Combination meter	INFO
	Stop light switch circuit	INFO
	Transmission range sensor circuit (for U341E)	INFO
	Transmission range sensor circuit (for U250E)	INFO
	Transmission control switch circuit (for U250E)	INFO
	Clutch switch circuit (for M/T)	INFO
	If the symptoms still occur after the above areas have been inspected and have proven to be normal, replace the ECM. (for 2ZR-FE)	INFO
	If the symptoms still occur after the above areas have been inspected and have proven to be normal, replace the ECM. (for 2AZ-FE)	INFO
The cruise control is canceled while it is operating.	Stop light switch circuit	INFO
	Clutch switch circuit (for M/T)	INFO
	Transmission range sensor circuit (for U341E)	INFO
	Transmission range sensor circuit (for U250E)	INFO

SYMPTOM	SUSPECTED AREA	SEE PAGE
	Transmission control switch circuit (for U250E)	INFO
	Cruise control switch circuit	INFO
	Vehicle speed sensor circuit	INFO
	Combination meter	INFO
	If the symptoms still occur after the above areas have been inspected and have proven to be normal, replace the ECM. (for 2ZR-FE)	INFO
	If the symptoms still occur after the above areas have been inspected and have proven to be normal, replace the ECM. (for 2AZ-FE)	INFO
Vehicle speed cannot be set. (The CRUISE main indicator light does not come on.)	Stop light switch circuit	INFO
	Clutch switch circuit (for M/T)	INFO
	Vehicle speed sensor circuit	INFO
	Combination meter	INFO
	Cruise control switch circuit	INFO
	Transmission range sensor circuit (for U341E)	INFO
	Transmission range sensor circuit (for U250E)	INFO
	Transmission control switch circuit (for U250E)	INFO
	Cruise main indicator light circuit	INFO
	If the symptoms still occur after the above areas have been inspected and have proven to be normal, replace the ECM. (for 2ZR-FE)	INFO
	If the symptoms still occur after the above areas have been inspected and have proven to be normal, replace the ECM. (for 2AZ-FE)	INFO
Vehicle speed can be set. (The CRUISE main indicator light does not come on.)	Cruise main indicator light circuit	INFO
	If the symptoms still occur after the above area has been inspected and has proven to be normal, replace the ECM. (for 2ZR-FE)	INFO
	If the symptoms still occur after the above area has been inspected and has proven to be normal, replace the ECM. (for 2AZ-FE)	INFO

SYMPTOM	SUSPECTED AREA	SEE PAGE
Pulling back on the control main switch does not cancel the cruise control. (The CRUISE main indicator light remains on.)	Cruise control switch circuit	INFO
	If the symptoms still occur after the above area has been inspected and has proven to be normal, replace the ECM. (for 2ZR-FE)	INFO
	If the symptoms still occur after the above area has been inspected and has proven to be normal, replace the ECM. (for 2AZ-FE)	INFO
Pulling back on the control main switch does not cancel the cruise control. (The CRUISE main indicator light goes off.)	Replace ECM (for 2ZR-FE)	INFO
	Replace ECM (for 2AZ-FE)	INFO
The cruise control is not canceled when vehicle speed drops below the low speed limit. (The CRUISE main indicator light remains on.)	Vehicle speed sensor circuit	INFO
	If the symptoms still occur after the above area has been inspected and has proven to be normal, replace the ECM. (for 2ZR-FE)	INFO
	If the symptoms still occur after the above area has been inspected and has proven to be normal, replace the ECM. (for 2AZ-FE)	INFO
The cruise control is not canceled when vehicle speed drops below the low speed limit. (The CRUISE main indicator light goes off.)	Replace ECM (for 2ZR-FE)	INFO
	Replace ECM (for 2AZ-FE)	INFO
Depressing the brake pedal does not cancel the cruise control. (The CRUISE main indicator light remains on.)	Stop light switch circuit	INFO
	If the symptoms still occur after the above area has been inspected and has proven to be normal, replace the ECM. (for 2ZR-FE)	INFO
	If the symptoms still occur after the above area has been inspected and has proven to be normal, replace the ECM. (for 2AZ-FE)	INFO
Depressing the brake pedal does not cancel the cruise control. (The CRUISE main indicator light goes off.)	Replace ECM (for 2ZR-FE)	INFO
	Replace ECM (for 2AZ-FE)	INFO
Depressing the clutch pedal does not cancel the cruise control. (The CRUISE main indicator light remains on.)	Clutch switch circuit (for M/T)	INFO
	If the symptoms still occur after the above area has been inspected and has proven to be normal, replace the ECM. (for 2ZR-FE)	INFO
	If the symptoms still occur after the above area has been inspected and has proven to be normal, replace the ECM. (for 2AZ-FE)	INFO
Depressing the clutch pedal does not cancel	Replace ECM (for 2ZR-FE)	INFO

SYMPTOM	SUSPECTED AREA	SEE PAGE
the cruise control. (The CRUISE main indicator light goes off.)	Replace ECM (for 2AZ-FE)	INFO
Moving the shift lever does not cancel the cruise control.	Transmission range sensor circuit (for U341E)	INFO
	Transmission range sensor circuit (for U250E)	INFO
	Transmission control switch circuit (for U250E)	INFO
	If the symptoms still occur after the above areas have been inspected and have proven to be normal, replace the ECM. (for 2ZR-FE)	INFO
	If the symptoms still occur after the above areas have been inspected and have proven to be normal, replace the ECM. (for 2AZ-FE)	INFO
Hunting (Speed is not constant.)	Vehicle speed sensor circuit	INFO
	Combination meter	INFO
	If the symptoms still occur after the above areas have been inspected and have proven to be normal, replace the ECM. (for 2ZR-FE)	INFO
	If the symptoms still occur after the above areas have been inspected and have proven to be normal, replace the ECM. (for 2AZ-FE)	INFO
The CRUISE main indicator light remains blinking.	TC and CG terminal circuit	INFO
	If the symptoms still occur after the above area has been inspected and has proven to be normal, replace the ECM. (for 2ZR-FE)	INFO
	If the symptoms still occur after the above area has been inspected and has proven to be normal, replace the ECM. (for 2AZ-FE)	INFO

Last Modified: 3-10-2010	6.4 D	**From:** 200901
Model Year: 2010	**Model:** Corolla	**Doc ID:** RM000000ST004OX
Title: CRUISE CONTROL: CRUISE CONTROL SYSTEM: ROAD TEST (2010 Corolla)		

ROAD TEST

1. PROBLEM SYMPTOM CONFIRMATION

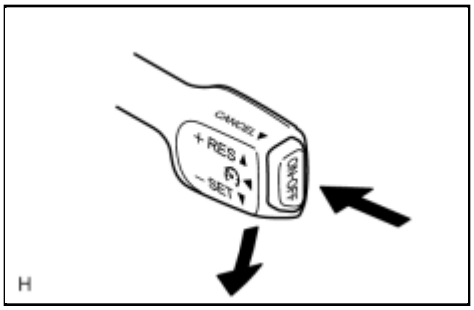

(a) Inspect the SET function.

(1) Turn the cruise control main switch on.

(2) Drive at the required speed between 40 km/h (25 mph) and 200 km/h (125 mph).

(3) Push the cruise control main switch to - (COAST)/SET.

(4) After releasing the switch, check that the vehicle cruises at the set speed.

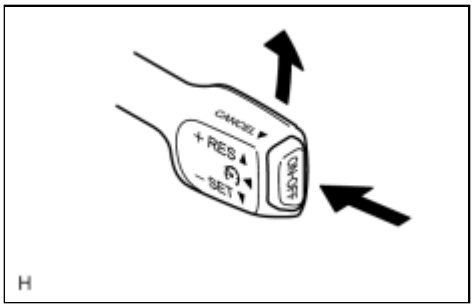

(b) Inspect the + (ACCELERATION) function.

(1) Turn the cruise control main switch on.

(2) Drive at the required speed between 40 km/h (25 mph) and 200 km/h (125 mph).

(3) Push the cruise control main switch to - (COAST)/SET.

(4) Check that vehicle speed increases while the cruise control main switch is pushed to + (ACCEL)/RES (RESUME), and that the vehicle cruises at the newly set speed when the switch is released.

(5) Push the cruise control main switch to + (ACCEL)/RES (RESUME) and then release it immediately. Check that vehicle speed increases by approximately 1.6 km/h (1.0 mph) (tap-up control).

(c) Inspect the - (COAST) function.

(d) Inspect the CANCEL function.

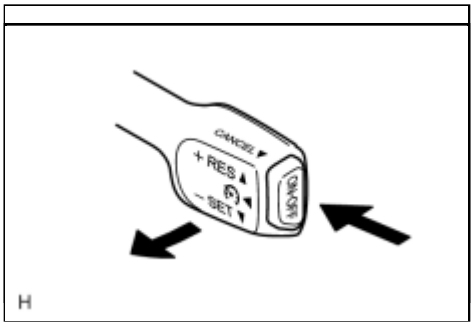

(1) Turn the cruise control main switch on.

(2) Drive at the required speed between 40 km/h (25 mph) and 200 km/h (125 mph).

(3) Push the cruise control main switch to - (COAST)/SET.

(4) Check that vehicle speed decreases while the cruise control main switch is pushed to - (COAST)/SET, and that the vehicle cruises at the newly set speed when the switch is released.

(5) Push the cruise control main switch to - (COAST)/SET, and then release it immediately. Check that vehicle speed decreases by approximately 1.6 km/h (1.0 mph) (tap-down control).

When performing any one of the following, check that the cruise control system is canceled and that the normal driving mode is set.

- Depressing the brake pedal
- Depressing the clutch pedal (for M/T)
- The shift lever is moved to except D or S (S5 and S4) (for U250E).

- The shift lever is moved to except D or 3 (for U341E).
- Turning the cruise control main switch off
- Pulling the cruise control main switch to CANCEL

(e) Inspect the RES (RESUME) function.

(1) Turn the cruise control main switch on.

(2) Drive at the required speed between 40 km/h (25 mph) and 200 km/h (125 mph).

(3) Push the cruise control main switch to - (COAST)/SET.

(4) Cancel the cruise control system by performing any of the above operations (other than turning the main switch off).

(5) After pushing the cruise control main switch to + (ACCEL)/RES (RESUME) at a driving speed of more than 40 km/h (25 mph), check that the vehicle resumes at the speed set prior to the cancellation.

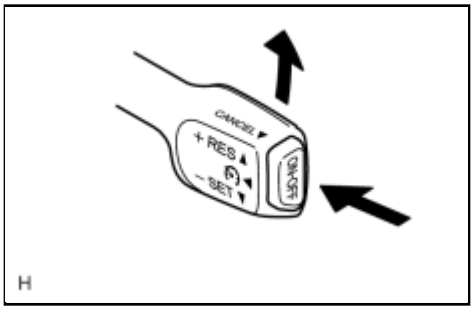

Last Modified: 3-10-2010	6.4 U	**From:** 200901
Model Year: 2010	**Model:** Corolla	**Doc ID:** RM000001W1U02JX
Title: CRUISE CONTROL: CRUISE CONTROL SYSTEM: TERMINALS OF ECM (2010 Corolla)		

TERMINALS OF ECM

1. CHECK ECM

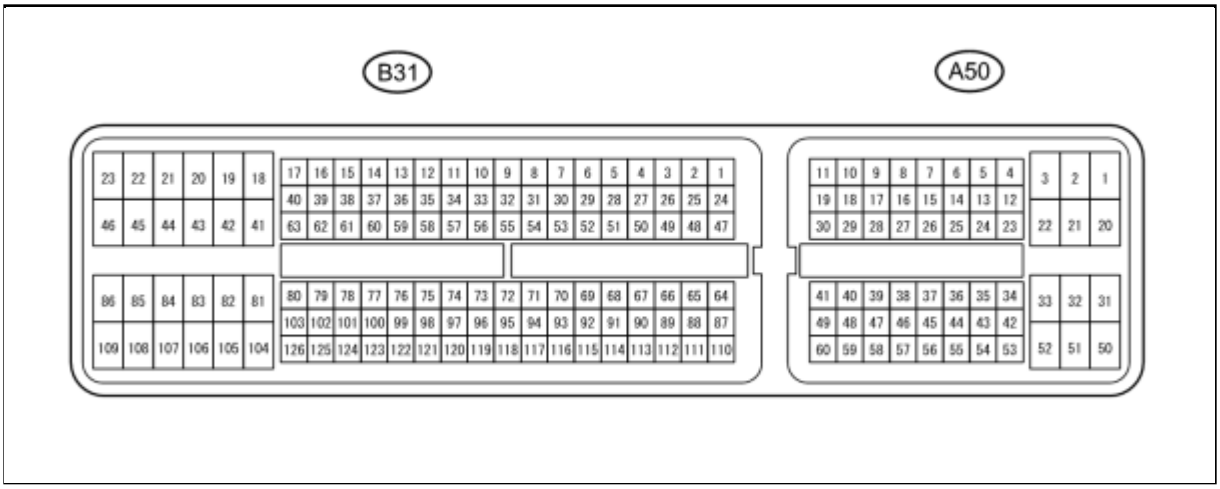

TERMINAL NO. (SYMBOL)	WIRING COLOR	TERMINAL DESCRIPTION	CONDITION	SPECIFIED CONDITION
A50-27 (TC) - B31-104 (E1)	P - BR	Body ground	Ignition switch ON	11 to 14 V
A50-27 (TC) - B31-104 (E1)	P - BR	Body ground	Terminals TC and CG of DLC3 connected	Below 1 V
A50-36 (STP) - B31-104 (E1)	L - BR	Stop light signal	Ignition switch ON, Brake pedal depressed	11 to 14 V
A50-36 (STP) - B31-104 (E1)	L - BR	Stop light signal	Ignition switch ON, Brake pedal released	Below 1 V
A50-40 (CCS) - B31-104 (E1)	L-B - BR	Cruise control main switch circuit	Ignition switch ON	11 to 14 V
A50-40 (CCS) - B31-104 (E1)	L-B - BR	Cruise control main switch circuit	CANCEL switch ON	6.6 to 10.1 V
A50-40 (CCS) - B31-104 (E1)	L-B - BR	Cruise control main switch circuit	- SET switch ON	4.5 to 7.1 V
A50-40 (CCS) - B31-104 (E1)	L-B - BR	Cruise control main switch circuit	+ RES switch ON	2.3 to 4.0 V
A50-40 (CCS) - B31-104 (E1)	L-B - BR	Cruise control main switch circuit	MAIN switch ON	Below 1 V

TERMINAL NO. (SYMBOL)	WIRING COLOR	TERMINAL DESCRIPTION	CONDITION	SPECIFIED CONDITION
A50-35 (ST1-) - B31-104 (E1)	R - BR	Stop light signal	Ignition switch ON, Brake pedal depressed	Below 1 V
A50-35 (ST1-) - B31-104 (E1)	R - BR	Stop light signal	Ignition switch ON, Brake pedal released	11 to 14 V
B31-56 (D)*1 - B31-104 (E1)	LG - BR	Clutch signal	Ignition switch ON, Clutch pedal depressed	Below 1 V
B31-56 (D)*1 - B31-104 (E1)	LG - BR	Clutch signal	Ignition switch ON, Clutch pedal released	11 to 14 V
B31-56 (D)*2 - B31-104 (E1)	P*3 - BR P-G*4 - BR	D shift position switch signal	Ignition switch ON, Shift lever in except D	Below 1 V
B31-56 (D)*2 - B31-104 (E1)	P*3 - BR P-G*4 - BR	D shift position switch signal	Ignition switch ON, Shift lever in D	11 to 14 V

- *1: for M/T
- *2: for A/T
- *3: for 2ZR-FE
- *4: for 2AZ-FE

Last Modified: 3-10-2010	6.4 D	**From:** 200901
Model Year: 2010	**Model:** Corolla	**Doc ID:** RM000000PM005BX
Title: CRUISE CONTROL: CRUISE CONTROL SYSTEM: DIAGNOSIS SYSTEM (2010 Corolla)		

DIAGNOSIS SYSTEM

1. DESCRIPTION

The ECM controls the cruise control system of the vehicle. The data and DTCs relating to the cruise control system can be read from the DLC3 of the vehicle. If any DTC is not displayed when checking for DTCs, there may be a problem with either the combination meter or the CAN communication system. Use the Techstream to check and solve the problem.

2. CHECK DLC3

(a) Check the DLC3 INFO .

3. CHECK INDICATOR

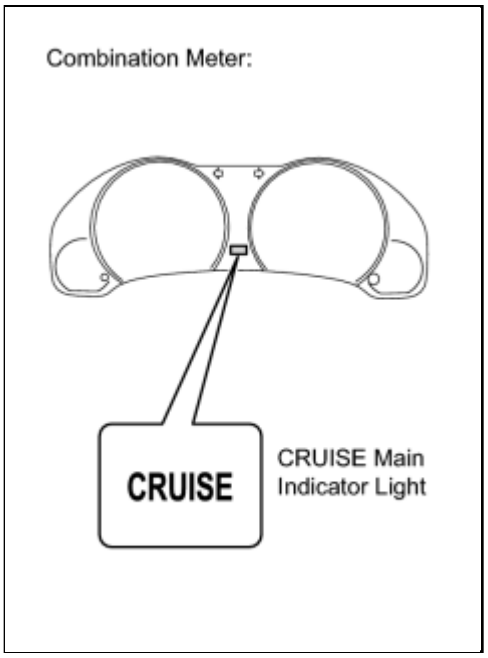

(a) Turn the ignition switch to ON.

(b) Check that the CRUISE main indicator light illuminates when the cruise control main switch is turned on, and that the indicator light turns off when the main switch is turned off. If the results are not as specified, inspect the CRUISE main indicator light circuit INFO .

HINT:

While driving with cruise control, the ECM activates AUTO CANCEL of the cruise control system when a malfunction occurs in one of the following: vehicle speed sensors, stop light switch, or other related parts. When AUTO CANCEL is activated, the CRUISE main indicator light outputs the blinking pattern as shown in the illustration. At the same time, data of the malfunction is stored as a DTC.

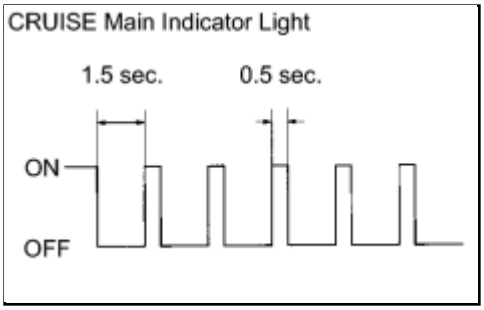
CRUISE Main Indicator Light
1.5 sec.
0.5 sec.
ON
OFF

Last Modified: 3-10-2010	6.4 D	**From:** 200901
Model Year: 2010	**Model:** Corolla	**Doc ID:** RM000000PM1045X
Title: CRUISE CONTROL: CRUISE CONTROL SYSTEM: DTC CHECK / CLEAR (2010 Corolla)		

DTC CHECK / CLEAR

1. CHECK DTC

(a) Connect the Techstream to the DLC3.

(b) Turn the ignition switch to ON.

(c) Turn the Techstream on.

(d) Enter the following menus: Powertrain / Cruise Control / Trouble Codes.

(e) Check the details of the DTC(s) INFO .

2. CLEAR DTC

(a) Connect the Techstream to the DLC3.

(b) Turn the ignition switch to ON.

(c) Turn the Techstream on.

(d) Enter the following menus: Powertrain / Cruise Control / Trouble Codes.

(e) Clear the DTCs.

Last Modified: 3-10-2010	6.4 U	**From:** 200901
Model Year: 2010	**Model:** Corolla	**Doc ID:** RM000001XO200GX
Title: CRUISE CONTROL: CRUISE CONTROL SYSTEM: DATA LIST / ACTIVE TEST (2010 Corolla)		

DATA LIST / ACTIVE TEST

1. DATA LIST

HINT:

Using the Techstream to read the Data List allows the values or states of switches, sensors, actuators and other items to be read without removing any parts. This non-intrusive inspection can be very useful because intermittent conditions or signals may be discovered before parts or wiring is disturbed. Reading the Data List information early in troubleshooting is one way to save diagnostic time.

NOTICE:

In the table below, the values listed under "Normal Condition" are reference values. Do not depend solely on these reference values when deciding whether a part is faulty or not.

(a) Connect the Techstream to the DLC3.

(b) Turn the ignition switch to ON.

(c) Turn the Techstream on.

(d) Enter the following menus: Powertrain / Cruise Control / Data List.

(e) Read the Data List according to the display on the Techstream.

Cruise Control (ECM)

TESTER DISPLAY	MEASUREMENT ITEM/RANGE	NORMAL CONDITION	DIAGNOSTIC NOTE
CCS Vehicle Spd	Vehicle speed/min.: 0 km/h (0 mph), max.: 255 km/h (158 mph)	Actual vehicle speed	-
CCS Mem Vehicle Spd	Stored vehicle speed/min.: 0 km/h (0 mph), max.: 200 km/h (125 mph)	Actual stored vehicle speed	-
Throttle Opening Angle	Required throttle opening angle/min.: 0°, max.: 125°	Actual required throttle opening angle	-
Cruise Control	Cruise control system active condition/ON or OFF	ON: Cruise control activated OFF: Cruise control deactivated	-
Main SW M-CPU	Main SW signal (Main CPU)/ON or OFF	ON: Cruise control main switch pushed OFF: Cruise control main switch not pushed	3
CCS Ready M-CPU	Cruise control system standby condition (Main CPU)/ON or OFF	ON: Cruise control main switch (Main CPU) is SET OFF: Cruise control main switch (Main CPU) is	1

TESTER DISPLAY	MEASUREMENT ITEM/RANGE	NORMAL CONDITION	DIAGNOSTIC NOTE
		UNSET	
CCS Indicator M-CPU	Cruise indicator signal (Main CPU)/ON or OFF	ON: "CRUISE" ON OFF: "CRUISE" OFF	2
Cancel Switch	CANCEL SW signal/ON or OFF	ON: CANCEL switch ON OFF: CANCEL switch OFF	-
SET/COAST Switch	- (COAST)/SET SW signal/ON or OFF	ON: - (COAST)/SET switch ON OFF: - (COAST)/SET switch OFF	-
RES/ACC Switch	+ (ACCEL)/RES (RESUME) SW signal/ON or OFF	ON: + (ACCEL)/RES (RESUME) switch ON OFF: + (ACCEL)/RES (RESUME) switch OFF	-
Stop Light SW M-CPU*1	Stop light SW signal (Main CPU)/ON or OFF	ON: Brake pedal depressed OFF: Brake pedal released	-
Cruise Operation Status	Transmission range sensor signal/ON or OFF	For 2ZR-FE: • ON: Shift lever in D or 3 position • OFF: Shift lever except in D or 3 position For 2AZ-FE: • ON: Shift lever in D or S (5th, 4th) position • OFF: Shift lever except in D or S (5th, 4th) position	-
Brake Cancel Switch*2	Brake Cancel Signal/ON or OFF	ON: Brake pedal depressed OFF: Brake pedal released	-

*1: for 2ZR-FE

*2: for 2AZ-FE

HINT:

3 is OK but 1 is NG → ECM failure

1 is OK but 2 is NG → DTC output or ECM failure

3 is OK but cruise indicator does not turn on → CRUISE main indicator light, wire harness, or ECM failure

2. ACTIVE TEST

HINT:

Using the Techstream to perform Active Tests allows relays, VSVs, actuators and other items to be operated without removing any parts. This non-intrusive functional inspection can be very useful because intermittent

operation may be discovered before parts or wiring is disturbed. Performing Active Tests early in trouble shooting is one way to save diagnostic time. Data List information can be displayed while performing Active Tests.

(a) Connect the Techstream to the DLC3.

(b) Turn the ignition switch to ON.

(c) Turn the Techstream on.

(d) Enter the following menus: Body Electrical / Combination Meter / Active Test.

(e) Perform the Active Test according to the display on the Techstream.

HINT:

The ignition switch must be turned to ON to proceed with the Active Test using the Techstream.

Combination Meter

TESTER DISPLAY	TEST PART	CONTROL RANGE	DIAGNOSTIC NOTE
Indicat. Lamp Cruise	CRUISE main indicator light	OFF or ON	Confirm that the vehicle is stopped, engine idling

Last Modified: 3-10-2010	6.4 U	**From:** 200901
Model Year: 2010	**Model:** Corolla	**Doc ID:** RM000000ST104FX
Title: CRUISE CONTROL: CRUISE CONTROL SYSTEM: FAIL-SAFE CHART (2010 Corolla)		

FAIL-SAFE CHART

HINT:

If the following conditions are detected while the cruise control is in operation, the system clears the stored vehicle speed in the ECM and cancels the cruise control operation.

VEHICLE CONDITION	AUTO CANCEL CONDITION	RE-OPERATION CONDITION
CRUISE main indicator light blinks	• There is an open or a short in the stop light switch circuit • There is a problem with the vehicle speed signal	Turn the cruise control main switch on again
CRUISE main indicator light goes off	• There is a problem with the throttle position sensor and motor	Turn the cruise control main switch on again
CRUISE main indicator light blinks	• There is a problem with the input circuit of the stop light switch circuit • There is a problem with the cancel circuit	• Turn the cruise control main switch on again • Turn the ignition switch off then on again
CRUISE main indicator light remains on (Cruise control is canceled)	Under the following conditions, the stored vehicle speed is maintained: • The vehicle speed is lower than the low speed limit (approx. 40 km/h (25 mph)) while running with the cruise control on • The VSC system is operated	Push the cruise control main switch to + (ACCEL)/RES (RESUME)
	• The vehicle speed is lower than the stored speed by approx. 16 km/h (10 mph) or more	Push the cruise control main switch to - (COAST)/SET

Last Modified: 3-10-2010	6.4 S	**From:** 200901
Model Year: 2010	**Model:** Corolla	**Doc ID:** RM000000PLQ04PX
Title: CRUISE CONTROL: CRUISE CONTROL SYSTEM: DIAGNOSTIC TROUBLE CODE CHART (2010 Corolla)		

DIAGNOSTIC TROUBLE CODE CHART

If a trouble code is displayed during the DTC check, check the trouble areas listed for that code in the table below and proceed to the appropriate page.

Cruise Control System

DTC CODE	DETECTION ITEM	TROUBLE AREA	SEE PAGE
P0500	Vehicle Speed Sensor Malfunction	1. Open or short in speed signal circuit 2. Combination meter 3. Vehicle speed sensor 4. ECM	INFO
P0503	Vehicle Speed Sensor "A" Intermittent / Erratic / High	1. Open or short in speed signal circuit 2. Combination meter 3. Vehicle speed sensor 4. ECM	INFO
P0571	Brake Switch "A" Circuit	1. Stop light switch 2. Stop light switch circuit 3. ECM	INFO
P0575	Cruise Control Input Circuit	ECM	INFO

Last Modified: 3-10-2010	6.4 C	**From:** 200901
Model Year: 2010	**Model:** Corolla	**Doc ID:** RM000000ZRE04IX
Title: CRUISE CONTROL: CRUISE CONTROL SYSTEM: P0571: Brake Switch "A" Circuit (2010 Corolla)		

DTC	**P0571**	**Brake Switch "A" Circuit**

DESCRIPTION

When the brake pedal is depressed, the stop light switch sends a signal to the ECM. When the ECM receives this signal, it cancels the cruise control. The fail-safe function operates to enable normal driving even if there is a malfunction in the stop light signal circuit. The cancellation condition occurs when voltage is applied to terminal STP. When the brake is applied, voltage is normally applied to terminal STP of the ECM through the STOP fuse and the stop light switch, and the ECM turns the cruise control off.

DTC NO.	DTC DETECTION CONDITION	TROUBLE AREA
P0571	When voltage of STP terminal and that of ST1- terminal of ECM are less than 1 V for 0.5 sec. or more	• Stop light switch • Stop light switch circuit • ECM

WIRING DIAGRAM

w/o Smart Key System:

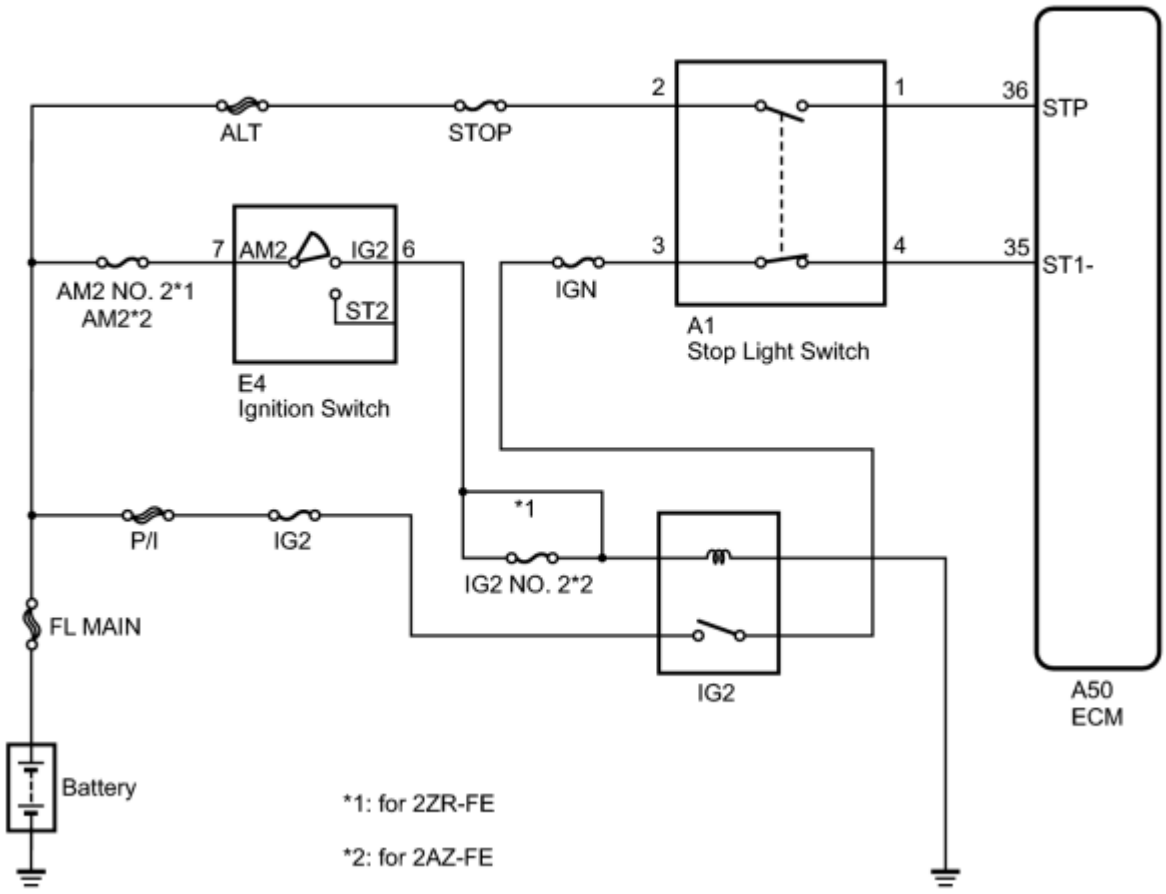

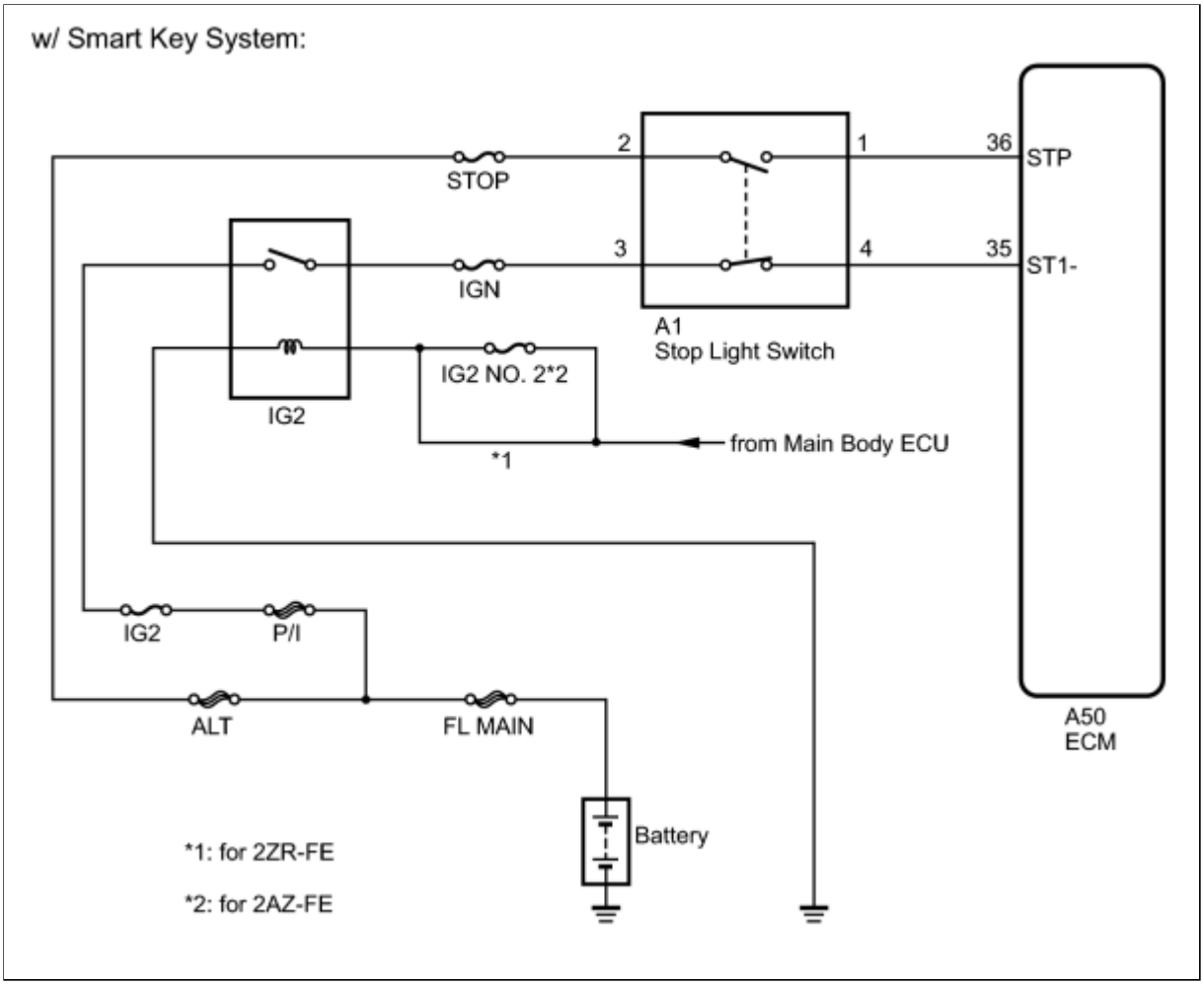

INSPECTION PROCEDURE

PROCEDURE

1.	**CHECK HARNESS AND CONNECTOR (STOP LIGHT SWITCH - BATTERY)**

(a) Disconnect the stop light switch connector.

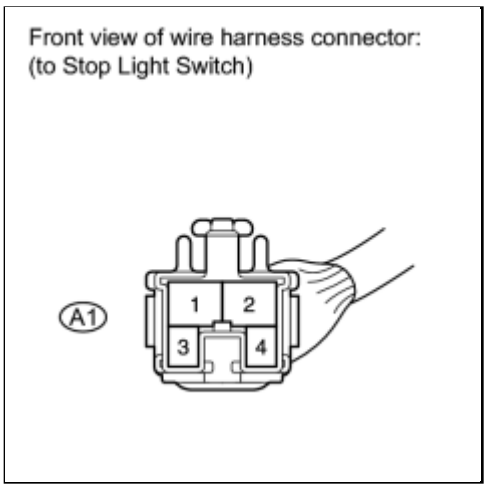

(b) Measure the voltage according to the value(s) in the table below.

Standard Voltage:

TESTER CONNECTION	CONDITION	SPECIFIED CONDITION
A1-2 - Body ground	Always	11 to 14 V
A1-3 - Body ground	Ignition switch ON	11 to 14 V

(c) Reconnect the stop light switch connector.

NG ▶ **REPAIR OR REPLACE HARNESS OR CONNECTOR**

OK ▼

2.	**INSPECT STOP LIGHT SWITCH**

(a) Remove the stop light switch INFO .

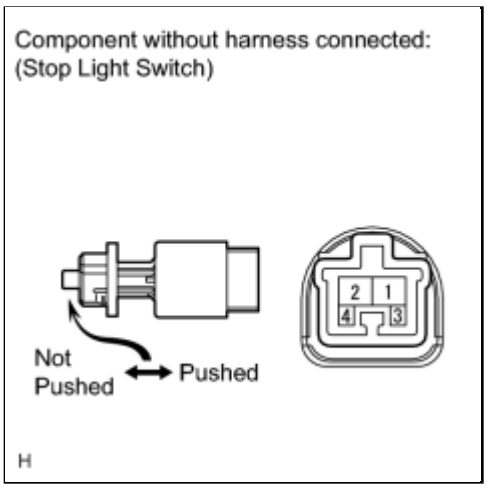

(b) Measure the resistance according to the value(s) in the table below.

Standard Resistance:

TESTER CONNECTION	SWITCH CONDITION	SPECIFIED CONDITION
1 - 2	Switch pin not pushed	Below 1 Ω
3 - 4	Switch pin not pushed	10 kΩ or higher
1 - 2	Switch pin pushed	10 kΩ or higher
3 - 4	Switch pin pushed	Below 1 Ω

(c) Install the stop light switch INFO .

NG ▶ **REPLACE STOP LIGHT SWITCH**

OK ▼

3.	**CHECK ECM**

(a) Disconnect the ECM connector.

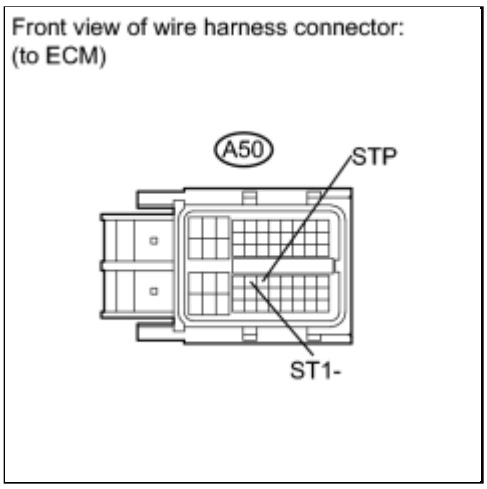

(b) Turn the ignition switch to ON.

(c) Measure the voltage according to the value(s) in the table below.

Standard Voltage:

TESTER CONNECTION	CONDITION	SPECIFIED CONDITION
A50-36 (STP) - Body ground	Brake pedal depressed	11 to 14 V
A50-36 (STP) - Body ground	Brake pedal released	Below 1 V
A50-35 (ST1-) - Body ground	Brake pedal depressed	Below 1 V
A50-35 (ST1-) - Body ground	Brake pedal released	11 to 14 V

Result:

RESULT	PROCEED TO
NG	A
OK (for 2ZR-FE)	B
OK (for 2AZ-FE)	C

(d) Reconnect the ECM connector.

C ▶ **REPLACE ECM (for 2AZ-FE)**

B ▶ **REPLACE ECM (for 2ZR-FE)**

A ▶ **REPAIR OR REPLACE HARNESS OR CONNECTOR (STOP LIGHT SWITCH - ECM)**

Last Modified: 3-10-2010	6.4 C	**From:** 200901
Model Year: 2010	**Model:** Corolla	**Doc ID:** RM000000ZRD03IX
Title: CRUISE CONTROL: CRUISE CONTROL SYSTEM: P0500,P0503: Vehicle Speed Sensor Malfunction (2010 Corolla)		

DTC	**P0500**	**Vehicle Speed Sensor Malfunction**

DTC	**P0503**	**Vehicle Speed Sensor "A" Intermittent / Erratic / High**

DESCRIPTION

The cruise control system uses the same vehicle speed signal that is sent to the ECM for the SFI system. If DTC P0500 or P0503 is detected, perform the diagnosis using the inspection procedure for DTC P0500 in the SFI system INFO for 2ZR-FE, or INFO for 2AZ-FE). The speed signal is converted for use by the cruise control system inside the ECM. Both the SFI system and the cruise control system can set DTC P0500, however, the detection conditions of the two systems are different.

DTC NO.	DTC DETECTION CONDITION	TROUBLE AREA
P0500	The vehicle speed signal from the vehicle speed sensor is cut for 0.14 sec. or more while cruise control is in operation.	• Open or short in speed signal circuit • Combination meter • Vehicle speed sensor • ECM
P0503	Momentary interruption and noise are detected when a rapid change of vehicle speed occurs while cruise control is in operation.	• Open or short in speed signal circuit • Combination meter • Vehicle speed sensor • ECM

WIRING DIAGRAM

Refer to the SFI System (for 2ZR-FE) INFO .

Refer to the SFI System (for 2AZ-FE) INFO .

INSPECTION PROCEDURE

Refer to the SFI System (for 2ZR-FE) INFO .

Refer to the SFI System (for 2AZ-FE) INFO .

Last Modified: 3-10-2010	6.4 J	**From:** 200901
Model Year: 2010	**Model:** Corolla	**Doc ID:** RM000000PLU05BX
Title: CRUISE CONTROL: CRUISE CONTROL SYSTEM: Cruise Control Switch Circuit (2010 Corolla)		

Cruise Control Switch Circuit

DESCRIPTION

The cruise control main switch operates 7 functions: SET, - (COAST), TAP-DOWN, RES (RESUME), + (ACCEL), TAP-UP, and CANCEL. The SET, TAP-DOWN, and - (COAST) functions, and the RES (RESUME), TAP-UP, and + (ACCEL) functions are operated with the same switch. The cruise control main switch is an automatic return type switch which turns on only while operating it in each direction and turns off after releasing it. The internal contact point of the cruise control main switch is turned on with the switch operation. Then the ECM reads the voltage value that has been changed by the switch operation to control SET, - (COAST), RES (RESUME), + (ACCEL), and CANCEL.

WIRING DIAGRAM

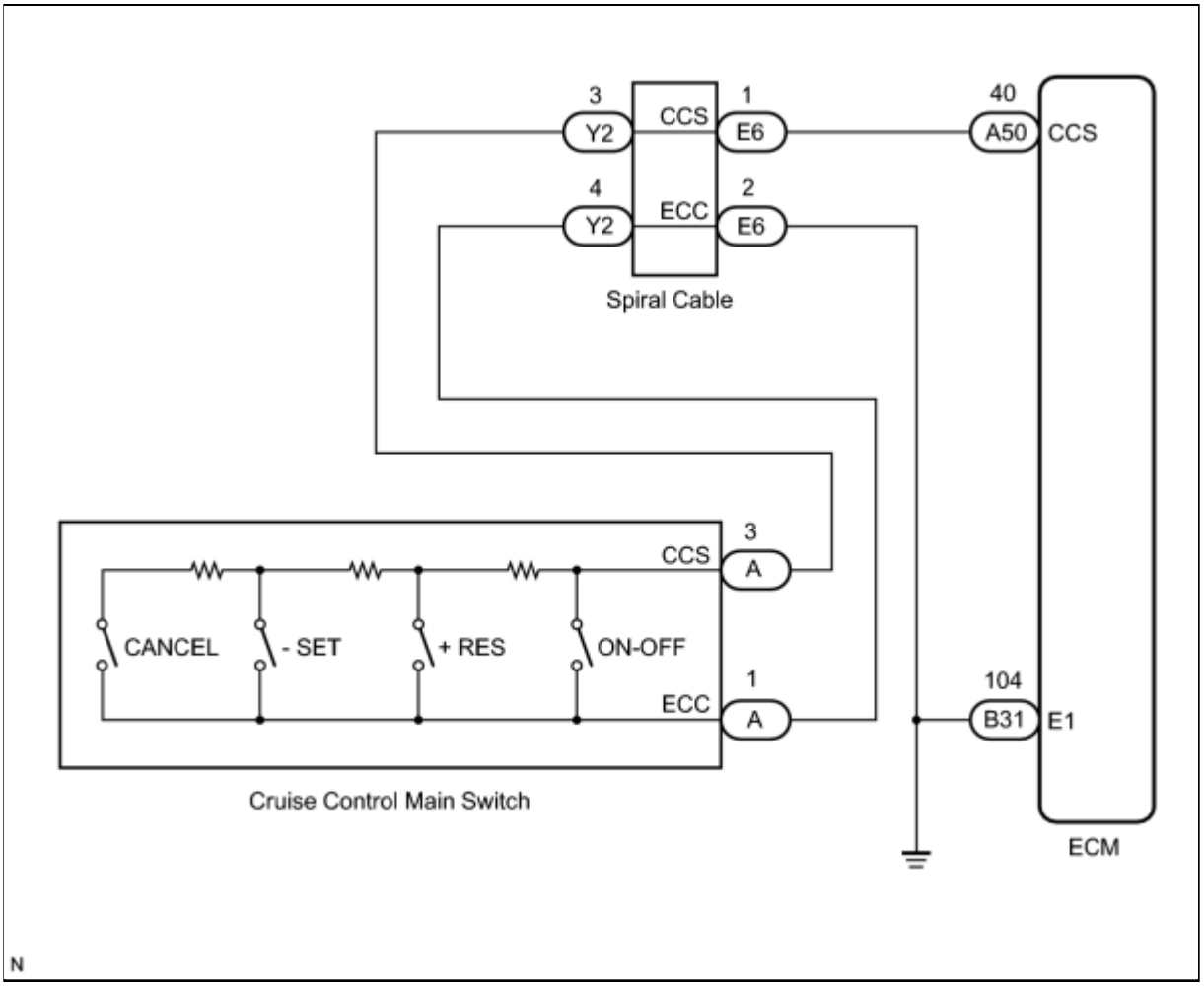

INSPECTION PROCEDURE

PROCEDURE

1.	**READ VALUE USING TECHSTREAM**

(a) Connect the Techstream to the DLC3.

(b) Turn the ignition switch to ON.

(c) Turn the Techstream on.

(d) Enter the following menus: Powertrain / Cruise Control / Data List.

(e) Check the Data List for proper functioning of the cruise control main switch.

Cruise Control (ECM)

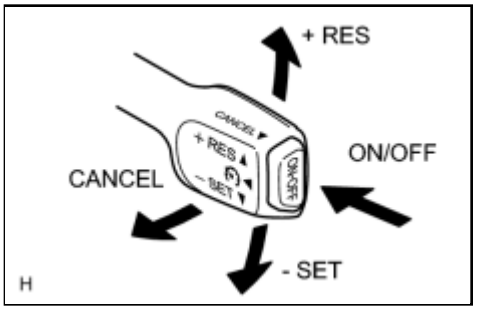

TESTER DISPLAY	MEASUREMENT ITEM/RANGE	NORMAL CONDITION	DIAGNOSTIC NOTE
Main SW M-CPU	Main switch signal (Main CPU)/ON or OFF	ON: Cruise control main switch pushed OFF: Cruise control main switch not pushed	-
Cancel SW	CANCEL switch signal/ON or OFF	ON: CANCEL switch on OFF: CANCEL switch off	-
SET/COAST SW	- (COAST)/SET switch signal/ON or OFF	ON: - SET switch on OFF: - SET switch off	-
RES/ACC SW	+ (ACCEL)/RES (RESUME) switch signal/ON or OFF	ON: + RES switch on OFF: + RES switch off	-

OK:

When the cruise control main switch is operated, the display changes as shown above.

Result:

RESULT	PROCEED TO
OK	A
NG (All items are defective)	B
NG (1 to 3 items are defective)	C

C ▶ **REPLACE CRUISE CONTROL MAIN SWITCH**

B ▶ **INSPECT CRUISE CONTROL MAIN SWITCH**

A ▶ **PROCEED TO NEXT SUSPECTED AREA SHOWN IN PROBLEM SYMPTOMS TABLE**

2.	**INSPECT CRUISE CONTROL MAIN SWITCH**

(a) Remove the cruise control main switch INFO .

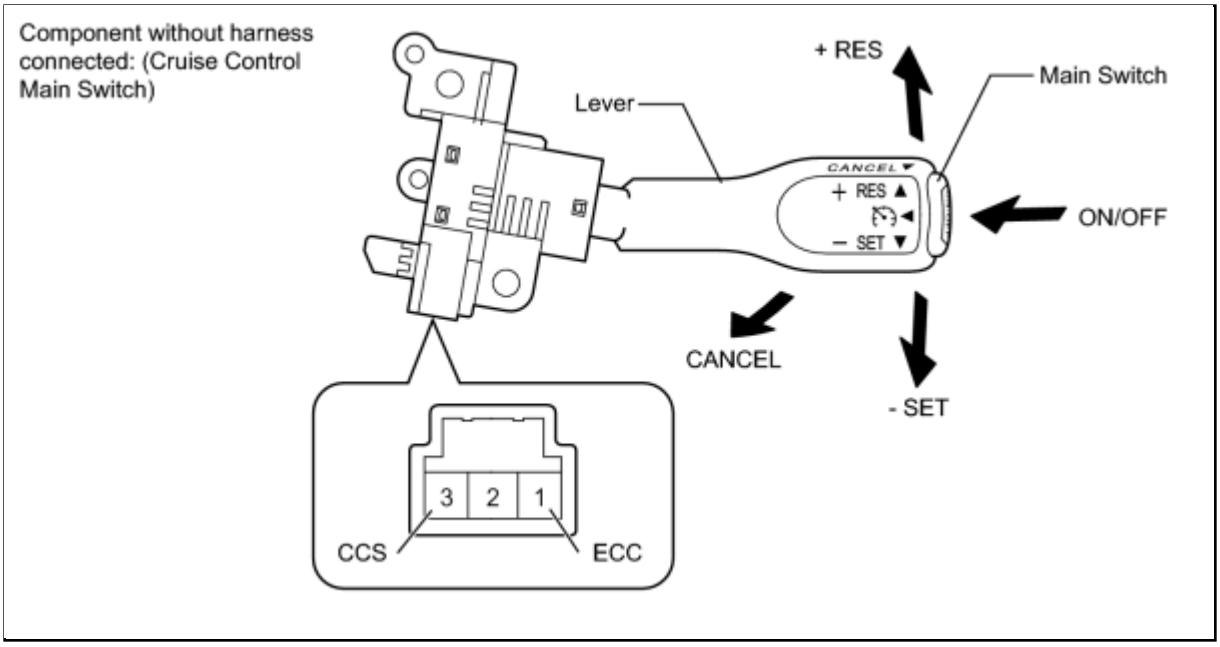

(b) Measure the resistance according to the value(s) in the table below.

Standard Resistance:

TESTER CONNECTION	SWITCH CONDITION	SPECIFIED CONDITION
1 (ECC) - 3 (CCS)	Main Switch off*1	1 MΩ or higher
	Main Switch on	Below 2.5 Ω
	+ RES	235 to 245 Ω
	- SET	617 to 643 Ω
	CANCEL	1509 to 1571 Ω

*1: Lever is in neutral position

(c) Install the cruise control main switch INFO.

NG ▶ **REPLACE CRUISE CONTROL MAIN SWITCH**

OK ▼

3.	**CHECK HARNESS AND CONNECTOR (CRUISE CONTROL MAIN SWITCH - SPIRAL CABLE)**

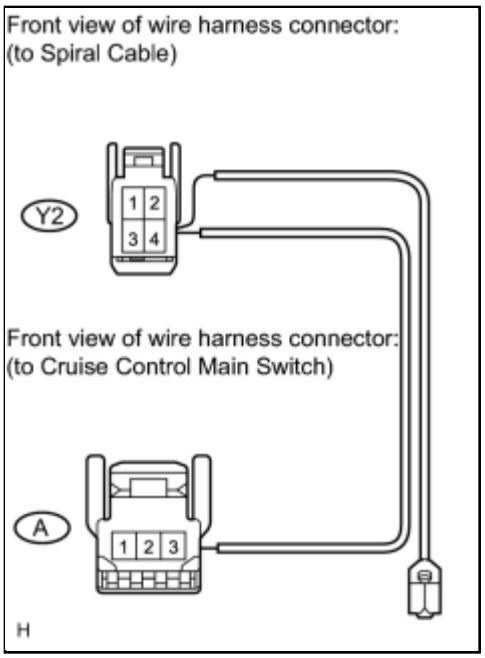

(a) Disconnect the Y2 connector from the spiral cable.

(b) Measure the resistance according to the value(s) in the table below.

Standard Resistance:

TESTER CONNECTION	CONDITION	SPECIFIED CONDITION
A-1 - Y2-4	Always	Below 1 Ω
A-3 - Y2-3	Always	Below 1 Ω

(c) Reconnect the Y2 connector from the spiral cable.

NG ▶ **REPAIR OR REPLACE HARNESS OR CONNECTOR**

OK ▼

4.	**CHECK SPIRAL CABLE**

NOTICE:

The spiral cable is an important part of the SRS airbag system. Incorrect removal or installation of the spiral cable may cause airbag deployment. Be sure to read the page shown in the brackets.

HINT:

- Removal INFO
- Installation INFO

(a) Remove the spiral cable INFO.

(b) Measure the resistance according to the value(s) in the table below.

Standard Resistance:

TESTER CONNECTION	CONDITION	SPECIFIED CONDITION

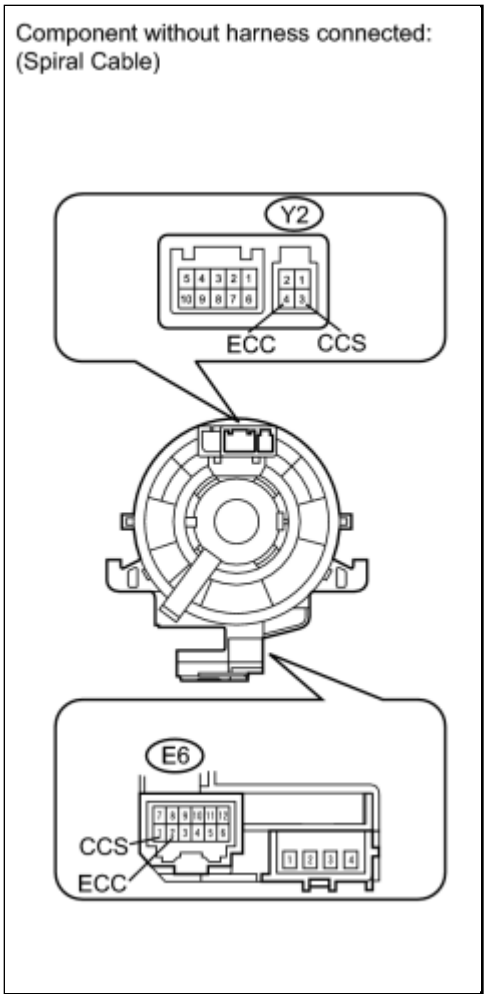

TESTER CONNECTION	CONDITION	SPECIFIED CONDITION
Y2-3 (CCS) - E6-1 (CCS)	The spiral cable position is center	Below 1 Ω
	The spiral cable position is 2.5 rotations to the left	
	The spiral cable position is 2.5 rotations to the right	
Y2-4 (ECC) - E6-2 (ECC)	The spiral cable position is center	Below 1 Ω
	The spiral cable position is 2.5 rotations to the left	
	The spiral cable position is 2.5 rotations to the right	

HINT:

The spiral cable makes a maximum of approximately 5 rotations.

(c) Install the spiral cable.

NG ▶ **REPLACE SPIRAL CABLE**

OK ▼

5.	**CHECK HARNESS AND CONNECTOR (SPIRAL CABLE - ECM, BODY GROUND)**

(a) Disconnect the spiral cable connector.

Front view of wire harness connector:
(to Spiral Cable)



Front view of wire harness connector:
(to ECM)

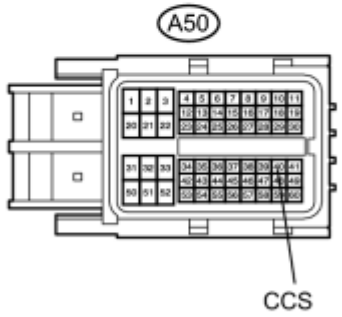

(b) Disconnect the ECM connector.

(c) Measure the resistance according to the value(s) in the table below.

Standard Resistance:

TESTER CONNECTION	CONDITION	SPECIFIED CONDITION
E6-1 (CCS) - A50-40 (CCS)	Always	Below 1 Ω
A50-40 (CCS) - Body ground	Always	10 kΩ or higher
E6-2 (ECC) - Body ground	Always	Below 1 Ω

Result:

RESULT	PROCEED TO
NG	A
OK (for 2ZR-FE)	B
OK (for 2AZ-FE)	C

(d) Reconnect the ECM connector.

(e) Reconnect the spiral cable connector.

C ▶ **REPLACE ECM (for 2AZ-FE)**

B ▶ **REPLACE ECM (for 2ZR-FE)**

A ▶ **REPAIR OR REPLACE HARNESS OR CONNECTOR**

Last Modified: 3-10-2010	6.4 J	**From:** 200901
Model Year: 2010	**Model:** Corolla	**Doc ID:** RM000000ZAN01KX
Title: CRUISE CONTROL: CRUISE CONTROL SYSTEM: Clutch Switch Circuit (2010 Corolla)		

Clutch Switch Circuit

DESCRIPTION

Clutch switch circuit inspection is necessary for M/T vehicles.

When the clutch pedal is released, the ECM receives positive (+) battery voltage through the ECU-IG No. 1 fuse. While depressing the clutch pedal, the clutch switch sends a signal to terminal D of the ECM. The ECM cancels cruise control when terminal D receives the signal.

WIRING DIAGRAM

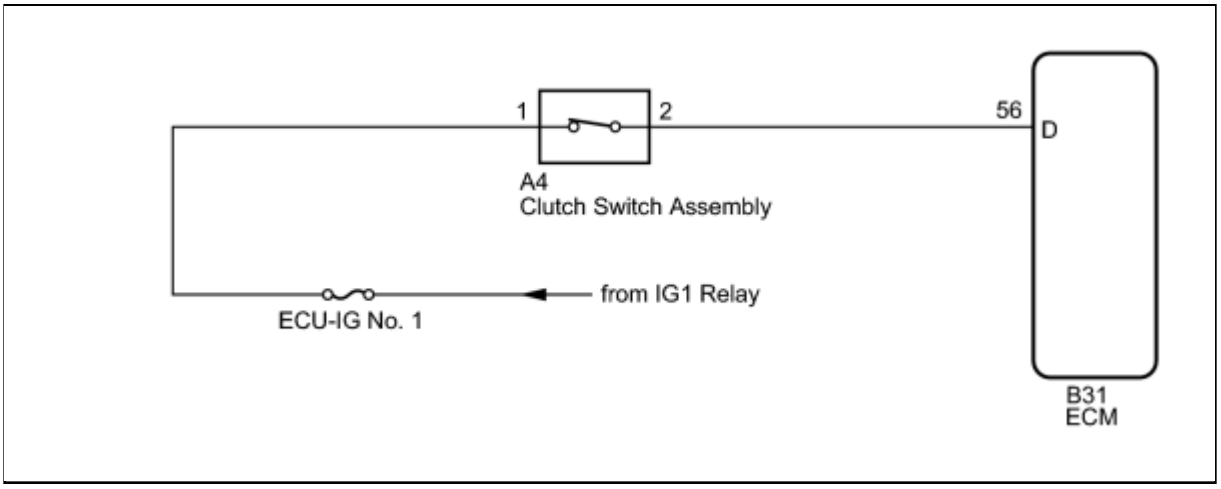

INSPECTION PROCEDURE

PROCEDURE

1.	**INSPECT ECM**

(a) Disconnect the ECM connector.

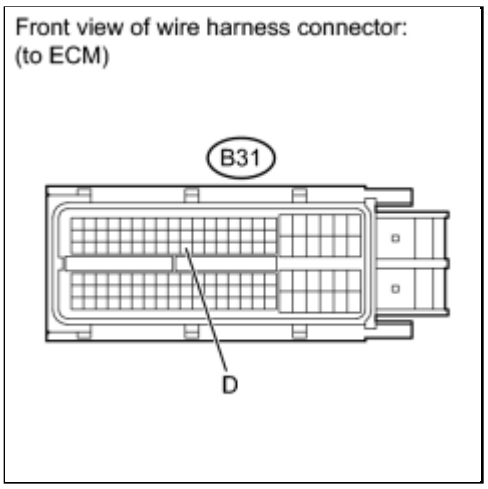

(b) Turn the ignition switch to ON.

(c) Measure the voltage according to the value(s) in the table below.

Standard Voltage:

TESTER CONNECTION	CONDITION	SPECIFIED CONDITION
B31-56 (D) - Body ground	Clutch pedal depressed	Below 1 V
	Clutch pedal released	11 to 14 V

(d) Reconnect the ECM connector.

NG ▶ **INSPECT CLUTCH SWITCH ASSEMBLY**

OK ▶ **PROCEED TO NEXT SUSPECTED AREA SHOWN IN PROBLEM SYMPTOMS TABLE**

2.	**INSPECT CLUTCH SWITCH ASSEMBLY**

(a) Turn the ignition switch off.

(b) Remove the clutch switch assembly INFO .

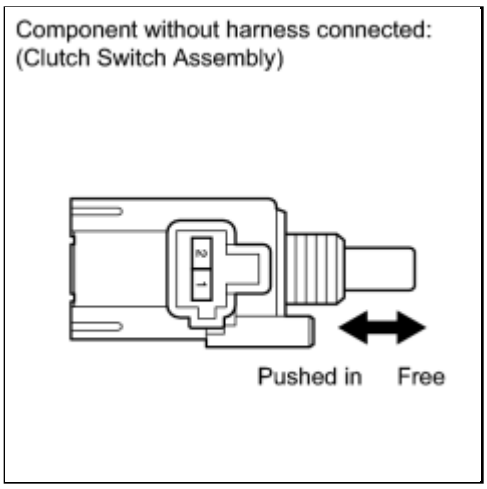

(c) Measure the resistance according to the value(s) in the table below.

Standard Resistance:

TESTER CONNECTION	SWITCH CONDITION	SPECIFIED CONDITION
1 - 2	Switch pin free	10 kΩ or higher
	Switch pin pushed in	Below 1 Ω

(d) Install the clutch switch assembly INFO .

NG ▶ **REPLACE CLUTCH SWITCH ASSEMBLY**

OK ▼

3.	**CHECK HARNESS AND CONNECTOR (ECM - CLUTCH SWITCH ASSEMBLY)**

(a) Measure the resistance according to the value(s) in the table below.

Standard Resistance:

TESTER CONNECTION	CONDITION	SPECIFIED CONDITION
B31-56 (D) - A4-2	Always	Below 1 Ω
B31-56 (D) - Body ground	Always	10 kΩ or higher

Front view of wire harness connector:
(to ECM)

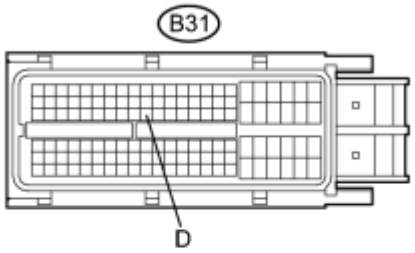

Front view of wire harness connector:
(to Clutch Switch Assembly)

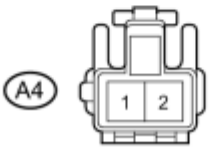

NG ▶ **REPAIR OR REPLACE HARNESS OR CONNECTOR (ECM - CLUTCH SWITCH ASSEMBLY)**

OK ▶ **REPAIR OR REPLACE HARNESS OR CONNECTOR (BATTERY - CLUTCH SWITCH ASSEMBLY)**

Last Modified: 3-10-2010	6.4 C	**From:** 200901
Model Year: 2010	**Model:** Corolla	**Doc ID:** RM000000ZRF039X
Title: CRUISE CONTROL: CRUISE CONTROL SYSTEM: P0575: Cruise Control Input Circuit (2010 Corolla)		

DTC	**P0575**	**Cruise Control Input Circuit**

DESCRIPTION

This DTC indicates the internal abnormalities of the ECM.

DTC NO.	DTC DETECTION CONDITION	TROUBLE AREA
P0575	When either of the following conditions is met: • STP signals input to the ECM supervisory CPU and control ECU are different for 0.15 seconds or more • 0.4 seconds have passed after cruise cancel input signal (STP input) is input to the ECM	ECM

HINT:

The ECM receives signals from each sensor to control all functions of the cruise control system. When a trouble code is detected, the fail-safe function remains on until the ignition switch is turned off.

INSPECTION PROCEDURE

PROCEDURE

1.	**REPLACE ECM**

(a) Replace the ECM INFO for 2ZR-FE, INFO for 2AZ-FE).

NEXT ▶ **END**

Last Modified: 3-10-2010	6.4 J	**From:** 200901
Model Year: 2010	**Model:** Corolla	**Doc ID:** RM000000PLV053X
Title: CRUISE CONTROL: CRUISE CONTROL SYSTEM: Cruise Main Indicator Light Circuit (2010 Corolla)		

Cruise Main Indicator Light Circuit

DESCRIPTION

- The ECM detects a cruise control switch signal and sends it to the combination meter through CAN. Then the CRUISE main indicator light comes on.
- The CRUISE main indicator light circuit uses CAN for communication. If there is a malfunction in this circuit, check for DTCs in the CAN Communication System before troubleshooting this circuit INFO .

INSPECTION PROCEDURE

PROCEDURE

1.	**PERFORM ACTIVE TEST USING TECHSTREAM**

(a) Connect the Techstream to the DLC3.

(b) Turn the ignition switch to ON.

(c) Turn the Techstream on.

(d) Enter the following menus: Body Electrical / Combination Meter / Active Test.

(e) Check the CRUISE main indicator light by performing the Active Test.

Combination Meter:

TESTER DISPLAY	TEST PART	CONTROL RANGE	DIAGNOSTIC NOTE
Indicat. Lamp Cruise	CRUISE main indicator light	OFF or ON	Confirm that the vehicle is stopped, engine idling

OK:

Indicator light blinks/goes off.

NG ▶ **REPLACE COMBINATION METER**

OK

2.	READ VALUE USING TECHSTREAM

(a) Connect the Techstream to the DLC3.

(b) Turn the ignition switch to ON.

(c) Turn the Techstream on.

(d) Enter the following menus: Powertrain / Cruise Control / Data List.

(e) Check the Data List for proper functioning of the CRUISE main indicator light.

Cruise Control (ECM):

TESTER DISPLAY	MEASUREMENT ITEM/RANGE	NORMAL CONDITION	DIAGNOSTIC NOTE
CCS Indicator M-CPU	Cruise indicator signal (Main CPU)/ON or OFF	ON: "CRUISE" on OFF: "CRUISE" off	-

OK:

When the cruise control main switch is operated, the display changes as shown above.

Result:

RESULT	PROCEED TO
OK	A
NG (for 2ZR-FE)	B
NG (for 2AZ-FE)	C

C ▶ **REPLACE ECM (for 2AZ-FE)**

B ▶ **REPLACE ECM (for 2ZR-FE)**

A ▶ **PROCEED TO NEXT SUSPECTED AREA SHOWN IN PROBLEM SYMPTOMS TABLE**

Last Modified: 3-10-2010	6.4 J	**From:** 200901
Model Year: 2010	**Model:** Corolla	**Doc ID:** RM000000V6104IX
Title: CRUISE CONTROL: CRUISE CONTROL SYSTEM: TC and CG Terminal Circuit (2010 Corolla)		

TC and CG Terminal Circuit

DESCRIPTION

Connecting terminals TC and CG of the DLC3 causes the system to enter self-diagnostic mode. If a malfunction is present, the MIL will blink.

HINT:

When a particular warning light remains blinking, a ground short in the wiring of terminal TC of the DLC3 or an internal ground short in the relevant ECU is suspected.

WIRING DIAGRAM

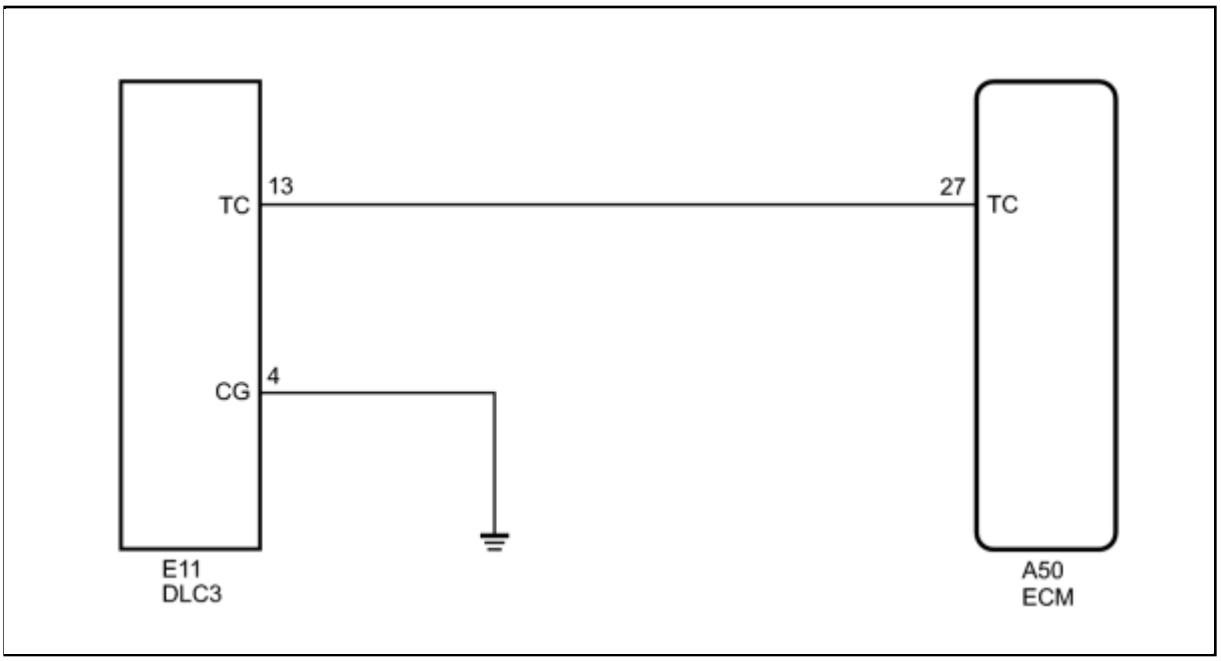

INSPECTION PROCEDURE

PROCEDURE

1.	**CHECK HARNESS AND CONNECTOR (TERMINAL TC of DLC3 - ECM)**

(a) Disconnect the ECM connector.

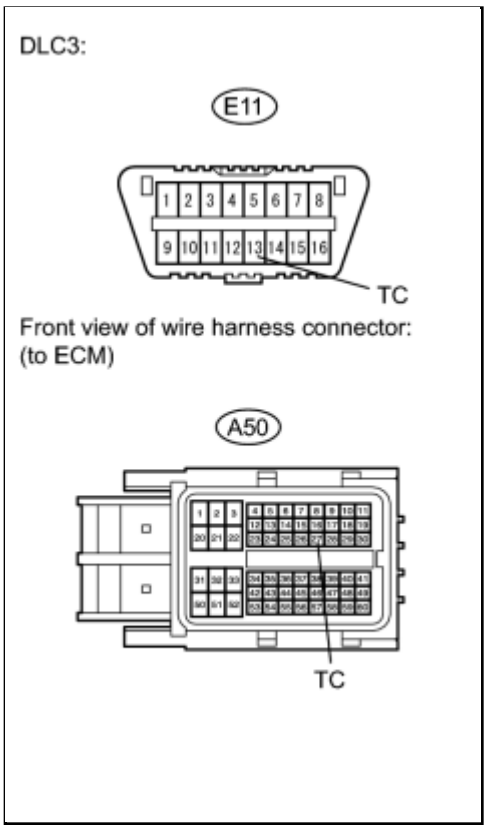

(b) Measure the resistance according to the value(s) in the table below.

Standard Resistance:

TESTER CONNECTION	CONDITION	SPECIFIED CONDITION
A50-27 (TC) - E11-13 (TC)	Always	Below 1 Ω

(c) Reconnect the ECM connector.

NG ▶ **REPAIR OR REPLACE HARNESS OR CONNECTOR (DLC3 - ECM)**

OK ▼

2.	**CHECK HARNESS AND CONNECTOR (TERMINAL CG of DLC3 - BODY GROUND)**

(a) Measure the resistance according to the value(s) in the table below.

Standard Resistance:

TESTER CONNECTION	CONDITION	SPECIFIED CONDITION
E11-4 (CG) - Body ground	Always	Below 1 Ω

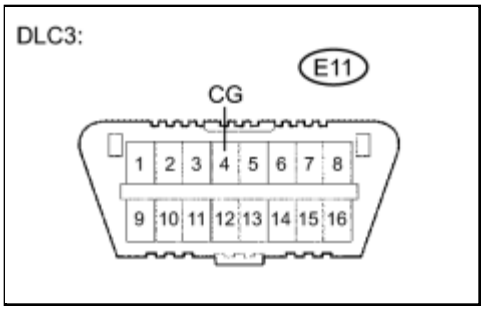

NG ▶ **REPAIR OR REPLACE HARNESS OR CONNECTOR (DLC3 - BODY GROUND)**

OK ▼

3.	CHECK HARNESS AND CONNECTOR (TERMINAL TC of DLC3 - BODY GROUND)

(a) Measure the resistance according to the value(s) in the table below.

Standard Resistance:

TESTER CONNECTION	CONDITION	SPECIFIED CONDITION
E11-13 (TC) - Body ground	Always	10 kΩ or higher

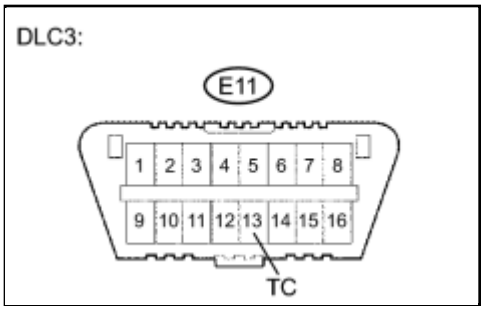

NG ▶ **REPAIR OR REPLACE HARNESS OR CONNECTOR OR EACH ECU**

OK ▶ **PROCEED TO NEXT SUSPECTED AREA SHOWN IN PROBLEM SYMPTOMS**

Last Modified: 3-10-2010	6.4 K	**From:** 200901
Model Year: 2010	**Model:** Corolla	**Doc ID:** RM0000012OC01AX
Title: 2AZ-FE EMISSION CONTROL: CANISTER: COMPONENTS (2010 Corolla)		

COMPONENTS

ILLUSTRATION

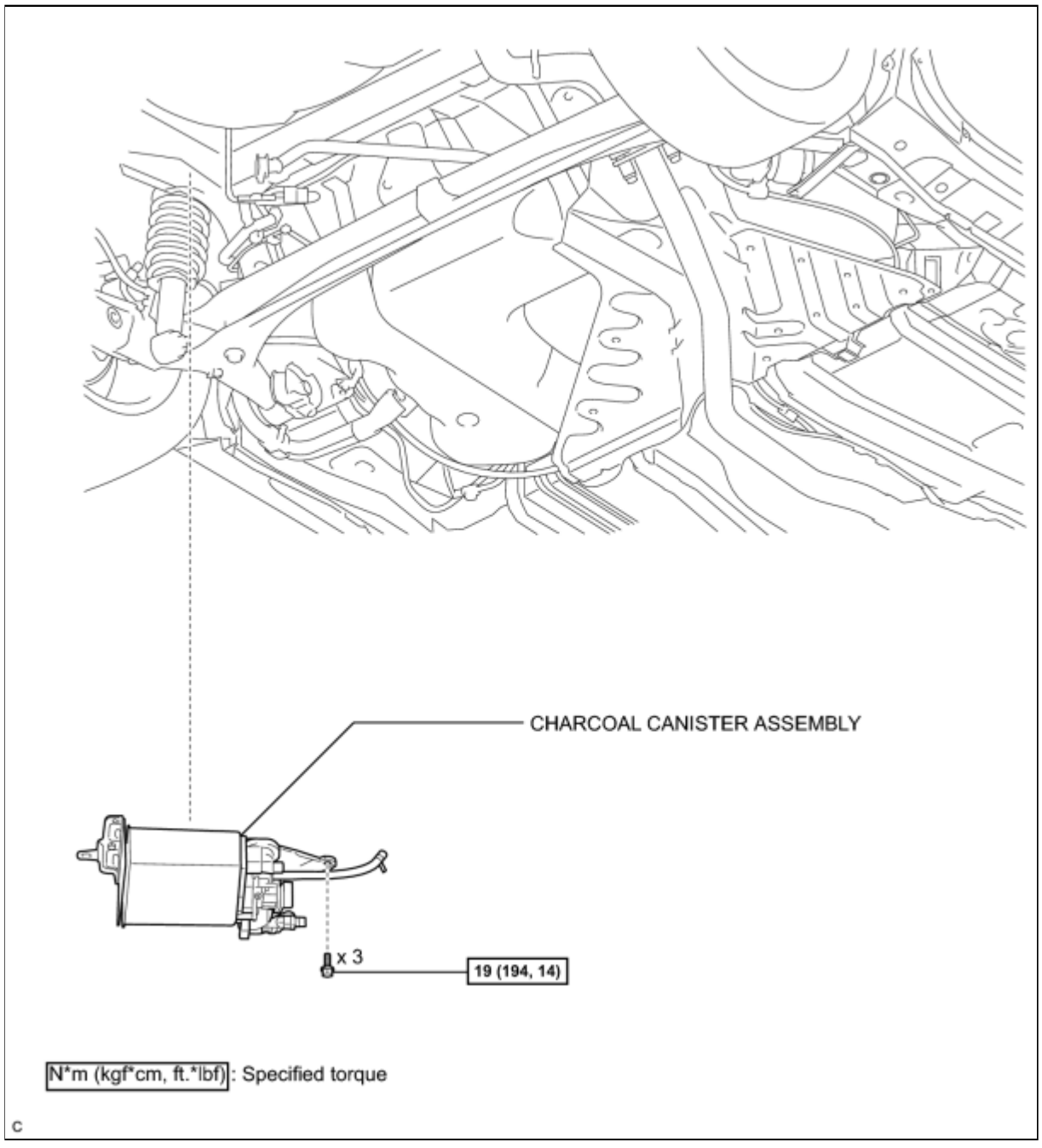

Last Modified: 3-10-2010	6.4 A	**From:** 200901
Model Year: 2010	**Model:** Corolla	**Doc ID:** RM000001OOG01GX
Title: 2AZ-FE EMISSION CONTROL: CANISTER: REMOVAL (2010 Corolla)		

REMOVAL

1. REMOVE CHARCOAL CANISTER ASSEMBLY

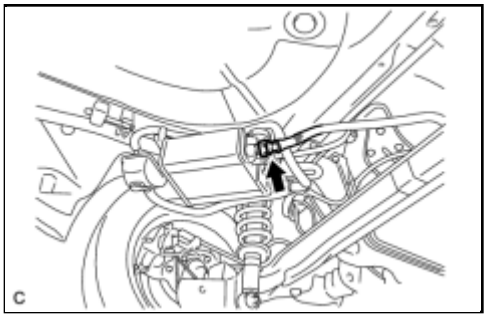

(a) Disconnect the fuel tank vent hose from the charcoal canister assembly.

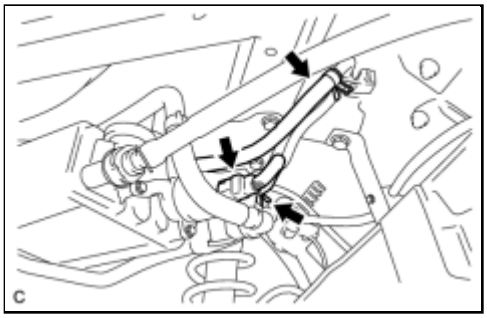

(b) Disconnect the vapor pressure sensor connector.

(c) Disconnect the wire harness clamp.

(d) Disconnect the purge line hose.

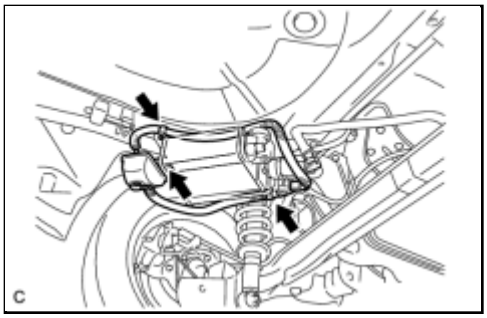

(e) Disconnect the charcoal canister filter sub-assembly from the charcoal canister assembly.

(f) Remove the 3 bolts and charcoal canister assembly.

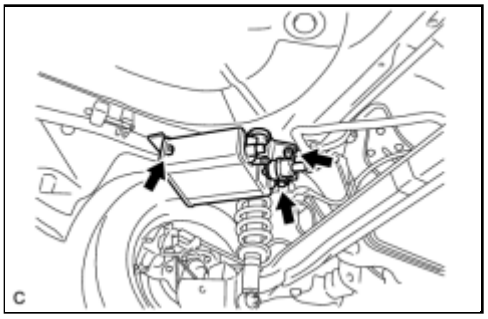
C

Last Modified: 3-10-2010	6.4 G	**From:** 200901
Model Year: 2010	**Model:** Corolla	**Doc ID:** RM0000012OB01CX
Title: 2AZ-FE EMISSION CONTROL: CANISTER: INSPECTION (2010 Corolla)		

INSPECTION

1. INSPECT CHARCOAL CANISTER ASSEMBLY

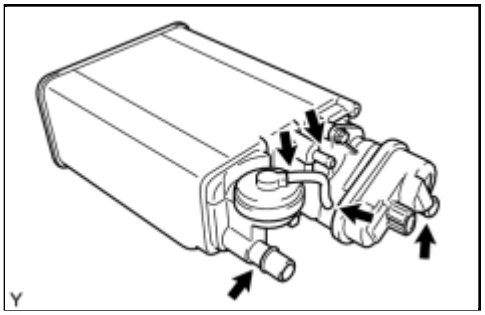

(a) Visually check the charcoal canister for cracks or damage.

If cracks or damage are found, replace the charcoal canister assembly.

(b) Check charcoal canister operation.

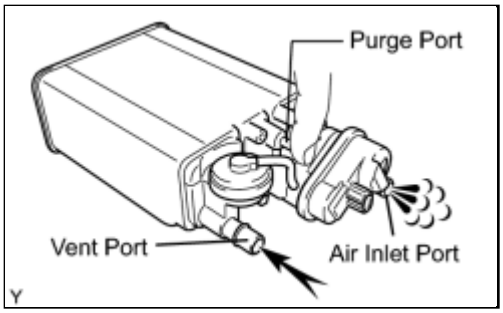

(1) With the purge port closed, blow 1.10 kPa (11.2 gf/cm2, 0.16 psi) of air into the vent port, and check that air flows from the air inlet port.

If the result is not as specified, replace the charcoal canister assembly.

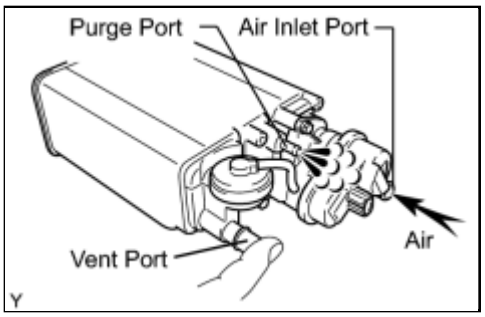

(2) With the vent port closed, blow 1.10 kPa (11.2 gf/cm2, 0.16 psi) of air into the air inlet port, and check that air flows from the purge port.

If the result is not as specified, replace the charcoal canister assembly.

(c) Check for air leakage.

(1) With the purge port and air inlet port closed, apply 19.6 kPa (0.2 kgf/cm2, 2.81 psi) of pressurized air into the

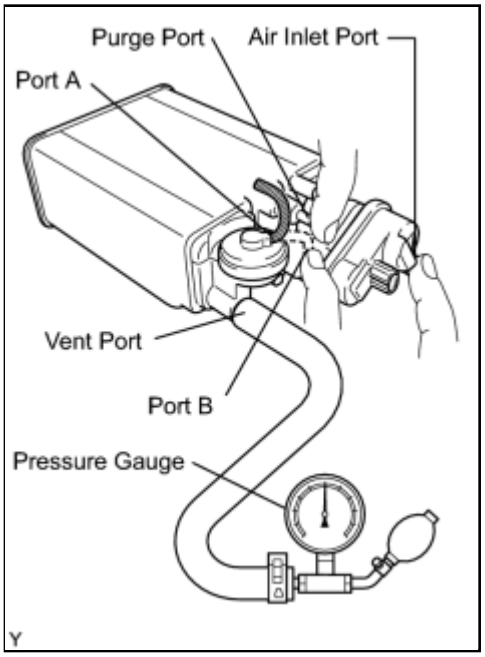

vent port, then confirm that pressure is retained for 1 minute.

If the result is not as specified, replace the charcoal canister assembly.

Last Modified: 3-10-2010	6.4 A	**From:** 200901
Model Year: 2010	**Model:** Corolla	**Doc ID:** RM000001OOD01RX
Title: 2AZ-FE EMISSION CONTROL: CANISTER: INSTALLATION (2010 Corolla)		

INSTALLATION

1. INSTALL CHARCOAL CANISTER ASSEMBLY

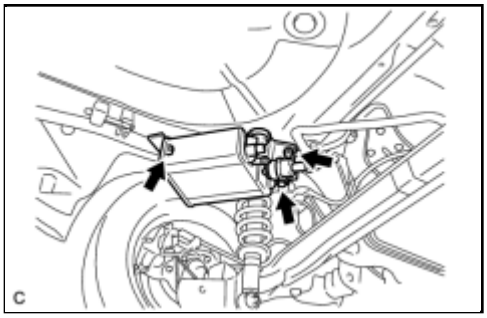

(a) Install the charcoal canister assembly with the 3 bolts.

Torque: 19 N·m (194 kgf·cm, 14ft·lbf)

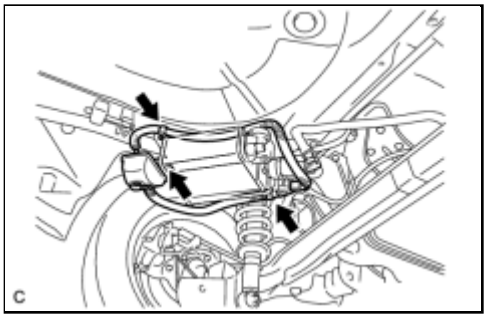

(b) Connect the the charcoal canister filter sub-assembly to the charcoal canister assembly.

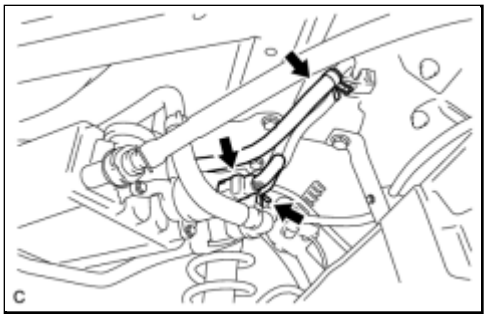

(c) Connect the purge line hose.

(d) Connect the wire harness clamp.

(e) Connect the vapor pressure sensor connector.

(f) Connect the fuel tank vent hose to the charcoal canister.

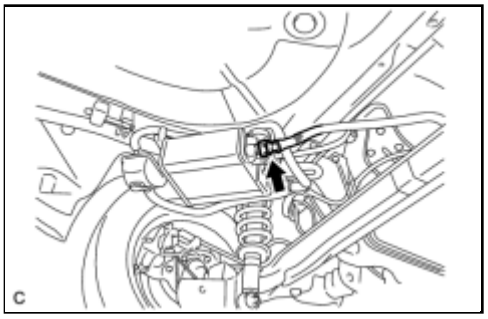
C

Last Modified: 3-10-2010	6.4 K	**From:** 200901
Model Year: 2010	**Model:** Corolla	**Doc ID:** RM0000012OC019X
Title: 2ZR-FE EMISSION CONTROL: CANISTER: COMPONENTS (2010 Corolla)		

COMPONENTS

ILLUSTRATION

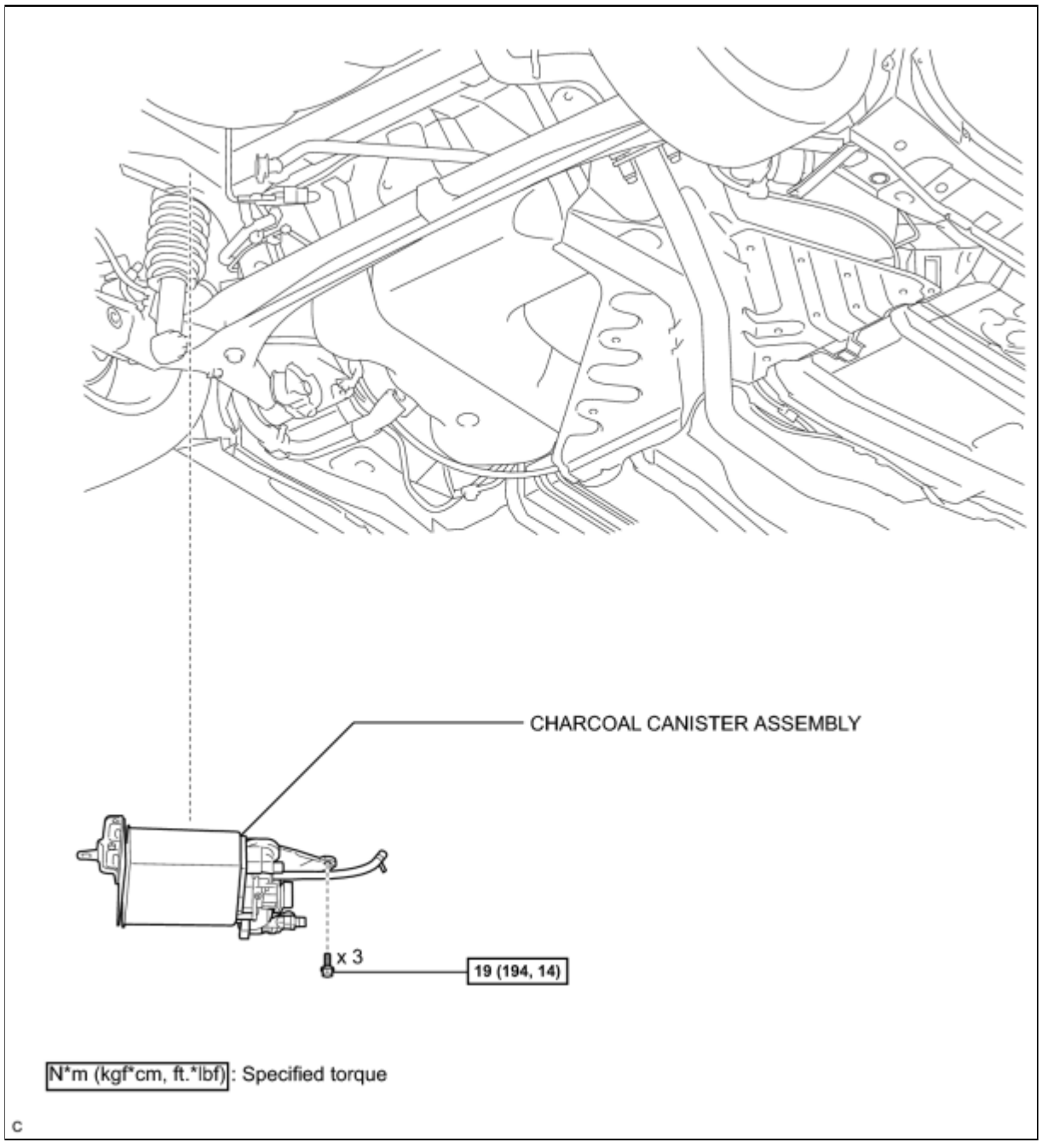

Last Modified: 3-10-2010	6.4 A	**From:** 200901
Model Year: 2010	**Model:** Corolla	**Doc ID:** RM000001OOG01FX
Title: 2ZR-FE EMISSION CONTROL: CANISTER: REMOVAL (2010 Corolla)		

REMOVAL

1. REMOVE CHARCOAL CANISTER ASSEMBLY

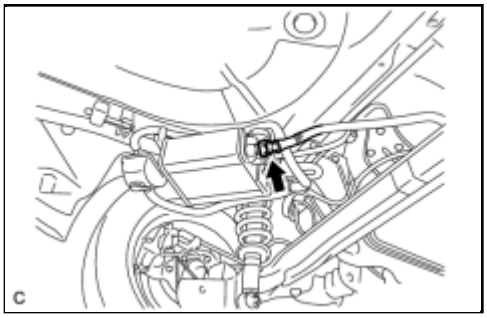

(a) Disconnect the fuel tank vent hose from the charcoal canister assembly.

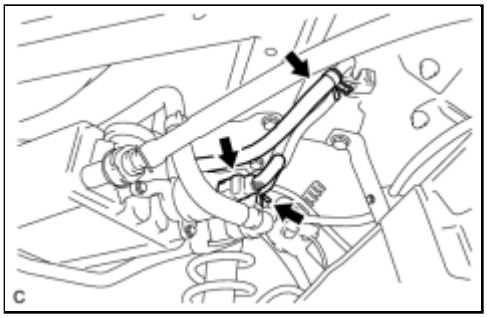

(b) Disconnect the vapor pressure sensor connector.

(c) Disconnect the wire harness clamp.

(d) Disconnect the purge line hose from the charcoal canister assembly.

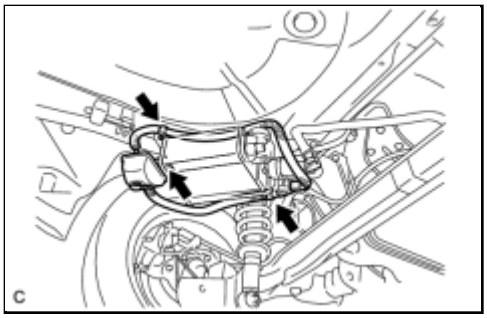

(e) Disconnect the charcoal canister filter sub-assembly from the charcoal canister assembly.

(f) Remove the 3 bolts and charcoal canister.

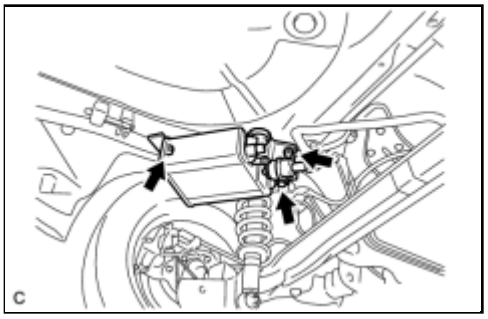
C

Last Modified: 3-10-2010	6.4 G	**From:** 200901
Model Year: 2010	**Model:** Corolla	**Doc ID:** RM0000012OB01BX
Title: 2ZR-FE EMISSION CONTROL: CANISTER: INSPECTION (2010 Corolla)		

INSPECTION

1. INSPECT CHARCOAL CANISTER ASSEMBLY

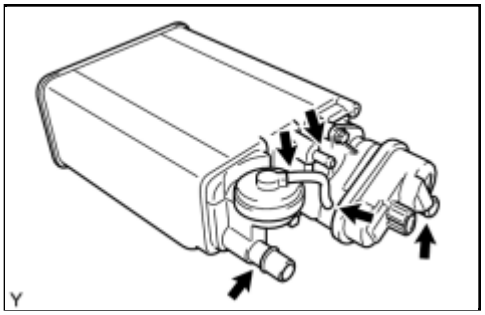

(a) Visually check the charcoal canister for cracks or damage.

If cracks or damage are found, replace the charcoal canister assembly.

(b) Check charcoal canister operation.

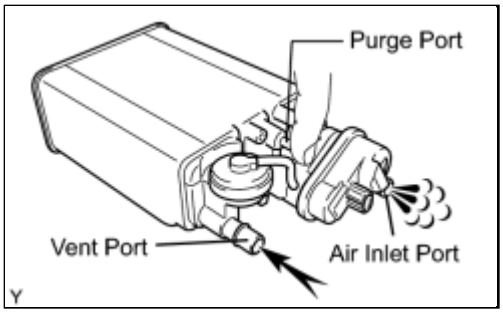

(1) With the purge port closed, blow 1.10 kPa (11.2 gf/cm2, 0.16 psi) of air into the vent port, and check that air flows from the air inlet port.

If the result is not as specified, replace the charcoal canister assembly.

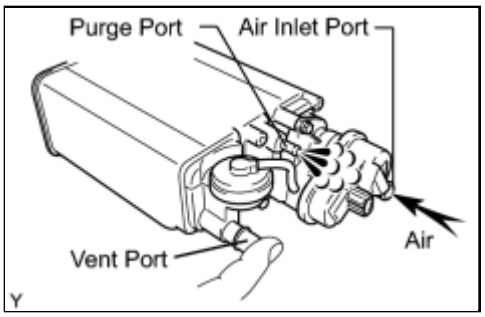

(2) With the vent port closed, blow 1.10 kPa (11.2 gf/cm2, 0.16 psi) of air into the air inlet port, and check that air flows from the purge port.

If the result is not as specified, replace the charcoal canister assembly.

(c) Check for air leakage.

(1) With the purge port and air inlet port closed, apply 19.6 kPa (0.2 kgf/cm2, 2.81 psi) of pressurized air into the

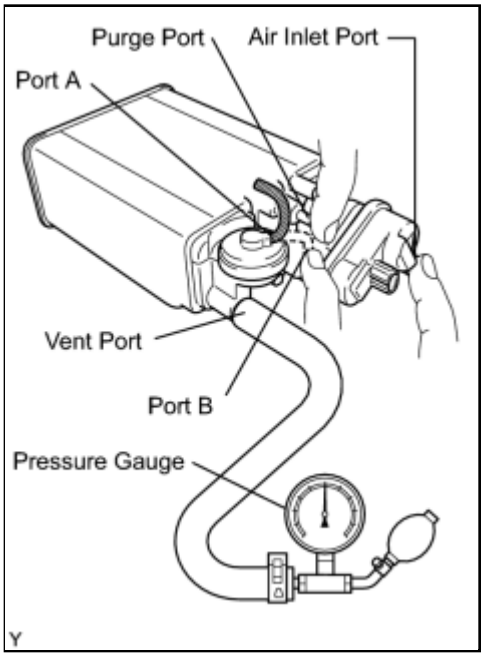

vent port, then confirm that pressure is retained for 1 minute.

If the result is not as specified, replace the charcoal canister assembly.

Last Modified: 3-10-2010	6.4 A	**From:** 200901
Model Year: 2010	**Model:** Corolla	**Doc ID:** RM000001OOD01QX
Title: 2ZR-FE EMISSION CONTROL: CANISTER: INSTALLATION (2010 Corolla)		

INSTALLATION

1. INSTALL CHARCOAL CANISTER ASSEMBLY

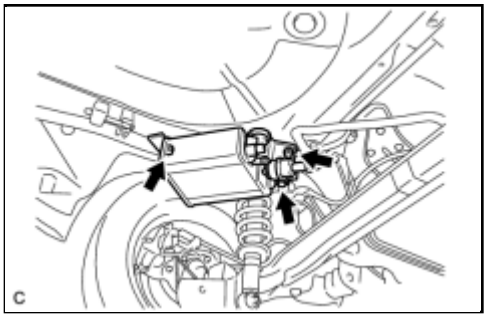

(a) Install the charcoal canister assembly with the 3 bolts.

Torque: 19 N·m (194 kgf·cm, 14ft·lbf)

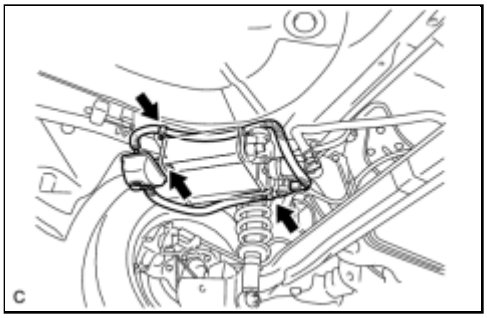

(b) Connect the charcoal canister filter sub-assembly to the charcoal canister assembly.

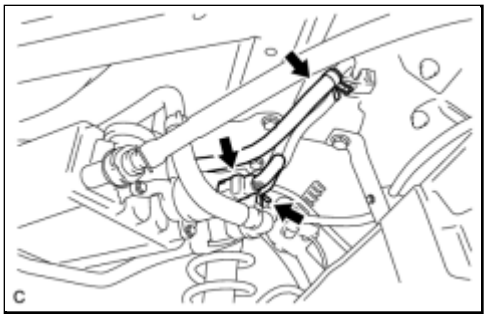

(c) Connect the purge line hose.

(d) Connect the wire harness clamp.

(e) Connect the vapor pressure sensor connector.

(f) Connect the fuel tank vent hose to the charcoal canister assembly.

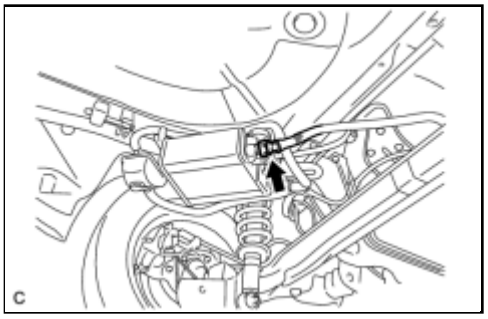
C

Last Modified: 3-10-2010	6.4 R	**From:** 200901
Model Year: 2010	**Model:** Corolla	**Doc ID:** RM0000012NW00XX
Title: 2AZ-FE EMISSION CONTROL: EMISSION CONTROL SYSTEM: PARTS LOCATION (2010 Corolla)		

PARTS LOCATION

ILLUSTRATION

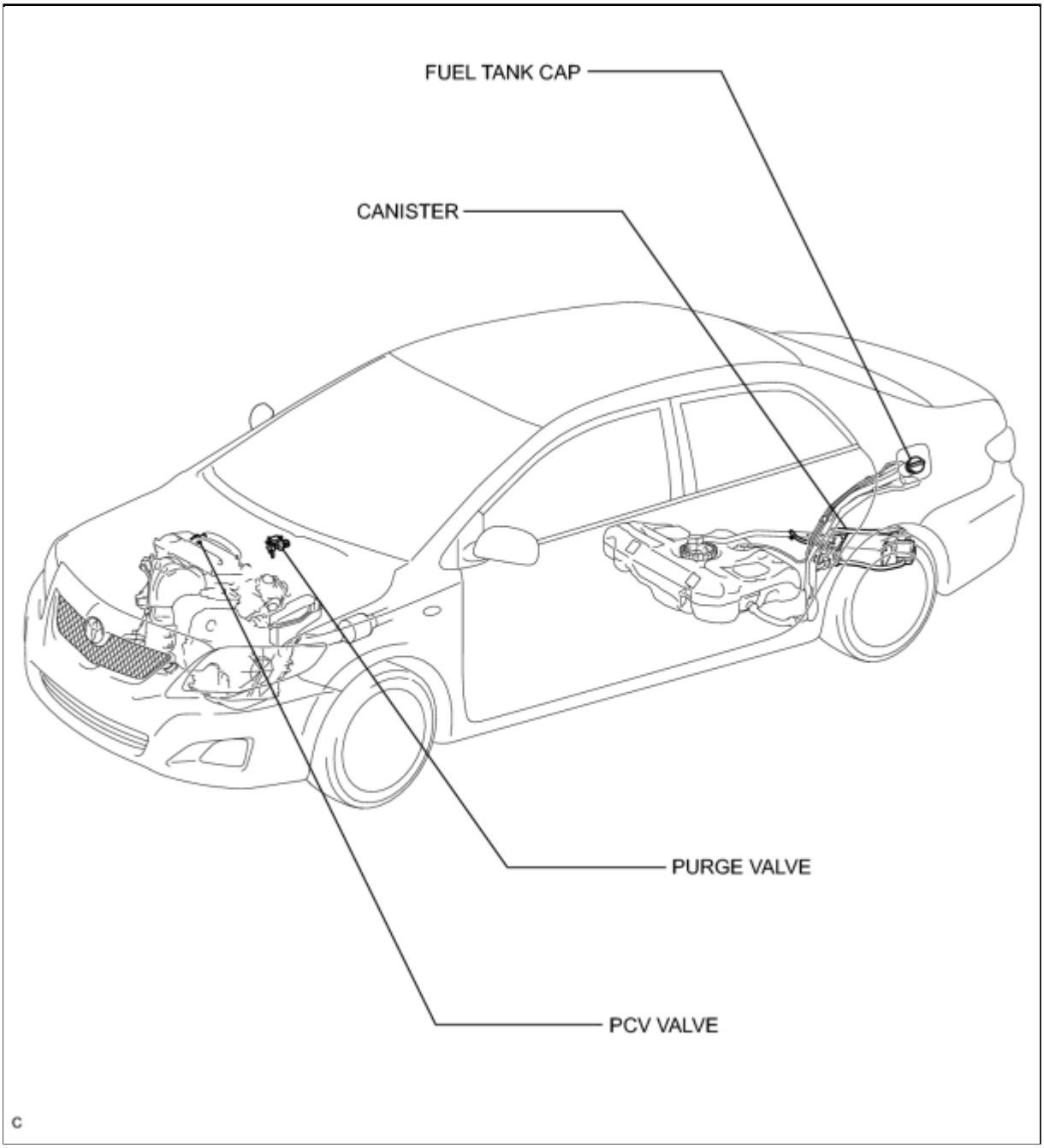

Last Modified: 3-10-2010	6.4 G	**From:** 200901
Model Year: 2010	**Model:** Corolla	**Doc ID:** RM0000012OO02VX
Title: 2AZ-FE EMISSION CONTROL: EMISSION CONTROL SYSTEM: ON-VEHICLE INSPECTION (2010 Corolla)		

ON-VEHICLE INSPECTION

1. VISUALLY INSPECT HOSE, CONNECTIONS AND GASKETS

(a) Check that there are no cracks, leaks or damage.

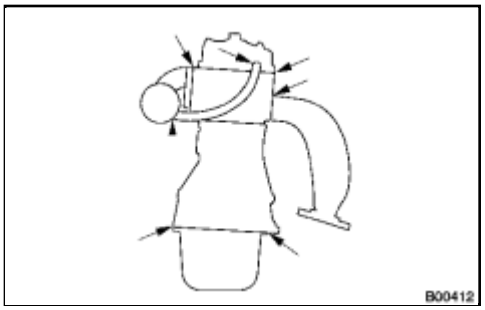

HINT:

- Detachment or other problems with the engine oil dipstick, oil filler cap, PCV hose or other components may cause the engine to run improperly.
- Disconnection, looseness or cracks in any part of the air induction system between the throttle body and cylinder head will allow air suction and cause an engine failure or engine malfunctions.

If the result is not as specified, replace the parts as necessary.

2. INSPECT FUEL CUT RPM

(a) Start and warm up the engine.

(b) Increase the engine speed to at last 3000 rpm.

(c) Use a sound scope to check for injector operating sounds.

(d) Check that when the accelerator pedal is released, injector operating sounds stop momentarily (at 2500 rpm) and then resume (at 1400 rpm).

Standard

ITEM	SPECIFIED CONDITION
Fuel cut off rpm	2500 rpm
Fuel injection restart rpm	1400 rpm

If the result is not specified, check the injectors, wiring and ECM.

3. INSPECT LINE AND CONNECTORS

(a) Visually check for loose connections, sharp bends or damage.

4. INSPECT AIR TIGHTNESS IN FUEL TANK AND FILLER PIPE

(a) Disconnect the vent line hose from the canister.

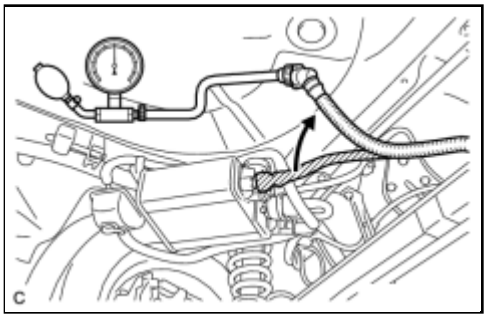

(b) Connect the pressure gauge to the vent line hose.

(c) Apply pressure to the fuel tank to create an internal pressure of 4 kPa (41 gf/cm^2, 0.58 psi).

(d) Check that the internal pressure of the fuel tank is maintained for 1 minute.

(e) Check the connecting portions of each hose and pipe.

(f) Check the installed parts on the fuel tank.

If any malfunctions, damage or other problems are found, replace the fuel tank and filler pipe.

(g) Reconnect the vent line hose to the fuel tank.

5. INSPECT FUEL TANK ASSEMBLY

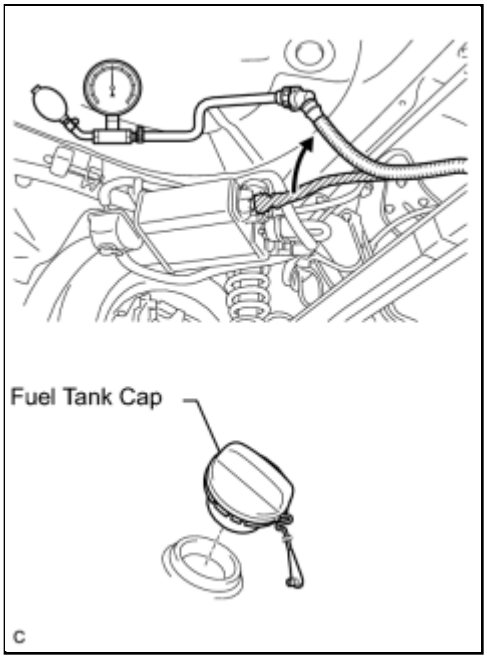

(a) Disconnect the vent line hose from the canister.

(b) Connect the pressure gauge to the fuel tank.

(c) Fill the fuel tank with fuel.

(d) Apply pressure of 4 kPa (41 gf/cm^2, 0.58 psi) to the vent port of the fuel tank.

HINT:

Check the amount of fuel in the fuel tank. When the fuel tank is full, the float valve of the fill check valve is closed and no air can pass through.

(e) Remove the fuel tank cap, and check that the pressure drops.

If the pressure does not drop, replace the fuel tank assembly.

(f) Reconnect the vent line hose to the fuel tank.

6. INSPECT AIR INLET LINE

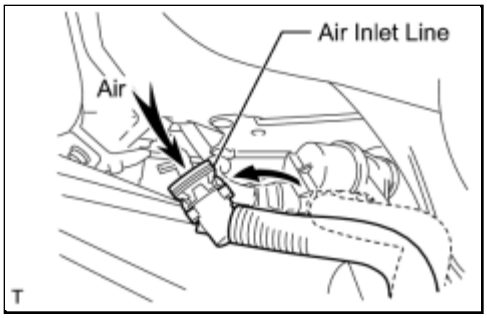

(a) Disconnect the air inlet line hose from the charcoal canister.

(b) Check that air can flow freely into the air inlet line.

If air cannot flow freely into the air inlet line, repair or replace it.

(c) Reconnect the air inlet line hose to the charcoal canister.

7. INSPECT EVAPORATIVE EMISSION CONTROL SYSTEM

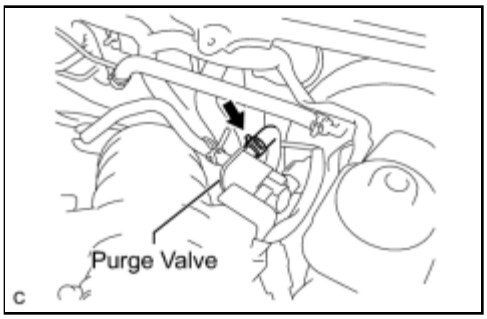

(a) Start the engine.

(b) Disconnect the vacuum hose from the purge valve as shown in the illustration.

(c) Connect the Techstream to the DLC3.

(d) Enter the following menus: Powertrain / Engine and ECT / Active Test / Activate the VSV for EVAP Control.

(e) Check that a vacuum occurs at the purge valve port.

(f) Exit Active Test mode and reconnect the vacuum hose.

If the result is not as specified, replace the purge valve, wire harness or ECM.

Last Modified: 3-10-2010	6.4 U	**From:** 200901
Model Year: 2010	**Model:** Corolla	**Doc ID:** RM0000012NV02DX
Title: 2AZ-FE EMISSION CONTROL: EMISSION CONTROL SYSTEM: SYSTEM DIAGRAM (2010 Corolla)		

SYSTEM DIAGRAM

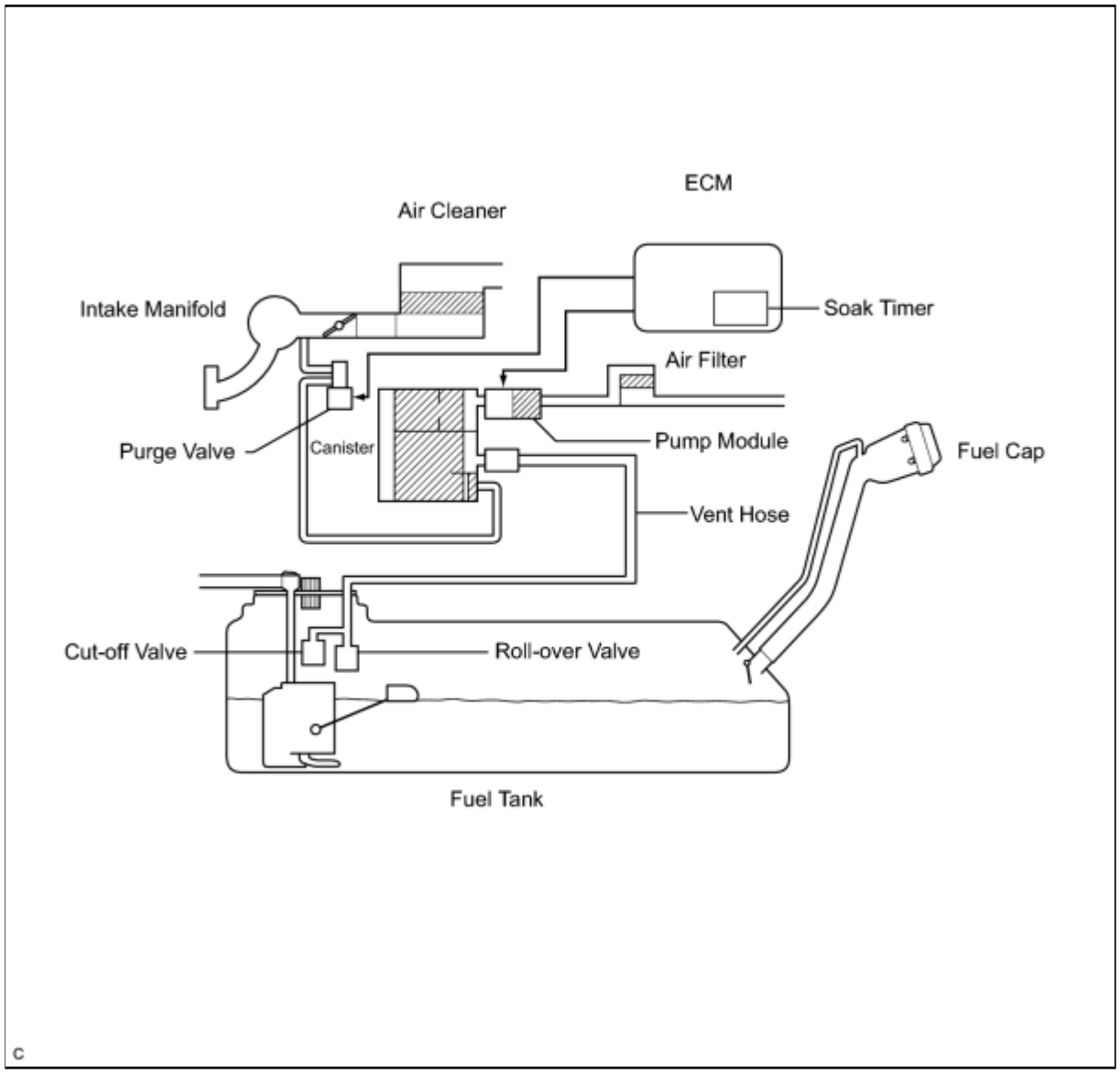

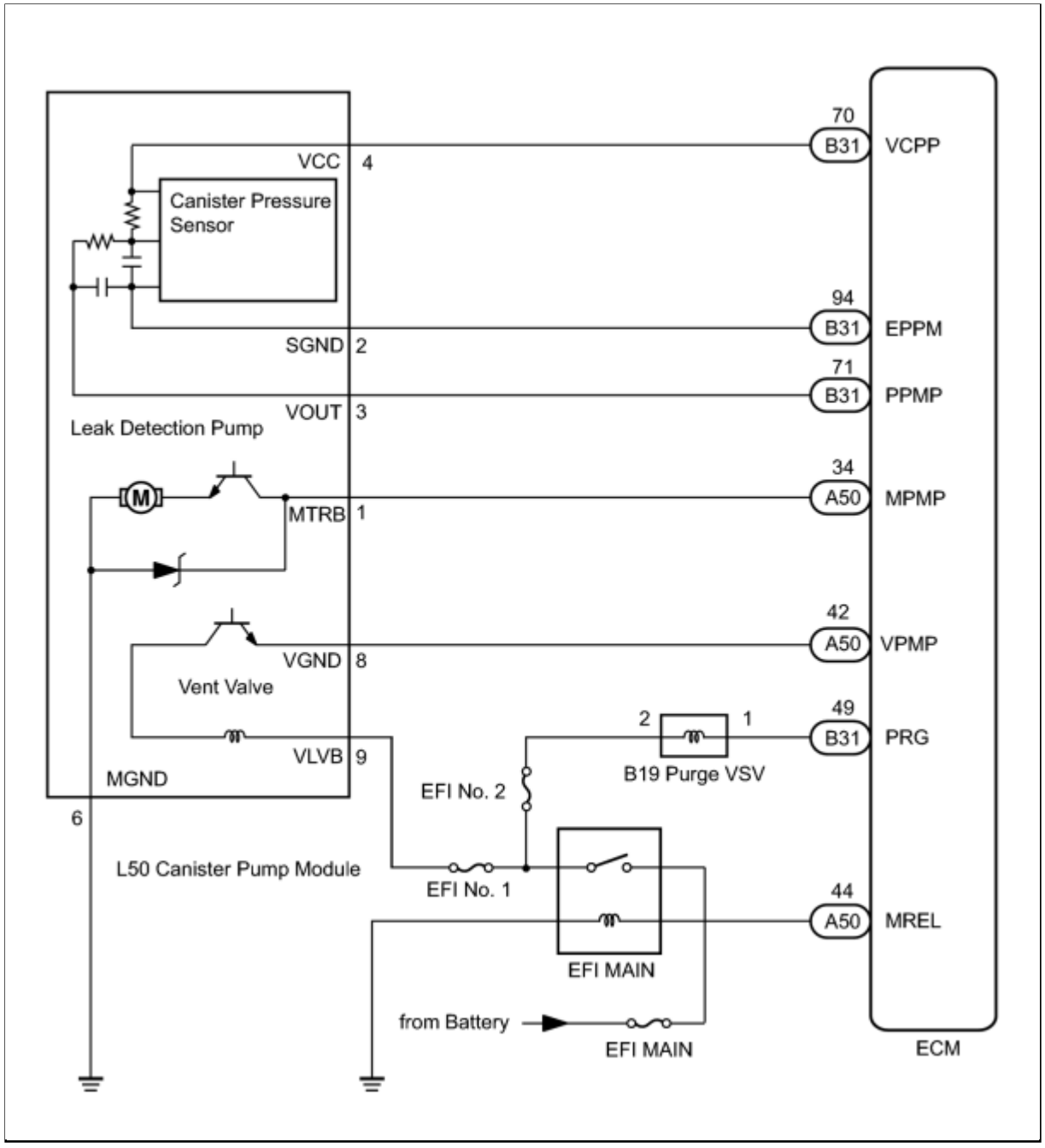
70
B31
VCPP
VCC
4
Canister Pressure Sensor
94
B31
EPPM
SGND
2
71
B31
PPMP
VOUT
3
Leak Detection Pump
34
A50
MPMP
M
MTRB
1
42
A50
VPMP
VGND
8
Vent Valve
2
1
49
B31
PRG
VLVB
9
B19 Purge VSV
MGND
EFI No. 2
6
L50 Canister Pump Module
EFI No. 1
44
A50
MREL
EFI MAIN
from Battery
EFI MAIN
ECM

Last Modified: 3-10-2010	6.4 R	**From:** 200901
Model Year: 2010	**Model:** Corolla	**Doc ID:** RM000002EDA01CX
Title: 2ZR-FE EMISSION CONTROL: EMISSION CONTROL SYSTEM: PARTS LOCATION (2010 Corolla)		

PARTS LOCATION

ILLUSTRATION

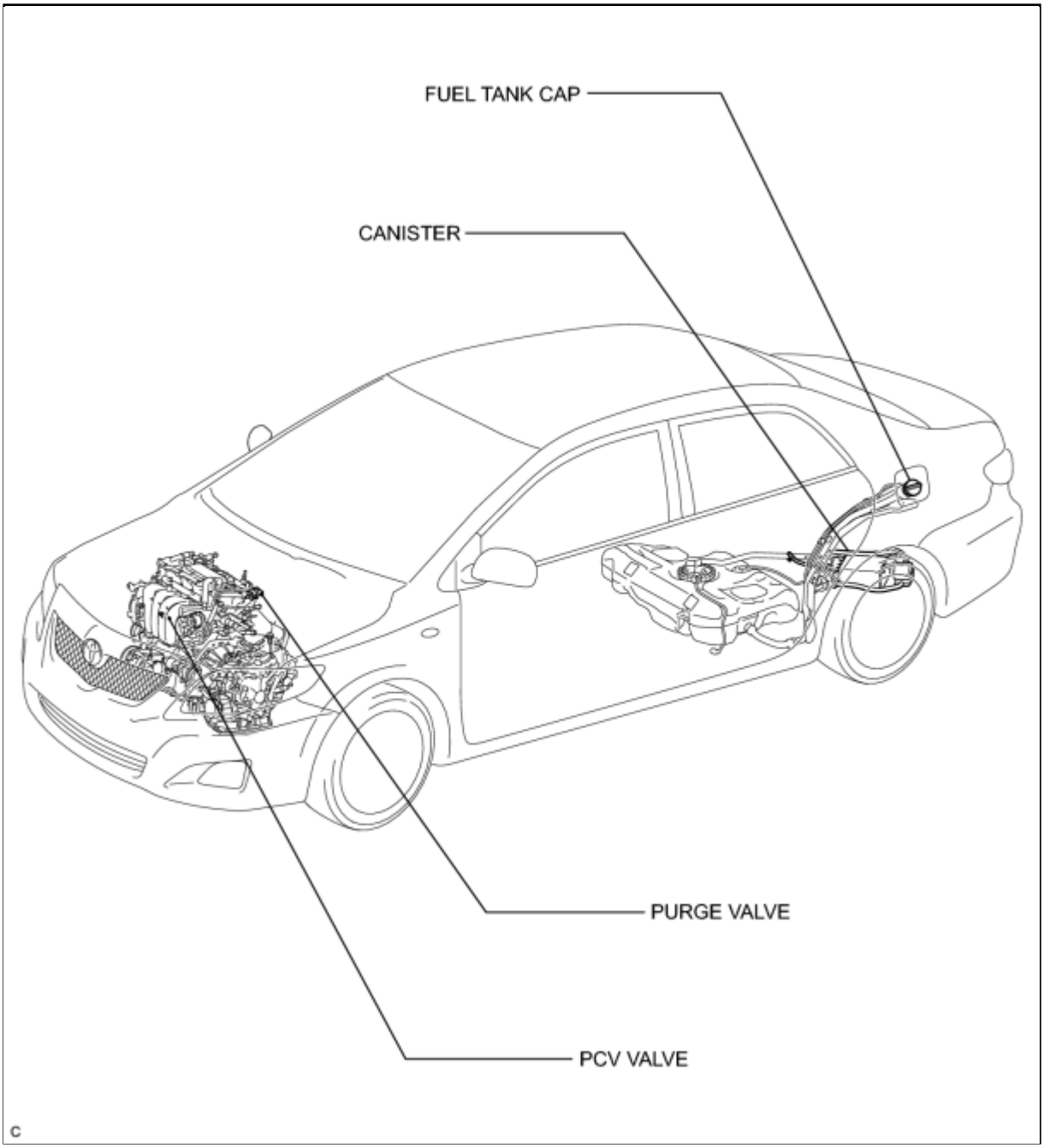

Last Modified: 3-10-2010	6.4 U	**From:** 200901
Model Year: 2010	**Model:** Corolla	**Doc ID:** RM0000012NV02CX
Title: 2ZR-FE EMISSION CONTROL: EMISSION CONTROL SYSTEM: SYSTEM DIAGRAM (2010 Corolla)		

SYSTEM DIAGRAM

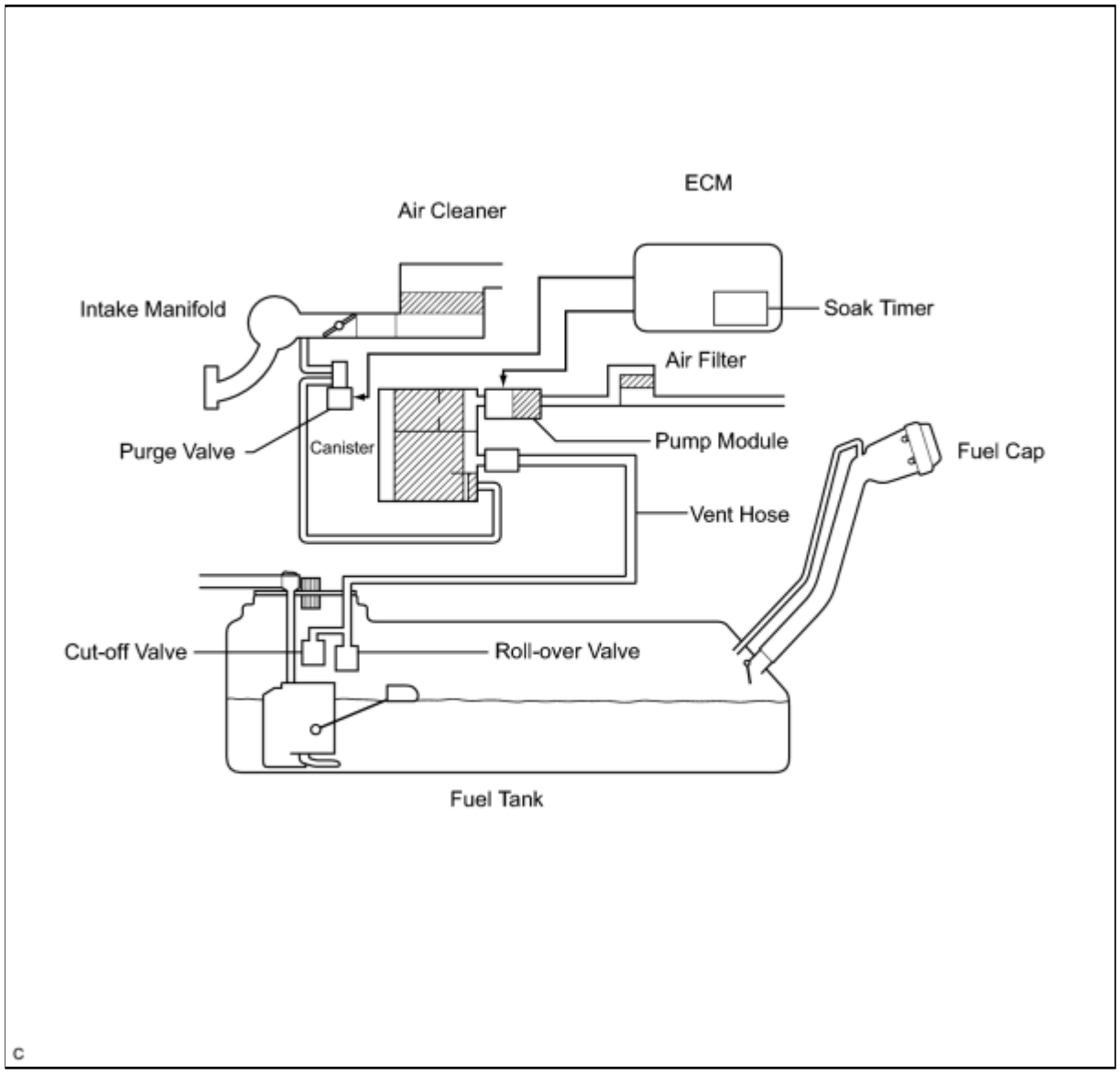

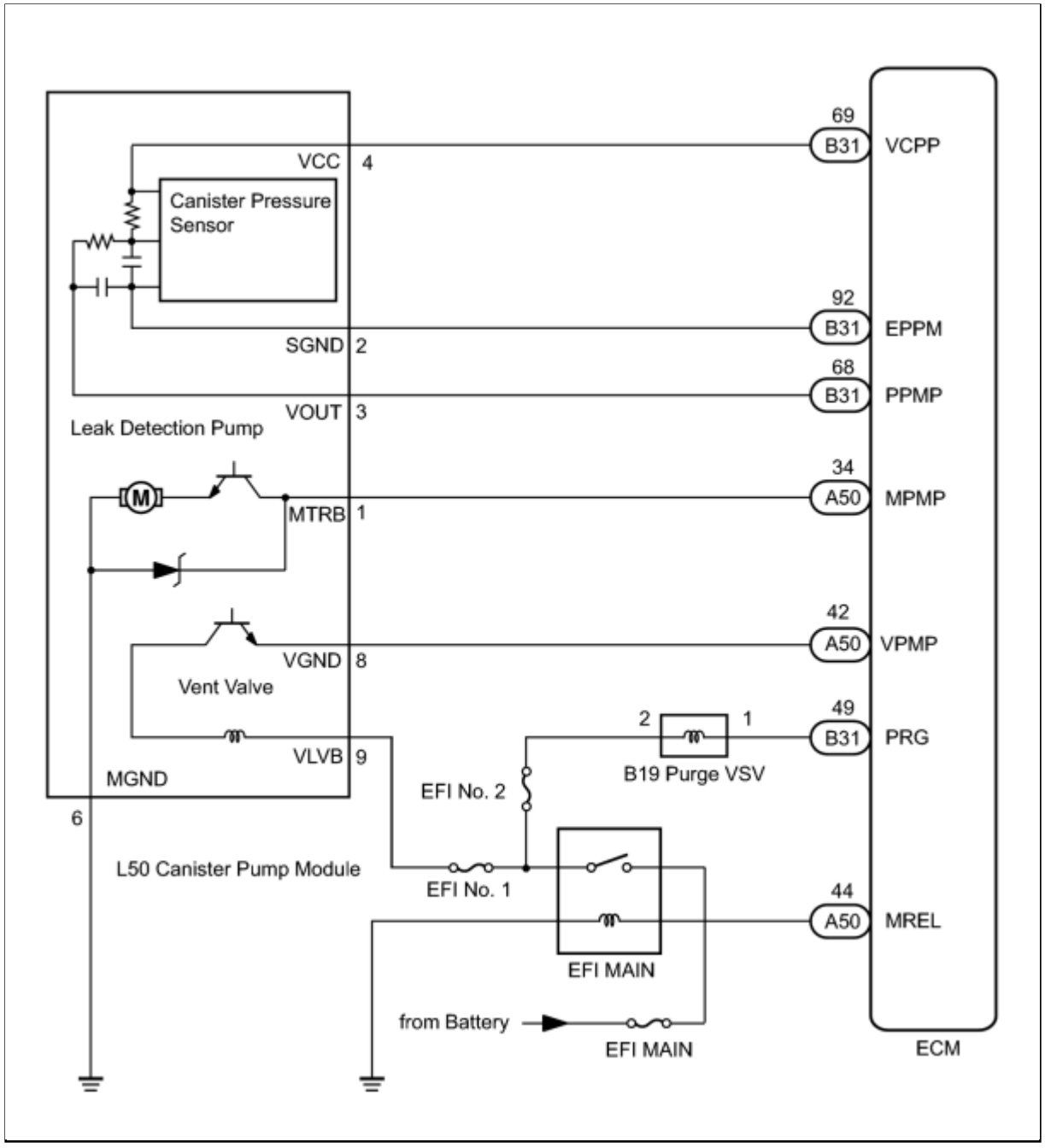
69
B31
VCPP
VCC
4
Canister Pressure Sensor
92
B31
EPPM
SGND
2
68
B31
PPMP
VOUT
3
Leak Detection Pump
34
A50
MPMP
M
MTRB
1
42
A50
VPMP
VGND
8
Vent Valve
2
1
49
B31
PRG
VLVB
9
B19 Purge VSV
MGND
EFI No. 2
6
L50 Canister Pump Module
EFI No. 1
44
A50
MREL
EFI MAIN
from Battery
EFI MAIN
ECM

Last Modified: 3-10-2010	6.4 G	**From:** 200901
Model Year: 2010	**Model:** Corolla	**Doc ID:** RM0000012OO02UX
Title: 2ZR-FE EMISSION CONTROL: EMISSION CONTROL SYSTEM: ON-VEHICLE INSPECTION (2010 Corolla)		

ON-VEHICLE INSPECTION

1. VISUALLY INSPECT HOSE, CONNECTIONS AND GASKETS

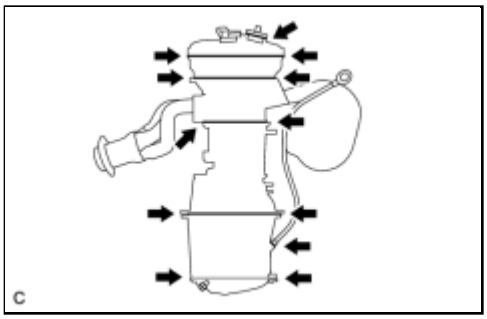

(a) Check for cracks, leaks or damage.

HINT:

Separation of the engine oil dipstick, oil filler cap, PCV hose, etc. may cause the engine to run improperly. Disconnection, looseness or cracks in any part of the air induction system between the throttle body and cylinder head will allow air suction and cause the engine to run improperly.

2. INSPECT FUEL CUT OFF/RESTART RPM

(a) Increase the engine speed to at least 3500 rpm.

(b) Use a sound scope to check for injector operating sounds.

(c) Check that when the accelerator pedal is released, injector operating sounds stop momentarily and then resume.

Standard engine speed (Manual Transmission):

ITEM	SPECIFIED CONDITION
Fuel cut off rpm	2500 rpm
Fuel injection restart rpm	1500 rpm

Standard engine speed (Automatic Transmission):

ITEM	SPECIFIED CONDITION
Fuel cut off rpm	2500 rpm
Fuel injection restart rpm	1200 rpm

3. INSPECT LINE AND CONNECTORS

(a) Visually check for loose connections, sharp bends or damage.

4. INSPECT AIR TIGHTNESS IN FUEL TANK AND FILLER PIPE

(a) Disconnect the vent line hose from the canister.

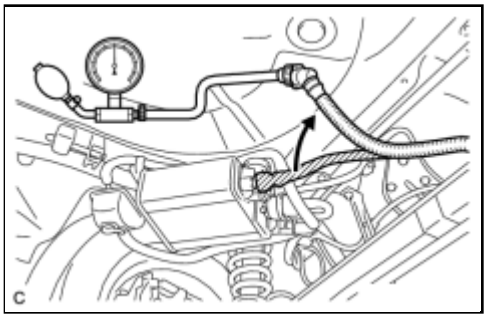

(b) Connect the pressure gauge to the vent line hose.

(c) Apply pressure to the fuel tank to create an internal pressure of 4 kPa (41 gf/cm^2, 0.58 psi).

(d) Check that the internal pressure of the fuel tank is maintained for 1 minute.

(e) Check the connected portions of each hose and pipe.

(f) Check the installed parts on the fuel tank.

If any malfunctions, damage or other problems are found, replace the fuel tank and filler pipe.

(g) Reconnect the vent line hose to the fuel tank.

5. INSPECT FUEL TANK ASSEMBLY

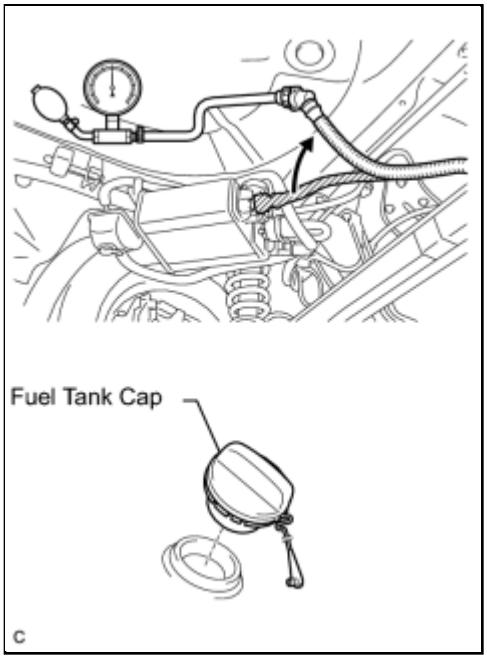

(a) Disconnect the vent line hose from the canister.

(b) Connect the pressure gauge to the vent line hose.

(c) Fill the fuel tank with fuel.

(d) Apply pressure of 4 kPa (41 gf/cm^2, 0.58 psi) to the vent port of the fuel tank.

HINT:

Check the amount of fuel in the fuel tank. When the fuel tank is full, the float valve of the fill check valve is closed and no air can pass through.

(e) Remove the fuel tank cap, and check that the pressure drops.

If the pressure does not drop, replace the fuel tank assembly.

(f) Reconnect the vent line hose to the fuel tank.

6. INSPECT AIR INLET LINE

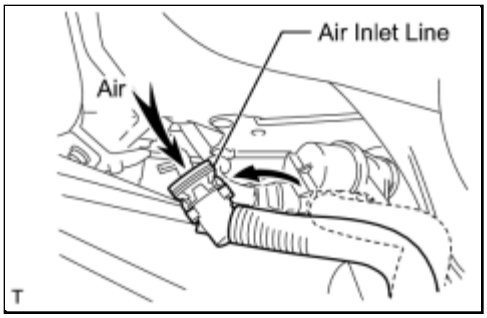

(a) Disconnect the air inlet line from the charcoal canister.

(b) Check that air can flow freely into the air inlet line.

If air cannot flow freely into the air inlet line, repair or replace it.

(c) Reconnect the air inlet line to the charcoal canister.

7. INSPECT EVAPORATIVE EMISSION CONTROL SYSTEM

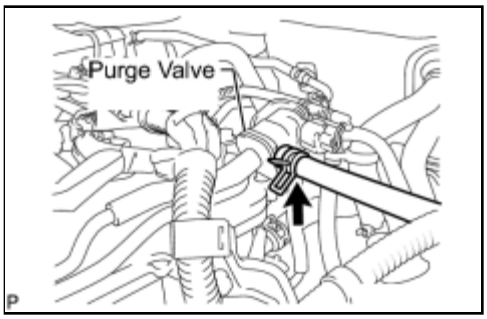

(a) Start the engine.

(b) Disconnect the vacuum hose from the purge valve as shown in the illustration.

(c) Connect the Techstream to the DLC3.

(d) Enter the following menus: Powertrain / Active Test / Activate the VSV for EVAP Control.

(e) Check that a vacuum occurs at the purge valve port.

(f) Exit Active Test mode and reconnect the vacuum hose.

If the result is not as specified, replace the purge valve, wire harness or ECM.

Last Modified: 3-10-2010	6.4 G	**From:** 200901
Model Year: 2010	**Model:** Corolla	**Doc ID:** RM000002BN8017X
Title: 2AZ-FE EMISSION CONTROL: FUEL TANK CAP: INSPECTION (2010 Corolla)		

INSPECTION

1. INSPECT FUEL TANK CAP ASSEMBLY

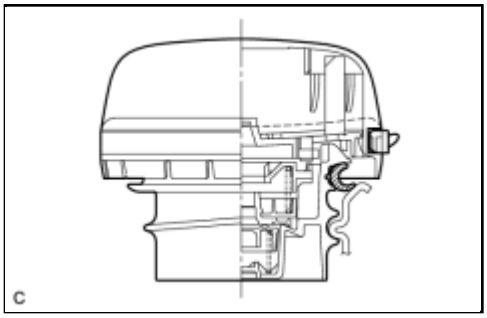

(a) Visually check if the cap or gasket is deformed or damaged.

If necessary, replace the cap.

Last Modified: 3-10-2010	6.4 G	**From:** 200901
Model Year: 2010	**Model:** Corolla	**Doc ID:** RM000000SGV01AX
Title: 2ZR-FE EMISSION CONTROL: FUEL TANK CAP: INSPECTION (2010 Corolla)		

INSPECTION

1. INSPECT FUEL TANK CAP ASSEMBLY

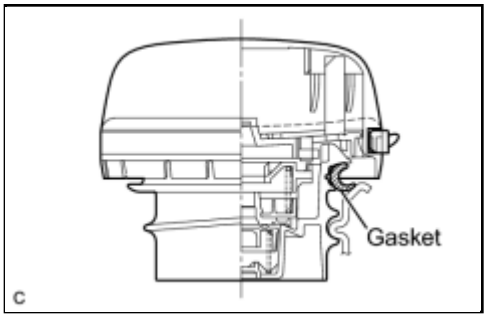

(a) Visually check if the cap or gasket is deformed or damaged.

If necessary, replace the cap.

Last Modified: 3-10-2010	6.4 K	**From:** 200901
Model Year: 2010	**Model:** Corolla	**Doc ID:** RM000002A47015X
Title: 2AZ-FE EMISSION CONTROL: PCV VALVE: COMPONENTS (2010 Corolla)		

COMPONENTS

ILLUSTRATION

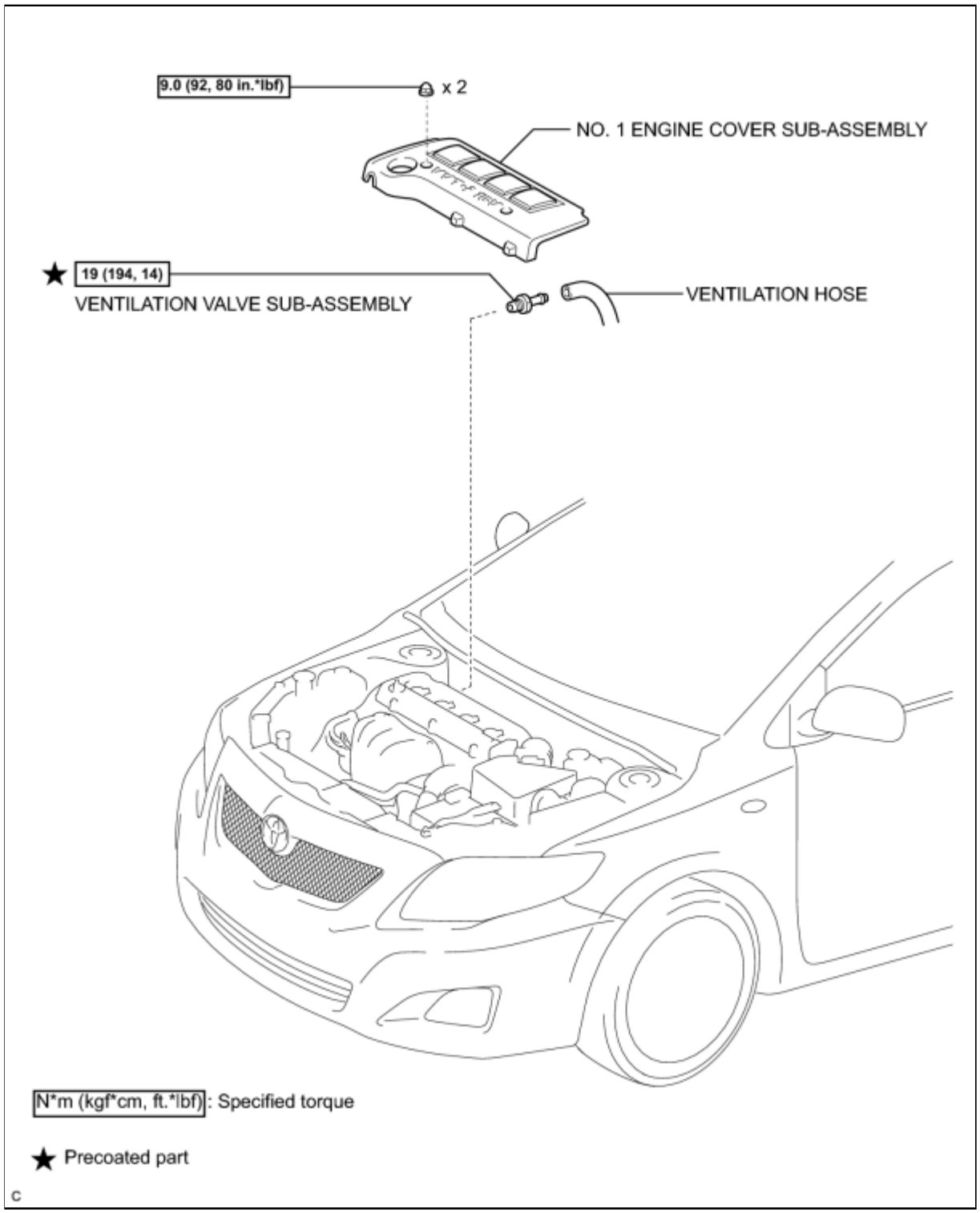

Last Modified: 3-10-2010	6.4 A	**From:** 200901
Model Year: 2010	**Model:** Corolla	**Doc ID:** RM000002A4801JX
Title: 2AZ-FE EMISSION CONTROL: PCV VALVE: REMOVAL (2010 Corolla)		

REMOVAL

1. REMOVE NO. 1 ENGINE COVER SUB-ASSEMBLY INFO

2. REMOVE VENTILATION VALVE SUB-ASSEMBLY

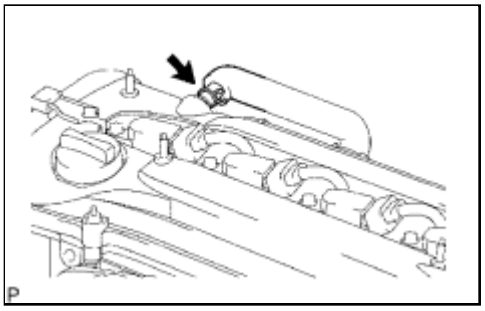

(a) Disconnect the ventilation hose from the ventilation valve sub-assembly.

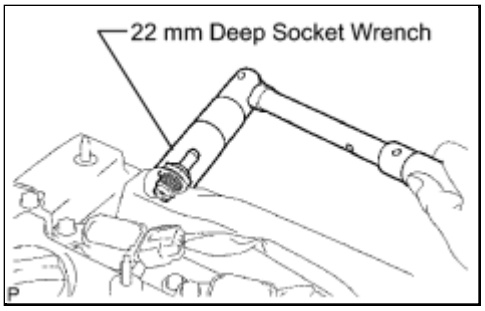

(b) Using a 22 mm deep socket wrench, remove the ventilation valve sub-assembly.

Last Modified: 3-10-2010	6.4 G	**From:** 200901
Model Year: 2010	**Model:** Corolla	**Doc ID:** RM0000012O7023X
Title: 2AZ-FE EMISSION CONTROL: PCV VALVE: INSPECTION (2010 Corolla)		

INSPECTION

1. INSPECT VENTILATION VALVE SUB-ASSEMBLY

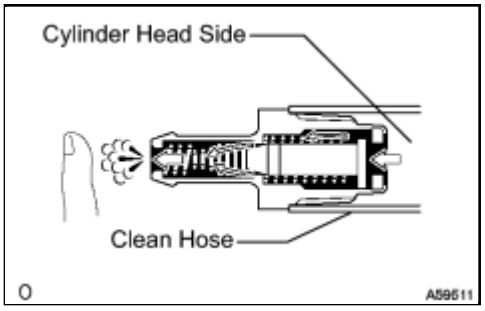

(a) Install a clean hose to the ventilation valve sub-assembly.

(b) Inspect ventilation valve operation.

(1) Blow air into the cylinder head side, and check that air passes through easily.

CAUTION:

Do not suck air through the valve. Petroleum substances inside the valve are hazardous to your health.

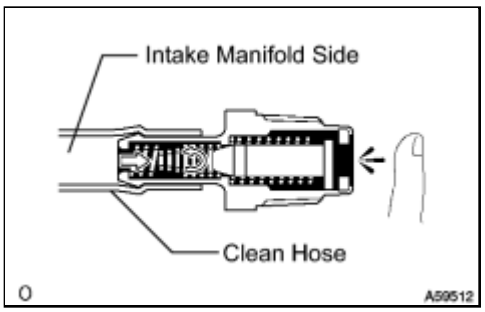

(2) Blow air into the intake manifold side, and check that air passes through with difficulty.

If the result is not as specified, replace the ventilation valve sub-assembly.

(c) Remove the clean hose from the ventilation valve sub-assembly.

Last Modified: 3-10-2010	6.4 A	**From:** 200901
Model Year: 2010	**Model:** Corolla	**Doc ID:** RM000002A4601JX
Title: 2AZ-FE EMISSION CONTROL: PCV VALVE: INSTALLATION (2010 Corolla)		

INSTALLATION

1. INSTALL VENTILATION VALVE SUB-ASSEMBLY

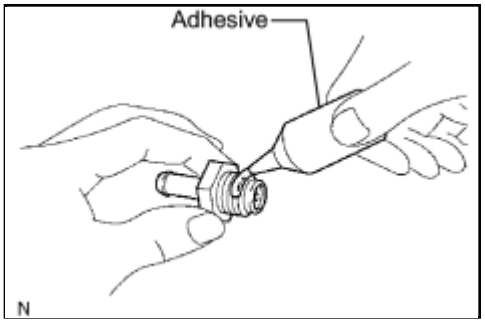

(a) Apply adhesive to 2 or 3 threads of the ventilation valve.

Adhesive:
Toyota genuine adhesive 1324, three bond 1324 or equivalent

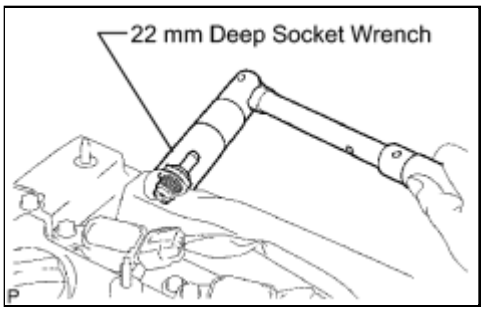

(b) Using a 22 mm deep socket wrench, install the ventilation valve.

Torque: 19 N·m (194 kgf·cm, 14ft·lbf)

(c) Connect the ventilation hose.

2. INSTALL NO. 1 ENGINE COVER SUB-ASSEMBLY INFO

3. INSPECT FOR OIL LEAK

Last Modified: 3-10-2010	6.4 K	**From:** 200901
Model Year: 2010	**Model:** Corolla	**Doc ID:** RM000002WZK00VX
Title: 2ZR-FE EMISSION CONTROL: PCV VALVE: COMPONENTS (2010 Corolla)		

COMPONENTS

ILLUSTRATION

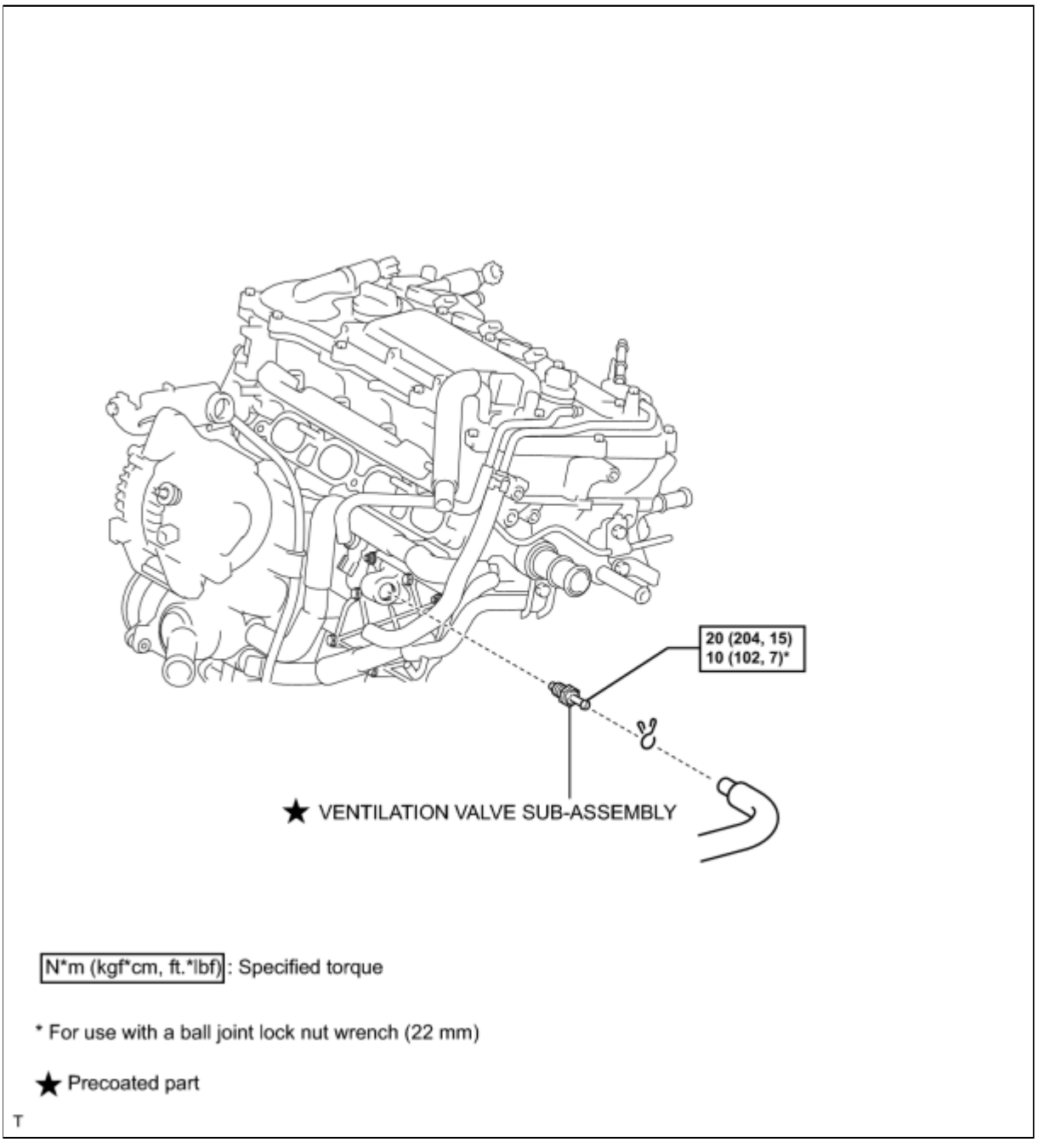

Last Modified: 3-10-2010	6.4 A	**From:** 200901
Model Year: 2010	**Model:** Corolla	**Doc ID:** RM000002WZL00XX
Title: 2ZR-FE EMISSION CONTROL: PCV VALVE: REMOVAL (2010 Corolla)		

REMOVAL

1. REMOVE INTAKE MANIFOLD

INFO

2. REMOVE VENTILATION VALVE SUB-ASSEMBLY

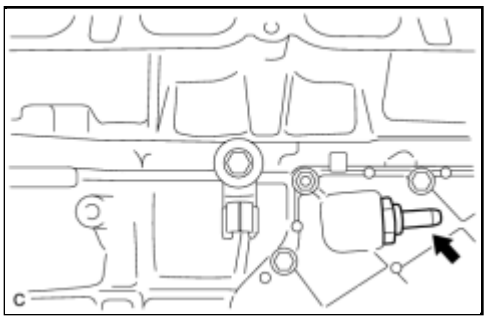

(a) Using a ball joint lock nut wrench (22 mm), remove the ventilation valve sub-assembly.

Last Modified: 3-10-2010	6.4 G	**From:** 200901
Model Year: 2010	**Model:** Corolla	**Doc ID:** RM0000012O7022X
Title: 2ZR-FE EMISSION CONTROL: PCV VALVE: INSPECTION (2010 Corolla)		

INSPECTION

1. INSPECT VENTILATION VALVE SUB-ASSEMBLY

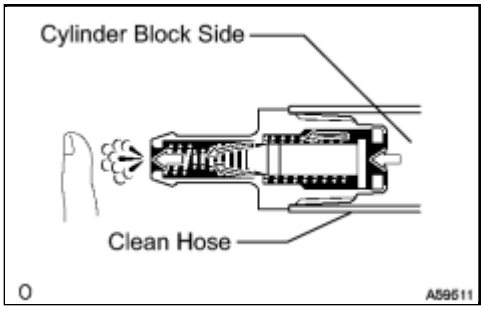

(a) Install a clean hose to the ventilation valve sub-assembly.

(b) Inspect ventilation valve operation.

(1) Blow air into the cylinder block side, and check that air passes through easily.

CAUTION:

Do not suck air through the valve. Petroleum substances inside the valve are hazardous to your health.

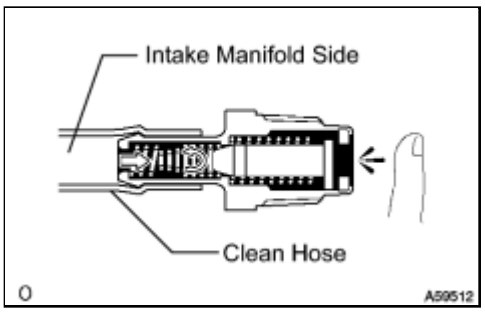

(2) Blow air into the intake manifold side, and check that air passes through with difficulty.

If the result is not as specified, replace the ventilation valve sub-assembly.

(c) Remove the clean hose from the ventilation valve sub-assembly.

Last Modified: 3-10-2010	6.4 A	**From:** 200901
Model Year: 2010	**Model:** Corolla	**Doc ID:** RM000002WZI00XX
Title: 2ZR-FE EMISSION CONTROL: PCV VALVE: INSTALLATION (2010 Corolla)		

INSTALLATION

1. INSTALL VENTILATION VALVE SUB-ASSEMBLY

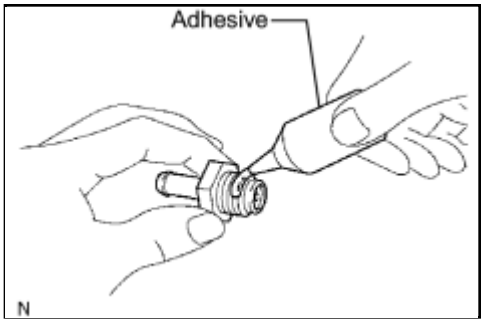

(a) Apply adhesive to 2 or 3 threads of the ventilation valve sub-assembly.

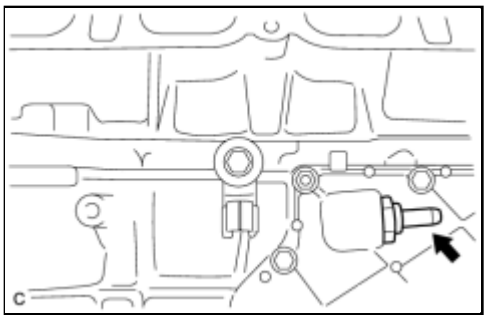

(b) Using a ball joint lock nut wrench (22 mm), install the ventilation valve sub-assembly.

without a ball joint lock nut wrench (22 mm) - Torque: 20 N·m (204 kgf·cm, 15ft·lbf)

with a ball joint lock nut wrench (22 mm) - Torque: 10 N·m (102 kgf·cm, 7ft·lbf)

2. INSTALL INTAKE MANIFOLD

INFO

Last Modified: 3-10-2010	6.4 K	**From:** 200901
Model Year: 2010	**Model:** Corolla	**Doc ID:** RM000002A4A017X
Title: 2AZ-FE EMISSION CONTROL: PURGE VALVE: COMPONENTS (2010 Corolla)		

COMPONENTS

ILLUSTRATION

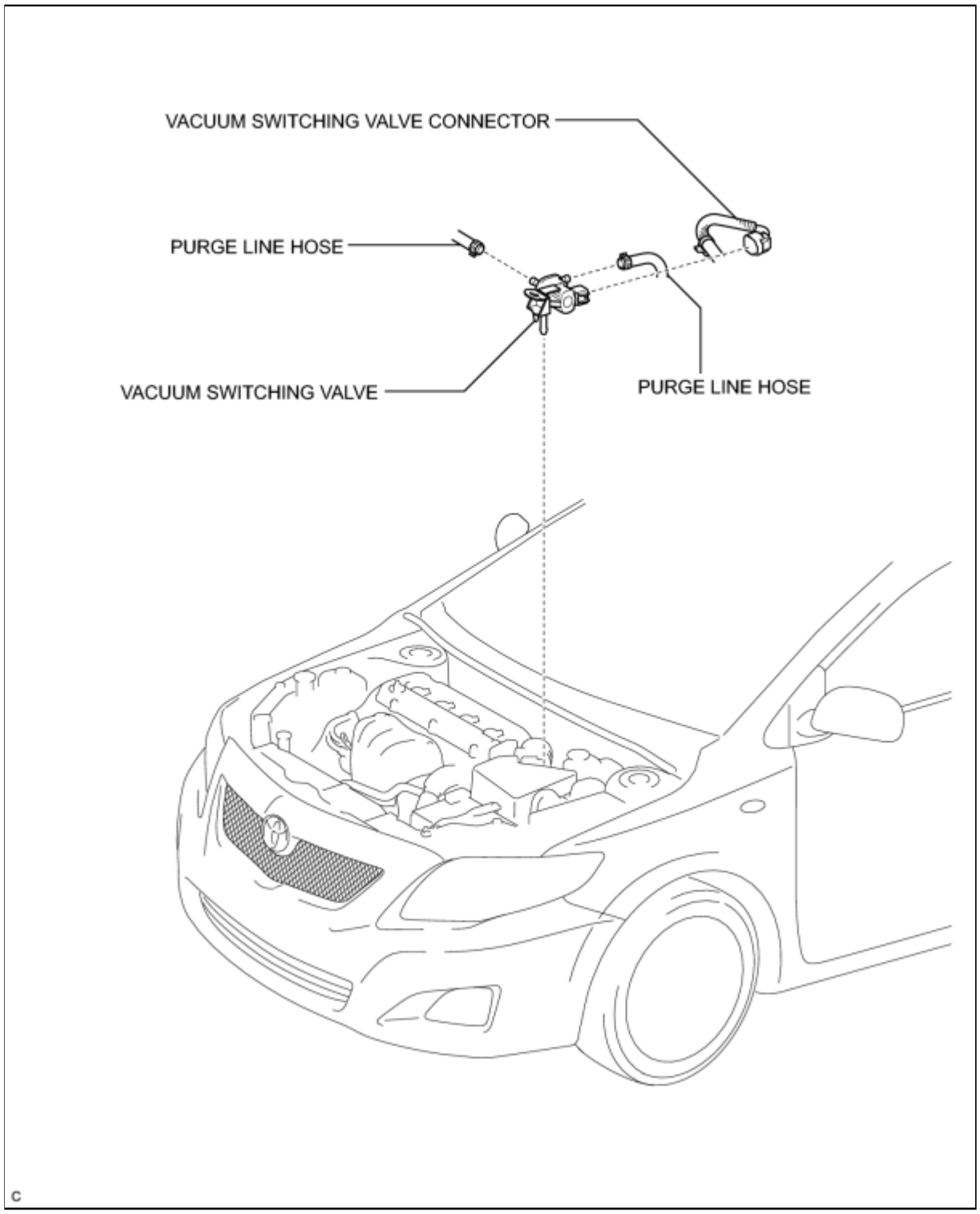

Last Modified: 3-10-2010	6.4 A	**From:** 200901
Model Year: 2010	**Model:** Corolla	**Doc ID:** RM000002A4B017X
Title: 2AZ-FE EMISSION CONTROL: PURGE VALVE: REMOVAL (2010 Corolla)		

REMOVAL

1. REMOVE VACUUM SWITCHING VALVE

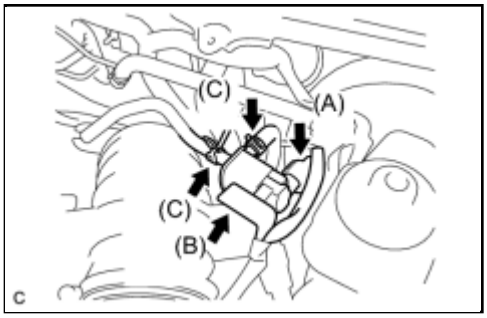

(a) Disconnect the vacuum switching valve connector.(A)

(b) Disconnect the wire harness clamp.(B)

(c) Disconnect the 2 purge line hoses from the vacuum switching valve.(C)

(d) Remove the vacuum switching valve.

Last Modified: 3-10-2010	6.4 G	**From:** 200901
Model Year: 2010	**Model:** Corolla	**Doc ID:** RM0000012OE01LX
Title: 2AZ-FE EMISSION CONTROL: PURGE VALVE: INSPECTION (2010 Corolla)		

INSPECTION

1. INSPECT VACUUM SWITCHING VALVE

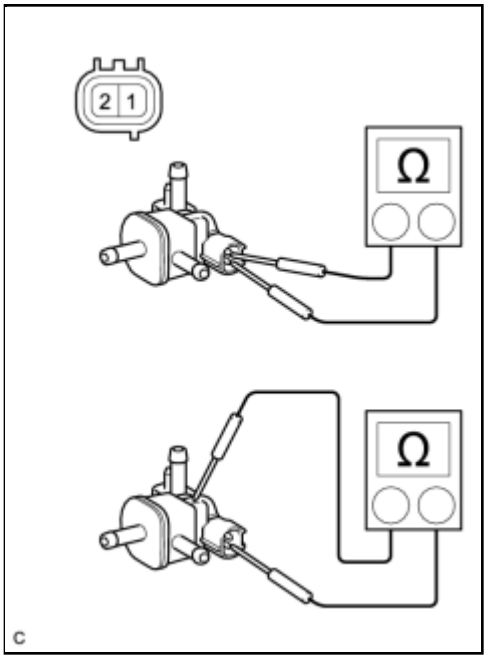

(a) Measure the resistance according to the value(s) in the table below.

Standard Resistance:

TESTER CONNECTION	SPECIFIED CONDITION
1 - 2	23 to 26 Ω at 20°C (68°F)
1 - Body ground 2 - Body ground	10 MΩ or higher

If the result is not as specified, replace the vacuum switching valve.

(b) Check the operation of the vacuum switching valve.

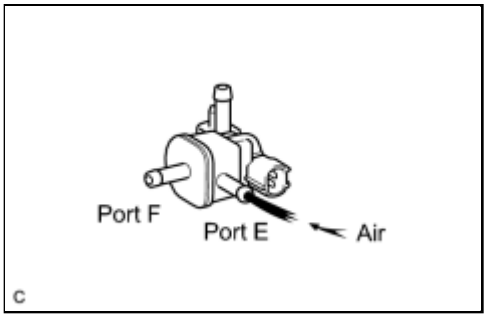

(1) Check that air does not flow from port E to port F.

(2) Apply battery voltage across the terminals.

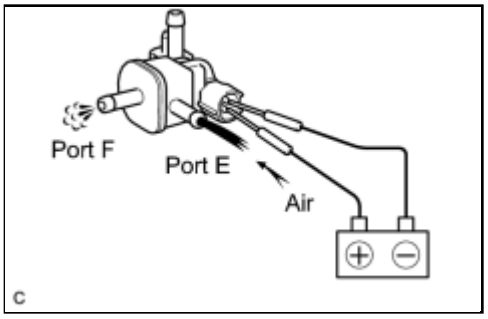

(3) Check that air flows from port E to port F.

If the result is not as specified, replace the vacuum switching valve.

Last Modified: 3-10-2010	6.4 A	**From:** 200901
Model Year: 2010	**Model:** Corolla	**Doc ID:** RM000002A49017X
Title: 2AZ-FE EMISSION CONTROL: PURGE VALVE: INSTALLATION (2010 Corolla)		

INSTALLATION

1. INSTALL VACUUM SWITCHING VALVE

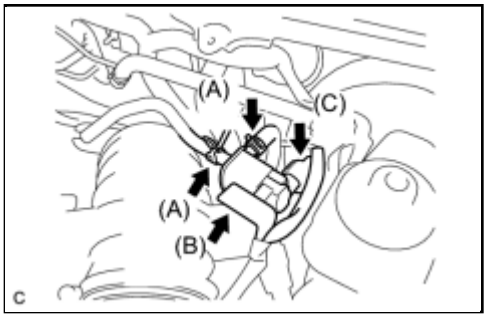

(a) Install the vacuum switching valve onto the air cleaner hose.

(b) Connect the 2 purge line hoses to the vacuum switching valve.(A)

(c) Connect the wire harness clamp.(B)

(d) Connect the vacuum switching valve connector.(C)

Last Modified: 3-10-2010	6.4 K	**From:** 200901
Model Year: 2010	**Model:** Corolla	**Doc ID:** RM000002WUE00UX
Title: 2ZR-FE EMISSION CONTROL: PURGE VALVE: COMPONENTS (2010 Corolla)		

COMPONENTS

ILLUSTRATION

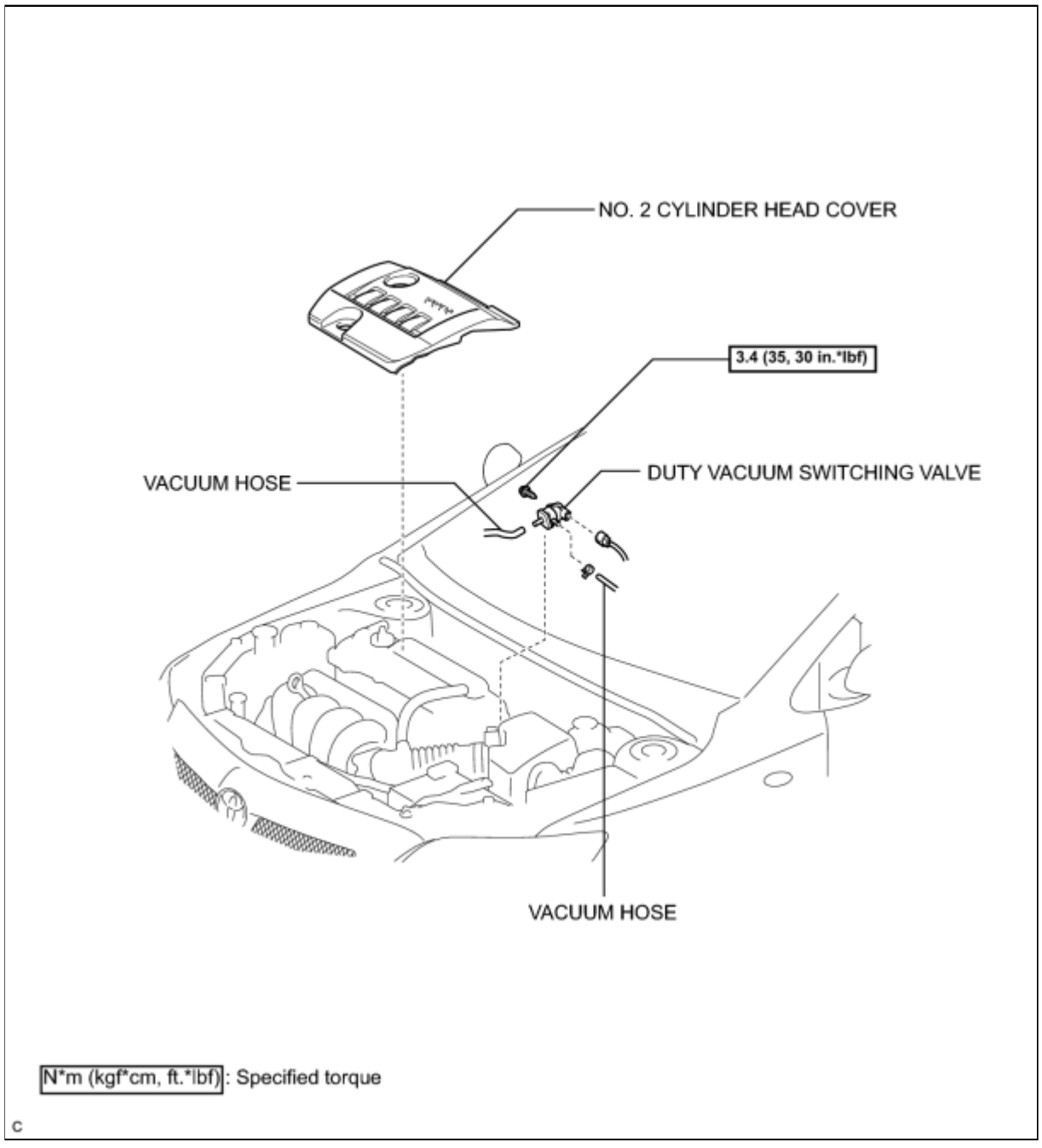

Last Modified: 3-10-2010	6.4 G	**From:** 200901
Model Year: 2010	**Model:** Corolla	**Doc ID:** RM000000R3500ZX
Title: 2ZR-FE EMISSION CONTROL: PURGE VALVE: INSPECTION (2010 Corolla)		

INSPECTION

1. INSPECT DUTY VACUUM SWITCHING VALVE

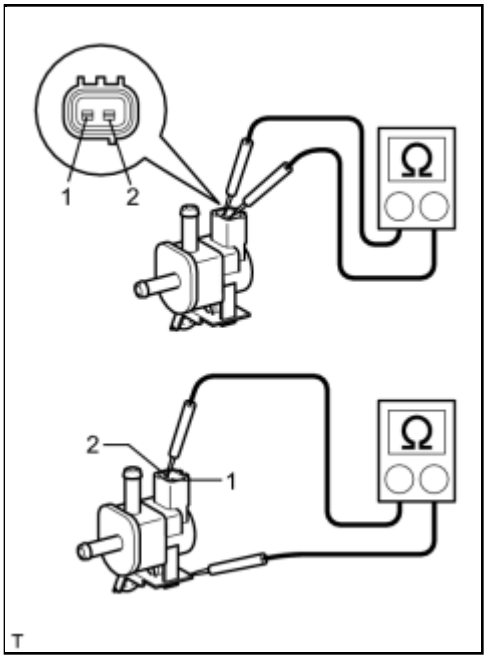

(a) Measure the resistance according to the value(s) in the table below.

Standard Resistance:

TESTER CONNECTION	CONDITION	SPECIFIED CONDITION
1 - 2	20°C (68°F)	23 to 26 Ω
1 - Body ground	Always	10 MΩ or higher
2 - Body ground	Always	10 MΩ or higher

If the result is not as specified, replace the duty vacuum switching valve.

(b) Check operation of the purge VSV.

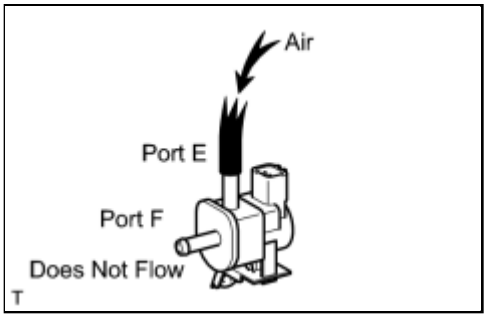

(1) Check that air does not flow from port E to port F.

If the result is not as specified, replace the duty vacuum switching valve.

(2) Apply battery voltage across terminals 1 and 2.

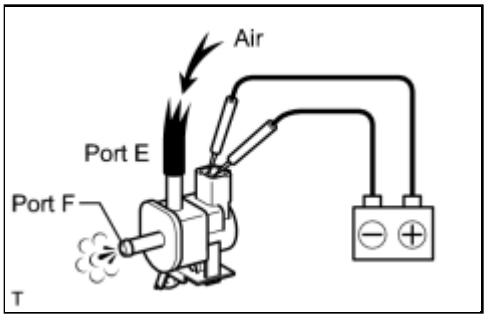

(3) Check that air flows from port E to port F.

If the result is not as specified, replace the duty vacuum switching valve.

Last Modified: 3-10-2010	6.4 A	**From:** 200901
Model Year: 2010	**Model:** Corolla	**Doc ID:** RM000002WUF00WX
Title: 2ZR-FE EMISSION CONTROL: PURGE VALVE: REMOVAL (2010 Corolla)		

REMOVAL

1. REMOVE NO. 2 CYLINDER HEAD COVER INFO

2. REMOVE DUTY VACUUM SWITCHING VALVE

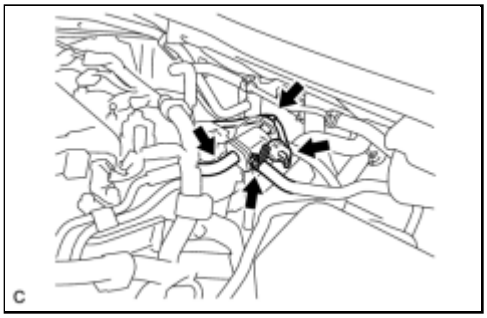

(a) Disconnect the duty vacuum switching valve connector, 2 vacuum hoses and wire harness clamp.

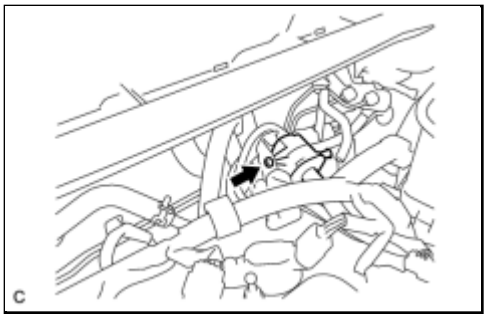

(b) Remove the screw and duty vacuum switching valve.

Last Modified: 3-10-2010	6.4 A	**From:** 200901
Model Year: 2010	**Model:** Corolla	**Doc ID:** RM000002WUD00WX
Title: 2ZR-FE EMISSION CONTROL: PURGE VALVE: INSTALLATION (2010 Corolla)		

INSTALLATION

1. INSTALL DUTY VACUUM SWITCHING VALVE

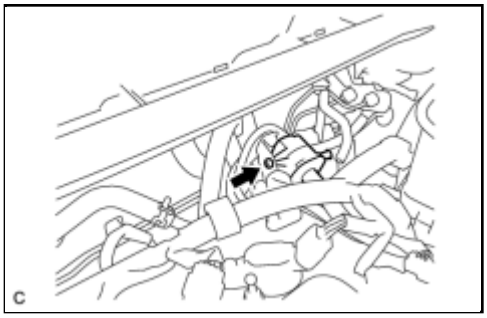

(a) Install the duty vacuum switching valve with the screw.

Torque: 3.4 N·m (35 kgf·cm, 30in·lbf)

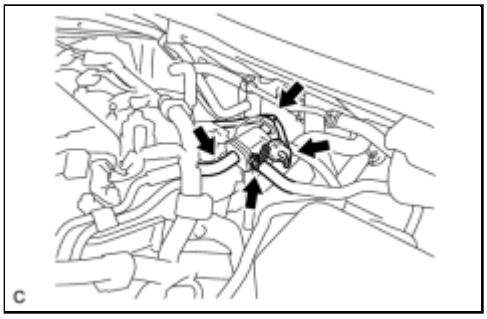

(b) Connect the duty vacuum switching valve connector, 2 vacuum hoses and wire harness clamp.

2. INSTALL NO. 2 CYLINDER HEAD COVER INFO

Last Modified: 3-10-2010	6.4 K	**From:** 200901
Model Year: 2010	**Model:** Corolla	**Doc ID:** RM000003D35003X
Title: 2AZ-FE ENGINE CONTROL: ACCELERATOR PEDAL: COMPONENTS (2010 Corolla)		

COMPONENTS

ILLUSTRATION

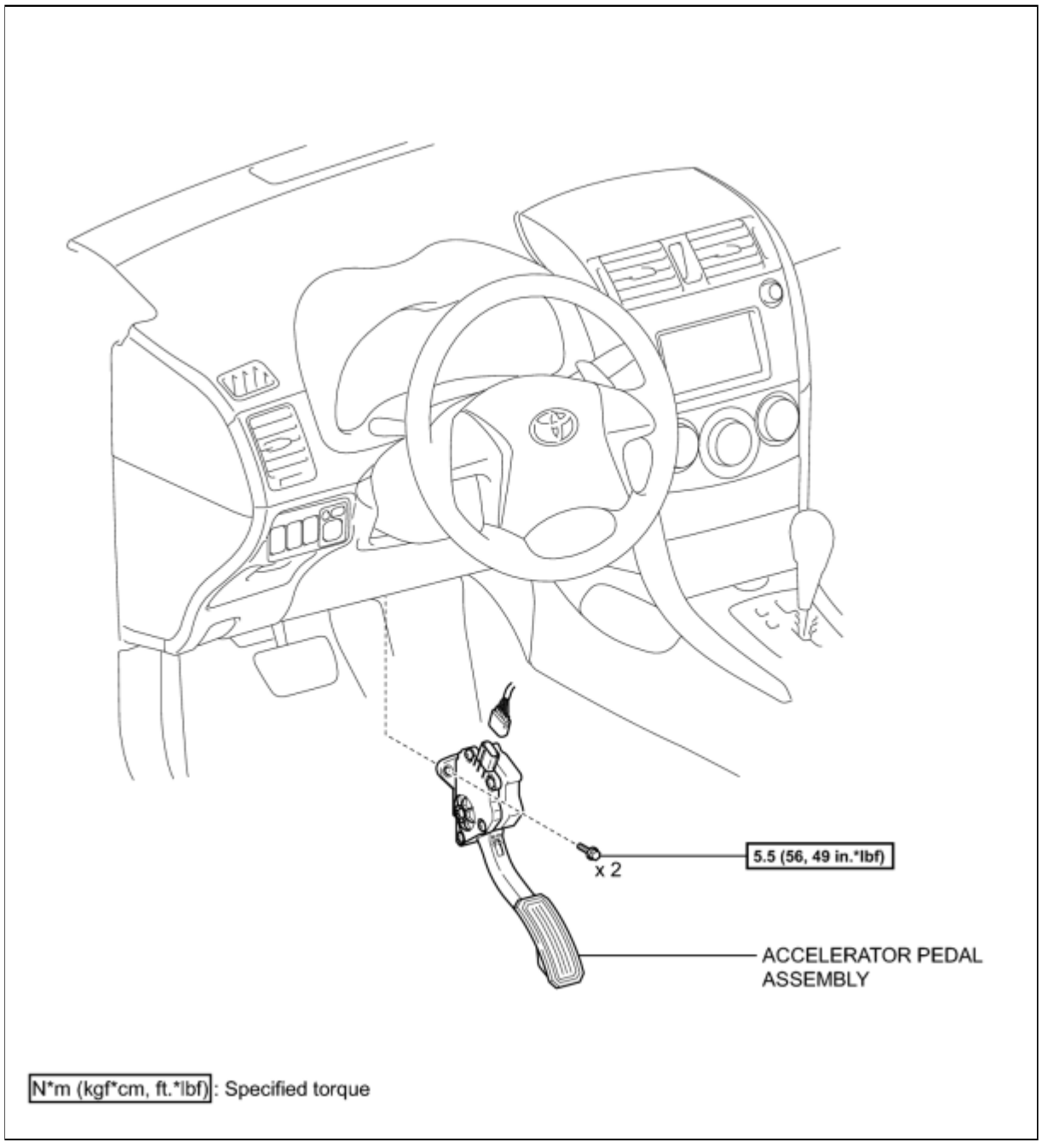

Last Modified: 3-10-2010	6.4 A	**From:** 200901
Model Year: 2010	**Model:** Corolla	**Doc ID:** RM000003D34003X
Title: 2AZ-FE ENGINE CONTROL: ACCELERATOR PEDAL: INSTALLATION (2010 Corolla)		

INSTALLATION

1. INSTALL ACCELERATOR PEDAL ASSEMBLY

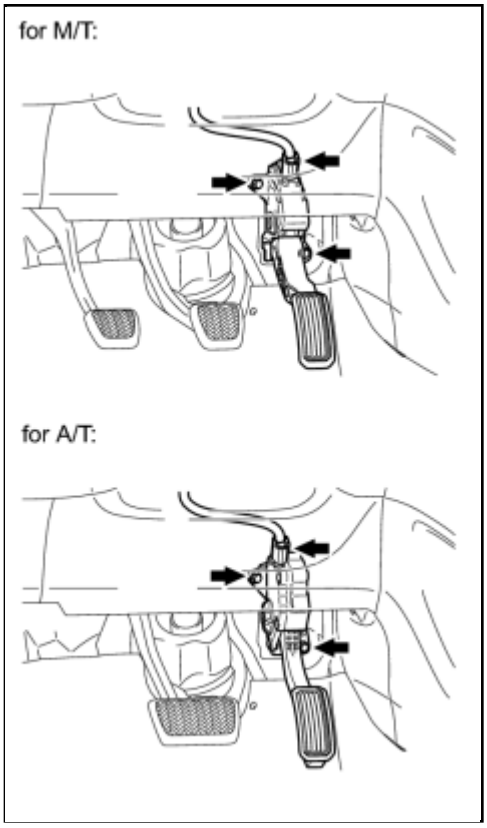

(a) Install the accelerator pedal assembly with the 2 bolts.

Torque: 5.5 N·m (56 kgf·cm, 49in·lbf)

(b) Install the accelerator pedal assembly connector.

Last Modified: 3-10-2010	6.4 G	**From:** 200901
Model Year: 2010	**Model:** Corolla	**Doc ID:** RM000003D37003X
Title: 2AZ-FE ENGINE CONTROL: ACCELERATOR PEDAL: ON-VEHICLE INSPECTION (2010 Corolla)		

ON-VEHICLE INSPECTION

1. INSPECT ACCELERATOR PEDAL ASSEMBLY

(a) Connect the Techstream to the DLC3.

(b) Turn the ignition switch to ON and turn the Techstream on.

(c) Enter the following menus: Powertrain / Engine and ECT / Data List / Accelerator Position No. 1, Accelerator Position No. 2.

(d) Read the value displayed on the Techstream.

Accelerator Position No. 1 Standard Voltage:

CONDITION	SPECIFIED CONDITION
Accelerator pedal is released	0.5 to 1.1 V
Accelerator pedal is depressed	2.6 to 4.5 V

Accelerator Position No. 2 Standard Voltage:

CONDITION	SPECIFIED CONDITION
Accelerator pedal is released	1.2 to 2.0 V
Accelerator pedal is depressed	3.4 to 5.0 V

If the result is not as specified, check the accelerator pedal, wire harness and ECM.

Last Modified: 3-10-2010	6.4 A	**From:** 200901
Model Year: 2010	**Model:** Corolla	**Doc ID:** RM000003D36003X
Title: 2AZ-FE ENGINE CONTROL: ACCELERATOR PEDAL: REMOVAL (2010 Corolla)		

REMOVAL

1. REMOVE ACCELERATOR PEDAL ASSEMBLY

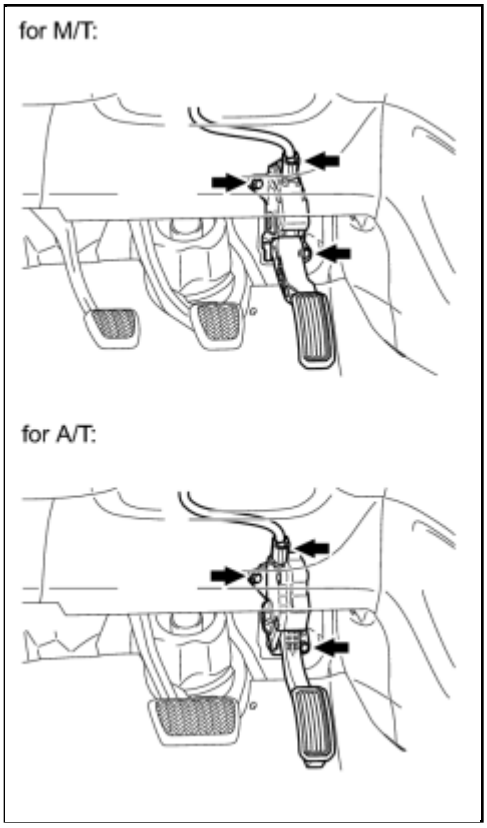

(a) Disconnect the accelerator pedal position sensor connector.

(b) Remove the 2 bolts and accelerator pedal.

Last Modified: 3-10-2010	6.4 K	**From:** 200901
Model Year: 2010	**Model:** Corolla	**Doc ID:** RM000002WT801EX
Title: 2ZR-FE ENGINE CONTROL: ACCELERATOR PEDAL: COMPONENTS (2010 Corolla)		

COMPONENTS

ILLUSTRATION

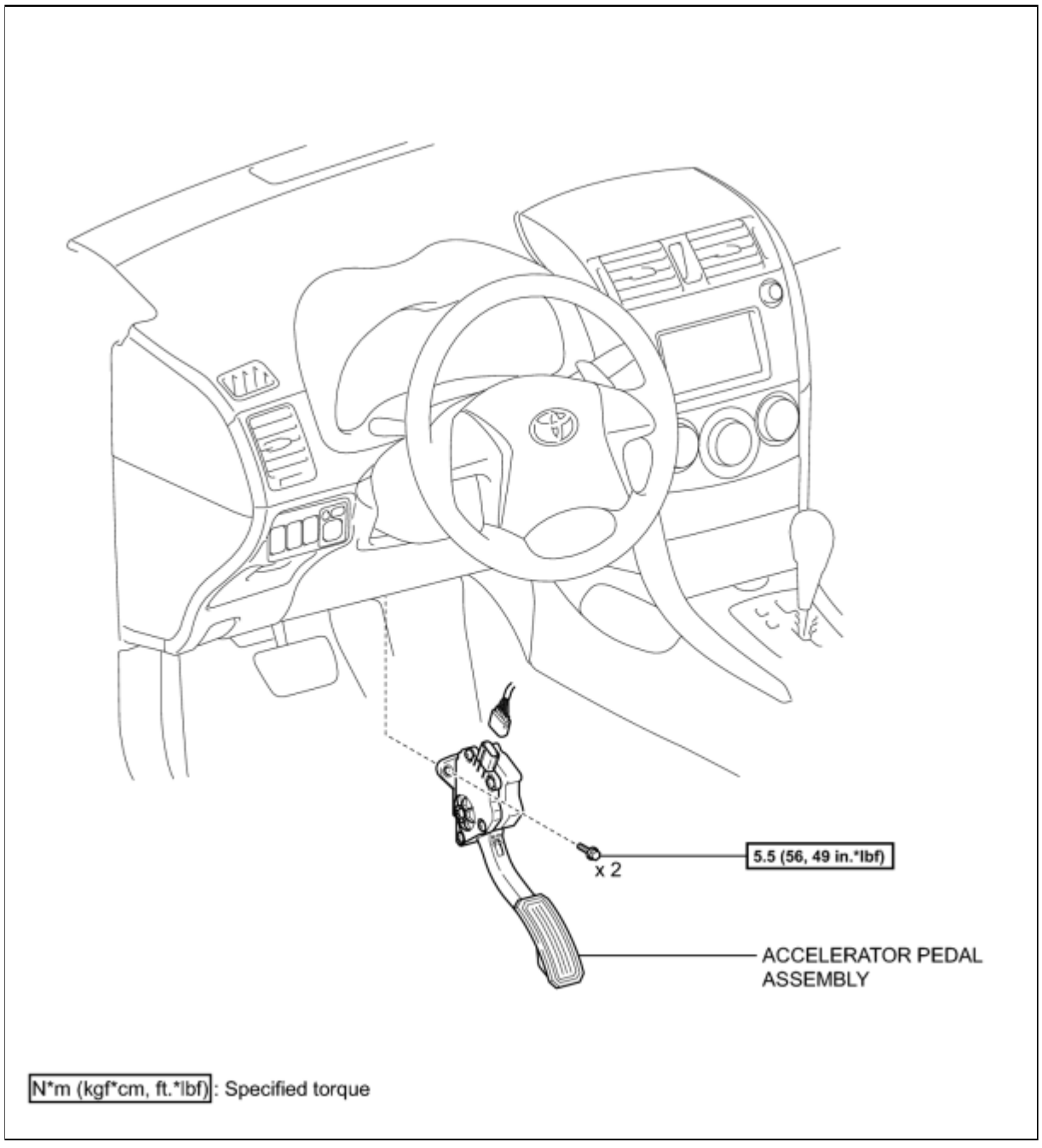

Last Modified: 3-10-2010	6.4 A	**From:** 200901
Model Year: 2010	**Model:** Corolla	**Doc ID:** RM000002WT601EX
Title: 2ZR-FE ENGINE CONTROL: ACCELERATOR PEDAL: INSTALLATION (2010 Corolla)		

INSTALLATION

1. INSTALL ACCELERATOR PEDAL ASSEMBLY

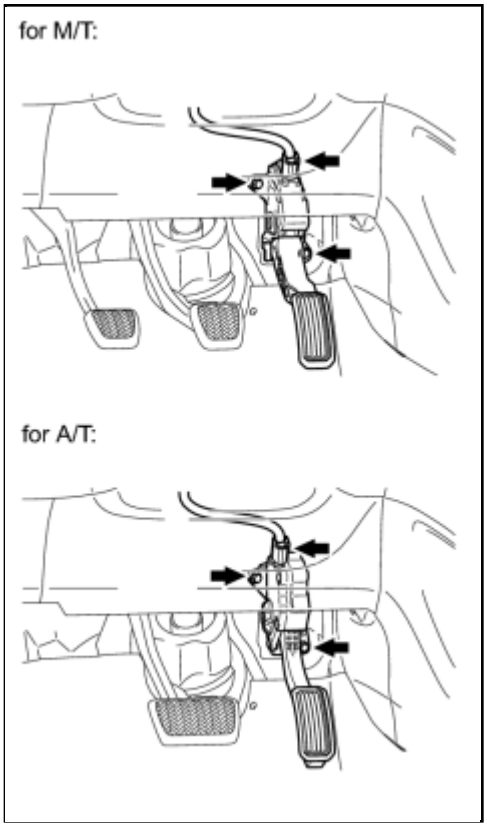

(a) Install the accelerator pedal assembly with the 2 bolts.

Torque: 5.5 N·m (56 kgf·cm, 49in·lbf)

(b) Install the accelerator pedal assembly connector.

Last Modified: 3-10-2010	6.4 G	**From:** 200901
Model Year: 2010	**Model:** Corolla	**Doc ID:** RM000002PQW01TX
Title: 2ZR-FE ENGINE CONTROL: ACCELERATOR PEDAL: ON-VEHICLE INSPECTION (2010 Corolla)		

ON-VEHICLE INSPECTION

1. INSPECT ACCELERATOR PEDAL

(a) Connect the Techstream to the DLC3.

(b) Turn the ignition switch to ON and turn the Techstream on.

(c) Enter the following menus: Powertrain / Engine and ECT / Data List / Accelerator Position No. 1, Accelerator Position No. 2.

(d) Read the values displayed on the Techstream.

Accelerator Position No. 1 Standard Voltage:

CONDITION	SPECIFIED CONDITION
Accelerator pedal is released	0.5 to 1.1 V
Accelerator pedal is depressed	2.6 to 4.5 V

Accelerator Position No. 2 Standard Voltage:

CONDITION	SPECIFIED CONDITION
Accelerator pedal is released	1.2 to 2.0 V
Accelerator pedal is depressed	3.4 to 5.0 V

If the result is not as specified, check the accelerator pedal, wire harness and ECM.

Last Modified: 3-10-2010	6.4 A	**From:** 200901
Model Year: 2010	**Model:** Corolla	**Doc ID:** RM000002WT901EX
Title: 2ZR-FE ENGINE CONTROL: ACCELERATOR PEDAL: REMOVAL (2010 Corolla)		

REMOVAL

1. REMOVE ACCELERATOR PEDAL ASSEMBLY

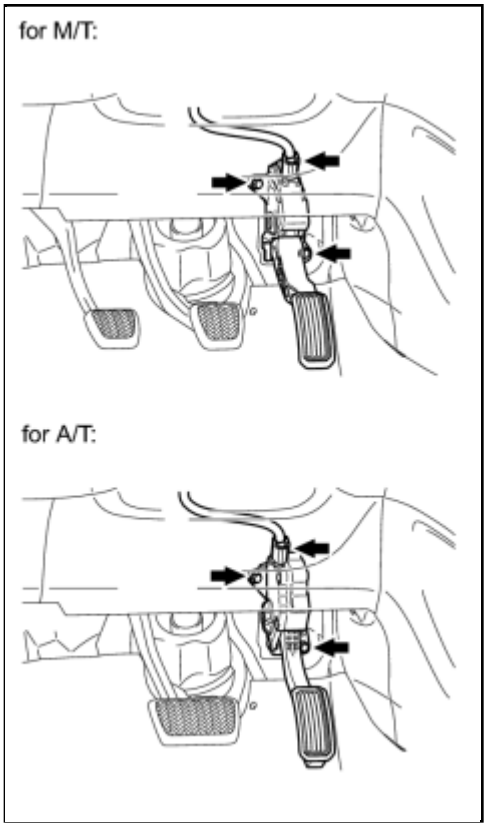

(a) Disconnect the accelerator pedal position sensor connector.

(b) Remove the 2 bolts and accelerator pedal.

Last Modified: 3-10-2010	6.4 K	**From:** 200901
Model Year: 2010	**Model:** Corolla	**Doc ID:** RM0000033D7006X
Title: 2AZ-FE ENGINE CONTROL: AIR FUEL RATIO SENSOR: COMPONENTS (2010 Corolla)		

COMPONENTS

ILLUSTRATION

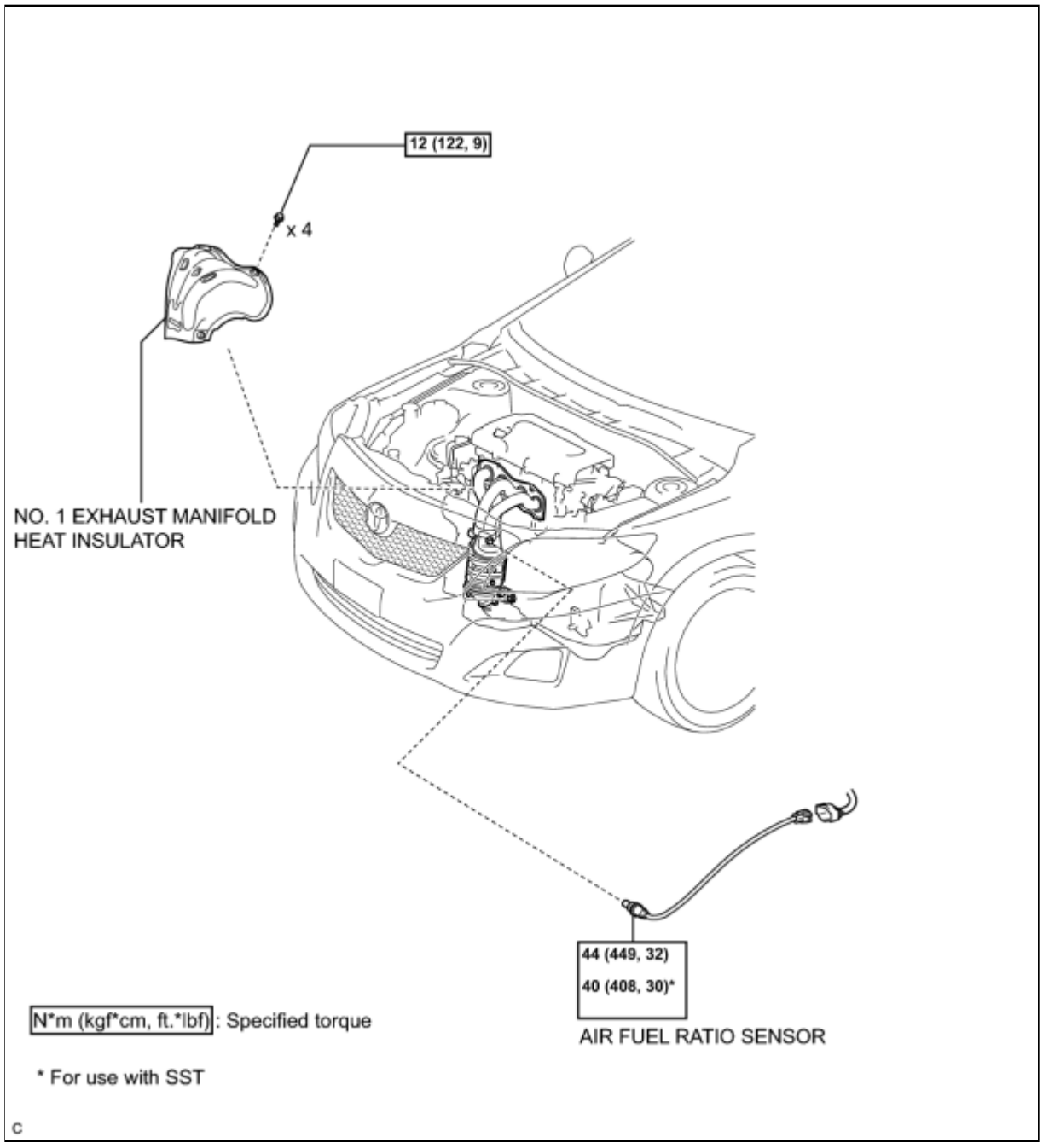

Last Modified: 3-10-2010	6.4 A	**From:** 200901
Model Year: 2010	**Model:** Corolla	**Doc ID:** RM0000033D8006X
Title: 2AZ-FE ENGINE CONTROL: AIR FUEL RATIO SENSOR: REMOVAL (2010 Corolla)		

REMOVAL

1. REMOVE NO. 1 EXHAUST MANIFOLD HEAT INSULATOR

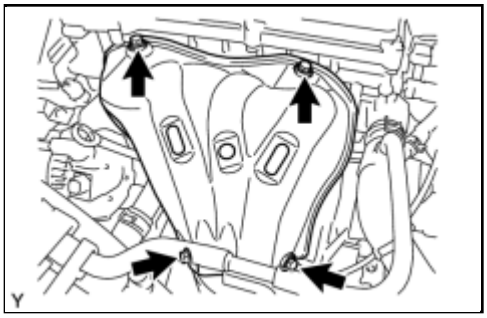

(a) Remove the 4 bolts and the No. 1 exhaust manifold heat insulator.

2. REMOVE AIR FUEL RATIO SENSOR

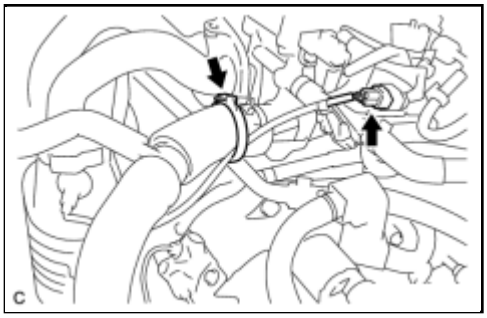

(a) Disconnect the air fuel ratio sensor connector and wire harness clamp.

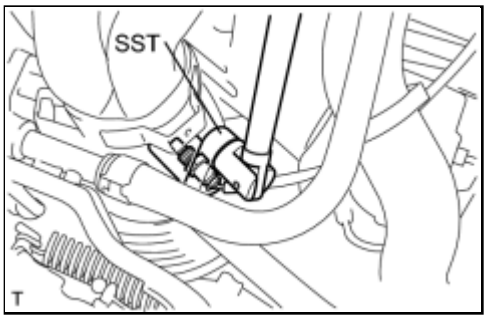

(b) Using SST, remove the air fuel ratio sensor.

SST: 09224-00010

Last Modified: 3-10-2010	6.4 G	**From:** 200901
Model Year: 2010	**Model:** Corolla	**Doc ID:** RM0000033D6006X
Title: 2AZ-FE ENGINE CONTROL: AIR FUEL RATIO SENSOR: INSPECTION (2010 Corolla)		

INSPECTION

1. INSPECT AIR FUEL RATIO SENSOR

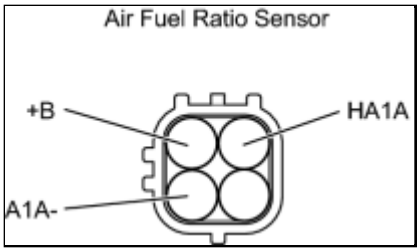

(a) Measure the resistance according to the value(s) in the table below.

Standard Resistance:

TESTER CONNECTION	CONDITION	SPECIFIED CONDITION
1 (HA1A) - 2 (+B)	20 °C (68 °F)	1.8 to 3.4 Ω
1 (HA1A) - 4 (A1A-)	-	10 kΩ or higher

If the resistance is not as specified, replace the air fuel ratio sensor.

Last Modified: 3-10-2010	6.4 A	**From:** 200901
Model Year: 2010	**Model:** Corolla	**Doc ID:** RM0000033D5006X
Title: 2AZ-FE ENGINE CONTROL: AIR FUEL RATIO SENSOR: INSTALLATION (2010 Corolla)		

INSTALLATION

1. INSTALL AIR FUEL RATIO SENSOR

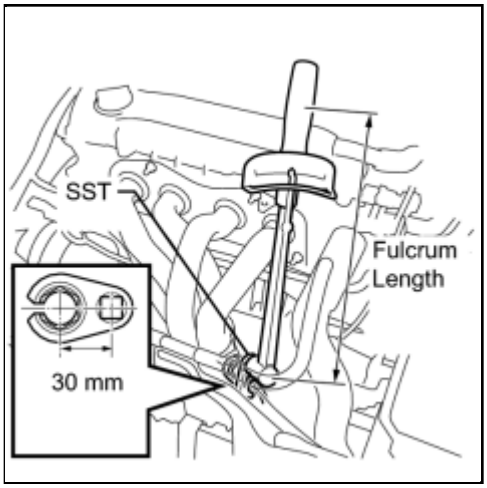

(a) Using SST, install the air fuel ratio sensor.

SST: 09224-00010

without SST - Torque: 44 N·m (449 kgf·cm, 32ft·lbf)

with SST - Torque: 40 N·m (408 kgf·cm, 30ft·lbf)

NOTICE:

- This torque value can be obtained by using a torque wrench with a fulcrum length of 300 mm (11.81 in.) and SST with a measure of 30 mm (1.18 in.) INFO .
- This torque value is effective when SST is parallel to the torque wrench.

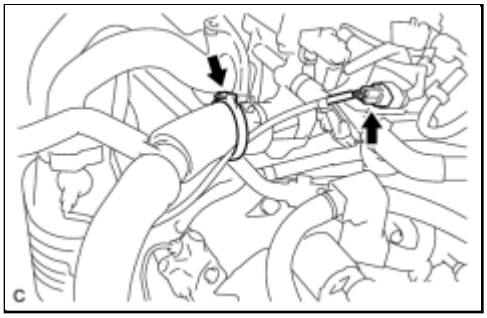

(b) Connect the air fuel ratio sensor connector and wire harness clamp.

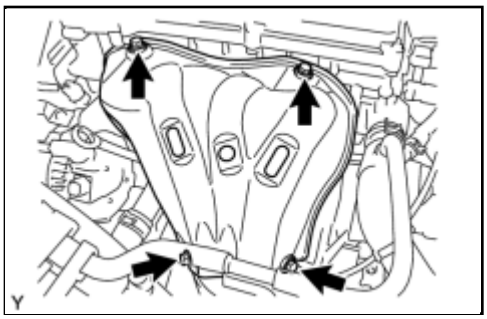

2. INSTALL NO. 1 EXHAUST MANIFOLD HEAT INSULATOR

(a) Install the No. 1 exhaust manifold heat insulator with the 4 bolts.

Torque: 12 N·m (122 kgf·cm, 9ft·lbf)

3. INSPECT FOR EXHAUST GAS LEAK

Last Modified: 3-10-2010	6.4 K	**From:** 200901
Model Year: 2010	**Model:** Corolla	**Doc ID:** RM00000306R00AX
Title: 2ZR-FE ENGINE CONTROL: AIR FUEL RATIO SENSOR: COMPONENTS (2010 Corolla)		

COMPONENTS

ILLUSTRATION

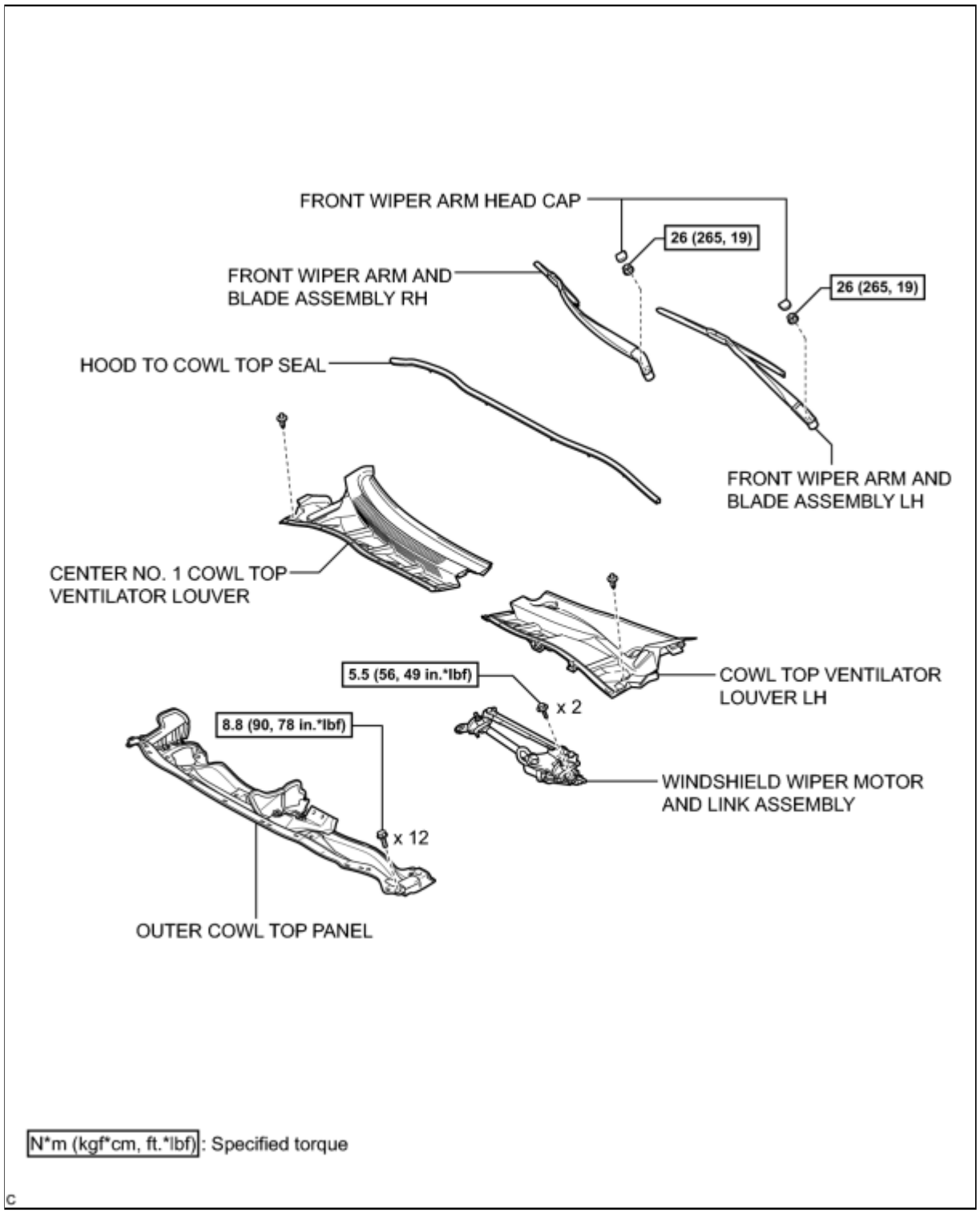

ILLUSTRATION

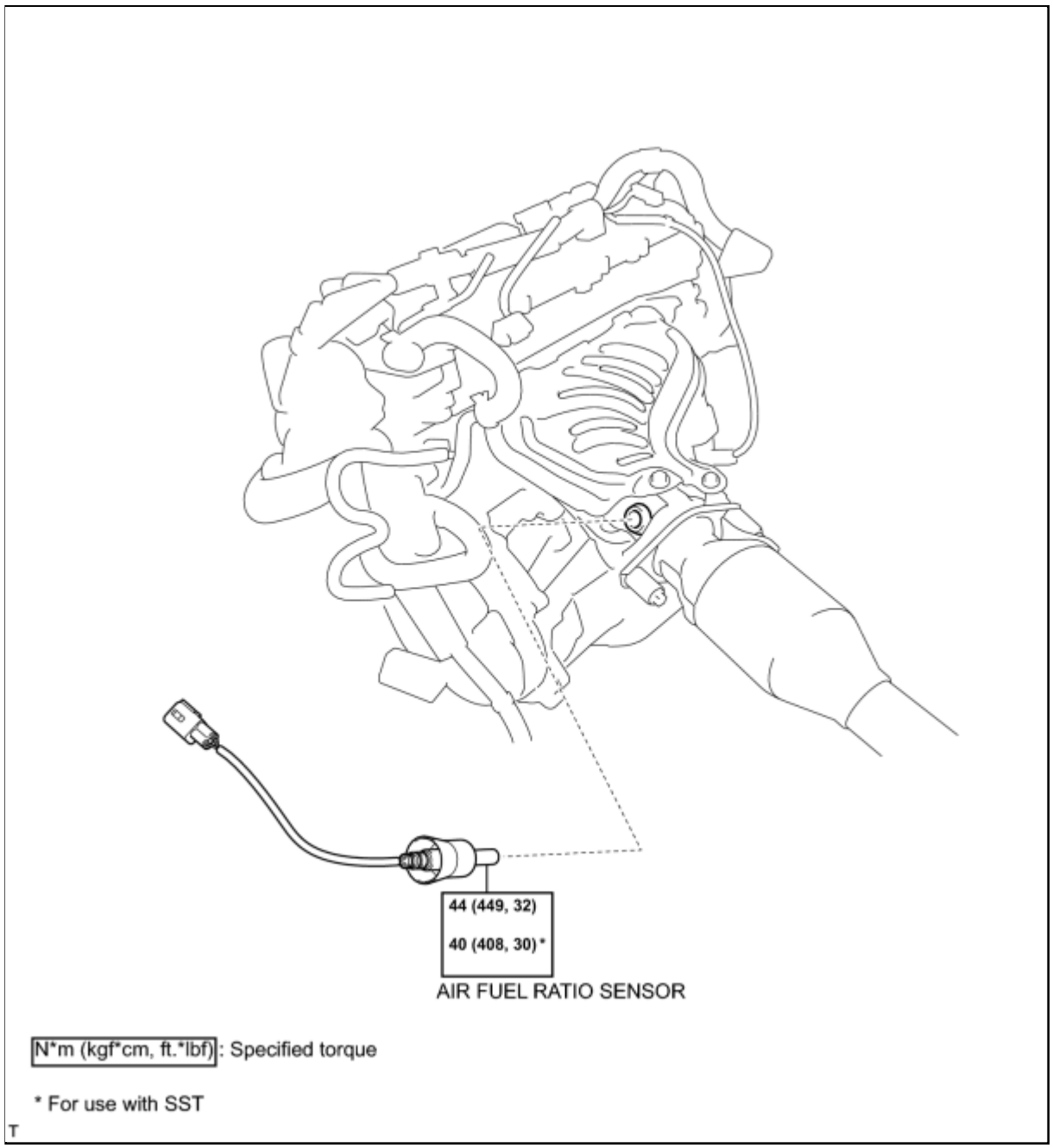

T

Last Modified: 3-10-2010	6.4 A	**From:** 200901
Model Year: 2010	**Model:** Corolla	**Doc ID:** RM00000306S00AX
Title: 2ZR-FE ENGINE CONTROL: AIR FUEL RATIO SENSOR: REMOVAL (2010 Corolla)		

REMOVAL

1. REMOVE FRONT WIPER ARM HEAD CAP INFO

2. REMOVE FRONT WIPER ARM AND BLADE ASSEMBLY LH INFO

3. REMOVE FRONT WIPER ARM AND BLADE ASSEMBLY RH INFO

4. REMOVE HOOD TO COWL TOP SEAL INFO

5. REMOVE CENTER NO. 1 COWL TOP VENTILATOR LOUVER INFO

6. REMOVE COWL TOP VENTILATOR LOUVER LH INFO

7. REMOVE WINDSHIELD WIPER MOTOR AND LINK ASSEMBLY INFO

8. REMOVE OUTER COWL TOP PANEL (for TMC Made) INFO

9. REMOVE OUTER COWL TOP PANEL (except TMC Made) INFO

10. REMOVE NO. 2 CYLINDER HEAD COVER INFO

11. REMOVE AIR FUEL RATIO SENSOR

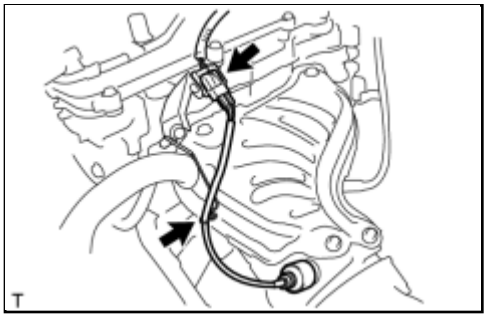

(a) Disconnect the air fuel ratio sensor connector and clamp.

(b) Using SST, remove the air fuel ratio sensor.

SST: 09224-00010

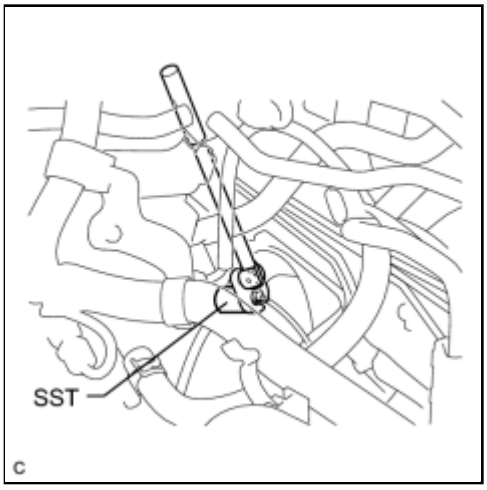
SST
C

Last Modified: 3-10-2010	6.4 G	**From:** 200901
Model Year: 2010	**Model:** Corolla	**Doc ID:** RM000001CK8027X
Title: 2ZR-FE ENGINE CONTROL: AIR FUEL RATIO SENSOR: INSPECTION (2010 Corolla)		

INSPECTION

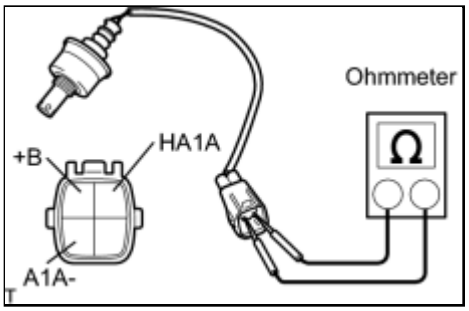

1. INSPECT AIR FUEL RATIO SENSOR

(a) Measure the resistance according to the value(s) in the table below.

Standard Resistance:

TESTER CONNECTION	CONDITION	SPECIFIED CONDITION
1 (HA1A) - 2 (+B)	20°C (68°F)	1.8 to 3.4 Ω
1 (HA1A) - 4 (A1A-)	-	10 kΩ or higher

If the result is not as specified, replace the air fuel ratio sensor.

Last Modified: 3-10-2010	6.4 A	**From:** 200901
Model Year: 2010	**Model:** Corolla	**Doc ID:** RM00000306Q00AX
Title: 2ZR-FE ENGINE CONTROL: AIR FUEL RATIO SENSOR: INSTALLATION (2010 Corolla)		

INSTALLATION

1. INSTALL AIR FUEL RATIO SENSOR

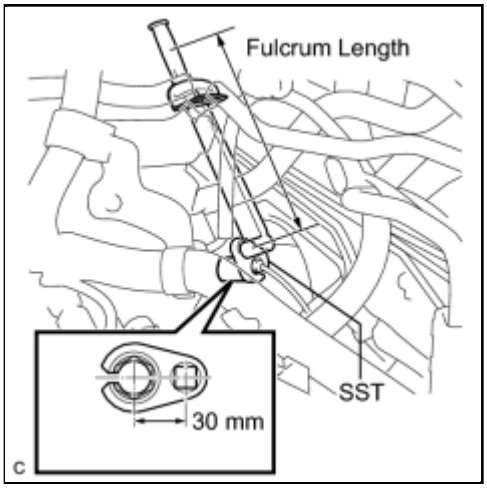

(a) Using SST, install the air fuel ratio sensor.

SST: 09224-00010
without SST - Torque: 44 N·m (449 kgf·cm, 32ft·lbf)
with SST - Torque: 40 N·m (408 kgf·cm, 30ft·lbf)

NOTICE:

- This torque value is effective when SST is parallel to the torque wrench.
- This torque value can be obtained by using a torque wrench with a fulcrum length of 300 mm (11.81 in.) and SST with a measurement of 30 mm (1.18 in.) INFO .

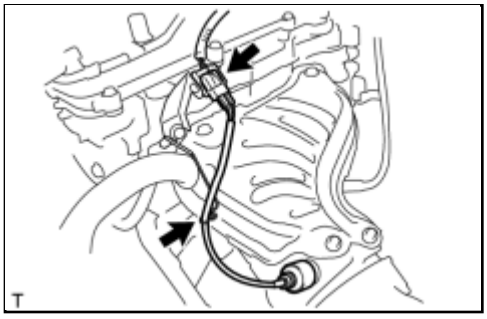

(b) Connect the air fuel ratio sensor connector and clamp.

2. INSTALL NO. 2 CYLINDER HEAD COVER INFO

3. INSTALL OUTER COWL TOP PANEL (for TMC Made) INFO

4. INSTALL OUTER COWL TOP PANEL (except TMC Made) INFO

5. INSTALL WINDSHIELD WIPER MOTOR AND LINK ASSEMBLY INFO

6. INSTALL COWL TOP VENTILATOR LOUVER LH INFO

7. INSTALL CENTER NO. 1 COWL TOP VENTILATOR LOUVER INFO

8. INSTALL HOOD TO COWL TOP SEAL INFO

9. INSTALL FRONT WIPER ARM AND BLADE ASSEMBLY RH INFO

10. INSTALL FRONT WIPER ARM AND BLADE ASSEMBLY LH INFO

11. INSTALL FRONT WIPER ARM HEAD CAP INFO

12. INSPECT FOR EXHAUST GAS LEAK

Last Modified: 3-10-2010	6.4 K	**From:** 200901
Model Year: 2010	**Model:** Corolla	**Doc ID:** RM000003D31003X
Title: 2AZ-FE ENGINE CONTROL: CAMSHAFT OIL CONTROL VALVE: COMPONENTS (2010 Corolla)		

COMPONENTS

ILLUSTRATION

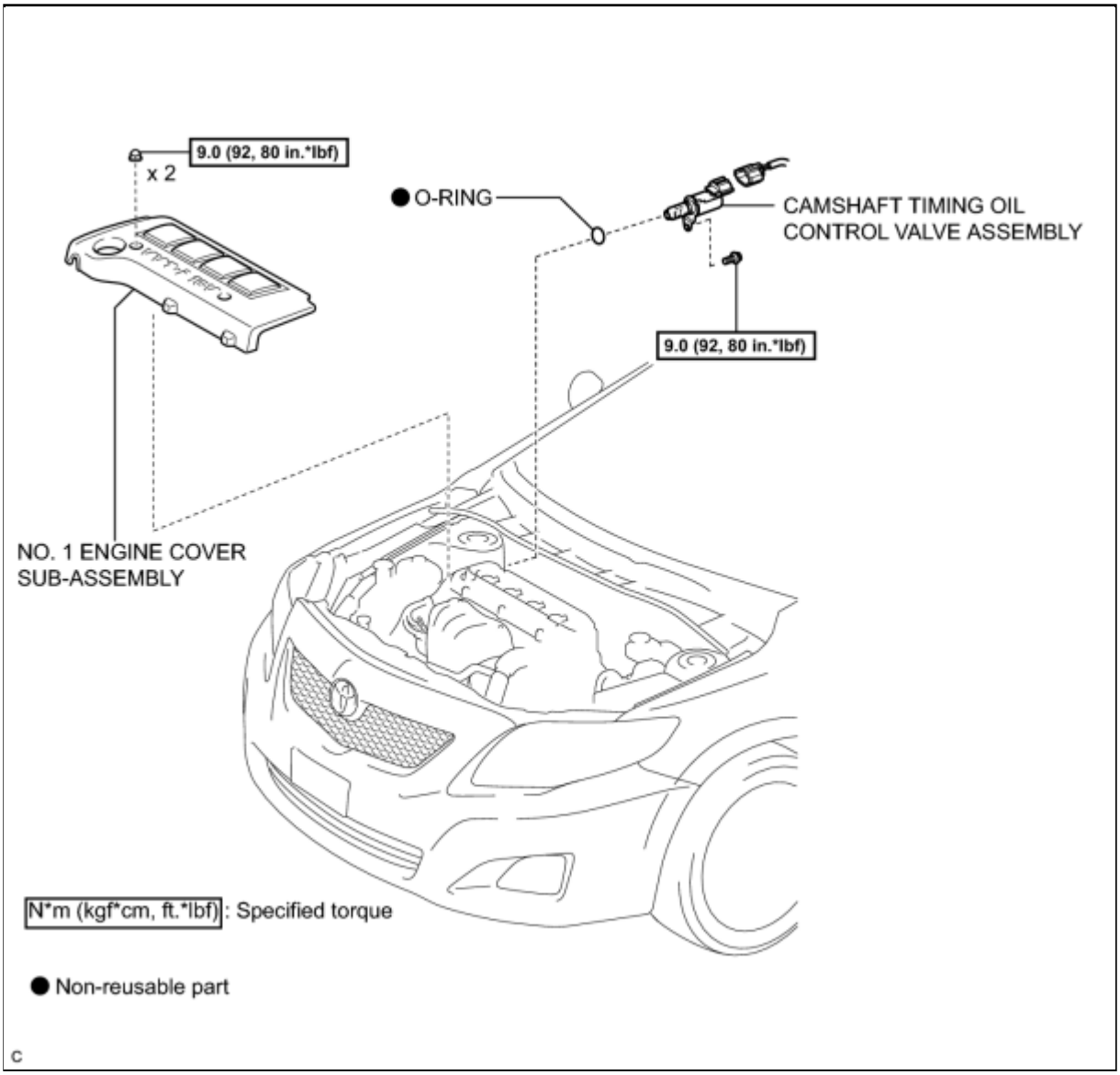

Last Modified: 3-10-2010	6.4 G	**From:** 200901
Model Year: 2010	**Model:** Corolla	**Doc ID:** RM000003D33003X
Title: 2AZ-FE ENGINE CONTROL: CAMSHAFT OIL CONTROL VALVE: ON-VEHICLE INSPECTION (2010 Corolla)		

ON-VEHICLE INSPECTION

1. INSPECT CAMSHAFT TIMING OIL CONTROL VALVE ASSEMBLY

(a) Connect the Techstream to the DLC3.

(b) Start the engine.

(c) Turn the Techstream on.

(d) Inspect the oil control valve (for intake camshaft).

(1) Enter the following menus: Powertrain / Engine and ECT / Active Test / Control the VVT System (Bank 1).

(2) Check the engine speed when the oil control valve is operated using the Techstream with the engine coolant temperature at 50°C (122°F) or less.

HINT:

- When performing the active test, the air conditioning should be on.
- Engine coolant temperature when the engine is started should be 30°C (86°F) or less.

Standard:

CONTROL RANGE	SPECIFIED CONDITION
OFF	Normal engine speed
ON	Rough idle or engine stalls (soon after oil control valve switched from OFF to ON)

Last Modified: 3-10-2010	6.4 A	**From:** 200901
Model Year: 2010	**Model:** Corolla	**Doc ID:** RM000003D32003X
Title: 2AZ-FE ENGINE CONTROL: CAMSHAFT OIL CONTROL VALVE: REMOVAL (2010 Corolla)		

REMOVAL

1. REMOVE NO. 1 ENGINE COVER SUB-ASSEMBLY INFO

2. REMOVE CAMSHAFT TIMING OIL CONTROL VALVE ASSEMBLY

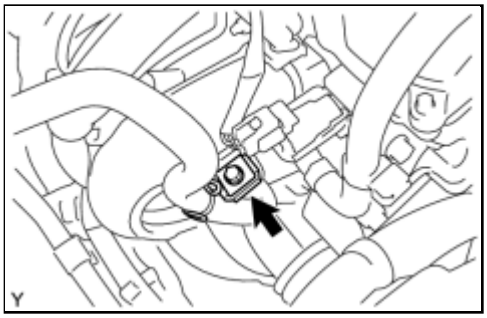

(a) Remove the bolt and the vacuum hose clamp.

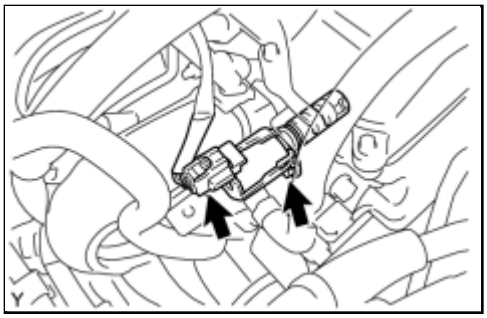

(b) Disconnect the camshaft timing oil control valve connector.

(c) Remove the bolt and the camshaft timing oil control valve assembly.

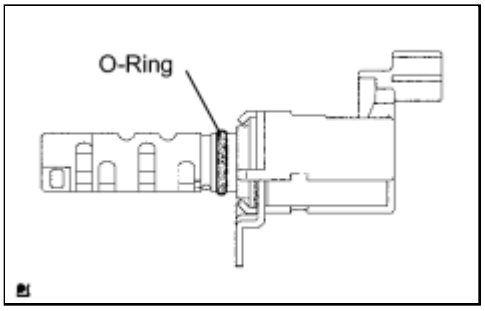

(d) Remove the O-ring from the camshaft timing oil control valve assembly.

Last Modified: 3-10-2010	6.4 G	**From:** 200901
Model Year: 2010	**Model:** Corolla	**Doc ID:** RM000003D30003X
Title: 2AZ-FE ENGINE CONTROL: CAMSHAFT OIL CONTROL VALVE: INSPECTION (2010 Corolla)		

INSPECTION

1. INSPECT CAMSHAFT TIMING OIL CONTROL VALVE ASSEMBLY

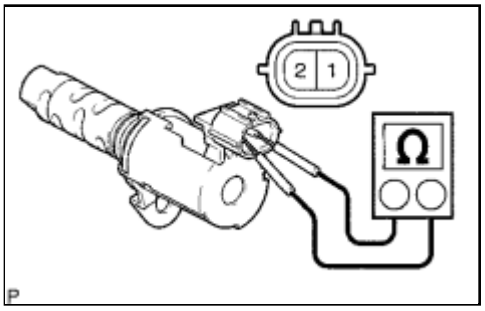

(a) Measure the resistance between the terminals.

Standard Resistance:

TESTER CONNECTION	CONDITION	SPECIFIED CONDITION
1 - 2	20°C (68°F)	6.9 to 7.9 Ω

If the result is not as specified, replace the oil control valve assembly.

(b) Check the operation.

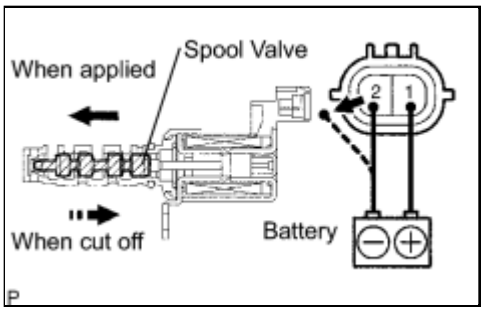

(1) Connect a positive (+) battery lead to terminal 1 and a negative (-) lead to terminal 2, and check the movement of the valve.

NOTICE:

Confirm that the valve moves freely and does not stick in any position.

If necessary, replace the camshaft timing oil control valve assembly.

HINT:

Accumulation of foreign matter can cause minor pressure leaks. Minor pressure leaks will cause the camshaft to advance, and this will cause a DTC to be set.

Last Modified: 3-10-2010	6.4 A	**From:** 200901
Model Year: 2010	**Model:** Corolla	**Doc ID:** RM000003D2Z003X
Title: 2AZ-FE ENGINE CONTROL: CAMSHAFT OIL CONTROL VALVE: INSTALLATION (2010 Corolla)		

INSTALLATION

1. INSTALL CAMSHAFT TIMING OIL CONTROL VALVE ASSEMBLY

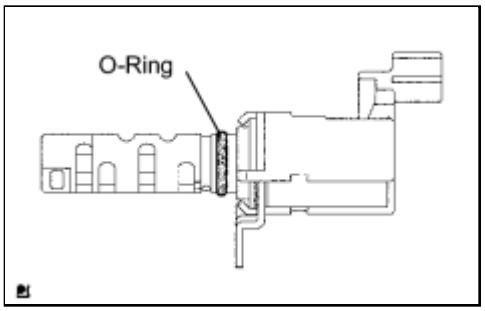

(a) Apply a light coat of engine oil to a new O-ring and install it onto the camshaft timing oil control valve assembly.

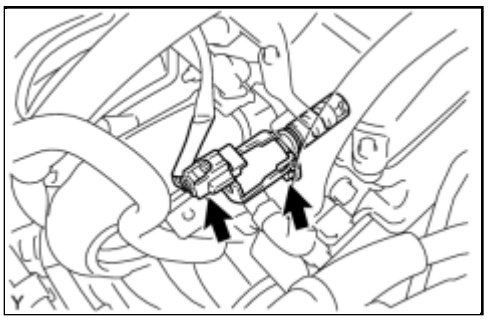

(b) Install the camshaft timing oil control valve assembly with the bolt.

Torque: 9.0 N·m (92 kgf·cm, 80in·lbf)

(c) Connect the camshaft timing oil control valve connector.

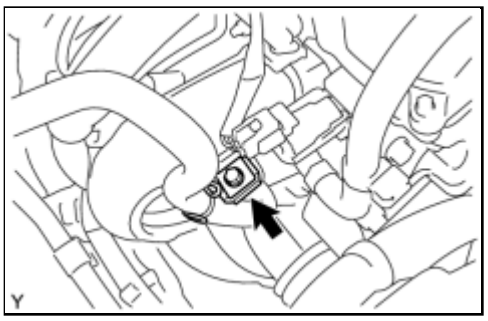

(d) Install the vacuum hose clamp with the bolt.

2. INSPECT FOR OIL LEAK

3. INSTALL NO. 1 ENGINE COVER SUB-ASSEMBLY INFO

Last Modified: 3-10-2010	6.4 K	**From:** 200901
Model Year: 2010	**Model:** Corolla	**Doc ID:** RM000003D3D003X
Title: 2ZR-FE ENGINE CONTROL: CAMSHAFT OIL CONTROL VALVE: COMPONENTS (2010 Corolla)		

COMPONENTS

ILLUSTRATION

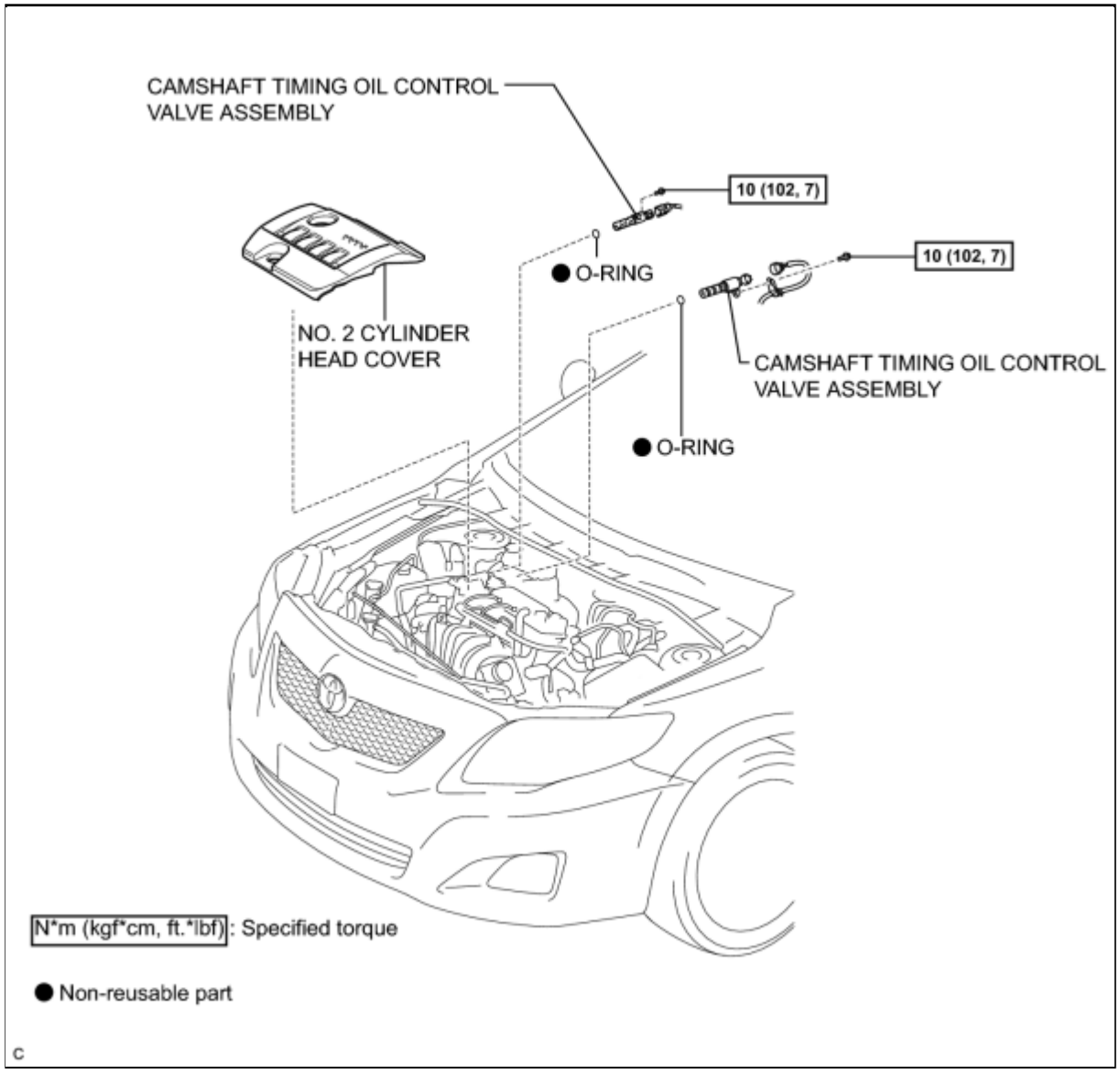

Last Modified: 3-10-2010	6.4 G	**From:** 200901
Model Year: 2010	**Model:** Corolla	**Doc ID:** RM000003D3F003X
Title: 2ZR-FE ENGINE CONTROL: CAMSHAFT OIL CONTROL VALVE: ON-VEHICLE INSPECTION (2010 Corolla)		

ON-VEHICLE INSPECTION

1. INSPECT CAMSHAFT TIMING OIL CONTROL VALVE ASSEMBLY

(a) Connect the Techstream to the DLC3.

(b) Start the engine.

(c) Turn the Techstream on.

(d) Inspect the oil control valve (for intake camshaft).

(1) Enter the following menus: Powertrain / Engine and ECT / Active Test / Control the VVT System (Bank 1).

(2) Check the engine speed when the oil control valve is operated using the Techstream with the engine coolant temperature at 50°C (122°F) or less.

HINT:

- When performing the active test, the air conditioning should be on.
- Engine coolant temperature when the engine is started should be 30°C (86°F) or less.

Standard:

CONTROL RANGE	SPECIFIED CONDITION
OFF	Normal engine speed
ON	Rough idle or engine stalls (soon after oil control valve switched from OFF to ON)

(e) Inspect the oil control valve (for exhaust camshaft).

(1) Enter the following menus: Powertrain / Engine and ECT / Active Test / Control the VVT Exhaust Linear (Bank 1).

(2) Check the engine speed when the oil control valve is operated using the Techstream with the engine coolant temperature at 50°C (122°F) or less.

HINT:

- When performing the active test, the air conditioning should be on.
- Engine coolant temperature when engine is started should be 30°C (86°F) or less.

Standard:

CONTROL RANGE	SPECIFIED CONDITION
100%	Rough idle or engine stalls (soon after oil control valve switched from OFF to ON)
-100%	Normal engine speed

Last Modified: 3-10-2010	6.4 A	**From:** 200901
Model Year: 2010	**Model:** Corolla	**Doc ID:** RM000003D3E003X
Title: 2ZR-FE ENGINE CONTROL: CAMSHAFT OIL CONTROL VALVE: REMOVAL (2010 Corolla)		

REMOVAL

1. REMOVE NO. 2 CYLINDER HEAD COVER INFO

2. REMOVE CAMSHAFT TIMING OIL CONTROL VALVE ASSEMBLY

(a) Exhaust camshaft side:



(1) Remove the bolt and the wire harness bracket.

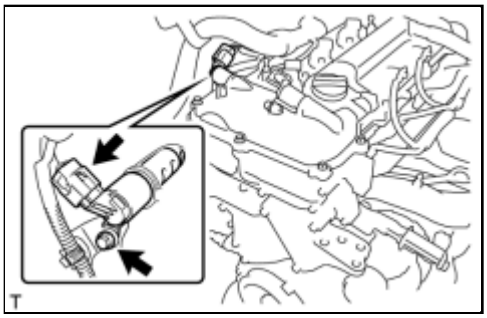

(2) Disconnect the camshaft timing oil control valve assembly connector.

(3) Remove the bolt and the camshaft timing oil control valve assembly and separate the wire harness bracket.

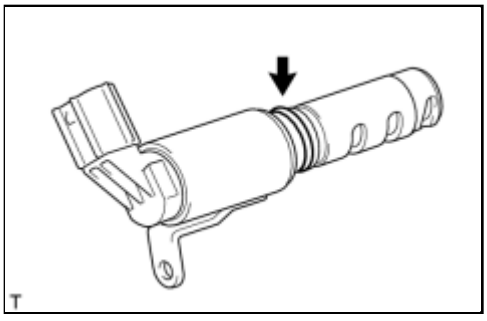

(4) Remove the O-ring from the camshaft timing oil control valve assembly.

(b) Intake camshaft side:

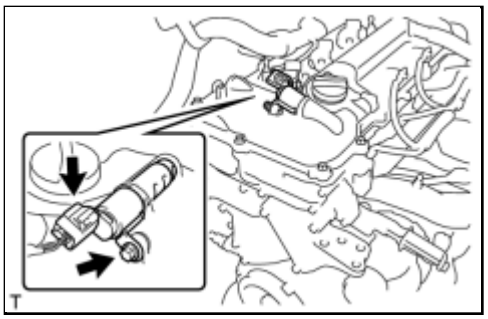

(1) Disconnect the camshaft timing oil control valve assembly connector.

(2) Remove the bolt and remove the camshaft timing oil control valve assembly.

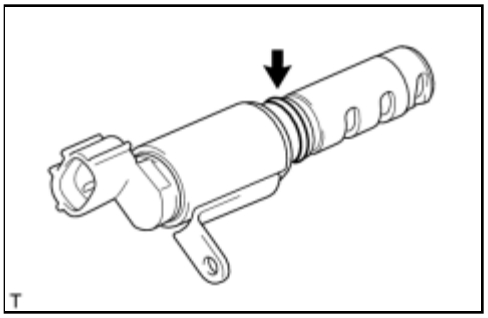

(3) Remove the O-ring from the camshaft timing oil control valve assembly.

Last Modified: 3-10-2010	6.4 G	**From:** 200901
Model Year: 2010	**Model:** Corolla	**Doc ID:** RM000003D3C003X
Title: 2ZR-FE ENGINE CONTROL: CAMSHAFT OIL CONTROL VALVE: INSPECTION (2010 Corolla)		

INSPECTION

1. INSPECT CAMSHAFT TIMING OIL CONTROL VALVE ASSEMBLY

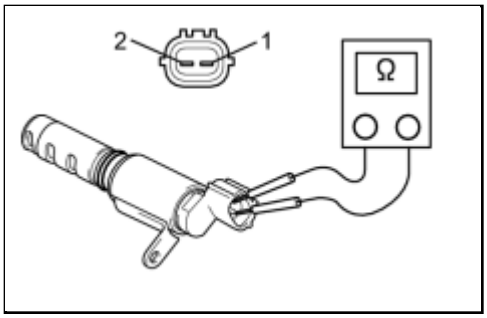

(a) Measure the resistance between the terminals.

Standard Resistance:

TESTER CONNECTION	CONDITION	SPECIFIED CONDITION
1 - 2	20°C (68°F)	6.9 to 7.9 Ω

If the result is not as specified, replace the oil control valve assembly.

(b) Check the operation.

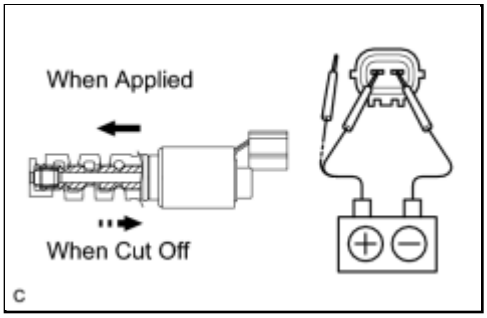

(1) Connect a positive (+) battery lead to terminal 1 and a negative (-) lead to terminal 2, and check the movement of the valve.

NOTICE:

Confirm that the valve moves freely and does not stick in any position.

If necessary, replace the camshaft timing oil control valve assembly.

HINT:

Accumulation of foreign matter can cause minor pressure leaks. Minor pressure leaks will cause the camshaft to advance or retard, and this will cause a DTC to be set.

Last Modified: 3-10-2010	6.4 A	**From:** 200901
Model Year: 2010	**Model:** Corolla	**Doc ID:** RM000003D3B003X
Title: 2ZR-FE ENGINE CONTROL: CAMSHAFT OIL CONTROL VALVE: INSTALLATION (2010 Corolla)		

INSTALLATION

1. INSTALL CAMSHAFT TIMING OIL CONTROL VALVE ASSEMBLY

(a) Intake camshaft side:

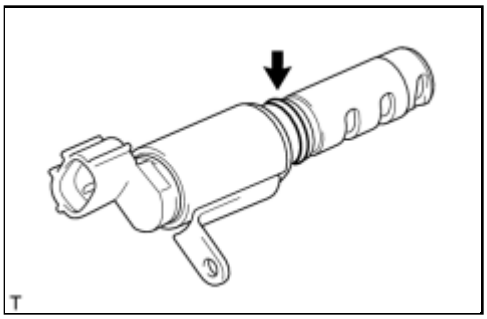

(1) Apply a light coat of engine oil to a new O-ring and install it onto the camshaft timing oil control valve assembly

NOTICE:

Do not twist the O-ring.

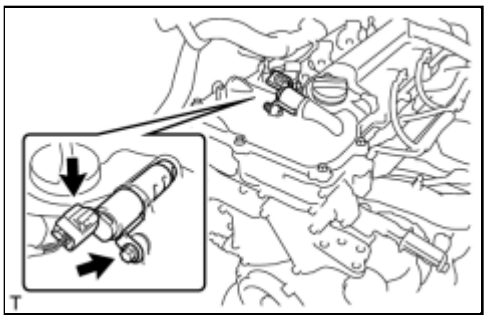

(2) Install the camshaft timing oil control valve assembly and wire harness bracket with the bolt.

Torque: 10 N·m (102 kgf·cm, 7ft·lbf)

(3) Connect the camshaft timing oil control valve assembly connector.

(b) Exhaust camshaft side:

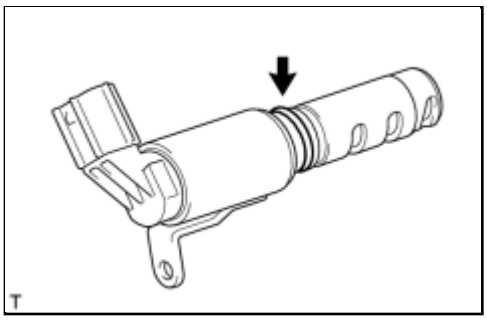

(1) Apply a light coat of engine oil to a new O-ring and install it onto the camshaft timing oil control valve assembly.

NOTICE:

Do not twist the O-ring.

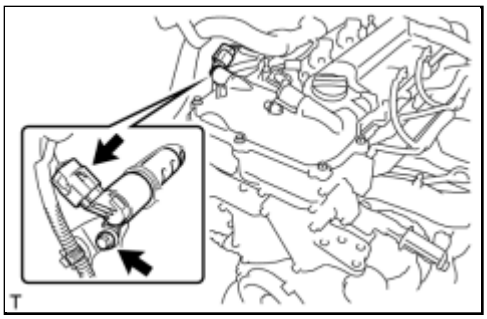

(2) Install the camshaft timing oil control valve assembly and wire harness bracket with the bolt.

Torque: 10 N·m (102 kgf·cm, 7ft·lbf)

(3) Connect the camshaft timing oil control valve assembly connector.



(4) Install the wire harness bracket with the bolt.

Torque: 8.4 N·m (85 kgf·cm, 74in·lbf)

2. INSPECT FOR OIL LEAK

3. INSTALL NO. 2 CYLINDER HEAD COVER INFO

Last Modified: 3-10-2010	6.4 K	**From:** 200901
Model Year: 2010	**Model:** Corolla	**Doc ID:** RM0000017V601QX
Title: 2AZ-FE ENGINE CONTROL: CAMSHAFT POSITION SENSOR: COMPONENTS (2010 Corolla)		

COMPONENTS

ILLUSTRATION

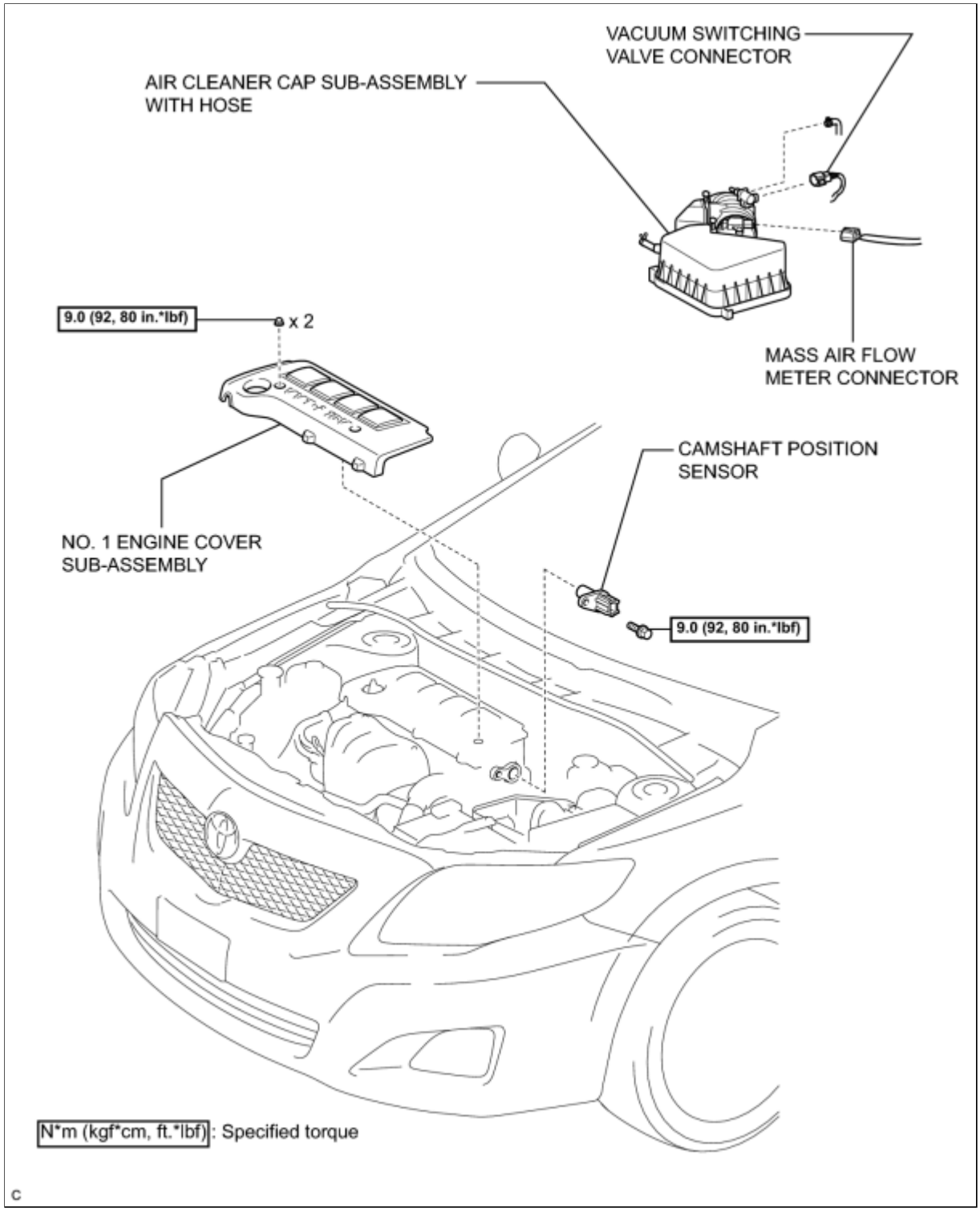
VACUUM SWITCHING VALVE CONNECTOR
AIR CLEANER CAP SUB-ASSEMBLY WITH HOSE
9.0 (92, 80 in.*lbf)
x 2
MASS AIR FLOW METER CONNECTOR
CAMSHAFT POSITION SENSOR
NO. 1 ENGINE COVER SUB-ASSEMBLY
9.0 (92, 80 in.*lbf)
N*m (kgf*cm, ft.*lbf): Specified torque

C

Last Modified: 3-10-2010	6.4 A	**From:** 200901
Model Year: 2010	**Model:** Corolla	**Doc ID:** RM0000017V7026X
Title: 2AZ-FE ENGINE CONTROL: CAMSHAFT POSITION SENSOR: REMOVAL (2010 Corolla)		

REMOVAL

1. REMOVE NO. 1 ENGINE COVER SUB-ASSEMBLY INFO

2. REMOVE AIR CLEANER CAP SUB-ASSEMBLY WITH HOSE INFO

3. REMOVE CAMSHAFT POSITION SENSOR

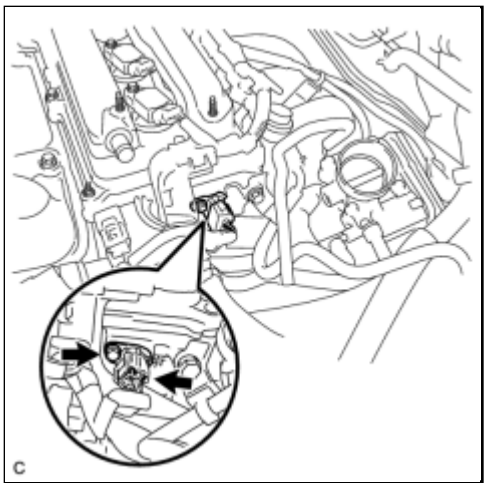

(a) Disconnect the camshaft position sensor connector.

(b) Remove the bolt and the camshaft position sensor.

Last Modified: 3-10-2010	6.4 G	**From:** 200901
Model Year: 2010	**Model:** Corolla	**Doc ID:** RM0000017V5017X
Title: 2AZ-FE ENGINE CONTROL: CAMSHAFT POSITION SENSOR: INSPECTION (2010 Corolla)		

INSPECTION

1. INSPECT CAMSHAFT POSITION SENSOR

(a) Measure the resistance.

Standard Resistance:

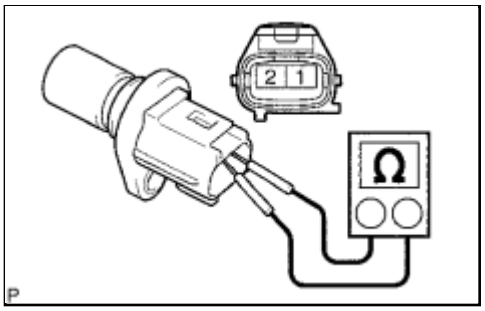

TESTER CONNECTION	CONDITION	SPECIFIED CONDITION
1 - 2	Cold	835 to 1,400 Ω
1 - 2	Hot	1,060 to 1,645 Ω

HINT:

In the table above, the terms Cold and Hot refer to the temperature of the coils. Cold means approximately -10 to 50 °C (14 to 122 °F). Hot means approximately 50 to 100 °C (122 to 212 °F).

If the resistance is not as specified, replace the camshaft position sensor.

Last Modified: 3-10-2010	6.4 A	**From:** 200901
Model Year: 2010	**Model:** Corolla	**Doc ID:** RM0000017V4027X
Title: 2AZ-FE ENGINE CONTROL: CAMSHAFT POSITION SENSOR: INSTALLATION (2010 Corolla)		

INSTALLATION

1. INSTALL CAMSHAFT POSITION SENSOR

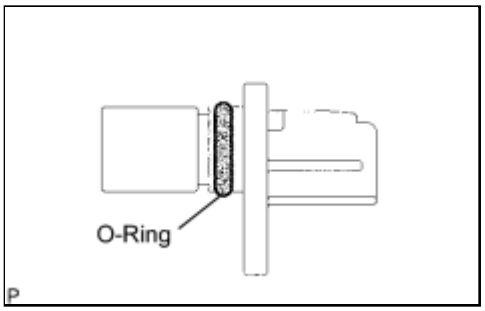

(a) Apply a light coat of engine oil to the O-ring of the sensor.

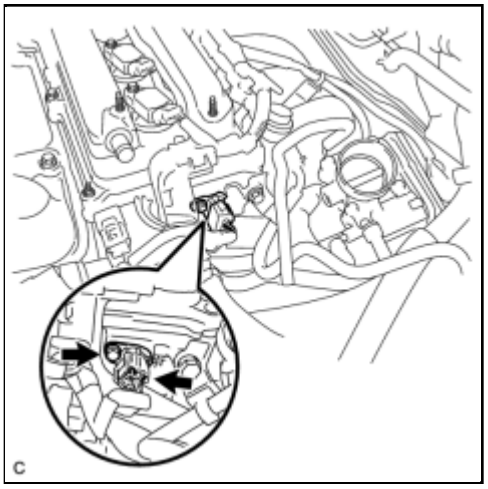

(b) Install the camshaft position sensor with the bolt.

Torque: 9.0 N·m (92 kgf·cm, 80in·lbf)

(c) Connect the camshaft position sensor connector.

2. INSTALL AIR CLEANER CAP SUB-ASSEMBLY WITH HOSE INFO

3. INSPECT FOR ENGINE OIL LEAK

4. INSTALL NO. 1 ENGINE COVER SUB-ASSEMBLY INFO

Last Modified: 3-10-2010	6.4 K	**From:** 200901
Model Year: 2010	**Model:** Corolla	**Doc ID:** RM0000030KY00BX
Title: 2ZR-FE ENGINE CONTROL: CAMSHAFT POSITION SENSOR: COMPONENTS (2010 Corolla)		

COMPONENTS

ILLUSTRATION

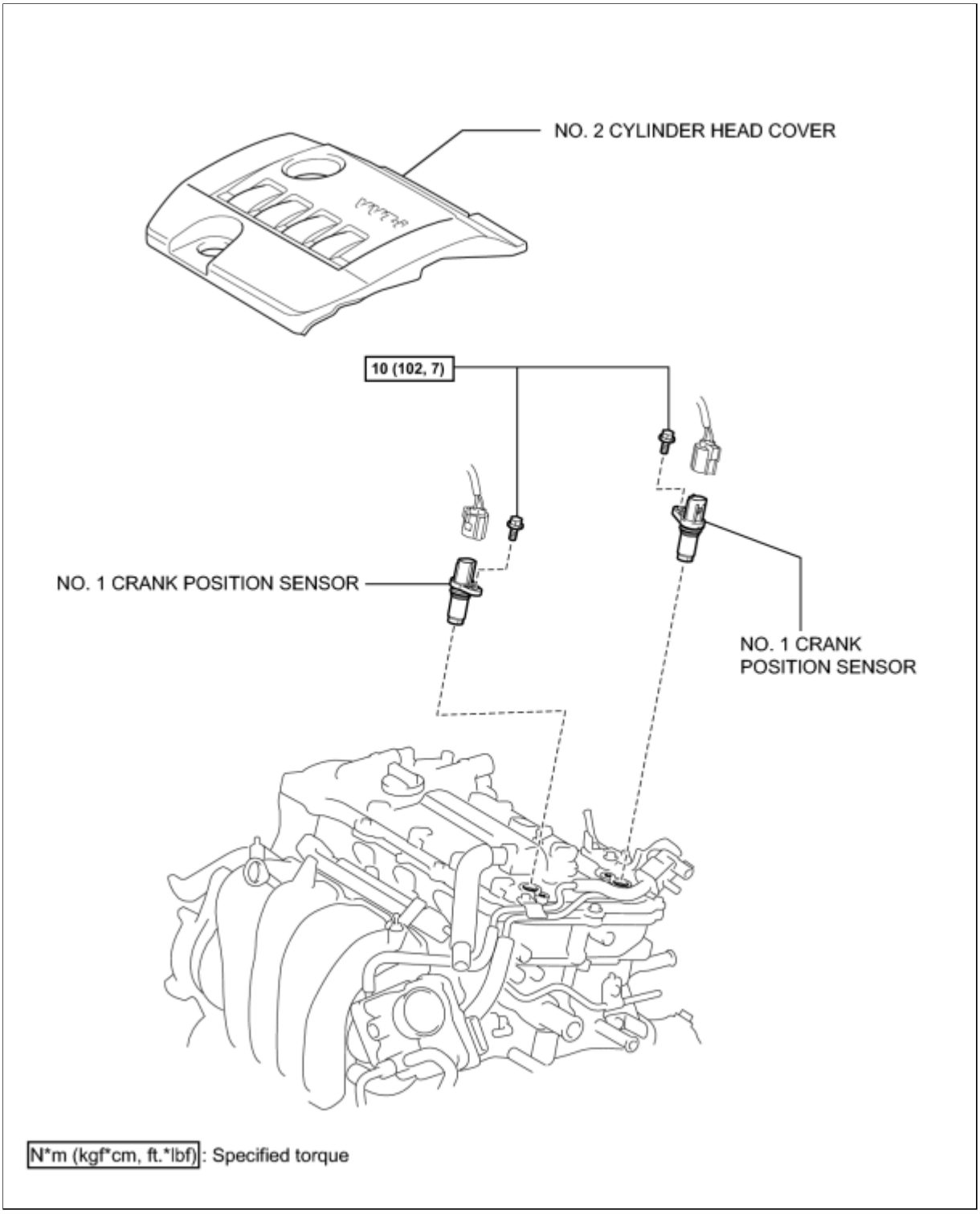

N*m (kgf*cm, ft.*lbf): Specified torque

Last Modified: 3-10-2010	6.4 A	**From:** 200901
Model Year: 2010	**Model:** Corolla	**Doc ID:** RM0000030KZ00BX
Title: 2ZR-FE ENGINE CONTROL: CAMSHAFT POSITION SENSOR: REMOVAL (2010 Corolla)		

REMOVAL

HINT:

Although the part name refers to the No. 1 crank position sensors, this procedure is for the camshaft position sensors.

1. REMOVE NO. 2 CYLINDER HEAD COVER INFO

2. REMOVE NO. 1 CRANK POSITION SENSOR

(a) Exhaust camshaft side:

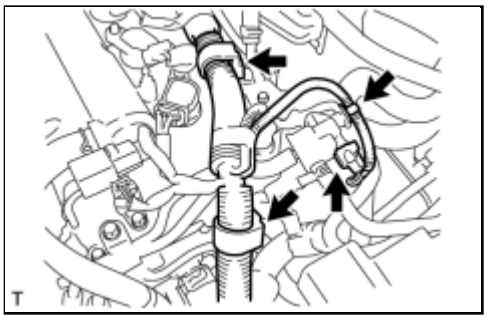

(1) Disconnect the duty vacuum switching valve connector and 3 engine wire harness clamps.

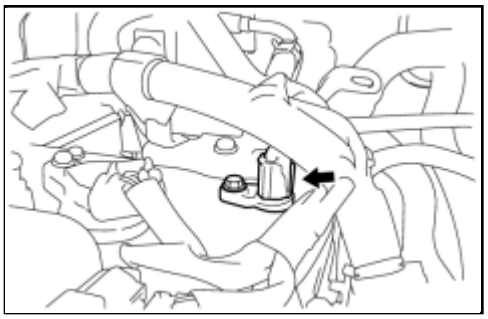

(2) Disconnect the No. 1 crank position sensor connector.

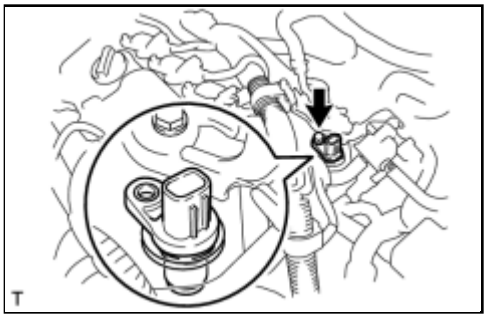

(3) Remove the bolt and No. 1 crank position sensor.

(b) Intake camshaft side:

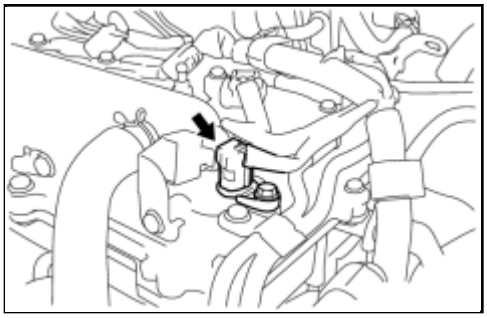

(1) Disconnect the No. 1 crank position sensor connector.

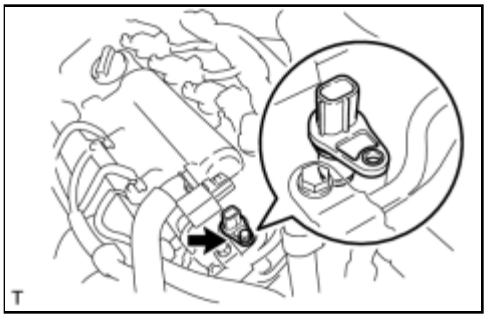

(2) Remove the bolt and No. 1 crank position sensor.

Last Modified: 3-10-2010	6.4 A	**From:** 200901
Model Year: 2010	**Model:** Corolla	**Doc ID:** RM0000030KX00BX
Title: 2ZR-FE ENGINE CONTROL: CAMSHAFT POSITION SENSOR: INSTALLATION (2010 Corolla)		

INSTALLATION

HINT:

Although the part name refers to the No. 1 crank position sensors, this procedure is for the camshaft position sensors.

1. INSTALL NO. 1 CRANK POSITION SENSOR

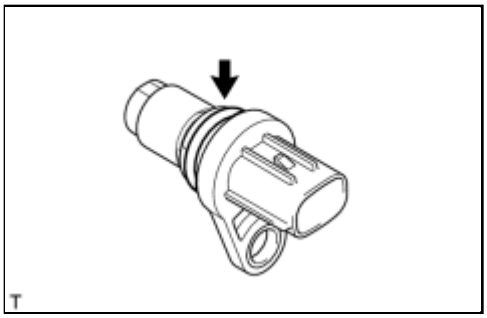

(a) Apply a light coat of engine oil to the O-rings on the No. 1 crank position sensors.

(b) Intake camshaft side:

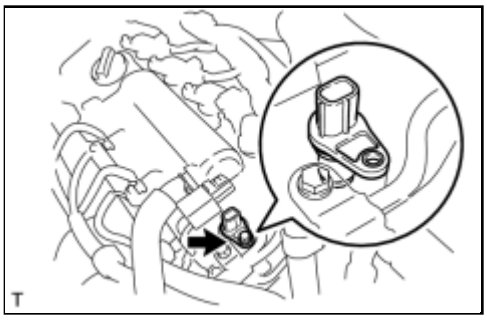

(1) Install the No. 1 crank position sensor with the bolt.

Torque: 10 N·m (102 kgf·cm, 7ft·lbf)

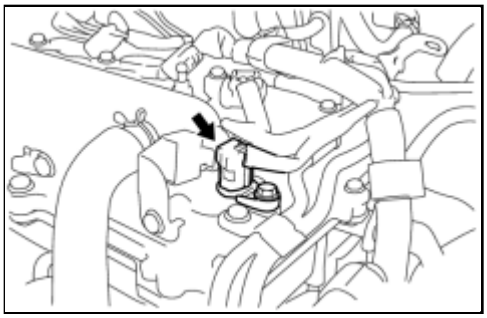

(2) Connect the No. 1 crank position sensor connector.

(c) Exhaust camshaft side:

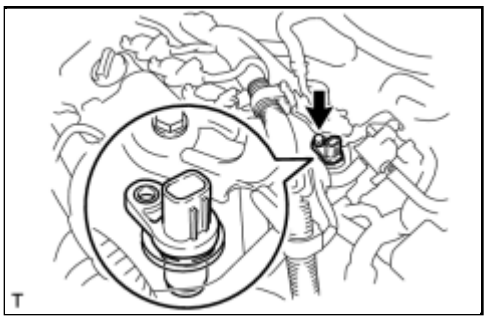

(1) Install the No. 1 crank position sensor with the bolt.

Torque: 10 N·m (102 kgf·cm, 7ft·lbf)

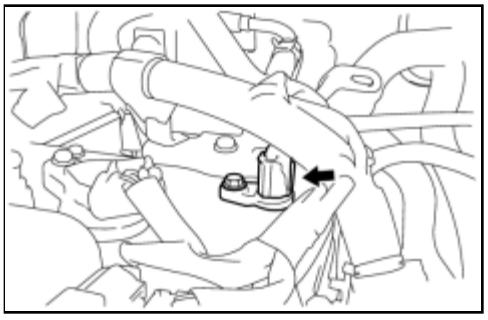

(2) Connect the No. 1 crank position sensor.

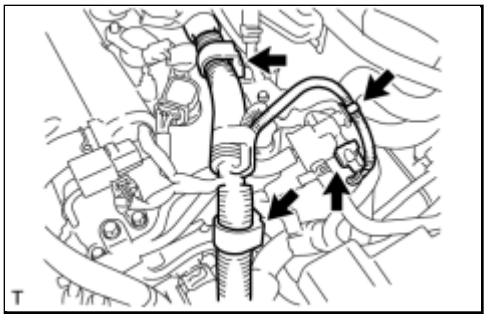

(3) Connect the 3 engine wire harness clamps and duty vacuum switching connector.

2. INSPECT FOR OIL LEAK

3. INSTALL ENGINE UNDER COVER RH

4. INSTALL NO. 2 CYLINDER HEAD COVER INFO

Last Modified: 3-10-2010	6.4 K	**From:** 200901
Model Year: 2010	**Model:** Corolla	**Doc ID:** RM0000017VA00RX
Title: 2AZ-FE ENGINE CONTROL: CRANKSHAFT POSITION SENSOR: COMPONENTS (2010 Corolla)		

COMPONENTS

ILLUSTRATION

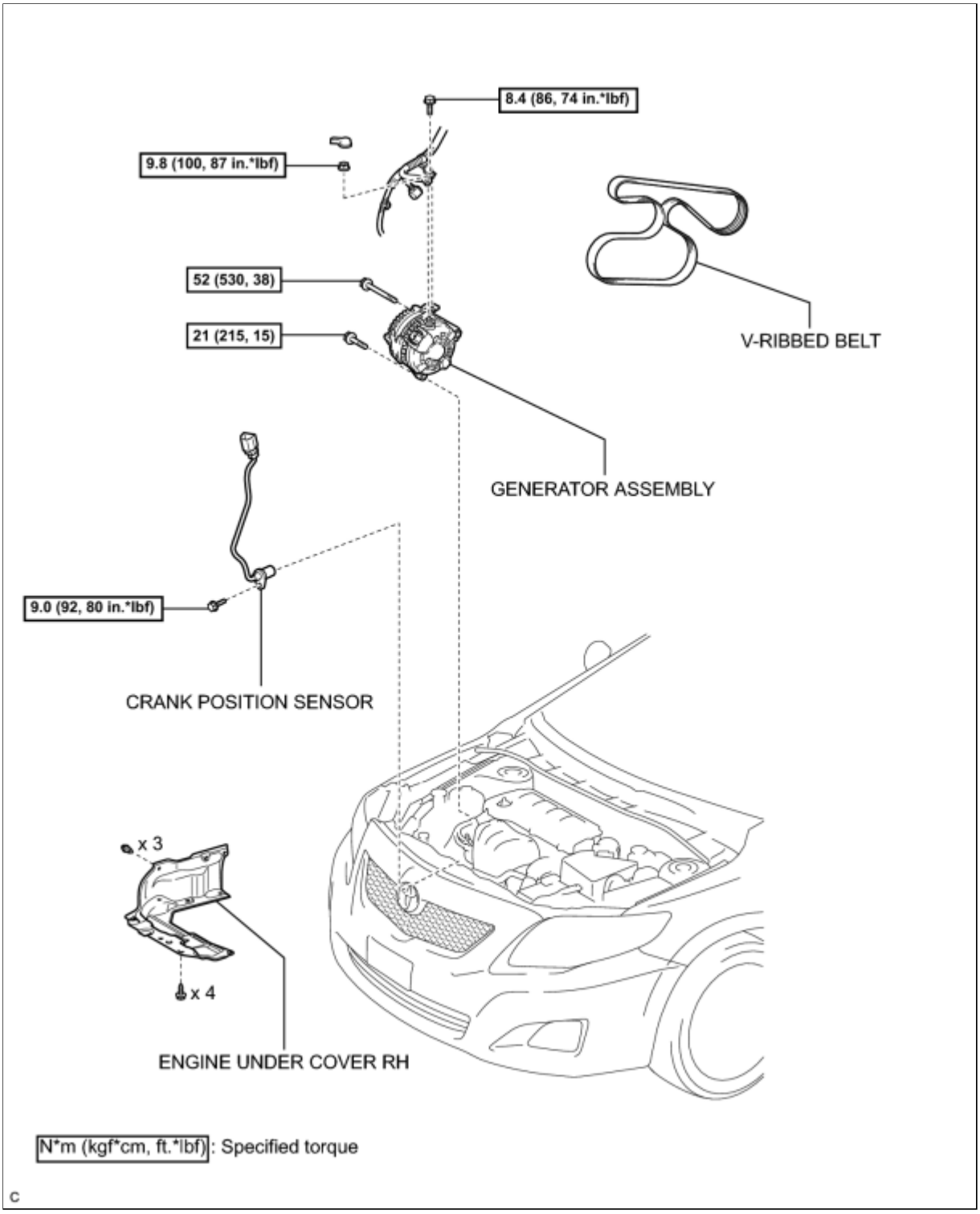
8.4 (86, 74 in.*lbf)
9.8 (100, 87 in.*lbf)
52 (530, 38)
21 (215, 15)
V-RIBBED BELT
GENERATOR ASSEMBLY
9.0 (92, 80 in.*lbf)
CRANK POSITION SENSOR
x 3
x 4
ENGINE UNDER COVER RH
N*m (kgf*cm, ft.*lbf): Specified torque

C

Last Modified: 3-10-2010	6.4 A	**From:** 200901
Model Year: 2010	**Model:** Corolla	**Doc ID:** RM0000017VB00SX
Title: 2AZ-FE ENGINE CONTROL: CRANKSHAFT POSITION SENSOR: REMOVAL (2010 Corolla)		

REMOVAL

1. DISCONNECT CABLE FROM NEGATIVE BATTERY TERMINAL

2. REMOVE ENGINE UNDER COVER RH

3. REMOVE V-RIBBED BELT INFO

4. REMOVE GENERATOR ASSEMBLY INFO

5. REMOVE CRANK POSITION SENSOR

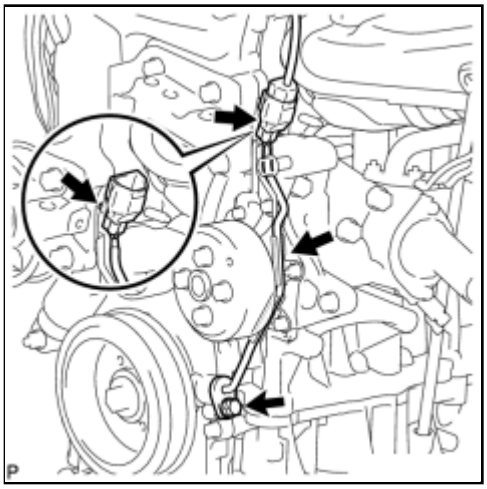

(a) Disconnect the crank position sensor connector.

(b) Separate the crank position sensor connector clamp and wire harness.

(c) Remove the bolt and crank position sensor.

Last Modified: 3-10-2010	6.4 G	**From:** 200901
Model Year: 2010	**Model:** Corolla	**Doc ID:** RM0000017V900SX
Title: 2AZ-FE ENGINE CONTROL: CRANKSHAFT POSITION SENSOR: INSPECTION (2010 Corolla)		

INSPECTION

1. INSPECT CRANK POSITION SENSOR

(a) Measure the resistance.

Standard Resistance:

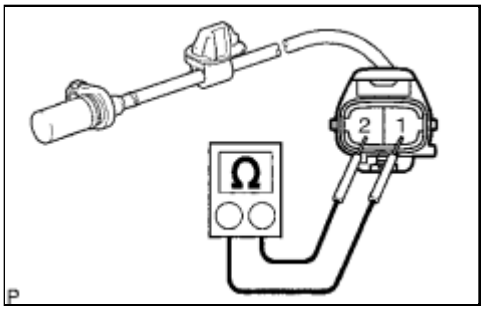

TESTER CONNECTION	CONDITION	SPECIFIED CONDITION
1 - 2	Cold	985 to 1,600 Ω
1 - 2	Hot	1265 to 1890 Ω

HINT:

In the table above, the terms Cold and Hot refer to the temperature of the coils. Cold means approximately -10 to 50°C (14 to 122°F). Hot means approximately 50 to 100°C (122 to 212°F).

If the resistance is not as specified, replace the crank position sensor.

Last Modified: 3-10-2010	6.4 A	**From:** 200901
Model Year: 2010	**Model:** Corolla	**Doc ID:** RM0000017V800UX
Title: 2AZ-FE ENGINE CONTROL: CRANKSHAFT POSITION SENSOR: INSTALLATION (2010 Corolla)		

INSTALLATION

1. INSTALL CRANK POSITION SENSOR

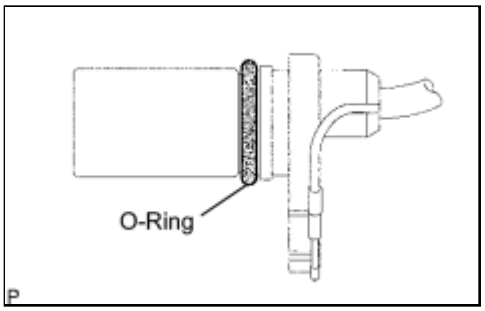

(a) Apply a light coat of engine oil to the O-ring on the crank position sensor.

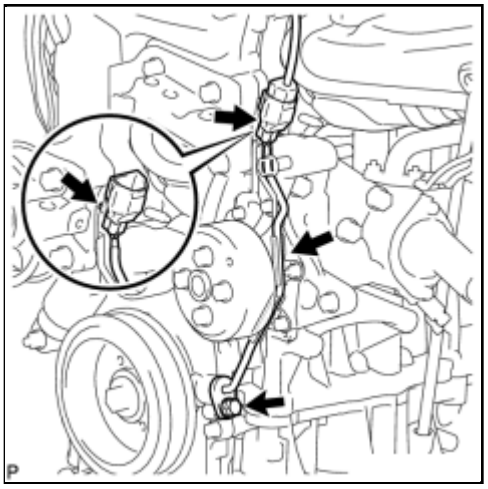

(b) Install the crank position sensor with the bolt.

Torque: 9.0 N·m (90 kgf·cm, 80in·lbf)

NOTICE:

Do not twist the O-ring.

(c) Install the wire harness and crank position sensor connector clamp.

(d) Connect the crank position sensor connector.

2. INSTALL GENERATOR ASSEMBLY INFO

3. INSTALL V-RIBBED BELT INFO

4. INSTALL ENGINE UNDER COVER RH

5. CONNECT CABLE TO NEGATIVE BATTERY TERMINAL INFO

6. INSPECT FOR OIL LEAK

Last Modified: 3-10-2010	6.4 K	**From:** 200901
Model Year: 2010	**Model:** Corolla	**Doc ID:** RM0000030L100AX
Title: 2ZR-FE ENGINE CONTROL: CRANKSHAFT POSITION SENSOR: COMPONENTS (2010 Corolla)		

COMPONENTS

ILLUSTRATION

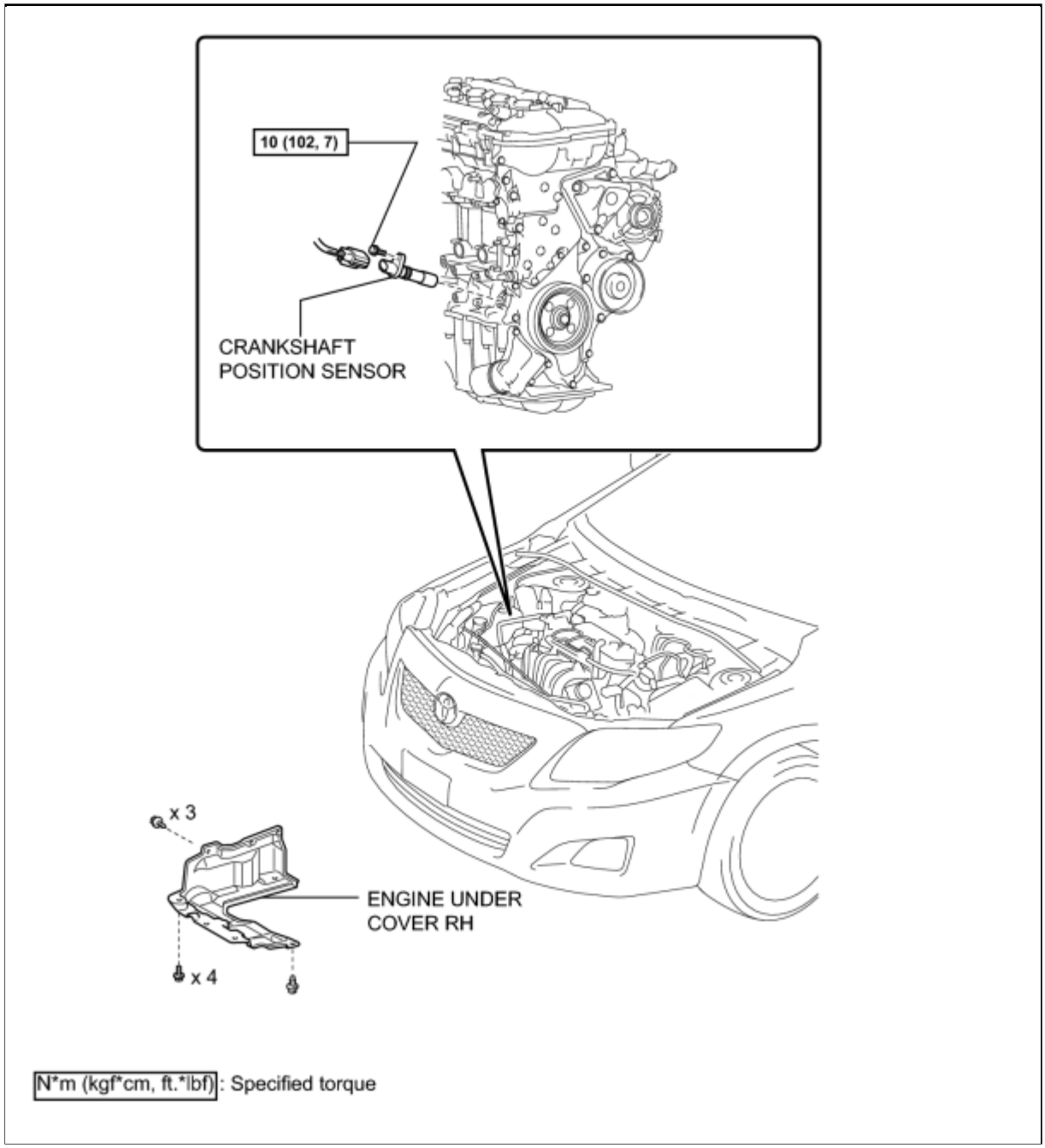

Last Modified: 3-10-2010	6.4 A	**From:** 200901
Model Year: 2010	**Model:** Corolla	**Doc ID:** RM0000030L200AX
Title: 2ZR-FE ENGINE CONTROL: CRANKSHAFT POSITION SENSOR: REMOVAL (2010 Corolla)		

REMOVAL

1. REMOVE ENGINE UNDER COVER RH

2. REMOVE CRANK POSITION SENSOR

(a) Disconnect the crank position sensor connector.

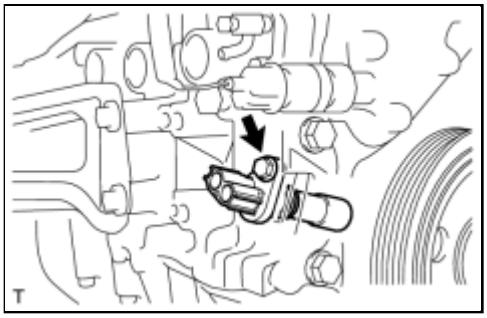

(b) Remove the bolt and crank position sensor.

Last Modified: 3-10-2010	6.4 G	**From:** 200901
Model Year: 2010	**Model:** Corolla	**Doc ID:** RM000001DBN014X
Title: 2ZR-FE ENGINE CONTROL: CRANKSHAFT POSITION SENSOR: INSPECTION (2010 Corolla)		

INSPECTION

1. INSPECT CRANK POSITION SENSOR

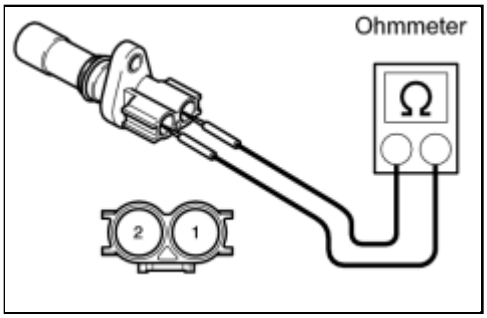

(a) Measure the resistance according to the value(s) in the table below.

Standard Resistance:

TESTER CONNECTION	CONDITION	SPECIFIED CONDITION
1 - 2	Cold	1630 to 2740 Ω
	Hot	2065 to 3225 Ω

HINT:

In the table above, the terms Cold and Hot refer to the temperature of the coils. Cold means approximately -10 to 50°C (14 to 122°F). Hot means approximately 50 to 100°C (122 to 212°F).

If the resistance is not as specified, replace the crank position sensor.

Last Modified: 3-10-2010	6.4 A	**From:** 200901
Model Year: 2010	**Model:** Corolla	**Doc ID:** RM0000030L000AX
Title: 2ZR-FE ENGINE CONTROL: CRANKSHAFT POSITION SENSOR: INSTALLATION (2010 Corolla)		

INSTALLATION

1. INSTALL CRANK POSITION SENSOR

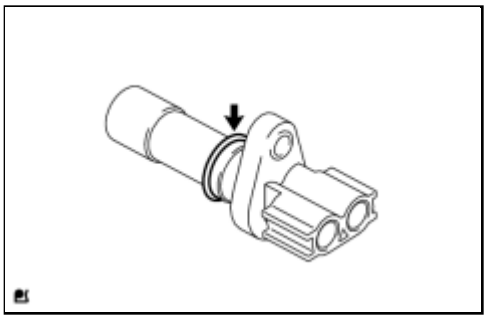

(a) Apply a light coat of engine oil to the O-ring on the crank position sensor.

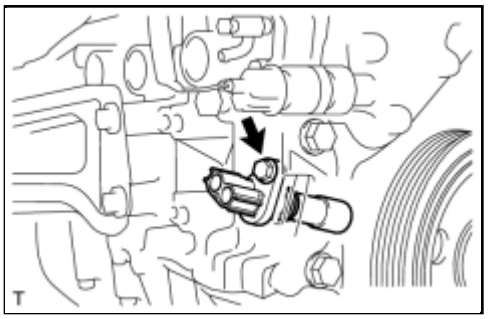

(b) Install the crank position sensor with the bolt.

Torque: 10 N·m (102 kgf·cm, 7ft·lbf)

Connect the crank position sensor connector.

2. INSPECT FOR OIL LEAK

3. INSTALL ENGINE UNDER COVER RH

Last Modified: 3-10-2010	6.4 K	**From:** 200901
Model Year: 2010	**Model:** Corolla	**Doc ID:** RM000002WT4011X
Title: 2AZ-FE ENGINE CONTROL: ECM: COMPONENTS (2010 Corolla)		

COMPONENTS

ILLUSTRATION

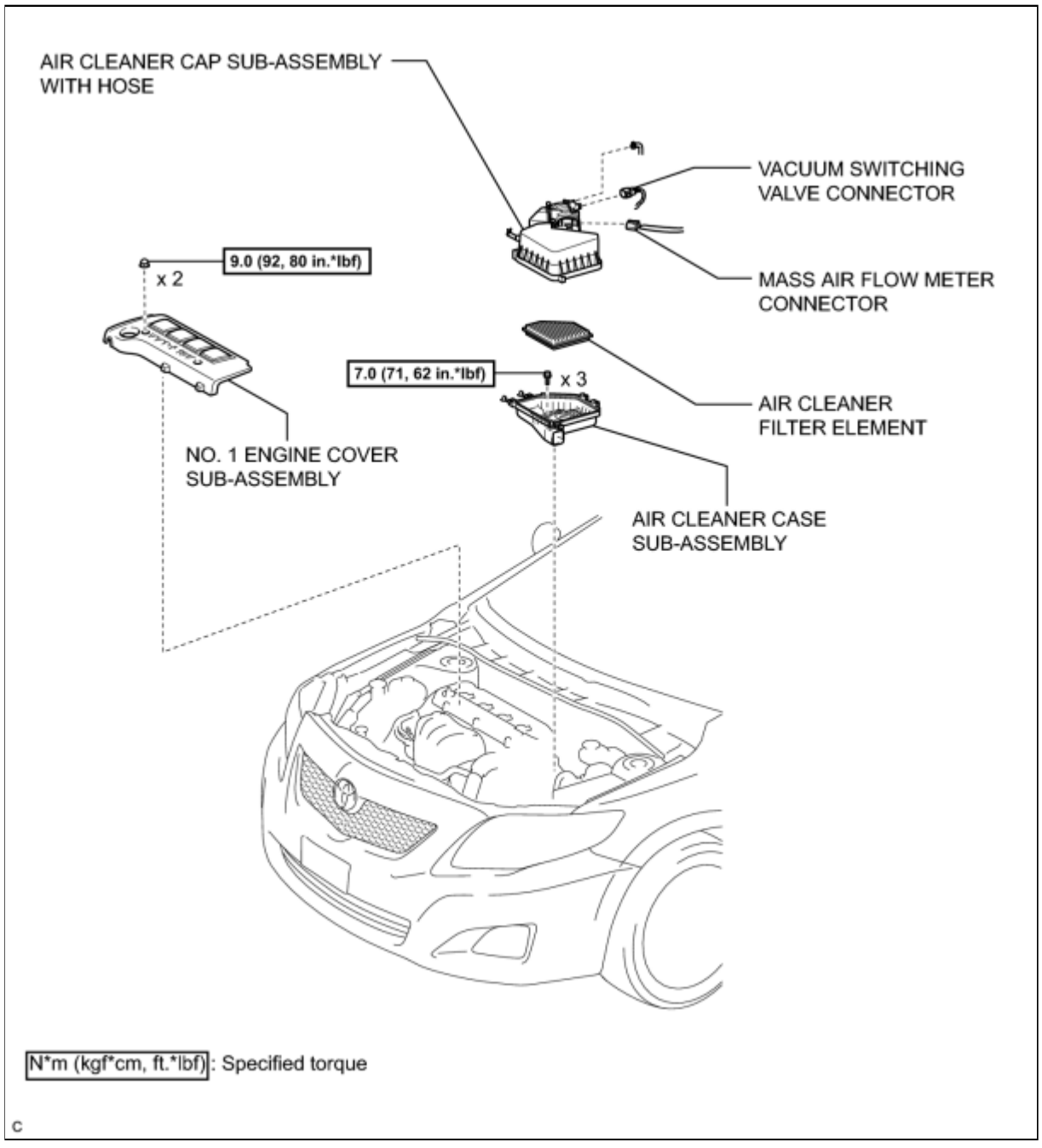

ILLUSTRATION

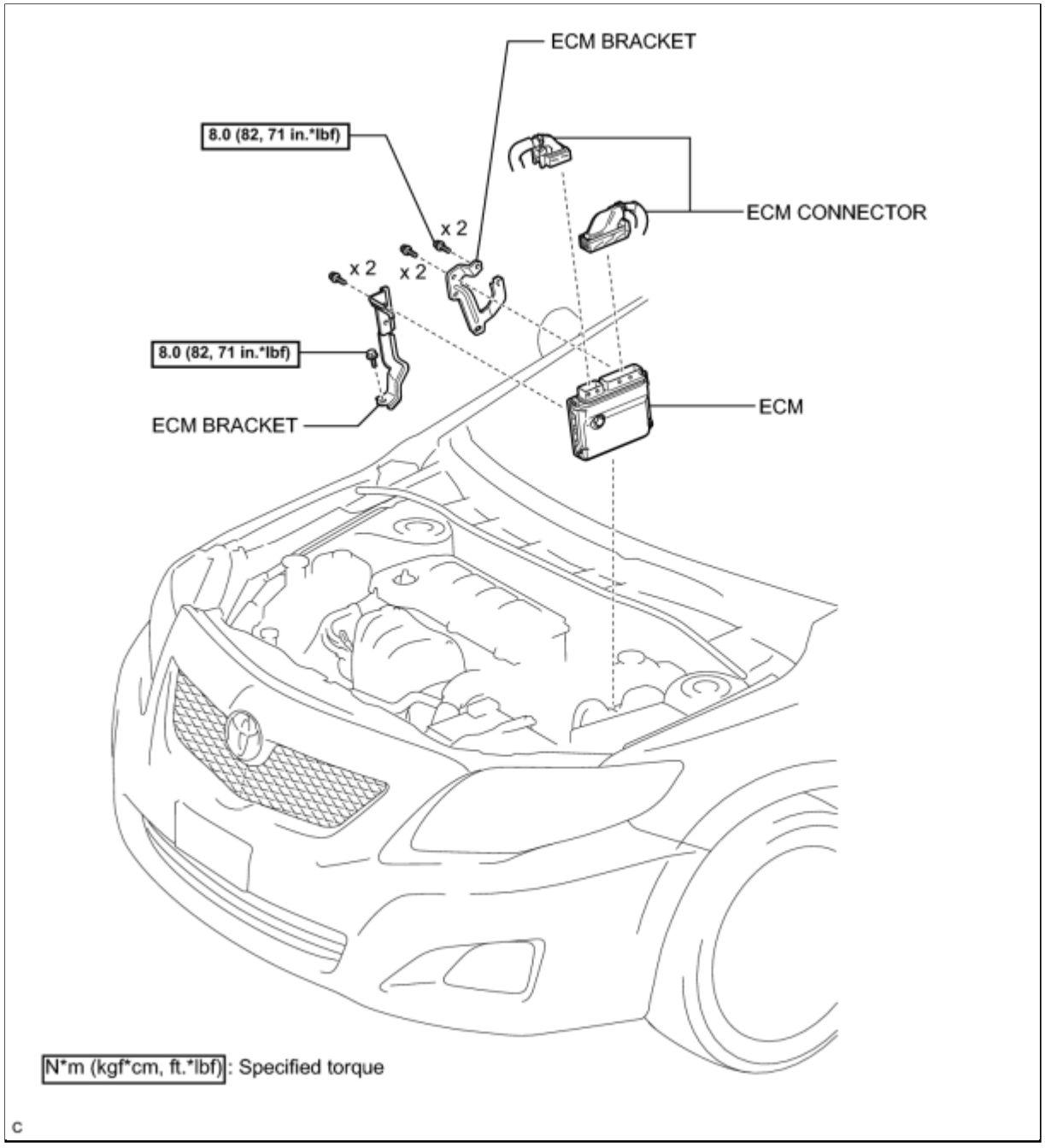
ECM BRACKET
8.0 (82, 71 in.*lbf)
x 2
x 2
x 2
ECM CONNECTOR
8.0 (82, 71 in.*lbf)
ECM BRACKET
ECM
N*m (kgf*cm, ft.*lbf): Specified torque

C

Last Modified: 3-10-2010	6.4 A	**From:** 200901
Model Year: 2010	**Model:** Corolla	**Doc ID:** RM000002WT501YX
Title: 2AZ-FE ENGINE CONTROL: ECM: REMOVAL (2010 Corolla)		

REMOVAL

1. DISCONNECT CABLE FROM BATTERY NEGATIVE TERMINAL

2. REMOVE NO. 1 ENGINE COVER SUB-ASSEMBLY INFO

3. REMOVE AIR CLEANER CAP SUB-ASSEMBLY WITH HOSE INFO

4. REMOVE AIR CLEANER CASE SUB-ASSEMBLY INFO

5. REMOVE ECM

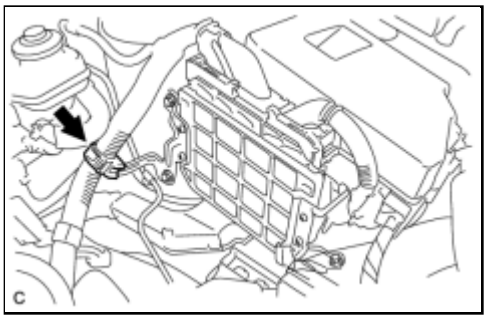

(a) Separate the wire harness clamp.

(b) Disconnect the 2 ECM connectors.

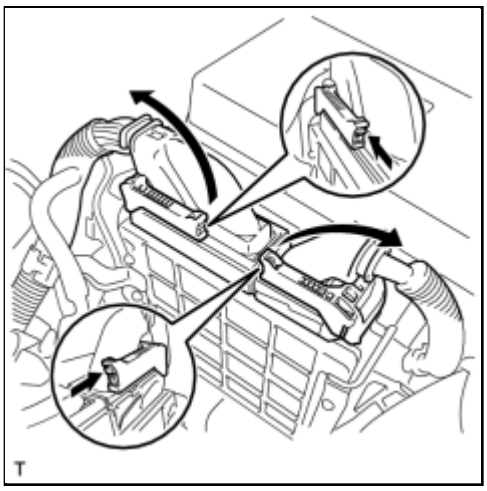

(1) Push the locks on the 2 levers, then raise the levers, and disconnect the 2 ECM connectors.

NOTICE:

After disconnecting the connectors, make sure that dirt, water or other foreign matter does not contact the connecting parts of the connectors.

(c) Remove the 3 bolts and the ECM.

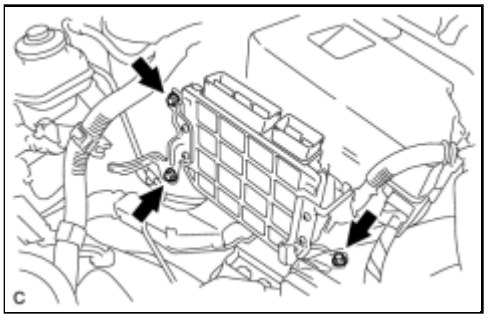

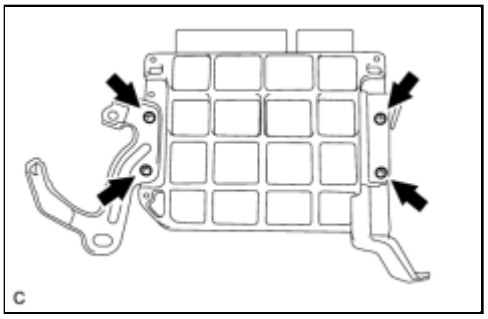

(d) Remove the 4 screws and 2 ECM brackets.

Last Modified: 3-10-2010	6.4 A	**From:** 200901
Model Year: 2010	**Model:** Corolla	**Doc ID:** RM000002WT301YX
Title: 2AZ-FE ENGINE CONTROL: ECM: INSTALLATION (2010 Corolla)		

INSTALLATION

1. INSTALL ECM

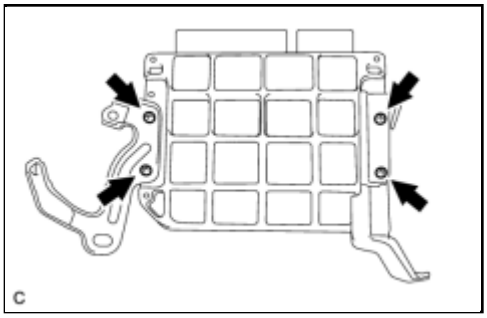

(a) Install the 2 ECM brackets onto the ECM with the 4 screws.

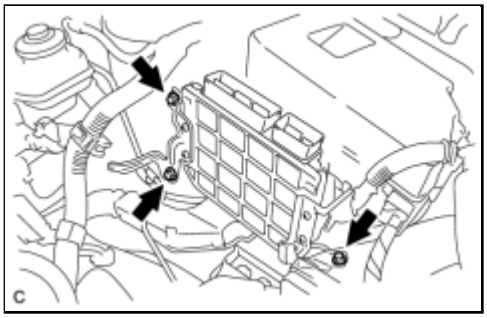

(b) Install the ECM with the 3 bolts.

Torque: 8.0 N·m (82 kgf·cm, 71in·lbf)

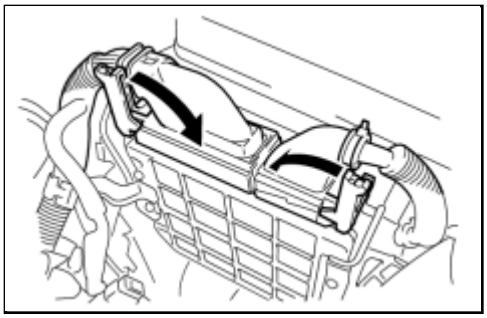

(c) Connect the 2 ECM connectors.

(1) Connect the 2 ECM connectors and lower the 2 levers.

NOTICE:

- When connecting the connectors, make sure that dirt, water or other foreign matter does not get caught between the connectors and other parts.
- Make sure that the 2 levers are securely locked.

(d) Install the wire harness clamp.

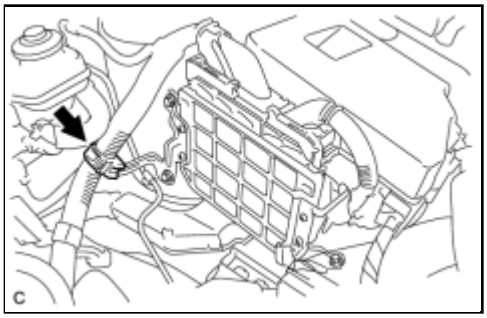

2. INSTALL AIR CLEANER CASE SUB-ASSEMBLY INFO

3. INSTALL AIR CLEANER CAP SUB-ASSEMBLY WITH HOSE INFO

4. INSTALL NO. 1 ENGINE COVER SUB-ASSEMBLY INFO

5. CONNECT CABLE TO BATTERY NEGATIVE TERMINAL INFO

6. PERFORM INITIALIZATION

HINT:

Initialization cannot be completed by only removing the cable from the battery.

(a) Perform Reset Memory (AT initialization) when replacing the ECM INFO . (for Automatic Transaxle)

(b) Perform Registration (VIN registration) when replacing the ECM INFO .

Last Modified: 3-10-2010	6.4 K	**From:** 200901
Model Year: 2010	**Model:** Corolla	**Doc ID:** RM0000030LQ009X
Title: 2ZR-FE ENGINE CONTROL: ECM: COMPONENTS (2010 Corolla)		

COMPONENTS

ILLUSTRATION

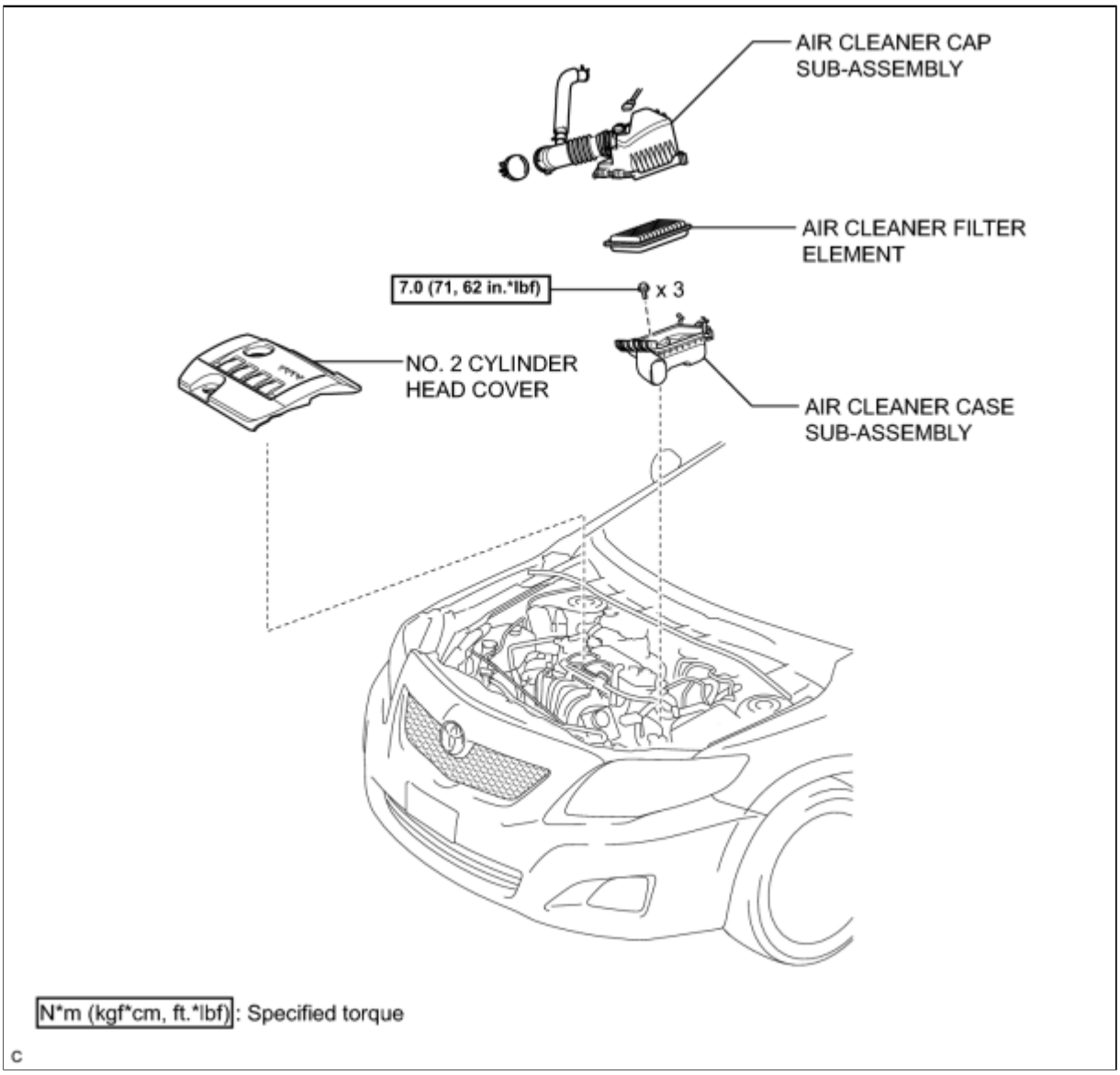

ILLUSTRATION

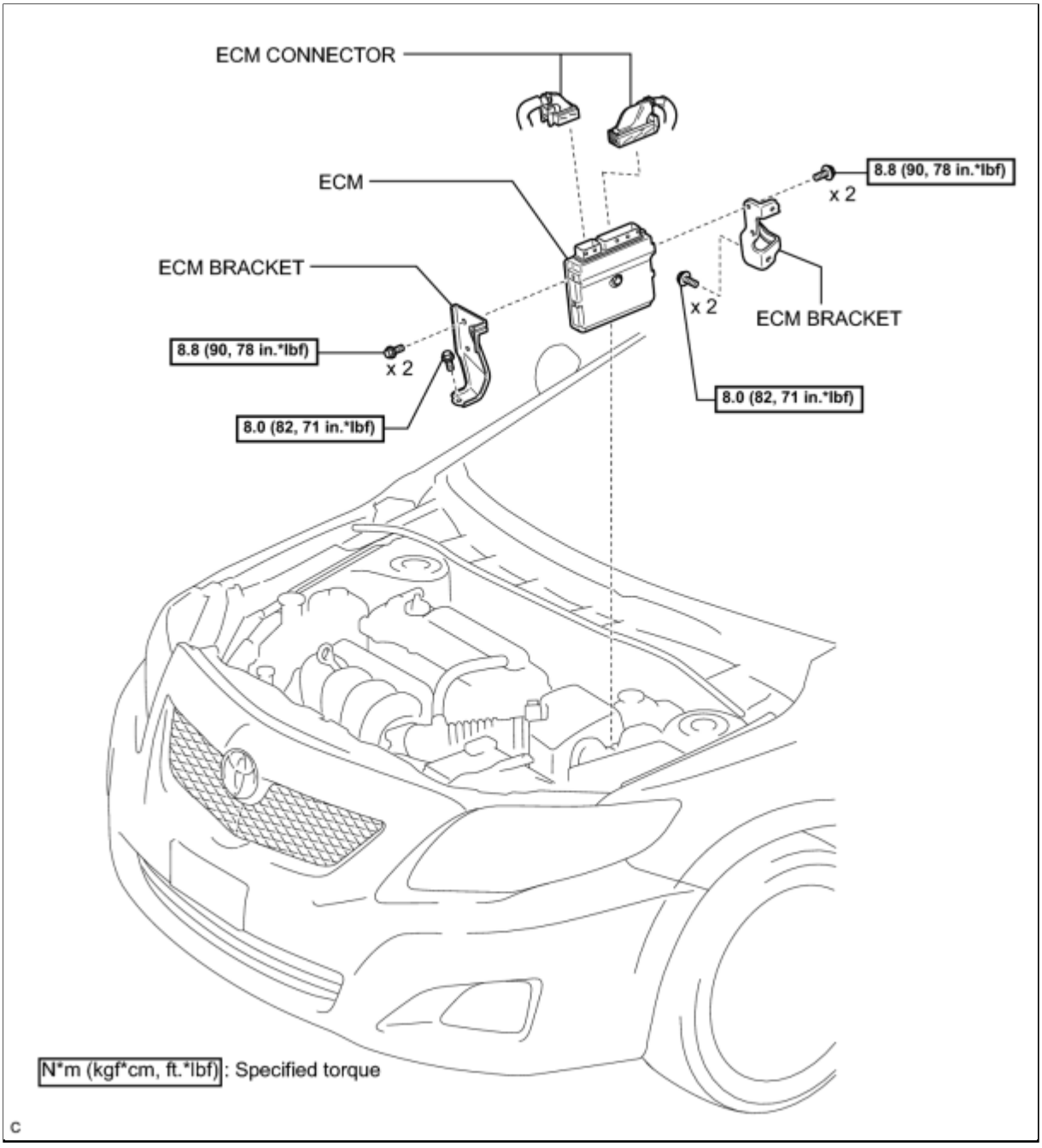
ECM CONNECTOR
ECM
ECM BRACKET
8.8 (90, 78 in.*lbf)
x 2
8.0 (82, 71 in.*lbf)
8.8 (90, 78 in.*lbf)
x 2
x 2
ECM BRACKET
8.0 (82, 71 in.*lbf)
N*m (kgf*cm, ft.*lbf): Specified torque

c

Last Modified: 3-10-2010	6.4 A	**From:** 200901
Model Year: 2010	**Model:** Corolla	**Doc ID:** RM000001CN001BX
Title: 2ZR-FE ENGINE CONTROL: ECM: REMOVAL (2010 Corolla)		

REMOVAL

1. DISCONNECT CABLE FROM NEGATIVE BATTERY TERMINAL

2. REMOVE AIR CLEANER CAP SUB-ASSEMBLY INFO

3. REMOVE AIR CLEANER CASE SUB-ASSEMBLY INFO

4. REMOVE ECM

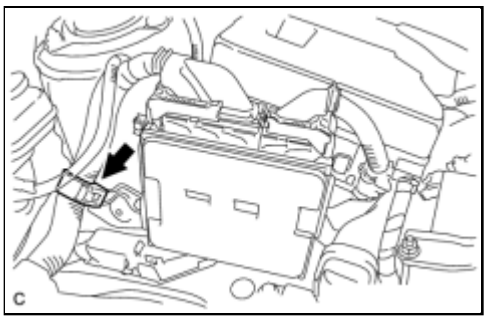

(a) Separate the wire harness clamp.

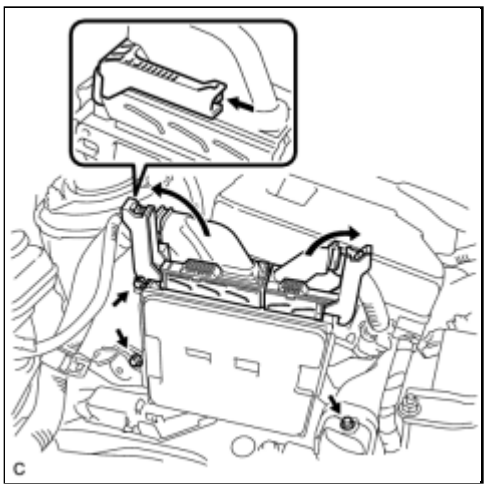

(b) Disconnect the 2 ECM connectors.

(1) Push the locks on the 2 levers, then raise the levers, and disconnect the 2 ECM connectors.

NOTICE:

After disconnecting the connectors, make sure that dirt, water or other foreign matter does not contact the connecting parts of the connectors.

(c) Remove the 3 bolts and the ECM.

(d) Remove the 4 screws and 2 ECM brackets.

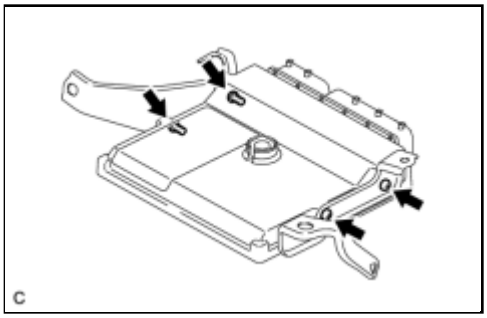
C

Last Modified: 3-10-2010	6.4 A	**From:** 200901
Model Year: 2010	**Model:** Corolla	**Doc ID:** RM000001CMY01BX
Title: 2ZR-FE ENGINE CONTROL: ECM: INSTALLATION (2010 Corolla)		

INSTALLATION

1. INSTALL ECM

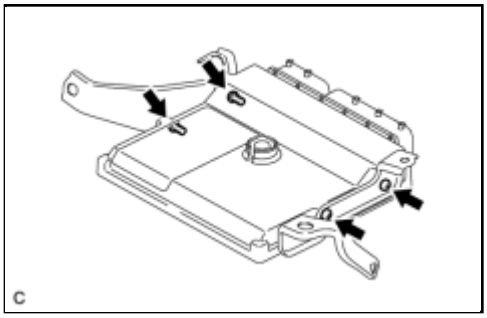

(a) Install the 2 ECM brackets onto the ECM with the 4 screws.

Torque: 8.8 N·m (90 kgf·cm, 78in·lbf)

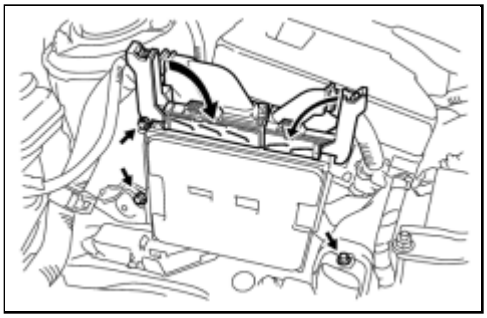

(b) Install the ECM with the 3 bolts.

Torque: 8.0 N·m (82 kgf·cm, 71in·lbf)

(c) Connect the 2 ECM connectors.

(1) Connect the 2 ECM connectors and lower the 2 levers.

NOTICE:

- When connecting the connectors, make sure that dirt, water or other foreign matter does not get caught between the connectors and other parts.
- Make sure that the 2 levers are securely locked.

(d) Install the wire harness clamp.

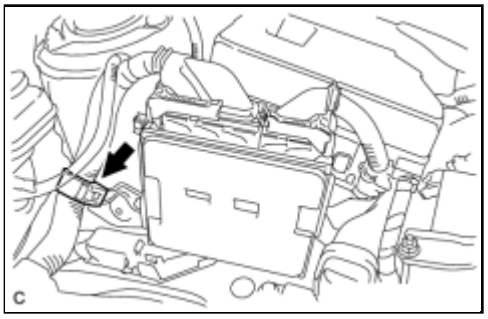

2. INSTALL AIR CLEANER CASE SUB-ASSEMBLY INFO

3. INSTALL AIR CLEANER CAP SUB-ASSEMBLY INFO

4. CONNECT CABLE TO NEGATIVE BATTERY TERMINAL INFO

5. PERFORM INITIALIZATION

HINT:

Initialization cannot be completed by only removing the battery.

(a) Perform the Reset Memory (AT initialization) when replacing the ECM INFO . (for Automatic Transaxle)

(b) Perform the Registration (VIN registration) when replacing the ECM INFO .

Last Modified: 3-10-2010	6.4 K	**From:** 200901
Model Year: 2010	**Model:** Corolla	**Doc ID:** RM0000017U8011X
Title: 2AZ-FE ENGINE CONTROL: ENGINE COOLANT TEMPERATURE SENSOR: COMPONENTS (2010 Corolla)		

COMPONENTS

ILLUSTRATION

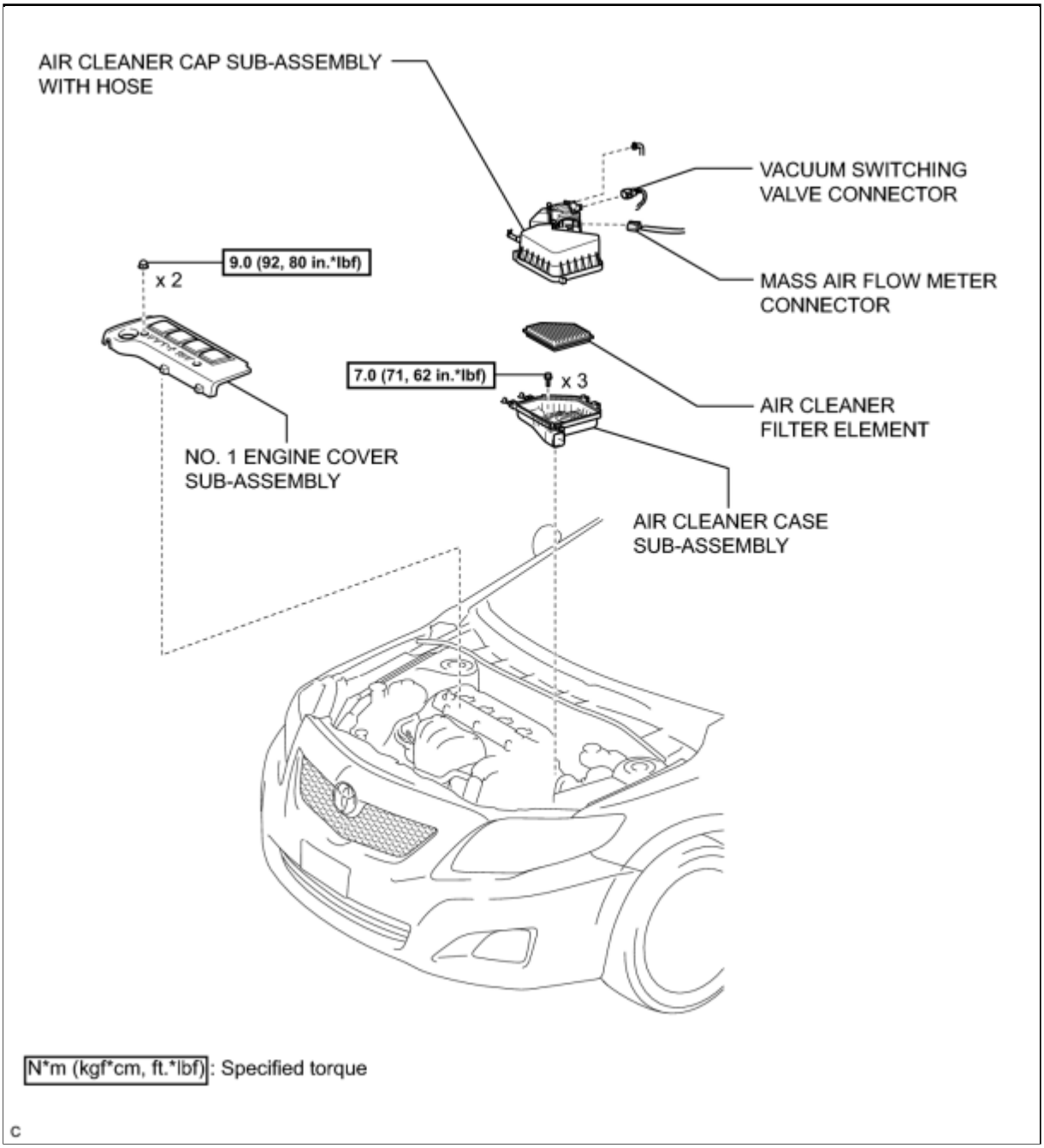

ILLUSTRATION

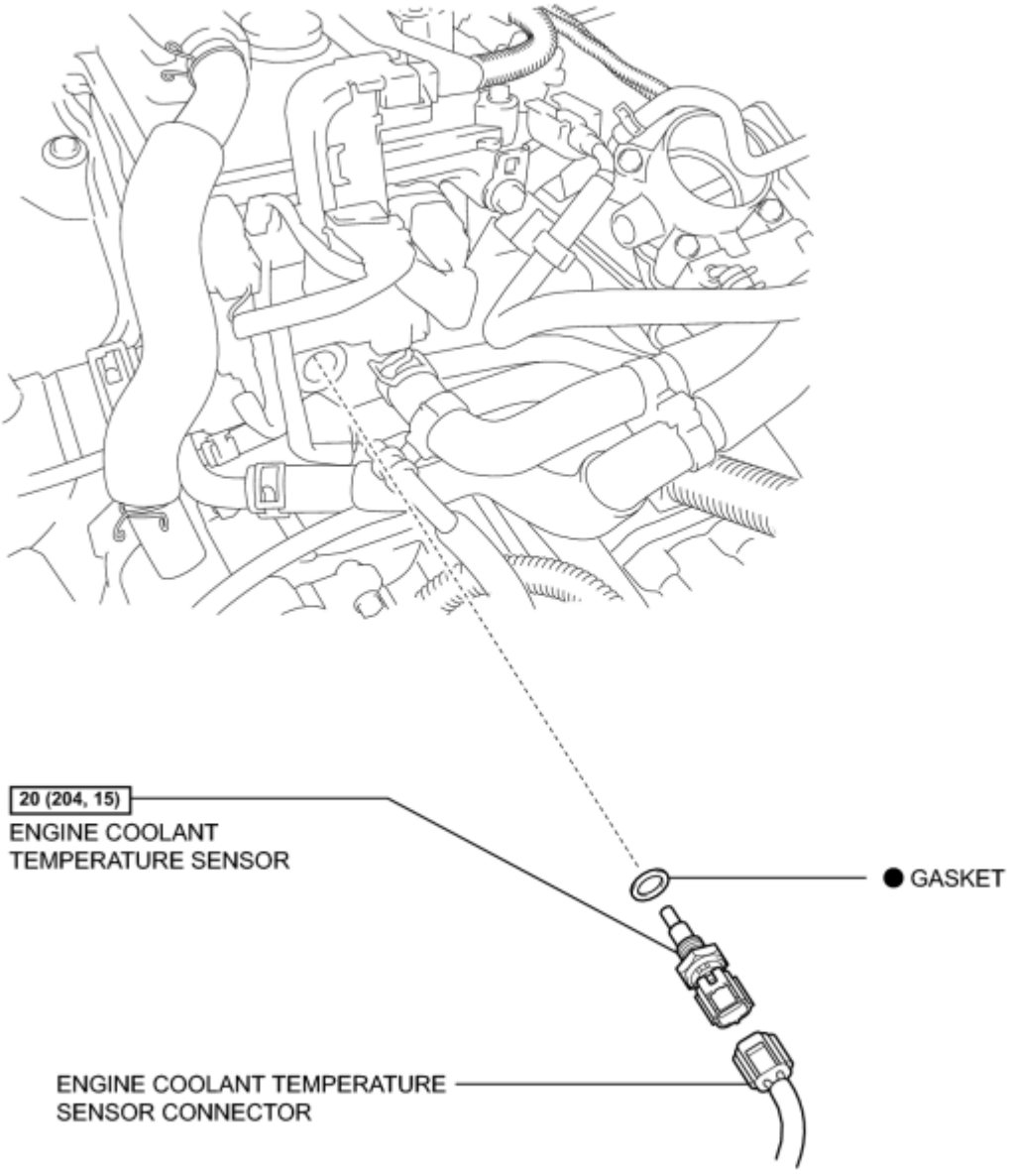

N*m (kgf*cm, ft.*lbf): Specified torque

● Non-reusable part

P

Last Modified: 3-10-2010	6.4 A	**From:** 200901
Model Year: 2010	**Model:** Corolla	**Doc ID:** RM0000017U9011X
Title: 2AZ-FE ENGINE CONTROL: ENGINE COOLANT TEMPERATURE SENSOR: REMOVAL (2010 Corolla)		

REMOVAL

1. REMOVE NO. 1 ENGINE COVER SUB-ASSEMBLY INFO

2. DRAIN ENGINE COOLANT INFO

3. REMOVE AIR CLEANER CAP SUB-ASSEMBLY WITH HOSE INFO

4. REMOVE AIR CLEANER CASE SUB-ASSEMBLY INFO

5. REMOVE ENGINE COOLANT TEMPERATURE SENSOR

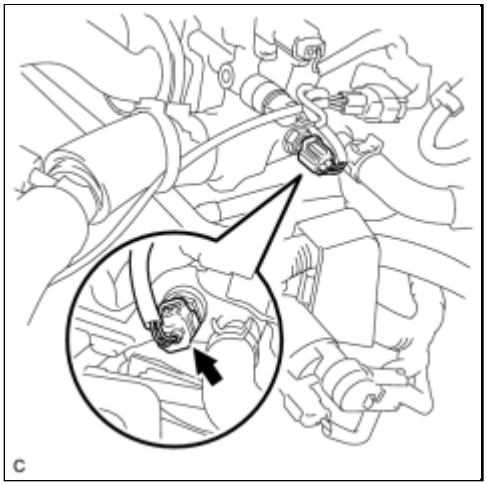

(a) Disconnect the engine coolant temperature sensor connector.

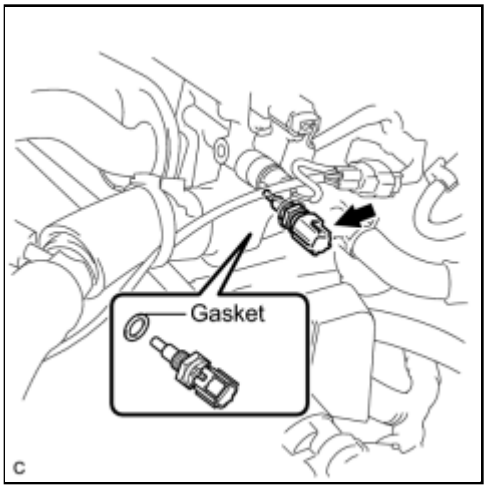

(b) Remove the engine coolant temperature sensor and gasket.

Last Modified: 3-10-2010	6.4 G	**From:** 200901
Model Year: 2010	**Model:** Corolla	**Doc ID:** RM0000017U7016X
Title: 2AZ-FE ENGINE CONTROL: ENGINE COOLANT TEMPERATURE SENSOR: INSPECTION (2010 Corolla)		

INSPECTION

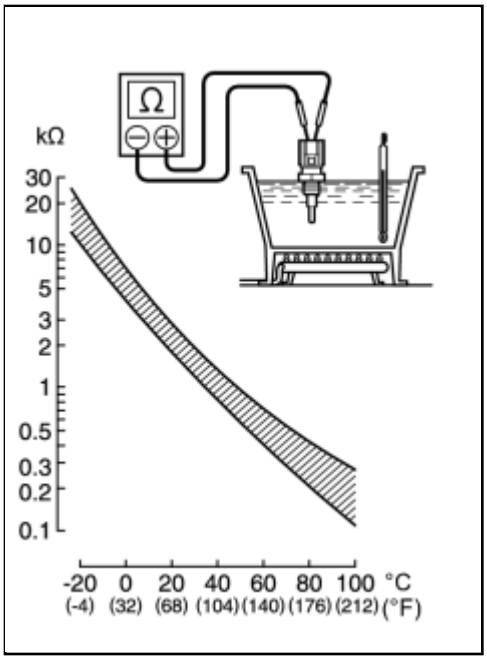

1. INSPECT ENGINE COOLANT TEMPERATURE SENSOR

(a) Measure the resistance.

(1) Using an ohmmeter, measure the resistance between the terminals.

Standard Resistance:

TESTER CONNECTION	CONDITION	SPECIFIED CONDITION
1 - 2	20 °C (68°F)	2.32 to 2.59 kΩ
1 - 2	80 °C (176°F)	0.310 to 0.326 kΩ

NOTICE:

When checking the engine coolant temperature sensor in the water, keep the terminals dry. After the check, wipe the sensor dry.

If the resistance is not as specified, replace the engine coolant temperature sensor.

Last Modified: 3-10-2010	6.4 A	**From:** 200901
Model Year: 2010	**Model:** Corolla	**Doc ID:** RM0000017U6012X
Title: 2AZ-FE ENGINE CONTROL: ENGINE COOLANT TEMPERATURE SENSOR: INSTALLATION (2010 Corolla)		

INSTALLATION

1. INSTALL ENGINE COOLANT TEMPERATURE SENSOR

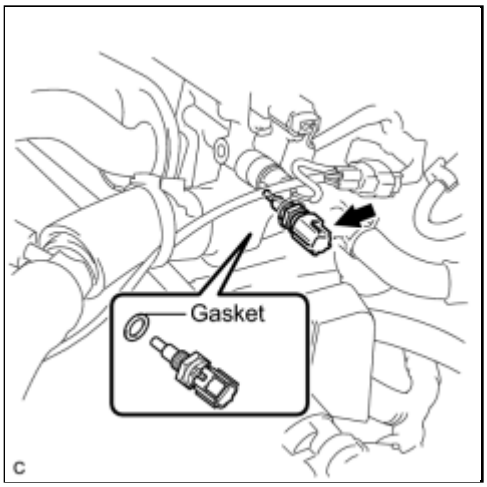

(a) Install the engine coolant temperature sensor through a new gasket.

Torque: 20 N·m (204 kgf·cm, 14ft·lbf)

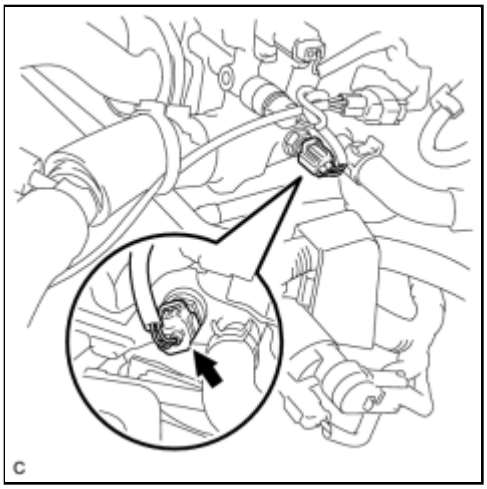

(b) Connect the engine coolant temperature sensor connector.

2. INSTALL AIR CLEANER CASE SUB-ASSEMBLY INFO

3. INSTALL AIR CLEANER CAP SUB-ASSEMBLY WITH HOSE INFO

4. ADD ENGINE COOLANT INFO

5. INSPECT FOR COOLANT LEAK INFO

6. INSTALL NO. 1 ENGINE COVER SUB-ASSY INFO

Last Modified: 3-10-2010	6.4 K	**From:** 200901
Model Year: 2010	**Model:** Corolla	**Doc ID:** RM0000030LF009X
Title: 2ZR-FE ENGINE CONTROL: ENGINE COOLANT TEMPERATURE SENSOR: COMPONENTS (2010 Corolla)		

COMPONENTS

ILLUSTRATION

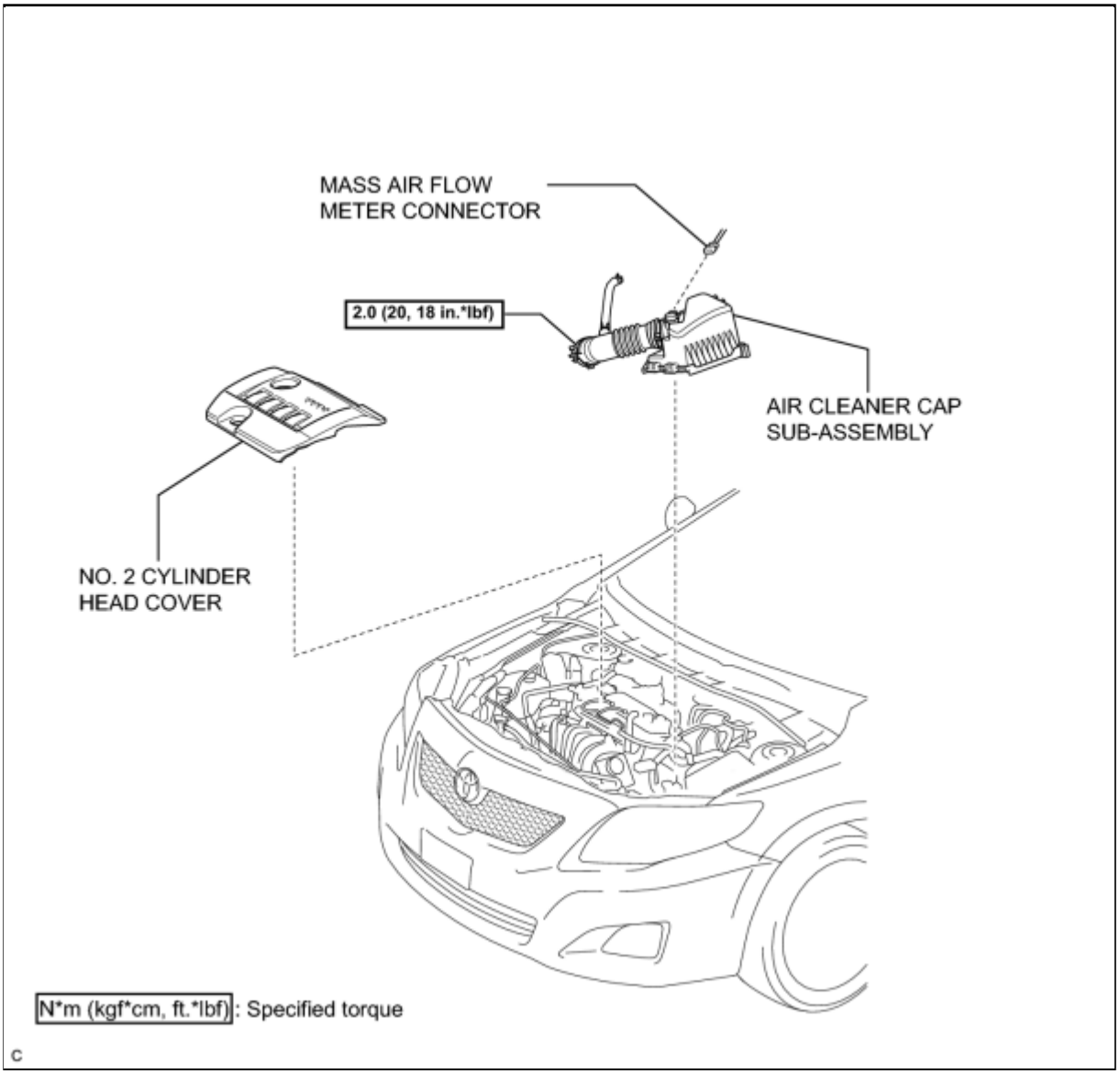

ILLUSTRATION

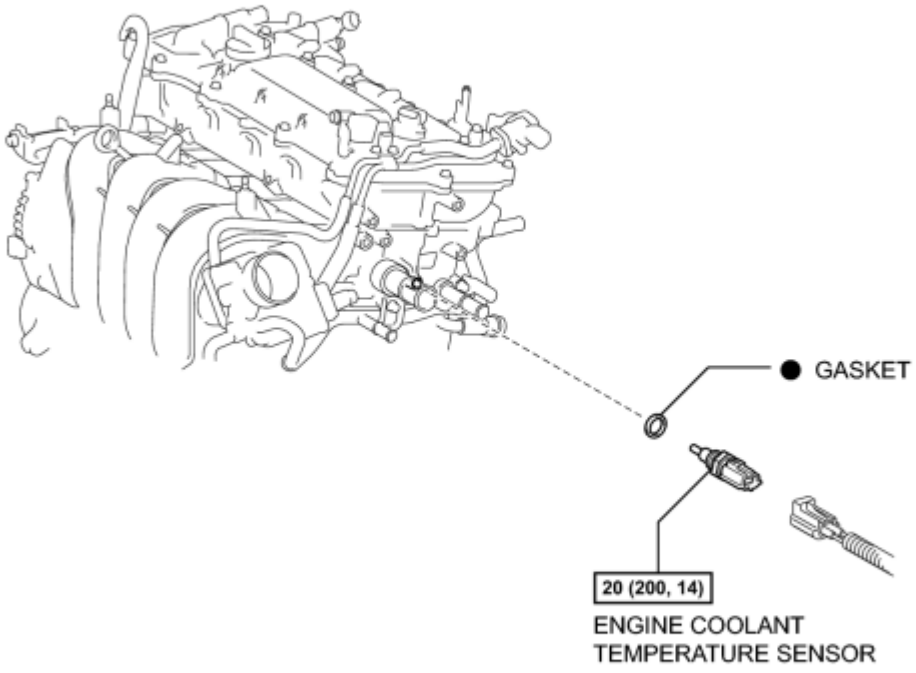

N*m (kgf*cm, ft.*lbf): Specified torque

● Non-reusable part

Last Modified: 3-10-2010	6.4 A	**From:** 200901
Model Year: 2010	**Model:** Corolla	**Doc ID:** RM0000030LG009X
Title: 2ZR-FE ENGINE CONTROL: ENGINE COOLANT TEMPERATURE SENSOR: REMOVAL (2010 Corolla)		

REMOVAL

1. REMOVE NO. 2 CYLINDER HEAD COVER INFO

2. DRAIN ENGINE COOLANT INFO

3. REMOVE AIR CLEANER CAP SUB-ASSEMBLY INFO

4. REMOVE ENGINE COOLANT TEMPERATURE SENSOR

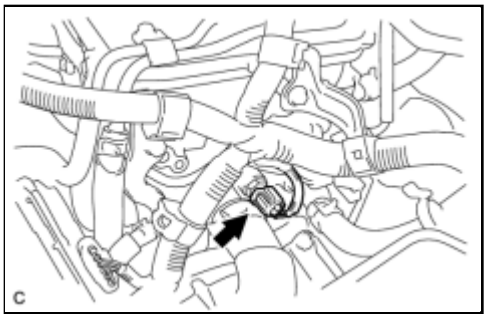

(a) Disconnect the engine coolant temperature sensor connector.

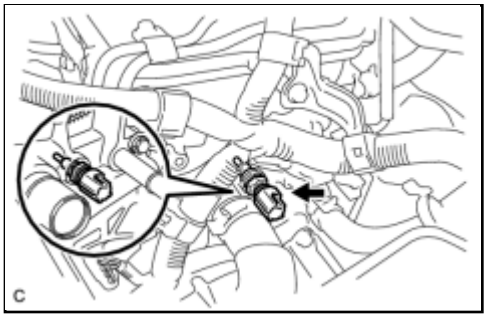

(b) Remove the engine coolant temperature sensor.

Last Modified: 3-10-2010	6.4 G	**From:** 200901
Model Year: 2010	**Model:** Corolla	**Doc ID:** RM000001DBF012X
Title: 2ZR-FE ENGINE CONTROL: ENGINE COOLANT TEMPERATURE SENSOR: INSPECTION (2010 Corolla)		

INSPECTION

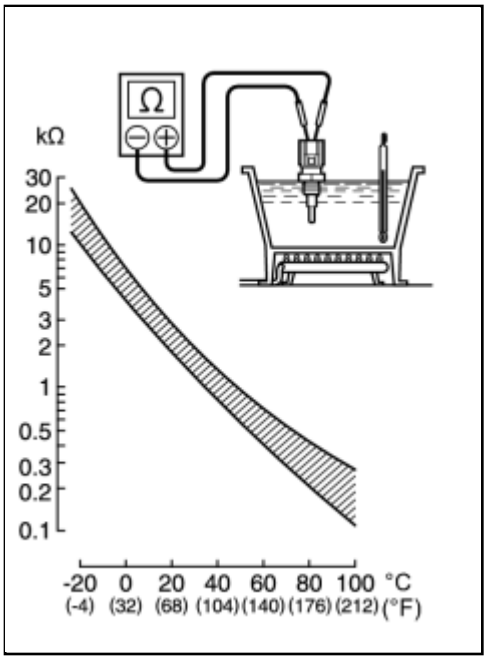

1. INSPECT ENGINE COOLANT TEMPERATURE SENSOR

(a) Measure the resistance according to the value(s) in the table below.

Standard Resistance:

CONDITION	SPECIFIED CONDITION
Approximately 20°C (68°F)	2.32 to 2.59 kΩ
Approximately 80°C (176°F)	0.310 to 0.326 kΩ

NOTICE:

When checking the engine coolant temperature sensor in water, keep the terminals dry. After the check, dry the sensor.

If the resistance is not as specified, replace the engine coolant temperature sensor.

Last Modified: 3-10-2010	6.4 A	**From:** 200901
Model Year: 2010	**Model:** Corolla	**Doc ID:** RM0000030LE009X
Title: 2ZR-FE ENGINE CONTROL: ENGINE COOLANT TEMPERATURE SENSOR: INSTALLATION (2010 Corolla)		

INSTALLATION

1. INSTALL ENGINE COOLANT TEMPERATURE SENSOR

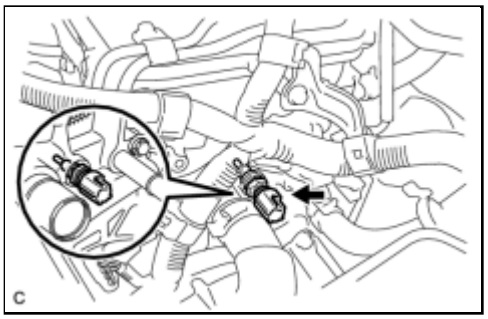

(a) Install the engine coolant temperature sensor through a new gasket.

Torque: 20 N·m (200 kgf·cm, 14ft·lbf)

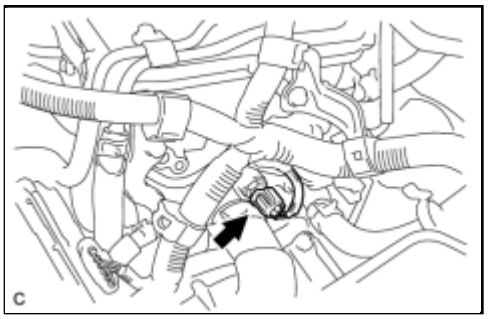

(b) Connect the engine coolant temperature sensor connector.

2. INSTALL AIR CLEANER CAP SUB-ASSEMBLY INFO

3. ADD ENGINE COOLANT INFO

4. INSPECT FOR COOLANT LEAK INFO

5. INSTALL NO. 2 CYLINDER HEAD COVER INFO

Last Modified: 3-10-2010	6.4 K	**From:** 200901
Model Year: 2010	**Model:** Corolla	**Doc ID:** RM0000033D300AX
Title: 2AZ-FE ENGINE CONTROL: HEATED OXYGEN SENSOR: COMPONENTS (2010 Corolla)		

COMPONENTS

ILLUSTRATION

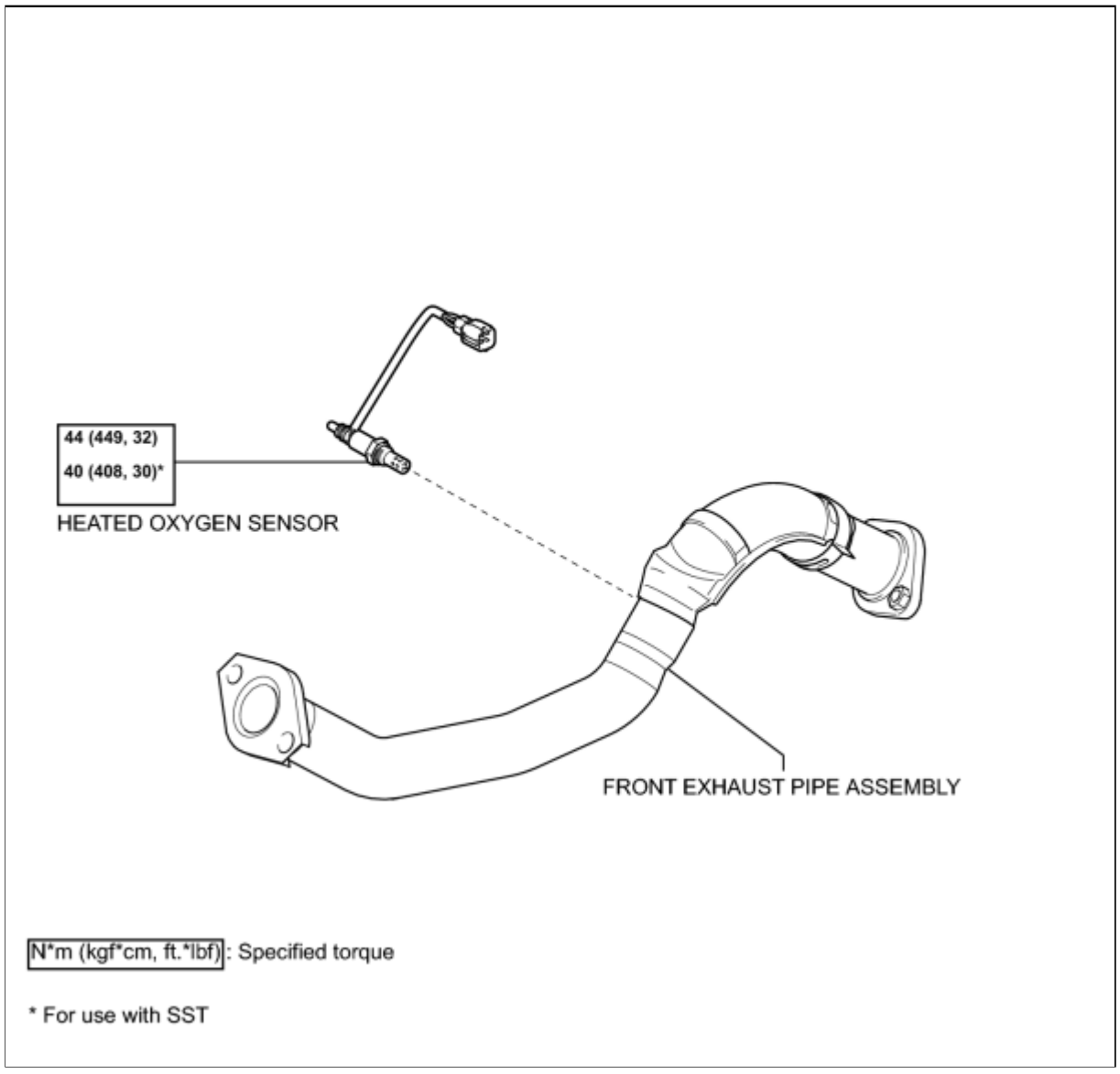

Last Modified: 3-10-2010	6.4 A	**From:** 200901
Model Year: 2010	**Model:** Corolla	**Doc ID:** RM0000033D400BX
Title: 2AZ-FE ENGINE CONTROL: HEATED OXYGEN SENSOR: REMOVAL (2010 Corolla)		

REMOVAL

1. REMOVE HEATED OXYGEN SENSOR

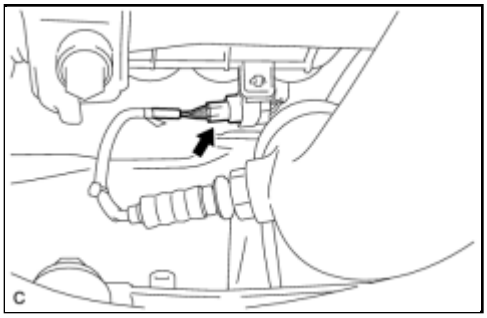

(a) Disconnect the heated oxygen sensor connector.

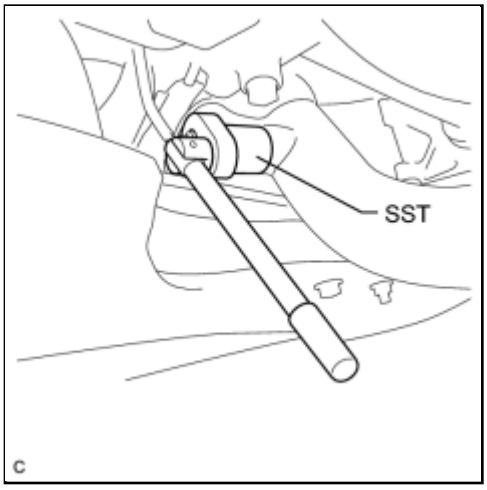

(b) Using SST, remove the heated oxygen sensor.

SST: 09224-00010

Last Modified: 3-10-2010	6.4 G	**From:** 200901
Model Year: 2010	**Model:** Corolla	**Doc ID:** RM0000033D200AX
Title: 2AZ-FE ENGINE CONTROL: HEATED OXYGEN SENSOR: INSPECTION (2010 Corolla)		

INSPECTION

1. INSPECT HEATED OXYGEN SENSOR

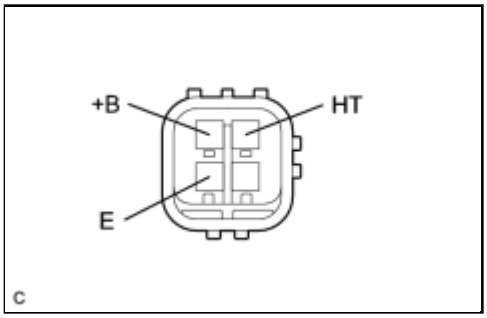

(a) Check the resistance.

(1) Using an ohmmeter, measure the resistance between the terminals.

Standard Resistance:

TESTER CONNECTION	CONDITION	SPECIFIED CONDITION
HT - +B	20 °C (68 °F)	11 to 16 Ω
HT - E	-	10 kΩ or higher

If the resistance is not as specified, replace the heated oxygen sensor.

Last Modified: 3-10-2010	6.4 A	**From:** 200901
Model Year: 2010	**Model:** Corolla	**Doc ID:** RM0000033D100BX
Title: 2AZ-FE ENGINE CONTROL: HEATED OXYGEN SENSOR: INSTALLATION (2010 Corolla)		

INSTALLATION

1. INSTALL HEATED OXYGEN SENSOR

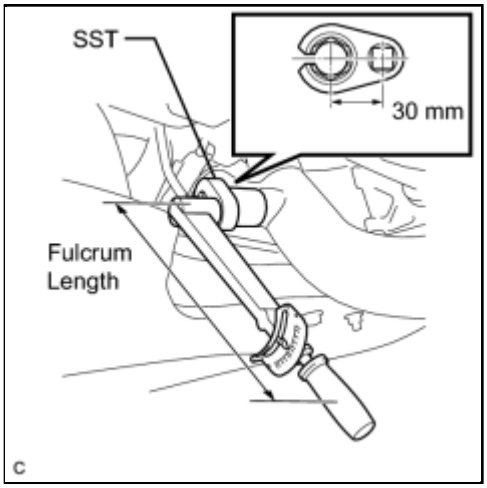

(a) Using SST, install the heated oxygen sensor.

SST: 09224-00010

without SST - Torque: 44 N·m (449 kgf·cm, 32ft·lbf)

with SST - Torque: 40 N·m (408 kgf·cm, 30ft·lbf)

NOTICE:

- This torque value can be obtained by using a torque wrench with a fulcrum length of 300 mm (11.81 in.) and SST with a measurement of 30 mm (1.18 in.) INFO .
- This torque value is effective when SST is parallel to the torque wrench.

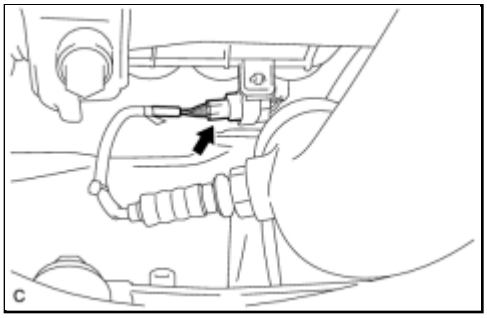

(b) Connect the heated oxygen sensor connector.

2. INSPECT FOR EXHAUST GAS LEAK

Last Modified: 3-10-2010	6.4 K	**From:** 200901
Model Year: 2010	**Model:** Corolla	**Doc ID:** RM00000306U00AX
Title: 2ZR-FE ENGINE CONTROL: HEATED OXYGEN SENSOR: COMPONENTS (2010 Corolla)		

COMPONENTS

ILLUSTRATION

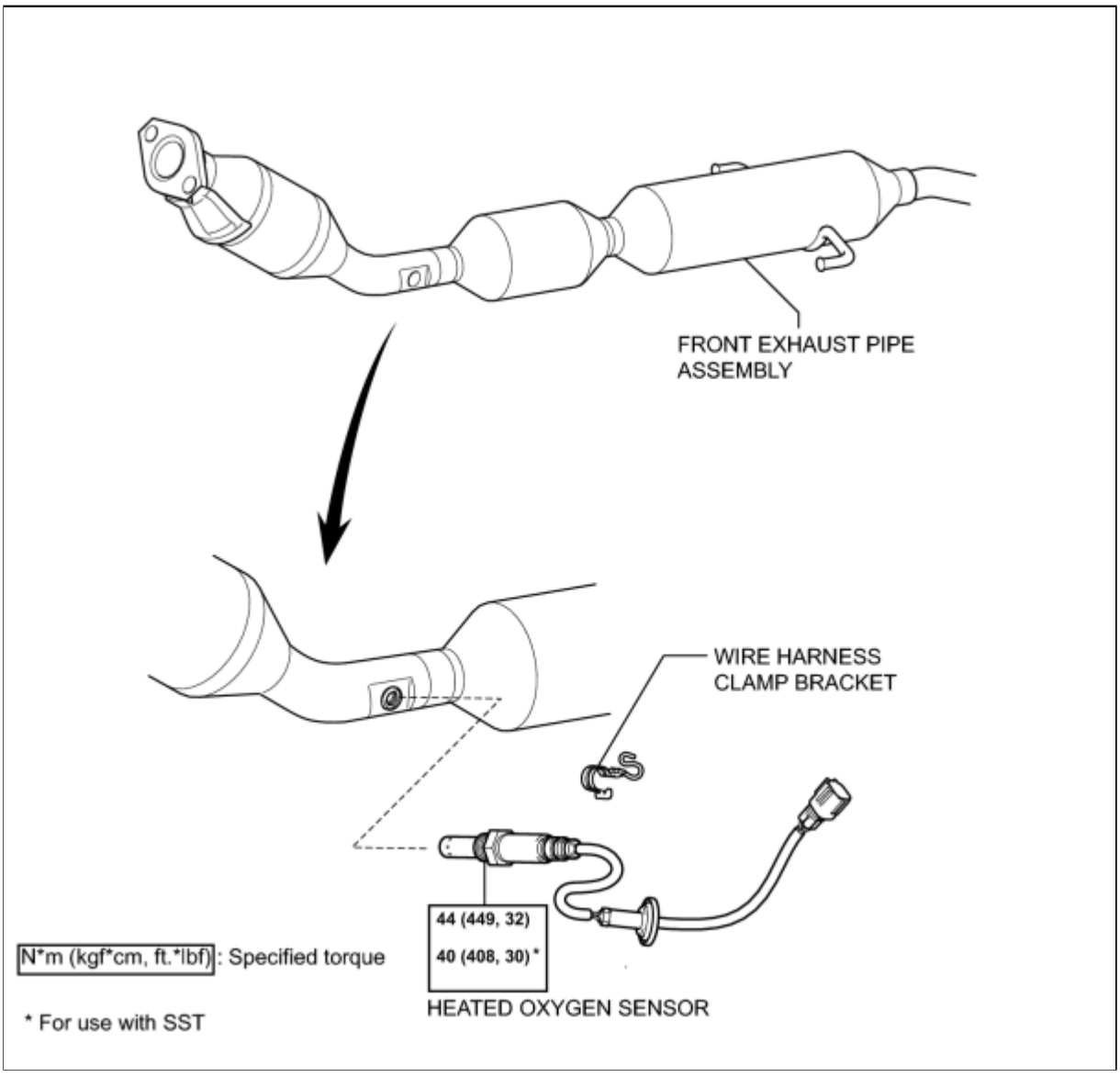

Last Modified: 3-10-2010	6.4 A	**From:** 200901
Model Year: 2010	**Model:** Corolla	**Doc ID:** RM00000306V00AX
Title: 2ZR-FE ENGINE CONTROL: HEATED OXYGEN SENSOR: REMOVAL (2010 Corolla)		

REMOVAL

1. REMOVE HEATED OXYGEN SENSOR

(a) Disconnect the heated oxygen sensor connector.

(b) Remove the grommet and pull the sensor connector out of the cabin through the floor panel.

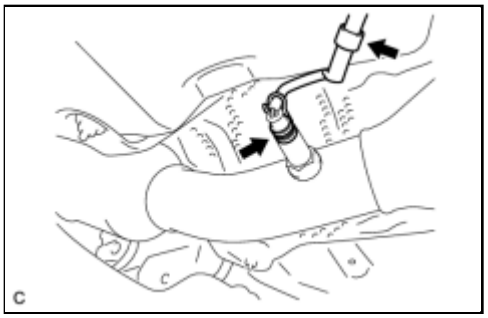

(c) Remove the wire harness clamp bracket and disconnect the wire harness clamp.

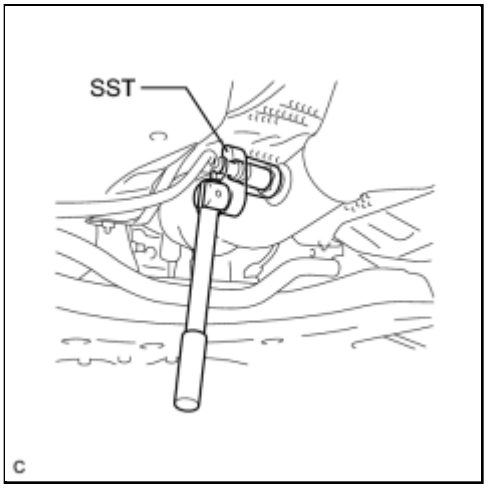

(d) Using SST, remove the heated oxygen sensor.

SST: 09224-00010

Last Modified: 3-10-2010	6.4 G	**From:** 200901
Model Year: 2010	**Model:** Corolla	**Doc ID:** RM000001CK8028X
Title: 2ZR-FE ENGINE CONTROL: HEATED OXYGEN SENSOR: INSPECTION (2010 Corolla)		

INSPECTION

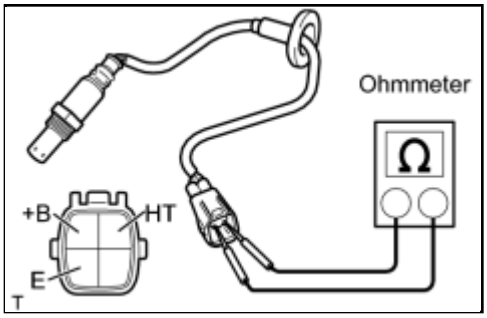

1. INSPECT HEATED OXYGEN SENSOR

(a) Measure the resistance according to the value(s) in the table below.

Standard Resistance:

TESTER CONNECTION	CONDITION	SPECIFIED CONDITION
(HT) - (+B)	20°C (68°F)	11 to 16 Ω
(HT) - (E)	-	10 kΩ or higher

If the result is not as specified, replace the heated oxygen sensor.

Last Modified: 3-10-2010	6.4 A	**From:** 200901
Model Year: 2010	**Model:** Corolla	**Doc ID:** RM00000306T00AX
Title: 2ZR-FE ENGINE CONTROL: HEATED OXYGEN SENSOR: INSTALLATION (2010 Corolla)		

INSTALLATION

1. INSTALL HEATED OXYGEN SENSOR

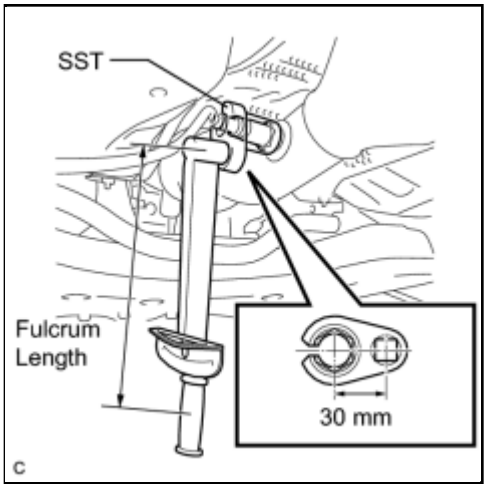

(a) Using SST, install the heated oxygen sensor onto the front exhaust pipe.

SST: 09224-00010
without SST - Torque: 44 N·m (449 kgf·cm, 32ft·lbf)
with SST - Torque: 40 N·m (408 kgf·cm, 30ft·lbf)

NOTICE:

- This torque value can be obtained by using a torque wrench with a fulcrum length of 300 mm (11.81 in.) and SST a measurement of 30 mm (1.18 in.) INFO .
- This torque value is effective when SST is parallel to the torque wrench.

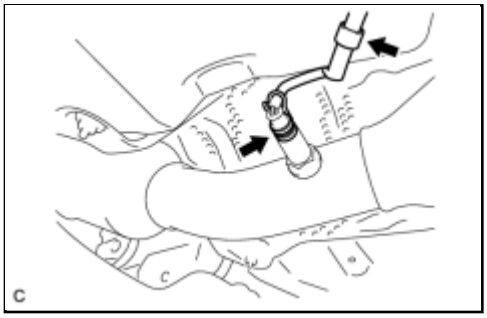

(b) Install the wire harness clamp bracket and connect the wire harness clamp.

(c) Pass the sensor connector through the floor panel and install the grommet.

(d) Connect the heated oxygen sensor connector.

2. INSPECT FOR EXHAUST GAS LEAK

Last Modified: 3-10-2010	6.4 K	**From:** 200901
Model Year: 2010	**Model:** Corolla	**Doc ID:** RM000001QVL012X
Title: 2AZ-FE ENGINE CONTROL: IGNITION COIL AND SPARK PLUG: COMPONENTS (2010 Corolla)		

COMPONENTS

ILLUSTRATION

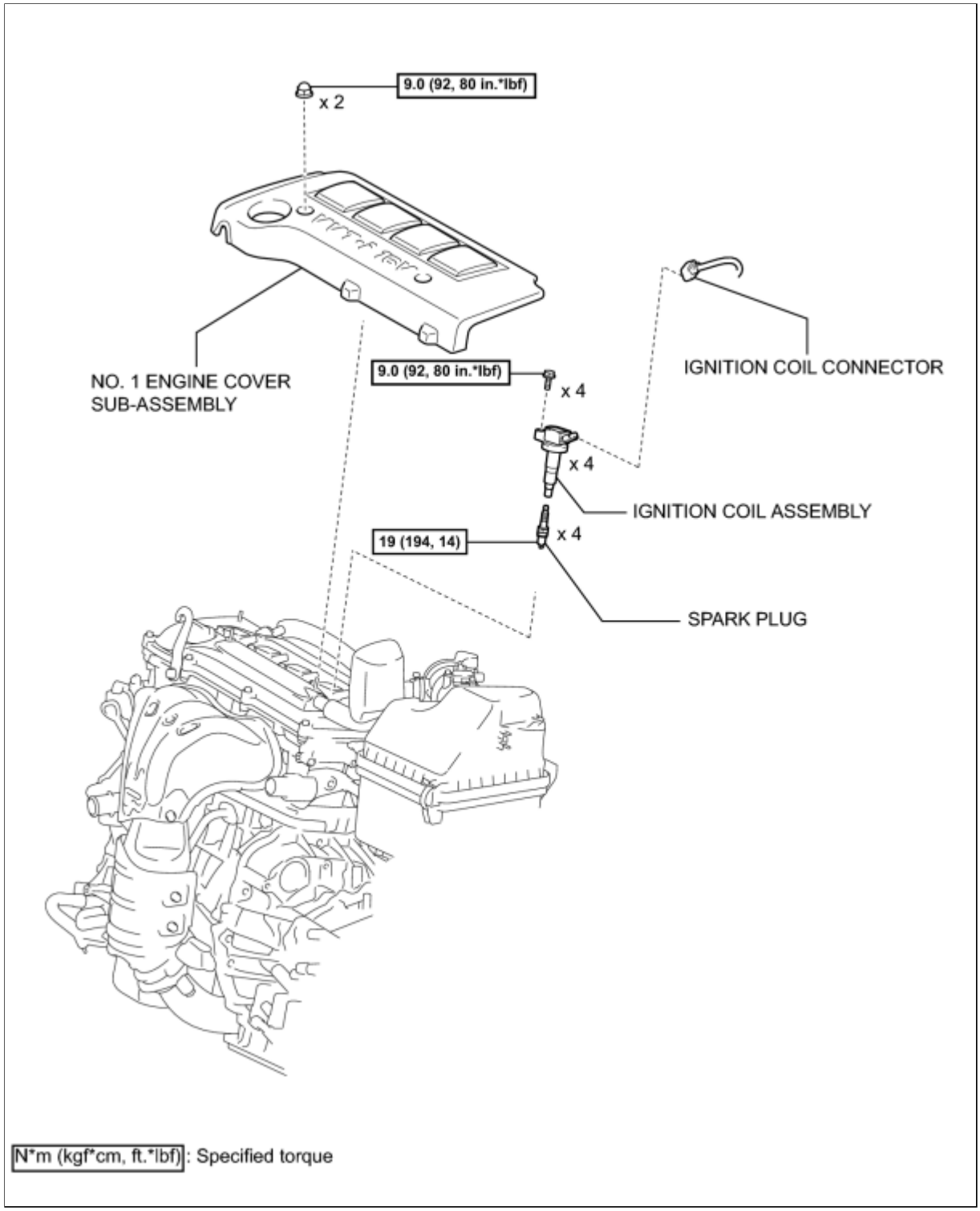
9.0 (92, 80 in.*lbf)
x 2
NO. 1 ENGINE COVER SUB-ASSEMBLY
9.0 (92, 80 in.*lbf)
x 4
IGNITION COIL CONNECTOR
x 4
IGNITION COIL ASSEMBLY
19 (194, 14)
x 4
SPARK PLUG
N*m (kgf*cm, ft.*lbf): Specified torque

Last Modified: 3-10-2010	6.4 A	**From:** 200901
Model Year: 2010	**Model:** Corolla	**Doc ID:** RM000001QVM01DX
Title: 2AZ-FE ENGINE CONTROL: IGNITION COIL AND SPARK PLUG: REMOVAL (2010 Corolla)		

REMOVAL

1. REMOVE NO. 1 ENGINE COVER SUB-ASSEMBLY INFO

2. REMOVE IGNITION COIL ASSEMBLY

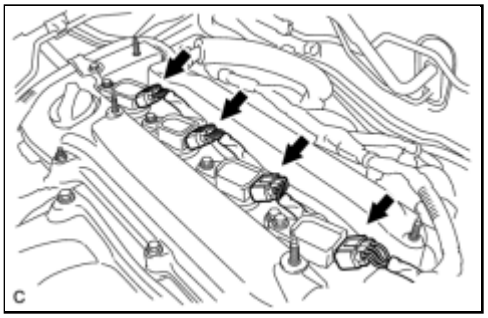

(a) Disconnect the 4 ignition coil connectors.

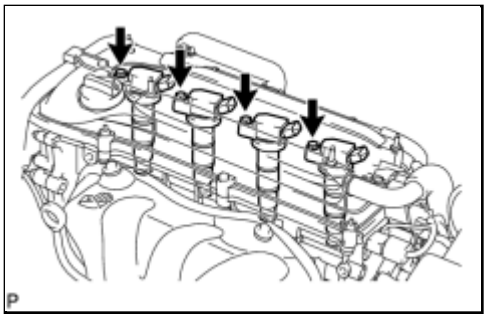

(b) Remove the 4 bolts and 4 ignition coils.

3. REMOVE SPARK PLUG

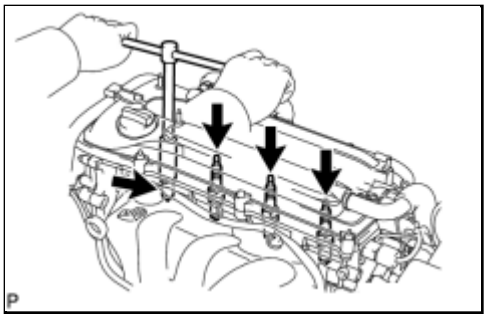

(a) Remove the 4 spark plugs.

Last Modified: 3-10-2010	6.4 A	**From:** 200901
Model Year: 2010	**Model:** Corolla	**Doc ID:** RM000001QVK01EX
Title: 2AZ-FE ENGINE CONTROL: IGNITION COIL AND SPARK PLUG: INSTALLATION (2010 Corolla)		

INSTALLATION

1. INSTALL SPARK PLUG

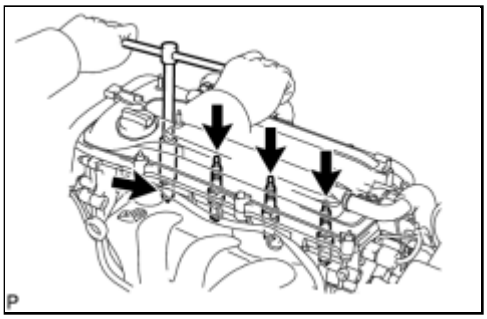

(a) Install the 4 spark plugs.

Torque: 19 N·m (194 kgf·cm, 14ft·lbf)

2. INSTALL IGNITION COIL ASSEMBLY

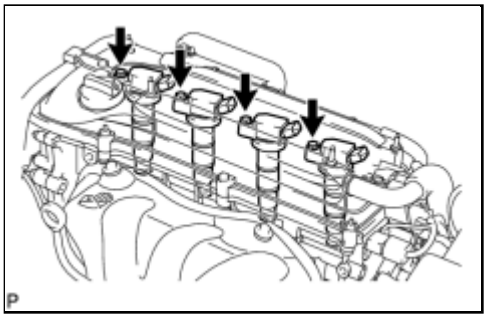

(a) Install the 4 ignition coils with the 4 bolts.

Torque: 9.0 N·m (92 kgf·cm, 80in·lbf)

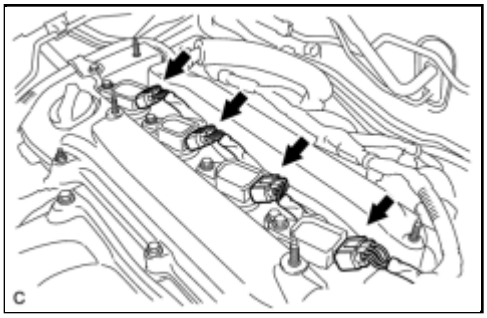

(b) Connect the 4 ignition coil connectors.

3. INSTALL NO. 1 ENGINE COVER SUB-ASSEMBLY INFO

Last Modified: 3-10-2010	6.4 K	**From:** 200901
Model Year: 2010	**Model:** Corolla	**Doc ID:** RM00000304P00BX
Title: 2ZR-FE ENGINE CONTROL: IGNITION COIL AND SPARK PLUG: COMPONENTS (2010 Corolla)		

COMPONENTS

ILLUSTRATION

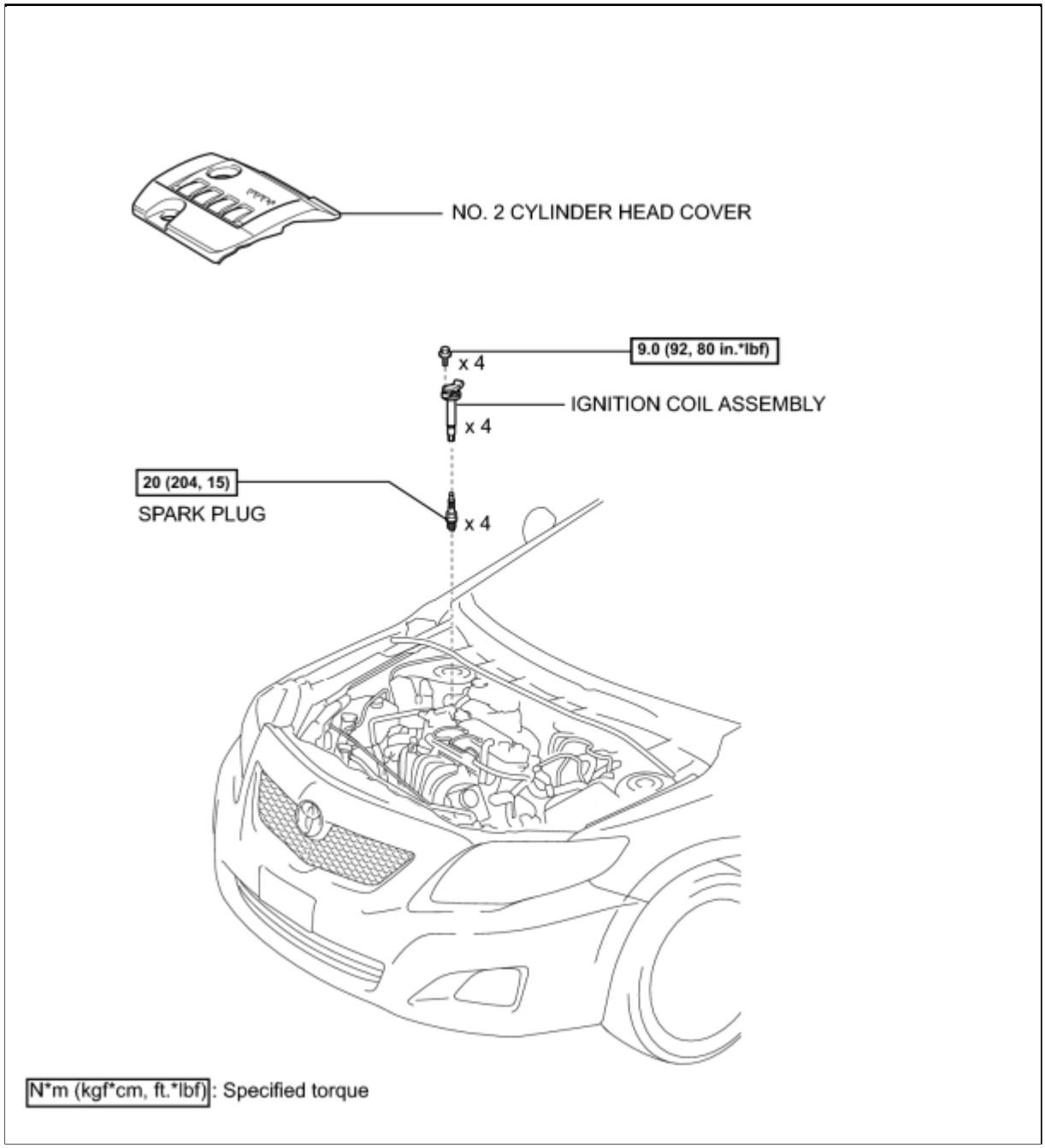

Last Modified: 3-10-2010	6.4 A	**From:** 200901
Model Year: 2010	**Model:** Corolla	**Doc ID:** RM00000304Q00BX
Title: 2ZR-FE ENGINE CONTROL: IGNITION COIL AND SPARK PLUG: REMOVAL (2010 Corolla)		

REMOVAL

1. REMOVE NO. 2 CYLINDER HEAD COVER INFO

2. REMOVE IGNITION COIL ASSEMBLY

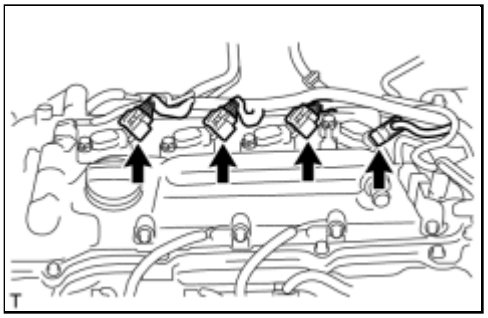

(a) Disconnect the 4 ignition coil connectors.

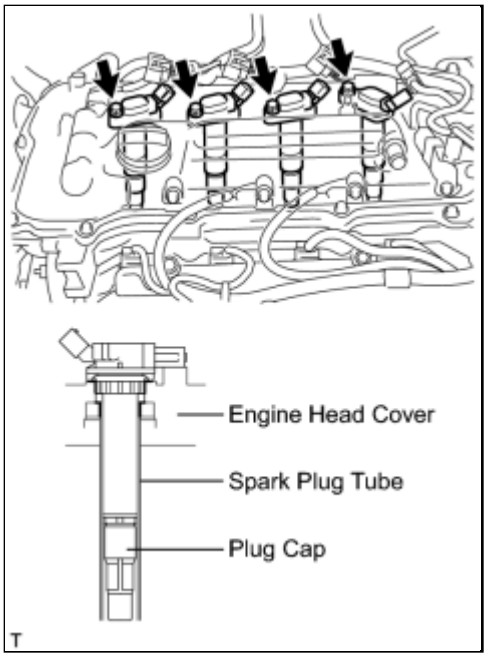

(b) Remove the 4 bolts and 4 ignition coils.

NOTICE:

When removing each ignition coil, do not damage the plug cap on the engine head cover opening or the upper edge of the spark plug tube.

3. REMOVE SPARK PLUG

(a) Using a 14 mm spark plug wrench, remove the 4 spark plugs.

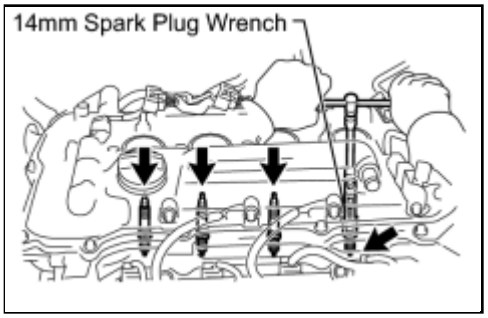
14mm Spark Plug Wrench

Last Modified: 3-10-2010	6.4 A	**From:** 200901
Model Year: 2010	**Model:** Corolla	**Doc ID:** RM0000030400BX
Title: 2ZR-FE ENGINE CONTROL: IGNITION COIL AND SPARK PLUG: INSTALLATION (2010 Corolla)		

INSTALLATION

1. INSTALL SPARK PLUG

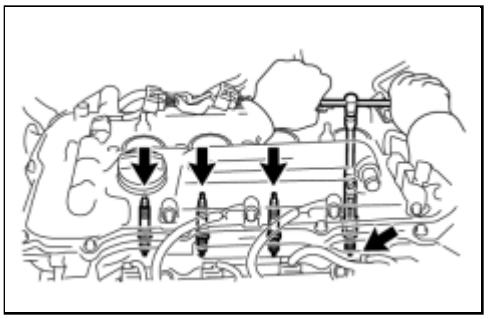

(a) Using a 14 mm spark plug wrench, install the 4 spark plugs.

Torque: 20 N·m (204 kgf·cm, 15ft·lbf)

2. INSTALL IGNITION COIL ASSEMBLY

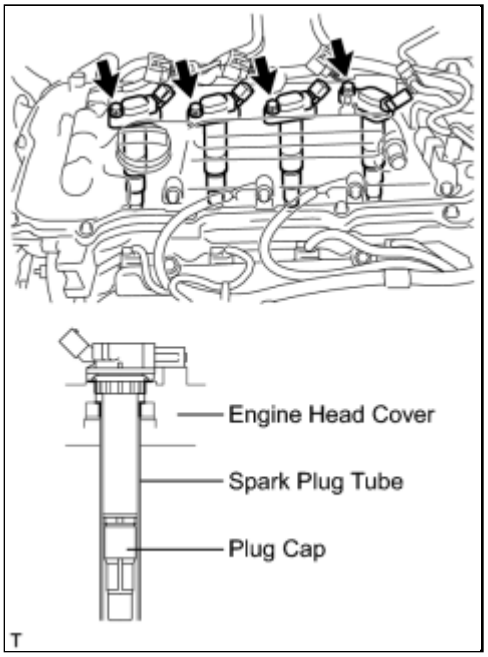

(a) Install the 4 ignition coils with the 4 bolts.

Torque: 10 N·m (102 kgf·cm, 7ft·lbf)

NOTICE:

When installing each ignition coil, do not damage the plug cap on the engine head cover opening or the upper edge of the spark plug tube.

(b) Connect the 4 ignition coil connectors.

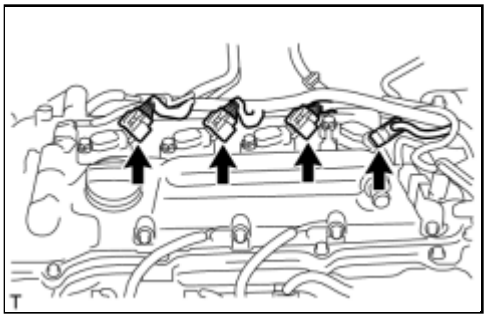

3. INSTALL NO. 2 CYLINDER HEAD COVER INFO

TOYOTA

Last Modified: 3-10-2010	6.4 R	**From:** 200901
Model Year: 2010	**Model:** Corolla	**Doc ID:** RM000003CXW005X
Title: 2AZ-FE ENGINE CONTROL: IGNITION SYSTEM: PARTS LOCATION (2010 Corolla)		

PARTS LOCATION

ILLUSTRATION

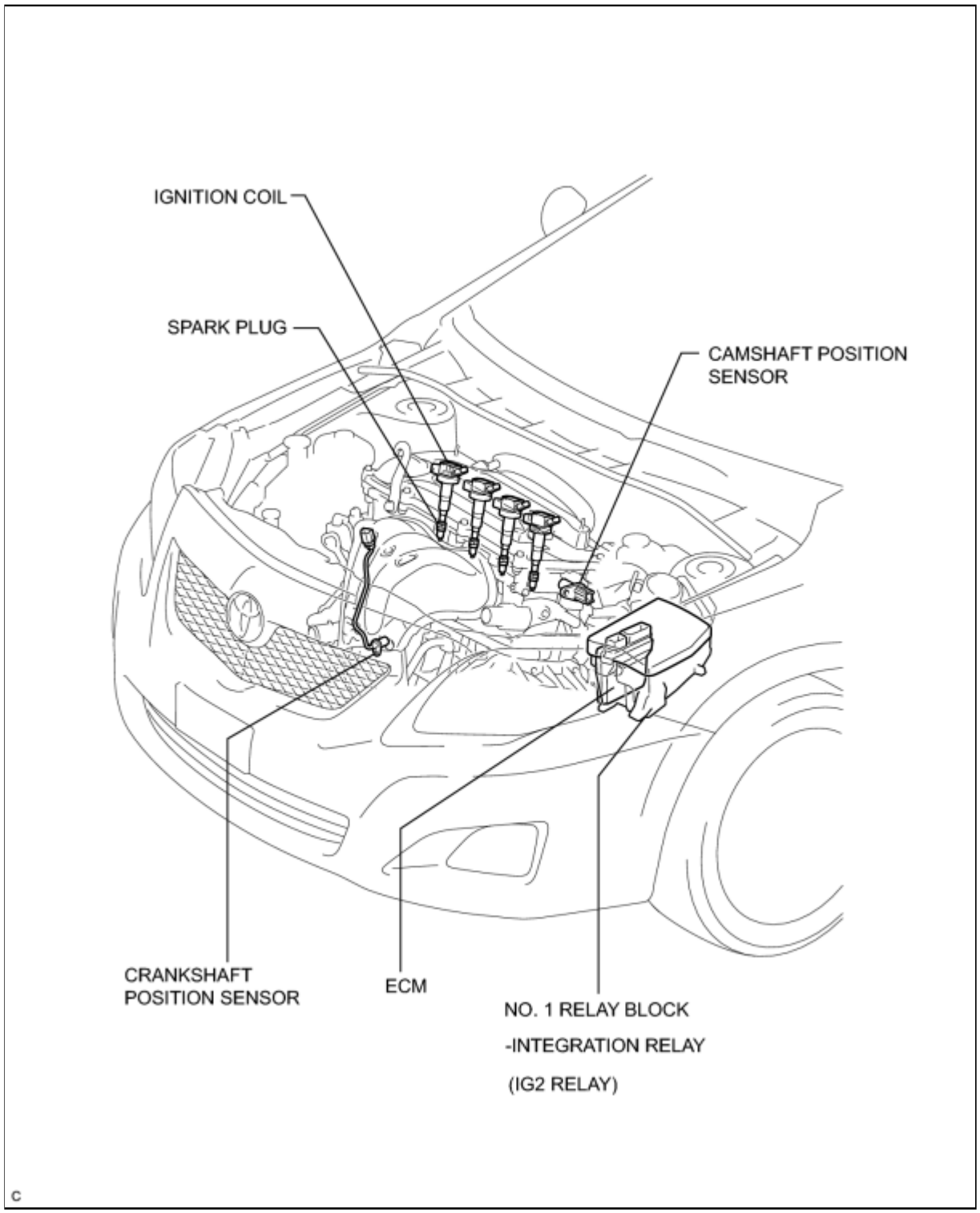

Last Modified: 3-10-2010	6.4 G	**From:** 200901
Model Year: 2010	**Model:** Corolla	**Doc ID:** RM000003CXY005X
Title: 2AZ-FE ENGINE CONTROL: IGNITION SYSTEM: ON-VEHICLE INSPECTION (2010 Corolla)		

ON-VEHICLE INSPECTION

1. INSPECT IGNITION COIL AND PERFORM SPARK TEST

(a) Check for DTCs INFO .

NOTICE:

If any DTC is present, perform troubleshooting in accordance with the procedure for that DTC.

(b) Check whether spark occurs.

(1) Remove the 4 ignition coils and 4 spark plugs INFO .

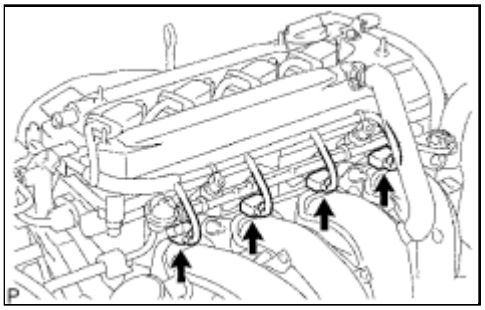

(2) Disconnect the 4 fuel injector connectors.

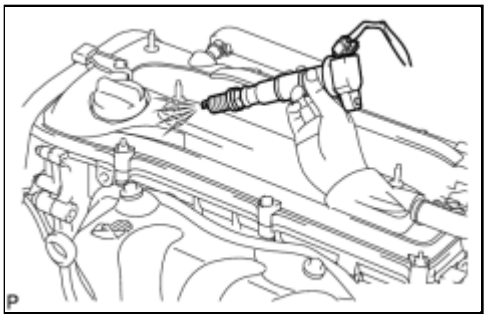

(3) Install the spark plug into the ignition coil and connect the ignition coil connector.

(4) Ground the spark plug.

(5) Check that spark occurs while the engine is being cranked.

NOTICE:

- Ground the spark plug when checking it.
- Replace any ignition coils that have been subjected to any physical impact.
- Do not crank the engine for more than 2 seconds.

If spark does not occur, perform the following procedure.

(c) Perform the following spark test procedure.

(1) Check that the wire harness side connector of the ignition coil with igniter is securely

connected.

Result:

RESULT	ACTION
NG	Connect securely
OK	Go to next step

(2) Perform the spark test on each ignition coil with igniter.

1. Replace the ignition coil with igniter with a known good one.
2. Perform the spark test again.

Result:

RESULT	ACTION
OK	Replace ignition coil with igniter
NG	Go to next step

(3) Check the spark plug.

1. Replace the spark plug with a known good one.
2. Perform the spark test again.

Result:

RESULT	ACTION
OK	Replace spark plug
NG	Go to next step

(4) Check that power is supplied to each ignition coil with igniter.

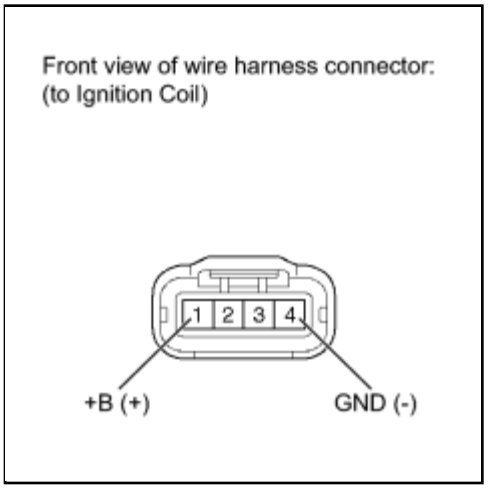

1. Disconnect each ignition coil connector.
2. Measure the resistance according to the value(s) in the table below.

Standard Resistance (Check for open):

TESTER CONNECTION	CONDITION	SPECIFIED CONDITION
4 (GND) - Body ground	Always	Below 1 Ω

HINT:

Perform the same procedure for each ignition coil.

3. Turn the ignition switch to ON.

4. Measure the voltage according to the value(s) in the table below.

Standard Voltage:

TESTER CONNECTION	CONDITION	SPECIFIED CONDITION
1 (+B) - 4 (GND)	Ignition switch ON	11 to 14 V

HINT:

Perform the same procedure for each ignition coil.

Result:

RESULT	ACTION
NG	Check wiring between ignition switch and ignition coil with igniter
OK	Go to next step

(5) Check the resistance of the crankshaft position sensor INFO .

Result:

RESULT	ACTION
NG	Replace crankshaft position sensor
OK	Go to next step

(6) Check the IGT signals from the ECM INFO .

Result:

RESULT	ACTION
NG	Check ECM
OK	Repair wiring between ignition coil and ECM

(d) Connect the 4 injector connectors.

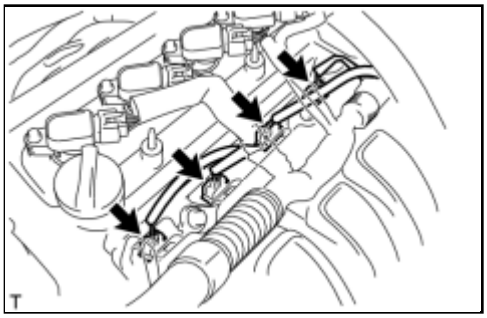

(e) Install the 4 ignition coils and 4 spark plugs INFO .

2. INSPECT SPARK PLUG

NOTICE:

- Do not use a wire brush for cleaning.
- Do not attempt to adjust the electrode gap of a used spark plug.

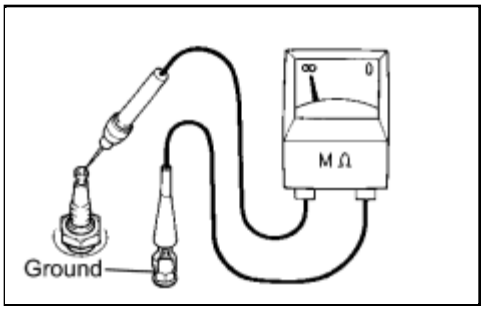

(a) Check the electrode.

(1) Using a megohmmeter, measure the insulation resistance.

Standard Resistance:

10 MΩ or more

If a megohmmeter is not available, perform the following simple inspection instead.

HINT:

If the result is not as specified, clean the spark plug with a spark plug cleaner and measure the resistance again.

(b) Alternative inspection method:

(1) Quickly accelerate the engine to 4000 rpm 5 times.

(2) Remove the spark plug.

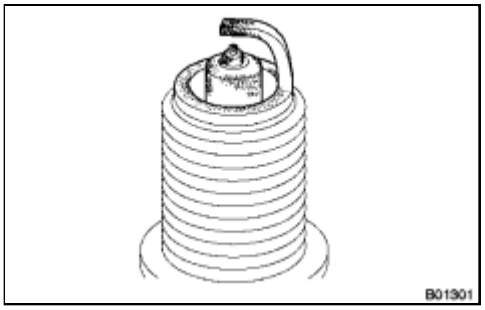

(3) Visually check the spark plug.

If the electrode is dry, the spark plug is functioning properly. If the electrode is damp, proceed to the next step.

(c) Check the spark plug for any damage to its threads and insulator.

If there is any damage, replace the spark plug.

Recommended Spark Plug:

MANUFACTURER	PRODUCT
DENSO	SK20R11
NGK	IFR6A11

(d) Reference:

Maximum Electrode Gap for Used Spark Plug:

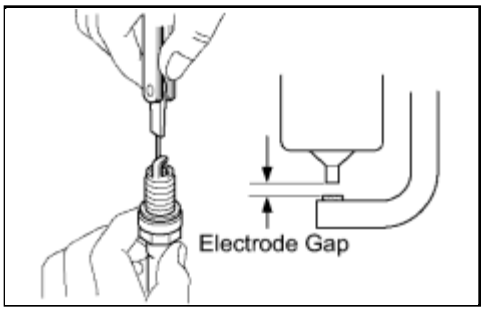

ELECTRODE GAP
1.3 mm (0.0512 in.)

If the gap is greater than the maximum, replace the spark plug.

Electrode Gap for New Spark Plug:

ELECTRODE GAP
1.0 to 1.1 mm (0.0394 to 0.0433 in.)

(e) Clean the spark plug.

If the electrode has traces of wet carbon, clean the electrode with a spark plug cleaner and then dry it.

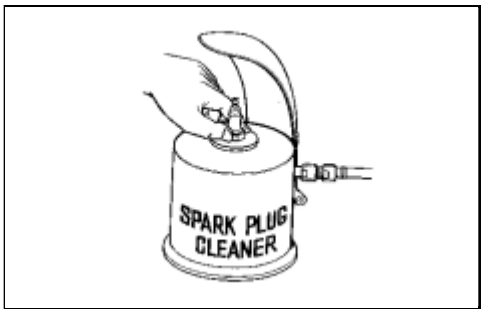

Air pressure:

588 kPa (6 kgf/cm^2, 85 psi)

Duration:

20 seconds or less

HINT:

Only use the spark plug cleaner when the electrode is free of oil. If the electrode has traces of oil, use gasoline to clean off the oil before using the spark plug cleaner.

Last Modified: 3-10-2010	6.4 U	**From:** 200901
Model Year: 2010	**Model:** Corolla	**Doc ID:** RM000003CXX005X
Title: 2AZ-FE ENGINE CONTROL: IGNITION SYSTEM: SYSTEM DIAGRAM (2010 Corolla)		

SYSTEM DIAGRAM

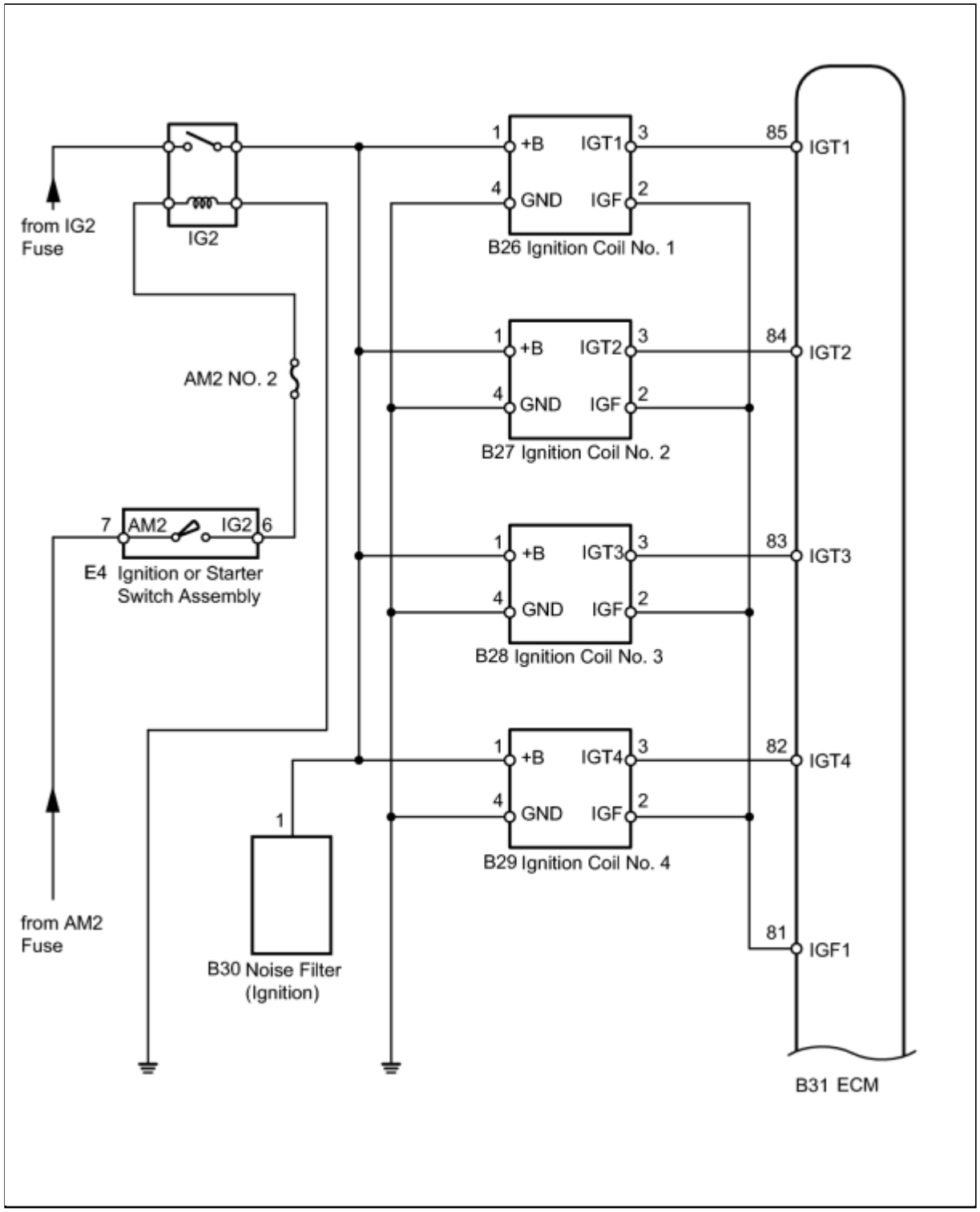

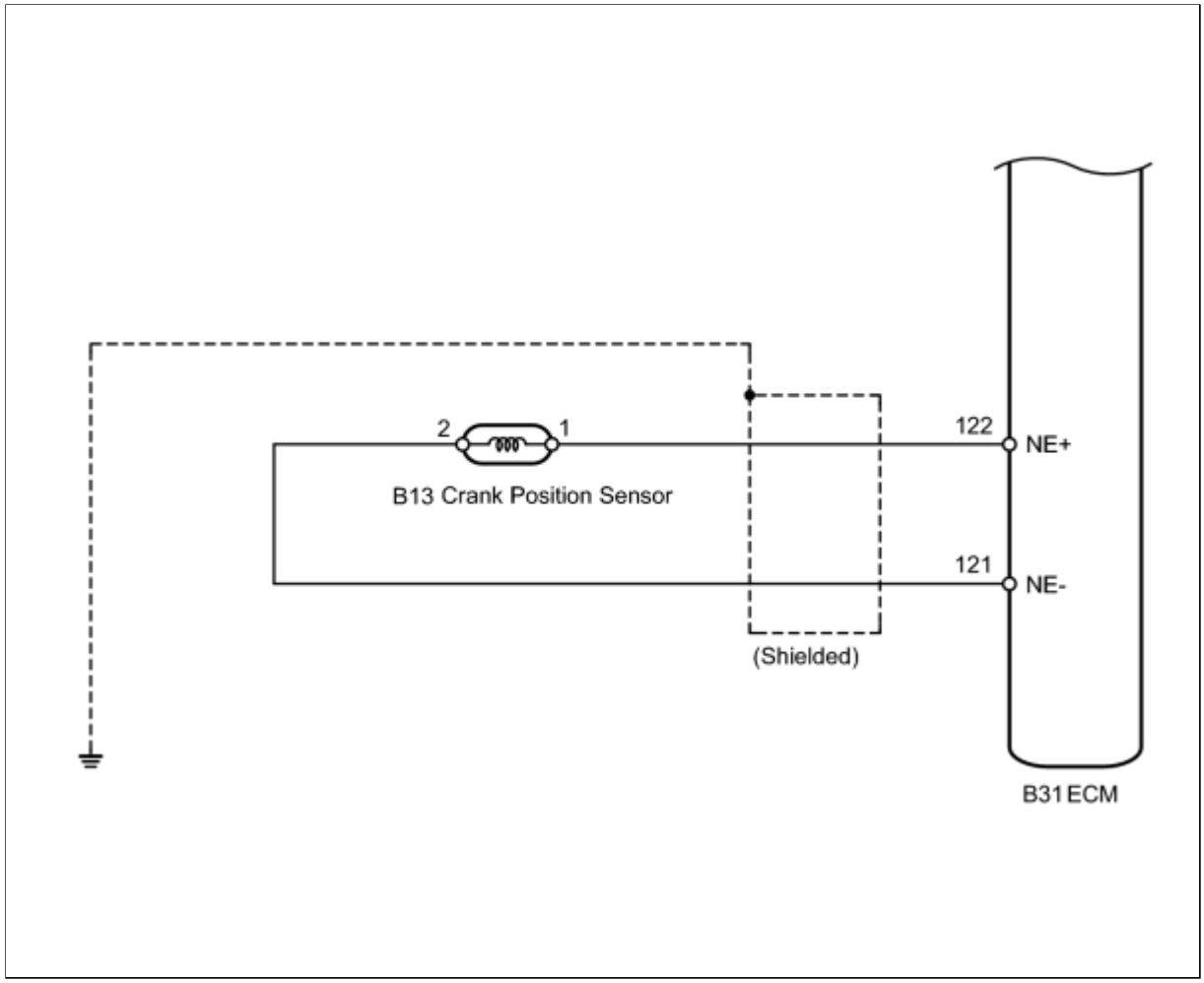
2
1
B13 Crank Position Sensor
122
NE+
121
NE-
(Shielded)
B31 ECM

Last Modified: 3-10-2010	6.4 G	**From:** 200901
Model Year: 2010	**Model:** Corolla	**Doc ID:** RM000001QVP01TX
Title: 2ZR-FE ENGINE CONTROL: IGNITION SYSTEM: ON-VEHICLE INSPECTION (2010 Corolla)		

ON-VEHICLE INSPECTION

1. CHECK IGNITION COIL ASSEMBLY AND PERFORM SPARK TEST

(a) Check for DTCs INFO .

NOTICE:

If any DTC is present, perform troubleshooting in accordance with the procedure for that DTC.

(b) Check that spark occurs.

(1) Remove the ignition coils and spark plug INFO .

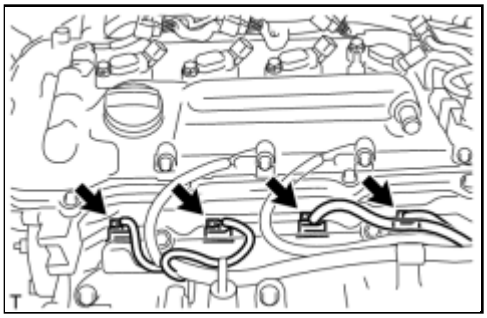

(2) Disconnect the 4 fuel injector connectors.

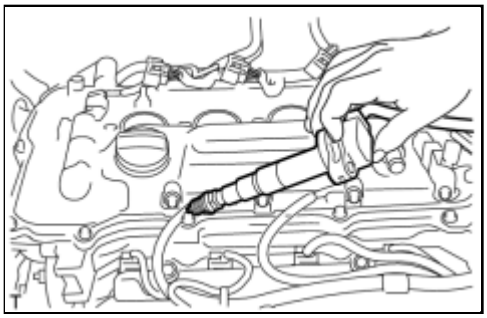

(3) Install the spark plug into the ignition coil, and then connect the ignition coil connector.

(4) Ground the spark plug.

(5) Check that spark occurs while the engine is being cranked.

NOTICE:

- Be sure to ground the spark plugs when checking them.
- If the ignition coil has been struck or dropped, replace it.
- Do not crank the engine for more than 2 seconds.

If spark does not occur, perform the following procedure.

(c) Perform the following spark test procedure.

(1) Check that the ignition coil connector is securely connected.

Result:

RESULT	ACTION
NG	Connect securely
OK	Go to next step

(2) Perform a spark test on each ignition coil.

1. Replace the ignition coil with a known good one.
2. Perform the spark test again.

Result:

RESULT	ACTION
OK	Replace ignition coil
NG	Go to next step

(3) Perform a spark test.

1. Replace the spark plug with a known good one.
2. Perform the spark test again.

Result:

RESULT	ACTION
OK	Replace the spark plug
NG	Go to next step

(4) Check power supply to each ignition coil.

1. Disconnect each ignition coil connector.
2. Measure the resistance according to the value(s) in the table below.

Standard Resistance (Check for open):

TESTER CONNECTION	CONDITION	SPECIFIED CONDITION
4 (GND) - Body ground	Always	Below 1 Ω

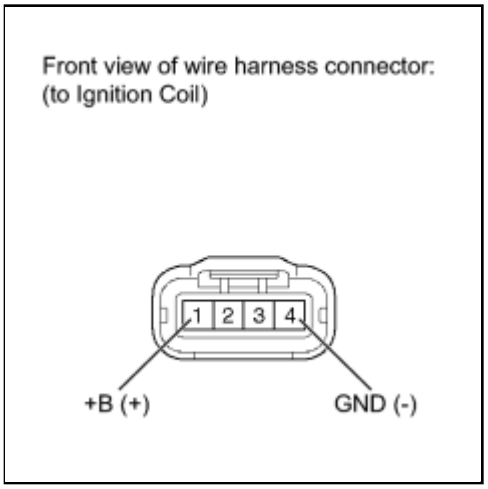

HINT:

Perform the same procedure for each ignition coil.

3. Turn the ignition switch to ON.
4. Measure the voltage according to the value(s) in the table below.

Standard Voltage:

TESTER CONNECTION	CONDITION	SPECIFIED CONDITION
1 (+B) - 4 (GND)	Ignition switch ON	11 to 14 V

HINT:

Perform the same procedure for each ignition coil.

Result:

RESULT	ACTION
NG	Check wire harness and connector
OK	Go to next step

(5) Check the resistance of the crank position sensor INFO .

Result:

RESULT	ACTION
NG	Replace crankshaft position sensor
OK	Go to next step

(6) Check the IGT signal from the ECM INFO .

Result:

RESULT	ACTION
NG	Check ECM
OK	Repair wiring between ignition coil and ECM

2. INSPECT SPARK PLUG

(a) Check the electrode.

(1) Using a megohmmeter, measure the resistance.

Standard Resistance:
10 MΩ or more

If the result is 10 MΩ or less, clean the plug and measure the resistance again.

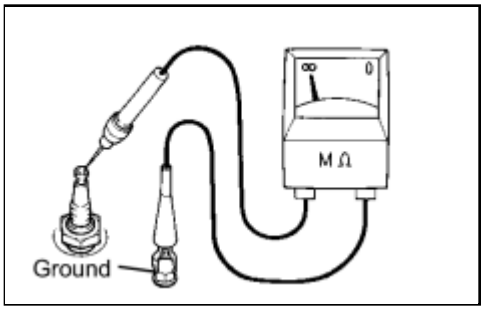

HINT:

If a megohmmeter is not available, perform the following simple inspection instead.

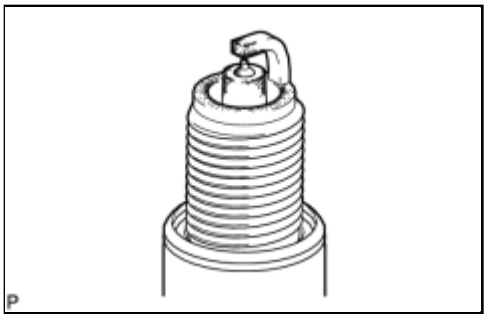

(b) Alternative inspection method:

(1) Quickly accelerate the engine to 4000 rpm 5 times.

(2) Remove each spark plug.

(3) Visually check the spark plug.

If the electrode is dry, the spark plug is functioning properly. If the electrode is damp, proceed to the next step.

(c) Check the spark plug for any damage to its threads and insulator.

If there is any damage, replace the spark plug.

Recommended Spark Plug

MANUFACTURER	SPARK PLUG TYPE
DENSO	SC20HR11

(d) Check the spark plug electrode gap.

Maximum Electrode Gap for Used Spark Plug:

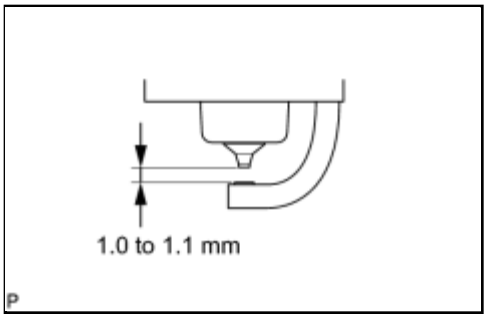

ELECTRODE GAP
1.3 mm (0.0512 in.)

If the gap is greater than the maximum, replace the spark plug.

Electrode Gap for New Spark Plug:

ELECTRODE GAP
1.0 to 1.1 mm (0.0394 to 0.0433 in.)

(e) Clean the spark plugs.

If the electrode has traces of wet carbon, clean the electrode with a spark plug cleaner and then dry it.

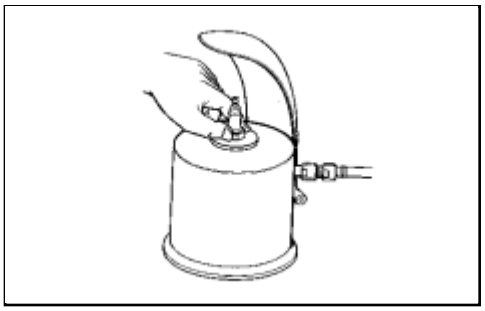

Standard air pressure:
588 kPa (6 kgf/cm^2, 85 psi)
Standard duration:
20 seconds or less.

HINT:

Only use the spark plug cleaner when the electrode is free of oil. If the electrode has traces of oil, use gasoline to clean off the oil before using the spark plug cleaner.

Last Modified: 3-10-2010	6.4 R	**From:** 200901
Model Year: 2010	**Model:** Corolla	**Doc ID:** RM00000304L00DX
Title: 2ZR-FE ENGINE CONTROL: IGNITION SYSTEM: PARTS LOCATION (2010 Corolla)		

PARTS LOCATION

ILLUSTRATION

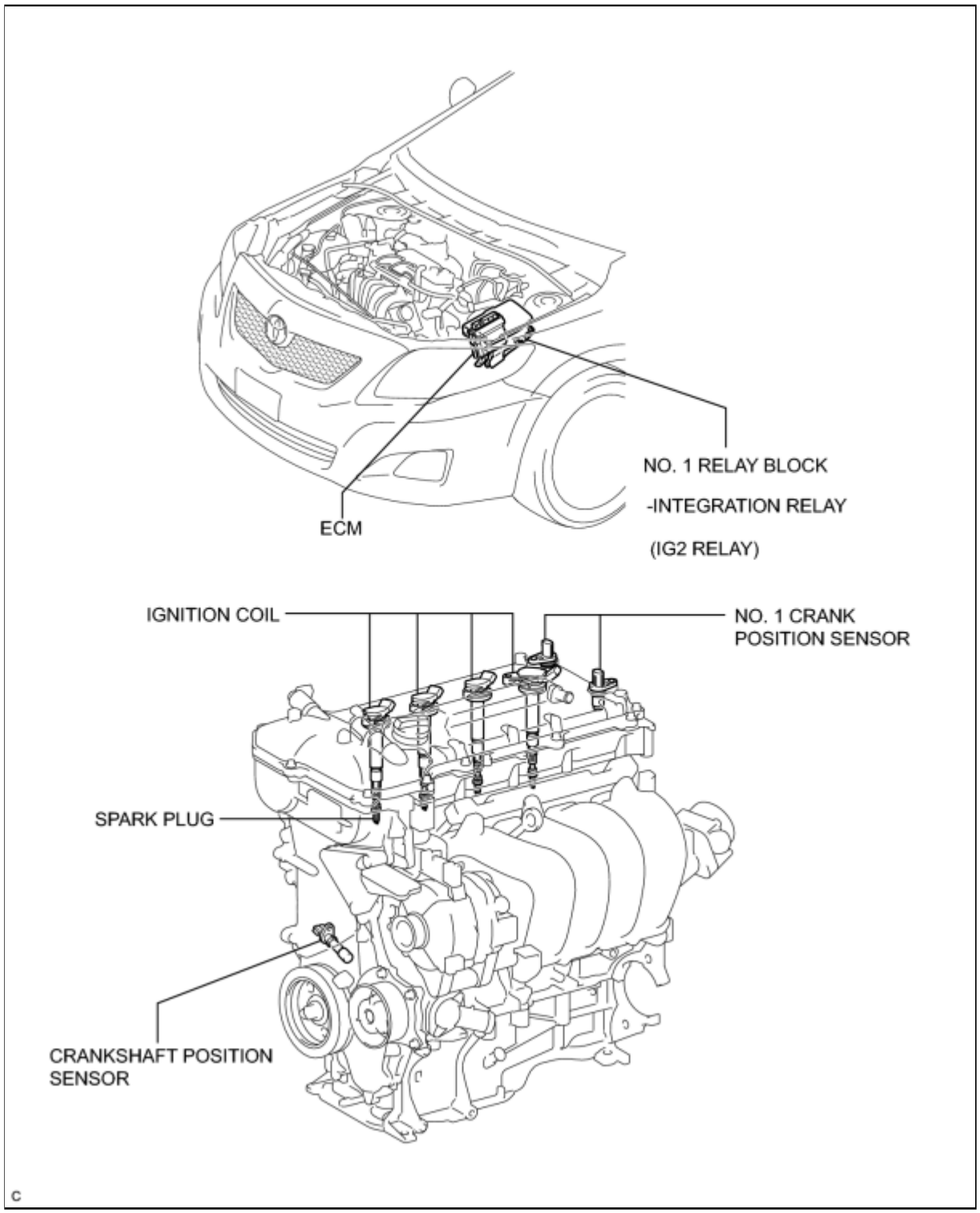

Last Modified: 3-10-2010	6.4 U	**From:** 200901
Model Year: 2010	**Model:** Corolla	**Doc ID:** RM00000304M00AX
Title: 2ZR-FE ENGINE CONTROL: IGNITION SYSTEM: SYSTEM DIAGRAM (2010 Corolla)		

SYSTEM DIAGRAM

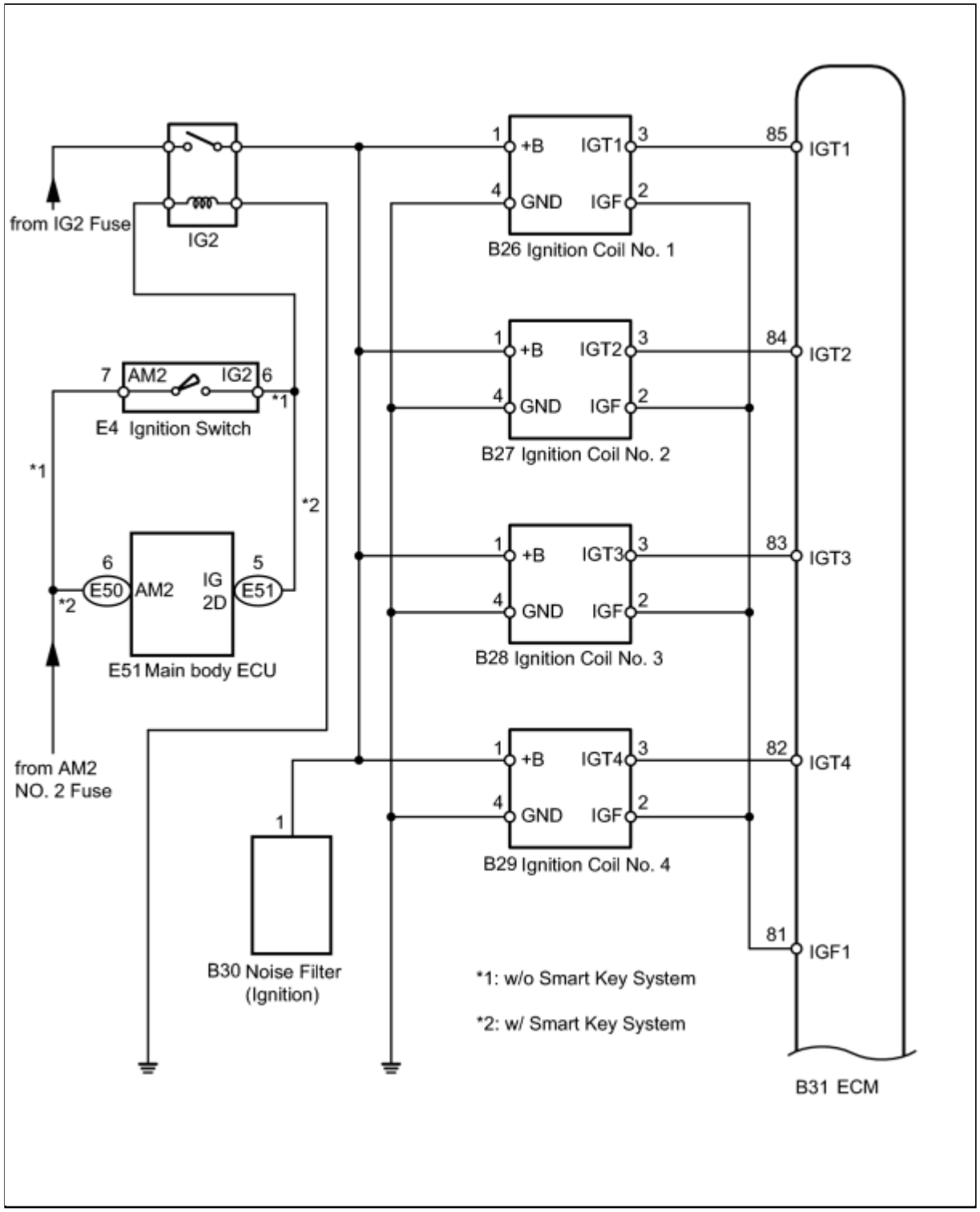

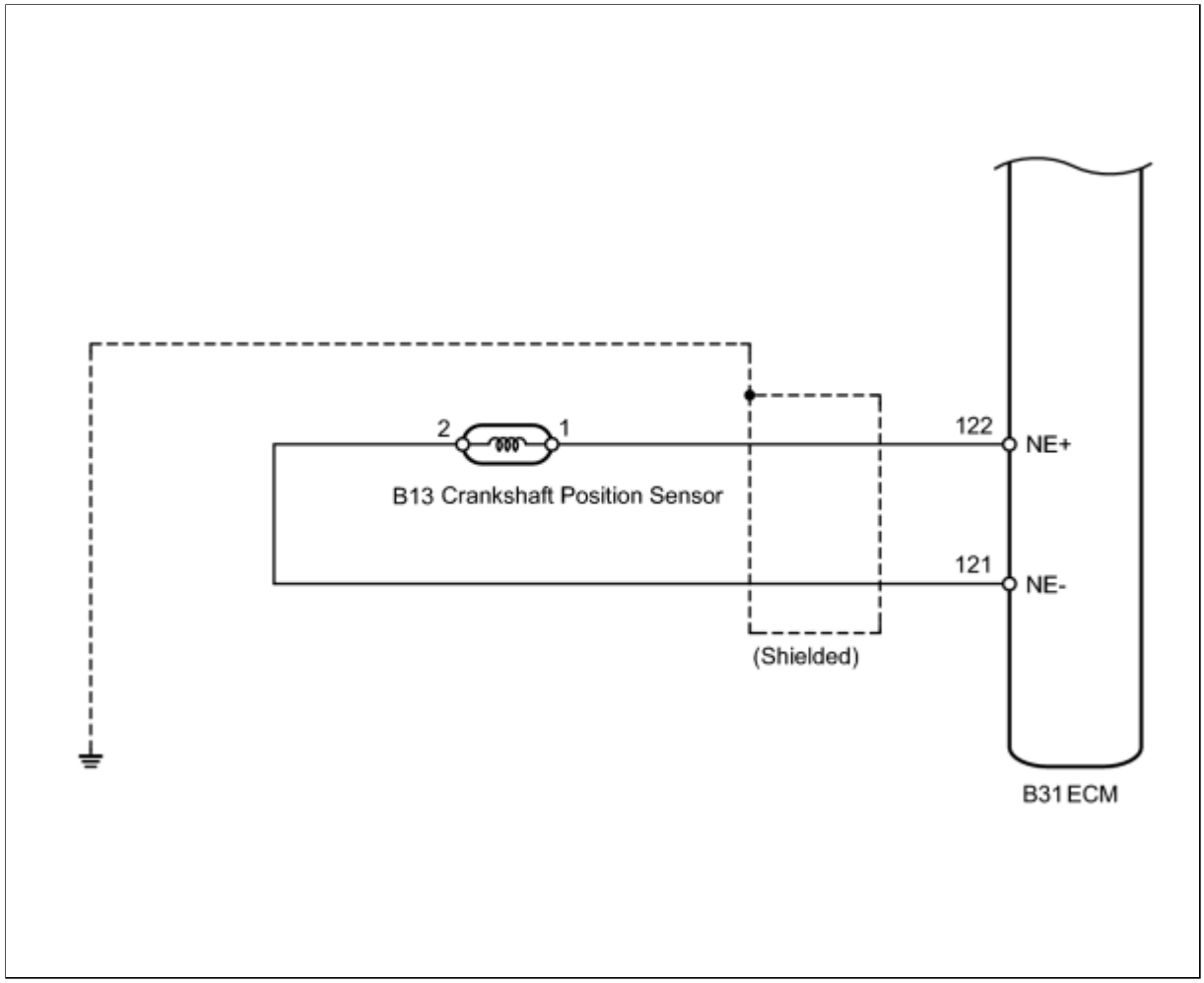
2
1
B13 Crankshaft Position Sensor
122
NE+
121
NE-
(Shielded)
B31 ECM

Last Modified: 3-10-2010	6.4 K	**From:** 200901
Model Year: 2010	**Model:** Corolla	**Doc ID:** RM0000033DZ00FX
Title: 2AZ-FE ENGINE CONTROL: INTEGRATION RELAY: COMPONENTS (2010 Corolla)		

COMPONENTS

ILLUSTRATION

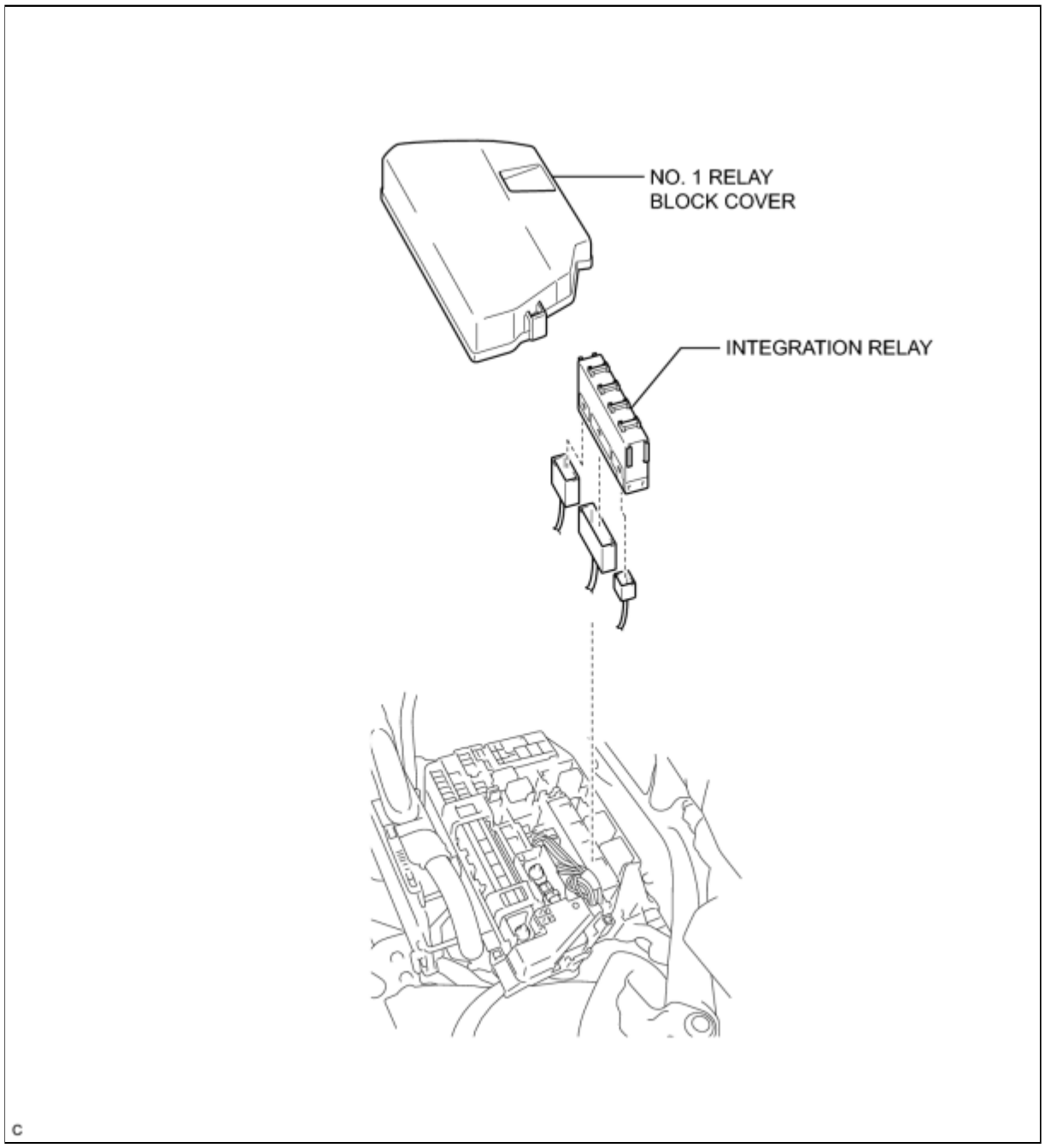

Last Modified: 3-10-2010	6.4 A	**From:** 200901
Model Year: 2010	**Model:** Corolla	**Doc ID:** RM0000033E000GX
Title: 2AZ-FE ENGINE CONTROL: INTEGRATION RELAY: REMOVAL (2010 Corolla)		

REMOVAL

1. REMOVE NO. 1 RELAY BLOCK COVER

2. REMOVE INTEGRATION NO.2 RELAY

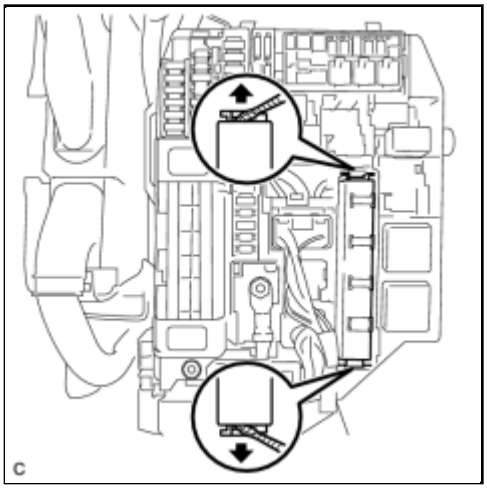

(a) Using a screwdriver with its tip wrapped in protective tape, disengage the 2 claws and disconnect the integration relay.

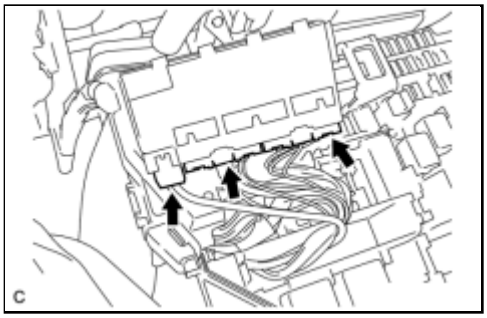

(b) Disconnect the 3 connectors and remove the integration relay.

Last Modified: 3-10-2010	6.4 G	**From:** 200901
Model Year: 2010	**Model:** Corolla	**Doc ID:** RM0000033DY00FX
Title: 2AZ-FE ENGINE CONTROL: INTEGRATION RELAY: INSPECTION (2010 Corolla)		

INSPECTION

1. INSPECT INTEGRATION NO.1 RELAY

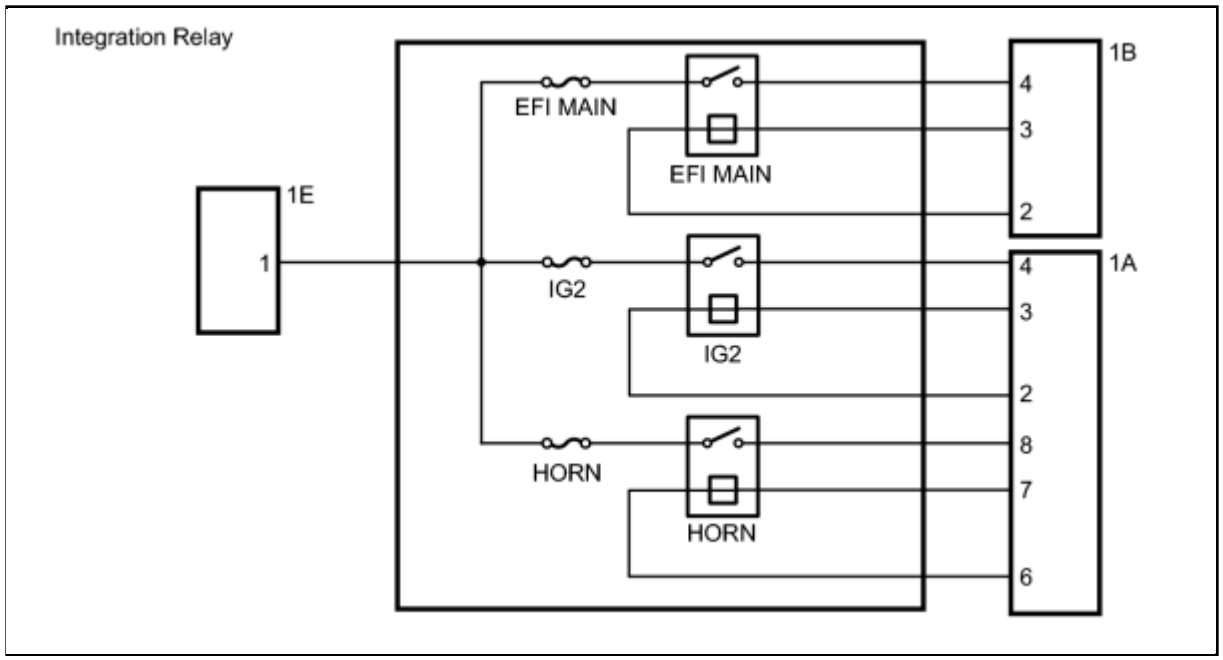

(a) EFI MAIN RELAY:

(1) Measure the resistance according to the value(s) in the table below.

Standard Resistance:

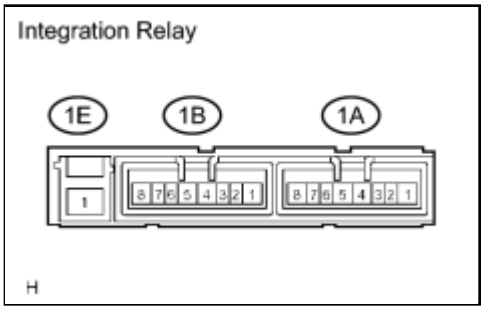

TESTER CONNECTION	CONDITION	SPECIFIED CONDITION
Integration relay (1E-1) - Integration relay (1B-4)	Battery voltage is not applied between terminals 1B-3 and 1B-2	10 kΩ or higher
Integration relay (1E-1) - Integration relay (1B-4)	Battery voltage is applied between terminals 1B-3 and 1B-2	Below 1 Ω

If the resistance is not as specified, replace the integration relay.

(b) IG2 RELAY:

(1) Measure the resistance according to the value(s) in the table below.

Standard Resistance:

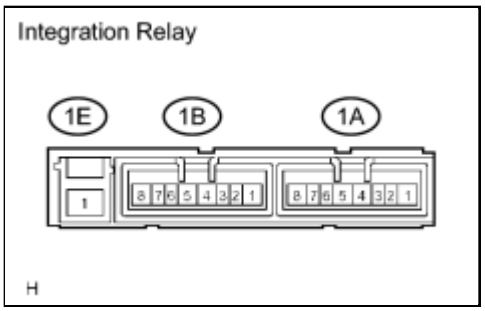

TESTER CONNECTION	CONDITION	SPECIFIED CONDITION
Integration relay (1E-1) - Integration relay (1A-4)	Battery voltage is not applied between terminals 1A-2 and 1A-3	10 kΩ or higher
Integration relay (1E-1) - Integration relay (1A-4)	Battery voltage is applied between terminals 1A-2 and 1A-3	Below 1 Ω

If the resistance is not as specified, replace the integration relay.

(c) HORN RELAY:

(1) Measure the resistance according to the value(s) in the table below.

Standard Resistance:

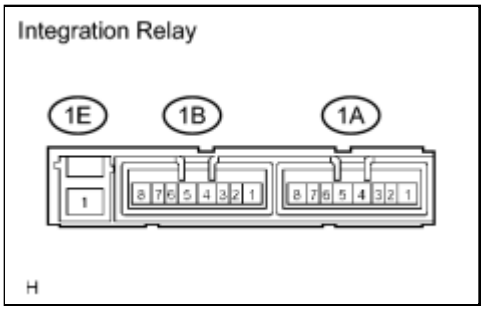

TESTER CONNECTION	CONDITION	SPECIFIED CONDITION
Integration relay (1E-1) - Integration relay (1A-8)	Battery voltage is not applied between terminals 1A-6 and 1A-7	10 kΩ or higher
Integration relay (1E-1) - Integration relay (1A-8)	Battery voltage is applied between terminals 1A-6 and 1A-7	Below 1 Ω

If the resistance is not as specified, replace the integration relay.

Last Modified: 3-10-2010	6.4 A	**From:** 200901
Model Year: 2010	**Model:** Corolla	**Doc ID:** RM0000033DX00GX
Title: 2AZ-FE ENGINE CONTROL: INTEGRATION RELAY: INSTALLATION (2010 Corolla)		

INSTALLATION

1. INSTALL INTEGRATION NO.2 RELAY

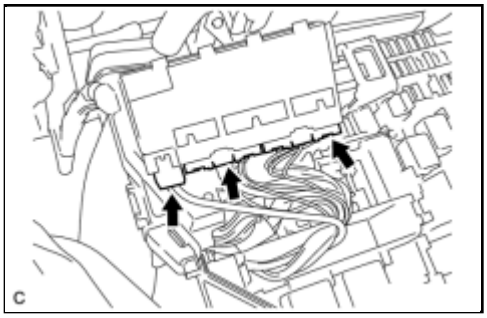

(a) Connect the 3 connectors.

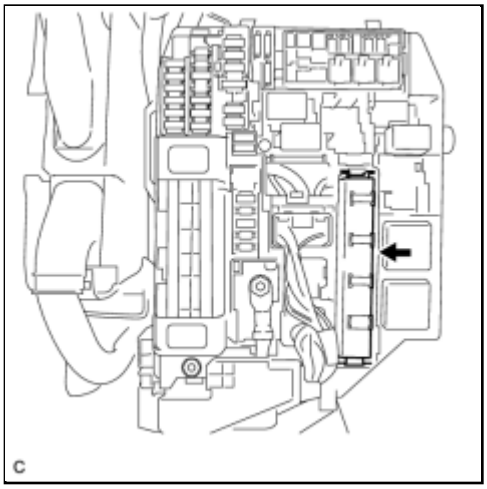

(b) Attach the integration relay to the engine room relay block.

2. INSTALL NO. 1 RELAY BLOCK COVER

Last Modified: 3-10-2010	6.4 K	**From:** 200901
Model Year: 2010	**Model:** Corolla	**Doc ID:** RM0000030LH009X
Title: 2ZR-FE ENGINE CONTROL: INTEGRATION RELAY: COMPONENTS (2010 Corolla)		

COMPONENTS

ILLUSTRATION

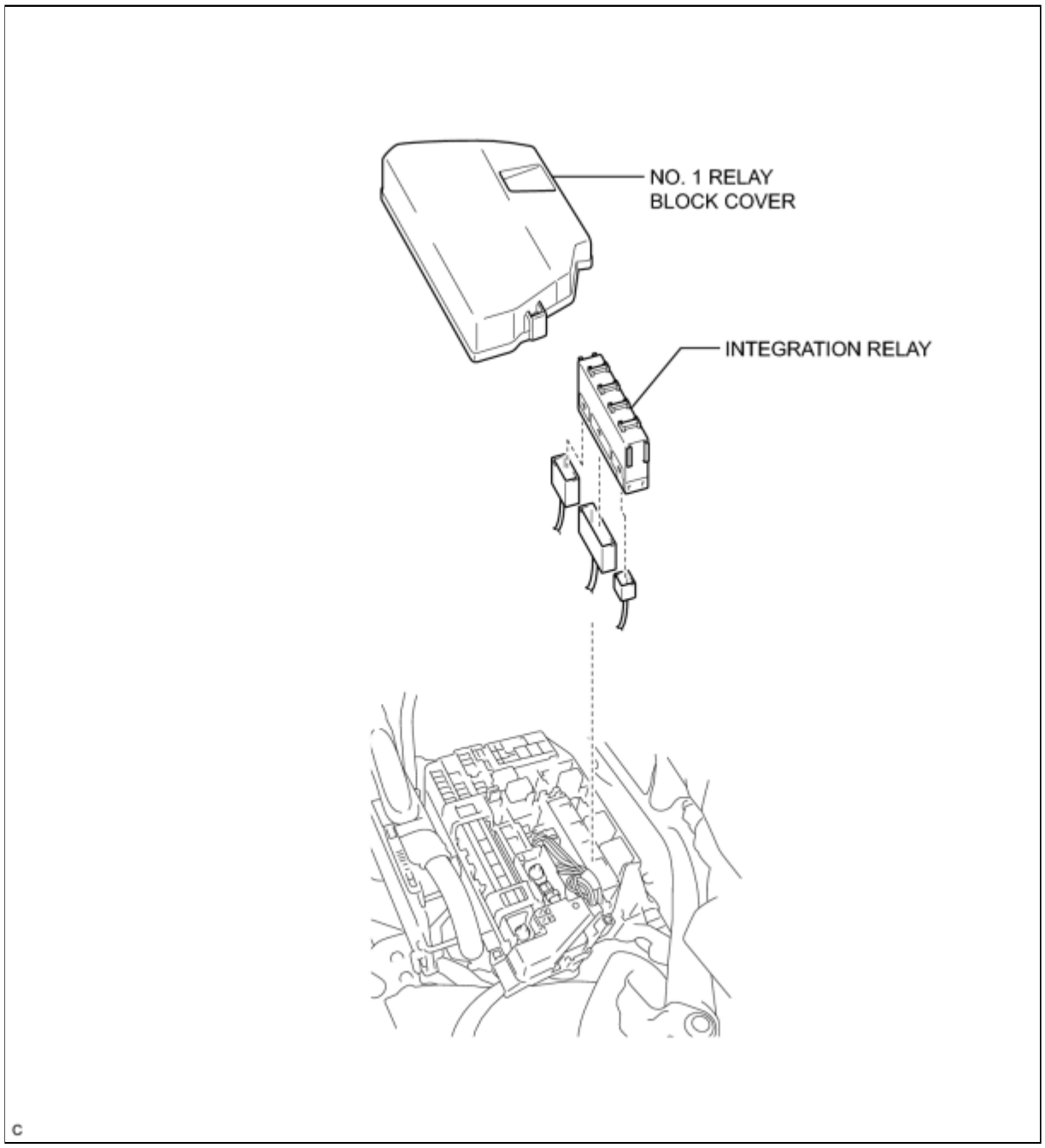

Last Modified: 3-10-2010	6.4 A	**From:** 200901
Model Year: 2010	**Model:** Corolla	**Doc ID:** RM000001CMT02ZX
Title: 2ZR-FE ENGINE CONTROL: INTEGRATION RELAY: REMOVAL (2010 Corolla)		

REMOVAL

1. REMOVE NO. 1 RELAY BLOCK COVER

2. REMOVE INTEGRATION NO.1 RELAY

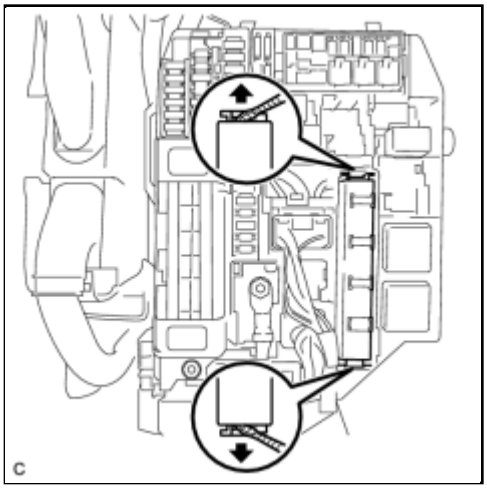

(a) Using a screwdriver with its tip wrapped in protective tape, disengage the 2 claws and disconnect the integration relay.

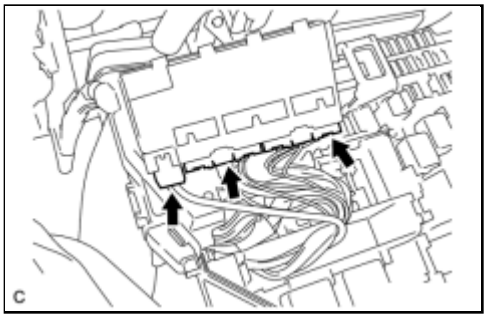

(b) Disconnect the 3 connectors.

Last Modified: 3-10-2010	6.4 G	**From:** 200901
Model Year: 2010	**Model:** Corolla	**Doc ID:** RM000001CMR01GX
Title: 2ZR-FE ENGINE CONTROL: INTEGRATION RELAY: INSPECTION (2010 Corolla)		

INSPECTION

1. INSPECT INTEGRATION NO.1 RELAY

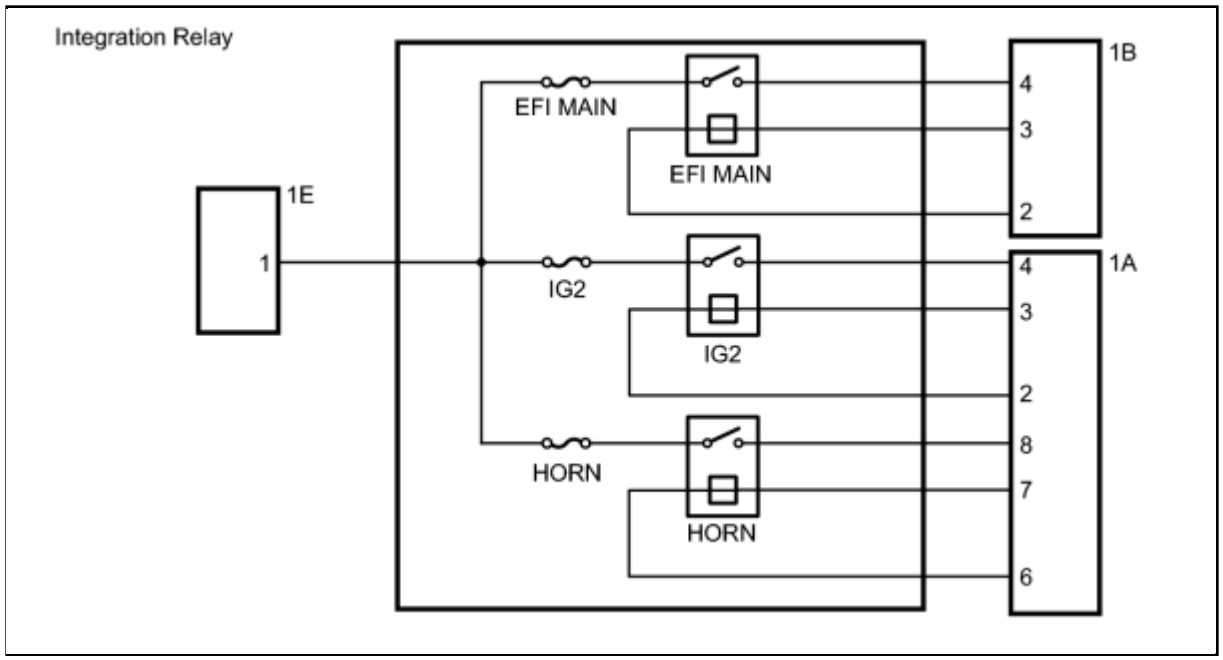

(a) EFI MAIN RELAY:

(1) Measure the resistance according to the value(s) in the table below.

Standard Resistance:

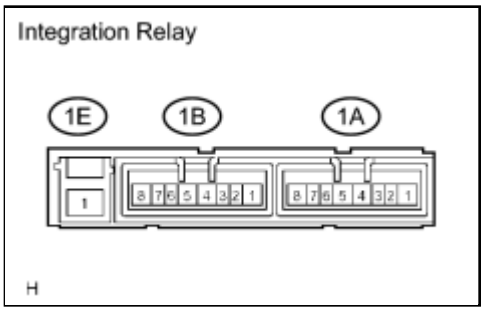

TESTER CONNECTION	CONDITION	SPECIFIED CONDITION
Integration relay (1E-1) - Integration relay (1B-4)	Battery voltage is not applied between terminals 1B-3 and 1B-2	10 kΩ or higher
Integration relay (1E-1) - Integration relay (1B-4)	Battery voltage is applied between terminals 1B-3 and 1B-2	Below 1 Ω

If the resistance is not as specified, replace the integration relay.

(b) IG2 RELAY:

(1) Measure the resistance according to the value(s) in the table below.

Standard Resistance:

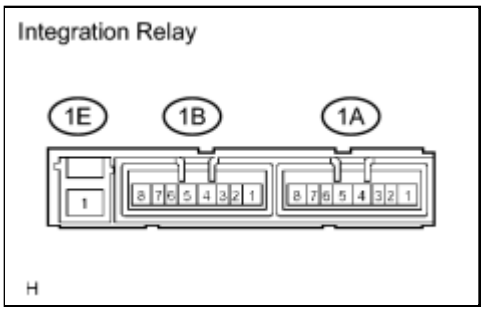

TESTER CONNECTION	CONDITION	SPECIFIED CONDITION
Integration relay (1E-1) - Integration relay (1A-4)	Battery voltage is not applied between terminals 1A-2 and 1A-3	10 kΩ or higher
Integration relay (1E-1) - Integration relay (1A-4)	Battery voltage is applied between terminals 1A-2 and 1A-3	Below 1 Ω

If the resistance is not as specified, replace the integration relay.

(c) HORN RELAY:

(1) Measure the resistance according to the value(s) in the table below.

Standard Resistance:

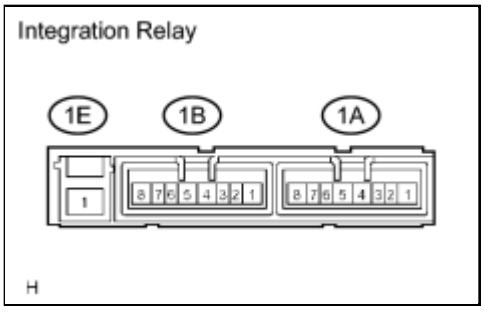

TESTER CONNECTION	CONDITION	SPECIFIED CONDITION
Integration relay (1E-1) - Integration relay (1A-8)	Battery voltage is not applied between terminals 1A-6 and 1A-7	10 kΩ or higher
Integration relay (1E-1) - Integration relay (1A-8)	Battery voltage is applied between terminals 1A-6 and 1A-7	Below 1 Ω

If the resistance is not as specified, replace the integration relay.

Last Modified: 3-10-2010	6.4 A	**From:** 200901
Model Year: 2010	**Model:** Corolla	**Doc ID:** RM000001CMM01SX
Title: 2ZR-FE ENGINE CONTROL: INTEGRATION RELAY: INSTALLATION (2010 Corolla)		

INSTALLATION

1. INSTALL INTEGRATION NO.1 RELAY

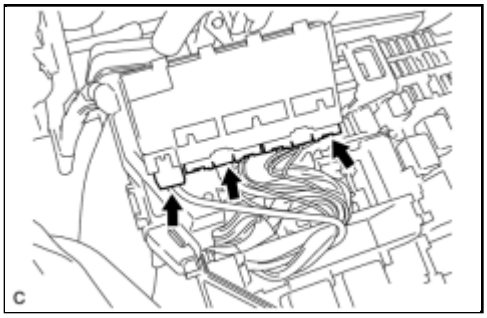

(a) Connect the 3 connectors.

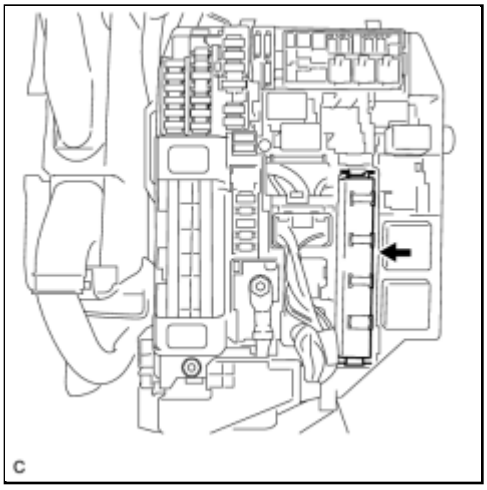

(b) Attach the integration relay to the engine room relay block.

2. INSTALL NO. 1 RELAY BLOCK COVER

Last Modified: 3-10-2010	6.4 K	**From:** 200901
Model Year: 2010	**Model:** Corolla	**Doc ID:** RM0000017UH013X
Title: 2AZ-FE ENGINE CONTROL: KNOCK SENSOR: COMPONENTS (2010 Corolla)		

COMPONENTS

ILLUSTRATION

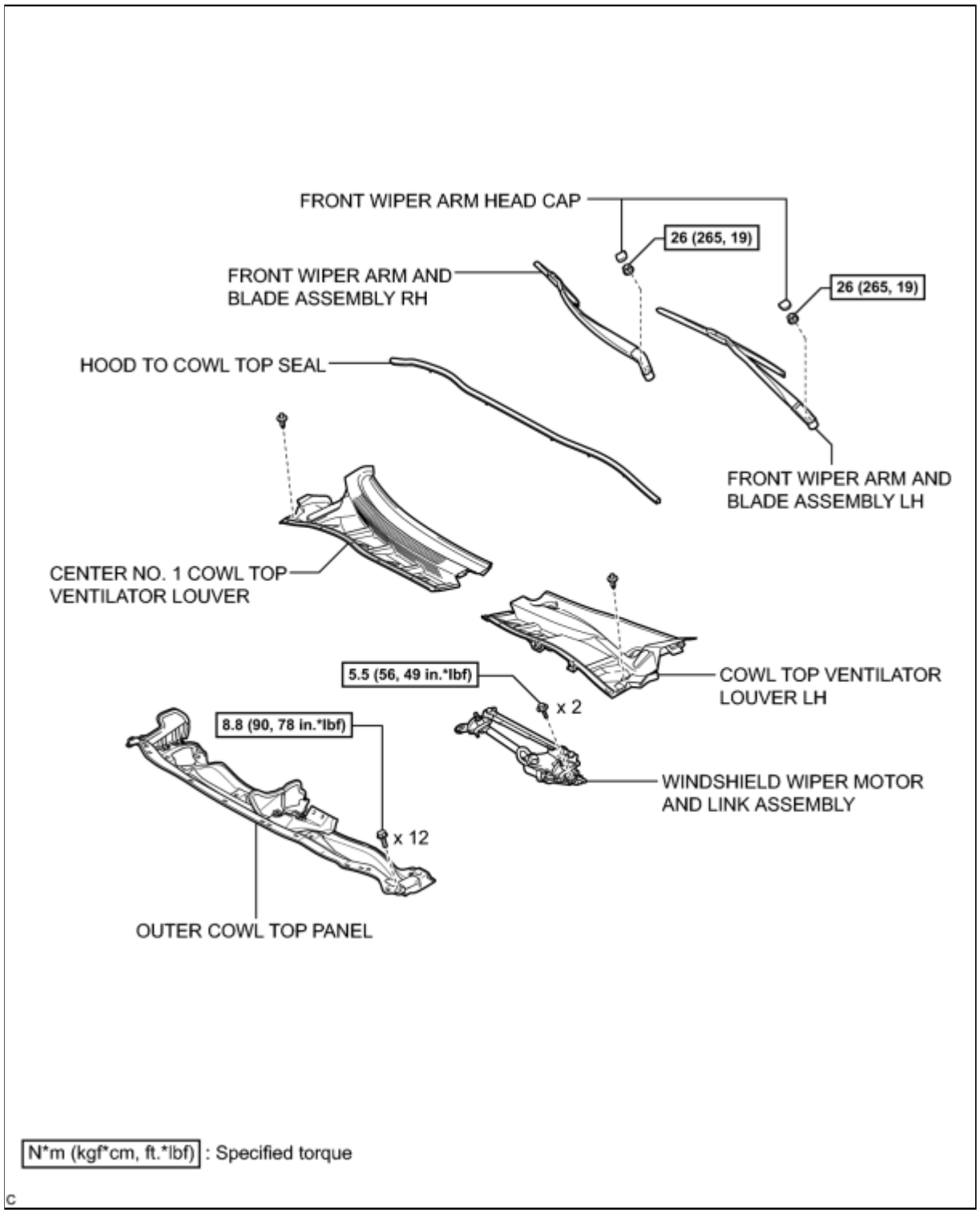

ILLUSTRATION

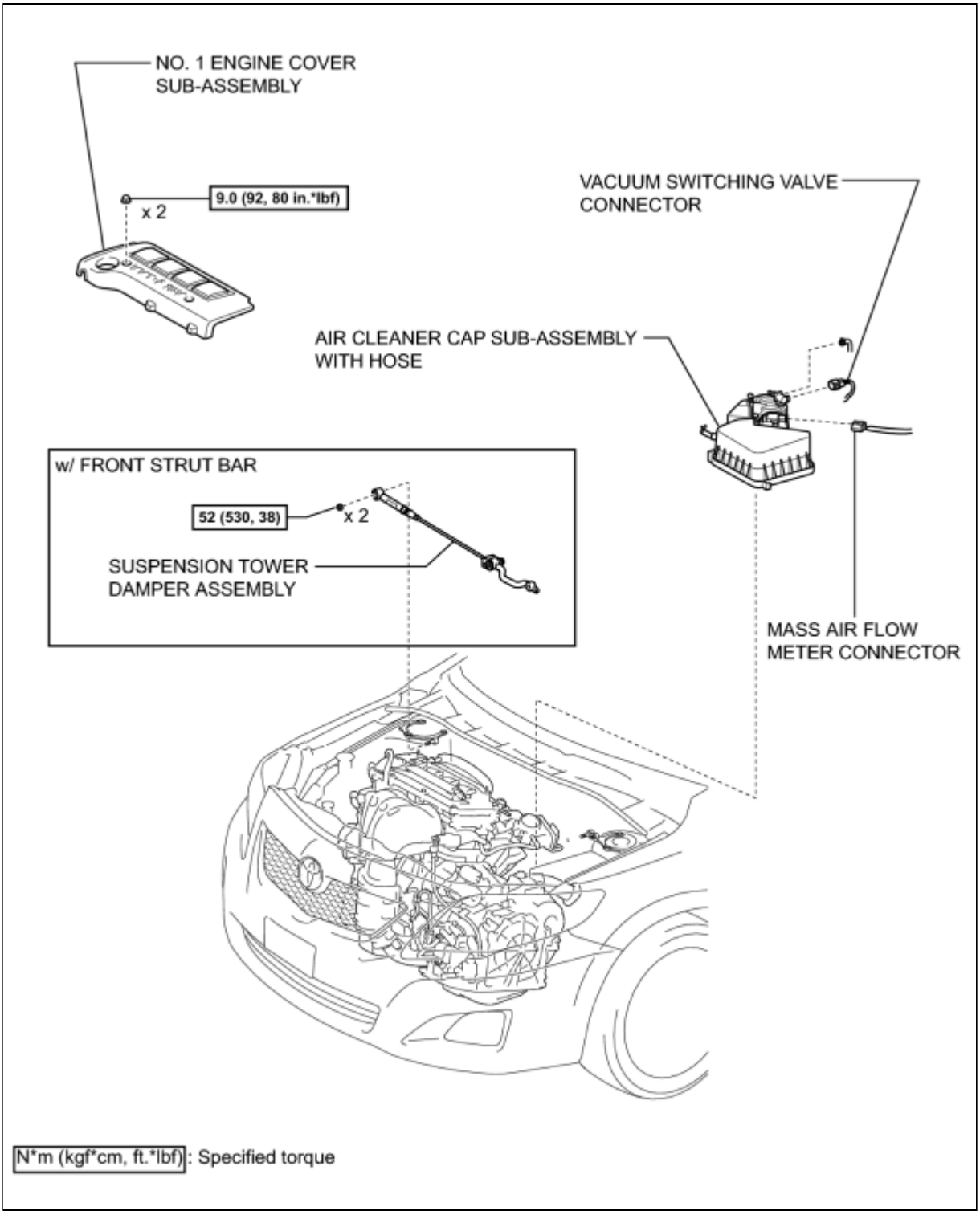

ILLUSTRATION

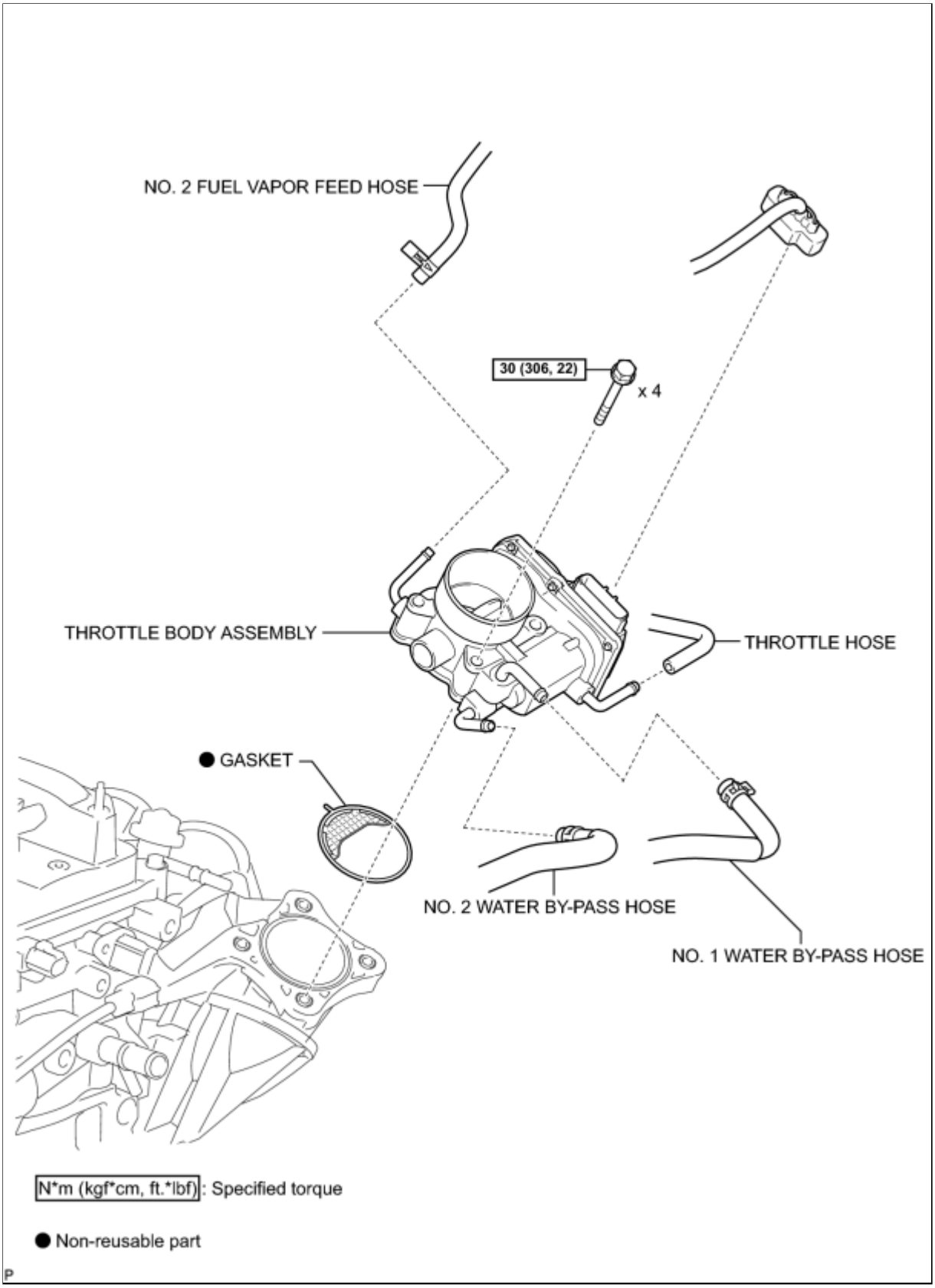

ILLUSTRATION

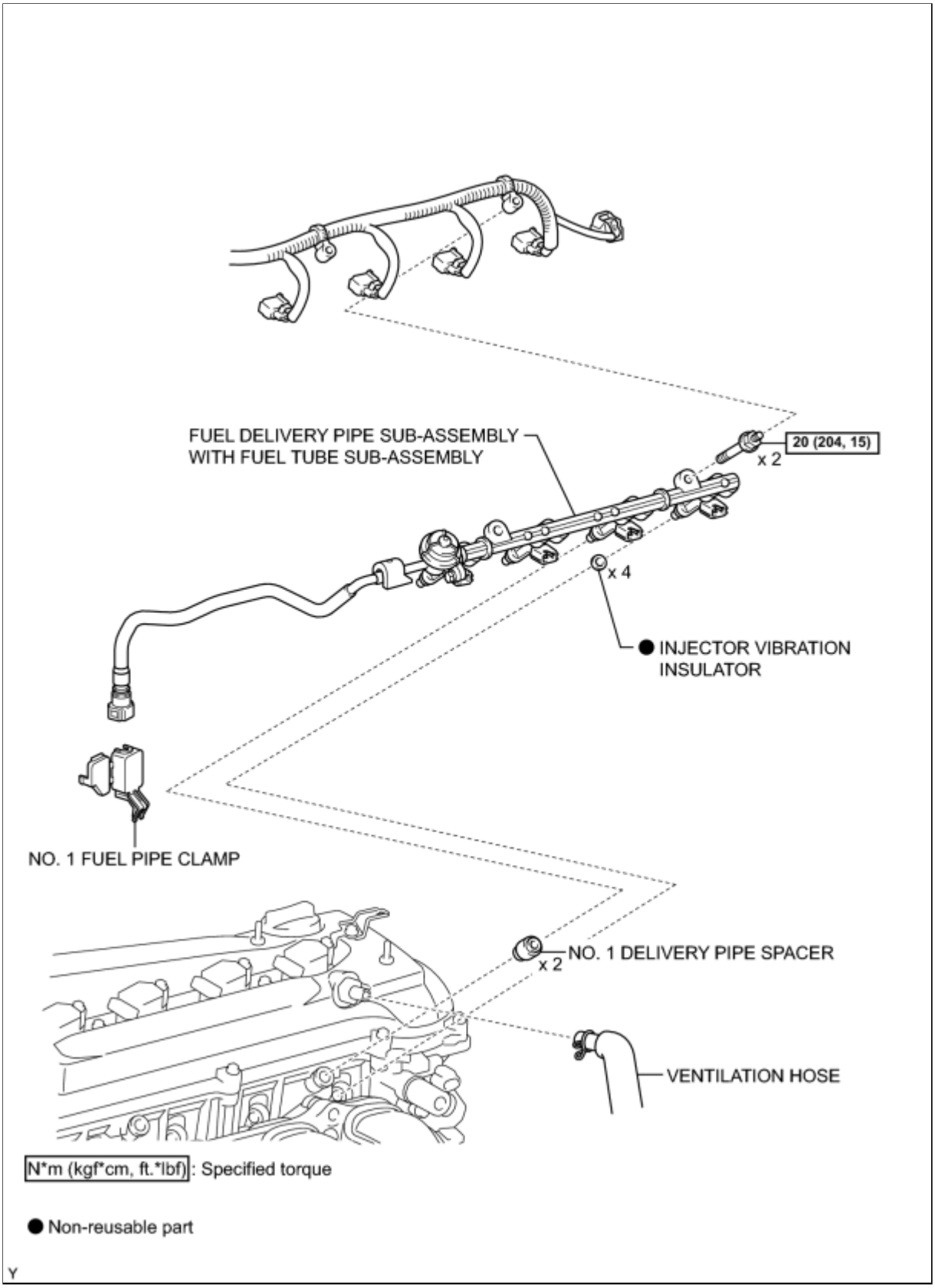

ILLUSTRATION

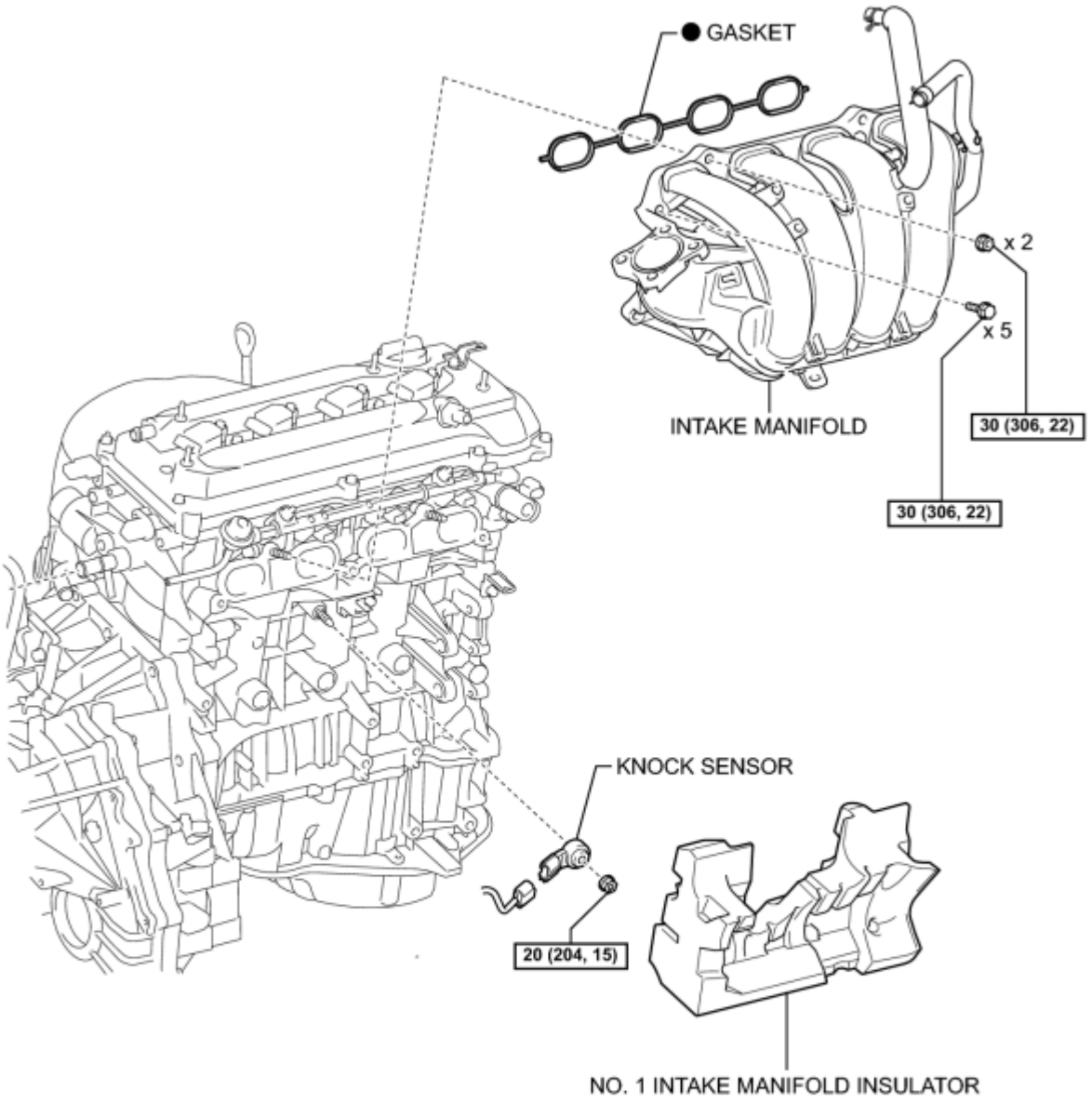

N*m (kgf*cm, ft.*lbf): Specified torque

● Non-reusable part

Last Modified: 3-10-2010	6.4 A	**From:** 200901
Model Year: 2010	**Model:** Corolla	**Doc ID:** RM0000017UI02UX
Title: 2AZ-FE ENGINE CONTROL: KNOCK SENSOR: REMOVAL (2010 Corolla)		

REMOVAL

1. DISCHARGE FUEL SYSTEM PRESSURE

INFO

2. DRAIN COOLANT INFO

3. REMOVE FRONT WIPER ARM HEAD CAP INFO

4. REMOVE FRONT WIPER ARM AND BLADE ASSEMBLY LH INFO

5. REMOVE FRONT WIPER ARM AND BLADE ASSEMBLY RH INFO

6. REMOVE HOOD TO COWL TOP SEAL INFO

7. REMOVE CENTER NO. 1 COWL TOP VENTILATOR LOUVER INFO

8. REMOVE COWL TOP VENTILATOR LOUVER LH INFO

9. REMOVE WINDSHIELD WIPER MOTOR AND LINK ASSEMBLY INFO

10. REMOVE OUTER COWL TOP PANEL INFO

11. REMOVE SUSPENSION TOWER DAMPER ASSEMBLY (w/ Front Strut Bar) INFO

12. REMOVE NO. 1 ENGINE COVER SUB-ASSEMBLY INFO

13. REMOVE AIR CLEANER CAP SUB-ASSEMBLY WITH HOSE INFO

14. REMOVE THROTTLE BODY ASSEMBLY INFO

15. DISCONNECT FUEL TUBE SUB-ASSEMBLY INFO

16. REMOVE FUEL DELIVERY PIPE SUB-ASSEMBLY WITH FUEL TUBE SUB-ASSEMBLY INFO

17. REMOVE INTAKE MANIFOLD

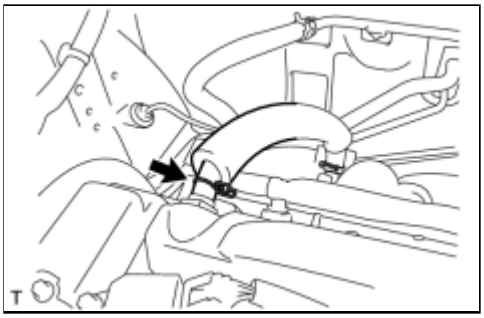

(a) Disconnect the ventilation hose.

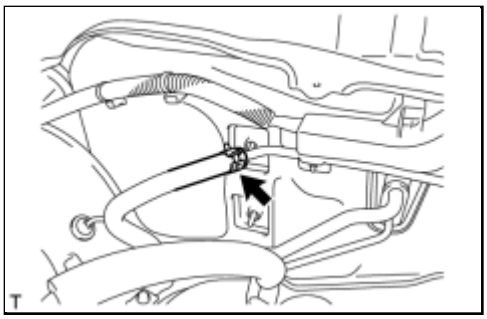

(b) Disconnect the union to check valve hose.

(c) Separate the wire harness clamp from the intake manifold.

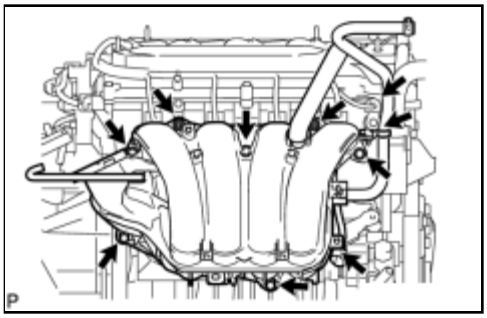

(d) Remove the 5 bolts, 2 nuts and intake manifold.

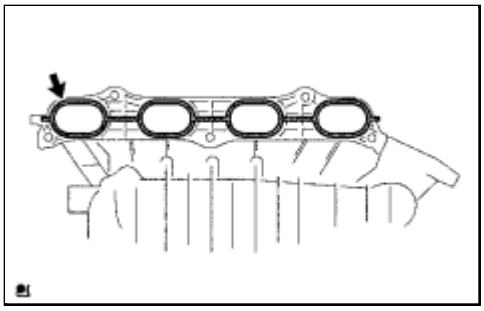

(e) Remove the intake manifold gasket.

18. REMOVE NO. 1 INTAKE MANIFOLD INSULATOR

(a) Remove the No. 1 intake manifold insulator.

19. REMOVE KNOCK SENSOR

(a) Disconnect the sensor connector.

(b) Remove the nut and knock sensor.

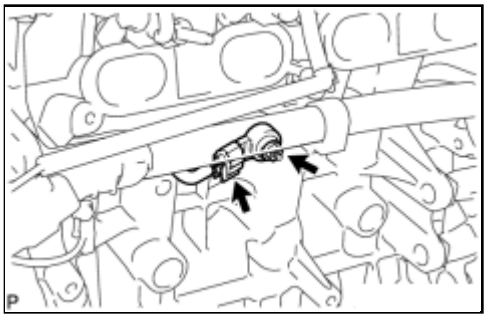
P

Last Modified: 3-10-2010	6.4 G	**From:** 200901
Model Year: 2010	**Model:** Corolla	**Doc ID:** RM0000017UG016X
Title: 2AZ-FE ENGINE CONTROL: KNOCK SENSOR: INSPECTION (2010 Corolla)		

INSPECTION

1. INSPECT KNOCK SENSOR

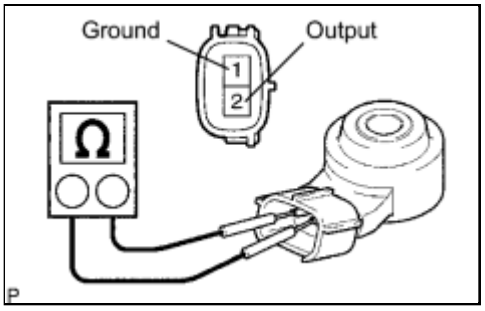

(a) Measure the resistance.

Standard Resistance:

TESTER CONNECTION	CONDITION	SPECIFIED CONDITION
1 - 2	20°C (68°F)	120 to 280 kΩ

If the result is not as specified, replace the knock sensor.

Last Modified: 3-10-2010	6.4 A	**From:** 200901
Model Year: 2010	**Model:** Corolla	**Doc ID:** RM0000017UF02SX
Title: 2AZ-FE ENGINE CONTROL: KNOCK SENSOR: INSTALLATION (2010 Corolla)		

INSTALLATION

1. INSTALL KNOCK SENSOR

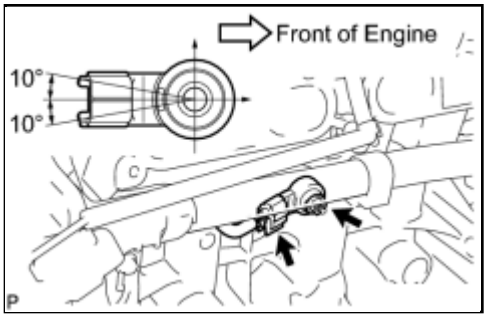

(a) Install the knock sensor with the nut.

Torque: 20 N·m (204 kgf·cm, 15ft·lbf)

(b) Connect the sensor connector.

2. INSTALL NO. 1 INTAKE MANIFOLD INSULATOR

(a) Install the No. 1 intake manifold insulator.

3. INSTALL INTAKE MANIFOLD

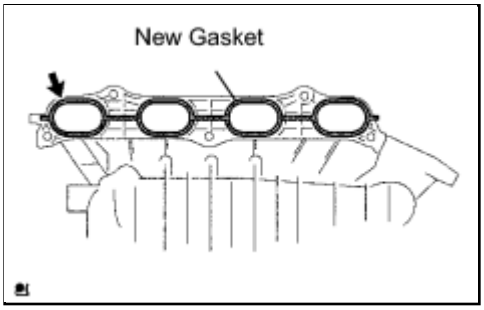

(a) Install a new gasket to the intake manifold.

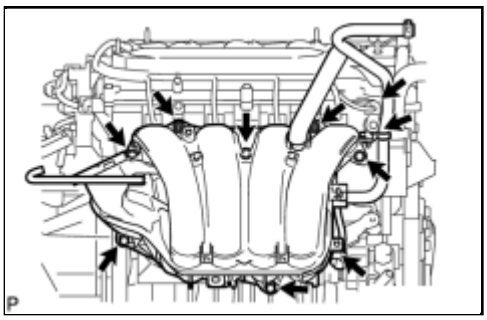

(b) Install the intake manifold with the 5 bolts and 2 nuts.

Torque: 30 N·m (306 kgf·cm, 22ft·lbf)

(c) Install the wire harness clamp onto the intake manifold.

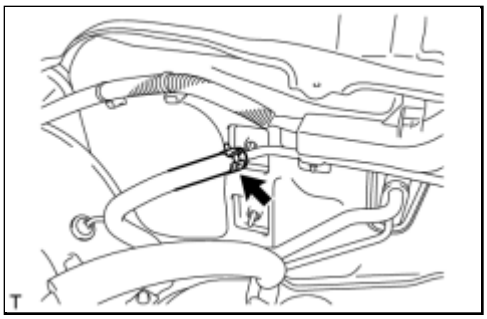

(d) Connect the union to check valve hose.

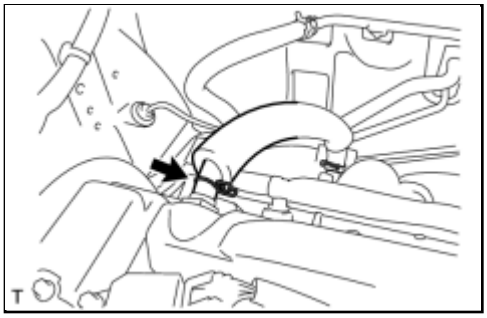

(e) Connect the ventilation hose.

4. INSTALL FUEL DELIVERY PIPE SUB-ASSEMBLY WITH FUEL TUBE SUB-ASSEMBLY INFO

5. CONNECT FUEL TUBE SUB-ASSEMBLY INFO

6. INSTALL THROTTLE BODY ASSEMBLY INFO

7. INSTALL SUSPENSION TOWER DAMPER ASSEMBLY (w/ Front Strut Bar) INFO

8. INSTALL OUTER COWL TOP PANEL INFO

9. INSTALL WINDSHIELD WIPER MOTOR AND LINK ASSEMBLY INFO

10. INSTALL COWL TOP VENTILATOR LOUVER LH INFO

11. INSTALL CENTER NO. 1 COWL TOP VENTILATOR LOUVER INFO

12. INSTALL HOOD TO COWL TOP SEAL INFO

13. INSTALL FRONT WIPER ARM AND BLADE ASSEMBLY RH INFO

14. INSTALL FRONT WIPER ARM AND BLADE ASSEMBLY LH INFO

15. INSTALL FRONT WIPER ARM HEAD CAP INFO

16. INSTALL AIR CLEANER CAP SUB-ASSEMBLY WITH HOSE INFO

17. ADD ENGINE COOLANT INFO

18. INSPECT FOR COOLANT LEAK INFO

19. INSPECT FOR FUEL LEAK INFO

20. INSTALL NO. 1 ENGINE COVER SUB-ASSEMBLY INFO



Last Modified: 3-10-2010	6.4 K	**From:** 200901
Model Year: 2010	**Model:** Corolla	**Doc ID:** RM0000030MC00PX
Title: 2ZR-FE ENGINE CONTROL: KNOCK SENSOR: COMPONENTS (2010 Corolla)		

COMPONENTS

ILLUSTRATION

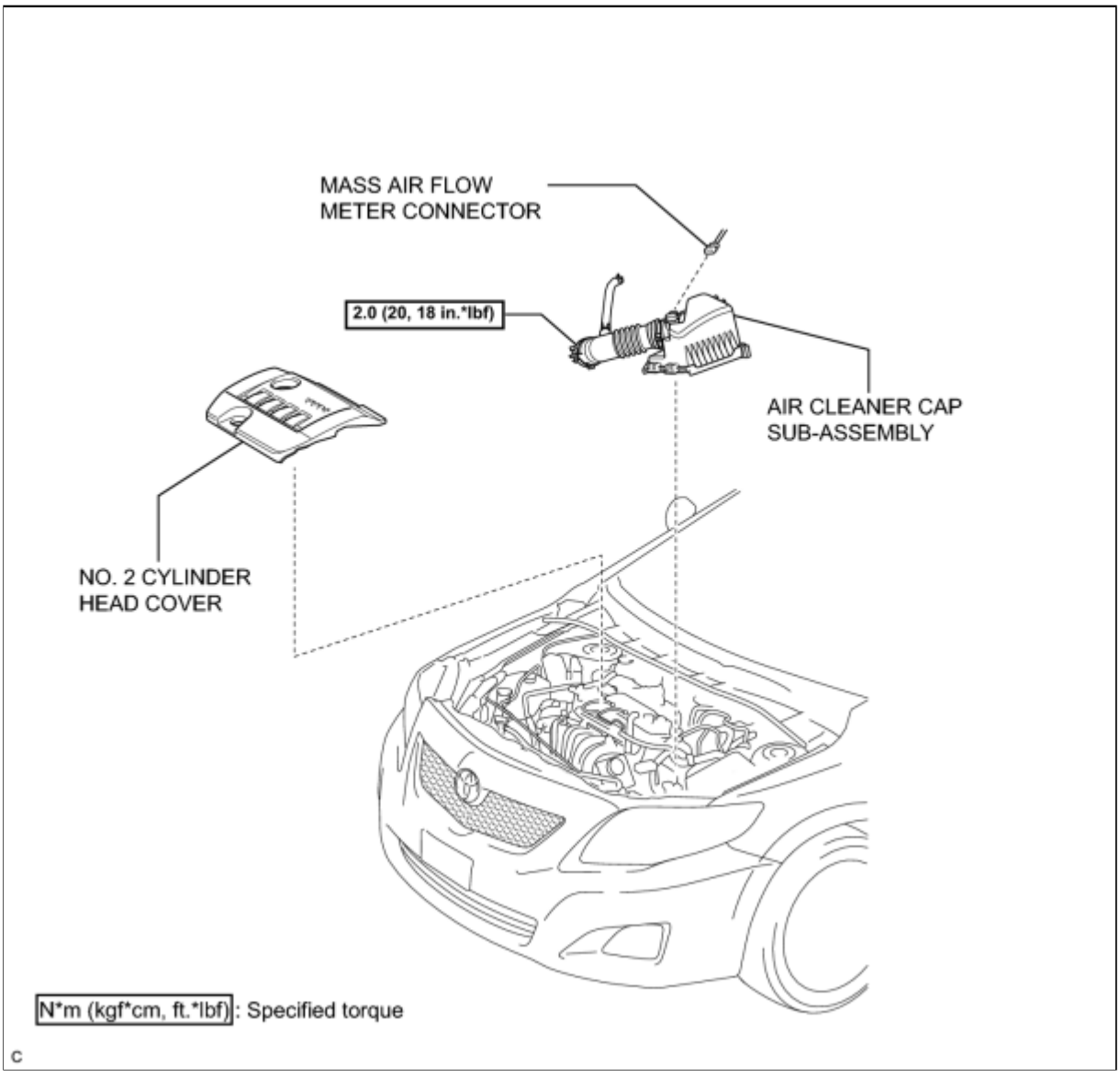

ILLUSTRATION

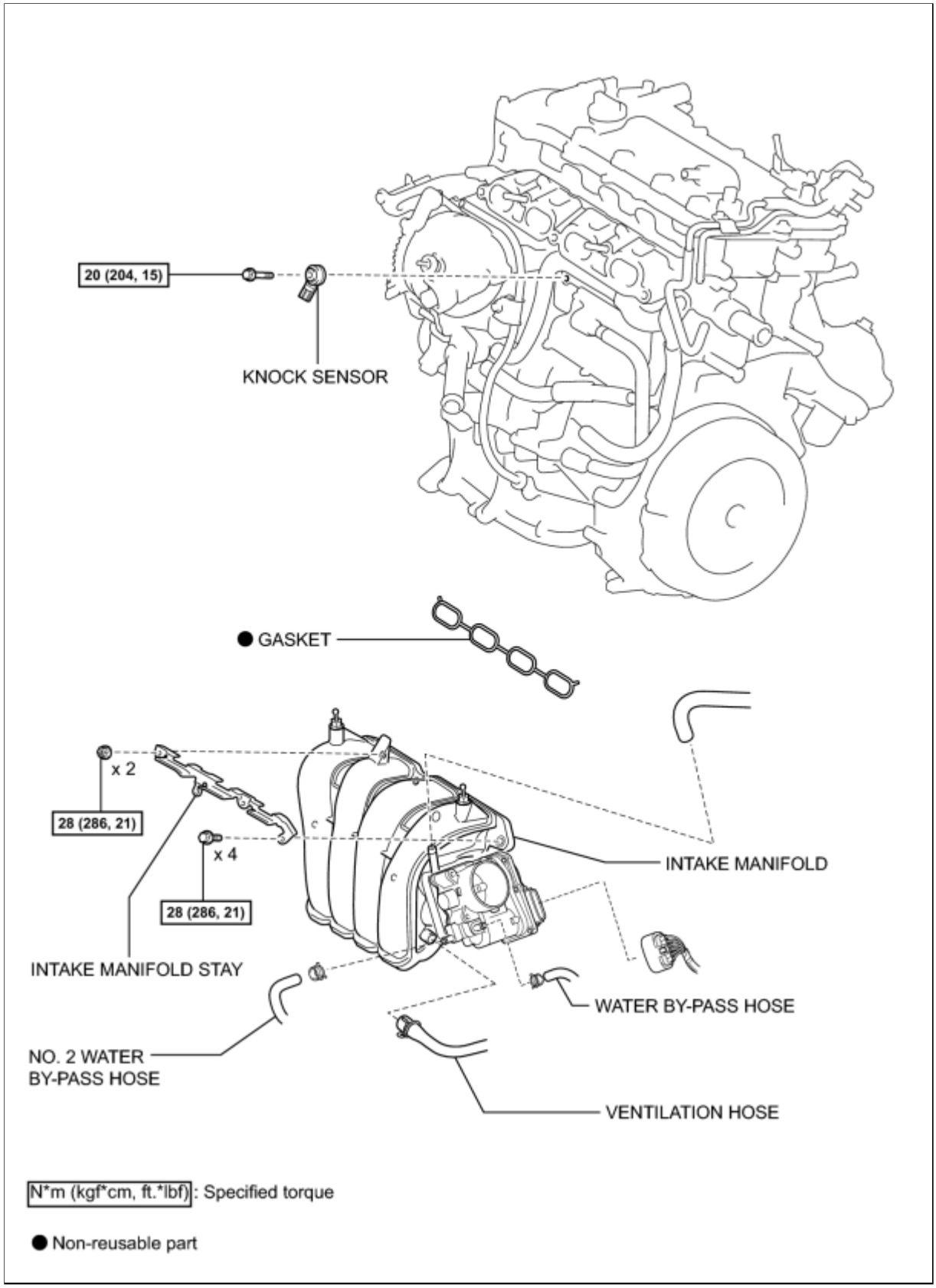

N*m (kgf*cm, ft.*lbf): Specified torque

● Non-reusable part

Last Modified: 3-10-2010	6.4 A	**From:** 200901
Model Year: 2010	**Model:** Corolla	**Doc ID:** RM0000030MD00PX
Title: 2ZR-FE ENGINE CONTROL: KNOCK SENSOR: REMOVAL (2010 Corolla)		

REMOVAL

1. DRAIN ENGINE COOLANT INFO

2. REMOVE NO. 2 CYLINDER HEAD COVER INFO

3. REMOVE AIR CLEANER CAP SUB-ASSEMBLY INFO

4. REMOVE INTAKE MANIFOLD

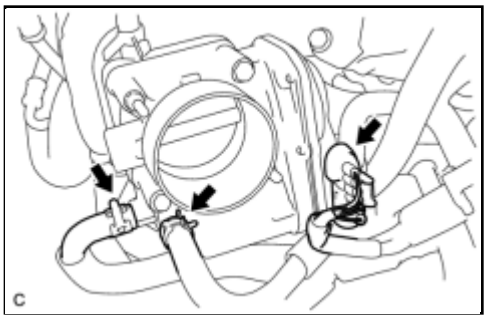

(a) Disconnect the throttle body connector and the 2 water by-pass hoses.

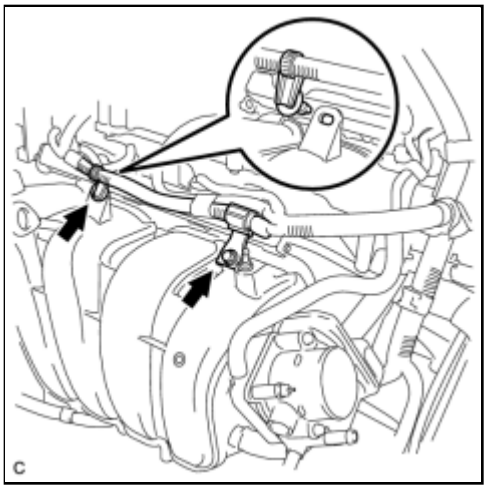

(b) Separate the wire harness clamp and remove the bolt and wire harness bracket.

(c) Separate the 2 hoses.

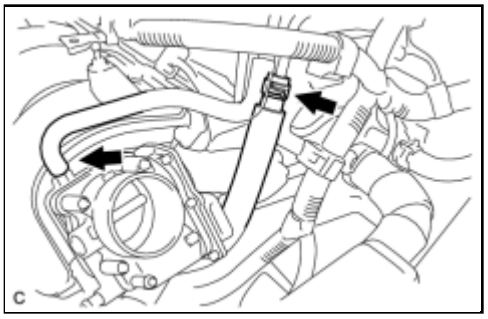

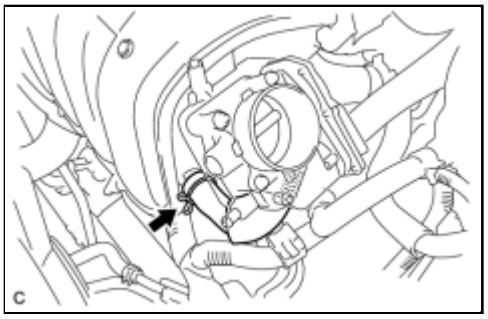

(d) Separate the ventilation hose.

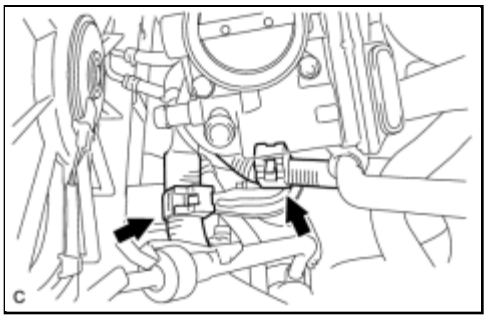

(e) Separate the 2 wire harness clamps.

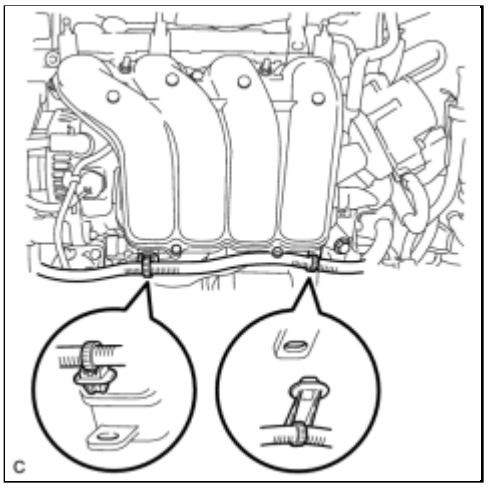

(f) Separate the 2 wire harness clamps.

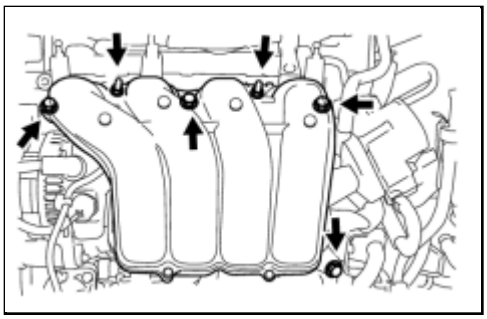

(g) Remove the 4 bolts and 2 nuts and remove the intake manifold stay and intake manifold with throttle body.

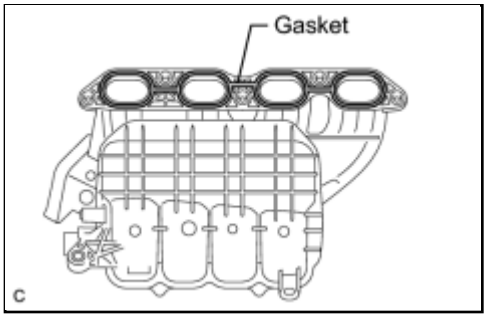

(h) Remove the gasket from the intake manifold.

5. REMOVE KNOCK SENSOR

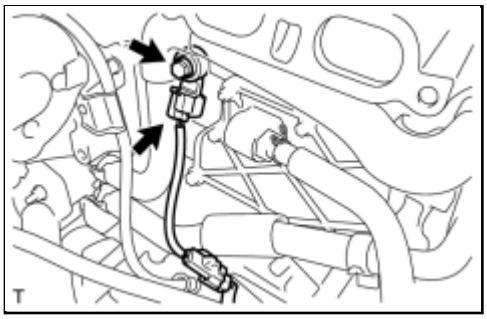

(a) Disconnect the knock sensor connector.

(b) Remove the bolt and remove the knock sensor.

Last Modified: 3-10-2010	6.4 G	**From:** 200901
Model Year: 2010	**Model:** Corolla	**Doc ID:** RM000001CZI014X
Title: 2ZR-FE ENGINE CONTROL: KNOCK SENSOR: INSPECTION (2010 Corolla)		

INSPECTION

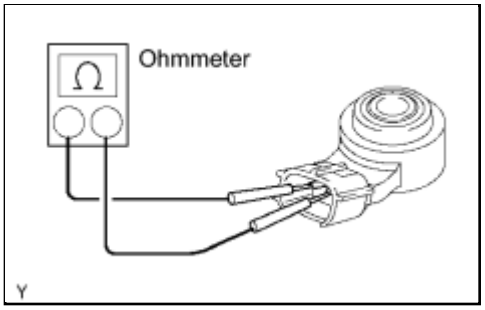

1. INSPECT KNOCK SENSOR

(a) Measure the resistance according to the value(s) in the table below.

Standard Resistance:

TESTER CONNECTION	CONDITION	SPECIFIED CONDITION
1 - 2	20°C (68°F)	120 to 280 kΩ

If the result is not as specified, replace the knock sensor.

Last Modified: 3-10-2010	6.4 A	**From:** 200901
Model Year: 2010	**Model:** Corolla	**Doc ID:** RM0000030MB00PX
Title: 2ZR-FE ENGINE CONTROL: KNOCK SENSOR: INSTALLATION (2010 Corolla)		

INSTALLATION

1. INSTALL KNOCK SENSOR

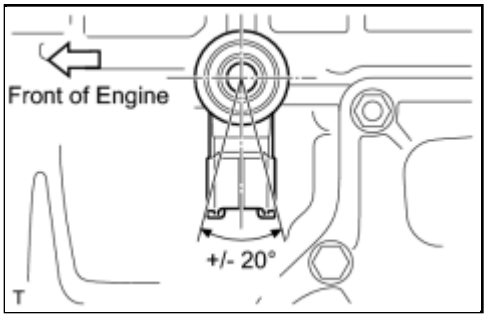

(a) Install the knock sensor with the bolt as shown in the illustration.

Torque: 20 N·m (204 kgf·cm, 15ft·lbf)

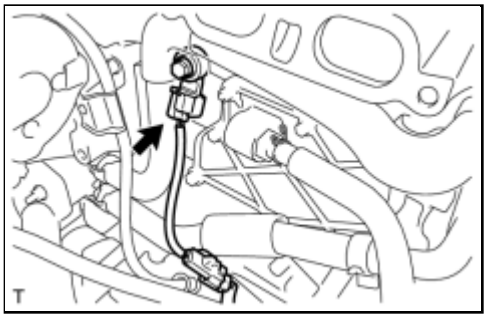

(b) Connect the knock sensor connector.

2. INSTALL INTAKE MANIFOLD

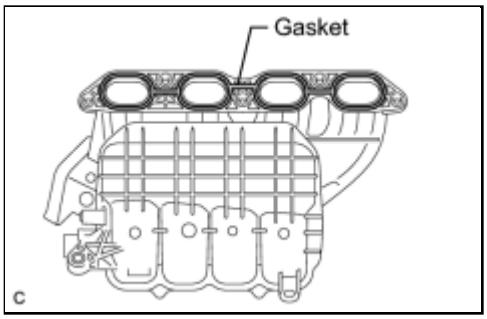

(a) Install a new gasket onto the intake manifold.

(b) Install the intake manifold and intake manifold stay with the 4 bolts and 2 nuts.

Torque: 28 N·m (286 kgf·cm, 21ft·lbf)

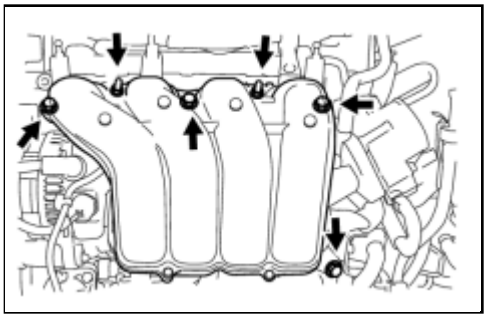

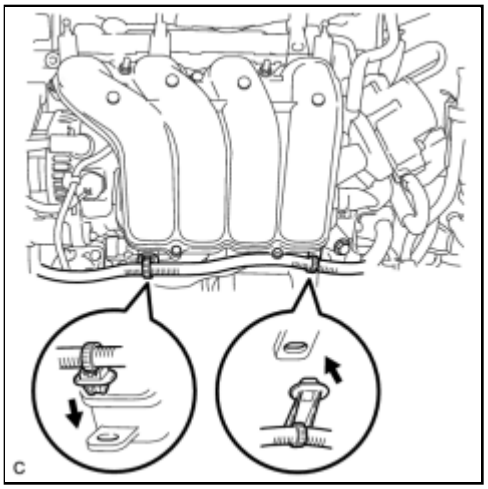

(c) Connect the 2 wire harness clamps.

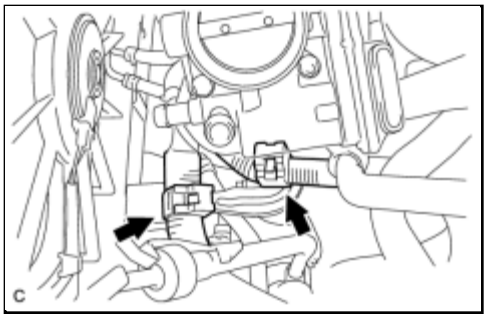

(d) Connect the 2 wire harness clamps.

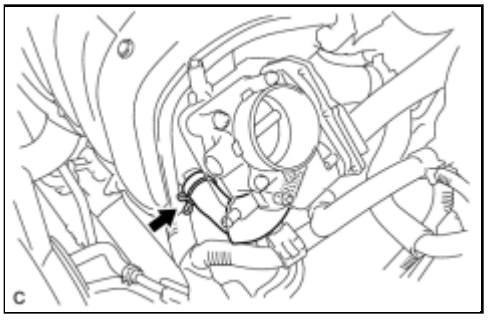

(e) Connect the ventilation hose.

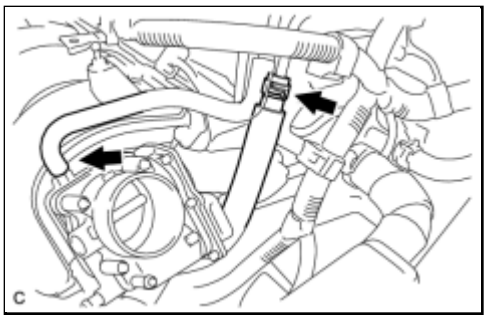

(f) Connect the 2 hoses.

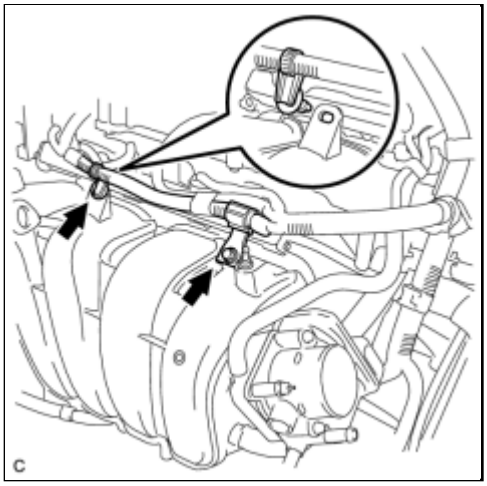

(g) Connect the wire harness clamp and install the wire harness bracket with the bolt.

Torque: 10 N·m (102 kgf·cm, 8ft·lbf)

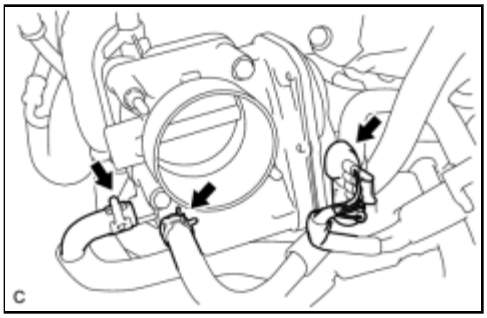

(h) Connect the 2 water by-pass hoses and the throttle body connector.

3. INSTALL AIR CLEANER CAP SUB-ASSEMBLY INFO

4. ADD ENGINE COOLANT INFO

5. INSPECT FOR COOLANT LEAK INFO

6. INSTALL NO. 2 CYLINDER HEAD COVER INFO

Last Modified: 3-10-2010	6.4 K	**From:** 200901
Model Year: 2010	**Model:** Corolla	**Doc ID:** RM0000017TX011X
Title: 2AZ-FE ENGINE CONTROL: MASS AIR FLOW METER: COMPONENTS (2010 Corolla)		

COMPONENTS

ILLUSTRATION

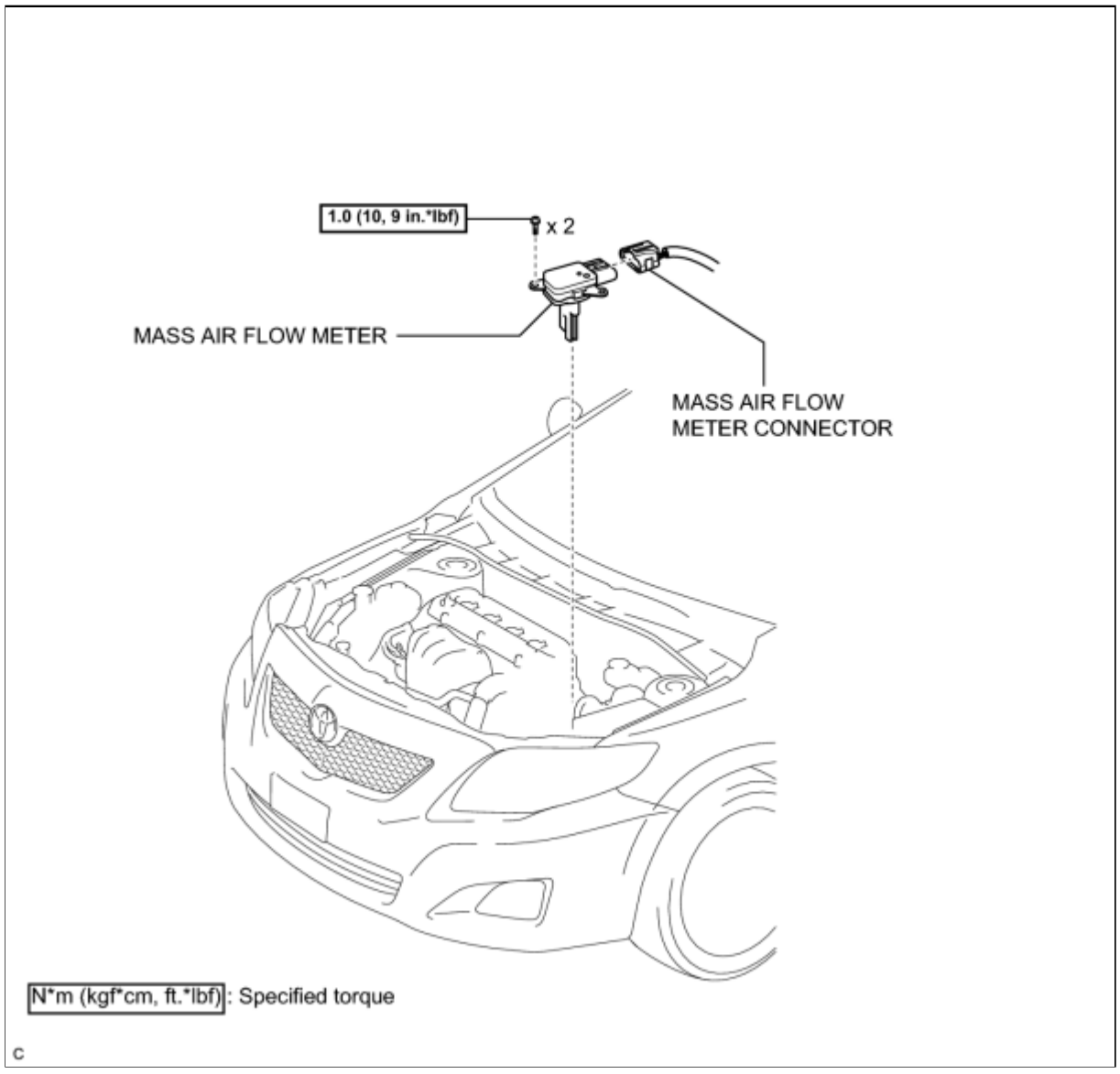

Last Modified: 3-10-2010	6.4 G	**From:** 200901
Model Year: 2010	**Model:** Corolla	**Doc ID:** RM000001RYE019X
Title: 2AZ-FE ENGINE CONTROL: MASS AIR FLOW METER: ON-VEHICLE INSPECTION (2010 Corolla)		

ON-VEHICLE INSPECTION

NOTICE:

- Perform the mass air flow meter inspection in accordance with the procedure below.
- Only replace the mass air flow meter when any foreign matter adheres to the sensor and both MAF values in the Data List (with the engine stopped) are not within the normal operating range.

1. INSPECT MASS AIR FLOW METER

(a) Read the values using the Techstream (MAF).

NOTICE:

- Perform the inspection with the vehicle indoors and on a level surface.
- Perform the inspection of the mass air flow meter while it is installed into the air cleaner case (installed on the vehicle).
- During the test, do not use an exhaust air duct on the exhaust pipe.

(1) Connect the Techstream to the DLC3.

(2) Turn the ignition switch to ON (do not run the engine).

(3) Turn the Techstream on.

(4) Enter the following menus: Powertrain / Engine and ECT / Data List / MAF.

(5) Wait 30 seconds, and read the values on the Techstream.

Standard Condition:

TESTER DISPLAY	CONDITION	STANDARD CONDITION
MAF	• Engine not running • 30 seconds after ignition switch is turned to ON	Less than 0.48 g/sec

- If the result is not as specified, replace the mass air flow meter.
- If the result is within the specified range, remove and inspect the mass air flow meter INFO .

Last Modified: 3-10-2010	6.4 A	**From:** 200901
Model Year: 2010	**Model:** Corolla	**Doc ID:** RM0000017TY011X
Title: 2AZ-FE ENGINE CONTROL: MASS AIR FLOW METER: REMOVAL (2010 Corolla)		

REMOVAL

1. REMOVE MASS AIR FLOW METER

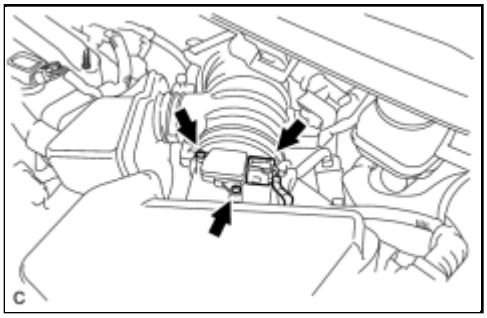

(a) Disconnect the mass air flow meter connector.

(b) Remove the 2 screws and mass air flow meter.

Last Modified: 3-10-2010	6.4 G	**From:** 200901
Model Year: 2010	**Model:** Corolla	**Doc ID:** RM0000033BP006X
Title: 2AZ-FE ENGINE CONTROL: MASS AIR FLOW METER: INSPECTION (2010 Corolla)		

INSPECTION

1. INSPECT MASS AIR FLOW METER

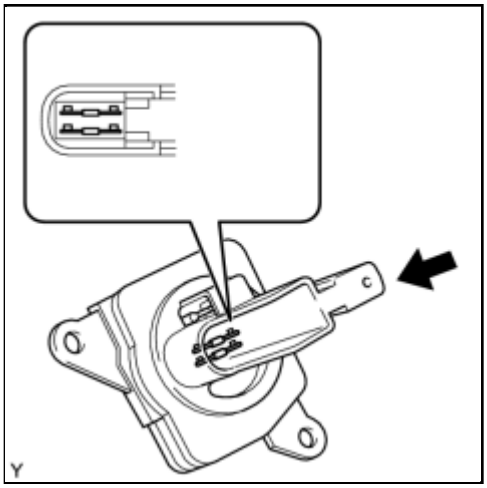

(a) Perform a visual check for any foreign matter on the platinum hot wire (heater) of the mass air flow meter shown in the illustration.

OK:

No foreign matter attached.

If the result is not as specified, replace the mass air flow meter.

(b) Measure the resistance according to the value(s) in the table below.

Standard Resistance:

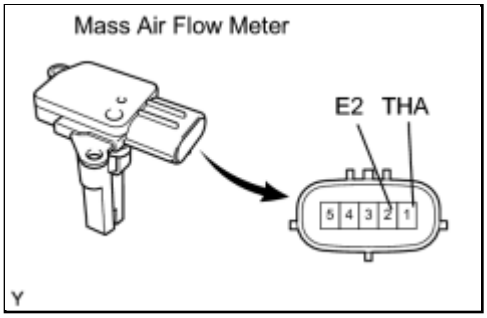

TESTER CONNECTION	CONDITION	SPECIFIED CONDITION
1 (THA) - 2 (E2)	-20°C (-4°F)	13.6 to 18.4 kΩ
1 (THA) - 2 (E2)	20°C (68°F)	2.21 to 2.69 kΩ
1 (THA) - 2 (E2)	60°C (140°F)	0.493 to 0.667 kΩ

If the result is not as specified, replace the mass air flow meter.

Last Modified: 3-10-2010	6.4 A	**From:** 200901
Model Year: 2010	**Model:** Corolla	**Doc ID:** RM0000017TV012X
Title: 2AZ-FE ENGINE CONTROL: MASS AIR FLOW METER: INSTALLATION (2010 Corolla)		

INSTALLATION

1. INSTALL MASS AIR FLOW METER

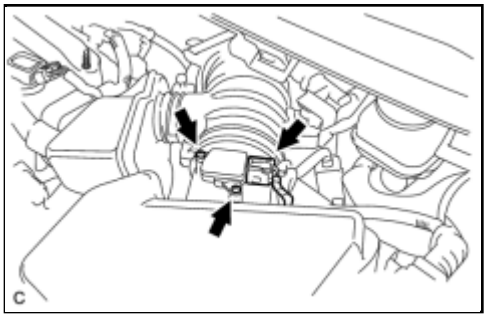

(a) Install the mass air flow meter with the 2 screws.

Torque: 1.0 N·m (10 kgf·cm, 9in·lbf)

(b) Connect the mass air flow meter connector.

Last Modified: 3-10-2010	6.4 K	**From:** 200901
Model Year: 2010	**Model:** Corolla	**Doc ID:** RM0000030K6009X
Title: 2ZR-FE ENGINE CONTROL: MASS AIR FLOW METER: COMPONENTS (2010 Corolla)		

COMPONENTS

ILLUSTRATION

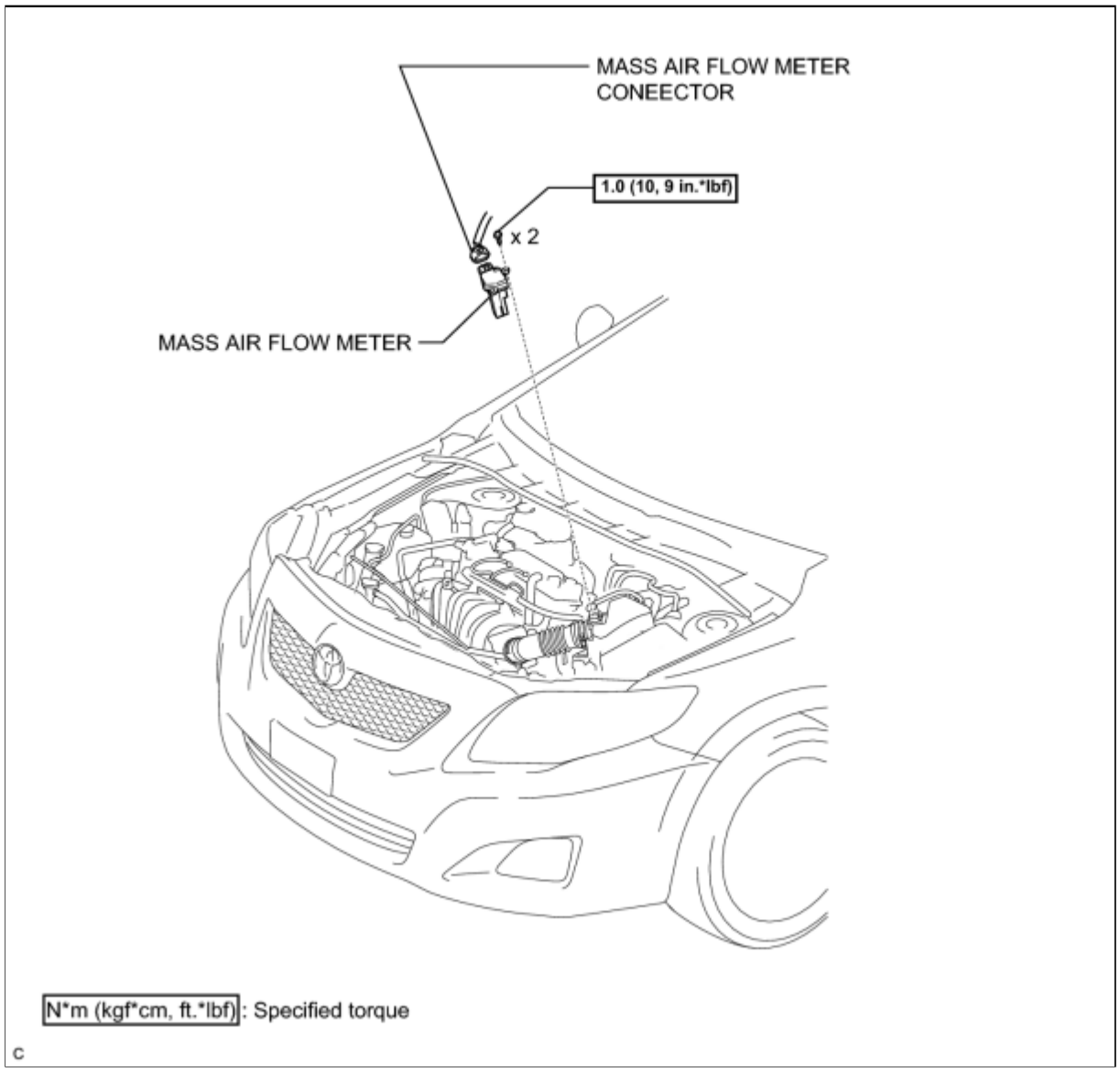

Last Modified: 3-10-2010	6.4 G	**From:** 200901
Model Year: 2010	**Model:** Corolla	**Doc ID:** RM000001D0M015X
Title: 2ZR-FE ENGINE CONTROL: MASS AIR FLOW METER: ON-VEHICLE INSPECTION (2010 Corolla)		

ON-VEHICLE INSPECTION

NOTICE:

- Perform the mass air flow meter inspection in accordance with the following procedure.
- Only replace the mass air flow meter when foreign matter adheres to the sensor and the MAF value in the Data List (with the engine stopped) is not within the normal operating range.

1. INSPECT MASS AIR FLOW METER

(a) Read the values using the Techstream (MAF).

NOTICE:

- Perform the inspection with the vehicle indoors and on a level surface.
- Perform the inspection of the mass air flow meter while it is installed into the air cleaner case (installed on the vehicle).
- During the test, do not use an exhaust air duct on the exhaust pipe.

(1) Connect the Techstream to the DLC3.

(2) Turn the ignition switch to ON (do not run the engine).

(3) Turn the Techstream on.

(4) Enter the following menus: Powertrain / Engine and ECT / Data List / MAF.

(5) Wait 30 seconds, and read the values on the Techstream.

Standard Condition:

TESTER DISPLAY	CONDITION	STANDARD CONDITION
MAF	• Engine not running • 30 seconds after ignition switch is turned to ON	Less than 0.26 g/sec

- If the result is not as specified, replace the mass air flow meter.
- If the result is within the specified range, remove and inspect the mass air flow meter INFO .

Last Modified: 3-10-2010	6.4 A	**From:** 200901
Model Year: 2010	**Model:** Corolla	**Doc ID:** RM0000030K7009X
Title: 2ZR-FE ENGINE CONTROL: MASS AIR FLOW METER: REMOVAL (2010 Corolla)		

REMOVAL

1. REMOVE MASS AIR FLOW METER

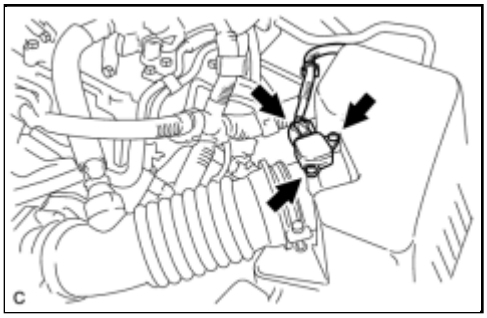

(a) Disconnect the mass air flow meter connector.

(b) Remove the 2 screws and the mass air flow meter.

Last Modified: 3-10-2010	6.4 G	**From:** 200901
Model Year: 2010	**Model:** Corolla	**Doc ID:** RM000002W8700LX
Title: 2ZR-FE ENGINE CONTROL: MASS AIR FLOW METER: INSPECTION (2010 Corolla)		

INSPECTION

1. INSPECT MASS AIR FLOW METER

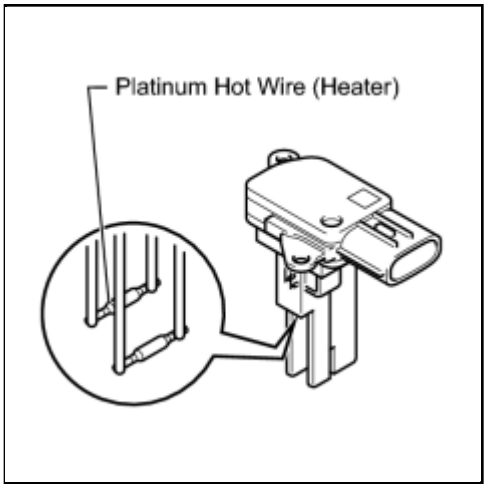

(a) Perform a visual check for any foreign matter on the platinum hot wire (heater) of the mass air flow meter shown in the illustration.

Result:

No foreign matter attached.

If the result is not as specified, replace the mass air flow meter.

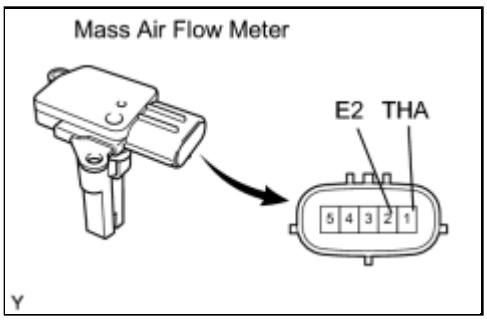

(b) Measure the resistance according to the value(s) in the table below.

Standard Resistance:

TESTER CONNECTION	CONDITION	SPECIFIED CONDITION
1 (THA) - 2 (E2)	-20°C (-4°F)	13.6 to 18.4 kΩ
	20°C (68°F)	2.21 to 2.69 kΩ
	60°C (140°F)	0.49 to 0.67 kΩ

Last Modified: 3-10-2010	6.4 A	**From:** 200901
Model Year: 2010	**Model:** Corolla	**Doc ID:** RM0000030K4009X
Title: 2ZR-FE ENGINE CONTROL: MASS AIR FLOW METER: INSTALLATION (2010 Corolla)		

INSTALLATION

1. INSTALL MASS AIR FLOW METER

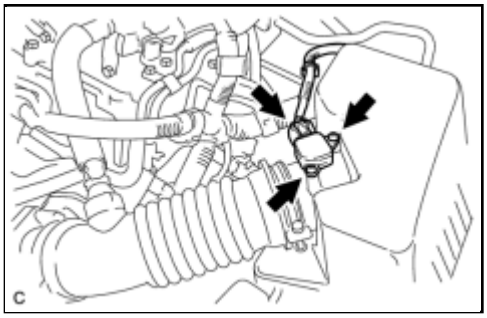

(a) Install the mass air flow meter with the 2 screws.

Torque: 1.0 N·m (10 kgf·cm, 9in·lbf)

NOTICE:

Make sure that the O-ring is not cracked or does not jump out of position during installation.

(b) Connect the mass air flow meter connector.

Last Modified: 3-10-2010	6.4 G	**From:** 200901
Model Year: 2010	**Model:** Corolla	**Doc ID:** RM000003D38003X
Title: 2AZ-FE ENGINE CONTROL: RELAY: ON-VEHICLE INSPECTION (2010 Corolla)		

ON-VEHICLE INSPECTION

1. INSPECT CIRCUIT OPENING RELAY

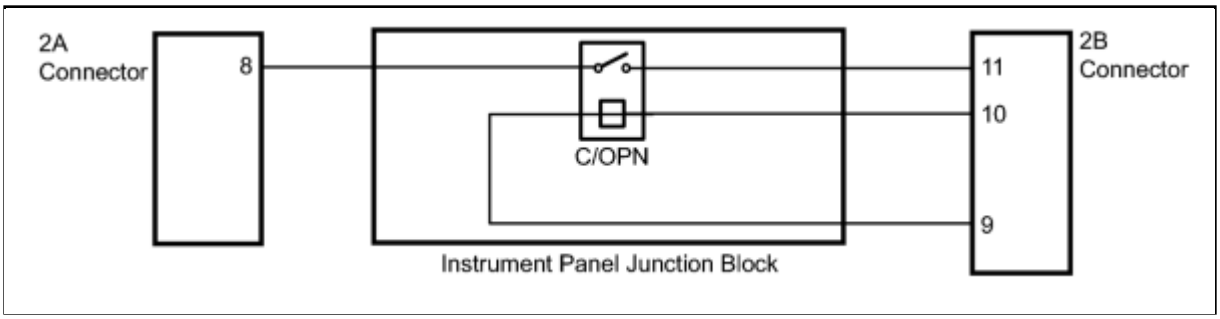

(a) Measure the resistance according to the value(s) in the table below.

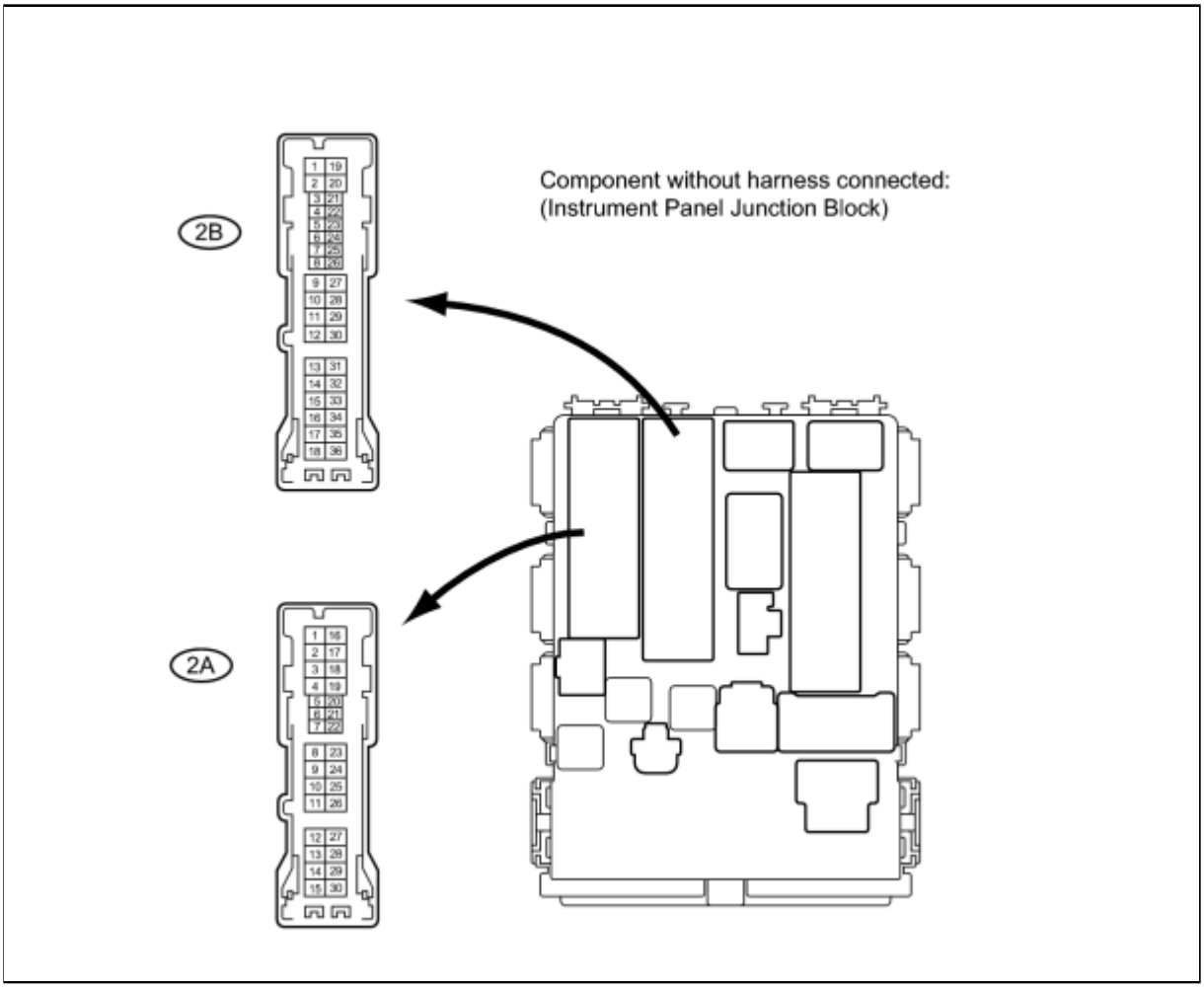

Standard Resistance:

TESTER CONNECTION	CONDITION	SPECIFIED CONDITION
2A-8 - 2B-11	Battery voltage is not applied between terminals 2B-10 and 2B-9	10 kΩ or higher
2A-8 - 2B-11	Battery voltage is applied between terminals 2B-10 and 2B-9	Below 1 Ω

If the resistance is not as specified, replace the instrument panel junction block.

Last Modified: 3-10-2010	6.4 G	**From:** 200901
Model Year: 2010	**Model:** Corolla	**Doc ID:** RM000003D3G003X
Title: 2ZR-FE ENGINE CONTROL: RELAY: ON-VEHICLE INSPECTION (2010 Corolla)		

ON-VEHICLE INSPECTION

1. INSPECT CIRCUIT OPENING RELAY

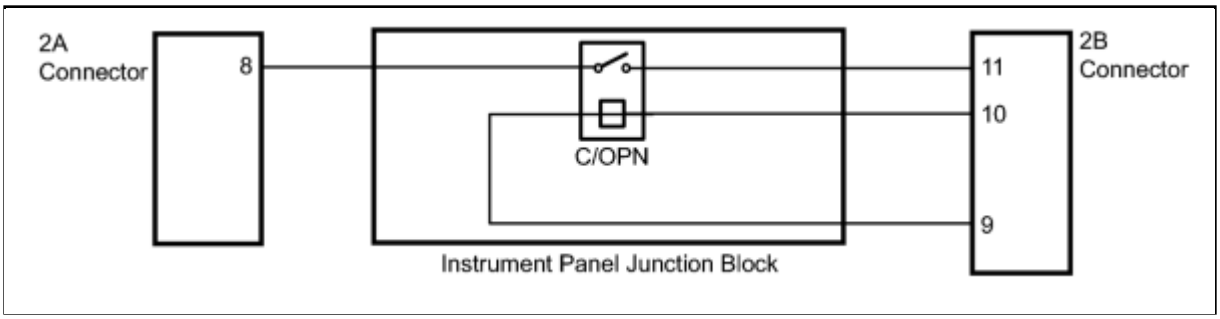

(a) Measure the resistance according to the value(s) in the table below.

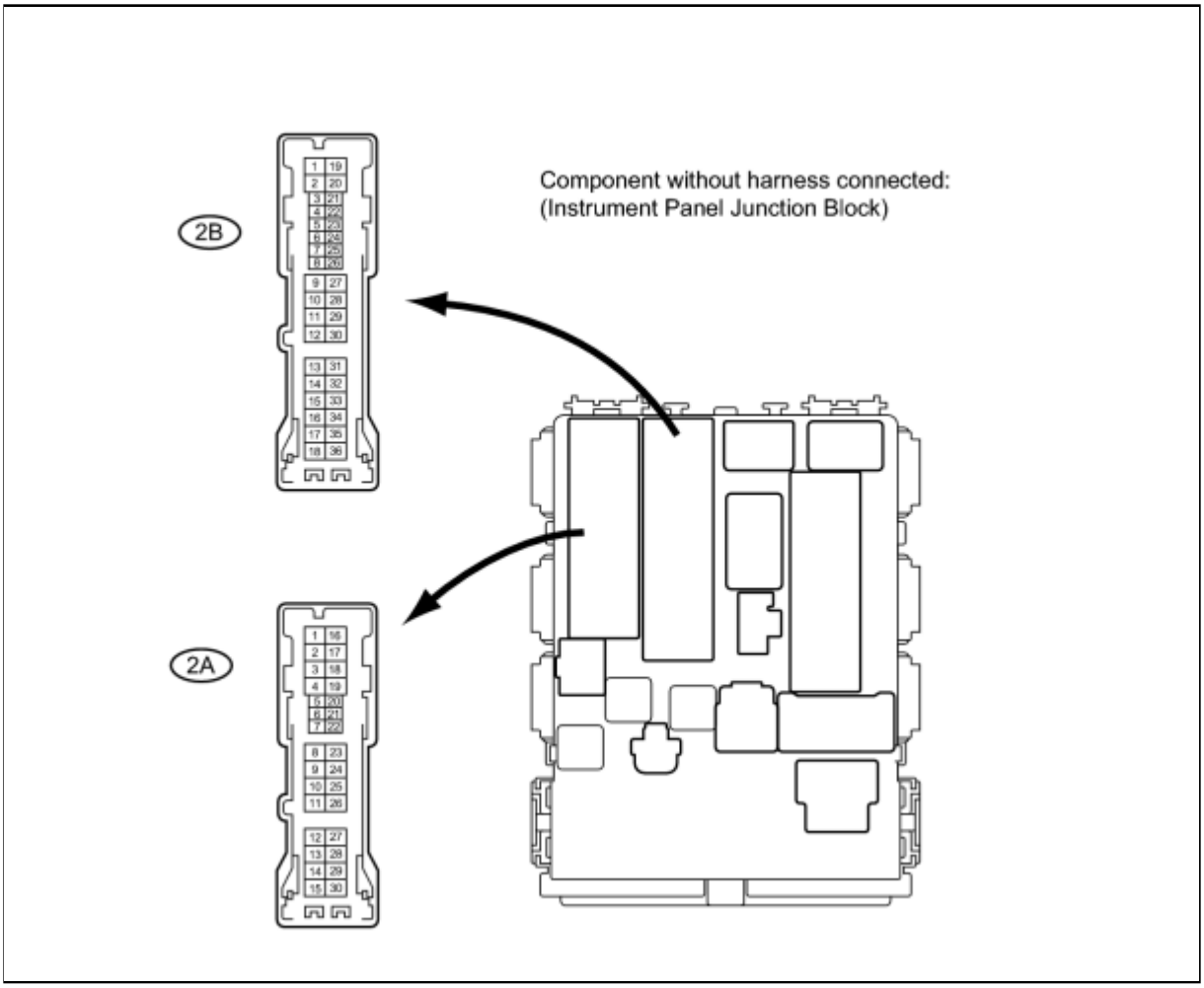

Standard Resistance:

TESTER CONNECTION	CONDITION	SPECIFIED CONDITION
2A-8 - 2B-11	Battery voltage is not applied between terminals 2B-10 and 2B-9	10 kΩ or higher
2A-8 - 2B-11	Battery voltage is applied between terminals 2B-10 and 2B-9	Below 1 Ω

If the resistance is not as specified, replace the instrument panel junction block.

Last Modified: 3-10-2010	6.4 L	**From:** 200901
Model Year: 2010	**Model:** Corolla	**Doc ID:** RM000000PD804IX
Title: 2AZ-FE ENGINE CONTROL: SFI SYSTEM: PRECAUTION (2010 Corolla)		

PRECAUTION

1. INITIALIZATION

NOTICE:

- Perform RESET MEMORY (AT initialization) when replacing the automatic transaxle assembly, engine assembly or ECM INFO .
- Perform REGISTRATION (VIN registration) when replacing the ECM INFO .

HINT:

Reset memory cannot be completed by only disconnecting the battery.

2. EXPRESSION OF IGNITION SWITCH

HINT:

The type of ignition switch used on this model differs according to the specifications of the vehicle. The expressions listed in the table below are used in this section.

EXPRESSION	IGNITION SWITCH (POSITION)	ENGINE SWITCH (CONDITION)
Ignition switch off	LOCK	Off
Ignition switch ON	ON	On (IG)
Ignition switch ACC	ACC	On (ACC)
Engine Start	START	Start

3. FOR USING TECHSTREAM

CAUTION:

Observe the following items for safety reasons:

- Before using the Techstream, read the instruction manual.
- Prevent the Techstream cable from being caught on the pedals, shift lever or steering wheel when driving with the Techstream connected to the vehicle.
- When driving the vehicle for testing purposes using the Techstream, two persons are required. One person drives the vehicle, and the other operates the Techstream.

4. DISCONNECTING AND RECONNECTING NEGATIVE BATTERY CABLE

(a) Before performing work on electronic components, disconnect the cable from the negative (-) battery terminal in order to prevent damage to the electrical system or components.

(b) Before disconnecting and reconnecting the battery cable,

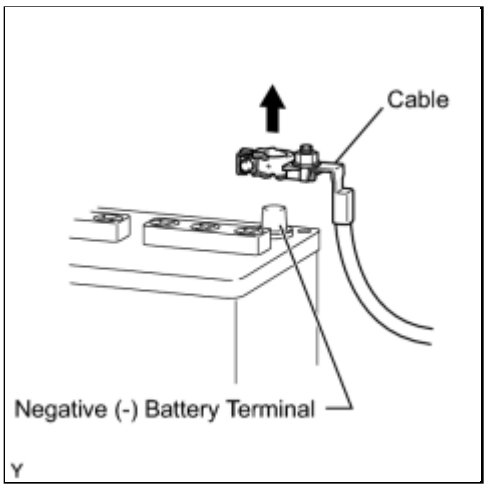

turn the ignition switch off and the headlight switch off. Then loosen the terminal nut completely. Do not damage the cable or terminal.

(c) When the battery cable is disconnected, the clock and radio settings and stored DTCs are cleared. Therefore, before disconnecting the battery cable, make a note of the settings.

Last Modified: 3-10-2010	6.4 D	**From:** 200901
Model Year: 2010	**Model:** Corolla	**Doc ID:** RM000000PDC07UX
Title: 2AZ-FE ENGINE CONTROL: SFI SYSTEM: DEFINITION OF TERMS (2010 Corolla)		

DEFINITION OF TERMS

TERMS	DEFINITION
Monitor Description	Description of what the ECM monitors and how it detects malfunctions (monitoring purpose and its details).
Related DTCs	A group of diagnostic trouble codes that are output by the ECM based on the same malfunction detection logic.
Typical Enabling Condition	Preconditions that allow the ECM to detect malfunctions. With all preconditions satisfied, the ECM sets DTCs when monitored value(s) exceeds malfunction threshold(s).
Sequence of Operation	Order of monitor priority, applied if multiple sensors and components are involved in a single malfunction detection process. Each sensor and component is monitored in turn, when the previous detection operation has completed.
Required Sensor/Components	The sensors and components used by the ECM to detect each malfunction.
Frequency of Operation	The number of times the ECM checks for each malfunction during each driving cycle. "Once per driving cycle" means the ECM only performs checks for that malfunction once during a single driving cycle. "Continuous" means the ECM performs checks for that malfunction whenever enabling conditions are met.
Duration	The minimum time for which the ECM must detect a continuous deviation in monitored value(s) in order to set a DTC. Timing begins when Typical Enabling Conditions met.
Malfunction Thresholds	The value beyond which the ECM determines malfunctions exist and sets DTCs.
MIL Operation	Timing of MIL illumination after a malfunction is detected. "Immediate" means the ECM illuminates the MIL as soon as a malfunction is detected. "2 driving cycle" means the ECM illuminates the MIL if the same malfunction is detected a second time during the next sequential driving cycle.

Last Modified: 3-10-2010	6.4 R	**From:** 200901
Model Year: 2010	**Model:** Corolla	**Doc ID:** RM000000PDA04XX
Title: 2AZ-FE ENGINE CONTROL: SFI SYSTEM: PARTS LOCATION (2010 Corolla)		

PARTS LOCATION

ILLUSTRATION

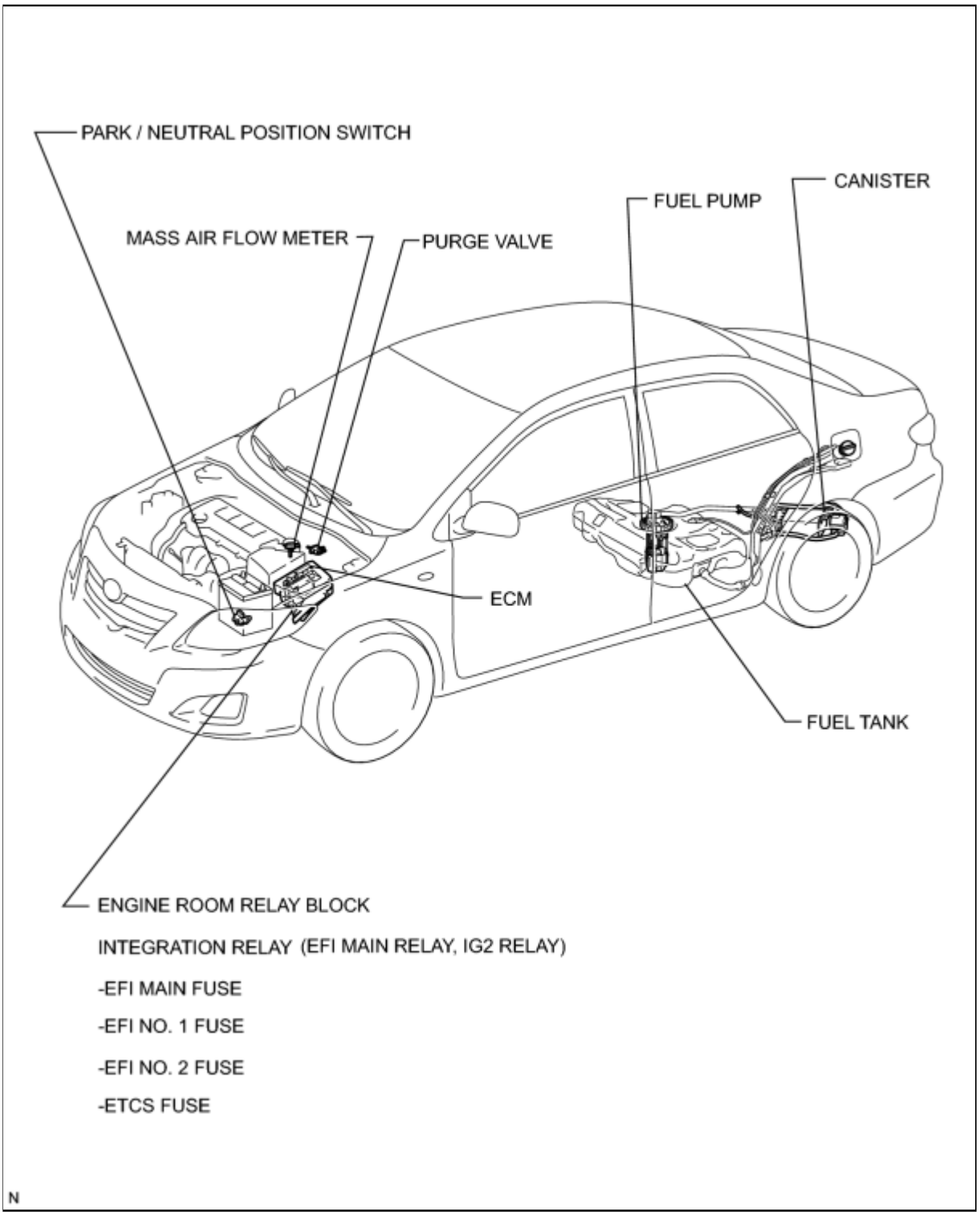

ILLUSTRATION

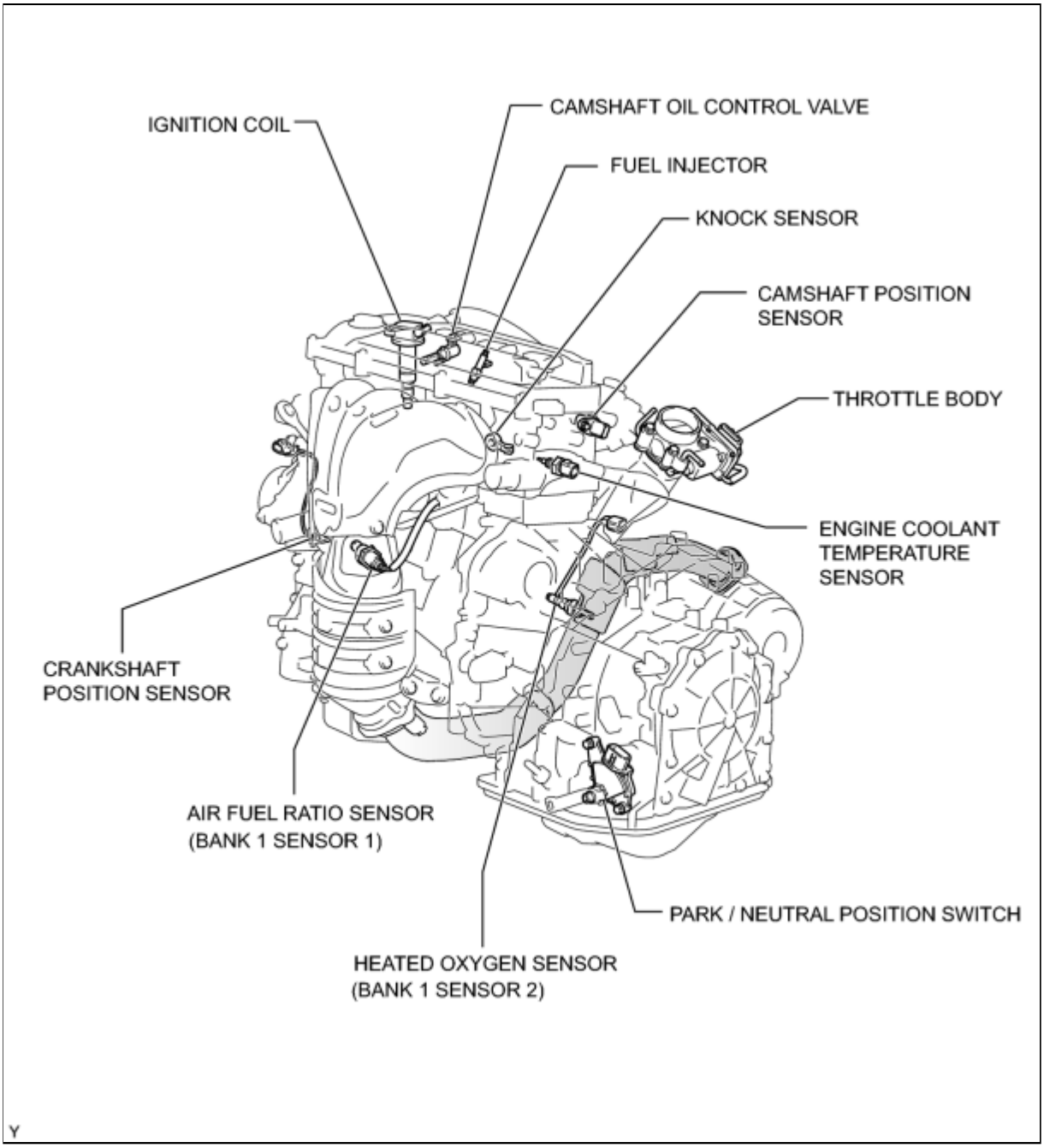

ILLUSTRATION

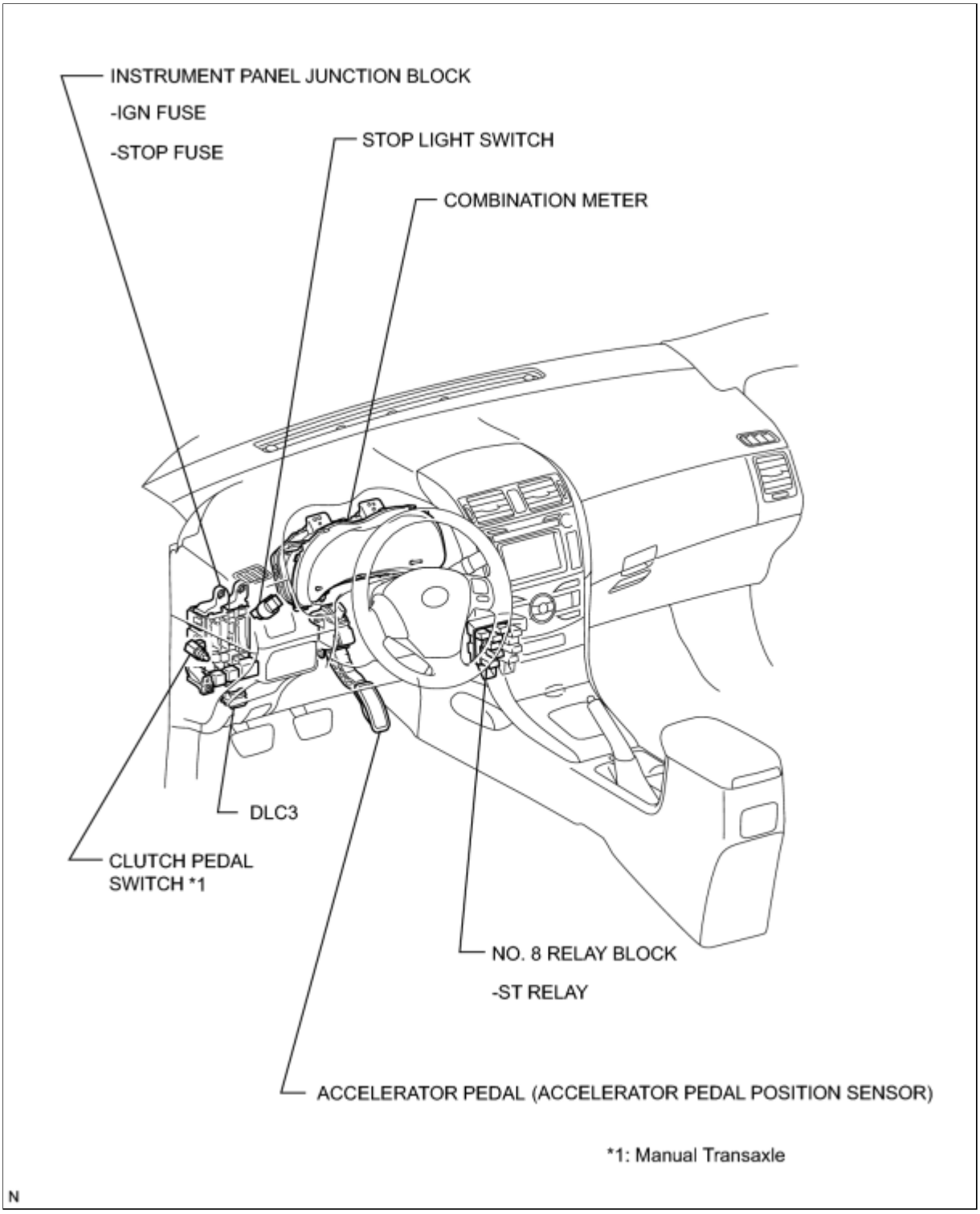
INSTRUMENT PANEL JUNCTION BLOCK
-IGN FUSE
-STOP FUSE
STOP LIGHT SWITCH
COMBINATION METER
DLC3
CLUTCH PEDAL SWITCH *1
NO. 8 RELAY BLOCK
-ST RELAY
ACCELERATOR PEDAL (ACCELERATOR PEDAL POSITION SENSOR)
*1: Manual Transaxle

N

Last Modified: 3-10-2010	6.4 D	**From:** 200901
Model Year: 2010	**Model:** Corolla	**Doc ID:** RM000000PD90BIX
Title: 2AZ-FE ENGINE CONTROL: SFI SYSTEM: HOW TO PROCEED WITH TROUBLESHOOTING (2010 Corolla)		

HOW TO PROCEED WITH TROUBLESHOOTING

HINT:

***: Use the Techstream.**

1.	**VEHICLE BROUGHT TO WORKSHOP**

NEXT

2.	**CUSTOMER PROBLEM ANALYSIS**

NEXT

3.	**CONNECT TECHSTREAM TO DLC3**

HINT:

If the display indicates a communication fault with the Techstream, inspect the DLC3.

NEXT

4.	**CHECK DTC AND FREEZE FRAME DATA***

HINT:

Record or print DTCs and freeze frame data, if necessary.

NEXT

5.	**CLEAR DTC AND FREEZE FRAME DATA***

NEXT

6.	**CONDUCT VISUAL INSPECTION**

NEXT

7.	**SET CHECK MODE DIAGNOSIS***

NEXT

8.	**CONFIRM PROBLEM SYMPTOMS**

HINT:

If the engine does not start, perform step 10 and 12 first.

Result:

RESULT	PROCEED TO

RESULT	PROCEED TO
Malfunction does not occur	A
Malfunction occurs	B

B ▶ **GO TO STEP 10**

A ▼

9.	**SIMULATE SYMPTOMS**

NEXT ▼

10.	**CHECK DTC***

Result:

RESULT	PROCEED TO
Trouble code	A
No code	B

B ▶ **GO TO STEP 12**

A ▼

11.	**REFER TO DTC CHART**

NEXT

12.	CONDUCT BASIC INSPECTION

Result:

RESULT	PROCEED TO
Malfunctioning parts not confirmed	A
Malfunctioning parts confirmed	B

B ▶ **GO TO STEP 17**

A

13.	REFER TO PROBLEM SYMPTOMS TABLE

Result:

RESULT	PROCEED TO
Malfunctioning circuit confirmed	A
Malfunctioning parts confirmed	B

B ▶ **GO TO STEP 17**

A

14.	CHECK ECM POWER SOURCE CIRCUIT

NEXT

15.	**CONDUCT CIRCUIT INSPECTION**

Result:

RESULT	PROCEED TO
Malfunction not confirmed	A
Malfunction confirmed	B

B **GO TO STEP 18**

A

16.	**CHECK FOR INTERMITTENT PROBLEMS**

NEXT

17.	**CONDUCT PARTS INSPECTION**

NEXT

18.	**IDENTIFY PROBLEM**

NEXT

19.	ADJUST AND/OR REPAIR

NEXT

20.	CONDUCT CONFIRMATION TEST

NEXT END

Last Modified: 3-10-2010	6.4 U	**From:** 200901
Model Year: 2010	**Model:** Corolla	**Doc ID:** RM000000PDB05QX
Title: 2AZ-FE ENGINE CONTROL: SFI SYSTEM: SYSTEM DIAGRAM (2010 Corolla)		

SYSTEM DIAGRAM

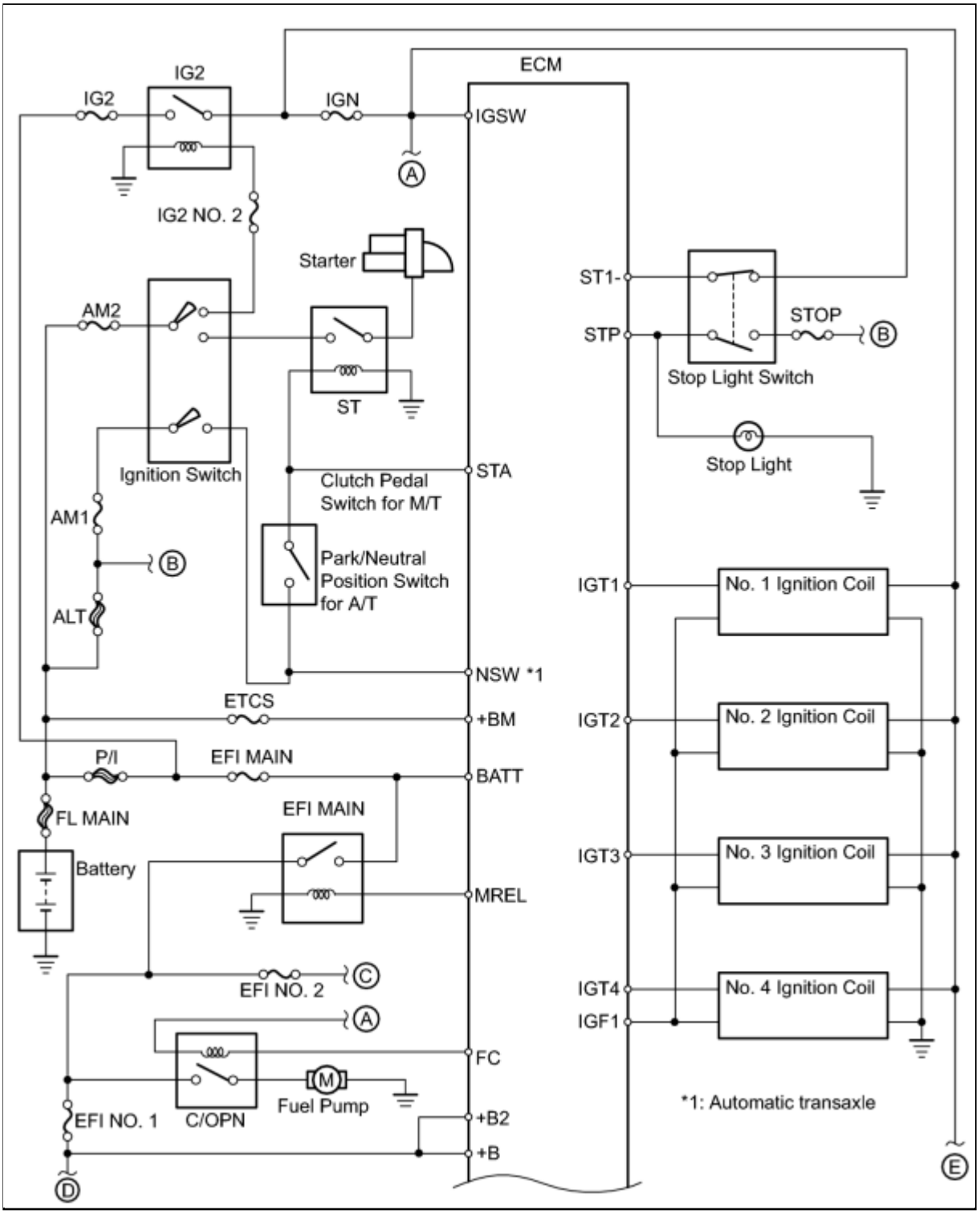

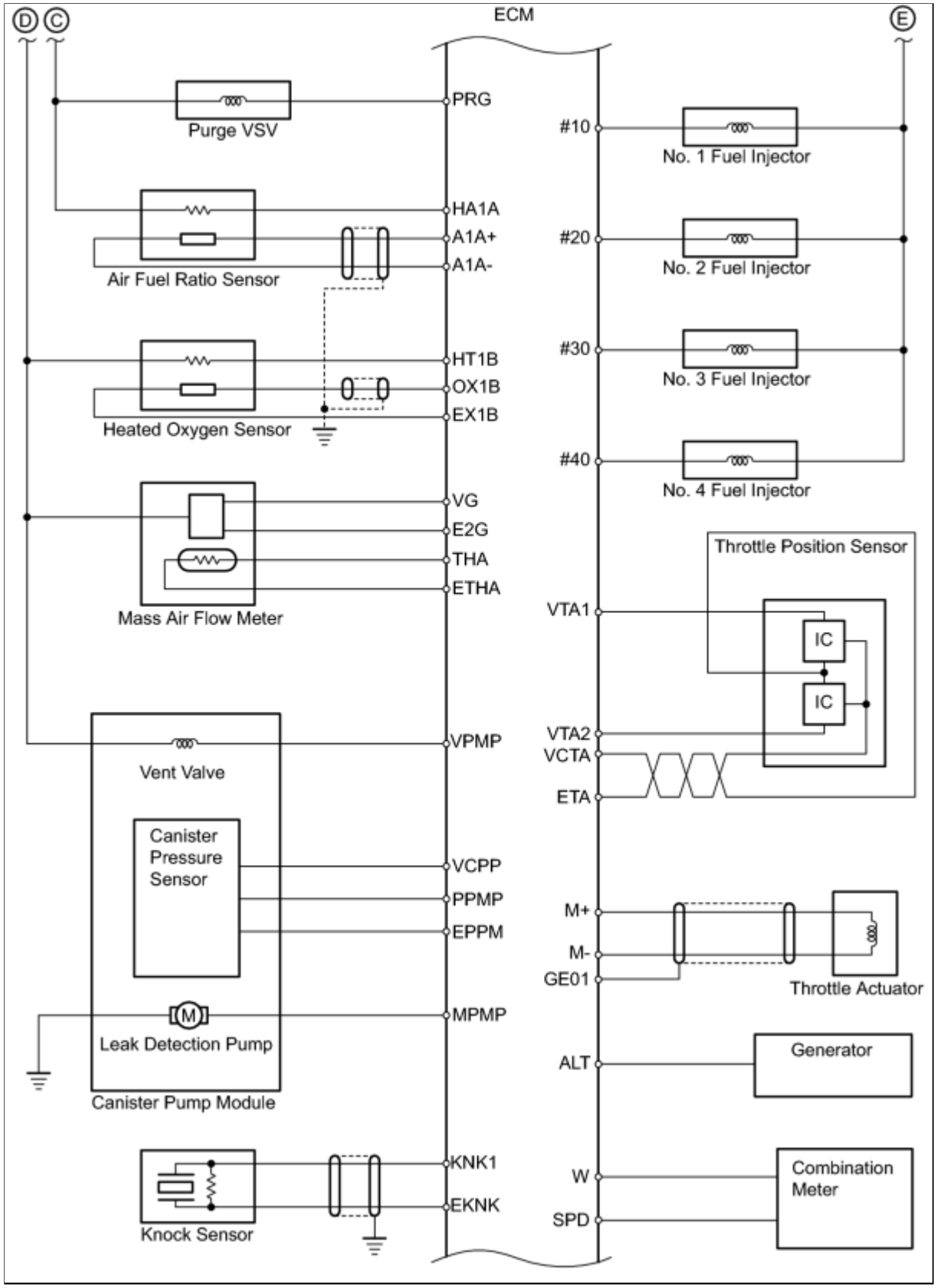
ECM
D
C
E
PRG
Purge VSV
HA1A
A1A+
A1A-
Air Fuel Ratio Sensor
HT1B
OX1B
EX1B
Heated Oxygen Sensor
VG
E2G
THA
ETHA
Mass Air Flow Meter
VPMP
Vent Valve
Canister Pressure Sensor
VCPP
PPMP
EPPM
MPMP
Leak Detection Pump
Canister Pump Module
KNK1
EKNK
Knock Sensor
#10
No. 1 Fuel Injector
#20
No. 2 Fuel Injector
#30
No. 3 Fuel Injector
#40
No. 4 Fuel Injector
Throttle Position Sensor
IC
IC
VTA1
VTA2
VCTA
ETA
M+
M-
GE01
Throttle Actuator
ALT
Generator
W
SPD
Combination Meter

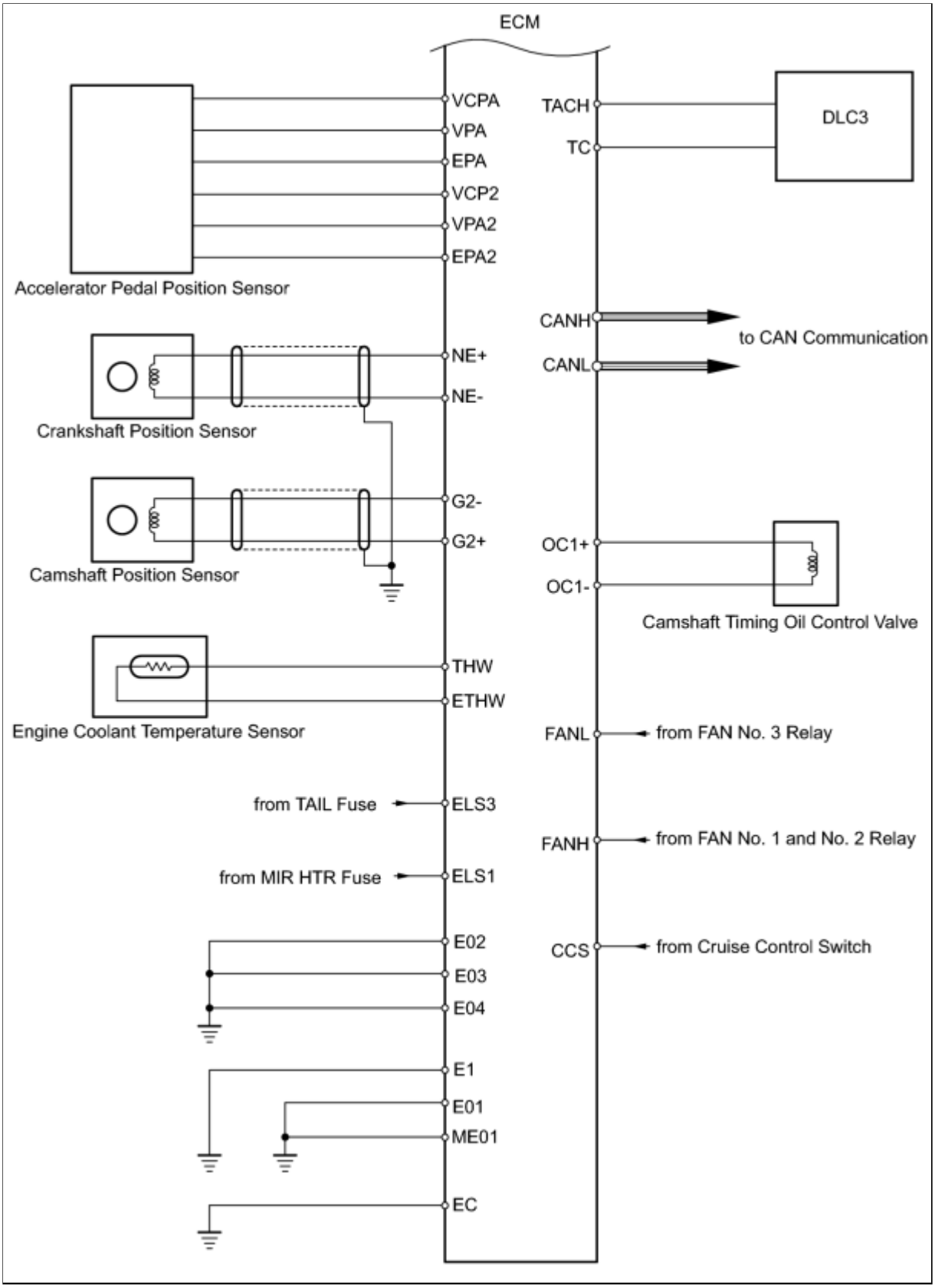
ECM
VCPA
VPA
EPA
VCP2
VPA2
EPA2
Accelerator Pedal Position Sensor
NE+
NE-
Crankshaft Position Sensor
G2-
G2+
Camshaft Position Sensor
THW
ETHW
Engine Coolant Temperature Sensor
from TAIL Fuse
ELS3
from MIR HTR Fuse
ELS1
E02
E03
E04
E1
E01
ME01
EC
TACH
TC
DLC3
CANH
CANL
to CAN Communication
OC1+
OC1-
Camshaft Timing Oil Control Valve
FANL
from FAN No. 3 Relay
FANH
from FAN No. 1 and No. 2 Relay
CCS
from Cruise Control Switch

Last Modified: 3-10-2010	6.4 D	**From:** 200901
Model Year: 2010	**Model:** Corolla	**Doc ID:** RM000000PDM0AJX
Title: 2AZ-FE ENGINE CONTROL: SFI SYSTEM: BASIC INSPECTION (2010 Corolla)		

BASIC INSPECTION

When a malfunction is not confirmed by the DTC check, troubleshooting should be carried out in all circuits considered to be possible causes of the problem. In many cases, by carrying out the basic engine check shown in the following flowchart, the location of the problem can be found quickly and efficiently. Therefore, using this check is essential when engine troubleshooting.

1.	**CHECK BATTERY VOLTAGE**

NOTICE:

Carry out this check with the engine stopped and the ignition switch off.

Result:

RESULT	PROCEED TO
11 V or more	OK
Below 11 V	NG

NG ▶ **CHARGE OR REPLACE BATTERY**

OK ▼

2.	**CHECK WHETHER ENGINE CRANKS**

NG ▶ INFO **PROCEED TO PROBLEM SYMPTOMS TABLE**

OK ▼

3.	**CHECK WHETHER ENGINE STARTS**

NG ▶ GO TO STEP 6

OK ▼

4.	CHECK AIR FILTER

(a) Visually check that the air filter is not excessively contaminated with dirt or oil.

NG ▶ REPLACE AIR FILTER

OK ▼

5.	CHECK IDLE SPEED

NG ▶ TROUBLESHOOT IDLE SPEED AND PROCEED TO NEXT STEP

OK ▼

6.	CHECK FUEL PRESSURE

NG ▶ TROUBLESHOOT FUEL PRESSURE AND PROCEED TO NEXT STEP

OK ▼

7.	CHECK FOR SPARK

NG ▶ TROUBLESHOOT SPARK AND PROCEED TO NEXT STEP

OK ▶ INFO PROCEED TO PROBLEM SYMPTOMS TABLE

Last Modified: 3-10-2010	6.4 D	**From:** 200901
Model Year: 2010	**Model:** Corolla	**Doc ID:** RM000000PDQ0BLX
Title: 2AZ-FE ENGINE CONTROL: SFI SYSTEM: CHECK FOR INTERMITTENT PROBLEMS (2010 Corolla)		

CHECK FOR INTERMITTENT PROBLEMS

HINT:

Inspect the vehicle's ECM using check mode. Intermittent problems are easier to detect with the Techstream when the ECM is in check mode. In check mode, the ECM uses 1 trip detection logic, which is more sensitive to malfunctions than normal mode (default), which uses 2 trip detection logic.

1. Clear the DTCs INFO .
2. Switch the ECM from normal mode to check mode using the Techstream INFO .
3. Perform a simulation test INFO .
4. Check and wiggle the harness(es), connector(s) and terminal(s) INFO .

Last Modified: 3-10-2010	6.4 M	**From:** 200901
Model Year: 2010	**Model:** Corolla	**Doc ID:** RM000000PDT057X
Title: 2AZ-FE ENGINE CONTROL: SFI SYSTEM: REGISTRATION (2010 Corolla)		

REGISTRATION

NOTICE:

The Vehicle Identification Number (VIN) must be input into a replacement ECM.

HINT:

The VIN is a 17-digit alphanumeric vehicle identification number. The Techstream is required to register the VIN.

1. DESCRIPTION

HINT:

This registration section consists of two parts: Read VIN and Write VIN.

(a) Read VIN: This process allows the VIN stored in the ECM to be read in order to confirm that the two VINs, provided with the vehicle and stored in the vehicle's ECM, are the same.

(b) Write VIN: This process allows the VIN to be input into the ECM. If the ECM is changed, or the ECM VIN and vehicle VIN do not match, the VIN can be registered, or overwritten in the ECM by following procedure.

2. READ VIN

(a) Confirm the vehicle VIN.

(b) Connect the Techstream to the DLC3.

(c) Turn the ignition switch to ON.

(d) Turn the Techstream on.

(e) Enter the following menus: Powertrain / Engine and ECT / Utility / VIN / VIN Read.

3. WRITE VIN

(a) Confirm the vehicle VIN.

(b) Connect the Techstream to the DLC3.

(c) Turn the ignition switch to ON.

(d) Turn the Techstream on.

(e) Enter the following menus: Powertrain / Engine and ECT / Utility / VIN / VIN Write.

Last Modified: 3-10-2010	6.4 D	**From:** 200901
Model Year: 2010	**Model:** Corolla	**Doc ID:** RM000000PDR05WX
Title: 2AZ-FE ENGINE CONTROL: SFI SYSTEM: CHECKING MONITOR STATUS (2010 Corolla)		

CHECKING MONITOR STATUS

The purpose of the monitor result (mode 06) is to allow access to the results for on-board diagnostic monitoring tests of specific components/systems that are not continuously monitored. Examples are the catalyst, evaporative emissions (EVAP) and thermostat.

The monitor result allows an OBD II scan tool to display the monitor status, test value, minimum test limit and maximum test limit. These data are displayed after the vehicle has been driven to run the monitor.

When the test value is not between the minimum test limit and maximum test limit, the ECM (PCM) interprets this as a malfunction. When the component is not malfunctioning, if the difference of the test value and test limit is very small, the component may malfunction in the near future.

Perform the following instruction to view the monitor status. Although this instruction refers the Techstream, it can be checked using a generic OBD II scan tool. Refer to your scan tool operator's manual for specific procedures.

1. PERFORM MONITOR DRIVE PATTERN

(a) Connect the Techstream to the DLC3.

(b) Turn the ignition switch to ON and the Techstream on.

(c) Clear the DTCs INFO .

(d) Run the vehicle in accordance with the applicable drive pattern described in Readiness Monitor Drive Pattern INFO . Do not turn the ignition switch off.

NOTICE:

The test results will be lost if the ignition switch is turned off.

2. ACCESS MONITOR RESULT

(a) Enter the following menus: Powertrain / Engine and ECT / Monitor / Result.

The monitor status appears after the component name.

- Pass: The component is functioning normally.
- Fail: The component is malfunctioning.

(b) Confirm that the component is either Pass or Fail.

(c) Select the component and press ENTER. The accuracy test value appears if the monitor status is either Pass or Fail.

3. CHECK COMPONENT STATUS

(a) Compare the test value with the minimum test limit (MIN LIMIT) and maximum test limit (MAX LIMIT).

(b) If the test value is between the minimum test limit and maximum test limit, the component is functioning normally. If not, the component is malfunctioning. The test value is usually significantly higher or lower than the test limit. If the test value is on the borderline of the test limit, the component may malfunction in the near future.

HINT:

The monitor result might show a pass on rare occasions even if the malfunction indicator lamp (MIL) is illuminated. This indicates the system malfunctioned on a previous driving cycle. This might be caused by an intermittent problem.

4. MONITOR RESULT INFORMATION

If you use a generic scan tool, multiply the value by the scaling value listed below.

Air Fuel Ratio Sensor (Sensor 1)

MONITOR ID	TEST ID	SCALING	UNIT	DESCRIPTION
$01	$8E	Multiply by 0.001	V	Air fuel ratio sensor deterioration level
$01	$91	Multiply by 0.004	mA	Air fuel ratio sensor current

Heated Oxygen Sensor (Sensor 2)

MONITOR ID	TEST ID	SCALING	UNIT	DESCRIPTION
$02	$07	Multiply by 0.001	V	Minimum sensor voltage
$02	$08	Multiply by 0.001	V	Maximum sensor voltage
$02	$8B	Multiply by 0.001	Seconds	0.35 - 0.2 V sensor switch time
$02	$8D	Multiply by 0.001	Seconds	Duration that sensor voltage drops to 0.2 V during fuel cut
$02	$8F	Multiply by 0.0003	g	Maximum oxygen storage capacity

Catalyst

MONITOR ID	TEST ID	SCALING	UNIT	DESCRIPTION
$21	$A9	Multiply by 0.0003	No dimension	Oxygen storage capacity of catalyst

EVAP

MONITOR ID	TEST ID	SCALING	UNIT	DESCRIPTION
$3D	$C9	Multiply by 0.001	kPa	Test value for small leak (P0456)
$3D	$CA	Multiply by 0.001	kPa	Test value for gross leak (P0455)
$3D	$CE	Multiply by 0.001	kPa	Test value for vent valve stuck OFF (P2420)
$3D	$CF	Multiply by 0.001	kPa	Test value for vent valve stuck ON (P2419)
$3D	$D4	Multiply by 0.001	kPa	Test value for purge VSV stuck closed (P0441)

MONITOR ID	TEST ID	SCALING	UNIT	DESCRIPTION
$3D	$D5	Multiply by 0.001	kPa	Test value for purge VSV stuck open (P0441)
$3D	$D7	Multiply by 0.001	kPa	Test value for purge flow insufficient (P0441)

Misfire

MONITOR ID	TEST ID	SCALING	UNIT	DESCRIPTION
$A1	$0B	Multiply by 1	Time	Total EWMA misfire count of all cylinders in last ten driving cycles EWMA: Exponential Weighted Moving Average
$A1	$0C	Multiply by 1	Time	• When engine switch is on (IG), total misfire count of all cylinders in last driving cycle is displayed. • While engine is running, total misfire count of all cylinders in current driving cycle is displayed.
$A2	$0B	Multiply by 1	Time	Total EWMA misfire count of cylinder 1 in last ten driving cycles
$A2	$0C	Multiply by 1	Time	• When engine switch is on (IG), total misfire count of cylinder 1 in last driving cycle is displayed. • While engine is running, total misfire count of cylinder 1 in current driving cycle is displayed.
$A3	$0B	Multiply by 1	Time	Total EWMA misfire count of cylinder 2 in last ten driving cycles
$A3	$0C	Multiply by 1	Time	• When engine switch is on (IG), total misfire count of cylinder 2 in last driving cycle is displayed. • While engine is running, total misfire count of cylinder 2 in current driving cycle is displayed.
$A4	$0B	Multiply by 1	Time	Total EWMA misfire count of cylinder 3 in last ten driving cycles
$A4	$0C	Multiply by 1	Time	• When engine switch is on (IG), total misfire count of cylinder 3 in last driving cycle is displayed. • While engine is running, total misfire count of cylinder 3 in current driving cycle is displayed.
$A5	$0B	Multiply by 1	Time	Total EWMA misfire count of cylinder 4 in last ten driving cycles
$A5	$0C	Multiply by 1	Time	• When engine switch is on (IG), total misfire count of cylinder 4 in last driving cycle is displayed. • While engine is running, total misfire count of cylinder 4 in current driving cycle is displayed.

Last Modified: 3-10-2010	6.4 U	**From:** 200901
Model Year: 2010	**Model:** Corolla	**Doc ID:** RM000000PDH08TX
Title: 2AZ-FE ENGINE CONTROL: SFI SYSTEM: TERMINALS OF ECM (2010 Corolla)		

TERMINALS OF ECM

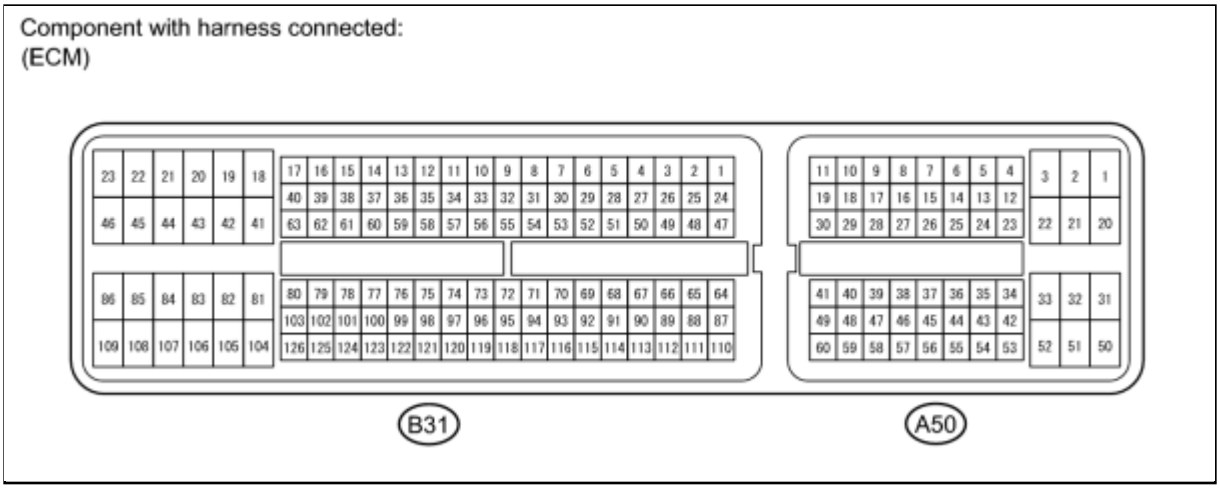

HINT:

The standard normal voltage between each pair of ECM terminals is shown in the table below. The appropriate conditions for checking each pair of terminals are also indicated. The result of checks should be compared with the standard normal voltage for that pair of terminals, displayed in the Specified Condition column. The illustration above can be used as a reference to identify the ECM terminal locations.

TERMINAL NO. (SYMBOL)	WIRING COLOR	TERMINAL DESCRIPTION	CONDITION	SPECIFIED CONDITION
A50-20 (BATT) - B31-104 (E1)	P - BR	Battery (for measuring battery voltage and for ECM memory)	Always	11 to 14 V
A50-3 (+BM) - B31-104 (E1)	B - BR	Power source of throttle actuator	Always	11 to 14 V
A50-28 (IGSW) - B31-104 (E1)	B - BR	Ignition switch	Ignition switch to ON	11 to 14 V
A50-2 (+B) - B31-104 (E1)	B - BR	Power source of ECM	Ignition switch to ON	11 to 14 V
A50-1 (+B2) - B31-104 (E1)	B - BR	Power source of ECM	Ignition switch to ON	11 to 14 V
B31-100 (OC1+) - B31-123 (OC1-)	B - V	Camshaft timing oil control valve	Idling	Pulse generation (see waveform 1)

TERMINAL NO. (SYMBOL)	WIRING COLOR	TERMINAL DESCRIPTION	CONDITION	SPECIFIED CONDITION
A50-44 (MREL) - B31-104 (E1)	L - BR	EFI relay	Ignition switch to ON	11 to 14 V
B31-118 (VG) - B31-116 (E2G)	V - B	Mass air flow meter	Idling, Shift lever position P or N, A/C switch OFF	0.5 to 3.0 V
B31-65 (THA) - B31-88 (ETHA)	P - BR-W	Intake air temperature sensor (built into mass air flow meter)	Idling, Intake air temperature 20°C (68°F)	0.5 to 3.4 V
B31-97 (THW) - B31-96 (ETHW)	B - BR	Engine coolant temperature sensor	Idling, Engine coolant temperature 80°C (176°F)	0.2 to 1.0 V
B31-67 (VCTA) - B31-91 (ETA)	Y - BR	Power source of throttle position sensor (specific voltage)	Ignition switch to ON	4.5 to 5.5 V
B31-115 (VTA1) - B31-91 (ETA)	LG - BR	Throttle position sensor (for engine control)	Ignition switch to ON, Throttle valve fully closed	0.5 to 1.1 V
			Ignition switch to ON, Throttle valve fully open	3.2 to 4.8 V
B31-114 (VTA2) - B31-91 (ETA)	R - BR	Throttle position sensor (for sensor malfunction detection)	Ignition switch to ON, Throttle valve fully closed	2.1 to 3.1 V
			Ignition switch to ON, Throttle valve fully open	4.6 to 5.0 V
A50-55 (VPA) - A50-59 (EPA)	L - R	Accelerator pedal position sensor (for engine control)	Ignition switch to ON, Accelerator pedal released	0.5 to 1.1 V
			Ignition switch to ON, Accelerator pedal fully depressed	2.5 to 4.5 V
A50-56 (VPA2) - A50-60 (EPA2)	Y - O	Accelerator pedal position sensor (for sensor malfunctioning detection)	Ignition switch to ON, Accelerator pedal released	1.2 to 2.0 V
			Ignition switch to ON, Accelerator pedal fully depressed	3.4 to 5.5 V
A50-57 (VCPA) - A50-59 (EPA)	P - R	Power source of accelerator pedal position sensor (for VPA)	Ignition switch to ON	4.5 to 5.5 V

TERMINAL NO. (SYMBOL)	WIRING COLOR	TERMINAL DESCRIPTION	CONDITION	SPECIFIED CONDITION
A50-58 (VCP2) - A50-60 (EPA2)	B - O	Power source of accelerator pedal position sensor (for VPA2)	Ignition switch to ON	4.5 to 5.5 V
B31-109 (HA1A) - B31-46 (E04)	R - W-B	Air fuel ratio sensor heater	Idling with warm engine	Pulse generation (see waveform 2)
			Ignition switch to ON	11 to 14 V
B31-112 (A1A+) - B31-104 (E1)	Y -BR	Air fuel ratio sensor	Ignition switch to ON	3.3 V*1
B31-113 (A1A-) - B31-104 (E1)	L - BR	Air fuel ratio sensor	Ignition switch to ON	3.0 V*1
B31-47 (HT1B) - B31-86 (E03)	P - W-B	Heated oxygen sensor heater	Ignition switch to ON	11 to 14 V
B31-64 (OX1B) - B31-87 (EX1B)	B - LG-B	Heated oxygen sensor	Engine speed maintained at 2500 rpm for 2 minutes after warming up sensor	Pulse generation (see waveform 3)
B31-108 (#10) - B31-45 (E01) B31-107 (#20) - B31-45 (E01) B31-106 (#30) - B31-45 (E01) B31-105 (#40) - B31-45 (E01)	V - W-B R - W-B G - W-B LG - W-B	Fuel injector	Ignition switch to ON	11 to 14 V
			Idling	Pulse generation (see waveform 4)
B31-110 (KNK1) - B31-111 (EKNK)	B - W	Knock sensor	Engine speed maintained at 4000 rpm after warming up engine	Pulse generation (see waveform 5)
B31-99 (G2+) - B31-98 (G2-)	R - W	Camshaft position sensor	Idling	Pulse generation (see waveform 6)
B31-122 (NE+) - B31-121 (NE-)	R - G	Crankshaft position sensor	Idling	Pulse generation (see waveform 6)
B31-85 (IGT1) - B31-104 (E1) B31-84 (IGT2) - B31-104 (E1) B31-83 (IGT3) - B31-104 (E1) B31-82 (IGT4)	W-L - BR B - BR L-B - BR B - BR	Ignition coil (ignition signal)	Idling	Pulse generation (see waveform 7)

TERMINAL NO. (SYMBOL)	WIRING COLOR	TERMINAL DESCRIPTION	CONDITION	SPECIFIED CONDITION
- B31-104 (E1)				
B31-81 (IGF1) - B31-104 (E1)	Y - BR	Ignition coil (ignition confirmation signal)	Ignition switch to ON	4.5 to 5.5 V
			Idling	Pulse generation (see waveform 7)
B31-49 (PRG) - B31-104 (E1)	L-B - BR	Purge VSV	Ignition switch to ON	11 to 14 V
			Idling	Pulse generation (see waveform 8)
A50-8 (SPD) - B31-104 (E1)	V - BR	Speed signal from combination meter	Driving at 12 mph (20 km/h)	Pulse generation (see waveform 9)
A50-48 (STA) - B31-104 (E1)	LG - BR	Starter signal	Cranking	5.5 V or more
B31-52 (NSW)*2 - B31-104 (E1)	W - BR	Park/neutral position switch signal	Ignition switch to ON, transmission gear position in P or N	Below 1.5 V
			Ignition switch to ON, transmission gear position in except P or N	6.0 V or more
A50-36 (STP) - B31-104 (E1)	L - BR	Stop light switch	Brake pedal depressed	7.5 to 14 V
			Brake pedal released	Below 1.5 V
A50-35 (ST1-) - B31-104 (E1)	R - BR	Stop light switch (opposite to STP terminal)	Ignition switch to ON, Brake pedal depressed	Below 1.5 V
			Ignition switch to ON, Brake pedal released	7.5 to 14 V
B31-42 (M+) - B31-43 (ME01)	P - W-B	Throttle actuator	Idling with warm engine	Pulse generation (see waveform 10)
B31-41 (M-) - B31-43 (ME01)	L - W-B	Throttle actuator	Idling with warm engine	Pulse generation (see waveform 11)
A50-7 (FC) - B31-104 (E1)	O - BR	Fuel pump control	Ignition switch to ON	11 to 14 V
			Idling	Below 1.5 V
A50-24 (W) - B31-104 (E1)	R - BR	MIL	Ignition switch to ON (MIL goes on)	Below 1.5 V
			Idling	11 to 14 V
A50-27 (TC) - B31-104 (E1)	P - BR	Terminal TC of DLC3	Ignition switch to ON	11 to 14 V

TERMINAL NO. (SYMBOL)	WIRING COLOR	TERMINAL DESCRIPTION	CONDITION	SPECIFIED CONDITION
A50-15 (TACH) - B31-104 (E1)	GR - BR	Engine speed	Idling	Pulse generation (see waveform 12)
A50-42 (VPMP) - B31-104 (E1)	W - BR	Vent valve (built into canister pump module)	Ignition switch to ON	11 to 14 V
A50-34 (MPMP) - B31-104 (E1)	R - BR	Leak detection pump (built into canister pump module)	Leak detection pump OFF	Below 3 V
			Leak detection pump ON	11 to 14 V
B31-70 (VCPP) - B31-94 (EPPM)	V - G	Power source for canister pressure sensor (specific voltage)	Ignition switch to ON	4.5 to 5.5 V
B31-71 (PPMP) - B31-94 (EPPM)	Y - G	Canister pressure sensor (built into canister pump module)	Ignition switch to ON	3 to 3.6 V
A50-31 (ELS1) - B31-104 (E1)	B - BR	Electric load	Taillight switch ON	7.5 to 14 V
			Taillight switch OFF	Below 1.5 V
A50-33 (ELS3) - B31-104 (E1)	G - BR	Electric load	Defogger switch ON	7.5 to 14 V
			Defogger switch OFF	Below 1.5 V
A50-21 (FANL) - B31-104 (E1)	R - BR	No. 3 fan relay	Ignition switch to ON	11 to 14 V
			Idling with A/C ON, or high engine coolant temperature	Below 1.5 V
A50-22 (FANH) - B31-104 (E1)	W - BR	No. 1 and No. 2 fan relay	Idling with high engine coolant temperature	Below 1.5 V
B31-50 (ALT) - B31-104 (E1)	L - BR	Generator	Ignition switch to ON	11 to 14 V
A50-41 (CANH) - B31-104 (E1)	Y - BR	CAN communication line	Ignition switch to ON	Pulse generation (see waveform 13)
A50-49 (CANL) - B31-104 (E1)	W - BR	CAN communication line	Ignition switch to ON	Pulse generation (see waveform 14)

HINT:

***1: The ECM terminal voltage is constant regardless of the output voltage from the sensor.**

***2: Automatic Transaxle**

1. WAVEFORM 1

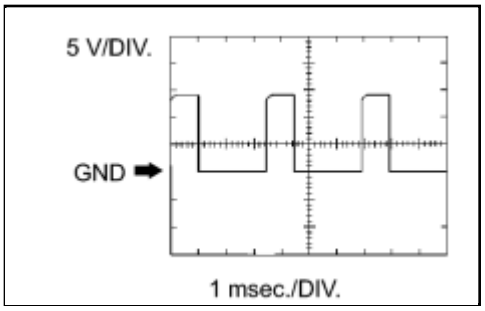

Camshaft Timing Oil Control Valve

ECM Terminal Name	Between OC1+ and OC1-
Tester Range	5 V/DIV., 1 msec/DIV.
Condition	Idling

2. WAVEFORM 2

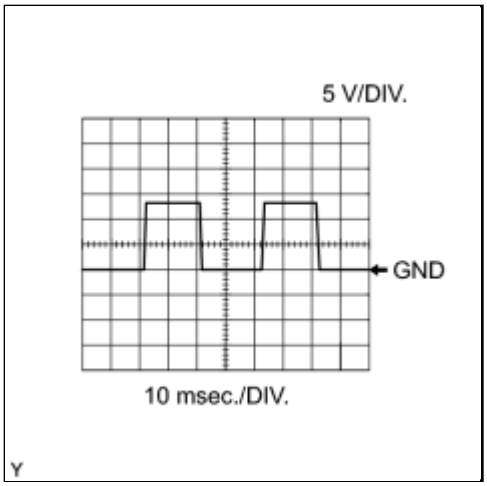

Air Fuel Ratio Sensor (Sensor 1) Heater

ECM Terminal Name	Between HA1A and E04
Tester Range	5 V/DIV., 10 msec/DIV.
Condition	Idling with warm engine

HINT:

The wavelength varies in accordance with the engine operating condition.

3. WAVEFORM 3

Heated Oxygen Sensor (Sensor 2)

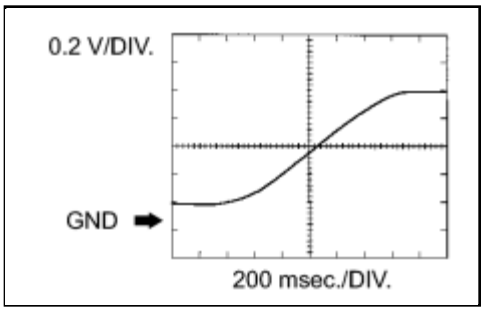

ECM Terminal Name	Between OX1B and EX1B
Tester Range	0.2 V/DIV., 200 msec/DIV.
Condition	Engine speed maintained at 2500 rpm for 2 minutes after warming up sensor

HINT:

In Data List, item O2S B1 S2 shows the ECM input values from the heated oxygen sensor.

4. WAVEFORM 4

Injector No. 1 (to No. 4) Injection Signal

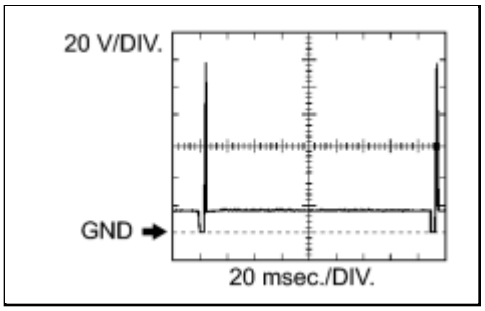

ECM Terminal Name	Between #10 (to #40) and E01
Tester Range	20 V/DIV., 20 msec/DIV.
Condition	Idling

HINT:

The wavelength becomes shorter as the engine rpm increases.

5. WAVEFORM 5

Knock Sensor

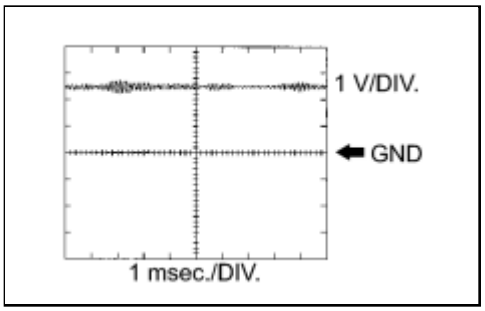

ECM Terminal Name	Between KNK1 and EKNK
Tester Range	1 V/DIV., 1 msec/DIV.
Condition	Engine speed maintained at 4000 rpm after warming up engine

HINT:

- The wavelength becomes shorter as the engine rpm increases.
- The waveforms and amplitudes displayed differ slightly depending on the vehicle.

6. WAVEFORM 6

Crankshaft Position Sensor and Camshaft Position Sensor

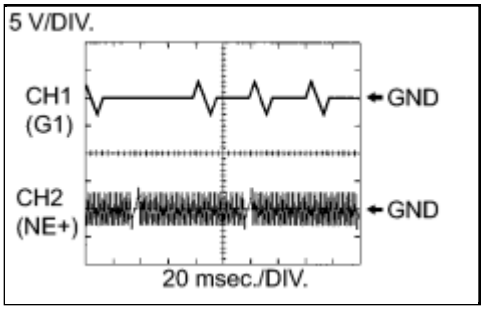

ECM Terminal Name	CH1: Between G2+ and G2- CH2: Between NE+ and NE-
Tester Range	5 V/DIV., 20 msec/DIV.
Condition	Idling

HINT:

The wavelength becomes shorter as the engine rpm increases.

7. WAVEFORM 7

Igniter IGT Signal (from ECM to igniter) and Igniter IGF Signal (from igniter to ECM)

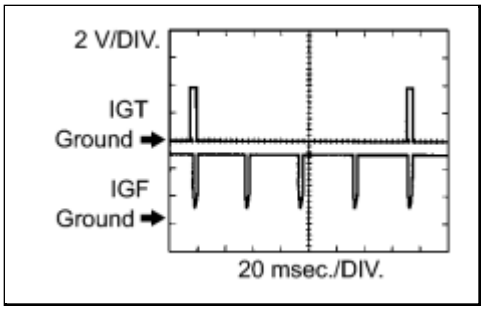

ECM Terminal Name	Between IGT (1 to 4) and E1 Between IGF1 and E1
Tester Range	2 V/DIV., 20 msec/DIV.
Condition	Idling

HINT:

The wavelength becomes shorter as the engine rpm increases.

8. WAVEFORM 8

Purge VSV

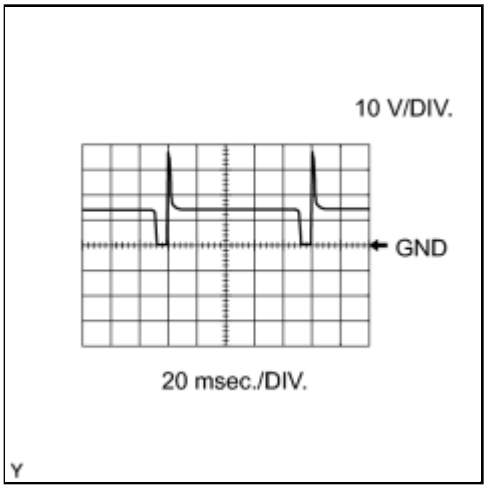

ECM Terminal Name	Between PRG and E1
Tester Range	10 V/DIV., 20 msec/DIV.
Condition	Idling

HINT:

If the waveform is not similar to the illustration, check the waveform again after idling for 10 minutes or more.

9. WAVEFORM 9

Vehicle Speed Signal

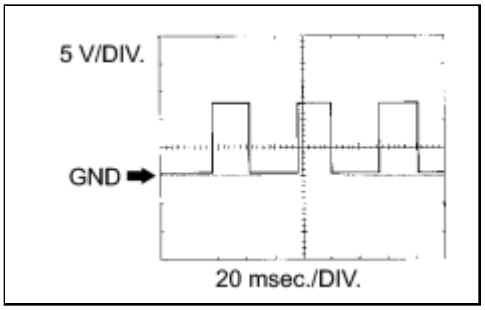

ECM Terminal Name	Between SPD and E1
Tester Range	2 V/DIV., 20 msec/DIV.
Condition	Driving at 12 mph (20 km/h)

HINT:

The wavelength becomes shorter as the vehicle speed increases.

10. WAVEFORM 10

Throttle Actuator Positive Terminal

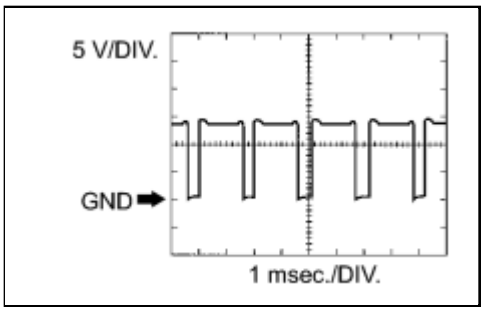

ECM Terminal Name	Between M+ and ME01
Tester Range	5 V/DIV., 1 msec/DIV.
Condition	Idling with warm engine

HINT:

The duty ratio varies depending on the throttle actuator operation.

11. WAVEFORM 11

Throttle Actuator Negative Terminal

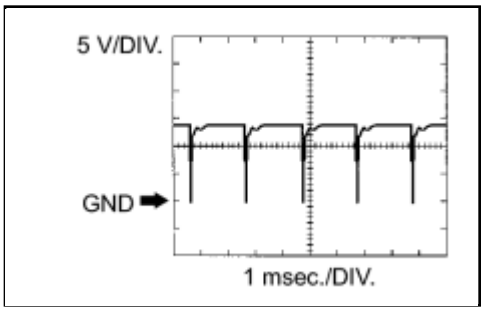

ECM Terminal Name	Between M- and ME01
Tester Range	5 V/DIV., 1 msec/DIV.
Condition	Idling with warm engine

HINT:

The duty ratio varies depending on the throttle actuator operation.

12. WAVEFORM 12

Engine Speed Signal

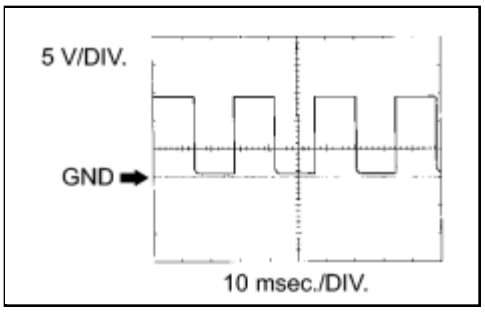

ECM Terminal Name	Between TACH and E1
Tester Range	5 V/DIV., 10 msec/DIV.
Condition	Idling

HINT:

The wavelength becomes shorter as the engine rpm increases.

13. WAVEFORM 13

CAN Communication Signal (Reference)

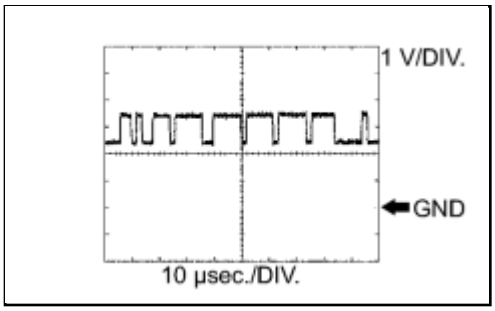

ECM Terminal Name	Between CANH and E1
Tester Range	1 V/DIV., 10 µsec/DIV.
Condition	Ignition switch to ON

HINT:

The waveform varies depending on the CAN communication signal.

14. WAVEFORM 14

CAN Communication Signal (Reference)

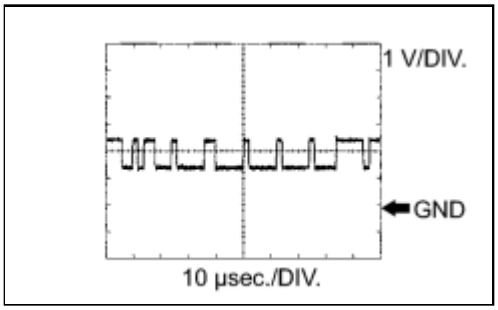

ECM Terminal Name	Between CANL and E1
Tester Range	1 V/DIV., 10 µsec/DIV.
Condition	Ignition switch to ON

HINT:

The waveform varies depending on the CAN communication signal.

Last Modified: 3-10-2010	6.4 D	**From:** 200901
Model Year: 2010	**Model:** Corolla	**Doc ID:** RM000000SXQ03AX
Title: 2AZ-FE ENGINE CONTROL: SFI SYSTEM: READINESS MONITOR DRIVE PATTERN (2010 Corolla)		

READINESS MONITOR DRIVE PATTERN

1. PURPOSE OF READINESS TESTS

- The On-Board Diagnostic (OBD II) system is designed to monitor the performance of emission related components, and indicate any detected abnormalities with DTCs (Diagnostic Trouble Codes). Since various components need to be monitored during different driving conditions, the OBD II system is designed to run separate monitoring programs called Readiness Monitors.
- To view the status, enter the following menus: Powertrain / Engine and ECT / Monitor / Status2.
- When the Readiness Monitor status reads Complete, the necessary conditions have been met for running the performance tests for that Readiness Monitor.
- A generic OBD II scan tool can also be used to view the Readiness Monitor status.

HINT:

Many state Inspection and Maintenance (I/M) programs require a vehicle's Readiness Monitor status to show Complete before beginning emission tests.

The Readiness Monitor will be reset to Incomplete if:

- The ECM has lost battery power or blown a fuse.
- DTCs have been cleared.
- The conditions for running the Readiness Monitor have not been met.

If the Readiness Monitor status shows Incomplete, follow the appropriate Readiness Monitor Drive Pattern to change the status to Complete.

CAUTION:

Strictly observe posted speed limits, traffic laws, and road conditions when performing these drive patterns.

NOTICE:

These drive patterns represent the fastest method of satisfying all conditions necessary to achieve complete status for each specific Readiness Monitor.

In the event of a drive pattern being interrupted (possibly due to factors such as traffic conditions), the drive pattern can be resumed. In most cases, the Readiness Monitor will still achieve complete status upon completion of the drive pattern.

To ensure completion of the Readiness Monitors, avoid sudden changes in vehicle load and speed (driving up and down hills and/or sudden acceleration).

2. CATALYST MONITOR (ACTIVE AIR-FUEL RATIO CONTROL TYPE)

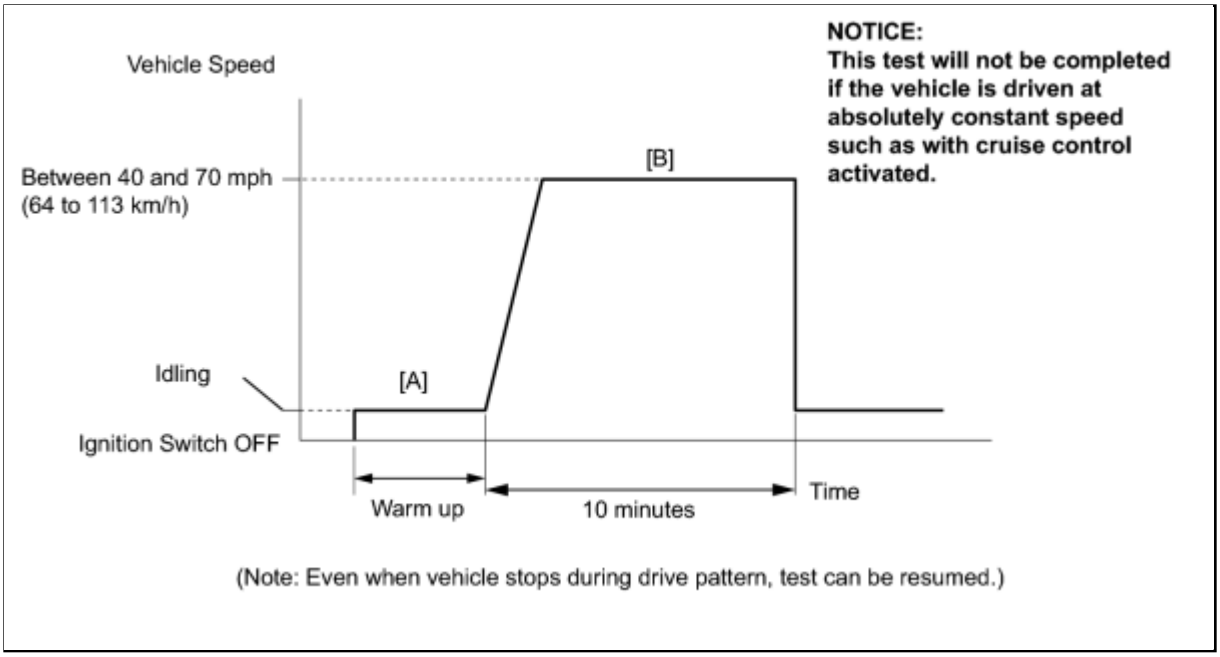

(a) Preconditions

- The monitor will not run unless:
    - The MIL is OFF.

(b) Drive Pattern

(1) Connect the Techstream to the DLC3.

(2) Turn the ignition switch to ON.

(3) Turn the Techstream on.

(4) Clear the DTCs (if set) INFO .

(5) Start the engine and warm it up [A].

(6) Drive the vehicle at between 40 mph and 70 mph (64 km/h and 113 km/h) for at least 10 minutes [B].

(c) Monitor Status

Check the Readiness Monitor status displayed on the Techstream.

If the status does not switch to Complete, extend the driving time.

3. EVAP SYSTEM MONITOR (KEY OFF TYPE)

(a) Preconditions

- The monitor will not run unless:
    - The fuel tank is less than 90% full.
    - The altitude is less than 8000 ft. (2438 m).
    - The vehicle is stationary.
    - The engine coolant temperature is between 4.4°C and 35°C (40°F and 95°F).
    - The intake air temperature is between 4.4°C and 35°C (40°F and 95°F).
    - The vehicle was driven in a city area (or on a free-way) for 10 minutes or more.

(b) Monitor Conditions

(1) Turn the ignition switch off and wait for 5 to 10 hours.

HINT:

Do not start the engine until checking Readiness Monitor status. If the engine is started, the step described above must be repeated.

(c) Monitor Status

(1) Connect the Techstream to the DLC3.

(2) Turn the ignition switch to ON.

(3) Turn the Techstream on.

(4) Check the Readiness Monitor status displayed on the Techstream.

If the status does not switch to Complete, restart the engine, make sure that the preconditions have been met, and then perform the Monitor Conditions again.

4. AIR-FUEL RATIO AND HEATED OXYGEN SENSOR MONITORS (ACTIVE AIR-FUEL RATIO CONTROL TYPE)

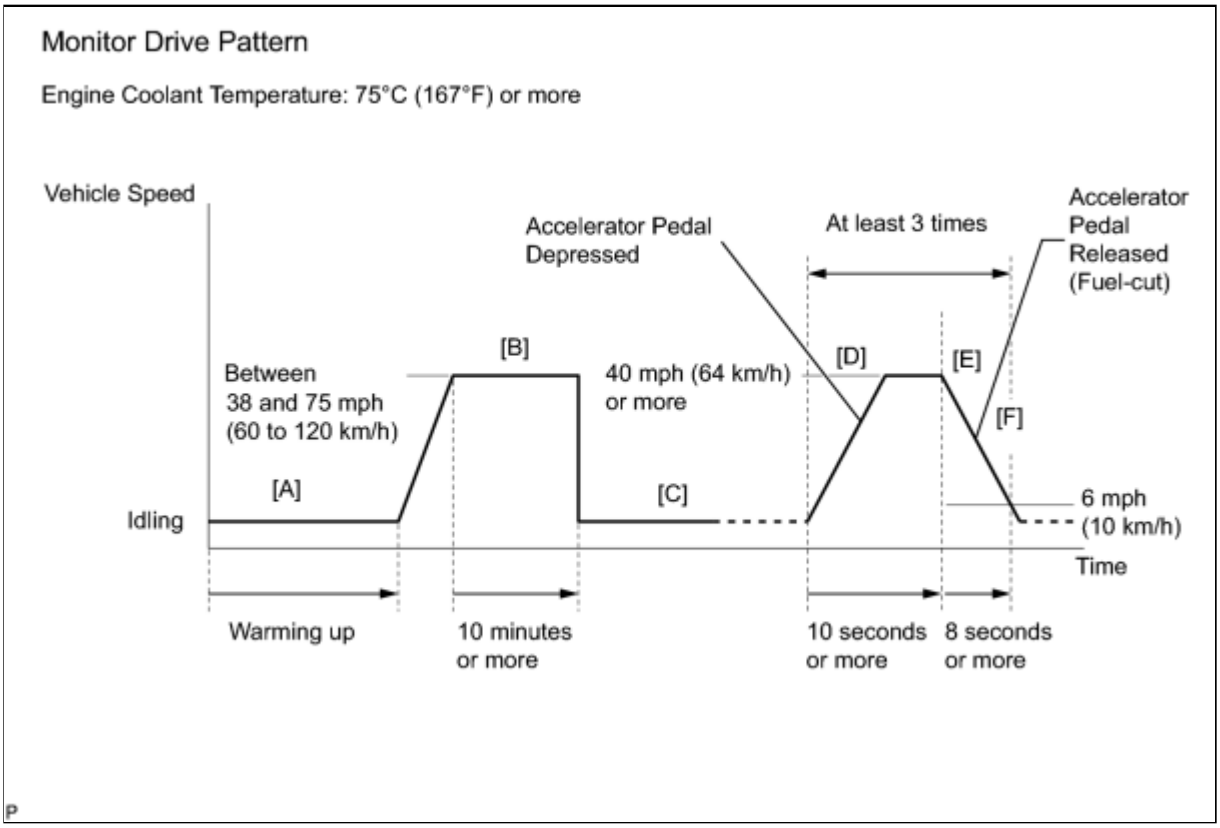

(a) Preconditions

- The monitor will not run unless:
    - 2 minutes or more have elapsed since the engine was started.
    - The engine coolant temperature is 75°C (167°F) or more.
    - Cumulative driving time at a vehicle speed of 30 mph (48 km/h) or more exceeds 6 minutes.
    - Air-fuel ratio feedback control is performed.

(b) Drive Pattern for front air fuel ratio sensor and heated oxygen sensor

(1) Connect the Techstream to the DLC3.

(2) Turn the ignition switch to ON.

(3) Turn the Techstream on.

(4) Clear the DTCs INFO .

(5) Start the engine, and warm it up until the engine coolant temperature reaches 75°C (167°F) or higher [A].

(6) Drive the vehicle at between 38 mph (60 km/h) and 75 mph (120 km/h) for at least 10 minutes [B].

(7) Change the transmission to 2nd gear [C].

(8) Accelerate the vehicle to 40 mph (64 km/h) or more by depressing the accelerator pedal for at least 10 seconds [D].

(9) Soon after performing step (8) above, release the accelerator pedal for at least 8 seconds without depressing the brake pedal, in order to execute fuel-cut control [E].

(10) Allow the vehicle to decelerate until the vehicle speed declines to less than 6 mph (10 km/h) [F].

(11) Repeat steps from (8) through (10) above at least 3 times in one driving cycle.

(c) Monitor Status

(1) Check the Readiness Monitor status displayed on the Techstream.

(2) If the status does not switch to Complete, make sure that the preconditions have been met, and then perform steps from (5) through (11) in Drive Pattern above.

5. AIR-FUEL RATIO (A/F) AND HEATED OXYGEN (HO2) SENSOR HEATER MONITORS (FRONT A/F AND REAR HO2 SENSOR TYPE)

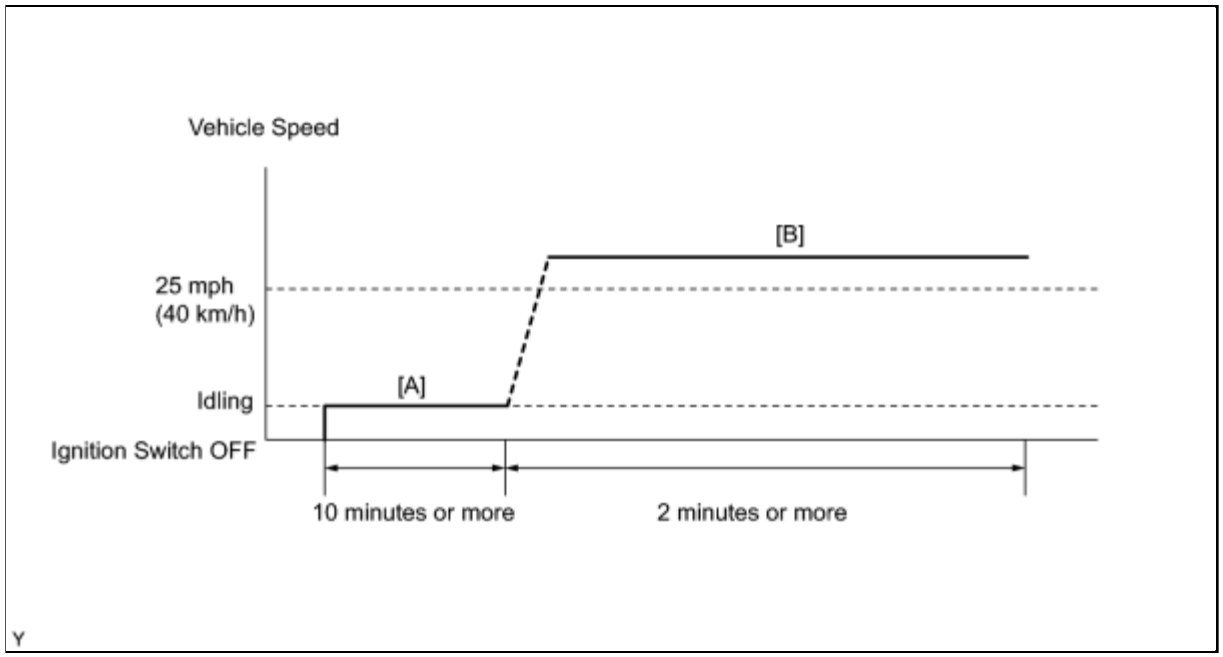

(a) Preconditions

- The monitor will not run unless:
    - The MIL is OFF.

(b) Drive Pattern

(1) Connect the Techstream to the DLC3.

(2) Turn the ignition switch to ON.

(3) Turn the Techstream on.

(4) Clear DTCs (if set) 

.

(5) Start the engine.

(6) Allow the engine to idle for 10 minutes or more.

(7) Drive the vehicle at 25 mph (40 km/h) or more for at least 2 minutes.

(c) Monitor Status

(1) Check the Readiness Monitor status displayed on the Techstream.

If the status does not switch to Complete, make sure that the preconditions have been met, and repeat steps (5) to (7) described in the Drive Pattern above.

Last Modified: 3-10-2010	6.4 T	**From:** 200901
Model Year: 2010	**Model:** Corolla	**Doc ID:** RM000000PDG0A4X
Title: 2AZ-FE ENGINE CONTROL: SFI SYSTEM: PROBLEM SYMPTOMS TABLE (2010 Corolla)		

PROBLEM SYMPTOMS TABLE

HINT:

Use the table below to help determine the cause of problem symptom. If multiple suspected areas are listed, potential causes of the symptoms are listed in order of probability in the "Suspected Area" column of the table. Check each symptom by checking the suspected areas in the order they are listed. Replace parts as necessary.

SFI System

SYMPTOM	SUSPECTED AREA	SEE PAGE
Engine does not crank (Does not start)	Battery	INFO
	Starter	INFO
	Starter relay	INFO
	Park/neutral position switch	INFO
	Clutch pedal switch	INFO
Engine does not crank (Does not start)	ECM power source circuit	INFO
	Crankshaft position sensor	INFO
	Camshaft position sensor	INFO
	Ignition system	INFO
	Fuel pump control circuit	INFO
	Fuel injector circuit	INFO
	Valve timing	INFO
	VC output circuit	INFO
	ECM	INFO
Engine cranks normally but difficult to start	Fuel pump control circuit	INFO
	Fuel pump	INFO
	Fuel injector circuit	INFO
	ECM power source circuit	INFO
	Engine coolant temperature sensor	INFO
	Intake system	INFO

SYMPTOM	SUSPECTED AREA	SEE PAGE
	Ignition system	INFO
	Spark plug	INFO
	Throttle body	INFO
	Compression	INFO
Incomplete intermittent combustion occurs (Does not start)	Fuel pump control circuit	INFO
	Fuel pump	INFO
	Ignition circuit	INFO
	Ignition system	INFO
	Fuel injector circuit	INFO
	ECM power source circuit	INFO
	Crankshaft position sensor	INFO
	Camshaft position sensor	INFO
	Valve timing	INFO
High engine idle speed	Throttle body	INFO
	Intake system	INFO
	A/C signal circuit	INFO
	ECM power source circuit	INFO
	Engine coolant temperature sensor	INFO
	PCV valve and hose	INFO
Low engine idle speed (Poor idling)	Throttle body	INFO
	A/C signal circuit	INFO
	Fuel pump control circuit	INFO
	Fuel pump	INFO
	Intake system	INFO
	PCV valve and hose	INFO
Rough idling	Compression	INFO
	Ignition system	INFO
	Spark plug	INFO

SYMPTOM	SUSPECTED AREA	SEE PAGE
	Fuel injector circuit	INFO
	ECM power source circuit	INFO
	Fuel pump control circuit	INFO
	Fuel pump	INFO
	Throttle body	INFO
	Intake system	INFO
	PCV valve and hose	INFO
	Air fuel ratio sensor	INFO
	Heated oxygen sensor	INFO
	Mass air flow meter	INFO
Idle hunting	Throttle body	INFO
	Intake system	INFO
	PCV valve and hose	INFO
	Air fuel ratio sensor	INFO
	Mass air flow meter	INFO
Hesitation/Poor acceleration	Fuel pump control circuit	INFO
	Fuel pump	INFO
	Spark plug	INFO
	Ignition system	INFO
	Fuel injector circuit	INFO
	ECM power source circuit	INFO
	Mass air flow meter	INFO
	Throttle body	INFO
	Intake system	INFO
	Valve timing	INFO
	Compression	INFO
Surging (Poor driveability)	Spark plug	INFO
	Fuel pump control circuit	INFO

SYMPTOM	SUSPECTED AREA	SEE PAGE
	Fuel pump	INFO
	Ignition system	INFO
	Fuel injector circuit	INFO
	ECM power source circuit	INFO
	Mass air flow meter	INFO
	Variable valve timing (VVT) system	INFO
	Compression	INFO
Engine stalls soon after starting	Fuel pump control circuit	INFO
	Fuel pump	INFO
	Spark plug	INFO
	Ignition system	INFO
	Fuel injector circuit	INFO
	ECM power source circuit	INFO
	Mass air flow meter	INFO
	Variable valve timing (VVT) system	INFO
	Throttle body	INFO
	Intake system	INFO
	PCV valve and hose	INFO
	Compression	INFO
Engine stalls only during A/C operation	A/C signal circuit	INFO
	ECM	INFO
Unable/difficult to refuel	Refueling valve (canister)	INFO

Last Modified: 3-10-2010	6.4 U	**From:** 200901
Model Year: 2010	**Model:** Corolla	**Doc ID:** RM000000PDN0AEX
Title: 2AZ-FE ENGINE CONTROL: SFI SYSTEM: DATA LIST / ACTIVE TEST (2010 Corolla)		

DATA LIST / ACTIVE TEST

1. DATA LIST

HINT:

Using the Techstream to read the Data List allows the values or states of switches, sensors, actuators and other items to be read without removing any parts. This non-intrusive inspection can be very useful because intermittent conditions or signals may be discovered before parts or wiring is disturbed. Reading the Data List information early in troubleshooting is one way to save diagnostic time

NOTICE:

In the table below, the values listed under Normal Condition are reference only. Do not depend solely on these values when determining whether or not a part is faulty.

(a) Warm up the engine.

(b) Turn the ignition switch off.

(c) Connect the Techstream to the DLC3.

(d) Turn the ignition switch to ON.

(e) Turn the Techstream on.

(f) Enter the following menus: Powertrain / Engine and ECT / Data List.

(g) According to the display on the Techstream, read the Data List.

TESTER DISPLAY	MEASUREMENT ITEM/RANGE	NORMAL CONDITION*1	DIAGNOSTIC NOTE
Vehicle Speed	Vehicle speed: Min.: 0 mph (0 km/h), Max.: 158.4 mph (255 km/h)	Actual vehicle speed	Speed indicated on speedometer
Engine Speed	Engine speed: Min.: 0 rpm, Max.: 16383.75 rpm	650 to 750 rpm: Idling	-
Calculate Load	Calculated load by ECM: Min.: 0%, Max.: 100%	• 20 to 40%: Idling • 10 to 30%: Running without load (2500 rpm)	-
Vehicle Load	Vehicle load: Min.: 0%, Max.: 25700%	Actual vehicle load	Load percentage in terms of maximum intake air flow amount

TESTER DISPLAY	MEASUREMENT ITEM/RANGE	NORMAL CONDITION*1	DIAGNOSTIC NOTE
MAF	Air flow rate from Mass Air Flow (MAF) meter: Min.: 0 g/sec, Max.: 655.35 g/sec	1 to 3 g/sec: Idling 2 to 7 g/sec: Running without load (2500 rpm)	If value approximately 0.0 g/sec: • Mass air flow meter power source circuit open • VG circuit open or shorted If value 271.0 g/sec or more: • E2G circuit open
Atmosphere Pressure	Atmospheric pressure: Min.: 0 kPa, Max.: 255 kPa	Equivalent to atmospheric pressure	-
Intake Air	Intake air temperature: Min.: -40°C (-40°F), Max.: 140°C (284°F)	Equivalent to ambient air temperature	• If value -40°C (-40°F): sensor circuit open • If value 140°C (284°F): sensor circuit shorted
Coolant Temp	Engine coolant temperature: Min.: -40°C (-40°F), Max.: 215°C (419°F)	80 to 100°C (176 to 212°F): After warming up	• If value -40°C (-40°F): sensor circuit open • If value 215°C (419°F): sensor circuit shorted
Engine Run Time	Engine run time: Min.: 0 s, Max.: 65535 s	Time since engine started	-
Initial Engine Coolant Temp	Initial engine coolant temperature: Min.: -40°C (-40°F), Max.: 120°C (248°F)	Coolant temperature when engine started	Service data
Initial Intake Air Temp	Initial intake air temperature: Min.: -40°C (-40°F), Max.: 120°C (248°F)	Intake air temperature when engine started	Service data

TESTER DISPLAY	MEASUREMENT ITEM/RANGE	NORMAL CONDITION*1	DIAGNOSTIC NOTE
Battery Voltage	Battery voltage: Min.: 0 V, Max.: 65.535 V	11 to 14 V: Idling	-
Accelerator Position	Accelerator pedal position: Min.: 0 %, Max.: 399.9 %	Actual accelerator pedal position	-
Accel Sens. No. 1 Volt %	Accelerator pedal position No. 1: Min.: 0%, Max.: 100%	10 to 22%: Accelerator pedal released 52 to 90%: Accelerator pedal fully depressed	-
Accel Sens. No. 2 Volt %	Accelerator pedal position No. 2: Min.: 0%, Max.: 100%	24 to 40%: Accelerator pedal released 68 to 100%: Accelerator pedal fully depressed	-
Accel Sensor Out No. 1	Accelerator pedal position sensor No. 1 voltage: Min.: 0 V, Max.: 4.98 V	-	ETCS service data
Accel Sensor Out No. 2	Accelerator pedal position sensor No. 2 voltage: Min.: 0 V, Max.: 4.98 V	-	ETCS service data
Accel Sensor Out No. 1	Accelerator pedal position sensor No. 1 voltage: Min.: 0 V, Max.: 5 V	0.5 to 1.1 V: Accelerator pedal released 2.6 to 4.5 V: Accelerator pedal fully depressed	-
Accel Sensor Out No. 2	Accelerator pedal position sensor No. 2 voltage: Min.: 0 V, Max.: 5 V	1.2 to 2.0 V: Accelerator pedal released 3.4 to 5.0 V: Accelerator pedal fully depressed	-
Accelerator Idle Position	Whether or not accelerator pedal position sensor detecting idle: ON or OFF	ON: Idling	-
Accel Fully Close Learn #1	Accelerator fully closed learning value No. 1: Min.: 0 deg, Max.:	-	ETCS service data

TESTER DISPLAY	MEASUREMENT ITEM/RANGE	NORMAL CONDITION*1	DIAGNOSTIC NOTE
	124.512 deg		
Accel Fully Close Learn #2	Accelerator fully closed learning value No. 2: Min.: 0 deg., Max.: 124.512 deg.	-	ETCS service data
Throttle Sensor Volt %	Throttle valve opening percentage according to throttle position sensor/ Min.: 0%, Max.: 100%	• 10 to 22%: Accelerator pedal released • 64 to 96%: Accelerator pedal fully depressed	Value calculated based on the voltage at terminal VTA1.
Throttle Sensor #2 Volt %	Throttle valve opening percentage according to throttle position sensor No. 2/ Min.: 0%, Max.: 100%	• 42 to 62%: Accelerator pedal released • 92 to 100%: Accelerator pedal fully depressed	Value calculated based on the voltage at terminal VTA2.
ST1	Brake pedal signal: ON or OFF	ON: Brake pedal depressed	-
System Guard	System guard: ON or OFF	-	ETCS service data
Open Side Malfunction	Open side malfunction: ON or OFF	-	ETCS service data
Throttle Idle Position	Whether or not throttle position sensor detecting idle: ON or OFF	• ON: Accelerator pedal released • OFF: Accelerator pedal fully depressed	-
Throttle Require Position	Throttle requirement position: Min.: 0 V, Max.: 5 V	0.5 to 1.1 V: Idling	-
Throttle Sensor Position*3	Throttle sensor positioning: Min.: 0%, Max.: 100%	• 0%: Accelerator pedal released • 50 to 80%: Accelerator pedal fully	Recognition value for throttle opening angle on ECM

TESTER DISPLAY	MEASUREMENT ITEM/RANGE	NORMAL CONDITION*1	DIAGNOSTIC NOTE
		depressed	
Throttle Position No.1	Throttle position sensor No. 1 output voltage: Min.: 0 V, Max.: 4.98 V	-	ETCS service data
Throttle Position No.2	Throttle position sensor No. 2 output voltage: Min.: 0 V, Max.: 4.98 V	-	ETCS service data
Throttle Position No.1	Throttle position No. 1 output voltage: Min.: 0 V, Max.: 5 V	• 0.5 to 1.1 V: Accelerator pedal released • 3.2 to 4.8 V: Accelerator pedal fully depressed • 0.6 to 1.4 V: Fail-safe operating	-
Throttle Position No.2	Throttle position No. 2 output voltage: Min.: 0 V, Max.: 5 V	• 2.1 to 3.1 V: Accelerator pedal released • 4.6 to 5.0 V: Accelerator pedal fully depressed • 2.1 to 3.1 V: Fail-safe operating	-
Throttle Position Command	Throttle position command value: Min.: 0 V, Max.: 4.9804 V	0.5 to 4.8 V	-
Throttle Sens Open Pos #1	Throttle sensor opener position No. 1: Min.: 0 V, Max.: 4.9804 V	0.6 to 1.4 V	ETCS service data

TESTER DISPLAY	MEASUREMENT ITEM/RANGE	NORMAL CONDITION*1	DIAGNOSTIC NOTE
Throttle Sens Open Pos #2	Throttle sensor opener position No. 2: Min.: 0 V, Max.: 4.9804 V	1.7 to 2.5 V	ETCS service data
Throttle Motor Current	Throttle actuator current: Min.: 0 A, Max.: 20 A	0 to 3.0 A: Idling	ETCS service data
Throttle Motor DUTY	Throttle motor: Min.: 0%, Max.: 100%	10 to 22%: Idling after engine warmed up	ETCS service data
Throttle Motor Current	Throttle actuator current: Min.: 0 A, Max.: 19.92 A	0 to 3.0 A: Idling	-
Throttle Motor Open Duty	Throttle actuator opening duty ratio: Min.: 0%, Max.: 100%	0 to 40%: Idling	When accelerator pedal depressed, duty ratio increased
Throttle Motor Close Duty	Throttle actuator closed duty ratio: Min.: 0%, Max.: 100%	0 to 40%: Idling	When accelerator pedal released quickly, duty ratio increased
Throttle Motor Duty (Open)	Throttle actuator duty ratio (open): Min.: 0%, Max.: 100%	0 to 40%: Idling	ETCS service data
Throttle Motor Duty (Close)	Throttle actuator duty ratio (close): Min.: 0%, Max.: 100%	0 to 40%: Idling	ETCS service data
Throttle Fully Close Learn	Throttle valve fully closed (learned value): Min.: 0 V, Max.: 5 V	0.4 to 1.0 V: Accelerator pedal released	-
+BM Voltage	+BM voltage: Min.: 0, Max.: 19.92 V	11 to 14 V: Ignition switch ON and system normal	ETCS service data
Actuator Power Supply	Actuator power supply ON or OFF	ON: Idling	-

TESTER DISPLAY	MEASUREMENT ITEM/RANGE	NORMAL CONDITION*1	DIAGNOSTIC NOTE
Injector (Port)	Injection period of No. 1 cylinder: Min.: 0 ms, Max.: 32.64 ms	1.0 to 3.0 ms: Idling	-
Injection Volum (Cylinder1)	Injection volume (Cylinder 1): Min.: 0 ml, Max.: 2.048 ml	0.05 to 0.15 ml: Idling	Quantity of fuel injection volume for 10 times
Fuel Pump/Speed Status	Fuel pump/status: ON or OFF	-	Active Test support data
Vacuum Pump	Key-off EVAP system leak detection pump status: ON or OFF	-	Active Test support data
EVAP (Purge) VSV	EVAP (Purge) VSV control duty: Min.: 0%, Max.: 100%	10 to 50%: Idling, under purge control	Order signal from ECM
Evap Purge Flow	Ratio of evaporative purge flow to intake air volume:: Min.: 0%, Max.: 102.4%	0 to 10%: Idling	Service data
Purge Density Learn Value	Learning value of purge density: Min.: -50, Max.: 350	-40 to 10: Idling	Service data
Vapor Pressure Pump	Vapor pressure: Min.: 33.853 kPa (253.897 mmHg), Max.: 125.596 kPa (941.97 mmHg)	Approximately 100 kPa (absolute): Ignition switch ON	EVAP system pressure monitored by canister pressure sensor
Vapor pressure (calculated)	Vapor pressure (calculated): Min.: -5.632 kPa (-42.24 mmHg), Max.: 715.264 kPa (5364.3 mmHg)	Approximately 100 kPa (absolute): Ignition switch ON	EVAP system pressure monitored by canister pressure sensor
EVAP System Vent Valve	key-off EVAP system vent valve status:	-	Active Test support data

TESTER DISPLAY	MEASUREMENT ITEM/RANGE	NORMAL CONDITION*1	DIAGNOSTIC NOTE
	ON or OFF		
EVAP Purge VSV	VSV status for EVAP control: ON or OFF	-	Active Test support data
Target Air-Fuel Ratio	Ratio compared to stoichiometric level: Min.: 0, Max.: 1.999	0.8 to 1.2: Idling	-
AF Lambda B1 S1	Short-term fuel trim associated with bank 2 sensor 1: Min.: 0, Max.: 1.999	• Value less than 1 (0.000 to 0.999) = RICH • Stoichiometric air-fuel ratio=1 • Value greater than 1 (1.001 to 1.999) = LEAN	-
AFS Voltage B1 S1	A/F sensor output voltage for bank 1 sensor 1: Min.: 0 V, Max.: 7.999 V	2.6 to 3.8 V: Idling, engine warmed up	Performing Control the Injection Volume or Control the Injection Volume for A/F Sensor function of Active Test enables technician to check output voltage of sensor
AFS Current B1 S1	Air fuel ratio sensor output current for bank 1 sensor 1: Min.: -128 mA, Max.: 127.99 mA	-0.5 to 0.5 mA: Idling, engine warmed up	Value becomes higher when fuel-cut executed under high engine speed
A/F Heater Duty #1	Air fuel ratio heater duty ratio for bank 1: Min.: 0 %, Max.: 399.9 %	0 to 100 %	-
O2S B1 S2	Heated oxygen sensor output voltage for bank 1 sensor 2: Min.: 0 V, Max.: 1.275 V	0.0 to 0.9 V: Driving at 44 mph (70 km/h)	Performing Control the Injection Volume or Control the Injection Volume for A/F Sensor function of Active Test enables technician to check output voltage of sensor
O2S Impedance B1S2	Sub heated oxygen sensor impedance (bank 1 sensor 2): Min.: 0 Ω, Max.: 21247.68 Ω	5 to 15000 Ω: After driving for 10 minutes or more in urban area	-

TESTER DISPLAY	MEASUREMENT ITEM/RANGE	NORMAL CONDITION*1	DIAGNOSTIC NOTE
O2 Heater B1S2	Heated oxygen sensor heater for bank 1 sensor 2: Active or Not Act	-	-
O2 Heater Curr Val B1S2	Heated oxygen sensor current for bank 1 sensor 2: Min.: 0 A, Max.: 4.9 A	-	-
Short FT #1	Short-term fuel trim of bank 1: Min.: -100%, Max.: 99.2%	-20 to 20%	Short-term fuel compensation used to maintain air-fuel ratio at stoichiometric air-fuel ratio
Long FT #1	Long-term fuel trim of bank 1: Min.: -100%, Max.: 99.2%	-20 to 20%	Overall fuel compensation carried out long-term to compensate continual deviation of short-term fuel trim from central value
Total FT #1	Total fuel trim of bank 1 Average value for fuel trim system of bank 1: Min.: -0.5, Max.: 0.496	-0.28 to 0.2: Idling	-
Fuel System Status #1	Fuel system status (bank 1): OL or CL or OLDrive or OLFault or CLFault	CL: Idling after warming up	• OL (Open Loop): Has not yet satisfied conditions to go closed loop • CL (Closed Loop): Using heated oxygen sensor as feedback for fuel control • OLDrive: Open loop due to driving conditions (fuel enrichment) • OLFault: Open loop due to detected system fault • CLFault: Closed loop but heated oxygen

TESTER DISPLAY	MEASUREMENT ITEM/RANGE	NORMAL CONDITION*1	DIAGNOSTIC NOTE
			sensor, which used for fuel control malfunctioning
Fuel System Status #2	Fuel system status (bank 2): OL or CL or OLDrive or OLFault or CLFault	CL: Idling after warming up	• OL (Open Loop): Has not yet satisfied conditions to go closed loop • CL (Closed Loop): Using air fuel ratio sensor as feedback for fuel control • OLDrive: Open loop due to driving conditions (fuel enrichment) • OLFault: Open loop due to detected system fault • CLFault: Closed loop but air fuel ratio sensor, which used for fuel control malfunctioning
IGN Advance	Ignition timing advance for No. 1 cylinder: Min.: -64 deg., Max.: 63.5 deg.	BTDC 0 to 15 deg: Idling	-
Knock Feedback Value	Feedback value of knocking: Min.: -64°CA, Max.: 1984°CA	-20 to 0°CA: Driving at 44 mph (70 km/h)	Service data
Knock Correct Learn Value	Correction learning value of knocking: Min.: -64°CA, Max.: 1984°CA	0 to 20°CA: Driving at 44 mph (70 km/h)	Service data
VVT Control Status #1	VVT control (bank 1) status: ON or OFF	-	Active Test support data

TESTER DISPLAY	MEASUREMENT ITEM/RANGE	NORMAL CONDITION*1	DIAGNOSTIC NOTE
VVT Aim Angle #1*2	VVT aim angle (bank 1): Min.: 0%, Max.: 100%	0 to 100%	VVT duty signal value during intrusive operation
VVT Change Angle #1*2	VVT change angle (bank 1): Min.: 0°FR, Max.: 60°FR	0 to 56°FR: Idling	Displacement angle during intrusive operation
VVT OCV Duty #1*2	VVT OCV operation duty: Min.: 0%, Max.: 100%	0 to 100%	Requested duty value for intrusive operation
Catalyst Temp B1 S1	Catalyst temperature (associated sensor 1): Min.: -40°C (-40°F), Max.: 6513.5°C (11756°F)	Close to catalyst inlet temperature	-
Catalyst Temp B1 S2	Catalyst temperature (associated sensor 2): Min.: -40°C (-40°F), Max.: 6513.5°C (11756°F)	Close to catalyst outlet temperature	-
Starter Signal	Starter signal (STA terminal input status): ON or OFF	ON: Cranking	-
Neutral Position SW Signal*4	Park/neutral position switch status for automatic transmission: ON or OFF	ON: Shift lever in P or N position	-
Clutch Switch	Clutch pedal switch assembly status: ON or OFF	OFF: Clutch pedal released ON: Clutch pedal fully depressed	-
Stop Light Switch	Stop light switch status: ON or OFF	ON: Brake pedal depressed	-
A/C Signal	A/C switch status: ON or OFF	ON: A/C ON	-

TESTER DISPLAY	MEASUREMENT ITEM/RANGE	NORMAL CONDITION*1	DIAGNOSTIC NOTE
Closed Throttle Position SW	Closed throttle position switch: ON or OFF	• ON: Throttle fully closed • OFF: Throttle open	-
Fuel Cut Condition	Fuel-cut condition: ON or OFF	ON: Any fuel-cut operation executed	-
Immobiliser Communication	Immobiliser communication: ON or OFF	-	OFF: Communication malfunctioning, or engine immobiliser system set ON: Communication normal
Check Mode	Check mode: ON or OFF	ON: Check mode ON	INFO
SPD Test Result	Check mode result for vehicle speed sensor: Compl or Incmpl	-	-
Misfire Test Result	Check mode result for misfire monitor: Compl or Incmpl	-	-
OXS1 Test Result	Check mode result for heated oxygen sensor (bank 1): Compl or Incmpl	-	-
A/F Test Results #1	Check mode result for air fuel ratio sensor (bank 1): Compl or Incmpl	-	-
Complete Parts Monitor	Comprehensive component monitor: Not Avl or Avail	-	-
Fuel System Monitor	Fuel system monitor: Not Avl or Avail	-	-
Misfire Monitor	Misfire monitor: Not Avl or Avail	-	-
EGR/VVT Monitor	EGR/VVT monitor: Not Avl or Avail	-	-
EGR/VVT Monitor	EGR/VVT monitor: Compl or Incmpl	-	-

TESTER DISPLAY	MEASUREMENT ITEM/RANGE	NORMAL CONDITION*1	DIAGNOSTIC NOTE
O2S(A/FS) Heater Monitor	O2S (A/FS) heater monitor: Not Avl or Avail	-	-
O2S(A/FS) Heater Monitor	O2S (A/FS) heater monitor: Compl or Incmpl	-	-
O2S(A/FS) Monitor	O2S (A/FS) monitor: Not Avl or Avail	-	-
O2S(A/FS) Monitor	O2S (A/FS) monitor: Compl or Incmpl	-	-
A/C Monitor	A/C monitor: Not Avl or Avail	-	-
A/C Monitor	A/C monitor: Compl or Incmpl	-	-
2nd Air Monitor	2nd Air monitor: Not Avl or Avail	-	-
2nd Air Monitor	2nd Air monitor: Compl or Incmpl	-	-
EVAP Monitor	EVAP monitor: Not Avl or Avail	-	-
EVAP Monitor	EVAP monitor: Compl or Incmpl	-	-
Heated Catalyst Monitor	Heated catalyst monitor: Not Avl or Avail	-	-
Heated Catalyst Monitor	Heated catalyst monitor: Compl or Incmpl	-	-
Catalyst Monitor	Catalyst monitor: Not Avl or Avail	-	-
Catalyst Monitor	Catalyst monitor: Compl or Incmpl	-	-
Component Monitor ENA	Comprehensive component monitor: Unable or Enable	-	-
Component Monitor CMPL	Comprehensive component monitor: Compl or Incmpl	-	-

TESTER DISPLAY	MEASUREMENT ITEM/RANGE	NORMAL CONDITION*1	DIAGNOSTIC NOTE
Fuel System Monitor ENA	Fuel system monitor: Unable or Enable	-	-
Fuel System Monitor CMPL	Fuel system monitor: Compl or Incmpl	-	-
Misfire Monitor ENA	Misfire monitor: Unable or Enable	-	-
Misfire Monitor CMPL	Misfire monitor: Compl or Incmpl	-	-
EGR/VVT Monitor ENA	EGR monitor: Unable or Enable	-	-
EGR/VVT Monitor CMPL	EGR monitor: Compl or Incmpl	-	-
Heater Monitor ENA	O2S (A/FS) heater monitor: Unable or Enable	-	-
Heater Monitor CMPL	O2S (A/FS) heater monitor: Compl or Incmpl	-	-
O2S(A/FS) Monitor ENA	O2S (A/FS) monitor: UNABLE or ENABLE	-	-
O2S(A/FS) Monitor CMPL	O2S (A/FS) monitor: Compl or Incmpl	-	-
A/C Monitor ENA	A/C monitor: Unable or Enable	-	-
A/C Monitor CMPL	A/C monitor: Compl or Incmpl	-	-
2nd Air Monitor ENA	2nd air monitor: Unable or Enable	-	-
2nd Air Monitior CMPL	2nd air monitor: Compl or Incmpl	-	-
EVAP Monitor ENA	EVAP monitor: Unable or Enable	-	-
EVAP Monitor CMPL	EVAP monitor: Compl or Incmpl	-	-
Heated Cat Monitor ENA	Heated catalyst monitor: Unable or Enable	-	-

TESTER DISPLAY	MEASUREMENT ITEM/RANGE	NORMAL CONDITION*1	DIAGNOSTIC NOTE
Heated Cat Monitor CMPL	Heated catalyst monitor: Compl or Incmpl	-	-
Catalyst Monitor ENA	Catalyst monitor: Unable or Enable	-	-
Catalyst Monitor CMPL	Catalyst monitor: Compl or Incmpl	-	-
TC Terminal	TC terminal status: ON or OFF	-	-
# Codes (Include History)	Number of emission related DTCs	0: No emission related DTC detected	-
MIL	MIL status: ON or OFF	ON: MIL ON	-
MIL ON Run Distance	Distance traveled since MIL turned ON: Min.: 0 km (0 mile), Max.: 65535 km (40721 mile)	Distance since DTC detected	-
Running Time from MIL ON	Running time since MIL turned ON: Min.: 0 min, Max.: 65535 min	Equivalent to running time since MIL turned ON	-
Time after DTC Cleared	Time since DTCs cleared: Min.: 0 min., Max.: 65535 min.	Equivalent to time since DTCs erased	-
Distance from DTC Cleared	Distance traveled since DTCs cleared: Min.: 0 km (0 mile), Max.: 65535 km (40721 mile)	Equivalent to distance driven since DTCs erased	-
Warmup Cycle Cleard DTC	Warm-up cycles since DTCs cleared: Min.: 0, Max.: 255	-	Number of warm-up cycles since DTCs cleared
Dist Batt Cable Disconnect	Distance from battery cable disconnected: Min.: 0 km, Max.: 65535 km	-	-

TESTER DISPLAY	MEASUREMENT ITEM/RANGE	NORMAL CONDITION*1	DIAGNOSTIC NOTE
IG OFF Elapsed Time	Time after ignition switch off: Min.: 0 min, Max.: 655350 min	-	-
OBD Requirements	OBD requirement	OBD2	-
Number of Emission DTC	Emission related DTCs	-	Number of emission related DTCs
TC and TE1	TC and CG (TE1) terminals of DLC3: ON or OFF	-	Active Test support data
Ignition Trig. Count	Ignition counter to calculated misfire rate: Min.: 0, Max.: 800	0 to 400	-
Cylinder #1 Misfire Count	Misfire ratio of cylinder 1: Min.: 0, Max.: 255	0	-
Cylinder #2 Misfire Count	Misfire ratio of cylinder 2: Min.: 0, Max.: 255	0	-
Cylinder #3 Misfire Count	Misfire ratio of cylinder 3: Min.: 0, Max.: 255	0	-
Cylinder #4 Misfire Count	Misfire ratio of cylinder 4: Min.: 0, Max.: 255	0	-
All Cylinders Misfire Count	All cylinders misfire rate: Min.: 0, Max.: 255	0	-
Misfire RPM	Average of engine speed when misfire occurs: Min.: 0 rpm, Max.: 6375 rpm	0 rpm: Misfire 0	-
Misfire Load	Average of engine load when misfire occurred: Min.: 0 g/rev, Max.: 3.98 g/rev	0 g/rev: Misfire 0	-

TESTER DISPLAY	MEASUREMENT ITEM/RANGE	NORMAL CONDITION*1	DIAGNOSTIC NOTE
Misfire Margin	Margin to detect engine misfire: Min.: -100%, Max.: 99.22%	-100 to 99.22%	Misfire detection margin
Catalyst OT MF F/C	Catalyst overheat misfire prevention fuel cut function availability: Not Avl or Avail	Avail: Catalyst overheat misfire prevention fuel cut function available Not Avl: Catalyst overheat misfire prevention fuel cut function not available	Service data
Cat OT MF F/C History	Catalyst overheat misfire prevention fuel cut function history: ON or OFF	ON: Fuel cut operation history exists	Service data
Cat OT MF F/C Cylinder#1	Display of fuel cut operation in No. 1 cylinder (if certain level of misfire malfunction is detected): ON or OFF	ON: Fuel cut is operating	-
Cat OT MF F/C Cylinder#2	Display of fuel cut operation in No. 2 cylinder (if certain level of misfire malfunction is detected): ON or OFF	ON: Fuel cut is operating	-
Cat OT MF F/C Cylinder#3	Display of fuel cut operation in No. 3 cylinder (if certain level of misfire malfunction is detected): ON or OFF	ON: Fuel cut is operating	-
Cat OT MF F/C Cylinder#4	Display of fuel cut operation in No. 4 cylinder (if certain level of misfire malfunction is detected): ON or OFF	ON: Fuel cut is operating	-

TESTER DISPLAY	MEASUREMENT ITEM/RANGE	NORMAL CONDITION*1	DIAGNOSTIC NOTE
Electric Fan Motor	Electric cooling fan motor: ON or OFF	ON: Electric cooling fan motor operating	Active Test support data
Idle Fuel Cut Prohibit	Idle fuel cut prohibit: ON or OFF	-	-
Idle Fuel Cut	Fuel cut idle: ON or OFF	ON: Fuel cut operating	Idle Fuel Cut = "ON" when throttle valve fully closed and engine speed over 2800 rpm
FC TAU	Fuel cut TAU (Fuel cut during very light load): ON or OFF	ON: Fuel cut operating	Fuel cut being performed under very light load to prevent engine combustion from becoming incomplete
Electrical Load Signal 1	Electrical load signal 1: ON or OFF	ON: Headlights or defogger turned ON	-
Electrical Load Signal 3	Electrical load signal 3: ON or OFF	ON: Headlights or defogger turned ON	-
Model Code	Model code	-	Identifying model code: AZE15#
Engine Type	Engine type	-	Identifying engine type: 2AZFE
Cylinder Number	Cylinder number: Min.: 0, Max.: 255	-	Identifying cylinder number: 4
Transmission Type	Transmission type	-	Identifying transmission type: 4AT or MT
Destination	Destination	-	Identifying destination: A (America)
Model Year	Model year: Min.: 1900, Max.: 2155	-	Identifying model year: 200#
System Identification	System identification	-	Identifying engine system: GASOLINE (gasoline engine)
Engine Speed of Cyl #1	Engine RPM for cylinder 1: Min.: 0 rpm, Max.: 25600 rpm	-	Output only when Check the Cylinder Compression performed using Active Test 51199 rpm: Not performed Active Test

TESTER DISPLAY	MEASUREMENT ITEM/RANGE	NORMAL CONDITION*1	DIAGNOSTIC NOTE
Engine Speed of Cyl #2	Engine RPM for cylinder 2: Min.: 0 rpm, Max.: 25600 rpm	-	Output only when Check the Cylinder Compression performed using Active Test 51199 rpm: Not performed Active Test
Engine Speed of Cyl #3	Engine RPM for cylinder 3: Min.: 0 rpm, Max.: 25600 rpm	-	Output only when Check the Cylinder Compression performed using Active Test 51199 rpm: Not performed Active Test
Engine Speed of Cyl #4	Engine RPM for cylinder 4: Min.: 0 rpm, Max.: 25600 rpm	-	Output only when Check the Cylinder Compression performed using Active Test 51199 rpm: Not performed Active Test
Av Engine Speed of All Cyl	Engine RPM for all cylinders: Min.: 0 rpm, Max.: 25600 rpm	-	Output only when Check the Cylinder Compression performed using Active Test 51199 rpm: Not performed Active Test

HINT:

- *1: If no idling conditions are specified, the shift lever should be in N or P, and the A/C switch and all accessory switches should be OFF.
- *2: Values are only displayed when performing the Active Tests: Control the VVT Linear (Bank1). For other Active Tests, the value will be 0.
- *3: Excluding throttle valve operating percentage due to Idle Speed Control (ISC).
- *4: Automatic Transaxle only

2. ACTIVE TEST

HINT:

Using the Techstream to perform Active Tests allows relays, VSVs, actuators and other items to be operated without removing any parts. This non-intrusive functional inspection can be very useful because intermittent operation may be discovered before parts or wiring is disturbed. Performing Active Tests early in troubleshooting is one way to save diagnostic time. Data List information can be displayed while performing Active Tests.

(a) Warm up the engine.

(b) Turn the ignition switch off.

(c) Connect the Techstream to the DLC3.

(d) Turn the ignition switch to ON.

(e) Turn the Techstream on.

(f) Enter the following menus: Powertrain / Engine and ECT / Active Test.

(g) According to the display on the Techstream, perform the Active Test.

TESTER DISPLAY	TEST PART	CONTROL RANGE	DIAGNOSTIC NOTE
Control the Injection Volume	Change injection volume	-12.5 to 24.8%	• All injectors tested at the same time • Perform test at less than 3000 rpm • Injection volume can be changed in 1% graduations within control range
Control the Injection Volume for A/F Sensor	Change injection volume	Lower by 12.5% or increase by 24.8%	• Perform test at less than 3000 rpm • Control the Injection Volume for A/F Sensor enables checking and graphing of A/F (Air Fuel Ratio) sensor and Heated Oxygen (HO2) sensor voltage outputs • To conduct test, enter the following menus: Active Test / Control the Injection Volume for A/F Sensor / Data List / A/F Control System / AFS Voltage B1 S1 and O2S B1 S2
Activate the VSV for EVAP Control	Activate purge VSV control	ON/OFF	-
Control the Fuel Pump / Speed	Activate fuel pump (C/OPN Relay)	ON/OFF	Test possible when following conditions met: • Ignition switch ON • Engine is stopped
Connect the TC and TE1	Turn on and off TC and CG (TE1) connection	ON/OFF	• ON: TC and TE1 connected • OFF: TC and TE1 disconnected
Control the Idle Fuel Cut Prohibit	Prohibit idling fuel cut control	ON/OFF	Idling fuel-cut turned ON when throttle valve fully closed and engine speed over 2800 rpm
Prohibit the Catalyst OT Misfire prevent F/C	Prohibit catalyst overheat malfunction prevention fuel cut operation during	ON/OFF ON: Fuel cut prohibited	Confirm that vehicle stopped and engine speed 3000 rpm or less

TESTER DISPLAY	TEST PART	CONTROL RANGE	DIAGNOSTIC NOTE
	misfire		
Control the Electric Cooling Fan	Control electric cooling fan motor	ON/OFF	-
Control the ETCS Open/Close Slow Speed	Throttle actuator	Close/Open	Test possible when following conditions met: • Ignition switch ON • Engine is stopped • Fully depressing accelerator pedal (APP: 58 degrees or more)
Control the ETCS Open/Close Fast Speed	Throttle actuator	Close/Open	
Control the VVT Linear (Bank1)	Control VVT (bank 1)	Between -128 and 127%	• Engine stall or rough idle when VVT actuator operated by 100%. • Test possible during idle.
Control the VVT System (Bank1)	Turn on and off OCV (Camshaft Timing Oil Control Valve)	ON/OFF	• Engine stalls or idles roughly when OCV turned ON • Normal engine running or idling when OCV OFF • Test possible during idle.
Activate the Vacuum Pump	Leak detection pump	ON/OFF	-
Activate the VSV for Vent Valve	Vent valve	ON/OFF	-
Control the Cylinder #1 Fuel Cut	Cylinder #1 injector fuel cut	ON/OFF	Test possible while vehicle stopped and engine idling *1
Control the Cylinder #2 Fuel Cut	Cylinder #2 injector fuel cut	ON/OFF	
Control the Cylinder #3 Fuel Cut	Cylinder #3 injector fuel cut	ON/OFF	
Control the Cylinder #4 Fuel Cut	Cylinder #4 injector fuel cut	ON/OFF	
Control the All Cylinder Fuel Cut	All cylinder fuel cut	ON/OFF	

TESTER DISPLAY	TEST PART	CONTROL RANGE	DIAGNOSTIC NOTE
Check the Cylinder Compression *2	Check the cylinder compression pressure (measuring engine speed for each cylinder)	ON/OFF	Fuel injection and ignition stop in all cylinders

NOTICE:

***1: If the display of the Data List's Catalyst OT MF F/C item is Not Avl, perform this Active Test with the vehicle stopped and the engine idling. If the display of the Data List's Catalyst OT MF F/C item is Avail, perform this Active Test as described below.**

1. Stop the engine and turn the ignition switch to ON to turn Control the Cylinder #1 Fuel Cut (to #4 Fuel Cut) ON.
2. Start the engine.

HINT:

***2: When performing the Active Test item "Check the Cylinder Compression" and then cranking the engine, the ECM stops the fuel injection and ignition, and measures the engine speed for each cylinder.**

If one cylinder's speed is higher than the others, that cylinder's compression pressure can be concluded to be lower than the others.

1. Warm up the engine.
2. Turn the ignition switch off.
3. Connect the Techstream to the DLC3.
4. Turn the ignition switch to ON.
5. Turn the Techstream on.
6. Enter the following menus: Powertrain / Engine and ECT / Active Test / Check the Cylinder Compression.
7. Enter the following menus: Compression / Engine Speed of Cyl #1 to #4, Av Engine Speed of All Cyl
8. Press the RIGHT or LEFT button to change the Check the Cylinder Compression to ON.

   HINT:

   Fuel injection and ignition for all cylinders are prohibited at this time, and each cylinder's engine speed measurement will enter standby mode.

9. Crank the engine until the monitor item values "Engine speed of Cyl #1 to #4" and "Av Engine Speed of All Cyl" change.
10. Monitor the engine speed (Engine Speed of Cyl #1 to #4, Av Engine Speed of All Cyl) displayed on the Techstream.

    HINT:

    The Techstream displays the values to be extremely high before cranking the engine. Each cylinder's engine speed is measured while cranking the engine and then the Techstream displays the actual engine speed values.

    NOTICE:

    - The Active Test item "Check the Cylinder Compression" will automatically turn off 255

seconds after the Active Test is turned on.

- When the "Check the Cylinder Compression" is OFF and the engine is cranked, the engine will start.
- If the "Check the Cylinder Compression" test needs to be performed again after the speed measurements have been performed once, press EXIT to return to the Active Test menu screen. Then perform the Check the Cylinder Compression test again.
- Use a fully-charged battery.

3. SYSTEM CHECK

HINT:

Performing a System Check in the Utility menu enables the system, which consists of multiple actuators, to be operated without removing any parts. In addition, it can show whether or not any DTCs are set, and can detect potential malfunctions in the system.

(a) Connect the Techstream to the DLC3.

(b) Turn the ignition switch to ON.

(c) Turn the Techstream on.

(d) Enter the following menus: Powertrain / Engine and ECT / Utility.

(e) Perform the System Check by referring to the table below.

TESTER DISPLAY	TEST PART	CONTROL RANGE	DIAGNOSTIC NOTE
Evaporative System Check (Automatic Mode)	Perform 5 steps in order to operate EVAP key-off monitor automatically	35°C (95°F) or less	• If no DTCs in Pending after performing this test, system functioning normally • Refer to EVAP system INFO
Evaporative System Check (Manual Mode)	Perform 5 steps in order to operate EVAP key-off monitor manually	35°C (95°F) or less	• Used to detect malfunctioning parts • Refer to EVAP system INFO

Last Modified: 3-10-2010	6.4 D	**From:** 200901
Model Year: 2010	**Model:** Corolla	**Doc ID:** RM000000PDJ0D4X
Title: 2AZ-FE ENGINE CONTROL: SFI SYSTEM: DIAGNOSIS SYSTEM (2010 Corolla)		

DIAGNOSIS SYSTEM

1. DESCRIPTION

When troubleshooting OBD II (On-Board Diagnostics) vehicles, the Techstream (complying with SAE J1987) must be connected to the DLC3 (Data Link Connector 3) of the vehicle. Various data in the vehicle's ECM (Engine Control Module) can be then read.

OBD II regulations require that the vehicle's on-board computer illuminate the MIL (Malfunction Indicator Lamp) on the instrument panel when the computer detects a malfunction in:



a. The emission control system and components.
b. The powertrain control components (which affect vehicle emissions).
c. The computer itself.

In addition, the applicable DTCs prescribed by SAE J2012 are recorded in the ECM memory. If the malfunction does not recur in 3 consecutive trips, the MIL turns off automatically but the DTCs remain recorded in the ECM memory.

To check the DTCs, connect the Techstream to the DLC3. The Techstream displays DTCs, freeze frame data, and a variety of the engine data. The DTCs and freeze frame data can be erased with the Techstream. In order to enhance OBD function on vehicles and develop the Off-Board diagnosis system, Controller Area Network (CAN) communication is used in this system. CAN is a network which uses a pair of data transmission lines spanning multiple computers and sensors. It allows for high speed communications between the systems and simplification of the wire harness connections.

2. NORMAL MODE AND CHECK MODE

The diagnosis system operates in normal mode during normal vehicle use. In normal mode, 2 trip detection logic is used to ensure accurate detection of malfunctions. Check mode is also available as an option for technicians. In check mode, 1 trip detection logic is used for simulating malfunction symptoms and increasing the system's ability to detect malfunctions, including intermittent problems (the Techstream only).

3. 2 TRIP DETECTION LOGIC

When a malfunction is first detected, the malfunction is temporarily stored in the ECM memory (1st trip). If the same malfunction is detected during the next subsequent drive cycle, the MIL is illuminated (2nd trip).

4. DLC3 (Data Link Connector 3)

(a) Check DLC3 INFO .

5. FREEZE FRAME DATA

The ECM records vehicle and driving condition information as freeze frame data the moment a DTC is stored. When troubleshooting, freeze frame data can be helpful in determining whether the vehicle was running or stopped, whether the engine was warmed up or not, whether the air-fuel ratio was lean or rich, as well as other data recorded at the time of a malfunction.

6. BATTERY VOLTAGE

Standard voltage:
11 to 14 V

If voltage is below 11 V, replace or recharge the battery before proceeding.

7. MIL (Malfunction Indicator Lamp)

(a) The MIL is illuminated when the ignition switch is first turned to ON (the engine is not running).

(b) The MIL should turn OFF when the engine is started. If the MIL remains illuminated, the diagnosis system has detected a malfunction or abnormality in the system.

HINT:

If the MIL does not illuminate when the ignition switch is first turned to ON, check the MIL circuit INFO .

8. ALL READINESS

HINT:

- With "ALL READINESS" you can check whether or not the DTC judgment has been completed by using the Techstream.
- You should check "ALL READINESS" after simulating malfunction symptoms or for validation after finishing repairs.

(a) Connect the Techstream to the DLC3.

(b) Turn the ignition switch to ON.

(c) Turn the Techstream on.

(d) Turn the ignition switch off.

(e) Turn the ignition switch to ON and turn the Techstream on.

(f) Clear the DTCs INFO .

(g) Perform the DTC judgment driving pattern to run the DTC judgment.

(h) Enter the following menus: Powertrain / Engine / Utility / All Readiness.

(i) Input the DTCs to be confirmed.

(j) Check the DTC judgment result.

TECHSTREAM DISPLAY	DESCRIPTION
NORMAL	• DTC judgment completed • System normal

TECHSTREAM DISPLAY	DESCRIPTION
ABNORMAL	• DTC judgment completed • System abnormal
INCOMPLETE	• DTC judgment not completed • You should perform driving pattern after confirming DTC enabling conditions
UNKNOWN	• Unable to perform DTC judgment • Number of DTCs which do not fulfill DTC preconditions has reached ECU's memory limit

Last Modified: 3-10-2010	6.4 D	**From:** 200901
Model Year: 2010	**Model:** Corolla	**Doc ID:** RM000000PDK0BZX
Title: 2AZ-FE ENGINE CONTROL: SFI SYSTEM: DTC CHECK / CLEAR (2010 Corolla)		

DTC CHECK / CLEAR

NOTICE:

When the diagnosis system is changed from normal mode to check mode or vice versa, all DTCs and freeze frame data recorded in normal mode are erased. Before changing modes, always check and make a note of DTCs and freeze frame data.

HINT:

- DTCs which are stored in the ECM can be displayed on the Techstream. The Techstream can display current, pending and permanent DTCs.
- If a malfunction is detected during the current driving cycle, current and permanent DTCs are stored.
- Some DTCs are not stored if the ECM does not detect the same malfunction again during a second consecutive driving cycle. However, such malfunctions, detected on only one occasion, are stored as pending DTCs.
- Current and pending DTCs can be cleared by using the Techstream or by disconnecting the cable from the negative battery terminal. However, permanent DTCs cannot be cleared using either of these two methods.
- After clearing current DTCs using the Techstream (or by disconnecting the cable from the negative battery terminal), permanent DTCs can be cleared when the system is determined to be normal for the relevant DTCs and then the universal trip is performed. The driving pattern to obtain a normal judgment is described under the "CONFIRMATION DRIVING PATTERN" for the respective DTC.

2 Trip Detection Examples

Pending DTC	Store condition	Malfunction detected
	Clear condition	System determined to be normal or DTCs cleared using Techstream or Cable disconnected from negative battery terminal
Current DTC	Store condition	Malfunction detected (2nd trip)
	Clear condition	No malfunctions in 40 driving cycles or DTCs cleared using Techstream or Cable disconnected from negative battery terminal
Permanent DTC	Store condition	Malfunction detected (2nd trip)

	Clear condition	Ignition switch turned to ON after normal judgment obtained in 3 consecutive driving cycles or After DTCs cleared using Techstream or cable disconnected from negative battery terminal, normal judgment obtained and universal trip performed (not for misfire and fuel system DTCs) or After DTCs cleared using Techstream or cable disconnected from negative battery terminal, malfunction not detected when universal trip driving performed (misfire and fuel system DTCs)
MIL	ON	Malfunction detected (2nd trip)
	OFF	Ignition switch turned to ON after normal judgment obtained in 3 consecutive driving cycles or DTCs cleared using Techstream or Cable disconnected from negative battery terminal

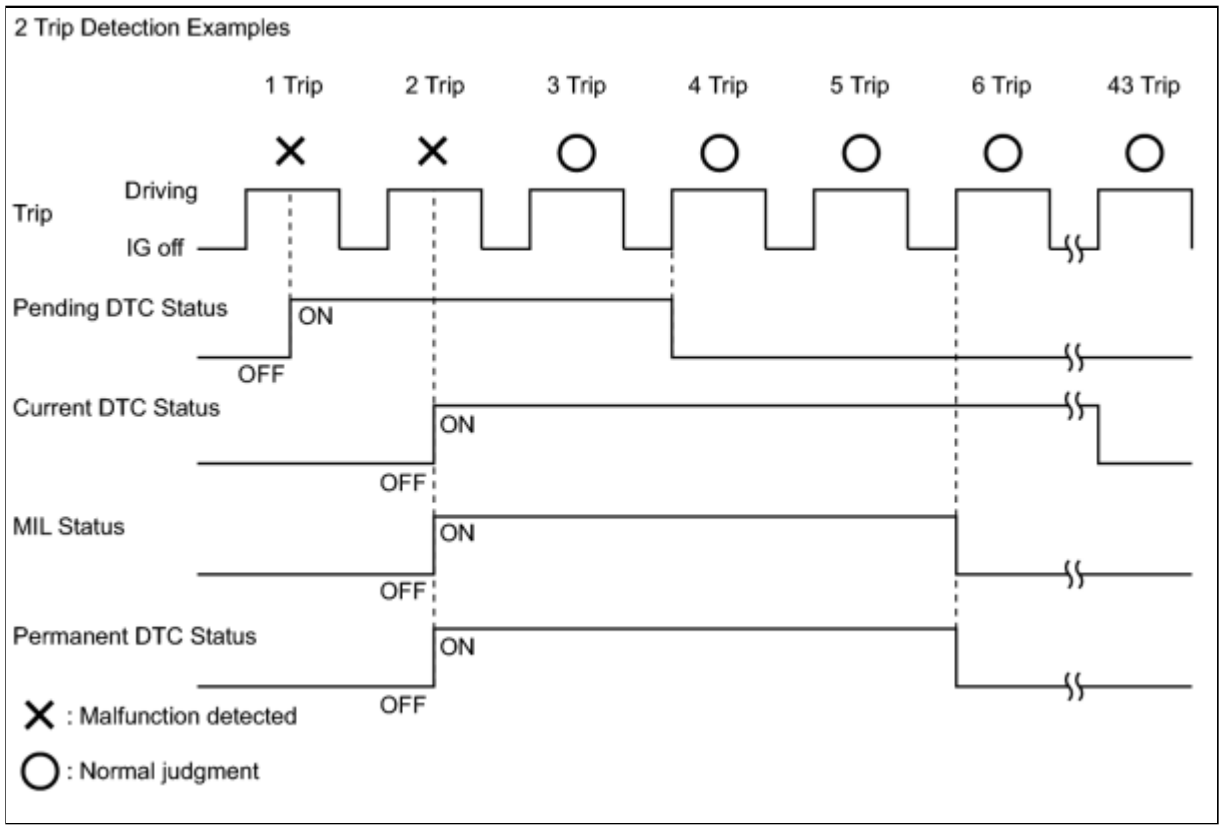

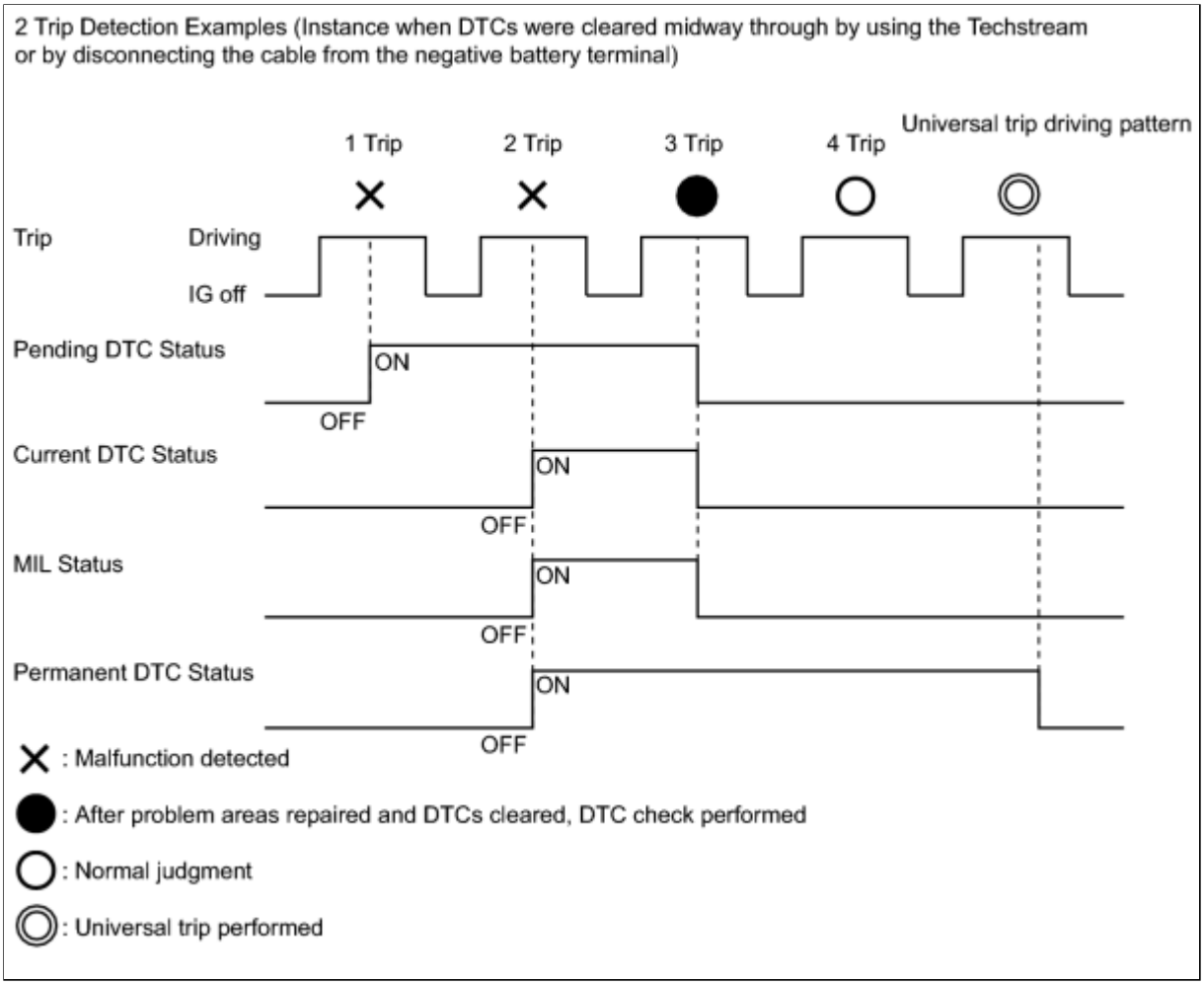

HINT:

- Obtaining a normal judgment and performing a universal trip driving pattern can be done in the same driving cycle or in different driving cycles.
- It is unnecessary to obtain a normal judgment if the DTCs are misfire or fuel system DTCs.

1. CHECK DTC

(a) Connect the Techstream to the DLC3.

(b) Turn the ignition switch to ON.

(c) Turn the Techstream on.

(d) Enter the following menus: Powertrain / Engine and ECT / Trouble Codes.

(e) Check the DTC(s) and freeze frame data, and then save or write them down.

(f) Check the details of the DTC(s) INFO .

2. CLEAR DTC (Pending and Current DTC)

(a) Connect the Techstream to the DLC3.

(b) Turn the ignition switch to ON.

(c) Turn the Techstream on.

(d) Enter the following menus: Powertrain / Engine and ECT / Trouble Codes.

(e) Clear the DTCs.

3. CLEAR DTC (Pending and Current DTC without using Techstream)

(a) Perform either of the following operations:

(1) Disconnect the cable from the negative (-) battery terminal for more than 1 minute.

(2) Remove the EFI MAIN and ETCS fuses from the engine room relay block located inside the engine compartment for more than 1 minute.

4. CLEAR PERMANENT DTC

HINT:

Even if the following procedure is not performed, permanent DTCs are cleared by obtaining a normal judgment during 3 consecutive driving cycles.

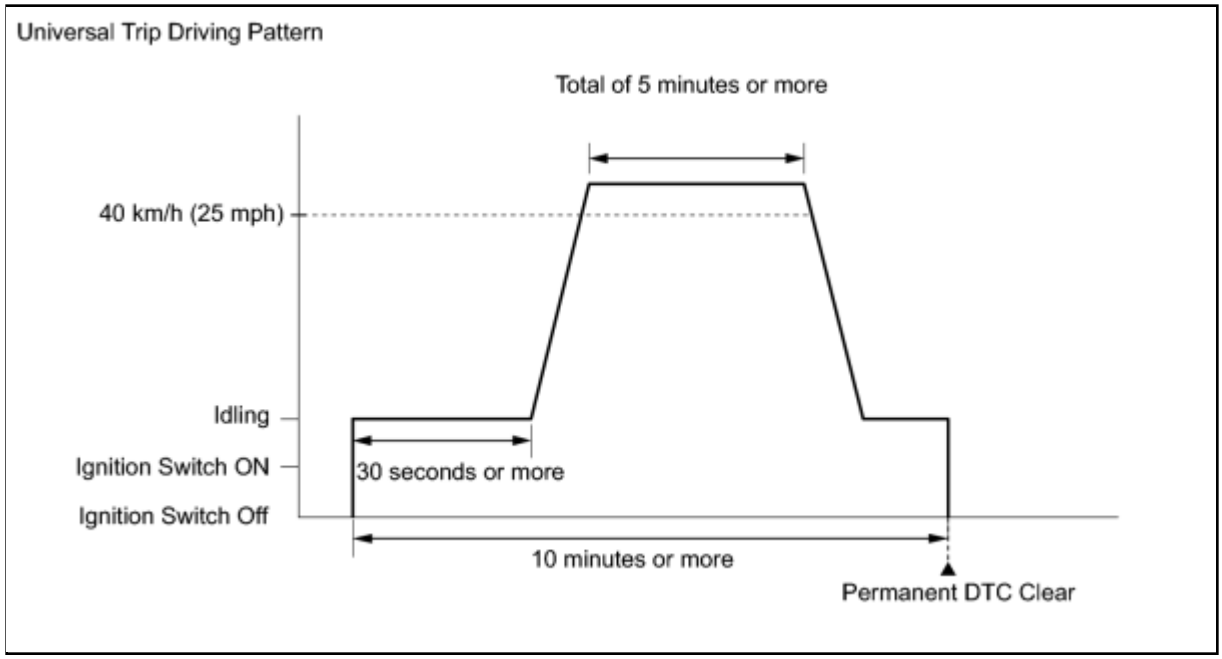

(a) Connect the Techstream to the DLC3.

(b) Turn the ignition switch to ON.

(c) Turn the Techstream on.

(d) Enter the following menus: Powertrain / Engine and ECT / Trouble Codes.

(e) Check if permanent DTCs are stored.

HINT:

If permanent DTCs are not output, it is not necessary to continue this procedure.

(f) Clear the DTCs.

(g) Perform the respective confirmation driving patterns in order to obtain a normal judgment for the output DTCs.

HINT:

- Confirmation driving patterns do not need to be performed for misfire and fuel system DTCs.
- For the confirmation driving pattern, refer to the procedures for the relevant DTC INFO .

(h) Perform the universal trip.

HINT:

The driving pattern to obtain a normal judgment and the universal trip driving can be performed consecutively in the same driving cycle.

1. Idle the engine for 30 seconds or more.
2. Drive the vehicle at 40 km/h (25 mph) or more for a total of 5 minutes or more.

   HINT:

   It is possible to complete the drive pattern even if the vehicle decelerates to less than 40 km/h (25 mph) during the driving cycle provided that the vehicle is driven at 40 km/h (25 mph) or more for a total of 5 minutes.

3. Allow 10 minutes or more to elapse from the time the engine is started.

(i) Enter the following menus: Powertrain / Engine and ECT / Trouble Codes.

(j) Check that the permanent DTCs have been cleared.

HINT:

The permanent DTCs are cleared when the universal trip is completed.



Last Modified: 3-10-2010	6.4 D	**From:** 200901
Model Year: 2010	**Model:** Corolla	**Doc ID:** RM000000PDS0B0X
Title: 2AZ-FE ENGINE CONTROL: SFI SYSTEM: FREEZE FRAME DATA (2010 Corolla)		

FREEZE FRAME DATA

1. DESCRIPTION

The ECM records vehicle and driving condition information as freeze frame data the moment a DTC is stored. When troubleshooting, freeze frame data can be helpful in determining whether the vehicle was moving or stationary, whether the engine was warmed up or not, whether the air-fuel ratio was lean or rich, as well as other data recorded at the time of a malfunction.

HINT:

If it is impossible to replicate the problem even though a DTC is detected, confirm the freeze frame data.

The ECM records engine conditions in the form of freeze frame data every 0.5 seconds. Using the Techstream, five separate sets of freeze frame data, including the data values at the time when the DTC was set, can be checked.

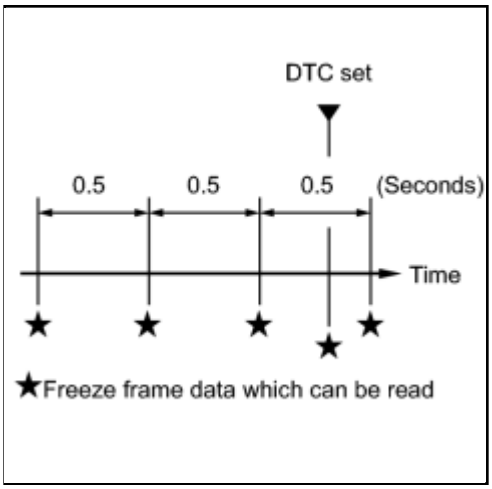

- 3 sets of data from before the DTC was set.
- 1 sets of data from when the DTC was set.
- 1 sets of data from after the DTC was set.

2. LIST OF FREEZE FRAME DATA

TECHSTREAM DISPLAY	MEASUREMENT ITEM	DIAGNOSTIC NOTE
Vehicle Speed	Vehicle speed	Speed indicated on speedometer
Engine Speed	Engine speed	-
Calculate Load	Calculated load by ECM	-
Vehicle Load	Vehicle load	Load percentage in terms of maximum intake air flow amount

TECHSTREAM DISPLAY	MEASUREMENT ITEM	DIAGNOSTIC NOTE
MAF	Air flow rate from Mass Air Flow (MAF) meter	If value approximately 0.0 g/sec: • Mass air flow meter power source circuit open • VG circuit open or short If value 271.0 g/sec or more: • E2G circuit open
Atmosphere Pressure	Atmospheric pressure	-
Intake Air	Intake air temperature	• If value -40°C (-40°F): sensor circuit open • If value 140°C (284°F): sensor circuit shorted
Coolant Temp	Engine coolant temperature	• If value -40°C (-40°F): sensor circuit open • If value 215°C (419°F): sensor circuit shorted
Engine Run Time	Engine run time	-
Initial Engine Coolant Temp	Initial engine coolant temperature	Service data
Initial Intake Air Temp	Initial intake air temperature	Service data
Battery Voltage	Battery voltage	-
Accel Sens. No. 1 Volt %	Accelerator pedal position No. 1	-
Accel Sens. No. 2 Volt %	Accelerator pedal position No. 2	-
Throttle Sensor Volt %	Throttle position	-
Throttl Sensor DUTY #2 Volt %	Absolute throttle sensor positioning #2	Recognition value for throttle opening angle on ECM Read value with ignition switch ON
Throttle Sensor Position	Throttle sensor positioning	Recognition value for throttle opening angle on ECM Read value with ignition switch ON
Throttle Motor	Throttle motor	-
Injector (Port)	Injection period of No. 1 cylinder	-

TECHSTREAM DISPLAY	MEASUREMENT ITEM	DIAGNOSTIC NOTE
Injection Volum (Cylinder1)	Injection volume (Cylinder 1)	Quantity of fuel injection volume for 10 times
Fuel Pump/Speed Status	Fuel pump/status	Active Test support data
Vacuum Pump	Key-off EVAP system leak detection pump status	Active Test support data
EVAP (Purge) VSV	EVAP (Purge) VSV control duty	Order signal from ECM
Evap Purge Flow	Ratio of evaporative purge flow to intake air volume	Service data
Purge Density Learn Value	Learning value of purge density	Service data
EVAP System Vent Valve	key-off EVAP system vent valve status	Active Test support data
EVAP Purge VSV	VSV status for EVAP control	Active Test support data
Target Air-fuel Ratio	Ratio compared to stoichiometric level	-
AF Lambda B1 S1	Fuel trim at A/F sensor	-
AFS Voltage B1 S1	A/F sensor output voltage for bank 1 sensor 1	Performing Control the Injection Volume or Control the Injection Volume for A/F Sensor function of Active Test enables technician to check output voltage of sensor
AFS Current B1 S1	Air fuel ratio sensor output current for bank 1 sensor 1	Value becomes higher when fuel-cut executed under high engine speed
A/F Heater Duty #1	Air fuel ratio heater duty ratio	-
O2S B1 S2	Heated oxygen sensor output voltage for bank 1 sensor 2	Performing Control the Injection Volume or Control the Injection Volume for A/F Sensor function of Active Test enables technician to check output voltage of sensor
O2S Impedance B1S2	Sub heated oxygen sensor impedance (bank 1 sensor 2)	-
O2 Heater B1S2	Heated oxygen sensor heater	-

TECHSTREAM DISPLAY	MEASUREMENT ITEM	DIAGNOSTIC NOTE
O2 Heater Curr Val B1S2	Heated oxygen sensor current	-
Short FT #1	Short-term fuel trim of bank 1	Short-term fuel compensation used to maintain air-fuel ratio at stoichiometric air-fuel ratio
Long FT #1	Long-term fuel trim of bank 1	Overall fuel compensation carried out long-term to compensate continual deviation of short-term fuel trim from central value
Total FT #1	Total fuel trim of bank 1 Average value for fuel trim system of bank 1	-
Fuel System Status #1	Fuel system status (bank 1)	• OL (Open Loop): Has not yet satisfied conditions to go closed loop • CL (Closed Loop): Using heated oxygen sensor as feedback for fuel control • OLDrive: Open loop due to driving conditions (fuel enrichment) • OLFault: Open loop due to detected system fault • CLFault: Closed loop but heated oxygen sensor, which is used for fuel control, malfunctioning
Fuel System Status #2	Fuel system status (bank 2)	• OL (Open Loop): Has not yet satisfied conditions to go closed loop • CL (Closed Loop): Using air fuel ratio sensor as feedback for fuel control • OLDrive: Open loop due to driving conditions (fuel enrichment) • OLFault: Open loop due to detected system fault • CLFault: Closed loop but air fuel ratio sensor, which is used for fuel control malfunctioning
IGN Advance	Ignition timing advance for No. 1 cylinder	-
Knock Feedback Value	Feedback value of knocking	Service data

TECHSTREAM DISPLAY	MEASUREMENT ITEM	DIAGNOSTIC NOTE
Knock Correct Learn Value	Correction learning value of knocking	Service data
VVT Control Status #1	VVT control (bank 1) status	Active Test support data
Catalyst Temp B1 S1	Catalyst temperature (associated sensor 1)	-
Catalyst Temp B1 S2	Catalyst temperature (associated sensor 2)	-
Starter Signal	Starter signal (STA terminal input status)	-
Neutral Position SW Signal*1	Park/neutral position switch status	-
Clutch Switch	Clutch switch	-
Stop Light Switch	Stop light switch status	-
A/C Signal	A/C switch status	-
Closed Throttle Position SW	Closed throttle position switch	-
Fuel Cut Condition	Fuel-cut condition	-
Immobiliser Communication	Immobiliser communication	OFF: Communication malfunctioning, or engine immobiliser system set
TC Terminal	TC terminal status	-
Time after DTC Cleared	Time since DTCs cleared	-
Distance from DTC Cleared	Distance traveled since DTCs cleared	-
Warmup Cycle Cleard DTC	Warm-up cycles since DTCs cleared	Number of warm-up cycles since DTCs cleared
Dist Batt Cable Disconnect	Accumulated distance from battery cable disconnected	-
IG OFF Elapsed Time	Cumulative time after ignition switch off	-
TC and TE1	TC and CG (TE1) terminals of DLC3	Active Test support data
Ignition Trig. Count	Ignition counter to calculated misfire rate	-

TECHSTREAM DISPLAY	MEASUREMENT ITEM	DIAGNOSTIC NOTE
Cylinder #1 Misfire Count	Misfire ratio of cylinder 1	-
Cylinder #2 Misfire Count	Misfire ratio of cylinder 2	-
Cylinder #3 Misfire Count	Misfire ratio of cylinder 3	-
Cylinder #4 Misfire Count	Misfire ratio of cylinder 4	-
All Cylinders Misfire Count	All cylinders misfire rate	-
Misfire RPM	Average engine speed when misfire occurs	-
Misfire Load	Average engine load when misfire occurred	-
Misfire Margin	Margin to detect engine misfire	Misfire detection margin
Catalyst OT MF F/C	Catalyst over temperature misfire prevention F/C not available	-
Cat OT MF F/C History	Catalyst over temperature misfire prevention F/C history OFF	-
Cat OT MF F/C Cylinder#1	Catalyst over temperature misfire prevention F/C history OFF	-
Cat OT MF F/C Cylinder#2	Catalyst over temperature misfire prevention F/C history OFF	-
Cat OT MF F/C Cylinder#3	Catalyst over temperature misfire prevention F/C history OFF	-
Cat OT MF F/C Cylinder#4	Catalyst over temperature misfire prevention F/C history OFF	-
Electric Fan Motor	Electric cooling fan motor	Active Test support data

TECHSTREAM DISPLAY	MEASUREMENT ITEM	DIAGNOSTIC NOTE
Idle Fuel Cut Prohibit	Prohibition of fuel cut at idle	-
Idle Fuel Cut	Fuel cut idle	Idle Fuel Cut = "ON" when throttle valve fully closed and engine speed over 2800 rpm
FC TAU	Fuel cut TAU (Fuel cut during very light load)	Fuel cut being performed under very light load to prevent engine combustion from becoming incomplete
Electrical Load Signal 1	Electrical load signal 1	-
Electrical Load Signal 3	Electrical Load Signal 3	-

*1: Automatic Transaxle only

*2: Manual Transaxle only

Last Modified: 3-10-2010	6.4 D	**From:** 200901
Model Year: 2010	**Model:** Corolla	**Doc ID:** RM000000PDL0ADX
Title: 2AZ-FE ENGINE CONTROL: SFI SYSTEM: CHECK MODE PROCEDURE (2010 Corolla)		

CHECK MODE PROCEDURE

HINT:

Techstream:

Compared to normal mode, check mode is more sensitive to malfunctions. Therefore, check mode can detect the malfunctions that cannot be detected in normal mode.

NOTICE:

All the stored DTCs and freeze frame data are cleared if: 1) the ECM is changed from normal mode to check mode or vice versa; or 2) the ignition switch is turned from ON to ACC or off while in check mode. Before changing modes, always check and note any DTCs and freeze frame data.

1. CHECK MODE PROCEDURE

(a) Check and ensure the following conditions:

(1) Battery voltage 11 V or more.

(2) Throttle valve fully closed.

(3) Transmission in the P or N (neutral) position.

(4) A/C switch OFF.

(b) Turn the ignition switch off.

(c) Connect the Techstream to the DLC3.

(d) Turn the ignition switch to ON.

(e) Turn the Techstream on.

(f) Enter the following menus: Powertrain / Engine and ECT / Utility / Check Mode.

(g) Switch the ECM from normal mode to check mode.

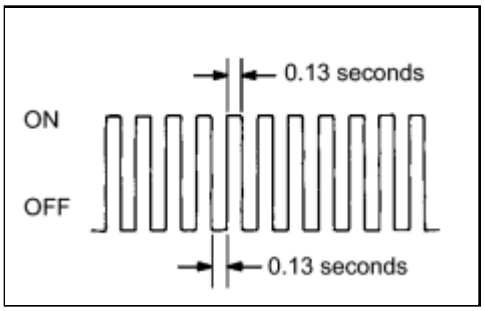

(h) Make sure the MIL flashes as shown in the illustration.

(i) Start the engine.

(j) Make sure the MIL turns OFF.

(k) Simulate the conditions of the malfunction described by the customer.

(l) Check DTCs and freeze frame data using the Techstream.

Last Modified: 3-10-2010	6.4 U	**From:** 200901
Model Year: 2010	**Model:** Corolla	**Doc ID:** RM000000PDO08EX
Title: 2AZ-FE ENGINE CONTROL: SFI SYSTEM: FAIL-SAFE CHART (2010 Corolla)		

FAIL-SAFE CHART

If any of the following DTCs are set, the ECM enters fail-safe mode to allow the vehicle to be driven temporarily or stops fuel injection.

DTC	COMPONENT	FAIL-SAFE OPERATION	FAIL-SAFE DEACTIVATION CONDITION
P0031 P0032	Air fuel ratio sensor heater	ECM turns off air fuel ratio sensor heater	Ignition switch off
P0037 P0038	Heated oxygen sensor heater	ECM turns off heated oxygen sensor heater	Ignition switch off
P0102 P0103	Mass air flow meter	ECM calculates ignition timing according to engine speed and throttle valve position	Pass condition detected
P0112 P0113	Intake air temperature sensor	ECM estimates intake air temperature to be 20°C (68°F)	Pass condition detected
P0115 P0117 P0118	Engine coolant temperature sensor	ECM estimates engine coolant temperature to be 80°C (176°F)	Pass condition detected
P0120 P0121 P0122 P0123 P0220 P0222 P0223 P0604 P0606 P060A P060D P060E P0657 P1607 P2102 P2103 P2111 P2112 P2118 P2119 P2135	Electronic Throttle Control System (ETCS)	ECM cuts off throttle actuator current and the throttle valve returns to the 6.5° throttle position by return spring ECM then adjusts engine output by controlling fuel injection (intermittent fuel-cut) and ignition timing in accordance with accelerator pedal opening angle, to allow vehicle to continue at minimal speed *1	Pass condition detected and then ignition switch turned off

DTC	COMPONENT	FAIL-SAFE OPERATION	FAIL-SAFE DEACTIVATION CONDITION
P0300 P0301 P0302 P0303 P0304 *2	• Fuel injector • Electronic throttle control system	When a catalyst damaging misfire occurs (MIL blinking), following fail-safe operation performed for catalyst overheat malfunction prevention 1. Under low load and low engine speed - Fuel cut performed on malfunctioning cylinder 2. Under high load and high engine speed - Throttle valve opening angle control is performed - All cylinder fuel cut or malfunctioning cylinder fuel cut is performed	Pass condition detected and then ignition switch turned off
P0327 P0328	Knock sensor	ECM sets ignition timing to maximum retard	Ignition switch off
P0351 to P0354	Igniter	ECM cuts fuel	Pass condition detected
P2120 P2121 P2122 P2123 P2125 P2127 P2128 P2138	Accelerator pedal position sensor	Accelerator pedal position sensor has 2 sensor circuits: Main and Sub. If either circuit malfunctions, the ECM controls the engine using the other circuit. If both circuits malfunction, the ECM regards the accelerator pedal as being released. As a result, the throttle valve is closed and the engine idles.	Pass condition detected and then ignition switch turned off

HINT:

- *1: The vehicle can be driven slowly when the accelerator pedal is depressed firmly and slowly. If the accelerator pedal is depressed quickly, the vehicle may speed up and slow down erratically.
- *2: Misfire related fail-safe operations occur when catalyst overheat malfunctions occur.

Last Modified: 3-10-2010	6.4 C	**From:** 200901
Model Year: 2010	**Model:** Corolla	**Doc ID:** RM000000PDW08VX
Title: 2AZ-FE ENGINE CONTROL: SFI SYSTEM: P0010: Camshaft Position "A" Actuator Circuit (Bank 1) (2010 Corolla)		

DTC	**P0010**	**Camshaft Position "A" Actuator Circuit (Bank 1)**

DESCRIPTION

The VVT (variable valve timing) system adjusts the intake valve timing to improve driveability. The engine oil pressure turns the VVT controller to adjust the valve timing. The camshaft timing oil control valve is a solenoid valve and switches the engine oil line. The valve moves when the ECM applies 12 V to the solenoid. The ECM changes the energizing time to the solenoid (duty-cycle) in accordance with the camshaft position, crankshaft position, throttle position, etc.

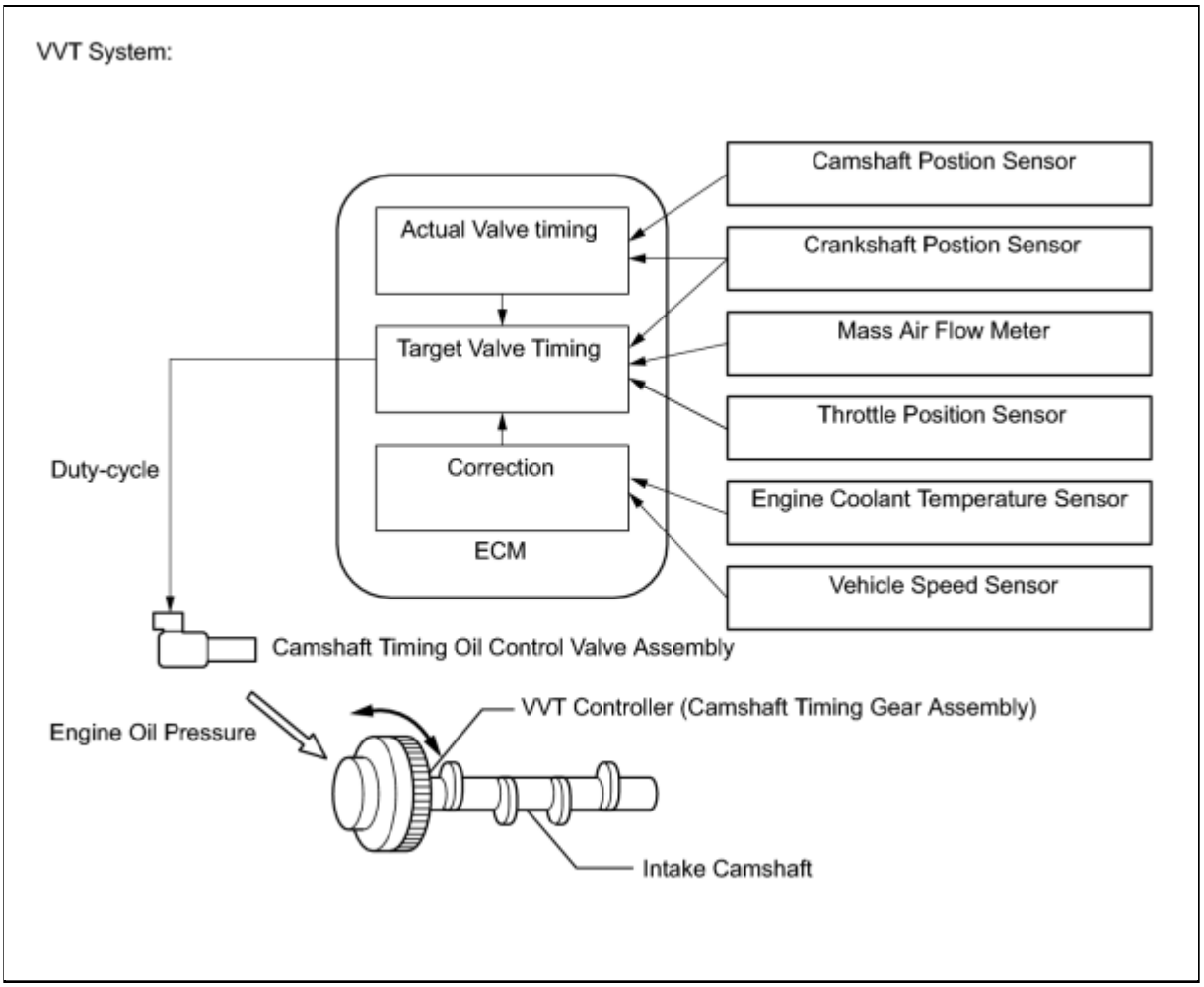

DTC NO.	DTC DETECTION CONDITION	TROUBLE AREA

DTC NO.	DTC DETECTION CONDITION	TROUBLE AREA
P0010	Open or short in camshaft timing oil control valve assembly circuit (1 trip detection logic)	• Open or short in camshaft timing oil control valve assembly circuit • Camshaft timing oil control valve assembly • ECM

MONITOR DESCRIPTION

This DTC is designed to detect an open or short in the camshaft timing oil control valve circuit. If the camshaft timing oil control valve assembly duty-cycle is excessively high or low while the engine is running, the ECM will illuminate the MIL and set the DTC.

MONITOR STRATEGY

Related DTCs	P0010: VVT camshaft timing oil control valve assembly range check (bank 1)
Required Sensors/Components (Main)	VVT camshaft timing oil control valve assembly
Required Sensors/Components (Related)	-
Frequency of Operation	Continuous
Duration	1 second
MIL Operation	Immediate
Sequence of Operation	None

TYPICAL ENABLING CONDITIONS

Monitor runs whenever following DTCs not present	None
All of following conditions met	-
Starter	OFF
Ignition switch	ON
Time after ignition switch OFF to ON	0.5 seconds or more

TYPICAL MALFUNCTION THRESHOLDS

One of following conditions met	-
A. All of following conditions met	-
Battery voltage	11 to 13 V
Target duty ratio	Less than 70%
Output signal duty ratio	100%
B. All of following conditions met	-
Battery voltage	13 V or more
Target duty ratio	Less than 80%
Output signal duty ratio	100%
C. Both of following conditions met	-
Current cut status	Not cut
Output signal duty ratio	3% or less

COMPONENT OPERATING RANGE

VVT camshaft timing oil control valve assembly duty ratio	3 to 100%

CONFIRMATION DRIVING PATTERN

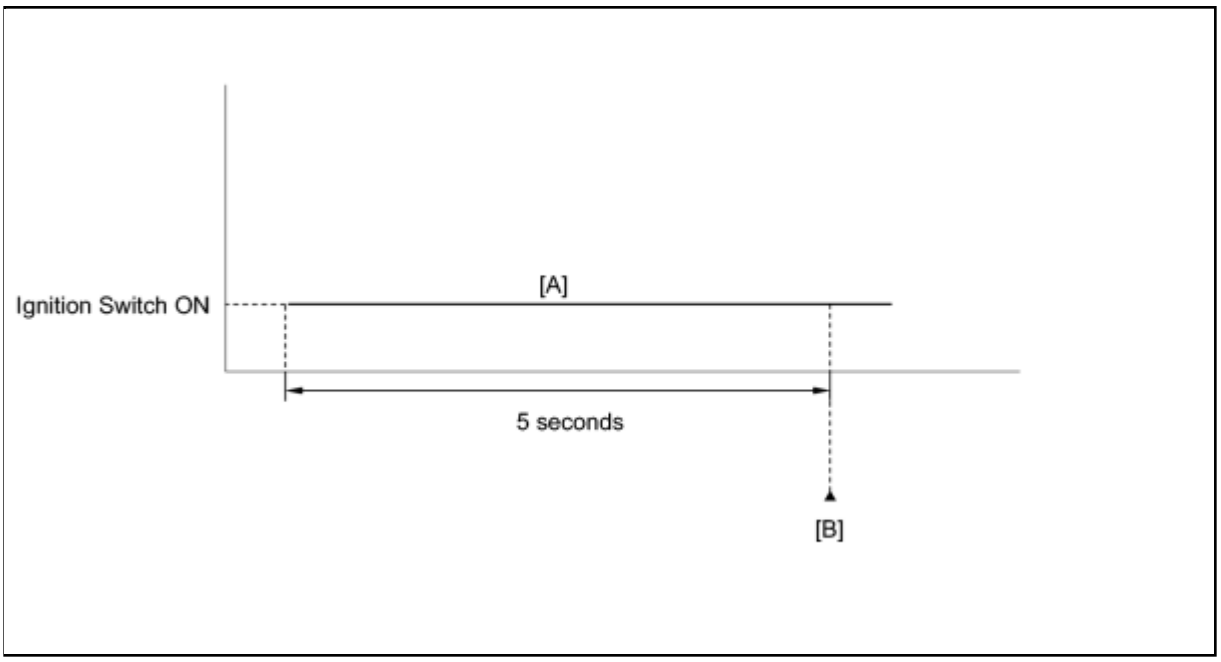

1. Connect the Techstream to the DLC3.
2. Turn the ignition switch to ON and turn the Techstream on.
3. Clear the DTCs (even if no DTCs are stored, perform the clear DTC procedure) INFO .

4. Turn the ignition switch off.
5. Turn the ignition switch to ON and turn the Techstream on.
6. Wait 5 seconds [A].
7. Enter the following menus: Powertrain / Engine / Utility / All Readiness.
8. Input the DTC: P0010.
9. Check the DTC judgment result [B].

TECHSTREAM DISPLAY	DESCRIPTION
NORMAL	○ DTC judgment completed ○ System normal
ABNORMAL	○ DTC judgment completed ○ System abnormal
INCOMPLETE	○ DTC judgment not completed ○ Perform driving pattern after confirming DTC enabling conditions
UNKNOWN	○ Unable to perform DTC judgment ○ Number of DTCs which do not fulfill DTC preconditions has reached ECU memory limit

10. If the test result is UNKNOWN, enter the following menus: Powertrain / Engine / Trouble Codes / Pending.
11. Read Pending DTCs.

HINT:

If a pending DTC is output, the system is malfunctioning.

12. If the test result is INCOMPLETE or UNKNOWN and no pending DTC is output, perform a universal trip and check for permanent DTCs INFO .

HINT:

- If a permanent DTC is output, the system is malfunctioning.
- If no permanent DTC is output, the system is normal.

WIRING DIAGRAM

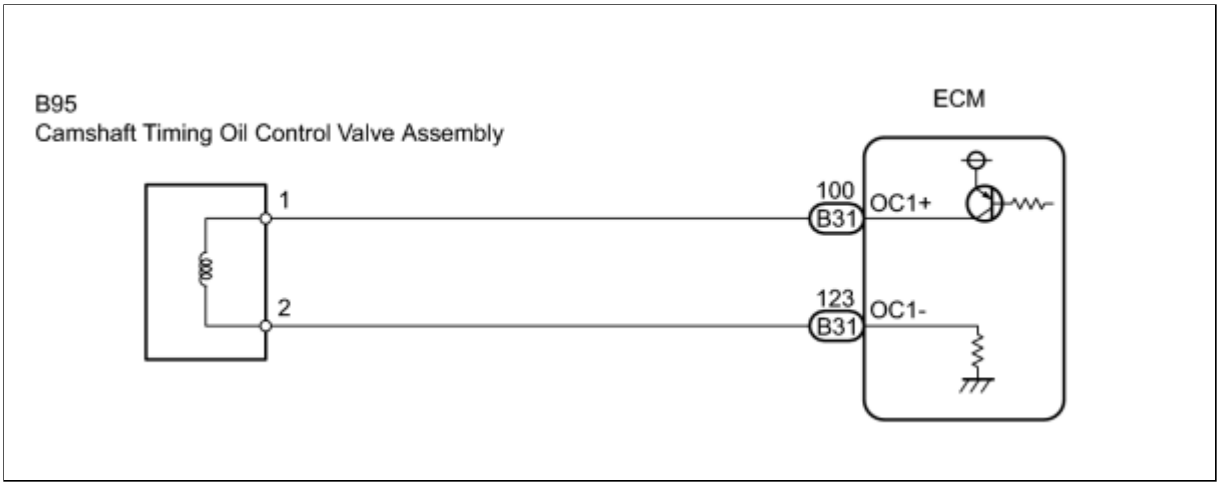

INSPECTION PROCEDURE

HINT:

Read freeze frame data using the Techstream. The ECM records vehicle and driving condition information as freeze frame data the moment a DTC is stored. When troubleshooting, freeze frame data can be helpful in determining whether the vehicle was running or stopped, whether the engine was warmed up or not, whether the air fuel ratio was lean or rich, as well as other data recorded at the time of a malfunction.

PROCEDURE

1.	**READ DTC OUTPUT**

(a) Connect the Techstream to the DLC3.

(b) Turn the ignition switch to ON.

(c) Turn the Techstream on.

(d) Clear DTCs after recording the freeze frame data and DTC INFO .

(e) Turn the ignition switch off.

(f) Start the engine and allow the engine to idle.

(g) Enter the following menus: Powertrain / Engine and ECT / Trouble Codes.

(h) Read DTCs.

Result:

RESULT	PROCEED TO
P0010	A
No output	B

B ▶ CHECK FOR INTERMITTENT PROBLEMS

A ▼

2.	**INSPECT CAMSHAFT TIMING OIL CONTROL VALVE ASSEMBLY**

Component without harness connected:
(Camshaft Timing Oil Control Valve Assembly)



(a) Disconnect the camshaft timing oil control valve assembly connector.

(b) Measure the resistance according to the value(s) in the table below.

Standard Resistance:

TESTER CONNECTION	CONDITION	SPECIFIED CONDITION
1 - 2	20°C (68°F)	6.9 to 7.9 Ω

(c) Reconnect the camshaft timing oil control valve assembly connector.

NG ▶ REPLACE CAMSHAFT TIMING OIL CONTROL VALVE ASSEMBLY

OK ▼

3.	**CHECK HARNESS AND CONNECTOR (CAMSHAFT TIMING OIL CONTROL VALVE ASSEMBLY - ECM)**	(a) Disconnect the camshaft timing oil control valve assembly connector.

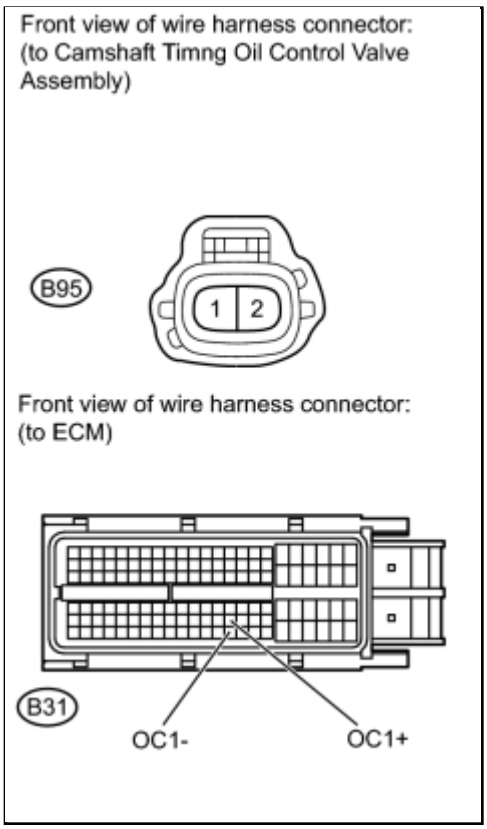

(b) Disconnect the ECM connector.

(c) Measure the resistance according to the value(s) in the table below.

Standard Resistance (Check for Open):

TESTER CONNECTION	CONDITION	SPECIFIED CONDITION
B95-1 - B31-100 (OC1+)	Always	Below 1 Ω
B95-2 - B31-123 (OC1-)	Always	Below 1 Ω

Standard Resistance (Check for Short):

TESTER CONNECTION	CONDITION	SPECIFIED CONDITION
B95-1 or B31-100 (OC1+) - Body ground	Always	10 kΩ or higher
B95-2 or B31-123 (OC1-) - Body ground	Always	10 kΩ or higher

(d) Reconnect the camshaft timing oil control valve assembly connector.

(e) Reconnect the ECM connector.

NG ▶ **REPAIR OR REPLACE HARNESS OR CONNECTOR (CAMSHAFT TIMING OIL CONTROL VALVE ASSEMBLY - ECM)**

OK ▶ **REPLACE ECM**

Last Modified: 3-10-2010	6.4 C	**From:** 200901
Model Year: 2010	**Model:** Corolla	**Doc ID:** RM000000PDU09HX
Title: 2AZ-FE ENGINE CONTROL: SFI SYSTEM: P0011,P0012: Camshaft Position "A" - Timing Over-Advanced or System Performance (Bank 1) (2010 Corolla)		

DTC	**P0011**	**Camshaft Position "A" - Timing Over-Advanced or System Performance (Bank 1)**

DTC	**P0012**	**Camshaft Position "A" - Timing Over-Retarded (Bank 1)**

DESCRIPTION

Refer to DTC P0010 INFO .

DTC NO.	DTC DETECTION CONDITION	TROUBLE AREA
P0011	Valve timing is not adjusted in valve timing advance range (1 trip detection logic)	• Valve timing • Camshaft timing oil control valve assembly • Oil control valve filter • Camshaft timing gear assembly • ECM
P0012	Valve timing is not adjusted in valve timing retard range (2 trip detection logic)	

MONITOR DESCRIPTION

The ECM optimizes the intake valve timing using the VVT (Variable Valve Timing) system to control the intake camshaft. The VVT system includes the ECM, the camshaft timing oil control valve assembly and the VVT controller (camshaft timing gear assembly). The ECM sends a target duty-cycle control signal to the camshaft timing oil control valve assembly. This control signal regulates the oil pressure supplied to the VVT controller. The VVT controller can advance or retard the intake camshaft. If the difference between the target and actual intake valve timing is large, and changes in the actual intake valve timing are small, the ECM interprets this as a VVT controller stuck malfunction and sets a DTC.

Example:
A DTC is set when the following conditions "A" and "B" are met:

a. It takes 5 seconds or more to change the valve timing by 5°CA (Condition "A").
b. After above condition is met, the camshaft timing oil control valve is forcibly activated during 10 seconds (Condition "B").

DTC P0011 (Advanced Cam Timing) is subject to 1 trip detection logic.
DTC P0012 (Retarded Cam Timing) is subject to 2 trip detection logic.
These DTCs indicate that the VVT controller cannot operate properly due to camshaft timing oil control valve assembly malfunctions or the presence of foreign objects in the camshaft timing oil control valve.

The monitor will run if all of the following conditions are met:

- The engine is warm (the engine coolant temperature is 75°C [167°F] or more).
- The vehicle has been driven at more than 40 mph (64 km/h) for 3 minutes.
- The engine has idled for 3 minutes.

MONITOR STRATEGY

Related DTCs	P0011: Advanced camshaft timing P0012: Retarded camshaft timing
Required Sensors/Components (Main)	VVT camshaft timing oil control valve assembly and VVT controller
Required Sensors/Components (Related)	Crankshaft position sensor Camshaft position sensor Engine coolant temperature sensor
Frequency of Operation	Once per driving cycle
Duration	Within 10 seconds
MIL Operation	Advanced camshaft timing: Immediate Retarded camshaft timing: 2 driving cycles
Sequence of Operation	None

TYPICAL ENABLING CONDITIONS

Monitor runs whenever following DTCs are not present	P0010 (VVT Oil Control Valve Bank 1) P0016 (VVT System Bank 1 - Misalignment) P0102, P0103 (Mass Air Flow Meter) P0115, P0117, P0118 (Engine Coolant Temperature Sensor) P0125 (Insufficient Engine Coolant Temperature for Closed Loop Fuel Control) P0335 (Crankshaft Position Sensor) P0340 (Camshaft Position Sensor)
Battery voltage	11 V or more
Engine RPM	550 to 4000 rpm
Engine coolant temperature	75 to 100°C (167 to 212°F)

TYPICAL MALFUNCTION THRESHOLDS

All of following conditions are met	-

Deviation of actual valve timing and target valve timing	More than 5°CA (crankshaft angle)
Valve timing	No change at advanced (retarded) valve timing

If the difference between the target and actual camshaft timing is greater than the specified value, the ECM operates the VVT actuator.
Then, the ECM monitors the camshaft timing change for 5 seconds.

CONFIRMATION DRIVING PATTERN

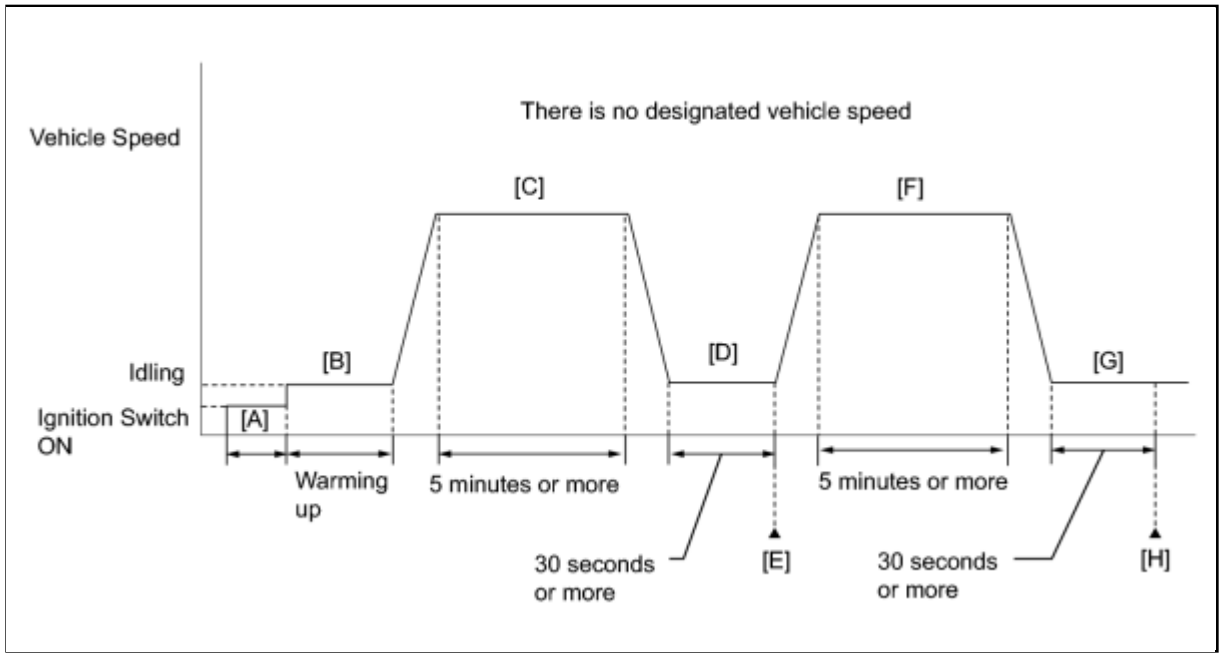

1. Connect the Techstream to the DLC3.
2. Turn the ignition switch to ON and turn the Techstream on.
3. Clear the DTCs (even if no DTCs are stored, perform the clear DTC procedure) INFO .
4. Turn the ignition switch off.
5. Turn the ignition switch to ON and turn the Techstream on [A].
6. Start the engine and warm it up until the engine coolant temperature reaches 75°C (167°F) or higher [B].
7. Drive the vehicle for 5 minutes or more [C].
8. Idle the engine for 30 seconds or more [D].
9. Enter the following menus: Powertrain / Engine / Utility / All Readiness.
10. Input the DTC: P0011 or P0012.
11. Check the DTC judgment result [E].

TECHSTREAM DISPLAY	DESCRIPTION
NORMAL	○ DTC judgment completed ○ System normal

CAUTION:
When performing the confirmation driving pattern, obey all speed limits and traffic laws.

HINT:

- If the judgment result shows ABNORMAL, the system has a malfunction.
- If the judgment result shows INCOMPLETE or UNKNOWN, perform steps [F] through [H].

12. Drive the vehicle for 5 minutes or more [F].
13. Idle the engine for 30 seconds or more [G].
14. Enter the following menus: Powertrain / Engine / Utility / All Readiness.
15. Input the DTC: P0011 or P0012.
16. Check the DTC judgment result again [H].
17. If the test result is UNKNOWN, enter the following menus: Powertrain / Engine / Trouble Codes / Pending.
18. Read Pending DTCs [H].

HINT:

If a pending DTC is output, the system is malfunctioning.

19. If the test result is INCOMPLETE or UNKNOWN and no pending DTC is output, perform a universal trip and check for permanent DTCs INFO .

HINT:

- If a permanent DTC is output, the system is malfunctioning.
- If no permanent DTC is output, the system is normal.

WIRING DIAGRAM

Refer to DTC P0010 INFO .

INSPECTION PROCEDURE

HINT:

- DTC P0011 or P0012 may be set when foreign objects in the engine oil are caught in some parts of the system. The DTC will remain set even if the system returns to normal after a short time. Foreign objects are filtered out by the oil filter.
- Read freeze frame data using the Techstream. The ECM records vehicle and driving condition information as freeze frame data the moment a DTC is stored. When troubleshooting, freeze frame data can be helpful in determining whether the vehicle was running or stopped, whether the engine was warmed up or not, whether the air fuel ratio was lean or rich, as well as other data recorded at the time of a malfunction.

PROCEDURE

1.	**CHECK ANY OTHER DTCS OUTPUT (IN ADDITION TO DTC P0011 OR P0012)**

(a) Connect the Techstream to the DLC3.

(b) Turn the ignition switch to ON.

(c) Turn the Techstream on.

(d) Enter the following menus: Powertrain / Engine and ECT / Trouble Codes.

(e) Read DTCs.

Result:

RESULT	PROCEED TO
P0011 or P0012	A
P0011 or P0012 and other DTCs	B

HINT:

If any DTCs other than P0011 or P0012 are output, troubleshoot those DTCs first.

B ▶ **GO TO DTC CHART**

A ▼

2.	**PERFORM ACTIVE TEST USING TECHSTREAM (OPERATE CAMSHAFT TIMING OIL CONTROL VALVE)**

(a) Connect the Techstream to the DLC3

(b) Start the engine.

(c) Turn the Techstream on.

(d) Warm up the engine.

(e) Enter the following menus: Powertrain / Engine and ECT / Active Test / Control the VVT System (Bank 1).

(f) Check the engine speed while operating the camshaft timing oil control valve using the Techstream.

OK:

TESTER OPERATION	SPECIFIED CONDITION
Camshaft timing oil control valve OFF	Normal engine speed
Camshaft timing oil control valve ON	Engine idles roughly or stalls (soon after camshaft timing oil control valve switched from OFF to ON)

NG ▶ CHECK VALVE TIMING (CHECK FOR LOOSE OR JUMPED TEETH ON TIMING CHAIN)

OK ▼

3.	CHECK WHETHER DTC OUTPUT RECURS (DTC P0011 OR P0012)

(a) Connect the Techstream to the DLC3

(b) Turn the ignition switch to ON.

(c) Turn the Techstream on.

(d) Clear the DTCs INFO .

(e) Start the engine and warm it up.

(f) Drive the vehicle for more than 10 minutes.

(g) Select the following menu items: Powertrain / Engine and ECT / Trouble Codes / Pending.

(h) Read DTCs.

Result:

RESULT	PROCEED TO
No output	A
P0011 or P0012	B

B ▶ CHECK VALVE TIMING (CHECK FOR LOOSE OR JUMPED TEETH ON TIMING CHAIN)

A ▶ CHECK FOR INTERMITTENT PROBLEMS

4.	CHECK VALVE TIMING (CHECK FOR LOOSE OR JUMPED TEETH ON TIMING CHAIN)

(a) Remove the cylinder head cover INFO .

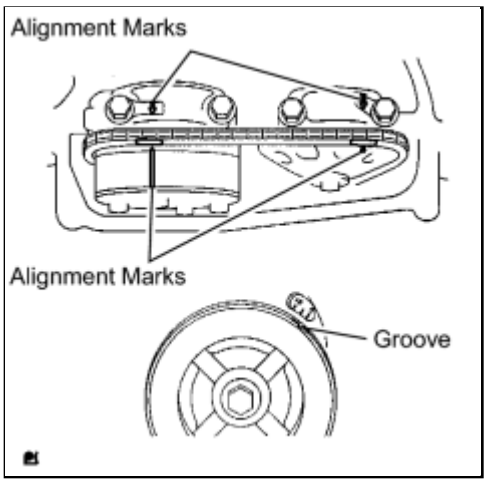

(b) Turn the crankshaft pulley, and align its groove with the timing mark "0" of the timing chain cover.

(c) Check that the alignment marks of the camshaft timing gears are aligned with the alignment marks of the bearing cap as shown in the illustration.

If not, turn the crankshaft 1 revolution (360°), then align the marks as above.

OK:

Alignment marks on camshaft timing gears are aligned as shown in the illustration.

(d) Reinstall the cylinder head cover INFO .

NG ▶ **ADJUST VALVE TIMING**

OK ▼

5.	**INSPECT CAMSHAFT TIMING OIL CONTROL VALVE ASSEMBLY**

(a) Remove the camshaft timing oil control valve assembly INFO .

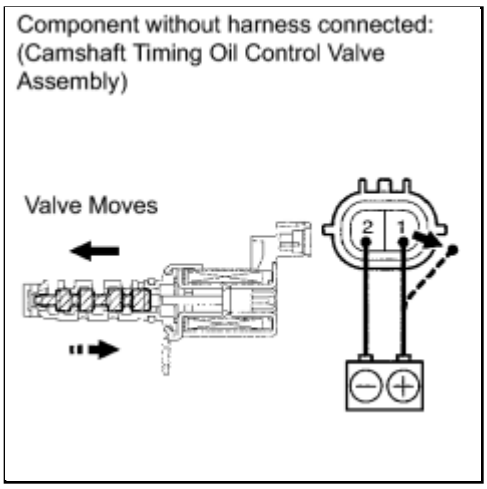

(b) Measure the resistance according to the value(s) in the table below.

Standard Resistance:

TESTER CONNECTION	CONDITION	SPECIFIED CONDITION
1 - 2	20°C (68°F)	6.9 to 7.9 Ω

(c) Apply positive battery voltage to terminal 1 and connect the negative battery terminal to terminal 2. Check the valve operation.

OK:

Valve moves quickly.

(d) Reinstall the camshaft timing oil control valve assembly INFO .

NG ▶ **REPLACE CAMSHAFT TIMING OIL CONTROL VALVE ASSEMBLY**

OK ▼

6.	**INSPECT OIL CONTROL VALVE FILTER**

(a) Remove the oil control valve filter INFO .

OK:

Filter is not clogged.

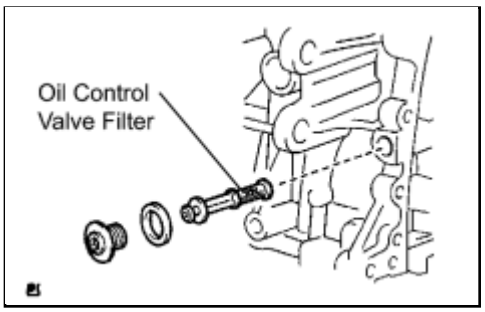

(b) Reinstall the oil control valve filter INFO .

NG ▶ **REPLACE OIL CONTROL VALVE FILTER**

OK
▼

7.	**REPLACE CAMSHAFT TIMING GEAR ASSEMBLY**

(a) Replace the camshaft timing gear assembly INFO .

NEXT
▼

8.	**CHECK WHETHER DTC OUTPUT RECURS**

(a) Connect the Techstream to the DLC3

(b) Turn the ignition switch to ON.

(c) Turn the Techstream on.

(d) Clear the DTCs INFO .

(e) Start the engine and warm it up.

(f) Drive the vehicle for more than 10 minutes.

(g) Select the following menu items: Powertrain / Engine and ECT / Trouble Codes / Pending.

(h) Read DTCs.

Result:

RESULT	PROCEED TO
No output	A
P0011 or P0012	B

HINT:

DTC P0011 or P0012 is output when foreign objects in engine oil are caught in some parts of the system. These codes will remain set for a short time even after the system returns to normal. These foreign objects may then be captured by the oil filter, thus eliminating the source of the problem.

B ▶ **REPLACE ECM**

A ▶ **END**

Last Modified: 3-10-2010	6.4 S	**From:** 200901
Model Year: 2010	**Model:** Corolla	**Doc ID:** RM000000PDF07VX
Title: 2AZ-FE ENGINE CONTROL: SFI SYSTEM: DIAGNOSTIC TROUBLE CODE CHART (2010 Corolla)		

DIAGNOSTIC TROUBLE CODE CHART

HINT:

Parameters listed in the chart may be different than your readings depending on the type of instrument and other factors.

If any DTCs are displayed during a check mode DTC check, check the circuit for the DTCs listed in the table below. For details of each DTC, refer to the page indicated.

HINT:

- *1: MIL flashes when a catalyst damaging misfire is detected.
- *2: DTC only applies to models for Mexico.

SFI SYSTEM

DTC CODE	DETECTION ITEM	TROUBLE AREA	MIL	MEMORY	DTC FOR MEXICO MODELS	SEE PAGE
P0010	Camshaft Position "A" Actuator Circuit (Bank 1)	-Open or short in camshaft timing oil control valve assembly circuit -Camshaft timing oil control valve assembly -ECM	Comes on	DTC stored	Applies	INFO
P0011	Camshaft Position "A" - Timing Over-Advanced or System Performance (Bank 1)	-Valve timing -Camshaft timing oil control valve assembly -Oil control valve filter -Camshaft timing gear assembly -ECM	Comes on	DTC stored	Applies	INFO
P0012	Camshaft Position "A" - Timing Over-Retarded (Bank 1)	-Valve timing -Camshaft timing oil control valve assembly -Oil control valve filter -Camshaft timing gear assembly -ECM	Comes on	DTC stored	Applies	INFO
P0016	Crankshaft Position - Camshaft Position Correlation (Bank 1	-Mechanical system (Timing chain has jumped a tooth or chain	Comes on	DTC stored	Applies	INFO

DTC CODE	DETECTION ITEM	TROUBLE AREA	MIL	MEMORY	DTC FOR MEXICO MODELS	SEE PAGE
	Sensor A)	stretched) -Camshaft timing oil control valve assembly -Camshaft timing gear assembly -ECM				
P0031	Oxygen (A/F) Sensor Heater Control Circuit Low (Bank 1 Sensor 1)	-Open in air fuel ratio sensor heater circuit -Air fuel ratio sensor heater (sensor 1) -ECM	Comes on	DTC stored	Applies	INFO
P0032	Oxygen (A/F) Sensor Heater Control Circuit High (Bank 1 Sensor 1)	-Short in air fuel ratio sensor heater circuit -Air fuel ratio sensor heater (sensor 1) -ECM	Comes on	DTC stored	Applies	INFO
P0037	Oxygen Sensor Heater Control Circuit Low (Bank 1 Sensor 2)	-Open in heated oxygen sensor (sensor 2) heater circuit -Heated oxygen sensor (sensor 2) heater -ECM	Comes on	DTC stored	Applies	INFO
P0038	Oxygen Sensor Heater Control Circuit High (Bank 1 Sensor 2)	-Short in heated oxygen sensor (sensor 2) heater circuit -Heated oxygen sensor (sensor 2) heater -ECM	Comes on	DTC stored	Applies	INFO
P0101	Mass Air Flow Circuit Range / Performance Problem	-Mass air flow meter -Intake system -PCV hose connections	Comes on	DTC stored	-	INFO
P0102	Mass or Volume Air Flow Circuit Low Input	-Open or short in mass air flow meter circuit -Mass air flow meter -ECM	Comes on	DTC stored	Applies	INFO
P0103	Mass or Volume Air Flow Circuit High Input	-Open or short in mass air flow meter circuit -Mass air flow meter -ECM	Comes on	DTC stored	Applies	INFO
P0111	Intake Air Temperature Sensor Gradient Too High	-Mass air flow meter	Comes on	DTC stored	-	INFO
P0112	Intake Air	-Short in intake air	Comes on	DTC	Applies	INFO

TOYOTA

Last Modified: 3-10-2010	6.4 C	**From:** 200901
Model Year: 2010	**Model:** Corolla	**Doc ID:** RM000000PDV094X
Title: 2AZ-FE ENGINE CONTROL: SFI SYSTEM: P0016: Crankshaft Position - Camshaft Position Correlation (Bank 1 Sensor A) (2010 Corolla)		

DTC	**P0016**	**Crankshaft Position - Camshaft Position Correlation (Bank 1 Sensor A)**

DESCRIPTION

The ECM optimizes the valve timing by using the VVT (Variable Valve Timing) system to control the intake camshaft. The VVT system includes the ECM, the camshaft timing oil control valve assembly and the VVT controller (camshaft timing gear assembly). The ECM sends a target duty-cycle control signal to the camshaft timing oil control valve assembly. This control signal regulates the oil pressure supplied to the VVT controller. The VVT controller can advance or retard the intake camshaft.

DTC NO.	DTC DETECTION CONDITION	TROUBLE AREA
P0016	Deviations in crankshaft and camshaft position sensor signals (2 trip detection logic)	• Mechanical system (Timing chain has jumped a tooth or chain stretched) • Camshaft timing oil control valve assembly • Camshaft timing gear assembly • ECM

MONITOR DESCRIPTION

To monitor the correlation of the intake camshaft position and crankshaft position, the ECM checks the VVT learning value while the engine is idling. The VVT learning value is calibrated based on the camshaft position and crankshaft position. The intake valve timing is set to the most retarded angle while the engine is idling. If the VVT learning value is out of the specified range in consecutive driving cycles, the ECM illuminates the MIL and sets the DTC.

This DTC indicates that the intake camshaft has been installed toward the crankshaft at an incorrect angle, caused by factors such as the timing chain having jumped a tooth.

This monitor begins to run after the engine has idled for 5 minutes.

MONITOR STRATEGY

Related DTCs	P0016: Camshaft Timing Misalignment at idling
Required Sensors/Components (Main)	VVT controller (camshaft timing gear assembly)

Required Sensors/Components (Related)	Camshaft position sensor Crankshaft position sensor
Frequency of Operation	Once per driving cycle
Duration	Less than 1 minute
MIL Operation	2 driving cycles
Sequence of Operation	None

TYPICAL ENABLING CONDITIONS

Monitor runs whenever following DTCs are not present	P0010 (VVT Oil Control Valve Bank 1) P0016 (VVT System Bank 1 - Misalignment) P0102, P0103 (Mass Air Flow Meter) P0115, P0117, P0118 (Engine Coolant Temperature Sensor) P0125 (Insufficient Engine Coolant Temperature for Closed Loop Fuel Control) P0335 (Crankshaft Position Sensor) P0340 (Camshaft Position Sensor)
Engine RPM	550 to 1000 rpm

TYPICAL MALFUNCTION THRESHOLDS

One of following conditions is met	-
VVT learning value at maximum retarded valve timing	Less than 27°CA (crankshaft angle)
VVT learning value at maximum retarded valve timing	More than 49°CA (crankshaft angle)

CONFIRMATION DRIVING PATTERN

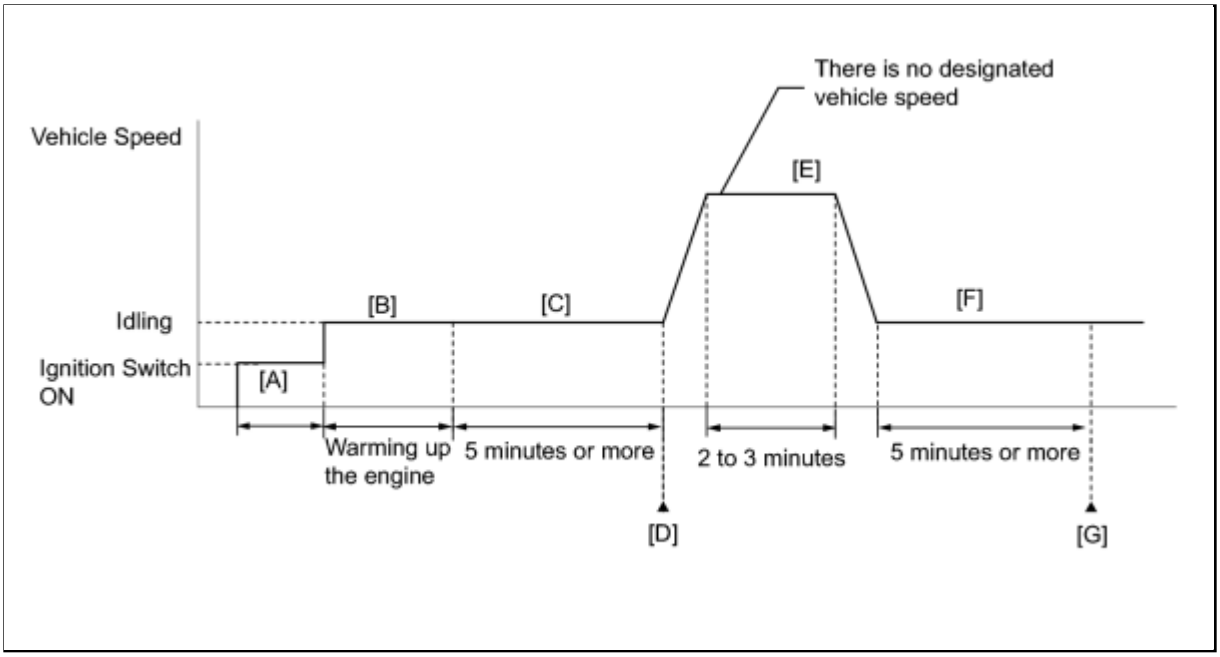

1. Connect the Techstream to the DLC3.
2. Turn the ignition switch to ON and turn the Techstream on.
3. Clear the DTCs (even if no DTCs are stored, perform the clear DTC procedure) INFO .
4. Turn the ignition switch off.
5. Turn the ignition switch to ON and turn the Techstream on [A].
6. Start the engine and warm it up until the engine coolant temperature reaches 75°C (167°F) or higher [B].
7. Idle the engine for 5 minutes or more [C].
8. Enter the following menus: Powertrain / Engine / Utility / All Readiness.
9. Input the DTC: P0016 or P0017.
10. Check the DTC judgment result [D].

TECHSTREAM DISPLAY	DESCRIPTION
NORMAL	○ DTC judgment completed ○ System normal
ABNORMAL	○ DTC judgment completed ○ System abnormal
INCOMPLETE	○ DTC judgment not completed ○ Perform driving pattern after confirming DTC enabling conditions
UNKNOWN	○ Unable to perform DTC judgment ○ Number of DTCs which do not fulfill DTC preconditions has reached ECU memory limit

CAUTION:

When performing the confirmation driving pattern, obey all speed limits and traffic laws.

HINT:

- If the judgment result shows ABNORMAL, the system has a malfunction.
- If the judgment result shows INCOMPLETE or UNKNOWN, perform steps [E] through [G].

11. Drive the vehicle for 2 to 3 minutes [E].
12. Idle the engine for 5 minutes or more [F].
13. Check the DTC judgment result [G].
14. If the test result is UNKNOWN, enter the following menus: Powertrain / Engine / Trouble Codes / Pending.
15. Read Pending DTCs [G].

HINT:

If a pending DTC is output, the system is malfunctioning.

16. If the test result is INCOMPLETE or UNKNOWN and no pending DTC is output, perform a universal trip and check for permanent DTCs INFO .

HINT:

- If a permanent DTC is output, the system is malfunctioning.
- If no permanent DTC is output, the system is normal.

WIRING DIAGRAM

Refer to DTC P0335 INFO .

INSPECTION PROCEDURE

HINT:

Read freeze frame data using the Techstream. The ECM records vehicle and driving condition information as freeze frame data the moment a DTC is stored. When troubleshooting, freeze frame data can be helpful in determining whether the vehicle was running or stopped, whether the engine was warmed up or not, whether the air fuel ratio was lean or rich, as well as other data recorded at the time of a malfunction.

PROCEDURE

1.	**CHECK ANY OTHER DTCS OUTPUT (IN ADDITION TO DTC P0016)**

(a) Connect the Techstream to the DLC3.

(b) Turn the ignition switch to ON.

(c) Turn the Techstream on.

(d) Enter the following menus: Powertrain / Engine and ECT / Trouble Codes.

(e) Read DTCs.

Result:

RESULT	PROCEED TO
P0016	A
P0016 and other DTCs	B

HINT:

If any DTCs other than P0016 are output, troubleshoot those DTCs first.

B ▶ **GO TO DTC CHART**

A

2.	**PERFORM ACTIVE TEST USING TECHSTREAM (OPERATE CAMSHAFT TIMING OIL CONTROL VALVE ASSEMBLY)**

(a) Connect the Techstream to the DLC3.

(b) Start the engine.

(c) Turn the Techstream on.

(d) Warm up the engine.

(e) Enter the following menus: Powertrain / Engine and ECT / Active Test / Control the VVT System (Bank 1).

(f) Enter the following menus: Powertrain / Engine and ECT / Data List / VVT Change Angle (Bank1) and VVT OCV Duty (Bank1).

(g) Check that the VVT change angle varies when operating the camshaft timing oil control valve using the Techstream.

OK:

The VVT change angle value and engine speed vary.

NG ▶ **INSPECT CAMSHAFT TIMING OIL CONTROL VALVE ASSEMBLY**

OK

3.	ADJUST VALVE TIMING INFO

NEXT ▶ CHECK WHETHER DTC OUTPUT RECURS (DTC P0016)

4.	INSPECT CAMSHAFT TIMING OIL CONTROL VALVE ASSEMBLY INFO

NG ▶ REPLACE CAMSHAFT TIMING OIL CONTROL VALVE ASSEMBLY

OK ▼

5.	INSPECT OIL CONTROL VALVE FILTER INFO

NG ▶ REPLACE OIL CONTROL VALVE FILTER

OK ▼

6.	REPLACE CAMSHAFT TIMING GEAR ASSEMBLY

(a) Replace camshaft timing gear assembly INFO .

NEXT ▼

7.	CHECK WHETHER DTC OUTPUT RECURS (DTC P0016)

(a) In order to erase the ECM learned values for valve timing, disconnect the cable from the negative (-) battery terminal for 1 minute.

(b) Reconnect the cable to the negative (-) battery terminal.

(c) Connect the Techstream to the DLC3.

(d) Turn the ignition switch to ON.

(e) Turn the Techstream on.

(f) Clear the DTCs INFO .

(g) Start the engine and idle it for 5 minutes.

(h) Drive the vehicle with a city driving pattern for approximately 10 minutes.

(i) Enter the following menus: Powertrain / Engine and ECT / Trouble Codes.

(j) Read DTCs.

Result:

RESULT	PROCEED TO
No output	A
P0016	B

B ▶ **REPLACE ECM**

A ▶ **END**

Last Modified: 3-10-2010	6.4 C	**From:** 200901
Model Year: 2010	**Model:** Corolla	**Doc ID:** RM000000WC10A2X
Title: 2AZ-FE ENGINE CONTROL: SFI SYSTEM: P0031,P0032: Oxygen (A/F) Sensor Heater Control Circuit Low (Bank 1 Sensor 1) (2010 Corolla)		

DTC	**P0031**	**Oxygen (A/F) Sensor Heater Control Circuit Low (Bank 1 Sensor 1)**

DTC	**P0032**	**Oxygen (A/F) Sensor Heater Control Circuit High (Bank 1 Sensor 1)**

DESCRIPTION

Refer to DTC P2195 INFO .

HINT:

- When either of these DTCs is set, the ECM enters fail-safe mode. The ECM turns off the air fuel ratio sensor heater in fail-safe mode. Fail-safe mode continues until the ignition switch is turned off.
- Although the DTC titles say the oxygen sensor, these DTCs relate to the air fuel ratio sensor.
- Sensor 1 refers to the sensor mounted in front of the Three-way catalytic converter and located near the engine assembly.
- The ECM uses pulse width modulation to adjust the current through the heater. The air fuel ratio sensor heater circuit uses a relay on the +B side of the circuit.

Reference (System Diagram of Sensor 1):

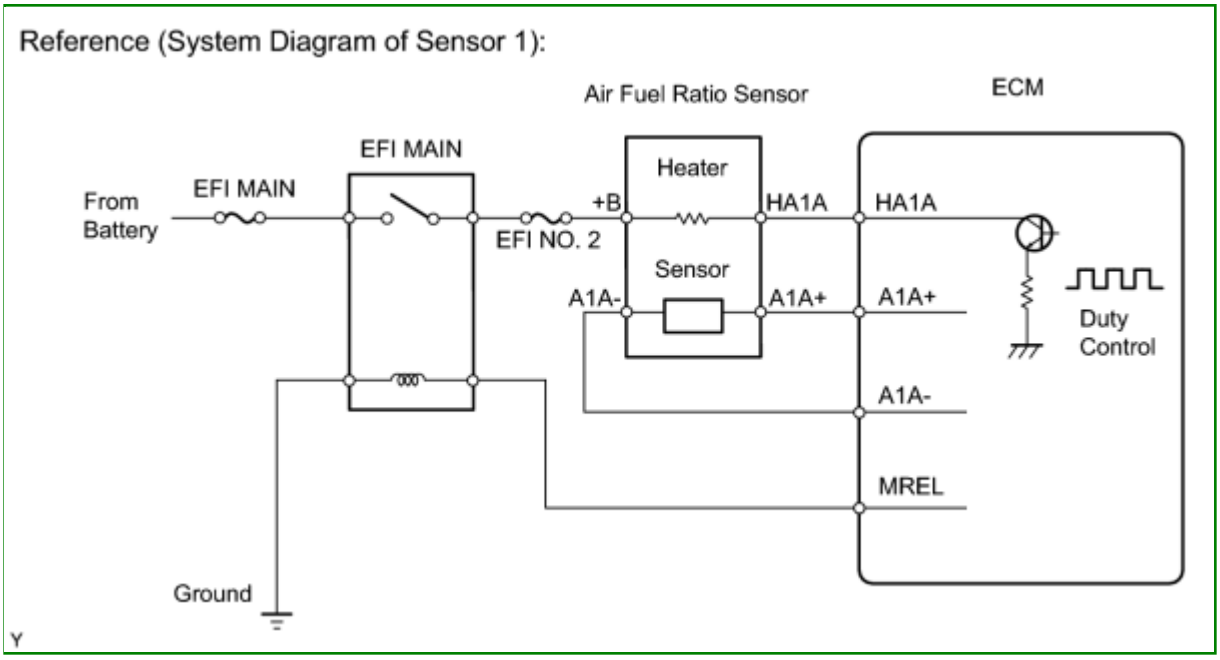

DTC NO.	DTC DETECTION CONDITION	TROUBLE AREA

DTC NO.	DTC DETECTION CONDITION	TROUBLE AREA
P0031	Air fuel ratio sensor heater current less than 0.8 A (1 trip detection logic)	• Open in air fuel ratio sensor heater circuit • Air fuel ratio sensor heater (sensor 1) • ECM
P0032	Air fuel ratio sensor heater current fail (1 trip detection logic)	• Short in air fuel ratio sensor heater circuit • Air fuel ratio sensor heater (sensor 1) • ECM

HINT:

- Sensor 1 refers to the sensor closest to the engine assembly.
- Sensor 2 refers to the sensor farthest away from the engine assembly.

MONITOR DESCRIPTION

The ECM uses information from the air fuel ratio sensor to regulate the air fuel ratio and keep it close to the stoichiometric level. This maximizes the ability of the three-way catalytic converter to purify the exhaust gases.

The air fuel ratio sensor detects oxygen levels in the exhaust gas and transmits the information to the ECM. The inner surface of the sensor element is exposed to the outside air. The outer surface of the sensor element is exposed to the exhaust gas. The sensor element is made of platinum coated zirconia and includes an integrated heating element.

The zirconia element generates a small voltage when there is a large difference in the oxygen concentrations between the exhaust gas and outside air. The platinum coating amplifies this voltage generation.

The air fuel ratio sensor is more efficient when heated. When the exhaust gas temperature is low, the sensor cannot generate useful voltage signals without supplementary heating. The ECM regulates the supplementary heating using a duty-cycle approach to adjust the average current in the sensor heater element. If the heater current is outside the normal range, the signal transmitted by the air fuel ratio sensor becomes inaccurate, as a result, the ECM is unable to regulate air-fuel ratio properly.

When the current in the air fuel ratio sensor heater is outside the normal operating range, the ECM interprets this as a malfunction in the sensor heater and sets a DTC.

MONITOR STRATEGY

Related DTCs	P0031: Air fuel ratio sensor heater open/short (Low electrical current) P0032: Air fuel ratio sensor heater open/short (High

	electrical current)
Required Sensors/Components (Main)	Air fuel ratio sensor heater
Required Sensors/Components (Related)	-
Frequency of Operation	Continuous
Duration	10 seconds
MIL Operation	Immediate
Sequence of Operation	None

TYPICAL ENABLING CONDITIONS

All

Monitor runs whenever following DTCs are not present	None

P0031

Battery voltage	10.5 V or more
Air fuel ratio sensor heater duty-cycle ratio	50% or more
Time after engine start	10 seconds or more

P0032

Battery voltage	Less than 20 V
Time after engine start	10 seconds or more

TYPICAL MALFUNCTION THRESHOLDS

P0031

Air fuel ratio sensor heater current	Less than 0.8 A

P0032

Hybrid IC high current limiter port	Fail

COMPONENT OPERATING RANGE

Air fuel ratio sensor heater resistance	1.8 to 3.4 Ω at 20°C (68°F)

CONFIRMATION DRIVING PATTERN

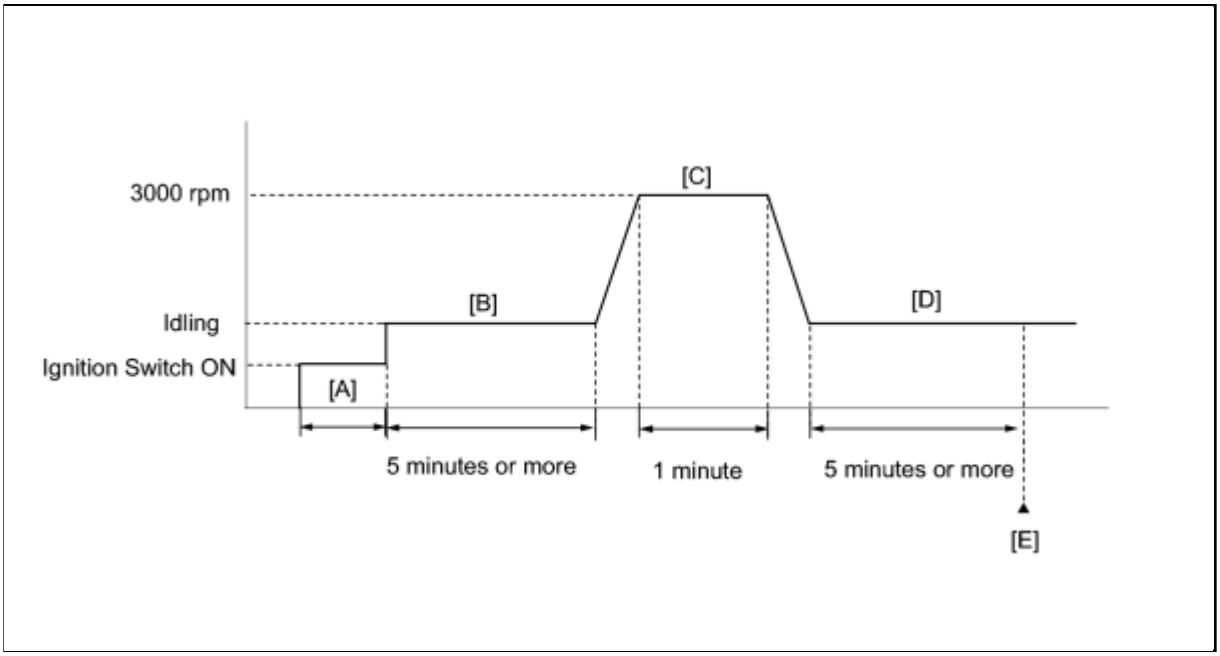

1. Connect the Techstream to the DLC3.
2. Turn the ignition switch to ON and turn the Techstream on.
3. Clear the DTCs (even if no DTCs are stored, perform the clear DTC procedure) INFO .
4. Turn the ignition switch off.
5. Turn the ignition switch to ON and turn the Techstream on [A].
6. Start the engine and idle it for 5 minutes or more [B].
7. With the vehicle stationary, depress the accelerator pedal and maintain an engine speed of 3000 rpm for 1 minute [C].
8. Idle the engine for 5 minutes or more [D].
9. Enter the following menus: Powertrain / Engine / Utility / All Readiness.
10. Input the DTC: P0031 or P0032.
11. Check the DTC judgment result [E].

TECHSTREAM DISPLAY	DESCRIPTION
NORMAL	○ DTC judgment completed ○ System normal
ABNORMAL	○ DTC judgment completed ○ System abnormal
INCOMPLETE	○ DTC judgment not completed ○ Perform driving pattern after confirming DTC enabling conditions

TECHSTREAM DISPLAY	DESCRIPTION
UNKNOWN	○ Unable to perform DTC judgment ○ Number of DTCs which do not fulfill DTC preconditions has reached ECU memory limit

12. If the judgment result shows INCOMPLETE or UNKNOWN, perform steps [B] through [E] again.
13. If the test result is UNKNOWN, enter the following menus: Powertrain / Engine / Trouble Codes / Pending.
14. Read Pending DTCs.

HINT:

If a pending DTC is output, the system is malfunctioning.

15. If the test result is INCOMPLETE or UNKNOWN and no pending DTC is output, perform a universal trip and check for permanent DTCs INFO .

HINT:

- If a permanent DTC is output, the system is malfunctioning.
- If no permanent DTC is output, the system is normal.

WIRING DIAGRAM

Refer to DTC P2195 INFO .

INSPECTION PROCEDURE

HINT:

Read freeze frame data using the Techstream. The ECM records vehicle and driving condition information as freeze frame data the moment a DTC is stored. When troubleshooting, freeze frame data can be helpful in determining whether the vehicle was running or stopped, whether the engine was warmed up or not, whether the air fuel ratio was lean or rich, as well as other data recorded at the time of a malfunction.

PROCEDURE

1.	**INSPECT AIR FUEL RATIO SENSOR (HEATER RESISTANCE)**

(a) Disconnect the air fuel ratio sensor connector.

(b) Measure the resistance according to the value(s) in the table below.

Standard Resistance:

Component without harness connected:
(Air Fuel Ratio Sensor)

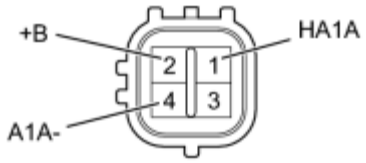

TESTER CONNECTION	CONDITION	SPECIFIED CONDITION
1 (HA1A) - 2 (+B)	20°C (68°F)	1.8 to 3.4 Ω
1 (HA1A) - 4 (A1A-)	Always	10 kΩ or higher

(c) Reconnect the air fuel ratio sensor connector.

NG ▶ **REPLACE AIR FUEL RATIO SENSOR**

OK ▼

2.	**CHECK TERMINAL VOLTAGE (POWER SOURCE)**

(a) Disconnect the air fuel ratio sensor connector.

(b) Turn the ignition switch to ON.

(c) Measure the voltage according to the value(s) in the table below.

Standard Voltage:

Front view of wire harness connector:
(to Air Fuel Ratio Sensor)



TESTER CONNECTION	SWITCH CONDITION	SPECIFIED CONDITION
B92-2 (+B) - Body ground	Ignition switch ON	11 to 14 V

(d) Reconnect the air fuel ratio sensor connector.

NG ▶ **INSPECT FUSE (EFI NO. 2 FUSE)**

OK

3.	**CHECK HARNESS AND CONNECTOR (AIR FUEL RATIO SENSOR - ECM)**

(a) Disconnect the air fuel ratio sensor connector.

(b) Disconnect the ECM connector.

(c) Measure the resistance according to the value(s) in the table below.

Standard Resistance (Check for Open):

TESTER CONNECTION	CONDITION	SPECIFIED CONDITION
B92-1 (HA1A) - B31-109 (HA1A)	Always	Below 1 Ω

Standard Resistance (Check for Short):

TESTER CONNECTION	CONDITION	SPECIFIED CONDITION
B92-1 (HA1A) or B31-109 (HA1A) - Body ground	Always	10 kΩ or higher

(d) Reconnect the air fuel ratio sensor connector.

(e) Reconnect the ECM connector.

Front view of wire harness connector:
(to Air Fuel Ratio Sensor)



Front view of wire harness connector:
(to ECM)

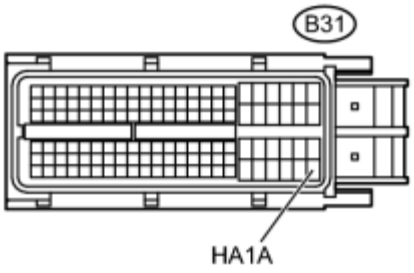

NG ▶ **REPAIR OR REPLACE HARNESS OR CONNECTOR (AIR FUEL RATIO SENSOR - ECM)**

OK ▼

4.	CHECK WHETHER DTC OUTPUT RECURS (DTC P0031 OR P0032)

(a) Connect the Techstream to the DLC3.

(b) Turn the ignition switch to ON.

(c) Turn the Techstream on.

(d) Clear the DTCs INFO .

(e) Start the engine.

(f) Allow the engine to idle for 1 minute or more.

(g) Enter the following menus: Powertrain / Engine and ECT / Trouble Codes.

(h) Read DTCs.

Result:

RESULT	PROCEED TO
No output	A
P0031 or P0032	B

B ▶ **REPLACE ECM**

A ▶ **CHECK FOR INTERMITTENT PROBLEMS**

5.	INSPECT FUSE (EFI NO. 2 FUSE)

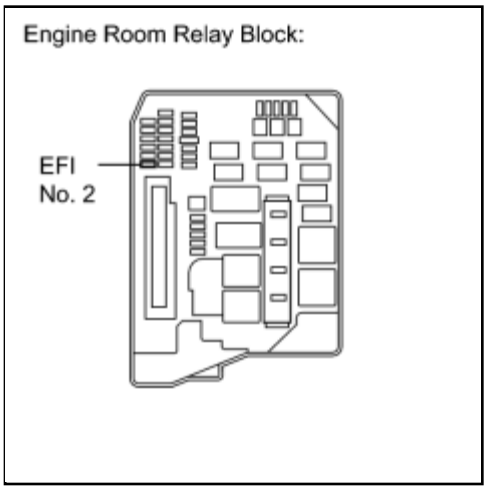

(a) Remove the EFI No. 2 fuse from the engine room relay block.

(b) Measure the resistance according to the value(s) in the table below.

Standard Resistance:

TESTER CONNECTION	CONDITION	SPECIFIED CONDITION
EFI No. 2 fuse	Always	Below 1 Ω

(c) Reinstall the EFI No. 2 fuse.

NG → REPLACE FUSE (EFI NO. 2 FUSE)

OK → REPAIR OR REPLACE HARNESS OR CONNECTOR (AIR FUEL RATIO SENSOR - ENGINE ROOM RELAY BLOCK)

Last Modified: 3-10-2010	6.4 C	**From:** 200901
Model Year: 2010	**Model:** Corolla	**Doc ID:** RM000000PFA09XX
Title: 2AZ-FE ENGINE CONTROL: SFI SYSTEM: P0037,P0038,P0141: Oxygen Sensor Heater Control Circuit Low (Bank 1 Sensor 2) (2010 Corolla)		

DTC	**P0037**	**Oxygen Sensor Heater Control Circuit Low (Bank 1 Sensor 2)**

DTC	**P0038**	**Oxygen Sensor Heater Control Circuit High (Bank 1 Sensor 2)**

DTC	**P0141**	**Oxygen Sensor Heater Circuit Malfunction (Bank 1 Sensor 2)**

DESCRIPTION

Refer to DTC P0136 INFO .

HINT:

- Sensor 2 refers to the sensor mounted behind the three-way catalytic converter and located far from the engine assembly.
- When any of these DTCs are set, the ECM enters fail-safe mode. The ECM turns off the heated oxygen sensor heater in fail-safe mode. Fail-safe mode continues until the ignition switch is turned off.
- The ECM uses pulse width modulation to adjust the current through the heater. The heated oxygen sensor heater circuit uses a relay on the +B side of the circuit.

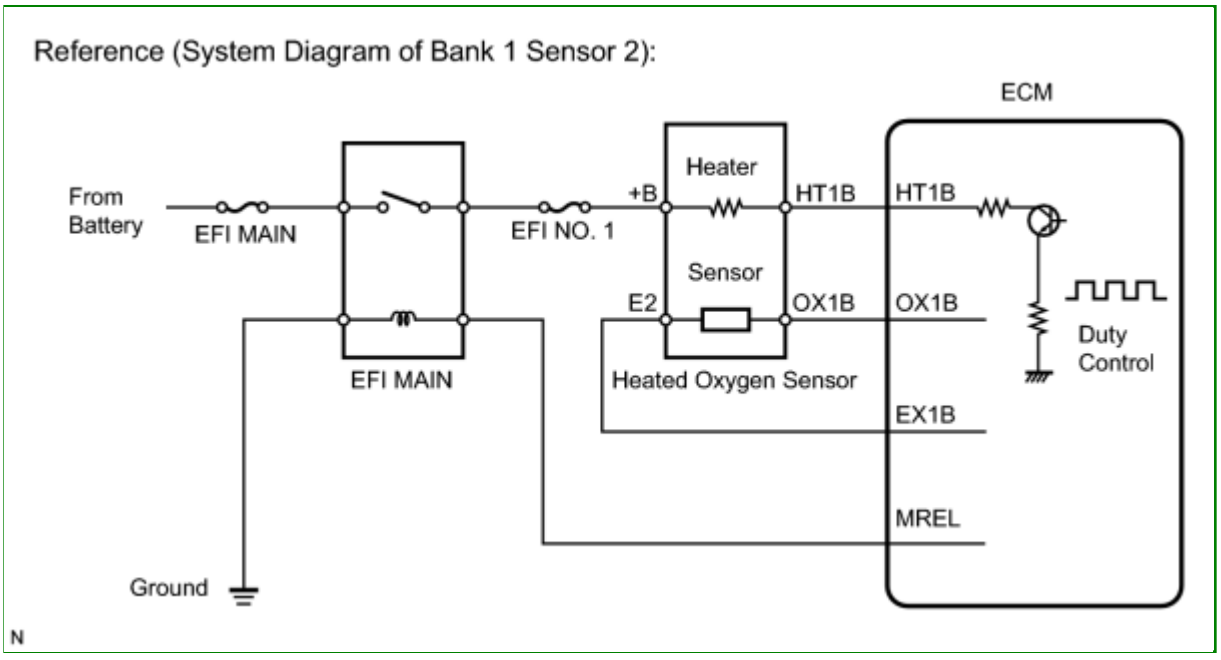

DTC NO.	DTC DETECTION CONDITION	TROUBLE AREA
P0037	Heated oxygen sensor (sensor 2) heater current less than 0.3 A (1 trip detection logic)	• Open in heated oxygen sensor (sensor 2) heater circuit • Heated oxygen sensor (sensor 2) heater • ECM
P0038	Heated oxygen sensor (sensor 2) heater current more than 2 A (1 trip detection logic)	• Short in heated oxygen sensor (sensor 2) heater circuit • Heated oxygen sensor (sensor 2) heater • ECM
P0141	Cumulative heater resistance correction value exceeds the acceptable threshold (2 trip detection logic)	• Open or short in heated oxygen sensor (sensor 2) heater circuit • Heated oxygen sensor (sensor 2) heater • ECM

HINT:

- Sensor 1 refers to the sensor closest to the engine assembly.
- Sensor 2 refers to the sensor farthest away from the engine assembly.

MONITOR DESCRIPTION

The sensing portion of the heated oxygen sensor has a zirconia element which is used to detect the oxygen concentration in the exhaust gas. If the zirconia element is at the appropriate temperature, and the difference between the oxygen concentrations surrounding the inside and outside surfaces of the sensor is large, the zirconia element generates voltage signals. In order to increase the oxygen concentration detecting capacity of the zirconia element, the ECM supplements the heat from the exhaust with heat from a heating element inside the sensor.

Heated oxygen sensor heater range check (P0037 and P0038):

The ECM monitors the current applied to the heated oxygen sensor heater to check the heater for malfunctions. If the current is below the threshold value, the ECM will determine that there is an open circuit in the heater. If the current is above the threshold value, the ECM will determine that there is a short circuit in the heater.

Example:

The ECM sets DTC P0038 when the current in the heated oxygen sensor heater is more than 2 A. Conversely, when the heater current is less than 0.3 A, DTC P0037 is set.

Heated oxygen sensor heater performance (P0141):

After the accumulated heater ON time exceeds 100 seconds, the ECM calculates the heater resistance using the battery voltage and the current applied to the heater. If the resistance is above the threshold

value, the ECM will determine that there is a malfunction in the heated oxygen sensor heater and set DTC P0141.

MONITOR STRATEGY

Related DTCs	P0037: Heated oxygen sensor heater (sensor 2) open/short (Low electrical current) P0038: Heated oxygen sensor heater (sensor 2) open/short (High electrical current) P0141: Heated oxygen sensor heater performance (sensor 2)
Required sensors/Components (Main)	Heated oxygen sensor heater (sensor 2)
Required sensors/Components (Related)	-
Frequency of operation	Continuous: P0037, P0038 Once per driving cycle: P0141
Duration	0.5 seconds: P0037, P0038 1 second: P0038 10 seconds: P0141
MIL operation	Immediate: P0037, P0038 2 driving cycles: P0141
Sequence of operation	None

TYPICAL ENABLING CONDITIONS

All

Monitor runs whenever following DTCs are not present	None

P0037

Battery voltage	10.5 to 20 V

P0038 (Case 1)

Battery voltage	10.5 V or more
Engine	Running
Starter	OFF

P0038 (Case 2)

Battery voltage	10.5 to 20 V

P0141

One of the following conditions is met:	Condition A or B
A. All of the following conditions are met:	Condition 1, 2, 3, 4 and 5
1. Battery voltage	10.5 V or more
2. Fuel cut	OFF
3. Time after fuel cut ON to OFF	30 seconds or more
4. Accumulated heater ON time	100 seconds or more
5. Learned heater OFF current operation	Completed
B. Duration that rear heated oxygen sensor impedance is less than 15 kΩ	2 seconds or more

TYPICAL MALFUNCTION THRESHOLDS

P0037

Heater current	Less than 0.3 A

P0038

Learned heater OFF current	More than 2 A

P0141 (Heater Performance Monitor Check)

Accumulated heater resistance	Varies with sensor element temperature (Example: More than 23 Ω)

COMPONENT OPERATING RANGE

Heated oxygen sensor heater current	0.4 to 1 A (when engine idles, HO2 sensor warmed up and battery voltage 11 to 14 V)

MONITOR RESULT

Refer to Checking Monitor Status INFO .

CONFIRMATION DRIVING PATTERN

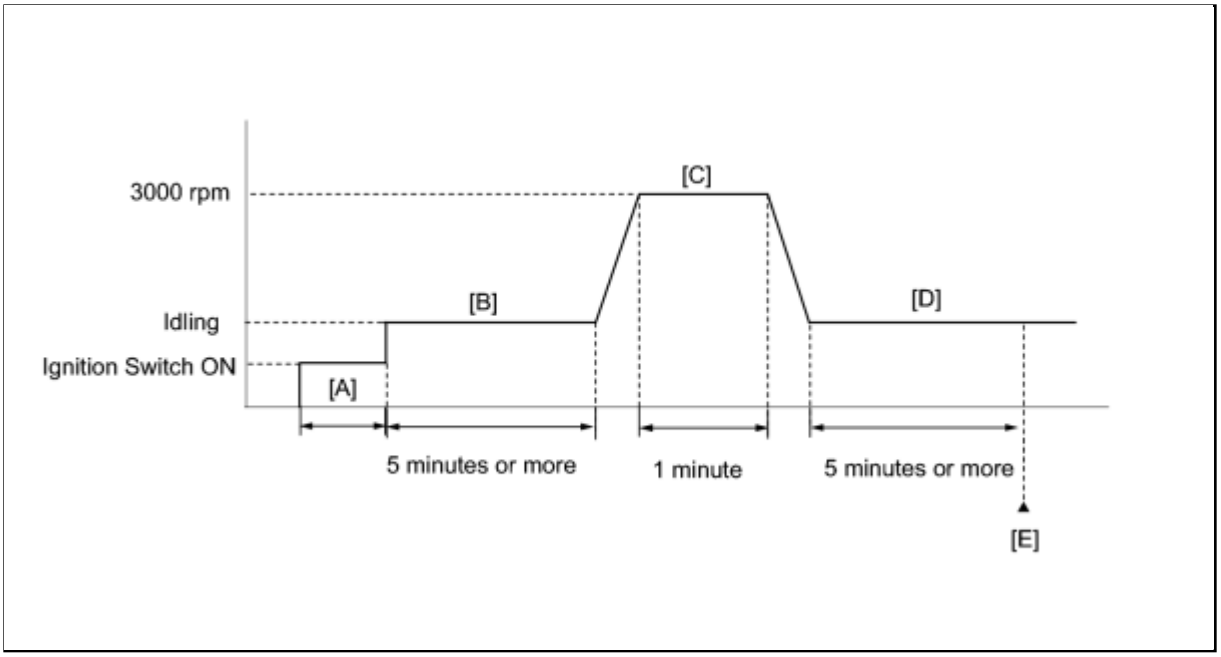

1. Connect the Techstream to the DLC3.
2. Turn the ignition switch to ON and turn the Techstream on.
3. Clear the DTCs (even if no DTCs are stored, perform the clear DTC procedure) INFO .
4. Turn the ignition switch off.
5. Turn the ignition switch to ON and turn the Techstream on [A].
6. Start the engine and idle it for 5 minutes or more [B].
7. With the vehicle stationary, depress the accelerator pedal and maintain an engine speed of 3000 rpm for 1 minute [C].
8. Idle the engine for 5 minutes or more [D].
9. Enter the following menus: Powertrain / Engine / Utility / All Readiness.
10. Input the DTC: P0037, P0038 or P0141.
11. Check the DTC judgment result [E].

TECHSTREAM DISPLAY	DESCRIPTION
NORMAL	○ DTC judgment completed ○ System normal
ABNORMAL	○ DTC judgment completed ○ System abnormal
INCOMPLETE	○ DTC judgment not completed ○ Perform driving pattern after confirming DTC enabling conditions
UNKNOWN	○ Unable to perform DTC judgment ○ Number of DTCs which do not fulfill DTC preconditions has reached ECU memory limit

12. If the judgment result shows INCOMPLETE or UNKNOWN, perform steps [B] through [E]

again.

13. If the test result is UNKNOWN, enter the following menus: Powertrain / Engine / Trouble Codes / Pending.
14. Read Pending DTCs.

HINT:

If a pending DTC is output, the system is malfunctioning.

15. If the test result is INCOMPLETE or UNKNOWN and no pending DTC is output, perform a universal trip and check for permanent DTCs INFO .

HINT:

- If a permanent DTC is output, the system is malfunctioning.
- If no permanent DTC is output, the system is normal.

WIRING DIAGRAM

Refer to DTC P0136 INFO .

INSPECTION PROCEDURE

HINT:

Read freeze frame data using the Techstream. The ECM records vehicle and driving condition information as freeze frame data the moment a DTC is stored. When troubleshooting, freeze frame data can be helpful in determining whether the vehicle was running or stopped, whether the engine was warmed up or not, whether the air fuel ratio was lean or rich, as well as other data recorded at the time of a malfunction.

PROCEDURE

1.	**INSPECT HEATED OXYGEN SENSOR (HEATER RESISTANCE)**

Component without harness connected:
(Heated Oxygen Sensor)

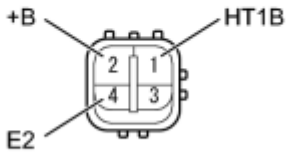

(a) Disconnect the heated oxygen sensor connector.

(b) Measure the resistance according to the value(s) in the table below.

Standard Resistance:

TESTER CONNECTION	CONDITION	SPECIFIED CONDITION
1 (HT1B) - 2 (+B)	20°C (68°F)	11 to 16 Ω
1 (HT1B) - 4 (E2)	Always	10 kΩ or higher

(c) Reconnect the heated oxygen sensor connector.

NG → REPLACE HEATED OXYGEN SENSOR

OK ↓

2.	CHECK TERMINAL VOLTAGE (POWER SOURCE)

(a) Disconnect the heated oxygen sensor connector.

(b) Turn the ignition switch to ON.

(c) Measure the voltage according to the value(s) in the table below.

Standard Voltage:

TESTER CONNECTION	SWITCH CONDITION	SPECIFIED CONDITION
B24-2 (+B) - Body ground	Ignition switch ON	11 to 14 V

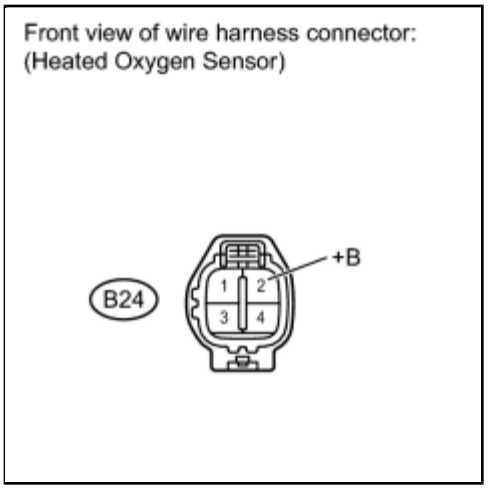

(d) Reconnect the heated oxygen sensor connector.

NG → INSPECT FUSE (EFI NO. 1)

OK ↓

3.	CHECK HARNESS AND CONNECTOR (HEATED OXYGEN SENSOR - ECM)

(a) Disconnect the heated oxygen sensor connector.

(b) Disconnect the ECM connector.

(c) Measure the resistance according to the value(s) in the table below.

Standard Resistance (Check for Open):

TESTER CONNECTION	CONDITION	SPECIFIED CONDITION
B24-1 (HT1B) - B31-47 (HT1B)	Always	Below 1 Ω

Standard Resistance (Check for Short):

TESTER CONNECTION	CONDITION	SPECIFIED CONDITION
B24-1 (HT1B) or B31-47 (HT1B) - Body ground	Always	10 kΩ or higher

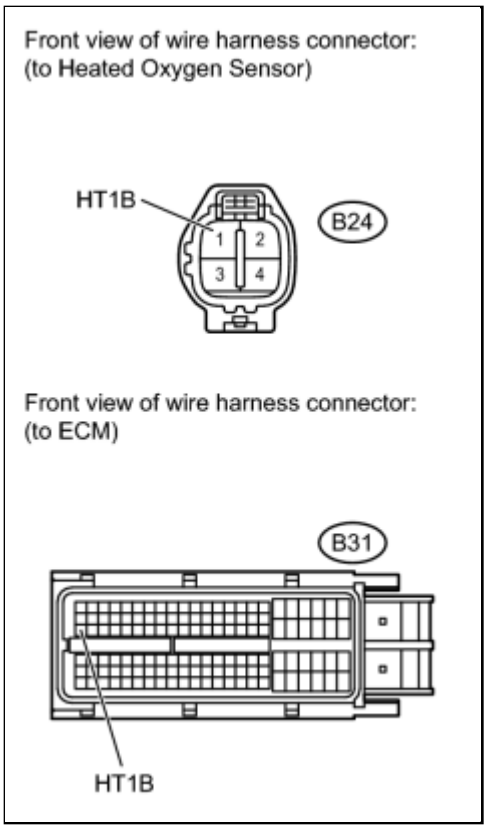

(d) Reconnect the heated oxygen sensor connector.

(e) Reconnect the ECM connector.

NG ▶ **REPAIR OR REPLACE HARNESS OR CONNECTOR (HEATED OXYGEN SENSOR - ECM)**

OK ▼

4.	**CHECK WHETHER DTC OUTPUT RECURS (DTC P0037, P0038 OR P0141)**

(a) Connect the Techstream to the DLC3.

(b) Turn the ignition switch to ON.

(c) Turn the Techstream on.

(d) Clear the DTCs INFO .

(e) Start the engine.

(f) Allow the engine to idle for 1 minute or more.

(g) Enter the following menus: Powertrain / Engine and ECT / Trouble Codes.

(h) Read DTCs.

Result:

RESULT	PROCEED TO
No output	A
P0037, P0038 or P0141	B

B ▶ **REPLACE ECM**

A ▶ **CHECK FOR INTERMITTENT PROBLEMS**

5.	**INSPECT FUSE (EFI NO. 1)**

(a) Remove the EFI No. 1 fuse from the engine room relay block.

(b) Measure the resistance according to the value(s) in the table below.

Standard Resistance:

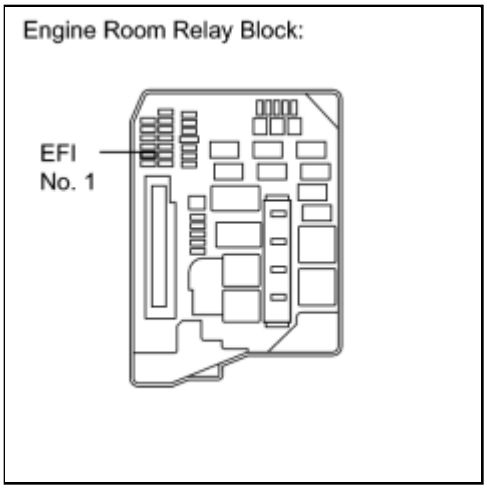

TESTER CONNECTION	CONDITION	SPECIFIED CONDITION
EFI No. 1 fuse	Always	Below 1 Ω

(c) Reinstall the EFI No. 1 fuse.

NG ▶ **REPLACE FUSE (EFI NO. 1 FUSE)**

OK ▶ **REPAIR OR REPLACE HARNESS OR CONNECTOR (HEATED OXYGEN**

SENSOR - ENGINE ROOM RELAY BLOCK)

Last Modified: 3-10-2010	6.4 C	**From:** 200901
Model Year: 2010	**Model:** Corolla	**Doc ID:** RM000000PF404MX
Title: 2AZ-FE ENGINE CONTROL: SFI SYSTEM: P0101: Mass Air Flow Circuit Range / Performance Problem (2010 Corolla)		

DTC	**P0101**	**Mass Air Flow Circuit Range / Performance Problem**

DESCRIPTION

Refer to DTC P0102 INFO .

DTC NO.	DTC DETECTION CONDITION	TROUBLE AREA
P0101	Conditions (a), (b), (c), (d) and (e) continue for more than 10 seconds (2 trip detection logic): (a) Engine running (b) Engine coolant temperature 70°C (158°F) or higher (c) Throttle position sensor voltage 0.24 to 2 V (d) Average engine load value ratio less than 0.85, or more than 1.18 (varies with estimated engine load) Average engine load value ratio = Average engine load based on mass air flow meter output / Average engine load estimated from driving conditions (e) Average air-fuel ratio less than -20%, or more than 20%	• Mass air flow meter • Intake system • PCV hose connections

MONITOR DESCRIPTION

The mass air flow meter is a sensor that measures the amount of air flowing through the throttle valve. The ECM uses this information to determine the fuel injection time and to provide an appropriate air-fuel ratio. Inside the mass air flow meter, there is a heated platinum wire which is exposed to the flow of intake air. By applying a specific electrical current to the wire, the ECM heats it to a specific temperature. The flow of incoming air cools both the wire and an internal thermistor, affecting their resistance. To maintain a constant current value, the ECM varies the voltage applied to the mass air flow meter. The voltage level is proportional to the airflow through the sensor, and the ECM uses it to calculate the intake air volume.

The ECM monitors the average engine load value ratio to check the mass air flow meter for malfunctions. The average engine load value ratio is obtained by comparing the average engine load calculated from the mass air flow meter output to the average engine load estimated from the driving conditions, such as the engine speed and the throttle opening angle. If the average engine load value ratio is below the threshold value, the ECM determines that the intake air volume is low, and if the average engine load value ratio is above the threshold value, the ECM determines that the intake air volume is high.

If this is detected in 2 consecutive driving cycles, the MIL is illuminated and the DTC is set.

MONITOR STRATEGY

Related DTCs	P0101: Mass air flow meter rationality
Required Sensors/Components (Main)	Mass air flow meter
Required Sensors/Components (Related)	Crankshaft position sensor Camshaft position sensor Engine coolant temperature sensor Throttle position sensor
Frequency of Operation	Continuous
Duration	10 times
MIL Operation	2 driving cycles
Sequence of Operation	None

TYPICAL ENABLING CONDITIONS

Monitor runs whenever following DTCs are not present	None
Throttle position (Throttle position sensor voltage)	0.24 to 2 V
Time after engine starts	5 seconds
Battery voltage	10.5 V or more
Estimated Load	30 to 70 %
Engine coolant temperature	70°C (158°F) or more
Intake air temperature sensor circuit	OK
Engine coolant temperature sensor circuit	OK
Crankshaft position sensor circuit	OK
Throttle position sensor circuit	OK
Canister pressure sensor circuit	OK
EVAP leak detection pump	OK
EVAP vent valve	OK

TYPICAL MALFUNCTION THRESHOLDS

Both of following conditions 1 and 2 met	-
1. Averaged engine load value ratio	Less than 0.85, or more than 1.18 (varies with estimated engine load)

2. Averaged air-fuel ratio	Less than -20%, or more than 20%

CONFIRMATION DRIVING PATTERN

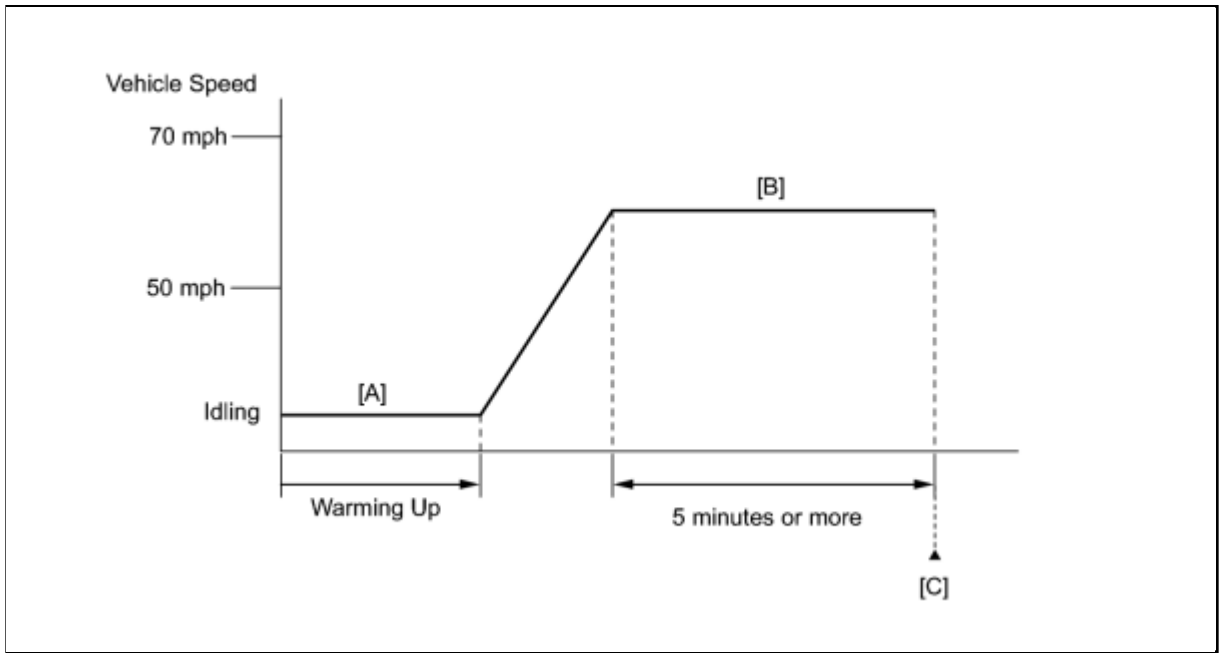

1. Connect the Techstream to the DLC3.
2. Turn the ignition switch to ON.
3. Turn the Techstream on.
4. Clear the DTCs (even if no DTCs are stored, perform the clear DTC procedure) INFO .
5. Turn the ignition switch off.
6. Turn the ignition switch to ON and turn the Techstream on.
7. Start the engine and warm it up until the engine coolant temperature reaches 70°C (158°F) or higher [A].
8. Drive the vehicle at approximately 50 mph (80 km/h) to 70 mph (112 km/h) for 5 minutes or more [B].

   HINT:

   Drive while keeping the engine load as stable as possible.

9. Enter the following menus: Powertrain / Engine / Utility / All Readiness.
10. Input the DTC: P0101.
11. Check the DTC judgment result [C].

TECHSTREAM DISPLAY	DESCRIPTION
NORMAL	○ DTC judgment completed ○ System normal

TECHSTREAM DISPLAY	DESCRIPTION
ABNORMAL	○ DTC judgment completed ○ System abnormal
INCOMPLETE	○ DTC judgment not completed ○ Perform driving pattern after confirming DTC enabling conditions
UNKNOWN	○ Unable to perform DTC judgment ○ Number of DTCs which do not fulfill DTC preconditions has reached ECU memory limit

CAUTION:

When performing the confirmation driving pattern, obey all speed limits and traffic laws.

HINT:

If the judgment result shows INCOMPLETE or UNKNOWN, perform steps [B] and [C] again.

12. If the test result is UNKNOWN, enter the following menus: Powertrain / Engine / Trouble Codes / Pending.
13. Read Pending DTCs.

HINT:

If a pending DTC is output, the system is malfunctioning.

14. If the test result is INCOMPLETE or UNKNOWN and no pending DTC is output, perform a universal trip and check for permanent DTCs INFO .

HINT:

- If a permanent DTC is output, the system is malfunctioning.
- If no permanent DTC is output, the system is normal.

WIRING DIAGRAM

Refer to DTC P0102 INFO .

INSPECTION PROCEDURE

HINT:

Read freeze frame data using the Techstream. The ECM records vehicle and driving condition information as freeze frame data the moment a DTC is stored. When troubleshooting, freeze frame data can be helpful in determining whether the vehicle was running or stopped, whether the engine was warmed up or not, whether the air fuel ratio was lean or rich, as well as other data recorded at the time of a malfunction.

PROCEDURE

1.	**CHECK ANY OTHER DTCS OUTPUT (IN ADDITION TO DTC P0101)**

(a) Connect the Techstream to the DLC3.

(b) Turn the ignition switch to ON.

(c) Turn the Techstream on.

(d) Enter the following menus: Powertrain / Engine and ECT / Trouble Codes.

(e) Read DTCs.

Result:

RESULT	PROCEED TO
P0101	A
P0101 and other DTCs	B

HINT:

If any DTCs other than P0101 are output, troubleshoot those DTCs first.

B ▶ **GO TO DTC CHART**

A ▼

2.	**CHECK INTAKE SYSTEM**

(a) Check the intake system for vacuum leak INFO .

OK:

No leak in intake system.

NG ▶ **REPAIR OR REPLACE INTAKE SYSTEM**

OK ▼

3.	**CHECK PCV HOSE CONNECTIONS**

(a) Check the PCV hose.

OK:

PCV hose is connected correctly and is not damaged.

NG ▶ **REPAIR OR REPLACE PCV HOSE**

OK ▶ **REPLACE MASS AIR FLOW METER**

Last Modified: 3-10-2010	6.4 C	**From:** 200901
Model Year: 2010	**Model:** Corolla	**Doc ID:** RM000000U5B09CX
Title: 2AZ-FE ENGINE CONTROL: SFI SYSTEM: P0102,P0103: Mass or Volume Air Flow Circuit Low Input (2010 Corolla)		

DTC	**P0102**	**Mass or Volume Air Flow Circuit Low Input**

DTC	**P0103**	**Mass or Volume Air Flow Circuit High Input**

DESCRIPTION

The mass air flow meter is a sensor that measures the amount of air flowing through the throttle valve.

The ECM uses this information to determine the fuel injection time and to provide the appropriate air fuel ratio.

Inside the mass air flow meter, there is a heated platinum wire which is exposed to the flow of intake air.

By applying a specific electrical current to the wire, the ECM heats it to a given temperature. The flow of incoming air cools both the wire and an internal thermistor, affecting their resistance. To maintain a constant current value, the ECM varies the voltage applied to these components in the mass air flow meter. The voltage level is proportional to the air flow through the sensor, and the ECM uses it to calculate the intake air volume.

The circuit is constructed so that the platinum hot wire and the temperature sensor create a bridge circuit, and the power transistor is controlled so that the potentials of A and B remain equal to maintain the predetermined temperature.

HINT:

When any of these DTCs are set, the ECM enters fail-safe mode. During fail-safe mode, the ignition timing is calculated by the ECM, according to the engine RPM and throttle valve position. Fail-safe mode continues until a pass condition is detected.

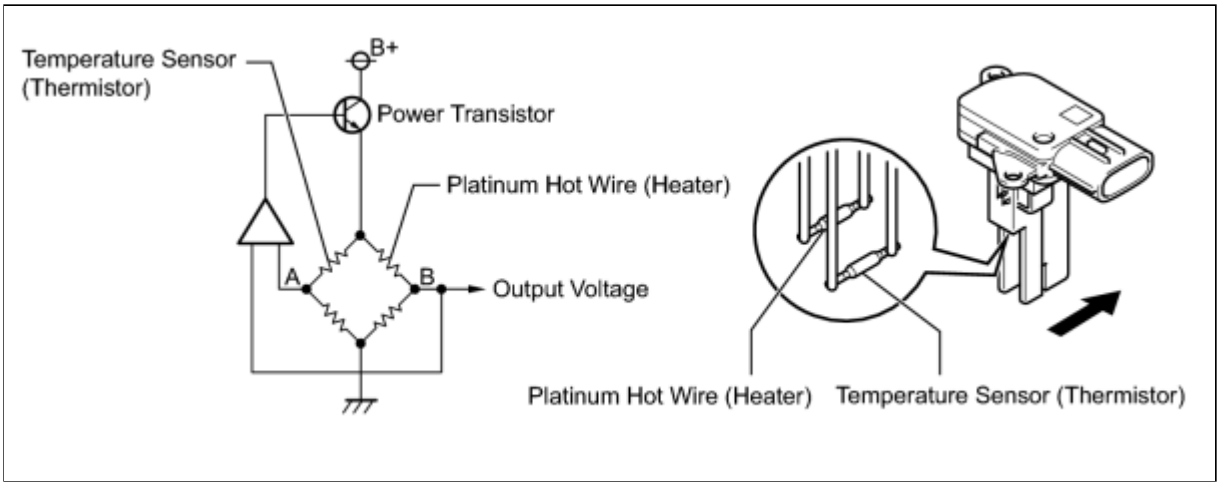

DTC NO.	DTC DETECTION CONDITION	TROUBLE AREA
P0102	Mass air flow meter voltage less than 0.2 V for 3 seconds (1 trip detection logic)	• Open or short in mass air flow meter circuit • Mass air flow meter • ECM
P0103	Mass air flow meter voltage more than 4.9 V for 3 seconds (1 trip detection logic)	• Open or short in mass air flow meter circuit • Mass air flow meter • ECM

HINT:

When any of these DTCs are set, check the air-flow rate by entering the following menus: Powertrain / Engine and ECT / Data List / All Data / MAF.

MASS AIR FLOW RATE (GM/SEC)	CONDITION	MALFUNCTION
Approximately 0.0	• Engine not running • 30 seconds after ignition switch tuned to ON	• Open in mass air flow meter power source circuit • Open or short in VG circuit
0.48 or more		• Open in E2G circuit

NOTICE:

- Perform the inspection with the vehicle indoors and on a level surface.
- Perform the inspection of the mass air flow meter while it is installed to the air cleaner case (installed to the vehicle).
- During the test, do not use an exhaust air duct on the exhaust tail pipe assembly.

MONITOR DESCRIPTION

If there is a defect in the mass air flow meter or an open or short circuit, the voltage level deviates from the normal operating range. The ECM interprets this deviation as a malfunction in the mass air flow meter circuit and sets a DTC.

Example:

When the sensor output voltage remains less than 0.2 V, or more than 4.9 V, for more than 3 seconds, the ECM sets a DTC.

If the malfunction is not repaired successfully, a DTC is set 3 seconds after the engine is next started.

MONITOR STRATEGY

Related DTCs	P0102: Mass air flow meter range check (Low voltage) P0103: Mass air flow meter range check (High voltage)
Required Sensors/Components (Main)	Mass air flow meter
Required Sensors/Components (Related)	Crankshaft position sensor
Frequency of Operation	Continuous
Duration	3 seconds
MIL Operation	Immediate: Engine RPM less than 4000 rpm 2 driving cycles: Engine RPM 4000 rpm or more
Sequence of Operation	None

TYPICAL ENABLING CONDITIONS

Monitor runs whenever following DTCs are not present	None

TYPICAL MALFUNCTION THRESHOLDS

P0102

Mass air flow meter voltage	Less than 0.2 V

P0103

Mass air flow meter voltage	More than 4.9 V

COMPONENT OPERATING RANGE

Mass air flow meter voltage	Between 0.2 V and 4.9 V

CONFIRMATION DRIVING PATTERN

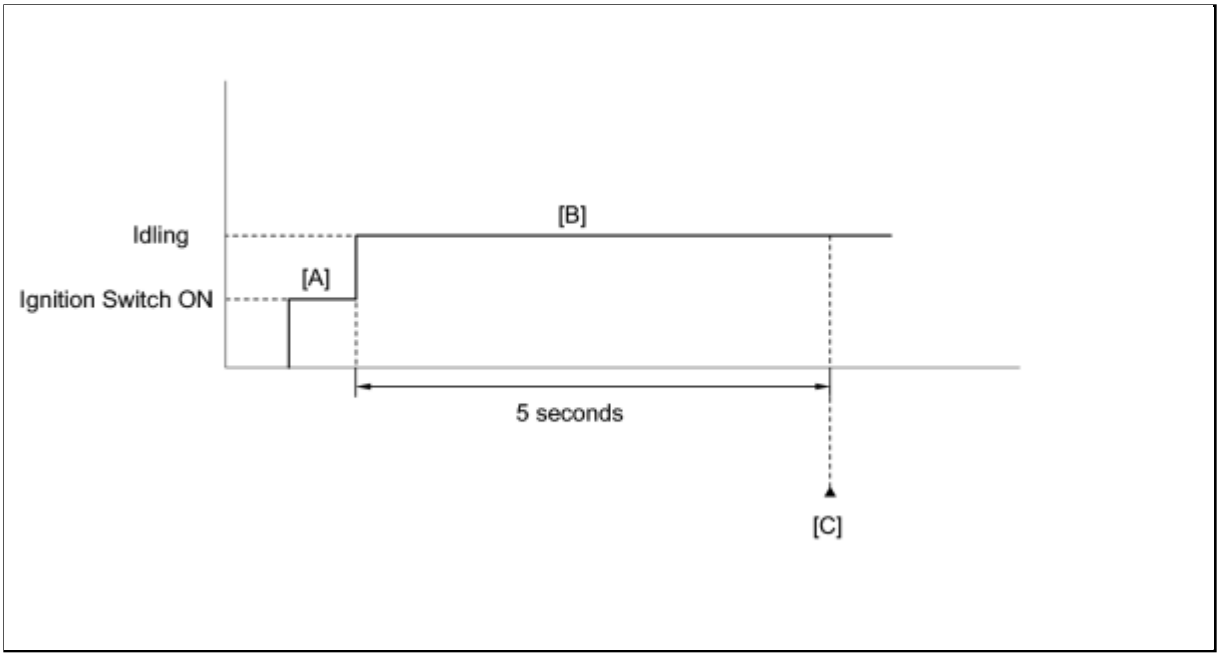

1. Connect the Techstream to the DLC3.
2. Turn the ignition switch to ON and turn the Techstream on.
3. Clear the DTCs (even if no DTCs are stored, perform the clear DTC procedure) INFO .
4. Turn the ignition switch off.
5. Turn the ignition switch to ON and turn the Techstream on [A].
6. Start the engine.
7. Idle the engine for 5 seconds [B].
8. Enter the following menus: Powertrain / Engine / Utility / All Readiness.
9. Input the DTC: P0102 or P0103.
10. Check the DTC judgment result [C].

TECHSTREAM DISPLAY	DESCRIPTION
NORMAL	○ DTC judgment completed ○ System normal
ABNORMAL	○ DTC judgment completed ○ System abnormal
INCOMPLETE	○ DTC judgment not completed ○ Perform driving pattern after confirming DTC enabling conditions
UNKNOWN	○ Unable to perform DTC judgment ○ Number of DTCs which do not fulfill DTC preconditions has reached ECU memory limit

HINT:

If the judgment result shows INCOMPLETE or UNKNOWN, perform steps [B] and [C] again.

11. If the test result is UNKNOWN, enter the following menus: Powertrain / Engine / Trouble Codes / Pending.
12. Read Pending DTCs.

HINT:

If a pending DTC is output, the system is malfunctioning.

13. If the test result is INCOMPLETE or UNKNOWN and no pending DTC is output, perform a universal trip and check for permanent DTCs INFO .

HINT:

- If a permanent DTC is output, the system is malfunctioning.
- If no permanent DTC is output, the system is normal.

WIRING DIAGRAM

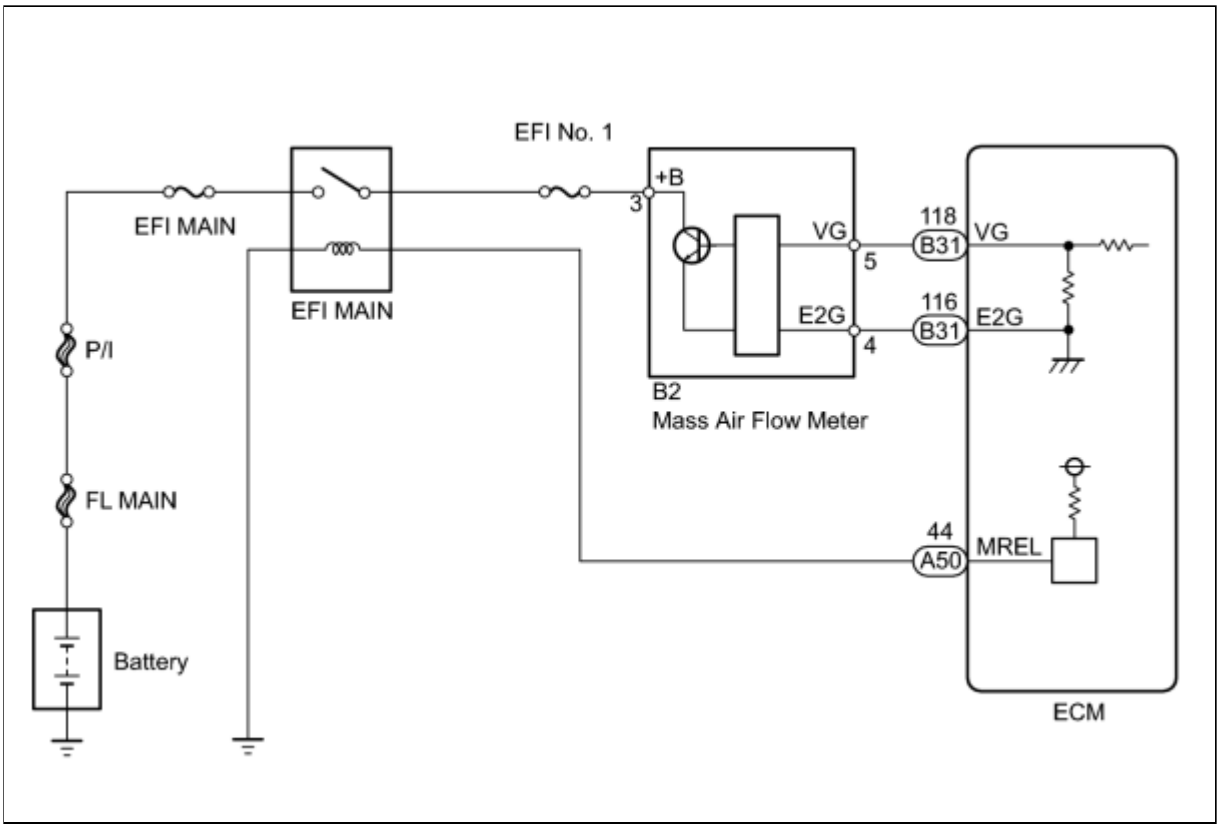

INSPECTION PROCEDURE

NOTICE:

Inspect the fuses for circuits related to this system before performing the following inspection procedure.

HINT:

Read freeze frame data using the Techstream. The ECM records vehicle and driving condition information as freeze frame data the moment a DTC is stored. When troubleshooting, freeze frame data can determine if the vehicle was moving or stationary, if the engine was warmed up or not, if the air fuel ratio was lean or rich, as well as other data from the time the malfunction.

PROCEDURE

1.	**READ DTC OUTPUT**

(a) Connect the Techstream to the DLC3.

(b) Turn the ignition switch to ON.

(c) Turn the Techstream on.

(d) Enter the following menus: Powertrain / Engine and ECT / DTC.

(e) Read the DTCs.

Result:

RESULT	PROCEED TO
DTC P0102 is output	A
DTC P0103 is output	B

HINT:

***: The value must change when the throttle valve is open or closed with the engine running.**

B ▶ **CHECK HARNESS AND CONNECTOR (SENSOR GROUND)**

A ▼

2.	**INSPECT MASS AIR FLOW METER (POWER SOURCE VOLTAGE)**

(a) Disconnect the mass air flow meter connector.

(b) Turn the ignition switch to ON.

(c) Measure the voltage according to the value(s) in the table below.

Standard Voltage:

TESTER CONNECTION	SWITCH CONDITION	SPECIFIED CONDITION
B2-3 (+B) - Body ground	Ignition switch ON	11 to 14 V

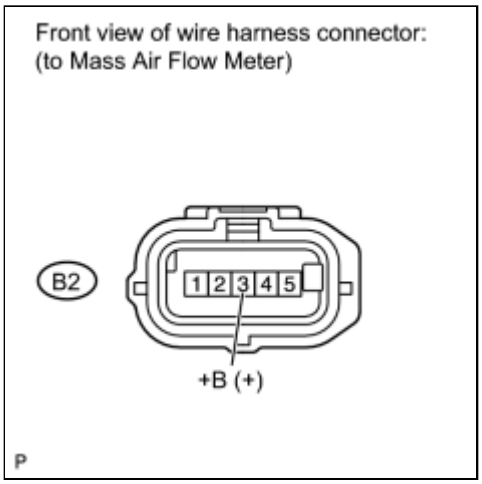

(d) Reconnect the mass air flow meter connector.

NG ▶ **REPAIR OR REPLACE HARNESS OR CONNECTOR (INTEGRATION RELAY (EFI MAIN RELAY - MASS AIR FLOW METER))**

OK ▼

3.	CHECK HARNESS AND CONNECTOR (MASS AIR FLOW METER - ECM)

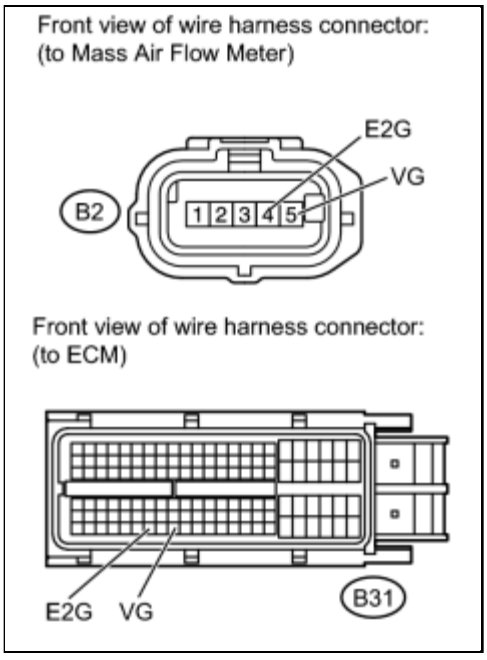

(a) Disconnect the mass air flow meter connector.

(b) Disconnect the ECM connector.

(c) Measure the resistance according to the value(s) in the table below.

Standard Resistance (Check for Open):

TESTER CONNECTION	CONDITION	SPECIFIED CONDITION
B2-5 (VG) - B31-118 (VG)	Always	Below 1 Ω
B2-4 (E2G) - B31-116 (E2G)		

Standard Resistance (Check for Short):

TESTER CONNECTION	CONDITION	SPECIFIED

		CONDITION
B2-5 (VG) or B31-118 (VG) - Body ground	Always	10 kΩ or higher

(d) Reconnect the mass air flow meter connector.

(e) Reconnect the ECM connector.

NG ▶ **REPAIR OR REPLACE HARNESS OR CONNECTOR (MASS AIR FLOW METER - ECM)**

OK ▼

4.	INSPECT MASS AIR FLOW METER

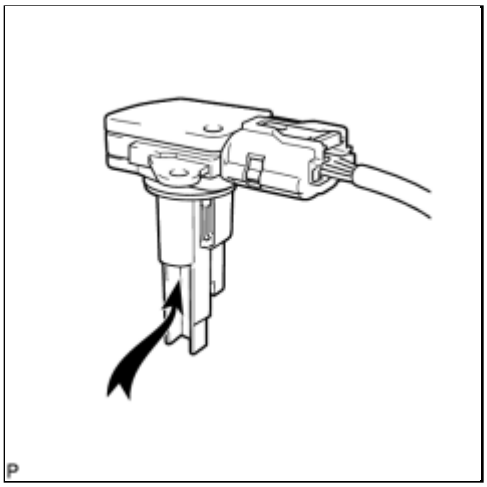

(a) Perform On-vehicle Inspection INFO .

(b) Perform Inspection INFO .

(c) Inspect the function of the mass air flow meter.

(1) Remove the mass air flow meter with the connector connected.

(2) Connect the Techstream to the DLC3.

(3) Turn the engine switch to ON.

(4) Turn the Techstream on.

(5) Enter the following menus: Powertrain / Engine / Data List / MAF.

(6) Blow air to the mass air flow meter and check that the intake air amount reading changes.

OK:

The reading changes.

NG ▶ REPLACE MASS AIR FLOW METER

OK ▶ REPLACE ECM

5.	CHECK HARNESS AND CONNECTOR (SENSOR GROUND)

(a) Disconnect the mass air flow meter connector.

(b) Measure the resistance according to the value(s) in the table below.

Standard Resistance:

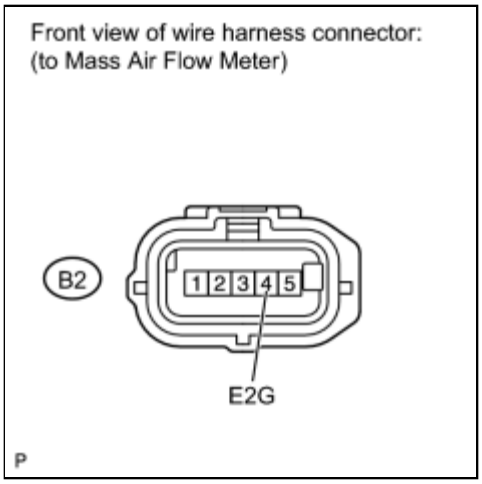

TESTER CONNECTION	CONDITION	SPECIFIED CONDITION
B2-4 (E2G) - Body ground	Always	Below 1 Ω

(c) Reconnect the mass air flow meter connector.

NG ▶ CHECK HARNESS AND CONNECTOR (MASS AIR FLOW METER - ECM)

OK ▶ REPLACE MASS AIR FLOW METER

6.	CHECK HARNESS AND CONNECTOR (MASS AIR FLOW METER - ECM)

(a) Disconnect the mass air flow meter connector.

(b) Disconnect the ECM connector.

(c) Measure the resistance according to the value(s) in the table below.

Standard Resistance (Check for Open):

TESTER CONNECTION	CONDITION	SPECIFIED CONDITION
B2-5 (VG) - B31-118 (VG)	Always	Below 1 Ω
B2-4 (E2G) - B31-116 (E2G)		

Standard Resistance (Check for Short):

TESTER CONNECTION	CONDITION	SPECIFIED CONDITION
B2-5 (VG) or B31-118 (VG) - Body ground	Always	10 kΩ or higher

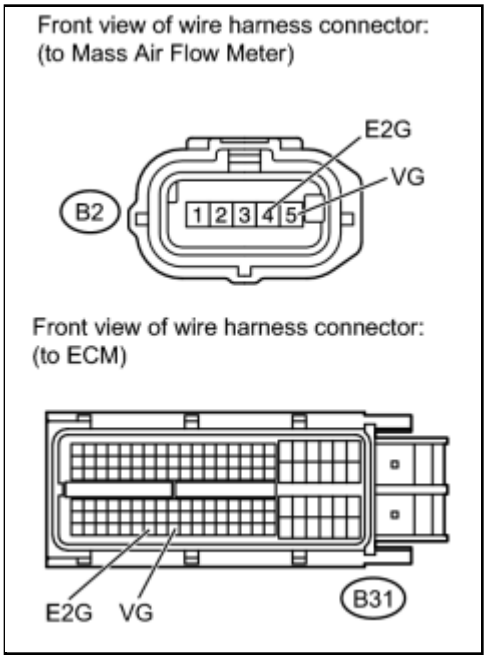

(d) Reconnect the mass air flow meter connector.

(e) Reconnect the ECM connector.

NG ▶ **REPAIR OR REPLACE HARNESS OR CONNECTOR (MASS AIR FLOW METER - ECM)**

OK ▶ **REPLACE ECM**

Last Modified: 3-10-2010	6.4 C	**From:** 200901
Model Year: 2010	**Model:** Corolla	**Doc ID:** RM000000PF3094X
Title: 2AZ-FE ENGINE CONTROL: SFI SYSTEM: P0112,P0113: Intake Air Temperature Circuit Low Input (2010 Corolla)		

DTC	**P0112**	**Intake Air Temperature Circuit Low Input**

DTC	**P0113**	**Intake Air Temperature Circuit High Input**

DESCRIPTION

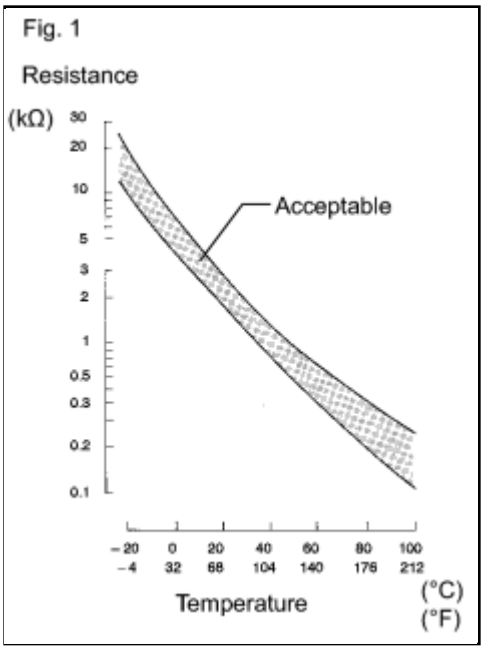

The intake air temperature sensor, mounted on the mass air flow meter, monitors the intake air temperature. The intake air temperature sensor has a built-in thermistor with a resistance that varies according to the temperature of the intake air. When the intake air temperature becomes low, the resistance of the thermistor increases. When the temperature becomes high, the resistance drops. These variations in resistance are transmitted to the ECM as voltage changes (see Fig. 1).
The intake air temperature sensor is powered by a 5 V supply from the THA terminal of the ECM, via resistor R which is located inside the ECM.
Resistor R and the intake air temperature sensor are connected in series. When the resistance value of the intake air temperature sensor changes, according to changes in the intake air temperature, the voltage at terminal THA also varies. Based on this signal, the ECM increases the fuel injection volume when the engine is cold to improve driveability.

HINT:

When any of DTCs P0112 and P0113 are set, the ECM enters fail-safe mode. During fail-safe mode, the intake air temperature is estimated to be 20°C (68°F) by the ECM. Fail-safe mode continues until a pass condition is

detected.

DTC NO.	DTC DETECTION CONDITION	TROUBLE AREA
P0112	Short in intake air temperature sensor circuit for 0.5 seconds (1 trip detection logic)	• Short in intake air temperature sensor circuit • Intake air temperature sensor (built into mass air flow meter) • ECM
P0113	Open in intake air temperature sensor circuit for 0.5 seconds (1 trip detection logic)	• Open in intake air temperature sensor circuit • Intake air temperature sensor (built into mass air flow meter) • ECM

HINT:

When any of these DTCs are set, check the intake air temperature by entering the following menus: Powertrain / Engine and ECT / All Data / Intake Air.

TEMPERATURE DISPLAYED	MALFUNCTION
-40°C (-40°F)	Open circuit
140°C (284°F) or higher	Short circuit

MONITOR DESCRIPTION

The ECM monitors the sensor voltage and uses this value to calculate the intake air temperature. When the sensor output voltage deviates from the normal operating range, the ECM interprets this as a malfunction in the intake air temperature sensor and sets a DTC.

Example:

If the sensor output voltage is more than 4.91 V for 0.5 seconds or more, the ECM determines that there is an open in the intake air temperature sensor circuit, and sets DTC P0113. Conversely, if the output voltage is less than 0.18 V for 0.5 seconds or more, the ECM determines that there is a short in the sensor circuit, and sets DTC P0112.

If the malfunction is not repaired successfully, a DTC is set 0.5 seconds after the engine is next started.

MONITOR STRATEGY

Related DTCs	P0112: Intake air temperature sensor range check (Low voltage) P0113: Intake air temperature sensor range check (High voltage)
Required Sensors/Components (Main)	Intake air temperature sensor
Required Sensors/Components (Related)	-
Frequency of Operation	Continuous
Duration	0.5 seconds
MIL Operation	Immediate
Sequence of Operation	None

TYPICAL ENABLING CONDITIONS

Monitor runs whenever following DTCs are not present	None

TYPICAL MALFUNCTION THRESHOLDS

P0112

Intake air temperature sensor voltage	Less than 0.18 V [More than 140°C (284°F)]

P0113

Intake air temperature sensor voltage	More than 4.91 V [Less than -40°C (-40°F)]

COMPONENT OPERATING RANGE

Intake air temperature sensor voltage	0.18 to 4.91 V [-40 to 140°C (-40 to 284°F)]

CONFIRMATION DRIVING PATTERN

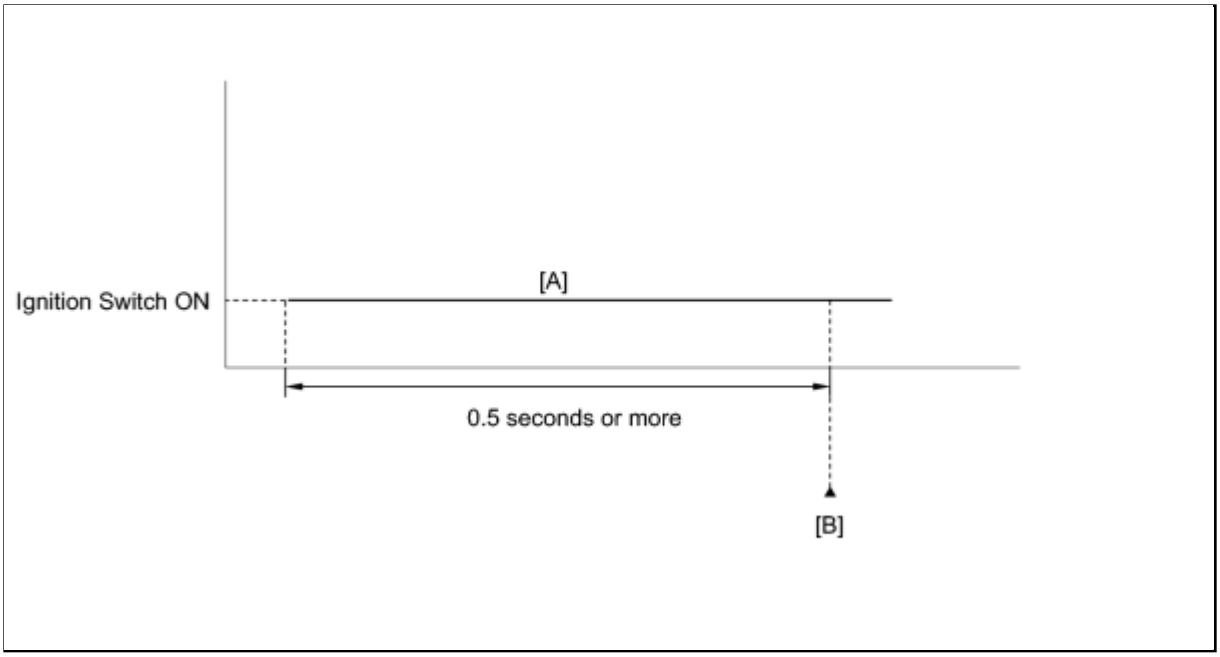

1. Connect the Techstream to the DLC3.
2. Turn the ignition switch to ON and turn the Techstream on.
3. Clear the DTCs (even if no DTCs are stored, perform the clear DTC procedure) INFO .
4. Turn the ignition switch off.
5. Turn the ignition switch to ON and turn the Techstream on.
6. Wait 0.5 seconds or more [A].
7. Enter the following menus: Powertrain / Engine / Utility / All Readiness.
8. Input the DTC: P0112 or P0113.
9. Check the DTC judgment result [B].

TECHSTREAM DISPLAY	DESCRIPTION
NORMAL	○ DTC judgment completed ○ System normal
ABNORMAL	○ DTC judgment completed ○ System abnormal
INCOMPLETE	○ DTC judgment not completed ○ Perform driving pattern after confirming DTC enabling conditions
UNKNOWN	○ Unable to perform DTC judgment ○ Number of DTCs which do not fulfill DTC preconditions has reached ECU memory limit

10. If the test result is UNKNOWN, enter the following menus: Powertrain / Engine / Trouble Codes / Pending.
11. Read Pending DTCs.

HINT:

If a pending DTC is output, the system is malfunctioning.

12. If the test result is INCOMPLETE or UNKNOWN and no pending DTC is output, perform a universal trip and check for permanent DTCs INFO .

HINT:

- If a permanent DTC is output, the system is malfunctioning.
- If no permanent DTC is output, the system is normal.

WIRING DIAGRAM

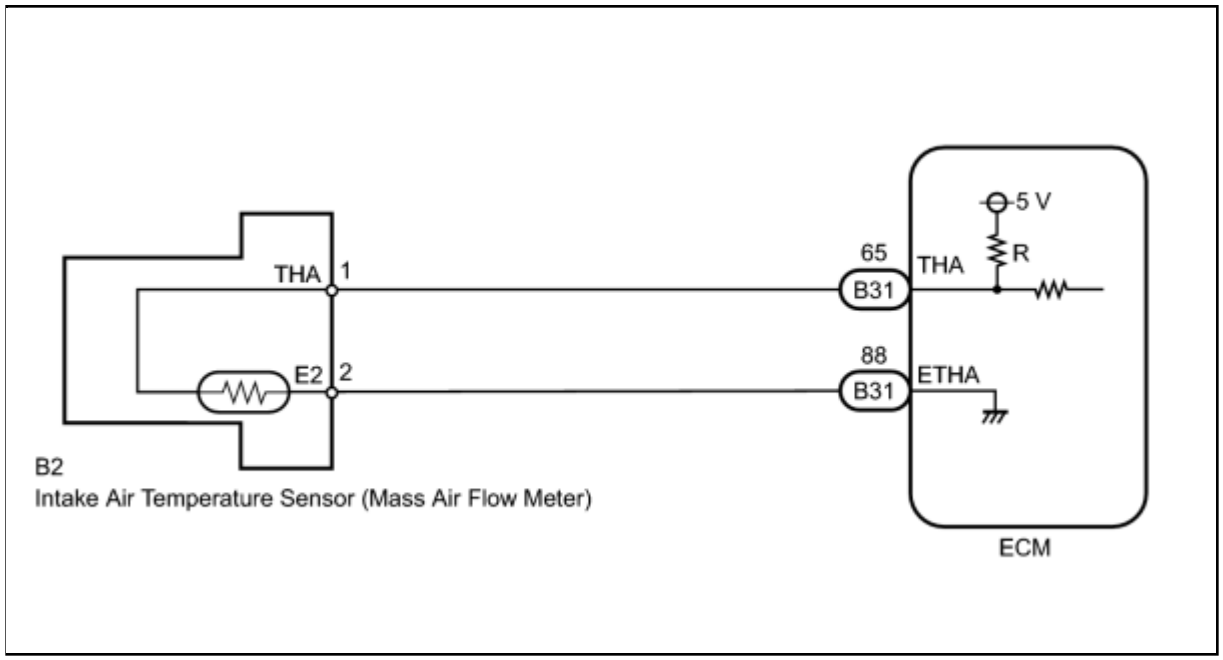

INSPECTION PROCEDURE

HINT:

Read freeze frame data using the Techstream. The ECM records vehicle and driving condition information as freeze frame data the moment a DTC is stored. When troubleshooting, freeze frame data can be helpful in determining whether the vehicle was running or stopped, whether the engine was warmed up or not, whether the air fuel ratio was lean or rich, as well as other data recorded at the time of a malfunction.

PROCEDURE

1.	**READ VALUE USING TECHSTREAM (INTAKE AIR TEMPERATURE)**

(a) Connect the Techstream to the DLC3.

(b) Turn the ignition switch to ON.

(c) Turn the Techstream on.

(d) Enter the following menus: Powertrain / Engine and ECT / Intake Air.

(e) Read the value displayed on the Techstream.

OK:
Same as actual intake air temperature.
Result:

RESULT	PROCEED TO
-40°C (-40°F)	A
140°C (284°F) or higher	B
Same as actual intake air temperature	C

HINT:

- If there is an open circuit, the Techstream indicates -40°C (-40°F).
- If there is a short circuit, the Techstream indicates 140°C (284°F) or higher.

C ▶ **CHECK FOR INTERMITTENT PROBLEMS**

B ▶ **READ VALUE USING TECHSTREAM (CHECK FOR SHORT IN WIRE HARNESS)**

A ▼

2.	**READ VALUE USING TECHSTREAM (CHECK FOR OPEN IN WIRE HARNESS)**

(a) Disconnect the mass air flow meter connector.

(b) Connect terminals 1 (THA) and 2 (E2) of the mass air flow meter wire harness side connector.

(c) Connect the Techstream to the DLC3.

(d) Turn the ignition switch to ON.

(e) Turn the Techstream on.

(f) Enter the following menus: Powertrain / Engine and ECT / Intake Air.

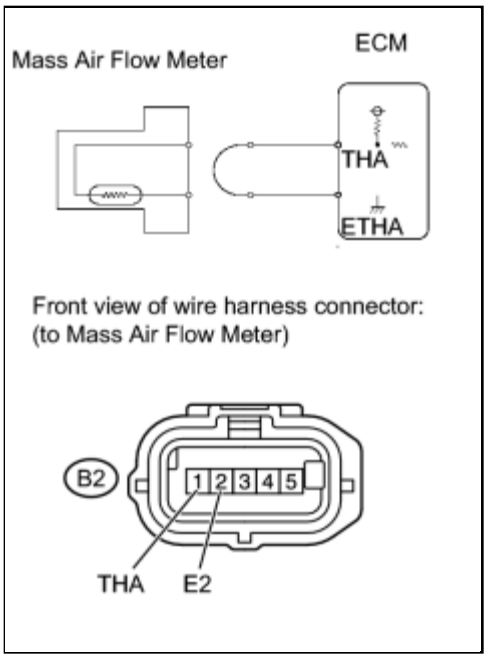

(g) Read the value displayed on the Techstream.

Standard Value:

140°C (284°F) or higher

(h) Reconnect the mass air flow meter connector.

NG ▶ **CHECK HARNESS AND CONNECTOR (MASS AIR FLOW METER - ECM)**

OK ▶ **REPLACE MASS AIR FLOW METER**

3.	CHECK HARNESS AND CONNECTOR (MASS AIR FLOW METER - ECM)

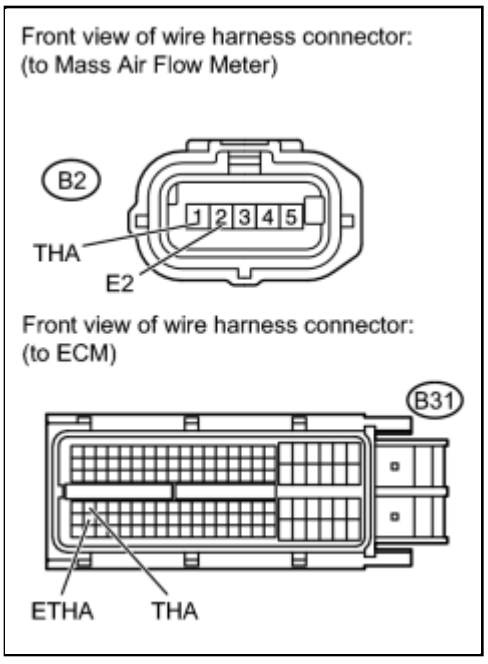

(a) Disconnect the mass air flow meter connector.

(b) Disconnect the ECM connector.

(c) Measure the resistance according to the value(s) in the table below.

Standard Resistance:

TESTER CONNECTION	CONDITION	SPECIFIED CONDITION
B2-1 (THA) - B31-65 (THA)	Always	Below 1 Ω
B2-2 (E2) - B31-88 (ETHA)	Always	Below 1 Ω

(d) Reconnect the mass air flow meter connector.

(e) Reconnect the ECM connector.

NG ▶ **REPAIR OR**

REPLACE HARNESS OR CONNECTOR (MASS AIR FLOW METER - ECM)

OK ▶ REPLACE ECM

4.	READ VALUE USING TECHSTREAM (CHECK FOR SHORT IN WIRE HARNESS)

(a) Disconnect the mass air flow meter connector.

(b) Connect the Techstream to the DLC3.

(c) Turn the ignition switch to ON.

(d) Turn the Techstream on.

(e) Enter the following menus: Powertrain / Engine and ECT / Intake Air.

(f) Read the value displayed on the Techstream.

Standard Value:
-40°C (-40°F)

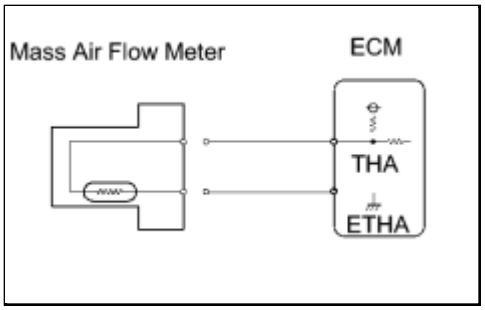

(g) Reconnect the mass air flow meter connector.

NG ▶ CHECK HARNESS AND CONNECTOR (MASS AIR FLOW METER - ECM)

OK ▶ REPLACE MASS AIR FLOW METER

5.	CHECK HARNESS AND CONNECTOR (MASS AIR FLOW METER - ECM)

(a) Disconnect the mass air flow meter connector.

(b) Disconnect the ECM connector.

(c) Measure the resistance according to the value(s) in the table below.

Standard Resistance:

TESTER CONNECTION	CONDITION	SPECIFIED CONDITION
B2-1 (THA) or B31-65 (THA) - Body ground	Always	10 kΩ or higher

(d) Reconnect the mass air flow meter connector.

(e) Reconnect the ECM connector.

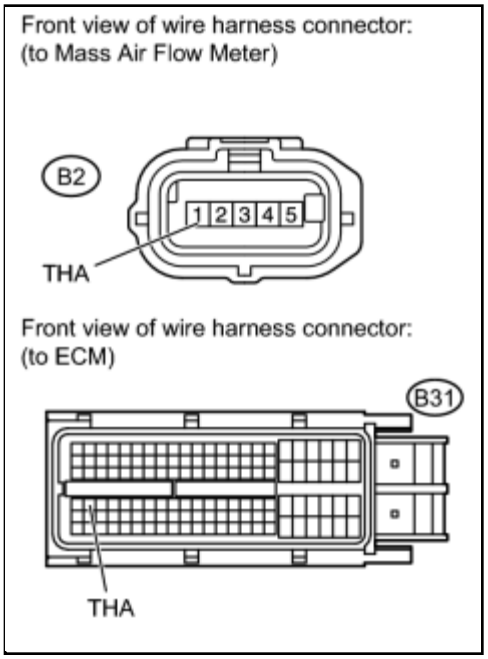

NG ▶ **REPAIR OR REPLACE HARNESS OR CONNECTOR (MASS AIR FLOW METER - ECM)**

OK ▶ **REPLACE ECM**

Last Modified: 3-10-2010	6.4 C	**From:** 200901
Model Year: 2010	**Model:** Corolla	**Doc ID:** RM000001WPH02PX
Title: 2AZ-FE ENGINE CONTROL: SFI SYSTEM: P0111: Intake Air Temperature Sensor Gradient Too High (2010 Corolla)		

DTC	**P0111**	**Intake Air Temperature Sensor Gradient Too High**

DESCRIPTION

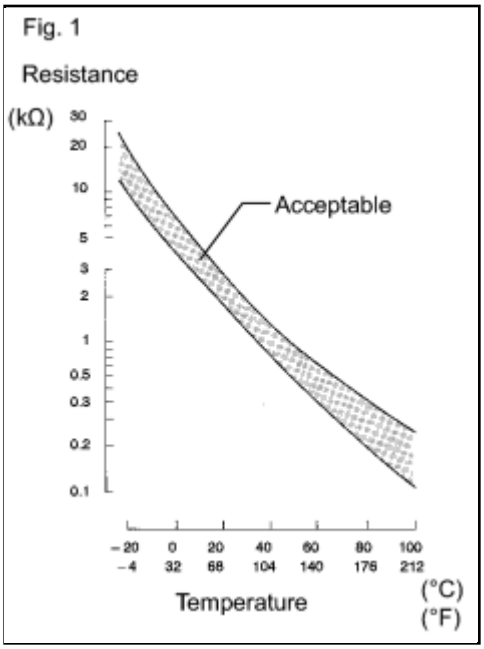

The intake air temperature sensor, part of the mass air flow meter, monitors the intake air temperature. The intake air temperature sensor has a built-in thermistor with a resistance that varies according to the temperature of the intake air. When the intake air temperature becomes low, the resistance of the thermistor increases. When the temperature becomes high, the resistance drops. These variations in resistance are transmitted to the ECM as voltage changes (See Fig. 1).

The intake air temperature sensor is powered by a 5 V supply from the THA terminal of the ECM, via resistor R which is located inside the ECM.

Resistor R and the intake air temperature sensor are connected in series. When the resistance value of the intake air temperature sensor changes, according to changes in the intake air temperature, the voltage at terminal THA also varies. Based on this signal, the ECM increases the fuel injection volume when the engine is cold to improve driveability.

DTC NO.	DTC DETECTION CONDITION	TROUBLE AREA
P0111	When either of following conditions is met (2 trip detection logic): • In duration between engine warmed up and next engine starts, change in intake air temperature sensor output bellow threshold	Mass air flow meter

DTC NO.	DTC DETECTION CONDITION	TROUBLE AREA
	• During engine warming up after cold engine starts, change in intake air temperature sensor output bellow threshold	

MONITOR DESCRIPTION

After a warm engine is stopped

The ECM monitors the intake air temperature variation in the period from when the engine was warmed up on the previous trip until the next engine start. If the change in engine coolant temperature sensor output is less than the threshold, it is determined that a malfunction has occurred in the intake air temperature sensor. When this is detected, the MIL is illuminated and the DTC is set.

After a cold engine is started

The monitor runs when the engine is started cold after 5 hours or more have elapsed since the engine stopped. If the intake air temperature sensor output variation until the engine has warmed up completely is less than the threshold, it is determined that a malfunction has occurred in the intake air temperature sensor. When this is detected in 2 consecutive driving cycles, the MIL is illuminated and the DTC is set.

MONITOR STRATEGY

Related DTCs	P0111: Intake air temperature sensor rationality (After engine stop) P0111: Intake air temperature sensor rationality (After cold engine start)
Required Sensors/Components (Main)	Intake air temperature sensor
Required Sensors/Components (Sub)	-
Frequency of Operation	Once per driving cycle
Duration	5 hours or more
MIL Operation	2 driving cycles
Sequence of Operation	None

TYPICAL ENABLING CONDITIONS

All

Monitor runs whenever following DTCs are not present	None

After Engine Stop

Time after engine start	10 seconds or more
Battery voltage	10.5 V or more
Engine coolant temperature sensor circuit	OK
Engine coolant temperature before engine stop	70°C (158°F) or more
Time that mass air flow is low before engine stop	2100 seconds
Accumulated mass air flow amount before engine stop	1864 g or more
Key-off duration	30 minutes

After Cold Engine Start

Key-off duration	5 hours
Time after engine start	10 seconds or more
Engine coolant temperature sensor circuit	OK
Engine coolant temperature	70°C (158°F) or more
Accumulated mass air flow amount	1864 g or more
Either of following conditions 1 or 2 is met:	-
1. Duration while engine load is low	120 seconds or more
2. Duration while engine load is high	10 seconds or more

TYPICAL MALFUNCTION THRESHOLDS

After Engine Stop

Intake air temperature change	Less than 1°C (33.8°F)

After Cold Engine Start

Intake air temperature change	Less than 1°C (33.8°F)

CONFIRMATION DRIVING PATTERN

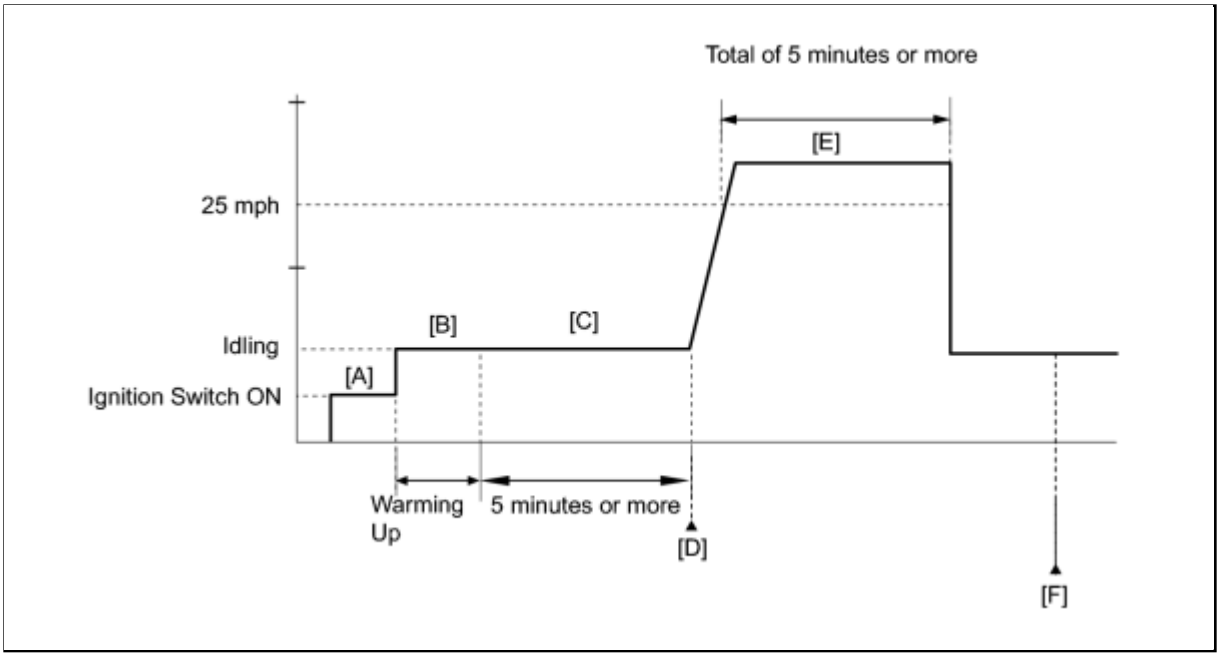

1. Connect the Techstream to the DLC3.
2. Turn the ignition switch to ON and turn the Techstream on.
3. Clear the DTCs (even if no DTCs are stored, perform the clear DTC procedure) INFO .
4. Turn the ignition switch off.
5. Turn the ignition switch to ON and turn the Techstream on [A].
6. Start the engine and warm it up until the engine coolant temperature reaches 75°C (167°F) or higher [B].
7. Idle the engine for 5 minutes or more [C].

HINT:

During steps [A] through [C], if the change in the intake air temperature is below 1°C (1.8°F), the intake air temperature sensor (mass air flow meter) is malfunctioning. It is not necessary to continue this procedure.

8. Enter the following menus: Powertrain / Engine / Utility / All Readiness.
9. Input the DTC: P0111.
10. Check the DTC judgment result [D].

TECHSTREAM DISPLAY	DESCRIPTION
NORMAL	○ DTC judgment completed ○ System normal
ABNORMAL	○ DTC judgment completed ○ System abnormal
INCOMPLETE	○ DTC judgment not completed ○ Perform driving pattern after confirming DTC enabling conditions

TECHSTREAM DISPLAY	DESCRIPTION
UNKNOWN	○ Unable to perform DTC judgment ○ Number of DTCs which do not fulfill DTC preconditions has reached ECU memory limit

CAUTION:

When performing the confirmation driving pattern, obey all speed limits and traffic laws.

HINT:

- If the judgment result shows ABNORMAL, the system has a malfunction.
- If the judgment result shows INCOMPLETE or UNKNOWN, perform steps [E] and [F].

11. Drive the vehicle at 25 mph (40 km/h) or more for a total of 5 minutes or more [E].
12. Check the DTC judgment result again [F].

HINT:

If the judgment result shows INCOMPLETE or UNKNOWN, perform steps [E] and [F] again.

13. If the test result is UNKNOWN, enter the following menus: Powertrain / Engine / Trouble Codes / Pending.
14. Read Pending DTCs.

HINT:

If a pending DTC is output, the system is malfunctioning.

15. If the test result is INCOMPLETE or UNKNOWN and no pending DTC is output, perform a universal trip and check for permanent DTCs INFO .

HINT:

- If a permanent DTC is output, the system is malfunctioning.
- If no permanent DTC is output, the system is normal.

WIRING DIAGRAM

Refer to DTC P0112 INFO .

INSPECTION PROCEDURE

PROCEDURE

1.	**CHECK ANY OTHER DTCS OUTPUT (IN ADDITION TO DTC P0111)**

(a) Connect the Techstream to the DLC3.

(b) Turn the ignition switch to ON.

(c) Turn the Techstream on.

(d) Enter the following menus: Powertrain / Engine and ECT / Trouble Codes.

(e) Read DTCs.

Result:

RESULT	PROCEED TO
P0111 and other DTCs	A
P0111	B

HINT:

If any DTCs other than P0111 are output, troubleshoot those DTCs first.

B ▶ **REPLACE MASS AIR FLOW METER**

A ▶ **GO TO DTC CHART**

Last Modified: 3-10-2010	6.4 C	**From:** 200901
Model Year: 2010	**Model:** Corolla	**Doc ID:** RM000000PF509VX
Title: 2AZ-FE ENGINE CONTROL: SFI SYSTEM: P0115,P0117,P0118: Engine Coolant Temperature Circuit Malfunction (2010 Corolla)		

DTC	**P0115**	**Engine Coolant Temperature Circuit Malfunction**

DTC	**P0117**	**Engine Coolant Temperature Circuit Low Input**

DTC	**P0118**	**Engine Coolant Temperature Circuit High Input**

DESCRIPTION

A thermistor, whose resistance value varies according to the engine coolant temperature, is built into the engine coolant temperature sensor.

The structure of the sensor and its connection to the ECM are similar to that of the intake air temperature sensor.

HINT:

When any of DTCs P0115, P0117 and P0118 are set, the ECM enters fail-safe mode. During fail-safe mode, the engine coolant temperature is estimated to be 80°C (176°F) by the ECM. Fail-safe mode continues until a pass condition is detected.

DTC NO.	DTC DETECTION CONDITION	TROUBLE AREA
P0115	Open or short in engine coolant temperature sensor circuit for 0.5 seconds (1 trip detection logic)	• Open or short in engine coolant temperature sensor circuit • Engine coolant temperature sensor • ECM
P0117	Short in engine coolant temperature sensor circuit for 0.5 seconds (1 trip detection logic)	• Short in engine coolant temperature sensor circuit • Engine coolant temperature sensor • ECM
P0118	Open in engine coolant temperature sensor circuit for 0.5 seconds (1 trip detection logic)	• Open in engine coolant temperature sensor circuit

DTC NO.	DTC DETECTION CONDITION	TROUBLE AREA
		• Engine coolant temperature sensor • ECM

HINT:

When any of these DTCs are set, check the engine coolant temperature by entering the following menus: Powertrain / Engine and ECT / Data List / Coolant Temp.

TEMPERATURE DISPLAYED	MALFUNCTION
-40°C (-40°F)	Open circuit
140°C (284°F)	Short circuit

MONITOR DESCRIPTION

The engine coolant temperature sensor is used to monitor the engine coolant temperature. The engine coolant temperature sensor has a thermistor with a resistance that varies according to the temperature of the engine coolant. When the coolant temperature becomes low, the resistance in the thermistor increases. When the temperature becomes high, the resistance drops. These variations in resistance are reflected in the output voltage from the sensor. The ECM monitors the sensor voltage and uses this value to calculate the engine coolant temperature. When the sensor output voltage deviates from the normal operating range, the ECM interprets this as a fault in the engine coolant temperature sensor circuit and sets a DTC.

Example:

If the sensor output voltage is more than 4.91 V for 0.5 seconds or more, the ECM determines that there is an open in the engine coolant temperature sensor circuit, and sets DTC P0118. Conversely, if the voltage output is less than 0.14 V for 0.5 seconds or more, the ECM determines that there is a short in the sensor circuit, and sets DTC P0117.

If the malfunction is not repaired successfully, a DTC is set 0.5 seconds after the engine is next started.

MONITOR STRATEGY

Related DTCs	P0115: Engine coolant temperature sensor range check (Fluctuating) P0117: Engine coolant temperature sensor range check (Low voltage) P0118: Engine coolant temperature sensor range check (High voltage)
Required Sensors/Components (Main)	Engine coolant temperature sensor

Required Sensors/Components (Related)	-
Frequency of Operation	Continuous
Duration	0.5 seconds
MIL Operation	Immediate
Sequence of Operation	None

TYPICAL ENABLING CONDITIONS

Monitor runs whenever following DTCs are not present	None

TYPICAL MALFUNCTION THRESHOLDS

P0115

Engine coolant temperature sensor voltage	Less than 0.14 V, or more than 4.91 V

P0117

Engine coolant temperature sensor voltage	Less than 0.14 V [More than 140°C (284°F)]

P0118

Engine coolant temperature sensor voltage	More than 4.91 V [Less than -40°C (-40°F)]

COMPONENT OPERATING RANGE

Engine coolant temperature sensor voltage	0.14 to 4.91 V [-40 to 140°C (-40 to 284°F)]

CONFIRMATION DRIVING PATTERN

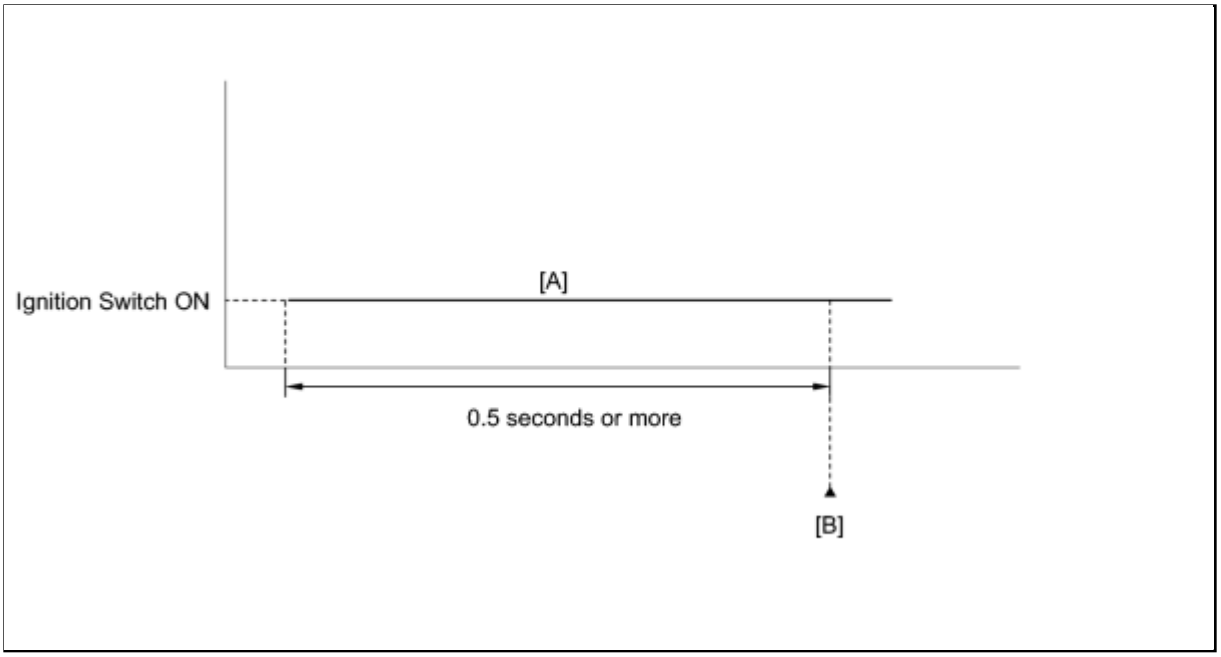

1. Connect the Techstream to the DLC3.
2. Turn the ignition switch to ON and turn the Techstream on.
3. Clear the DTCs (even if no DTCs are stored, perform the clear DTC procedure) INFO .
4. Turn the ignition switch off.
5. Turn the ignition switch to ON and turn the Techstream on.
6. Wait 0.5 seconds or more [A].
7. Enter the following menus: Powertrain / Engine / Utility / All Readiness.
8. Input the DTC: P0115, P0117 or P0118.
9. Check the DTC judgment result [B].

TECHSTREAM DISPLAY	DESCRIPTION
NORMAL	○ DTC judgment completed ○ System normal
ABNORMAL	○ DTC judgment completed ○ System abnormal
INCOMPLETE	○ DTC judgment not completed ○ Perform driving pattern after confirming DTC enabling conditions
UNKNOWN	○ Unable to perform DTC judgment ○ Number of DTCs which do not fulfill DTC preconditions has reached ECU memory limit

10. If the test result is UNKNOWN, enter the following menus: Powertrain / Engine / Trouble Codes / Pending.
11. Read Pending DTCs.

HINT:

If a pending DTC is output, the system is malfunctioning.

12. If the test result is INCOMPLETE or UNKNOWN and no pending DTC is output, perform a universal trip and check for permanent DTCs INFO .

HINT:

- If a permanent DTC is output, the system is malfunctioning.
- If no permanent DTC is output, the system is normal.

WIRING DIAGRAM

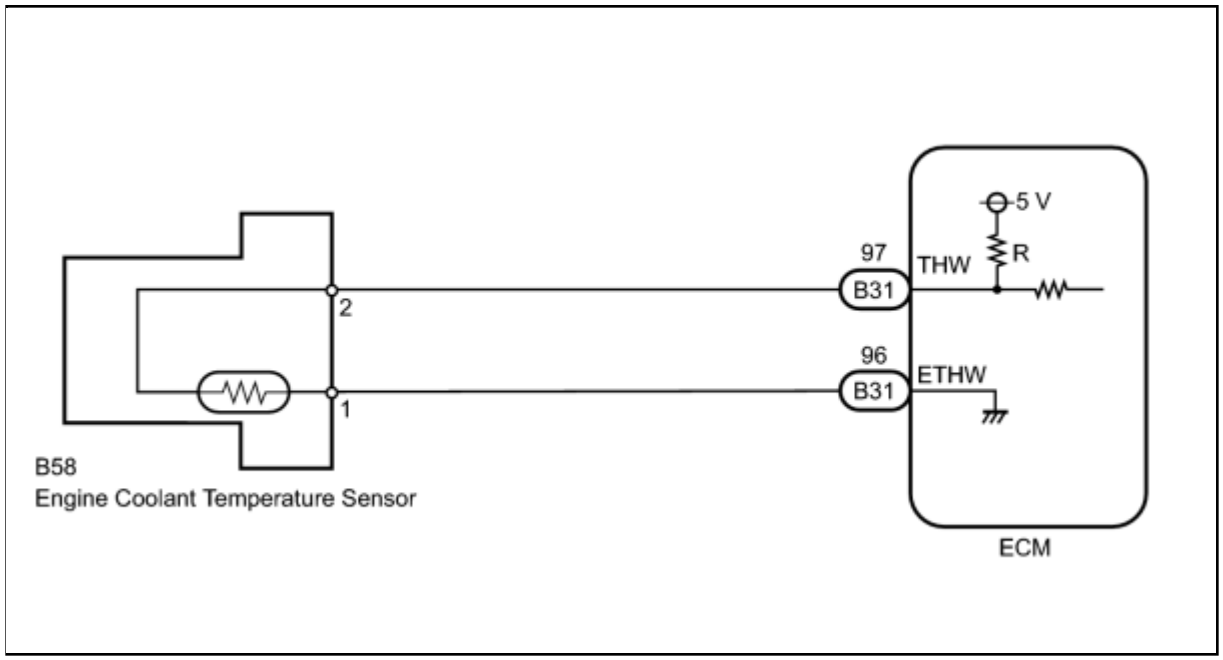

INSPECTION PROCEDURE

HINT:

Read freeze frame data using the Techstream. The ECM records vehicle and driving condition information as freeze frame data the moment a DTC is stored. When troubleshooting, freeze frame data can be helpful in determining whether the vehicle was running or stopped, whether the engine was warmed up or not, whether the air fuel ratio was lean or rich, as well as other data recorded at the time of a malfunction.

PROCEDURE

1.	**READ VALUE USING TECHSTREAM (ENGINE COOLANT TEMPERATURE)**

(a) Connect the Techstream to the DLC3.

(b) Turn the ignition switch to ON.

(c) Turn the Techstream on.

(d) Enter the following menus: Powertrain / Engine and ECT / Data List / Coolant Temp.

(e) Read the value displayed on the Techstream.

Standard Value:
Between 80°C and 100°C (176°F and 212°F) with a warm engine.
Result:

RESULT	PROCEED TO
-40°C (-40°F)	A
140°C (284°F)	B
Between 80°C and 100°C (176°F and 212°F)	C

HINT:

- If there is an open circuit, the Techstream indicates -40°C (-40°F).
- If there is a short circuit, the Techstream indicates 140°C (284°F).

C ▶ **CHECK FOR INTERMITTENT PROBLEMS**

B ▶ **READ VALUE USING TECHSTREAM (CHECK FOR SHORT IN WIRE HARNESS)**

A ▼

2.	**READ VALUE USING TECHSTREAM (CHECK FOR OPEN IN WIRE HARNESS)**

(a) Disconnect the engine coolant temperature sensor connector.

(b) Connect terminals 1 and 2 of the engine coolant temperature sensor connector on the wire harness side.

(c) Connect the Techstream to the DLC3.

(d) Turn the ignition switch to ON.

(e) Turn the Techstream on.

(f) Enter the following menus: Powertrain / Engine and ECT

/ Data List / Coolant Temp.

(g) Read the value displayed on the Techstream.

Standard Value:
140°C (284°F).

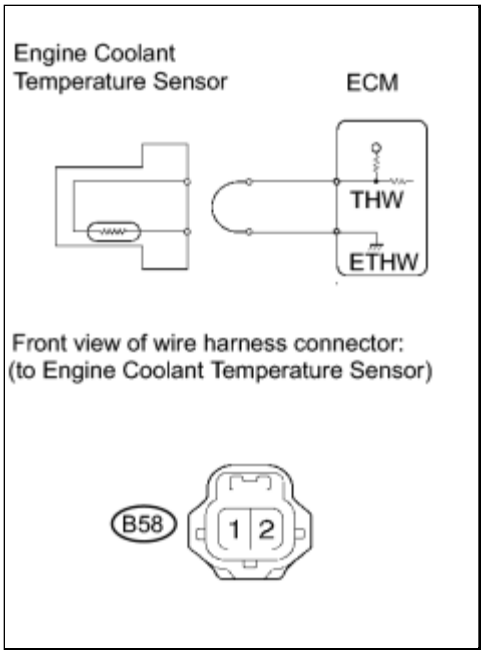

(h) Reconnect the engine coolant temperature sensor connector.

NG ▶ **CHECK HARNESS AND CONNECTOR (ENGINE COOLANT TEMPERATURE SENSOR - ECM)**

OK ▶ **REPLACE ENGINE COOLANT TEMPERATURE SENSOR**

3.	CHECK HARNESS AND CONNECTOR (ENGINE COOLANT TEMPERATURE SENSOR - ECM)

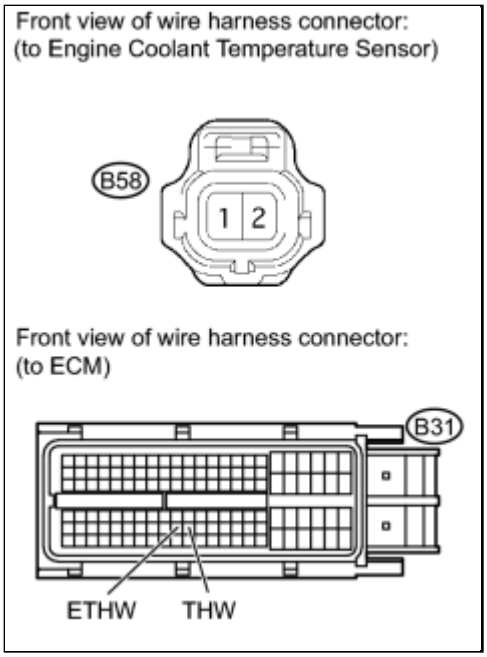

(a) Disconnect the engine coolant temperature sensor connector.

(b) Disconnect the ECM connector.

(c) Measure the resistance according to the value(s) in the table below.

Standard Resistance:

TESTER CONNECTION	CONDITION	SPECIFIED CONDITION
B58-2 - B31-97 (THW)	Always	Below 1 Ω
B58-1 - B31-96 (ETHW)	Always	Below 1 Ω

(d) Reconnect the engine coolant temperature sensor connector.

(e) Reconnect the ECM connector.

NG ▶ **REPAIR OR REPLACE HARNESS OR CONNECTOR (ENGINE COOLANT TEMPERATURE SENSOR - ECM)**

OK ▶ **REPLACE ECM**

4.	READ VALUE USING TECHSTREAM (CHECK FOR SHORT IN WIRE HARNESS)

(a) Disconnect the engine coolant temperature sensor connector.

(b) Connect the Techstream to the DLC3.

(c) Turn the ignition switch to ON.

(d) Turn the Techstream on.

(e) Enter the following menus: Powertrain / Engine and ECT / Data List / All Data / Coolant Temp.

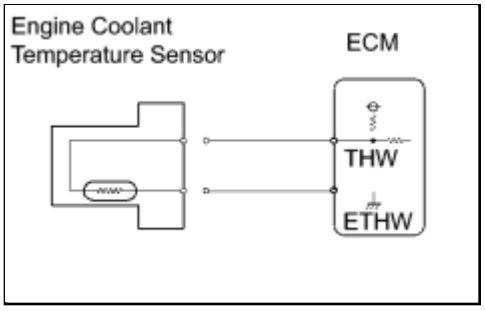

(f) Read the value displayed on the Techstream.

Standard Value:
-40°C (-40°F)

(g) Reconnect the engine coolant temperature sensor connector.

NG ▶ **CHECK HARNESS AND CONNECTOR (ENGINE COOLANT TEMPERATURE SENSOR - ECM)**

OK ▶ **REPLACE ENGINE**

5.	CHECK HARNESS AND CONNECTOR (ENGINE COOLANT TEMPERATURE SENSOR - ECM)

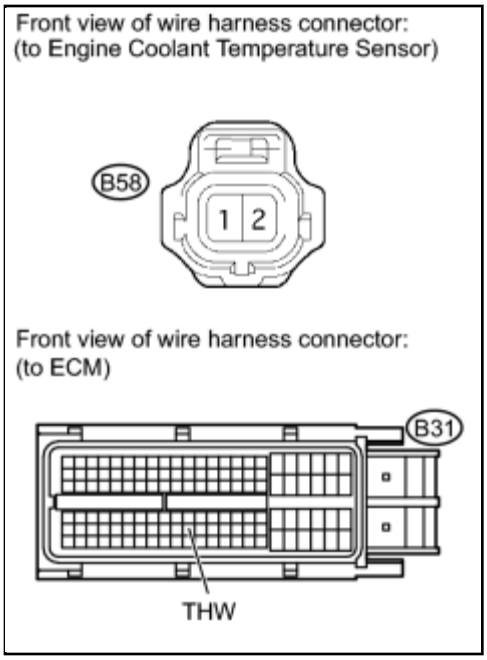

(a) Disconnect the engine coolant temperature sensor connector.

(b) Disconnect the ECM connector.

(c) Measure the resistance according to the value(s) in the table below.

Standard Resistance:

TESTER CONNECTION	CONDITION	SPECIFIED CONDITION
B58-2 or B31-97 (THW) - Body ground	Always	10 kΩ or higher

(d) Reconnect the engine coolant temperature sensor connector.

(e) Reconnect the ECM connector.

NG ▶ **REPAIR OR REPLACE HARNESS OR CONNECTOR (ENGINE COOLANT TEMPERATURE SENSOR - ECM)**

OK ▶ **REPLACE ECM**

Last Modified: 3-10-2010	6.4 C	**From:** 200901
Model Year: 2010	**Model:** Corolla	**Doc ID:** RM000000WBY06ZX
Title: 2AZ-FE ENGINE CONTROL: SFI SYSTEM: P0136-P0139: Oxygen Sensor Circuit Malfunction (Bank 1 Sensor 2) (2010 Corolla)		

DTC	**P0136**	**Oxygen Sensor Circuit Malfunction (Bank 1 Sensor 2)**

DTC	**P0137**	**Oxygen Sensor Circuit Low Voltage (Bank 1 Sensor 2)**

DTC	**P0138**	**Oxygen Sensor Circuit High Voltage (Bank 1 Sensor 2)**

DTC	**P0139**	**Oxygen Sensor Circuit Slow Response (Bank 1 Sensor 2)**

DESCRIPTION

A three-way catalytic converter (TWC) is used in order to convert the carbon monoxide (CO), hydrocarbon (HC), and nitrogen oxide (NOx) into less harmful substances. To allow the three-way catalytic converter to function effectively, it is necessary to keep the air fuel ratio of the engine near the stoichiometric air fuel ratio. For the purpose of helping the ECM to deliver accurate air fuel ratio control, the heated oxygen sensor is used.

The heated oxygen sensor is located behind the three-way catalytic converter, and detects the oxygen concentration in the exhaust gas. Since the sensor is integrated with the heater that heats the sensing portion, it is possible to detect the oxygen concentration even when the intake air volume is low (the exhaust gas temperature is low).

When the air fuel ratio becomes lean, the oxygen concentration in the exhaust gas is great. The heated oxygen sensor informs the ECM that the post three-way catalytic converter air fuel ratio is lean (low voltage, i.e. less than 0.45 V).

Conversely, when the air fuel ratio is richer than the stoichiometric air-fuel level, the oxygen concentration in the exhaust gas becomes small. The heated oxygen sensor informs the ECM that the post-TWC air fuel ratio is rich (high voltage, i.e. more than 0.45 V). The heated oxygen sensor has the property of changing its output voltage drastically when the air fuel ratio is close to the stoichiometric level.

The ECM uses the supplementary information from the HO2 sensor to determine whether the air fuel ratio after the three-way catalytic converter is rich or lean, and adjusts the fuel injection time accordingly. Thus, if the heated oxygen sensor is working improperly due to internal malfunctions, the ECM is unable to compensate for deviations in the primary air fuel ratio control.

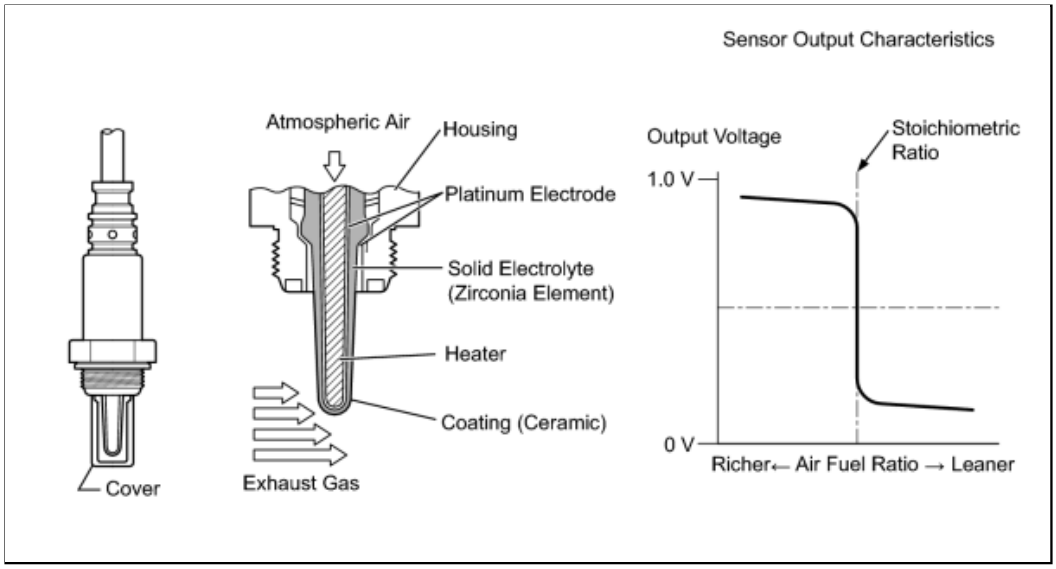

DTC NO.	DTC DETECTION CONDITION	TROUBLE AREA
P0136	• Abnormal voltage output: During active air fuel ratio control, following conditions (a) and (b) met for certain period of time (2 trip detection logic) (a) Heated oxygen sensor voltage does not decrease to less than 0.21 V (b) Heated oxygen sensor voltage does not increase to more than 0.59 V • Low impedance: Sensor impedance less than 5 Ω for more than 30 seconds when ECM presumes sensor to being warmed up and operating normally (2 trip detection logic)	• Open or short in heated oxygen sensor (bank 1 sensor 2) circuit • Heated oxygen sensor (bank 1 sensor 2) • Heated oxygen sensor heater (bank 1 sensor 2) • Air fuel ratio sensor (bank 1 sensor 1) • Gas leaks from exhaust system
P0137	• Low voltage (open): During active air fuel ratio control, following conditions (a) and (b) met for certain period of time (2 trip detection logic) (a) Heated oxygen sensor voltage output less than 0.21 V (b) Target air fuel ratio rich • High impedance: Sensor impedance 15 kΩ or more for more than 90 seconds when ECM presumes sensor to be warmed up and operating normally (2 trip detection logic)	• Open in heated oxygen sensor (bank 1 sensor 2) circuit • Heated oxygen sensor (bank 1 sensor 2) • Heated oxygen sensor heater (bank 1 sensor 2) • Air fuel ratio sensor (bank 1 sensor 1) • Gas leaks from exhaust system
P0138	• High voltage (short): During active air fuel ratio control, following conditions (a) and (b) met for certain period of time (2 trip detection logic) (a) Heated oxygen sensor voltage output 0.59 V or more (b) Target air fuel ratio lean	• Short in heated oxygen sensor (bank 1 sensor 2) circuit • Heated oxygen sensor (bank 1 sensor 2) • ECM

DTC NO.	DTC DETECTION CONDITION	TROUBLE AREA
	• Extremely high voltage (short): HO2 sensor voltage output exceeds 1.2 V for more than 10 seconds (2 trip detection logic)	
P0139	• Heated oxygen sensor (sensor 2) voltage does not drop to below 0.2 V immediately after fuel cut starts (2 trip detection logic) • The heated oxygen sensor (sensor 2) voltage does not drop from 0.35 V to 0.2 V immediately after fuel cut starts (2 trip detection logic)	• Short in heated oxygen sensor (bank 1 sensor 2) circuit • Heated oxygen sensor (bank 1 sensor 2) • ECM

for Mexico Models

DTC NO.	DTC DETECTION CONDITIONS	TROUBLE AREAS
P0136	Not applicable	None
P0137	• Low voltage (open): During active air-fuel ratio control, both of the following conditions are met for a certain period of time (2 trip detection logic): (a) The Heated oxygen sensor voltage output is below 0.21 V. (b) The target air-fuel ratio is rich.	• Open in Heated oxygen sensor (sensor 2) circuit • Heated oxygen sensor (sensor 2) • Heated oxygen sensor heater (sensor 2) • EFI relay • Gas leak from exhaust system
P0138	Not applicable	None
P0139	Not applicable	None

MONITOR DESCRIPTION

1. Active Air Fuel Ratio Control

The ECM usually performs air fuel ratio feedback control so that the air fuel ratio sensor output indicates a near stoichiometric air fuel ratio. This vehicle includes active air fuel ratio control in addition to regular air fuel ratio control. The ECM performs active air fuel ratio control to detect any deterioration in the three-way catalytic converter and heated oxygen sensor malfunctions (refer to the diagram below).

Active air fuel ratio control is performed for approximately 15 to 20 seconds while driving with a warm engine. During active air fuel ratio control, the air fuel ratio is forcibly regulated to become lean or rich by the ECM. If the ECM detects a malfunction, a DTC is set.

2. Abnormal Voltage Output of Heated Oxygen (HO2) Sensor (DTC P0136)

While the ECM is performing active air fuel ratio control, the air fuel ratio is forcibly regulated to become rich or lean. If the sensor is not functioning properly, the voltage output variation is small. For example, when the heated oxygen sensor voltage does not decrease to less than 0.21 V or does not increase to more than 0.59 V during active air fuel ratio control, the ECM determines that the sensor voltage output is abnormal and sets DTCs P0136.

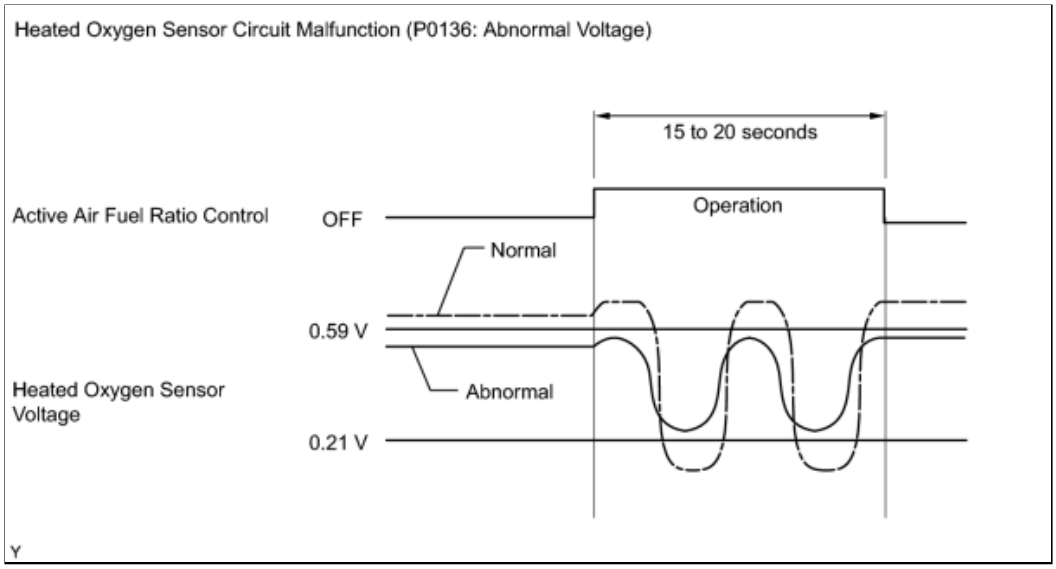

3. Open or Short in Heated Oxygen Sensor Circuit (DTCs P0137 or P0138)

During active air fuel ratio control, the ECM calculates the oxygen storage capacity* of the three-way catalytic converter by forcibly regulating the air fuel ratio to become rich or lean.

If the heated oxygen sensor has an open or short, or the voltage output of the sensor noticeably decreases, the oxygen storage capacity indicates an extraordinarily high value. Even if the ECM attempts to continue regulating the air fuel ratio to become rich or lean, the heated oxygen sensor output does not change.

While performing active air fuel ratio control, when the target air fuel ratio is rich and the heated oxygen sensor voltage output is 0.21 V or less (lean), the ECM interprets this as an abnormally low sensor output voltage and sets DTC P0137. When the target air fuel ratio is lean and the voltage output is 0.59 V or more (rich) during active air fuel ratio control, the ECM determines that the sensor voltage output is abnormally high, and sets DTC P0138.

HINT:

DTC P0138 is also set if the heated oxygen sensor voltage output is more than 1.2 V for 10 seconds or more.

***: The three-way catalytic converter has the capability to store oxygen. The oxygen storage capacity and the emission purification capacity of the three-way catalytic converter are mutually related. The ECM determines whether the catalyst has deteriorated, based on the calculated oxygen storage capacity value** INFO **.**

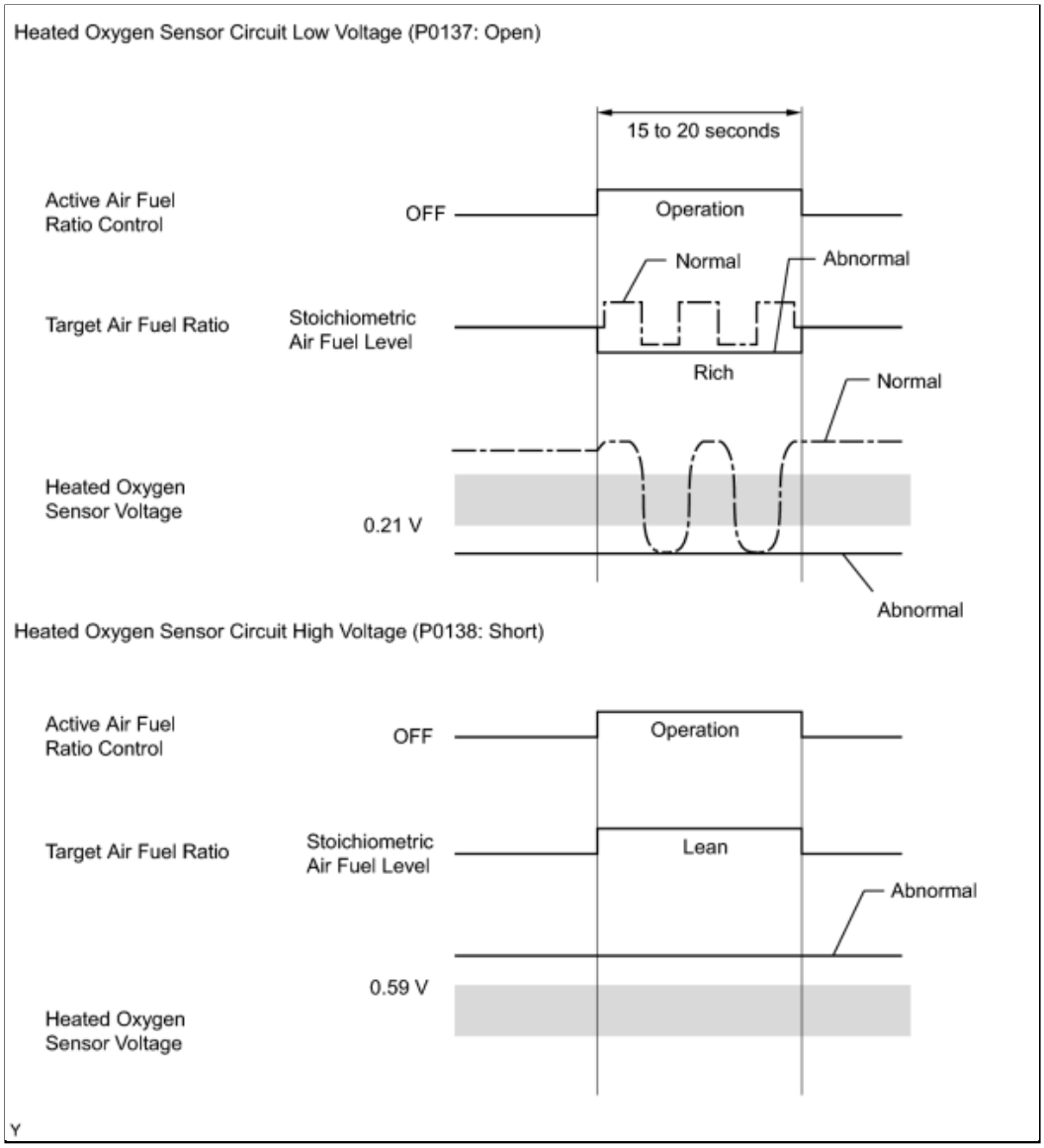

4. High or Low Impedance of Heated Oxygen Sensor (DTCs P0136 or P0137)

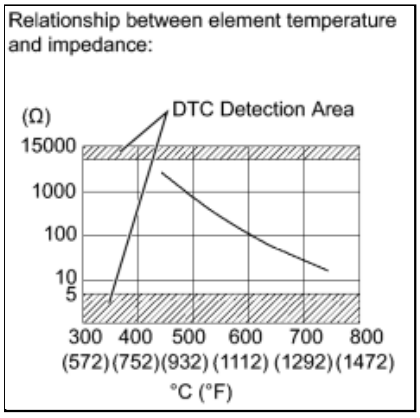

During normal air fuel ratio feedback control, there are small variations in the exhaust gas oxygen concentration. In order to continuously monitor the slight variation of the heated oxygen sensor signal while the engine is running, the impedance* of the sensor is measured by the ECM. The ECM determines that there is a malfunction in the sensor when the measured impedance deviates from the standard range.

*: The effective resistance in an alternating current electrical circuit.

HINT:

- The impedance cannot be measured using an ohmmeter.
- DTC P0136 indicates the deterioration of the heated oxygen sensor. The ECM sets the DTCs by calculating the impedance of the sensor when the typical enabling conditions are satisfied (2 driving cycles).
- DTC P0137 indicates an open or short circuit in the heated oxygen sensor (2 driving cycles). The ECM sets the DTCs when the impedance of the sensor exceeds the threshold of 15 kΩ.

5. Abnormal Voltage Output of Heated Oxygen Sensor During Fuel-cut (DTC P0139)

The sensor output voltage drops to below 0.2 V (extremely Lean status) immediately when the vehicle decelerates and fuel cut is operating. If the voltage does not drop to below 0.2 V for 7 seconds or more, or voltage does not drop from 0.35 V to 0.2 V for 1 seconds, the ECM determines that the sensor response has deteriorated, illuminates the MIL and sets a DTC.

MONITOR STRATEGY

Related DTCs	P0136: Heated oxygen sensor output voltage (Output voltage) P0136: Heated oxygen sensor impedance (Low) P0137: Heated oxygen sensor output voltage (Low voltage) P0137: Heated oxygen sensor impedance (High) P0138: Heated oxygen sensor output voltage (High voltage) P0138: Heated oxygen sensor output voltage (Extremely high) P0139: Heated oxygen sensor output voltage during fuel cut
Required Sensors/Components (Main)	Heated oxygen sensor (sensor 2)
Required Sensors/Components (Related)	Crankshaft position sensor Engine coolant temperature sensor Mass air flow meter Throttle position sensor
Frequency of Operation	Once per driving cycle: Active air fuel ratio control detection, Heated oxygen sensor output voltage during fuel cut Continuous: Other
Duration	20 seconds: Heated oxygen sensor output (Output voltage, High voltage, Low voltage) 30 seconds: Heated oxygen sensor impedance (Low) 90 seconds: Heated oxygen sensor impedance (High) 10 seconds: Heated oxygen sensor voltage (Extremely high) 7 seconds: Heated oxygen sensor voltage during fuel cut
MIL Operation	2 driving cycles
Sequence of Operation	None

TYPICAL ENABLING CONDITIONS

All:

Monitor runs whenever following DTCs are not present	P0016 (VVT System Bank 1 - Misalignment) P0031, P0032 (Air Fuel Ratio Sensor Heater - Sensor 1) P0037, P0038 (Heated Oxygen Sensor Heater - Sensor 2) P0102, P0103 (Mass Air Flow Meter) P0112, P0113 (Intake Air Temperature Sensor) P0115, P0117, P0118 (Engine Coolant Temperature Sensor) P0120, P0121 P0122, P0123, P0220, P0222, P0223, P2135 (Throttle Position Sensor) P0125 (Insufficient Engine Coolant Temperature for Closed Loop Fuel Control) P0128 (Thermostat) P0171, P0172 (Fuel System) P0301, P0302, P0303, P0304 (Misfire) P0335 (Crankshaft Position Sensor) P0340 (Camshaft Position Sensor) P0451, P0452, P0453 (EVAP System)

	P0500 (Vehicle Speed Sensor) P2195, P2196, P2237, P2238, P2239, P2252, P2253, P2A00 (Air Fuel Ratio Sensor - Sensor 1)

Heated Oxygen Sensor Output Voltage (Output Voltage, High Voltage and Low Voltage):

Active air fuel ratio control	Executing
Active air fuel ratio control begins when all of following conditions are met:	-
Battery voltage	11 V or more
Engine coolant temperature	75°C (167°F) or more
Idling	OFF
Engine RPM	Less than 4000 rpm
Air fuel ratio sensor status	Activated
Fuel system status	Closed loop
Fuel cut	OFF
Engine load	10 to 80%
Shift position	A/T models: 4th or more M/T models: 3th or more

Heated Oxygen Sensor Impedance (Low):

Battery voltage	11 V or more
Estimated sensor temperature	Less than 700°C (1292°F)
ECM monitor	Completed
DTC P0607	Not set

Heated Oxygen Sensor Impedance (High):

Battery voltage	11 V or more
Estimated sensor temperature	450°C (842°F) or more, less than 750°C (1382°F)
DTC P0607	Not set

Heated Oxygen Sensor Output Voltage (Extremely High):

Battery voltage	11 V or more
Time after engine start	2 seconds or more

Heated oxygen sensor voltage during fuel cut:

Engine coolant temperature	75°C (167°F) or more
Catalyst temperature	400°C (752°F) or more
Fuel cut	Executing

TYPICAL MALFUNCTION THRESHOLDS

Heated Oxygen Sensor Output Voltage (Output voltage):

Either of following conditions are met:	1 or 2
1. All of following conditions (a), (b) and (c) are met	-
(a) Commanded air fuel ratio	14.3 or less
(b) Rear heated oxygen sensor voltage	0.21 to 0.59 V
(c) Oxygen storage capacity of catalyst	2.0 g or more
2. All of following conditions (d), (e) and (f) are met	-
(d) Commanded air fuel ratio	14.9 or more
(e) Rear heated oxygen sensor voltage	0.21 to 0.59 V
(f) Oxygen storage capacity of catalyst	2.0 g or more

Heated Oxygen Sensor Output Voltage (Low output voltage):

All of following conditions (a), (b) and (c) are met	-
(a) Commanded air fuel ratio	14.3 or less
(b) Rear heated oxygen sensor voltage	Less than 0.21 V
(c) Oxygen Storage Capacity of Catalyst	2.0 g or more

Heated Oxygen Sensor Output Voltage (High output voltage):

All of following conditions (a), (b) and (c) are met	-
(a) Commanded air fuel ratio	14.9 or more
(b) Rear heated oxygen sensor voltage	More than 0.59 V
(c) Oxygen Storage Capacity of Catalyst	2.0 g or more

Heated Oxygen Sensor Impedance (Low):

Duration of following condition	30 seconds or more
Heated oxygen sensor impedance	Less than 5 Ω

Heated Oxygen Sensor Impedance (High):

Duration of following condition	90 seconds or more
Heated oxygen sensor impedance	15 kΩ or more

Heated Oxygen Sensor Output Voltage (Extremely High):

Duration of following condition	10 seconds or more
Heated oxygen sensor voltage	1.2 V or more

Heated Oxygen Sensor Voltage During Fuel-cut:

Duration until rear heated oxygen sensor voltage drops to 0.2 V after fuel cut	7 seconds or more
Duration that rear oxygen sensor voltage drops from 0.35 V to 0.2 V during fuel cut	1 seconds or more

COMPONENT OPERATING RANGE

Duration of following condition	30 seconds or more
Heated oxygen sensor voltage	Less than 1.2 V

MONITOR RESULT

Refer to CHECKING MONITOR STATUS INFO .

CONFIRMATION DRIVING PATTERN

P0136, P0137 and P0138

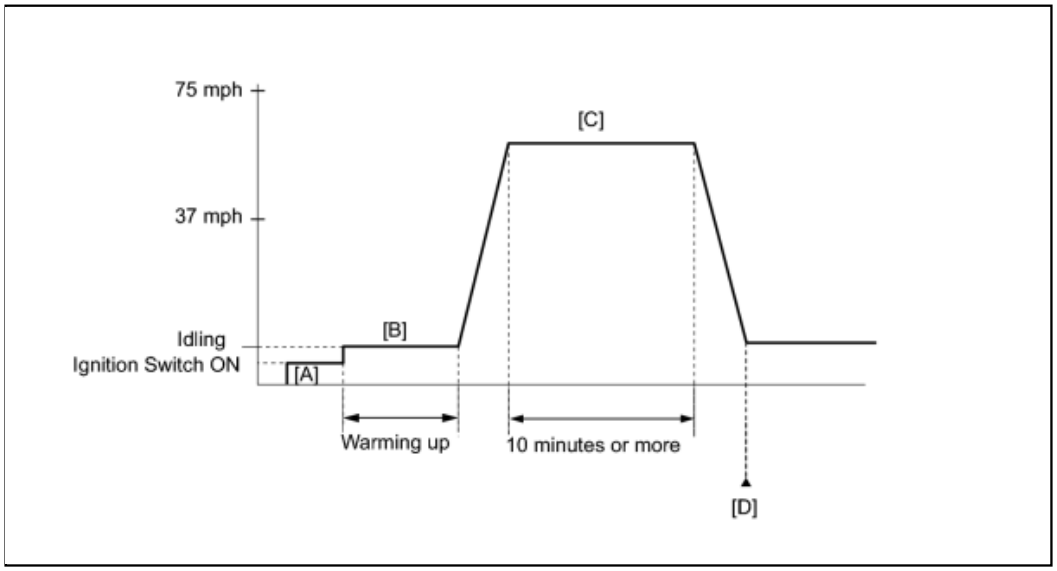

1. Connect the Techstream to the DLC3.
2. Turn the ignition switch to ON and turn the Techstream on.
3. Clear the DTCs (even if no DTCs are stored, perform the clear DTC procedure) INFO .
4. Turn the ignition switch off.
5. Turn the ignition switch to ON and turn the Techstream on [A].
6. Start the engine and warm it up until the engine coolant temperature reaches 75°C (167°F) or higher [B].
7. With the transmission in 4th gear or higher, drive the vehicle at 37 to 75 mph (60 to 120 km/h) for 10 minutes or more [C].
8. Enter the following menus: Powertrain / Engine / Utility / All Readiness.
9. Input the DTC: P0136, P0137 or P0138.
10. Check the DTC judgment result [D].

TECHSTREAM DISPLAY	DESCRIPTION
NORMAL	○ DTC judgment completed ○ System normal
ABNORMAL	○ DTC judgment completed ○ System abnormal
INCOMPLETE	○ DTC judgment not completed ○ Perform driving pattern after confirming DTC enabling conditions

TECHSTREAM DISPLAY	DESCRIPTION
UNKNOWN	○ Unable to perform DTC judgment ○ Number of DTCs which do not fulfill DTC preconditions has reached ECU memory limit

CAUTION:

When performing the confirmation driving pattern, obey all speed limits and traffic laws.

HINT:

If the judgment result shows INCOMPLETE or UNKNOWN, perform steps [C] and [D].

11. If the test result is UNKNOWN, enter the following menus: Powertrain / Engine / Trouble Codes / Pending.
12. Read Pending DTCs.

HINT:

If a pending DTC is output, the system is malfunctioning.

13. If the test result is INCOMPLETE or UNKNOWN and no pending DTC is output, perform a universal trip and check for permanent DTCs INFO .

HINT:

- If a permanent DTC is output, the system is malfunctioning.
- If no permanent DTC is output, the system is normal.

P0139

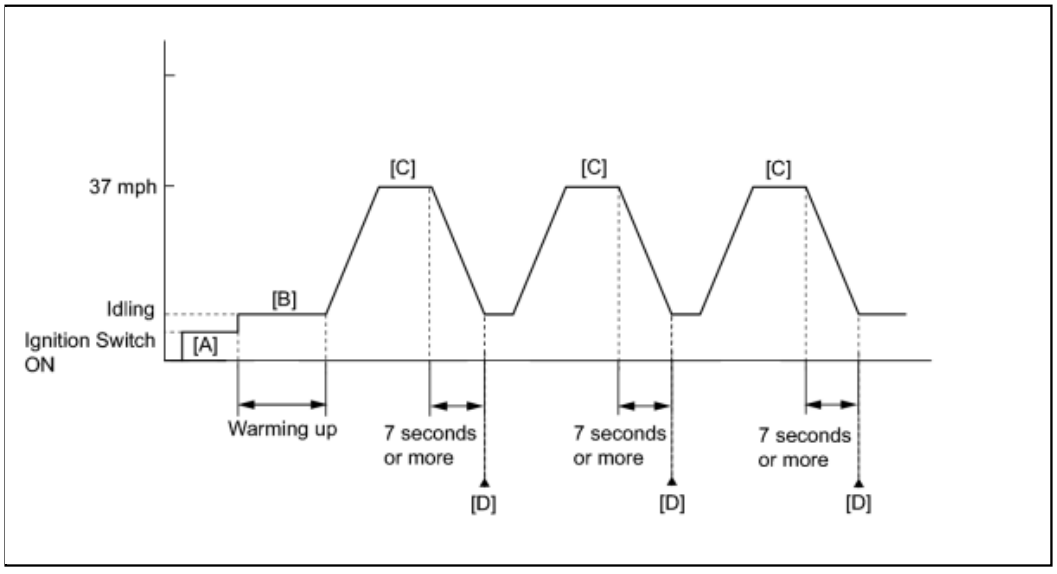

1. Connect the Techstream to the DLC3.
2. Turn the ignition switch to ON and turn the Techstream on.
3. Clear the DTCs (even if no DTCs are stored, perform the clear DTC procedure) INFO .
4. Turn the ignition switch off.
5. Turn the ignition switch to ON and turn the Techstream on [A].
6. Start the engine and warm it up until the engine coolant temperature reaches 75°C (167°F) or higher [B].
7. Drive the vehicle at 37 mph (60 km/h), and then decelerate the vehicle by releasing the accelerator pedal for 7 seconds or more to perform the fuel cut [C].
8. Enter the following menus: Powertrain / Engine / Utility / All Readiness.
9. Input the DTC: P0139.

10. Check the DTC judgment result [D].

TECHSTREAM DISPLAY	DESCRIPTION
NORMAL	○ DTC judgment completed ○ System normal
ABNORMAL	○ DTC judgment completed ○ System abnormal
INCOMPLETE	○ DTC judgment not completed ○ Perform driving pattern after confirming DTC enabling conditions
UNKNOWN	○ Unable to perform DTC judgment ○ Number of DTCs which do not fulfill DTC preconditions has reached ECU memory limit

CAUTION:

When performing the confirmation driving pattern, obey all speed limits and traffic laws.

HINT:

If the judgment result shows INCOMPLETE or UNKNOWN, move the shift lever to 2 and then perform steps [C] through [D] again.

11. If the test result is UNKNOWN, enter the following menus: Powertrain / Engine / Trouble Codes / Pending.
12. Read Pending DTCs.

HINT:

If a pending DTC is output, the system is malfunctioning.

13. If the test result is INCOMPLETE or UNKNOWN and no pending DTC is output, perform a universal trip and check for permanent DTCs INFO.

HINT:

- If a permanent DTC is output, the system is malfunctioning.
- If no permanent DTC is output, the system is normal.

WIRING DIAGRAM

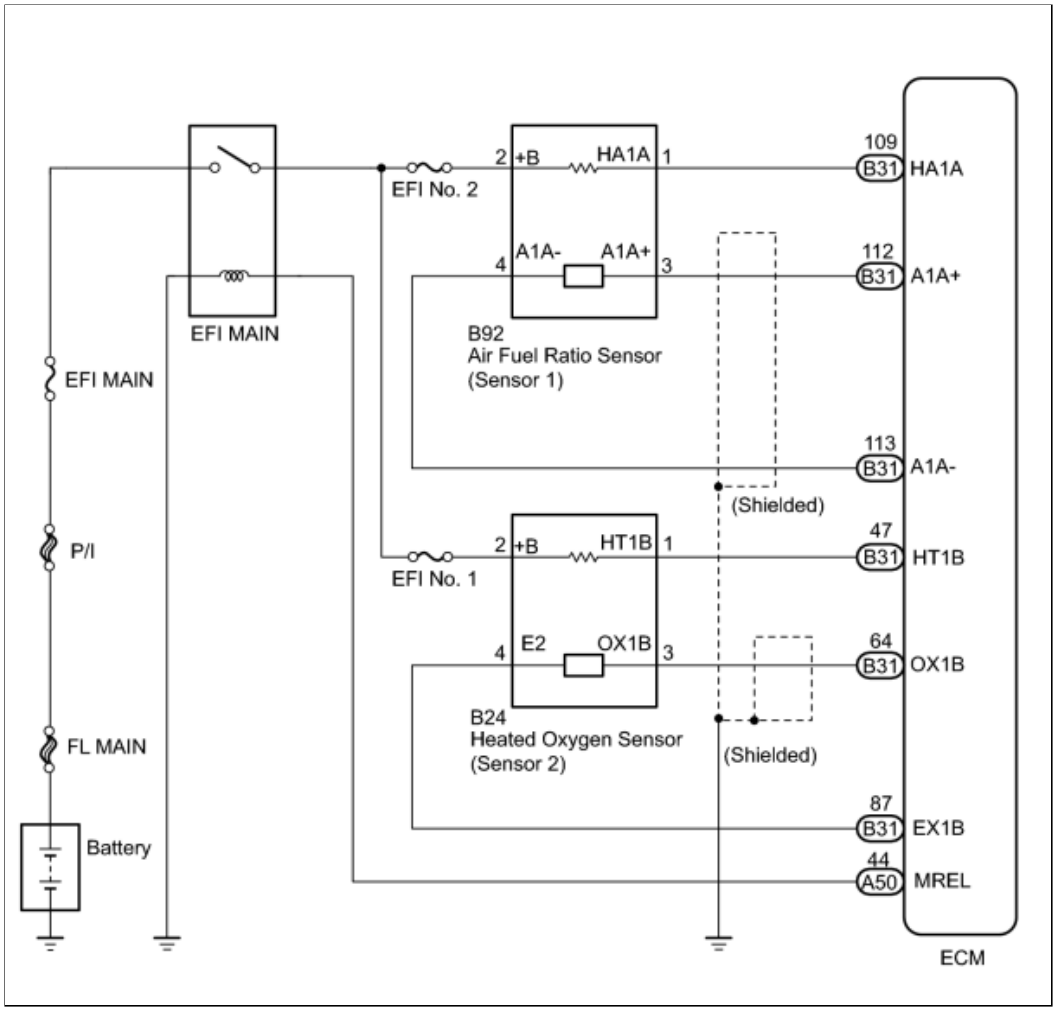

INSPECTION PROCEDURE

HINT:

Malfunctioning areas can be identified by performing the Control the Injection Volume for A/F sensor function provided in the Active Test. The Control the Injection Volume for A/F sensor function can help to determine whether the air fuel ratio sensor, heated oxygen (HO2) sensor and other potential trouble areas are malfunctioning.

The following instructions describe how to conduct the Control the Injection Volume for A/F sensor operation using the Techstream.

1. Connect the Techstream to the DLC3.
2. Start the engine.
3. Turn the Techstream on.
4. Warm up the engine at an engine speed of 2500 rpm for approximately 90 seconds.
5. Select the following menu items: Powertrain / Engine and ECT / Active Test / Control the Injection Volume for A/F sensor.
6. Perform the Active Test operation with the engine idling (press the RIGHT or LEFT button to change the fuel injection volume).
7. Monitor the output voltages of the air fuel ratio and heated oxygen sensors (AFS Voltage B1 S1 and O2S B1 S2) displayed on the Techstream.

HINT:

- The Control the Injection Volume for A/F sensor operation lowers the fuel injection volume by 12.5% or increases the injection volume by 25%.
- Each sensor reacts in accordance with increases and decreases in the fuel injection volume.

TECHSTREAM DISPLAY (SENSOR)	INJECTION VOLUME	STATE	VOLTAGE
AFS Voltage B1 S1 (Air fuel ratio)	+25%	Rich	Less than 3.1 V
	-12.5%	Lean	More than 3.4 V
O2S B1 S2 (Heated oxygen)	+25%	Rich	More than 0.55 V
	-12.5%	Lean	Less than 0.4 V

NOTICE:

The air fuel ratio sensor has an output delay of a few seconds and the heated oxygen sensor has a maximum output delay of approximately 20 seconds.

CASE	AIR FUEL RATIO SENSOR (SENSOR 1) OUTPUT VOLTAGE	HEATED OXYGEN SENSOR (SENSOR 2) OUTPUT VOLTAGE	MAIN SUSPECTED TROUBLE AREA
1	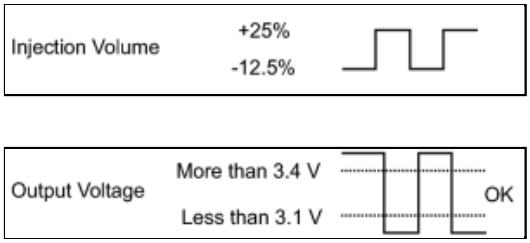	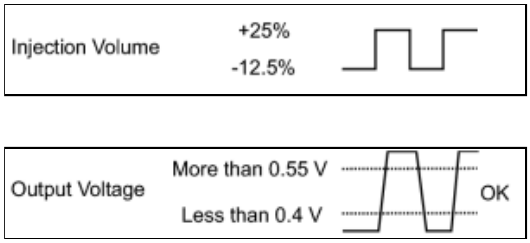	-
2	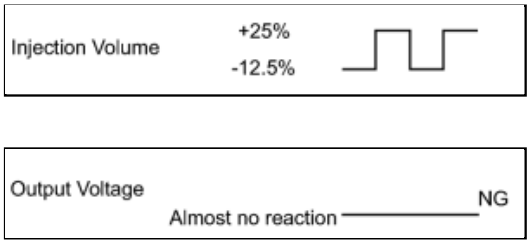	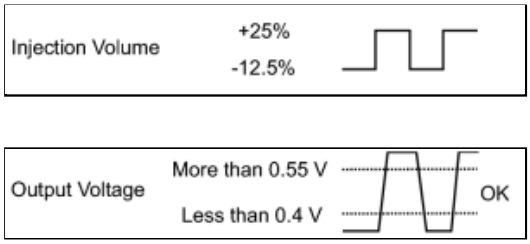	• A/F sensor • A/F sensor heater • A/F sensor circuit
3	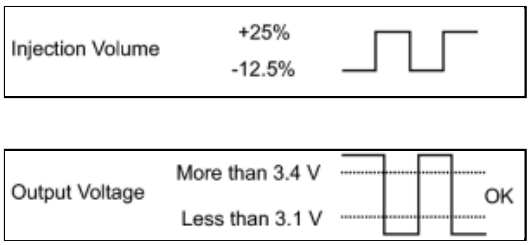	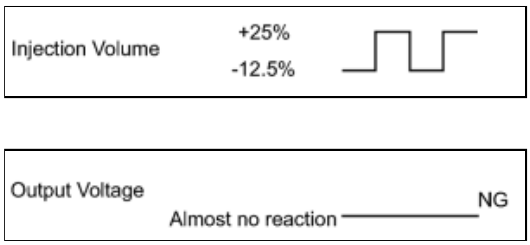	• HO2 sensor • HO2 sensor heater • HO2 sensor circuit
4	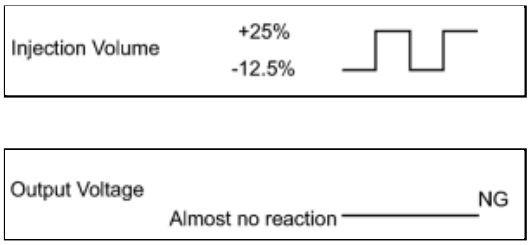	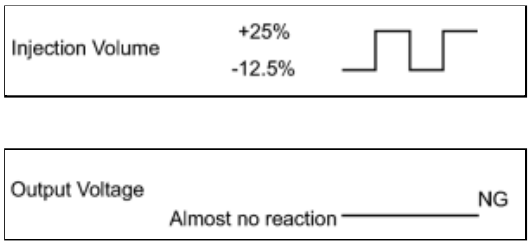	• Injector • Fuel pressure • Gas leak from exhaust system

- Following the Control the Injection Volume for A/F sensor procedure enables technicians to check and graph the voltage outputs of both the air fuel ratio and heated oxygen sensors.
- To display the graph, select the following menu items: Powertrain / Engine and ECT / Active Test / Control the Injection Volume for A/F Sensor / A/F Control System / AFS Voltage B1 S1 and O2S B1 S2; then press the

graph button on the Data List view.

HINT:

Read freeze frame data using the Techstream. The ECM records vehicle and driving condition information as freeze frame data the moment a DTC is stored. When troubleshooting, freeze frame data can be helpful in determining whether the vehicle was running or stopped, whether the engine was warmed up or not, whether the air fuel ratio was lean or rich, as well as other data recorded at the time of a malfunction.

PROCEDURE

1.	**READ DTC OUTPUT (DTC P0136, P0137, P0138 OR P0139)**

(a) Connect the Techstream to the DLC3.

(b) Turn the ignition switch to ON.

(c) Turn the Techstream on.

(d) Select the following menu items: Powertrain / Engine and ECT / Trouble Codes.

(e) Read DTCs.

Result:

RESULT	PROCEED TO
P0138	A
P0137	B
P0136	C
P0139	D

D ▶ **READ VALUE USING TECHSTREAM (OUTPUT VOLTAGE OF HEATED OXYGEN SENSOR)**

C ▶ **READ VALUE USING TECHSTREAM (OUTPUT VOLTAGE OF HEATED OXYGEN SENSOR)**

B ▶ **CHECK FOR EXHAUST GAS LEAK**

A ▼

2.	**READ VALUE USING TECHSTREAM (OUTPUT VOLTAGE OF HEATED OXYGEN SENSOR)**

(a) Connect the Techstream to the DLC3.

(b) Turn the ignition switch to ON.

(c) Turn the Techstream on.

(d) Select the following menu items: Powertrain / Engine and ECT / Data List / A/F Control System / O2S B1

S2.

(e) Allow the engine to idle.

(f) Read the heated oxygen sensor output voltage while idling.

Result:

RESULT	PROCEED TO
1.0 V or more	A
Less than 1.0 V	B

B ▶ **PERFORM ACTIVE TEST USING TECHSTREAM**

A ▼

3.	**INSPECT HEATED OXYGEN SENSOR (CHECK FOR SHORT)**

(a) Disconnect the heated oxygen sensor connector.

(b) Measure the resistance according to the value(s) in the table below.

Standard Resistance:

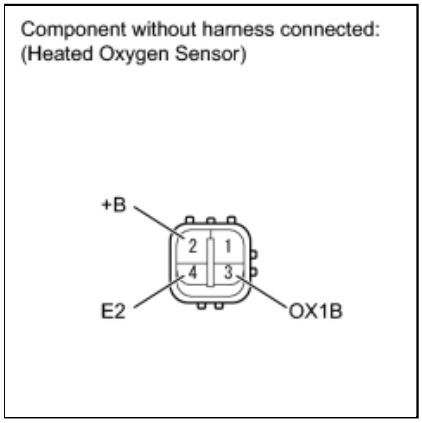

TESTER CONNECTION	CONDITION	SPECIFIED CONDITION
2 (+B) - 4 (E2)	Always	10 kΩ or higher
2 (+B) - 3 (OX1B)		

(c) Reconnect the heated oxygen sensor connector.

NG ▶ **REPLACE HEATED OXYGEN SENSOR**

OK ▼

4.	**CHECK HARNESS AND CONNECTOR (CHECK FOR SHORT)**

(a) Turn the ignition switch to off and wait for 5 minutes or more.

(b) Disconnect the ECM connector.

(c) Measure the resistance according to the value(s) in the table below.

Standard Resistance:

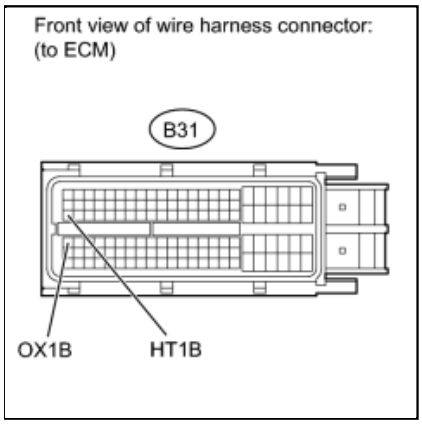

TESTER CONNECTION	CONDITION	SPECIFIED CONDITION
B31-47 (HT1B) - B31-64 (OX1B)	Always	10 kΩ or higher

(d) Reconnect the ECM connector.

NG ▶ **REPAIR OR REPLACE HARNESS OR CONNECTOR**

OK ▶ **REPLACE ECM**

5.	PERFORM ACTIVE TEST USING TECHSTREAM

(a) Connect the Techstream to the DLC3.

(b) Turn the ignition switch to ON.

(c) Turn the Techstream on.

(d) Start the engine and warm it up.

(e) Select the following menu items: Powertrain / Engine and ECT / Active Test / Control the Injection Volume.

(f) Change the fuel injection volume using the Techstream, and monitor the voltage output of air fuel ratio and heated oxygen sensors displayed on the Techstream.

HINT:

- Change the fuel injection volume within the range of -12% and +12%. The injection volume can be changed in 1% graduations within the range.
- The A/F sensor is displayed as AFS Voltage B1 S1, and the HO2 sensor is displayed as O2S B1 S2 on the Techstream.

Result:

TECHSTREAM DISPLAY (SENSOR)	VOLTAGE VARIATION	PROCEED TO
AFS Voltage B1 S1 (A/F)	Alternates between more and less than 3.3 V	OK
	Remains at more than 3.3 V	NG
	Remains at less than 3.3 V	NG

HINT:

A normal heated oxygen sensor voltage (O2S B1 S2) reacts in accordance with increases and decreases in fuel injection volumes. When the air fuel ratio sensor voltage remains at either less or more than 3.3 V despite the heated oxygen sensor indicating a normal reaction, the air fuel ratio sensor is malfunctioning.

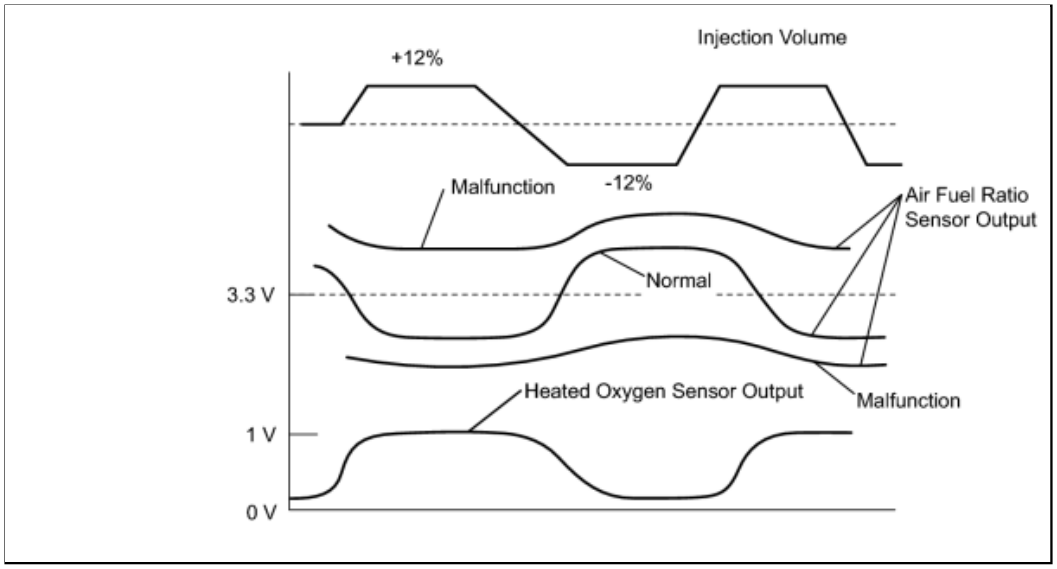

NG ▶ **REPLACE AIR FUEL RATIO SENSOR**

OK ▼

6.	**INSPECT AIR FUEL RATIO SENSOR**

HINT:

This air fuel ratio sensor test is to check the air fuel ratio sensor current during the fuel-cut. When the sensor is normal, the sensor current will indicate below 3.0 mA in this test.

(a) Connect the Techstream to the DLC3.

(b) Turn the ignition switch to ON.

(c) Turn the Techstream on.

(d) Drive the vehicle according to the drive pattern listed below:

(1) Warm up the engine until the engine coolant temperature reaches 75°C (167°F) or more.

(2) Drive the vehicle at 60 km/h (40 mph) or more and decelerate the vehicle for 5 seconds or more.

(3) Repeat the deceleration above at least 3 times.

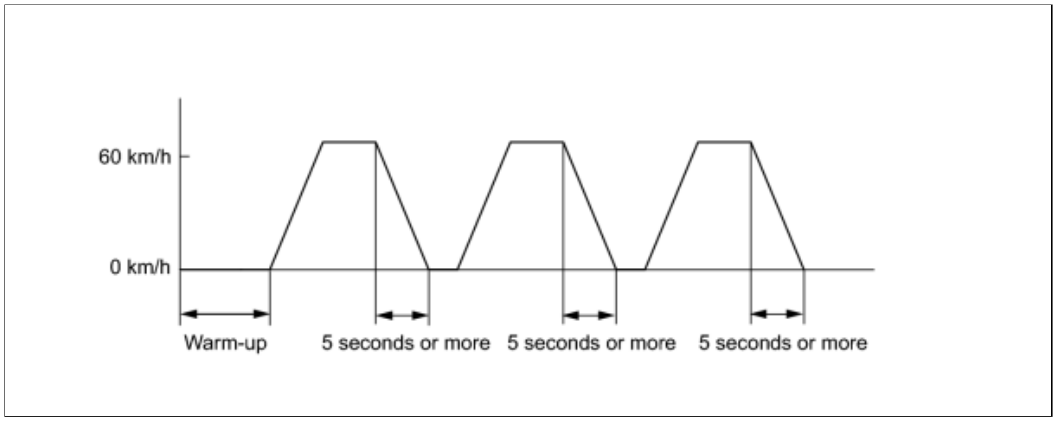

(e) Select the following menu items: Powertrain / Engine and ECT / Monitor / O2 Sensor / Details.

(f) Confirm that RANGE B1S1 is either Pass or Fail. If the Techstream shows Incomplete, re-check RANGE B1S1 after performing the drive pattern.

(g) Select the RANGE B1S1.

(h) Read the Test Value.

Standard current:
Less than 3.0 mA

HINT:

If the Techstream shows Incomplete again, increase the vehicle speed and use second gear to decelerate the vehicle. Refer to the CONFIRMATION DRIVING PATTERN.

NG ▶ **REPLACE AIR FUEL RATIO SENSOR**

OK ▶ **REPLACE HEATED OXYGEN SENSOR**

7.	READ VALUE USING TECHSTREAM (OUTPUT VOLTAGE OF HEATED OXYGEN SENSOR)

(a) Connect the Techstream to the DLC3.

(b) Turn the ignition switch to ON.

(c) Turn the Techstream on.

(d) Start the engine.

(e) Select the following menu items: Powertrain / Engine and ECT / Data List / A/F Control System / O2S B1 S2.

(f) After warming up the engine, run the engine at an engine speed of 2500 rpm for 3 minutes.

(g) Read the output voltage of the heated oxygen sensor when the engine rpm is suddenly increased.

HINT:

Quickly accelerate the engine to 4000 rpm 3 times using the accelerator pedal.

Standard:
Fluctuates between 0.4 V or less and 0.5 V or more.

NG ▶ **CHECK FOR EXHAUST GAS LEAK**

OK

8.	PERFORM ACTIVE TEST USING TECHSTREAM (INJECTION VOLUME)

(a) Connect the Techstream to the DLC3.

(b) Turn the ignition switch to ON.

(c) Turn the Techstream on.

(d) Start the engine and warm it up.

(e) Select the following menu items: Powertrain / Engine and ECT / Active Test / Control the Injection Volume.

(f) Change the fuel injection volume using the Techstream, and monitor the voltage output of air fuel ratio and heated oxygen sensors displayed on the Techstream.

HINT:

- Change the fuel injection volume within the range of -12% and +12%. The injection volume can be changed in 1% graduations within the range.
- The A/F sensor is displayed as AFS Voltage B1 S1, and the HO2 sensor is displayed as O2S B1 S2 on the Techstream.

Result:

TECHSTREAM DISPLAY (SENSOR)	VOLTAGE VARIATION	PROCEED TO
AFS Voltage B1 S1 (A/F)	Alternates between more and less than 3.3 V	OK
	Remains at more than 3.3 V	NG
	Remains at less than 3.3 V	NG

HINT:

A normal heated oxygen sensor voltage (O2S B1 S2) reacts in accordance with increases and decreases in fuel injection volumes. When the air fuel ratio sensor voltage remains at either less or more than 3.3 V despite the heated oxygen sensor indicating a normal reaction, the air fuel ratio sensor is malfunctioning.

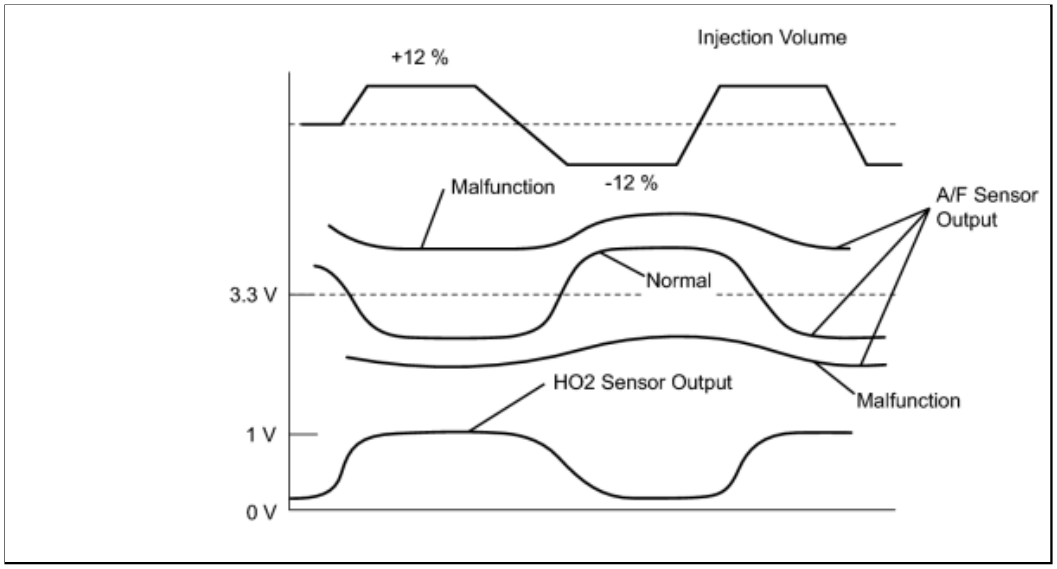

NG ▶ **REPLACE AIR FUEL RATIO SENSOR**

OK ▶ **CHECK ENGINE TO DETERMINE CAUSE OF EXTREMELY RICH OR LEAN ACTUAL AIR FUEL RATIO**

9.	**CHECK FOR EXHAUST GAS LEAK**

OK:
No gas leaks.

NG ▶ **REPAIR OR REPLACE EXHAUST GAS LEAK POINT**

OK ▼

10.	**INSPECT HEATED OXYGEN SENSOR (HEATER RESISTANCE)** INFO

NG ▶ **REPLACE HEATED OXYGEN SENSOR**

OK ▼

11.	**CHECK HARNESS AND CONNECTOR (HEATED OXYGEN SENSOR - ECM)**

(a) Disconnect the heated oxygen sensor connector.

(b) Disconnect the ECM connector.

(c) Measure the resistance according to the value(s) in the table below.

Standard resistance (Check for open):

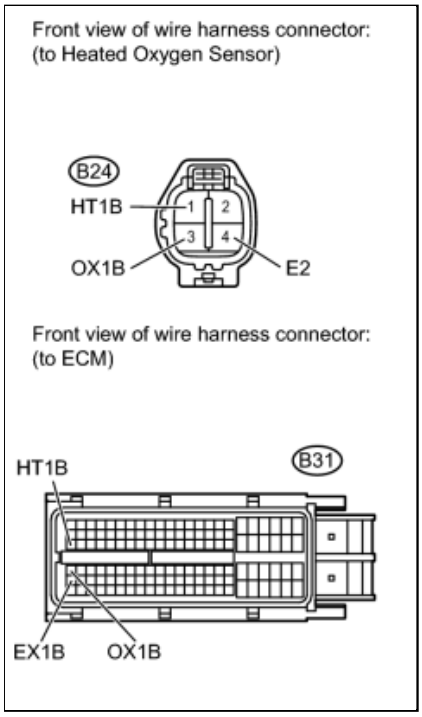

TESTER CONNECTION	CONDITION	SPECIFIED CONDITION
B24-1 (HT1B) - B31-47 (HT1B)	Always	Below 1 Ω
B24-3 (OX1B) - B31-64 (OX1B)		
B24-4 (E2) - B31-87 (EX1B)		

Standard resistance (Check for short):

TESTER CONNECTION	CONDITION	SPECIFIED CONDITION
B24-1 (HT1B) or B31-47 (HT1B) - Body ground	Always	10 kΩ or higher
B24-3 (OX1B) or B31-64 (OX1B) - Body ground		

(d) Reconnect the heated oxygen sensor connector.

(e) Reconnect the ECM connector.

NG ▶ **REPAIR OR REPLACE HARNESS OR CONNECTOR**

OK ▼

12.	REPLACE HEATED OXYGEN SENSOR

(a) Replace the heated oxygen sensor INFO .

NEXT ▼

13.	PERFORM CONFIRMATION DRIVING PATTERN

HINT:

Refer to the Confirmation Driving Pattern for P0136, P0137 and P0138.

NEXT

14.	CHECK WHETHER DTC OUTPUT RECURS (DTC P0136, P0137 OR P0138)

(a) Connect the Techstream to the DLC3.

(b) Turn the ignition switch to ON.

(c) Turn the Techstream on.

(d) Select the following menu items: Powertrain / Engine and ECT / Utility / All Readiness.

(e) Input DTCs: P0136, P0137 and P0138. Check the DTC MONITOR is Normal. If DTC MONITOR is Incomplete, perform the drive pattern increasing the vehicle speed and using second gear to decelerate the vehicle.

Result:

RESULT	PROCEED TO
NORMAL (No DTC output)	A
ABNORMAL (P0136, P0137 or P0138 detected)	B

B ▶ **REPLACE AIR FUEL RATIO SENSOR**

A ▶ **END**

15.	REPLACE AIR FUEL RATIO SENSOR

(a) Replace the air fuel ratio sensor INFO .

NEXT

16.	PERFORM CONFIRMATION DRIVING PATTERN

HINT:

Refer to the Confirmation Driving Pattern for P0136, P0137 and P0138.

NEXT

17.	CHECK WHETHER DTC OUTPUT RECURS (DTC P0136 OR P0138)

(a) Connect the Techstream to the DLC3.

(b) Turn the ignition switch to ON.

(c) Turn the Techstream on.

(d) Select the following menu items: Powertrain / Engine and ECT / Utility / All Readiness.

(e) Input DTCs: P0136 or P0138. Check the DTC MONITOR is Normal. If DTC MONITOR is Incomplete, perform the drive pattern increasing the vehicle speed and using second gear to decelerate the vehicle.

Result:

RESULT	PROCEED TO
NORMAL (No DTC output)	A
ABNORMAL (P0136 or P0138 detected)	B

B ▶ **REPLACE HEATED OXYGEN SENSOR**

A ▶ **END**

18.	READ VALUE USING TECHSTREAM (OUTPUT VOLTAGE OF HEATED OXYGEN SENSOR)

(a) Connect the Techstream to the DLC3.

(b) Turn the ignition switch to ON.

(c) Turn the Techstream on.

(d) Select the following menu items: Powertrain / Engine and ECT / Data List / A/F Control System / O2S B1 S2.

(e) Allow the engine to idle.

(f) Read the heated oxygen sensor output voltage while idling.

Result:

RESULT	PROCEED TO
1.0 V or higher	A
Below 1.0 V	B

B ▶ **CHECK WHETHER DTC OUTPUT RECURS (DTC P0139 IS OUTPUT AGAIN)**

A

19.	INSPECT HEATED OXYGEN SENSOR (CHECK FOR SHORT)

(a) Disconnect the heated oxygen sensor connector.

(b) Measure the resistance according to the value(s) in the table below.

Standard resistance:

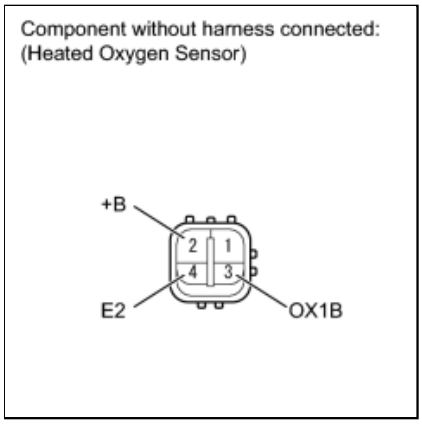

TESTER CONNECTION	CONDITION	SPECIFIED CONDITION
2 (+B) - 4 (E2)	Always	10 kΩ or higher
2 (+B) - 3 (OX1B)		

(c) Reconnect the heated oxygen sensor connector.

NG ▶ REPLACE HEATED OXYGEN SENSOR

OK ▼

20.	CHECK HARNESS AND CONNECTOR (CHECK FOR SHORT)

(a) Turn the ignition switch off and wait for 5 minutes or more.

(b) Disconnect the ECM connector.

(c) Measure the resistance according to the value(s) in the table below.

Standard resistance:

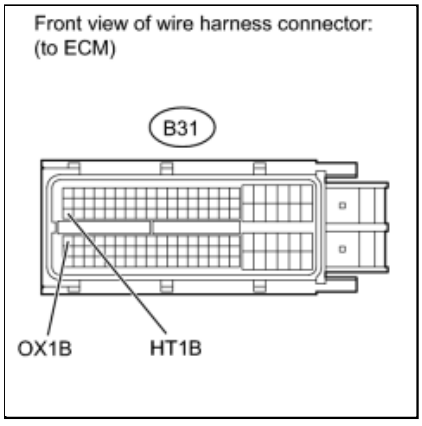

TESTER CONNECTION	CONDITION	SPECIFIED CONDITION
B31-47 (HT1B) - B31-64 (OX1B)	Always	10 kΩ or higher

(d) Reconnect the ECM connector.

NG ▶ REPAIR OR REPLACE HARNESS OR CONNECTOR

OK ▶ REPLACE ECM

21.	CHECK WHETHER DTC OUTPUT RECURS (DTC P0139 IS OUTPUT AGAIN)

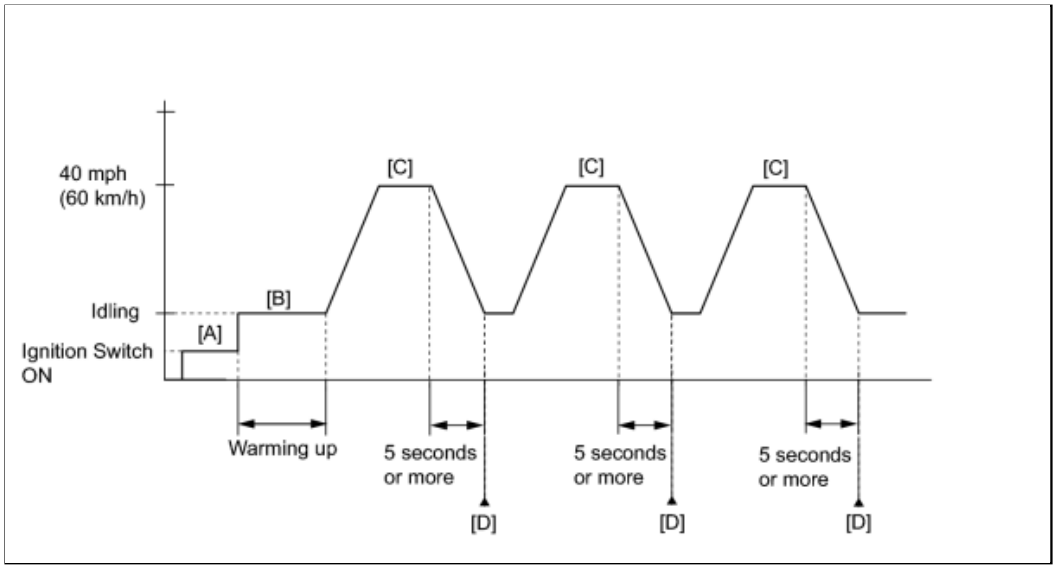

(a) Connect the Techstream to the DLC3.

(b) Turn the ignition switch to ON and turn the Techstream on.

(c) Clear the DTC (even if no DTC are stored, perform the clear DTC procedure) INFO .

(d) Turn the ignition switch off.

(e) Turn the ignition switch to ON and turn the Techstream on [A].

(f) Start the engine and warm it up until the engine coolant temperature reaches 75°C (167°F) or more [B].

(g) Drive the vehicle at 37 mph (60 km/h), and then decelerate the vehicle by releasing the accelerator pedal for 5 seconds or more to perform the fuel cut [C].

(h) Select the following menu items: Powertrain / Engine and ECT / Utility / All Readiness.

(i) Input DTC: P0139. Check the DTC MONITOR is NORMAL. If DTC MONITOR is INCOMPLETE, perform the drive pattern increasing the vehicle speed and using second gear to decelerate the vehicle.

Result:

RESULT	PROCEED TO
ABNORMAL (P0139 detected)	A
NORMAL (No DTC output)	B

B ▶ **CHECK FOR INTERMITTENT PROBLEMS**

A ▶ **REPLACE HEATED OXYGEN SENSOR**

Last Modified: 3-10-2010	6.4 C	**From:** 200901
Model Year: 2010	**Model:** Corolla	**Doc ID:** RM000000PFB0A7X
Title: 2AZ-FE ENGINE CONTROL: SFI SYSTEM: P0116: Engine Coolant Temperature Circuit Range / Performance Problem (2010 Corolla)		

DTC	**P0116**	**Engine Coolant Temperature Circuit Range / Performance Problem**

DESCRIPTION

Refer to DTC P0115 INFO .

DTC NO.	DTC DETECTION CONDITION	TROUBLE AREA
P0116	When either of following conditions met (2 trip detection logic) • During engine warming up after cold engine starts, change in Engine Coolant Temperature (ECT) sensor output bellow threshold • In duration between warmed engine stopped and next cold engine starts, change in ECT sensor output bellow threshold	• Thermostat • Engine coolant temperature sensor
	For Mexico Models: Case 1: Engine Coolant Temperature (ECT) between 35°C and 60°C (95°F and 140°F) when engine started, and conditions (a) and (b) met (2 trip detection logic) • (a) Vehicle driven at varying speeds (accelerated and decelerated) • (b) ECT remains within 3°C (37.4°F) of initial ECT Case 2: ECT more than 60°C (140°F) when engine started, and conditions (a) and (b) met (6 trip detection logic) • (a) Vehicle driven at varying speeds (accelerated and decelerated) • (b) ECT measurements remain within 1°C (33.8°F) of initial ECT on 6 successive occasions	

MONITOR DESCRIPTION

The engine coolant temperature sensor is used to monitor the engine coolant temperature. The engine coolant temperature sensor has a built-in thermistor with a resistance that varies according to the temperature of the engine coolant. When the engine coolant temperature becomes low, the resistance of the thermistor increases. When the temperature becomes high, the resistance drops. These variations in the resistance are reflected in the voltage output from the engine coolant temperature sensor.

The ECM monitors the sensor voltage and uses this value to calculate the engine coolant temperature. If the sensor voltage output deviates from the normal operating range, the ECM interprets this deviation as a malfunction in the engine coolant temperature sensor and sets the DTC.

Examples:

- Upon starting the engine, the engine coolant temperature is between 35°C and 60°C (95°F and 140°F). If the engine coolant temperature remains within 3°C (37°F) of the stating temperature after driving for 250 seconds, the DTC is set (2 trip detection logic).
- Upon starting the engine, the engine coolant temperature is over 60°C (140°F). If the engine coolant temperature remains within 1°C (34°F) of the starting temperature after driving for 250 seconds, the DTC is set (6 trip detection logic).

ECT sensor high side stuck monitor (only for Mexico models)

The ECM monitors the sensor voltage and uses this value to calculate the ECT. If the sensor voltage output deviates from the normal operating range, the ECM interprets this deviation as a malfunction in the ECT sensor and sets the DTC.

Examples:

- Upon starting the engine, the ECT is between 35°C and 60°C (95°F and 140°F). If after driving for 250 seconds, the ECT remains within 3°C (37.4°F) of the starting temperature, the DTC is set (2 trip detection logic).
- Upon starting the engine, the ECT is over 60°C (140°F). If after driving for 250 seconds, the ECM remains within 1°C (33.8°F) of the starting temperature, the DTC is set (6 trip detection logic).

MONITOR STRATEGY

Related DTCs	P0116: Engine coolant temperature sensor cold start monitor P0116: Engine coolant temperature sensor soak monitor
Required Sensors/Components (Main)	Engine coolant temperature sensor
Required Sensors/Components (Related)	None
Frequency of Operation	Once per driving cycle
Duration	5 hours or more
MIL Operation	2 driving cycles
Sequence of Operation	None

TYPICAL ENABLING CONDITIONS

Engine Coolant Temperature Sensor Cold Start Monitor

Monitor runs whenever following DTCs are not present	None

Battery voltage	10.5 V or more
Time after engine start	1 second or more
Engine coolant temperature at engine start	Less than 60°C (140°F)
Intake air temperature sensor circuit	OK
Soak time	0 or more
Accumulated mass air flow	490 g or more
Engine	Running
Fuel cut	OFF
Difference between engine coolant temperature at engine start and intake air temperature	Less than 40°C (104°F)

Engine Coolant Temperature Sensor Soak Monitor

Monitor runs whenever following DTCs are not present	None
Battery voltage	10.5 V or more
Engine	Running
Soak time	5 hours or more
Either (a) or (b) condition met	-
(a) Engine coolant temperature	60°C (140°F) or more
(b) Accumulated MAF	846 g or more

TYPICAL MALFUNCTION THRESHOLDS

Engine Coolant Temperature Sensor Cold Start Monitor

Engine coolant temperature sensor value change	Less than 5°C (41°F)

Engine Coolant Temperature Sensor Soak Monitor

Difference between current engine coolant temperature sensor value and previous engine coolant temperature sensor value when engine stopped	Less than 5°C (41°F)

COMPONENT OPERATING RANGE

Engine coolant temperature	Engine coolant temperature sensor value changes in accordance with actual engine coolant temperature

CONFIRMATION DRIVING PATTERN

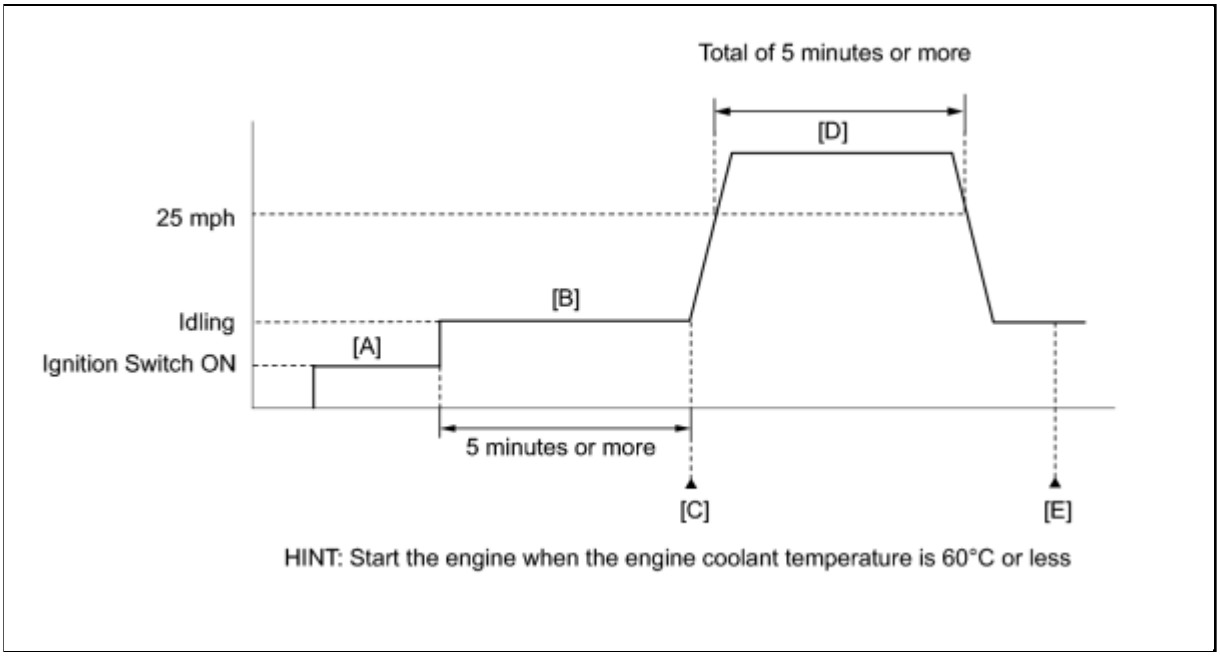

1. Connect the Techstream to the DLC3.
2. Turn the ignition switch to ON and turn the Techstream on.
3. Enter the following menu items: Powertrain / Engine / Data List / Coolant Temp.
4. Check that the coolant temperature is 60°C (140°F) or less.
5. Clear the DTCs (even if no DTCs are stored, perform the clear DTC procedure) INFO .
6. Turn the ignition switch off.
7. Turn the ignition switch to ON and turn the Techstream on [A].
8. Start the engine and idle it for 5 minutes or more [B].

HINT:

If the engine coolant temperature does not change by 5°C (9°F) or higher, the engine coolant temperature sensor is malfunctioning. It is not necessary to continue this procedure.

9. Enter the following menus: Powertrain / Engine / Utility / All Readiness.
10. Input the DTC: P0116.
11. Check the DTC judgment result [C].

TECHSTREAM DISPLAY	DESCRIPTION
NORMAL	○ DTC judgment completed ○ System normal
ABNORMAL	○ DTC judgment completed ○ System abnormal

TECHSTREAM DISPLAY	DESCRIPTION
INCOMPLETE	○ DTC judgment not completed ○ Perform driving pattern after confirming DTC enabling conditions
UNKNOWN	○ Unable to perform DTC judgment ○ Number of DTCs which do not fulfill DTC preconditions has reached ECU memory limit

CAUTION:

When performing the confirmation driving pattern, obey all speed limits and traffic laws.

HINT:

If the judgment result shows INCOMPLETE or UNKNOWN, perform steps [D] and [E].

12. Drive the vehicle at 25 mph (40 km/h) or more for a total of 5 minutes or more [D].

HINT:

In the event of the drive pattern being interrupted (possibly due to factors such as traffic conditions), the drive pattern can be resumed.

13. Check the DTC judgment result again [E].

HINT:

If the judgment result shows INCOMPLETE or UNKNOWN, perform steps [D] and [E] again.

14. If the test result is UNKNOWN, enter the following menus: Powertrain / Engine / Trouble Codes / Pending.
15. Read Pending DTCs.

HINT:

If a pending DTC is output, the system is malfunctioning.

16. If the test result is INCOMPLETE or UNKNOWN and no pending DTC is output, perform a universal trip and check for permanent DTCs INFO .

HINT:

- If a permanent DTC is output, the system is malfunctioning.
- If no permanent DTC is output, the system is normal.

INSPECTION PROCEDURE

HINT:

- If any of DTCs P0115, P0117, P0118 or P0125 are set simultaneously with DTC P0116, the engine coolant temperature sensor may have an open or a short circuit. Troubleshoot those DTCs first.
- Read freeze frame data using the Techstream. The ECM records vehicle and driving condition

information as freeze frame data the moment a DTC is stored. When troubleshooting, freeze frame data can be helpful in determining whether the vehicle was running or stopped, whether the engine was warmed up or not, whether the air fuel ratio was lean or rich, as well as other data recorded at the time of a malfunction.

PROCEDURE

1.	**CHECK ANY OTHER DTCS OUTPUT (IN ADDITION TO DTC P0116)**

(a) Connect the Techstream to the DLC3.

(b) Turn the ignition switch to ON.

(c) Turn the Techstream on.

(d) Enter the following menus: Powertrain / Engine and ECT / Trouble Codes.

(e) Read DTCs.

Result:

RESULT	PROCEED TO
P0116	A
P0116 and other DTCs	B

B ▶ **GO TO DTC CHART**

A ▼

2.	**INSPECT THERMOSTAT**

(a) Remove the thermostat INFO .

(b) Measure the valve opening temperature of the thermostat.

Standard Value:
80 to 84°C (176 to 183°F)

HINT:

In addition to the above check, confirm that the valve is completely closed when the temperature is below the standard.

(c) Reinstall the thermostat INFO .

NG → REPLACE THERMOSTAT

OK → REPLACE ENGINE COOLANT TEMPERATURE SENSOR

Last Modified: 3-10-2010	6.4 C	**From:** 200901
Model Year: 2010	**Model:** Corolla	**Doc ID:** RM000000PF609UX
Title: 2AZ-FE ENGINE CONTROL: SFI SYSTEM: P0120-P0123,P0220,P0222,P0223,P2135: Throttle / Pedal Position Sensor / Switch "A" Circuit Malfunction (2010 Corolla)		

DTC	**P0120**	**Throttle / Pedal Position Sensor / Switch "A" Circuit Malfunction**

DTC	**P0121**	**Throttle / Pedal Position Sensor / Switch "A" Circuit Range / Performance Problem**

DTC	**P0122**	**Throttle / Pedal Position Sensor / Switch "A" Circuit Low Input**

DTC	**P0123**	**Throttle / Pedal Position Sensor / Switch "A" Circuit High Input**

DTC	**P0220**	**Throttle / Pedal Position Sensor / Switch "B" Circuit**

DTC	**P0222**	**Throttle / Pedal Position Sensor / Switch "B" Circuit Low Input**

DTC	**P0223**	**Throttle / Pedal Position Sensor / Switch "B" Circuit High Input**

DTC	**P2135**	**Throttle / Pedal Position Sensor / Switch "A" / "B" Voltage Correlation**

DESCRIPTION

HINT:

- These DTCs relate to the throttle position sensor.

The throttle position sensor is mounted on the throttle body, and detects the opening angle of the throttle valve. This sensor is a non-contact type. It uses Hall-effect elements in order to yield accurate signals even in extreme conditions.

The throttle position sensor has 2 sensor circuits, each of which transmits a signal, VTA1 and VTA2. VTA1 is used to detect the throttle valve angle and VTA2 is used to detect malfunctions in VTA1. The sensor signal voltages vary between 0 V and 5 V in proportion to the throttle valve opening angle, and are transmitted to the VTA terminals of the ECM.

As the valve closes, the sensor output voltage decreases and as the valve opens, the sensor output voltage increases. The ECM calculates the throttle valve opening angle according to these signals and controls the throttle actuator in response to driver inputs. These signals are also used in calculations such as air-fuel ratio correction, power enrichment correction and fuel-cut control.

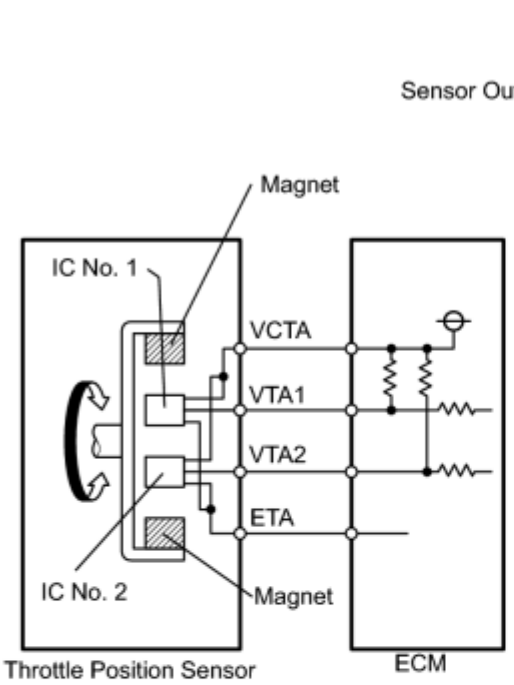

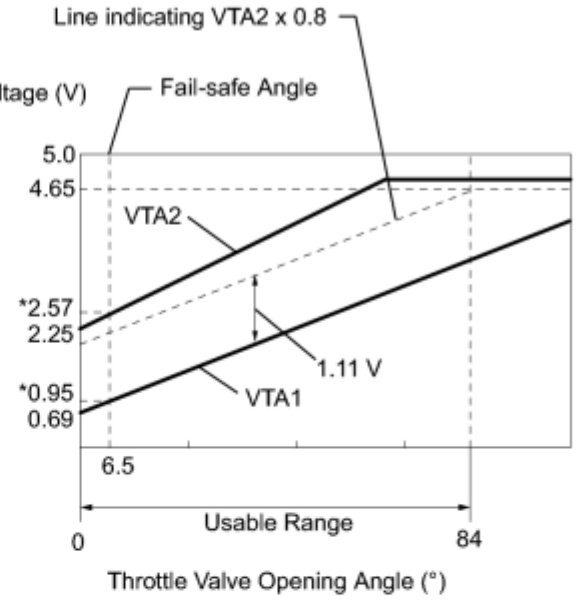

*: During fail-safe control

Note:

The throttle valve opening angle detected by the sensor terminal VTA1 is expressed as a percentage.

Between 10% and 22%: Throttle valve fully closed

Between 64% and 96%: Throttle valve fully open

Approximately 19%: Fail safe angle (6.5°)

Features of sensor output:

The difference in voltage between VTA1 and VTA2 x 0.8 is approximately 1.11 V.

(VTA2 × 0.8 is approximately equal to VTA1 + 1.11 V)

DTC NO.	DTC DETECTION CONDITION	TROUBLE AREA
P0120	Output voltage of VTA1 quickly fluctuates beyond lower and upper malfunction thresholds for 2 seconds or more when accelerator pedal depressed (1 trip detection logic)	• Throttle position sensor (built into throttle body)

DTC NO.	DTC DETECTION CONDITION	TROUBLE AREA
		• ECM
P0121	Difference between VTA1 and VTA2 voltages less than 0.8 V, or more than 1.6 V for 2 seconds (1 trip detection logic)	• Throttle position sensor (built into throttle body) • Throttle position sensor circuit • ECM
P0122	Output voltage of VTA1 0.2 V or less for 2 seconds or more when accelerator pedal depressed (1 trip detection logic)	• Throttle position sensor (built into throttle body) • Short in VTA1 circuit • Open in VC circuit • ECM
P0123	Output voltage of VTA1 4.54 V or more for 2 seconds or more when accelerator pedal depressed (1 trip detection logic)	• Throttle position sensor (built into throttle body) • Open in VTA1 circuit • Open in E2 circuit • Short between VC and VTA1 circuits • ECM
P0220	Output voltage of VTA2 quickly fluctuates beyond lower and upper malfunction thresholds for 2 seconds or more when accelerator pedal depressed (1 trip detection logic)	• Throttle position sensor (built into throttle body) • ECM
P0222	Output voltage of VTA2 1.75 V or less for 2 seconds or more when accelerator pedal depressed (1 trip detection logic)	• Throttle position sensor (built into throttle body) • Short in VTA2 circuit • Open in VC circuit • ECM

DTC NO.	DTC DETECTION CONDITION	TROUBLE AREA
P0223	Output voltage of VTA2 4.8 V or more, and VTA1 between 0.2 V and 2.02 V, for 2 seconds or more when accelerator pedal depressed (1 trip detection logic)	• Throttle position sensor (built into throttle body) • Open in VTA2 circuit • Open in E2 circuit • Short between VC and VTA2 circuits • ECM
P2135	Either condition (a) or (b) met (1 trip detection logic): (a) Difference between output voltages of VTA1 and VTA2 0.02 V or less for 0.5 seconds or more (b) Output voltage of VTA1 0.2 V or less, and VTA2 1.75 V or less, for 0.4 seconds or more	• Short between VTA1 and VTA2 circuits • Throttle position sensor (built into throttle body) • ECM

HINT:

- When any of these DTCs are set, check the throttle valve opening angle by entering the following menus: Powertrain / Engine and ECT / Data List / ETCS / Throttle Position No. 1 and Throttle Position No. 2.
- Throttle Position No. 1 denotes the VTA1 signal, and Throttle Position No. 2 denotes the VTA2 signal.

  Reference (Normal Condition):

TECHSTREAM DISPLAY	ACCELERATOR PEDAL FULLY RELEASED	ACCELERATOR PEDAL FULLY DEPRESSED
Throttle Position No. 1	0.5 to 1.1 V	3.3 to 4.9 V
Throttle Position No. 2	2.1 to 3.1 V	4.6 to 5.0 V

MONITOR DESCRIPTION

P0120, P0122, P0123, P0220, P0223, P2135

The ECM uses the throttle position sensor to monitor the throttle valve opening angle. There are several checks that the ECM performs to confirm the proper operation of the throttle position sensor.

- A specific voltage difference is expected between the sensor terminals, VTA1 and VTA2, for each throttle valve opening angle. If the difference between VTA1 and VTA2 is incorrect, the

ECM interprets this as a malfunction in the sensor circuit, and sets a DTC.

- VTA1 and VTA2 each have a specific voltage range. If VTA1 or VTA2 is outside the normal operating range, the ECM interprets this as a malfunction in the sensor circuit, and sets a DTC.
- VTA1 and VTA2 should never be close to the same voltage level. If VTA1 is within 0.02 V of VTA2, the ECM determines that there is a short circuit in the sensor circuit, and sets a DTC.

If the malfunction is not repaired successfully, a DTC is set 10 seconds after the engine is next started.

P0121

This sensor transmits two signals: VTA1 and VTA2. VTA1 is used to detect the throttle opening angle and VTA2 is used to detect malfunctions in VTA1. The ECM performs several checks to confirm the proper operation of the TP sensor and VTA1.

For each throttle opening angle, a specific voltage difference is expected between the outputs of VTA1 and VTA2. If the output voltage difference between the two signals deviates from the normal operating range, the ECM interprets this as a malfunction in the TP sensor. The ECM illuminates the MIL and stores the DTC.

If the malfunction is not repaired successfully, the DTC is stored 2 seconds after the engine is next started.

MONITOR STRATEGY

Related DTCs	P0120: Throttle position sensor 1 range check (Fluctuating) P0121: Throttle position sensor rationality P0122: Throttle position sensor 1 range check (Low voltage) P0123: Throttle position sensor 1 range check (High voltage) P0220: Throttle position sensor 2 range check (Fluctuating) P0222: Throttle position sensor 2 range check (Low voltage) P0223: Throttle position sensor 2 range check (High voltage) P2135: Throttle position sensor range check (Correlation)
Required Sensors/Components (Main)	Throttle position sensor
Required Sensors/Components (Related)	-
Frequency of Operation	Continuous
Duration	Within 2 seconds: P0121 2 seconds: P0120, P0122, P0123, P0220, P0222 and P0223 0.5 seconds: P2135 Case 1

	0.4 seconds: P2135 Case 2
MIL Operation	Immediate
Sequence of Operation	None

TYPICAL ENABLING CONDITIONS

P0120, P0122, P0123, P0220, P0222, P0223, P2135

Monitor runs whenever following DTCs not present	None
Either of following conditions A or B met	-
A. Ignition switch ON	0.012 seconds or more
B. Electronic throttle actuator power	ON

P0121

Monitor runs whenever following DTCs not present	None
Either of following conditions A or B is met	-
A. Ignition switch	ON
B. Electronic throttle motor power	ON
Throttle position sensor malfunction (P0120, P0122, P0123, P0220, P0222, P0223, P2135)	Not detected

TYPICAL MALFUNCTION THRESHOLDS

P0120

VTA1 voltage	0.2 V or less, or 4.54 V or more

P0121

Either of following conditions is met	-
Difference of throttle position sensor voltage between VTA1 and (VTA2 x 0.8)	Higher than 1.6 V
Difference of throttle position sensor voltage between VTA1 and (VTA2 x 0.8)	Lower than 0.8 V

P0122

VTA1 voltage	0.2 V or less

P0123

VTA1 voltage	4.54 V or more

P0220

VTA2 voltage	1.75 V or less, or 4.8 V or more

P0222

VTA2 voltage	1.75 V or less

P0223

VTA2 voltage when VTA1 0.2 V or more, and 2.02 V or less	4.8 V or more

P2135 Case 1

Difference between VTA1 and VTA2 voltages	0.02 V or less

P2135 Case 2

VTA1 voltage	0.2 V or less
VTA2 voltage	1.75 V or less

COMPONENT OPERATING RANGE

VTA1 voltage	0.2 to 4.54 V
VTA2 voltage	1.75 to 4.8 V

CONFIRMATION DRIVING PATTERN

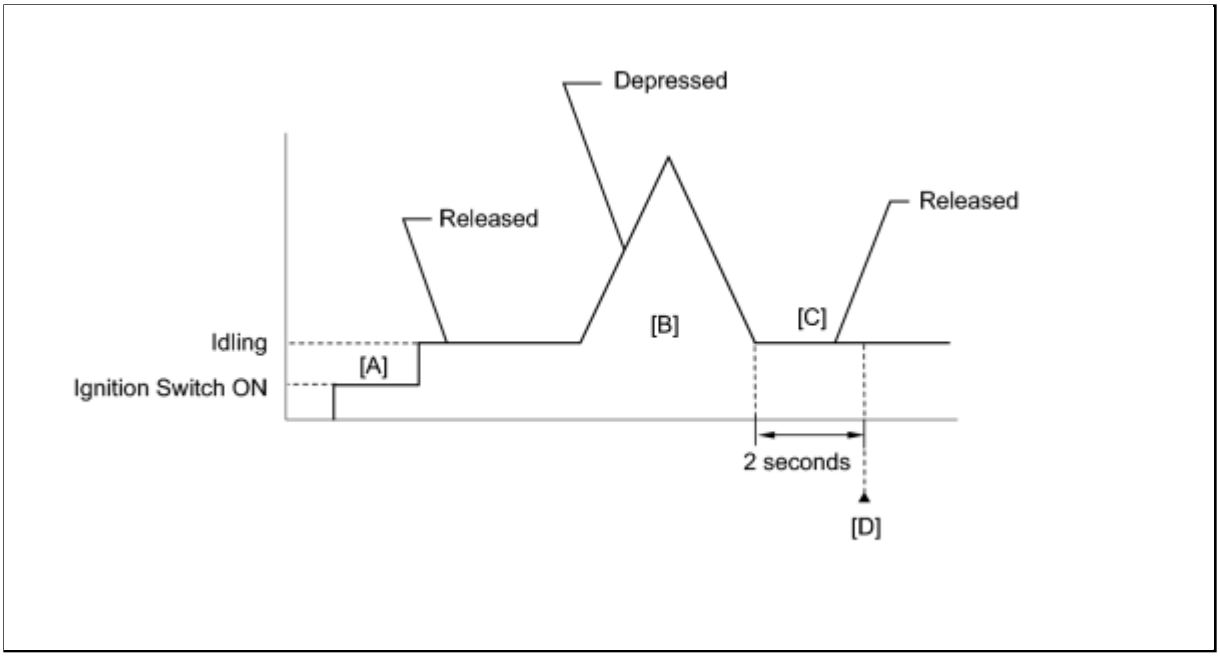

1. Connect the Techstream to the DLC3.
2. Turn the ignition switch to ON and turn the Techstream on.
3. Clear the DTCs (even if no DTCs are stored, perform the clear DTC procedure) INFO .
4. Turn the ignition switch off.
5. Turn the ignition switch to ON and turn the Techstream on [A].
6. Start the engine.
7. With the vehicle stationary, fully depress and release the accelerator pedal [B].
8. Idle the engine for 2 seconds or more [C].
9. Enter the following menus: Powertrain / Engine / Utility / All Readiness.
10. Input the DTC: P0120, P0121, P0122, P0123, P0220, P0222, P0223 or P2135.
11. Check the DTC judgment result [D].

TECHSTREAM DISPLAY	DESCRIPTION
NORMAL	○ DTC judgment completed ○ System normal
ABNORMAL	○ DTC judgment completed ○ System abnormal
INCOMPLETE	○ DTC judgment not completed ○ Perform driving pattern after confirming DTC enabling conditions
UNKNOWN	○ Unable to perform DTC judgment ○ Number of DTCs which do not fulfill DTC preconditions has reached ECU memory limit

HINT:

- If the judgment result shows ABNORMAL, the system has a malfunction.
- If the judgment result shows INCOMPLETE or UNKNOWN, perform steps [B] and [D] again.

12. If the test result is UNKNOWN, enter the following menus: Powertrain / Engine / Trouble Codes / Pending.
13. Read Pending DTCs.

HINT:

If a pending DTC is output, the system is malfunctioning.

14. If the test result is INCOMPLETE or UNKNOWN and no pending DTC is output, perform a universal trip and check for permanent DTCs INFO .

HINT:

- If a permanent DTC is output, the system is malfunctioning.
- If no permanent DTC is output, the system is normal.

FAIL-SAFE

When any of these DTCs, as well as other DTCs relating to Electronic Throttle Control System malfunctions, are set, the ECM enters fail-safe mode. During fail-safe mode, the ECM cuts the current to the throttle actuator, and the throttle valve is returned to a 6.5° throttle angle by the return spring. The ECM then adjusts the engine output by controlling the fuel injection (intermittent fuel-cut) and ignition timing, in accordance with the accelerator pedal angle, to allow the vehicle to continue at a minimal speed. If the accelerator pedal is depressed firmly and gently, the vehicle can be driven slowly.

Fail-safe mode continues until a pass condition is detected, and the ignition switch is then turned to off.

WIRING DIAGRAM

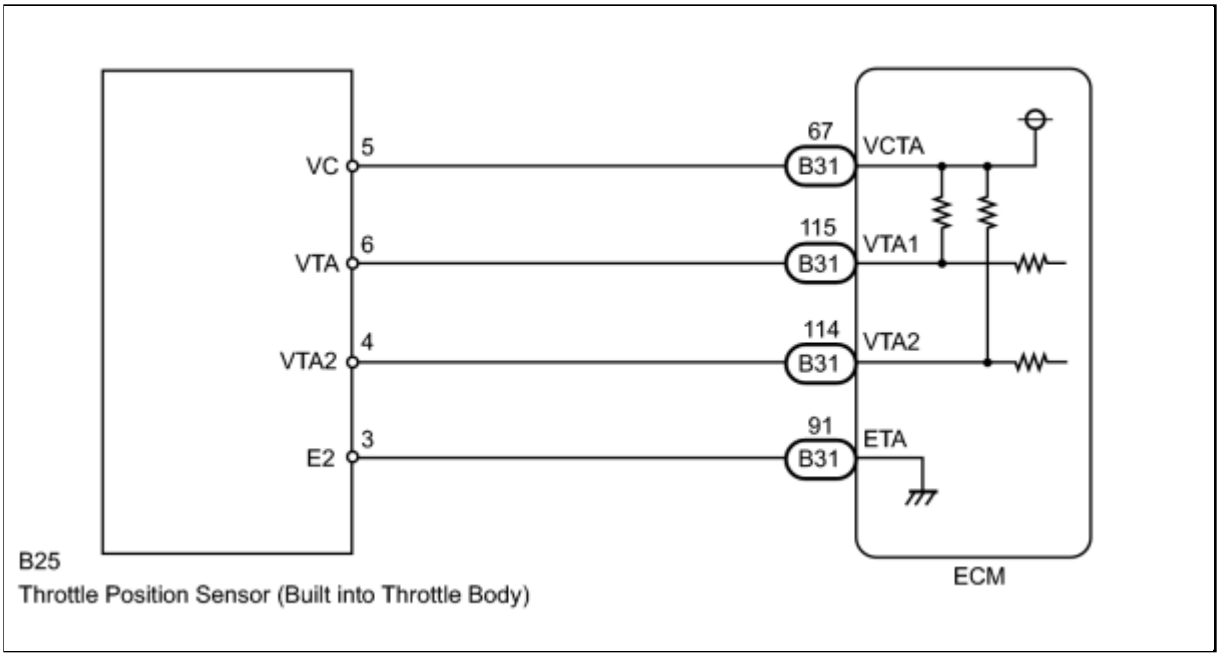

INSPECTION PROCEDURE

HINT:

Read freeze frame data using the Techstream. The ECM records vehicle and driving condition information as freeze frame data the moment a DTC is stored. When troubleshooting, freeze frame data can be helpful in determining whether the vehicle was running or stopped, whether the engine was warmed up or not, whether the air fuel ratio was lean or rich, as well as other data recorded at the time of a malfunction.

PROCEDURE

1.	**READ VALUE USING TECHSTREAM (THROTTLE POSITION SENSOR)**

(a) Connect the Techstream to the DLC3.

(b) Turn the ignition switch to ON.

(c) Turn the Techstream on.

(d) Enter the following menus: Powertrain / Engine and ECT / Data List / ETCS / Throttle Position No. 1 and Throttle Position No. 2.

(e) Read the values displayed on the Techstream.

Result:

WHEN ACCELERATOR PEDAL RELEASED		WHEN ACCELERATOR PEDAL DEPRESSED		TROUBLE AREA	PROCEED TO
THROTTLE POSITION NO. 1	THROTTLE POSITION NO. 2	THROTTLE POSITION NO. 1	THROTTLE POSITION NO. 2		
0 to 0.2 V	0 to 0.2 V	0 to 0.2 V	0 to 0.2 V	VC circuit open	A
4.5 to 5.0 V	4.5 to 5.0 V	4.5 to 5.0 V	4.5 to 5.0 V	E2 circuit open	
0 to 0.2 V, or 4.5 to 5.0 V	2.1 V to 3.1 V (Fail-safe)	0 to 0.2 V, or 4.5 to 5.0 V	2.1 V to 3.1 V (Fail-safe)	VTA1 circuit open or ground short	
0.6 V to 1.4 V (Fail-safe)	0 to 0.2 V, or 4.5 to 5.0 V	0.6 V to 1.4 V (Fail-safe)	0 to 0.2 V, or 4.5 to 5.0 V	VTA2 circuit open or ground short	
0.5 to 1.1 V	2.1 to 3.1 V	3.2 to 4.8 V (Not fail-safe)	4.6 to 5.0 V (Not fail-safe)	Throttle position sensor circuit normal	B

HINT:

- DTC P0121 is stored when the voltages output from VTA1 and VTA2 are not consistent with the characteristics of the sensors. Therefore, check the Freeze Frame Data when this DTC is output. Use the following formula to confirm relative fluctuations in voltage.

  Features of sensor output:

VTA2 x 0.8 is approximately equal to VTA1 + 1.11 V
VTA1: Throttle Position No. 1
VTA2: Throttle Position No. 2

- If DTC P0121 is output, proceed to the "CHECK HARNESS AND CONNECTOR (THROTTLE POSITION SENSOR - ECM)".

B ▶ **CHECK WHETHER DTC OUTPUT RECURS (THROTTLE POSITION SENSOR DTCS)**

A

2.	**CHECK HARNESS AND CONNECTOR (THROTTLE POSITION SENSOR - ECM)**

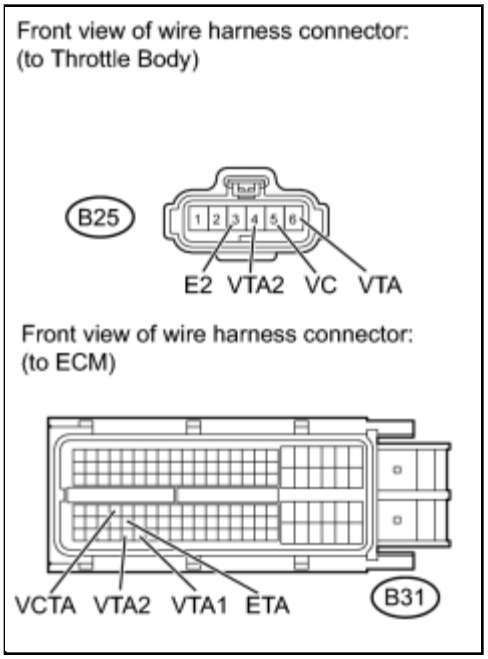

(a) Disconnect the throttle body connector.

(b) Disconnect the ECM connector.

(c) Measure the resistance according to the value(s) in the table below.

Standard Resistance (Check for Open):

TESTER CONNECTION	CONDITION	SPECIFIED CONDITION
B25-5 (VC) - B31-67 (VCTA)	Always	Below 1 Ω
B25-6 (VTA) - B31-115 (VTA1)	Always	Below 1 Ω
B25-4 (VTA2) - B31-114 (VTA2)	Always	Below 1 Ω

TESTER CONNECTION	CONDITION	SPECIFIED CONDITION
B25-3 (E2) - B31-91 (ETA)	Always	Below 1 Ω

Standard Resistance (Check for Short):

TESTER CONNECTION	CONDITION	SPECIFIED CONDITION
B25-5 (VC) or B31-67 (VCTA) - Body ground	Always	10 kΩ or higher
B25-6 (VTA) or B31-115 (VTA1) - Body ground	Always	10 kΩ or higher
B25-4 (VTA2) or B31-114 (VTA2) - Body ground	Always	10 kΩ or higher

(d) Reconnect the throttle body connector.

(e) Reconnect the ECM connector.

NG ▶ **REPAIR OR REPLACE HARNESS OR CONNECTOR (THROTTLE POSITION SENSOR - ECM)**

OK ▼

3.	**INSPECT ECM (VC VOLTAGE)**

(a) Disconnect the throttle body connector.

(b) Turn the ignition switch to ON.

(c) Measure the voltage according to the value(s) in the table below.

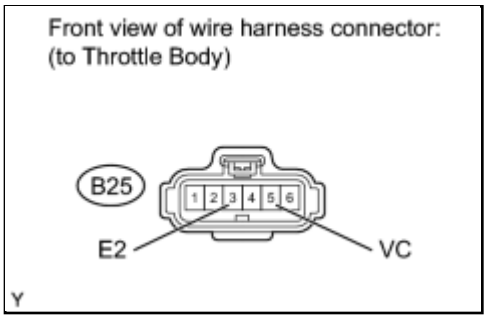

Standard Voltage:

TESTER CONNECTION	CONDITION	SPECIFIED CONDITION
B25-5 (VC) - B25-3 (E2)	Ignition switch ON	4.5 to 5.5 V

(d) Reconnect the throttle body connector.

NG ▶ **REPLACE ECM**

OK

4.	REPLACE THROTTLE BODY

(a) Replace throttle body INFO .

NEXT

5.	CHECK WHETHER DTC OUTPUT RECURS (THROTTLE POSITION SENSOR DTCS)

(a) Connect the Techstream to the DLC3.

(b) Turn the ignition switch to ON.

(c) Turn the Techstream on.

(d) Clear the DTCs INFO .

(e) Start the engine.

(f) Allow the engine to idle for 15 seconds or more.

(g) Enter the following menus: Powertrain / Engine and ECT / Trouble Codes.

(h) Read DTCs.

Result:

RESULT	PROCEED TO
P0120, P0121, P0122, P0123, P0220, P0222, P0223 and/or P2135	A
No output	B

B ▶ **END**

A ▶ **REPLACE ECM**

Last Modified: 3-10-2010	6.4 C	**From:** 200901
Model Year: 2010	**Model:** Corolla	**Doc ID:** RM0000010BK05BX
Title: 2AZ-FE ENGINE CONTROL: SFI SYSTEM: P011B: Engine Coolant Temperature / Intake Air Temperature Correlation (2010 Corolla)		

DTC	**P011B**	**Engine Coolant Temperature / Intake Air Temperature Correlation**

DESCRIPTION

The engine has two temperature sensors, an engine coolant temperature sensor and an intake air temperature sensor, to detect the temperature while the engine is operating. A thermistor, whose resistance value varies according to the temperature, is built into each sensor. When the temperature is low, the resistance of the thermistor is high. When the temperature is high, the resistance is low. These variations in resistance are transmitted to the ECM as voltage changes. Based on these temperature signals output from the sensors, the ECM determines the fuel injection duration and the ignition timing to control the engine.

DTC NO.	DTC DETECTION CONDITION	TROUBLE AREA
P011B	• All of following conditions are met: (2 trip detection logic) a. Battery voltage 10.5 V or more b. 7 hours or more elapsed from engine stops on previous trip c. 35.2 seconds after cold engine starts d. Minimum intake air temperature after engine starts more than -10°C (14°F) e. Average engine coolant temperature before engine starts more than -10°C (14°F) f. Difference between readings of engine coolant temperature and intake air temperature greater than 20°C (68°F)	• Intake air temperature sensor (built into mass air flow meter) • Engine coolant temperature sensor • ECM

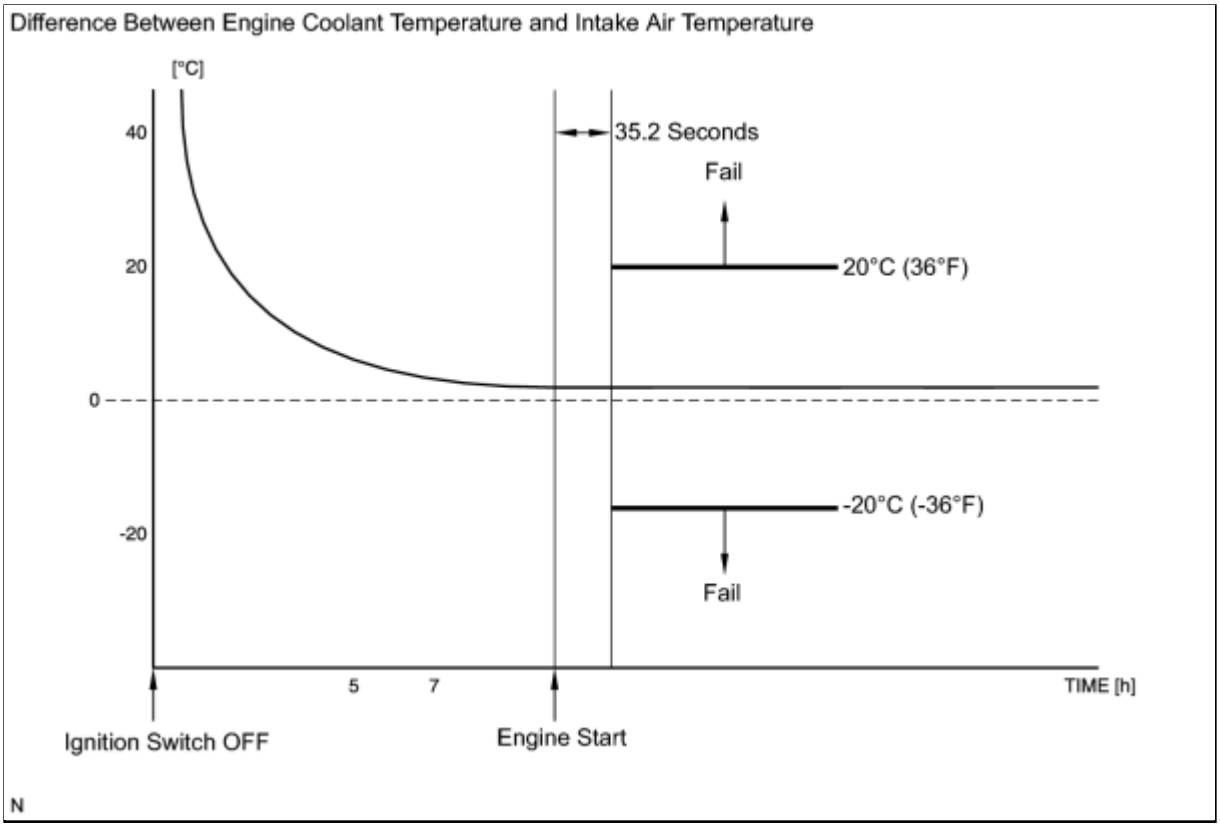

HINT:

- Waiting is required to prevent the temperature of the engine from affecting the readings. If the engine has been operated recently, it will not be possible to accurately compare the readings.
- For diagnosis, in order to duplicate the detection conditions of the DTC, it is necessary to park the vehicle for 7 hours. Parking the vehicle for 7 hours ensures that the actual temperature of the engine coolant temperature sensor and intake air temperature sensor are very similar. When the vehicle has been parked for less than 7 hours, differences in the readings may exist, this does not necessarily indicate a fault.

MONITOR DESCRIPTION

The ECM monitors the difference between the engine coolant temperature and the intake air temperature when the engine is started cold to detect the engine temperature conditions accurately. The monitor runs when the engine started cold after 7 hours or more has elapsed since the engine was stopped (ignition switch turned to OFF) on the previous trip. If the difference between the engine coolant temperature and the intake air temperature on a cold start exceeds 20°C (36°F), the ECM interprets this as a malfunction in the engine coolant temperature sensor circuit and intake air temperature sensor circuit, and sets the DTC.

MONITOR STRATEGY

Related DTCs	P011B: Engine coolant temperature / Intake air temperature sensor correlation
Required Sensors / Components (Main)	Engine coolant temperature / Intake air temperature sensor

Required Sensors / Components (Related)	-
Frequency of Operation	Once per driving cycle
Duration	7 hours or more
MIL Operation	2 driving cycles
Sequence of Operation	None

TYPICAL ENABLING CONDITIONS

The monitor will run whenever these DTCs are not present	None
All of following conditions met	Conditions 1 and 2
1. All of following conditions met	Conditions (a), (b), (c) and (d)
(a) After ignition switch ON and engine not running time	Less than 20 seconds
(b) Soak Time	7 hours or more
(c) Battery voltage	10.5 V or more
(d) Time after engine start	35.2 seconds or more
2. Either of the following conditions are met	Condition (a) and (b)
(a) Minimum intake air temperature after engine start	-10°C (14°F) or more
(b) Engine coolant temperature before engine start	-10°C (14°F) or more

TYPICAL MALFUNCTION THRESHOLDS

Engine coolant temperature and intake air temperature deviate	Less than -20°C (-36°F) or more than 20°C (36°F)

CONFIRMATION DRIVING PATTERN

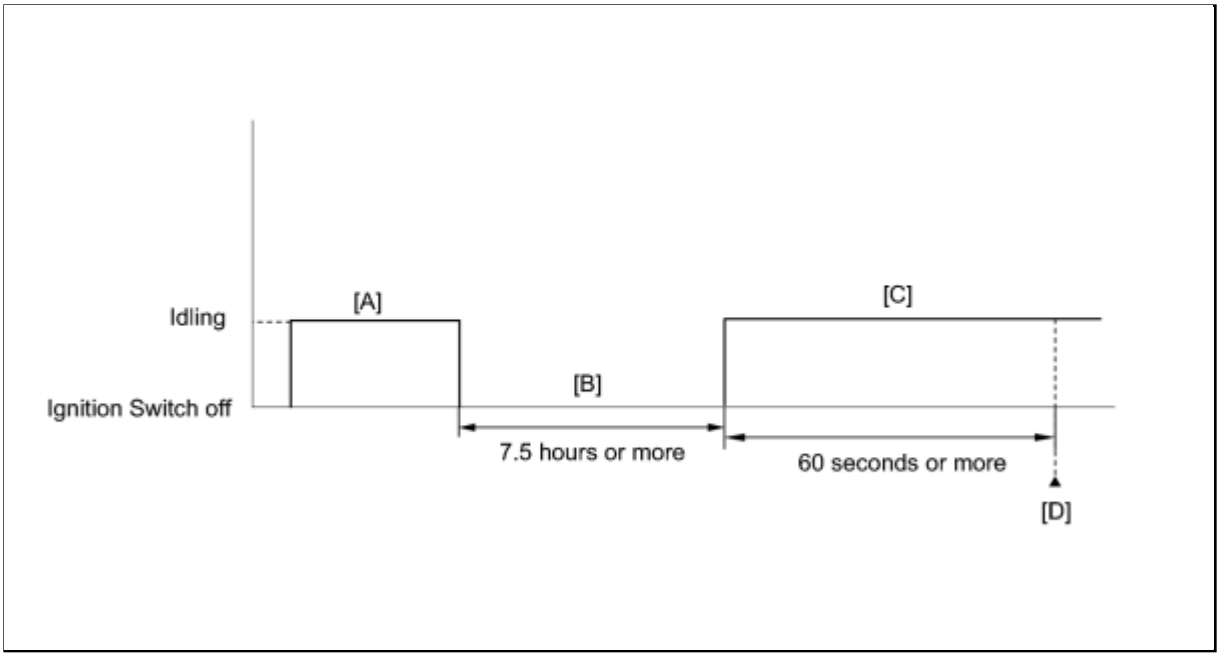

1. Connect the Techstream to the DLC3.
2. Turn the ignition switch to ON and turn the Techstream on.
3. Clear the DTCs (even if no DTCs are stored, perform the clear DTC procedure) INFO [A].
4. Turn the ignition switch off.
5. With the engine stopped, leave the vehicle as is for 7.5 hours or more [B].
6. Start the engine and wait 60 seconds or more [C].
7. Enter the following menus: Powertrain / Engine / Utility / All Readiness.
8. Input the DTC: P011B.
9. Check the DTC judgment result [D].

TECHSTREAM DISPLAY	DESCRIPTION
NORMAL	○ DTC judgment completed ○ System normal
ABNORMAL	○ DTC judgment completed ○ System abnormal
INCOMPLETE	○ DTC judgment not completed ○ Perform driving pattern after confirming DTC enabling conditions
UNKNOWN	○ Unable to perform DTC judgment ○ Number of DTCs which do not fulfill DTC preconditions has reached ECU memory limit

HINT:

If the judgment result shows INCOMPLETE or UNKNOWN, perform steps [A] through [D] again.

10. If the test result is UNKNOWN, enter the following menus: Powertrain / Engine / Trouble Codes / Pending.
11. Read Pending DTCs.

HINT:

If a pending DTC is output, the system is malfunctioning.

12. If the test result is INCOMPLETE or UNKNOWN and no pending DTC is output, perform a universal trip and check for permanent DTCs INFO .

HINT:

- If a permanent DTC is output, the system is malfunctioning.
- If no permanent DTC is output, the system is normal.

INSPECTION PROCEDURE

PROCEDURE

1.	**CHECK ANY OTHER DTCS OUTPUT (IN ADDITION TO P011B)**

(a) Connect the Techstream to the DLC3.

(b) Turn the ignition switch to ON.

(c) Turn the Techstream on.

(d) Enter the following menus: Powertrain / Engine and ECT / Trouble Codes.

(e) Read DTCs.

Result:

RESULT	PROCEED TO
P011B	A
P011B and other DTCs	B

HINT:

If any DTCs other than P011B are output, troubleshoot those DTCs first.

B ▶ **GO TO DTC CHART**

A ▼

2.	READ VALUE USING TECHSTREAM (INTAKE AIR TEMPERATURE)

(a) Leave the vehicle for 7 hours or more.

HINT:

It is necessary leave the vehicle for 7 hours or more to allow conditions similar to the DTC detection conditions.

(b) Connect the Techstream to the DLC3.

(c) Turn the ignition switch to ON.

(d) Turn the Techstream on.

(e) Enter the following menus: Powertrain / Engine and ECT / Intake Air.

(f) Read the value displayed on the Techstream.

OK:
Difference between the intake air temperature and the actual outside air temperature is within 10°C (50°F).

HINT:

Temperature readings on the vehicle's outside temperature gauge (if equipped) are not suitable for comparing to the intake air temperature reading. The outside temperature gauge has a significant delay built in to prevent temperature swings from being displayed on its display. Use an accurate thermometer to determine the outside air temperature.

NG ▶ **REPLACE MASS AIR FLOW METER**

OK ▼

3.	READ VALUE USING TECHSTREAM (COOLANT TEMPERATURE)

(a) Connect the Techstream to the DLC3.

(b) Turn the ignition switch to ON.

(c) Turn the Techstream on.

(d) Enter the following menus: Powertrain / Engine and ECT / All Data / Coolant Temp.

(e) Read the value displayed on the Techstream.

OK:

The difference between the coolant temperature and the actual outside air temperature is within 10°C (50°F).

HINT:

If the result is not as specified, check if there are heat sources such as a block heater in the engine compartment.

NG ▶ **REPLACE ENGINE COOLANT TEMPERATURE SENSOR**

OK ▶ **REPLACE ECM**

Last Modified: 3-10-2010	6.4 C	**From:** 200901
Model Year: 2010	**Model:** Corolla	**Doc ID:** RM000000XH30AGX
Title: 2AZ-FE ENGINE CONTROL: SFI SYSTEM: P0300-P0304: Random / Multiple Cylinder Misfire Detected (2010 Corolla)		

DTC	**P0300**	**Random / Multiple Cylinder Misfire Detected**

DTC	**P0301**	**Cylinder 1 Misfire Detected**

DTC	**P0302**	**Cylinder 2 Misfire Detected**

DTC	**P0303**	**Cylinder 3 Misfire Detected**

DTC	**P0304**	**Cylinder 4 Misfire Detected**

DESCRIPTION

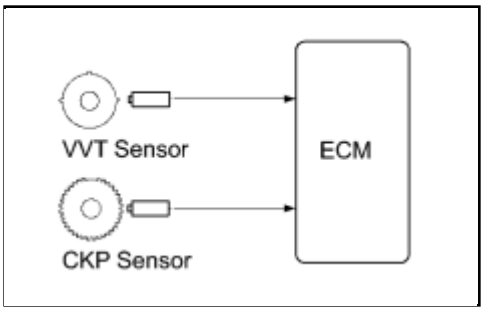

When the engine misfires, high concentrations of hydrocarbons (HC) enter the exhaust gas. High HC concentration levels can cause an increase in exhaust emission levels. Extremely high concentrations of HC can also cause increases in the three-way catalytic converter temperature, which may cause damage to the three-way catalytic converter. To prevent this increase in emissions and to limit the possibility of thermal damage, the ECM monitors the misfire rate. When the temperature of the three-way catalytic converter reaches the point of thermal degradation, the ECM blinks the MIL. To monitor misfires, the ECM uses both the camshaft position sensor and the crankshaft position sensor. The camshaft position sensor is used to identify any misfiring cylinders and the crankshaft position sensor is used to measure variations in the crankshaft rotation speed. Misfires are counted when the crankshaft rotation speed variations exceed predetermined thresholds. If the misfire count exceeds the threshold levels, and could cause emission control system performance deterioration, the ECM

illuminates the MIL and sets a DTC.

DTC NO.	DTC DETECTION CONDITION	TROUBLE AREA
P0300	When one of following conditions below is detected (2 trip detection logic): • High temperature misfire occurs in three-way catalytic converter (MIL blinks) • Emission deterioration misfire occurs (MIL illuminates) • Simultaneous misfiring of several cylinders occurs	• Open or short in engine wire harness • Connector connection • Vacuum hose connections • Ignition system • Fuel injector • Fuel pressure • Mass air flow meter • Engine coolant temperature sensor • Compression pressure • Valve clearance • Valve timing • PCV valve and hose • PCV hose connections • Intake system • ECM
P0301 P0302 P0303 P0304	When one of following conditions below is detected (2 trip detection logic): • High temperature misfire occurs in three-way catalytic converter (MIL blinks) • Emission deterioration misfire occurs (MIL illuminates) • Misfiring of specific cylinder occurs	

When DTCs for misfiring cylinders are randomly set, but DTC P0300 is not set, it indicates that misfires have been detected in different cylinders at different times. DTC P0300 is only set when several misfiring cylinders are detected at the same time.

MONITOR DESCRIPTION

The ECM illuminates the MIL and sets a DTC when either one of the following conditions, which could cause emission control system performance deterioration, is detected (2 trip detection logic).

- Within the first 1000 crankshaft revolutions of the engine starting, an excessive misfiring rate (approximately 20 to 50 misfires per 1000 crankshaft revolutions) occurs once.
- An excessive misfiring rate (approximately 20 to 50 misfires per 1000 crankshaft revolutions) occurs a total of 4 times.

The ECM flashes the MIL and sets a DTC when either one of the following conditions, which could cause the three-way catalytic converter damage, is detected (2 trip detection logic).

HINT:

If a catalyst damage misfire occurs, the monitor informs the driver by blinking the MIL (1 trip).

Misfire Monitor for Mexico Models

The ECM illuminates the MIL and sets a DTC when either one of the following conditions, which could cause emission deterioration, is detected (2 trip detection logic).

- Within the first 1000 crankshaft revolutions of the engine starting, an excessive misfiring rate (approximately 1000 misfires per 1000 crankshaft revolutions) occurs once.

- An excessive misfiring rate (approximately 500 misfires per 1000 crankshaft revolutions) occurs a total of 4 times.

The ECM flashes the MIL and sets a DTC when the following condition, which could cause the Three-Way Catalytic Converter (TWC) damage, is detected (2 trip detection logic).

- A catalyst damage misfire, which is monitored every 200 crankshaft revolutions, occurs 3 times.

MONITOR STRATEGY

Related DTCs	P0300: Multiple cylinder misfire P0301: Cylinder 1 misfire P0302: Cylinder 2 misfire P0303: Cylinder 3 misfire P0304: Cylinder 4 misfire
Required Sensors/Components (Main)	Crankshaft position sensor Camshaft position sensor
Required Sensors/Components (Related)	Engine coolant temperature Intake air temperature sensor Mass air flow meter
Frequency of Operation	Continuous
Duration	1000 to 4000 crankshaft revolutions: Emission related misfire 200 to 600 crankshaft revolutions: Catalyst damaging misfire
MIL Operation	2 driving cycles: Emission related misfire MIL flashes immediately: Catalyst damaging misfire
Sequence of Operation	None

TYPICAL ENABLING CONDITIONS

Misfire

Monitor runs whenever following DTCs are not present	P0016 (VVT System bank 1- Misalignment) P0102, P0103 (Mass Air Flow Meter) P0112, P0113 (Intake Air Temperature Sensor) P0115, P0117, P0118 (Engine Coolant Temperature Sensor) P0120, P0121 P0122, P0123, P0220, P0222, P0223, P2135 (Throttle Position Sensor) P0125 (Insufficient Engine Coolant Temperature for Closed Loop Fuel Control) P0327, P0328 (Knock Sensor) P0335 (Crankshaft Position Sensor) P0340 (Camshaft Position Sensor)

	P0351, P0352, P0353, P0354 (Igniter) P0500 (Vehicle Speed Sensor)
Battery voltage	8 V or more
VVT system	Not operated by scan tool
Engine RPM	400 to 6400 rpm
Either of following conditions (a) or (b) is met	-
(a) Engine coolant temperature at engine start	More than -7°C (19°F)
(b) Engine coolant temperature	More than 20°C (68°F)
Fuel cut	OFF

Monitor Period of Emission Related Misfire

First 1000 revolutions after engine start, or Check Mode	Crankshaft 1000 revolutions
Except above	Crankshaft 1000 revolutions x 4

Monitor Period of Catalyst Damaging Misfire (MIL blinks)

All of following conditions 1, 2 and 3 met	Crankshaft 200 revolutions
1. Driving cycles	1st
2. Check mode	OFF
3. Engine RPM	Less than 2450 rpm
Except above (MIL blinks immediately)	Crankshaft 200 revolutions x 3

FOR MEXICO MODELS:

Misfire: for Mexico models

The monitor will run whenever these DTCs are not present	P0016 (VVT System bank 1- Misalignment) P0102, P0103 (Mass Air Flow Meter) P0112, P0113 (Intake Air Temperature Sensor) P0115, P0117, P0118 (Engine Coolant Temperature Sensor) P0120, P0121 P0122, P0123, P0220, P0222, P0223, P2135 (Throttle Position Sensor) P0125 (Insufficient Engine Coolant Temperature for Closed Loop Fuel Control) P0327, P0328 (Knock Sensor) P0335 (Crankshaft Position Sensor) P0340 (Camshaft Position Sensor)

	P0351, P0352, P0353, P0354 (Igniter) P0500 (Vehicle Speed Sensor)
Battery voltage	8 V or more
VVT system	Not operated by scan tool
Engine RPM	400 to 6400 rpm
ECT	More than 65°C (149°F)
Fuel cut	OFF

Monitor period of emission-related-misfire: for Mexico models

First 1000 revolutions after engine start, or check mode	Crankshaft 1000 revolutions
Except above	Crankshaft 1000 revolutions x 4

Monitor period of catalyst-damaged-misfire (MIL blinks): for Mexico models

All of following conditions 1, 2 and 3 met	Crankshaft 200 revolutions
1. Driving cycles	1st
2. Check mode	OFF
Except above	Crankshaft 200 revolutions x 3

TYPICAL MALFUNCTION THRESHOLDS

Monitor Period of Emission Related Misfire

Misfire rate	1.266% or more (Automatic Transaxle) 1.493% or more (Manual Transaxle)

Monitor Period of Catalyst Damaged Misfire (MIL blinks)

Number of misfire per 200 revolutions	118 or more (varies with intake air amount and RPM)

FOR MEXICO MODELS:

Monitor period of emission-related-misfire: for Mexico models

Misfire rate	100% or more: for 1st 1000 revolutions 25% or more: after 1st 1000 revolutions

Monitor period of catalyst-damaged-misfire (MIL blinks): for Mexico models

Number of misfire per 200 revolutions	118 or more (varies with intake air amount and

	RPM)
Paired cylinder misfire (MIL blinks immediately)	Detected

MONITOR RESULT

Refer to Checking Monitor Status INFO .

CONFIRMATION DRIVING PATTERN

1. Connect the Techstream to the DLC3.
2. Turn the ignition switch to ON.
3. Turn the Techstream on.
4. Record the DTC(s) and freeze frame data.
5. Clear the DTCs (even if no DTCs are stored, perform the Clear DTC procedure) INFO .
6. Using the Techstream, switch the ECM from normal mode to check mode INFO .
7. Read the misfire counts of each cylinder, Cylinder #1 Misfire Count to Cylinder #4 Misfire Count, with the engine idling. If any misfire count is displayed, skip the following confirmation driving pattern.
8. Drive the vehicle so that the vehicle conditions displayed in Misfire RPM and Misfire Load of the Data List are the same as the freeze frame data. Perform this step several times.

   HINT:

   In order to store misfire DTCs, it is necessary to operate the vehicle for the period of time shown in the table below, confirm the Misfire RPM and Misfire Load in the Data List.

ENGINE SPEED	DURATION
Idling	8 minutes or more
1000	4.5 minutes or more
2000	2.5 minutes or more
3000	1.5 minutes or more

9. Check whether misfires have occurred by checking DTCs and freeze frame data.

   HINT:

   Do not turn the ignition switch off until the output DTC(s) and freeze frame data have been recorded. When the ECM returns to normal mode (default), the stored DTC(s), freeze frame data and other data are cleared.

10. Record the DTC(s), freeze frame data and misfire counts.
11. Turn the ignition switch off and wait for at least 15 seconds.
12. Clear the DTCs (even if no DTCs are stored, perform the Clear DTC procedure) INFO .

WIRING DIAGRAM

Ignition System Circuit:

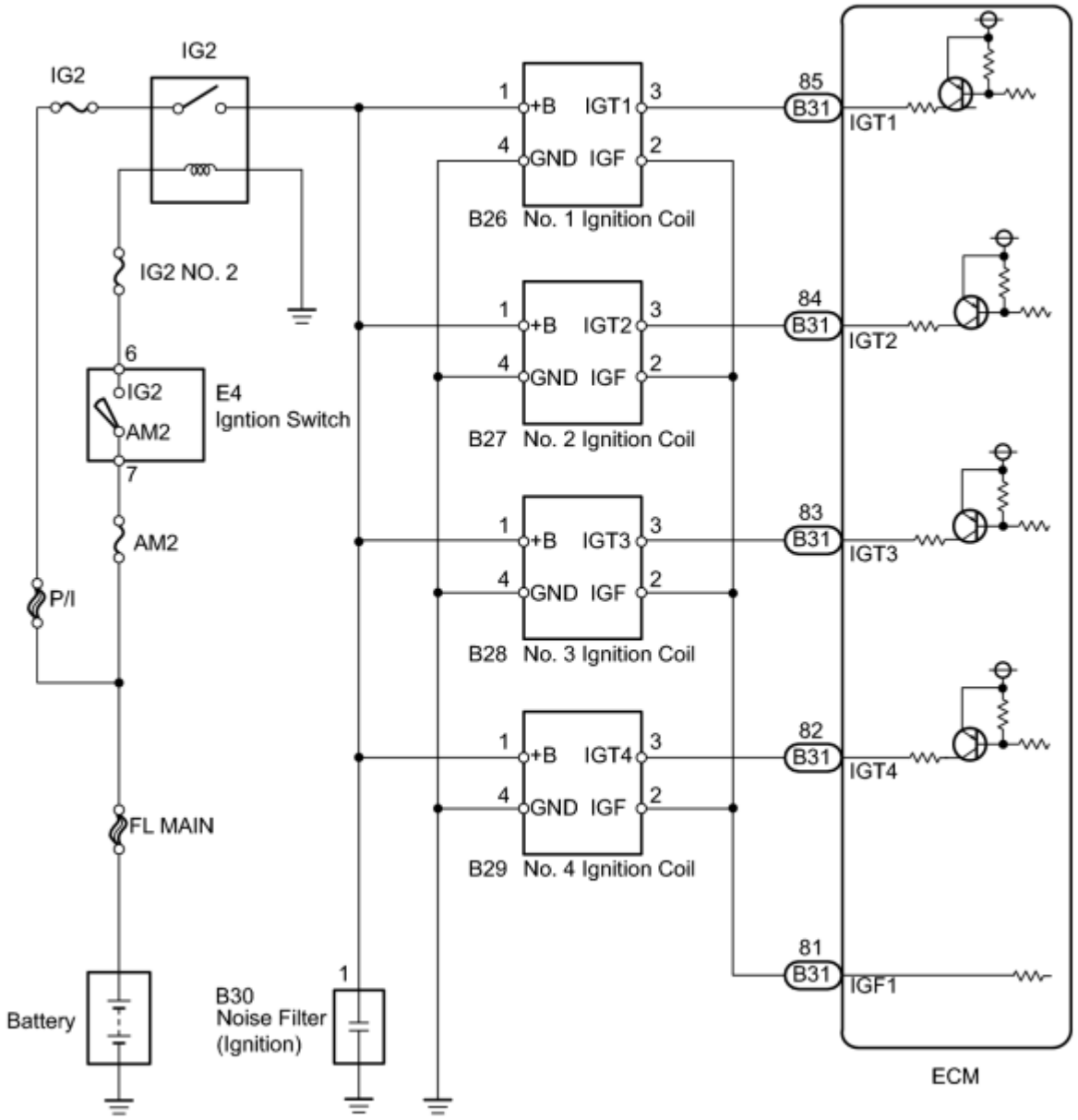

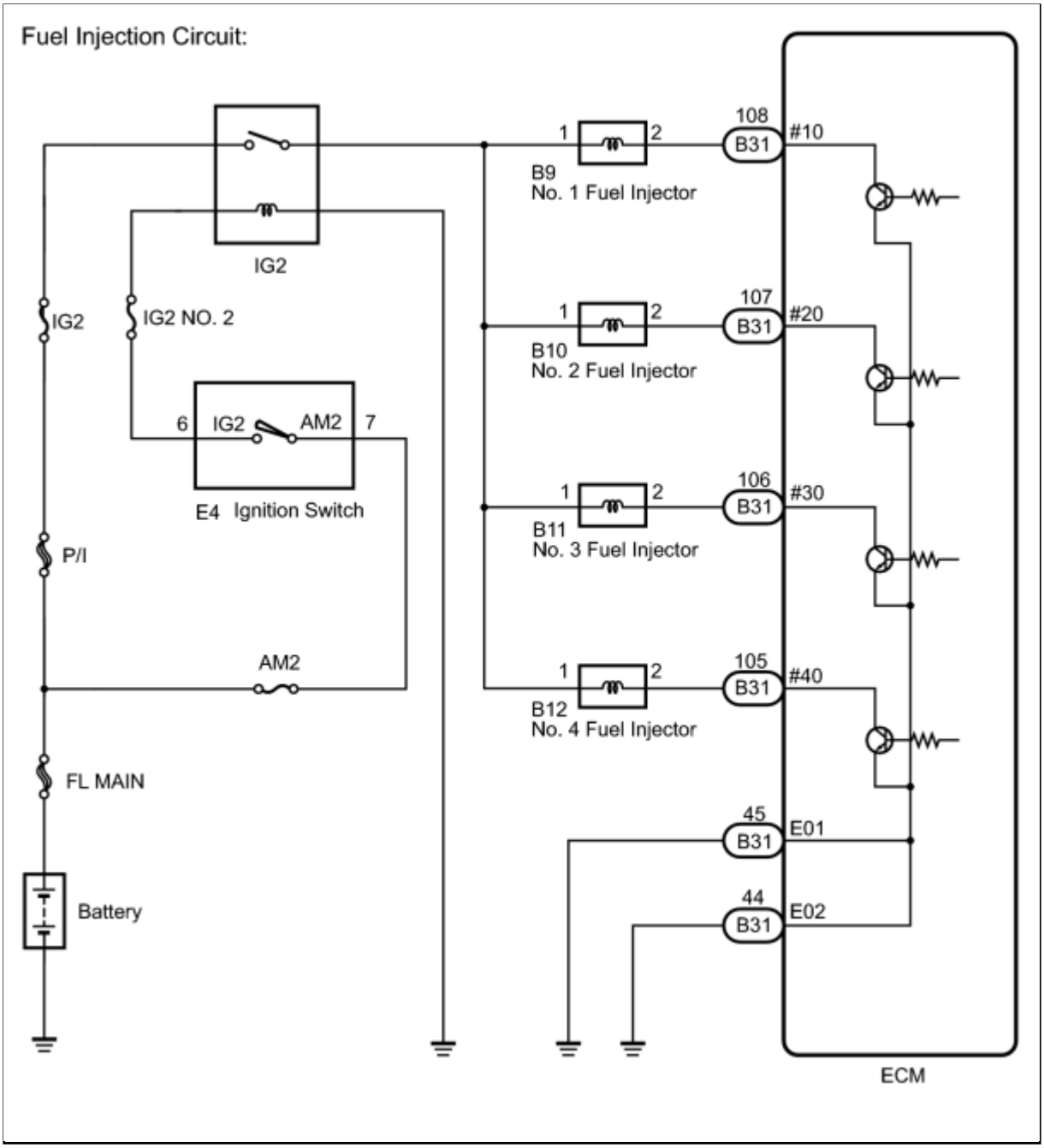

INSPECTION PROCEDURE

HINT:

- If any DTCs other than misfire DTCs are output, troubleshoot those DTCs first.
- Read freeze frame data using the Techstream. The ECM records vehicle and driving condition information as freeze frame data the moment a DTC is stored. When troubleshooting, freeze frame data can be helpful in determining whether the vehicle was running or stopped, whether the engine was warmed up or not, whether the air fuel ratio was lean or rich, as well as other data recorded at the time of a malfunction.
- If the misfire does not recur when the vehicle is brought to the workshop, reproduce the conditions stored in the ECM as freeze frame data.
- If the misfire still cannot be reproduced even though the conditions stored in the ECM as freeze frame data have been reproduced, one of the following factors is considered to be a possible

cause of the problem:

a. There was insufficient fuel in the tank.
b. Improper fuel is used.
c. The spark plugs have been contaminated.
d. The problem requires further diagnosis.

- After finishing repairs, check the misfire counts of the cylinders (Cylinder #1 Misfire Count to Cylinder #4 Misfire Count).
- Be sure to confirm that no misfiring cylinder DTCs are set again by conducting the confirmation driving pattern after finishing repairs.
- When one of Short FT #1, Long FT #1, Short FT #2 or Long FT #2 in the freeze frame data is outside the range of +/- 20%, the air-fuel ratio may be Rich (-20% or less) or Lean (+20% or more).
- When the Coolant Temp in the freeze frame data is less than 75°C (167°F), the misfire occurred while warming up the engine.
- An extremely imbalanced drive wheel which causes body vibration may cause misfire DTCs to be detected.

PROCEDURE

1.	**CHECK ANY OTHER DTCS OUTPUT (IN ADDITION TO MISFIRE DTCS)**

(a) Connect the Techstream to the DLC3.

(b) Turn the ignition switch to ON.

(c) Turn the Techstream on.

(d) Enter the following menus: Powertrain / Engine and ECT / Trouble Codes.

(e) Read DTCs.

HINT:

Write down indicated DTCs.

Result:

RESULT	PROCEED TO
P0300, P0301, P0302, P0303 and/or P0304	A
P0300, P0301, P0302, P0303 and/or P0304 and other DTCs	B

HINT:

If any DTCs other than P0300, P0301, P0302, P0303 and P0304 are output, troubleshoot those DTCs first.

B ▶ GO TO DTC CHART

A

2.	**READ VALUE USING TECHSTREAM (MISFIRE RPM AND MISFIRE LOAD)**

(a) Connect the Techstream to the DLC3.

(b) Turn the ignition switch to ON.

(c) Turn the Techstream on.

(d) Enter the following menus: Powertrain / Engine and ECT / Data List / Misfire / Misfire RPM and Misfire Load.

(e) Read and note the Misfire RPM and Misfire Load values.

HINT:

The Misfire RPM and Misfire Load values indicate the vehicle conditions under which the misfire occurs.

NEXT

3.	**CHECK PCV HOSE CONNECTIONS**

(a) Check PCV hose.

OK:

PCV hose is correctly connected and is not damaged.

NG → **REPAIR OR REPLACE PCV HOSE**

OK

4.	**READ VALUE USING TECHSTREAM (CATALYST OT MF F/C)**

(a) Connect the Techstream to the DLC3.

(b) Turn the ignition switch to ON.

(c) Turn the Techstream on.

(d) Enter the following menus: Powertrain / Engine and ECT / Data List / Catalyst OT MF F/C.

(e) Read the value displayed on the Techstream.

Result:

DATA LIST	TECHSTREAM DISPLAY	PROCEED TO
Catalyst OT MF F/C	Avail	A
	Not Avl	B

B ▶ **READ VALUE USING TECHSTREAM (CYLINDER #1, #2, #3 AND #4)**

A

▼

5.	**PERFORM ACTIVE TEST USING TECHSTREAM (PROHIBIT CATALYST OT MISFIRE PREVENT F/C)**

(a) Connect the Techstream to the DLC3.

(b) Turn the ignition switch to ON.

(c) Turn the Techstream on.

(d) Enter the following menus: Powertrain / Engine and ECT / Active Test / Prohibit the Catalyst OT Misfire prevent F/C.

(e) Perform the Active Test.

NOTICE:

When performing the Active Test, make sure the vehicle is stopped and either idling or at 3000 rpm or less.

NEXT

▼

6.	**READ VALUE USING TECHSTREAM (CYLINDER #1, #2, #3 AND #4)**

(a) Enter the following menus: Powertrain / Engine and ECT / Data List / Misfire / Cylinder #1 Misfire Count, #2, #3 and #4.

(b) Start the engine and allow the engine to idle.
(c) Read each value for Cylinder #1 Misfire Count to #4 displayed on the Techstream. If no misfire counts occur in any cylinders, perform steps (d) and (e) and then check the misfire counts again.

(d) Drive the vehicle with the Misfire RPM and Misfire Load noted in the "READ VALUE USING TECHSTREAM (Misfire RPM and Misfire Load)" procedures above.
(e) Read the Cylinder #1 Misfire Count to #4 or DTCs displayed on the Techstream.
Result:

RESULT (MISFIRE COUNT)	PROCEED TO
Most misfires occur in only 1 or 2 cylinders	A
3 cylinders or more have equal misfire counts	B

HINT:

- If it is difficult to reproduce misfires for each cylinder, check the Data List item called Misfire Margin. Try to find vehicle driving conditions that lower the Misfire Margin value. Values above 30% are considered normal.
- If the freeze frame data record of the engine coolant temperature is below 75°C (167°F), it may only be possible to detect the misfire when the engine is cold.
- If the freeze frame data record of the Engine Run Time is below 120 seconds, the misfire may be detected immediately after the engine is started.

B ▶ **CHECK INTAKE SYSTEM**

A ▼

7.	**INSPECT SPARK PLUG**

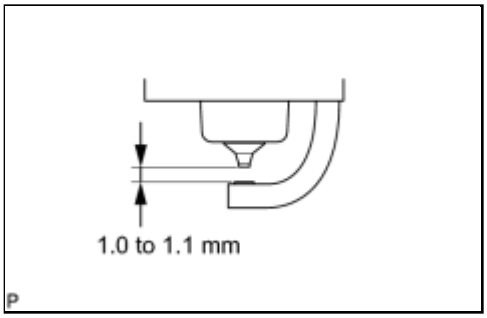

(a) Remove the ignition coil and the spark plug from the misfiring cylinder.

(b) Measure the spark plug electrode gap.

Standard Gap:
1.0 to 1.1 mm (0.0394 to 0.0433 in.)

(c) Check the electrode for carbon deposits.

Recommended Spark Plug:

MANUFACTURER	PRODUCT

MANUFACTURER	PRODUCT
DENSO	SK20R11
NGK	IFR6A11

NOTICE:

If the electrode gap is not as specified, replace the spark plug. Do not adjust the electrode gap.

(d) Reinstall the ignition coil.

NG ▶ **REPLACE SPARK PLUG**

OK ▼

8.	CHECK FOR SPARK AND IGNITION

(a) Disconnect the injector connectors to prevent the engine from starting.

CAUTION:

Always disconnect all injector connectors.

(b) Remove the ignition coil from the cylinder head.

(c) Install the spark plug onto the ignition coil.

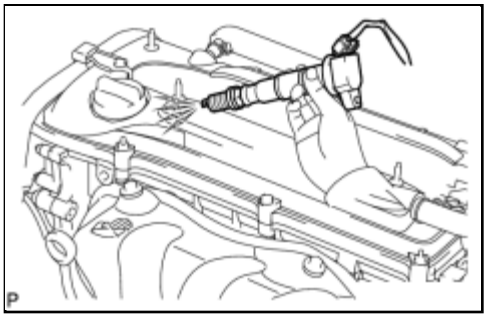

(d) Touch the spark plug assembly to the cylinder head.

(e) Crank the engine for less than 2 seconds and check for spark.

NOTICE:

Do not crank the engine for more than 2 seconds.

OK:

Sparks jump across electrode gap.

(f) Install the ignition coil.

(g) Reconnect the injector connectors.

NG ▶ **CHANGE TO**

KNOWN GOOD SPARK PLUG AND CHECK SPARK OF MISFIRING CYLINDER

OK

9.	CHECK CYLINDER COMPRESSION PRESSURE

(a) Measure the compression pressure of the misfiring cylinder INFO .

NG → CHECK ENGINE TO DETERMINE CAUSE OF LOW COMPRESSION

OK

10.	INSPECT ECM TERMINAL OF MISFIRING CYLINDER (#10, #20, #30 AND /OR #40 VOLTAGE)

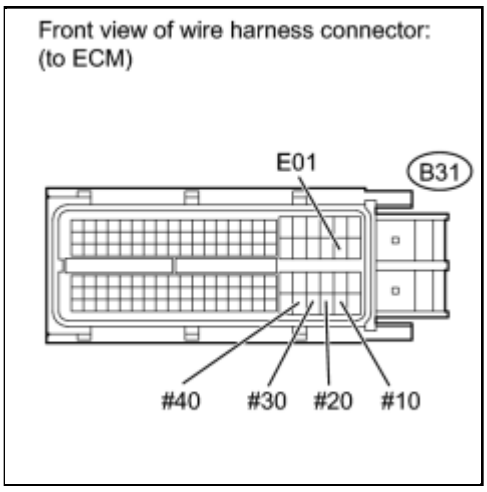

(a) Disconnect the ECM connector.

(b) Turn the ignition switch to ON.

(c) Measure the voltage according to the value(s) in the table below.

Standard Voltage:

TESTER CONNECTION	SWITCH CONDITION	SPECIFIED CONDITION
B31-108 (#10) - B31-45 (E01)	Ignition switch ON	11 to 14 V

TESTER CONNECTION	SWITCH CONDITION	SPECIFIED CONDITION
B31-107 (#20) - B31-45 (E01)	Ignition switch ON	11 to 14 V
B31-106 (#30) - B31-45 (E01)	Ignition switch ON	11 to 14 V
B31-105 (#40) - B31-45 (E01)	Ignition switch ON	11 to 14 V

(d) Reconnect the ECM connector.

NG ▶ **GO TO FUEL INJECTOR CIRCUIT**

OK ▼

11.	CHECK FUEL INJECTOR OF MISFIRING CYLINDER

(a) Check the injector injection (whether fuel volume is high or low, and whether injection pattern is poor) INFO .

NG ▶ **REPLACE FUEL INJECTOR**

OK ▼

12.	CHECK VALVE CLEARANCE OF MISFIRING CYLINDER

(a) Check the valve clearance INFO .

NG ▶ **ADJUST VALVE CLEARANCE**

OK

13.	**CHECK INTAKE SYSTEM**

(a) Check the intake system for vacuum leaks INFO .

OK:

No leaks in intake system.

NG ▶ **REPAIR OR REPLACE INTAKE SYSTEM**

OK

14.	**CHECK VALVE TIMING** INFO

NG ▶ **ADJUST VALVE TIMING**

OK

15.	**CHECK FUEL PRESSURE**

(a) Check the fuel pressure INFO .

NG ▶ **REPAIR OR REPLACE FUEL PUMP, PRESSURE REGULATOR, FUEL PIPE LINE OR FILTER**

OK

16.	READ VALUE USING TECHSTREAM (COOLANT TEMP) INFO

NG ▶ REPLACE ENGINE COOLANT TEMPERATURE SENSOR

OK ▼

17.	INSPECT MASS AIR FLOW METER INFO

NG ▶ REPLACE MASS AIR FLOW METER

OK ▶ REPLACE ECM

18.	CHECK INTAKE SYSTEM

(a) Check the intake system for vacuum leaks INFO .

OK:
No leaks in intake system.

NG ▶ REPAIR OR REPLACE INTAKE SYSTEM

OK ▼

19.	CHECK VALVE TIMING INFO

NG ▶ ADJUST VALVE TIMING

OK

▼

20.	CHECK FUEL PRESSURE

(a) Check the fuel pressure INFO .

NG ▶ REPAIR OR REPLACE FUEL PUMP, PRESSURE REGULATOR, FUEL PIPE LINE OR FILTER

OK
▼

21.	READ VALUE USING TECHSTREAM (COOLANT TEMP) INFO

NG ▶ REPLACE ENGINE COOLANT TEMPERATURE SENSOR

OK
▼

22.	INSPECT MASS AIR FLOW METER INFO

NG ▶ REPLACE MASS AIR FLOW METER

OK
▼

23.	INSPECT SPARK PLUG

(a) Remove the ignition coil and the spark plug of the misfiring cylinder.

(b) Measure the spark plug electrode gap.

Standard Gap:

1.0 to 1.1 mm (0.0394 to 0.0433 in.)

(c) Check the electrode for carbon deposits.

Recommended Spark Plug:

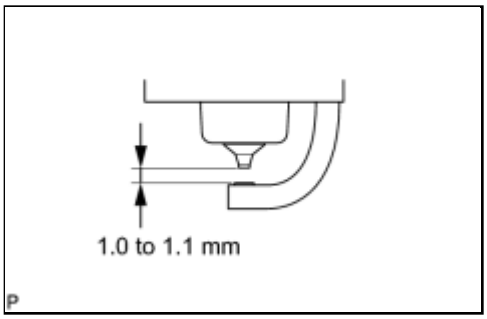

MANUFACTURER	PRODUCT
DENSO	SK20R11
NGK	IFR6A11

NOTICE:

If the electrode gap is not as specified, replace the spark plug. Do not adjust the electrode gap.

(d) Reinstall the ignition coil.

NG ▶ **REPLACE SPARK PLUG**

OK ▼

24.	CHECK FOR SPARK AND IGNITION

(a) Disconnect the injector connectors to prevent the engine from starting.

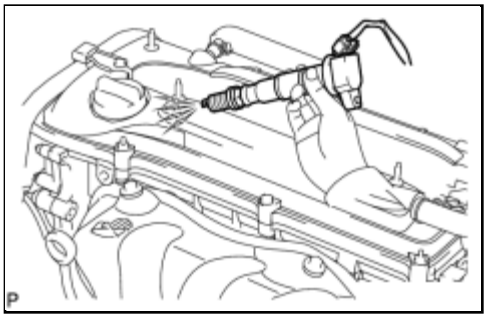

CAUTION:

Always disconnect all injector connectors.

(b) Remove the ignition coil from the cylinder head.

(c) Install the spark plug onto the ignition coil.

(d) Touch the spark plug tip to the cylinder head.

(e) Crank the engine for less than 2 seconds and check for spark.

NOTICE:

Do not crank the engine for more than 2 seconds.

OK:

Sparks jump across electrode gap.

(f) Install the ignition coil.

(g) Reconnect the injector connectors.

NG ▶ **CHANGE TO KNOWN GOOD SPARK PLUG AND CHECK SPARK OF MISFIRING CYLINDER**

OK ▼

25.	**CHECK CYLINDER COMPRESSION PRESSURE**

(a) Measure the compression pressure of the misfiring cylinder INFO .

NG ▶ **CHECK ENGINE TO DETERMINE CAUSE OF LOW COMPRESSION**

OK ▼

26.	**INSPECT ECM TERMINAL OF MISFIRING CYLINDER (#10, #20, #30 AND/OR #40 VOLTAGE)**

(a) Disconnect the ECM connector.

(b) Turn the ignition switch to ON.

(c) Measure the voltage according to the value(s) in the table below.

Standard Voltage:

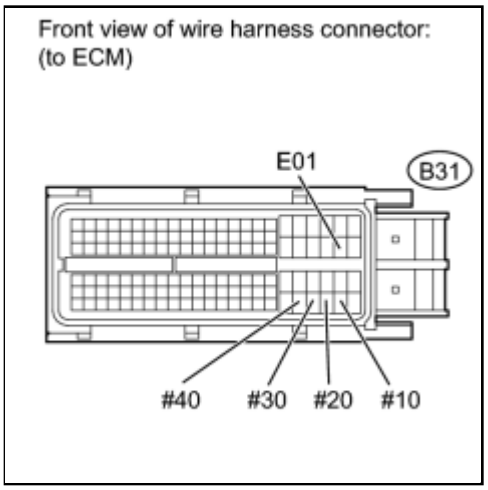

TESTER CONNECTION	SWITCH CONDITION	SPECIFIED CONDITION
B31-108 (#10) - B31-45 (E01)	Ignition switch ON	11 to 14 V
B31-107 (#20) - B31-45 (E01)	Ignition switch ON	11 to 14 V
B31-106 (#30) - B31-45 (E01)	Ignition switch ON	11 to 14 V
B31-105 (#40) - B31-45 (E01)	Ignition switch ON	11 to 14 V

(d) Reconnect the ECM connector.

NG ▶ **GO TO FUEL INJECTOR CIRCUIT**

OK ▼

27.	CHECK FUEL INJECTOR OF MISFIRING CYLINDER

(a) Check the injector injection (whether fuel volume is high or low, and whether injection pattern is poor) INFO .

NG ▶ **REPLACE FUEL INJECTOR**

OK ▼

28.	CHECK VALVE CLEARANCE OF MISFIRING CYLINDER

(a) Check the valve clearance INFO .

NG ▶ ADJUST VALVE CLEARANCE

OK ▶ REPLACE ECM

29.	CHANGE TO KNOWN GOOD SPARK PLUG AND CHECK SPARK OF MISFIRING CYLINDER

(a) Change the installed spark plug to a known good spark plug.

(b) Perform a spark test.

CAUTION:

Always disconnect all injector connectors.

NOTICE:

Do not crank the engine for more than 2 seconds.

(1) Install the spark plug into the ignition coil and connect the ignition coil connector.

(2) Disconnect the injector connectors.

(3) Ground the spark plug.

(4) Check if spark occurs while the engine is being cranked.

OK:

Sparks jump across electrode gap.

NG ▶ CHANGE TO KNOWN GOOD IGNITION COIL AND CHECK SPARK OF MISFIRING CYLINDER

OK ▶ REPLACE SPARK PLUG

30.	CHANGE TO KNOWN GOOD IGNITION COIL AND CHECK SPARK OF MISFIRING CYLINDER

(a) Change the ignition coil to a known good ignition coil.

(b) Perform a spark test.

CAUTION:

Always disconnect all injector connectors.

NOTICE:

Do not crank the engine for more than 2 seconds.

(1) Install the spark plug into the ignition coil and connect the ignition coil connector.

(2) Disconnect the injector connector.

(3) Ground the spark plug.

(4) Check if sparks occur while the engine is being cranked.

OK:

Sparks jump across electrode gap.

NG ▶ **REPLACE ECM**

OK ▶ **REPLACE IGNITION COIL**

Last Modified: 3-10-2010	6.4 C	**From:** 200901
Model Year: 2010	**Model:** Corolla	**Doc ID:** RM000000T9P05JX
Title: 2AZ-FE ENGINE CONTROL: SFI SYSTEM: P0125: Insufficient Coolant Temperature for Closed Loop Fuel Control (2010 Corolla)		

DTC	**P0125**	**Insufficient Coolant Temperature for Closed Loop Fuel Control**

DESCRIPTION

Refer to DTC P0115 INFO .

DTC NO.	DTC DETECTION CONDITION	TROUBLE AREA
P0125	Engine coolant temperature does not reach closed-loop enabling temperature for 20 minutes (this period varies with engine start engine coolant temperature) (2 trip detection logic)	• Cooling system • Engine coolant temperature sensor • Thermostat

MONITOR DESCRIPTION

The resistance of the engine coolant temperature sensor varies in proportion to the actual engine coolant temperature. The ECM supplies a constant voltage to the sensor and monitors the signal output voltage of the sensor. The signal output voltage varies according to the changing resistance of the sensor. After the engine is started, the engine coolant temperature is monitored through this signal. If the engine coolant temperature sensor indicates that the engine is not yet warm enough for closed-loop fuel control, despite a specified period of time having elapsed since the engine was started, the ECM interprets this as a malfunction in the sensor or cooling system and sets the DTC.

Example:

The engine coolant temperature is 5°C (41°F) at engine start. After about 1 minute running time, the engine coolant temperature sensor still indicates that the engine is not warm enough to begin closed-loop fuel (air-fuel ratio feedback) control. The ECM interprets this as a malfunction in the sensor or cooling system and sets the DTC.

MONITOR STRATEGY

Related DTCs	P0125: Insufficient engine coolant temperature for closed-loop fuel control
Required Sensors/Components (Main)	Engine coolant temperature sensor Thermostat Cooling system

Required Sensors/Components (Related)	-
Frequency of Operation	Once per driving cycle
Duration	52 seconds: Engine coolant temperature at engine start 1.67°C (35°F) or more 111 seconds: Engine coolant temperature at engine start 1.67 to -9.44°C (35 to 15°F) 1200 seconds: Engine coolant temperature at engine start less than -9.44°C (15°F)
MIL Operation	2 driving cycles
Sequence of Operation	None

TYPICAL ENABLING CONDITIONS

Monitor runs whenever following DTCs are not present	None
Thermostat fail	Not detected

TYPICAL MALFUNCTION THRESHOLDS

Time until actual engine coolant temperature reaches closed-loop fuel control enabling temperature	52 seconds: Engine coolant temperature at engine start 1.67°C (35°F) or more 111 seconds: Engine coolant temperature at engine start 1.67 to -9.44°C (35 to 15°F) 1200 seconds: Engine coolant temperature at engine start less than -9.44°C (15°F)

CONFIRMATION DRIVING PATTERN

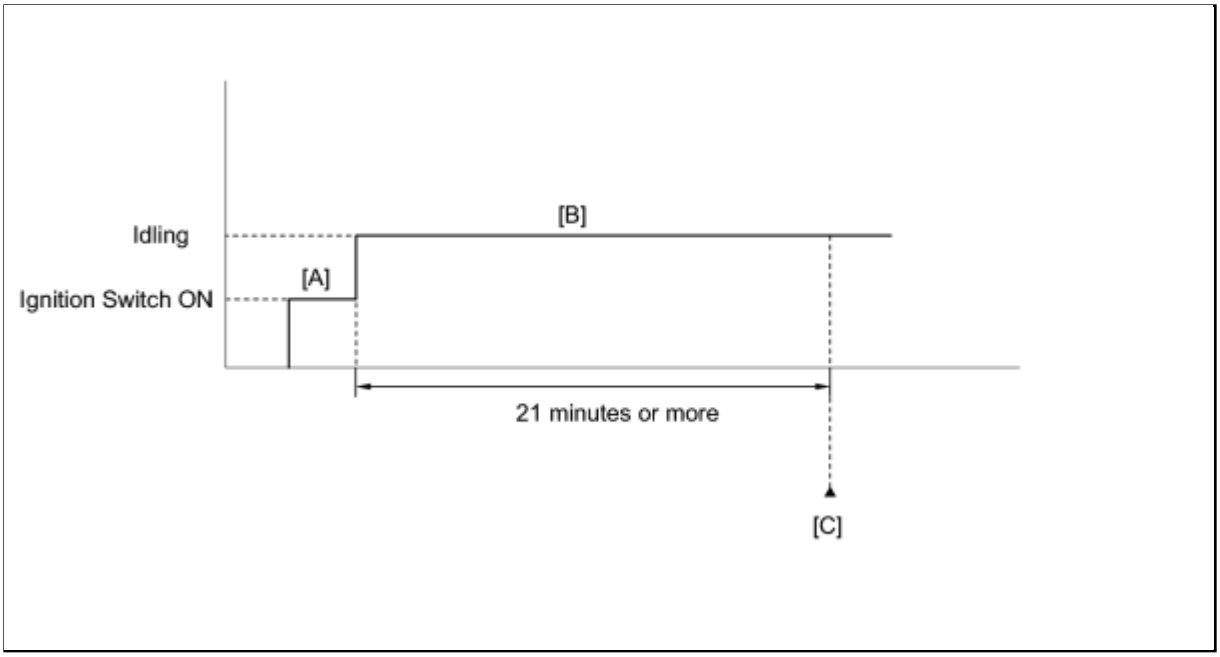

1. Leave the vehicle outside overnight.
2. Connect the Techstream to the DLC3.
3. Turn the ignition switch to ON and turn the Techstream on.
4. Enter the following menu items: Powertrain / Engine / Data List / Coolant Temp.
5. Check that the engine coolant temperature is 10°C (50°F) or less.
6. Clear the DTCs (even if no DTCs are stored, perform the clear DTC procedure) INFO .
7. Turn the ignition switch off.
8. Turn the ignition switch to ON and turn the Techstream on [A].
9. Start the engine.
10. After starting the engine, wait 21 minutes or more [B].
11. Enter the following menus: Powertrain / Engine / Utility / All Readiness.
12. Input the DTC: P0125.
13. Check the DTC judgment result [C].

TECHSTREAM DISPLAY	DESCRIPTION
NORMAL	○ DTC judgment completed ○ System normal
ABNORMAL	○ DTC judgment completed ○ System abnormal
INCOMPLETE	○ DTC judgment not completed ○ Perform driving pattern after confirming DTC enabling conditions
UNKNOWN	○ Unable to perform DTC judgment ○ Number of DTCs which do not fulfill DTC preconditions has reached ECU memory limit

14. If the test result is UNKNOWN, enter the following menus: Powertrain / Engine / Trouble Code / Pending.
15. Read Pending DTCs.

    HINT:

    If a pending DTC is output, the system is malfunctioning.

16. If the test result is INCOMPLETE or UNKNOWN and no pending DTC is output, perform a universal trip and check for permanent DTCs INFO .

    HINT:

    - If a permanent DTC is output, the system is malfunctioning.
    - If no permanent DTC is output, the system is normal.

WIRING DIAGRAM

Refer to DTC P0115 INFO .

INSPECTION PROCEDURE

HINT:

- If any of DTCs P0115, P0116, P0117 or P0118 are set simultaneously with DTC P0125, the engine coolant temperature sensor may have an open or a short circuit. Troubleshoot those DTCs first.
- Read freeze frame data using the Techstream. The ECM records vehicle and driving condition information as freeze frame data the moment a DTC is stored. When troubleshooting, freeze frame data can be helpful in determining whether the vehicle was running or stopped, whether the engine was warmed up or not, whether the air fuel ratio was lean or rich, as well as other data recorded at the time of a malfunction.

PROCEDURE

1.	**CHECK ANY OTHER DTCS OUTPUT (IN ADDITION TO DTC P0125)**

(a) Connect the Techstream to the DLC3.

(b) Turn the ignition switch to ON.

(c) Turn the Techstream on.

(d) Enter the following menus: Powertrain / Engine and ECT / Trouble Codes.

(e) Read DTCs.

Result:

RESULT	PROCEED TO
P0125	A

RESULT	PROCEED TO
P0125 and other DTCs	B

HINT:

If any DTCs other than P0125 are output, troubleshoot those DTCs first.

B ▶ **GO TO DTC CHART**

A
▼

2.	INSPECT THERMOSTAT

(a) Remove the thermostat INFO .

(b) Check the valve opening temperature of the thermostat.

Standard Value:
80 to 84°C (176 to 183°F)

HINT:

In addition to the above check, confirm that the valve is completely closed when the temperature is below the standard.

(c) Reinstall the thermostat INFO .

NG ▶ **REPLACE THERMOSTAT**

OK
▼

3.	CHECK COOLING SYSTEM

(a) Check for defects in the cooling system that might cause the system to be too cold, such as abnormal radiator fan operation or any modifications.

NG ▶ **REPAIR OR REPLACE COOLING SYSTEM**

OK	▶	REPLACE ENGINE COOLANT TEMPERATURE SENSOR

Last Modified: 3-10-2010	6.4 C	**From:** 200901
Model Year: 2010	**Model:** Corolla	**Doc ID:** RM000000WC3091X
Title: 2AZ-FE ENGINE CONTROL: SFI SYSTEM: P0171,P0172: System Too Lean (Bank 1) (2010 Corolla)		

DTC	**P0171**	**System Too Lean (Bank 1)**

DTC	**P0172**	**System Too Rich (Bank 1)**

DESCRIPTION

The fuel trim is related to the feedback compensation value, not to the basic injection duration. The fuel trim consists of both the short-term and long-term fuel trim.

The short-term fuel trim is fuel compensation that is used to constantly maintain the air fuel ratio at stoichiometric levels. The signal from the air fuel ratio sensor indicates whether the air fuel ratio is rich or lean compared to the stoichiometric ratio. This triggers a reduction in the fuel injection volume if the air fuel ratio is rich and an increase in the fuel injection volume if it is lean.

Factors such as individual engine differences, wear over time and changes in operating environment cause short-term fuel trim to vary from the central value. The long-term fuel trim, which controls overall fuel compensation, compensates for long-term deviations in the fuel trim from the central value caused by the short- term fuel trim compensation.

If both the short-term and long-term fuel trim are lean or rich beyond predetermined values, it is interpreted as a malfunction, and the ECM illuminates the MIL and sets a DTC.

DTC NO.	DTC DETECTION CONDITION	TROUBLE AREA
P0171	With warm engine and stable air fuel ratio feedback, fuel trim considerably in error to lean side (2 trip detection logic)	• Intake system • Injector blockage • Mass air flow meter • Engine coolant temperature sensor • Fuel pressure • Gas leak from exhaust system • Open or short in air fuel ratio sensor (sensor 1) circuit • Air fuel ratio sensor (sensor 1) • EFI No. 2 fuse • PCV valve and hose • PCV hose connections • ECM
P0172	With warm engine and stable air fuel ratio feedback, fuel trim considerably in error to rich side (2 trip detection logic)	• Injector leak or blockage • Mass air flow meter • Engine coolant temperature sensor • Ignition system • Fuel pressure • Gas leak from exhaust system • Open or short in air fuel ratio sensor (sensor 1) circuit • Air fuel ratio sensor (sensor 1) • EFI No. 2 fuse • ECM

HINT:

- When DTC P0171 is set, the actual air fuel ratio is on the lean side. When DTC P0172 is set, the actual air fuel ratio is on the rich side.
- If the vehicle runs out of fuel, the air fuel ratio is lean and DTC P0171 may be set. The MIL is then illuminated.
- When the total of the short-term and long-term fuel trim values is within the malfunction threshold (and the engine coolant temperature is more than 75°C [167°F]), the system is functioning normally.

MONITOR DESCRIPTION

Under closed-loop fuel control, a fuel injection volume that deviates from that estimated by the ECM causes changes in the long-term fuel trim compensation value. The long-term fuel trim is adjusted when there are persistent deviations in the short-term fuel trim value. Deviations from the ECM's estimated fuel injection volume also affects the average fuel trim learning value, which is a combination of the average short-term fuel trim (fuel feedback compensation value) and the average long-term fuel trim (learning value of the air- fuel ratio). If the average fuel trim learning value exceeds a malfunction threshold, the ECM interpret this a fault in the fuel system and sets a DTC.

Example:

If the average fuel trim learning value is more than +35% or less than -35%, the ECM interprets this as a fuel system malfunction.

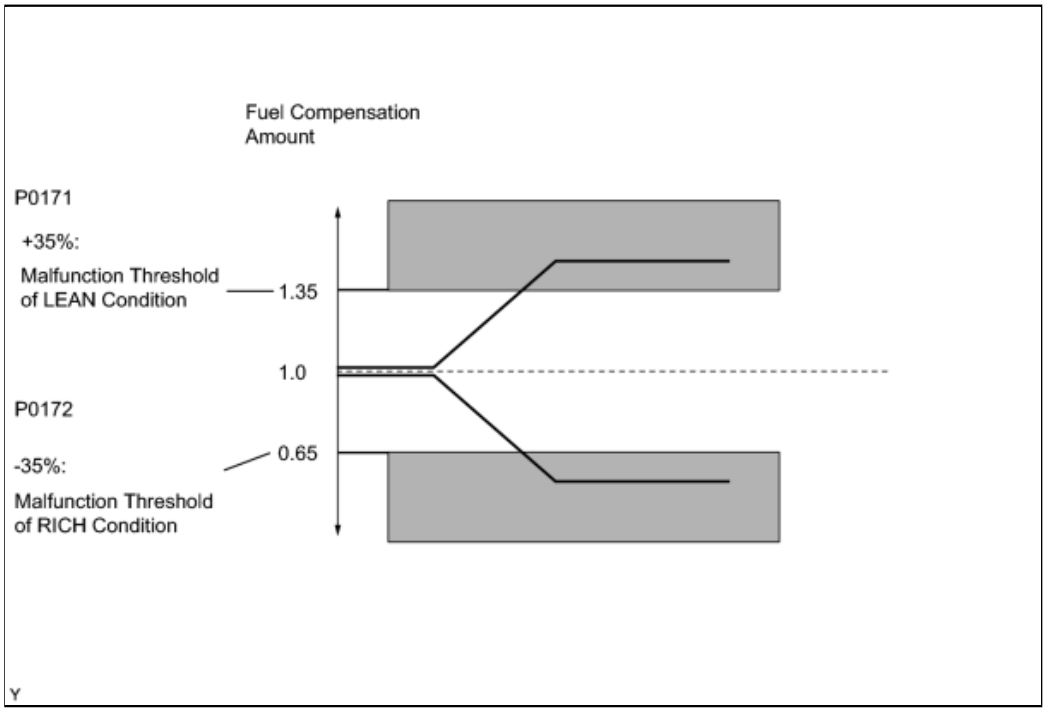

MONITOR STRATEGY

Related DTCs	P0171: Fuel trim Lean (bank 1) P0172: Fuel trim Rich (bank 1)
Required Sensors/Components (Main)	Fuel system
Required Sensors/Components (Related)	Air fuel ratio sensor Mass air flow meter Crankshaft position sensor
Frequency of Operation	Continuous
Duration	Within 10 seconds

MIL Operation	2 driving cycles
Sequence of Operation	None

TYPICAL ENABLING CONDITIONS

Fuel-trim

Monitor runs whenever following DTCs not present	P0010 (VVT Oil Control Valve Bank 1) P0011 (VVT System bank 1- Advance) P0012 (VVT System bank 1- Retard) P0016 (VVT System bank 1- Misalignment) P0031, P0032 (Air Fuel Ratio Sensor Heater - Sensor 1) P0102, P0103 (Mass Air Flow Meter) P0115, P0117, P0118 (Engine Coolant Temperature Sensor) P0120, P0121 P0122, P0123, P0220, P0222, P0223, P2135 (Throttle Position Sensor) P0125 (Insufficient Engine Coolant Temperature for Closed Loop Fuel Control) P0335 (Crankshaft Position Sensor) P0340 (Camshaft Position Sensor) P0351, P0352, P0353, P0354 (Igniter) P0500 (Vehicle Speed Sensor)
Fuel system status	Closed-loop
Battery voltage	11 V or more
Either of following conditions 1 or 2 set	-
1. Engine RPM	Below 1100 rpm
2. Intake air amount per revolution	0.22 g/rev or more
Catalyst monitor	No executed

TYPICAL MALFUNCTION THRESHOLDS

Fuel-trim

Purge-cut	Executing
Either of following conditions 1 or 2 met	-
1. Average between short-term fuel trim and long-term fuel trim	35% or more (varies with engine coolant temperature)
2. Average between short-term fuel trim and long-term fuel trim	-35% or less (varies with engine coolant temperature)

CONFIRMATION DRIVING PATTERN

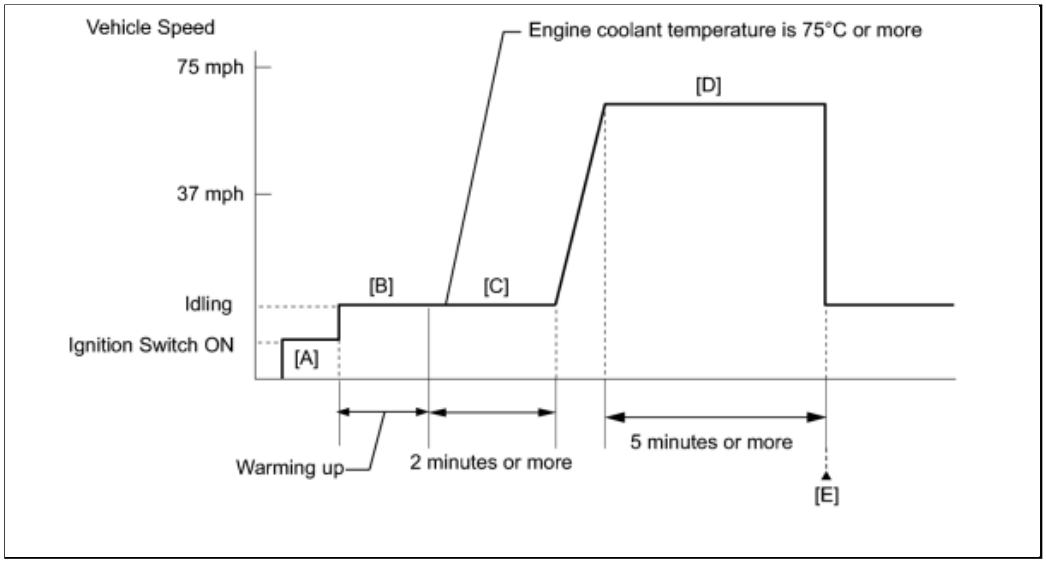

1. Connect the Techstream to the DLC3.
2. Turn the ignition switch to ON and turn the Techstream on.
3. Clear the DTCs (even if no DTCs are stored, perform the clear DTC procedure) INFO .
4. Turn the ignition switch off.
5. Turn the ignition switch to ON and turn the Techstream on [A].
6. Start the engine and warm it up (until the engine coolant temperature is 75°C (167°F) or higher) with all the accessories switched off [B].
7. With the engine warmed up, idle the engine for 2 minutes or more [C].
8. Drive the vehicle at between 37 and 75 mph (60 and 120 km/h) and at an engine speed of between 1400 and 3200 rpm for 5 minutes or more [D].
9. Enter the following menus: Powertrain / Engine / Utility / All Readiness.
10. Input the DTC: P0171 or P0172.
11. Check the DTC judgment result [E].

TECHSTREAM DISPLAY	DESCRIPTION
NORMAL	○ DTC judgment completed ○ System normal
ABNORMAL	○ DTC judgment completed ○ System abnormal
INCOMPLETE	○ DTC judgment not completed ○ Perform driving pattern after confirming DTC enabling conditions
UNKNOWN	○ Unable to perform DTC judgment ○ Number of DTCs which do not fulfill DTC preconditions has reached ECU memory limit

CAUTION:

When performing the confirmation driving pattern, obey all speed limits and traffic laws.

HINT:

If the judgment result shows INCOMPLETE or UNKNOWN, perform steps [C] through [E] again.

12. If the test result is UNKNOWN, enter the following menus: Powertrain / Engine / Trouble Codes / Pending.
13. Read Pending DTCs.

HINT:

If a pending DTC is output, the system is malfunctioning.

14. If the test result is INCOMPLETE or UNKNOWN and no pending DTC is output, perform a universal trip and check for permanent DTCs INFO .

HINT:

- If a permanent DTC is output, the system is malfunctioning.
- If no permanent DTC is output, the system is normal.

WIRING DIAGRAM

Refer to DTC P2195 INFO .

INSPECTION PROCEDURE

HINT:

Malfunctioning areas can be identified by performing the Control the Injection Volume for A/F sensor function provided in the Active Test. The Control the Injection Volume for A/F sensor function can help to determine whether the air fuel ratio sensor, heated oxygen sensor and other potential trouble areas are malfunctioning.

The following instructions describe how to conduct the Control the Injection Volume for A/F sensor operation using the Techstream.

1. Connect the Techstream to the DLC3.
2. Start the engine.
3. Turn the Techstream on.
4. Warm up the engine at an engine speed of 2500 rpm for approximately 90 seconds.
5. Enter the following menus: Powertrain / Engine and ECT / Active Test / Control the Injection Volume for A/F sensor.
6. Perform the Active Test operation with the engine idling (press the RIGHT or LEFT button to change the fuel injection volume).
7. Monitor the output voltages of the air fuel ratio and heated oxygen sensors (AFS Voltage B1 S1 and O2S B1 S2) displayed on the Techstream.

HINT:

- The Control the Injection Volume for A/F sensor operation lowers the fuel injection volume by 12.5% or increases the injection volume by 25%.
- Each sensor reacts in accordance with increases and decreases in the fuel injection volume.

TECHSTREAM DISPLAY (SENSOR)	INJECTION VOLUME	STATE	VOLTAGE
AFS Voltage B1 S1 (Air fuel ratio sensor)	+25%	Rich	Less than 3.1 V
	-12.5%	Lean	More than 3.4 V
O2S B1 S2 (Heated oxygen sensor)	+25%	Rich	More than 0.55 V
	-12.5%	Lean	Less than 0.4 V

NOTICE:

The air fuel ratio sensor has an output delay of a few seconds and the heated oxygen sensor has a maximum output delay of approximately 20 seconds.

CASE	AIR FUEL RATIO SENSOR (SENSOR 1) OUTPUT VOLTAGE	HEATED OXYGEN SENSOR (SENSOR 2) OUTPUT VOLTAGE	MAIN SUSPECTED TROUBLE AREA
1	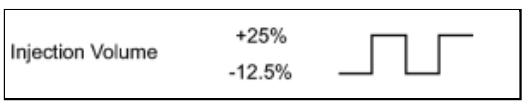	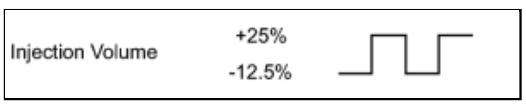	-

CASE	AIR FUEL RATIO SENSOR (SENSOR 1) OUTPUT VOLTAGE	HEATED OXYGEN SENSOR (SENSOR 2) OUTPUT VOLTAGE	MAIN SUSPECTED TROUBLE AREA
	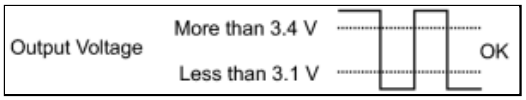	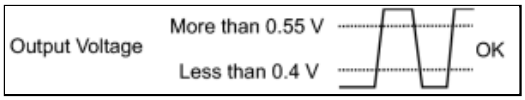	
2	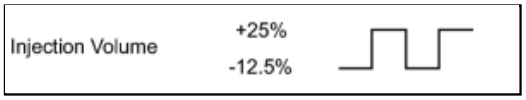 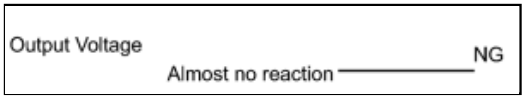	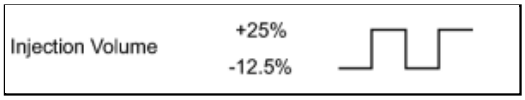 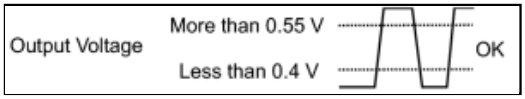	• Air fuel ratio sensor • Air fuel ratio sensor heater • Air fuel ratio sensor circuit
3	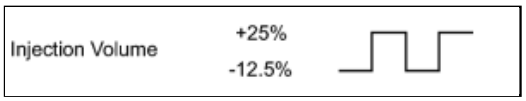 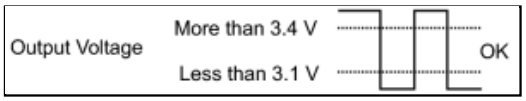	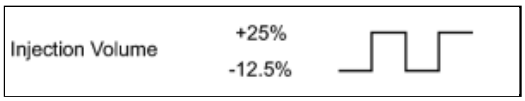 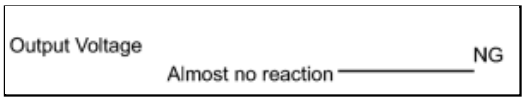	• Heated oxygen sensor • Heated oxygen sensor heater • Heated oxygen sensor circuit
4	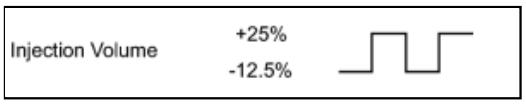 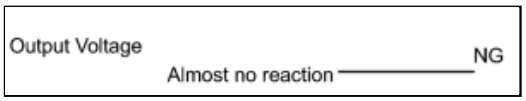	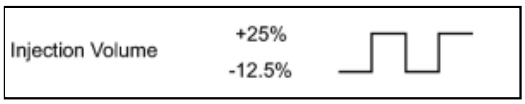 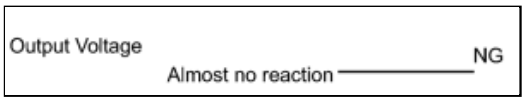	• Injector • Fuel pressure • Gas leak from exhaust system (Air fuel ratio extremely rich or lean)

- Following the Control the Injection Volume for A/F sensor procedure enables technicians to check and graph the voltage outputs of both the air fuel ratio and heated oxygen sensors.
- To display the graph, enter the following menus: Powertrain / Engine and ECT / Active Test / Control the Injection Volume for A/F Sensor / A/F Control System / AFS Voltage B1 S1 and O2S B1 S2; then press the graph button on the Data List view.

HINT:

- Read freeze frame data using the Techstream. The ECM records vehicle and driving condition information as freeze frame data the moment a DTC is stored. When troubleshooting, freeze frame data can be helpful in determining whether the vehicle was running or stopped, whether the engine was warmed up or not, whether the air fuel ratio was lean or rich, as well as other data recorded at the time of a malfunction.
- A low air fuel ratio sensor voltage could be caused by a rich air fuel mixture. Check for conditions that would cause the engine to run rich.

- A high air fuel ratio sensor voltage could be caused by a lean air fuel mixture. Check for conditions that would cause the engine to run lean.

PROCEDURE

1.	**CHECK ANY OTHER DTCS OUTPUT (IN ADDITION TO DTC P0171 OR P0172)**

(a) Connect the Techstream to the DLC3.

(b) Turn the ignition switch to ON.

(c) Turn the Techstream on.

(d) Enter the following menus: Powertrain / Engine and ECT / Trouble Codes.

(e) Read DTCs.

Result:

RESULT	PROCEED TO
P0171 or P0172	A
P0171 or P0172 and other DTCs	B

HINT:

If any DTCs other than P0171 or P0172 are output, troubleshoot those DTCs first.

B ▶ **GO TO DTC CHART**

A ▼

2.	**CHECK PCV HOSE CONNECTIONS**

(a) Check PCV hose.

OK:

PCV hose is connected correctly and is not damaged.

NG ▶ **REPAIR OR REPLACE PCV HOSE**

OK ▼

3.	**CHECK INTAKE SYSTEM**

(a) Check the intake system for vacuum leaks INFO .

OK:
No leaks in air induction system.

NG ▶ **REPAIR OR REPLACE INTAKE SYSTEM**

OK ▼

4.	PERFORM ACTIVE TEST USING TECHSTREAM (AIR FUEL RATIO CONTROL)

(a) Connect the Techstream to the DLC3.

(b) Start the engine.

(c) Turn the Techstream on.

(d) Warm up the engine at an engine speed of 2500 rpm for approximately 90 seconds.

(e) Enter the following menus: Powertrain / Engine and ECT / Active Test / Control the Injection Volume for A/F Sensor.

(f) Perform the Control the Injection Volume for A/F Sensor operation with the engine idling (press the RIGHT or LEFT button to change the fuel injection volume).

(g) Monitor the voltage outputs of the air fuel ratio sensor and the heated oxygen sensor (AFS Voltage B1S1 and O2S B1S2) displayed on the Techstream.

HINT:

- The Control the Injection Volume for A/F Sensor operation lowers the fuel injection volume by 12.5% or increases the injection volume by 25%.
- Each sensor reacts in accordance with increases and decreases in the fuel injection volume.

Standard:

TECHSTREAM DISPLAY (SENSOR)	INJECTION VOLUME	STATE	VOLTAGE
AFS Voltage B1S1 Air Fuel Ratio	+25%	Rich	Less than 3.1
	-12.5%	Lean	More than 3.4
O2S B1S2 Heated Oxygen	+25%	Rich	More than 0.55
	-12.5%	Lean	Less than 0.4

Result

STATE AFS VOLTAGE B1S1	STATE O2S B1S2	AIR FUEL RATIO CONDITION AND AIR FUEL RATIO SENSOR CONDITION	MISFIRE	SUSPECTED TROUBLE AREA	PROCEED TO
Lean/Rich	Lean/Rich	Normal	-	-	C
Lean	Lean	Actual air fuel ratio lean	May occur	• PCV valve and hose • PCV hose connections • Injector blockage • Gas leak from exhaust system	A

STATE AFS VOLTAGE B1S1	STATE O2S B1S2	AIR FUEL RATIO CONDITION AND AIR FUEL RATIO SENSOR CONDITION	MISFIRE	SUSPECTED TROUBLE AREA	PROCEED TO
				• Air induction system • Fuel pressure • Mass air flow meter • Engine coolant temperature sensor	
Rich	Rich	Actual air fuel ratio rich	-	• Injector leak or blockage • Gas leak from exhaust system • Ignition system • Fuel pressure • Mass air flow meter • Engine coolant temperature sensor	
Lean	Lean/Rich	Air fuel ratio sensor malfunction	-	• Air fuel ratio sensor	B
Rich	Lean/Rich	Air fuel ratio sensor malfunction	-	• Air fuel ratio sensor	

Lean: During Control the Injection Volume for A/F Sensor, the air fuel sensor output voltage (AFS Voltage) is consistently more than 3.4 V, and the heated oxygen sensor output voltage (O2S) is consistently less than 0.4 V.

Rich: During Control the Injection Volume for A/F Sensor, the AFS Voltage is consistently less than 3.1 V, and the O2S is consistently more than 0.55 V.

Lean/Rich: During Control the Injection Volume for A/F Sensor of the Active Test, the output voltage of the heated oxygen sensor alternates correctly.

C ▶ **PERFORM CONFIRMATION DRIVING PATTERN**

B ▶ **INSPECT AIR FUEL RATIO SENSOR (HEATER RESISTANCE)**

A ▼

5.	**READ VALUE USING TECHSTREAM (COOLANT TEMP)**

(a) Connect the Techstream to the DLC3.

(b) Turn the ignition switch to ON.

(c) Turn the Techstream on.

(d) Enter the following menus: Powertrain / Engine and ECT / Data List / Coolant Temp.

(e) Read the Data List twice, when the engine is both cold and warmed up.

Standard Value:
With cold engine: Same as ambient air temperature.

With warm engine: 80 to 100°C (176 to 212°F).

NG ▶ **REPLACE ENGINE COOLANT TEMPERATURE SENSOR**

OK ▼

6.	INSPECT MASS AIR FLOW METER

(a) Read the values using the Techstream (MAF).

NOTICE:

- Turn the ignition switch off.
- Perform the inspection with the vehicle indoors and on a level surface.
- Perform the inspection of the mass air flow meter while it is installed in the air cleaner case (installed on the vehicle).
- During the test, make sure that an exhaust air duct is not drawing air through the exhaust pipe.

(1) Connect the Techstream to the DLC3.

(2) Turn the ignition switch to ON (do not start the engine).

(3) Turn the Techstream on.

(4) Enter the following menus: Powertrain / Engine and ECT / Data List / MAF.

(5) Wait for 30 seconds, and read the values on the Techstream.

Standard Value:
Less than 0.48 g/sec

(b) Inspect the mass air flow meter.

(1) Remove the mass air flow meter INFO.

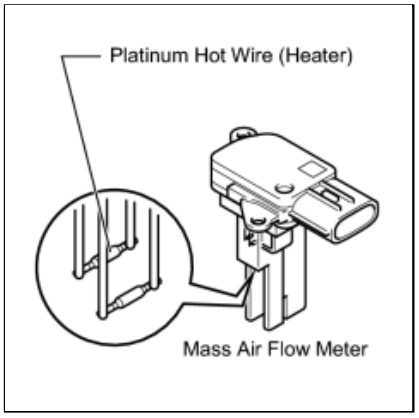

(2) Using a work light, check that the platinum filament (heater portion) in the mass air flow meter has no foreign matter attached.

OK:
No foreign matter attached.

(3) Reinstall the mass air flow meter INFO.

NG ▶ **REPLACE MASS AIR FLOW METER**

OK

7.	CHECK FUEL PRESSURE

(a) Check the fuel pressure INFO .

NG ▶ REPAIR OR REPLACE FUEL SYSTEM

OK ▼

8.	CHECK FOR EXHAUST GAS LEAK

OK:
No gas leaks.

NG ▶ REPAIR OR REPLACE EXHAUST SYSTEM

OK ▼

9.	CHECK SPARK AND IGNITION

HINT:

- Refer to the ignition system inspection procedure INFO .
- If the spark plugs or ignition system malfunctions, engine misfires may occur. The misfire count can be read using the Techstream. Enter the following menus: Powertrain / Engine and ECT / Data List / Cylinder #1 Misfire Rate (to Cylinder #4 Misfire Rate)

NG ▶ REPAIR OR REPLACE IGNITION SYSTEM

OK ▼

10.	INSPECT FUEL INJECTOR ASSEMBLY (INJECTION AND VOLUME)

HINT:

- Refer to the fuel injector inspection procedure INFO .
- If the injectors malfunction, engine misfires may occur. The misfire count can be read using the Techstream. Enter the

following menus: Powertrain / Engine and ECT / Data List / Cylinder #1 Misfire Count (to Cylinder #4 Misfire Count).

NG ▶ **REPLACE FUEL INJECTOR ASSEMBLY**

OK ▼

11.	**INSPECT AIR FUEL RATIO SENSOR (HEATER RESISTANCE)** INFO

NG ▶ **REPLACE AIR FUEL RATIO SENSOR**

OK ▼

12.	**CHECK TERMINAL VOLTAGE (POWER SOURCE OF AIR FUEL RATIO SENSOR)** INFO

NG ▶ **INSPECT FUSE (EFI NO. 2 FUSE)**

OK ▼

13.	**CHECK HARNESS AND CONNECTOR (AIR FUEL RATIO SENSOR - ECM)** INFO

NG ▶ **REPAIR OR REPLACE HARNESS OR CONNECTOR (AIR FUEL RATIO SENSOR - ECM)**

OK ▼

14.	**REPLACE AIR FUEL RATIO SENSOR**

(a) Replace the air fuel ratio sensor INFO.

NEXT ▼

15.	PERFORM CONFIRMATION DRIVING PATTERN

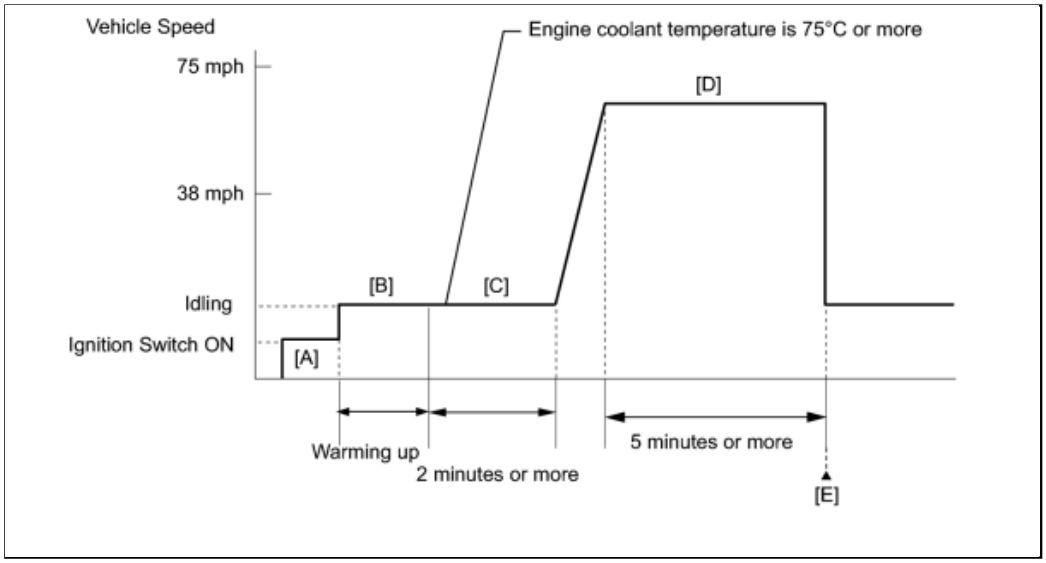

(a) Connect the Techstream to the DLC3.
(b) Turn the ignition switch to ON.
(c) Turn the Techstream on.
(d) Clear DTCs INFO .
(e) Switch the ECM from normal mode to check mode using the Techstream INFO .
(f) Start the engine and warm it up with all the accessories switched OFF.
(g) Drive the vehicle at between 40 mph and 75 mph (60 km/h and 120 km/h) and at an engine speed of between 1400 rpm and 3200 rpm for 3 to 5 minutes.

HINT:

If the system is still malfunctioning, the MIL will be illuminated during step (g).

NOTICE:
If the conditions in this test are not strictly followed, no malfunction will be detected.

NEXT

16.	CHECK WHETHER DTC OUTPUT RECURS (DTC P0171 OR P0172)

(a) Connect the Techstream to the DLC3.

(b) Turn the ignition switch to ON.

(c) Turn the Techstream on.

(d) Enter the following menus: Powertrain / Engine and ECT / Trouble Codes.

(e) Read DTCs.

Result:

RESULT	PROCEED TO
No output	A
P0171 or P0172	B

B ▶ **REPLACE ECM**

A ▶ **END**

17.	**INSPECT FUSE (EFI NO. 2 FUSE)** INFO

NG ▶ **REPLACE FUSE (EFI NO. 2 FUSE)**

OK ▶ **REPAIR OR REPLACE HARNESS OR CONNECTOR (AIR FUEL RATIO SENSOR - ENGINE ROOM RELAY BLOCK)**

Last Modified: 3-10-2010	6.4 C	**From:** 200901
Model Year: 2010	**Model:** Corolla	**Doc ID:** RM000000TB304AX
Title: 2AZ-FE ENGINE CONTROL: SFI SYSTEM: P0128: Coolant Thermostat (Coolant Temperature Below Thermostat Regulating Temperature) (2010 Corolla)		

DTC	**P0128**	**Coolant Thermostat (Coolant Temperature Below Thermostat Regulating Temperature)**

DESCRIPTION

HINT:

This DTC relates to the thermostat.

This DTC is set when the engine coolant temperature does not reach 75°C (167°F) despite sufficient engine warm-up time having elapsed.

DTC NO.	DTC DETECTION CONDITION	TROUBLE AREA
P0128	• Conditions (a), (b) and (c) are met for 5 seconds (2 trip detection logic): • (a) Cold start • (b) Engine warmed up • (c) Engine coolant temperature less than 75°C (167°F)	• Thermostat • Cooling system • Engine coolant temperature sensor • ECM

MONITOR DESCRIPTION

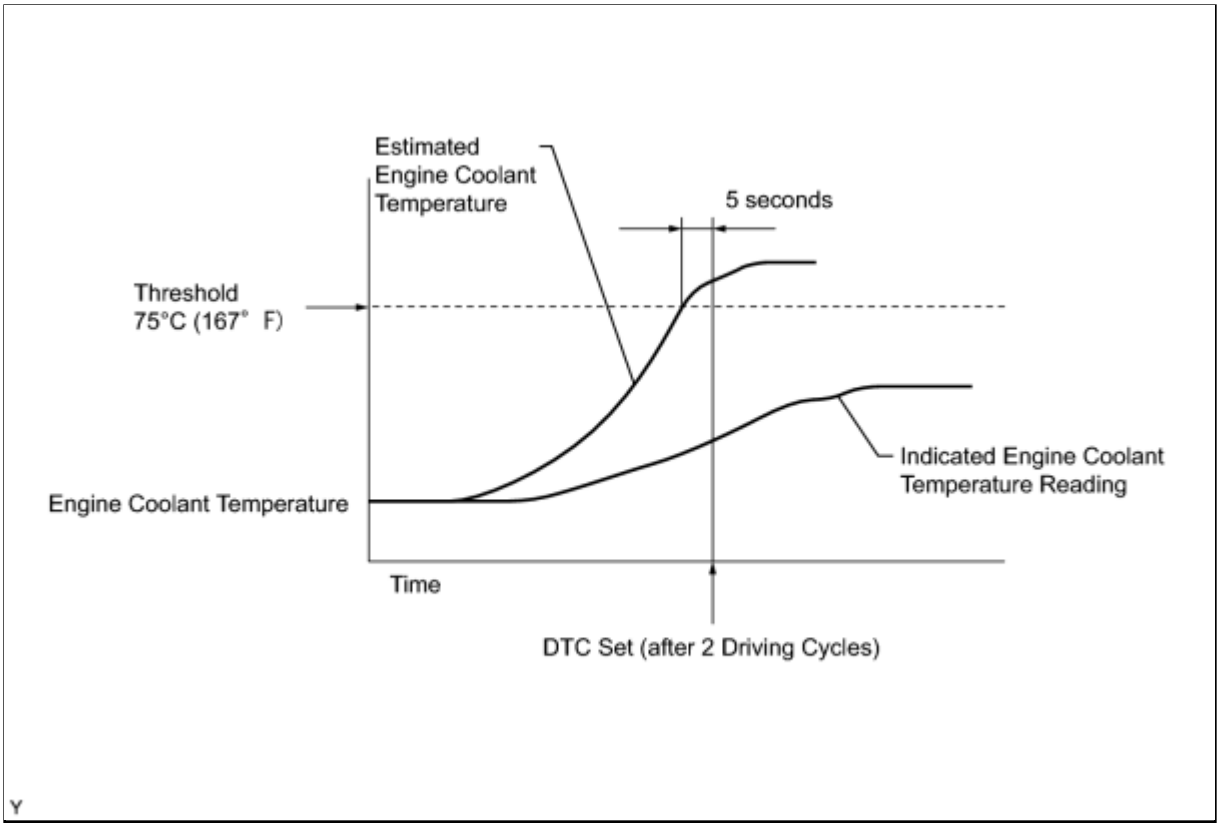

The ECM estimates the engine coolant temperature based on the starting temperature, engine loads, and engine speeds. The ECM then compares the estimated temperature with the actual engine coolant temperature. When the estimated engine coolant temperature reaches 75°C (167°F), the ECM checks the actual engine coolant temperature. If the actual engine coolant temperature is less than 75°C (167°F), the ECM interprets this as a malfunction in the thermostat or the engine cooling system and sets the DTC.

MONITOR STRATEGY

Related DTCs	P0128: Coolant Thermostat
Required Sensors/Components (Main)	Thermostat Engine coolant temperature sensor
Required Sensors/Components (Related)	Intake air temperature sensor Vehicle speed sensor
Frequency of Operation	Once per driving cycle
Duration	900 seconds
MIL Operation	2 driving cycles
Sequence of Operation	None

TYPICAL ENABLING CONDITIONS

Monitor runs whenever following DTCs are not present	P0010 (VVT Oil Control Valve Bank 1) P0011 (VVT System bank 1- Advance) P0012 (VVT System bank 1- Retard) P0016 (VVT System bank 1- Misalignment) P0031, P0032 (Air Fuel Ratio Snesor Heater - Sensor 1) P0102, P0103 (Mass Air Flow Meter) P0112, P0113 (Intake Air Temperature Sensor) P0115, P0117, P0118 (Engine Coolant Temperature Sensor) P0120, P0121 P0122, P0123, P0220, P0222, P0223, P2135 (Throttle Position Sensor) P0171, P0172 (Fuel System) P0301, P0302, P0303, P0304 (Misfire) P0335 (Crankshaft Position Sensor) P0340 (Camshaft Position Sensor) P0351, P0352, P0353, P0354 (Igniter) P0500 (Vehicle Speed Sensor) P2195, P2196, P2237, P2238, P2239, P2252, P2253, P2A00 (Air Fuel Ratio Sensor - Sensor 1)
Battery voltage	11 V or more
Either of following conditions 1 or 2 is met:	-
1. All of following conditions met:	-
• Engine coolant temperature at engine start - Intake air temperature at engine start	-15 to 7°C (5 to 45°F)
• Engine coolant temperature at engine start	-10 to 56°C (14 to 133°F)
• Intake air temperature at engine start	-10 to 56°C (14 to 133°F)
2. All of following conditions met:	-
• Engine coolant temperature at engine start - Intake air temperature at engine start	More than 7°C (45°F)
• Engine coolant temperature at engine start	56°C (133°F) or less
• Intake air temperature at engine start	-10°C (14°F) or more

Accumulated time at 80 mph (128 km/h) or more of vehicle speed	Less than 20 seconds

TYPICAL MALFUNCTION THRESHOLDS

Duration that both of following conditions (a) and (b) met	5 seconds or more
(a) Estimated engine coolant temperature	75°C (167°F) or more
(b) Engine coolant temperature sensor output	Below 75°C (167°F)

CONFIRMATION DRIVING PATTERN

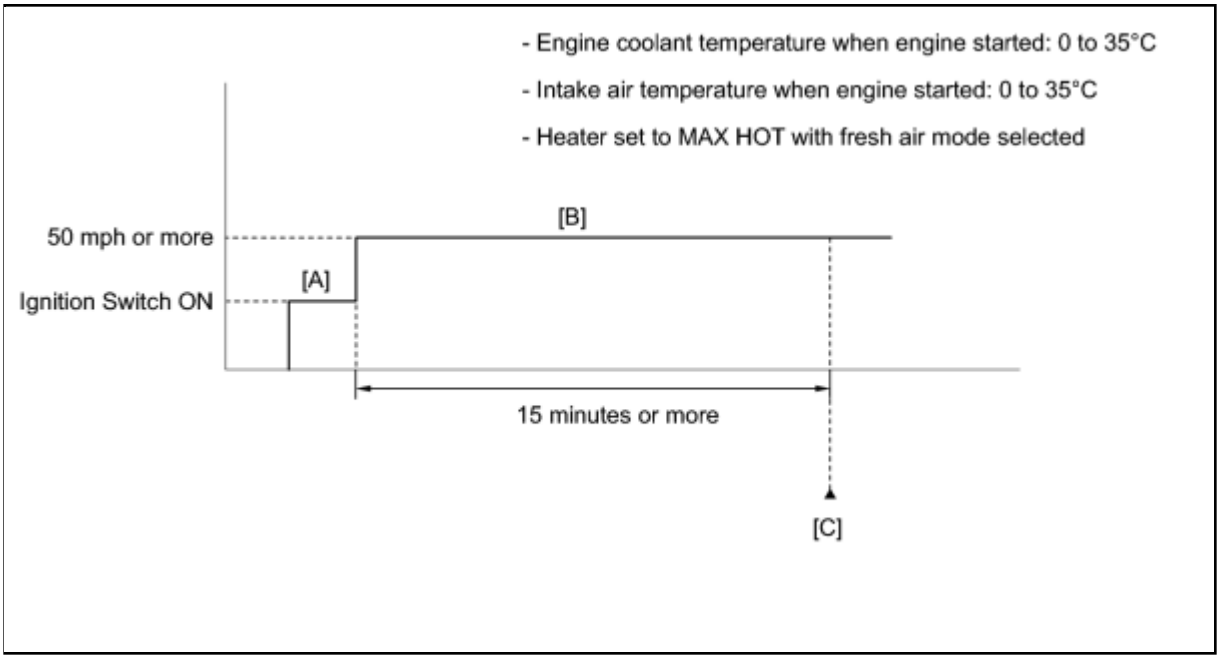

1. Connect the Techstream to the DLC3.
2. Turn the ignition switch to ON and turn the Techstream on.
3. Clear the DTCs (even if no DTCs are stored, perform the clear DTC procedure) INFO .
4. Turn the ignition switch off for 30 seconds.
5. Turn the ignition switch to ON and turn the Techstream on [A].
6. Enter the following menus: Powertrain / Engine / Data List / All Data / Coolant Temp and Intake Air.
7. Check that "Coolant Temp" and "Intake Air" in the Data List are within the range of 0 to 35°C (32 to 95°F).
8. Heater set to MAX HOT with fresh air mode selected.
9. Start the engine and wait 15 minutes or more [B].
10. Enter the following menus: Powertrain / Engine and ECT / Trouble Codes / Pending.
11. Read Pending DTCs [C].

HINT:

If a pending DTC is output, the system is malfunctioning.

TECHSTREAM DISPLAY	DESCRIPTION
NORMAL	○ DTC judgment completed ○ System normal
ABNORMAL	○ DTC judgment completed ○ System abnormal
INCOMPLETE	○ DTC judgment not completed ○ Perform driving pattern after confirming DTC enabling conditions
UNKNOWN	○ Unable to perform DTC judgment ○ Number of DTCs which do not fulfill DTC preconditions has reached ECU's memory limit

HINT:

- If the judgment result shows ABNORMAL, the system has a malfunction.
- If the judgment result shows INCOMPLETE or UNKNOWN, perform steps [B] and [C].

12. If the test result is UNKNOWN, enter the following menus: Powertrain / Engine and ECT / Trouble Codes / Pending.
13. Read Pending DTCs.

HINT:

If a pending DTC is output, the system is malfunctioning.

14. If the test result is INCOMPLETE or UNKNOWN and no pending DTC is output, perform a universal trip and check for permanent DTCs INFO .

HINT:

- If a permanent DTC is output, the system is malfunctioning.
- If no permanent DTC is output, the system is normal.

INSPECTION PROCEDURE

HINT:

Read freeze frame data using the Techstream. The ECM records vehicle and driving condition information as freeze frame data the moment a DTC is stored. When troubleshooting, freeze frame data can be helpful in determining whether the vehicle was running or stopped, whether the engine was warmed up or not, whether the air fuel ratio was lean or rich, as well as other data recorded at the time of a malfunction.

PROCEDURE

1.	**CHECK ANY OTHER DTCS OUTPUT (IN ADDITION TO DTC P0128)**

(a) Connect the Techstream to the DLC3.

(b) Turn the ignition switch to ON.

(c) Turn the Techstream on.

(d) Enter the following menus: Powertrain / Engine and ECT / Trouble Codes.

(e) Read DTCs.

Result:

RESULT	PROCEED TO
P0128	A
P0128 and other DTCs	B

HINT:

If any DTCs other than P0128 are output, troubleshoot those DTCs first.

B ▶ **GO TO DTC CHART**

A ▼

2.	**CHECK COOLING SYSTEM**

(a) Check for defects in the cooling system that might cause the system to be too cold, such as abnormal radiator fan operation or any modifications.

NG ▶ **REPAIR OR REPLACE COOLING SYSTEM**

OK ▼

3.	**INSPECT THERMOSTAT**

(a) Remove the thermostat INFO .

(b) Measure the valve opening temperature of the thermostat.

Standard Value:
80 to 84°C (176 to 183°F)

HINT:

In addition to the above check, confirm that the valve is completely closed when the temperature is below the standard.

(c) Reinstall the thermostat INFO .

NG ▶ **REPLACE THERMOSTAT**

OK ▶ **REPLACE ECM**

Last Modified: 3-10-2010	6.4 C	**From:** 200901
Model Year: 2010	**Model:** Corolla	**Doc ID:** RM000000SVT098X
Title: 2AZ-FE ENGINE CONTROL: SFI SYSTEM: P0327,P0328: Knock Sensor 1 Circuit Low Input (Bank 1 or Single Sensor) (2010 Corolla)		

DTC	**P0327**	**Knock Sensor 1 Circuit Low Input (Bank 1 or Single Sensor)**

DTC	**P0328**	**Knock Sensor 1 Circuit High Input (Bank 1 or Single Sensor)**

DESCRIPTION

A flat type knock sensor is used. Flat type knock sensors (non-resonant type) have a structure that can detect vibrations over a wide band of frequencies: between approximately 6 kHz and 15 kHz.

Knock sensors are fitted onto the engine block to detect engine knocking.

The knock sensor contains a piezoelectric element which generates a voltage when it becomes deformed.

The voltage is generated when the engine block vibrates due to knocking. Occurrence of engine knocking can be suppressed by delaying the ignition timing.

DTC NO.	DTC DETECTION CONDITION	TROUBLE AREA
P0327	Output voltage of knock sensor less than 0.5 V for 1 second or more (1 trip detection logic)	• Short in knock sensor circuit • Knock sensor • ECM
P0328	Output voltage of knock sensor more than 4.5 V for 1 second or more (1 trip detection logic)	• Open in knock sensor circuit • Knock sensor • ECM

HINT:

When any of DTCs P0327 and P0328 are set, the ECM enters fail-safe mode. During fail-safe mode, the ignition timing is delayed to its maximum retardation. Fail-safe mode continues until the ignition switch is turned off.

Reference: Inspection using an oscilloscope

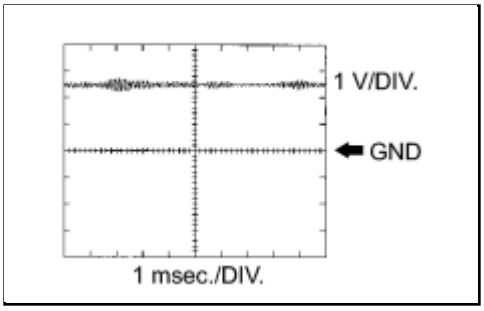

The correct waveform is as shown.

ECM Terminal Name	Between KNK1 and EKNK
Tester Range	1 V/DIV., 1 msec/DIV.
Condition	Engine speed maintained at 4000 rpm after warming up engine

MONITOR DESCRIPTION

If the output voltage transmitted by the knock sensor remains low or high for more than 1 second, the ECM interprets this as a malfunction in the sensor circuit, and sets a DTC.

The monitor for DTCs P0327 and P0328 begins to run when 5 seconds have elapsed since the engine was started.

If the malfunction is not repaired successfully, DTC P0327 or P0328 is set 5 seconds after the engine is next started.

MONITOR STRATEGY

Related DTCs	P0327: Knock sensor (bank 1) range check (Low voltage) P0328: Knock sensor (bank 1) range check (High voltage)
Required Sensors/Components (Main)	Knock sensor
Required Sensors/Components (Related)	-
Frequency of Operation	Continuous
Duration	1 second
MIL Operation	Immediate
Sequence of Operation	None

TYPICAL ENABLING CONDITIONS

Monitor runs whenever following DTCs are not present	None
Battery voltage	10.5 V or more

Time after engine start	5 seconds or more

TYPICAL MALFUNCTION THRESHOLDS

Knock Sensor Range Check (Low Voltage) P0327

Knock sensor voltage	Less than 0.5 V

Knock Sensor Range Check (High Voltage) P0328

Knock sensor voltage	More than 4.5 V

CONFIRMATION DRIVING PATTERN

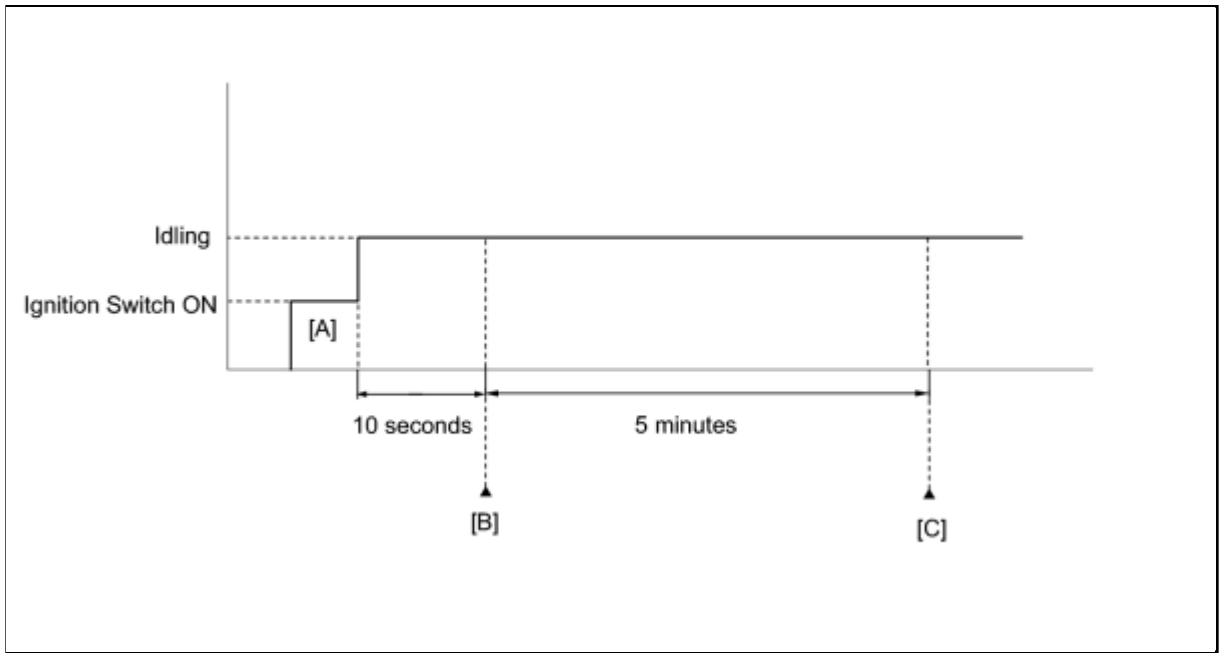

1. Connect the Techstream to the DLC3.
2. Turn the ignition switch to ON and turn the Techstream on.
3. Clear the DTCs (even if no DTCs are stored, perform the clear DTC procedure) INFO .
4. Turn the ignition switch off.
5. Turn the ignition switch to ON and turn the Techstream on [A].
6. Start the engine and wait 10 seconds.
7. Enter the following menus: Powertrain / Engine / Utility / All Readiness.
8. Input the DTC: P0327 or P0328.
9. Check the DTC judgment result [B].

TECHSTREAM DISPLAY	DESCRIPTION

TECHSTREAM DISPLAY	DESCRIPTION
NORMAL	○ DTC judgment completed ○ System normal
ABNORMAL	○ DTC judgment completed ○ System abnormal
INCOMPLETE	○ DTC judgment not completed ○ Perform driving pattern after confirming DTC enabling conditions
UNKNOWN	○ Unable to perform DTC judgment ○ Number of DTCs which do not fulfill DTC preconditions has reached ECU memory limit

HINT:

If the judgment result shows INCOMPLETE or UNKNOWN, idle the engine for 5 minutes and check the DTC judgment result again [C].

10. If the test result is UNKNOWN, enter the following menus: Powertrain / Engine / Trouble Codes / Pending.
11. Read Pending DTCs.

HINT:

If a pending DTC is output, the system is malfunctioning.

12. If the test result is INCOMPLETE or UNKNOWN and no pending DTC is output, perform a universal trip and check for permanent DTCs INFO .

HINT:

- If a permanent DTC is output, the system is malfunctioning.
- If no permanent DTC is output, the system is normal.

WIRING DIAGRAM

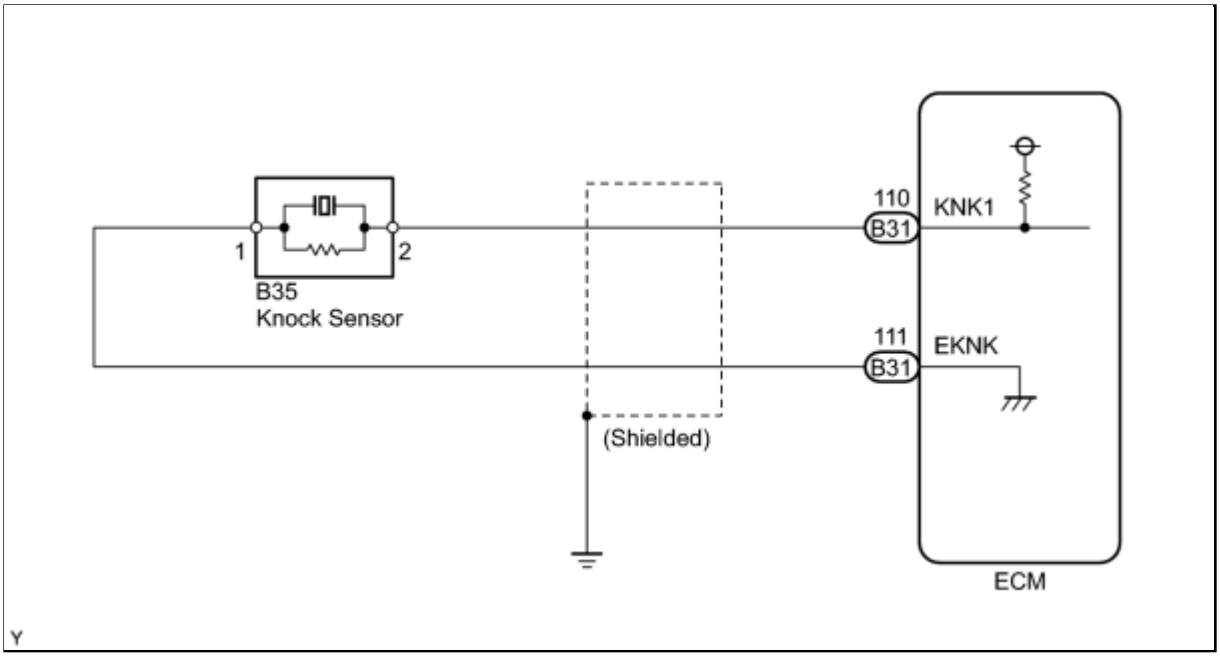

INSPECTION PROCEDURE

HINT:

Read freeze frame data using the Techstream. The ECM records vehicle and driving condition information as freeze frame data the moment a DTC is stored. When troubleshooting, freeze frame data can be helpful in determining whether the vehicle was running or stopped, whether the engine was warmed up or not, whether the air fuel ratio was lean or rich, as well as other data recorded at the time of a malfunction.

PROCEDURE

1.	**READ VALUE USING TECHSTREAM (KNOCK FEEDBACK VALUE)**

(a) Connect the Techstream to the DLC3.

(b) Start the engine.

(c) Turn the Techstream on.

(d) Warm up the engine.

(e) Enter the following menus: Powertrain / Engine and ECT / All Data / Knock Feedback Value.

(f) Read the value while driving the vehicle.

OK:

The value changes.

Malfunction does not occur	Knock Feedback Value changes

Malfunction occurs	Knock Feedback Value does not change

HINT:

The knock feedback value change can be confirmed by running the engine with a high load, for example, by activating the air conditioning system and racing the engine.

NG ▶ **INSPECT ECM (KNK1 VOLTAGE)**

OK ▶ **CHECK FOR INTERMITTENT PROBLEMS**

2.	**INSPECT ECM (KNK1 VOLTAGE)**

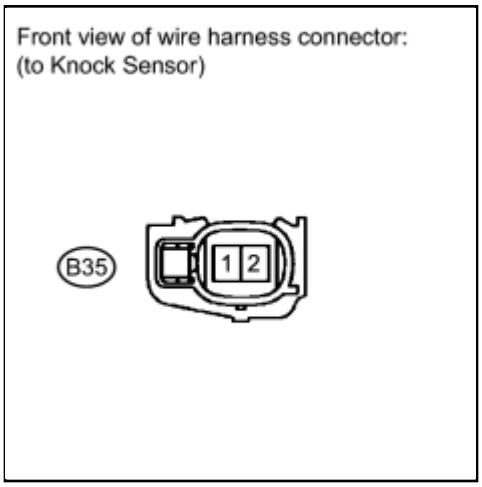

(a) Disconnect the knock sensor connector.

(b) Turn the ignition switch to ON.

(c) Measure the voltage according to the value(s) in the table below.

Standard Voltage:

TESTER CONNECTION	SWITCH CONDITION	SPECIFIED CONDITION
B35-2 - B35-1	Ignition switch ON	4.5 to 5.5 V

(d) Reconnect the knock sensor connector.

NG ▶ **CHECK HARNESS AND CONNECTOR (ECM - KNOCK SENSOR)**

OK

3.	**INSPECT KNOCK SENSOR**

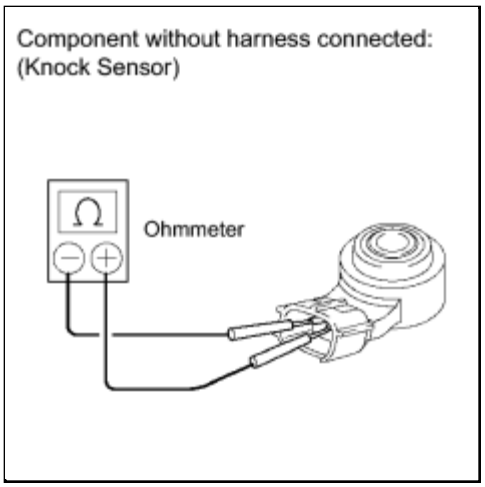

(a) Remove the knock sensor.

(b) Measure the resistance according to the value(s) in the table below.

Standard Resistance:

TESTER CONNECTION	CONDITION	SPECIFIED CONDITION
1 - 2	20°C (68°F)	120 to 280 kΩ

(c) Reinstall the knock sensor.

NG ▶ **REPLACE KNOCK SENSOR**

OK ▶ **REPLACE ECM**

4.	**CHECK HARNESS AND CONNECTOR (ECM - KNOCK SENSOR)**

(a) Disconnect the knock sensor connector.

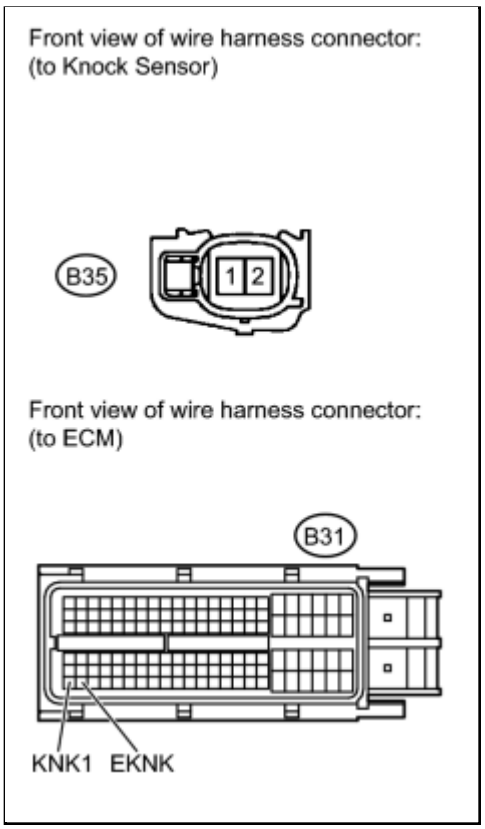

(b) Disconnect the ECM connector.

(c) Measure the resistance according to the value(s) in the table below.

Standard Resistance (Check for Open):

TESTER CONNECTION	CONDITION	SPECIFIED CONDITION
B35-2 - B31-110 (KNK1)	Always	Below 1 Ω
B35-1 - B31-111 (EKNK)	Always	Below 1 Ω

Standard Resistance (Check for Short):

TESTER CONNECTION	CONDITION	SPECIFIED CONDITION
B35-2 or B31-110 (KNK1) - Body ground	Always	10 kΩ or higher
B35-1 or B31-111 (EKNK) - Body ground	Always	10 kΩ or higher

(d) Reconnect the knock sensor connector.

(e) Reconnect the ECM connector.

NG ▶ **REPAIR OR REPLACE HARNESS OR CONNECTOR (ECM - KNOCK SENSOR)**

OK ▶ **REPLACE ECM**

Last Modified: 3-10-2010	6.4 C	**From:** 200901
Model Year: 2010	**Model:** Corolla	**Doc ID:** RM000000TCW0BFX
Title: 2AZ-FE ENGINE CONTROL: SFI SYSTEM: P0335,P0339: Crankshaft Position Sensor "A" Circuit (2010 Corolla)		

DTC	**P0335**	**Crankshaft Position Sensor "A" Circuit**

DTC	**P0339**	**Crankshaft Position Sensor "A" Circuit Intermittent**

DESCRIPTION

The crankshaft position sensor system consists of a crankshaft position sensor plate and a pickup coil.

The sensor plate has 34 teeth and is installed on the crankshaft. The pickup coil is made of wound copper wire, an iron core and magnet. The sensor plate rotates and, as each tooth passes by the pickup coil, a pulse signal is created. The pickup coil generates 34 signals per engine revolution. Based on these signals, the ECM calculates the crankshaft position and engine RPM. Using these calculations, the fuel injection time and ignition timing are controlled.

DTC NO.	DTC DETECTION CONDITION	TROUBLE AREA
P0335	When either of following conditions is met: (1 trip detection logic) • Missing crankshaft position sensor signal despite camshaft position sensor signal inputs normal after engine cranked • No crankshaft position sensor signal to ECM at engine speed of 600 rpm or more	• Open or short in crankshaft position sensor circuit • Crankshaft position sensor • Crankshaft position sensor plate • ECM
P0339	Following conditions (a), (b) and (c) are met: (1 trip detection logic) (a) Engine speed 1500 rpm or more (b) No crankshaft position sensor signal for 0.05 seconds or more (c) 3 seconds or more have elapsed since starter signal switched from ON to OFF	• Open or short in crankshaft position sensor circuit • Crankshaft position sensor • Crankshaft position sensor plate • ECM

Reference: Inspection using an oscilloscope.

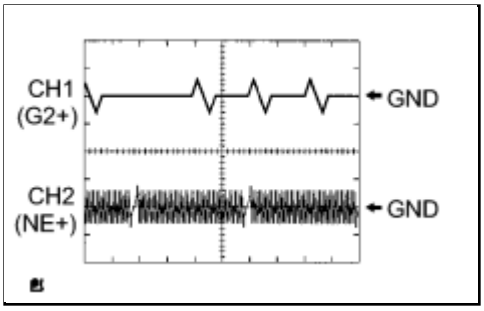

HINT:

- The correct waveform is as shown.
- G2+ stand for the camshaft position sensor signal, and NE+ stands for the crankshaft position sensor signal.
- A failure of the ground for the shielding of the wiring may result in noisy waveforms.

ECM Terminal Name	CH1: Between G2+ and G2- CH2: Between NE+ and NE-
Tester Range	5 V/DIV., 20 msec/DIV.
Condition	Idling

MONITOR DESCRIPTION

If there is no signal from the crankshaft position sensor despite the engine rotating, the ECM interprets this as a malfunction of the sensor.

If the malfunction is not repaired successfully, a DTC is set 10 seconds after the engine is next started.

MONITOR STRATEGY

Related DTCs	P0335: Crankshaft position sensor range check or rationality
Required Sensors/Components (Main)	Crankshaft position sensor
Required Sensors/Components (Related)	Camshaft position sensor
Frequency of Operation	Continuous
Duration	3 times
MIL Operation	Immediate
Sequence of Operation	None

TYPICAL ENABLING CONDITIONS

All

Monitor runs whenever following DTCs are not present	None

Case 1

Time after starter OFF to ON	3 seconds or more
Number of camshaft position sensor signal pulse	6 times
Battery voltage	7 V or more
Ignition switch	ON

Case 2

Starter	OFF
Engine speed	600 rpm or more
Time after starter from ON to OFF	3 seconds or more

TYPICAL MALFUNCTION THRESHOLDS

Case 1

Number of crankshaft position sensor signal pulse	132 or less, and 174 or more

Case 2

Engine speed signal	No signal

COMPONENT OPERATING RANGE

Crankshaft position sensor	• Crankshaft position sensor output voltage fluctuates while crankshaft rotating • 34 crankshaft position sensor signals per crankshaft revolution

CONFIRMATION DRIVING PATTERN

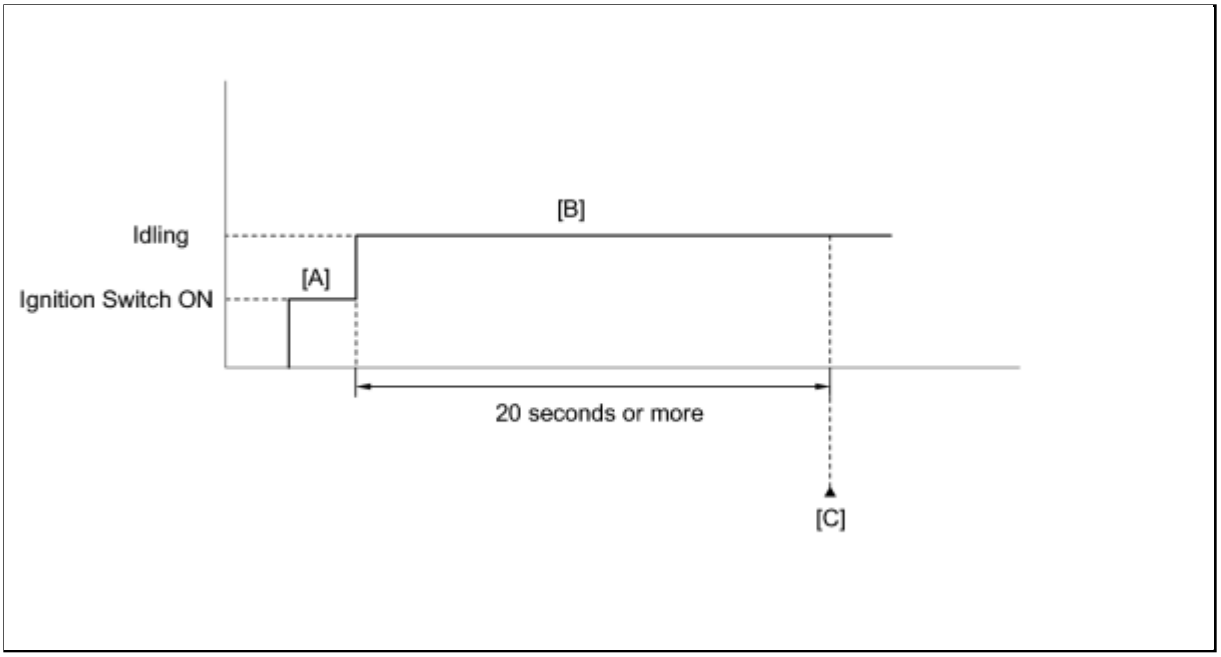

1. Connect the Techstream to the DLC3.
2. Turn the ignition switch to ON and turn the Techstream on.
3. Clear the DTCs (even if no DTCs are stored, perform the clear DTC procedure) INFO .
4. Turn the ignition switch off.
5. Turn the ignition switch to ON and turn the Techstream on [A].
6. Start the engine.
7. Idle the engine for 20 seconds or more [B].
8. Enter the following menus: Powertrain / Engine / Utility / All Readiness.
9. Input the DTC: P0335 or P0339.
10. Check the DTC judgment result [C].

TECHSTREAM DISPLAY	DESCRIPTION
NORMAL	○ DTC judgment completed ○ System normal
ABNORMAL	○ DTC judgment completed ○ System abnormal
INCOMPLETE	○ DTC judgment not completed ○ Perform driving pattern after confirming DTC enabling conditions
UNKNOWN	○ Unable to perform DTC judgment ○ Number of DTCs which do not fulfill DTC preconditions has reached ECU memory limit

HINT:

If the judgment result shows INCOMPLETE or UNKNOWN, perform steps [B] and [C] again.

11. If the test result is UNKNOWN, enter the following menus: Powertrain / Engine / Trouble Codes / Pending.
12. Read Pending DTCs.

HINT:

If a pending DTC is output, the system is malfunctioning.

13. If the test result is INCOMPLETE or UNKNOWN and no pending DTC is output, perform a universal trip and check for permanent DTCs INFO .

HINT:

- If a permanent DTC is output, the system is malfunctioning.
- If no permanent DTC is output, the system is normal.

WIRING DIAGRAM

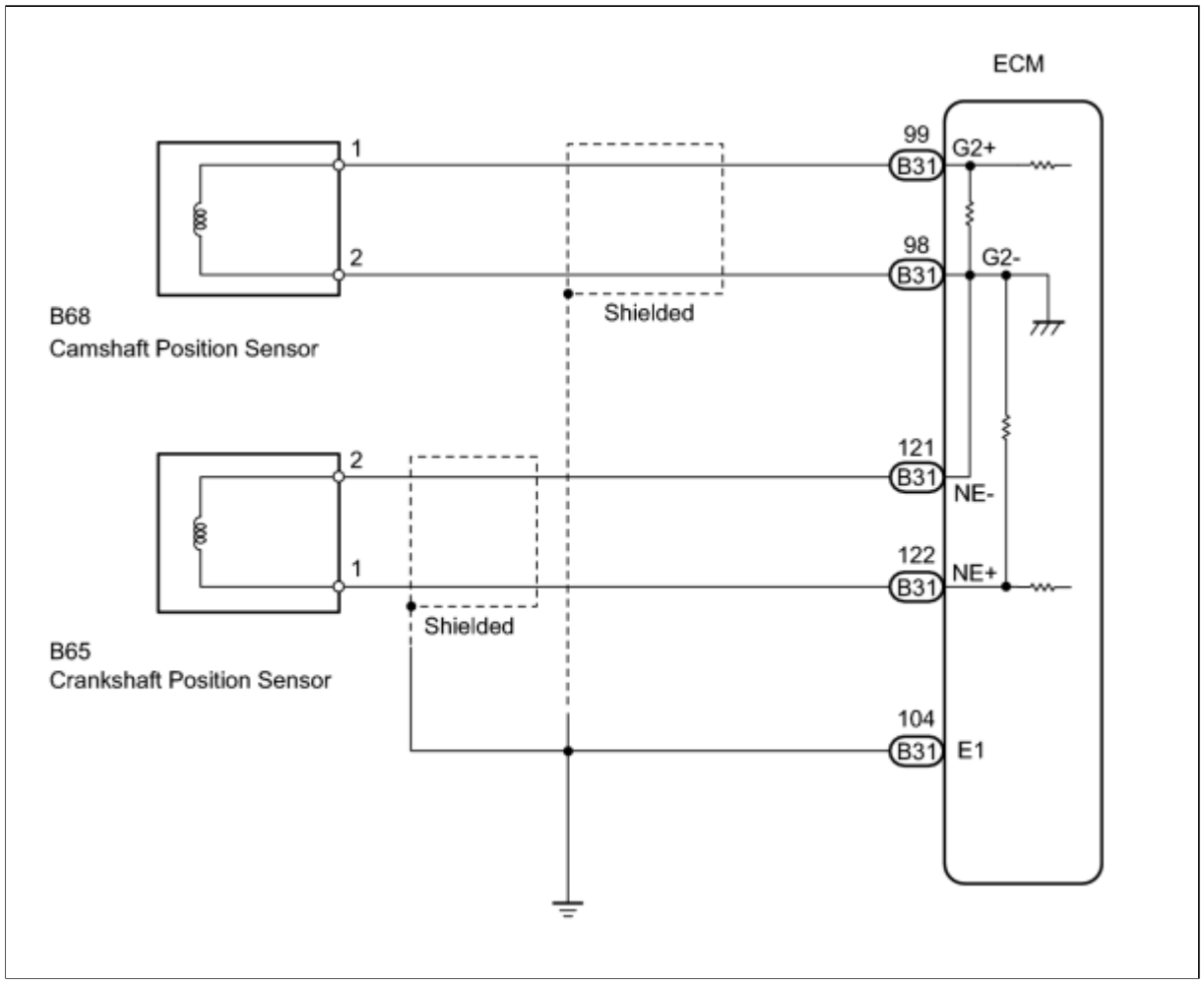

INSPECTION PROCEDURE

HINT:

- If no problem is found through this diagnostic troubleshooting procedure, troubleshoot the engine mechanical systems.
- Check the engine speed. The engine speed can be checked using the Techstream. To check, follow

the operation below:

a. Connect the Techstream to the DLC3.
b. Start the engine.
c. Turn the Techstream on.
d. Enter the following menus: Powertrain / Engine and ECT / Data List / Engine Speed.

- Read freeze frame data using the Techstream. The ECM records vehicle and driving condition information as freeze frame data the moment a DTC is stored. When troubleshooting, freeze frame data can be helpful in determining whether the vehicle was running or stopped, whether the engine was warmed up or not, whether the air fuel ratio was lean or rich, as well as other data recorded at the time of a malfunction.

PROCEDURE

1.	**READ VALUE USING TECHSTREAM (ENGINE SPEED)**

(a) Connect the Techstream to the DLC3.

(b) Turn the ignition switch to ON.

(c) Turn the Techstream on.

(d) Enter the following menus: Powertrain / Engine and ECT / Data List / Engine Speed.

(e) Start the engine.

(f) Read the values displayed on the Techstream while the engine is running.

OK:
Correct values are displayed.

HINT:

- To check the engine speed change, display the graph on the Techstream.
- If the engine does not start, check the engine speed while cranking.
- If the engine speed indicated on the Techstream remains at zero (0), there may be an open or short in the crankshaft position sensor circuit.

NG ▶ **INSPECT CRANKSHAFT POSITION SENSOR (RESISTANCE)**

OK ▶ **CHECK FOR INTERMITTENT PROBLEMS**

2.	**INSPECT CRANKSHAFT POSITION SENSOR (RESISTANCE)**

(a) Disconnect the crankshaft position sensor connector.

(b) Measure the resistance according to the value(s) in the table below.

Standard Resistance:

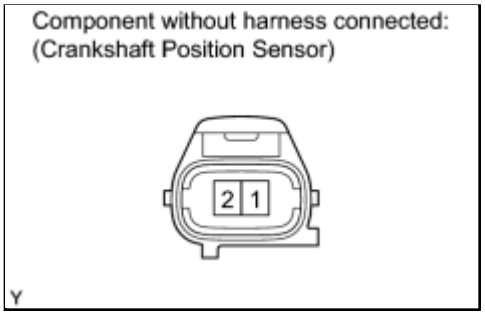

TESTER CONNECTION	CONDITION	SPECIFIED CONDITION
1 - 2	20°C (68°F)	1150 to 1450 Ω

(c) Reconnect the crankshaft position sensor connector.

NG ▶ **REPLACE CRANKSHAFT POSITION SENSOR**

OK ▼

3.	**CHECK HARNESS AND CONNECTOR (CRANKSHAFT POSITION SENSOR - ECM)**

(a) Disconnect the crankshaft position sensor connector.

(b) Disconnect the ECM connector.

(c) Measure the resistance according to the value(s) in the table below.

Standard Resistance (Check for Open):

TESTER CONNECTION	CONDITION	SPECIFIED CONDITION
B65-1 - B31-122 (NE+)	Always	Below 1 Ω
B65-2 - B31-121 (NE-)	Always	Below 1 Ω

Standard Resistance (Check for Short):

TESTER CONNECTION	CONDITION	SPECIFIED CONDITION

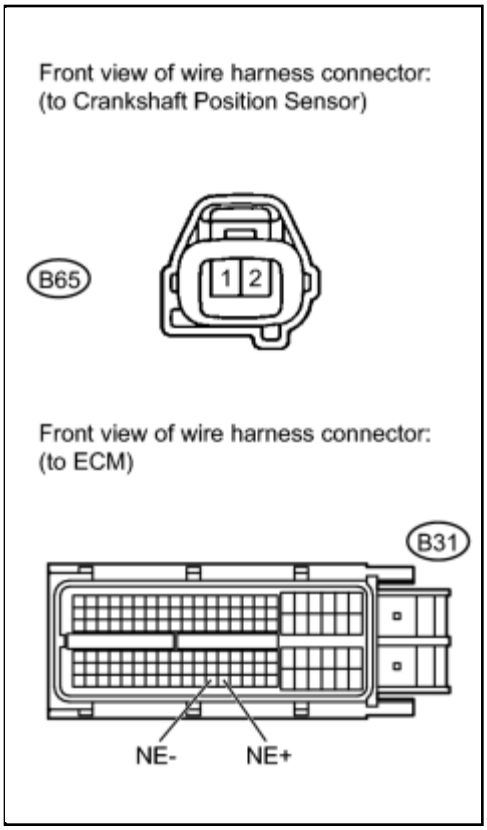

TESTER CONNECTION	CONDITION	SPECIFIED CONDITION
B65-1 or B31-122 (NE+) - Body ground	Always	10 kΩ or higher
B65-2 or B31-121 (NE-) - Body ground	Always	10 kΩ or higher

(d) Reconnect the crankshaft position sensor connector.

(e) Reconnect the ECM connector.

NG ▶ **REPAIR OR REPLACE HARNESS OR CONNECTOR (CRANKSHAFT POSITION SENSOR - ECM)**

OK ▼

4.	CHECK SENSOR INSTALLATION (CRANKSHAFT POSITION SENSOR)

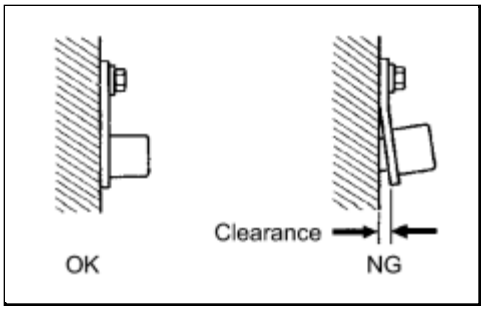

(a) Check the crankshaft position sensor installation.

OK:

Sensor is installed correctly.

NG ▶ **SECURELY REINSTALL SENSOR**

OK ▼

5.	INSPECT CRANKSHAFT POSITION SENSOR PLATE (TEETH OF SENSOR PLATE)

(a) Check the teeth of the sensor plate.

OK:

Sensor plate does not have any cracks or deformation.

NG ▶ **REPLACE CRANKSHAFT POSITION SENSOR PLATE**

OK
▼

6.	**REPLACE CRANKSHAFT POSITION SENSOR**

(a) Replace crankshaft position sensor INFO .

NEXT
▼

7.	**CHECK WHETHER DTC OUTPUT RECURS**

(a) Connect the Techstream to the DLC3.

(b) Turn the ignition switch to ON.

(c) Turn the Techstream on.

(d) Clear the DTCs INFO .

(e) Start the engine.

(f) Enter the following menus: Powertrain / Engine and ECT / Trouble Codes.

(g) Read DTCs.

Result:

RESULT	PROCEED TO
No output	A
P0335 or P0339	B

HINT:

If the engine does not start, replace the ECM.

B ▶ REPLACE ECM

A ▶ END

Last Modified: 3-10-2010	6.4 C	**From:** 200901
Model Year: 2010	**Model:** Corolla	**Doc ID:** RM000000XH40A8X
Title: 2AZ-FE ENGINE CONTROL: SFI SYSTEM: P0351-P0354: Ignition Coil "A" Primary / Secondary Circuit (2010 Corolla)		

DTC	**P0351**	**Ignition Coil "A" Primary / Secondary Circuit**

DTC	**P0352**	**Ignition Coil "B" Primary / Secondary Circuit**

DTC	**P0353**	**Ignition Coil "C" Primary / Secondary Circuit**

DTC	**P0354**	**Ignition Coil "D" Primary / Secondary Circuit**

DESCRIPTION

HINT:

- These DTCs indicate malfunctions relating to the primary circuit.
- If DTC P0351 is set, check the No. 1 ignition coil circuit.
- If DTC P0352 is set, check the No. 2 ignition coil circuit.
- If DTC P0353 is set, check the No. 3 ignition coil circuit.
- If DTC P0354 is set, check the No. 4 ignition coil circuit.

A direct ignition system is used on this vehicle.

The direct ignition system is an ignition system in which each cylinder is ignited by its own ignition coil and spark plug. The secondary wiring of each ignition coil generates a powerful voltage which is applied directly to each spark plug. The spark passes from the center electrode of the spark plug to the ground electrode.

The ignition coils of this system each have a built-in igniter.

The ECM determines the ignition timing and transmits the ignition (IGT) signals to each cylinder. Using the IGT signal, the ECM turns the power transistor inside the igniter on and off. The power transistor, in turn, switches on and off the current to the primary coil. When the current to the primary coil is cut off, a powerful voltage is generated in the secondary coil. This voltage is applied to the spark plugs, causing them to spark inside the cylinders. As the ECM cuts the current to the primary coil, the igniter sends back an ignition confirmation (IGF) signal to the ECM, for each cylinder ignition.

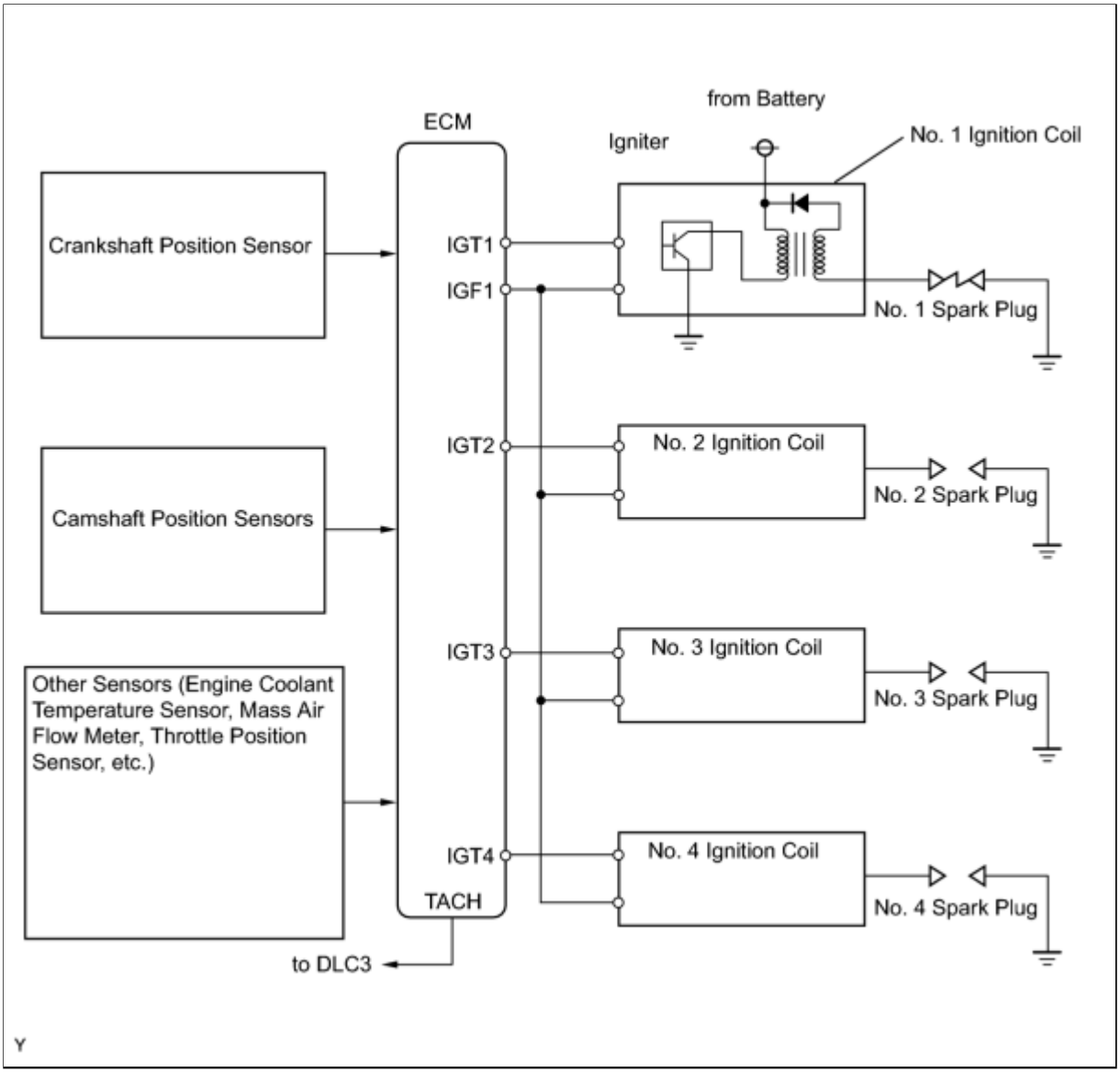

DTC NO.	DTC DETECTION CONDITIONS	TROUBLE AREAS
P0351 P0352 P0353 P0354	No IGF signal to ECM while engine running (1 trip detection logic)	• Ignition system • Open or short in IGF1 or IGT circuit (1 to 4) between ignition coil and ECM • No. 1 to No. 4 ignition coils • ECM

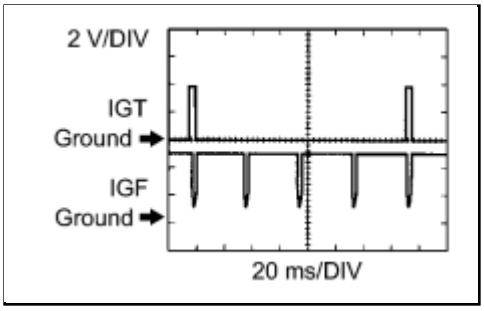

Reference: Inspection using an oscilloscope.
While cranking or idling the engine, check the waveform between terminals IGT (1 to 4) and E1, and IGF1 and E1 of the ECM connector.

ECM Terminal Name	Between IGT (1 to 4) and E1 Between IGF1 and E1
Tester Range	2 V/DIV, 20 ms/DIV
Condition	Idling

MONITOR DESCRIPTION

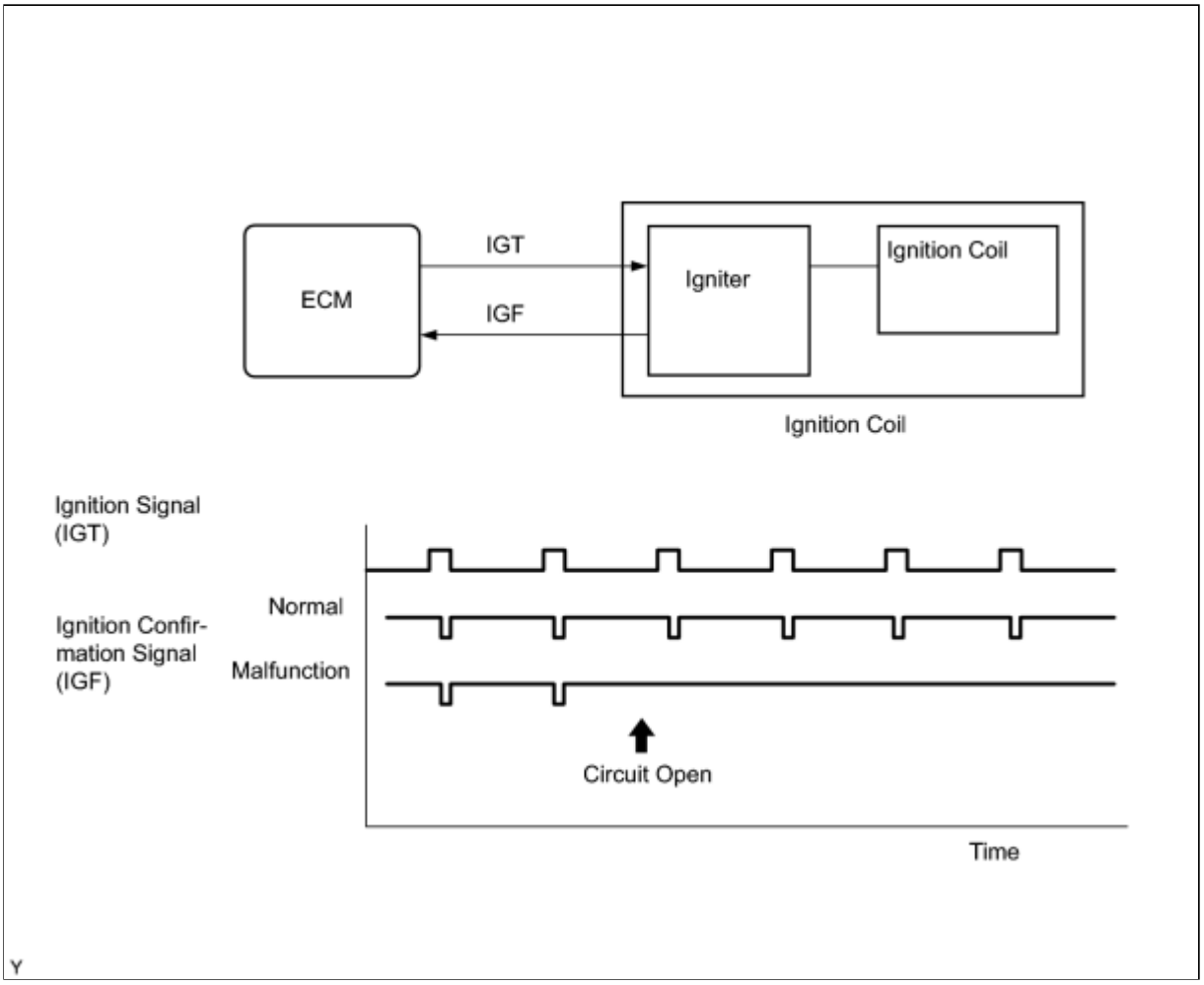

If the ECM does not receive any IGF signals despite transmitting the IGT signal, it interprets this as a fault in the igniter and sets a DTC.

If the malfunction is not repaired successfully, a DTC is set 1 second after the engine is next started.

MONITOR STRATEGY

Related DTCs	P0351: Igniter (cylinder 1) malfunction P0352: Igniter (cylinder 2) malfunction P0353: Igniter (cylinder 3) malfunction P0354: Igniter (cylinder 4) malfunction
Required Sensors/Components (Main)	Igniter
Required Sensors/Components (Related)	Crankshaft position sensor
Frequency of Operation	Continuous
Duration	0.512 seconds
MIL Operation	Immediate
Sequence of Operation	None

TYPICAL ENABLING CONDITIONS

Monitor runs whenever following DTCs are not present	None
Either of following conditions A or B is met	-
A. Engine RPM	1500 rpm or less
B. Starter	OFF
Either of following conditions C or D met	-
C. Both of following conditions (a) and (b) are met	-
(a) Engine speed	500 rpm or less
(b) Battery voltage	6 V or more
D. All of following conditions (a), (b) and (c) are met	-
(a) Engine speed	More than 500 rpm
(b) Battery voltage	10 V or more
(c) Number of sparks after CPU reset	5 sparks or more

TYPICAL MALFUNCTION THRESHOLDS

IGF signal	ECM does not receive any IGF signal despite ECM sending IGT signal to igniter

COMPONENT OPERATING RANGE

IGF signal	Igniter transmits IGF signal when it receives IGT signal from ECM

CONFIRMATION DRIVING PATTERN

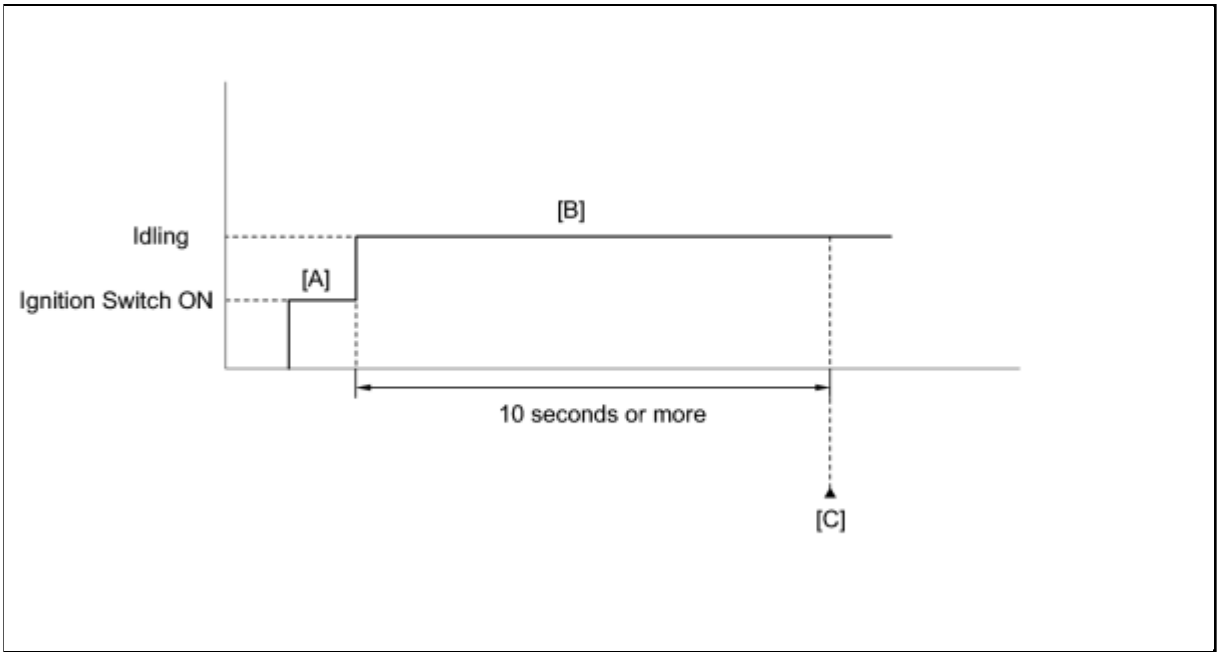

1. Connect the Techstream to the DLC3.
2. Turn the ignition switch to ON and turn the Techstream on.
3. Clear the DTCs (even if no DTCs are stored, perform the clear DTC procedure) INFO .
4. Turn the ignition switch off.
5. Turn the ignition switch to ON and turn the Techstream on [A].
6. Start the engine.
7. Idle the engine for 10 seconds or more [B].
8. Enter the following menus: Powertrain / Engine / Utility / All Readiness.
9. Input the DTC: P0351, P0352, P0353 or P0354.
10. Check the DTC judgment result [C].

TECHSTREAM DISPLAY	DESCRIPTION
NORMAL	○ DTC judgment completed ○ System normal
ABNORMAL	○ DTC judgment completed ○ System abnormal

TECHSTREAM DISPLAY	DESCRIPTION
INCOMPLETE	○ DTC judgment not completed ○ Perform driving pattern after confirming DTC enabling conditions
UNKNOWN	○ Unable to perform DTC judgment ○ Number of DTCs which do not fulfill DTC preconditions has reached ECU memory limit

HINT:

- If the judgment result shows ABNORMAL, the system has a malfunction.
- If the judgment result shows INCOMPLETE or UNKNOWN, perform steps [B] and [C] again.

11. If the test result is UNKNOWN, enter the following menus: Powertrain / Engine / Trouble Codes / Pending.
12. Read Pending DTCs.

HINT:

If a pending DTC is output, the system is malfunctioning.

13. If the test result is INCOMPLETE or UNKNOWN and no pending DTC is output, perform a universal trip and check for permanent DTCs INFO.

HINT:

- If a permanent DTC is output, the system is malfunctioning.
- If no permanent DTC is output, the system is normal.

WIRING DIAGRAM

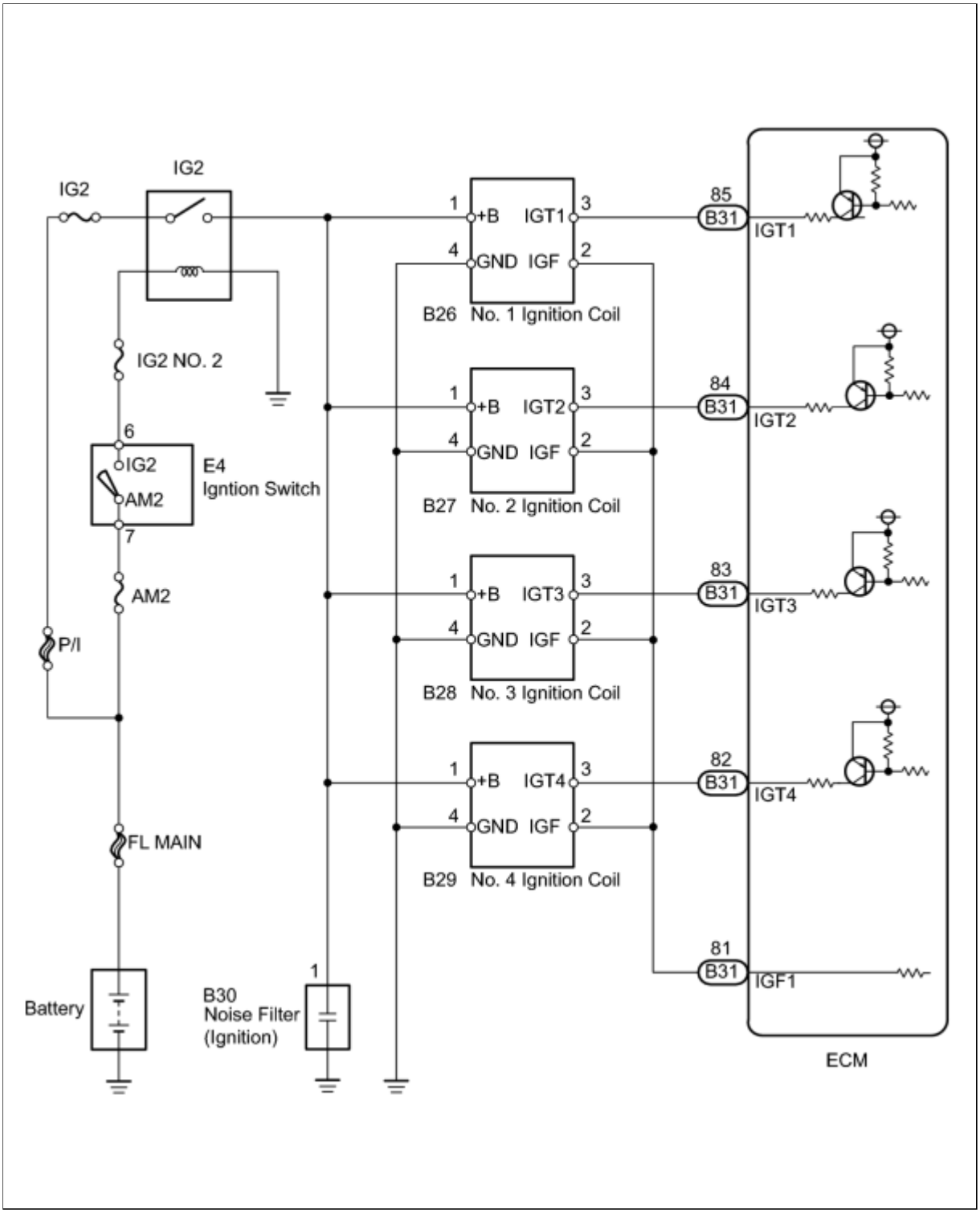

INSPECTION PROCEDURE

HINT:

Read freeze frame data using the Techstream. The ECM records vehicle and driving condition information as freeze frame data the moment a DTC is stored. When troubleshooting, freeze frame data can be helpful in determining whether the vehicle was running or stopped, whether the engine was warmed up or not, whether the air fuel ratio was lean or rich, as well as other data recorded at the time of a malfunction.

PROCEDURE

1.	**INSPECT IGNITION COIL ASSEMBLY (GROUND CIRCUIT)**

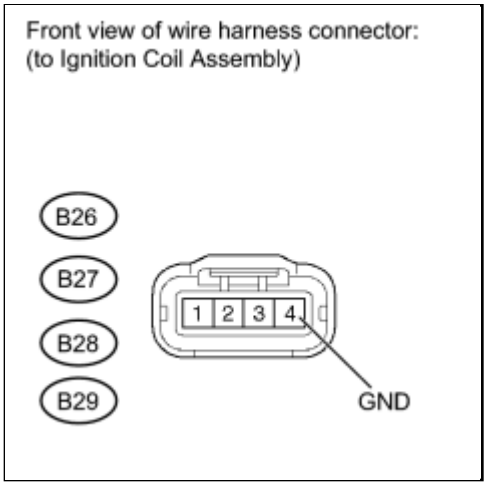

(a) Disconnect the ignition coil assembly connectors.

(b) Measure the resistance according to the value(s) in the table below.

Standard Resistance (Check for Open):

TESTER CONNECTION	CONDITION	SPECIFIED CONDITION
B26-4 (GND) - Body ground	Always	Below 1 Ω
B27-4 (GND) - Body ground	Always	Below 1 Ω
B28-4 (GND) - Body ground	Always	Below 1 Ω
B29-4 (GND) - Body ground	Always	Below 1 Ω

(c) Reconnect the ignition switch assembly connector.

NG ▶ **REPAIR OR REPLACE HARNESS OR CONNECTOR (GROUND CIRCUIT)**

OK ▼

2.	**INSPECT IGNITION COIL ASSEMBLY (POWER SOURCE)**

(a) Disconnect the ignition coil assembly connectors.

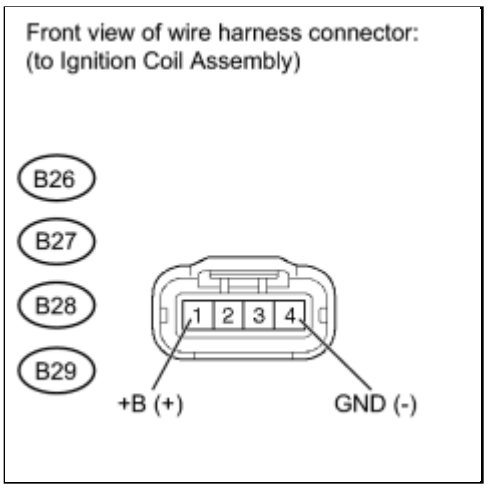

(b) Turn the ignition switch to ON.

(c) Measure the voltage according to the value(s) in the table below.

Standard Voltage:

TESTER CONNECTION	CONDITION	SPECIFIED CONDITION
B26-1 (+B) - B26-4 (GND)	Ignition switch ON	11 to 14 V
B27-1 (+B) - B27-4 (GND)	Ignition switch ON	11 to 14 V
B28-1 (+B) - B28-4 (GND)	Ignition switch ON	11 to 14 V
B29-1 (+B) - B29-4 (GND)	Ignition switch ON	11 to 14 V

(d) Reconnect the ignition coil assembly connectors.

NG ▶ **CHECK HARNESS AND CONNECTOR (IGNITION COIL ASSEMBLY - INTEGRATION RELAY)**

OK ▼

3.	**CHECK HARNESS AND CONNECTOR (IGNITION COIL ASSEMBLY - ECM)**

(a) Disconnect the ignition coil assembly connectors.

(b) Disconnect the ECM connector.

(c) Measure the resistance according to the value(s) in the table below.

Standard Resistance (Check for Open):

TESTER CONNECTION	CONDITION	SPECIFIED CONDITION
B26-2 (IGF) - B31-81 (IGF1)	Always	Below 1 Ω
B27-2 (IGF) - B31-81 (IGF1)	Always	Below 1 Ω
B28-2 (IGF) - B31-81 (IGF1)	Always	Below 1 Ω
B29-2 (IGF) - B31-81 (IGF1)	Always	Below 1 Ω

Front view of wire harness connector:
(to Ignition Coil Assembly)



Front view of wire harness connector:
(to ECM)

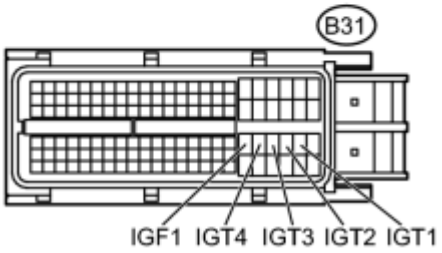

Standard Resistance (Check for Open):

TESTER CONNECTION	CONDITION	SPECIFIED CONDITION
B26-3 (IGT1) - B31-85 (IGT1)	Always	Below 1 Ω
B27-3 (IGT2) - B31-84 (IGT2)	Always	Below 1 Ω
B28-3 (IGT3) - B31-83 (IGT3)	Always	Below 1 Ω
B29-3 (IGT4) - B31-82 (IGT4)	Always	Below 1 Ω

Standard Resistance (Check for Short):

TESTER CONNECTION	CONDITION	SPECIFIED CONDITION
B26-2 (IGF) or B31-81 (IGF1) - Body ground	Always	10 kΩ or higher
B27-2 (IGF) or B31-81 (IGF1) - Body ground	Always	10 kΩ or higher
B28-2 (IGF) or B31-81 (IGF1) - Body ground	Always	10 kΩ or higher
B29-2 (IGF) or B31-81 (IGF1) - Body ground	Always	10 kΩ or higher

Standard Resistance (Check for Short):

TESTER CONNECTION	CONDITION	SPECIFIED

		CONDITION
B26-3 (IGT1) or B31-85 (IGT1) - Body ground	Always	10 kΩ or higher
B27-3 (IGT2) or B31-84 (IGT2) - Body ground	Always	10 kΩ or higher
B28-3 (IGT3) or B31-83 (IGT3) - Body ground	Always	10 kΩ or higher
B29-3 (IGT4) or B31-82 (IGT4) - Body ground	Always	10 kΩ or higher

(d) Reconnect the ECM connector.

(e) Reconnect the ignition coil assembly connectors.

NG ▶ **REPAIR OR REPLACE HARNESS OR CONNECTOR (IGNITION COIL ASSEMBLY - ECM)**

OK ▼

4.	CHECK WHETHER DTC OUTPUT RECURS (DTC P0351, P0352, P0353 OR P0354)

(a) Connect the Techstream to the DLC3.

(b) Turn the ignition switch to ON.

(c) Turn the Techstream on.

(d) Clear the DTCs INFO .

(e) Shuffle arrangement of the ignition coil with igniters (among No. 1 to No. 4 cylinders).

NOTICE:

Do not shuffle the connectors.

(f) Perform a simulation test.

(g) Enter the following menus: Powertrain / Engine and ECT / Trouble Codes.

(h) Read DTCs.

Result:

RESULT	PROCEED TO
Same DTC is output	A
Different ignition coil DTC is output	B

B ▶ **REPLACE IGNITION COIL ASSEMBLY**

A ▶ **REPLACE ECM**

5.	**CHECK HARNESS AND CONNECTOR (IGNITION COIL ASSEMBLY - INTEGRATION RELAY)**

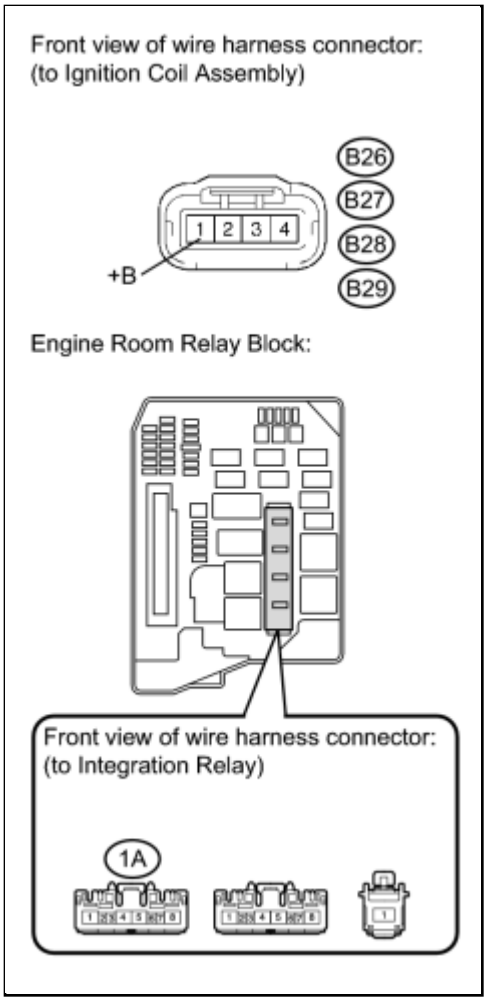

(a) Disconnect the ignition coil assembly connectors.

(b) Remove the integration relay from the engine room relay block.

(c) Measure the resistance according to the value(s) in the table below.

Standard Resistance (Check for Open):

TESTER CONNECTION	CONDITION	SPECIFIED CONDITION
B26-1 (+B) - 1A-4	Always	Below 1 Ω
B27-1 (+B) - 1A-4	Always	Below 1 Ω
B28-1 (+B) - 1A-4	Always	Below 1 Ω
B29-1 (+B) - 1A-4	Always	Below 1 Ω

Standard Resistance (Check for Short):

TESTER CONNECTION	CONDITION	SPECIFIED CONDITION
B26-1 (+B) or 1A-4 - Body ground	Always	10 kΩ or higher
B27-1 (+B) or 1A-4 - Body ground	Always	10 kΩ or higher
B28-1 (+B) or 1A-4 - Body ground	Always	10 kΩ or higher
B29-1 (+B) or 1A-4 - Body ground	Always	10 kΩ or higher

(d) Reinstall the integration relay.

(e) Reconnect the ignition coil assembly connectors.

NG ▶ **REPAIR OR REPLACE HARNESS OR CONNECTOR (IGNITION COIL ASSEMBLY - INTEGRATION RELAY)**

OK ▶ **REPAIR OR REPLACE ECM POWER SOURCE CIRCUIT**

Last Modified: 3-10-2010	6.4 C	**From:** 200901
Model Year: 2010	**Model:** Corolla	**Doc ID:** RM0000012JE03TX
Title: 2AZ-FE ENGINE CONTROL: SFI SYSTEM: P0340: Camshaft Position Sensor "A" Circuit (Bank 1 or Single Sensor) (2010 Corolla)		

DTC	**P0340**	**Camshaft Position Sensor "A" Circuit (Bank 1 or Single Sensor)**

DESCRIPTION

The camshaft position sensor consists of a magnet and an iron core which is wrapped with copper wire, and is installed onto the cylinder head. When the camshaft rotates, each of 3 teeth on the camshaft passes through the camshaft position sensor. This activates the internal magnet in the sensor, generating a voltage in the copper wire. The camshaft rotation is synchronized with the crankshaft rotation. When the crankshaft turns twice, the voltage is generated 3 times in the camshaft position sensor. The generated voltage in the sensor acts as a signal, allowing the ECM to locate the camshaft position. This signal is then used to control ignition timing, fuel injection timing, and the VVT system.

DTC NO.	DTC DETECTION CONDITION	TROUBLE AREA
P0340	When either of following conditions is met: • No camshaft position sensor signal to ECM while cranking (2 trip detection logic) • Missing camshaft position sensor signal despite crankshaft position sensor signal inputs normal at engine speed of 600 rpm or more (1 trip detection logic)	• Open or short in camshaft position sensor circuit • Camshaft position sensor • Camshaft • Timing chain jumped a tooth • ECM

HINT:

DTC P0340 indicates a malfunction relating to the camshaft position sensor circuit (the wire harness between the ECM and camshaft position sensor, and the camshaft position sensor itself).

Reference: Inspection using an oscilloscope

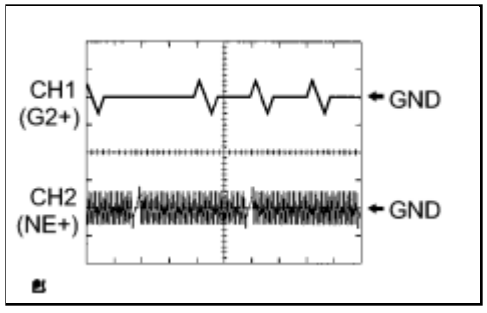

HINT:

- The correct waveform is as shown in the illustration.
- G2+ stands for the camshaft position sensor signal, and NE+ stands for the crankshaft position sensor signal.
- A failure of the ground for the shielding of the wiring may result in noisy waveforms.

ECM Terminal Name	CH1: Between G2+ and G2- CH2: Between NE+ and NE-
Tester Range	5 V/DIV., 20 msec/DIV.
Condition	Idling

MONITOR DESCRIPTION

If no signal is transmitted by the camshaft position sensor despite the engine revolving, or the rotation of the camshaft and the crankshaft is not synchronized, the ECM interprets this as a malfunction of the sensor.

If the malfunction is not repaired successfully, the DTC is set 10 seconds after the engine is next started.

MONITOR STRATEGY

Related DTCs	P0340: Camshaft position sensor range check P0340: Camshaft position/crankshaft position misalignment
Required Sensors/Components (Main)	Camshaft position sensor
Required Sensors/Components (Related)	Crankshaft position sensor
Frequency of Operation	Continuous
Duration	4 seconds: Camshaft position sensor range check 5 seconds: Camshaft position/crankshaft position misalignment
MIL Operation	2 driving cycles: Camshaft position sensor range check Immediate: Camshaft position/crankshaft position misalignment
Sequence of Operation	None

TYPICAL ENABLING CONDITIONS

All

Monitor runs whenever following DTCs are not present	None

Camshaft Position Sensor Range Check

Starter	ON
Minimum battery voltage while starter ON	Less than 11 V

Camshaft Position/Crankshaft Position Misalignment

Engine speed	600 rpm or more
Starter	OFF

TYPICAL MALFUNCTION THRESHOLDS

Camshaft Position Sensor Range Check

Camshaft position sensor signal	No signal

Camshaft Position/Crankshaft Position Misalignment

Camshaft position and crankshaft position phase	Misaligned

COMPONENT OPERATING RANGE

Camshaft position sensor	• Camshaft position sensor output voltage fluctuates while camshaft rotating • 3 camshaft position sensor signals per 2 crankshaft revolutions

CONFIRMATION DRIVING PATTERN

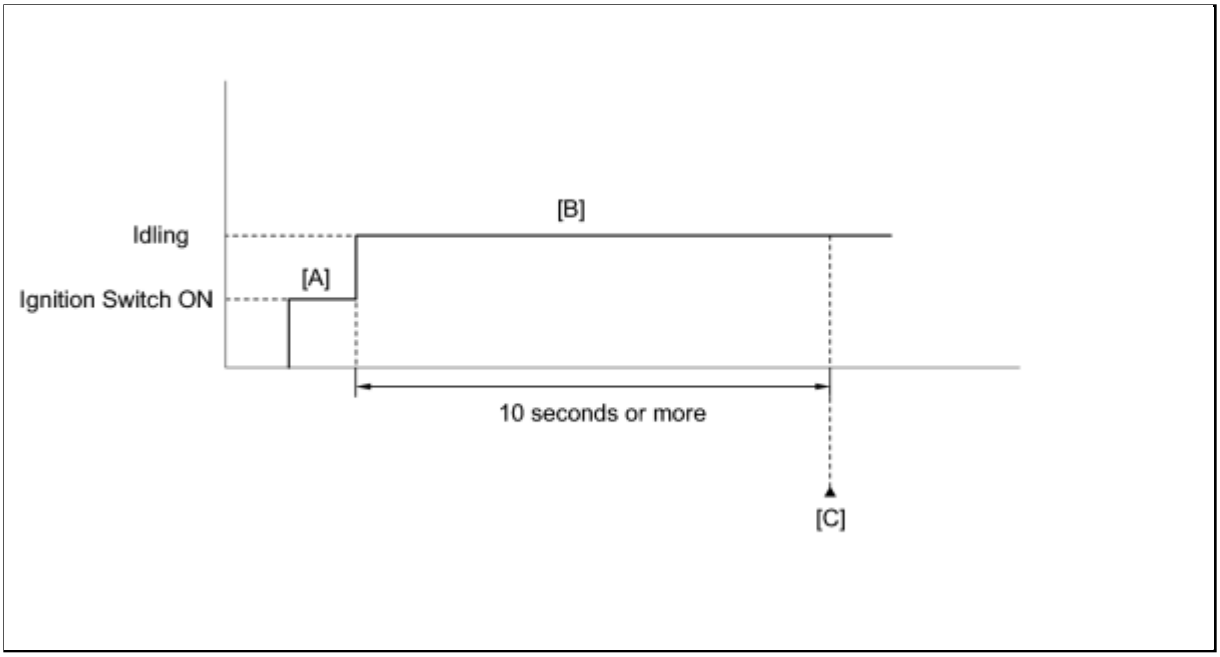

1. Connect the Techstream to the DLC3.
2. Turn the ignition switch to ON and turn the Techstream on.
3. Clear the DTCs (even if no DTCs are stored, perform the clear DTC procedure) INFO .
4. Turn the ignition switch off.
5. Turn the ignition switch to ON and turn the Techstream on [A].
6. Start the engine.
7. Idle the engine for 10 seconds or more [B].
8. Enter the following menus: Powertrain / Engine / Utility / All Readiness.
9. Input the DTC: P0340, P0342 or P0343.
10. Check the DTC judgment result [C].

TECHSTREAM DISPLAY	DESCRIPTION
NORMAL	○ DTC judgment completed ○ System normal
ABNORMAL	○ DTC judgment completed ○ System abnormal
INCOMPLETE	○ DTC judgment not completed ○ Perform driving pattern after confirming DTC enabling conditions
UNKNOWN	○ Unable to perform DTC judgment ○ Number of DTCs which do not fulfill DTC preconditions has reached ECU memory limit

HINT:

If the judgment result shows INCOMPLETE or UNKNOWN, perform steps [B] and [C] again.

11. If the test result is UNKNOWN, enter the following menus: Powertrain / Engine / Trouble Codes / Pending.
12. Read Pending DTCs.

HINT:

If a pending DTC is output, the system is malfunctioning.

13. If the test result is INCOMPLETE or UNKNOWN and no pending DTC is output, perform a universal trip and check for permanent DTCs INFO .

HINT:

- If a permanent DTC is output, the system is malfunctioning.
- If no permanent DTC is output, the system is normal.

WIRING DIAGRAM

Refer to DTC P0335 INFO .

INSPECTION PROCEDURE

HINT:

Read freeze frame data using Techstream. The ECM records vehicle and driving condition information as freeze frame data the moment a DTC is stored. When troubleshooting, freeze frame data can be helpful in determining whether the vehicle was running or stopped, whether the engine was warmed up or not, whether the air fuel ratio was lean or rich, as well as other data recorded at the time of a malfunction.

PROCEDURE

1.	**INSPECT CAMSHAFT POSITION SENSOR (RESISTANCE)**

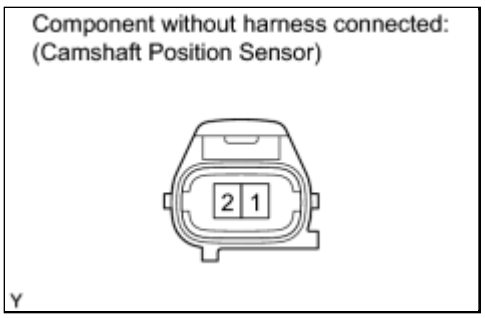

(a) Disconnect the camshaft position sensor connector.

(b) Measure the resistance according to the value(s) in the table below.

Standard Resistance:

TESTER CONNECTION	CONDITION	SPECIFIED CONDITION
1 - 2	20°C (68°F)	950 to 1250 Ω

(c) Reconnect the camshaft position sensor connector.

NG ▶ **REPLACE CAMSHAFT POSITION**

OK

2.	**CHECK HARNESS AND CONNECTOR (CAMSHAFT POSITION SENSOR - ECM)**

(a) Disconnect the camshaft position sensor connector.

(b) Disconnect the ECM connector.

(c) Measure the resistance according to the value(s) in the table below.

Standard Resistance (Check for Open):

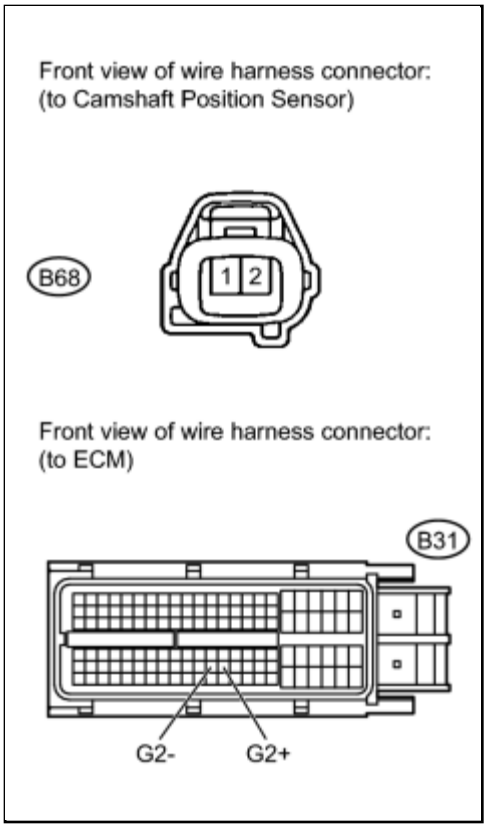

TESTER CONNECTION	CONDITION	SPECIFIED CONDITION
B68-1 - B31-99 (G2+)	Always	Below 1 Ω
B68-2 - B31-98 (G2-)	Always	Below 1 Ω

Standard Resistance (Check for Short):

TESTER CONNECTION	CONDITION	SPECIFIED CONDITION
B68-1 or B31-99 (G2+) - Body ground	Always	10 kΩ or higher
B68-2 or B31-98 (G2-) - Body ground	Always	10 kΩ or higher

(d) Reconnect the ECM connector.

(e) Reconnect the camshaft position sensor connector.

NG ▶ **REPAIR OR REPLACE HARNESS OR CONNECTOR (CAMSHAFT**

POSITION SENSOR - ECM)

OK

3.	CHECK SENSOR INSTALLATION (CAMSHAFT POSITION SENSOR)

(a) Check the camshaft position sensor installation.

OK:

Sensor is installed correctly.

NG ▶ SECURELY REINSTALL SENSOR

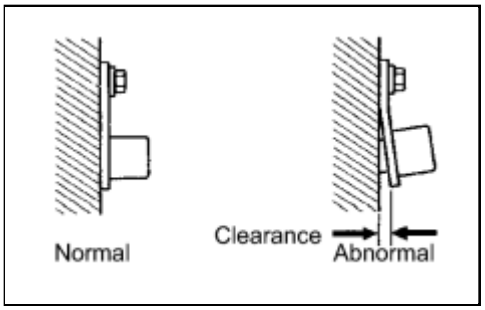

OK

4.	CHECK VALVE TIMING INFO

NG ▶ ADJUST VALVE TIMING

OK

5.	INSPECT CAMSHAFT

(a) Check the teeth of the camshaft.

OK:

Camshaft teeth do not have any cracks or deformation.

NG ▶ REPLACE CAMSHAFT

OK

6.	REPLACE CAMSHAFT POSITION SENSOR

(a) Replace camshaft position sensor INFO .

NEXT

7.	CHECK WHETHER DTC OUTPUT RECURS

(a) Connect the Techstream to the DLC3.

(b) Turn the ignition switch to ON.

(c) Turn the Techstream on.

(d) Clear DTCs INFO .

(e) Start the engine.

(f) Enter the following menus: Powertrain / Engine and ECT / Trouble Codes.

(g) Read DTCs.

Result:

RESULT	PROCEED TO
No output	A
P0340	B

HINT:

If the engine does not start, replace the ECM.

B ▶ **REPLACE ECM**

A ▶ **END**

Last Modified: 3-10-2010	6.4 C	**From:** 200901
Model Year: 2010	**Model:** Corolla	**Doc ID:** RM000000WC0058X
Title: 2AZ-FE ENGINE CONTROL: SFI SYSTEM: P0420: Catalyst System Efficiency Below Threshold (Bank 1) (2010 Corolla)		

DTC	**P0420**	**Catalyst System Efficiency Below Threshold (Bank 1)**

MONITOR DESCRIPTION

The ECM uses sensors mounted in front of and behind the three-way catalytic converter to monitor its efficiency.

The first sensor, the air fuel ratio sensor, sends pre-catalyst information to the ECM. The second sensor, the heated oxygen sensor, sends post-catalyst information to the ECM.

In order to detect any deterioration in the three-way catalytic converter, the ECM calculates the oxygen storage capacity of the three-way catalytic converter. This calculation is based on the voltage output of the heated oxygen sensor while performing active air-fuel ratio control.

The oxygen storage capacity value is an indication of the oxygen storage capacity of the three-way catalytic converter. When the vehicle is being driven with a warm engine, active air-fuel ratio control is performed for approximately 15 to 20 seconds. When it is performed, the ECM deliberately sets the air-fuel ratio to lean or rich. If the cycle of the waveform for the heated oxygen sensor is long, the oxygen storage capacity is great. There is a direct correlation between the heated oxygen sensor and the oxygen storage capacity of the three-way catalytic converter.

The ECM uses the oxygen storage capacity value to determine the state of the three-way catalytic converter. If any deterioration has occurred, it illuminates the MIL and sets the DTC.

DTC NO.	DTC DETECTION CONDITION	TROUBLE AREA
P0420	Oxygen Storage Capacity value smaller than standard value under active air fuel ratio control (2 trip detection logic)	• Gas leak from exhaust system • Air fuel ratio sensor (sensor 1) • Heated oxygen sensor (sensor 2) • Exhaust manifold converter sub-assembly (TWC: Front catalyst) • Center manifold converter sub-assembly (TWC: Rear catalyst)

HINT:

- Sensor 1 refers to the sensor closest to the engine assembly.
- Sensor 2 refers to the sensor farthest away from the engine assembly.

CATALYST LOCATION

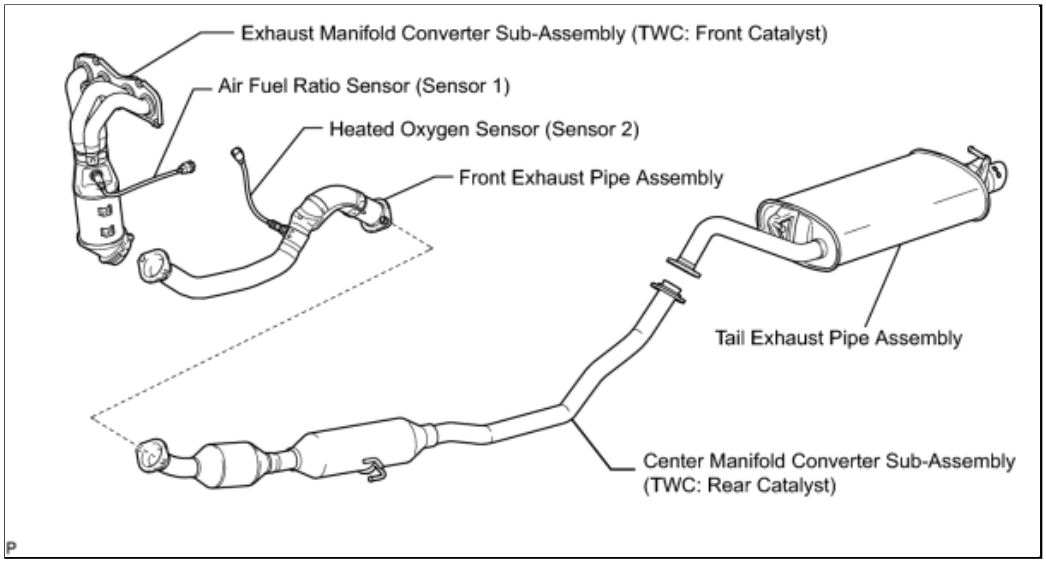

MONITOR STRATEGY

Related DTCs	P0420: Catalyst Deterioration
Required Sensors/Components (Main)	Air fuel ratio sensor Heated oxygen sensor
Required Sensors/Components (Related)	Intake air temperature sensor Mass air flow meter Crankshaft position sensor Engine coolant temperature sensor
Frequency of Operation	Once per driving cycle
Duration	About 30 seconds
MIL Operation	2 driving cycles
Sequence of Operation	None

TYPICAL ENABLING CONDITIONS

Monitor runs whenever following DTCs are not present	P0010 (VVT Oil Control Valve Bank 1) P0011 (VVT System bank 1- Advance) P0012 (VVT System bank 1- Retard) P0016 (VVT System bank 1- Misalignment) P0031, P0032 (Air Fuel Ratio Sensor Heater - Sensor 1) P0037, P0038 (Heated Oxygen Sensor Heater - Sensor 2) P0102, P0103 (Mass Air Flow Meter) P0115, P0117, P0118 (Engine Coolant Temperature Sensor) P0120, P0121 P0122, P0123, P0220, P0222, P0223, P2135 (Throttle Position Sensor) P0125 (Insufficient Engine Coolant Temperature for Closed Loop Fuel Control) P0136, P0137, P0138, P0139 (Rear Oxygen sensor - Sensor 2) P0171, P0172 (Fuel System) P0301, P0302, P0303, P0304 (Misfire) P0335 (Crankshaft Position Sensor) P0340 (Camshaft Position Sensor)

	P0351, P0352, P0353, P0354 (Igniter) P0500 (Vehicle Speed Sensor) P0606, P0607 (Heated Oxygen Sensor - Sensor 2) P2195, P2196, P2237, P2238, P2239, P2252, P2253, P2A00 (Air Fuel Ratio Sensor - Sensor 1)
Battery voltage	11 V or more
Intake air temperature	-10°C (14°F) or more
Engine coolant temperature	75°C (167°F) or more
Atmospheric pressure coefficient	0.75 or more
Idling	OFF
Engine RPM	Less than 4000 rpm
Air fuel ratio sensor status	Activated
Fuel system status	Closed loop
Engine load	10 to 80%
All of the following conditions are met	Condition 1, 2 and 3
1. Mass air flow rate	2.5 to 50 g/sec
2. Front catalyst temperature (estimated)	620 to 840°C (1148 to 1544°F)
3. Rear catalyst temperature (estimated)	400 to 770°C (752 to 1418°F)
Shift position	A/T models: 4th or higher M/T models: 3rd or higher

TYPICAL MALFUNCTION THRESHOLDS

Oxygen storage capacity of three-way catalytic converter	Less than 0.07 g

MONITOR RESULT

Refer to Checking Monitor Status INFO .

CONFIRMATION DRIVING PATTERN

HINT:

Performing this confirmation pattern will activate the catalyst monitor. This is very useful for verifying the completion of a repair.

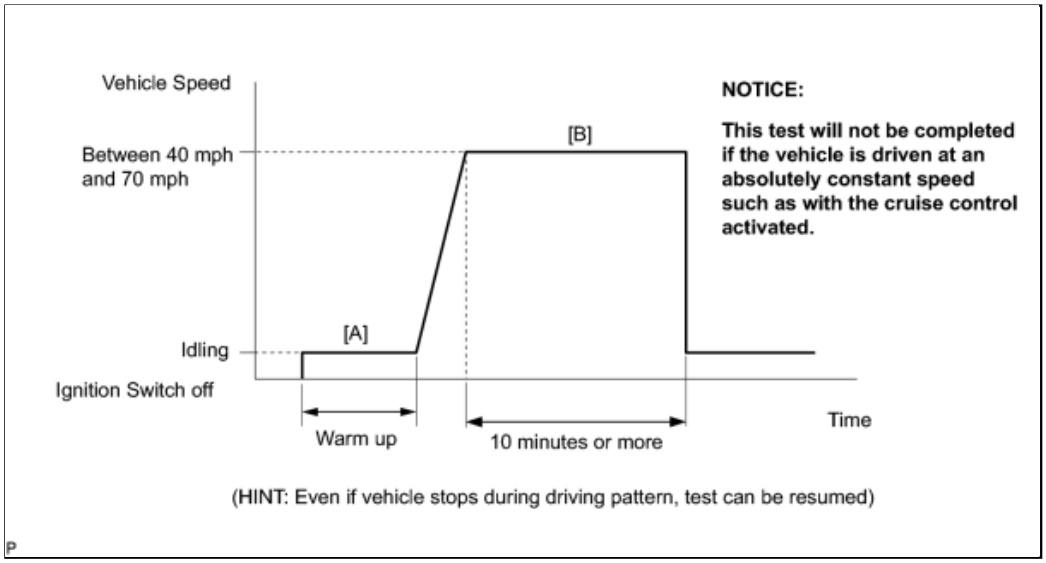

1. Connect the Techstream to the DLC3.
2. Turn the ignition switch to ON.
3. Turn the Techstream on.
4. Clear the DTCs (even if no DTCs are stored, perform the clear DTC procedure) INFO .
5. Turn the ignition switch off.
6. Turn the ignition switch to ON and turn the Techstream on [A].
7. Enter the following menus: Powertrain / Engine / Monitor.
8. Check that Catalyst / Status2 is Incomplete.
9. Start the engine and warm it up (until the engine coolant temperature is 75°C (167°F) or higher) [A].
10. Drive the vehicle at between 40 and 70 mph (64 and 113 km/h) for at least 10 minutes or more [B].
11. The monitor items will change to Complete as Catalyst monitor operates.
12. Enter the following menus: Powertrain / Engine / Trouble Codes / Pending.
13. Check if any DTCs (pending DTCs) are set.

HINT:

If Catalyst does not change to Complete, and no pending DTCs are stored, extend the driving time.

CONDITIONING FOR SENSOR TESTING

HINT:

Perform the operation with the engine speeds and time durations described below prior to checking the waveforms of the air fuel ratio sensor and heated oxygen sensor. This is in order to activate the sensors sufficiently to obtain the appropriate inspection results.

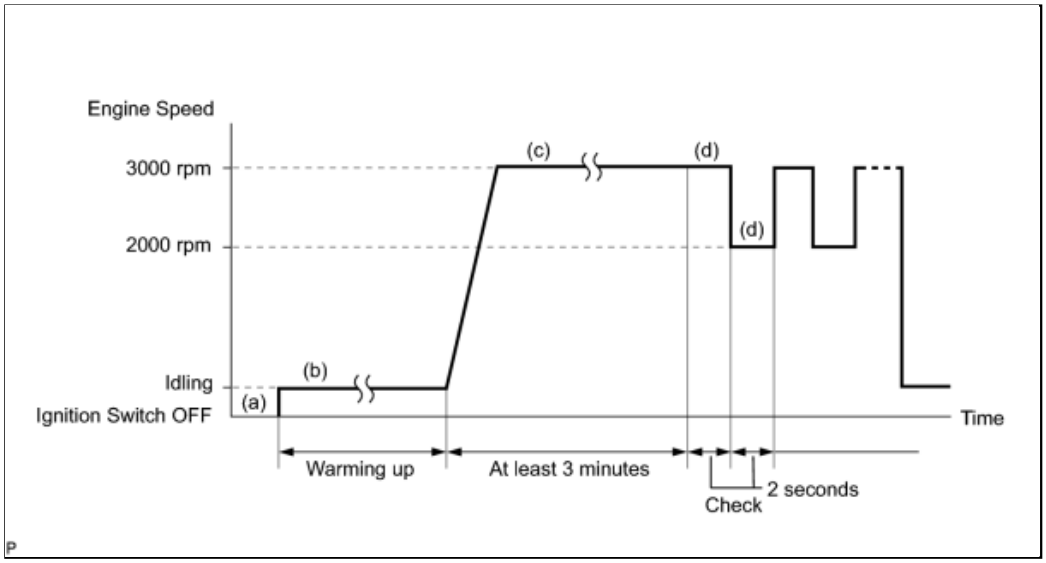

(a) Connect the Techstream to the DLC3.
(b) Start the engine and warm it up with all the accessories switched OFF until the engine coolant temperature stabilizes.
(c) Run the engine at an engine speed of between 2500 rpm and 3000 rpm for at least 3 minutes.
(d) While running the engine at 3000 rpm for 2 seconds and 2000 rpm for 2 seconds, check the waveforms of the air fuel ratio and heated oxygen sensors using the Techstream.

HINT:

- If either of the voltage outputs of the air fuel ratio or heated oxygen sensor does not fluctuate, or there is noise in the waveform of either sensor, the sensor may be malfunctioning.
- If the voltage outputs of both the sensors remain lean or rich, the air fuel ratio may be extremely lean or rich. In such cases, perform the following active test: Powertrain / Engine and ECT / Active Test / Control the Injection Volume for A/F sensor.
- If the three-way catalytic converter has deteriorated, the heated oxygen sensor (located behind the three-way catalytic converter) voltage output fluctuates up and down frequently, even under normal driving conditions (active air-fuel ratio control is not performed).

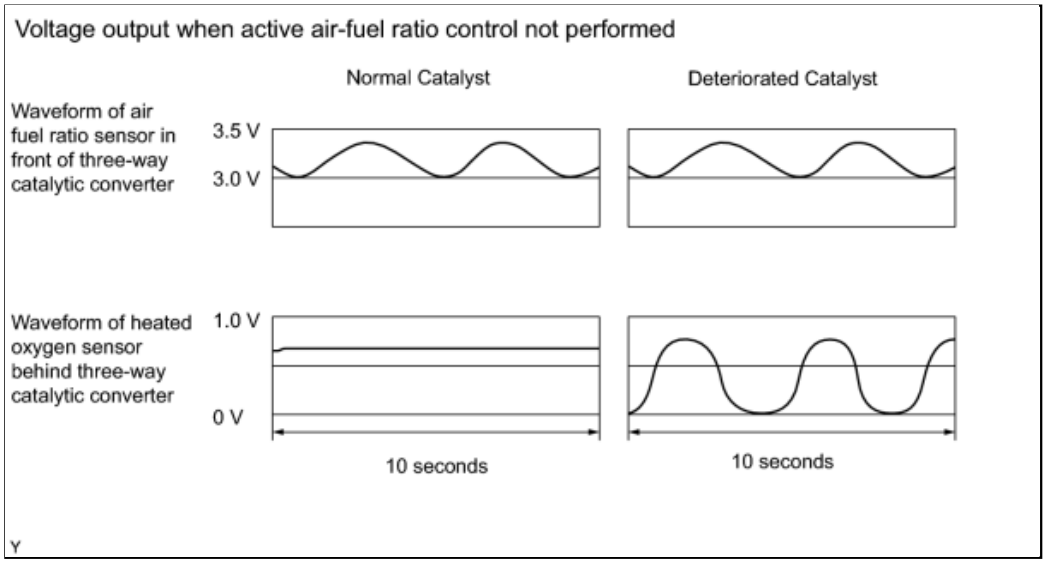

INSPECTION PROCEDURE

HINT:

Malfunctioning areas can be identified by performing the Control the Injection Volume for A/F sensor Active Test. The Control the Injection Volume for A/F sensor function can help to determine whether the air fuel ratio sensor, heated oxygen sensor and other

potential trouble areas are malfunctioning.

The following instructions describe how to conduct the Control the Injection Volume for A/F sensor operation using Techstream.

1. Connect the Techstream to the DLC3.
2. Start the engine.
3. Turn the Techstream on.
4. Warm up the engine at an engine speed of 2500 rpm for approximately 90 seconds.
5. Enter the following menus: Powertrain / Engine and ECT / Active Test / Control the Injection Volume for A/F sensor.
6. Perform the Active Test operation with the engine in an idling condition (press the RIGHT or LEFT button to change the fuel injection volume.)
7. Monitor the output voltages of the air fuel ratio and heated oxygen sensors (AFS Voltage B1 S1 and O2S B1 S2) displayed on the Techstream.

HINT:

- The Control the Injection Volume for A/F sensor operation lowers the fuel injection volume by 12.5% or increases the injection volume by 25%.
- Each sensor reacts in accordance with increases and decreases in the fuel injection volume.

TECHSTREAM DISPLAY (SENSOR)	INJECTION VOLUME	STATUS	VOLTAGE
AFS Voltage B1 S1 (Air fuel ratio sensor)	+25%	Rich	Less than 3.1 V
	-12.5%	Lean	More than 3.4 V
O2S B1 S2 (Heated oxygen sensor)	+25%	Rich	More than 0.55 V
	-12.5%	Lean	Less than 0.4 V

NOTICE:

The air fuel ratio sensor has an output delay of a few seconds and the heated oxygen sensor has a maximum output delay of approximately 20 seconds.

CASE	AIR FUEL RATIO SENSOR (SENSOR 1) OUTPUT VOLTAGE	HEATED OXYGEN SENSOR (SENSOR 2) OUTPUT VOLTAGE	MAIN SUSPECTED TROUBLE AREA
1	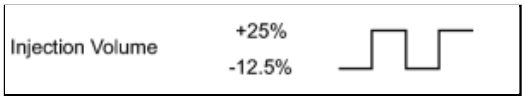 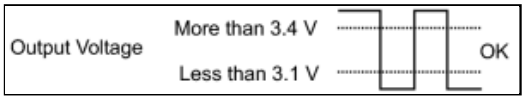	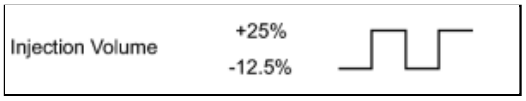 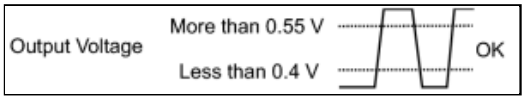	-
2	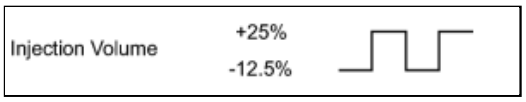 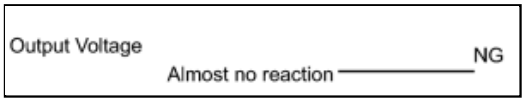	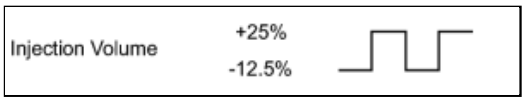 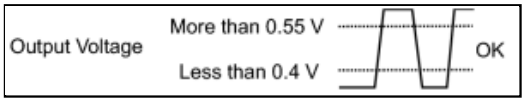	• Air fuel ratio sensor • Air fuel ratio sensor heater • Air fuel ratio sensor circuit
3			• Heated oxygen

CASE	AIR FUEL RATIO SENSOR (SENSOR 1) OUTPUT VOLTAGE	HEATED OXYGEN SENSOR (SENSOR 2) OUTPUT VOLTAGE	MAIN SUSPECTED TROUBLE AREA
	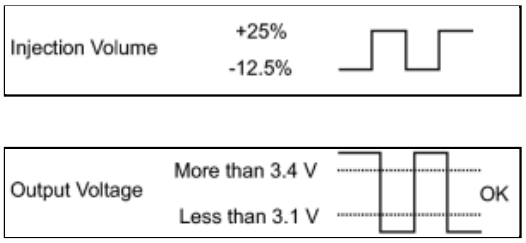	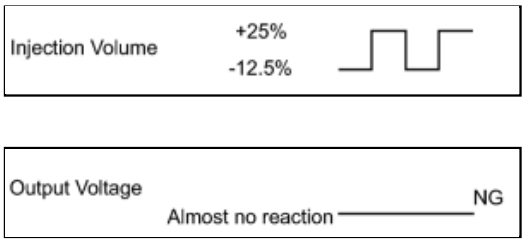	sensor • Heated oxygen sensor heater • Heated oxygen sensor circuit
4	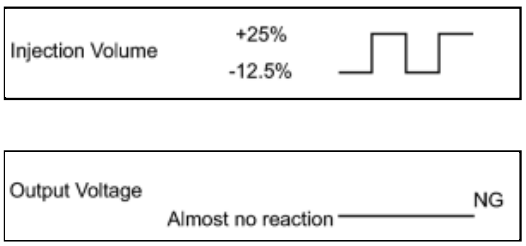	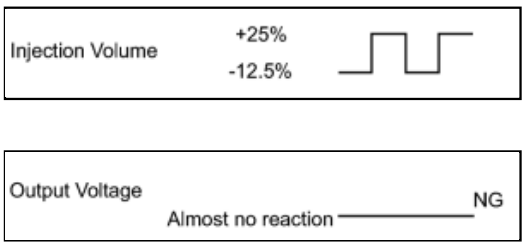	• Injector • Fuel pressure • Gas leak from exhaust system (Air fuel ratio extremely rich or lean)

- Following the Control the Injection Volume for A/F sensor procedure enables technicians to check and graph the voltage outputs of both the air fuel ratio and heated oxygen sensors.
- To display the graph, enter the following menus: Powertrain / Engine and ECT / Active Test / Control the Injection Volume for A/F Sensor / AFS Voltage B1 S1 and O2S B1 S2; then press the graph button on the Data List view.

HINT:

Read freeze frame data using the Techstream. The ECM records vehicle and driving condition information as freeze frame data the moment a DTC is stored. When troubleshooting, freeze frame data can be helpful in determining whether the vehicle was running or stopped, whether the engine was warmed up or not, whether the air fuel ratio was lean or rich, as well as other data recorded at the time of a malfunction.

PROCEDURE

1.	**CHECK ANY OTHER DTCS OUTPUT (IN ADDITION TO DTC P0420)**

(a) Connect the Techstream to the DLC3.

(b) Turn the ignition switch to ON.

(c) Turn the Techstream on.

(d) Enter the following menus: Powertrain / Engine and ECT / Trouble Codes.

(e) Read DTCs.

Result:

RESULT	PROCEED TO
P0420	A

RESULT	PROCEED TO
P0420 and other DTCs	B

HINT:

If any DTCs other than P0420 are output, troubleshoot those DTCs first.

B ▶ **GO TO DTC CHART**

A

2.	PERFORM ACTIVE TEST USING TECHSTREAM (CONTROL INJECTION VOLUME FOR A/F SENSOR)

(a) Connect the Techstream to the DLC3.

(b) Start the engine and warm it up.

(c) Turn the Techstream on.

(d) Run the engine at an engine speed of 2500 rpm for approximately 90 seconds.

(e) Enter the following menus: Powertrain / Engine and ECT / Active Test / Control the Injection Volume for A/F sensor.

(f) Perform the Active Test operation with the engine in an idling condition (press the RIGHT or LEFT button to change the fuel injection volume).

(g) Monitor the voltage outputs of the air fuel ratio sensor and heated oxygen sensor (AFS Voltage B1S1 and O2S B1S2) displayed on the Techstream.

HINT:

- The Control the Injection Volume for A/F sensor operation lowers the fuel injection volume by 12.5% or increases the injection volume by 25%.
- Each sensor reacts in accordance with increases and decreases in the fuel injection volume.

Standard:

TECHSTREAM DISPLAY (SENSOR)	INJECTION VOLUME	STATUS	VOLTAGE
AFS Voltage B1S1 (Air Fuel Ratio)	+25%	Rich	Less than 3.1
	-12.5%	Lean	More than 3.4
O2S B1S2 (Heated Oxygen)	+25%	Rich	More than 0.55
	-12.5%	Lean	Less than 0.4

Result:

STATUS AFS VOLTAGE B1S1	STATUS O2S B1S2	AIR FUEL RATIO CONDITION AND AIR FUEL RATIO AND HEATED OXYGEN SENSORS CONDITION	MISFIRE	MAIN SUSPECTED TROUBLE AREA	PROCEED TO
		Air fuel ratio sensor			

Lean: During Control the Injection Volume for A/F sensor, the air fuel ratio sensor output voltage (AFS Voltage) is consistently more than 3.4 V, and the heated oxygen sensor output voltage (O2S) is consistently less than 0.4 V.

- Three-way catalytic converter
- Gas leakage from exhaust system

A

Rich: During Control the Injection Volume for A/F sensor, the AFS Voltage is consistently less than 3.1 V, and the O2S is consistently more than 0.55 V.

Lean/Rich: During Control the Injection Volume for A/F sensor of the Active Test, the output voltage of the heated oxygen sensor alternates correctly.

C ▶ **CHECK FOR EXHAUST GAS LEAK**

B ▶ **REPLACE AIR FUEL RATIO SENSOR (SENSOR 1)**

A ▼

3.	**CHECK FOR EXHAUST GAS LEAK**

(a) Check exhaust system.

OK:

No gas leaks.

NG ▶ **REPAIR OR REPLACE EXHAUST GAS LEAK POINT**

OK ▼

4.	**REPLACE EXHAUST MANIFOLD CONVERTER SUB-ASSEMBLY (TWC: FRONT CATALYST)**

(a) Replace exhaust manifold converter sub-assembly INFO.

NEXT ▶ **REPLACE CENTER EXHAUST PIPE ASSEMBLY (TWC: REAR CATALYST)**

5.	**CHECK FOR EXHAUST GAS LEAK**

(a) Check exhaust system.

OK:

No gas leaks.

NG ▶ **REPAIR OR REPLACE EXHAUST GAS LEAK POINT**

OK ▶ **REPLACE HEATED OXYGEN SENSOR (SENSOR 2)**

Last Modified: 3-10-2010	6.4 C	**From:** 200901
Model Year: 2010	**Model:** Corolla	**Doc ID:** RM000002BHB01YX
Title: 2AZ-FE ENGINE CONTROL: SFI SYSTEM: P043E,P043F,P2401,P2402,P2419: Evaporative Emission System Reference Orifice Clog Up (2010 Corolla)		

DTC	**P043E**	**Evaporative Emission System Reference Orifice Clog Up**

DTC	**P043F**	**Evaporative Emission System Reference Orifice High Flow**

DTC	**P2401**	**Evaporative Emission Leak Detection Pump Stuck OFF**

DTC	**P2402**	**Evaporative Emission Leak Detection Pump Stuck ON**

DTC	**P2419**	**Evaporative Emission System Switching Valve Control Circuit Low**

DTC SUMMARY

DTC NO.	MONITORING ITEM	MALFUNCTION DETECTION CONDITION	TROUBLE AREA	DETECTION TIMING	DETECTION LOGIC
P043E	Reference orifice clogged	P043E, P043F, P2401, P2402 and P2419 present when one of following conditions met during key-off EVAP monitor: • Reference orifice clogged • Reference orifice high-flow • Leak	• Canister pump module (Reference orifice, leak detection pump, vent valve) • Connector/wire harness (Canister pump module - ECM) • EVAP system hose (pipe	While ignition switch OFF	2 trip
P043F	Reference orifice high-flow				
P2401	Leak detection pump stuck OFF				

DTC NO.	MONITORING ITEM	MALFUNCTION DETECTION CONDITION	TROUBLE AREA	DETECTION TIMING	DETECTION LOGIC
		detection pump OFF malfunction • Leak detection pump ON malfunction • Vent valve ON (close) malfunction	from air inlet port to canister pump module, canister filter, fuel tank vent hose) • ECM		
P2402	Leak detection pump stuck ON				
P2419	Vent valve stuck closed				

HINT:

The reference orifice is located inside the canister pump module.

DESCRIPTION

The description can be found in the EVAP (Evaporative Emission) System INFO .

HINT:

Unit expressions

- [kPa-a (mmHg-a)] denotes absolute pressure.
- [kPa-g (mmHg-g)] denotes gauge pressure (relative pressure).
- On the Techstream, choose the unit of measurement according to the inspection procedure.

INSPECTION PROCEDURE

Refer to the EVAP System INFO .

MONITOR DESCRIPTION

5 hours* after the ignition switch is turned off, the leak detection pump creates negative pressure (vacuum) in the EVAP system. The ECM monitors for leaks and actuator malfunctions based on the EVAP pressure.

HINT:

***: If the engine coolant temperature is not below 35°C (95°F) 5 hours after the ignition switch is turned off, the monitor check starts 2 hours later. If it is still not below 35°C (95°F) 7 hours after the ignition switch is turned off, the monitor check starts 2.5 hours later.**

SEQUENCE	OPERATION	DESCRIPTION	DURATION
-	ECM activation	The key-off monitor is activated by soak timer 5, 7 or 9.5 hours after ignition switch turned off.	-

SEQUENCE	OPERATION	DESCRIPTION	DURATION
A	Atmospheric pressure measurement	Vent valve is turned OFF (vent) and the EVAP system pressure is measured by ECM in order to register atmospheric pressure. If pressure in EVAP system is not between 70 kPa-a and 110 kPa-a (525 mmHg-a and 825 mmHg-a), the ECM cancels EVAP system monitor.	60 seconds
B	First reference pressure measurement	In order to determine reference pressure, the leak detection pump creates negative pressure (vacuum) through reference orifice and then ECM checks if the leak detection pump and vent valve operate normally.	60 seconds
C	EVAP system pressure measurement	Vent valve turned ON (closed) to shut the EVAP system. Negative pressure (vacuum) created in the EVAP system, and EVAP system pressure then measured. The measured value is memorized as it will be used in the leak check. If the EVAP pressure does not stabilize within 15 minutes, the ECM cancels EVAP system monitor.	15 minutes*
D	Purge VSV monitor	Purge VSV is opened and then the EVAP system pressure is measured by the ECM. A large increase indicates normality.	10 seconds
E	Second reference pressure measurement	After a second reference pressure measurement, the leak check is performed by comparing the first and second reference pressure. If stabilized system pressure is higher than second the reference pressure, the ECM determines that the EVAP system is leaking.	60 seconds
-	Final check	Atmospheric pressure is measured and then the monitor result is recorded by the ECM.	-

*: If only a small amount of fuel is in the fuel tank, it takes longer for the EVAP pressure to stabilize.

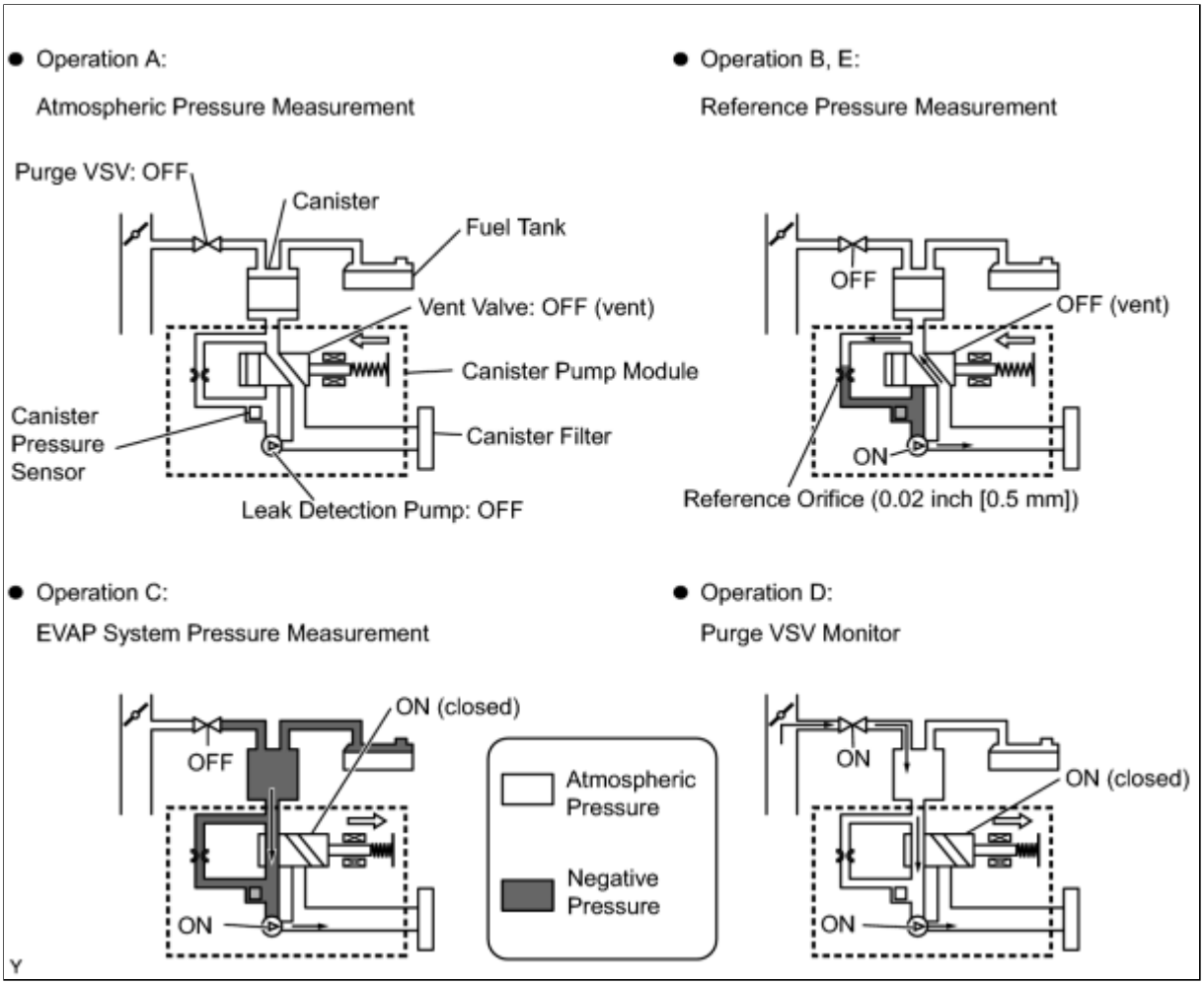

The leak detection pump creates negative pressure through the reference orifice (in operation B and E). When the system is normal, the EVAP pressure is between 724 to 752 mmHg* and saturated within a minute. If not, the ECM interprets this as a malfunction. The ECM will illuminate the MIL and set DTC if this malfunction is detected in consecutive drive cycles.

*: Typical value.

HINT:

"Saturated" indicates that the EVAP pressure change is less than 0.286 kPa-g (2.14 mmHg) in 60 seconds.

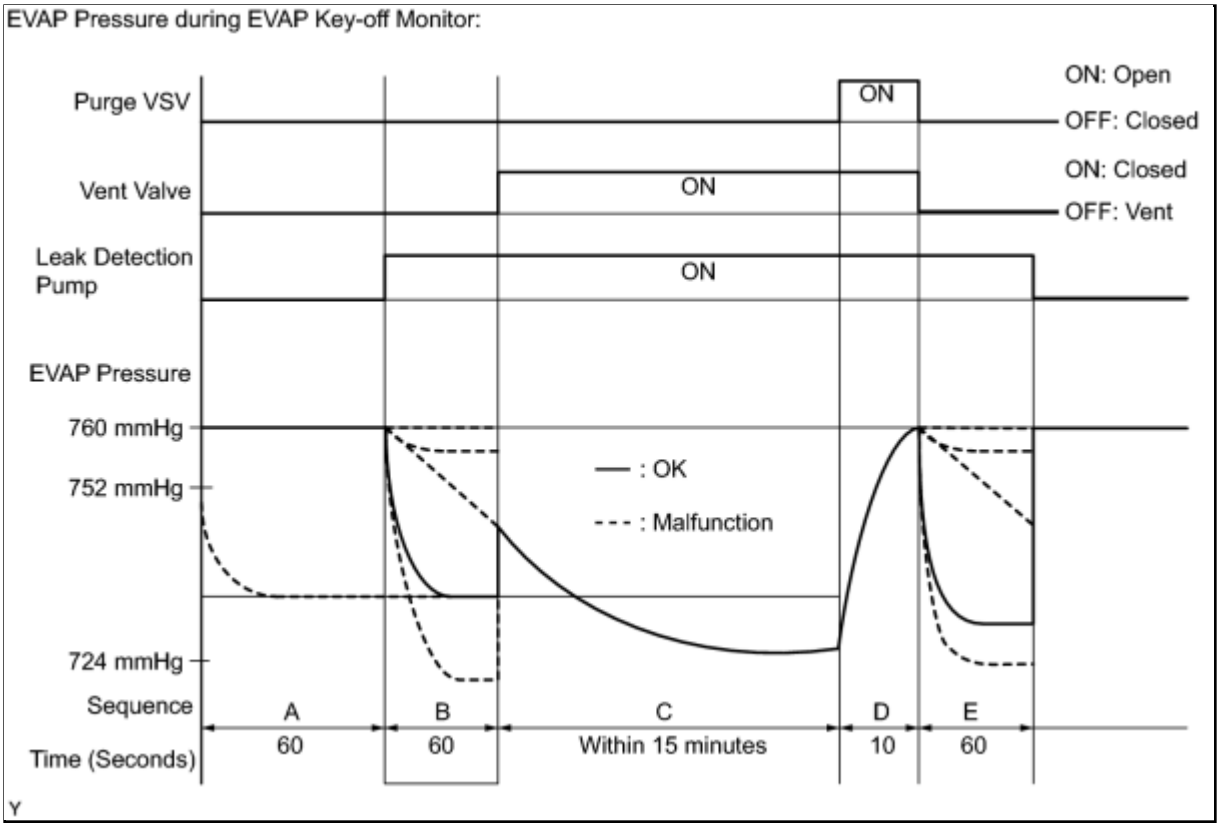

MONITOR STRATEGY

Required Sensors/Components	Canister pump module
Frequency of Operation	Once per driving cycle
Duration	Within 2 minutes
MIL Operation	2 driving cycles
Sequence of Operation	None

TYPICAL ENABLING CONDITIONS

Monitor runs whenever following DTCs are not present	None
Atmospheric pressure	70 to 110 kPa-a (525 to 825 mmHg-a)
Battery voltage	10.5 V or more
Vehicle speed	Below 2.5 mph (4 km/h)
Ignition switch	OFF
Time after key off	5, 7 or 9.5 hours
Canister pressure sensor malfunction (P0451, P0452 and P0453)	Not detected

Purge VSV	Not operated by scan tool
Vent valve	Not operated by scan tool
Leak detection pump	Not operated by scan tool
Both of following conditions are met before key off	Conditions 1 and 2
1. Duration that vehicle driven	5 minutes or more
2. EVAP purge operation	Performed
Engine coolant temperature	4.4 to 35°C (40 to 95°F)
Intake air temperature	4.4 to 35°C (40 to 95°F)

TYPICAL MALFUNCTION THRESHOLDS

"Saturated" indicates that the EVAP pressure change is less than 0.286 kPa-g (2.14 mmHg-g) in 60 seconds.

One of following conditions is met	-
EVAP pressure just after reference pressure measurement started	More than -1 kPa-g (-7.5 mmHg-g)
Reference pressure	Less than -4.85 kPa-g (-36.4 mmHg-g)
Reference pressure	-1.057 kPa-g (-7.93 mmHg-g) or more
Reference pressure	Not saturated within 60 seconds
Reference pressure difference between first and second	0.7 kPa-g (5.25 mmHg-g) or more

MONITOR RESULT

Refer to Checking Monitor Status INFO .

CONFIRMATION DRIVING PATTERN

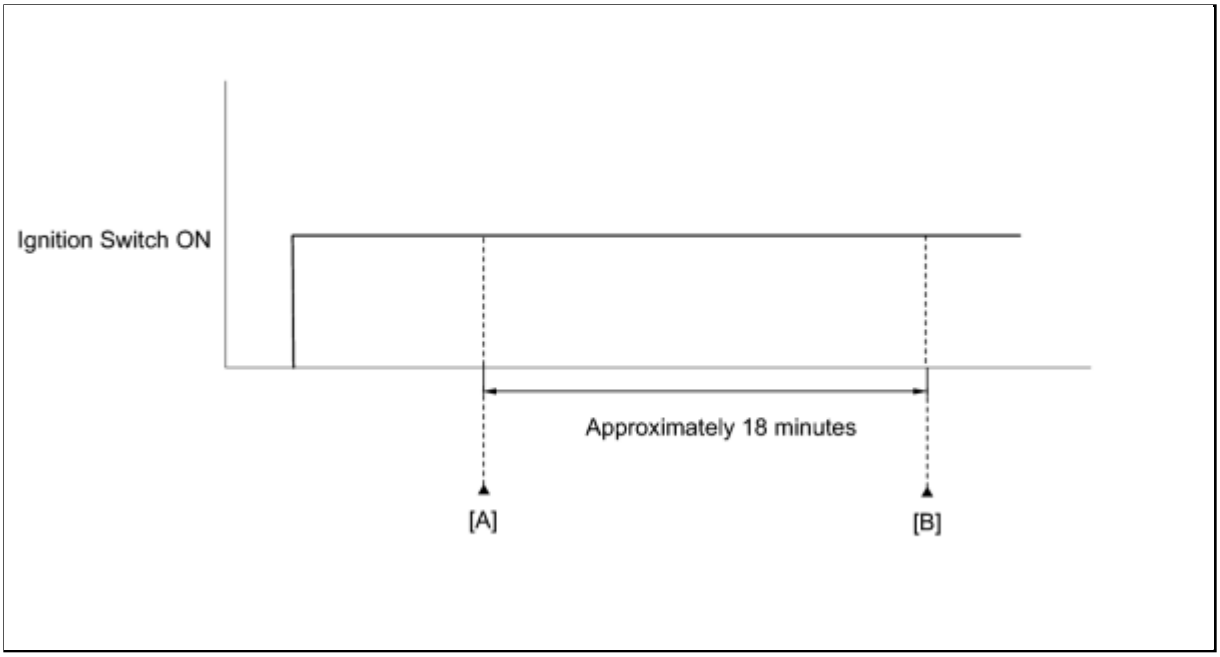

NOTICE:

- The Evaporative System Check (Automatic Mode) consists of 5 steps performed automatically by the Techstream. It takes a maximum of approximately 18 minutes.
- Do not perform the Evaporative System Check when the fuel tank is more than 90% full because the cut-off valve may be closed, making the fuel tank leak check unavailable.
- Do not run the engine during this operation.
- When the temperature of the fuel is 35°C (95°F) or higher, a large amount of vapor forms and any check results become inaccurate. When performing the Evaporative System Check, keep the fuel temperature below 35°C (95°F).

1. Connect the Techstream to the DLC3.
2. Turn the ignition switch to ON and turn the Techstream on.
3. Clear the DTCs (even if no DTCs are stored, perform the clear DTC procedure) INFO .
4. Turn the ignition switch off.
5. Turn the ignition switch to ON and turn the Techstream on.
6. Enter the following menus: Powertrain / Engine / Utility / Evaporative System Check / Automatic Mode [A].
7. After the "Evaporative System Check" is completed, check for All Readiness by entering the following menus: Powertrain / Engine / Utility / All readiness.
8. Input the DTC: P043E, P043F, P2401, P2402 or P2419.
9. Check the DTC judgment result [B].

TECHSTREAM DISPLAY	DESCRIPTION
NORMAL	○ DTC judgment completed ○ System normal
ABNORMAL	○ DTC judgment completed ○ System abnormal

TECHSTREAM DISPLAY	DESCRIPTION
INCOMPLETE	○ DTC judgment not completed ○ Perform driving pattern after confirming DTC enabling conditions
UNKNOWN	○ Unable to perform DTC judgment ○ Number of DTCs which do not fulfill DTC preconditions has reached ECU memory limit

HINT:

If the judgment result shows ABNORMAL, the system has a malfunction.

10. If the test result is UNKNOWN, enter the following menus: Powertrain / Engine / Trouble Codes / Pending.
11. Read Pending DTCs.

HINT:

If a pending DTC is output, the system is malfunctioning.

12. If the test result is INCOMPLETE or UNKNOWN and no pending DTC is output, perform a universal trip and check for permanent DTCs INFO .

HINT:

- If a permanent DTC is output, the system is malfunctioning.
- If no permanent DTC is output, the system is normal.

Last Modified: 3-10-2010	6.4 C	**From:** 200901
Model Year: 2010	**Model:** Corolla	**Doc ID:** RM000000SWF05FX
Title: 2AZ-FE ENGINE CONTROL: SFI SYSTEM: P0441: Evaporative Emission Control System Incorrect Purge Flow (2010 Corolla)		

DTC	**P0441**	**Evaporative Emission Control System Incorrect Purge Flow**

DTC SUMMARY

DTC NO.	MONITORING ITEM	MALFUNCTION DETECTION CONDITION	TROUBLE AREA	DETECTION TIMING	DETECTION LOGIC
P0441	Purge VSV (Vacuum Switching Valve) stuck open	Leak detection pump creates negative pressure (vacuum) in EVAP system and EVAP system pressure measured. Reference pressure measured at start and at end of leak check. If stabilized pressure higher than [second reference pressure x 0.35], ECM determines that purge VSV stuck open.	• Purge VSV • Connector/wire harness (Purge VSV - ECM) • ECM • Canister pump module • Leak from EVAP system	While ignition switch off	2 trip
	Purge VSV stuck closed	After EVAP leak check performed, purge VSV turned ON (open), and atmospheric air introduced into EVAP system. Reference pressure measured at start and at end of check. If pressure does not return to near atmospheric pressure, ECM determines that purge VSV stuck closed.	• Purge VSV • Connector/wire harness (Purge VSV - ECM) • ECM • Canister pump module • Leak from EVAP system	While ignition switch off	2 trip
	Purge flow	While engine running, following conditions successively met: • Negative pressure not created in EVAP system when purge VSV	• Purge VSV • Connector/wire harness (Purge VSV - ECM) • Leak from EVAP line (Purge VSV - Intake	While engine running	2 trip

DTC NO.	MONITORING ITEM	MALFUNCTION DETECTION CONDITION	TROUBLE AREA	DETECTION TIMING	DETECTION LOGIC
		turned ON (open) • EVAP system pressure change less than 0.4 kPa-g (3.0 mmHg-g) when vent valve turned ON (closed) • Atmospheric pressure change before and after purge flow monitor less than 0.1 kPa-g (0.75 mmHg-g)	manifold) • ECM		

DESCRIPTION

The description can be found in the EVAP (Evaporative Emission) System INFO .

INSPECTION PROCEDURE

Refer to the EVAP System INFO .

HINT:

Unit expressions

- [kPa-a (mmHg-a)] denotes absolute pressure.
- [kPa-g (mmHg-g)] denotes gauge pressure (relative pressure).
- On the Techstream, choose the unit of measurement according to the inspection procedure.

MONITOR DESCRIPTION

The two monitors, Key-Off and Purge Flow, are used to detect malfunctions relating to DTC P0441. The Key-Off monitor is initiated by the ECM internal timer, known as the soak timer, 5 hours* after the ignition switch is turned to off. The purge flow monitor runs while the engine is running.

1. KEY-OFF MONITOR

   5 hours* after the ignition switch is turned to off, the leak detection pump creates negative pressure (vacuum) in the EVAP system. The ECM monitors for leaks and actuator malfunctions based on the EVAP pressure.

HINT:

***: If the engine coolant temperature is not below 35°C (95°F) 5 hours after the ignition switch is turned to off, the monitor check starts 2 hours later. If it is still not below 35°C (95°F) 7 hours after the ignition switch is turned to off, the monitor check starts 2.5 hours later.**

SEQUENCE	OPERATION	DESCRIPTION	DURATION
-	ECM activation	The key-off monitor is activated by soak timer 5, 7 or 9.5 hours after ignition switch turned OFF.	-
A	Atmospheric pressure measurement	Vent valve is turned OFF (vent) and the EVAP system pressure is measured by the ECM in order to register atmospheric pressure. If pressure in EVAP system is not between 70 kPa-a and 110 kPa-a (525 mmHg-a and 825 mmHg-a), the ECM cancels EVAP system monitor.	60 seconds
B	First reference pressure measurement	In order to determine the reference pressure, the leak detection pump creates negative pressure (vacuum) through the reference orifice and then the ECM checks if the leak detection pump and vent valve operate normally.	60 seconds
C	EVAP system pressure measurement	Vent valve turned ON (closed) to shut the EVAP system. Negative pressure (vacuum) created in the EVAP system, and the EVAP system pressure then measured. The measured value is memorized as it will be used in the leak check. If the EVAP pressure does not stabilize within 15 minutes, the ECM cancels the EVAP system monitor.	15 minutes*
D	Purge VSV monitor	Purge VSV is opened and then the EVAP system pressure is measured by the ECM. A large increase indicates normality.	10 seconds
E	Second reference pressure measurement	After a second reference pressure measurement, the leak check is performed by comparing the first and second reference pressure. If stabilized system pressure is higher than the second reference pressure, the ECM determines that the EVAP system is leaking.	60 seconds
-	Final check	Atmospheric pressure is measured and then the monitor result is recorded by the ECM.	-

*: If only a small amount of fuel is in the fuel tank, it takes longer for the EVAP pressure to stabilize.

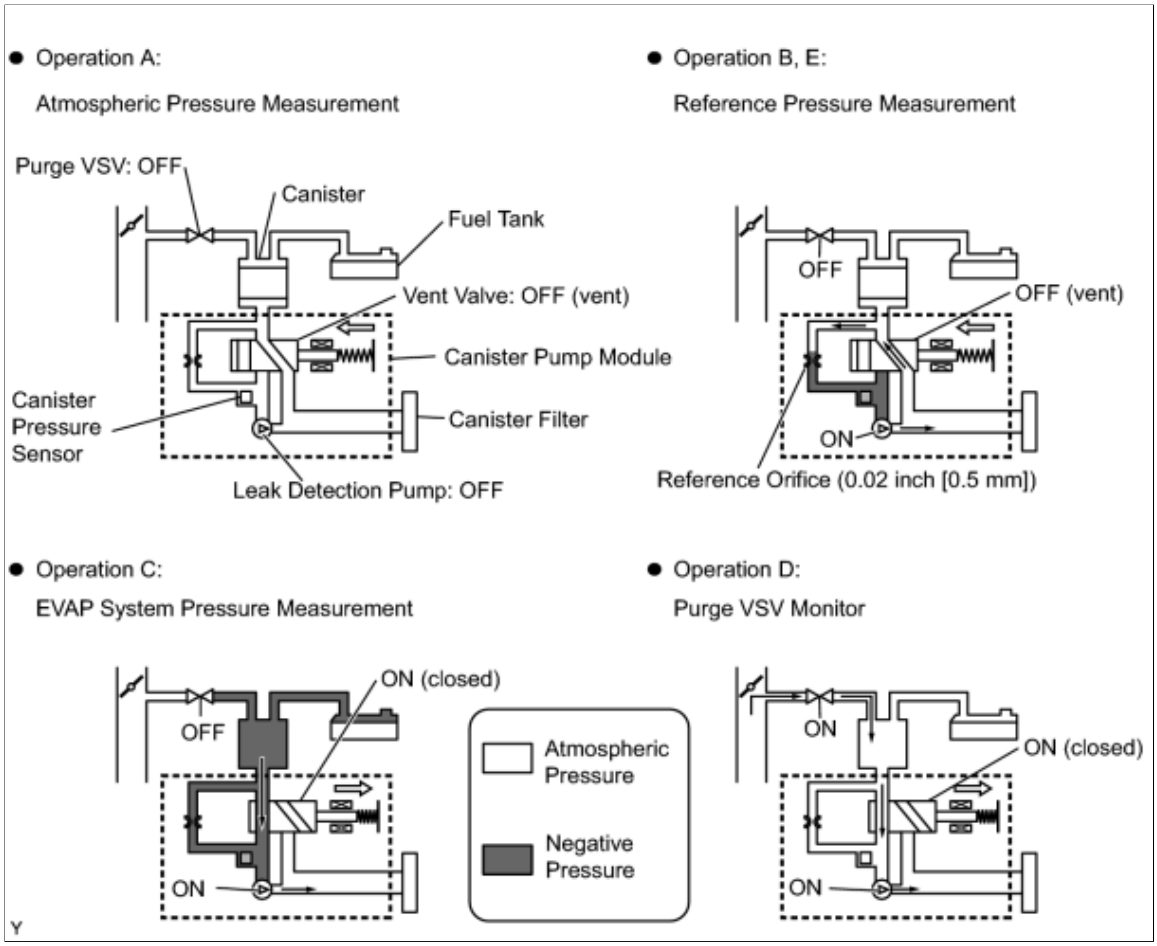

a. Purge VSV stuck open

In operation C, the leak detection pump creates negative pressure (vacuum) in the EVAP system. The EVAP system pressure is then measured by the ECM using the canister pressure sensor. If the stabilized system pressure is higher than [second reference pressure x 0.35], the ECM interprets this as the purge VSV (Vacuum Switching Valve) being stuck open. The ECM illuminates the MIL and sets the DTC (2 trip detection logic).

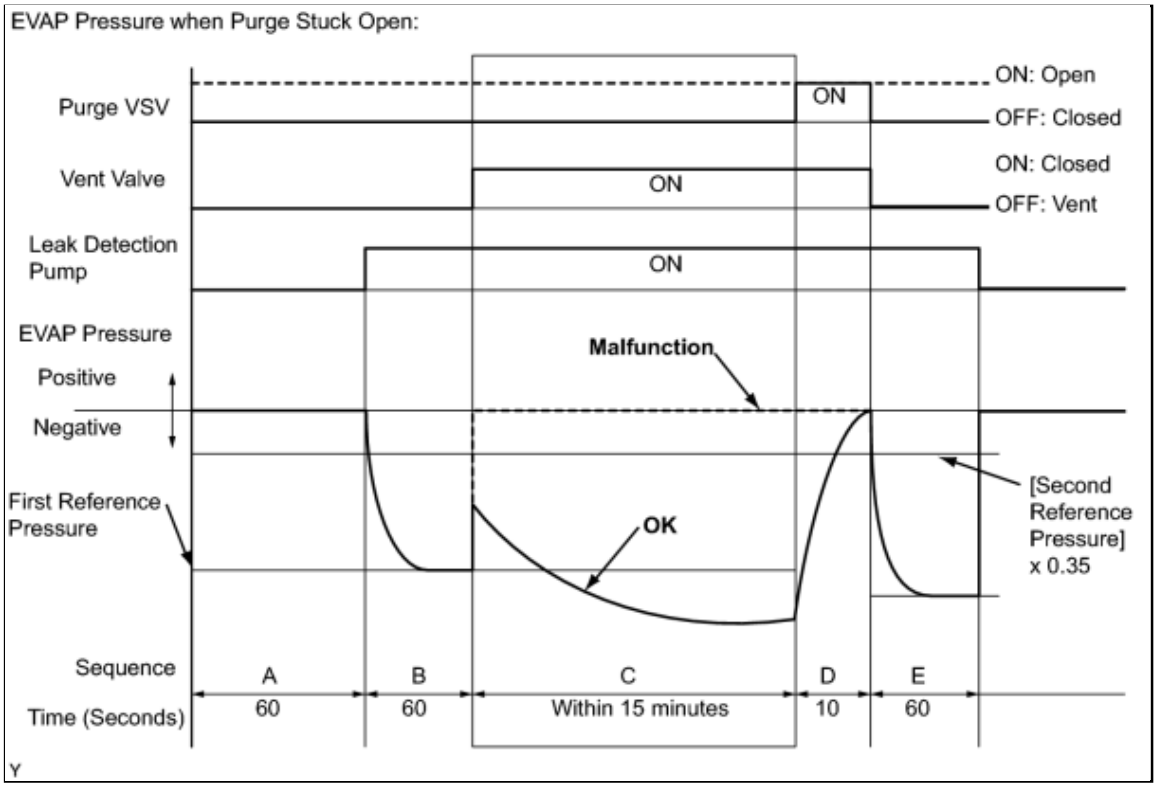

b. Purge VSV stuck closed

In operation D, the canister pressure sensor measures the EVAP system pressure. The pressure measurement for the purge VSV monitor is begun when the purge VSV is turned ON (open) after the EVAP leak check. When the measured pressure indicates an increase of 0.3 kPa-g (2.25 mmHg-g) or more, the purge VSV is functioning normally. If the pressure does not increase, the ECM interprets this as the purge VSV being stuck closed. The ECM illuminates the MIL and sets the DTC (2 trip detection logic).

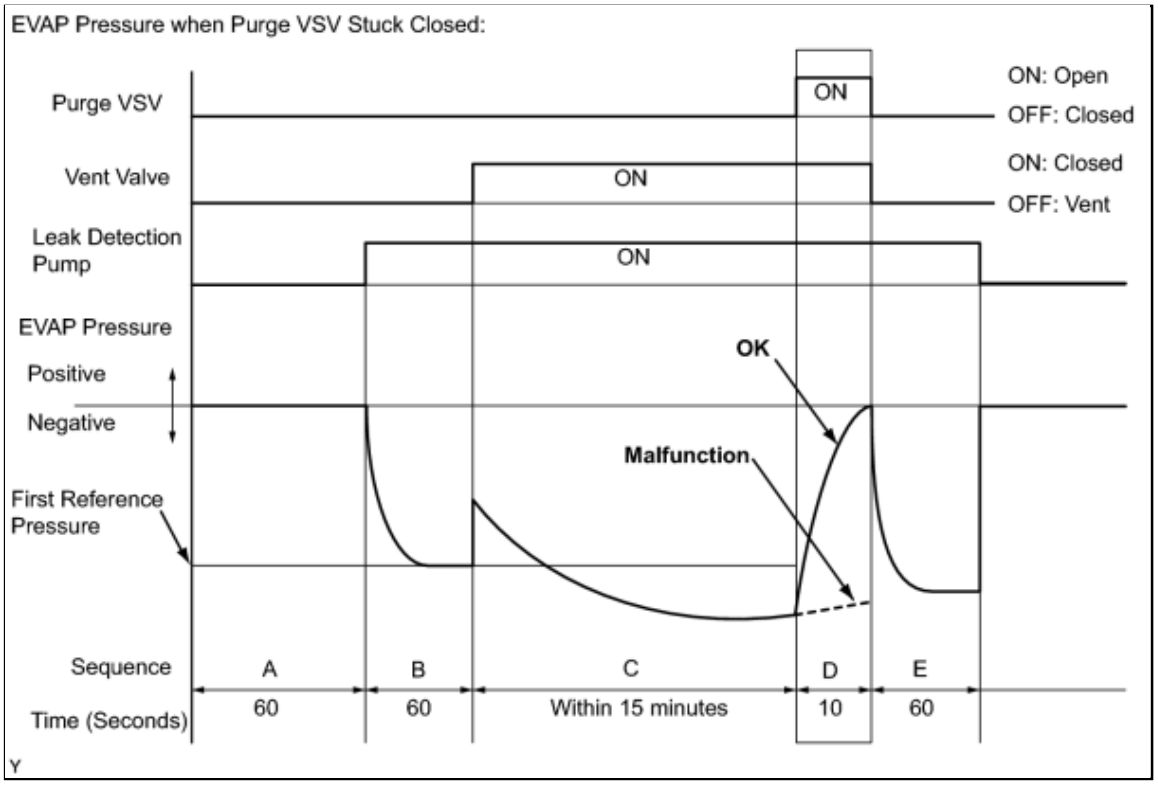

2. PURGE FLOW MONITOR

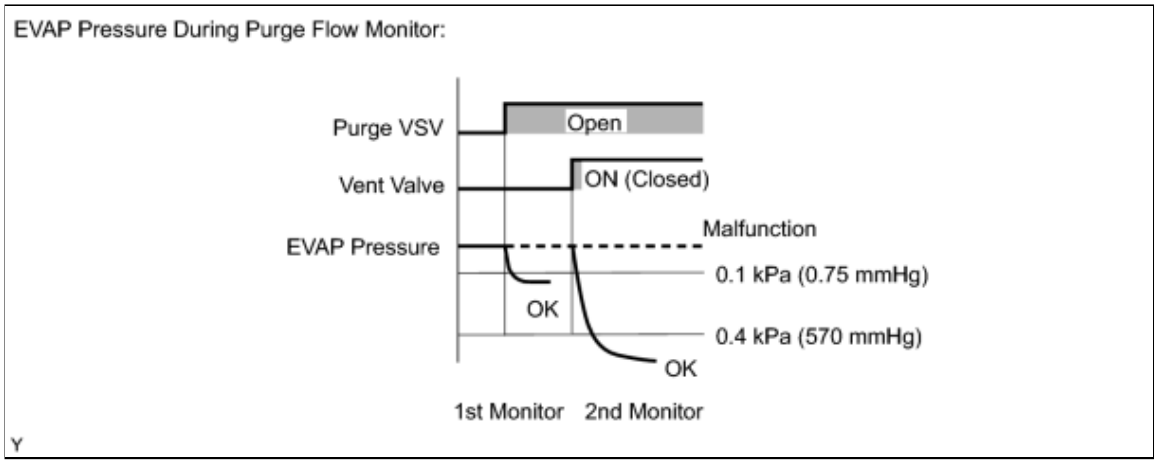

The purge flow monitor consists of two monitors. The 1st monitor is conducted every time and the 2nd monitor is activated if necessary.

- The 1st monitor

  While the engine is running and the purge VSV is ON (open), the ECM monitors the purge flow by measuring the EVAP pressure change. If negative pressure is not created, the ECM begins the 2nd monitor.

- The 2nd monitor

  The vent valve is turned ON (closed) and the EVAP pressure is then measured. If the variation in the pressure is less than 0.4 kPa-g (3.0 mmHg-g), the ECM interprets this as the purge VSV being stuck closed, and illuminates the MIL and sets DTC P0441 (2 trip detection logic).

Atmospheric pressure check:

In order to ensure reliable malfunction detection, the variation between the atmospheric pressures, before and after the purge flow monitor is performed, is measured by the ECM.

OBD II MONITOR SPECIFICATIONS

1. Key-off Monitor

Monitor Strategy

Required Sensors/Components	Purge VSV Canister pump module
Frequency of Operation	Once per driving cycle
Duration	Within 15 minutes (varies with fuel in tank)
MIL Operation	2 driving cycles
Sequence of Operation	None

Typical Enabling Conditions

EVAP key-off monitor runs when all of following conditions are met	-
Atmospheric pressure	70 to 110 kPa-a (525 to 825 mmHg-a)
Battery voltage	10.5 V or more
Vehicle speed	Below 2.5 mph (4 km/h)
Ignition switch	OFF
Time after key off	5 or 7 or 9.5 hours
Canister pressure sensor malfunction (P0451, P0452 and P0453)	Not detected
Purge VSV	Not operated by scan tool
Vent valve	Not operated by scan tool
Leak detection pump	Not operated by scan tool
Both of following conditions are met before key off	Conditions 1 and 2
1. Duration that vehicle driven	5 minutes or more
2. EVAP purge operation	Performed
Engine coolant temperature	4.4 to 35°C (40 to 95°F)
Intake air temperature	4.4 to 35°C (40 to 95°F)

Typical Malfunction Thresholds

Purge VSV stuck open:	-
EVAP pressure when vacuum introduction complete	Higher than reference pressure x 0.35

Purge VSV stuck closed:	-
EVAP pressure change after purge VSV ON (open)	Less than 0.3 kPa-g (2.25 mmHg-g)

OBD II MONITOR SPECIFICATIONS

1. Purge Flow Monitor

Monitor Strategy

Required Sensors/Components	Purge VSV Canister pump module
Frequency of Operation	Once per driving cycle
Duration	Within 10 minutes
MIL Operation	2 driving cycles
Sequence of Operation	None

Typical Enabling Conditions

Monitor runs whenever following DTCs are not present	None
Engine	Running
Engine coolant temperature	4.4°C (40°F) or more
Intake air temperature	4.4°C (40°F) or more
Canister pressure sensor malfunction	Not detected
Purge VSV	Not operated by scan tool
EVAP system check	Not operated by scan tool
Battery voltage	10 V or more
Purge duty cycle	8% or more

Typical Malfunction Thresholds

Both of following conditions are met	Conditions 1 and 2
1. EVAP pressure change when purge operation started	Less than 0.1 kPa-g (0.75 mmHg-g)
2. EVAP pressure change during purge operation when vent valve closed	Less than 0.4 kPa-g (3.0 mmHg-g)

MONITOR RESULT

Refer to Checking Monitor Status INFO .

CONFIRMATION DRIVING PATTERN

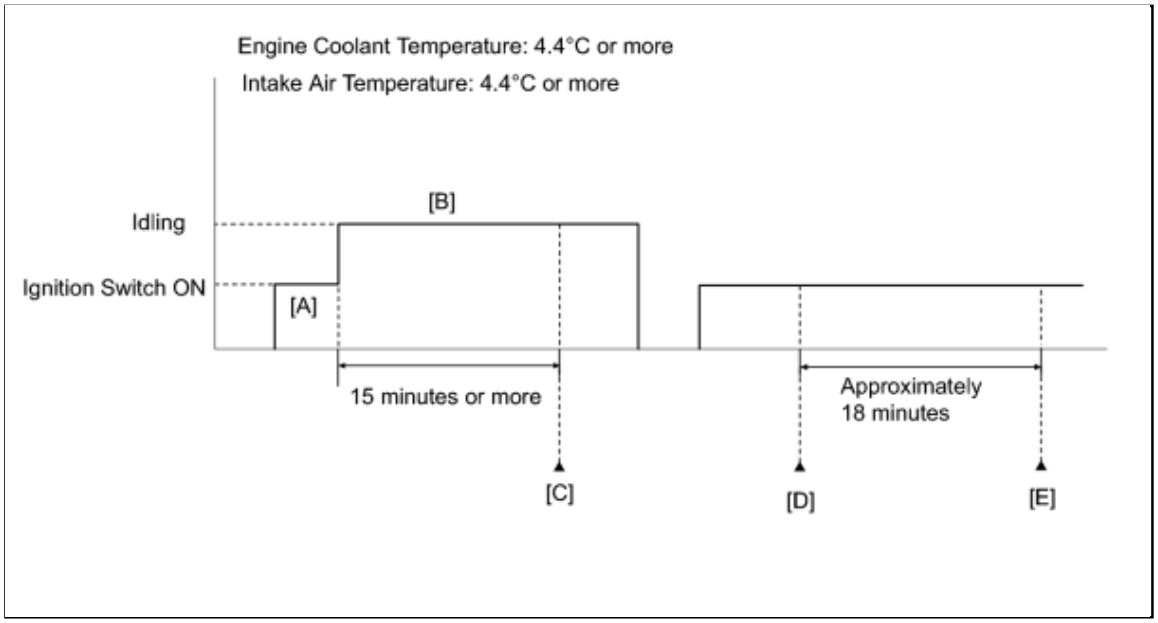

1. Connect the Techstream to the DLC3.
2. Turn the ignition switch to ON and turn the Techstream on.
3. Clear the DTCs (even if no DTCs are stored, perform the clear DTC procedure) INFO .
4. Turn the ignition switch off.
5. Turn the ignition switch to ON and turn the Techstream on [A].
6. Start the engine and wait 15 minutes or more [B].
7. Enter the following menus: Powertrain / Engine / Utility / All readiness.
8. Input the DTC: P0441.
9. Check the DTC judgment result [C].

TECHSTREAM DISPLAY	DESCRIPTION
NORMAL	○ DTC judgment completed ○ System normal
ABNORMAL	○ DTC judgment completed ○ System abnormal
INCOMPLETE	○ DTC judgment not completed ○ You should perform driving pattern after confirming DTC enabling conditions
UNKNOWN	○ Unable to perform DTC judgment ○ Number of DTCs which do not fulfill DTC preconditions has reached ECU memory limit

NOTICE:

- The Evaporative System Check (Automatic Mode) consists of 5 steps performed automatically by the Techstream. It takes a maximum of approximately 18 minutes.
- Do not perform the Evaporative System Check when the fuel tank is more than 90% full because the cut-off valve may be closed, making the fuel tank leak check unavailable.
- Do not run the engine during this operation.

- When the temperature of the fuel is 35°C (95°F) or higher, a large amount of vapor forms and any check results become inaccurate. When performing the Evaporative System Check, keep the fuel temperature below 35°C (95°F).

10. Turn the ignition switch to ON and turn the Techstream on.
11. Clear the DTCs (even if no DTCs are stored, perform the clear DTC procedure) INFO .
12. Turn the ignition switch off.
13. Turn the ignition switch to ON and turn the Techstream on.
14. Enter the following menus: Powertrain / Engine / Utility / Evaporative System Check / Automatic Mode [D].
15. After the "Evaporative System Check" is completed, check for All Readiness by entering the following menus: Powertrain / Engine / Utility / All Readiness.
16. Input the DTC: P0441.
17. Check the DTC judgment result [E].

TECHSTREAM DISPLAY	DESCRIPTION
NORMAL	- DTC judgment completed - System normal
ABNORMAL	- DTC judgment completed - System abnormal
INCOMPLETE	- DTC judgment not completed - Perform driving pattern after confirming DTC enabling conditions
UNKNOWN	- Unable to perform DTC judgment - Number of DTCs which do not fulfill DTC preconditions has reached ECU memory limit

HINT:

If the judgment result shows ABNORMAL, the system has a malfunction.

18. If the test result is UNKNOWN, enter the following menus: Powertrain / Engine / Trouble Codes / Pending.
19. Read Pending DTCs.

HINT:

If a pending DTC is output, the system is malfunctioning.

20. If the test result is INCOMPLETE or UNKNOWN and no pending DTC is output, perform a universal trip and check for permanent DTCs INFO .

HINT:

- If a permanent DTC is output, the system is malfunctioning.
- If no permanent DTC is output, the system is normal.

Last Modified: 3-10-2010	6.4 C	**From:** 200901
Model Year: 2010	**Model:** Corolla	**Doc ID:** RM0000012MC02HX
Title: 2AZ-FE ENGINE CONTROL: SFI SYSTEM: P0451-P0453: Evaporative Emission Control System Pressure Sensor Range / Performance (2010 Corolla)		

DTC	**P0451**	**Evaporative Emission Control System Pressure Sensor Range / Performance**

DTC	**P0452**	**Evaporative Emission Control System Pressure Sensor / Switch Low Input**

DTC	**P0453**	**Evaporative Emission Control System Pressure Sensor / Switch High Input**

DTC SUMMARY

DTC NO.	MONITORING ITEM	MALFUNCTION DETECTION CONDITION	TROUBLE AREA	DETECTION TIMING	DETECTION LOGIC
P0451	Canister pressure sensor noise	Sensor output voltage fluctuates frequently within certain time period.	• Canister pump module • Connector/wire harness (Canister pump module - ECM) • EVAP system hose (pipe from air inlet port to canister pump module, canister filter, fuel tank vent hose) • ECM	• EVAP monitoring (ignition switch off) • Engine running	2 trip
	Canister pressure sensor signal becomes fixed/flat	Sensor output voltage does not vary within certain time period.	• Canister pump module • Connector/wire harness (Canister pump module - ECM) • EVAP system hose (pipe from air inlet port to canister pump module, canister filter, fuel tank vent hose) • ECM	• EVAP monitoring (ignition switch off)	2 trip
P0452	Canister pressure sensor low input	EVAP pressure less than 42.1 kPa for 0.5 seconds.	• Canister pump module • Connector/wire harness (Canister pump module - ECM) • EVAP system hose (pipe from air inlet port to canister pump module, canister filter, fuel tank vent hose) • ECM	• Ignition switch ON • EVAP monitoring (ignition switch off)	1 trip

DTC NO.	MONITORING ITEM	MALFUNCTION DETECTION CONDITION	TROUBLE AREA	DETECTION TIMING	DETECTION LOGIC
P0453	Canister pressure sensor high input	EVAP pressure more than 123.8 kPa for 0.5 seconds.	• Canister pump module • Connector/wire harness (Canister pump module - ECM) • EVAP system hose (pipe from air inlet port to canister pump module, canister filter, fuel tank vent hose) • ECM	• Ignition switch ON • EVAP monitoring (ignition switch off)	1 trip

HINT:

The canister pressure sensor is built into the canister pump module.

DESCRIPTION

The description can be found in the EVAP (Evaporative Emission) System INFO .

HINT:

Unit expressions

- [kPa-a (mmHg-a)] denotes absolute pressure.
- [kPa-g (mmHg-g)] denotes gauge pressure (relative pressure).
- On the Techstream, choose the unit of measurement according to the inspection procedure.

MONITOR DESCRIPTION

Canister Pressure Sensor Specification:

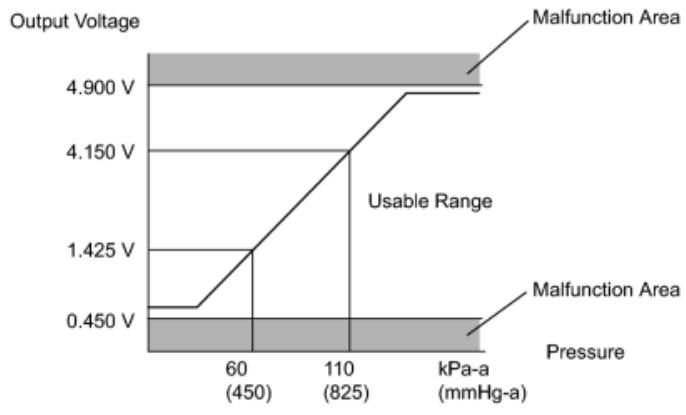

HINT:

Standard atmospheric pressure is 101.3 kPa-a (760 mmHg-a)

1. DTC P0451: Canister pressure sensor noise or fixed/flat

If the canister pressure sensor voltage output fluctuates rapidly for 10 seconds, the ECM stops the EVAP system monitor. The ECM interprets this as noise from the canister pressure sensor, and stops the EVAP system monitor. The ECM then illuminates the MIL and sets the DTC.

Alternatively, if the sensor voltage output does not change for 10 seconds, the ECM interprets this as the sensor being fixed/flat, and stops the monitor. The ECM then illuminates the MIL and sets the DTC.

(Both malfunctions are detected by 2 trip detection logic.)

2. DTC P0452: Canister pressure sensor voltage low

If the canister pressure sensor voltage output [pressure] is below 0.45 V [42.1 kPa-a (315.7 mmHg-a)], the ECM interprets this as an open or short circuit malfunction in the canister pressure sensor or its circuit, and stops the EVAP system monitor. The ECM then illuminates the MIL and sets the DTC (1 trip detection logic).

3. DTC P0453: Canister pressure sensor voltage high

If the canister pressure sensor voltage output [pressure] is 4.9 V [123.8 kPa-a (928.5 mmHg-a)] or more, the ECM interprets this as an open or short circuit malfunction in the canister pressure sensor or its circuit, and stops the EVAP system monitor. The ECM then illuminates the MIL and sets the DTC (1 trip detection logic).

MONITOR STRATEGY

Required Sensors/Components	Canister pump module
Frequency of Operation	Once per driving cycle: P0451 sensor fixed/flat Continuous: P0451 sensor noise, P0452 and P0453
Duration	0.5 seconds: P0452 and P0453 Less than 15 seconds: P0451 (Noise Monitor) Less than 2 minutes: P0451 (Fixed/flat monitor)
MIL Operation	Immediate: P0452 and P0453 2 driving cycles: P0451
Sequence of Operation	None

TYPICAL ENABLING CONDITIONS

P0451 (Noise monitor)

Monitor runs whenever following DTCs not present	None
Atmospheric pressure (absolute pressure)	70 to 110 kPa-a (525 to 825 mmHg-a)
Battery voltage	10.5 V or more
Intake air temperature	4.4 to 35°C (40 to 95°F)
Canister pressure sensor malfunction (P0452, 0453)	Not detected
Either of following conditions met	A or B
A. Engine condition	Running
B. Time after key off	5 or 7 or 9.5 hours

P0451 (Fixed/flat monitor)

Monitor runs whenever following DTCs are not present	None
Battery voltage	10.5 V or more
Intake air temperature	4.4 to 35°C (40 to 95°F)
Canister pressure sensor malfunction (P0452, 0453)	Not detected
Atmospheric pressure (absolute pressure)	70 to 110 kPa-a (525 to 825 mmHg-a)
Time after key off	5 or 7 or 9.5 hours

P0452 and P0453

Monitor runs whenever following DTCs are not present	None
Either of following conditions is met	(a) or (b)
(a) Ignition switch	ON
(b) Soak timer	ON

TYPICAL MALFUNCTION THRESHOLDS

P0451: Canister Pressure Sensor Noise

Frequency that EVAP pressure change 0.3 kPa-g (2.25 mmHg-g) or more	10 times or more in 10 seconds

P0451: Canister Pressure Sensor Fixed/Flat

EVAP pressure change during reference pressure	Less than 0.65 kPa-g (4.87 mmHg-g)

P0452: Canister Pressure Sensor Low Voltage

EVAP pressure	Less than 42.1 kPa-a (315.7 mmHg-a)

P0453: Canister Pressure Sensor High Voltage

EVAP pressure	More than 123.8 kPa-a (928.5 mmHg-a)

CONFIRMATION DRIVING PATTERN

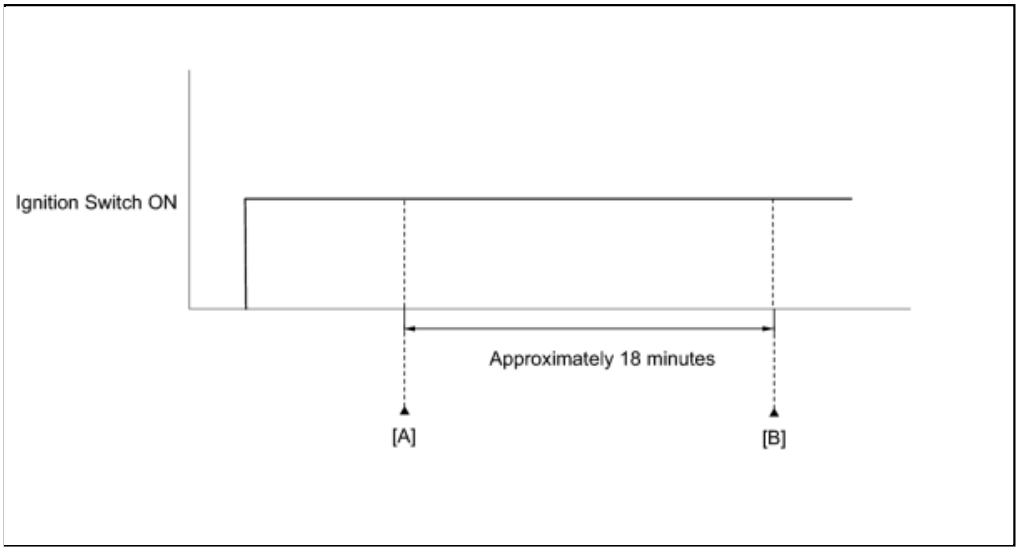

NOTICE:

- The Evaporative System Check (Automatic Mode) consists of 5 steps performed automatically by the Techstream. It takes a maximum of approximately 18 minutes.
- Do not perform the Evaporative System Check when the fuel tank is more than 90% full because the cut-off valve may be closed, making the fuel tank leak check unavailable.
- Do not run the engine during this operation.
- When the temperature of the fuel is 35°C (95°F) or higher, a large amount of vapor forms and any check results become inaccurate. When performing the Evaporative System Check, keep the fuel temperature below 35°C (95°F).

1. Connect the Techstream to the DLC3.
2. Turn the ignition switch to ON and turn the Techstream on.
3. Enter the following menus: Powertrain / Engine / Data List / Intake Air.

4. Clear the DTCs (even if no DTCs are stored, perform the clear DTC procedure) INFO .
5. Turn the ignition switch off.
6. Turn the ignition switch to ON and turn the Techstream on.
7. Enter the following menus: Powertrain / Engine / Utility / Evaporative System Check / Automatic Mode [A].
8. After the "Evaporative System Check" is completed, check for All Readiness by entering the following menus: Powertrain / Engine / Utility / All readiness.
9. Input the DTC: P0451, P0452 or P0453.
10. Check the DTC judgment result [B].

TECHSTREAM DISPLAY	DESCRIPTION
NORMAL	○ DTC judgment completed ○ System normal
ABNORMAL	○ DTC judgment completed ○ System abnormal
INCOMPLETE	○ DTC judgment not completed ○ Perform driving pattern after confirming DTC enabling conditions
UNKNOWN	○ Unable to perform DTC judgment ○ Number of DTCs which do not fulfill DTC preconditions has reached ECU memory limit

HINT:

If the judgment result shows ABNORMAL, the system has a malfunction.

11. If the test result is UNKNOWN, enter the following menus: Powertrain / Engine / Trouble Codes / Pending.
12. Read Pending DTCs.

HINT:

If a pending DTC is output, the system is malfunctioning.

13. If the test result is INCOMPLETE or UNKNOWN and no pending DTC is output, perform a universal trip and check for permanent DTCs INFO .

HINT:

- If a permanent DTC is output, the system is malfunctioning.
- If no permanent DTC is output, the system is normal.

WIRING DIAGRAM

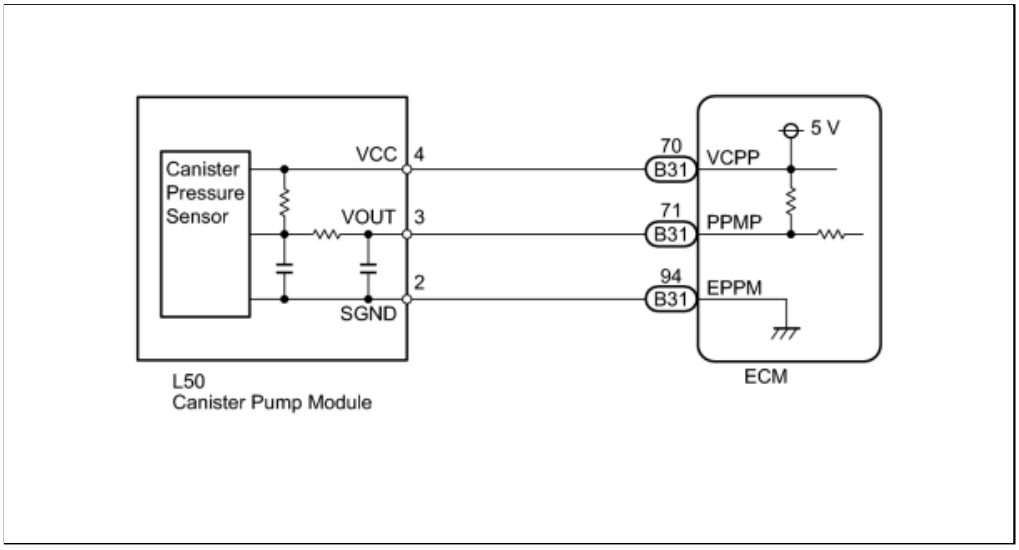

INSPECTION PROCEDURE

NOTICE:

- When a vehicle is brought into the workshop, leave it as it is. Do not change the vehicle condition. For example, do not tighten the fuel cap.
- Do not disassemble the canister pump module.
- The Techstream is required to conduct the following diagnostic troubleshooting procedure.

PROCEDURE

1.	**CONFIRM DTC AND EVAP PRESSURE**

(a) Connect the Techstream to the DLC3.

(b) Turn the ignition switch to ON (do not start the engine).

(c) Turn the Techstream on.

(d) Enter the following menus: Powertrain / Engine and ECT / Trouble Codes.

(e) Read DTCs.

(f) Enter the following menus: Powertrain / Engine and ECT / Data List / EVAP / Vapor Pressure Pump.

(g) Read the EVAP (Evaporative Emission) pressure displayed on the Techstream.

Result:

DISPLAY (DTC OUTPUT)	TEST RESULT	SUSPECTED TROUBLE AREA	PROCEED TO
P0451	-	Canister pressure sensor	C
P0452	Less than 45 kPa-a (430 mmHg-a)	• Wire harness/connector (ECM - Canister pressure sensor) • Canister pressure sensor • ECM	A
P0453	More than 120 kPa-a (900 mmHg-a)	• Wire harness/connector (ECM - Canister pressure sensor) • Canister pressure sensor	B

DISPLAY (DTC OUTPUT)	TEST RESULT	SUSPECTED TROUBLE AREA	PROCEED TO
		• ECM	

C ▶ GO TO EVAP SYSTEM

B ▶ CHECK HARNESS AND CONNECTOR (CANISTER PUMP MODULE - ECM)

A ▼

2.	CHECK HARNESS AND CONNECTOR (CANISTER PUMP MODULE - ECM)

(a) Turn the ignition switch to off.

(b) Disconnect the ECM connector.

(c) Measure the resistance according to the value(s) in the table below.

Result:

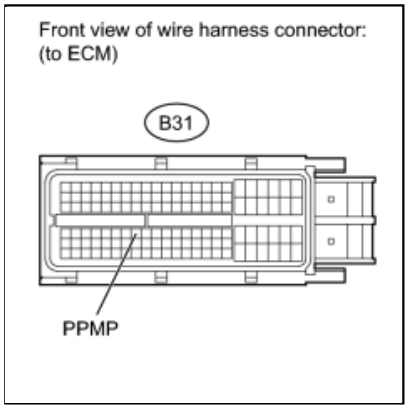

TESTER CONNECTION	CONDITION	SPECIFIED CONDITION	SUSPECTED TROUBLE AREA	PROCEED TO
B31-71 (PPMP) - Body ground	Always	10 Ω or less	• Wire harness/connector (ECM - Canister pressure sensor) • Short in canister pressure sensor circuit	A
		10 kΩ or more	• Wire harness/connector (ECM - Canister pressure sensor) • Short in ECM circuit	B

(d) Reconnect the ECM connector.

B ▶ REPLACE ECM

A ▼

3.	CHECK HARNESS AND CONNECTOR (CANISTER PUMP MODULE - ECM)

(a) Disconnect the canister pump module connector.

(b) Disconnect the ECM connector.

(c) Measure the resistance according to the value(s) in the table below.

Result:

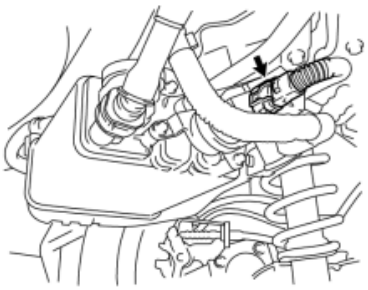

Front view of wire harness connector: (to ECM)

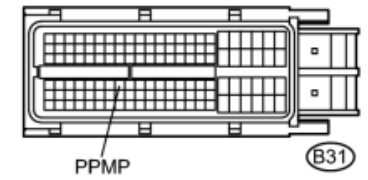

TESTER CONNECTION	CONDITION	SPECIFIED CONDITION	SUSPECTED TROUBLE AREA	PROCEED TO
B31-71 (PPMP) - Body ground	Always	10 kΩ or more	Short in canister pressure sensor circuit	A
		10 Ω or less	Short in wire harness/connector (ECM - Canister pressure sensor)	B

(d) Reconnect the canister pump module connector.

(e) Reconnect the ECM connector.

B ▶ **REPAIR OR REPLACE HARNESS OR CONNECTOR (CANISTER - ECM)**

A ▶ **REPLACE CANISTER**

4.	CHECK HARNESS AND CONNECTOR (CANISTER PUMP MODULE - ECM)

(a) Disconnect the canister pump module connector.

(b) Measure the voltage and resistance according to the value(s) in the table below.

Standard Voltage:

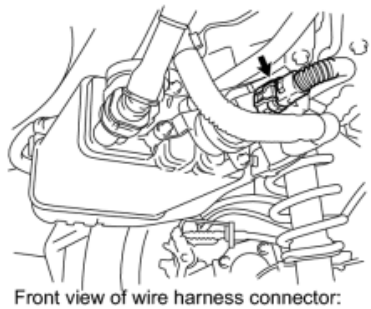

Front view of wire harness connector: (to Canister Pump Module)

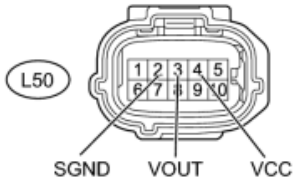

TESTER CONNECTION	SWITCH CONDITION	SPECIFIED CONDITION
L50-4 (VCC) - Body ground	Ignition switch ON	4.5 to 5.5 V
L50-3 (VOUT) - Body ground	Ignition switch ON	4.5 to 5.5 V

Standard Resistance:

TESTER CONNECTION	CONDITION	SPECIFIED CONDITION
L50-2 (SGND) - Body ground	Always	100 Ω or less

Result:

TEST RESULT	SUSPECTED TROUBLE AREA	PROCEED TO
Voltage and resistance within standard ranges	Open in canister pressure sensor circuit	A

Voltage and resistance outside standard ranges	Open in wire harness/connector (ECM - Canister pressure sensor)	B

(c) Reconnect the canister pump module connector.

B ▶ **REPAIR OR REPLACE HARNESS OR CONNECTOR (CANISTER - ECM)**

A

5.	**REPLACE CANISTER**

(a) Replace the canister INFO.

NOTICE:

When replacing the canister, check the canister pump module interior and related pipes for water, fuel and other liquids. If liquids are present, check for disconnections and/or cracks in the following: 1) the pipe from the air inlet port to the canister pump module; 2) the canister filter; and 3) the fuel tank vent hose.

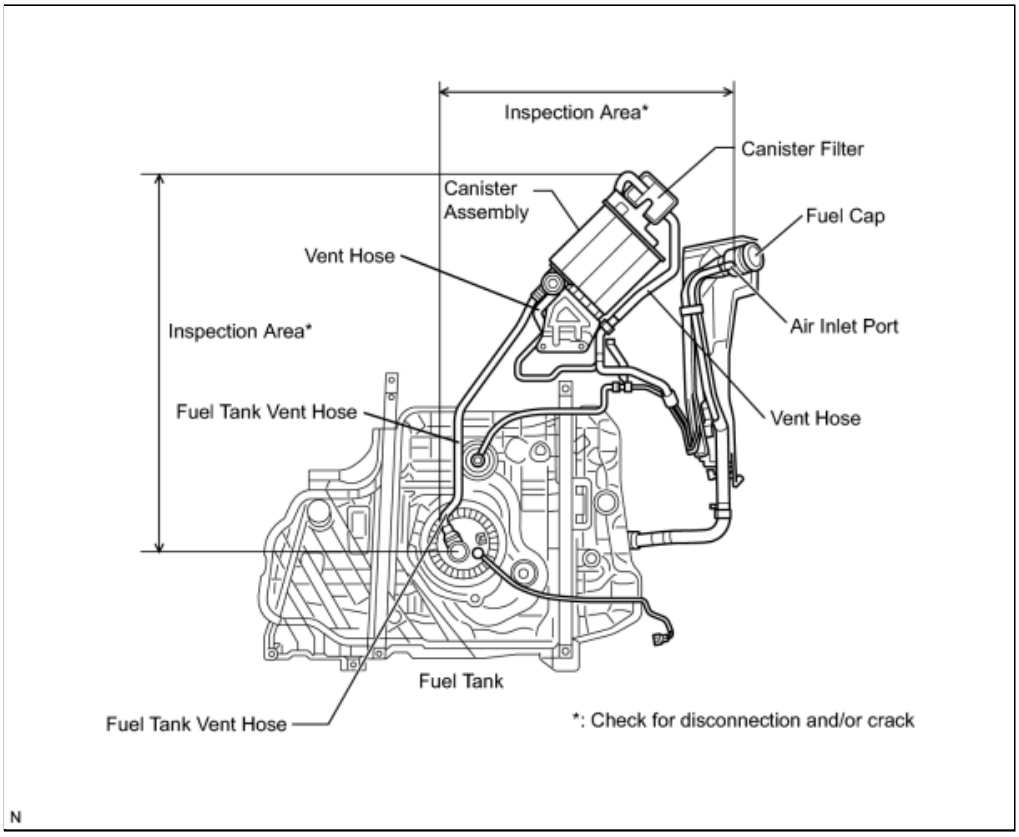

NEXT ▶ **CHECK WHETHER DTC OUTPUT RECURS (AFTER REPAIR)**

6.	**REPAIR OR REPLACE HARNESS OR CONNECTOR (CANISTER - ECM)**

HINT:

If the exhaust tailpipe has been removed, go to the next step before reinstalling it.

NEXT ▶ **CHECK WHETHER DTC OUTPUT RECURS (AFTER REPAIR)**

7.	**REPLACE ECM**

(a) Replace the ECM INFO .

NEXT ▶ **CHECK WHETHER DTC OUTPUT RECURS (AFTER REPAIR)**

8.	**CHECK WHETHER DTC OUTPUT RECURS (AFTER REPAIR)**

(a) Connect the Techstream to the DLC3.

(b) Turn the ignition switch to ON.

(c) Turn the Techstream on.

(d) Wait for at least 60 seconds.

(e) Enter the following menus: Powertrain / Engine and ECT / Trouble Codes / Pending.

HINT:

If no pending DTCs are displayed on the Techstream, the repair has been successfully completed.

NEXT ▶ **END**

Last Modified: 3-10-2010	6.4 C	**From:** 200901
Model Year: 2010	**Model:** Corolla	**Doc ID:** RM000000VSO04VX
Title: 2AZ-FE ENGINE CONTROL: SFI SYSTEM: P0443: Evaporative Emission Control System Purge Control Valve Circuit (2010 Corolla)		

DTC	**P0443**	**Evaporative Emission Control System Purge Control Valve Circuit**

DESCRIPTION

HINT:

This DTC P0443 is applicable to Mexico models only.

To reduce hydrocarbon emissions, evaporated fuel from the fuel tank is routed through a charcoal canister to the intake manifold for combustion in the cylinders.

The ECM changes the duty signals to the purge VSV so that the intake amount of hydrocarbon emissions is appropriate for the driving conditions (engine load, engine speed, vehicle speed, etc.) after the engine is warmed up.

DTC NO.	DTC DETECTION CONDITION	TROUBLE AREA
P0443	Terminal voltage of ECM output circuit does not correspond with drive signals from ECM to purge VSV (1-trip detection logic)	• Open or short in purge VSV circuit • Purge VSV • ECM

WIRING DIAGRAM

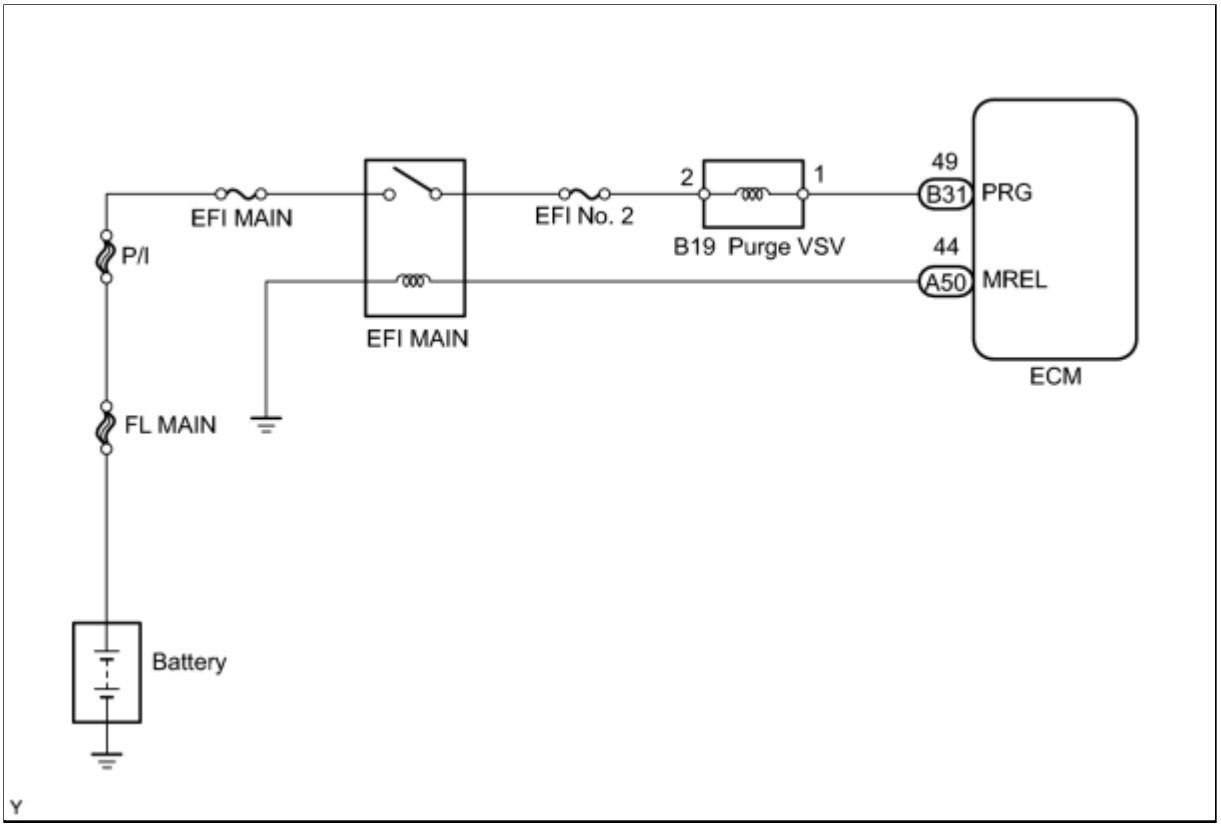

INSPECTION PROCEDURE

HINT:

Read freeze frame data using the Techstream tester. The ECM records vehicle and driving condition information as freeze frame data the moment a DTC is stored. When troubleshooting, freeze frame data can be helpful in determining whether the vehicle was running or stopped, whether the engine was warmed up or not, whether the air fuel ratio was lean or rich, as well as other data recorded at the time of a malfunction.

PROCEDURE

1.	**PERFORM ACTIVE TEST USING TECHSTREAM (ACTIVATE PURGE VSV CONTROL)**

(a) Connect the Techstream to the DLC3.

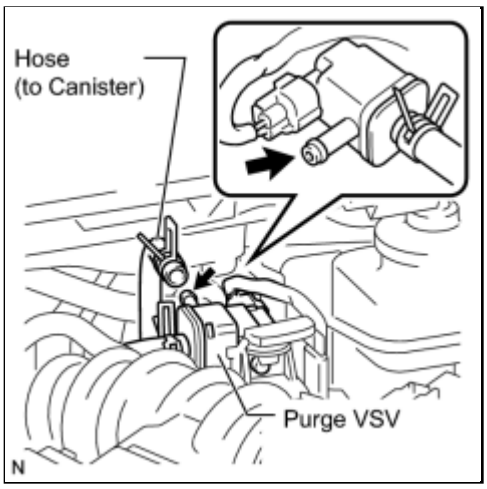

(b) Disconnect the vacuum hose from the purge VSV.

(c) Start the engine.

(d) Turn the Techstream on.

(e) Enter the following menus: Powertrain / Engine and ECT / Active Test / Activate the VSV for Evap Control.

(f) When the purge VSV is operated using the Techstream, check whether the VSV applies suction to your finger.

OK:

TESTER OPERATION	SPECIFIED CONDITION
VSV is ON	VSV applies suction to finger
VSV is OFF	VSV applies no suction to finger

(g) Reconnect the vacuum hose to the purge VSV.

NG ▶ **INSPECT PURGE VSV**

OK ▶ **CHECK FOR INTERMITTENT PROBLEMS**

2.	**INSPECT PURGE VSV**

(a) Disconnect the purge VSV connector.

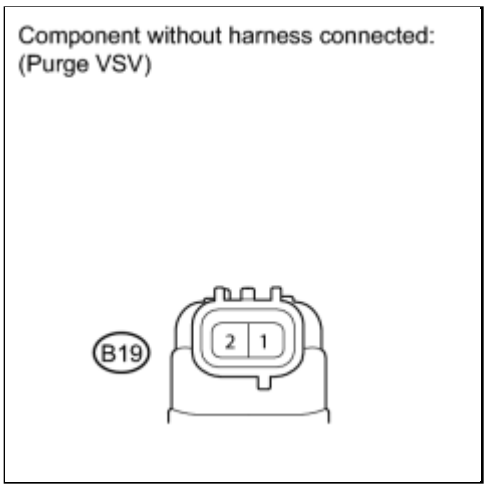

(b) Measure the resistance according to the value(s) in the table below.

Standard Resistance:

TESTER CONNECTION	CONDITION	SPECIFIED CONDITION
B19-1 - B19-2	20°C (68°F)	23 to 26 Ω

(c) Reconnect the purge VSV connector.

NG ▶ **REPLACE PURGE VSV**

OK ▼

3.	**INSPECT PURGE VSV (POWER SOURCE VOLTAGE)**

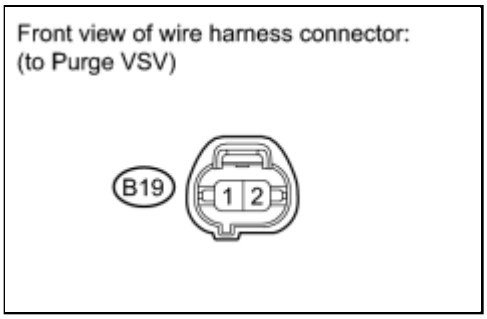

(a) Disconnect the purge VSV connector.

(b) Turn the ignition switch to ON.

(c) Measure the voltage according to the value(s) in the table below.

Standard Voltage:

TESTER CONNECTION	SWITCH CONDITION	SPECIFIED CONDITION
B19-2 - Body ground	Ignition switch to ON	9 to 14 V

(d) Reconnect the purge VSV connector.

NG ▶ **INSPECT FUSE (EFI NO. 2 FUSE)**

OK ▼

4.	CHECK HARNESS AND CONNECTOR (PURGE VSV - ECM)

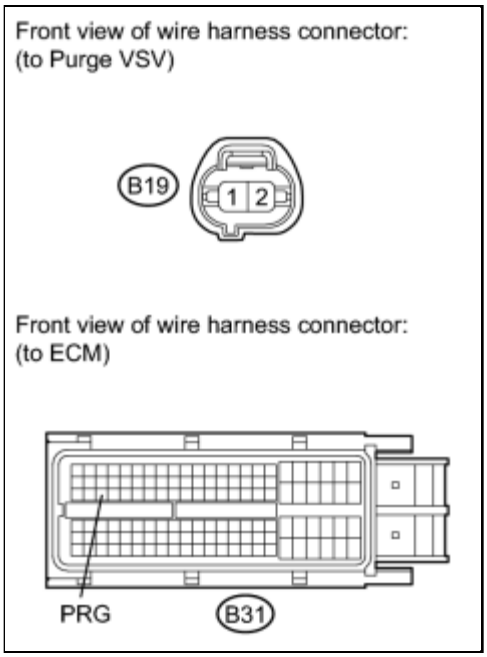

(a) Disconnect the purge VSV connector.

(b) Disconnect the ECM connector.

(c) Measure the resistance according to the value(s) in the table below.

Standard Resistance (Check for Open):

TESTER CONNECTION	CONDITION	SPECIFIED CONDITION
B19-1 - B31-49 (PRG)	Always	Below 1 Ω

Standard Resistance (Check for Short):

TESTER CONNECTION	CONDITION	SPECIFIED CONDITION
B19-1 or B31-49 (PRG) - Body ground	Always	10 kΩ or higher

(d) Reconnect the purge VSV connector.

(e) Reconnect the ECM connector.

NG ▶ **REPAIR OR REPLACE HARNESS OR CONNECTOR (PURGE VSV - ECM)**

OK ▶ **REPLACE ECM**

5.	**INSPECT FUSE (EFI NO. 2 FUSE)**

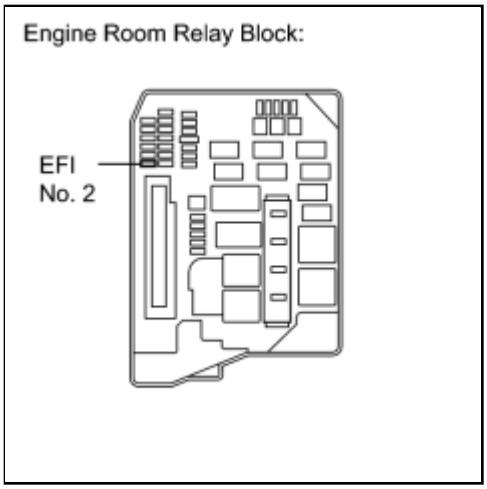

(a) Remove the EFI No. 2 fuse from the engine room relay block.

(b) Measure the resistance according to the value(s) in the table below.

Standard Resistance:

TESTER CONNECTION	CONDITION	SPECIFIED CONDITION
EFI No. 2 fuse	Always	Below 1 Ω

(c) Reinstall the EFI No. 2 fuse.

NG ▶ **REPLACE FUSE (EFI NO. 2 FUSE)**

OK ▶ **REPAIR OR REPLACE HARNESS OR CONNECTOR (PURGE VSV - ENGINE ROOM JUNCTION BLOCK (EFI MAIN RELAY))**

Last Modified: 3-10-2010	6.4 C	**From:** 200901
Model Year: 2010	**Model:** Corolla	**Doc ID:** RM000000SWH04QX
Title: 2AZ-FE ENGINE CONTROL: SFI SYSTEM: P0455,P0456: Evaporative Emission Control System Leak Detected (Gross Leak) (2010 Corolla)		

DTC	**P0455**	**Evaporative Emission Control System Leak Detected (Gross Leak)**

DTC	**P0456**	**Evaporative Emission Control System Leak Detected (Very Small Leak)**

DTC SUMMARY

DTC NO.	MONITORING ITEM	MALFUNCTION DETECTION CONDITION	TROUBLE AREA	DETECTION TIMING	DETECTION LOGIC
P0455	EVAP gross leak	Leak detection pump creates negative pressure (vacuum) in EVAP system and EVAP system pressure measured. Reference pressure measured at start and at end of leak check. If stabilized pressure higher than [second reference pressure x 0.35], ECM determines that EVAP system has large leak.	• Fuel tank cap (loose) • Leak from EVAP line (Canister - Fuel tank) • Leak from EVAP line (Purge VSV - Canister) • Canister pump module • Leak from fuel tank • Leak from canister	While ignition switch OFF	2 trip
P0456	EVAP small leak	Leak detection pump creates negative pressure (vacuum) in EVAP system and EVAP system pressure measured. Reference pressure measured at start and at end of leak	• Fuel tank cap (loose) • Leak from EVAP line (Canister - Fuel	While ignition switch OFF	2 trip

DTC NO.	MONITORING ITEM	MALFUNCTION DETECTION CONDITION	TROUBLE AREA	DETECTION TIMING	DETECTION LOGIC
		check. If stabilized pressure higher than second reference pressure, ECM determines that EVAP system has small leak.	tank) • Leak from EVAP line (Purge VSV - Canister) • Canister pump module • Leak from fuel tank • Leak from canister		

DESCRIPTION

The description can be found in the EVAP (Evaporative Emission) System INFO .

INSPECTION PROCEDURE

Refer to the EVAP System INFO .

HINT:

Unit expressions

- [kPa-a (mmHg-a)] denotes absolute pressure.
- [kPa-g (mmHg-g)] denotes gauge pressure (relative pressure).
- On the Techstream, choose the unit of measurement according to the inspection procedure.

MONITOR DESCRIPTION

5 hours* after the ignition switch is turned to off, the leak detection pump creates negative pressure (vacuum) in the EVAP system. The ECM monitors for leaks and actuator malfunctions based on the EVAP pressure.

HINT:

***: If the engine coolant temperature is not below 35°C (95°F) 5 hours after the ignition switch is turned OFF, the monitor check starts 2 hours later. If it is still not below 35°C (95°F) 7 hours after the ignition switch is turned off, the monitor check starts 2.5 hours later.**

SEQUENCE	OPERATION	DESCRIPTION	DURATION
-	ECM activation	The key-off monitor is activated by soak timer 5, 7 or 9.5 hours after ignition switch turned OFF.	-

SEQUENCE	OPERATION	DESCRIPTION	DURATION
A	Atmospheric pressure measurement	Vent valve is turned OFF (vent) and the EVAP system pressure is measured by the ECM in order to register atmospheric pressure. If pressure in EVAP system is not between 70 kPa-a and 110 kPa-a (525 mmHg-a and 825 mmHg-a), the ECM cancels EVAP system monitor.	60 seconds
B	First reference pressure measurement	In order to determine the reference pressure, the leak detection pump creates negative pressure (vacuum) through the reference orifice and then the ECM checks if the leak detection pump and vent valve operate normally.	60 seconds
C	EVAP system pressure measurement	Vent valve turned ON (closed) to shut the EVAP system. Negative pressure (vacuum) created in the EVAP system, and the EVAP system pressure then measured. The measured value is memorized as it will be used in the leak check. If the EVAP pressure does not stabilize within 15 minutes, the ECM cancels the EVAP system monitor.	15 minutes*
D	Purge VSV monitor	Purge VSV is opened and then the EVAP system pressure is measured by the ECM. A large increase indicates normality.	10 seconds
E	Second reference pressure measurement	After a second reference pressure measurement, the leak check is performed by comparing the first and second reference pressure. If stabilized system pressure is higher than the second reference pressure, the ECM determines that the EVAP system is leaking.	60 seconds
-	Final check	Atmospheric pressure is measured and then the monitor result is recorded by the ECM.	-

*: If only a small amount of fuel is in the fuel tank, it takes longer for the EVAP pressure to stabilize.

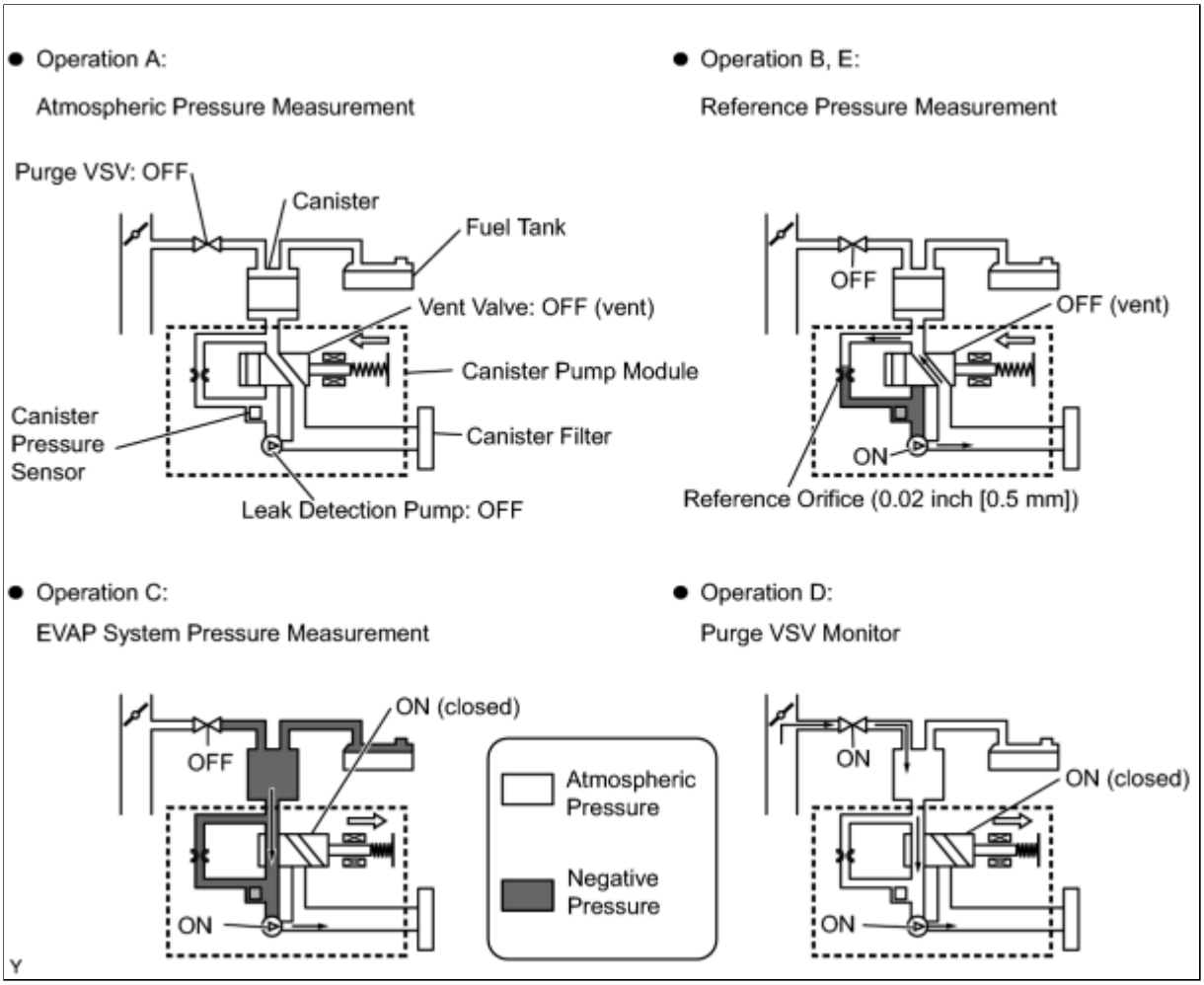

(a) P0455: EVAP gross leak

In operation C, the leak detection pump creates negative pressure (vacuum) in the EVAP system and the EVAP system pressure is measured. If the stabilized system pressure is higher than [second reference pressure x 0.35] (near atmospheric pressure), the ECM determines that the EVAP system has a large leak, illuminates the MIL and sets the DTC (2 trip detection logic).

(b) P0456: EVAP very small leak

In operation C, the leak detection pump creates negative pressure (vacuum) in the EVAP system and the EVAP system pressure is measured. If the stabilized system pressure is higher than the second reference pressure, the ECM determines that the EVAP system has a small leak, illuminates the MIL and sets the DTC (2 trip detection logic).

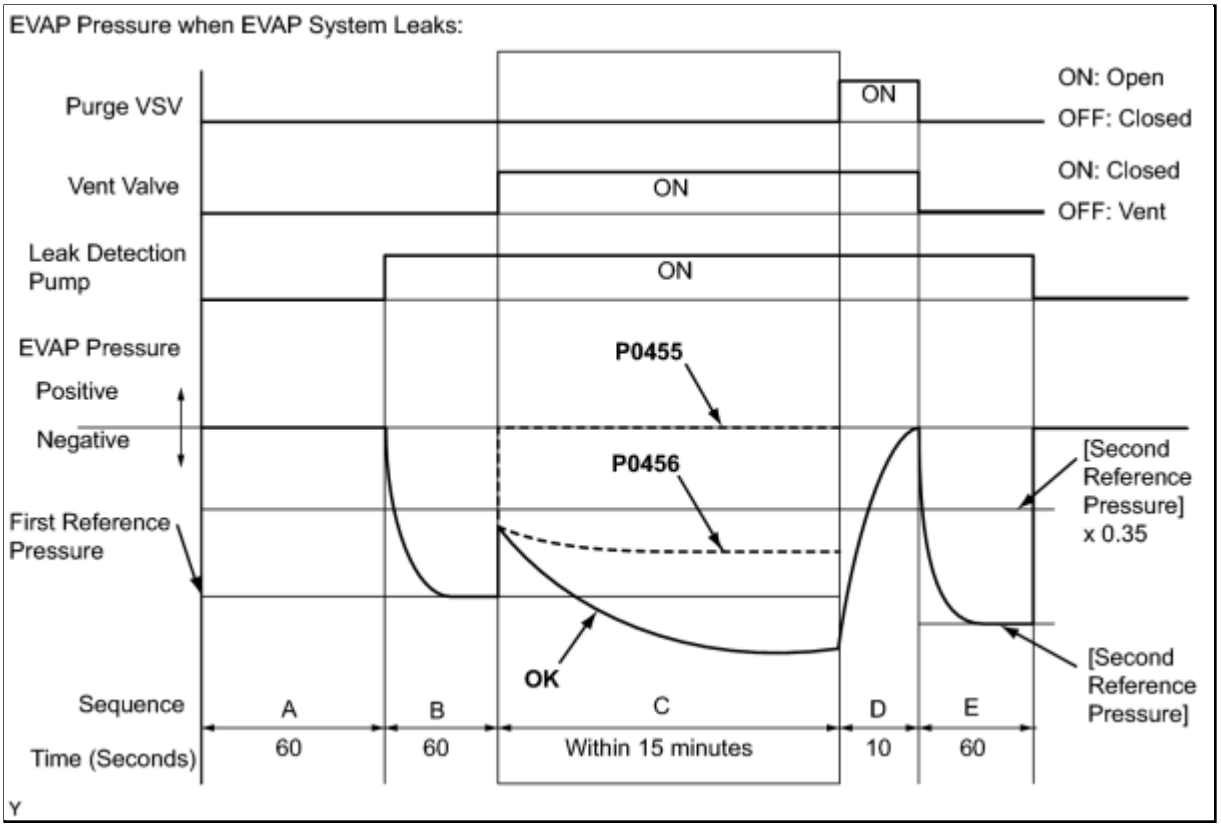

MONITOR STRATEGY

Required Sensors/Components	Purge VSV and canister pump module
Frequency of Operation	Once per driving cycle
Duration	Within 15 minutes (varies with amount of fuel in tank)
MIL Operation	2 driving cycles
Sequence of Operation	None

TYPICAL ENABLING CONDITIONS

P0455 (pattern A), P0456

Monitor runs whenever following DTCs are not present	None
Atmospheric pressure	70 to 110 kPa-a (525 to 825 mmHg-a)
Battery voltage	10.5 V or more
Vehicle speed	Below 2.5 mph (4 km/h)
Ignition switch	OFF
Time after key off	5 or 7 or 9.5 hours

Canister pressure sensor malfunction (P0451, P0452 and P0453)	Not detected
Purge VSV	Not operated by scan tool
Vent valve	Not operated by scan tool
Leak detection pump	Not operated by scan tool
Both of following conditions met before key off	Conditions 1 and 2
1. Duration that vehicle is driven	5 minutes or more
2. EVAP purge operation	Performed
Engine coolant temperature	4.4 to 35°C (40 to 95°F)
Intake air temperature	4.4 to 35°C (40 to 95°F)

P0455 (pattern B)

Atmospheric pressure	70 to 110 kPa-a (525 to 825 mmHg-a)
Battery voltage	10.5 V or more
Vehicle speed	Below 2.5 mph (4 km/h)
Ignition switch	OFF
Canister pressure sensor malfunction (P0451, P0452 and P0453)	Not detected
Purge VSV	Not operated by scan tool
Vent valve	Not operated by scan tool
Leak detection pump	Not operated by scan tool
Both of following conditions met before key off	Conditions 1 and 2
1. Duration that vehicle driven	5 minutes or more
2. EVAP purge operation	Performed
Engine coolant temperature	4.4 to 45°C (40 to 113°F)
Intake air temperature	4.4 to 45°C (40 to 113°F)

TYPICAL MALFUNCTION THRESHOLDS

P0455: EVAP Gross Leak

EVAP pressure when vacuum introduction complete	Higher than reference pressure x 0.35

P0456: EVAP Small Leak

EVAP pressure when vacuum introduction	Between reference pressure and reference pressure

complete	x 0.35

MONITOR RESULT

Refer to Checking Monitor Status INFO .

CONFIRMATION DRIVING PATTERN

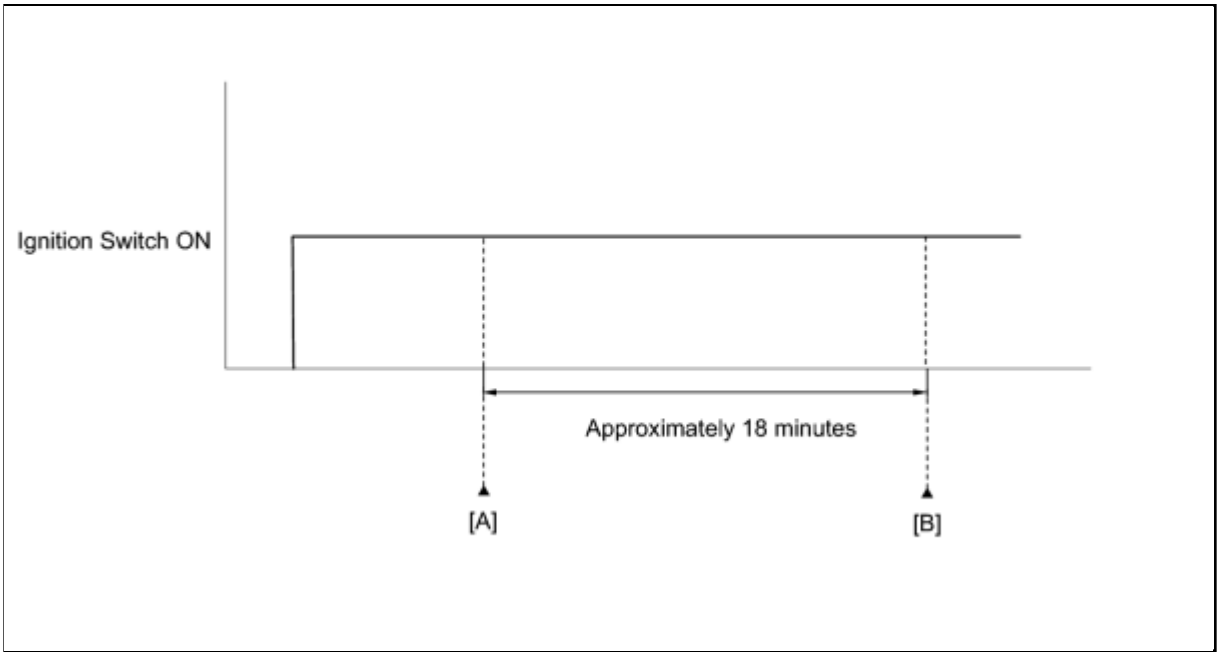

NOTICE:

- The Evaporative System Check (Automatic Mode) consists of 5 steps performed automatically by the Techstream. It takes a maximum of approximately 18 minutes.
- Do not perform the Evaporative System Check when the fuel tank is more than 90% full because the cut-off valve may be closed, making the fuel tank leak check unavailable.
- Do not run the engine during this operation.
- When the temperature of the fuel is 35°C (95°F) or higher, a large amount of vapor forms and any check results become inaccurate. When performing the Evaporative System Check, keep the fuel temperature below 35°C (95°F).

1. Connect the Techstream to the DLC3.
2. Turn the ignition switch to ON and turn the Techstream on.
3. Clear the DTCs (even if no DTCs are stored, perform the clear DTC procedure) INFO .
4. Turn the ignition switch off.
5. Turn the ignition switch to ON and turn the Techstream on.
6. Enter the following menus: Powertrain / Engine / Utility / Evaporative System Check / Automatic Mode [A].
7. After the "Evaporative System Check" is completed, check for All Readiness by entering the following menus: Powertrain / Engine / Utility / All Readiness.
8. Input the DTC: P0455 or P0456.
9. Check the DTC judgment result [B].

TECHSTREAM DISPLAY	DESCRIPTION
NORMAL	○ DTC judgment completed ○ System normal
ABNORMAL	○ DTC judgment completed ○ System abnormal
INCOMPLETE	○ DTC judgment not completed ○ Perform driving pattern after confirming DTC enabling conditions
UNKNOWN	○ Unable to perform DTC judgment ○ Number of DTCs which do not fulfill DTC preconditions has reached ECU memory limit

HINT:

If the judgment result shows ABNORMAL, the system has a malfunction.

10. If the test result is UNKNOWN, enter the following menus: Powertrain / Engine / Trouble Codes / Pending.
11. Read Pending DTCs.

HINT:

If a pending DTC is output, the system is malfunctioning.

12. If the test result is INCOMPLETE or UNKNOWN and no pending DTC is output, perform a universal trip and check for permanent DTCs INFO .

HINT:

- If a permanent DTC is output, the system is malfunctioning.
- If no permanent DTC is output, the system is normal.

Last Modified: 3-10-2010	6.4 C	**From:** 200901
Model Year: 2010	**Model:** Corolla	**Doc ID:** RM0000012ME04HX
Title: 2AZ-FE ENGINE CONTROL: SFI SYSTEM: P0500: Vehicle Speed Sensor "A" (2010 Corolla)		

DTC	**P0500**	**Vehicle Speed Sensor "A"**

DESCRIPTION

The speed sensors detect the wheel speed and send the appropriate signals to the skid control ECU. The skid control ECU converts these wheel speed signals into a 4-pulse signal and outputs it to the ECM via the combination meter. The ECM determines the vehicle speed based on the frequency of these pulse signals.

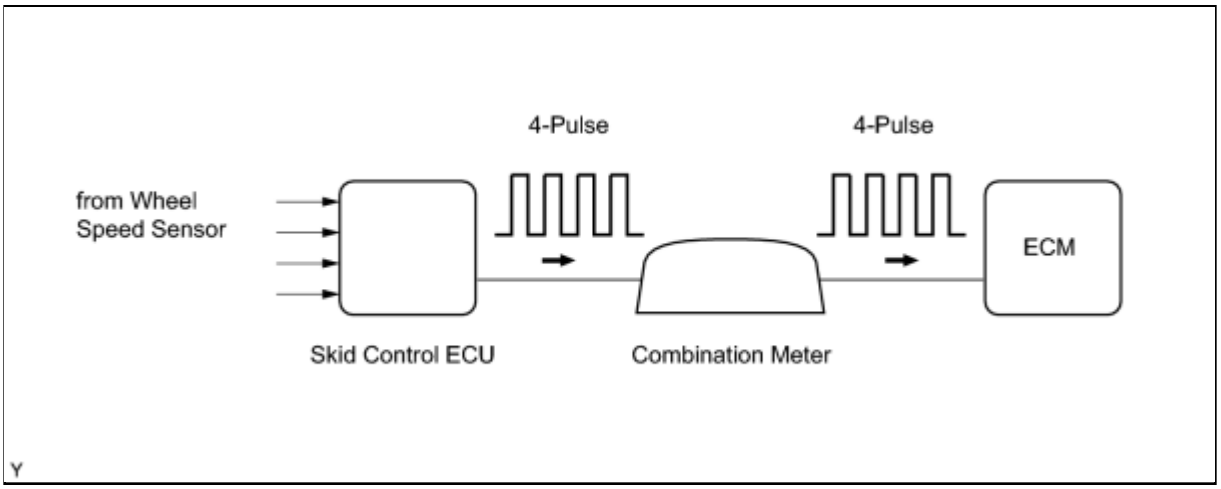

DTC NO.	DTC DETECTION CONDITION	TROUBLE AREA
P0500	While vehicle being driven, no vehicle speed sensor signal transmitted to ECM (2 trip detection logic: M/T models) (1 trip detection logic: A/T models)	• Open or short in speed signal circuit • Speed meter circuit (wheel speed sensor, skid control ECU) • Combination meter • ECM

MONITOR DESCRIPTION

Automatic Transaxle Models:

The ECM assumes that the vehicle is being driven when the vehicle speed sensor signal is being transmitted by the combination meter. If there is no signal from the combination meter, despite the ECM detecting the speed signal from the speed sensor NC, the ECM interprets this as a malfunction in the speed signal circuit. The ECM then illuminates the MIL and sets the DTC.

Manual Transaxle Models:

The ECM assumes that the vehicle is being driven when the indicated engine speed is more than 2,000 rpm and the engine load calculated by the ECM is more than a certain level or the idle fuel-cut operation* is being executed. If there is no signal from the vehicle speed sensor, despite these conditions being met, the ECM interprets this as a malfunction in the speed signal circuit. The ECM then illuminates the MIL and sets the DTC.

*: Idle fuel-cut is executed when the throttle valve is fully closed and engine speed is over 2800 rpm.

MONITOR STRATEGY

Related DTCs	P0500: Vehicle speed sensor "A" pulse input error
Required Sensors/Components (Main)	Vehicle speed sensor Combination meter Skid control ECU
Required Sensors/Components (Related)	Park/neutral position switch Engine coolant temperature sensor Crankshaft position sensor Throttle position sensor Mass air flow meter
Frequency of Operation	Continuous
Duration	2 seconds: A/T models 8 seconds: M/T models, Case 1 4.7 seconds: M/T models, Case 2
MIL Operation	Immediate: A/T models 2 driving cycles: M/T models
Sequence of Operation	None

TYPICAL ENABLING CONDITIONS

M/T Models, Case 1

Monitor runs whenever following DTCs are not present	None
Engine coolant temperature	70°C (158°F) or more
Engine speed	2000 to 5000 rpm
Engine load	31.9 % or more
Fuel-cut at high engine speed	Not executing

M/T Models, Case 2

Monitor runs whenever following DTCs are not present	None

Ignition switch	ON
Starter	OFF
Battery voltage	8 V or more

A/T Models

Monitor runs whenever following DTCs are not present	None
Time after ignition switch OFF to ON	3 seconds or more
Battery voltage	8 V or more
Ignition switch	ON
Starter	OFF
Engine	Running
Transmission counter gear revolution	300 rpm or more
When either condition below is met	Condition A or B
A. When both conditions below are met	-
Engine coolant temperature	20°C (68°F) or higher
Time after park/neutral position switch turned from on to off	2 seconds or more
B. When both conditions below are met	-
Engine coolant temperature	Below 20°C (68°F)
Time after park/neutral position switch turned from on to off	30 seconds or more

TYPICAL MALFUNCTION THRESHOLDS

Vehicle speed sensor signal	No pulse input

CONFIRMATION DRIVING PATTERN

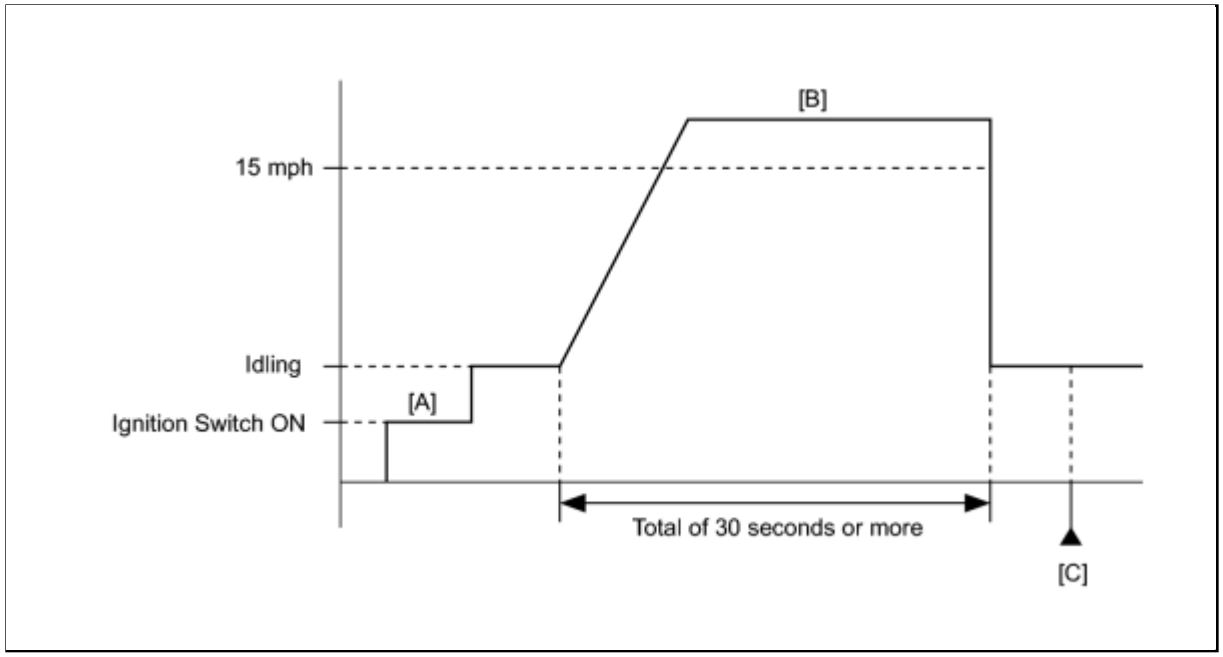

1. Connect the Techstream to the DLC3.
2. Turn the ignition switch to ON and turn the Techstream on.
3. Clear the DTCs (even if no DTCs are stored, perform the clear DTC procedure) INFO .
4. Turn the ignition switch off.
5. Turn the ignition switch to ON and turn the Techstream on [A].
6. Start the engine.
7. Drive the vehicle at 15 mph (24 km/h) or more for a total of 30 seconds or more [B].
8. Stop the vehicle.
9. Enter the following menus: Powertrain / Engine / Utility / All Readiness.
10. Input the DTC: P0500.
11. Check the DTC judgment result [C].

TECHSTREAM DISPLAY	DESCRIPTION
NORMAL	○ DTC judgment completed ○ System normal
ABNORMAL	○ DTC judgment completed ○ System abnormal
INCOMPLETE	○ DTC judgment not completed ○ Perform driving pattern after confirming DTC enabling conditions
UNKNOWN	○ Unable to perform DTC judgment ○ Number of DTCs which do not fulfill DTC preconditions has reached ECU memory limit

HINT:

If the judgment result shows ABNORMAL, the system has a malfunction.

12. If the test result is UNKNOWN, enter the following menus: Powertrain / Engine / Trouble Codes / Pending.
13. Read Pending DTCs.

HINT:

If a pending DTC is output, the system is malfunctioning.

14. If the test result is INCOMPLETE or UNKNOWN and no pending DTC is output, perform a universal trip and check for permanent DTCs INFO .

HINT:

- If a permanent DTC is output, the system is malfunctioning.
- If no permanent DTC is output, the system is normal.

WIRING DIAGRAM

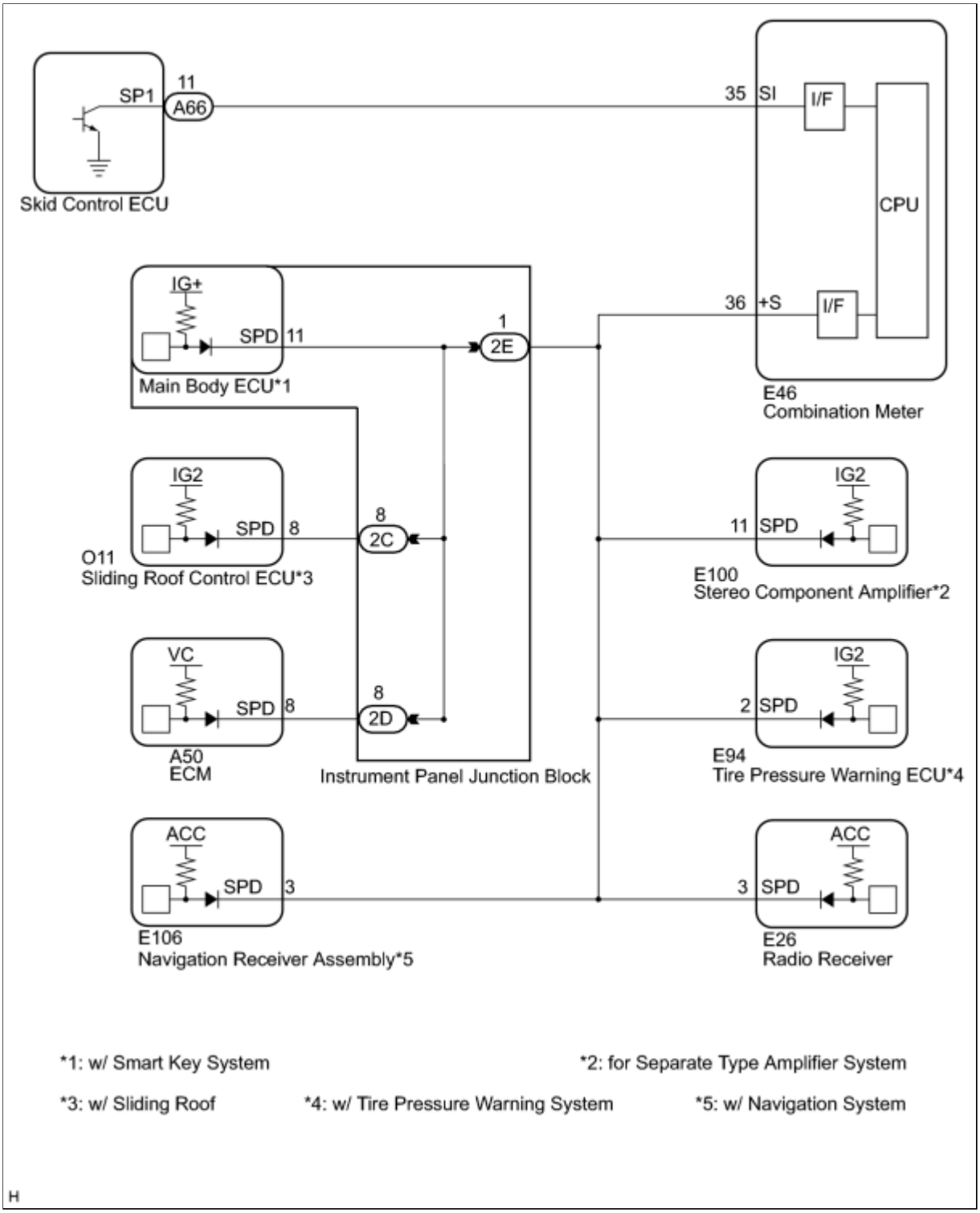

INSPECTION PROCEDURE

HINT:

Read freeze frame data using the Techstream. The ECM records vehicle and driving condition information as freeze frame data the moment a DTC is stored. When troubleshooting, freeze frame data can be helpful in determining whether the vehicle was running or stopped, whether the engine was warmed up or not, whether the air fuel ratio was lean or rich, as well as other data recorded at the time of a malfunction.

PROCEDURE

1.	READ VALUE USING TECHSTREAM (VEHICLE SPEED)

(a) Connect the Techstream to the DLC3.

(b) Turn the ignition switch to the ON position.

(c) Turn the Techstream on.

(d) Enter the following menus: Powertrain / Engine and ECT / Data List / Vehicle Speed.

(e) Drive the vehicle.

(f) Read the value displayed on the Techstream.

OK:

Vehicle speeds displayed on the tester and speedometer display are equal.

NG ▶ **CHECK HARNESS AND CONNECTOR (ECM - COMBINATION METER)**

OK ▶ **CHECK FOR INTERMITTENT PROBLEMS**

2.	CHECK HARNESS AND CONNECTOR (ECM - COMBINATION METER)

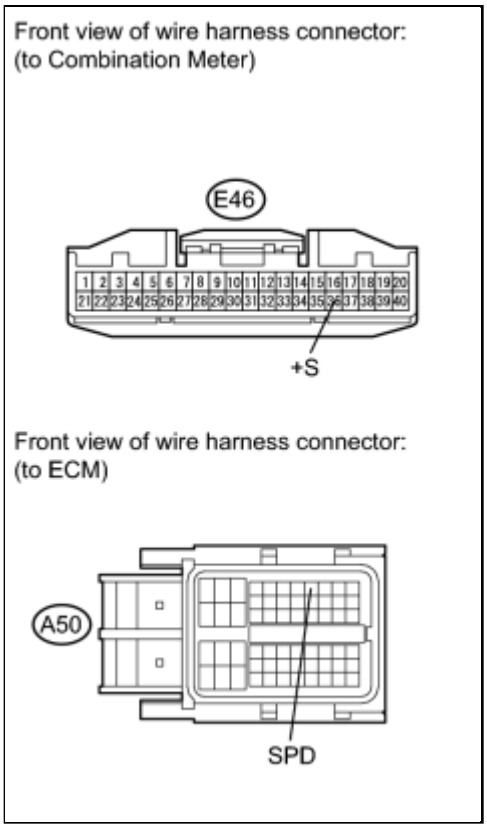

(a) Disconnect the ECM connector.

(b) Disconnect the combination meter connector.

(c) Measure the resistance according to the value(s) in the table below.

Standard Resistance (Check for Open):

TESTER CONNECTION	CONDITION	SPECIFIED CONDITION
E46-36 (+S) - A50-8 (SPD)	Always	Below 1 Ω

(d) Reconnect the ECM connector.

(e) Reconnect the combination meter connector.

NG ▶ **CHECK HARNESS AND CONNECTOR (ECM - INSTRUMENT PANEL JUNCTION BLOCK)**

OK ▼

3.	CHECK COMBINATION METER ASSEMBLY (SPD SIGNAL WAVEFORM)

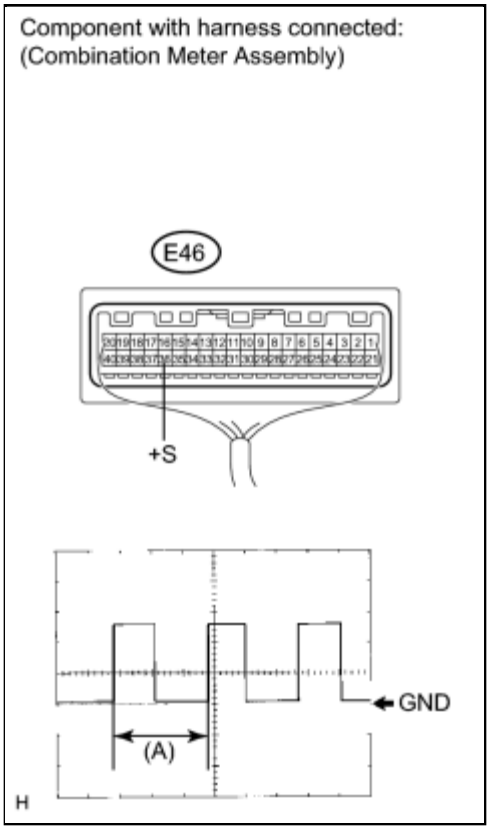

(a) Check the output waveform.

(1) Remove the combination meter assembly with the connector(s) still connected.

(2) Connect an oscilloscope to terminals E46-36 (+S) and body ground.

(3) Turn the ignition switch to ON.

(4) Turn the wheel slowly.

(5) Check the signal waveform according to the condition(s) in the table below.

ITEM	CONDITION
Tool setting	5 V/DIV., 20 ms/DIV.

OK:

The waveform is displayed as shown in the illustration.

HINT:

When the system is functioning normally, one wheel revolution generates 4 pulses. As the vehicle speed increases, the width

indicated by (A) in the illustration narrows.

NG ▶ **GO TO METER / GAUGE SYSTEM**

OK ▶ **REPLACE ECM**

4.	CHECK HARNESS AND CONNECTOR (ECM - INSTRUMENT PANEL JUNCTION BLOCK)

(a) Disconnect the ECM connector.

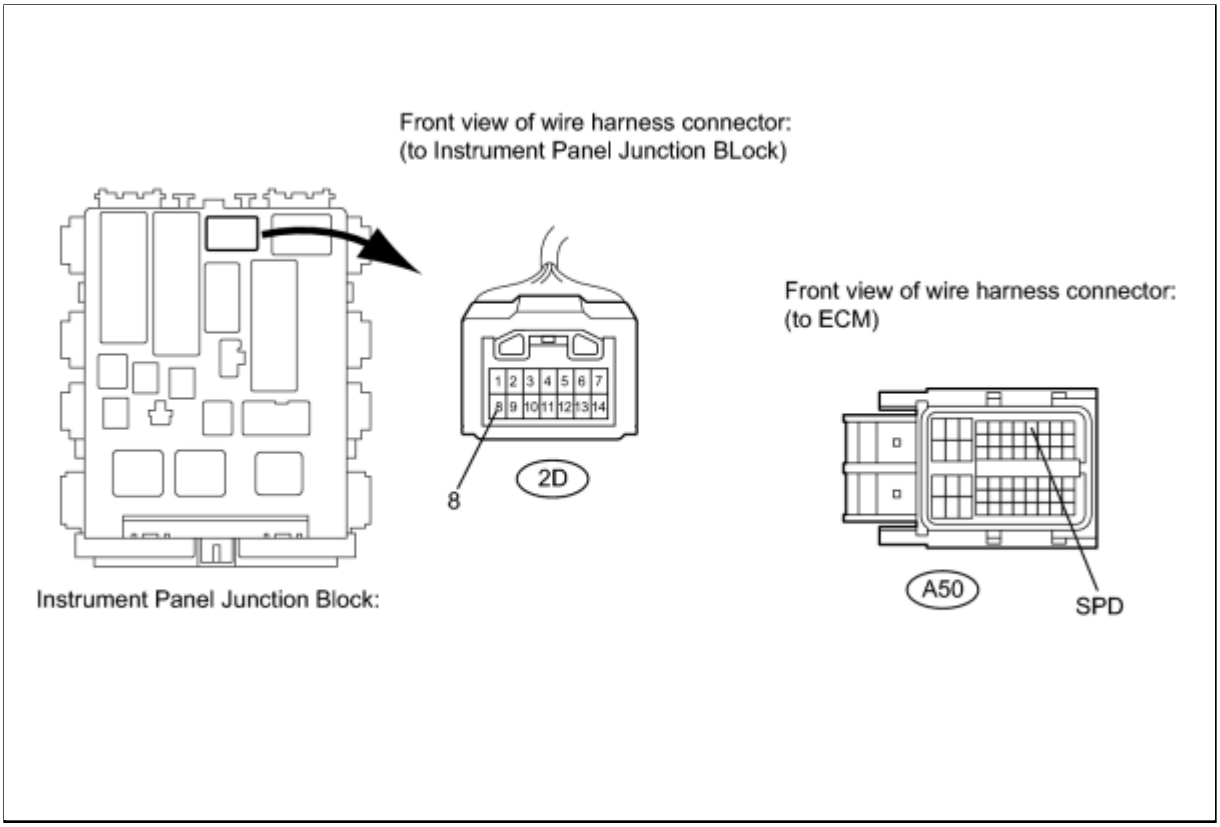

(b) Disconnect the instrument panel junction block connector.

(c) Measure the resistance according to the value(s) in the table below.

Standard Resistance (Check for Open):

TESTER CONNECTION	CONDITION	SPECIFIED CONDITION
2D-8 - A50-8 (SPD)	Always	Below 1 Ω

(d) Reconnect the ECM connector.

(e) Reconnect the instrument panel junction block connector.

NG ▶ REPAIR OR REPLACE HARNESS OR CONNECTOR (ECM - INSTRUMENT PANEL JUNCTION BLOCK)

OK ▶ REPAIR OR REPLACE HARNESS OR CONNECTOR (INSTRUMENT PANEL JUNCTION BLOCK)

Last Modified: 3-10-2010	6.4 C	**From:** 200901
Model Year: 2010	**Model:** Corolla	**Doc ID:** RM000000XCT08OX
Title: 2AZ-FE ENGINE CONTROL: SFI SYSTEM: P0504: Brake Switch "A" / "B" Correlation (2010 Corolla)		

DTC	**P0504**	**Brake Switch "A" / "B" Correlation**

DESCRIPTION

The stop light switch is a duplex system that transmits two signals: STP and ST1-. These two signals are used by the ECM to monitor whether or not the brake system is working properly. If the signals, which indicate the brake pedal is being depressed and released, are detected simultaneously, the ECM interprets this as a malfunction in the stop light switch and sets the DTC.

HINT:

The normal conditions are as shown in the table below. The signals can be read using the Techstream.

SIGNAL	BRAKE PEDAL RELEASED	IN TRANSITION	BRAKE PEDAL DEPRESSED
STP	OFF	ON	ON
ST1-	ON	ON	OFF

DTC NO.	DTC DETECTION CONDITION	TROUBLE AREA
P0504	Conditions (a), (b) and (c) continue for 0.5 seconds or more (1 trip detection logic): (a) Ignition switch ON (b) Brake pedal released (c) STP signal OFF when ST1- signal OFF	• Short in stop light switch signal circuit • STOP fuse • IGN fuse • Stop light switch • ECM

CONFIRMATION DRIVING PATTERN

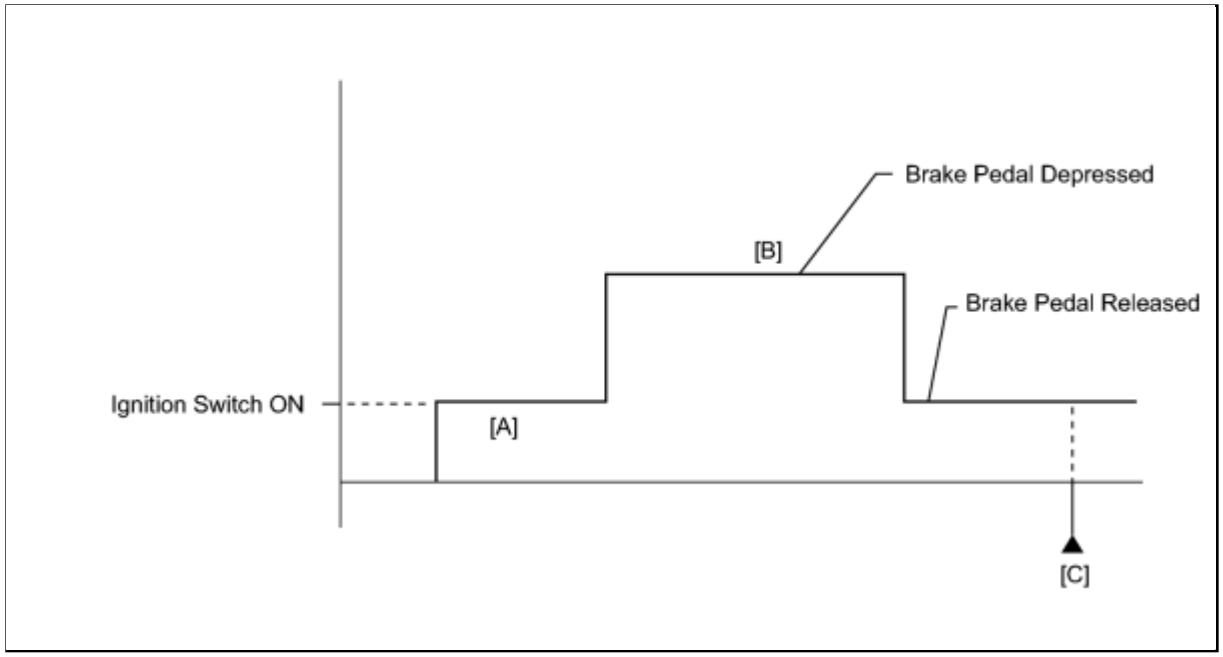

1. Connect the Techstream to the DLC3.
2. Turn the ignition switch to ON and turn the Techstream on.
3. Clear the DTCs (even if no DTCs are stored, perform the clear DTC procedure) INFO .
4. Turn the ignition switch off.
5. Turn the ignition switch to ON and turn the Techstream on [A].
6. Depress and release the brake pedal [B].
7. Enter the following menus: Powertrain / Engine / Utility / All Readiness.
8. Input the DTC: P0504.
9. Check the DTC judgment result [C].

TECHSTREAM DISPLAY	DESCRIPTION
NORMAL	○ DTC judgment completed ○ System normal
ABNORMAL	○ DTC judgment completed ○ System abnormal
INCOMPLETE	○ DTC judgment not completed ○ Perform driving pattern after confirming DTC enabling conditions
UNKNOWN	○ Unable to perform DTC judgment ○ Number of DTCs which do not fulfill DTC preconditions has reached ECU memory limit

HINT:

If the judgment result shows ABNORMAL, the system has a malfunction.

10. If the test result is UNKNOWN, enter the following menus: Powertrain / Engine / Trouble Codes / Pending.
11. Read Pending DTCs.

    HINT:

    If a pending DTC is output, the system is malfunctioning.

12. If the test result is INCOMPLETE or UNKNOWN and no pending DTC is output, perform a universal trip and check for permanent DTCs INFO .

    HINT:

    - If a permanent DTC is output, the system is malfunctioning.
    - If no permanent DTC is output, the system is normal.

WIRING DIAGRAM

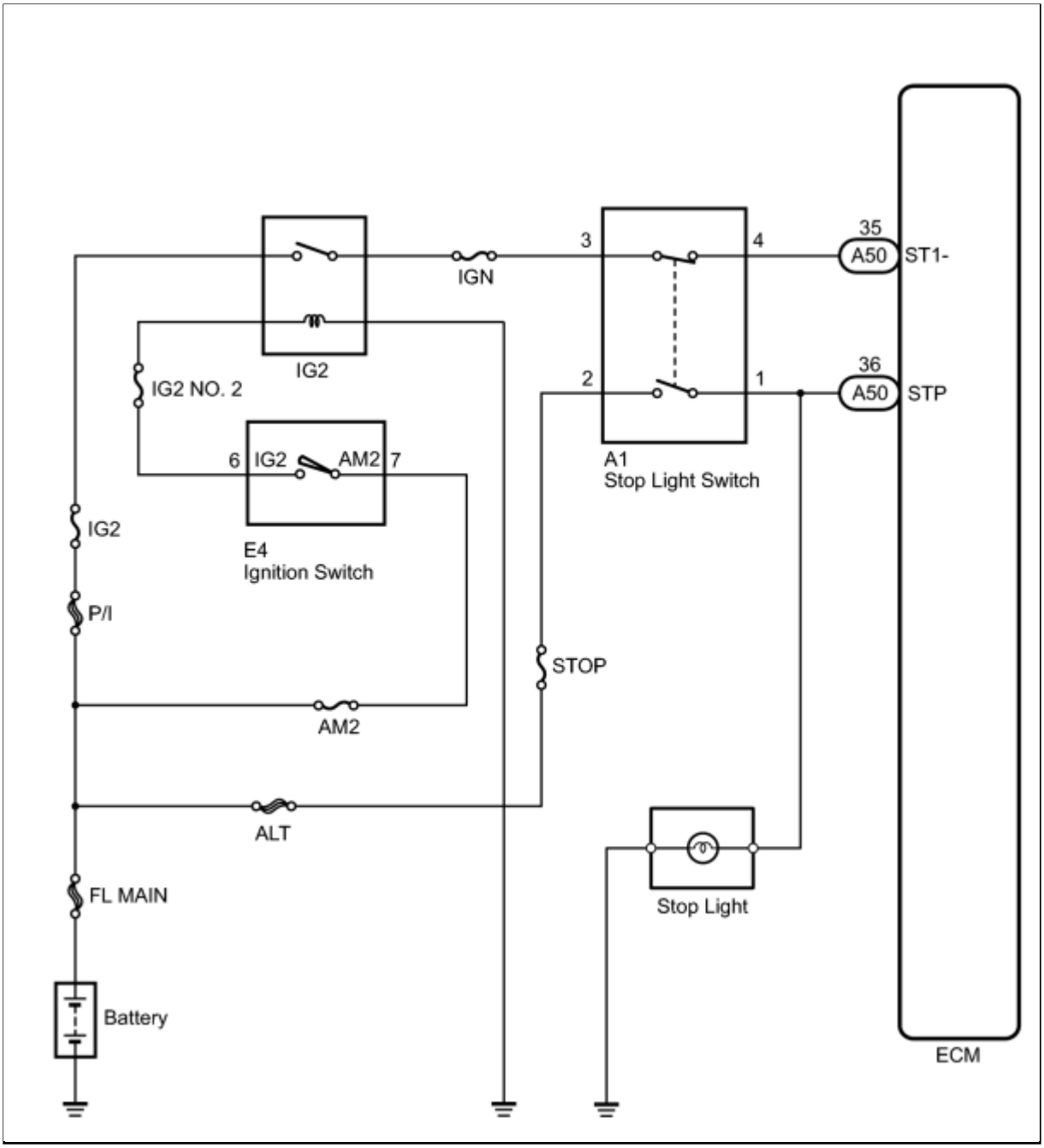

INSPECTION PROCEDURE

HINT:

- Read freeze frame data using the Techstream. The ECM records vehicle and driving condition information as freeze frame data the moment a DTC is stored. When troubleshooting, freeze frame data can be helpful in determining whether the vehicle was running or stopped, whether the engine was warmed up or not, whether the air fuel ratio was lean or rich, as well as other data recorded at the time of a malfunction.
- STP signal conditions can be checked using the Techstream.

    a. Connect the Techstream to the DLC3.
    b. Turn the ignition switch to ON.
    c. Turn the Techstream on.
    d. Enter the following menus: Powertrain / Engine and ECT / Stop Light Switch.

e. Check the STP signal when the brake pedal is depressed and released.

BRAKE PEDAL OPERATION	SPECIFIED CONDITION
Depressed	STP signal ON
Released	STP signal OFF

PROCEDURE

1.	**INSPECT STOP LIGHT SWITCH (TERMINAL VOLTAGE)**

(a) Disconnect the stop light switch connector.

(b) Measure the voltage according to the value(s) in the table below.

Standard Voltage:

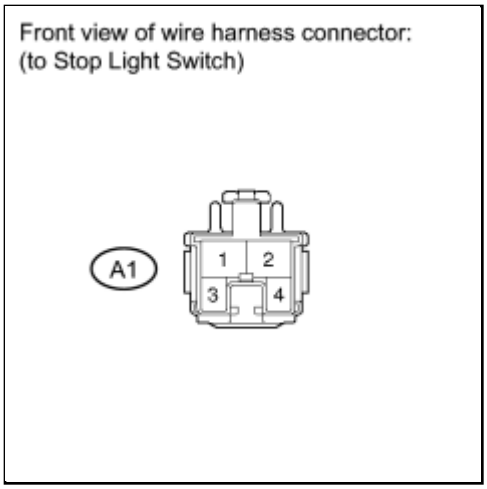

TESTER CONNECTION	SWITCH CONDITION	SPECIFIED CONDITION
A1-2 - Body ground	Always	11 to 14 V
A1-3 - Body ground	Ignition switch ON	11 to 14 V

(c) Reconnect the stop light switch connector.

NG ▶ **INSPECT FUSES (STOP AND IGN FUSES)**

OK ▼

2.	**INSPECT STOP LIGHT SWITCH**

(a) Remove the stop light switch.

(b) Measure the resistance according to the value(s) in

the table below.

Standard Resistance:

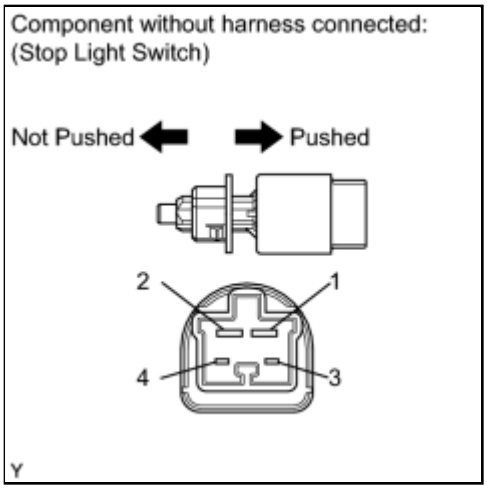

TESTER CONNECTION	SWITCH CONDITION	SPECIFIED CONDITION
1 - 2	Switch pin not pushed	Below 1 Ω
	Switch pin pushed	10 kΩ or higher
3 - 4	Switch pin not pushed	10 kΩ or higher
	Switch pin pushed	Below 1 Ω

(c) Reinstall the stop light switch.

NG ▶ **REPLACE STOP LIGHT SWITCH**

OK ▼

3.	**INSPECT ECM (STP AND ST1- VOLTAGE)**

(a) Disconnect the ECM connector.

(b) Turn the ignition switch to ON.

(c) Measure the voltage according to the value(s) in the table below.

Standard Voltage:

TESTER CONNECTION	CONDITION	SPECIFIED CONDITION
A50-35 (ST1-) - Body ground	Brake pedal released	11 to 14 V
	Brake pedal depressed	0 to 3 V

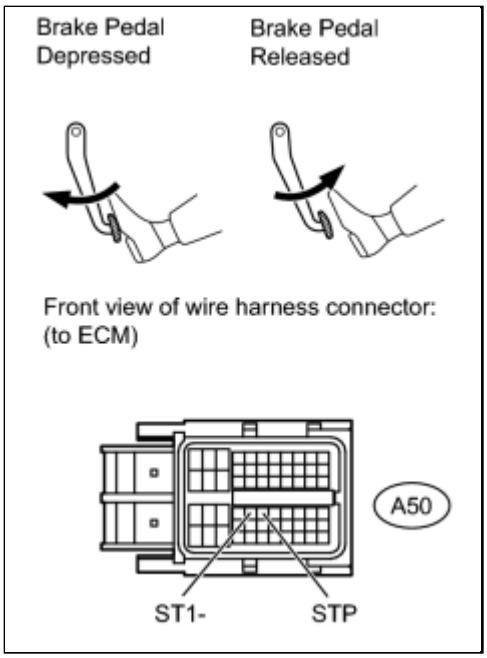

TESTER CONNECTION	CONDITION	SPECIFIED CONDITION
A50-36 (STP) - Body ground	Brake pedal released	0 to 3 V
	Brake pedal depressed	11 to 14 V

(d) Reconnect the ECM connector.

NG ▶ **REPAIR OR REPLACE HARNESS OR CONNECTOR**

OK ▶ **REPLACE ECM**

4.	**INSPECT FUSES (STOP AND IGN FUSES)**

(a) Remove the STOP and IGN fuses from the instrument panel junction block.

(b) Measure the resistance according to the value(s) in the table below.

Standard Resistance:

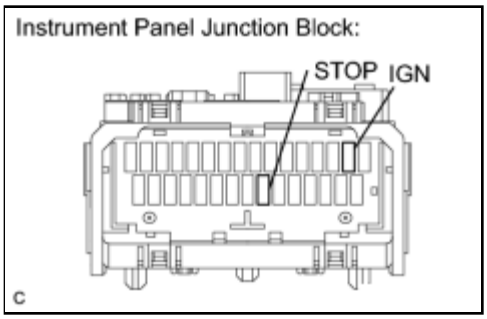

TESTER CONNECTION	CONDITION	SPECIFIED CONDITION
STOP fuse	Always	Below 1 Ω
IGN fuse		

(c) Reinstall the STOP and IGN fuses.

NG ▶ **REPLACE FUSE (STOP AND/OR IGN FUSE)**

OK ▶ **REPAIR OR REPLACE**

HARNESS OR CONNECTOR (BATTERY - STOP LIGHT SWITCH)

Last Modified: 3-10-2010	6.4 C	**From:** 200901
Model Year: 2010	**Model:** Corolla	**Doc ID:** RM000000T8M09PX
Title: 2AZ-FE ENGINE CONTROL: SFI SYSTEM: P0505: Idle Control System Malfunction (2010 Corolla)		

DTC	**P0505**	**Idle Control System Malfunction**

DESCRIPTION

The idle speed is controlled by the electronic throttle control system. The electronic throttle control system is comprised of: 1) a one valve type throttle body; 2) a throttle actuator, which operates the throttle valve; 3) a throttle position sensor, which detects the opening angle of the throttle valve; 4) an accelerator pedal position sensor, which detects the accelerator pedal position; and 5) the ECM, which controls the electronic throttle control system. Based on the target idle speed, the ECM controls the throttle actuator to provide the proper throttle valve opening angle.

DTC NO.	DTC DETECTION CONDITION	TROUBLE AREA
P0505	idle speed continues to vary greatly from target idle speed (2 trip detection logic)	• Electronic throttle control system • Intake system • PCV hose connections • ECM

MONITOR DESCRIPTION

The ECM monitors the idle speed and idle air flow volume to conduct idle speed control. The ECM determines that the idle speed control system is malfunctioning if the following conditions apply:

- The learned idle air flow volume remains at the maximum or minimum volume 5 times or more during a drive cycle.
- After driving at a vehicle speed of 6.25 mph (10 km/h) or more, the actual engine idle speed varies from the target idle speed by less than -100 rpm or 150 rpm or more when the A/C and NSW are off, or less than -100 rpm or 200 rpm or more when the A/C or NSW are on, 5 times or more during a driving cycle, the ECM illuminates the MIL and sets the DTC.

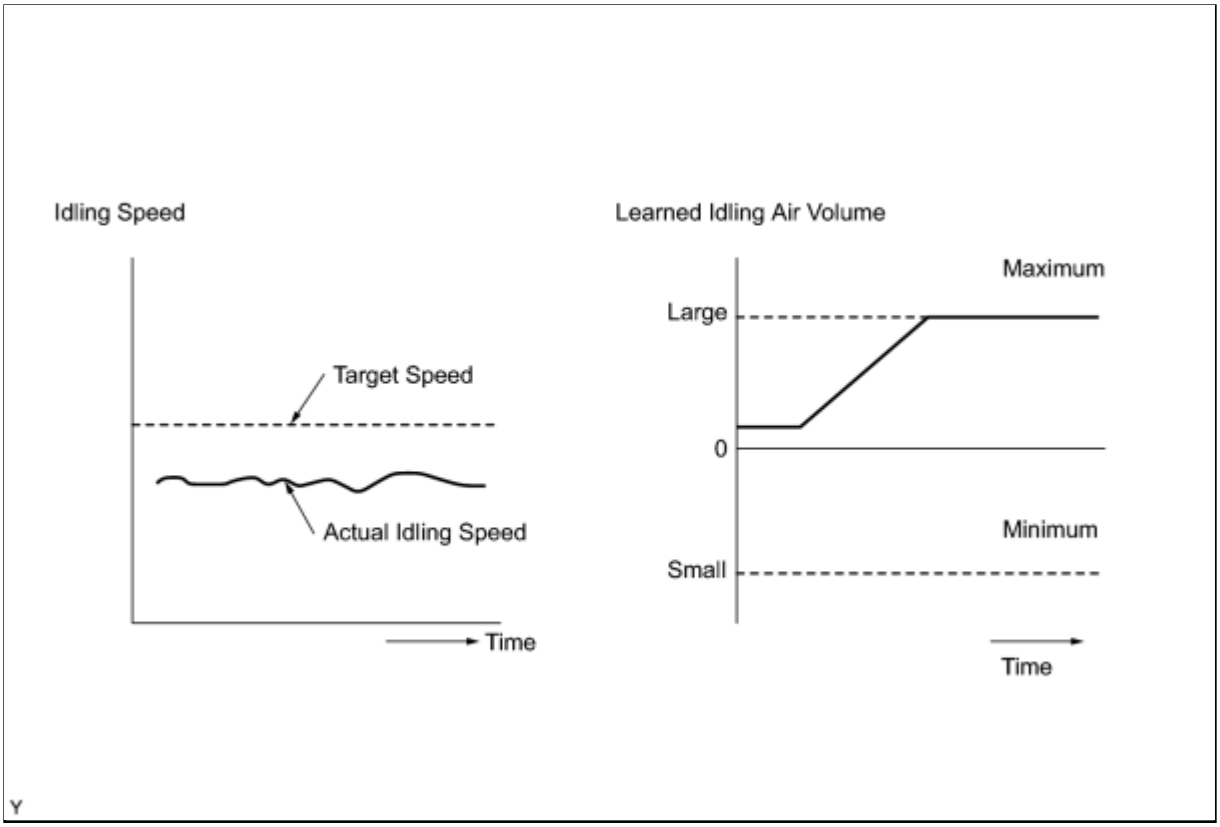

MONITOR STRATEGY

Related DTCs	P0505: Idle speed control function
Required Sensors/Components (Main)	Electronic throttle control system
Required Sensors/Components (Related)	Crankshaft position sensor Engine coolant temperature sensor Vehicle speed sensor
Frequency of Operation	Once per driving cycle
Duration	10 minutes (Idling after warming up)
MIL Operation	2 driving cycles
Sequence of Operation	None

TYPICAL ENABLING CONDITIONS

Monitor runs whenever following DTCs are not present	P0010 (VVT Oil Control Valve Bank 1) P0011 (VVT System bank 1- Advance) P0012 (VVT System bank 1- Retard) P0016 (VVT System bank 1- Misalignment) P0031, P0032 (Air Fuel Ratio Sensor Heater - Sensor 1) P0102, P0103 (Mass Air Flow Meter)

	P0115, P0117, P0118 (Engine Coolant Temperature Sensor) P0120, P0121 P0122, P0123, P0220, P0222, P0223, P2135 (Throttle Position Sensor) P0125 (Insufficient Engine Coolant Temperature for Closed Loop Fuel Control) P0171, P0172 (Fuel System) P0301, P0302, P0303, P0304 (Misfire) P0335 (Crankshaft Position Sensor) P0340 (Camshaft Position Sensor) P0351, P0352, P0353, P0354 (Igniter) P0451, P0452, P0453 (EVAP System) P0500 (Vehicle Speed Sensor) P0606, P0607 (Heated Oxygen Sensor - Sensor 2) P2195, P2196, P2237, P2238, P2239, P2252, P2253, P2A00 (Air Fuel Ratio Sensor - Sensor 1)
Engine	Running

TYPICAL MALFUNCTION THRESHOLDS

Either of the following conditions is met:	Condition 1 or 2
1. Frequency that both of the following conditions (a) and (b) are met	5 times or more
(a) Either of the following conditions is met:	Condition A or B
A. Engine speed - target engine speed	Less than -100 rpm, or 150 rpm or more (A/C off and NSW off)
B. Engine speed - target engine speed	Less than -100 rpm, or 200 rpm or more (A/C on or NSW on)
(b) Vehicle condition	Stop after vehicle was driven by 6.25 mph (10 km/h) or more
2. Frequency that both of the following conditions (a) and (b) are met	Once
(a) Either of the following conditions is met:	Condition A or B
A. Engine speed - target engine speed	Less than -100 rpm, or 150 rpm or more (A/C off and NSW off)
B. Engine speed - target engine speed	Less than -100 rpm, or 200 rpm or more (A/C on or NSW on)
(b) Idle air control flow rate learning valve	1.1 L/sec or less, or 6.0 L/sec or more

CONFIRMATION DRIVING PATTERN

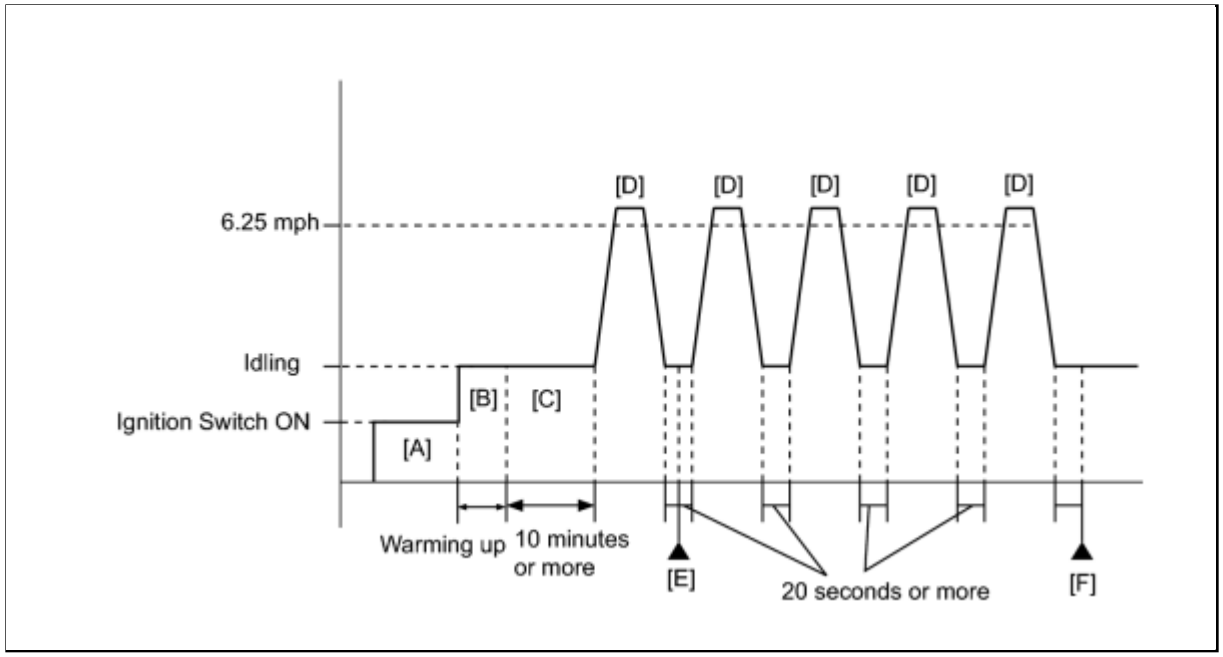

1. Connect the Techstream to the DLC3.
2. Turn the ignition switch to ON and turn the Techstream on.
3. Clear the DTCs (even if no DTCs are stored, perform the clear DTC procedure) INFO .
4. Turn the ignition switch off.
5. Turn the ignition switch to ON and turn the Techstream on [A].
6. Start the engine and warm it up (until the engine coolant temperature is 75°C (167°F) or more) with all the accessories switched off [B].
7. Idle the engine for 10 minutes or more [C].
8. Accelerate the vehicle to 6.25 mph (10 km/h) or more, and then idle the engine [D].
9. Enter the following menus: Powertrain / Engine / Utility / All Readiness.
10. Input the DTC: P0505.
11. Check the DTC judgment result [E].

TECHSTREAM DISPLAY	DESCRIPTION
NORMAL	○ DTC judgment completed ○ System normal
ABNORMAL	○ DTC judgment completed ○ System abnormal
INCOMPLETE	○ DTC judgment not completed ○ Perform driving pattern after confirming DTC enabling conditions
UNKNOWN	○ Unable to perform DTC judgment ○ Number of DTCs which do not fulfill DTC preconditions has reached ECU memory limit

HINT:

- If the judgment result shows ABNORMAL, the system has a malfunction.
- If the judgment result shows INCOMPLETE or UNKNOWN, repeat step [D] 4 times, allowing 20 seconds or more between each repetition, and then check the DTC judgment result [F].

12. If the test result is UNKNOWN, enter the following menus: Powertrain / Engine / Trouble Codes / Pending.
13. Read Pending DTCs.

HINT:

If a pending DTC is output, the system is malfunctioning.

14. If the test result is INCOMPLETE or UNKNOWN and no pending DTC is output, perform a universal trip and check for permanent DTCs INFO .

HINT:

- If a permanent DTC is output, the system is malfunctioning.
- If no permanent DTC is output, the system is normal.

INSPECTION PROCEDURE

HINT:

- The following conditions may also cause DTC P0505 to be set:
  a. The floor carpet overlapping slightly onto the accelerator pedal, causing the accelerator pedal to be slightly depressed and therefore the throttle valve position to be slightly open.
  b. The accelerator pedal being not fully released.
- Read freeze frame data using the Techstream. The ECM records vehicle and driving condition information as freeze frame data the moment a DTC is stored. When troubleshooting, freeze frame data can be helpful in determining whether the vehicle was running or stopped, whether the engine was warmed up or not, whether the air fuel ratio was lean or rich, as well as other data recorded at the time of a malfunction.

PROCEDURE

1.	**CHECK ANY OTHER DTCS OUTPUT (IN ADDITION TO DTC P0505)**

(a) Connect the Techstream to the DLC3.

(b) Turn the ignition switch to ON.

(c) Turn the Techstream on.

(d) Enter the following menus: Powertrain / Engine and ECT / Trouble Codes.

(e) Read DTCs.

Result:

RESULT	PROCEED TO
P0505	A
P0505 and other DTCs	B

HINT:

If any DTCs other than P0505 are output, troubleshoot those DTCs first.

B ▶ **GO TO DTC CHART**

A
▼

2.	CHECK PCV HOSE CONNECTIONS

(a) Check PCV hose.

OK:
PCV hose is connected correctly and is not damaged.

NG ▶ **REPAIR OR REPLACE PCV HOSE**

OK
▼

3.	CHECK INTAKE SYSTEM

(a) Check the intake system for vacuum leaks INFO .

OK:
No leak in intake system.

NG ▶ **REPAIR OR REPLACE INTAKE SYSTEM**

OK
▼

4.	**INSPECT THROTTLE BODY (THROTTLE VALVE)**

(a) Check the throttle valve condition.

OK:

Throttle valve is not contaminated with foreign objects and moves smoothly.

NG ▶ **REPLACE THROTTLE BODY**

OK ▶ **REPLACE ECM**

Last Modified: 3-10-2010	6.4 C	**From:** 200901
Model Year: 2010	**Model:** Corolla	**Doc ID:** RM000001BFY042X
Title: 2AZ-FE ENGINE CONTROL: SFI SYSTEM: P050A: Cold Start Idle Air Control System Performance (2010 Corolla)		

DTC	**P050A**	**Cold Start Idle Air Control System Performance**

MONITOR DESCRIPTION

This monitor will run when the engine is started at an engine coolant temperature of -10 to 50°C (14 to 122°F). The DTC can be set after the engine idles for 13 seconds (2 trip detection logic).

The DTC is designed to monitor the idle air control at cold start. When the engine is started at an engine coolant temperature of lower than 50°C (122°F), the ECM measures the accumulated mass air flow at idle. If it does not reach the specified level within 10 seconds, the ECM interprets this as a malfunction. The MIL is illuminated and a DTC is set when the malfunction is detected in consecutive driving cycles (2 trip detection logic).

The Electronic throttle control system controls the idle speed. The electronic throttle control system operates the throttle actuator to open and close the throttle valve, and adjusts the intake air amount to achieve the target idle speed.

NOTICE:

When the negative battery terminal is disconnected during inspections or repairs, the idle speed control learning values are cleared. This DTC cannot be set with the idle speed control learning values cleared.

HINT:

The Idle speed control learning is performed when the engine is warmed up and has been idling for 5 minutes.

P050A Detection Logic:

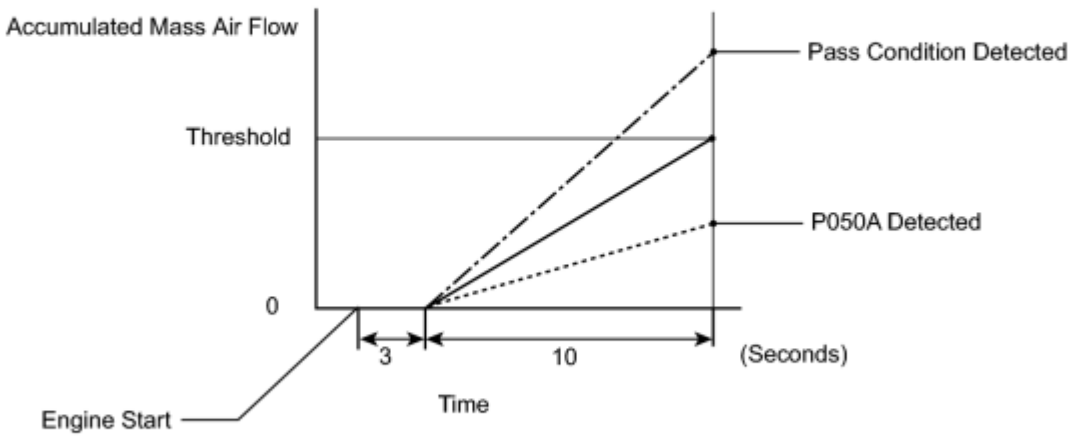

Engine Coolant Temperature: -10 to 50°C (14 to 122°F)

DTC NO.	DTC DETECTION CONDITION	TROUBLE AREA
P050A	Insufficient mass air flow at cold start (2 trip detection logic)	• Throttle body • Mass air flow meter • PCV system • Air cleaner filter element • Intake system • VVT system • ECM

MONITOR STRATEGY

Related DTCs	P050A: Cold start idle air speed control system
Required Sensors / Components (Main)	Throttle body
Required Sensors / Components (Related)	Mass air flow meter Engine coolant temperature sensor
Frequency of Operation	Once per driving cycle
Duration	10 seconds
MIL Operation	2 driving cycles
Sequence of Operation	None

TYPICAL ENABLING CONDITIONS

Monitor runs whenever following DTCs are not present	P0010 (VVT Oil Control Valve Bank 1) P0011 (VVT System bank 1- Advance) P0012 (VVT System bank 1- Retard) P0016 (VVT System bank 1- Misalignment) P0102, P0103 (Mass Air Flow Meter) P0115, P0117, P0118 (Engine Coolant Temperature Sensor) P0120, P0121 P0122, P0123, P0220, P0222, P0223, P2135 (Throttle Position Sensor) P0125 (Insufficient Engine Coolant Temperature for Closed Loop Fuel Control) P0171, P0172 (Fuel System) P0301, P0302, P0303, P0304 (Misfire) P0335 (Crankshaft Position Sensor) P0340 (Camshaft Position Sensor) P0351, P0352, P0353, P0354 (Igniter) P0500 (Vehicle Speed Sensor) P0606, P0607 (Heated Oxygen Sensor - Sensor 2) P2195, P2196, P2237, P2238, P2239, P2252, P2253, P2A00 (Air Fuel Ratio Sensor - Sensor 1)
Battery voltage	8 V or more
Time after engine start	3 seconds or more
Starter	OFF
Engine coolant temperature at engine start	-10°C (14°F) or more
Engine coolant temperature	-10 to 50°C (14 to 122°F)
Engine idling time	3 seconds or more
Fuel-cut	OFF
Vehicle speed	Less than 1.875 mph (3 km/h)
Atmospheric pressure	76 kPa (570 mmHg) or more

TYPICAL MALFUNCTION THRESHOLDS

Accumulated mass air flow	Varies with engine coolant temperature (Example: Less than 27.5 g)

CONFIRMATION DRIVING PATTERN

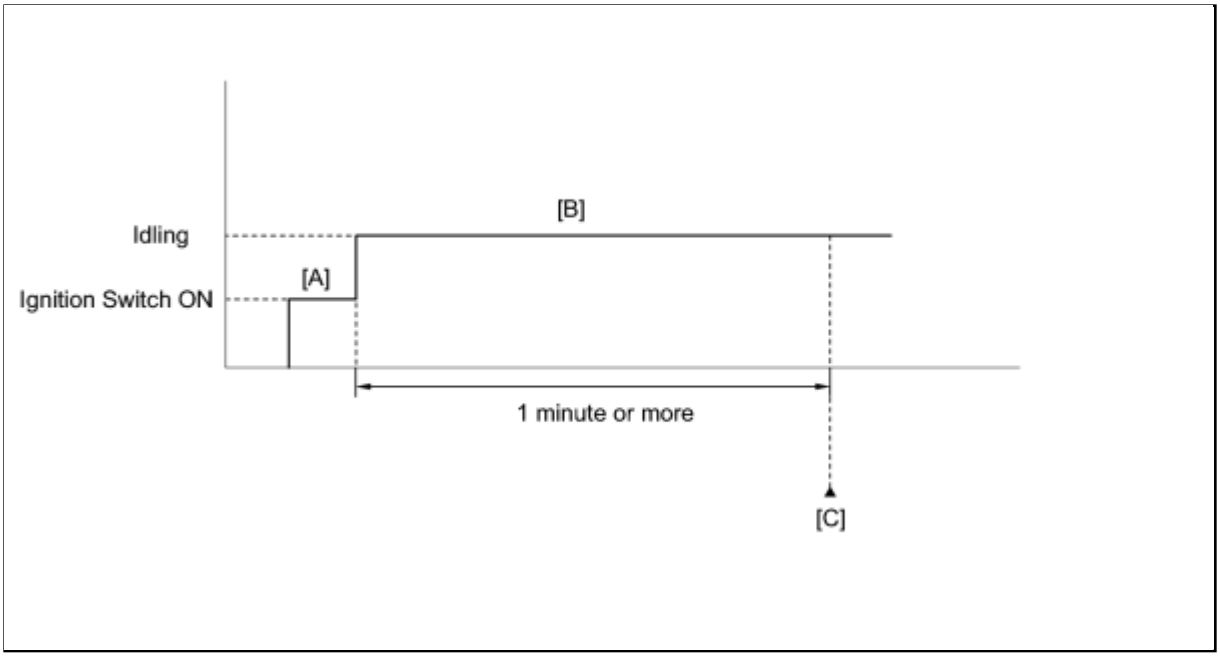

1. Connect the Techstream to the DLC3.
2. Turn the ignition switch to ON and turn the Techstream on.
3. Clear the DTCs (even if no DTCs are stored, perform the clear DTC procedure) INFO .
4. Turn the ignition switch off.
5. Turn the ignition switch to ON and turn the Techstream on [A].
6. Enter the following menus: Powertrain / Engine / Data List / All Data / Coolant Temp.
7. Check that "Coolant Temp" in the Data List are within the range of -10 to 50°C (14 to 122°F).
8. Start the engine and warm it up until the coolant temperature is the same as the coolant temperature in the freeze frame data.
9. Idle the engine for 1 minute or more [B].
10. Enter the following menus: Powertrain / Engine / Utility / All Readiness.
11. Input the DTC: P050A.
12. Check the DTC judgment result [C].

TECHSTREAM DISPLAY	DESCRIPTION
NORMAL	○ DTC judgment completed ○ System normal
ABNORMAL	○ DTC judgment completed ○ System abnormal
INCOMPLETE	○ DTC judgment not completed ○ Perform driving pattern after confirming DTC enabling conditions
UNKNOWN	○ Unable to perform DTC judgment ○ Number of DTCs which do not fulfill DTC preconditions has reached ECU memory limit

HINT:

- If the judgment result shows ABNORMAL, the system has a malfunction.

- If the judgment result shows INCOMPLETE or UNKNOWN, idle the engine for 3 minutes, let the engine cool down, and then perform steps [A] through [C].

13. If the test result is UNKNOWN, enter the following menus: Powertrain / Engine / Trouble Codes / Pending.
14. Read Pending DTCs.

HINT:

If a pending DTC is output, the system is malfunctioning.

15. If the test result is INCOMPLETE or UNKNOWN and no pending DTC is output, perform a universal trip and check for permanent DTCs INFO .

HINT:

- If a permanent DTC is output, the system is malfunctioning.
- If no permanent DTC is output, the system is normal.

INSPECTION PROCEDURE

HINT:

Read freeze frame data using the Techstream. The ECM records vehicle and driving condition information as freeze frame data the moment a DTC is stored. When troubleshooting, freeze frame data can be helpful in determining whether the vehicle was running or stopped, whether the engine was warmed up or not, whether the air-fuel ratio was lean or rich, as well as other data recorded at the time of a malfunction.

PROCEDURE

1.	**CHECK ANY OTHER DTCS OUTPUT (IN ADDITION TO DTC P050A)**

(a) Connect the Techstream to the DLC3.

(b) Turn the ignition switch to ON.

(c) Turn the Techstream on.

(d) Enter the following menus: Powertrain / Engine and ECT / Trouble Codes.

(e) Read DTCs.

Result:

RESULT	PROCEED TO
P050A	A
P050A and other DTCs	B

HINT:

If any DTCs other than P050A are output, troubleshoot those DTCs first.

B ▶ GO TO DTC CHART

A ▼

2.	READ VALUE USING TECHSTREAM (FUEL TRIM)

HINT:

Calculate the total fuel trim values to check the characteristic deviation of the mass air flow meter.

(a) Connect the Techstream to the DLC3.

(b) Turn the ignition switch to ON.

(c) Turn the Techstream on.

(d) Enter the following menus: Powertrain / Engine and ECT / Data List / A/F Control System / Short FT #1 and Long FT #1.

(e) Read the values displayed on the Techstream.

(f) Add together the Short FT #1 and Long FT #1 values to obtain the total Fuel Trim.

OK:

Total of Short FT #1 and Long FT #1 values is between -20% and 20%.

NG ▶ PERFORM ACTIVE TEST USING TECHSTREAM (OPERATE OIL CONTROL VALVE)

OK ▼

3.	INSPECT THROTTLE BODY

(a) Check that there are no deposits around the throttle valve.

OK:

No deposits around the throttle valve.

NG ▶ REPAIR OR REPLACE THROTTLE BODY

OK

4.	**REPLACE ECM**

(a) Replace ECM INFO .

NEXT **CHECK WHETHER DTC OUTPUT RECURS (DTC P050A)**

5.	**PERFORM ACTIVE TEST USING TECHSTREAM (OPERATE OIL CONTROL VALVE)**

(a) Connect the Techstream to the DLC3.

(b) Start the engine.

(c) Turn the Techstream ON.

(d) Warm up the engine.

(e) Enter the following menus: Powertrain / Engine and ECT / Active Test / Control the VVT System (Bank 1).

(f) Check the engine speed while operating the oil control valve using the Techstream.

OK:

TESTER OPERATION	SPECIFIED CONDITION
Oil Control Valve OFF	Normal engine speed
Oil Control Valve ON	Engine idles roughly or stalls (soon after camshaft timing oil control valve assembly switched from OFF to ON)

NG **CHECK AND REPAIR VVT SYSTEM**

OK

6.	CHECK PCV SYSTEM

(a) Start the engine.

(b) Pinch the positive crankcase ventilation (PCV) hose.

(c) Check the engine rpm.

OK:

The engine rpm changes when the PCV hose is pinched.

NG ▶ **REPAIR OR REPLACE PCV SYSTEM**

OK ▼

7.	CHECK AIR CLEANER FILTER ELEMENT SUB-ASSEMBLY

(a) Visually check that the air cleaner filter element sub-assembly is not excessively contaminated with dirt or oil.

OK:

The air cleaner filter element sub-assembly is not excessively contaminated with dirt or oil.

NG ▶ **REPLACE AIR CLEANER FILTER ELEMENT SUB-ASSEMBLY**

OK ▼

8.	CHECK INTAKE SYSTEM

(a) Check the intake system for vacuum leaks INFO .

OK:

No leaks in the intake system.

NG ▶ **REPAIR OR REPLACE INTAKE SYSTEM**

OK

9.	**REPLACE MASS AIR FLOW METER**

(a) Replace mass air flow meter INFO .

NEXT **CHECK WHETHER DTC OUTPUT RECURS (DTC P050A)**

10.	**REPAIR OR REPLACE THROTTLE BODY**

(a) Clean or replace throttle body INFO .

NEXT **CHECK WHETHER DTC OUTPUT RECURS (DTC P050A)**

11.	**CHECK AND REPAIR VVT SYSTEM**

HINT:

Refer to DTC P0011 Inspection Procedure INFO

NEXT **CHECK WHETHER DTC OUTPUT RECURS (DTC P050A)**

12.	**REPAIR OR REPLACE PCV SYSTEM**

NEXT **CHECK WHETHER DTC OUTPUT RECURS (DTC P050A)**

13.	**REPLACE AIR CLEANER FILTER ELEMENT SUB-ASSEMBLY**

NEXT ▶ CHECK WHETHER DTC OUTPUT RECURS (DTC P050A)

14.	REPAIR OR REPLACE INTAKE SYSTEM

NEXT ▶ CHECK WHETHER DTC OUTPUT RECURS (DTC P050A)

15.	CHECK WHETHER DTC OUTPUT RECURS (DTC P050A)

NOTICE:

For this operation, the engine must be cold (the same level as the engine coolant temperature recorded in the freeze frame data).

(a) Connect the Techstream to the DLC3.

(b) Turn the ignition switch to ON.

(c) Turn the Techstream on.

(d) Clear the DTCs INFO .

(e) Switch the ECM from normal mode to check mode using the Techstream INFO .

(f) Start the engine and idle it for one minute.

OK:

Stable fast idle

(g) Read DTCs.

OK:

No DTC is output.

NEXT ▶ END

Last Modified: 3-10-2010	6.4 C	**From:** 200901
Model Year: 2010	**Model:** Corolla	**Doc ID:** RM000000T8P0D4X
Title: 2AZ-FE ENGINE CONTROL: SFI SYSTEM: P0560: System Voltage (2010 Corolla)		

DTC	**P0560**	**System Voltage**

MONITOR DESCRIPTION

The battery supplies electricity to the ECM even when the ignition switch is off. This power allows the ECM to store data such as DTC history, freeze frame data and fuel trim values. If the battery voltage falls below a minimum level, the memory is cleared and the ECM determines that there is a malfunction in the power supply circuit. The next time the engine is started, the ECM illuminates the MIL and sets the DTC.

DTC NO.	DTC DETECTION CONDITION	TROUBLE AREA
P0560	Open in ECM back up power source circuit (1 trip detection logic)	• Open in back up power source circuit • Battery • Battery terminals • EFI MAIN fuse • ECM

HINT:

If DTC P0560 is set, the ECM does not store other DTCs or the data stored in the ECM may be partly erased.

MONITOR STRATEGY

Related DTCs	P0560: ECM system voltage
Required Sensors/Components (Main)	ECM
Required Sensors/Components (Related)	-
Frequency of Operation	Continuous
Duration	3 seconds
MIL Operation	Immediate (MIL illuminated after next engine start)
Sequence of Operation	None

TYPICAL ENABLING CONDITIONS

Monitor runs whenever following DTCs are not present	None

TYPICAL MALFUNCTION THRESHOLDS

ECM power source	Less than 3.5 V

CONFIRMATION DRIVING PATTERN

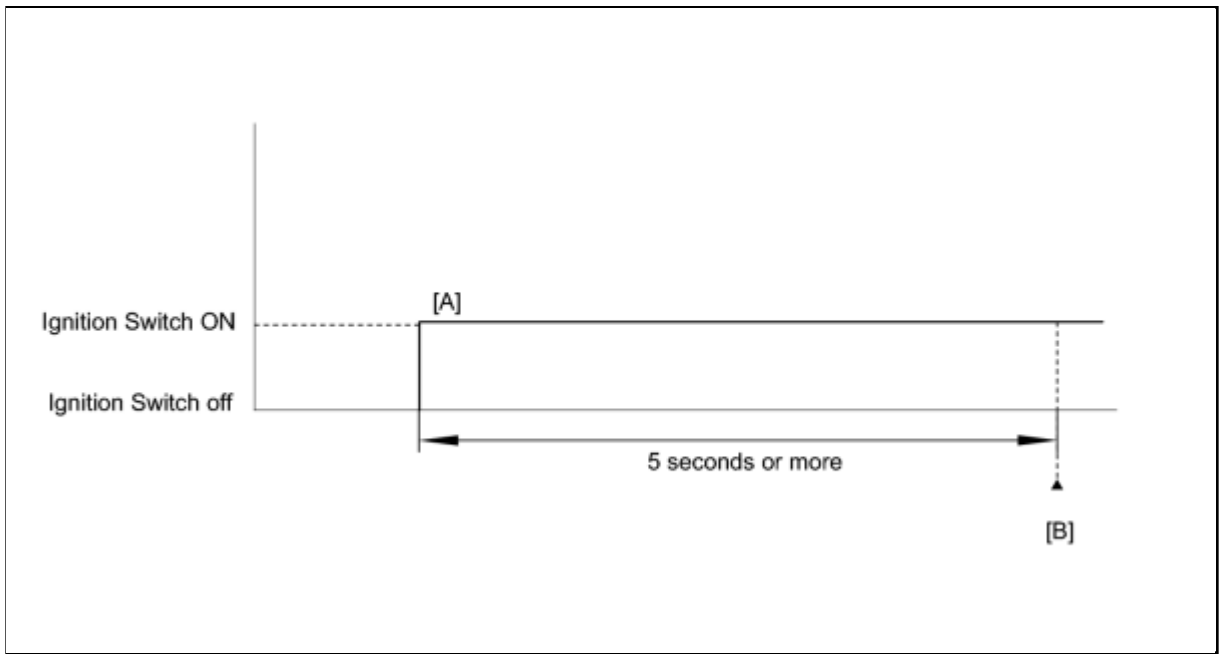

1. Connect the Techstream to the DLC3.
2. Turn the ignition switch to ON and turn the Techstream on.
3. Clear the DTCs (even if no DTCs are stored, perform the clear DTC procedure) INFO .
4. Turn the ignition switch off.
5. Turn the ignition switch to ON and turn the Techstream on [A].
6. Wait 5 seconds or more.
7. Enter the following menus: Powertrain / Engine / Utility / All Readiness.
8. Input the DTC: P0560.
9. Check the DTC judgment result [B].

TECHSTREAM DISPLAY	DESCRIPTION
NORMAL	○ DTC judgment completed ○ System normal
ABNORMAL	○ DTC judgment completed ○ System abnormal
INCOMPLETE	○ DTC judgment not completed ○ Perform driving pattern after confirming DTC enabling

TECHSTREAM DISPLAY	DESCRIPTION
	conditions
UNKNOWN	○ Unable to perform DTC judgment ○ Number of DTCs which do not fulfill DTC preconditions has reached ECU memory limit

HINT:

If the judgment result shows ABNORMAL, the system has a malfunction.

10. If the test result is UNKNOWN, enter the following menus: Powertrain / Engine / Trouble Codes / Pending.
11. Read Pending DTCs.

HINT:

If a pending DTC is output, the system is malfunctioning.

12. If the test result is INCOMPLETE or UNKNOWN and no pending DTC is output, perform a universal trip and check for permanent DTCs INFO .

HINT:

- If a permanent DTC is output, the system is malfunctioning.
- If no permanent DTC is output, the system is normal.

WIRING DIAGRAM

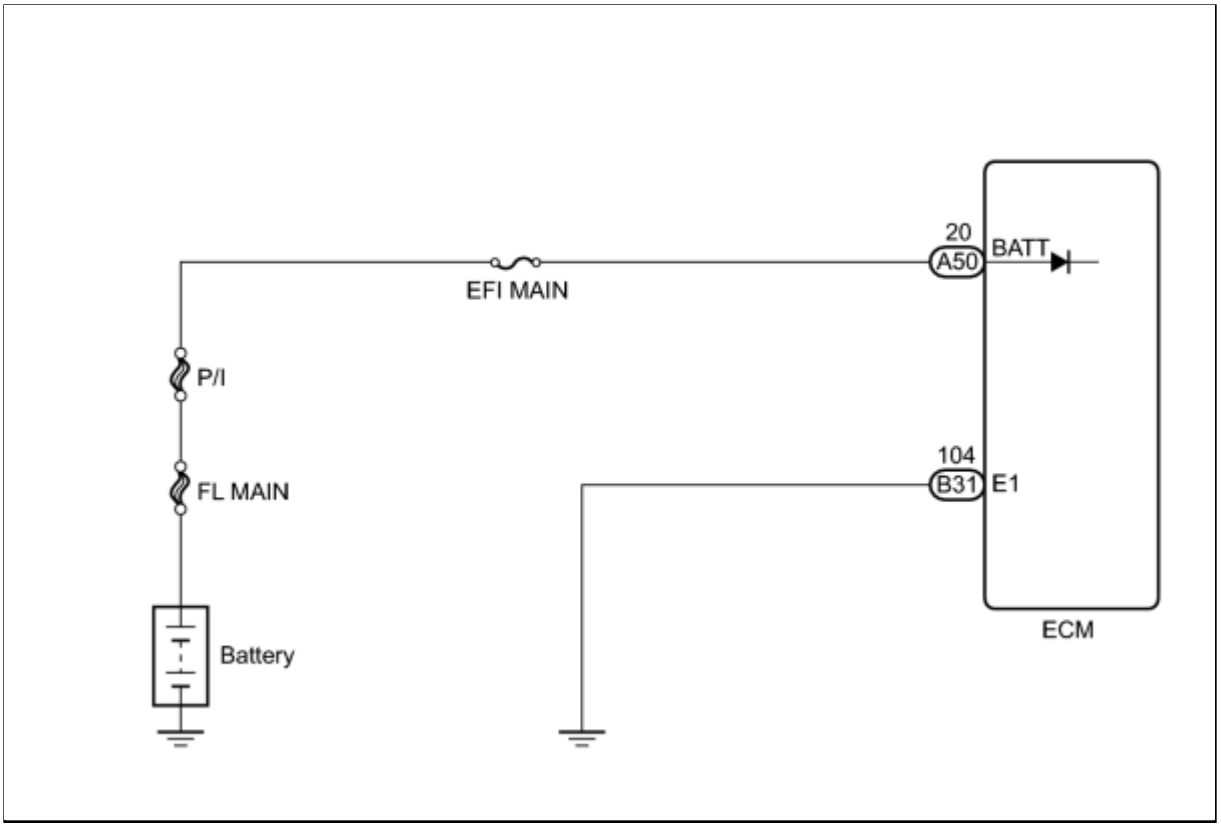

INSPECTION PROCEDURE

HINT:

Read freeze frame data using the Techstream. The ECM records vehicle and driving condition information as freeze frame data the moment a DTC is stored. When troubleshooting, freeze frame data can be helpful in determining whether the vehicle was running or stopped, whether the engine was warmed up or not, whether the air fuel ratio was lean or rich, as well as other data recorded at the time of a malfunction.

PROCEDURE

1.	**INSPECT FUSE (EFI MAIN)**

(a) Remove the EFI MAIN fuse from the engine room relay block.

(b) Measure the resistance according to the value(s) in the table below.

Standard Resistance:

TESTER CONNECTION	CONDITION	SPECIFIED CONDITION

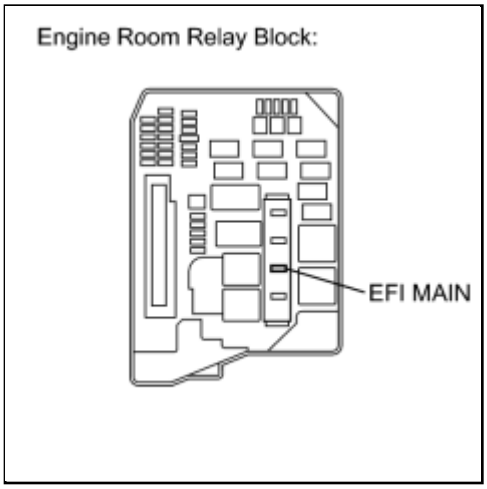

TESTER CONNECTION	CONDITION	SPECIFIED CONDITION
EFI MAIN Fuse	Always	Below 1 Ω

(c) Reinstall the EFI MAIN fuse.

NG ▶ **REPLACE FUSE (EFI MAIN)**

OK ▼

2.	CHECK HARNESS AND CONNECTOR (ECM - EFI MAIN FUSE - BATTERY)

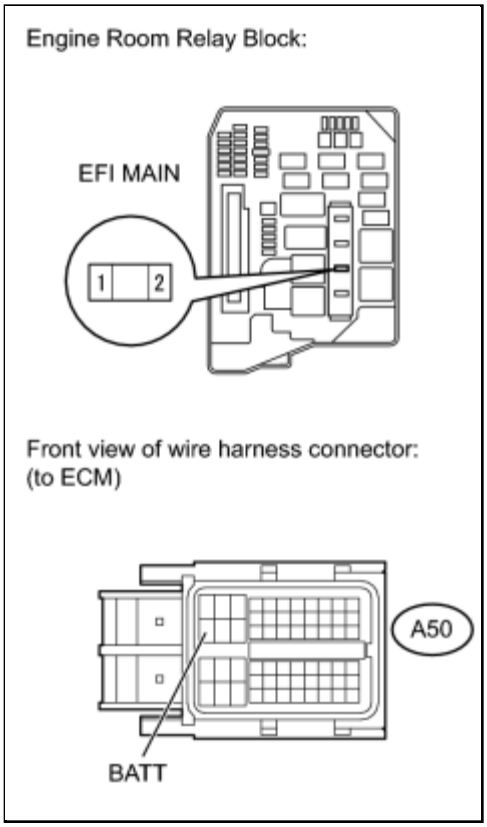

(a) Disconnect the negative battery terminal.

(b) Disconnect the positive battery terminal.

(c) Remove the EFI MAIN fuse from the engine room relay block.

(d) Disconnect the ECM connector.

(e) Measure the resistance according to the value(s) in the table below.

Standard Resistance (Check for Open):

TESTER CONNECTION	CONDITION	SPECIFIED CONDITION
EFI MAIN fuse (2) - A50-20 (BATT)	Always	Below 1 Ω
Battery positive terminal - EFI MAIN fuse (1)	Always	Below 1 Ω

Standard Resistance (Check for Short):

TESTER CONNECTION	CONDITION	SPECIFIED CONDITION
EFI MAIN fuse (2) or	Always	10 kΩ or higher

TESTER CONNECTION	CONDITION	SPECIFIED CONDITION
A50-20 (BATT) - Body ground		
Battery positive terminal or EFI MAIN fuse (1) - Body ground	Always	10 kΩ or higher

(f) Reinstall the EFI MAIN fuse.

(g) Reconnect the ECM connector.

(h) Reconnect the positive battery terminal.

(i) Reconnect the negative battery terminal.

NG ▶ **REPAIR OR REPLACE HARNESS OR CONNECTOR (ECM - EFI MAIN FUSE - BATTERY)**

OK ▼

3.	INSPECT BATTERY

(a) Check that the battery is not discharged or weak.

OK:

Battery is not discharged or weak

NG ▶ **CHARGE OR REPLACE BATTERY**

OK ▼

4.	CHECK BATTERY TERMINAL

(a) Check that the battery terminals are not loose or corroded.

OK:

Battery terminals are not loose or corroded

NG ▶ **REPAIR OR REPLACE BATTERY TERMINAL**

OK ▼

5.	**CHECK WHETHER DTC OUTPUT RECURS**

(a) Connect the Techstream to the DLC3.

(b) Turn the ignition switch to ON.

(c) Turn the Techstream on.

(d) Clear the DTCs [INFO].

(e) Turn the ignition switch to OFF and turn the Techstream OFF.

(f) Start the engine and turn the Techstream ON.

(g) Enter the following menus: Powertrain / Engine and ECT / Trouble Codes.

(h) Read DTCs.

Result:

RESULT	PROCEED TO
P0560	A
No output	B

B ▶ **CHECK FOR INTERMITTENT PROBLEMS**

A ▶ **REPLACE ECM**

Last Modified: 3-10-2010	6.4 C	**From:** 200901
Model Year: 2010	**Model:** Corolla	**Doc ID:** RM000002KQO02ZX
Title: 2AZ-FE ENGINE CONTROL: SFI SYSTEM: P0604: Random Access Memory (RAM) (2010 Corolla)		

DTC	**P0604**	**Random Access Memory (RAM)**

MONITOR DESCRIPTION

The ECM continuously monitors its internal memory status. This self-check ensures that the ECM is functioning properly. It is diagnosed by internal "mirroring" of the main CPU and sub CPU to detect the Random Access Memory (RAM) errors. If outputs from these CPUs are different and deviate from the standards, the ECM will illuminate the MIL and set the DTC immediately.

DTC NO.	DTC DETECTION CONDITION	TROUBLE AREA
P0604	ECM RAM errors	ECM

MONITOR STRATEGY

Related DTCs	P0606: ECM RAM error
Required sensors/Components (Main)	ECM
Required sensors/Components (Related)	None
Frequency of operation	Continuous
Duration	6 times
MIL operation	Immediate
Sequence of operation	None

TYPICAL ENABLING CONDITIONS

None	-

TYPICAL MALFUNCTION THRESHOLDS

Main CPU and sub CPU mirroring	Fail

CONFIRMATION DRIVING PATTERN

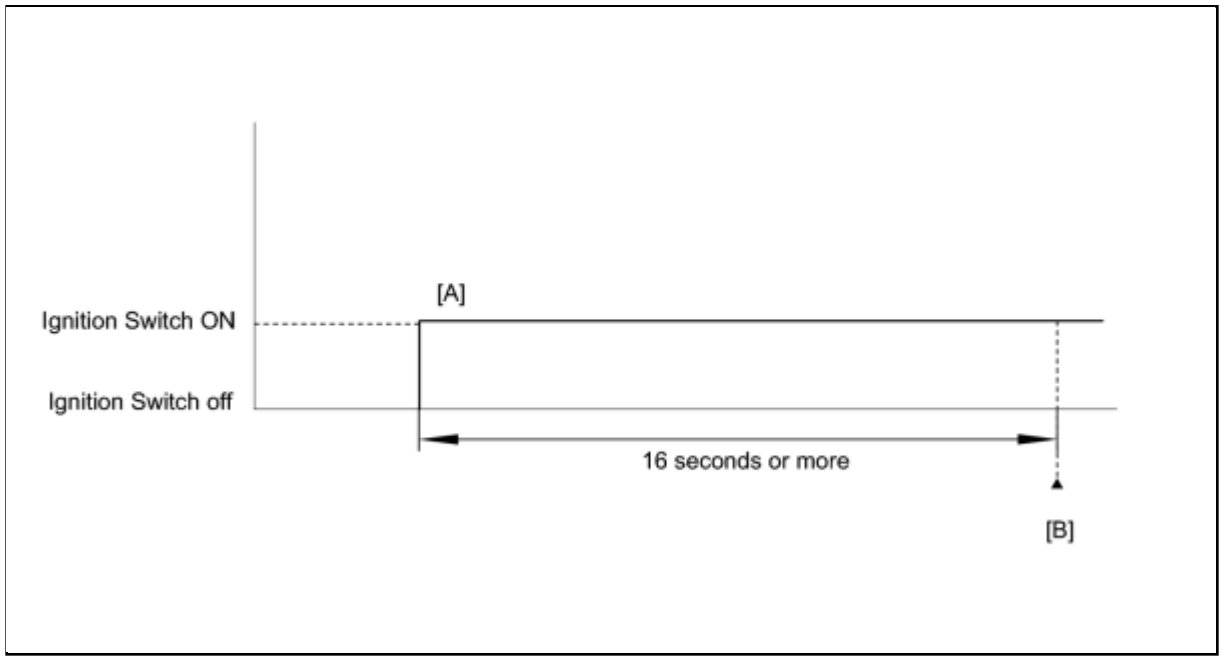

1. Connect the Techstream to the DLC3.
2. Turn the ignition switch to ON and turn the Techstream on.
3. Clear the DTCs (even if no DTCs are stored, perform the clear DTC procedure) INFO .
4. Turn the ignition switch off.
5. Turn the ignition switch to ON and turn the Techstream on [A].
6. Wait 16 seconds or more.
7. Enter the following menus: Powertrain / Engine / Utility / All Readiness.
8. Input the DTC: P0604.
9. Check the DTC judgment result [B].

TECHSTREAM DISPLAY	DESCRIPTION
NORMAL	○ DTC judgment completed ○ System normal
ABNORMAL	○ DTC judgment completed ○ System abnormal
INCOMPLETE	○ DTC judgment not completed ○ Perform driving pattern after confirming DTC enabling conditions
UNKNOWN	○ Unable to perform DTC judgment ○ Number of DTCs which do not fulfill DTC preconditions has reached ECU memory limit

HINT:

If the judgment result shows ABNORMAL, the system has a malfunction.

10. If the test result is UNKNOWN, enter the following menus: Powertrain / Engine / Trouble Codes / Pending.
11. Read Pending DTCs.

HINT:

If a pending DTC is output, the system is malfunctioning.

12. If the test result is INCOMPLETE or UNKNOWN and no pending DTC is output, perform a universal trip and check for permanent DTCs INFO .

HINT:

- If a permanent DTC is output, the system is malfunctioning.
- If no permanent DTC is output, the system is normal.

INSPECTION PROCEDURE

HINT:

Read freeze frame data using the Techstream. The ECM records vehicle and driving condition information as freeze frame data the moment a DTC is stored. When troubleshooting, freeze frame data can be helpful in determining whether the vehicle was running or stopped, whether the engine was warmed up or not, whether the air fuel ratio was lean or rich, as well as other data recorded at the time of a malfunction.

PROCEDURE

1.	**READ OUTPUT DTC (DTC P0604)**

(a) Connect the Techstream to the DLC3.

(b) Turn the ignition switch to ON.

(c) Turn the Techstream on.

(d) Clear DTC INFO .

(e) Turn the ignition switch off and turn the Techstream off.

(f) Disconnect the Techstream.

(g) Disconnect the cable from the battery negative (-) terminal and wait for 1 minute.

(h) Connect the cable to the battery negative (-) terminal.

(i) Connect the Techstream to the DLC3.

(j) Turn the ignition switch to ON.

(k) Turn the Techstream on.

(l) Enter the following menus: Powertrain / Engine and ECT / Trouble Codes.

(m) Read the DTCs.

Result:

RESULT	PROCEED TO
DTC is not output	A
DTC P0604 is output	B

B ▶ **REPLACE ECM**

A ▶ **CHECK FOR INTERMITTENT PROBLEMS**

Last Modified: 3-10-2010	6.4 C	**From:** 200901
Model Year: 2010	**Model:** Corolla	**Doc ID:** RM000003242024X
Title: 2AZ-FE ENGINE CONTROL: SFI SYSTEM: P0606: ECM / PCM Processor (2010 Corolla)		

DTC	**P0606**	**ECM / PCM Processor**

MONITOR DESCRIPTION

The ECM continuously monitors its main and sub CPUs. This self-check ensures that the ECM is functioning properly. If outputs from the CPUs are different and deviate from the standards, the ECM will illuminate the MIL and set the DTC immediately.

DTC NO.	DTC DETECTION CONDITION	TROUBLE AREA
P0606	• ECM main CPU error • ECM sub CPU error • Cruise control cancel circuit malfunction	ECM

MONITOR STRATEGY

Related DTC	P0606: ECM range check
Required sensors/Components (Main)	ECM
Required sensors/Components (Related)	-
Frequency of Operation	Continuous
Duration	16 seconds
MIL Operation	Immediate
Sequence of Operation	None

TYPICAL ENABLING CONDITIONS

Monitor runs whenever the following DTCs are not present	None

TYPICAL MALFUNCTION THRESHOLDS

CPU reset	Occurred

CONFIRMATION DRIVING PATTERN

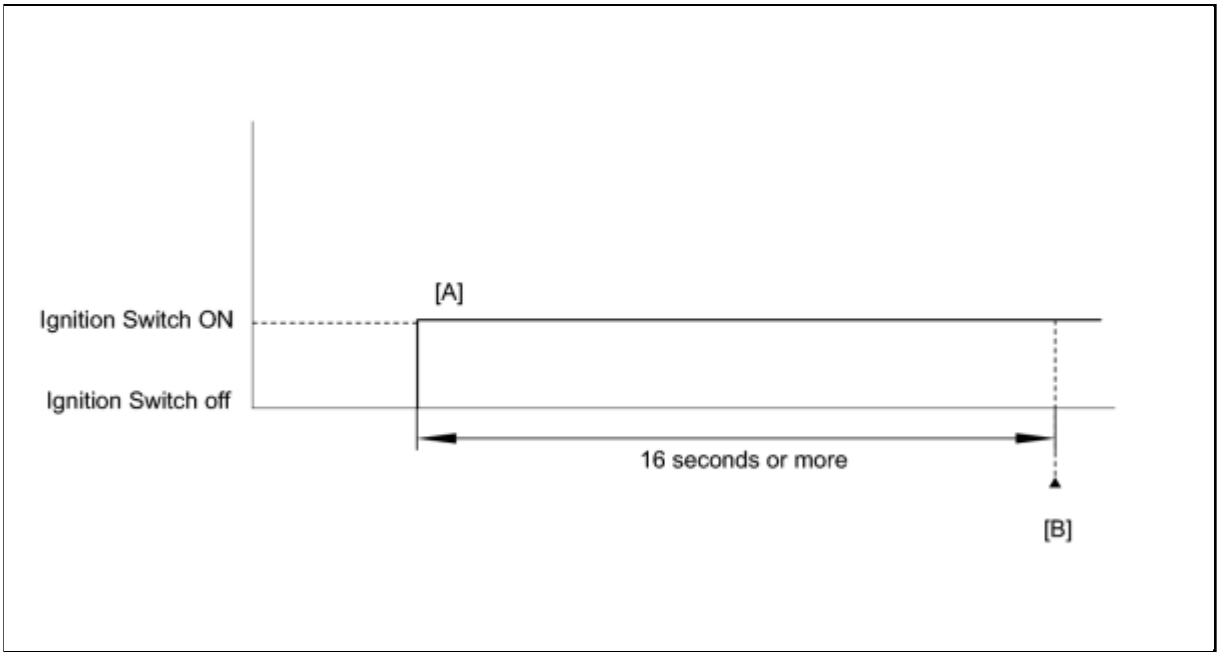

1. Connect the Techstream to the DLC3.
2. Turn the ignition switch to ON and turn the Techstream on.
3. Clear the DTCs (even if no DTCs are stored, perform the clear DTC procedure) INFO .
4. Turn the ignition switch off.
5. Turn the ignition switch to ON and turn the Techstream on [A].
6. Wait 16 seconds or more.
7. Enter the following menus: Powertrain / Engine / Utility / All Readiness.
8. Input the DTC: P0606.
9. Check the DTC judgment result [B].

TECHSTREAM DISPLAY	DESCRIPTION
NORMAL	○ DTC judgment completed ○ System normal
ABNORMAL	○ DTC judgment completed ○ System abnormal
INCOMPLETE	○ DTC judgment not completed ○ Perform driving pattern after confirming DTC enabling conditions
UNKNOWN	○ Unable to perform DTC judgment ○ Number of DTCs which do not fulfill DTC preconditions has reached ECU memory limit

HINT:

If the judgment result shows ABNORMAL, the system has a malfunction.

10. If the test result is UNKNOWN, enter the following menus: Powertrain / Engine / Trouble Codes / Pending.
11. Read Pending DTCs.

HINT:

If a pending DTC is output, the system is malfunctioning.

12. If the test result is INCOMPLETE or UNKNOWN and no pending DTC is output, perform a universal trip and check for permanent DTCs INFO .

HINT:

- If a permanent DTC is output, the system is malfunctioning.
- If no permanent DTC is output, the system is normal.

INSPECTION PROCEDURE

PROCEDURE

1.	**READ OUTPUT DTC (DTC P0606)**

(a) Connect the Techstream to the DLC3.

(b) Turn the ignition switch to ON.

(c) Turn the Techstream on.

(d) Clear DTC INFO .

(e) Turn the ignition switch off and turn the Techstream off.

(f) Disconnect the Techstream.

(g) Disconnect the cable from the battery negative (-) terminal and wait for 1 minute.

(h) Connect the cable to the battery negative (-) terminal.

(i) Connect the Techstream to the DLC3.

(j) Turn the ignition switch to ON.

(k) Turn the Techstream on.

(l) Enter the following menus: Powertrain / Engine and ECT / Trouble Codes.

(m) Read the DTCs.

Result:

RESULT	PROCEED TO
DTC is not output	A
DTC P0606 is output	B

B ▶ **REPLACE ECM**

A ▶ **CHECK FOR INTERMITTENT PROBLEMS**

Last Modified: 3-10-2010	6.4 C	**From:** 200901
Model Year: 2010	**Model:** Corolla	**Doc ID:** RM000002I3S03ZX
Title: 2AZ-FE ENGINE CONTROL: SFI SYSTEM: P0607: Control Module Performance (2010 Corolla)		

DTC	**P0607**	**Control Module Performance**

MONITOR DESCRIPTION

The ECM continuously monitors its internal processors (CPUs) and Heated Oxygen (HO2) sensor transistors. This self-check ensures that the ECM is functioning properly.

DTC NO.	DTC DETECTION CONDITION	TROUBLE AREA
P0607	• ECM CPUs malfunction • Heated Oxygen (HO2) sensor transistors (built into ECM) malfunction	• ECM • Heated oxygen sensor • Exhaust gas leak
	For Mexico models: ECM CPU error	• ECM

MONITOR STRATEGY

Related DTCs	None
Required sensors/Components (Main)	ECM
Required sensors/Components (Related)	Heated oxygen sensor
Frequency of operation	Continuous
Duration	60 seconds
MIL operation	Immediate
Sequence of operation	None

TYPICAL ENABLING CONDITIONS

Monitor runs whenever following DTCs not present	None
Engine	Running
Estimated HO2 sensor temperature	450 to 800°C (842 to 1472°F)

TYPICAL MALFUNCTION THRESHOLDS

HO2 sensor transistors	Fail

CONFIRMATION DRIVING PATTERN

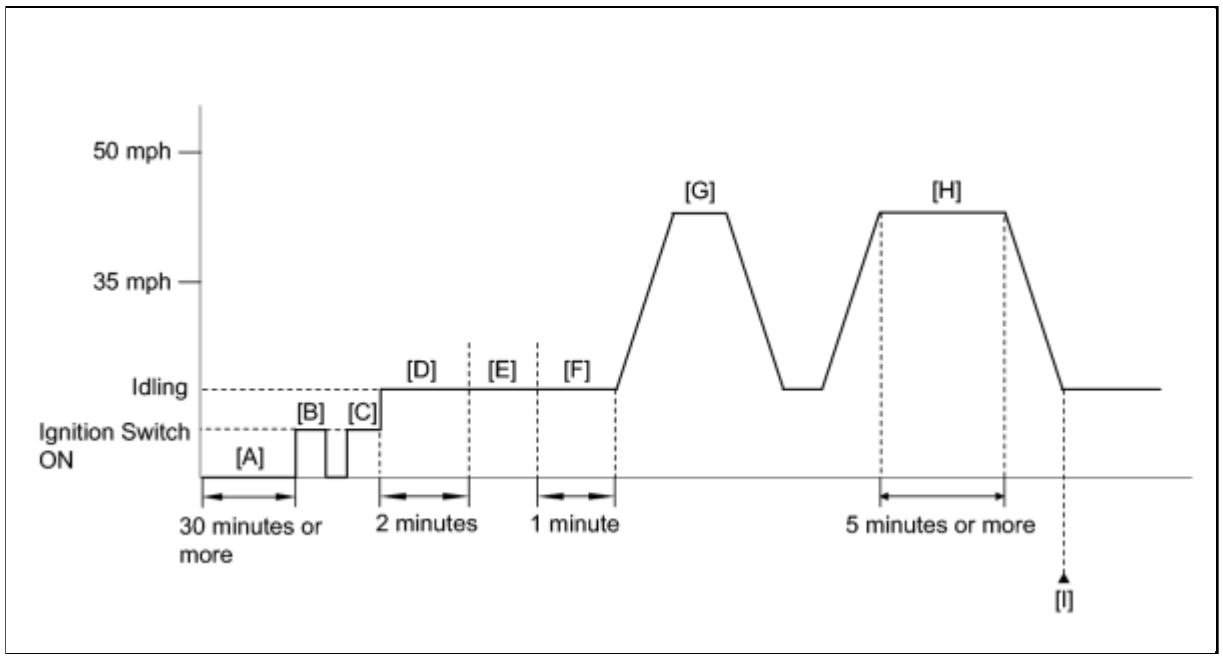

1. Stop the engine for 30 minutes or more [A].
2. Connect the Techstream to the DLC3.
3. Turn the ignition switch to ON and turn the Techstream on.
4. Clear the DTCs (even if no DTCs are stored, perform the clear DTC procedure) INFO [B].
5. Turn the ignition switch off.
6. Turn the ignition switch to ON and turn the Techstream on [C].
7. Start the engine, and wait 2 minutes [D].
8. Warm up the engine until the engine coolant temperature is 75°C (167°F) or higher [E].
9. Idle the engine for 1 minute [F].
10. Accelerate the vehicle to 50 mph (80 km/h) and stop the vehicle [G].
11. Drive the vehicle at 35 to 50 mph (56 to 80 km/h) for 5 minutes or more [H].
12. Enter the following menus: Powertrain / Engine / Utility / All Readiness.
13. Input the DTC: P0607, P0136, P0137 or P0138.
14. Check the DTC judgment result [I].

TECHSTREAM DISPLAY	DESCRIPTION
NORMAL	○ DTC judgment completed ○ System normal

TECHSTREAM DISPLAY	DESCRIPTION
ABNORMAL	○ DTC judgment completed ○ System abnormal
INCOMPLETE	○ DTC judgment not completed ○ Perform driving pattern after confirming DTC enabling conditions
UNKNOWN	○ Unable to perform DTC judgment ○ Number of DTCs which do not fulfill DTC preconditions has reached ECU memory limit

CAUTION:

When performing the confirmation driving pattern, obey all speed limits and traffic laws.

HINT:

- If the judgment result shows ABNORMAL, the system has a malfunction.
- If the judgment result shows INCOMPLETE or UNKNOWN, perform steps [D] through [H].

15. If the test result is UNKNOWN, enter the following menus: Powertrain / Engine / Trouble Codes / Pending.
16. Read Pending DTCs.

HINT:

If a pending DTC is output, the system is malfunctioning.

17. If the test result is INCOMPLETE or UNKNOWN and no pending DTC is output, perform a universal trip and check for permanent DTCs INFO .

HINT:

- If a permanent DTC is output, the system is malfunctioning.
- If no permanent DTC is output, the system is normal.

INSPECTION PROCEDURE

PROCEDURE

1.	**CHECK ANY OTHER DTCS OUTPUT**

(a) Connect the Techstream to the DLC3.

(b) Turn the engine switch on (IG).

(c) Turn the Techstream on.

(d) Enter the following menus: Powertrain / Engine and ECT / Trouble Codes.

(e) Read the DTCs INFO.

Result:

RESULT	PROCEED TO
DTC P0607 and P0136, P0137 or P0138 are output	A
DTC P0607 is output	B

B ▶ **CHECK FOR EXHAUST GAS LEAK**

A ▼

2.	**INSPECT DTC (P0136, P0137 OR P0138)**

(a) Inspect the P0136, P0137 or P0138 flowchart.

HINT:

- If P0136 is output, troubleshoot for that DTC first INFO. Then proceed to "INSPECT ECM".
- If P0137 is output, troubleshoot for that DTC first INFO. Then proceed to "INSPECT ECM".
- If P0138 is output, troubleshoot for that DTC first INFO. Then proceed to "INSPECT ECM".
- If DTC P0607 and P0136, P0137 or P0138 are output, the output voltage of the heated oxygen sensor may remain close to 0 V or become high (around 1 V or more).

NEXT ▶ **INSPECT ECM**

3.	**CHECK FOR EXHAUST GAS LEAK**

(a) Allow the engine to idle and rev the engine.

(b) Check for exhaust gas leaks around the heated oxygen sensor.

If any exhaust gas leaks are present, repair it and proceed to "PERFORM CONFIRMATION DRIVING PATTERN". If no exhaust gas leaks are present, proceed to "PERFORM CONFIRMATION DRIVING PATTERN".

HINT:

- If no exhaust gas leaks are present, a malfunction in the heated oxygen sensor circuit is suspected.
- If any exhaust gas leaks are present around the heated oxygen sensor, noise appears in the output voltage of the heated oxygen sensor.

NEXT

4.	**PERFORM CONFIRMATION DRIVING PATTERN**

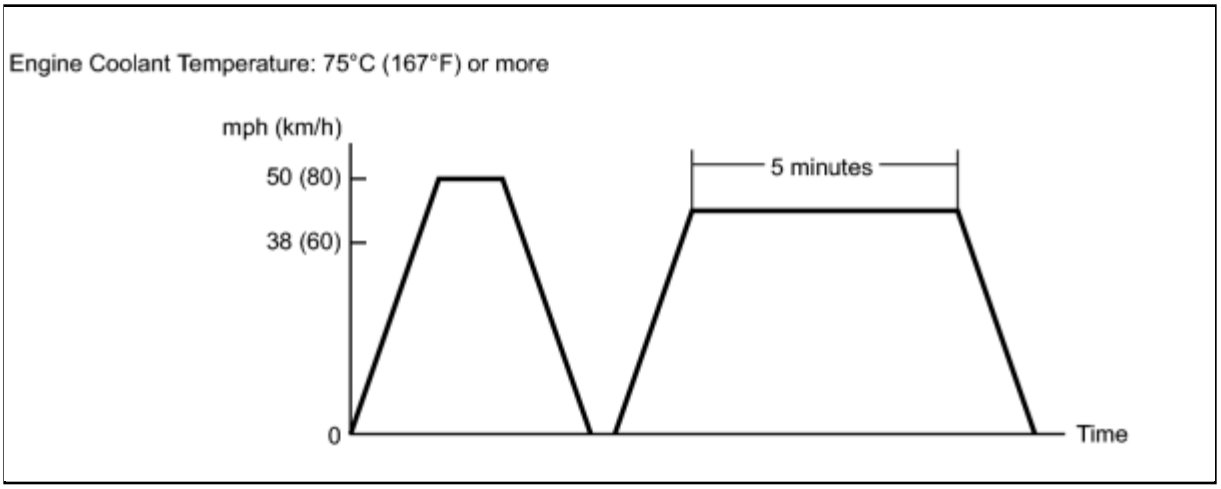

(a) Clear the DTC INFO .

(b) Connect the Techstream to the DLC3.

(c) Start the engine.

(d) Turn the Techstream on.

(e) Warm up the engine until the engine coolant temperature becomes 75° (167°F) or more.

(f) Perform the driving pattern.

(1) Accelerate the vehicle until 50 mph (80 km/h) and stop the vehicle.

(2) Drive the vehicle by 38 to 50 mph (60 to 80 km/h) for 5 minutes or more.

(g) Enter the following menus: Powertrain / Engine and ECT / Trouble Codes.

(h) Read the DTCs.

Result:

RESULT	PROCEED TO

RESULT	PROCEED TO
DTC P0607 and P0136, P0137 or P0138 are output	A
DTC P0607 is output	B
DTC is not output	C

C ▶ **INSPECT ECM**

B ▶ **REPLACE ECM**

A
▼

5.	INSPECT DTC (P0136, P0137 OR P0138)

(a) Inspect the P0136, P0137 or P0138 flowchart.

HINT:

- If P0136 is output, troubleshoot for that DTC first INFO. Then proceed to "INSPECT ECM".
- If P0137 is output, troubleshoot for that DTC first INFO. Then proceed to "INSPECT ECM".
- If P0138 is output, troubleshoot for that DTC first INFO. Then proceed to "INSPECT ECM".
- If DTC P0607 and P0136, P0137 or P0138 are output, the output voltage of the heated oxygen sensor may remain close to 0 V or become high (around 1 V or more).

NEXT
▼

6.	INSPECT ECM

(a) Clear the DTC INFO.

(b) Stop the engine and wait for 30 minutes.

(c) Connect the Techstream to the DLC3.

(d) Start the engine and allow it to idle for 2 minutes.

(e) Turn the Techstream on.

(f) Enter the following menus: Powertrain / Engine and ECT / Trouble Codes.

(g) Read the DTCs INFO.

Result:

RESULT	PROCEED TO
DTC is not output	A
DTC P0607 is output	B

B ▶ **REPLACE ECM**

A ▶ **END**

Last Modified: 3-10-2010	6.4 C	**From:** 200901
Model Year: 2010	**Model:** Corolla	**Doc ID:** RM000000TA00E2X
Title: 2AZ-FE ENGINE CONTROL: SFI SYSTEM: P0617: Starter Relay Circuit High (2010 Corolla)		

DTC	**P0617**	**Starter Relay Circuit High**

MONITOR DESCRIPTION

While the engine is being cranked, battery voltage is applied to terminal STA of the ECM. If the ECM detects the starter (STA) signal while the vehicle is being driven, it determines that there is a malfunction in the STA circuit. The ECM then illuminates the MIL and sets the DTC.

This monitor runs when the vehicle is driven at 12.4 mph (20 km/h) for over 20 seconds.

DTC NO.	DTC DETECTION CONDITION	TROUBLE AREA
P0617	When conditions (a), (b) and (c) are met, positive (+B) battery voltage 10.5 V or more applied to ECM for 20 seconds (1 trip detection logic) • (a) Vehicle speed 12.4 mph (20 km/h) or more • (b) Engine speed 1000 rpm or more • (c) STA signal ON	• Park/neutral position switch or clutch pedal switch • ST relay circuit • Ignition switch • ECM

MONITOR STRATEGY

Related DTCs	P0617: Starter signal
Required Sensors/Components (Main)	ST relay Park/neutral position switch Ignition switch
Required Sensors/Components (Related)	Vehicle Speed Sensor Crankshaft position sensor
Frequency of Operation	Continuous
Duration	20 seconds
MIL Operation	Immediate
Sequence of Operation	None

TYPICAL ENABLING CONDITIONS

Monitor runs whenever following DTCs are not present	None
Battery voltage	10.5 V or more
Vehicle speed	12.4 mph (20 km/h) or more
Engine speed	1000 rpm or more

TYPICAL MALFUNCTION THRESHOLDS

Starter signal	ON

CONFIRMATION DRIVING PATTERN

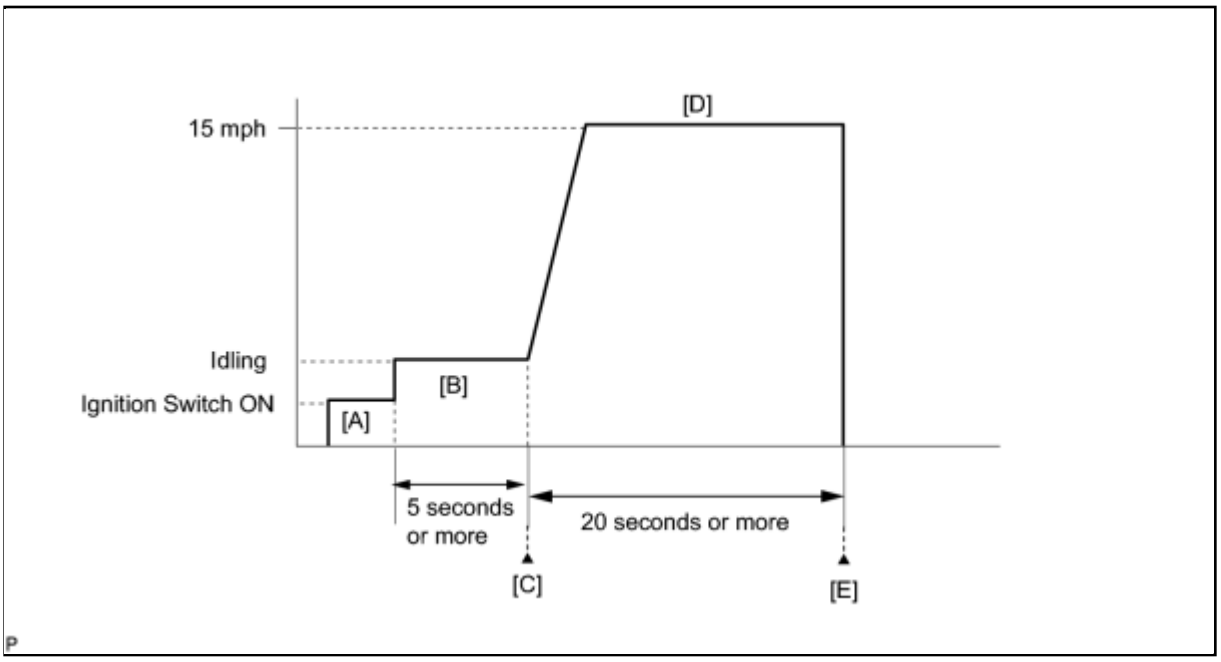

1. Connect the Techstream to the DLC3.
2. Turn the ignition switch to ON and turn the Techstream on.
3. Clear the DTCs (even if no DTCs are stored, perform the clear DTC procedure) INFO .
4. Turn the ignition switch off.
5. Turn the ignition switch to ON and turn the Techstream on [A].
6. Idle the engine for 5 minutes or more [B].
7. Enter the following menus: Powertrain / Engine / Utility / All Readiness.
8. Input the DTC: P0617.
9. Check the DTC judgment result [C].

TECHSTREAM DISPLAY	DESCRIPTION
NORMAL	○ DTC judgment completed

TECHSTREAM DISPLAY	DESCRIPTION
	○ System normal
ABNORMAL	○ DTC judgment completed ○ System abnormal
INCOMPLETE	○ DTC judgment not completed ○ Perform driving pattern after confirming DTC enabling conditions
UNKNOWN	○ Unable to perform DTC judgment ○ Number of DTCs which do not fulfill DTC preconditions has reached ECU memory limit

CAUTION:

When performing the confirmation driving pattern, obey all speed limits and traffic laws.

HINT:

- If the judgment result shows ABNORMAL, the system has a malfunction.
- If the judgment result shows INCOMPLETE or UNKNOWN, perform steps [D] and [E].

10. Drive the vehicle at 15 mph (24 km/h) or more for 20 seconds or more [D].
11. Check the DTC judgment result [E].
12. If the test result is UNKNOWN, enter the following menus: Powertrain / Engine / Trouble Codes / Pending.
13. Read Pending DTCs.

HINT:

If a pending DTC is output, the system is malfunctioning.

14. If the test result is INCOMPLETE or UNKNOWN and no pending DTC is output, perform a universal trip and check for permanent DTCs INFO .

HINT:

- If a permanent DTC is output, the system is malfunctioning.
- If no permanent DTC is output, the system is normal.

WIRING DIAGRAM

For the detail of the park/neutral position switch circuit, refer to the DTC P0705 INFO .

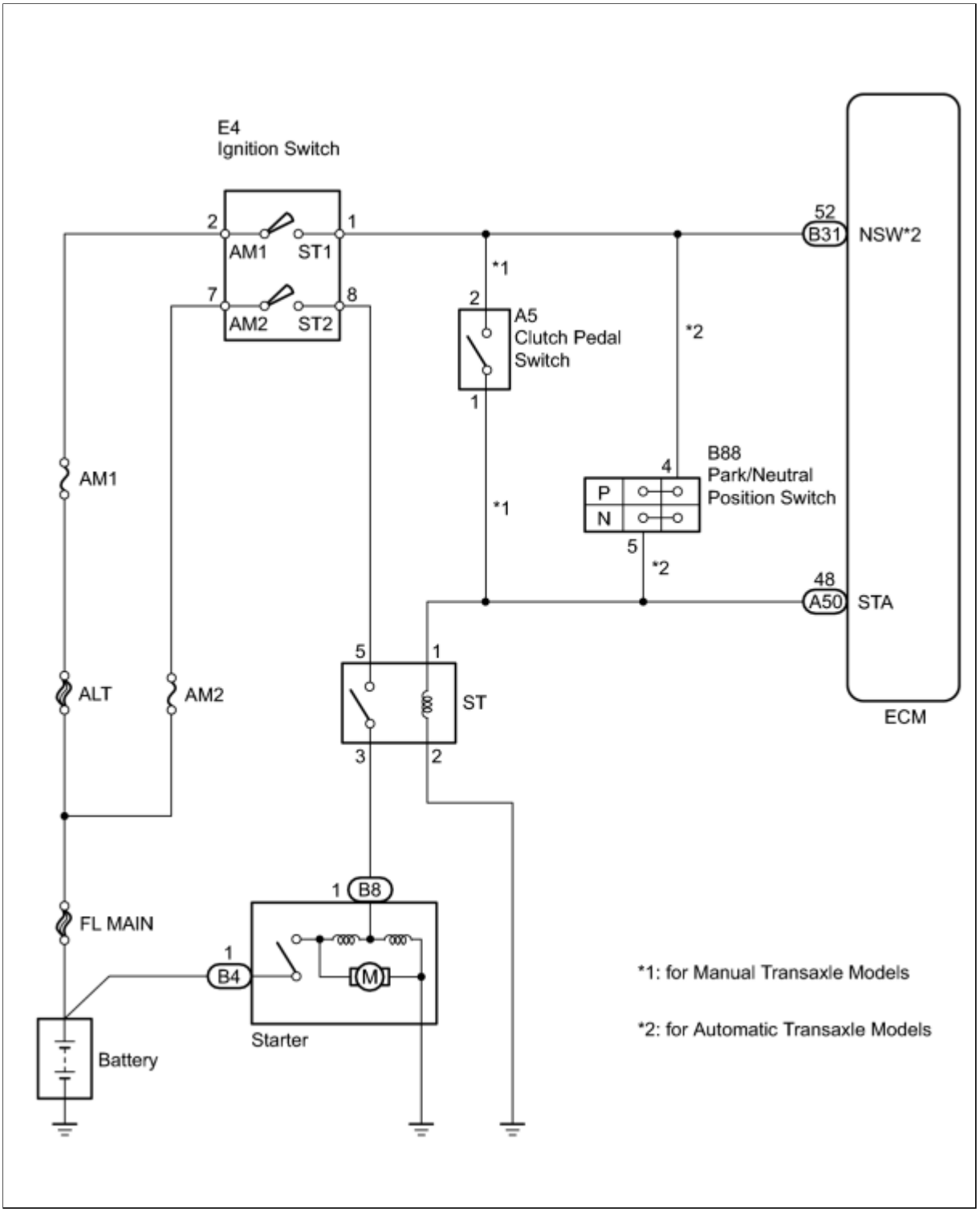

INSPECTION PROCEDURE

HINT:

- The following troubleshooting flowchart is based on the premise that the engine cranks normally.

  If the engine will not crank, proceed to the problem symptoms table INFO .
- Read freeze frame data using the Techstream. The ECM records vehicle and driving condition information as freeze frame data the moment a DTC is stored. When troubleshooting, freeze frame data can be helpful in determining whether the vehicle was running or stopped, whether the engine

was warmed up or not, whether the air fuel ratio was lean or rich, as well as other data recorded at the time of a malfunction.

PROCEDURE

1.	**READ VALUE USING TECHSTREAM (STARTER SIGNAL)**

(a) Connect the Techstream to the DLC3.

(b) Turn the ignition switch to ON.

(c) Turn the Techstream on.

(d) Enter the following menus: Powertrain / Engine and ECT / Data List / Starter Signal.

(e) Check the value displayed on the Techstream when the ignition switch is turned to the ON and START positions.

OK:

IGNITION SWITCH POSITION	STARTER SIGNAL
ON	OFF
START	ON

Result:

RESULT	PROCEED TO
OK	A
NG (Manual transaxle Model)	B
NG (Automatic transaxle Model)	C

C ▶ **READ VALUE USING TECHSTREAM (STARTER SIGNAL)**

B ▶ **READ VALUE USING TECHSTREAM (STARTER SIGNAL)**

A ▶ **CHECK FOR INTERMITTENT PROBLEMS**

2.	**READ VALUE USING TECHSTREAM (STARTER SIGNAL)**

(a) Disconnect the clutch pedal switch connector.

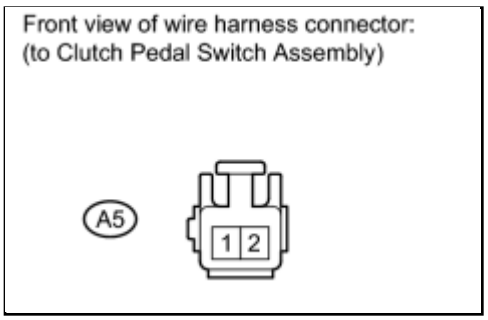

(b) Connect Techstream to the DLC3.

(c) Turn the ignition switch to ON.

(d) Turn the Techstream on.

(e) Enter the following menus: Powertrain / Engine and ECT / Data List / Starter Signal.

(f) Check the value displayed on the Techstream when the ignition switch is turned to ON.

Result:

STARTER SIGNAL	PROCEED TO
Remains ON	A
OFF	B

(g) Reconnect the clutch pedal switch connector.

B ▶ **INSPECT CLUTCH PEDAL SWITCH**

A ▼

3.	**INSPECT ECM (STA TERMINAL VOLTAGE)**

(a) Disconnect the clutch pedal switch or the park/neutral position switch connector.

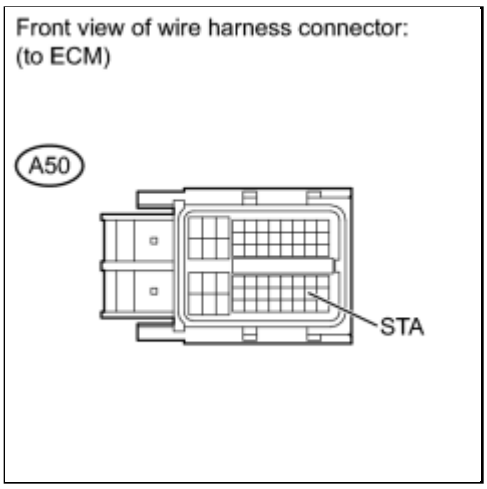

(b) Disconnect the ECM connector.

(c) Turn the ignition switch to ON.

(d) Measure the voltage according to the value(s) in the table below.

Standard Voltage:

TESTER CONNECTION	SWITCH CONDITION	SPECIFIED CONDITION	PROCEED TO
STA (A50-48) - Body ground	Ignition switch ON	11 to 14 V	A
		Below 1.5 V	B

(e) Reconnect the clutch pedal switch or the park/neutral position switch connector.

(f) Reconnect the ECM connector.

B ▶ **REPLACE ECM**

A ▼

4.	**CHECK HARNESS AND CONNECTOR (CLUTCH PEDAL SWITCH - ST RELAY)**

(a) Disconnect the clutch pedal switch connector.

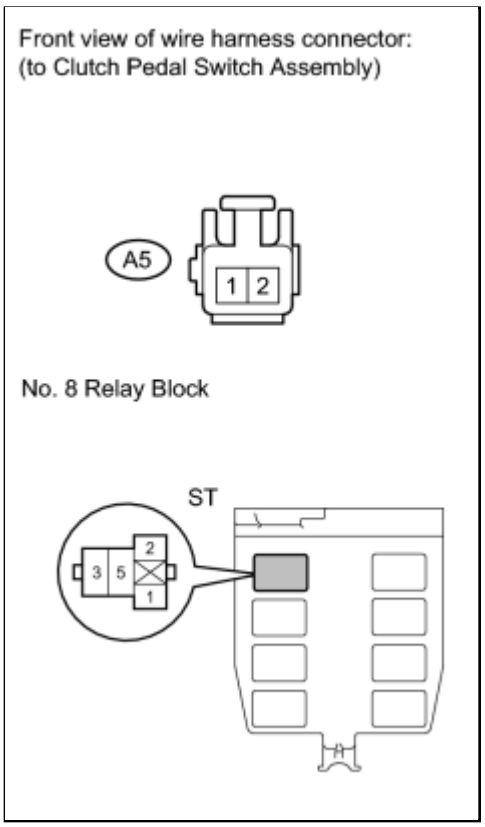

(b) Remove the ST relay from the No. 8 relay block.

(c) Measure the resistance according to the value(s) in the table below.

Standard Resistance (Check for Open):

TESTER CONNECTION	CONDITION	SPECIFIED CONDITION
ST Relay terminal 1 - A5-1	Always	Below 1 Ω

Standard Resistance (Check for Short):

TESTER CONNECTION	CONDITION	SPECIFIED CONDITION
ST Relay terminal 1 or A5-1 - Body ground	Always	10 kΩ or higher

(d) Reconnect the clutch pedal switch connector.

(e) Reinstall the ST relay.

NG ▶ **REPAIR OR REPLACE HARNESS OR CONNECTOR (CLUTCH PEDAL SWITCH - ST RELAY)**

OK ▶ **REPAIR OR REPLACE HARNESS OR CONNECTOR (ECM - CLUTCH PEDAL SWITCH)**

5.	INSPECT CLUTCH PEDAL SWITCH

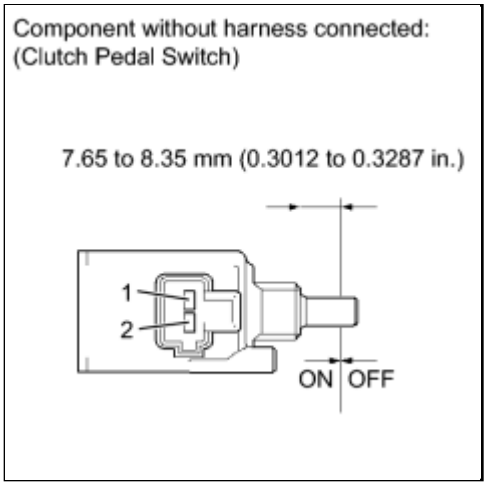

(a) Disconnect the clutch pedal switch connector.

(b) Measure the resistance according to the value(s) in the table below.

Standard Resistance:

TESTER CONNECTION	SWITCH CONDITION	SPECIFIED CONDITION
1 - 2	OFF (free)	10 kΩ or higher

Result:

RESULT	PROCEED TO
Outside standard range	A
Within standard range	B

(c) Reconnect the clutch pedal switch connector.

B ▶ **INSPECT IGNITION SWITCH**

A ▼

6.	REPLACE CLUTCH PEDAL SWITCH

(a) Replace the clutch pedal switch INFO .

NEXT

7.	INSPECT IGNITION SWITCH

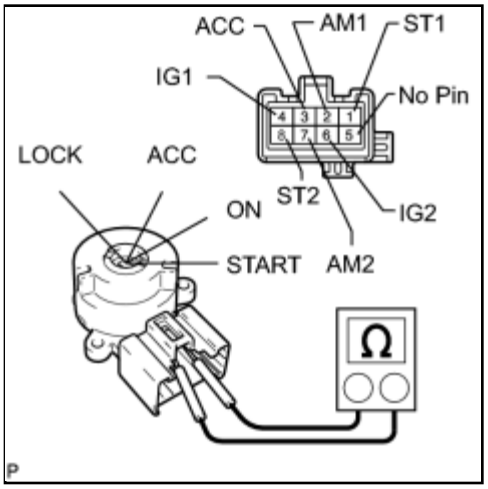

(a) Remove the ignition switch.

(b) Measure the resistance according to the value(s) in the table below.

Standard Resistance:

TESTER CONNECTION	SWITCH CONDITION	SPECIFIED CONDITION
All Terminals	LOCK	10 kΩ or higher
2 (AM1) - 3 (ACC)	ACC	Below 1 Ω
2 (AM1) - 3 (ACC) - 4 (IG1)	ON	
7 (AM2) - 6 (IG2)		
2 (AM1) - 4 (IG1) - 1 (ST1)	START	
7 (AM2) - 6 (IG2) - 8 (ST2)		

(c) Reinstall the ignition switch.

NG ▶ **REPLACE IGNITION SWITCH**

OK

8.	CHECK HARNESS AND CONNECTOR (CLUTCH PEDAL SWITCH - ECM)

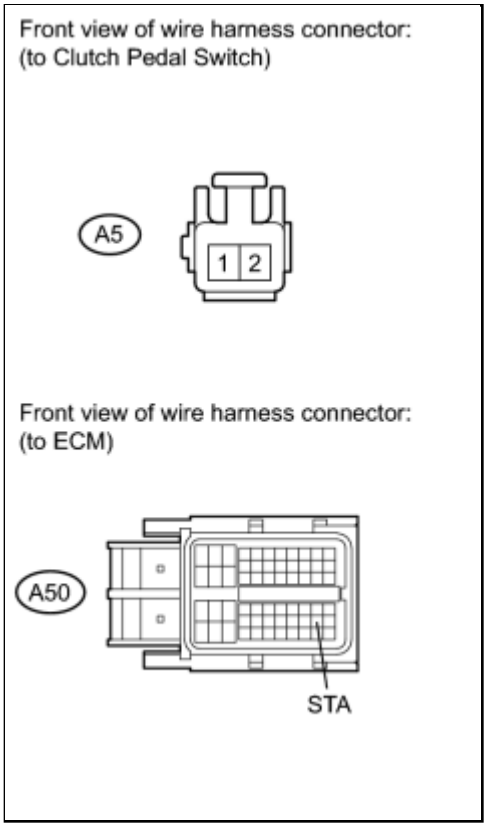

(a) Disconnect the ECM connector.

(b) Disconnect the clutch pedal switch connector.

(c) Measure the resistance according to the value(s) in the table below.

Standard Resistance (Check for Open):

TESTER CONNECTION	CONDITION	SPECIFIED CONDITION
A5-1 - A50-48 (STA)	Always	Below 1 Ω

Standard Resistance (Check for Short):

TESTER CONNECTION	CONDITION	SPECIFIED CONDITION
A5-1 or A50-48 (STA) - Body ground	Always	10 kΩ or higher

(d) Reconnect the ECM connector.

(e) Reconnect the clutch pedal switch connector.

NG ▶ **REPAIR OR REPLACE HARNESS OR CONNECTOR (CLUTCH PEDAL SWITCH - ECM)**

OK ▶ **REPAIR OR REPLACE HARNESS OR CONNECTOR (IGNITION SWITCH - CLUTCH PEDAL SWITCH)**

9.	READ VALUE USING TECHSTREAM (STARTER SIGNAL)

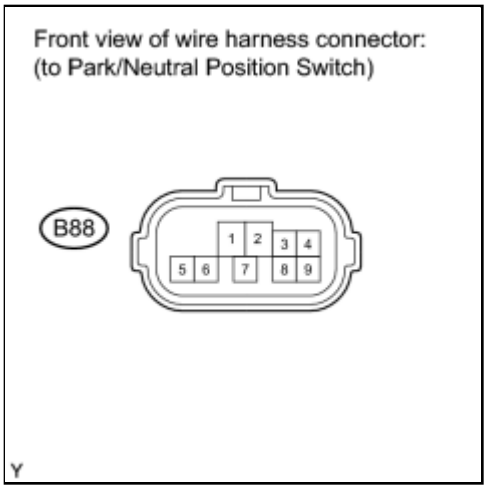

(a) Disconnect the park/neutral position switch connector.

(b) Connect Techstream to the DLC3.

(c) Turn the ignition switch to ON.

(d) Turn the Techstream on.

(e) Enter the following menus: Powertrain / Engine and ECT / Data List / Starter Signal.

(f) Check the value displayed on the Techstream when the ignition switch is turned to ON.

Result:

STARTER SIGNAL	PROCEED TO
Remains ON	A
OFF	B

(g) Reconnect the park/neutral position switch connector.

B ▶ **INSPECT PARK/NEUTRAL POSITION SWITCH**

A ▼

10.	**INSPECT ECM (STA TERMINAL VOLTAGE)**

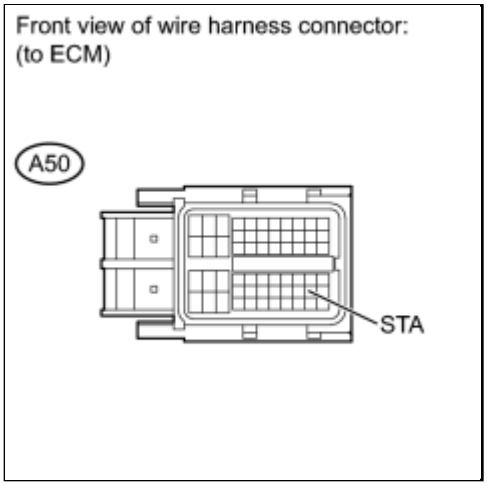

(a) Disconnect the clutch pedal switch or the park/neutral position switch connector.

(b) Disconnect the ECM connector.

(c) Turn the ignition switch to ON.

(d) Measure the voltage according to the value(s) in the table below.

Standard Voltage:

TESTER CONNECTION	SWITCH CONDITION	SPECIFIED CONDITION	PROCEED TO
STA (A50-48) - Body ground	Ignition switch ON	11 to 14 V	A
		Below 1.5 V	B

(e) Reconnect the clutch pedal switch or the park/neutral position switch connector.

(f) Reconnect the ECM connector.

B ▶ **REPLACE ECM**

A ▼

11.	**CHECK HARNESS AND CONNECTOR (PARK/NEUTRAL POSITION SWITCH - ST RELAY)**

(a) Disconnect the park/neutral position switch connector.

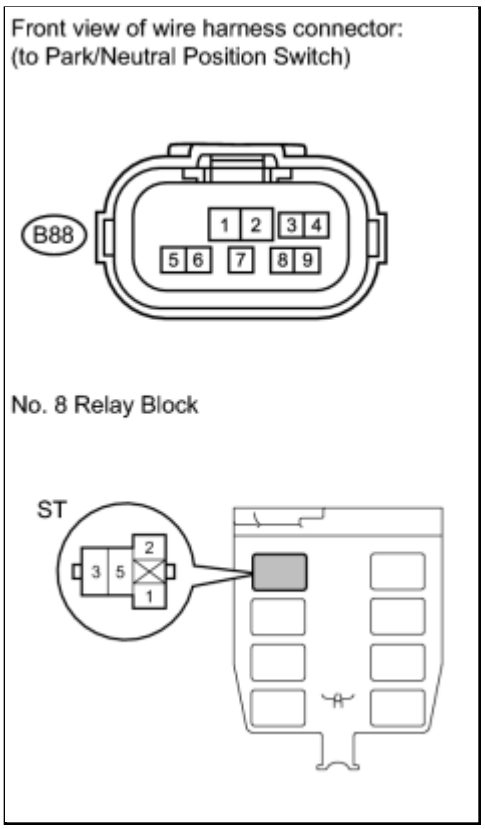

(b) Remove the ST relay from the No. 8 relay block.

(c) Measure the resistance according to the value(s) in the table below.

Standard Resistance (Check for Open):

TESTER CONNECTION	CONDITION	SPECIFIED CONDITION
B88-5 - ST Relay terminal 1	Always	Below 1 Ω

Standard Resistance (Check for Short):

TESTER CONNECTION	CONDITION	SPECIFIED CONDITION
B88-5 or ST Relay terminal 1 - Body ground	Always	10 kΩ or higher

(d) Reconnect the park/neutral position switch connector.

(e) Reinstall the ST relay.

NG ▶ **REPAIR OR REPLACE HARNESS OR CONNECTOR (PARK/NEUTRAL POSITION SWITCH - ST RELAY)**

OK ▶ **REPAIR OR REPLACE HARNESS OR CONNECTOR (ECM - PARK/NEUTRAL POSITION SWITCH)**

12.	**INSPECT PARK/NEUTRAL POSITION SWITCH**

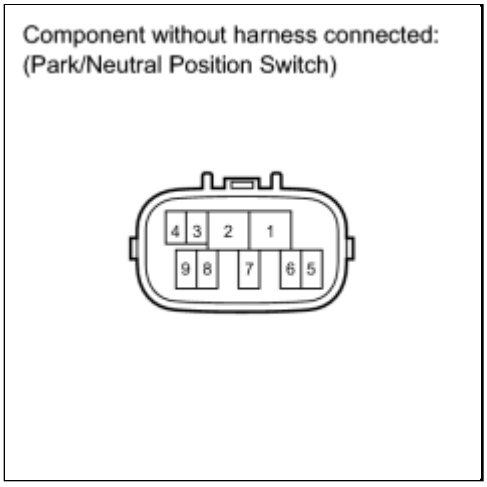

(a) Disconnect the park/neutral position switch connector.

(b) Measure the resistance according to the value(s) in the table below.

Standard Resistance (Check for Short):

TESTER CONNECTION	CONDITION	SPECIFIED CONDITION
4 - 5	Shift lever position except P and N	10 kΩ or higher
2 - 5	All shift lever positions (P, R, N, D and S)	10 kΩ or higher

Result:

RESULT	PROCEED TO
Outside standard range	A
Within standard range	B

(c) Reconnect the park/neutral position switch connector.

B ▶ **REPLACE PARK/NEUTRAL POSITION SWITCH**

A ▼

13.	**REPLACE PARK/NEUTRAL POSITION SWITCH**

(a) Replace the park/neutral position switch INFO .

NEXT

14.	INSPECT IGNITION SWITCH

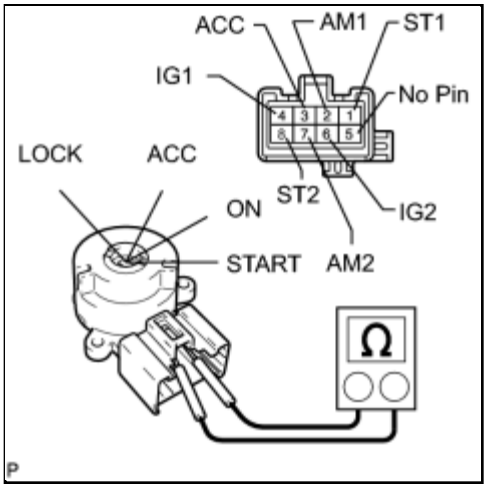

(a) Remove the ignition switch.

(b) Measure the resistance according to the value(s) in the table below.

Standard Resistance:

TESTER CONNECTION	SWITCH CONDITION	SPECIFIED CONDITION
All Terminals	LOCK	10 kΩ or higher
2 (AM1) - 3 (ACC)	ACC	Below 1 Ω
2 (AM1) - 3 (ACC) - 4 (IG1)	ON	
7 (AM2) - 6 (IG2)		
2 (AM1) - 4 (IG1) - 1 (ST1)	START	
7 (AM2) - 6 (IG2) - 8 (ST2)		

(c) Reinstall the ignition switch.

NG ▶ **REPLACE IGNITION SWITCH**

OK

15.	**INSPECT ECM (NSW TERMINAL VOLTAGE)**

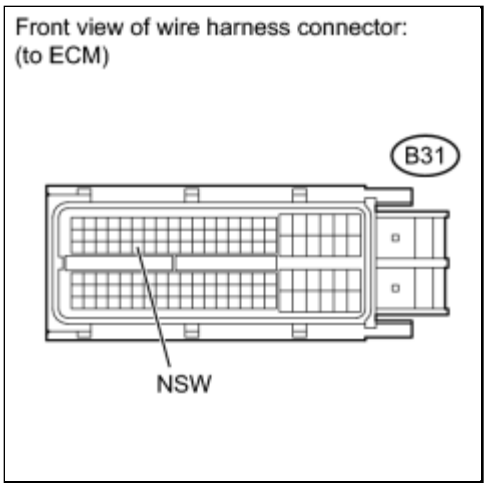

(a) Disconnect the park/neutral position switch connector.

(b) Disconnect the ECM connector.

(c) Turn the ignition switch to ON.

(d) Measure the voltage according to the value(s) in the table below.

Standard Voltage:

TESTER CONNECTION	SWITCH CONDITION	SPECIFIED CONDITION	PROCEED TO
NSW (B31-52) - Body ground	Ignition switch ON	11 to 14 V	A
		Below 1.5 V	B

(e) Reconnect the park/neutral position switch connector.

(f) Reconnect the ECM connector.

B **REPLACE ECM**

A

16.	**CHECK HARNESS AND CONNECTOR (PARK/NEUTRAL POSITION SWITCH - ECM)**

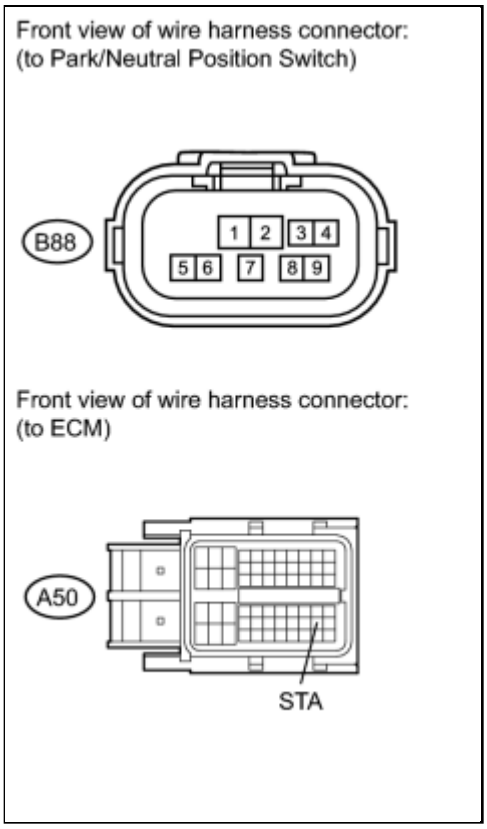

(a) Disconnect the park/neutral position switch connector.

(b) Disconnect the ECM connector.

(c) Measure the resistance according to the value(s) in the table below.

Standard Resistance (Check for Short):

TESTER CONNECTION	CONDITION	SPECIFIED CONDITION
B88-5 or A50-48 (STA) - Body ground	Always	10 kΩ or higher

(d) Reconnect the park/neutral position switch connector.

(e) Reconnect the ECM connector.

NG ▶ **REPAIR OR REPLACE HARNESS OR CONNECTOR (PARK/NEUTRAL POSITION SWITCH - ECM)**

OK ▶ **REPAIR OR REPLACE HARNESS OR CONNECTOR (IGNITION SWITCH - PARK/NEUTRAL POSITION SWITCH)**

Last Modified: 3-10-2010	6.4 C	**From:** 200901
Model Year: 2010	**Model:** Corolla	**Doc ID:** RM000002Z1R020X
Title: 2AZ-FE ENGINE CONTROL: SFI SYSTEM: P060A: Internal Control Module Monitoring Processor Performance (2010 Corolla)		

DTC	**P060A**	**Internal Control Module Monitoring Processor Performance**

MONITOR DESCRIPTION

The main CPU and sub CPU of the ECM communicate with each other. The main CPU monitors the communications and WDC pulses from the sub CPU. When the signal malfunctions below are detected, the DTC is stored.

DTC NO.	DTC DETECTION CONDITION	TROUBLE AREA
P060A	ECM sub CPU error	ECM

MONITOR STRATEGY

Related DTCs	P060A: ECM CPU error
Required sensors/Components (Main)	ECM
Required sensors/Components (Related)	-
Frequency of operation	Continuous
Duration	16 seconds
MIL operation	Immediate
Sequence of operation	None

TYPICAL ENABLING CONDITIONS

None	-

TYPICAL MALFUNCTION THRESHOLDS

When either condition below is met:	Condition 1 or 2
1. When all conditions below are met:	-
- CPU reset	1 time or more

- Learned throttle position - Learned accelerator pedal position	0.4 V or more
- Electronic throttle actuator	OFF
2. CPU reset	2 times or more

CONFIRMATION DRIVING PATTERN

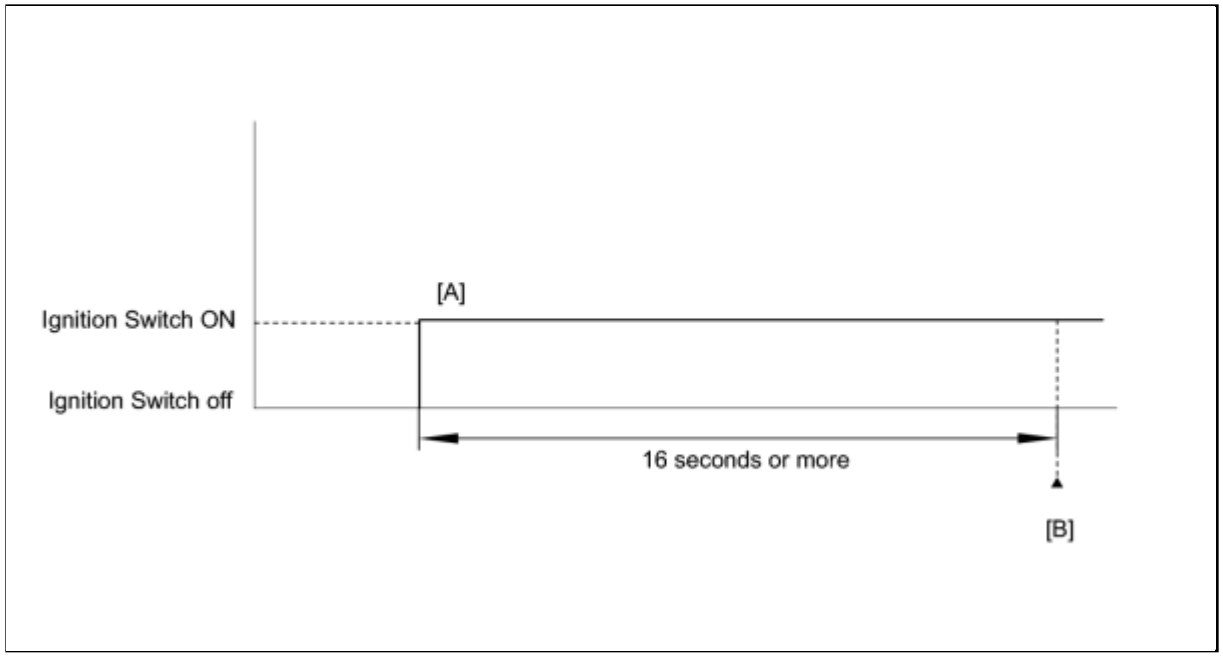

1. Connect the Techstream to the DLC3.
2. Turn the ignition switch to ON and turn the Techstream on.
3. Clear the DTCs (even if no DTCs are stored, perform the clear DTC procedure) INFO .
4. Turn the ignition switch off.
5. Turn the ignition switch to ON and turn the Techstream on [A].
6. Wait 16 seconds or more.
7. Enter the following menus: Powertrain / Engine / Utility / All Readiness.
8. Input the DTC: P060A.
9. Check the DTC judgment result [B].

TECHSTREAM DISPLAY	DESCRIPTION
NORMAL	○ DTC judgment completed ○ System normal
ABNORMAL	○ DTC judgment completed ○ System abnormal
INCOMPLETE	○ DTC judgment not completed ○ Perform driving pattern after confirming DTC enabling

TECHSTREAM DISPLAY	DESCRIPTION
	conditions
UNKNOWN	○ Unable to perform DTC judgment ○ Number of DTCs which do not fulfill DTC preconditions has reached ECU memory limit

HINT:

If the judgment result shows ABNORMAL, the system has a malfunction.

10. If the test result is UNKNOWN, enter the following menus: Powertrain / Engine / Trouble Codes / Pending.
11. Read Pending DTCs.

HINT:

If a pending DTC is output, the system is malfunctioning.

12. If the test result is INCOMPLETE or UNKNOWN and no pending DTC is output, perform a universal trip and check for permanent DTCs INFO .

HINT:

- If a permanent DTC is output, the system is malfunctioning.
- If no permanent DTC is output, the system is normal.

INSPECTION PROCEDURE

PROCEDURE

1.	**READ OUTPUT DTC (DTC P060A)**

(a) Connect the Techstream to the DLC3.

(b) Turn the ignition switch to ON.

(c) Turn the Techstream on.

(d) Clear the DTC INFO .

(e) Turn the ignition switch off and turn the Techstream off.

(f) Disconnect the Techstream.

(g) Disconnect the cable from the battery negative (-) terminal and wait for 1 minute.

(h) Connect the cable to the battery negative (-) terminal.

(i) Connect the Techstream to the DLC3.

(j) Turn the ignition switch to ON.

(k) Turn the Techstream on.

(l) Enter the following menus: Powertrain / Engine and ECT / Trouble Codes.

(m) Read DTCs.

Result:

RESULT	PROCEED TO
No output	A
P060A	B

B ▶ **REPLACE ECM**

A ▶ **CHECK FOR INTERMITTENT PROBLEMS**

Last Modified: 3-10-2010	6.4 C	**From:** 200901
Model Year: 2010	**Model:** Corolla	**Doc ID:** RM000002Z1S03CX
Title: 2AZ-FE ENGINE CONTROL: SFI SYSTEM: P060D: Internal Control Module Accelerator Pedal Position Performance (2010 Corolla)		

DTC	**P060D**	**Internal Control Module Accelerator Pedal Position Performance**

MONITOR DESCRIPTION

The ECM monitors the input signals of the Accelerator Pedal Position (APP) sensor No. 1. When the input signals and control signals deviate, the DTC is stored.

DTC NO.	DTC DETECTION CONDITION	TROUBLE AREA
P060D	ECM main CPU error	ECM

MONITOR STRATEGY

Related DTCs	P060D: Internal control module, Accelerator pedal position
Required sensors/Components (Main)	ECM
Required sensors/Components (Related)	-
Frequency of operation	Continuous
Duration	1 second
MIL operation	Immediate
Sequence of operation	None

TYPICAL ENABLING CONDITIONS

None	-

TYPICAL MALFUNCTION THRESHOLDS

Difference of main APP and sub APP	0.3 V or more

CONFIRMATION DRIVING PATTERN

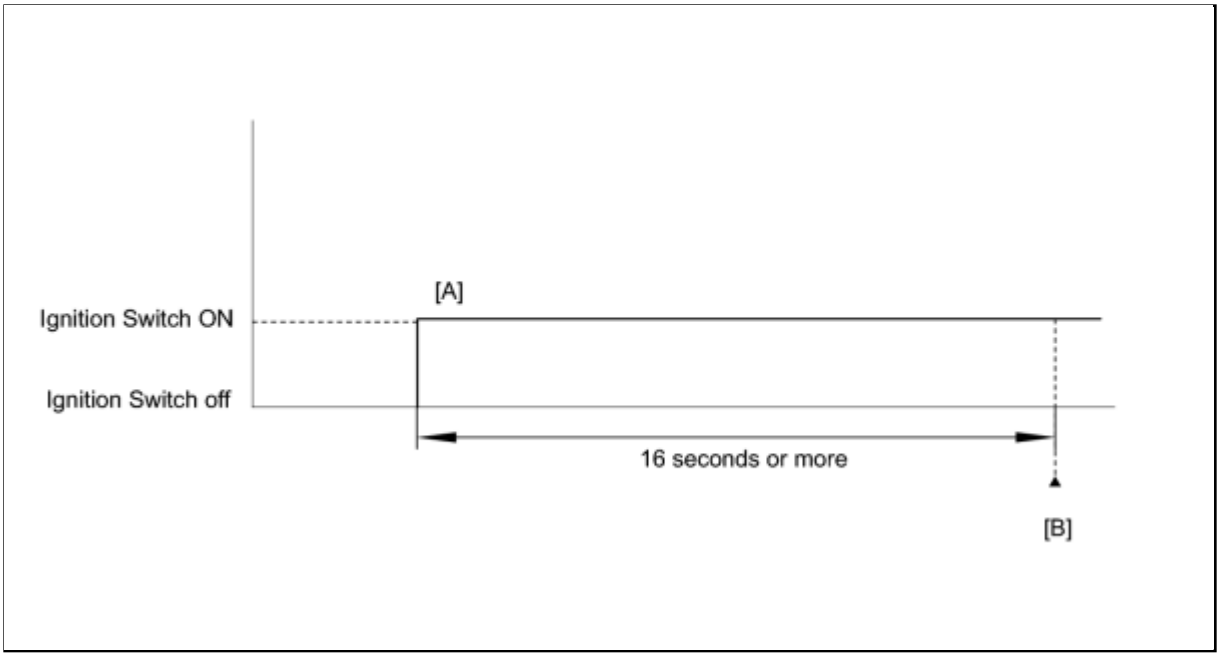

1. Connect the Techstream to the DLC3.
2. Turn the ignition switch to ON and turn the Techstream on.
3. Clear the DTCs (even if no DTCs are stored, perform the clear DTC procedure) INFO .
4. Turn the ignition switch off.
5. Turn the ignition switch to ON and turn the Techstream on [A].
6. Wait 16 seconds or more.
7. Enter the following menus: Powertrain / Engine / Utility / All Readiness.
8. Input the DTC: P060D.
9. Check the DTC judgment result [B].

TECHSTREAM DISPLAY	DESCRIPTION
NORMAL	○ DTC judgment completed ○ System normal
ABNORMAL	○ DTC judgment completed ○ System abnormal
INCOMPLETE	○ DTC judgment not completed ○ Perform driving pattern after confirming DTC enabling conditions
UNKNOWN	○ Unable to perform DTC judgment ○ Number of DTCs which do not fulfill DTC preconditions has reached ECU memory limit

HINT:

If the judgment result shows ABNORMAL, the system has a malfunction.

10. If the test result is UNKNOWN, enter the following menus: Powertrain / Engine / Trouble Codes / Pending.
11. Read Pending DTCs.

HINT:

If a pending DTC is output, the system is malfunctioning.

12. If the test result is INCOMPLETE or UNKNOWN and no pending DTC is output, perform a universal trip and check for permanent DTCs INFO .

HINT:

- If a permanent DTC is output, the system is malfunctioning.
- If no permanent DTC is output, the system is normal.

INSPECTION PROCEDURE

PROCEDURE

1.	**READ OUTPUT DTC (DTC P060D)**

(a) Connect the Techstream to the DLC3.

(b) Turn the ignition switch to ON.

(c) Turn the Techstream on.

(d) Clear the DTC INFO .

(e) Turn the ignition switch off and turn the Techstream off.

(f) Disconnect the Techstream.

(g) Disconnect the cable from the battery negative (-) terminal and wait for 1 minute.

(h) Connect the cable to the battery negative (-) terminal.

(i) Connect the Techstream to the DLC3.

(j) Turn the ignition switch to ON.

(k) Turn the Techstream on.

(l) Enter the following menus: Powertrain / Engine and ECT / Trouble Codes.

(m) Read DTCs.

Result:

RESULT	PROCEED TO
No output	A

RESULT	PROCEED TO
P060D	B

B ▶ **REPLACE ECM**

A ▶ **CHECK FOR INTERMITTENT PROBLEMS**

Last Modified: 3-10-2010	6.4 C	**From:** 200901
Model Year: 2010	**Model:** Corolla	**Doc ID:** RM000002Z1T01ZX
Title: 2AZ-FE ENGINE CONTROL: SFI SYSTEM: P060E: Internal Control Module Throttle Position Performance (2010 Corolla)		

DTC	**P060E**	**Internal Control Module Throttle Position Performance**

MONITOR DESCRIPTION

The ECM monitors the input signals of the throttle position sensor No. 1 and stop light switch. When the ECM monitors the input signals of the throttle position sensor No. 1 and the STP signal of the stop light switch, if the input signals and control signals deviate, the DTC is stored.

DTC NO.	DTC DETECTION CONDITION	TROUBLE AREA
P060E	ECM main CPU error	ECM

MONITOR STRATEGY

Related DTCs	P060E: Internal control module, Throttle position
Required sensors/Components (Main)	ECM
Required sensors/Components (Related)	-
Frequency of operation	Continuous
Duration	1 second
MIL operation	Immediate
Sequence of operation	None

TYPICAL ENABLING CONDITIONS

DMA communication error	Not detected

TYPICAL MALFUNCTION THRESHOLDS

When one of following conditions is met:	Condition 1 or 2
1. Difference of main throttle position and sub throttle position	0.3 V or more
2. Difference of main brake switch signal and sub brake switch signal	Different

CONFIRMATION DRIVING PATTERN

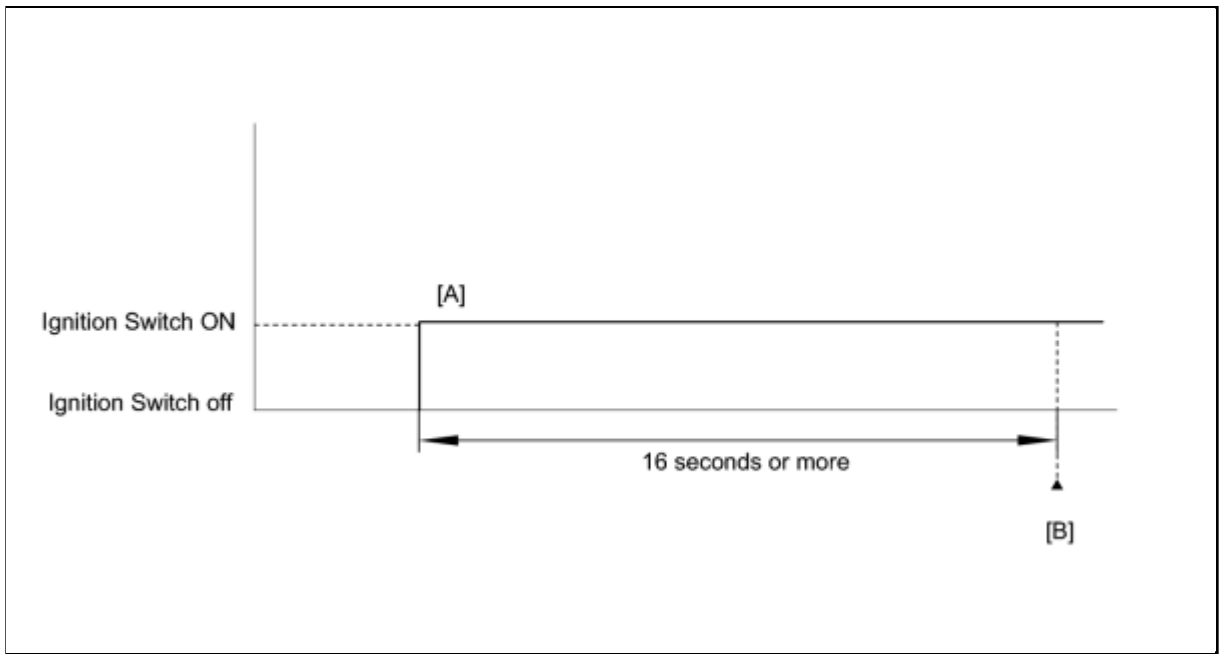

1. Connect the Techstream to the DLC3.
2. Turn the ignition switch to ON and turn the Techstream on.
3. Clear the DTCs (even if no DTCs are stored, perform the clear DTC procedure) INFO .
4. Turn the ignition switch off.
5. Turn the ignition switch to ON and turn the Techstream on [A].
6. Wait 16 seconds or more.
7. Enter the following menus: Powertrain / Engine / Utility / All Readiness.
8. Input the DTC: P060E.
9. Check the DTC judgment result [B].

TECHSTREAM DISPLAY	DESCRIPTION
NORMAL	○ DTC judgment completed ○ System normal
ABNORMAL	○ DTC judgment completed ○ System abnormal
INCOMPLETE	○ DTC judgment not completed ○ Perform driving pattern after confirming DTC enabling conditions
UNKNOWN	○ Unable to perform DTC judgment ○ Number of DTCs which do not fulfill DTC preconditions has reached ECU memory limit

HINT:

If the judgment result shows ABNORMAL, the system has a malfunction.

10. If the test result is UNKNOWN, enter the following menus: Powertrain / Engine / Trouble Codes / Pending.
11. Read Pending DTCs.

HINT:

If a pending DTC is output, the system is malfunctioning.

12. If the test result is INCOMPLETE or UNKNOWN and no pending DTC is output, perform a universal trip and check for permanent DTCs INFO .

HINT:

- If a permanent DTC is output, the system is malfunctioning.
- If no permanent DTC is output, the system is normal.

INSPECTION PROCEDURE

PROCEDURE

1.	**READ OUTPUT DTC (DTC P060E)**

(a) Connect the Techstream to the DLC3.

(b) Turn the ignition switch to ON.

(c) Turn the Techstream on.

(d) Clear the DTC INFO .

(e) Turn the ignition switch off and turn the Techstream off.

(f) Disconnect the Techstream.

(g) Disconnect the cable from the battery negative (-) terminal and wait for 1 minute.

(h) Connect the cable to the battery negative (-) terminal.

(i) Connect the Techstream to the DLC3.

(j) Turn the ignition switch to ON.

(k) Turn the Techstream on.

(l) Enter the following menus: Powertrain / Engine and ECT / Trouble Codes.

(m) Read DTCs.

Result:

RESULT	PROCEED TO
No output	A
P060E	B

B ▶ **REPLACE ECM**

A ▶ **CHECK FOR INTERMITTENT PROBLEMS**

Last Modified: 3-10-2010	6.4 C	**From:** 200901
Model Year: 2010	**Model:** Corolla	**Doc ID:** RM000003Q7C008X
Title: 2AZ-FE ENGINE CONTROL: SFI SYSTEM: P062F: Internal Control Module EEPROM Error (2010 Corolla)		

DTC	**P062F**	**Internal Control Module EEPROM Error**

DESCRIPTION

The ECM monitors its internal operation and it stores this DTC when it detects an internal malfunction.

DTC NO.	DTC DETECTION CONDITION	TROUBLE AREA
P062F	An ECM internal error (EEPROM)	ECM

MONITOR DESCRIPTION

The ECM monitors its internal operation. If the internal operation is malfunctioning, the ECM illuminates the MIL and stores a DTC.

MONITOR STRATEGY

Related DTCs	P062F: Internal control module EEPROM error
Required sensors/Components (Main)	ECM
Required sensors/Components (Related)	-
Frequency of operation	Once per driving cycle
Duration	11 seconds
MIL operation	Immediate
Sequence of operation	None

TYPICAL ENABLING CONDITIONS

Monitor runs whenever following DTCs not stored	None
Time after engine start	10 seconds or more
Battery voltage	8 V or more
Ignition switch	ON
Starter	OFF

TYPICAL MALFUNCTION THRESHOLDS

Permanent fault code data	Mismatch (3 times or more)

CONFIRMATION DRIVING PATTERN

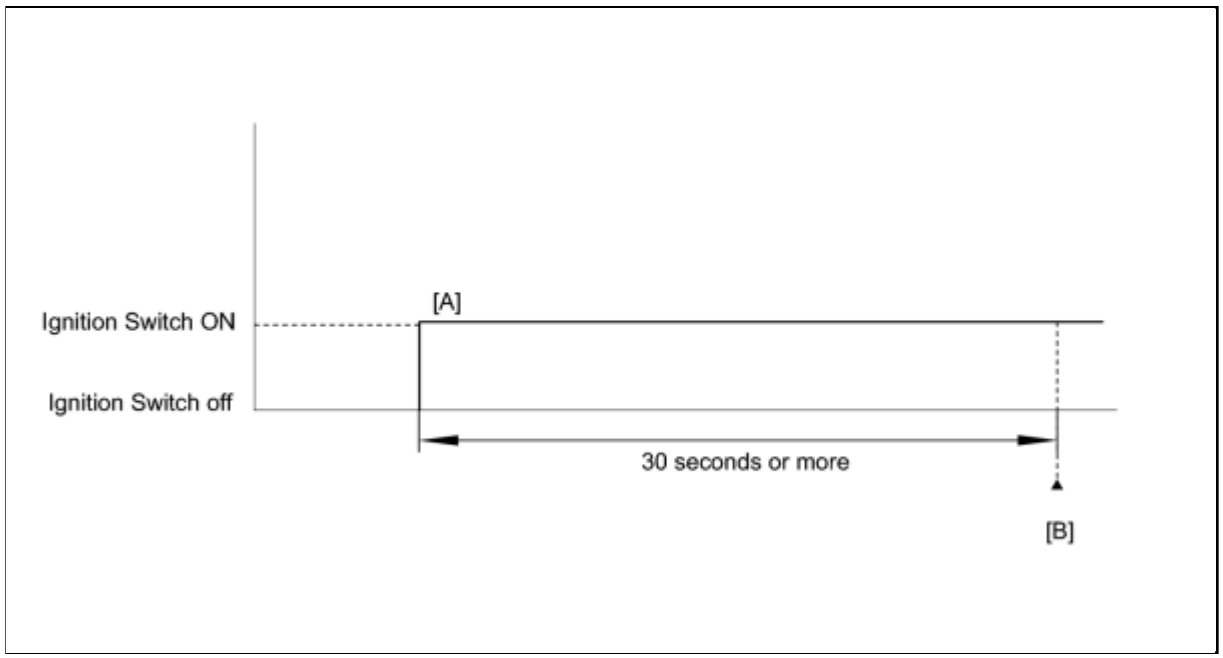

1. Connect the Techstream to the DLC3.
2. Turn the ignition switch to ON and turn the Techstream on.
3. Clear the DTCs (even if no DTCs are stored, perform the clear DTC procedure) INFO .
4. Turn the ignition switch off.
5. Turn the ignition switch to ON and turn the Techstream on [A].
6. Wait 30 seconds or more.
7. Enter the following menus: Powertrain / Engine / Utility / All Readiness.
8. Input the DTC: P062F.
9. Check the DTC judgment result [B].

TECHSTREAM DISPLAY	DESCRIPTION
NORMAL	○ DTC judgment completed ○ System normal
ABNORMAL	○ DTC judgment completed ○ System abnormal
INCOMPLETE	○ DTC judgment not completed ○ Perform driving pattern after confirming DTC enabling

TECHSTREAM DISPLAY	DESCRIPTION
	conditions
UNKNOWN	○ Unable to perform DTC judgment ○ Number of DTCs which do not fulfill DTC preconditions has reached ECU memory limit

HINT:

If the judgment result shows ABNORMAL, the system has a malfunction.

10. If the test result is UNKNOWN, enter the following menus: Powertrain / Engine / Trouble Codes / Pending.
11. Read Pending DTCs.

HINT:

If a pending DTC is output, the system is malfunctioning.

12. If the test result is INCOMPLETE or UNKNOWN and no pending DTC is output, perform a universal trip and check for permanent DTCs INFO .

HINT:

- If a permanent DTC is output, the system is malfunctioning.
- If no permanent DTC is output, the system is normal.

INSPECTION PROCEDURE

PROCEDURE

1.	**READ OUTPUT DTC (DTC P062F)**

(a) Connect the Techstream to the DLC3.

(b) Turn the ignition switch to ON.

(c) Turn the Techstream on.

(d) Clear DTC INFO .

(e) Turn the ignition switch off and turn the Techstream off.

(f) Disconnect the Techstream.

(g) Disconnect the cable from the negative (-) battery terminal and wait for 1 minute.

(h) Connect the cable to the negative (-) battery terminal.

(i) Connect the Techstream to the DLC3.

(j) Turn the ignition switch to ON.

(k) Turn the Techstream on.

(l) Enter the following menus: Powertrain / Engine and ECT / Trouble Codes.

(m) Read DTCs.

Result

RESULT	PROCEED TO
No output	A
P062F	B

B ▶ **REPLACE ECM**

A ▶ **CHECK FOR INTERMITTENT PROBLEMS**

Last Modified: 3-10-2010	6.4 C	**From:** 200901
Model Year: 2010	**Model:** Corolla	**Doc ID:** RM000000PGD03MX
Title: 2AZ-FE ENGINE CONTROL: SFI SYSTEM: P0630: VIN not Programmed or Mismatch - ECM / PCM (2010 Corolla)		

DTC	**P0630**	**VIN not Programmed or Mismatch - ECM / PCM**

MONITOR DESCRIPTION

DTC P0630 is set when the Vehicle Identification Number (VIN) is not stored in the Engine Control Module (ECM) or the input VIN is not accurate. Input the VIN with the Techstream.

DTC NO.	DTC DETECTION CONDITION	TROUBLE AREA
P0630	When either condition below is met: • VIN not stored in ECM • Input VIN in ECM not accurate	ECM

MONITOR STRATEGY

Related DTCs	P0630: VIN not programmed
Required Sensors/Components (Main)	ECM
Required Sensors/Components (Related)	-
Frequency of Operation	Continuous
Duration	0.065 seconds
MIL Operation	Immediate
Sequence of Operation	None

TYPICAL ENABLING CONDITIONS

Battery voltage	8 V or more
Ignition switch	ON
Starter	OFF

TYPICAL MALFUNCTION THRESHOLDS

VIN code	Not programmed

COMPONENT OPERATING RANGE

VIN code	Programmed

CONFIRMATION DRIVING PATTERN

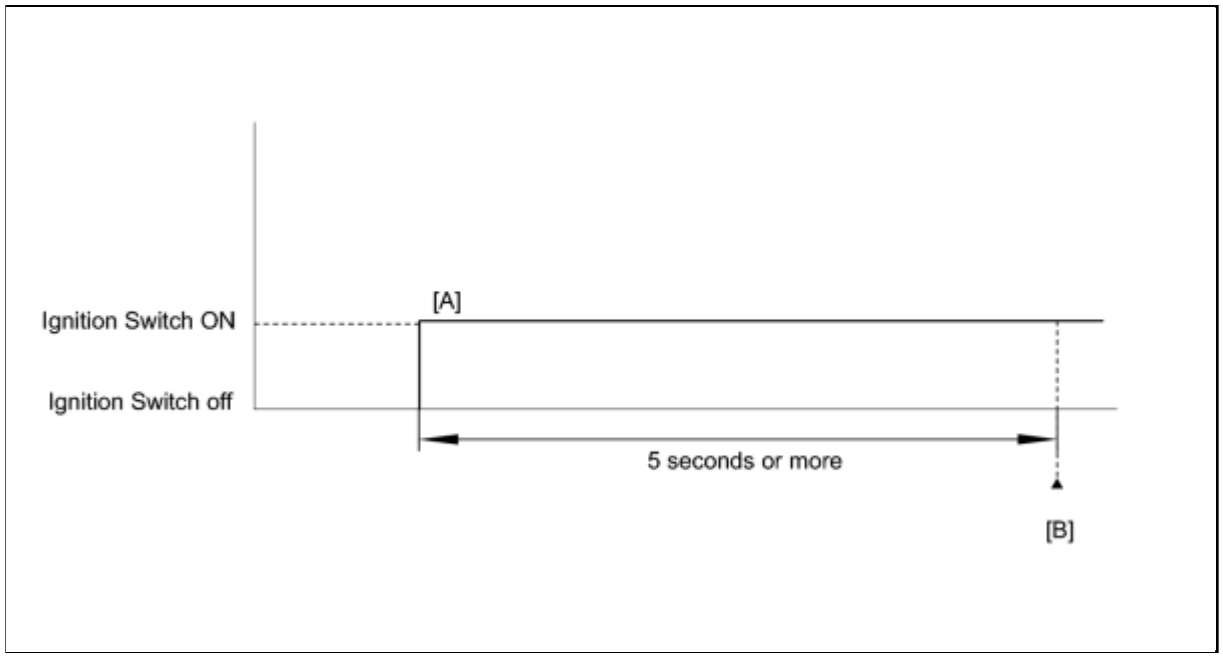

1. Connect the Techstream to the DLC3.
2. Turn the ignition switch to ON and turn the Techstream on.
3. Clear the DTCs (even if no DTCs are stored, perform the clear DTC procedure) INFO .
4. Turn the ignition switch off.
5. Turn the ignition switch to ON and turn the Techstream on [A].
6. Wait 5 seconds or more.
7. Enter the following menus: Powertrain / Engine / Utility / All Readiness.
8. Input the DTC: P0630.
9. Check the DTC judgment result [B].

TECHSTREAM DISPLAY	DESCRIPTION
NORMAL	○ DTC judgment completed ○ System normal
ABNORMAL	○ DTC judgment completed ○ System abnormal

TECHSTREAM DISPLAY	DESCRIPTION
INCOMPLETE	○ DTC judgment not completed ○ Perform driving pattern after confirming DTC enabling conditions
UNKNOWN	○ Unable to perform DTC judgment ○ Number of DTCs which do not fulfill DTC preconditions has reached ECU memory limit

HINT:

If the judgment result shows ABNORMAL, the system has a malfunction.

10. If the test result is UNKNOWN, enter the following menus: Powertrain / Engine / Trouble Codes / Pending.
11. Read Pending DTCs.

HINT:

If a pending DTC is output, the system is malfunctioning.

12. If the test result is INCOMPLETE or UNKNOWN and no pending DTC is output, perform a universal trip and check for permanent DTCs INFO .

HINT:

- If a permanent DTC is output, the system is malfunctioning.
- If no permanent DTC is output, the system is normal.

INSPECTION PROCEDURE

PROCEDURE

1.	**READ OUTPUT DTC (DTC P0630)**

(a) Connect the Techstream to the DLC3.

(b) Turn the ignition switch to ON.

(c) Turn the Techstream on.

(d) Enter the following menus: Powertrain / Engine and ECT / Trouble Codes.

(e) Read DTCs.

Result:

RESULT	PROCEED TO
P0630	A
P0630 and other DTCs	B

If any DTCs other than P0630 are output, troubleshoot those DTCs first.

NOTICE:

If P0630 is set, the VIN must be input to the ECM using the Techstream. However, all DTCs are cleared automatically by the Techstream when inputting the VIN. If DTCs other than P0630 are set, check them first.

B ▶ **GO TO DTC CHART**

A ▼

2.	**INPUT VIN**

(a) Input the VIN INFO .

NEXT ▶ **END**

Last Modified: 3-10-2010	6.4 C	**From:** 200901
Model Year: 2010	**Model:** Corolla	**Doc ID:** RM000002I3U04DX
Title: 2AZ-FE ENGINE CONTROL: SFI SYSTEM: P0657: Actuator Supply Voltage Circuit / Open (2010 Corolla)		

DTC	**P0657**	**Actuator Supply Voltage Circuit / Open**

MONITOR DESCRIPTION

The ECM monitors the output voltage to the throttle actuator. This self-check ensures that the ECM is functioning properly. The output voltage is usually 0 V when the ignition switch is turned off. If the output voltage is higher than 7 volts when the ignition switch is turned off, the ECM will illuminate the MIL and set the DTC the next time the ignition switch is turned to ON.

DTC NO.	DTC DETECTION CONDITION	TROUBLE AREA
P0657	Throttle actuator power supply error	ECM

MONITOR STRATEGY

Related DTCs	P0657: Electronic throttle control system power supply
Required sensors/Components (Main)	ECM
Required sensors/Components (Related)	Throttle actuator
Frequency of operation	Once per driving cycle
Duration	Within 1 second
MIL operation	Immediate
Sequence of operation	None

TYPICAL ENABLING CONDITIONS

Ignition switch	ON to OFF

TYPICAL MALFUNCTION THRESHOLDS

Throttle actuator power supply	7 V or more

CONFIRMATION DRIVING PATTERN

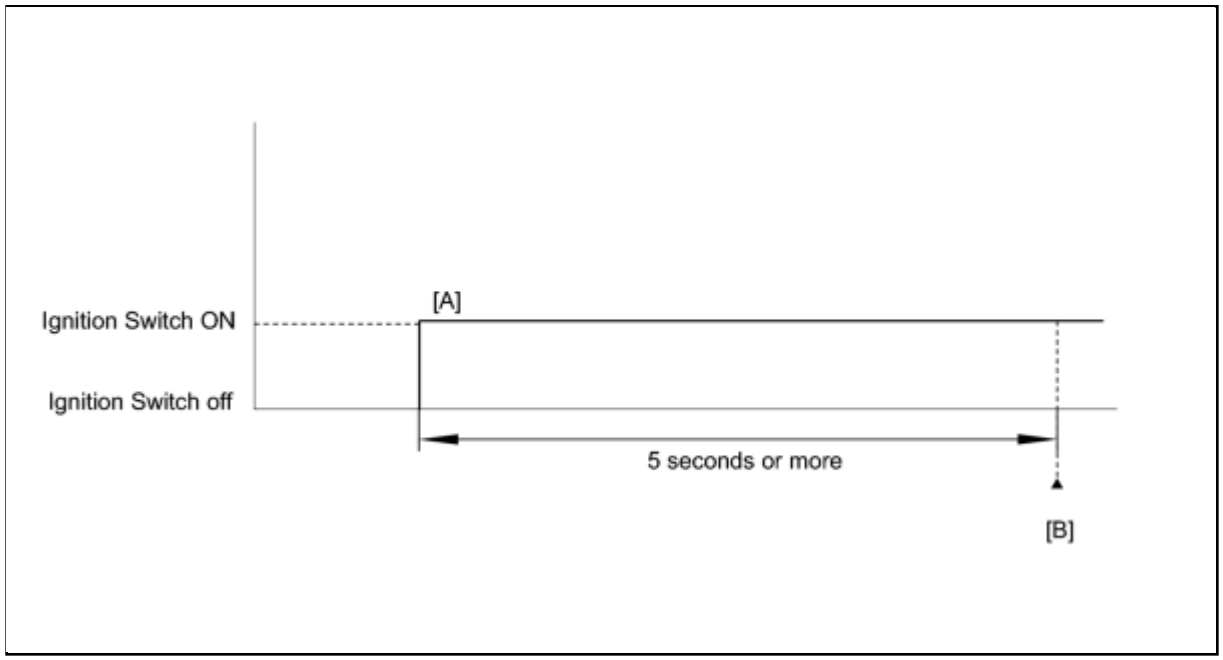

1. Connect the Techstream to the DLC3.
2. Turn the ignition switch to ON and turn the Techstream on.
3. Clear the DTCs (even if no DTCs are stored, perform the clear DTC procedure) INFO .
4. Turn the ignition switch off and turn the Techstream off.
5. Turn the ignition switch to ON and turn the Techstream on [A].
6. Wait 5 seconds or more.
7. Enter the following menus: Powertrain / Engine / Utility / All Readiness.
8. Input the DTC: P0657.
9. Check the DTC judgment result [B].

TECHSTREAM DISPLAY	DESCRIPTION
NORMAL	○ DTC judgment completed ○ System normal
ABNORMAL	○ DTC judgment completed ○ System abnormal
INCOMPLETE	○ DTC judgment not completed ○ Perform driving pattern after confirming DTC enabling conditions
UNKNOWN	○ Unable to perform DTC judgment ○ Number of DTCs which do not fulfill DTC preconditions has reached ECU memory limit

HINT:

If the judgment result shows ABNORMAL, the system has a malfunction.

10. If the test result is UNKNOWN, enter the following menus: Powertrain / Engine / Trouble Codes / Pending.
11. Read Pending DTCs.

HINT:

If a pending DTC is output, the system is malfunctioning.

12. If the test result is INCOMPLETE or UNKNOWN and no pending DTC is output, perform a universal trip and check for permanent DTCs INFO .

HINT:

- If a permanent DTC is output, the system is malfunctioning.
- If no permanent DTC is output, the system is normal.

INSPECTION PROCEDURE

HINT:

Read freeze frame data using the Techstream. The ECM records vehicle and driving condition information as freeze frame data the moment a DTC is stored. When troubleshooting, freeze frame data can be helpful in determining whether the vehicle was running or stopped, whether the engine was warmed up or not, whether the air fuel ratio was lean or rich, as well as other data recorded at the time of a malfunction.

PROCEDURE

1.	**READ OUTPUT DTC (DTC P0657)**

(a) Clear the DTC INFO .

(b) Turn the ignition switch OFF.

(c) Disconnect the cable from the negative battery terminal and wait for 1 minute.

(d) Connect the cable to the negative battery terminal.

(e) Turn the ignition switch to ON for 10 seconds.

(f) Turn the ignition switch off.

(g) Turn the ignition switch to ON.

(h) Check DTC.

OK:
P0657 is not present.

B ▶ **REPLACE ECM**

A ▶ **CHECK FOR INTERMITTENT PROBLEMS**

Last Modified: 3-10-2010	6.4 C	**From:** 200901
Model Year: 2010	**Model:** Corolla	**Doc ID:** RM000001DN902WX
Title: 2AZ-FE ENGINE CONTROL: SFI SYSTEM: P0724: Brake Switch "B" Circuit High (2010 Corolla)		

DTC	**P0724**	**Brake Switch "B" Circuit High**

DESCRIPTION

The purpose of this circuit is to prevent the engine from stalling when brakes are suddenly applied while driving with the lock-up torque converter clutch on.

When the brake pedal is depressed, this switch sends a signal to the ECM. Then the ECM cancels the operation of the lock-up clutch while braking is in progress.

DTC NO.	DTC DETECTION CONDITION	TROUBLE AREA
P0724	Stop light switch remains ON even when vehicle repeats 5 cycles of STOP (less than 1.86 mph [3 km/h]) and GO (18.65 mph [30 km/h] or more) (2 trip detection logic)	• Short in stop light switch signal circuit • Stop light switch • ECM

MONITOR DESCRIPTION

This DTC indicates that the stop light switch remains ON. When the stop light switch remains ON during "stop and go" driving, the ECM interprets this as a fault in the stop light switch, the MIL comes on and the ECM stores the DTC. The vehicle must stop (less than 1.86 mph [3 km/h]) and go (18.65 mph [30 km/h] or more) 5 times during 2 driving cycles, in order to detect a malfunction.

MONITOR STRATEGY

Related DTCs	P0724: Stop light switch/Range check/Rationality
Required sensors/Components (Main)	Stop light switch
Required sensors/Components (Related)	Speed sensor
Frequency of Operation	Continuous
Duration	5 times
MIL Operation	2 driving cycles
Sequence of Operation	None

TYPICAL ENABLING CONDITIONS

The stop light switch remains ON during GO and STOP 5 times.

GO and STOP are Defined as Follows;

Monitor runs whenever following DTCs are not present	None
GO: Vehicle speed	18.65 mph (30 km/h) or more
STOP: Vehicle speed	Less than 1.86 mph (3 km/h)

TYPICAL MALFUNCTION THRESHOLDS

Stop light switch status	Stuck ON

CONFIRMATION DRIVING PATTERN

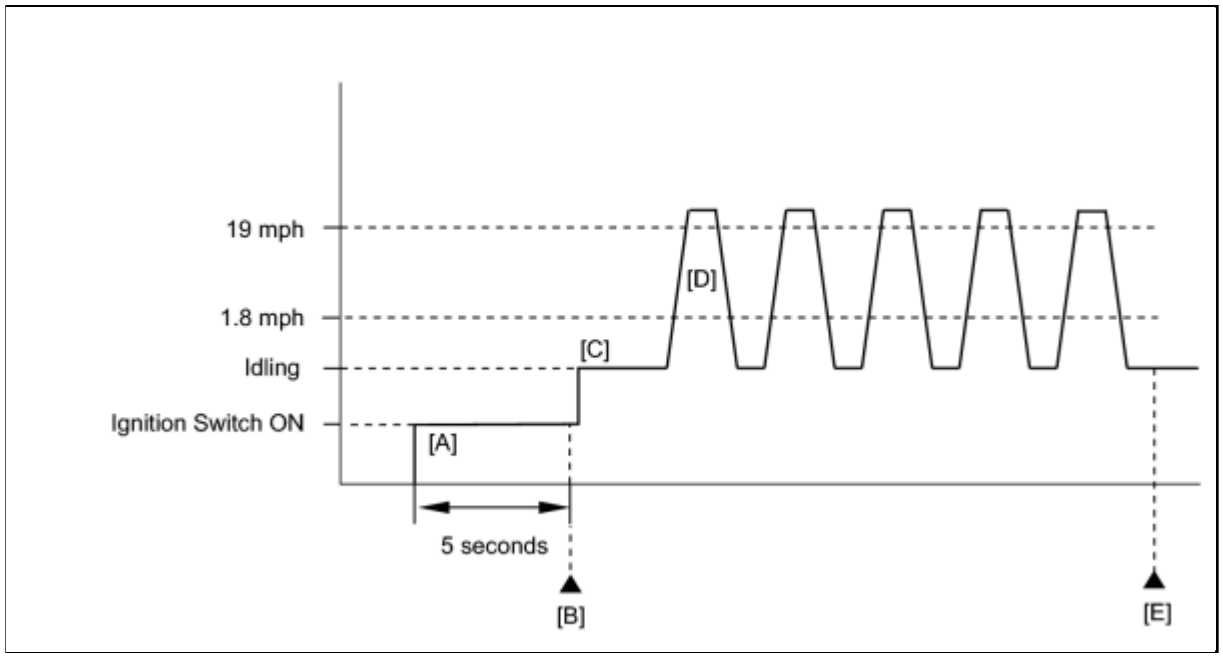

1. Connect the Techstream to the DLC3.
2. Turn the ignition switch to ON and turn the Techstream on.
3. Clear the DTCs (even if no DTCs are stored, perform the clear DTC procedure) INFO .
4. Turn the ignition switch off.
5. Turn the ignition switch to ON and turn the Techstream on [A].
6. Wait 5 seconds after clear DTCs.
7. Enter the following menus: Powertrain / Engine / Utility / All Readiness.
8. Input the DTC: P0724.
9. Check the DTC judgment result [B].

TECHSTREAM DISPLAY	DESCRIPTION
NORMAL	○ DTC judgment completed ○ System normal
ABNORMAL	○ DTC judgment completed ○ System abnormal
INCOMPLETE	○ DTC judgment not completed ○ Perform driving pattern after confirming DTC enabling conditions
UNKNOWN	○ Unable to perform DTC judgment ○ Number of DTCs which do not fulfill DTC preconditions has reached ECU memory limit

CAUTION:

When performing the confirmation driving pattern, obey all speed limits and traffic laws.

HINT:

- If the judgment result shows ABNORMAL, the system has a malfunction.
- If the judgment result shows INCOMPLETE or UNKNOWN, perform steps [C] through [E].

10. Start the engine [C].
11. Accelerate the vehicle to 19 mph (30 km/h) or more, depress the brake pedal and decelerate the vehicle to 1.8 mph (3 km/h) or less [D]. Repeat step [D] 5 times.
12. Check the DTC judgment result [E].
13. If the test result is UNKNOWN, enter the following menus: Powertrain / Engine / Trouble Codes / Pending.
14. Read Pending DTCs.

HINT:

If a pending DTC is output, the system is malfunctioning.

15. If the test result is INCOMPLETE or UNKNOWN and no pending DTC is output, perform a universal trip and check for permanent DTCs INFO .

HINT:

- If a permanent DTC is output, the system is malfunctioning.
- If no permanent DTC is output, the system is normal.

WIRING DIAGRAM

Refer to DTC P0504 INFO .

INSPECTION PROCEDURE

HINT:

Read freeze frame data using the Techstream. The ECM records vehicle and driving condition information as freeze frame data the moment a DTC is stored. When troubleshooting, freeze frame data can be helpful in determining whether the vehicle was running or stopped, whether the engine was warmed up or not, whether the air fuel ratio was lean or rich, as well as other data recorded at the time of a malfunction.

PROCEDURE

1.	**READ VALUE USING TECHSTREAM (STOP LIGHT SWITCH)**

(a) Connect the Techstream to the DLC3.

(b) Turn the ignition switch to ON.

(c) Turn the Techstream on.

(d) Enter the following menus: Powertrain / Engine and ECT / Data List / Stop Light Switch.

(e) Read the values displayed on the Techstream.

Result:

ITEM	MEASUREMENT ITEM: RANGE (DISPLAY)	NORMAL CONDITION
Stop Light Switch	Stop light switch status: ON or OFF	• ON: Brake pedal is depressed • OFF: Brake pedal is released

NG ▶ **INSPECT STOP LIGHT SWITCH**

OK ▶ **CHECK FOR INTERMITTENT PROBLEMS**

2.	**INSPECT STOP LIGHT SWITCH** INFO

NG ▶ **REPLACE STOP LIGHT SWITCH**

OK ▼

3.	CHECK HARNESS AND CONNECTOR (STOP LIGHT SWITCH - ECM)

(a) Disconnect the ECM connector.

(b) Turn the ignition switch to ON.

(c) Measure the voltage according to the value(s) in the table below.

Standard Voltage:

TESTER CONNECTION	CONDITION	SPECIFIED CONDITION
A50-35 (ST1-) - Body ground	Brake pedal released	11 to 14 V
	Brake pedal depressed	0 to 3 V
A50-36 (STP) - Body ground	Brake pedal released	0 to 3 V
	Brake pedal depressed	11 to 14 V

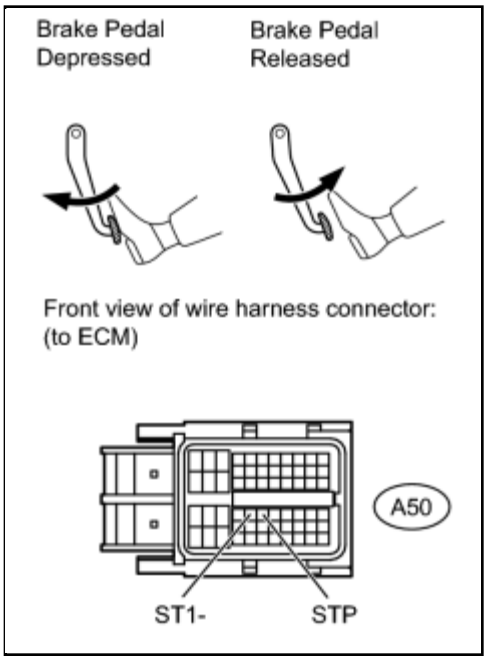

(d) Reconnect the ECM connector.

NG ▶ **REPAIR OR REPLACE HARNESS OR CONNECTOR (STOP LIGHT SWITCH - ECM)**

OK ▶ **REPLACE ECM**

Last Modified: 3-10-2010	6.4 C	**From:** 200901
Model Year: 2010	**Model:** Corolla	**Doc ID:** RM000000PFU0ADX
Title: 2AZ-FE ENGINE CONTROL: SFI SYSTEM: P2102,P2103: Throttle Actuator Control Motor Circuit Low (2010 Corolla)		

DTC	**P2102**	**Throttle Actuator Control Motor Circuit Low**

DTC	**P2103**	**Throttle Actuator Control Motor Circuit High**

DESCRIPTION

The throttle actuator is operated by the ECM and opens and closes the throttle valve using an electric motor and gears.

The opening angle of the throttle valve is detected by the throttle position sensor, which is mounted on the throttle body. The throttle position sensor provides feedback to the ECM. This feedback allows the ECM to appropriately control the throttle actuator and monitor the throttle opening angle as the ECM responds to driver inputs.

HINT:

This electronic throttle control system does not use a throttle cable.

DTC NO.	DTC DETECTION CONDITION	TROUBLE AREA
P2102	Conditions (a) and (b) continue for 2 seconds (1 trip detection logic): (a) Throttle actuator duty ratio 80% or more (b) Throttle actuator current less than 0.5 A	• Open in throttle actuator circuit • Throttle actuator • ECM
P2103	Either of following conditions is met (1 trip detection logic): • Hybrid IC diagnosis signal fail • Hybrid IC current limiter port fail	• Short in throttle actuator circuit • Throttle actuator • Throttle valve • Throttle body • ECM

MONITOR DESCRIPTION

The ECM monitors the electrical current through the electronic actuator, and detects malfunctions and

open circuits in the throttle actuator based on the current value. If the current is outside the standard range, the ECM determines that there is a malfunction in the throttle actuator. In addition, if the throttle valve does not function properly (for example, stuck on), the ECM determines that there is a malfunction. The ECM then illuminates the MIL and sets a DTC.

Example:

When the electrical current is less than 0.5 A and the throttle actuator duty ratio exceeds 80%, the ECM interprets this as the current being outside the standard range, and illuminates the MIL and sets a DTC.

If the malfunction is not repaired successfully, the DTC can be set when the engine is quickly revved to a high rpm several times after the engine has idled for 5 seconds after starting the engine.

MONITOR STRATEGY

Related DTCs	P2102: Throttle actuator current (low current) P2103: Throttle actuator current (high current)
Required Sensors/Components (Main)	Throttle actuator (throttle body)
Required Sensors/Components (Related)	None
Frequency of Operation	Continuous
Duration	P2102: 2 seconds P2103: 0.6 seconds
MIL Operation	Immediate
Sequence of Operation	None

TYPICAL ENABLING CONDITIONS

Monitor runs whenever following DTCs are not present	None

P2102:

Throttle actuator	ON
Duty-cycle to open throttle actuator	80% or more
Throttle actuator power supply	8 V or more
Motor current change during latest 0.016 seconds	Less than 0.2 A

P2103:

Throttle actuator	ON
Either of the following conditions 1 or 2 is met:	-
1. Throttle actuator power supply	8 V or more

2. Throttle actuator power	ON
Battery voltage	8 V or more
Starter	OFF

TYPICAL MALFUNCTION THRESHOLDS

P2102:

Throttle actuator current	Less than 0.5 A

P2103:

Either of following conditions is met:	A or B
A. Hybrid IC diagnosis signal	Fail
B. Hybrid IC current limiter port	Fail

CONFIRMATION DRIVING PATTERN

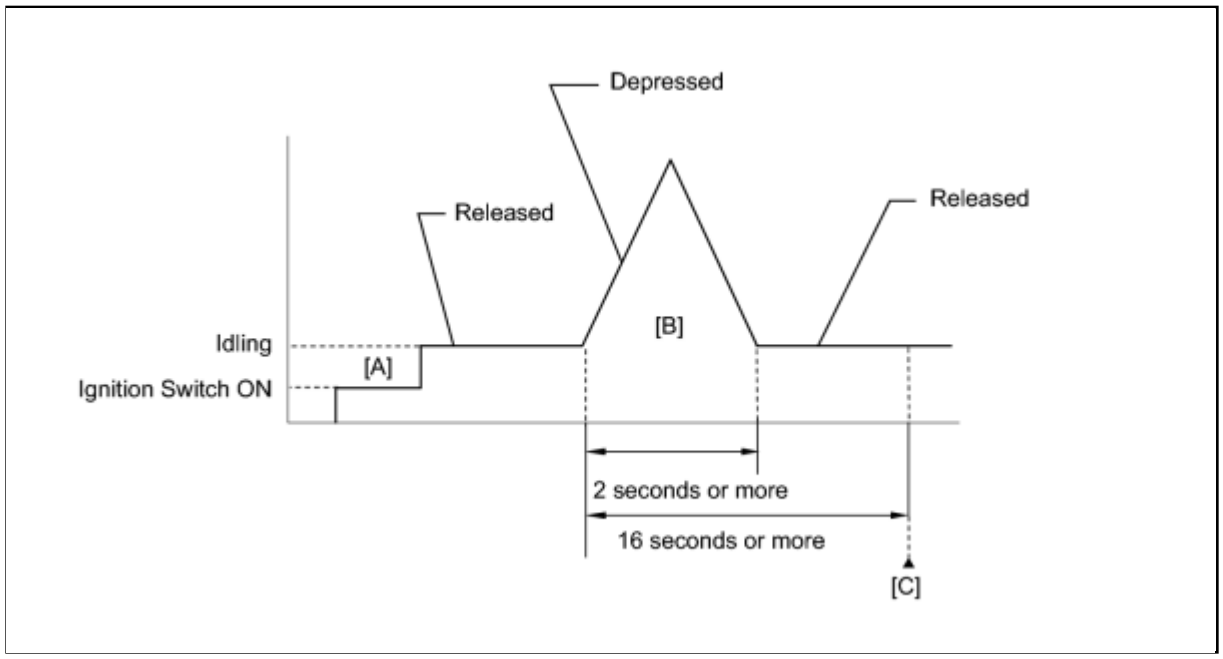

1. Connect the Techstream to the DLC3.
2. Turn the ignition switch to ON and turn the Techstream on.
3. Clear DTCs (even if no DTCs are stored, perform the clear DTC procedure) INFO .
4. Turn the ignition switch off.
5. Turn the ignition switch to ON and turn the Techstream on [A].
6. Start the engine.
7. With the vehicle stationary, fully depress the accelerator pedal and quickly release it [B].
8. Check that 16 seconds or more have elapsed from the instant when the accelerator pedal is

first depressed.

9. Enter the following menus: Powertrain / Engine / Utility / All Readiness.
10. Input the DTC: P2102 or P2103.
11. Check the DTC judgment result [C].

TECHSTREAM DISPLAY	DESCRIPTION
NORMAL	○ DTC judgment completed ○ System normal
ABNORMAL	○ DTC judgment completed ○ System abnormal
INCOMPLETE	○ DTC judgment not completed ○ Perform driving pattern after confirming DTC enabling conditions
UNKNOWN	○ Unable to perform DTC judgment ○ Number of DTCs which do not fulfill DTC preconditions has reached ECU memory limit

HINT:

- If the judgment result shows ABNORMAL, the system has a malfunction.
- If the judgment result shows INCOMPLETE or UNKNOWN, perform steps [B] through [C] again.

12. If the test result is UNKNOWN, enter the following menus: Powertrain / Engine / Trouble Codes / Pending.
13. Read Pending DTCs.

HINT:

If a pending DTC is output, the system is malfunctioning.

14. If the test result is INCOMPLETE or UNKNOWN and no pending DTC is output, perform a universal trip and check for permanent DTCs INFO .

HINT:

- If a permanent DTC is output, the system is malfunctioning.
- If no permanent DTC is output, the system is normal.

FAIL-SAFE

When either of these DTCs, as well as other DTCs relating to electronic throttle control system malfunctions, is set, the ECM enters fail-safe mode. During fail-safe mode, the ECM cuts the current to the throttle actuator, and the throttle valve is returned to a 6.5° throttle angle by the return spring. The ECM then adjusts the engine output by controlling the fuel injection (intermittent fuel-cut) and ignition timing, in accordance with the accelerator pedal opening angle, to allow the vehicle to continue running at a minimal speed. If the accelerator pedal is depressed gently, the vehicle can be driven slowly.

Fail-safe mode continues until a pass condition is detected, and the ignition switch is then turned off.

WIRING DIAGRAM

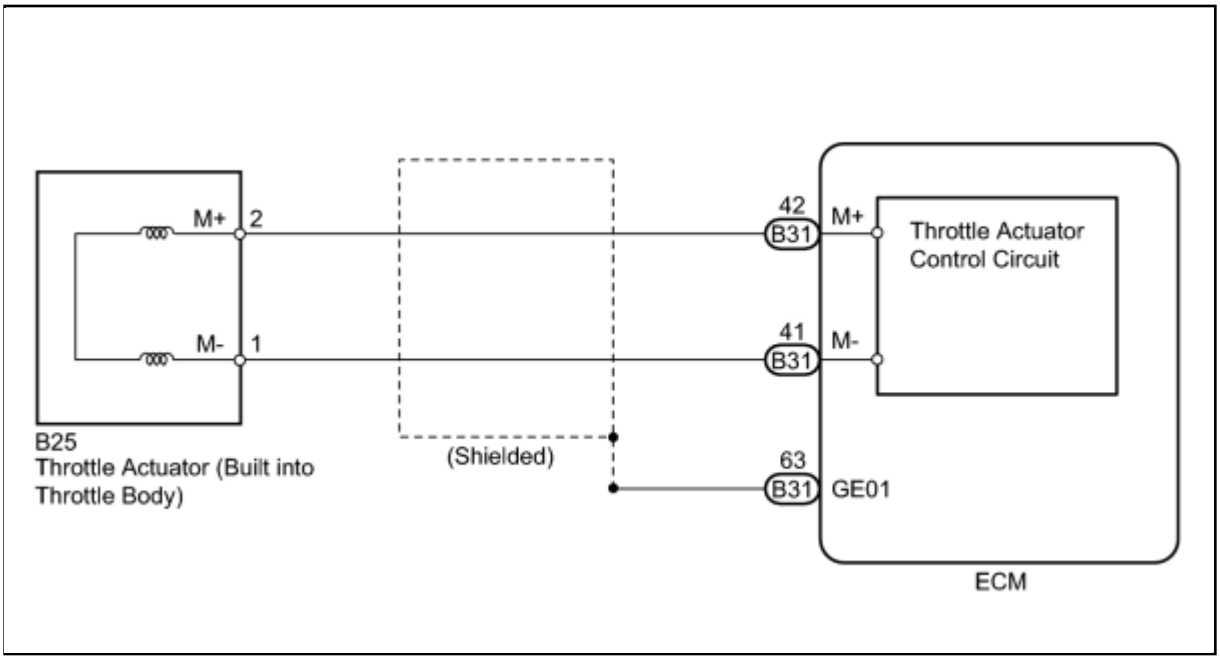

INSPECTION PROCEDURE

HINT:

- Read freeze frame data using the Techstream. The ECM records vehicle and driving condition information as freeze frame data the moment a DTC is stored. When troubleshooting, freeze frame data can be helpful in determining whether the vehicle was running or stopped, whether the engine was warmed up or not, whether the air fuel ratio was lean or rich, as well as other data recorded at the time of a malfunction.
- The throttle actuator current (Throttle Motor Current) and the throttle actuator duty ratio (Throttle Motor Open Duty / Throttle Motor Close Duty) can be read using Techstream. However, the ECM shuts off the throttle actuator current when the electronic throttle control system malfunctions.

PROCEDURE

1.	**INSPECT THROTTLE BODY (RESISTANCE OF THROTTLE ACTUATOR)**

(a) Disconnect the throttle body connector.

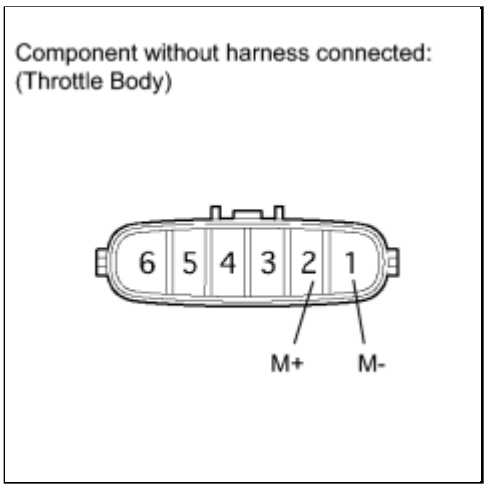

(b) Measure the resistance according to the value(s) in the table below.

Standard Resistance:

TESTER CONNECTION	CONDITION	SPECIFIED CONDITION
2 (M+) - 1 (M-)	20°C (68°F)	0.3 to 100 Ω

(c) Reconnect the throttle body connector.

NG ▶ **REPLACE THROTTLE BODY**

OK ▼

2.	**CHECK HARNESS AND CONNECTOR (THROTTLE BODY - ECM)**

(a) Disconnect the throttle body connector.

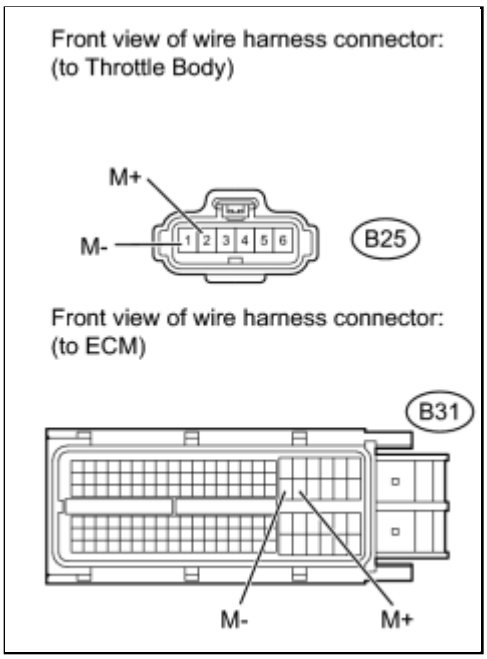

(b) Disconnect the ECM connector.

(c) Measure the resistance according to the value(s) in the table below.

Standard Resistance (Check for Open):

TESTER CONNECTION	CONDITION	SPECIFIED CONDITION
B25-2 (M+) - B31-42 (M+)	Always	Below 1 Ω
B25-1 (M-) - B31-41 (M-)	Always	Below 1 Ω

Standard Resistance (Check for Short):

TESTER CONNECTION	CONDITION	SPECIFIED CONDITION
B25-2 (M+) or B31-42 (M+) - Body ground	Always	10 kΩ or higher
B25-1 (M-) or B31-41 (M-) - Body ground	Always	10 kΩ or higher

(d) Reconnect the ECM connector.

(e) Reconnect the throttle body connector.

NG ▶ **REPAIR OR REPLACE HARNESS OR CONNECTOR (THROTTLE BODY - ECM)**

OK ▼

3.	INSPECT THROTTLE BODY (VISUALLY CHECK THROTTLE VALVE)

(a) Check for foreign objects between the throttle valve and the housing.

OK:

No foreign objects between throttle valve and housing.

NG ▶ **REMOVE FOREIGN OBJECT AND CLEAN THROTTLE BODY**

OK ▼

4.	INSPECT THROTTLE BODY (THROTTLE VALVE)

(a) Check if the throttle valve opens and closes smoothly.

OK:

Throttle valve opens and closes smoothly.

NG ▶ **REPLACE THROTTLE BODY**

OK ▶ **REPLACE ECM**

Last Modified: 3-10-2010	6.4 C	**From:** 200901
Model Year: 2010	**Model:** Corolla	**Doc ID:** RM0000324401RX
Title: 2AZ-FE ENGINE CONTROL: SFI SYSTEM: P1607: Cruise Control Input Processor (2010 Corolla)		

DTC	**P1607**	**Cruise Control Input Processor**

MONITOR DESCRIPTION

The ECM continuously monitors its main and sub CPUs for the cruise control. This self-check ensures that the ECM is functioning properly. If outputs from the CPUs are different and deviate from the standards, the ECM will illuminate the MIL and set the DTC immediately.

DTC NO.	DTC DETECTION CONDITION	TROUBLE AREA
P1607	ECM internal error	ECM

MONITOR STRATEGY

Related DTC	P1607: Internal control module range check
Required sensors/Components (Main)	ECM
Required sensors /Components (Related)	Cruise control
Frequency of Operation	Continuous
Duration	0.3 seconds
MIL Operation	Immediate
Sequence of Operation	None

TYPICAL ENABLING CONDITIONS

Monitor runs whenever the following DTCs are not present	None

TYPICAL MALFUNCTION THRESHOLDS

Cruise control	Forbiddance
When either condition below is met:	-

• Cruise control	Operating
• Low speed control	Operating

CONFIRMATION DRIVING PATTERN

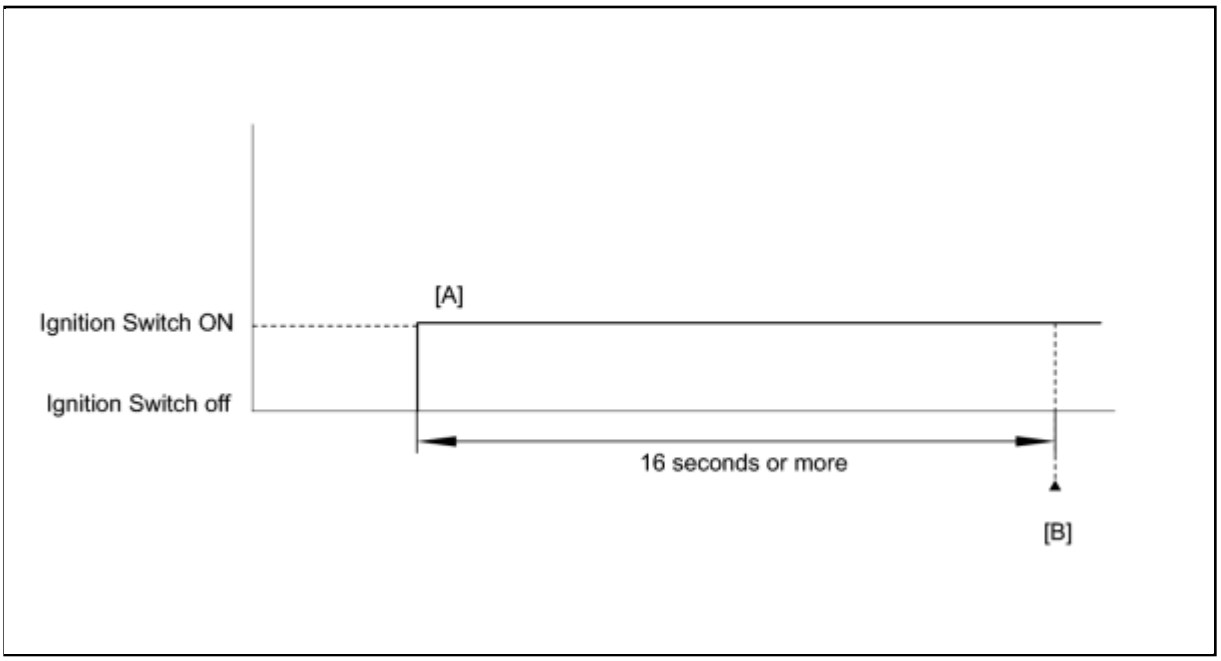

1. Connect the Techstream to the DLC3.
2. Turn the ignition switch to ON and turn the Techstream on.
3. Clear the DTCs (even if no DTCs are stored, perform the clear DTC procedure) INFO .
4. Turn the ignition switch off.
5. Turn the ignition switch to ON and turn the Techstream on [A].
6. Wait 16 seconds or more.
7. Enter the following menus: Powertrain / Engine / Utility / All Readiness.
8. Input the DTC: P1607.
9. Check the DTC judgment result [B].

TECHSTREAM DISPLAY	DESCRIPTION
NORMAL	○ DTC judgment completed ○ System normal
ABNORMAL	○ DTC judgment completed ○ System abnormal

TECHSTREAM DISPLAY	DESCRIPTION
INCOMPLETE	○ DTC judgment not completed ○ Perform driving pattern after confirming DTC enabling conditions
UNKNOWN	○ Unable to perform DTC judgment ○ Number of DTCs which do not fulfill DTC preconditions has reached ECU memory limit

HINT:

If the judgment result shows ABNORMAL, the system has a malfunction.

10. If the test result is UNKNOWN, enter the following menus: Powertrain / Engine / Trouble Codes / Pending.
11. Read Pending DTCs.

HINT:

If a pending DTC is output, the system is malfunctioning.

12. If the test result is INCOMPLETE or UNKNOWN and no pending DTC is output, perform a universal trip and check for permanent DTCs INFO .

HINT:

- If a permanent DTC is output, the system is malfunctioning.
- If no permanent DTC is output, the system is normal.

INSPECTION PROCEDURE

PROCEDURE

1.	**READ OUTPUT DTC (DTC P1607)**

(a) Connect the Techstream to the DLC3.

(b) Turn the ignition switch to ON.

(c) Turn the Techstream on.

(d) Clear the DTC INFO .

(e) Turn the ignition switch off and turn the Techstream off.

(f) Disconnect the Techstream.

(g) Disconnect the cable from the battery negative (-) terminal and wait for 1 minute.

(h) Connect the cable to the battery negative (-) terminal.

(i) Connect the Techstream to the DLC3.

(j) Turn the ignition switch to ON.

(k) Turn the Techstream on.

(l) Enter the following menus: Powertrain / Engine and ECT / Trouble Codes.

(m) Read DTCs.

Result:

RESULT	PROCEED TO
No output	A
P1607	B

B ▶ **REPLACE ECM**

A ▶ **CHECK FOR INTERMITTENT PROBLEMS**

Last Modified: 3-10-2010	6.4 C	**From:** 200901
Model Year: 2010	**Model:** Corolla	**Doc ID:** RM000000PFV0B7X
Title: 2AZ-FE ENGINE CONTROL: SFI SYSTEM: P2111,P2112: Throttle Actuator Control System - Stuck Open (2010 Corolla)		

DTC	**P2111**	**Throttle Actuator Control System - Stuck Open**

DTC	**P2112**	**Throttle Actuator Control System - Stuck Closed**

DESCRIPTION

The throttle actuator is operated by the ECM, and opens and closes the throttle valve using an electric motor and gears. The opening angle of the throttle valve is detected by the throttle position sensor, which is mounted on the throttle body. The throttle position sensor provides feedback to the ECM. This feedback allows the ECM to appropriately control the throttle actuator and monitor the throttle opening angle as the ECM responds to driver inputs.

HINT:

This electronic throttle control system does not use a throttle cable.

DTC NO.	DTC DETECTION CONDITION	TROUBLE AREA
P2111	ECM signals throttle actuator to close, but stuck open (1 trip detection logic)	• Throttle actuator • Throttle body • Throttle valve • ECM
P2112	ECM signals throttle actuator to open, but stuck closed (1 trip detection logic)	• Throttle actuator • Throttle body • Throttle valve • ECM

MONITOR DESCRIPTION

The ECM determines that there is a malfunction in the electronic throttle control system when the throttle valve remains at a fixed angle despite a high drive current from the ECM. The ECM illuminates the MIL and sets a DTC.

If the malfunction is not repaired successfully, the DTC can be set when the accelerator pedal is fully depressed and released quickly (to fully open and close the throttle valve) after the engine is next started.

MONITOR STRATEGY

Related DTCs	P2111: Throttle actuator stuck open P2112: Throttle actuator stuck closed
Required Sensors/Components (Main)	Throttle actuator (throttle body)
Required Sensors/Components (Related)	-
Frequency of Operation	Continuous
Duration	0.5 seconds
MIL Operation	Immediate
Sequence of Operation	None

TYPICAL ENABLING CONDITIONS

All

Monitor runs whenever following DTCs are not present	None

P2111 (Throttle Actuator Stuck Open)

All of following conditions are met:	-
System guard* judge condition	ON
Throttle actuator current	2 A or more
Duty cycle to close throttle	80% or more

P2112 (Throttle Actuator Stuck Closed)

All of following conditions are met:	-
System guard* judge condition	ON
Throttle actuator current	2 A or more
Duty cycle to open throttle	80% or more

*System guard set when following conditions are met:	-
Throttle actuator	ON
Throttle actuator duty calculation	Executing
Throttle position sensor fail	Not detected
Throttle actuator current-cut operation	Not executing
Throttle actuator power supply	4 V or more
Throttle actuator fail	Not detected

TYPICAL MALFUNCTION THRESHOLDS

P2111 (Throttle Actuator Stuck Open)

Throttle position sensor voltage change for 0.016 seconds	Less than 0.1 V for 0.5 seconds or more

P2112 (Throttle Actuator Stuck Closed)

Throttle position sensor voltage change for 0.016 seconds	Less than 0.1 V for 0.5 seconds or more

CONFIRMATION DRIVING PATTERN

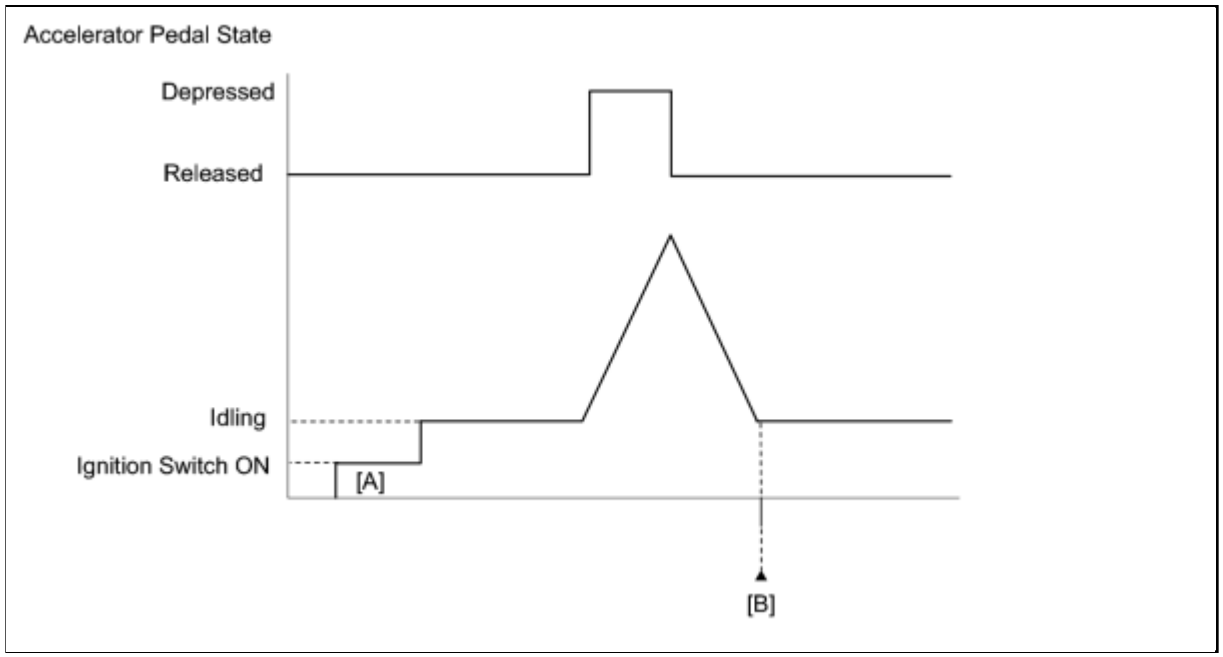

1. Connect the Techstream to the DLC3.
2. Turn the ignition switch to ON and turn the Techstream on.
3. Clear the DTCs (even if no DTCs are stored, perform the clear DTC procedure) INFO .
4. Turn the ignition switch off.
5. Turn the ignition switch to ON and turn the Techstream on [A].
6. Start the engine and fully depress and release the accelerator pedal quickly (to fully open and close the throttle valve).
7. Enter the following menus: Powertrain / Engine / Utility / All Readiness.
8. Input the DTC: P2111 or P2112.
9. Check the DTC judgment result [B].

TECHSTREAM DISPLAY	DESCRIPTION
NORMAL	○ DTC judgment completed ○ System normal

TECHSTREAM DISPLAY	DESCRIPTION
ABNORMAL	○ DTC judgment completed ○ System abnormal
INCOMPLETE	○ DTC judgment not completed ○ Perform driving pattern after confirming DTC enabling conditions
UNKNOWN	○ Unable to perform DTC judgment ○ Number of DTCs which do not fulfill DTC preconditions has reached ECU's memory limit

HINT:

If the judgment result shows ABNORMAL, the system has a malfunction.

10. If the test result is UNKNOWN, enter the following menus: Powertrain / Engine / Trouble Codes / Pending.
11. Read Pending DTCs.

HINT:

If a pending DTC is output, the system is malfunctioning.

12. If the test result is INCOMPLETE or UNKNOWN and no pending DTC is output, perform a universal trip and check for permanent DTCs INFO .

HINT:

- If a permanent DTC is output, the system is malfunctioning.
- If no permanent DTC is output, the system is normal.

FAIL-SAFE

When either of these DTCs, as well as other DTCs relating to electronic throttle control system malfunctions, is set, the ECM enters fail-safe mode. During fail-safe mode, the ECM cuts the current to the throttle actuator, and the throttle valve is returned to a 6.5° throttle angle by the return spring. The ECM then adjusts the engine output by controlling the fuel injection (intermittent fuel-cut) and ignition timing, in accordance with the accelerator pedal opening angle, to allow the vehicle to continue running at a minimal speed. If the accelerator pedal is depressed gently, the vehicle can be driven slowly.

Fail-safe mode continues until a pass condition is detected, and the ignition switch is then turned to off.

WIRING DIAGRAM

Refer to DTC P2102 INFO .

INSPECTION PROCEDURE

HINT:

Read freeze frame data using the Techstream. The ECM records vehicle and driving condition information as freeze frame data the moment a DTC is stored. When troubleshooting, freeze frame data can be helpful in determining whether the vehicle was running or stopped, whether the engine was warmed up or not, whether the air fuel ratio was lean or rich, as well as other data recorded at the time of a malfunction.

PROCEDURE

1.	**INSPECT THROTTLE BODY (VISUALLY CHECK THROTTLE VALVE)**

(a) Check for contamination such as carbon between the throttle valve and the housing. If necessary, clean the throttle body. After cleaning, check that the throttle valve moves smoothly.

OK:

Throttle valve is not contaminated with foreign objects and moves smoothly.

NG ▶ **REPLACE THROTTLE BODY**

OK ▼

2.	**CHECK WHETHER DTC OUTPUT RECURS (DTC P2111 OR P2112)**

(a) Connect the Techstream to the DLC3.

(b) Turn the ignition switch to ON.

(c) Turn the Techstream on.

(d) Clear the DTCs [INFO].

(e) Start the engine, and fully depress and release the accelerator pedal quickly (to fully open and close the throttle valve).

(f) Enter the following menus: Powertrain / Engine and ECT / Trouble Codes.

(g) Read DTCs.

Result:

RESULT	PROCEED TO
No output	A
P2111 or P2112	B

B ▶ REPLACE ECM

A ▶ CHECK FOR INTERMITTENT PROBLEMS

Last Modified: 3-10-2010	6.4 C	**From:** 200901
Model Year: 2010	**Model:** Corolla	**Doc ID:** RM000000PFW0AFX
Title: 2AZ-FE ENGINE CONTROL: SFI SYSTEM: P2118: Throttle Actuator Control Motor Current Range / Performance (2010 Corolla)		

DTC	**P2118**	**Throttle Actuator Control Motor Current Range / Performance**

DESCRIPTION

The electronic throttle control system has a dedicated power supply circuit. The voltage (+BM) is monitored and when it is low (less than 4 V), the ECM determines that there is a malfunction in the electronic throttle control system and cuts off the current to the throttle actuator.

When the voltage becomes unstable, the electronic throttle control system itself becomes unstable. For this reason, when the voltage is low, the current to the throttle actuator is cut. If repairs are made and the system returns to normal, turn the ignition switch off. On the next restart, the ECM will allow the current to flow to the throttle actuator.

HINT:

The electronic throttle control system does not use a throttle cable.

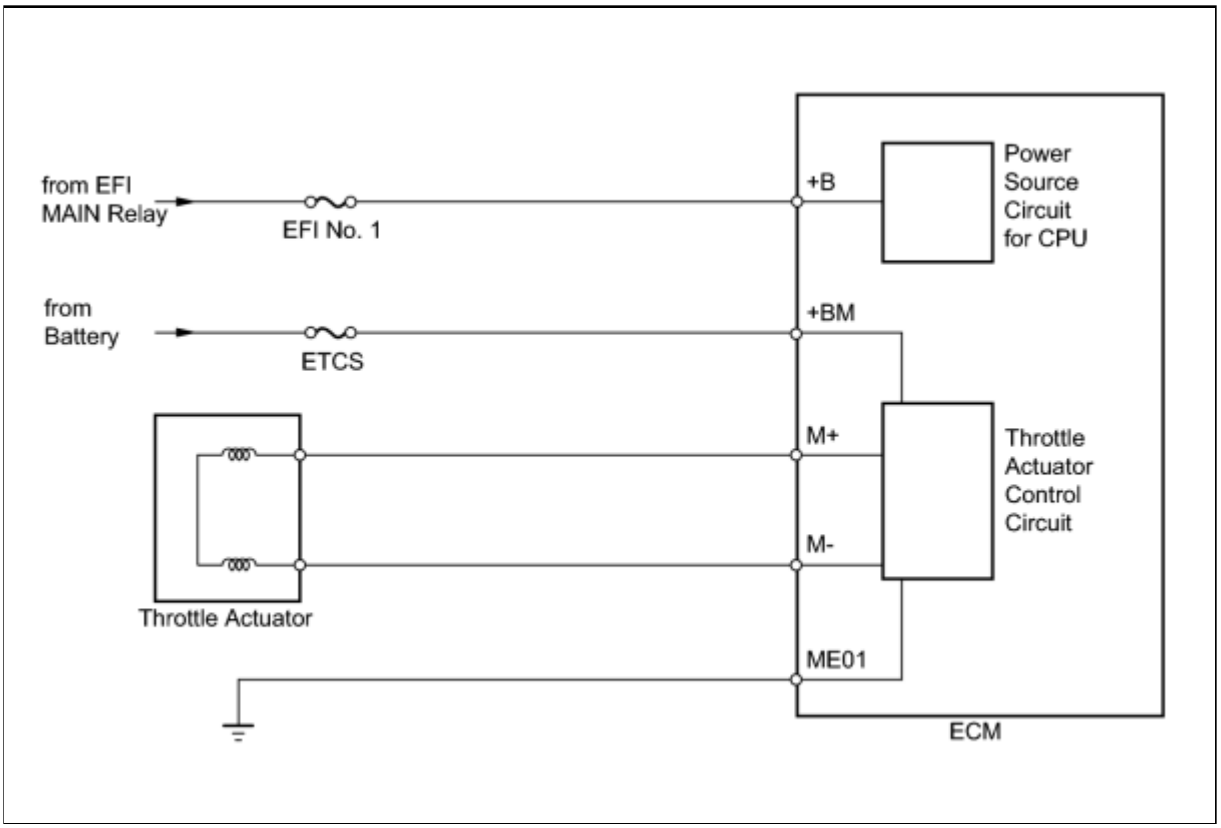

DTC	DTC DETECTION CONDITION	TROUBLE AREA

NO.		
P2118	Open in electronic throttle control system power source (+BM) circuit (1 trip detection logic)	• Open in electronic throttle control system power source circuit • Battery • Battery terminals • ETCS fuse • ECM

MONITOR DESCRIPTION

The ECM monitors the battery supply voltage applied to the throttle actuator.

When the power supply voltage (+BM) drops below 4 V for 0.8 seconds or more, the ECM interprets this as an open in the power supply circuit (+BM). The ECM illuminates the MIL and sets the DTC.

If the malfunction is not repaired successfully, the DTC is set 5 seconds after the engine is next started.

MONITOR STRATEGY

Related DTCs	P2118: Throttle actuator power supply
Required Sensors/Components (Main)	Throttle actuator, throttle valve (throttle body) ETCS fuse
Required Sensors/Components (Related)	None
Frequency of Operation	Continuous
Duration	0.8 seconds
MIL Operation	Immediate
Sequence of Operation	None

TYPICAL ENABLING CONDITIONS

Monitor runs whenever following DTCs are not present	None
Battery voltage	8 V or more
Electronic throttle actuator power	ON

TYPICAL MALFUNCTION THRESHOLDS

Throttle actuator power supply voltage (+BM)	Less than 4 V

COMPONENT OPERATING RANGE

Throttle actuator power supply voltage (+BM)	11 to 14 V

CONFIRMATION DRIVING PATTERN

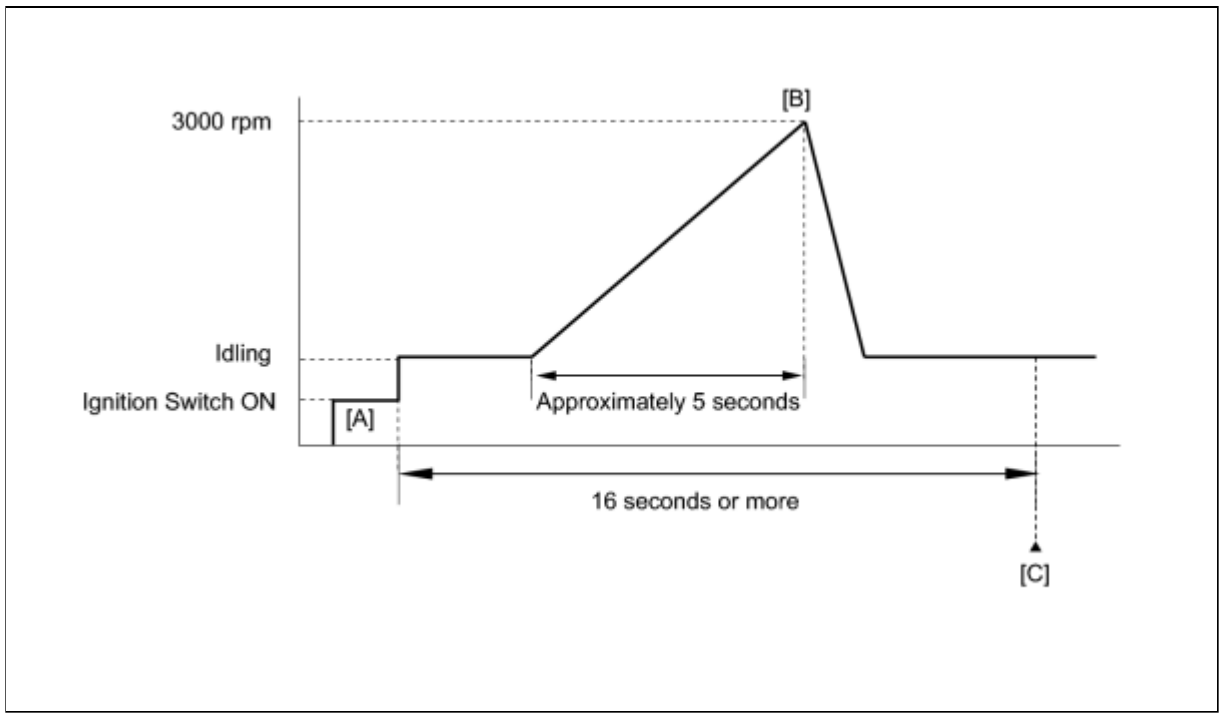

1. Connect the Techstream to the DLC3.
2. Turn the ignition switch to ON and turn the Techstream on.
3. Clear the DTCs (even if no DTCs are stored, perform the clear DTC procedure) INFO .
4. Turn the ignition switch off.
5. Turn the ignition switch to ON and turn the Techstream on [A].
6. Start the engine.
7. Slowly depress the accelerator pedal, raise the engine speed to approximately 3000 rpm for approximately 5 seconds, and then idle the engine [B].
8. Enter the following menus: Powertrain / Engine / Utility / All Readiness.
9. Input the DTC: P2118.
10. Check the DTC judgment result [C].

TECHSTREAM DISPLAY	DESCRIPTION
NORMAL	○ DTC judgment completed ○ System normal
ABNORMAL	○ DTC judgment completed ○ System abnormal

HINT:

○ If the judgment result shows ABNORMAL, the system has a malfunction.

- If the judgment result shows INCOMPLETE or UNKNOWN, perform steps [B] and [C] again.

11. If the test result is UNKNOWN, enter the following menus: Powertrain / Engine / Trouble Codes / Pending.
12. Read Pending DTCs.

    HINT:

    If a pending DTC is output, the system is malfunctioning.

13. If the test result is INCOMPLETE or UNKNOWN and no pending DTC is output, perform a universal trip and check for permanent DTCs INFO .

    HINT:

    - If a permanent DTC is output, the system is malfunctioning.
    - If no permanent DTC is output, the system is normal.

FAIL-SAFE

When this DTC, or other DTCs relating to electronic throttle control system malfunctions, are set, the ECM enters fail-safe mode. During fail-safe mode, the ECM cuts the current to the throttle actuator, and the throttle valve is returned to a 6.5° throttle angle by the return spring. The ECM then adjusts the engine output by controlling the fuel injection (intermittent fuel-cut) and ignition timing, in accordance with the accelerator pedal opening angle, to allow the vehicle to continue at a minimal speed. If the accelerator pedal is depressed gently, the vehicle can be driven slowly.

Fail-safe mode continues until a pass condition is detected, and the ignition switch is then turned to off.

WIRING DIAGRAM

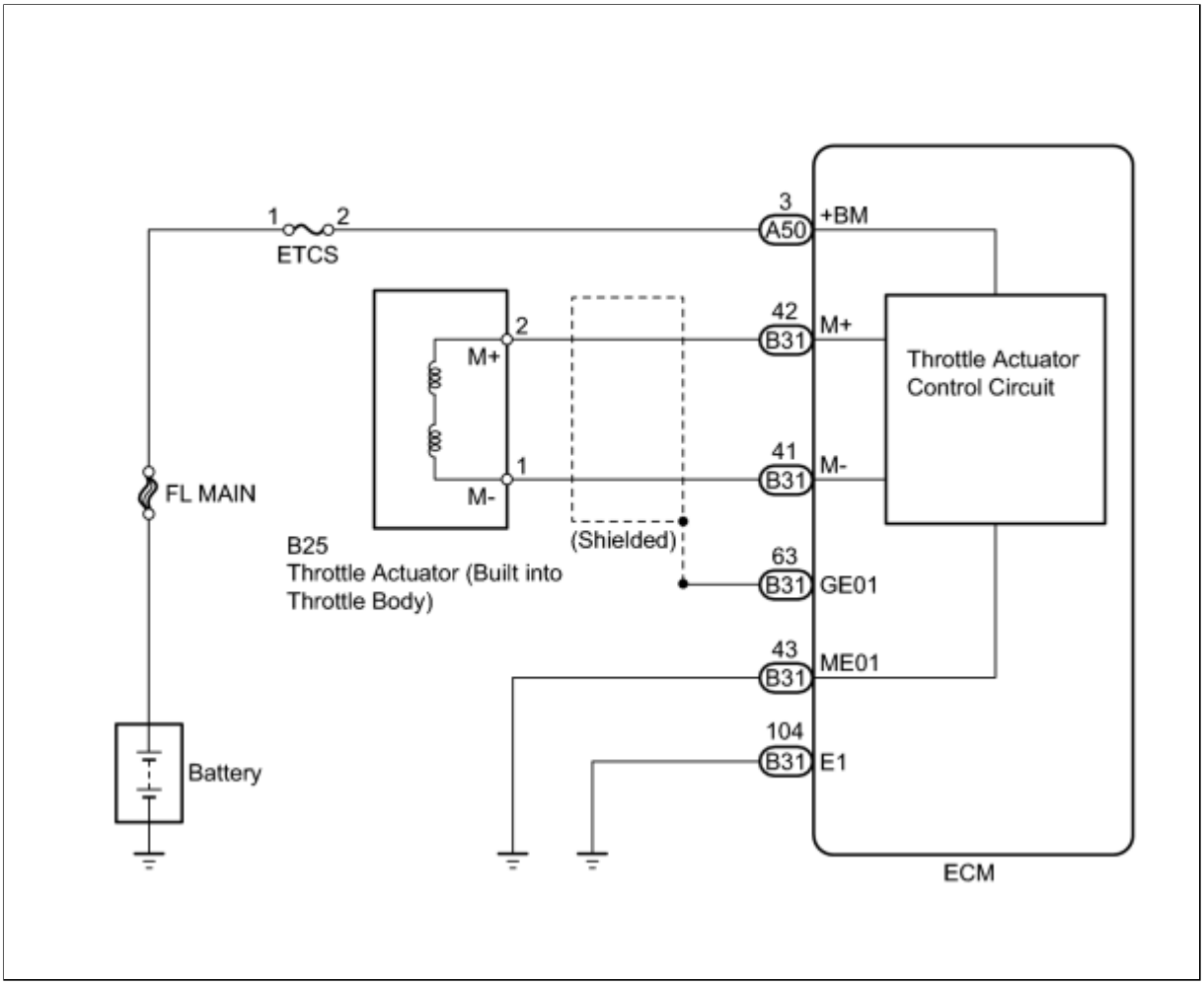

INSPECTION PROCEDURE

HINT:

Read freeze frame data using the Techstream. The ECM records vehicle and driving condition information as freeze frame data the moment a DTC is stored. When troubleshooting, freeze frame data can be helpful in determining whether the vehicle was running or stopped, whether the engine was warmed up or not, whether the air fuel ratio was lean or rich, as well as other data recorded at the time of a malfunction.

PROCEDURE

1.	**READ VALUE USING TECHSTREAM (+BM VOLTAGE)**

(a) Connect the Techstream to the DLC3.

(b) Turn the ignition switch to ON.

(c) Turn the Techstream on.

(d) Enter the following menus: Powertrain / Engine and ECT / Data List / +BM Voltage.

(e) Read the value displayed on the Techstream.

Standard Voltage:
11 to 14 V

NG ▶ **CHECK HARNESS AND CONNECTOR (ECM - BATTERY, BODY GROUND)**

OK ▶ **CHECK FOR INTERMITTENT PROBLEMS**

2.	**CHECK HARNESS AND CONNECTOR (ECM - BATTERY, BODY GROUND)**

(a) Disconnect the ECM connectors.

(b) Measure the voltage according to the value(s) in the table below.

Standard voltage:

TESTER CONNECTION	CONDITION	SPECIFIED CONDITION
A50-3 (+BM) - Body ground	Always	11 to 14 V

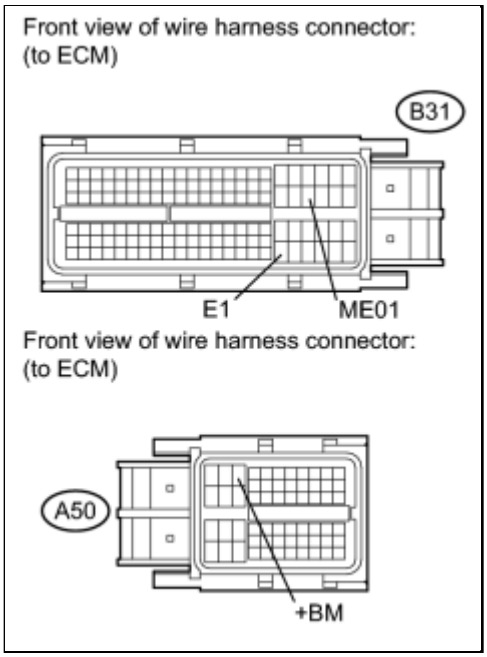

(c) Measure the resistance according to the value(s) in the table below.

Standard resistance:

TESTER CONNECTION	CONDITION	SPECIFIED CONDITION
B31-43 (ME01) - Body ground	Always	Below 1 Ω
B31-104 (E1) - Body ground		

(d) Reconnect the ECM connectors.

NG ▶ **REPAIR OR REPLACE HARNESS OR CONNECTOR (TERMINALS E1 AND ME01 - BODY**

GROUND)

OK ▶ REPLACE ECM

Last Modified: 3-10-2010	6.4 C	**From:** 200901
Model Year: 2010	**Model:** Corolla	**Doc ID:** RM000000PFY0AEX
Title: 2AZ-FE ENGINE CONTROL: SFI SYSTEM: P2120,P2122,P2123,P2125,P2127,P2128,P2138: Throttle / Pedal Position Sensor / Switch "D" Circuit (2010 Corolla)		

DTC	**P2120**	**Throttle / Pedal Position Sensor / Switch "D" Circuit**

DTC	**P2122**	**Throttle / Pedal Position Sensor / Switch "D" Circuit Low Input**

DTC	**P2123**	**Throttle / Pedal Position Sensor / Switch "D" Circuit High Input**

DTC	**P2125**	**Throttle / Pedal Position Sensor / Switch "E" Circuit**

DTC	**P2127**	**Throttle / Pedal Position Sensor / Switch "E" Circuit Low Input**

DTC	**P2128**	**Throttle / Pedal Position Sensor / Switch "E" Circuit High Input**

DTC	**P2138**	**Throttle / Pedal Position Sensor / Switch "D" / "E" Voltage Correlation**

DESCRIPTION

HINT:

- This electronic throttle control system does not use a throttle cable.
- These DTCs relate to the accelerator pedal position sensor.

The accelerator pedal position sensor is mounted on the accelerator pedal bracket and has 2 sensor circuits: VPA (main) and VPA2 (sub). This sensor is a non-contact type and uses Hall-effect elements in order to yield accurate signals even in extreme conditions. The voltage from this sensor, which is applied to terminals VPA and VPA2 of the ECM, varies between 0.5 V and 4.5 V in proportion to the operating angle of the accelerator pedal (throttle valve). A signal from VPA indicates the actual accelerator pedal opening angle (throttle valve opening angle) and is used for engine control. A signal from VPA2 conveys the status of the VPA circuit and is used to check the APP sensor itself.

The ECM monitors the actual accelerator pedal opening angle (throttle valve opening angle) through the

signals from VPA and VPA2, and controls the throttle actuator according to these signals.

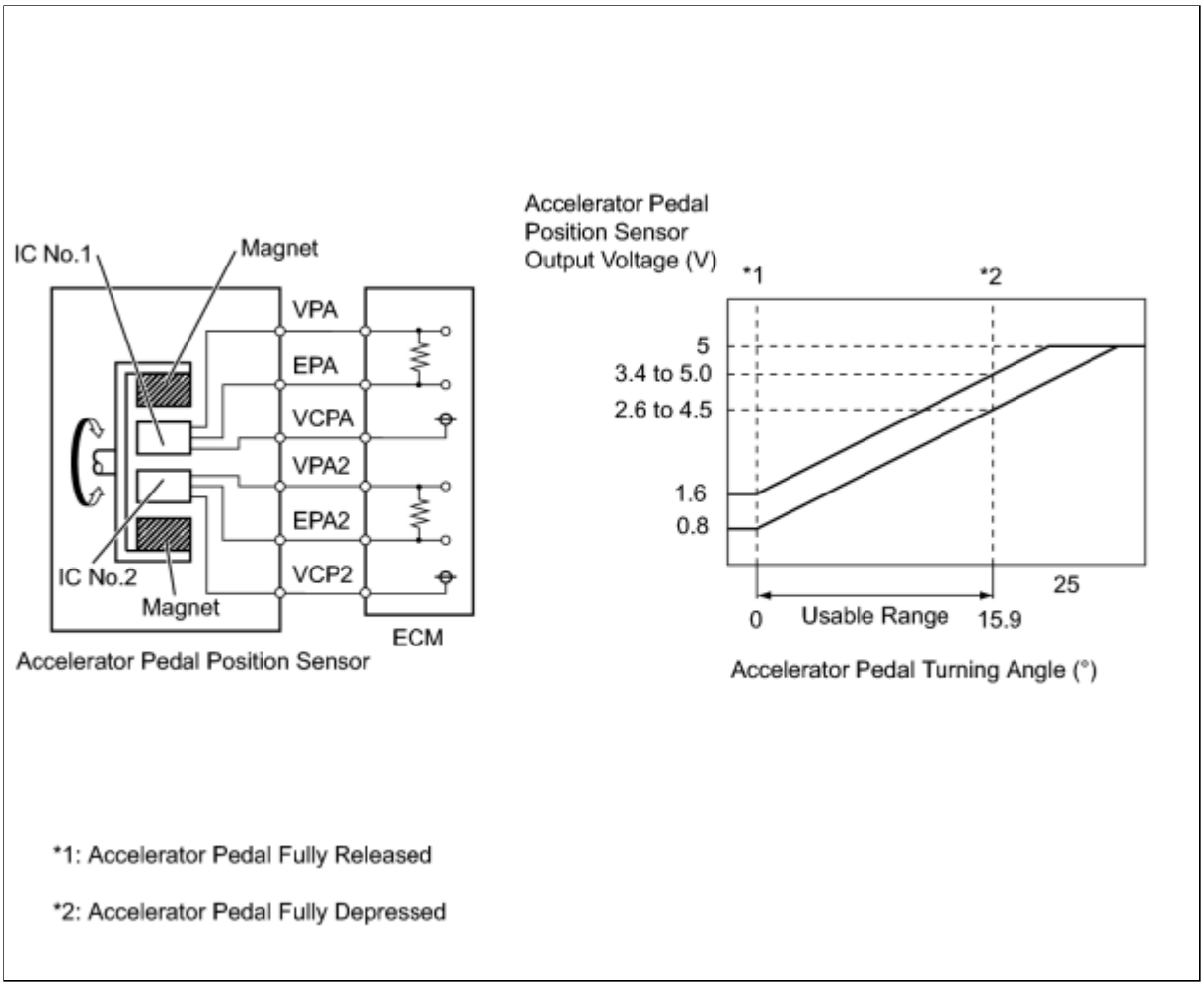

DTC NO.	DTC DETECTION CONDITION	TROUBLE AREA
P2120	VPA fluctuates rapidly beyond upper and lower malfunction thresholds for 0.5 seconds or more (1 trip detection logic)	• Accelerator pedal position sensor • ECM
P2122	VPA 0.4 V or less for 0.5 seconds or more when accelerator pedal depressed (1 trip detection logic)	• Accelerator pedal position sensor • Open in VCP1 circuit • Open or ground short in VPA circuit • ECM
P2123	VPA 4.8 V or more for 2.0 seconds or more (1 trip detection logic)	• Accelerator pedal position sensor

DTC NO.	DTC DETECTION CONDITION	TROUBLE AREA
		• Open in EPA circuit • ECM
P2125	VPA2 fluctuates rapidly beyond upper and lower malfunction thresholds for 0.5 seconds or more (1 trip detection logic)	• Accelerator pedal position sensor • ECM
P2127	VPA2 1.2 V or less for 0.5 seconds or more when accelerator pedal depressed (1 trip detection logic)	• Accelerator pedal position sensor • Open in VCP2 circuit • Open or ground short in VPA2 circuit • ECM
P2128	Conditions (a) and (b) continue for 2.0 seconds or more (1 trip detection logic): (a) VPA2 4.8 V or more (b) VPA between 0.4 V and 3.45 V	• Accelerator pedal position sensor • Open in EPA2 circuit • ECM
P2138	Condition (a) or (b) continues for 2.0 seconds or more (1 trip detection logic): (a) Difference between VPA and VPA2 0.02 V or less (b) VPA 0.4 V or less and VPA2 1.2 V or less	• Short between VPA and VPA2 circuits • Accelerator pedal position sensor • ECM

HINT:

When any of these DTCs are set, check the APP sensor voltage by entering the following menus: Powertrain / Engine and ECT / Data List / ETCS / Accel Sensor Out No. 1 and Accel Sensor Out No. 2.

TROUBLE AREA	ACCEL SENSOR OUT NO. 1 WHEN ACCELERATOR PEDAL RELEASED	ACCEL SENSOR OUT NO. 2 WHEN ACCELERATOR PEDAL RELEASED	ACCEL SENSOR OUT NO. 1 WHEN ACCELERATOR PEDAL DEPRESSED	ACCEL SENSOR OUT NO. 2 WHEN ACCELERATOR PEDAL DEPRESSED
VCP circuit open	0 to 0.2 V	0 to 0.2 V	0 to 0.2 V	0 to 0.2 V

TROUBLE AREA	ACCEL SENSOR OUT NO. 1 WHEN ACCELERATOR PEDAL RELEASED	ACCEL SENSOR OUT NO. 2 WHEN ACCELERATOR PEDAL RELEASED	ACCEL SENSOR OUT NO. 1 WHEN ACCELERATOR PEDAL DEPRESSED	ACCEL SENSOR OUT NO. 2 WHEN ACCELERATOR PEDAL DEPRESSED
Open or ground short in VPA circuit	0 to 0.2 V	1.2 to 2.0 V	0 to 0.2 V	3.4 to 5.0 V
Open or ground short in VPA2 circuit	0.5 to 1.1 V	0 to 0.2 V	2.6 to 4.5 V	0 to 0.2 V
EPA circuit open	4.5 to 5.0 V	4.5 to 5.0 V	4.5 to 5.0 V	4.5 to 5.0 V
Normal condition	0.5 to 1.1 V	1.2 to 2.0 V	2.6 to 4.5 V	3.4 to 5.0 V

HINT:

Accelerator pedal positions are expressed as voltages.

MONITOR DESCRIPTION

When either the output voltage of VPA or VPA2 deviates from the standard range, or the difference between the output voltages of the 2 sensor circuits is less than the threshold, the ECM determines that there is a malfunction in the APP sensor. The ECM then illuminates the MIL and sets a DTC.

Example:

When the output voltage of VPA drops below 0.4 V for more than 0.5 seconds when the accelerator pedal is fully depressed, DTC P2122 is set.

If the malfunction is not repaired successfully, a DTC is set 2 seconds after the engine is next started.

MONITOR STRATEGY

Related DTCs	P2120: Accelerator pedal position sensor 1 range check (fluctuating) P2122: Accelerator pedal position sensor 1 range check (low voltage) P2123: Accelerator pedal position sensor 1 range check (high voltage) P2125: Accelerator pedal position sensor 2 range check (fluctuating) P2127: Accelerator pedal position sensor 2 range check (low voltage) P2128: Accelerator pedal position sensor 2 range check (high

	voltage) P2138: Accelerator pedal position sensor range check (correlation)
Required Sensors/Components (Main)	Accelerator pedal position sensor
Required Sensors/Components (Related)	-
Frequency of Operation	Continuous
Duration	0.5 seconds: P2120, P2122, P2125 and P2127 2.0 seconds: P2123, P2128 and P2138
MIL Operation	Immediate
Sequence of Operation	None

TYPICAL ENABLING CONDITIONS

Monitor runs whenever following DTCs are not present	None
Either of following conditions 1 or 2 is met:	-
1. Ignition switch	0.012 seconds or more
2. Throttle actuator power	ON

TYPICAL MALFUNCTION THRESHOLDS

P2120

Either of following conditions 1 or 2 is met:	-
1. VPA voltage when VPA2 voltage 0.04 V or more	0.4 V or less
2. VPA voltage	4.8 V or more

P2122

VPA voltage when VPA2 voltage 0.04 V or more	0.4 V or less

P2123

VPA voltage	4.8 V or more

P2125

Either of following conditions 1 or 2 met:	-
1. VPA2 voltage when VPA voltage 0.04 V or more	1.2 V or less

2. VPA2 voltage when VPA voltage 0.4 to 3.45 V	4.8 V or more

P2127

VPA2 voltage when VPA voltage 0.04 V or more	1.2 V or less

P2128

VPA2 voltage when VPA voltage 0.4 to 3.45 V	4.8 V or more

P2138

Either of following conditions A or B met:	-
Condition A	-
Difference between VPA and VPA 2 voltages	0.02 V or less
Condition B	-
VPA voltage	0.4 V or less
VPA2 voltage	1.2 V or less

COMPONENT OPERATING RANGE

VPA voltage	0.4 to 4.8 V
VPA2 voltage	1.2 to 4.8 V
Difference between VPA and VPA2 voltages	More than 0.02 V

CONFIRMATION DRIVING PATTERN

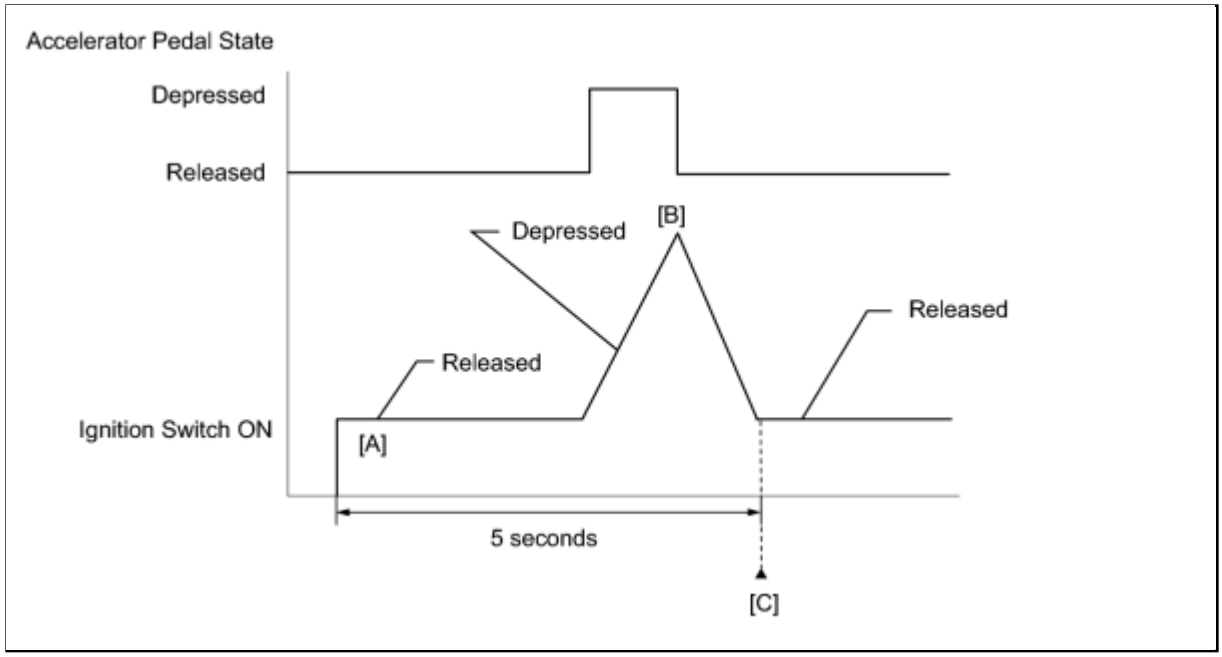

1. Connect the Techstream to the DLC3.
2. Turn the ignition switch to ON and turn the Techstream on.
3. Clear the DTCs (even if no DTCs are stored, perform the clear DTC procedure) INFO .
4. Turn the ignition switch off.
5. Turn the ignition switch to ON and turn the Techstream on [A].
6. Fully depress and release the accelerator pedal [B].
7. Check that 5 seconds or more have elapsed since the DTCs were cleared.
8. Enter the following menus: Powertrain / Engine / Utility / All Readiness.
9. Input the DTC: P2120, P2122, P2123, P2125, P2127, P2128 or P2138.
10. Check the DTC judgment result [C].

TECHSTREAM DISPLAY	DESCRIPTION
NORMAL	○ DTC judgment completed ○ System normal
ABNORMAL	○ DTC judgment completed ○ System abnormal
INCOMPLETE	○ DTC judgment not completed ○ Perform driving pattern after confirming DTC enabling conditions
UNKNOWN	○ Unable to perform DTC judgment ○ Number of DTCs which do not fulfill DTC preconditions has reached ECU memory limit

HINT:

- If the judgment result shows ABNORMAL, the system has a malfunction.

- If the judgment result shows INCOMPLETE or UNKNOWN, perform steps [B] and [C] again.

11. If the test result is UNKNOWN, enter the following menus: Powertrain / Engine / Trouble Codes / Pending.
12. Read Pending DTCs.

HINT:

If a pending DTC is output, the system is malfunctioning.

13. If the test result is INCOMPLETE or UNKNOWN and no pending DTC is output, perform a universal trip and check for permanent DTCs INFO .

HINT:

- If a permanent DTC is output, the system is malfunctioning.
- If no permanent DTC is output, the system is normal.

FAIL-SAFE

When any of DTCs P2120, P2121, P2122, P2123, P2125, P2127, P2128 and P2138 are set, the ECM enters fail-safe mode. If either of the 2 sensor circuits malfunctions, the ECM uses the remaining circuit to calculate the accelerator pedal position to allow the vehicle to continue driving. If both of the circuits malfunction, the ECM regards the accelerator pedal as being released. As a result, the throttle valve is closed and the engine idles.

Fail-safe mode continues until a pass condition is detected, and the ignition switch is turned off.

WIRING DIAGRAM

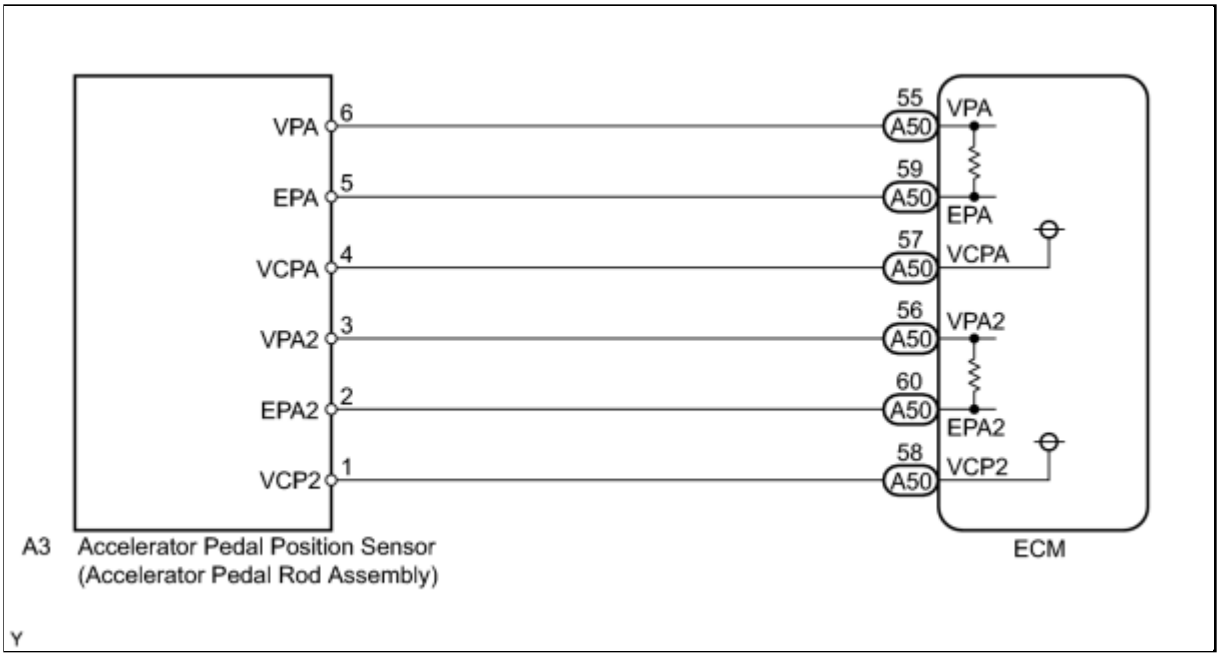

INSPECTION PROCEDURE

HINT:

Read freeze frame data using the Techstream. The ECM records vehicle and driving condition information as freeze frame data the moment a DTC is stored. When troubleshooting, freeze frame data can be helpful in determining whether the vehicle was running or stopped, whether the engine was warmed up or not, whether the air fuel ratio was lean or rich, as well as other data recorded at the time of a malfunction.

PROCEDURE

1.	**READ VALUE USING TECHSTREAM (ACCELERATOR POSITION SENSOR)**

(a) Connect Techstream to the DLC3.

(b) Turn the ignition switch to ON.

(c) Turn the Techstream on.

(d) Enter the following menus: Powertrain / Engine and ECT / Data List / ETCS / Accel Sensor Out No. 1 and Accel Sensor Out No. 2.

(e) Read the value displayed on the Techstream.

Standard Voltage:

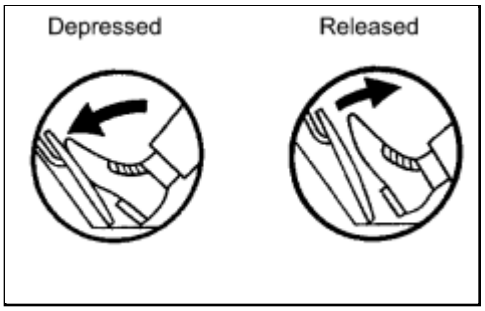

ACCELERATOR PEDAL OPERATION	ACCEL SENSOR OUT NO. 1	ACCEL SENSOR OUT NO. 2
Released	0.5 to 1.1 V	1.2 to 2.0 V
Depressed	2.6 to 4.5 V	3.4 to 5.0 V

NG ▶ **CHECK HARNESS AND CONNECTOR (ACCELERATOR PEDAL POSITION SENSOR - ECM)**

OK ▶ **CHECK FOR INTERMITTENT PROBLEMS**

2.	**CHECK HARNESS AND CONNECTOR (ACCELERATOR PEDAL POSITION SENSOR - ECM)**

(a) Disconnect the accelerator pedal position sensor connector.

(b) Disconnect the ECM connector.

(c) Measure the resistance according to the value(s) in the table below.

Front view of wire harness connector:
(to Accelerator Pedal Position Sensor)

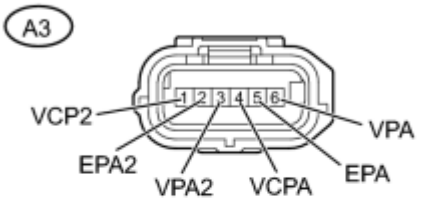

Front view of wire harness connector:
(to ECM)

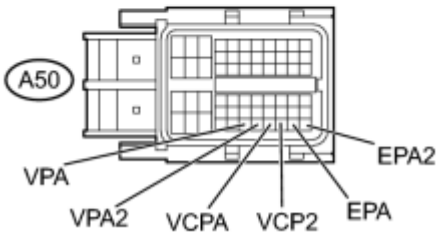

Standard Resistance (Check for Open):

TESTER CONNECTION	CONDITION	SPECIFIED CONDITION
A3-6 (VPA) - A50-55 (VPA)	Always	Below 1 Ω
A3-5 (EPA) - A50-59 (EPA)	Always	Below 1 Ω
A3-4 (VCPA) - A50-57 (VCPA)	Always	Below 1 Ω
A3-3 (VPA2) - A50-56 (VPA2)	Always	Below 1 Ω
A3-2 (EPA2) - A50-60 (EPA2)	Always	Below 1 Ω
A3-1 (VCP2) - A50-58 (VCP2)	Always	Below 1 Ω

Standard Resistance (Check for Short):

TESTER CONNECTION	CONDITION	SPECIFIED CONDITION
A3-6 (VPA) or A50-55 (VPA) - Body ground	Always	10 kΩ or higher
A3-5 (EPA) or A50-59 (EPA) - Body ground	Always	10 kΩ or higher
A3-4 (VCPA) or A50-57 (VCPA) - Body ground	Always	10 kΩ or higher
A3-3 (VPA2) or A50-56 (VPA2) - Body ground	Always	10 kΩ or higher
A3-2 (EPA2) or A50-60 (EPA2) - Body ground	Always	10 kΩ or higher
A3-1 (VCP2) or A50-58 (VCP2) - Body ground	Always	10 kΩ or higher

(d) Reconnect the accelerator pedal position sensor

connector.

(e) Reconnect the ECM connector.

NG ▶ **REPAIR OR REPLACE HARNESS OR CONNECTOR (ACCELERATOR PEDAL POSITION SENSOR - ECM)**

OK ▼

3.	**CHECK ECM (VCPA AND VCP2 VOLTAGE)**

(a) Disconnect the accelerator pedal position sensor connector.

(b) Turn the ignition switch to ON.

(c) Measure the voltage according to the value(s) in the table below.

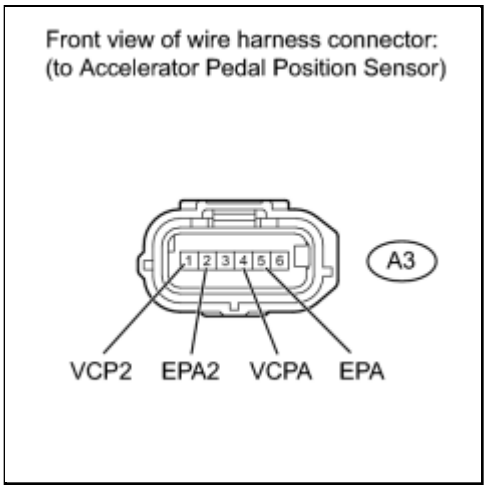

Standard Voltage:

TESTER CONNECTION	SWITCH CONDITION	SPECIFIED CONDITION
A3-4 (VCPA) - A3-5 (EPA)	Ignition switch ON	4.5 to 5.5 V
A3-1 (VCP2) - A3-2 (EPA2)	Ignition switch ON	4.5 to 5.5 V

(d) Reconnect the accelerator pedal position sensor connector.

NG ▶ **REPLACE ECM**

OK ▼

4.	**REPLACE ACCELERATOR PEDAL ROD ASSEMBLY**

(a) Replace the accelerator pedal rod assembly INFO .

NEXT

5.	**CHECK WHETHER DTC OUTPUT RECURS (ACCELERATOR PEDAL POSITION SENSOR DTCS)**

(a) Connect the Techstream to the DLC3.

(b) Turn the ignition switch to ON.

(c) Turn the Techstream on.

(d) Clear the DTCs INFO .

(e) Start the engine.

(f) Allow the engine to idle for 15 seconds or more.

(g) Fully depress and release the accelerator pedal several times quickly.

(h) Enter the following menus: Powertrain / Engine and ECT / Trouble Codes.

(i) Read DTCs.

Result:

RESULT	PROCEED TO
P2120, P2122, P2123, P2125, P2127, P2128, and/or P2138	A
No output	B

B ▶ **END**

A ▶ **REPLACE ECM**

Last Modified: 3-10-2010	6.4 J	**From:** 200901
Model Year: 2010	**Model:** Corolla	**Doc ID:** RM000000YEQ051X
Title: 2AZ-FE ENGINE CONTROL: SFI SYSTEM: EVAP System (2010 Corolla)		

EVAP System

RELATED DTCS

DTC	MONITORING ITEM	SEE PAGE
P043E	Reference orifice clogged (built into canister pump module)	INFO
P043F	Reference orifice high-flow (built into canister pump module)	
P0441	• Purge VSV (Vacuum Switching Valve) stuck closed • Purge VSV stuck open • Purge flow	INFO
P0451	• Canister pressure sensor (built into canister pump module) noise • Canister pressure sensor (built into canister pump module) signal becomes fixed/flat	INFO
P0452	Canister pressure sensor (built into canister pump module) voltage low	
P0453	Canister pressure sensor (built into canister pump module) voltage high	
P0455	EVAP gross leak	INFO
P0456	EVAP small leak	
P2401	Leak detection pump stuck OFF (built into canister pump module)	INFO
P2402	Leak detection pump stuck ON (built into canister pump module)	
P2419	Vent valve stuck closed (built into canister pump module)	INFO
P2420	Vent valve stuck open (vent) (built into canister pump module)	INFO
P2610	Soak timer (built into ECM)	INFO

If any EVAP system DTCs are set, the malfunctioning area can be determined using the table below.

DTC / Malfunctioning Area	P043E P043F	P0441	P0451	P0452	P0453	P0455	P0456	P2401 P2402	P2419	P2420
0.02 inch orifice clogged	●							●	●	
0.02 inch orifice high-flow	●							●	●	
Purge VSV stuck open		●				●				
Purge VSV stuck closed		●								
Pressure sensor stuck			●							
Pressure sensor noise			●							
Pressure sensor low output				●						
Pressure sensor high output					●					
Gross leak		●				●				
Small leak							●			
Vacuum pump stuck OFF	●							●	●	
Vacuum pump stuck ON	●							●	●	
Vent valve stuck closed	●							●	●	
Vent valve stuck open (vent)										●

Y

NOTICE:

If the reference pressure difference between the first and second checks is greater than the specification, all the DTCs relating to the reference pressure (P043E, P043F, P2401, P2402 and P2419) are stored.

DESCRIPTION

HINT:

Unit expressions

- [kPa-a (mmHg-a)] denotes absolute pressure.
- [kPa-g (mmHg-g)] denotes gauge pressure (relative pressure).
- On the Techstream, choose the unit of measurement according to the inspection procedure.

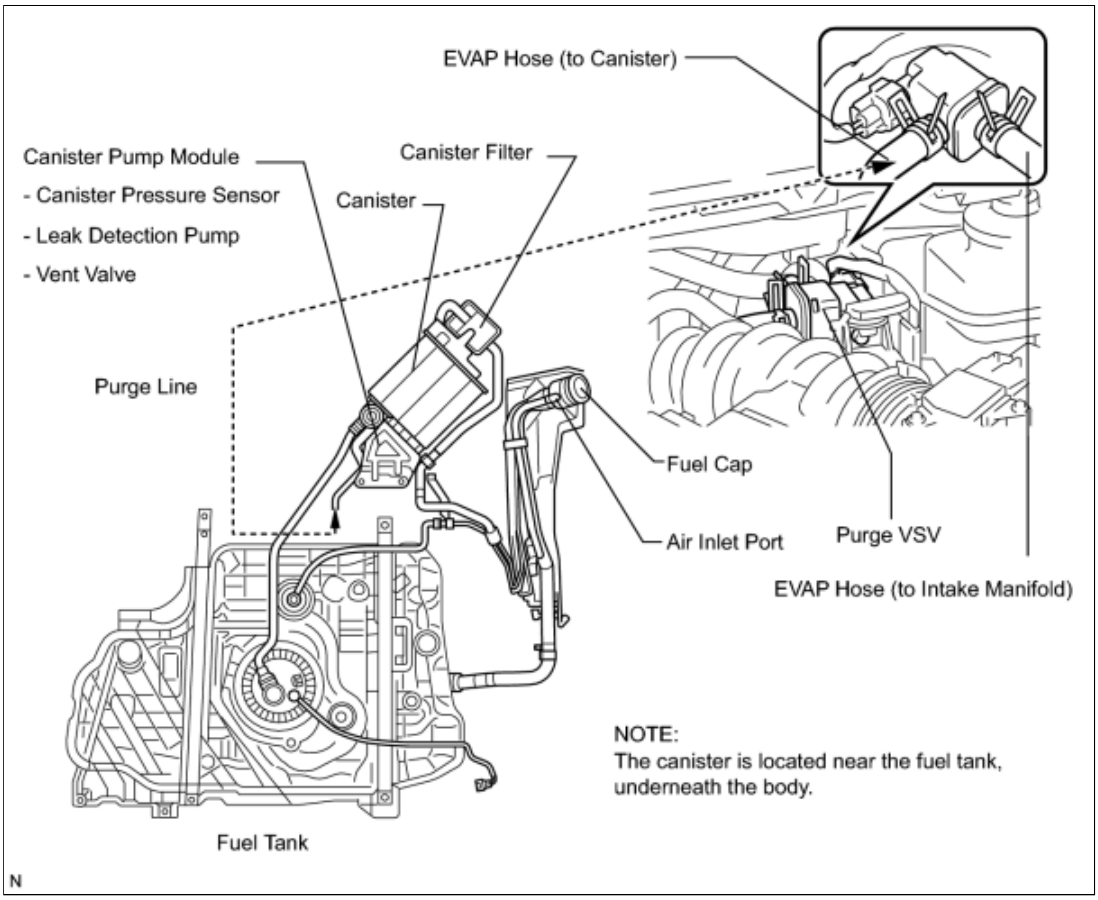

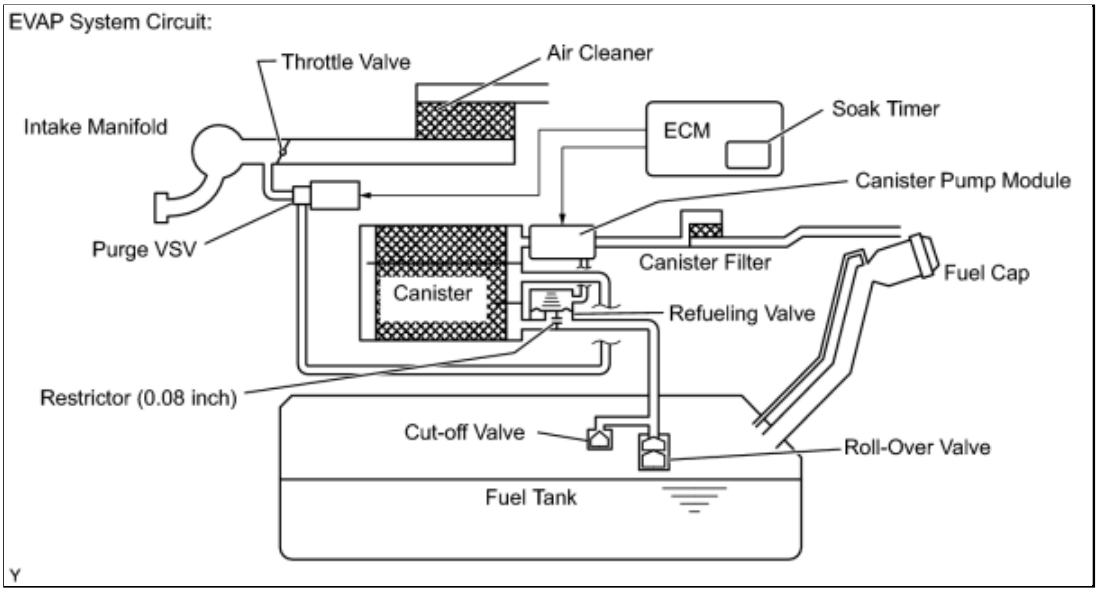

NOTICE:

To check for leaks in the EVAP system, disconnect the air inlet vent hose and apply pressure from the atmospheric side of the canister.

While the engine is running, if a predetermined condition (closed-loop, etc.) is met, the purge VSV is opened by the ECM and stored fuel vapors in the canister are purged into the intake manifold. The ECM changes the duty cycle ratio of the purge VSV to control purge flow volume.

The purge flow volume is also determined by the intake manifold pressure. Atmospheric pressure is allowed into the canister through the vent valve to ensure that the purge flow is maintained when the negative pressure (vacuum) is applied to the canister.

The following two monitors run to confirm the appropriate EVAP system operation.

1. Key-off monitor

This monitor checks for EVAP (evaporative emission) system leaks and canister pump module malfunctions. The monitor starts 5 hours* after the ignition switch is turned off. At least 5 hours are required for the fuel to cool down to stabilize the EVAP pressure, thus making the EVAP system monitor more accurate.

The leak detection pump creates negative pressure (vacuum) in the EVAP system and the pressure is measured. Finally, the ECM monitors for leaks from the EVAP system, and malfunctions in both the canister pump module and purge VSV, based on the EVAP pressure.

HINT:

***: If the engine coolant temperature is not below 35°C (95°F) 5 hours after the ignition switch is turned off, the monitor check starts 2 hours later. If it is still not below 35°C (95°F) 7 hours after the ignition switch is turned off, the monitor check starts 2.5 hours later.**

2. Purge flow monitor

The purge flow monitor consists of 2 monitors. The 1st monitor is conducted every time and the 2nd monitor is activated if necessary.

- The 1st monitor

  While the engine is running and the purge VSV (Vacuum Switching Valve) is ON (open), the ECM monitors the purge flow by measuring the EVAP pressure change. If negative pressure is not created, the ECM begins the 2nd monitor.
- The 2nd monitor

  The vent valve is turned ON (closed) and the EVAP pressure is measured. If the variation in the pressure is less than 0.4 kPa-g (3.0 mmHg-g), the ECM interprets this as the purge VSV being stuck closed, and illuminates the MIL and sets DTC P0441 (2 trip detection logic).

Atmospheric pressure check:

In order to ensure reliable malfunction detection, the variation between the atmospheric pressures, before and after the purge flow monitor is performed, is measured by the ECM.

EVAP Purge Flow:

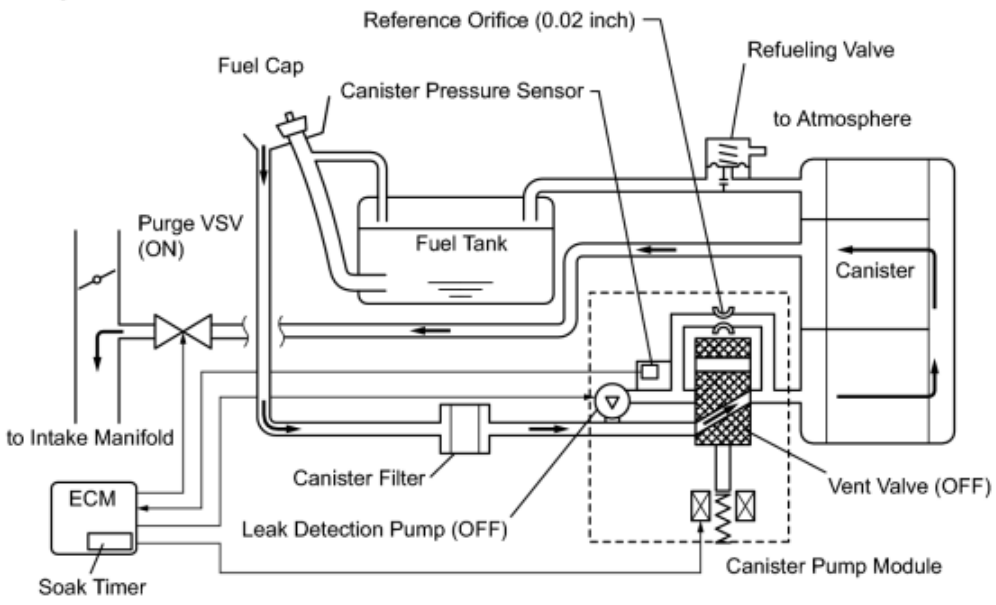

Y

COMPONENT	OPERATION
Canister	Contains activated charcoal to absorb evaporative emissions generated in fuel tank.
Cut-off valve	Located in fuel tank. Valve floats and closes when fuel tank 100% full.
Purge VSV (Vacuum Switching Valve)	Opens or closes line between canister and intake manifold. ECM uses purge VSV to control EVAP purge flow. In order to discharge EVAP absorbed by canister to intake manifold, ECM opens purge VSV. EVAP discharge volume to intake manifold controlled by purge VSV duty cycle ratio (current-carrying time) (Open: ON; Closed: OFF).
Refueling valve	Controls EVAP pressure from fuel tank to canister. Valve consists of diaphragm, spring and restrictor (diameter: 0.08 inch). When fuel vapor and pressure inside fuel tank increase, valve opens. While EVAP purged, valve closes and restrictor prevents large amount of vacuum from affecting pressure in fuel tank. Valve opened while refueling.
Roll-over valve	Located in fuel tank. Valve closed by its own weight when vehicle overturns to prevent fuel from spilling out.
Soak timer	Built into ECM. To ensure accurate EVAP monitor, measures 5 hours (+/-15 min.) after ignition switch turned to OFF. This allows fuel to cool down, stabilizing EVAP pressure. When approximately 5 hours elapsed, ECM activates (refer to fig. 3).
Canister pump module	Consists of (a) to (d) below. Canister pump module cannot be disassembled.
(a) Vent valve	Vents and closes EVAP system. When ECM turns valve ON, EVAP system closed. When ECM turns valve OFF, EVAP system vented. Negative pressure (vacuum) created in EVAP system to check for EVAP leaks by closing purge VSV, turning on vent valve (closed) and operating leak detection pump (refer to fig. 1).
(b) Canister pressure sensor	Indicates pressure as voltages. ECM supplies regulated 5 V to canister pressure sensor, and uses feedback from sensor to monitor EVAP system pressure (refer to fig. 2).
(c) Leak detection pump	Creates negative pressure (vacuum) in EVAP system for leak check.

COMPONENT	OPERATION
(d) Reference orifice	Has opening with 0.02 inch diameter. Vacuum produced through orifice by closing purge VSV, turning off vent valve and operating leak detection pump, to monitor reference pressure. Reference pressure indicates small leak of EVAP.

Canister Pump Module (fig. 1):

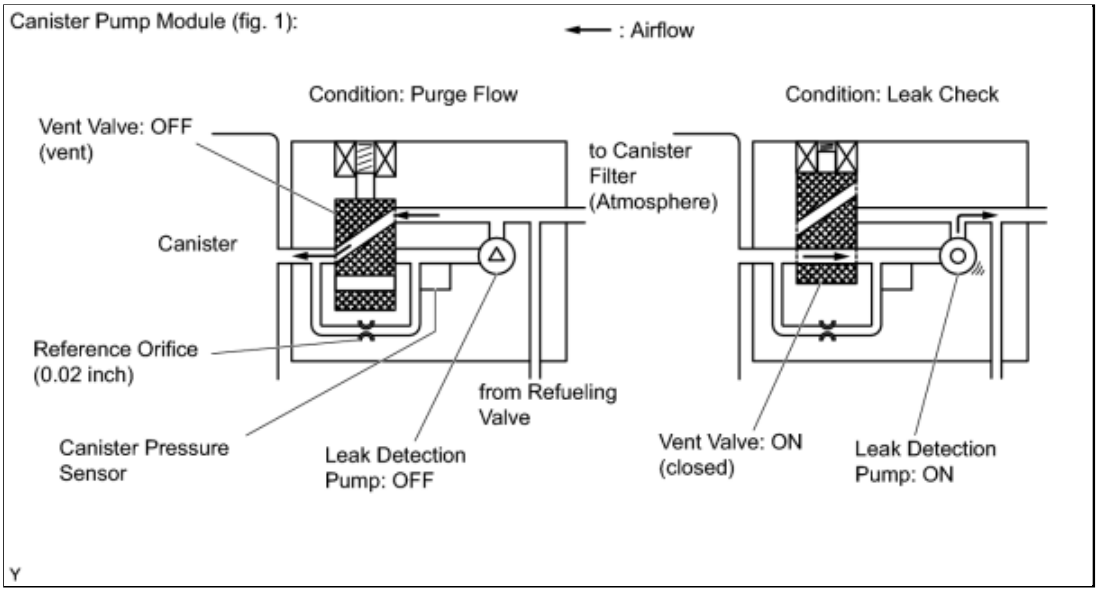

Y

Canister Pressure Sensor Specification (fig. 2):

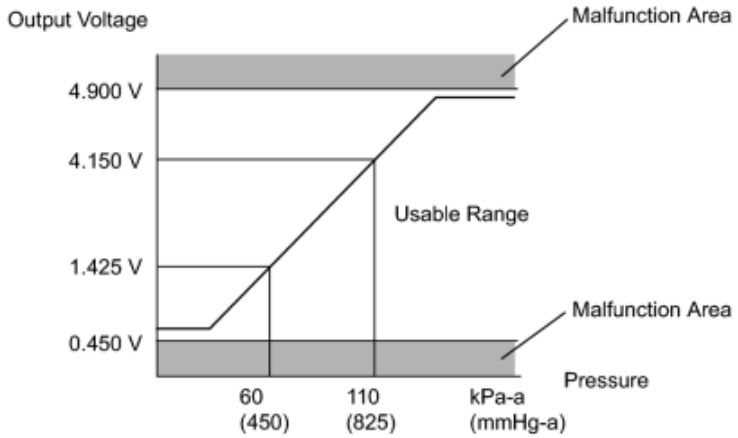

HINT:

Standard atmospheric pressure is 101.3 kPa-a (760 mmHg-a)

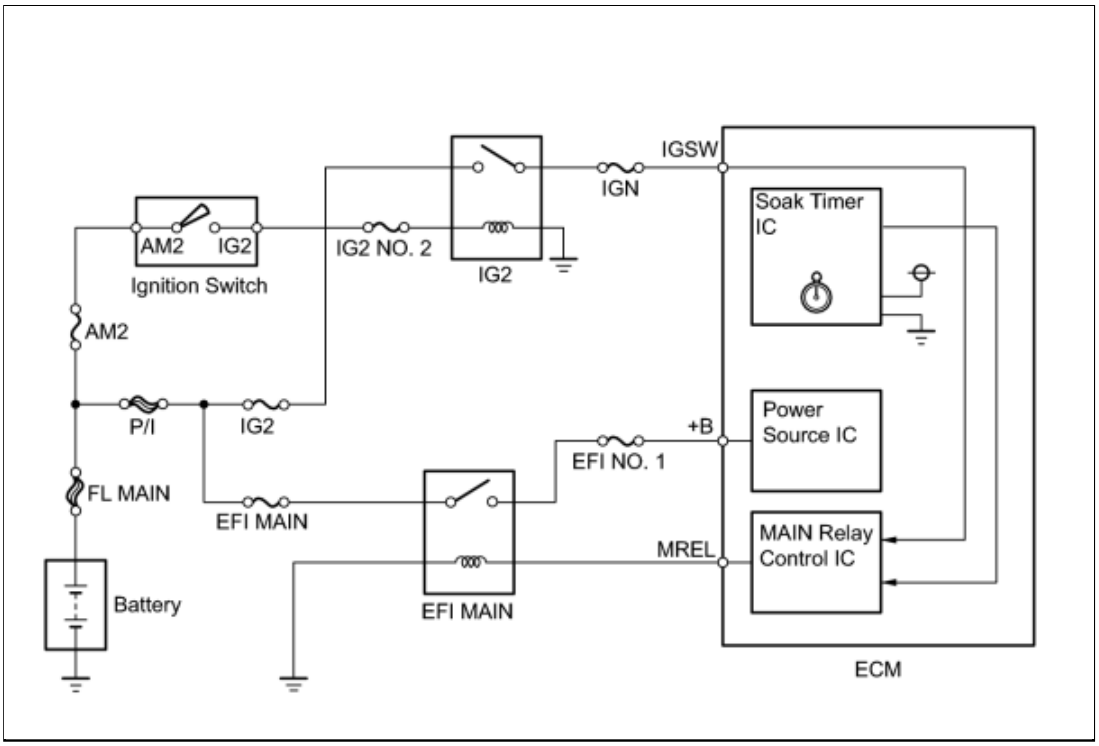

WIRING DIAGRAM

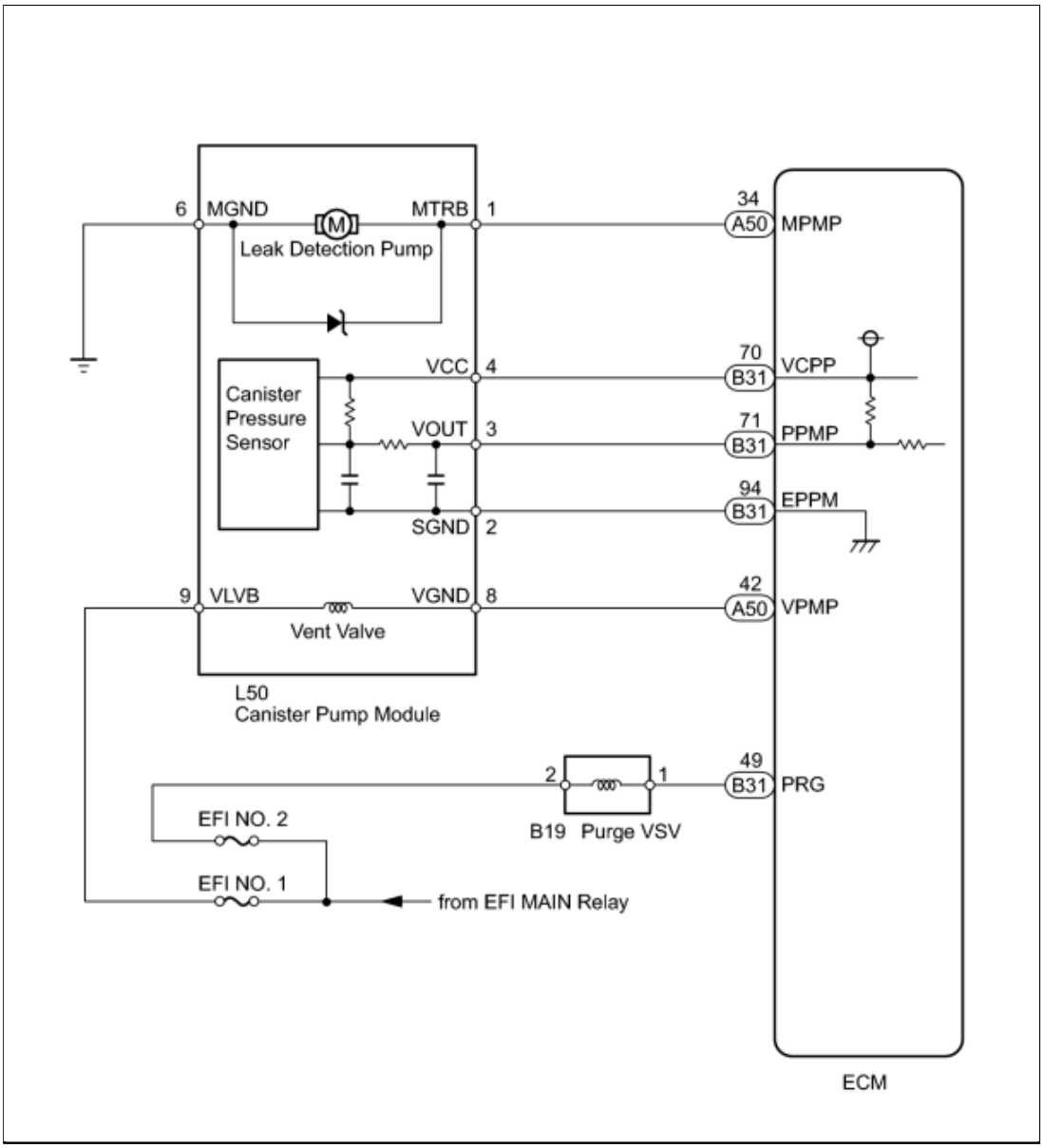

INSPECTION PROCEDURE

NOTICE:

The Techstream is required to conduct the following diagnostic troubleshooting procedure.

HINT:

- Using the Techstream to monitor results enables the EVAP (evaporative emission) system to be confirmed.
- Read freeze frame data using the Techstream. The ECM records vehicle and driving condition information as freeze frame data the moment a DTC is stored. When troubleshooting, freeze frame data can be helpful in determining whether the vehicle was running or stopped, whether the engine was warmed up or not, whether the air fuel ratio was lean or rich, as well as other data recorded at the time of a malfunction.

PROCEDURE

1.	**CONFIRM DTC**

(a) Turn the ignition switch off and wait for 10 seconds.

(b) Turn the ignition switch to ON.

(c) Turn the ignition switch off and wait for 10 seconds.

(d) Connect the Techstream to the DLC3.

(e) Turn the ignition switch to ON.

(f) Turn the Techstream on.

(g) Enter the following menus: Powertrain / Engine and ECT / Trouble Codes.

(h) Confirm DTCs and freeze frame data.

If any EVAP system DTCs are set, the malfunctioning area can be determined using the table below.

DTC / Malfunctioning Area	P043E P043F	P0441	P0451	P0452	P0453	P0455	P0456	P2401 P2402	P2419	P2420
0.02 inch orifice clogged	●							●	●	
0.02 inch orifice high-flow	●							●	●	
Purge VSV stuck open		●				●				
Purge VSV stuck closed		●								
Pressure sensor stuck			●							
Pressure sensor noise			●							
Pressure sensor low output				●						
Pressure sensor high output					●					
Gross leak		●				●				
Small leak							●			
Vacuum pump stuck OFF	●							●	●	
Vacuum pump stuck ON	●							●	●	
Vent valve stuck closed	●							●	●	
Vent valve stuck open (vent)										●

Y

NEXT

2.	**PERFORM EVAPORATIVE SYSTEM CHECK (AUTOMATIC MODE)**

NOTICE:

- The Evaporative System Check (Automatic Mode) consists of five steps performed automatically by the Techstream. It takes a maximum of approximately 18 minutes.
- Do not perform the Evaporative System Check when the fuel tank is more than 90% full because the cut-off

valve may be closed. If the cut-off valve is closed, the fuel tank leak check is not possible.
- Do not run the engine during this operation.
- When the temperature of the fuel is 35°C (95°F) or more, a large amount of vapor forms and any check results become inaccurate. When performing the Evaporative System Check, keep the temperature below 35°C (95°F).

(a) Clear DTCs INFO .

(b) Enter the following menus: Powertrain / Engine and ECT / Utility / Evaporative System Check / Automatic Mode.

(c) After the Evaporative System Check is completed, check for pending DTCs by entering the following menus: Powertrain / Engine and ECT / Trouble Codes / Pending.

HINT:

If no pending DTCs are displayed, perform the MONITOR CONFIRMATION (see "Diagnostic Help" menu). After this confirmation, check for pending DTCs. If no DTCs are displayed, the EVAP system is normal.

NEXT

3.	**PERFORM EVAPORATIVE SYSTEM CHECK (MANUAL MODE)**

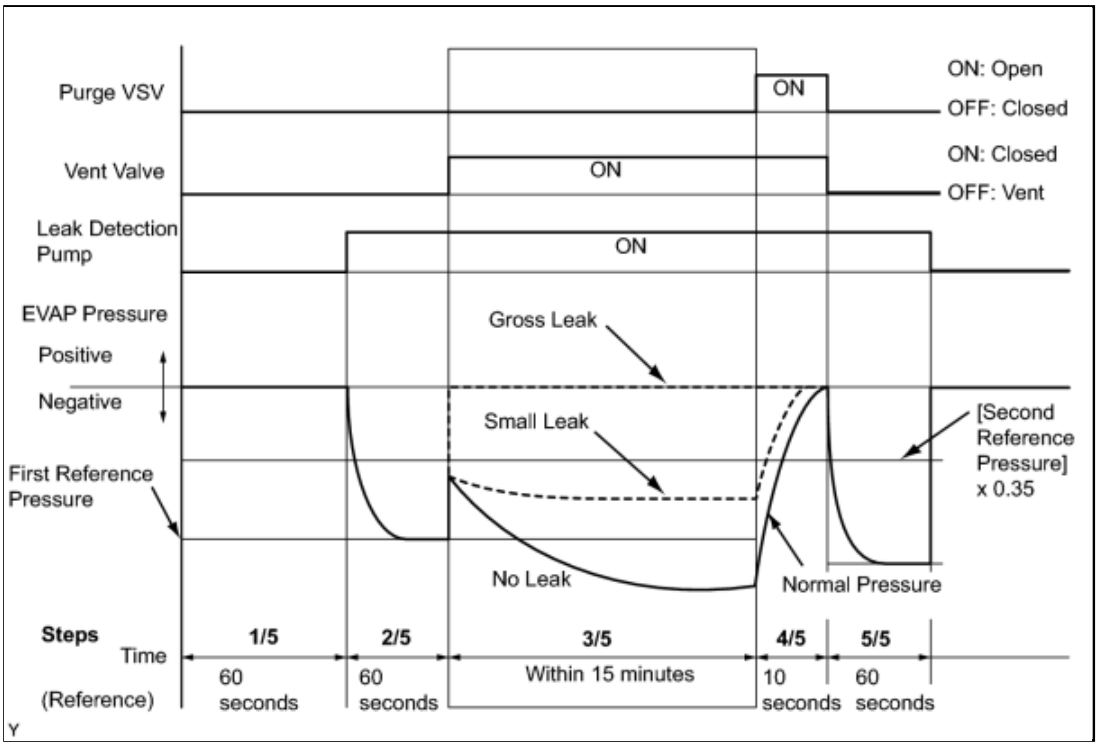

NOTICE:

- In the Evaporative System Check (Manual Mode), perform the series of 5 Evaporative System Check steps manually using the Techstream.
- Do not perform the Evaporative System Check when the fuel tank is more than 90% full because the cut-off valve may be closed. If the cut-off valve is closed, the fuel tank leak check is not possible.
- Do not run the engine during this operation.
- When the temperature of the fuel is 35°C (95°F) or more, a large amount of vapor forms and any check results

become inaccurate. When performing the Evaporative System Check, keep the temperature below 35°C (95°F).

(a) Clear the DTCs INFO.

(b) Enter the following menus: Powertrain / Engine and ECT / Utility / Evaporative System Check / Manual Mode.

NEXT

4.	**PERFORM EVAPORATIVE SYSTEM CHECK (STEP 1/5)**

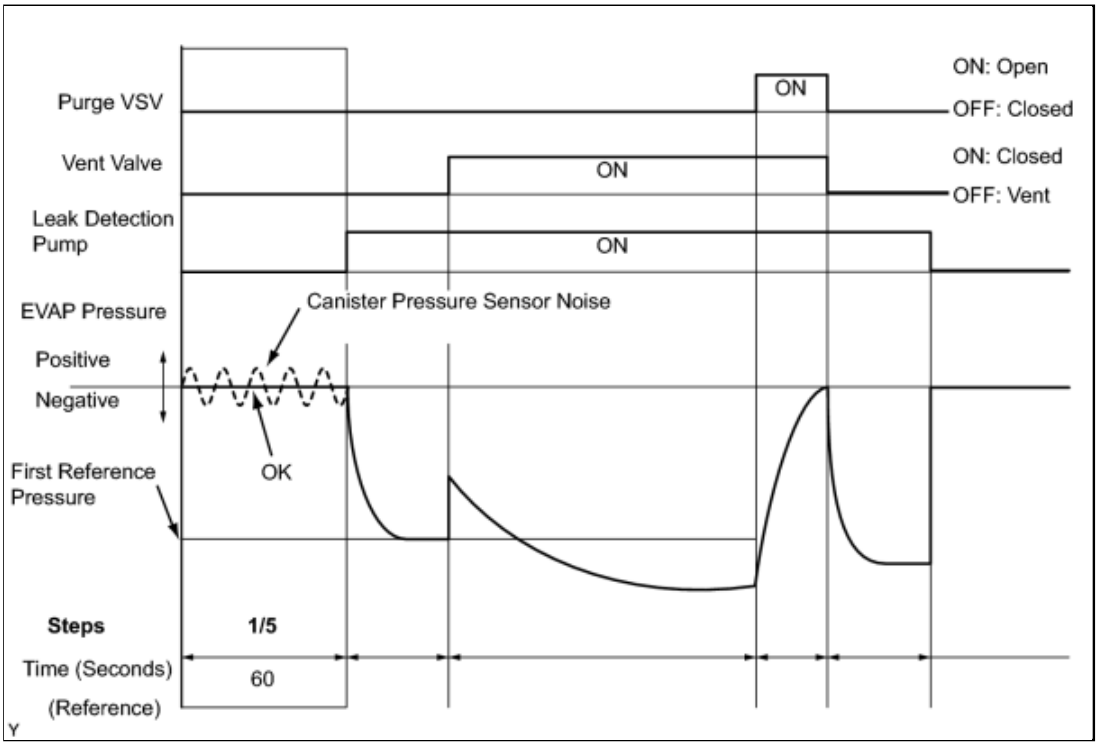

(a) Check the EVAP pressure in step 1/5.

Result:

DTCS*	RESULT	SUSPECTED TROUBLE AREA	PROCEED TO
-	Virtually no variation in EVAP pressure	Not yet determined	A
P0451	EVAP pressure fluctuates by +/- 0.3 kPa-g (+/- 2.25 mmHg-g) or more	Canister pressure sensor noise	B

*: These DTCs are already present in the ECM when the vehicle arrives and are confirmed in the "CONFIRM DTC" procedures above.

B ▶ **REPLACE CANISTER ASSEMBLY**

A

5.	**PERFORM EVAPORATIVE SYSTEM CHECK (STEP 1/5 TO 2/5)**

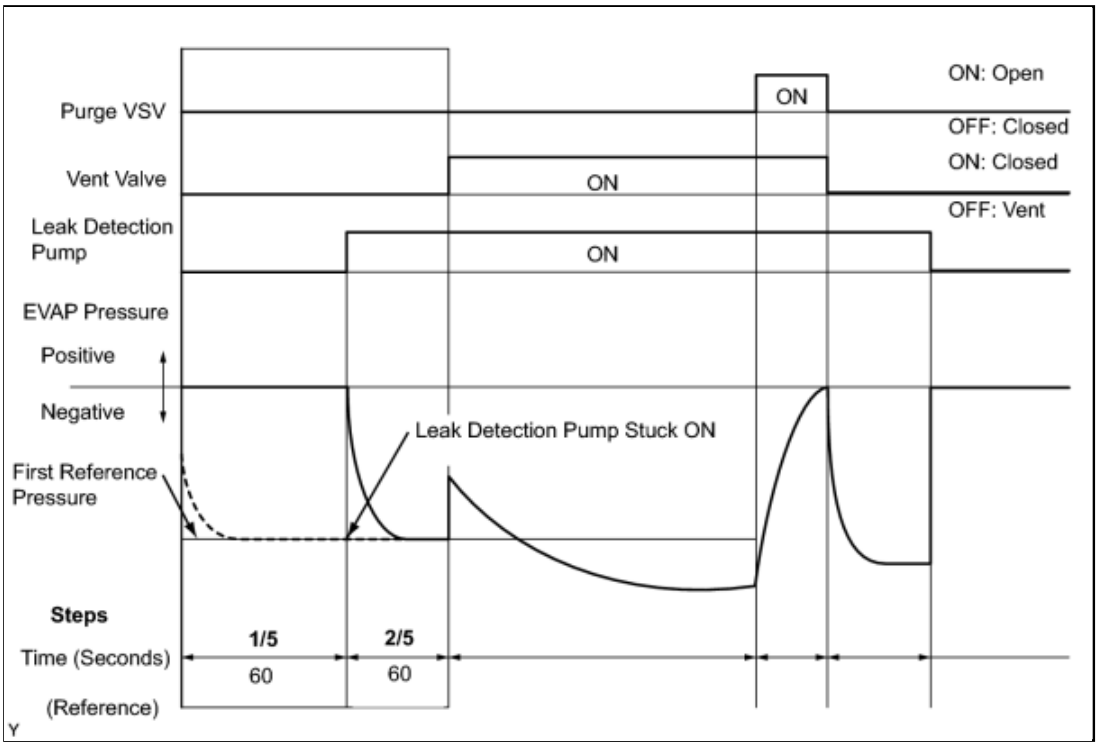

(a) Check the EVAP pressure in steps 1/5 and 2/5.

Result:

DTCS*	RESULT	SUSPECTED TROUBLE AREA	PROCEED TO
-	Virtually no variation in EVAP pressure during step 1/5. Then decreases to reference pressure	Not yet determined	A
P2402	Small difference between EVAP pressures during steps 1/5 and 2/5	Leak detection pump stuck ON	B

*: These DTCs are already present in the ECM when the vehicle arrives and are confirmed in the "CONFIRM DTC" procedures above.

HINT:

The first reference pressure is the value determined in step 2/5.

B **PERFORM ACTIVE TEST USING TECHSTREAM (FOR LEAK DETECTION PUMP)**

A

6.	PERFORM EVAPORATIVE SYSTEM CHECK (STEP 2/5)

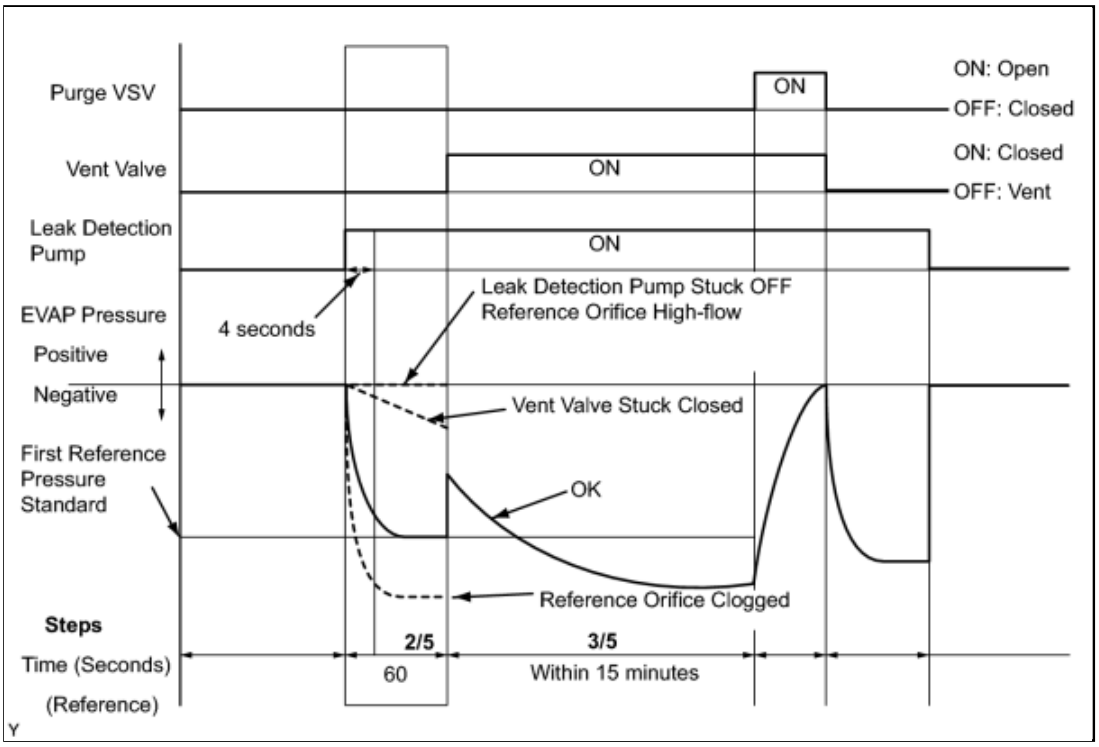

HINT:

Make a note of the pressures checked in steps (a) and (b) below.

(a) Check the EVAP pressure 4 seconds after the leak detection pump is activated*.

*: The leak detection pump begins to operate as step 1/5 finishes and step 2/5 starts.

(b) Check the EVAP pressure again when it has stabilized. This pressure is the reference pressure.

Result:

DTCS*	RESULT	SUSPECTED TROUBLE AREA	PROCEED TO
-	EVAP pressure in step (b) between -4.85 kPa-g and -1.057 kPa-g (-36.4 mmHg-g and -7.93 mmHg-g)	Not yet determined	A
P043F and P2401	EVAP pressure in step (b) -1.057 kPa-g (-7.93 mmHg-g) or more	• Reference orifice high-flow • Leak detection pump stuck OFF	B
P043E	EVAP pressure in step (b) below -4.85 kPa-g (-36.4 mmHg-g)	Reference orifice clogged	C

DTCS*	RESULT	SUSPECTED TROUBLE AREA	PROCEED TO
P2419	EVAP pressure in step (a) more than -1.057 kPa-g (-7.93 mmHg-g)	Vent valve stuck closed	D

*: These DTCs are already present in the ECM when the vehicle arrives and are confirmed in the "CONFIRM DTC" procedures above.

D ▶ **INSPECT CANISTER PUMP MODULE (VENT VALVE OPERATION)**

C ▶ **REPLACE CANISTER ASSEMBLY**

B ▶ **PERFORM EVAPORATIVE SYSTEM CHECK (STEP 3/5)**

A ▼

7.	PERFORM EVAPORATIVE SYSTEM CHECK (STEP 2/5 TO 3/5)

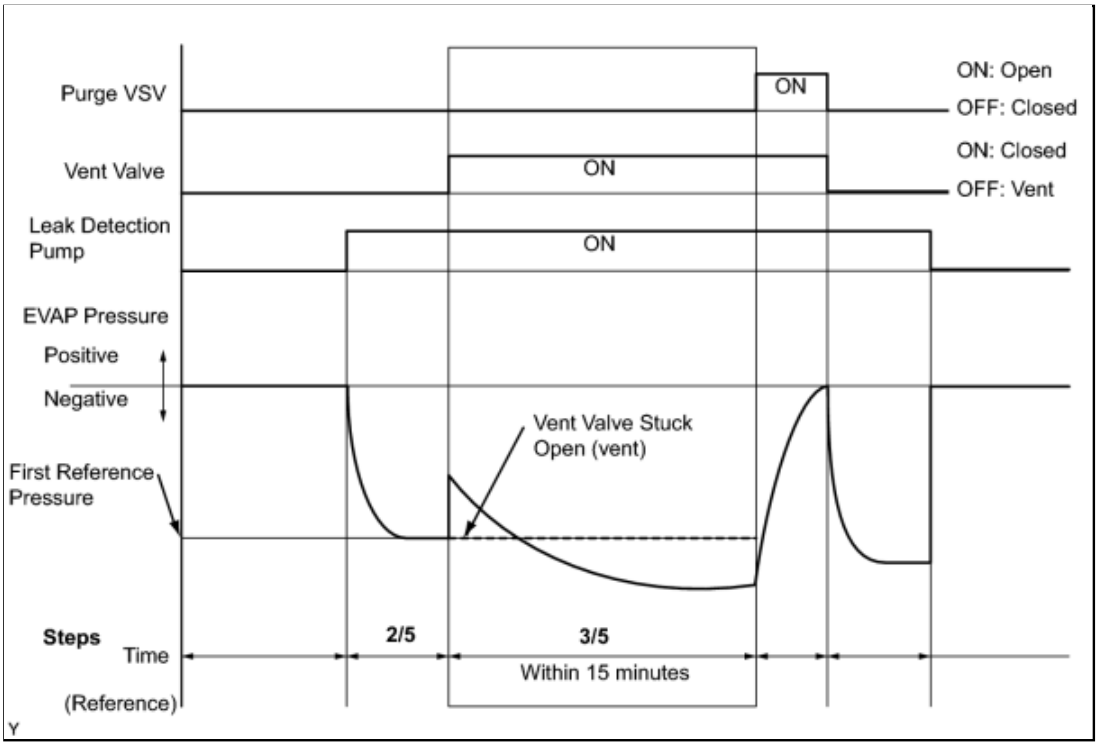

(a) Check the EVAP pressure increase in step 3/5.

Result:

DTCS*	RESULT	SUSPECTED TROUBLE	PROCEED

		AREA	TO
-	EVAP pressure increases by 0.3 kPa-g (2.25 mmHg-g) or more within 10 seconds of proceeding from step 2/5 to step 3/5	Not yet determined	A
P2420	No variation in EVAP pressure despite proceeding from step 2/5 to step 3/5	Vent valve stuck open (vent)	B
P0451	No variation in EVAP pressure during steps 1/5 through 3/5	Canister pressure sensor output value stuck	C

*: These DTCs are already present in the ECM when the vehicle arrives and are confirmed in the "CONFIRM DTC" procedures above.

C ▶ **REPLACE CANISTER ASSEMBLY**

B ▶ **INSPECT CANISTER PUMP MODULE (POWER SOURCE FOR VENT VALVE)**

A ▼

8.	PERFORM EVAPORATIVE SYSTEM CHECK (STEP 3/5)

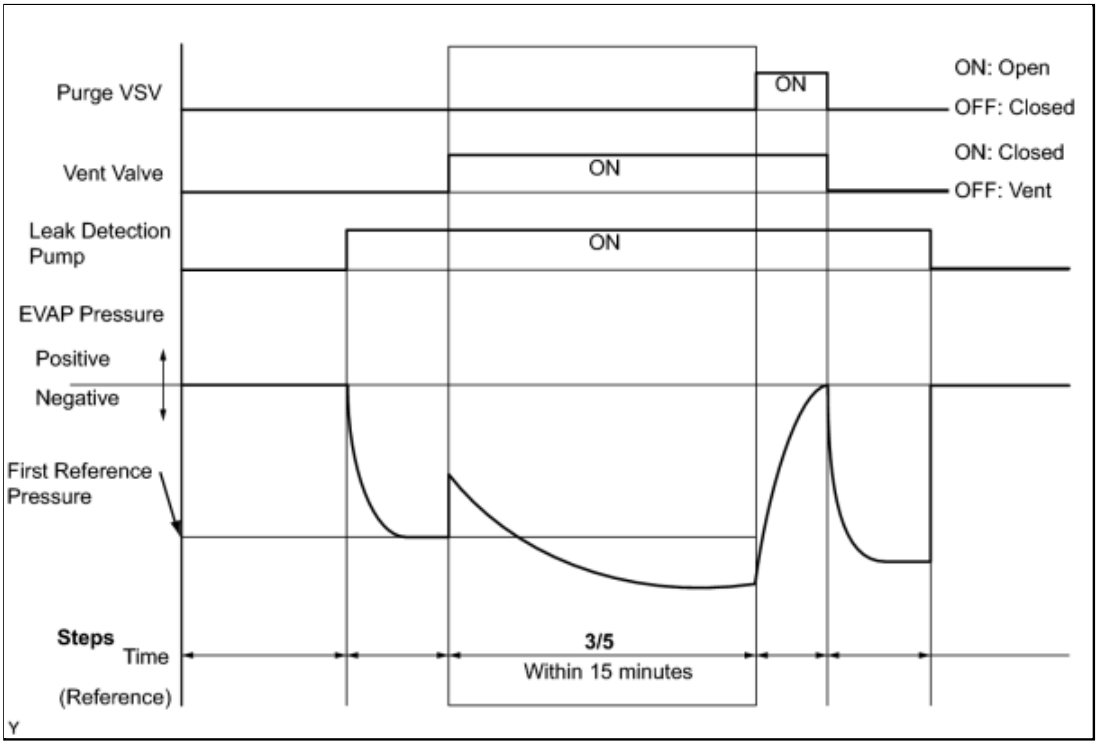

(a) Wait until the EVAP pressure change is less than 0.1 kPa-g (0.75 mmHg-g) for 30 seconds.

(b) Measure the EVAP pressure and record it.

HINT:

A few minutes are required for the EVAP pressure to become saturated. When there is little fuel in the fuel tank, it takes up to 15 minutes.

NEXT

9.	**PERFORM EVAPORATIVE SYSTEM CHECK (STEP 4/5)**

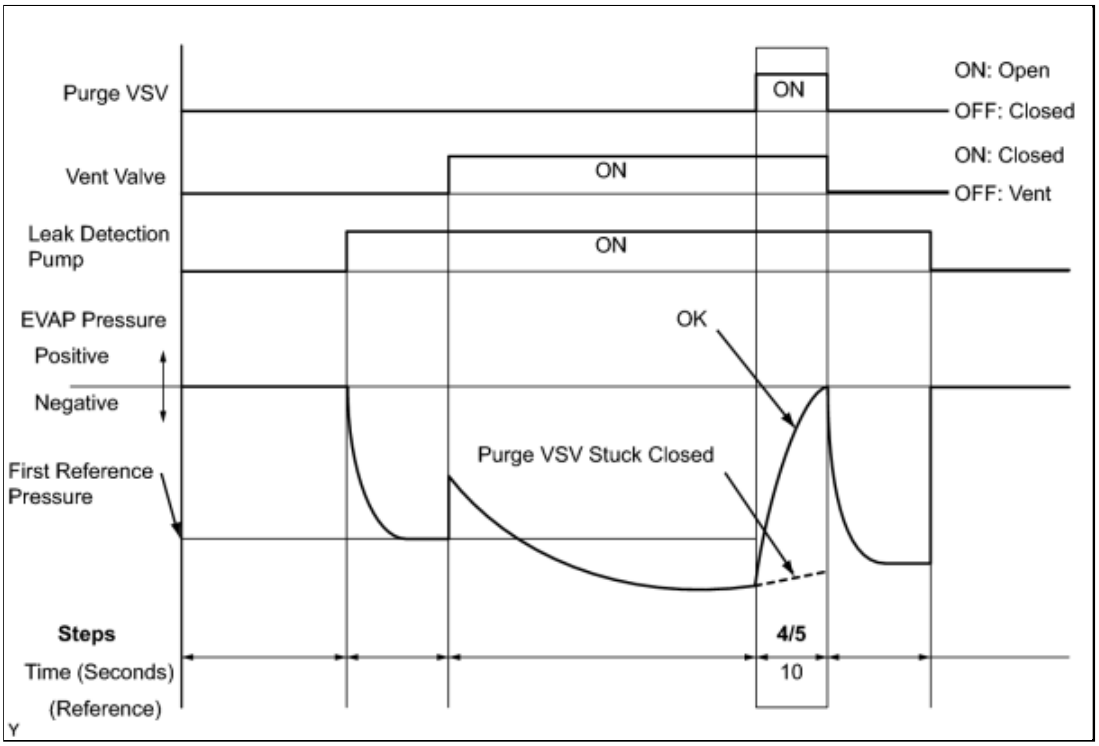

(a) Check the EVAP pressure in step 4/5.

Result:

DTCS*	RESULT	SUSPECTED TROUBLE AREA	PROCEED TO
-	EVAP pressure increases by 0.3 kPa-g (2.25 mmHg-g) or more within 10 seconds of proceeding from step 3/5 to step 4/5	Not yet determined	A
P0441	EVAP pressure increases by 0.3 kPa-g (2.25 mmHg-g) or more within 10 seconds of proceeding from step 3/5 to step 4/5	Problems in EVAP hose between purge VSV and intake manifold	B
P0441	Variation in EVAP pressure less than 0.3 kPa-g (2.25 mmHg-g) for 10 seconds, after proceeding from step 3/5 to step 4/5	Purge VSV stuck closed	C

*: These DTCs are already present in the ECM when the vehicle arrives and are confirmed in the "CONFIRM DTC" procedures above.

C ▶ PERFORM ACTIVE TEST USING TECHSTREAM (PURGE VSV)

B ▶ CHECK EVAP HOSE (PURGE VSV - INTAKE MANIFOLD)

A ▼

10.	PERFORM EVAPORATIVE SYSTEM CHECK (STEP 5/5)

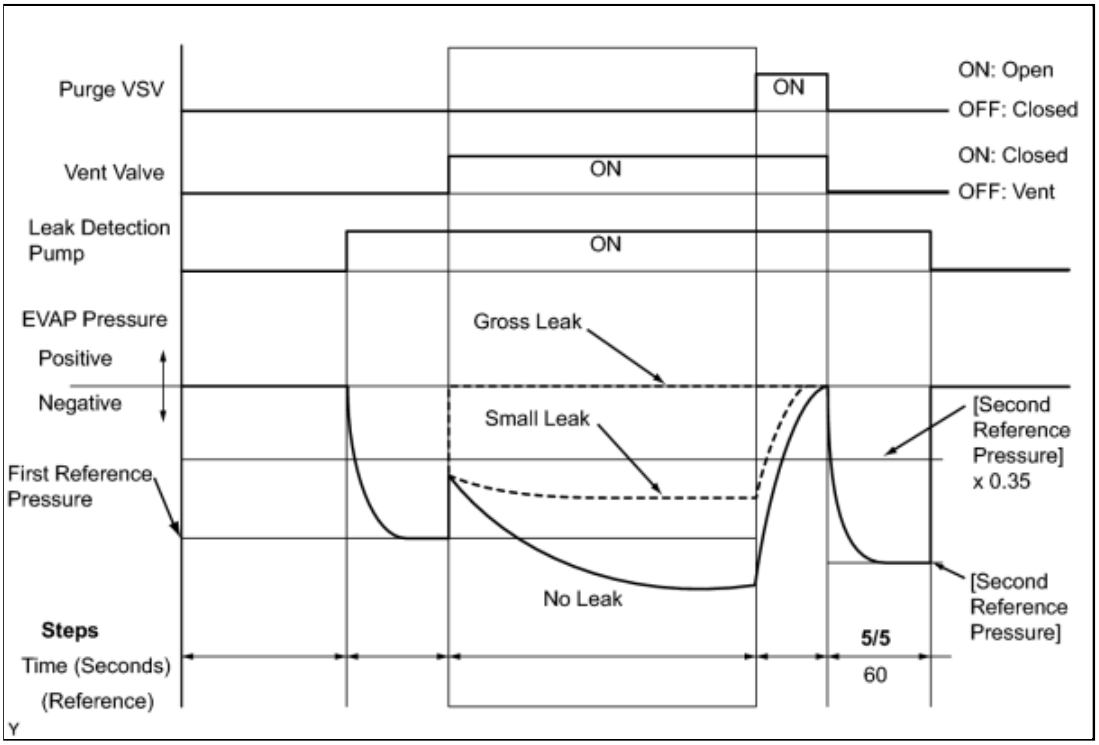

(a) Check the EVAP pressure in step 5/5.

(b) Compare the EVAP pressure in step 3/5 and the second reference pressure (step 5/5).

Result:

DTCS*	RESULT	SUSPECTED TROUBLE AREA	PROCEED TO
-	EVAP pressure (step 3/5) lower than second reference pressure (step 5/5)	Not yet determined (no leak from EVAP system)	A
P0441 and P0455	EVAP pressure (step 3/5) higher than [second reference pressure (step 5/5) x 0.35]	• Purge VSV stuck open • EVAP gross leak	B

DTCS*	RESULT	SUSPECTED TROUBLE AREA	PROCEED TO
P0456	EVAP pressure (step 3/5) higher than second reference pressure (step 5/5)	EVAP small leak	B

*: These DTCs are already present in the ECM when the vehicle arrives and are confirmed in the "CONFIRM DTC" procedures above.

B ▶ **PERFORM ACTIVE TEST USING TECHSTREAM (PURGE VSV)**

A ▶ **REPAIR OR REPLACE PARTS AND COMPONENTS INDICATED BY OUTPUT DTCS**

11.	PERFORM EVAPORATIVE SYSTEM CHECK (STEP 3/5)

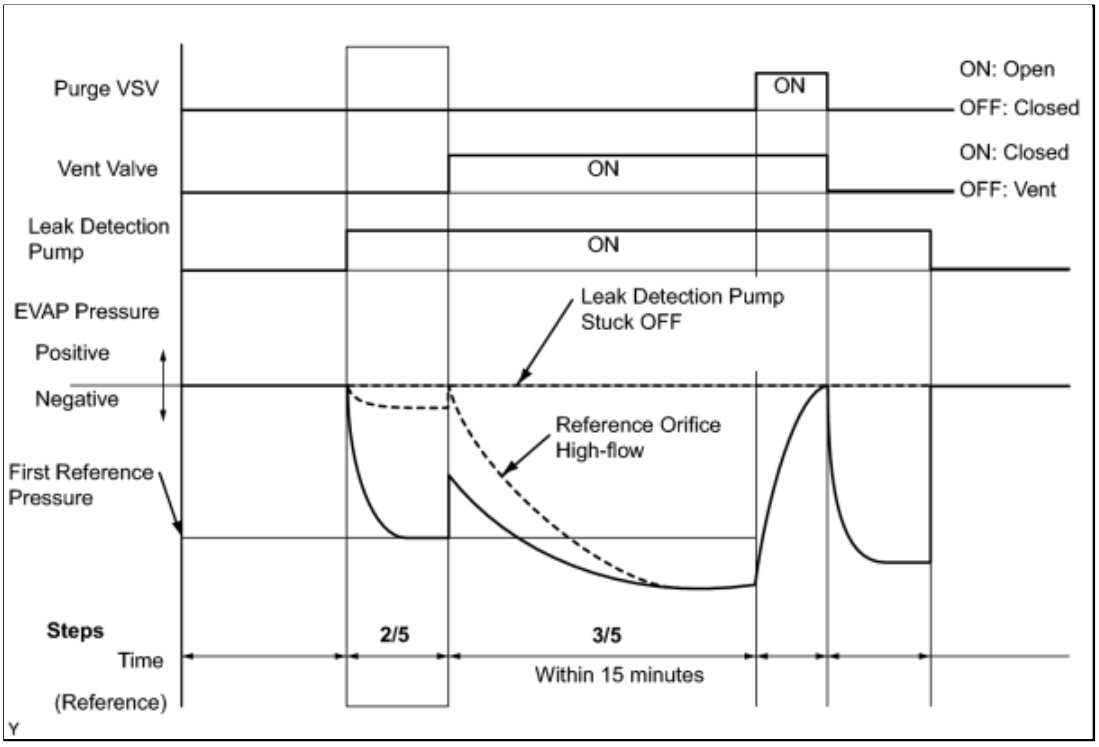

(a) Check the EVAP pressure in step 3/5.

Result:

DTCS*	RESULT	SUSPECTED TROUBLE AREA	PROCEED TO
P043F	EVAP pressure less than [reference pressure] measured at 2/5	Reference orifice high-flow	A
P2401	EVAP pressure almost same as [reference pressure] measured at 2/5	Leak detection pump stuck OFF	B

*: These DTCs are already present in the ECM when the vehicle arrives and are confirmed in the "CONFIRM DTC"

procedures above.

HINT:

The first reference pressure is the value determined in step 2/5.

B ▶ **PERFORM ACTIVE TEST USING TECHSTREAM (FOR LEAK DETECTION PUMP)**

A ▶ **REPLACE CANISTER ASSEMBLY**

12.	PERFORM ACTIVE TEST USING TECHSTREAM (PURGE VSV)

(a) Enter the following menus: Powertrain / Engine and ECT / Active Test / Activate the VSV for EVAP Control.

(b) Disconnect the hose (connected to the canister) from the purge VSV.

(c) Start the engine.

(d) Using the Techstream, turn off the purge VSV (Activate the VSV for EVAP Control: OFF).

(e) Use your finger to confirm that the purge VSV has no suction.

(f) Using the Techstream, turn on the purge VSV (Activate the VSV for EVAP Control: ON).

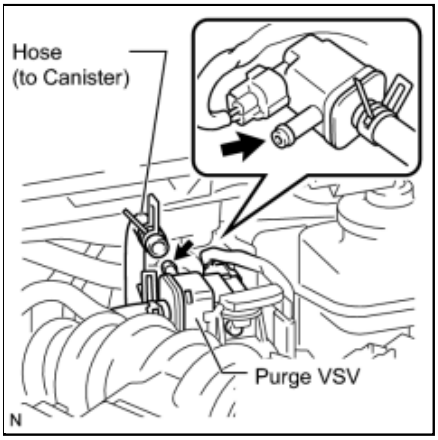

(g) Use your finger to confirm that the purge VSV has suction.

Result:

RESULT	SUSPECTED TROUBLE AREA	PROCEED TO
No suction when purge VSV turned OFF, and suction applied when turned ON	Purge VSV normal	A
Suction applied when purge VSV turned OFF	Purge VSV stuck open	B
No suction when purge VSV turned ON	• Purge VSV stuck closed • Problems with EVAP hose between purge VSV and intake manifold	C

(h) Reconnect the hose.

C ▶ **CHECK EVAP HOSE (PURGE VSV - INTAKE MANIFOLD)**

B ▶ **INSPECT PURGE VSV**

A

13.	CHECK FUEL CAP ASSEMBLY

(a) Check that the fuel cap is correctly installed and confirm the fuel cap meets OEM specifications.

(b) Tighten the fuel cap until a few click sounds are heard.

HINT:

If an EVAP tester is available, check the fuel cap using the Techstream.

1. Remove the fuel cap and install it onto a fuel cap adapter.
2. Connect an EVAP tester pump hose to the adapter, and pressurize the cap to 3.2 to 3.7 kPa (24 to 28 mmHg) using an EVAP tester pump.
3. Seal the adapter and wait for 2 minutes.
4. Check the pressure. If the pressure is 2 kPa (15 mmHg) or more, the fuel cap is normal.

Result:

RESULT	SUSPECTED TROUBLE AREA	PROCEED TO
Fuel cap correctly installed	-	A
Fuel cap loose	• Fuel cap improperly installed • Defective fuel cap • Fuel cap does not meet OEM specifications	B
Defective fuel cap	-	B
No fuel cap	-	C

C ▶ **REPLACE FUEL TANK CAP**

B ▶ **CORRECTLY REINSTALL OR REPLACE FUEL TANK CAP**

A ▶ **LOCATE EVAP LEAK PART**

14.	INSPECT PURGE VSV

(a) Turn the ignition switch off.

(b) Disconnect the purge VSV connector.

(c) Disconnect the hose (connected to the canister) from the purge VSV.

(d) Start the engine.

(e) Use your finger to confirm that the purge VSV has no suction.

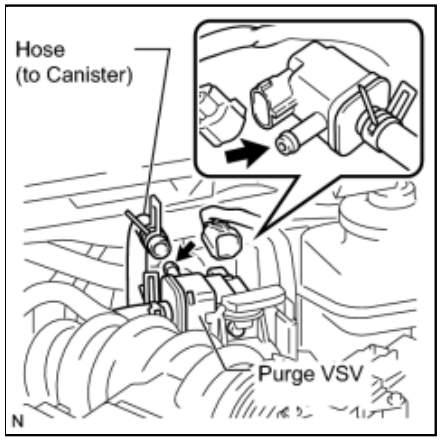

Result:

RESULT	SUSPECTED TROUBLE AREA	PROCEED TO
No suction	ECM	A
Suction applied	Purge VSV	B

(f) Reconnect the purge VSV connector.

(g) Reconnect the hose.

B ▶ **REPLACE PURGE VSV**

A ▶ **REPLACE ECM**

15.	CHECK EVAP HOSE (PURGE VSV - INTAKE MANIFOLD)

(a) Disconnect the hose (connected to the intake manifold) from the purge VSV.

(b) Start the engine.

(c) Use your finger to confirm that the hose has suction.

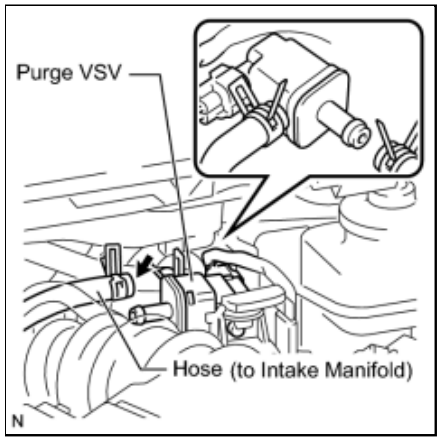

Result:

RESULT	SUSPECTED TROUBLE AREA	PROCEED TO
Suction applied	EVAP hose between purge VSV and intake manifold normal	A
No suction	• Intake manifold port • EVAP hose between purge VSV and intake manifold	B

(d) Reconnect the hose.

B ▶ **INSPECT INTAKE MANIFOLD (EVAP PURGE PORT)**

A ▼

16.	INSPECT PURGE VSV

(a) Remove the purge VSV.

(b) Apply battery voltage across the terminals of the purge VSV.

(c) Confirm that air flows from port A to port B.

Result:

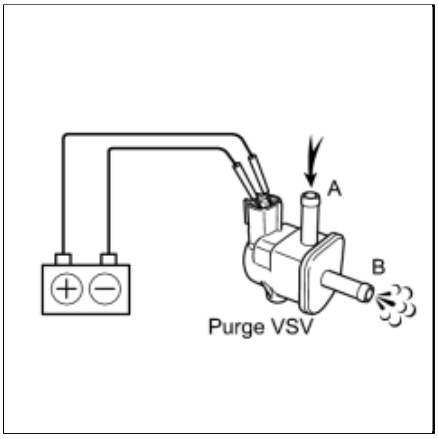

RESULT	CONDITION	SUSPECTED TROUBLE AREA	PROCEED TO
Air flows	Battery voltage applied across purge VSV terminals	-	A
No air flow	Battery voltage applied across purge VSV terminals	Purge VSV	B

(d) Reinstall the purge VSV.

B ▶ REPLACE PURGE VSV

A ▼

17.	CHECK HARNESS AND CONNECTOR (POWER SOURCE OF PURGE VSV)

(a) Disconnect the purge VSV connector.

(b) Turn the ignition switch to ON.

(c) Measure the voltage according to the value(s) in the table below.

Result:

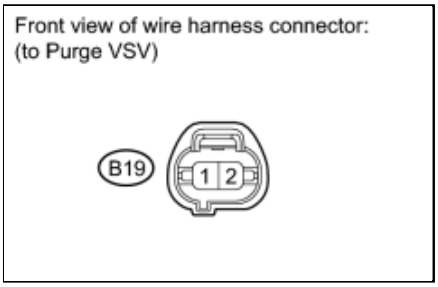

TESTER CONNECTION	SWITCH CONDITION	SPECIFIED CONDITION	SUSPECTED TROUBLE AREA	PROCEED TO
B19-2 - Body ground	Ignition switch ON	11 to 14 V	Normal	A
		Other than result above	Wire harness or connectors between purge VSV and battery	B

(d) Reconnect the purge VSV connector.

B ▶ REPAIR OR REPLACE HARNESS OR CONNECTOR

A ▼

18.	CHECK HARNESS AND CONNECTOR (PURGE VSV - ECM)

(a) Disconnect the ECM connector.

(b) Disconnect the purge VSV connector.

(c) Measure the resistance according to the value(s) in the table below.

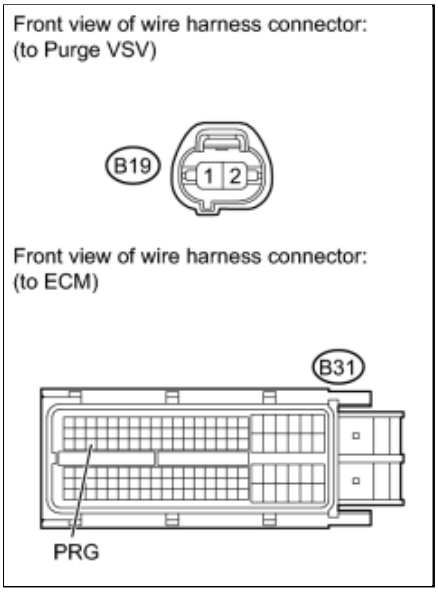

Standard Resistance (Check for Open):

TESTER CONNECTION	CONDITION	SPECIFIED CONDITION
B31-49 (PRG) - B19-1	Always	Below 1 Ω

Standard Resistance (Check for Short):

TESTER CONNECTION	CONDITION	SPECIFIED CONDITION
B31-49 (PRG) or B19-1 - Body ground	Always	10 kΩ or higher

(d) Reconnect the ECM connector.

(e) Reconnect the purge VSV connector.

NG ▶ REPAIR OR REPLACE HARNESS OR CONNECTOR

OK ▶ REPLACE ECM

19.	INSPECT CANISTER PUMP MODULE (POWER SOURCE FOR VENT VALVE)

(a) Turn the ignition switch off.

(b) Disconnect the canister pump module connector.

(c) Turn the ignition switch to ON.

(d) Measure the voltage according to the value(s) in the table below.

Result:

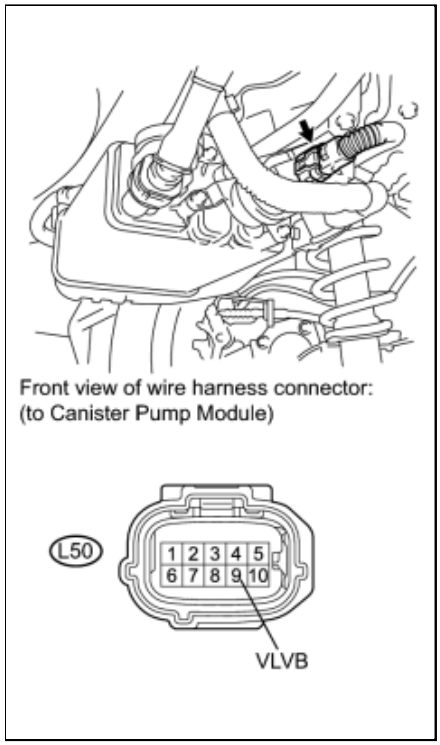

TESTER CONNECTION	SWITCH CONDITION	SPECIFIED CONDITION	SUSPECTED TROUBLE AREA	PROCEED TO
L50-9 (VLVB) - Body ground	Ignition switch ON	11 to 14 V	1. Wire harness between vent valve and ECM 2. Vent valve 3. ECM	A
		Below 3 V	Power source wire harness of vent valve	B

(e) Reconnect the canister pump module connector.

B → REPAIR OR REPLACE HARNESS OR CONNECTOR

A

20.	INSPECT CANISTER PUMP MODULE (VENT VALVE OPERATION)

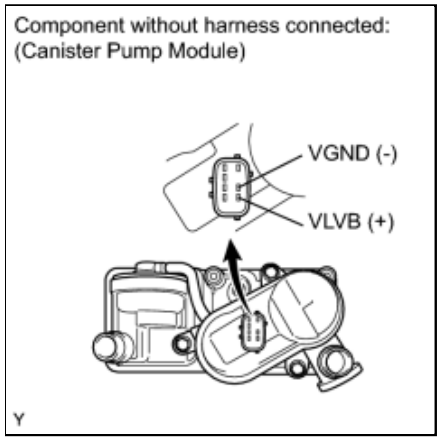

(a) Turn the ignition switch off.

(b) Disconnect the canister pump module connector.

(c) Apply the battery voltage to VLVB and VGND terminals of the canister pump module.

(d) Touch the canister pump module to confirm the vent valve operation.

Result:

RESULT	SUSPECTED TROUBLE AREA	PROCEED TO
Operating	1. Wire harness between vent valve and ECM 2. ECM	A
Not operating	Vent valve	B

(e) Reconnect the canister pump module connector.

B → REPLACE CANISTER ASSEMBLY

A

21.	CHECK HARNESS AND CONNECTOR (ECM - CANISTER PUMP MODULE)

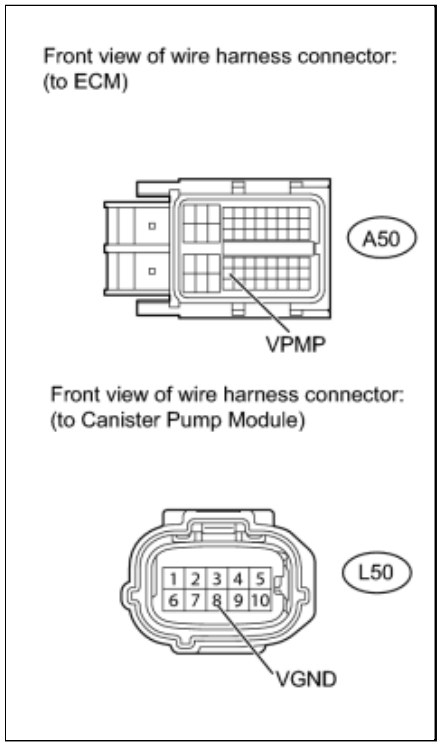

(a) Disconnect the ECM connector.

(b) Disconnect the canister pump module connector.

(c) Measure the resistance according to the value(s) in the table below.

Result:

TESTER CONNECTION	CONDITION	SPECIFIED CONDITION	SUSPECTED TROUBLE AREA	PROCEED TO
A50-42 (VPMP) - L50-8 (VGND)	Always	Below 1 Ω	ECM	A
		10 kΩ or higher	Wire harness between ECM and canister pump module	B

(d) Reconnect the ECM connector.

(e) Reconnect the canister pump module connector.

B → REPAIR OR REPLACE HARNESS OR CONNECTOR

A → REPLACE ECM

22.	PERFORM ACTIVE TEST USING TECHSTREAM (FOR LEAK DETECTION PUMP)

(a) Turn the ignition switch off.

(b) Disconnect the canister pump module connector.

(c) Turn the ignition switch to ON.

(d) Enter the following menus: Powertrain / Engine and ECT / Active Test / Activate the Vacuum Pump.

(e) Measure the voltage according to the value(s) in the table below.

Result:

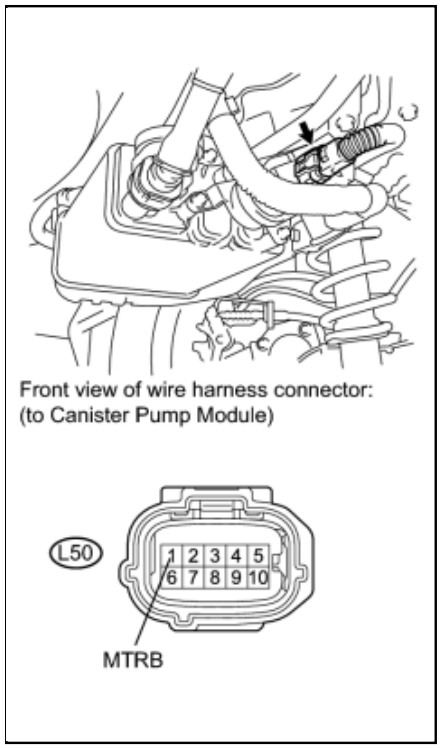

Front view of wire harness connector:
(to Canister Pump Module)

TESTER CONNECTION	CONDITION	SPECIFIED CONDITION	SUSPECTED TROUBLE AREA	PROCEED TO
L50-1 (MTRB) - Body ground	Leak detection pump ON and OFF (Active Test ON and OFF)	Below 3 V when OFF 11 to 14 V when ON	1. Wire harness between leak detection pump and body ground 2. Leak detection pump	A
		Below 3 V when OFF and ON	1. Wire harness between leak detection pump and ECM 2. ECM	B

(f) Reconnect the canister pump module connector.

B → CHECK HARNESS AND CONNECTOR (ECM - CANISTER PUMP MODULE)

A

23.	CHECK HARNESS AND CONNECTOR (CANISTER PUMP MODULE - BODY GROUND)

(a) Turn the ignition switch off.

(b) Disconnect the canister pump module connector.

(c) Measure the resistance according to the value(s) in the table below.

Result:

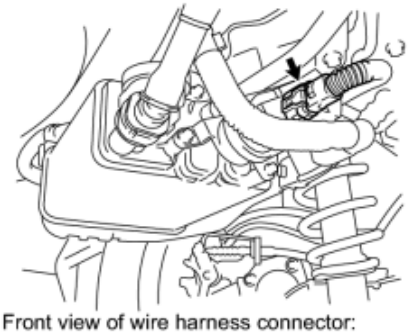

Front view of wire harness connector:
(to Canister Pump Module)

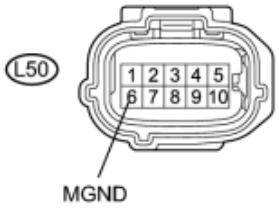

TESTER CONNECTION	CONDITION	SPECIFIED CONDITION	SUSPECTED TROUBLE AREA	PROCEED TO
L50-6 (MGND) - Body ground	Always	Below 1 Ω	Leak detection pump	A
		10 kΩ or higher	Wire harness between canister pump module and body ground	B

(d) Reconnect the canister pump module connector.

B ▶ **REPAIR OR REPLACE HARNESS OR CONNECTOR**

A ▶ **REPLACE CANISTER ASSEMBLY**

24.	CHECK HARNESS AND CONNECTOR (ECM - CANISTER PUMP MODULE)

(a) Turn the ignition switch off.

(b) Disconnect the ECM connector.

(c) Disconnect the canister pump module connector.

(d) Measure the resistance according to the value(s) in the table below.

Result:

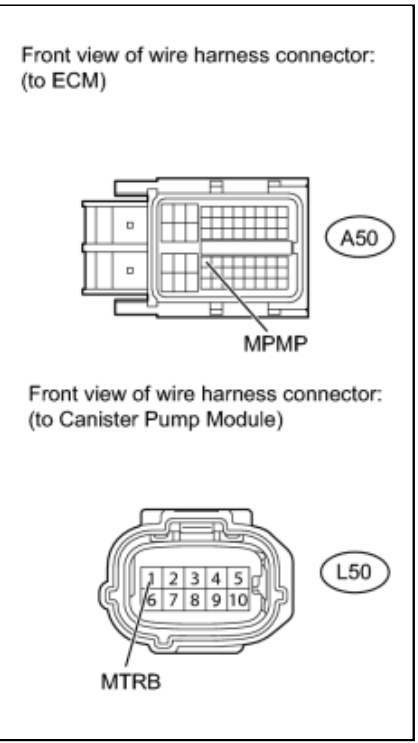

TESTER CONNECTION	CONDITION	SPECIFIED CONDITION	SUSPECTED TROUBLE AREA	PROCEED TO
A50-34 (MPMP) - L50-1 (MTRB)	Always	Below 1 Ω	ECM	A
		10 kΩ or higher	Wire harness between ECM and canister pump module	B

(e) Reconnect the ECM connector.

(f) Reconnect the canister pump module connector.

B ▶ **REPAIR OR REPLACE**

HARNESS OR CONNECTOR

A ▶ REPLACE ECM

25.	INSPECT INTAKE MANIFOLD (EVAP PURGE PORT)

(a) Stop the engine.

(b) Disconnect the EVAP hose from the intake manifold.

(c) Start the engine.

(d) Use your finger to confirm that the port of the intake manifold has suction.

Result:

RESULT	SUSPECTED TROUBLE AREA	PROCEED TO
Suction applied	EVAP hose between intake manifold and purge VSV	A
No suction	Intake manifold	B

(e) Reconnect the EVAP hose.

B ▶ INSPECT INTAKE MANIFOLD (EVAP PURGE PORT)

A ▶ REPLACE PURGE LINE HOSE (INTAKE MANIFOLD - PURGE VSV)

26.	CORRECTLY REINSTALL OR REPLACE FUEL TANK CAP

HINT:

- When reinstalling the fuel tank cap, tighten it until a few click sounds are heard.
- When replacing the fuel tank cap, use a fuel tank cap that meets OEM specifications, and install it until a few click sounds are heard.

NEXT ▶ PERFORM EVAPORATIVE SYSTEM CHECK (AUTOMATIC MODE)

27.	REPLACE FUEL TANK CAP

HINT:

When replacing the fuel cap, use a fuel cap that meets OEM specifications, and install it until a few click sounds are heard.

NEXT ▶ PERFORM EVAPORATIVE SYSTEM CHECK (AUTOMATIC MODE)

28.	LOCATE EVAP LEAK PART

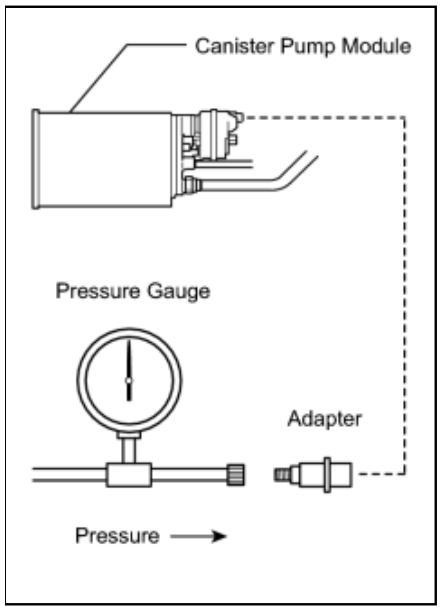

(a) Disconnect the vent hose.

(b) Connect an EVAP tester to the canister pump module with the adapter.

(c) Pressurize the EVAP system to 3.2 to 3.7 kPa (24 to 28 mmHg).

(d) Apply soapy water to the piping and connecting parts of the EVAP system.

(e) Look for areas where bubbles appear. This indicates the leak point.

(f) Repair or replace the leak point.

HINT:

Disconnect the hose between the canister and the fuel tank from the canister. Block the canister side and conduct an inspection. In this way, the fuel tank can be excluded as an area suspected of causing fuel leaks.

NEXT ▶ **PERFORM EVAPORATIVE SYSTEM CHECK (AUTOMATIC MODE)**

29.	REPLACE CANISTER ASSEMBLY

(a) Replace the canister assembly INFO .

NOTICE:

When replacing the canister, check the canister pump module interior and related pipes for water, fuel and other liquids. If liquids are present, check for disconnections and/or cracks in the following: 1) the pipe from the air inlet port to the canister pump module; 2) the canister filter; and 3) the fuel tank vent hose.

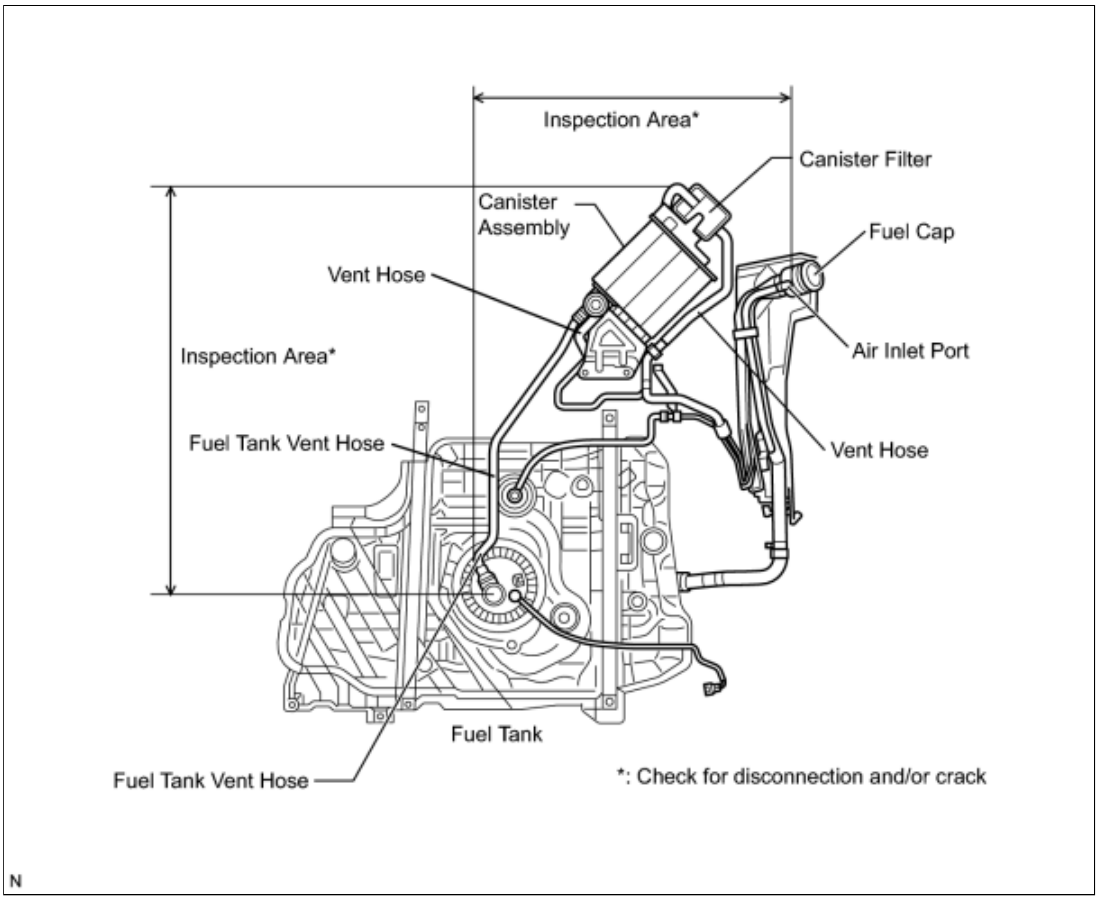

NEXT ▶ PERFORM EVAPORATIVE SYSTEM CHECK (AUTOMATIC MODE)

30.	REPLACE PURGE VSV

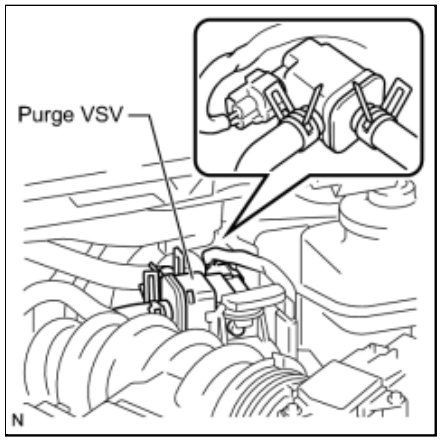

(a) Disconnect the connector and the hoses from the purge VSV.

(b) Remove the purge VSV.

(c) Install a new purge VSV.

(d) Reconnect the connector and hoses.

NEXT ▶ PERFORM EVAPORATIVE SYSTEM CHECK (AUTOMATIC MODE)

31.	REPAIR OR REPLACE HARNESS OR CONNECTOR

NEXT ▶ PERFORM EVAPORATIVE SYSTEM CHECK (AUTOMATIC MODE)

32.	REPLACE PURGE LINE HOSE (INTAKE MANIFOLD - PURGE VSV)

NEXT ▶ PERFORM EVAPORATIVE SYSTEM CHECK (AUTOMATIC MODE)

33.	INSPECT INTAKE MANIFOLD (EVAP PURGE PORT)

(a) Check that the EVAP purge port of the intake manifold is not clogged. If necessary, replace the intake manifold.

NEXT ▶ PERFORM EVAPORATIVE SYSTEM CHECK (AUTOMATIC MODE)

34.	REPLACE ECM

(a) Replace the ECM INFO .

NEXT ▶ PERFORM EVAPORATIVE SYSTEM CHECK (AUTOMATIC MODE)

35.	REPAIR OR REPLACE PARTS AND COMPONENTS INDICATED BY OUTPUT DTCS

(a) Repair the malfunctioning areas indicated by the DTCs that had been confirmed when the vehicle was brought in.

NEXT ▶ PERFORM EVAPORATIVE SYSTEM CHECK (AUTOMATIC MODE)

36.	PERFORM EVAPORATIVE SYSTEM CHECK (AUTOMATIC MODE)

NOTICE:

- The Evaporative System Check (Automatic Mode) consists of five steps performed automatically by the Techstream. It takes a maximum of approximately 18 minutes.
- Do not perform the EVAP SYSTEM CHECK when the fuel tank is more than 90% full because the cut-off valve may be closed. If the cut-off valve is closed, the fuel tank leak check is not possible.
- Do not run the engine during this operation.
- When the temperature of the fuel is 35°C (95°F) or more, a large amount of vapor forms and any check results become inaccurate. When performing an Evaporative System Check, keep the temperature below 35°C (95°F).

(a) Clear the DTCs INFO .

(b) Enter the following menus: Powertrain / Engine and ECT / Utility / Evaporative System Check / Automatic Mode.

(c) After the Evaporative System Check is completed, check for pending DTCs by entering the following menus: Powertrain / Engine and ECT / Trouble Codes.

HINT:

If no pending DTCs are found, the repair has been successfully completed.

NEXT END

CONFIRMATION DRIVING PATTERN

HINT:

After a repair, check Monitor Status by performing the Key-Off Monitor Confirmation and Purge Flow Monitor Confirmation described below.

1. Key-off monitor confirmation

(a) Preconditions

The monitor will not run unless:

- The vehicle has been driven for 10 minutes or more (in a city area or on a freeway)
- The fuel tank is less than 90% full
- The altitude is less than 8000 ft. (2432 m)
- The engine coolant temperature is between 4.4°C and 35°C (40°F and 95°F)
- The intake air temperature is between 4.4°C and 35°C (40°F and 95°F)
- The vehicle remains stationary (the vehicle speed is 0 mph [0 km/h])

(b) Monitor Conditions

1. Allow the engine to idle for at least 5 minutes.
2. Turn the ignition switch off and wait for 5 hours (or 7 or 9.5 hours).

HINT:

Do not start the engine until checking Monitor Status. If the engine is started, the steps described above must be repeated.

(c) Monitor Status

1. Connect the Techstream to the DLC3.
2. Turn the ignition switch to ON and turn the Techstream on.
3. Enter the following menus: Powertrain / Engine and ECT / Monitor / Evaporative System.
4. Check the Monitor Status displayed on the Techstream.

HINT:

If Incomplete is displayed, the monitor did not complete. Make sure that the preconditions have been met, and perform the Monitor Conditions again.

2. Purge flow monitor confirmation (P0441)

HINT:

Perform this monitor confirmation after the Key-Off Monitor Confirmation shows Complete.

(a) Preconditions

The monitor will not run unless:

- The vehicle has been driven for 10 minutes or more (in a city area or on a freeway)
- The engine coolant temperature is between 4.4°C and 35°C (40°F and 95°F)
- The intake air temperature is between 4.4°C and 35°C (40°F and 95°F)

(b) Monitor Conditions

1. Release the pressure from the fuel tank by removing and reinstalling the fuel cap.
2. Warm the engine up until the engine coolant temperature reaches more than 75°C (167°F).

3. Increase the engine speed to 3000 rpm once.
4. Allow the engine to idle and turn A/C on for 1 minute.

(c) Monitor Status

1. Turn the ignition switch off (if ON or the engine is running).
2. Connect the Techstream to the DLC3.
3. Turn the ignition switch to ON.
4. Turn the Techstream on.
5. Enter the following menus: Powertrain / Engine and ECT / Monitor.
6. Check the Monitor Status displayed on the Techstream.

HINT:

If Incomplete is displayed, the monitor did not complete. Make sure that the preconditions have been met, and perform the Monitor Conditions again.

MONITOR RESULT

Refer to Checking Monitor Status INFO .



Last Modified: 3-10-2010	6.4 C	**From:** 200901
Model Year: 2010	**Model:** Corolla	**Doc ID:** RM000000PFX0B9X
Title: 2AZ-FE ENGINE CONTROL: SFI SYSTEM: P2119: Throttle Actuator Control Throttle Body Range / Performance (2010 Corolla)		

DTC	**P2119**	**Throttle Actuator Control Throttle Body Range / Performance**

DESCRIPTION

The electronic throttle control system is composed of the throttle actuator, throttle position sensor, accelerator pedal position sensor, and ECM. The ECM operates the throttle actuator to regulate the throttle valve in response to driver inputs. The throttle position sensor detects the opening angle of the throttle valve, and provides the ECM with feedback so that the throttle valve can be appropriately controlled by the ECM.

DTC NO.	DTC DETECTION CONDITION	TROUBLE AREA
P2119	Throttle valve opening angle continues to vary greatly from target opening angle (1 trip detection logic)	• Electronic throttle control system • ECM

MONITOR DESCRIPTION

The ECM determines the actual opening angle of the throttle valve from the throttle position sensor signal. The actual opening angle is compared to the target opening angle commanded by the ECM. If the difference between these two values is outside the standard range, the ECM interprets this as a malfunction in the electronic throttle control system. The ECM then illuminates the MIL and sets the DTC.

If the malfunction is not repaired successfully, the DTC can be set when the accelerator pedal is quickly released (to close the throttle valve) after the engine speed reaches 5000 rpm by fully depressing the accelerator pedal (fully open the throttle valve).

MONITOR STRATEGY

Related DTCs	P2119: Electronic throttle control system malfunction
Required Sensors/Components (Main)	Throttle actuator (throttle body)
Required Sensors/Components (Related)	-
Frequency of Operation	Continuous
Duration	1 second
MIL Operation	Immediate

Sequence of Operation	None

TYPICAL ENABLING CONDITIONS

Monitor runs whenever following DTCs are not present	None
System guard* judge condition	ON
*System guard set when following conditions are met:	-
Throttle actuator	ON
Throttle actuator duty calculation	Executing
Throttle position sensor fail	Not detected
Throttle actuator current-cut operation	Not executing
Throttle actuator power supply	4 V or more
Throttle actuator fail	Not detected

TYPICAL MALFUNCTION THRESHOLDS

Either of following conditions A or B is met	-
A. Commanded closed throttle position - current closed throttle position	0.3 V or more for 1 second
B. Commanded open throttle position - current open throttle position	0.3 V or more for 0.6 seconds

CONFIRMATION DRIVING PATTERN

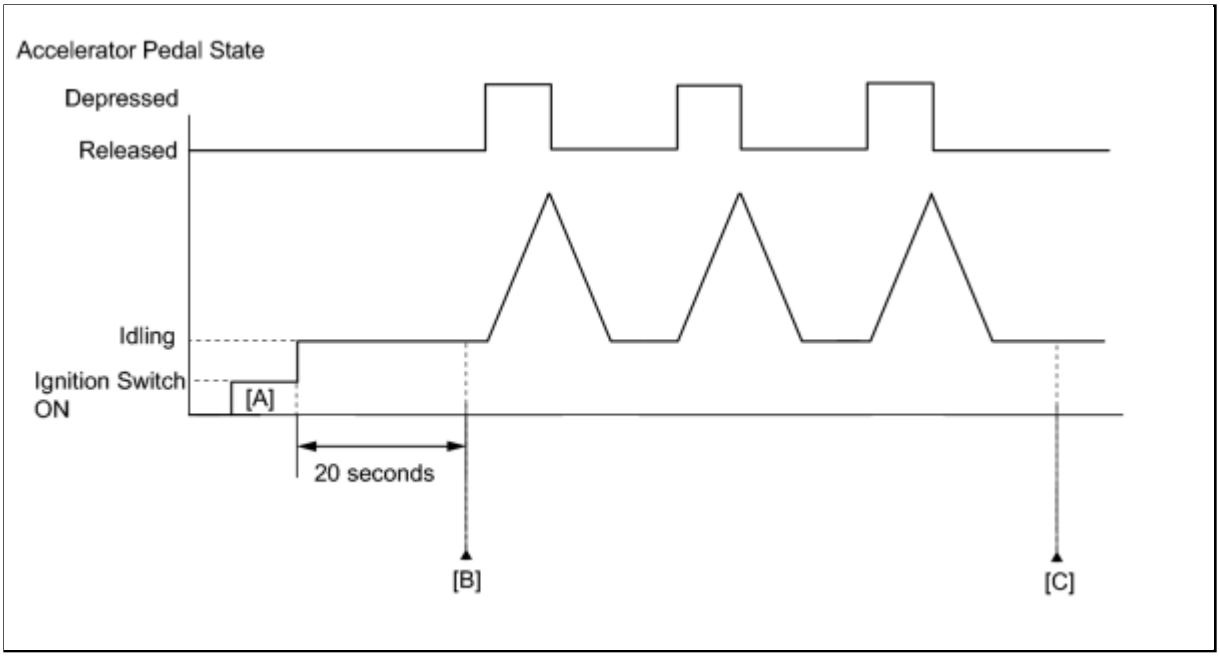

1. Connect the Techstream to the DLC3.
2. Turn the ignition switch to ON and turn the Techstream on.
3. Clear the DTCs (even if no DTCs are stored, perform the clear DTC operation) INFO .
4. Turn the ignition switch off.
5. Turn the ignition switch to ON and turn the Techstream on [A].
6. Start the engine.
7. Idle the engine for 20 seconds.
8. Enter the following menus: Powertrain / Engine / Utility / All Readiness.
9. Input the DTC: P2119.
10. Check the DTC judgment result [B].

TECHSTREAM DISPLAY	DESCRIPTION
NORMAL	○ DTC judgment completed ○ System normal
ABNORMAL	○ DTC judgment completed ○ System abnormal
INCOMPLETE	○ DTC judgment not completed ○ Perform driving pattern after confirming DTC enabling conditions
UNKNOWN	○ Unable to perform DTC judgment ○ Number of DTCs which do not fulfill DTC preconditions has reached ECU memory limit

HINT:

- If the judgment result shows ABNORMAL, the system has a malfunction.

- If the judgment result shows INCOMPLETE or UNKNOWN, fully depress and release the accelerator pedal 3 times, and then check the DTC judgment result at step [C].

11. If the test result is UNKNOWN, enter the following menus: Powertrain / Engine / Trouble Codes / Pending.
12. Read Pending DTCs.

HINT:

If a pending DTC is output, the system is malfunctioning.

13. If the test result is INCOMPLETE or UNKNOWN and no pending DTC is output, perform a universal trip and check for permanent DTCs INFO .

HINT:

- If a permanent DTC is output, the system is malfunctioning.
- If no permanent DTC is output, the system is normal.

FAIL-SAFE

When this DTC, as well as other DTCs relating to electronic throttle control system malfunctions, is set, the ECM enters fail-safe mode. During fail-safe mode, the ECM cuts the current to the throttle actuator, and the throttle valve is returned to a 6.5° throttle angle by the return spring. The ECM then adjusts the engine output by controlling the fuel injection (intermittent fuel-cut) and ignition timing, in accordance with the accelerator pedal opening angle, to allow the vehicle to continue running at a minimal speed. If the accelerator pedal is depressed gently, the vehicle can be driven slowly.

Fail-safe mode continues until a pass condition is detected, and the ignition switch is then turned to off.

WIRING DIAGRAM

Refer to DTC P2102 INFO .

INSPECTION PROCEDURE

HINT:

Read freeze frame data using the Techstream. The ECM records vehicle and driving condition information as freeze frame data the moment a DTC is stored. When troubleshooting, freeze frame data can be helpful in determining whether the vehicle was running or stopped, whether the engine was warmed up or not, whether the air fuel ratio was lean or rich, as well as other data recorded at the time of a malfunction.

PROCEDURE

1.	**CHECK ANY OTHER DTCS OUTPUT (IN ADDITION TO DTC P2119)**

(a) Connect the Techstream to the DLC3.

(b) Turn the ignition switch to ON.

(c) Turn the Techstream on.

(d) Enter the following menus: Powertrain / Engine and ECT / Trouble Codes.

(e) Read DTCs.

Result:

RESULT	PROCEED TO
P2119	A
P2119 and other DTCs	B

HINT:

If any DTCs other than P2119 are output, troubleshoot those DTCs first.

B ▶ **GO TO DTC CHART**

A ▼

2.	**INSPECT THROTTLE BODY (RESISTANCE OF THROTTLE ACTUATOR)**

(a) Disconnect the throttle body connector.

(b) Measure the resistance according to the value(s) in the table below

Standard Resistance:

TESTER CONDITION	CONDITION	SPECIFIED CONDITION
2 (M+) - 1 (M-)	20°C (68°F)	0.3 to 100 Ω

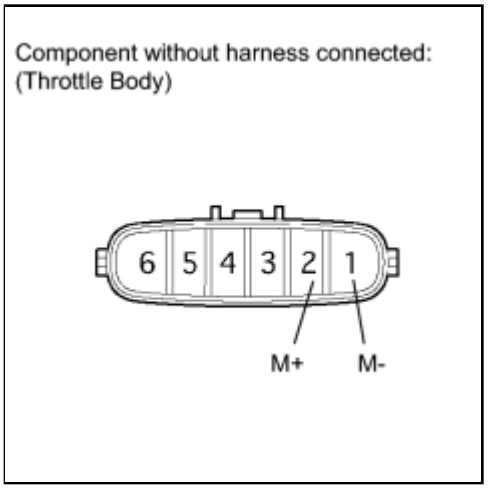

(c) Reconnect the throttle body connector.

NG ▶ **REPLACE THROTTLE BODY**

OK ▼

3.	REPLACE ECM

NEXT

4.	CHECK WHETHER DTC OUTPUT RECURS (DTC P2119)

(a) Connect the Techstream to the DLC3.

(b) Turn the ignition switch to ON.

(c) Turn the Techstream on.

(d) Clear the DTCs INFO.

(e) Allow the engine to idle for 15 seconds or more.

(f) Fully depress and release the accelerator pedal several times quickly.

(g) Enter the following menus: Powertrain / Engine and ECT / Trouble Codes.

(h) Read DTCs.

OK:

No DTC output.

HINT:

The output voltage of the throttle position sensor can be checked using the Techstream. Variations in the output voltage indicate that the throttle actuator is operating. To check the output voltage using the Techstream, enter the following menus: Powertrain / Engine and ECT / ETCS / Throttle Position No. 1.

NG ▶ **REPLACE THROTTLE BODY**

OK ▶ **CHECK FOR INTERMITTENT PROBLEMS**

Last Modified: 3-10-2010	6.4 C	**From:** 200901
Model Year: 2010	**Model:** Corolla	**Doc ID:** RM000000WC409EX
Title: 2AZ-FE ENGINE CONTROL: SFI SYSTEM: P2195,P2196: Oxygen (A/F) Sensor Signal Stuck Lean (Bank 1 Sensor 1) (2010 Corolla)		

DTC	**P2195**	**Oxygen (A/F) Sensor Signal Stuck Lean (Bank 1 Sensor 1)**

DTC	**P2196**	**Oxygen (A/F) Sensor Signal Stuck Rich (Bank 1 Sensor 1)**

DESCRIPTION

HINT:

- Although the DTC titles say oxygen sensor, these DTCs relate to the air-fuel ratio sensor.
- Sensor 1 refers to the sensor mounted in front of the three-way catalytic converter and located near the engine assembly.

The air fuel ratio sensor generates a voltage* that corresponds to the actual air-fuel ratio. This sensor voltage is used to provide the ECM with feedback so that it can control the air-fuel ratio. The ECM determines the deviation from the stoichiometric air-fuel ratio level, and regulates the fuel injection duration. If the air fuel ratio sensor malfunctions, the ECM is unable to control the air-fuel ratio accurately.

The air fuel ratio sensor is a planar type with an integrated heater, which heats the solid electrolyte (zirconia element). This heater is controlled by the ECM. When the intake air volume is low (the exhaust gas temperature is low), current flows to the heater to heat the sensor, in order to facilitate accurate oxygen concentration detection. In addition, the sensor and heater portions are the narrow type. The heat generated by the heater is conducted to the solid electrolyte through the alumina, therefore the sensor activation is accelerated.

In order to obtain a high purification rate of the carbon monoxide (CO), hydrocarbon (HC) and nitrogen oxide (NOx) components in the exhaust gas, a three-way catalytic converter is used. For the most efficient use of the three-way catalytic converter, the air-fuel ratio must be precisely controlled so that it is always close to the stoichiometric level.

*: Value changes inside the ECM. Since the air fuel ratio sensor uses a current output element, the current is converted into a voltage inside the ECM. Any measurements taken at the air fuel ratio sensor or ECM connectors will show a constant voltage.

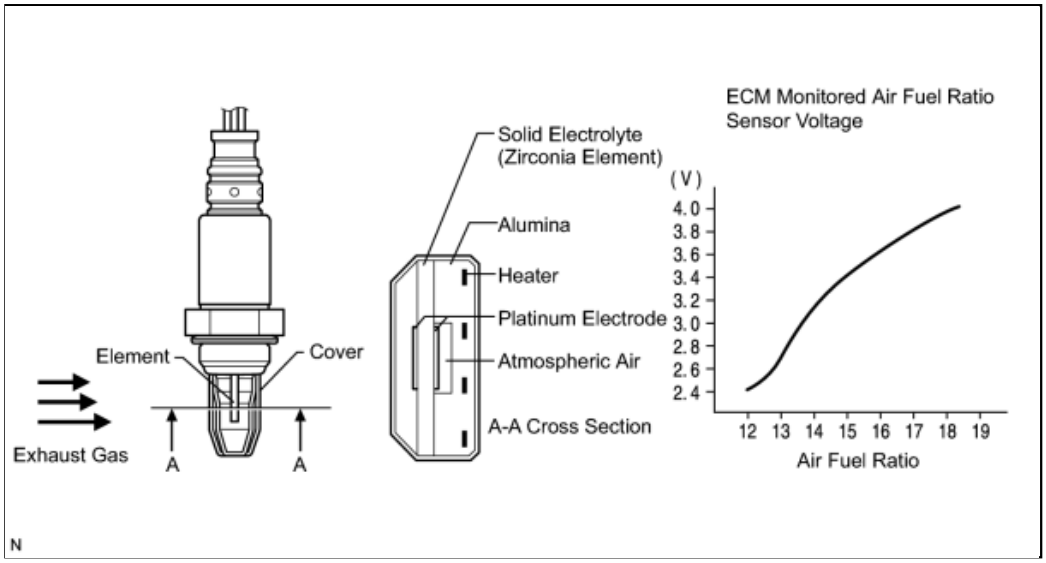

DTC NO.	DTC DETECTION CONDITION	TROUBLE AREA
P2195	Conditions (a) and (b) continue for 10 seconds or more (2 trip detection logic) • (a) Air fuel ratio sensor voltage more than 3.8 V • (b) Heated oxygen sensor voltage 0.15 V or more	• Open or short in air fuel ratio sensor (sensor 1) circuit • Air fuel ratio sensor (sensor 1) • Air fuel ratio sensor (sensor 1) heater • Air fuel ratio sensor heater circuit • Intake system • Fuel pressure • Fuel injector • ECM
	While fuel-cut operation performed (during vehicle deceleration), Air fuel ratio sensor current 3.6 mA or more for 3 seconds (2 trip detection logic)	• Air fuel ratio sensor • ECM
P2196	Conditions (a) and (b) continue for 10 seconds or more (2 trip detection logic) • (a) Air fuel ratio sensor voltage less than 2.8 V • (b) Heated oxygen sensor voltage less than 0.6 V	• Open or short in air fuel ratio sensor (sensor 1) circuit • Air fuel ratio sensor (sensor 1) • Air fuel ratio sensor (sensor 1) heater • Air fuel ratio sensor heater circuit • Intake system • Fuel pressure • Fuel injector • ECM
	While fuel-cut operation performed (during vehicle deceleration), Air fuel ratio sensor current less than 1.0 mA for 3 seconds (2 trip detection logic)	• Air fuel ratio sensor • ECM

HINT:

- When any of these DTCs are set, check the air fuel ratio sensor voltage output by entering the following menus: Powertrain / Engine and ECT / Data List / A/F Control System / AFS Voltage B1 S1.
- Short-term fuel trim values can also be read using the Techstream.
- The ECM regulates the voltages at the A1A+ and A1A- terminals of the ECM to a constant level. Therefore, the air fuel ratio sensor voltage output cannot be confirmed without using the Techstream.
- If a air fuel ratio sensor malfunction is detected, the ECM sets a DTC.

MONITOR DESCRIPTION

Sensor voltage detection monitor

Under the air-fuel ratio feedback control, if the air fuel ratio sensor voltage output indicates rich or lean for a certain period of time, the ECM determines that there is a malfunction in the air fuel ratio sensor. The ECM illuminates the MIL and sets a DTC.

Example:

If the air fuel ratio sensor voltage output is less than 2.8 V (very rich condition) for 10 seconds, despite the heated oxygen sensor voltage output being less than 0.6 V, the ECM sets DTC P2196. Alternatively, if the air fuel ratio sensor voltage output is more than 3.8 V (very lean condition) for 10 seconds, despite the heated oxygen sensor voltage output being 0.15 V or more, DTC P2195 is set.

Sensor current detection monitor

A rich air-fuel mixture causes a low air fuel ratio sensor current, and a lean air-fuel mixture causes a high air fuel ratio sensor current. Therefore, the sensor output becomes low during acceleration, and it becomes high during deceleration with the throttle valve fully closed. The ECM monitors the air fuel ratio sensor current during fuel-cut and detects any abnormal current values.

If the air fuel ratio sensor output is 3.6 mA or more for more than 3 seconds of cumulative time, the ECM interprets this as a malfunction in the air fuel ratio sensor and sets DTC P2195 (high-side stuck). If the air fuel ratio sensor output is less than 1.0 mA for more than 3 seconds of cumulative time, the ECM sets DTC P2196 (low-side stuck).

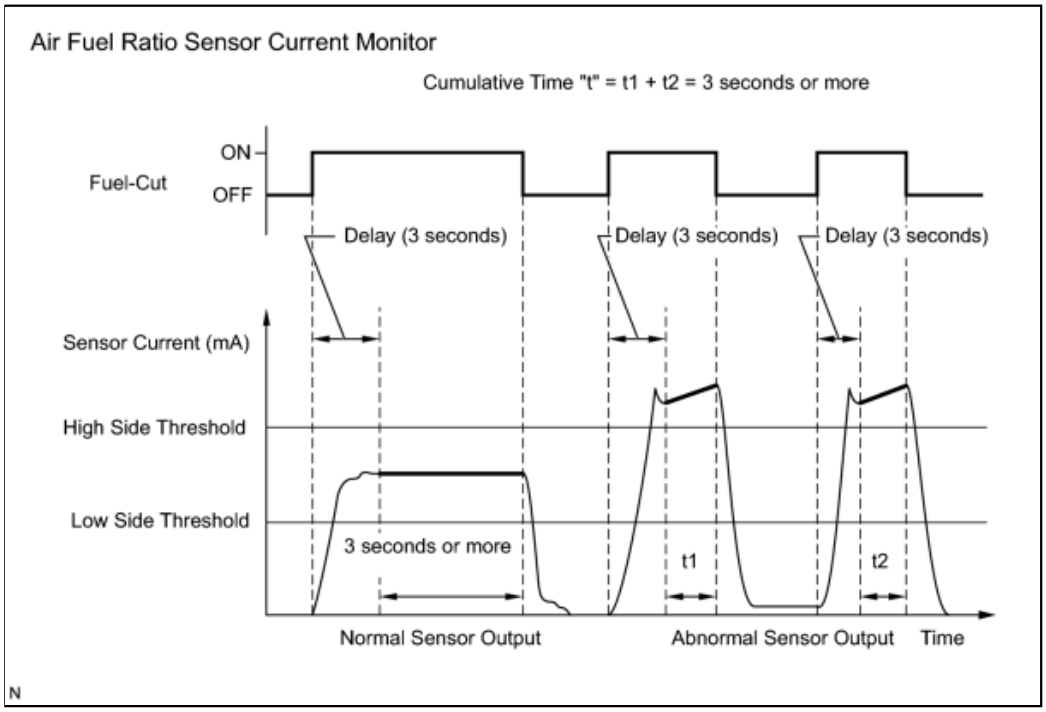

MONITOR STRATEGY

Related DTCs	P2195: Air fuel ratio sensor (Bank 1) signal stuck lean P2196: Air fuel ratio sensor (Bank 1) signal stuck rich
Required Sensors/Components (Main)	Air fuel ratio sensor
Required Sensors/Components (Related)	Heated oxygen sensor
Frequency of Operation	Continuous
Duration	10 seconds: Sensor voltage detection monitor 3 seconds: Sensor current detection monitor
MIL Operation	2 driving cycles
Sequence of Operation	None

TYPICAL ENABLING CONDITIONS

ALL

Monitor runs whenever following DTCs are not present	P0016 (VVT System Bank 1 - Misalignment) P0031, P0032 (Air Fuel Ratio Sensor Heater - Sensor 1)

	P0102, P0103 (Mass Air Flow Meter) P0112, P0113 (Intake Air Temperature Sensor) P0115, P0117, P0118 (Engine Coolant Temperature Sensor) P0120, P0121, P0122, P0123, P0220, P0222, P0223, P2135 (Throttle Position Sensor) P0125 (Insufficient Engine Coolant Temperature for Closed Loop) P0128 (Thermostat) P0171, P0172 (Fuel System) P0301, P0302, P0303, P0304 (Misfire) P0335 (Crankshaft Position Sensor) P0340 (Camshaft Position Sensor) P0451, P0452, P0453 (EVAP System) P0500 (Vehicle Speed Sensor) P0505 (IAC Valve)

Sensor Voltage Detection Monitor (Lean Side Malfunction P2195)

Time while all of following conditions met	2 seconds or more
Rear heated oxygen sensor voltage	0.15 V or more
Time after engine start	30 seconds or more
Air fuel ratio sensor status	Activated
Fuel system status	Closed-loop
Engine	Running

Sensor Voltage Detection Monitor (Rich Side Malfunction P2196)

Time while all of following conditions met	2 seconds or more
Rear heated oxygen sensor voltage	Below 0.6 V
Time after engine start	30 seconds or more
Air fuel ratio sensor status	Activated
Fuel system status	Closed-loop
Engine	Running

Sensor Current Detection Monitor (P2195, P2196)

Battery voltage	11 V or more
Atmospheric pressure	76 kPa (570 mmHg) or higher
Air-fuel ratio sensor status	Activated
Engine coolant temperature	75°C (167°F) or more
Continuous time of fuel cut	3 to 10 seconds

TYPICAL MALFUNCTION THRESHOLDS

Sensor Voltage Detection Monitor (Lean Side Malfunction P2195)

Air-fuel ratio sensor voltage	More than 3.8 V for 10 seconds

Sensor Voltage Detection Monitor (Rich Side Malfunction P2196)

Air-fuel ratio sensor voltage	Less than 2.8 V for 10 seconds

Sensor Current Detection Monitor (High Side Malfunction P2195)

Air-fuel ratio sensor current during fuel cut	3.6 mA or more

Sensor Current Detection Monitor (Low Side Malfunction P2196)

Air-fuel ratio sensor current during fuel cut	Less than 1.0 mA

MONITOR RESULT

Refer to Checking Monitor Status INFO .

WIRING DIAGRAM

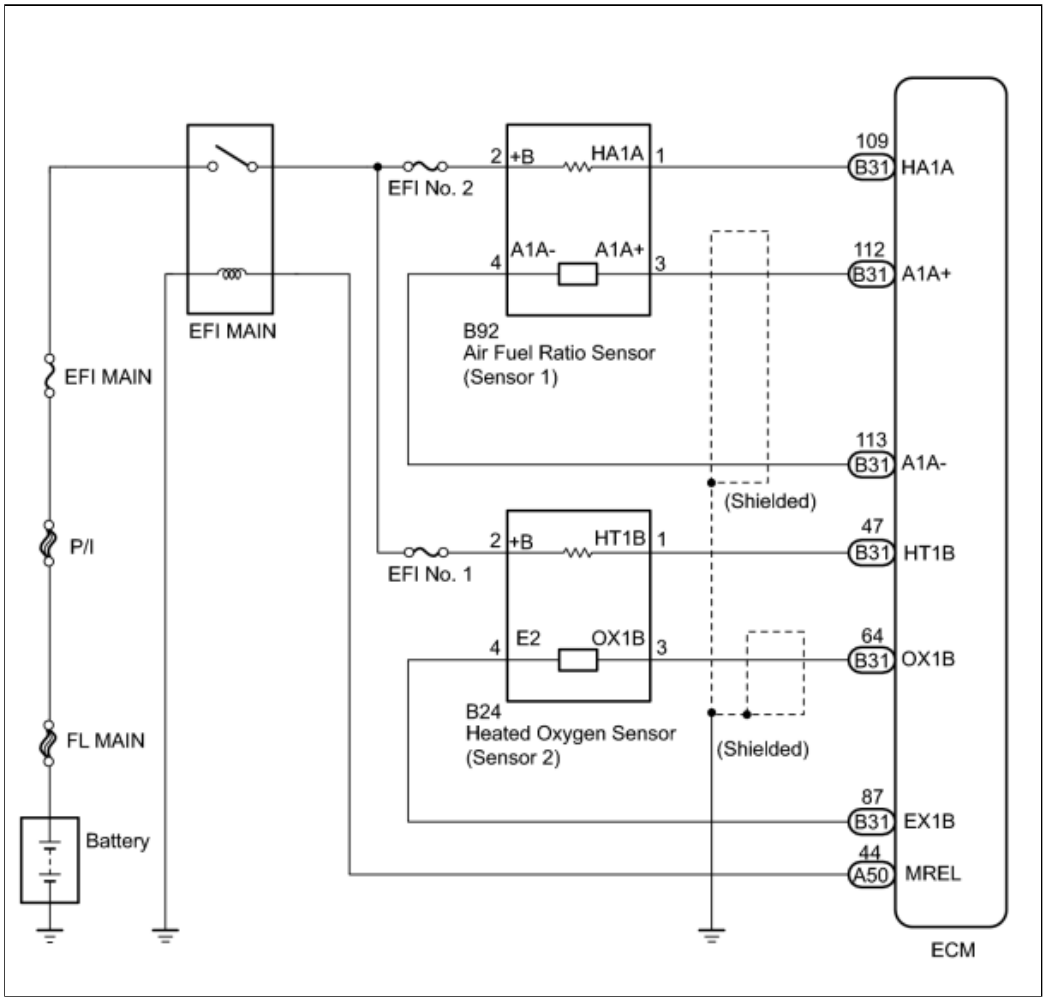

CONFIRMATION DRIVING PATTERN

This confirmation driving pattern is used in the "Perform Confirmation Driving Pattern" procedure of the following diagnostic troubleshooting procedure.

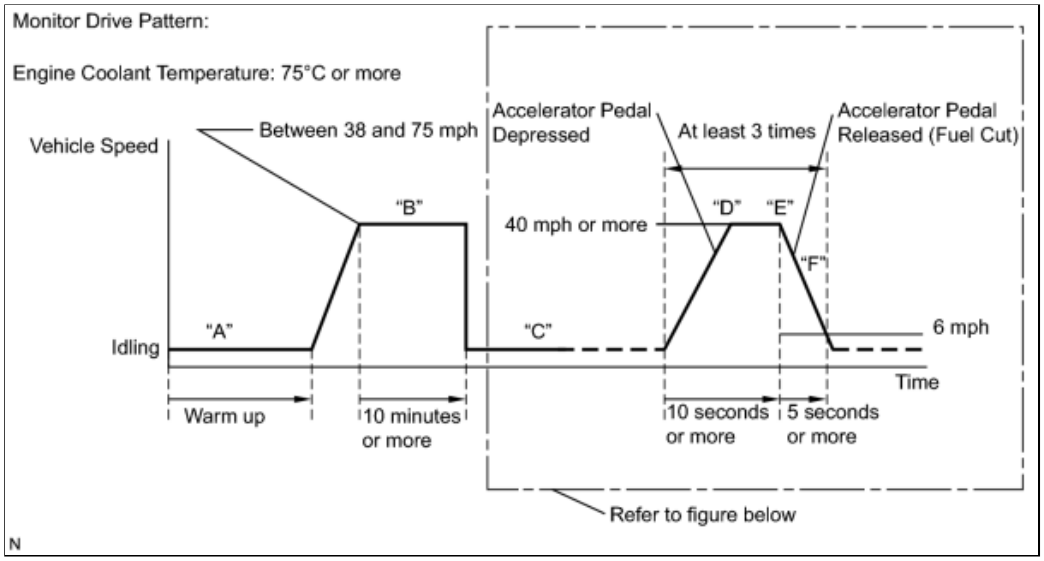

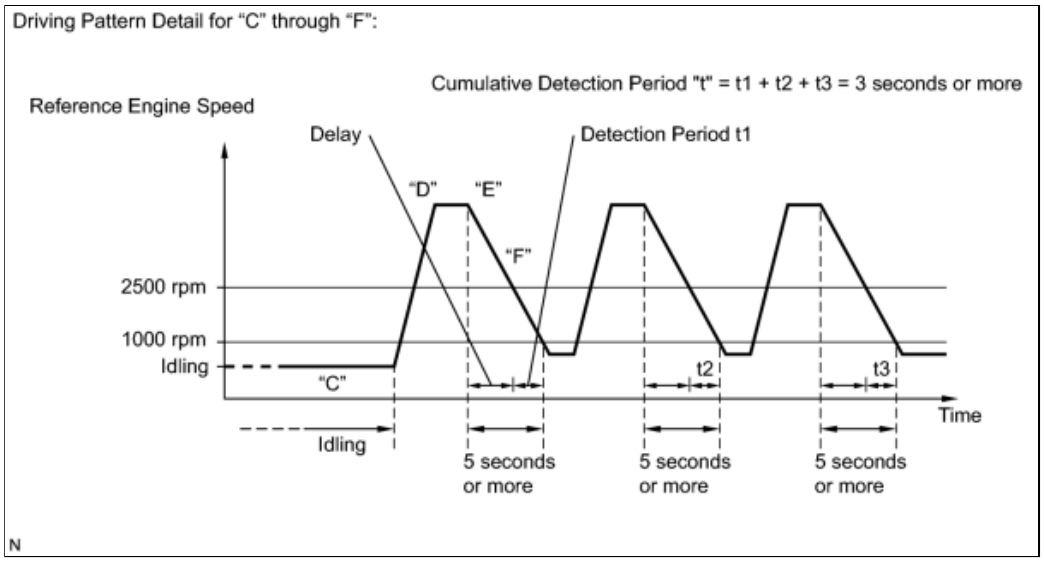

1. Connect the Techstream to the DLC3.
2. Turn the ignition switch to ON.
3. Turn the Techstream on.
4. Clear the DTCs (even if no DTCs are stored, perform the clear DTC procedure) INFO .
5. Turn the ignition switch off.
6. Turn the ignition switch to ON and turn the Techstream on.
7. Start the engine, and warm it up until the ECT reaches 75°C (167°F) or more (Step "A").
8. On Techstream, enter the following menus to check the fuel-cut status: Powertrain / Engine and ECT / Data List / Idle Fuel Cut.
9. Drive the vehicle at between 38 and 75 mph (60 and 120 km/h) for at least 10 minutes (Step "B").

CAUTION:

When performing the confirmation driving pattern, obey all speed limits and traffic laws.

10. Shift the transmission to 2nd gear (Step "C").
11. Accelerate the vehicle to 40 mph (64 km/h) or more by depressing the accelerator pedal for at least 10 seconds (Step "D").
12. Soon after performing step "D" above, release the accelerator pedal for at least 4 seconds without depressing the brake pedal in order to execute fuel-cut control (Step "E").

HINT:

Fuel-cut is performed when the following conditions are met:

- Accelerator pedal is fully released.

- Engine speed is 2500 rpm or more (fuel injection returns at 1000 rpm).

13. Allow the vehicle to decelerate until the vehicle speed decreases to less than 6 mph (10 km/h).
14. Repeat steps "C" through "E" above at least 3 times in one driving cycle.
15. Enter the following menus: Powertrain / Engine and ECT / Utility / All Readiness.
16. Input the DTC: P2195 or P2196.
17. Check the DTC judgment result [F].

TECHSTREAM DISPLAY	DESCRIPTION
NORMAL	• DTC judgment completed • System normal
ABNORMAL	• DTC judgment completed • System abnormal
INCOMPLETE	• DTC judgment not completed • Perform driving pattern after confirming DTC enabling conditions
UNKNOWN	• Unable to perform DTC judgment • Number of DTCs which do not fulfill DTC preconditions has reached ECU memory limit

HINT:

- If the judgment result shows ABNORMAL, the system has a malfunction.
- If the judgment result shows INCOMPLETE or UNKNOWN, perform steps "B" through "F".

18. If the test result is UNKNOWN, enter the following menus: Powertrain / Engine and ECT / Trouble Codes / Pending.
19. Read Pending DTCs.

HINT:

If a pending DTC is output, the system is malfunctioning.

20. If the test result is INCOMPLETE or UNKNOWN and no pending DTC is output, perform a universal trip and check for permanent DTCs INFO .

HINT:

- If a permanent DTC is output, the system is malfunctioning.
- If no permanent DTC is output, the system is normal.

INSPECTION PROCEDURE

HINT:

Malfunctioning areas can be identified by performing the Control the Injection Volume for A/F sensor function provided in the Active Test. The Control the Injection Volume for A/F sensor function can help to determine whether the Air Fuel Ratio sensor, Heated Oxygen sensor and other potential trouble areas are malfunctioning.

The following instructions describe how to conduct the Control the Injection Volume for A/F sensor operation using the Techstream.

1. Connect the Techstream to the DLC3.
2. Start the engine.
3. Turn the Techstream on.
4. Warm up the engine at an engine speed of 2500 rpm for approximately 90 seconds.
5. Enter the following menus: Powertrain / Engine and ECT / Active Test / Control the Injection Volume for A/F sensor.
6. Perform the Active Test operation with the engine in an idling condition (press the RIGHT or LEFT button to change the fuel injection volume.)
7. Monitor the output voltages of the air fuel ratio and heated oxygen sensors (AFS Voltage B1 S1 and O2S B1 S2)

displayed on the Techstream.

HINT:

- The Control the Injection Volume for A/F sensor operation lowers the fuel injection volume by 12.5% or increases the injection volume by 25%.
- Each sensor reacts in accordance with increases and decreases in the fuel injection volume.

TECHSTREAM DISPLAY (SENSOR)	INJECTION VOLUME	STATUS	VOLTAGE
AFS Voltage B1 S1 (Air fuel ratio sensor)	+25%	Rich	Less than 3.1 V
	-12.5%	Lean	More than 3.4 V
O2S B1 S2 (Heated oxygen sensor)	+25%	Rich	More than 0.55 V
	-12.5%	Lean	Less than 0.4 V

NOTICE:

The air fuel ratio sensor has an output delay of a few seconds and the heated oxygen sensor has a maximum output delay of approximately 20 seconds.

CASE	AIR FUEL RATIO SENSOR (SENSOR 1) OUTPUT VOLTAGE	HEATED OXYGEN SENSOR (SENSOR 2) OUTPUT VOLTAGE	MAIN SUSPECTED TROUBLE AREA
1	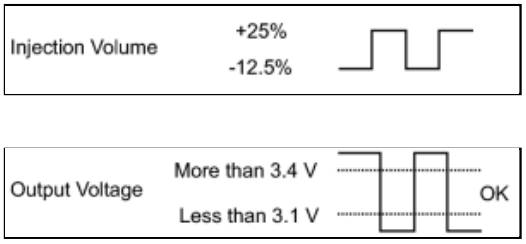	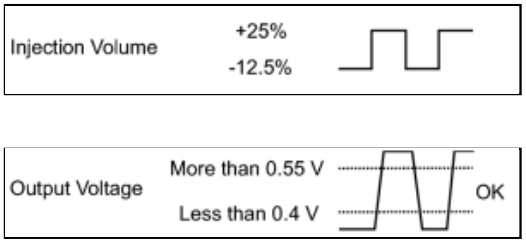	-
2	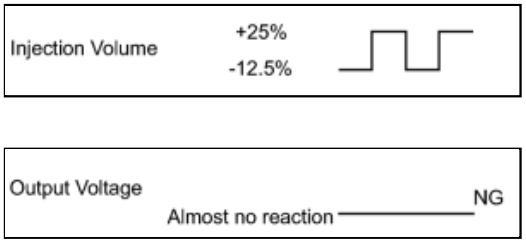	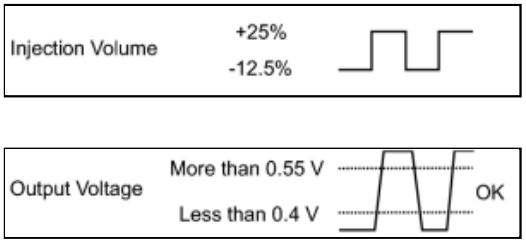	• Air fuel ratio sensor • Air fuel ratio sensor heater • Air fuel ratio sensor circuit
3	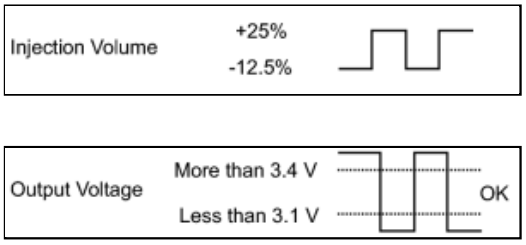	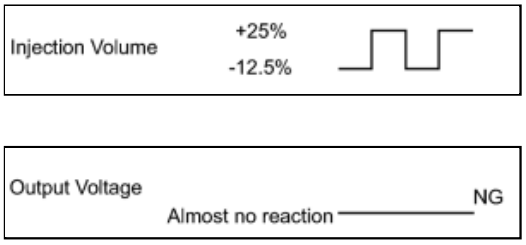	• Heated oxygen sensor • Heated oxygen sensor heater • Heated oxygen sensor circuit

CASE	AIR FUEL RATIO SENSOR (SENSOR 1) OUTPUT VOLTAGE	HEATED OXYGEN SENSOR (SENSOR 2) OUTPUT VOLTAGE	MAIN SUSPECTED TROUBLE AREA
4	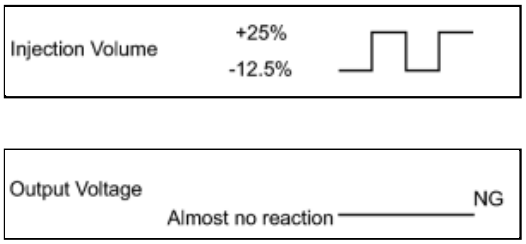	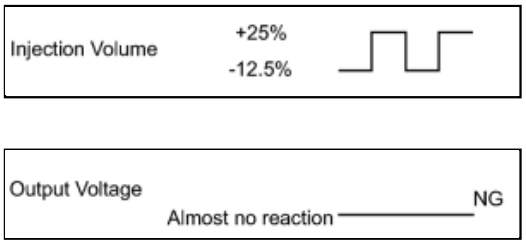	• Injector • Fuel pressure • Gas leak from exhaust system (Air fuel ratio extremely rich or lean)

- Following the Control the Injection Volume for air fuel ratio sensor procedure enables technicians to check and graph the voltage outputs of both the air fuel ratio and heated oxygen sensors.
- To display the graph, enter the following menus: Powertrain / Engine and ECT / Active Test / Control the Injection Volume for A/F Sensor / A/F Control System / AFS Voltage B1 S1 and O2S B1 S2; then press the graph button on the Data List view.

HINT:

- Read freeze frame data using the Techstream. The ECM records vehicle and driving condition information as freeze frame data the moment a DTC is stored. When troubleshooting, freeze frame data can be helpful in determining whether the vehicle was running or stopped, whether the engine was warmed up or not, whether the air fuel ratio was lean or rich, as well as other data recorded at the time of a malfunction.
- A low air fuel ratio sensor voltage could be caused by a rich air fuel mixture. Check for conditions that would cause the engine to run rich.
- A high air fuel ratio sensor voltage could be caused by a lean air fuel mixture. Check for conditions that would cause the engine to run lean.

PROCEDURE

1.	**CHECK ANY OTHER DTCS OUTPUT (IN ADDITION TO P2195 OR P2196)**

(a) Connect the Techstream to the DLC3.

(b) Turn the ignition switch to ON.

(c) Turn the Techstream on.

(d) Enter the following menus: Powertrain / Engine and ECT / Trouble Codes.

(e) Read DTCs.

Result:

RESULT	PROCEED TO
P2195 or P2196	A
P2195 or P2196 and other DTCs	B

HINT:

If any DTCs other than P2195 and P2196 are output, troubleshoot those DTCs first.

B GO TO DTC CHART

A

2.	READ VALUE USING TECHSTREAM (TEST VALUE OF AIR FUEL RATIO SENSOR)

(a) Connect the Techstream to the DLC3.

(b) Turn the ignition switch to ON.

(c) Turn the Techstream on.

(d) Clear the DTCs INFO.

(e) Allow the vehicle to drive in accordance with the drive pattern described in the Confirmation Driving Pattern.

(f) Enter the following menus: Powertrain / Engine and ECT / Monitor / O2 Sensor.

(g) Check that the status of O2 Sensor is Complete.

If the status is still Incomplete, perform the drive pattern increasing the vehicle speed and using the second gear to decelerate the vehicle.

(h) Enter the following menus: Powertrain / Engine and ECT / Monitor / O2 Sensor / Details / RANGE B1 S1.

(i) Check the test value of the air fuel ratio sensor output current during fuel-cut.

Result:

RESULT	PROCEED TO
Within normal range (1.0 mA or more, and less than 3.6 mA)	A
Outside normal range (Less than 1.0 mA, or 3.6 mA or more)	B

B REPLACE AIR FUEL RATIO SENSOR

A

3.	READ VALUE USING TECHSTREAM (OUTPUT VOLTAGE OF AIR FUEL RATIO SENSOR)

(a) Connect the Techstream to the DLC3.

(b) Start the engine.

(c) Turn the Techstream on.

(d) Warm up the air-fuel ratio sensor at an engine speed of 2500 rpm for 90 seconds.

(e) Enter the following menus: Powertrain / Engine and ECT / Data List / A/F Control System / AFS Voltage B1 S1 and Engine Speed, then press the Record button.

(f) Check the air fuel ratio sensor voltage three times, when the engine is in each of the following conditions:

(1) While idling (check for at least 30 seconds)
(2) At an engine speed of approximately 2500 rpm (without any sudden changes in engine speed)
(3) Raise the engine speed to 4000 rpm and then quickly release the accelerator pedal so that the throttle valve is fully closed.

Standard:

CONDITION	AIR FUEL RATIO SENSOR VOLTAGE VARIATION	REFERENCE
(1) and (2)	Changes at approximately 3.3 V	Between 3.1 V and 3.5 V
(3)	Increases to 3.8 V or more	This occurs during engine deceleration (when fuel-cut performed)

HINT:

For more information, see the diagrams below.

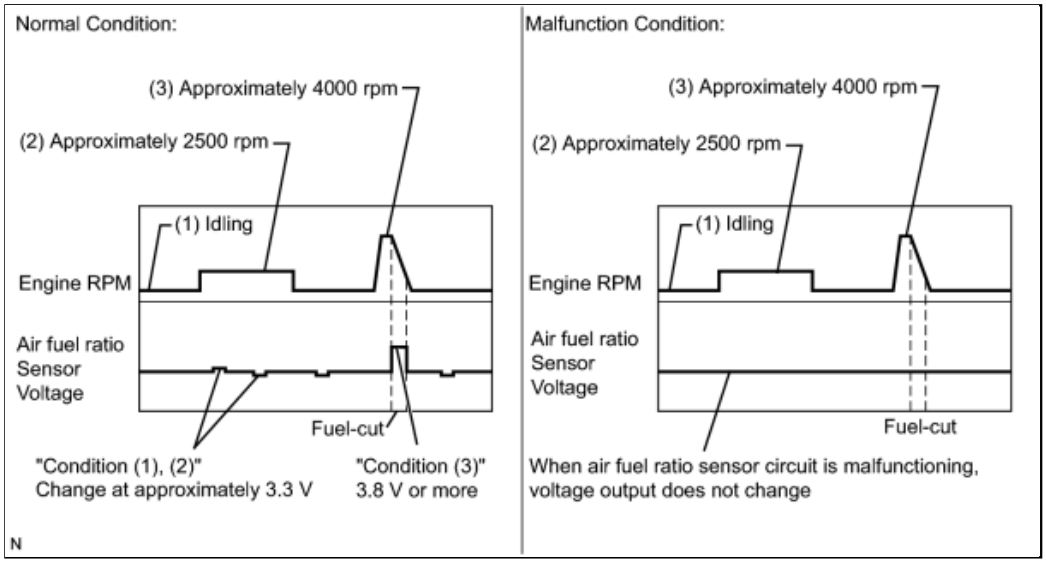

HINT:

- If the output voltage of the air fuel ratio sensor remains at approximately 3.3 V (see Malfunction Condition diagram) under any conditions, including those above, the air fuel ratio sensor may have an open circuit. (This will also happen if the air fuel ratio sensor heater has an open circuit.)
- If the output voltage of the air fuel ratio sensor remains at either approximately 3.8 V or more, or 2.8 V or less (see Malfunction Condition diagram) under any conditions, including those above, the air fuel ratio sensor may have a short circuit.
- The ECM stops fuel injection (fuel cut) during engine deceleration. This causes a lean condition and results in a momentary increase in the air fuel ratio sensor output voltage.
- The ECM must establish a closed throttle valve position learning value to perform fuel cut. If the battery terminal has been reconnected, the vehicle must be driven over 10 mph (16 km/h) to allow the ECM to learn the closed throttle valve position.
- When the vehicle is driven:

  The output voltage of the air fuel ratio sensor may be below 2.8 V during fuel enrichment. For the vehicle, this translates to a sudden increase in speed with the accelerator pedal fully depressed when trying to overtake another vehicle. The air fuel ratio sensor is functioning normally.
- The air fuel ratio sensor is a current output element; therefore, the current is converted into a voltage inside the ECM. Measuring the voltage at the connectors of the air fuel ratio sensor or ECM will show a constant voltage result.

NG ▶ **INSPECT AIR FUEL RATIO SENSOR (HEATER RESISTANCE)**

OK

4.	**PERFORM CONFIRMATION DRIVING PATTERN**

NEXT

5.	**CHECK WHETHER DTC OUTPUT RECURS (DTC P2195 OR P2196)**

(a) Connect the Techstream to the DLC3.

(b) Turn the ignition switch to ON.

(c) Turn the Techstream on.

(d) Enter the following menus: Powertrain / Engine and ECT / Trouble Codes.

(e) Read DTCs.

Result:

RESULT	PROCEED TO
P2195 or P2196	A
No output	B

B **CONFIRM IF VEHICLE HAS RUN OUT OF FUEL IN PAST**

A

6.	**REPLACE AIR FUEL RATIO SENSOR**

(a) Replace the air fuel ratio sensor INFO .

NEXT

7.	**PERFORM CONFIRMATION DRIVING PATTERN**

NEXT

8.	**CHECK WHETHER DTC OUTPUT RECURS (DTC P2195 OR P2196)**

(a) Connect the Techstream to the DLC3.

(b) Turn the ignition switch to ON.

(c) Turn the Techstream on.

(d) Enter the following menus: Powertrain / Engine and ECT / Trouble Codes.

(e) Read DTCs.

Result:

RESULT	PROCEED TO
No output	A
P2195 or P2196	B

B **REPLACE ECM**

A

9.	**CONFIRM IF VEHICLE HAS RUN OUT OF FUEL IN PAST**

NO **CHECK FOR INTERMITTENT PROBLEMS**

YES **DTC CAUSED BY RUNNING OUT OF FUEL**

10.	**INSPECT AIR FUEL RATIO SENSOR (HEATER RESISTANCE)** INFO

NG **REPLACE AIR FUEL RATIO SENSOR**

OK

11.	**CHECK HARNESS AND CONNECTOR (AIR FUEL RATIO SENSOR - ECM)**

(a) Disconnect the air fuel ratio sensor connector.

(b) Disconnect the ECM connector.

(c) Measure the resistance according to the value(s) in the table below.

Standard Resistance (Check for Open):

TESTER CONNECTION	CONDITION	SPECIFIED CONDITION
B92-1 (HA1A) - B31-109 (HA1A)	Always	Below 1 Ω
B92-3 (A1A+) - B31-112 (A1A+)		
B92-4 (A1A-) - B31-113 (A1A-)		

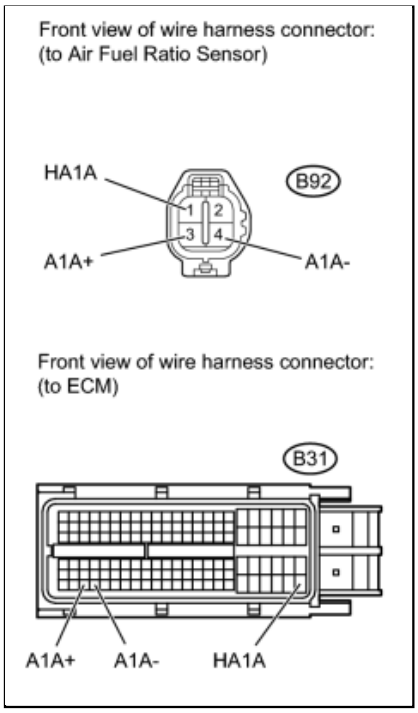

Standard Resistance (Check for Short):

TESTER CONNECTION	CONDITION	SPECIFIED CONDITION
B92-1 (HA1A) or B31-109 (HA1A) - Body ground	Always	10 kΩ or higher
B92-3 (A1A+) or B31-112 (A1A+) - Body ground		
B92-4 (A1A-) or B31-113 (A1A-) - Body ground		

(d) Reconnect the air fuel ratio sensor connector.

(e) Reconnect the ECM connector.

NG ▶ **REPAIR OR REPLACE HARNESS OR CONNECTOR (AIR FUEL RATIO SENSOR - ECM)**

OK ▼

12.	CHECK INTAKE SYSTEM

(a) Check the intake system for vacuum leaks INFO .

OK:

No leaks in intake system.

NG ▶ **REPAIR OR REPLACE INTAKE SYSTEM**

OK ▼

13.	CHECK FUEL PRESSURE

(a) Check the fuel pressure INFO .

NG ▶ REPAIR OR REPLACE FUEL SYSTEM

OK ▼

14.	INSPECT FUEL INJECTOR

(a) Check the injector injection (whether fuel volume is high or low, and whether injection pattern is poor) INFO .

NG ▶ REPLACE FUEL INJECTOR

OK ▼

15.	REPLACE AIR FUEL RATIO SENSOR

(a) Replace the air fuel ratio sensor INFO .

NEXT ▼

16.	PERFORM CONFIRMATION DRIVING PATTERN

NEXT ▼

17.	CHECK WHETHER DTC OUTPUT RECURS (DTC P2195 OR P2196)

(a) Connect the Techstream to the DLC3.

(b) Turn the ignition switch to ON.

(c) Turn the Techstream on.

(d) Enter the following menus: Powertrain / Engine and ECT / Trouble Codes / Pending.

(e) Read DTCs.

Result:

RESULT	PROCEED TO
No output	A
P2195 or P2196	B

B ▶ **REPLACE ECM**

A ▼

18.	**CONFIRM IF VEHICLE HAS RUN OUT OF FUEL IN PAST**

NO ▶ **CHECK FOR INTERMITTENT PROBLEMS**

YES ▶ **DTC CAUSED BY RUNNING OUT OF FUEL**

19.	**REPLACE AIR FUEL RATIO SENSOR**

(a) Replace the air fuel ratio sensor INFO .

NEXT ▼

20.	**PERFORM CONFIRMATION DRIVING PATTERN**

NEXT ▼

21.	**CHECK WHETHER DTC OUTPUT RECURS (DTC P2195 OR P2196)**

(a) Connect the Techstream to the DLC3.

(b) Turn the ignition switch to ON.

(c) Turn the Techstream on.

(d) Enter the following menus: Powertrain / Engine and ECT / Trouble Codes.

(e) Read DTCs.

Result:

RESULT	PROCEED TO
No output	A
P2195 or P2196 (Air fuel ratio sensor pending DTCs)	B

B ▶ **REPLACE ECM**

A ▶ **END**

Last Modified: 3-10-2010	6.4 C	**From:** 200901
Model Year: 2010	**Model:** Corolla	**Doc ID:** RM000000PFZ0ALX
Title: 2AZ-FE ENGINE CONTROL: SFI SYSTEM: P2121: Throttle / Pedal Position Sensor / Switch "D" Circuit Range / Performance (2010 Corolla)		

DTC	**P2121**	**Throttle / Pedal Position Sensor / Switch "D" Circuit Range / Performance**

DESCRIPTION

HINT:

- This DTC relates to the Accelerator Pedal Position (APP) sensor.

Refer to DTC P2120 INFO .

DTC NO.	DTC DETECTION CONDITION	TROUBLE AREA
P2121	Difference between VPA and VPA2 less than 0.4 V, or more than 1.2 V for 0.5 seconds (1 trip detection logic)	• Accelerator pedal position sensor • ECM

MONITOR DESCRIPTION

The accelerator pedal position sensor is mounted on the accelerator pedal bracket. The accelerator pedal position sensor has 2 sensor elements and 2 signal outputs: VPA and VPA2. VPA is used to detect the actual accelerator pedal angle (used for engine control) and VPA2 is used to detect malfunctions in VPA. When the difference between the output voltages of VPA and VPA2 deviates from the standard, the ECM determines that the accelerator pedal position sensor is malfunctioning. The ECM turns on the MIL and the DTC is set.

MONITOR STRATEGY

Related DTCs	P2121: Accelerator pedal position sensor rationality
Required Sensors/Components (Main)	Accelerator pedal position sensor
Required Sensors/Components (Related)	-
Frequency of Operation	Continuous
Duration	0.5 seconds
MIL Operation	Immediate
Sequence of Operation	None

TYPICAL ENABLING CONDITIONS

Monitor runs whenever following DTCs are not present	None
Either of following conditions 1 or 2 met:	-
1. Time after Ignition switch OFF to ON	0.012 seconds or more
2. Electronic throttle actuator power	ON

TYPICAL MALFUNCTION THRESHOLDS

Difference between VPA voltage (learned value) and VPA2 voltage (learned value)	Less than 0.4 V, or more than 1.2 V

CONFIRMATION DRIVING PATTERN

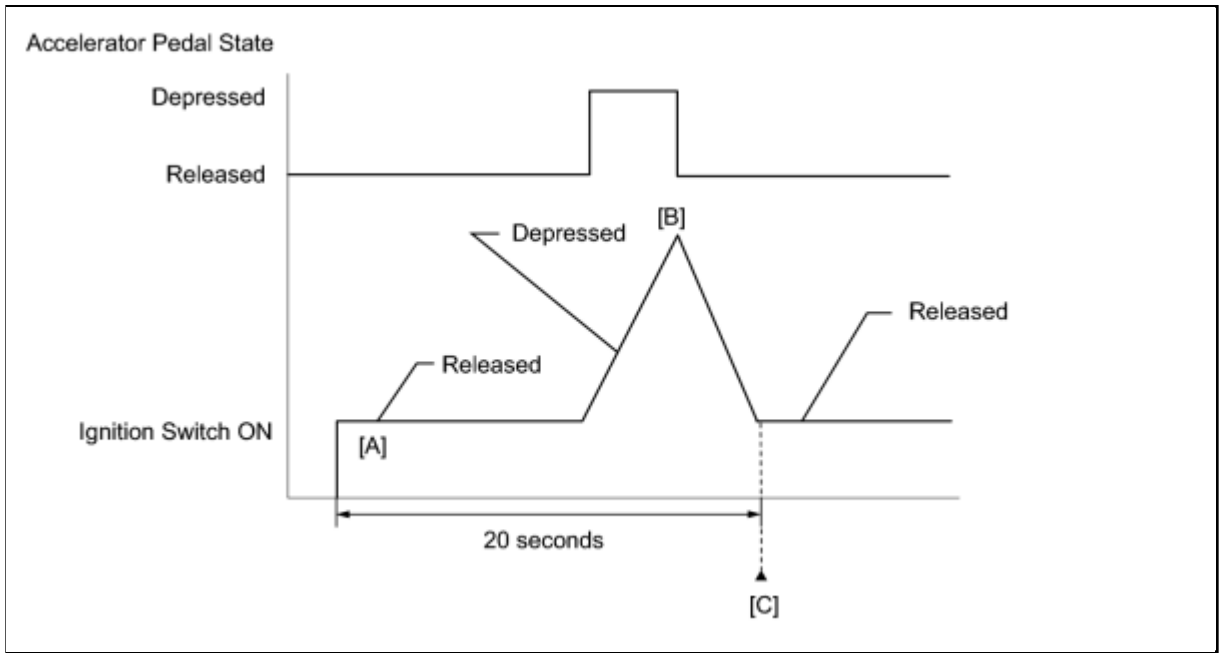

1. Connect the Techstream to the DLC3.
2. Turn the ignition switch to ON and turn the Techstream ON.
3. Clear the DTCs (even if no DTCs are stored, perform the clear DTC procedure) INFO .
4. Turn the ignition switch off.
5. Turn the ignition switch to ON and turn the Techstream on [A].
6. Fully depress and release the accelerator pedal [B].
7. Check that 20 seconds or more have elapsed since the DTCs were cleared.
8. Enter the following menus: Powertrain / Engine and ECT / Utility / All Readiness.
9. Input the DTC: P2121.
10. Check the DTC judgment result [C].

TECHSTREAM DISPLAY	DESCRIPTION
NORMAL	○ DTC judgment completed ○ System normal
ABNORMAL	○ DTC judgment completed ○ System abnormal
INCOMPLETE	○ DTC judgment not completed ○ Perform driving pattern after confirming DTC enabling conditions
UNKNOWN	○ Unable to perform DTC judgment ○ Number of DTCs which do not fulfill DTC preconditions has reached ECU memory limit

HINT:

- If the judgment result shows ABNORMAL, the system has a malfunction.
- If the judgment result shows INCOMPLETE or UNKNOWN, perform steps [B] and [C] again.

11. If the test result is UNKNOWN, enter the following menus: Powertrain / Engine and ECT / Trouble Codes / Pending.
12. Read Pending DTCs.

HINT:

If a pending DTC is output, the system is malfunctioning.

13. If the test result is INCOMPLETE or UNKNOWN and no pending DTC is output, perform a universal trip and check for permanent DTCs INFO .

HINT:

- If a permanent DTC is output, the system is malfunctioning.
- If no permanent DTC is output, the system is normal.

FAIL-SAFE

The accelerator pedal position sensor has two (main and sub) sensor circuits. If a malfunction occurs in either of the sensor circuits, the ECM detects the abnormal signal voltage difference between the two sensor circuits and switches to limp mode. In limp mode, the functioning circuit is used to calculate the accelerator pedal opening angle to allow the vehicle to continue driving. If both circuits malfunction, the ECM regards the opening angle of the accelerator pedal as being fully closed. In this case, the throttle valve remains closed as if the engine is idling.

If a pass condition is detected and then the ignition switch is turned to off, the fail-safe operation stops and the system returns to a normal condition.

WIRING DIAGRAM

Refer to DTC P2120 INFO .

INSPECTION PROCEDURE

HINT:

Read freeze frame data using the Techstream. The ECM records vehicle and driving condition information as freeze frame data the moment a DTC is stored. When troubleshooting, freeze frame data can be helpful in determining whether the vehicle was running or stopped, whether the engine was warmed up or not, whether the air fuel ratio was lean or rich, as well as other data recorded at the time of a malfunction.

PROCEDURE

1.	**CHECK ANY OTHER DTCS OUTPUT (IN ADDITION TO DTC P2121)**

(a) Connect the Techstream to the DLC3.

(b) Turn the ignition switch to ON.

(c) Turn the Techstream on.

(d) Enter the following menus: Powertrain / Engine and ECT / Trouble Codes.

(e) Read DTCs.

Result:

RESULT	PROCEED TO
P2121	A
P2121 and other DTCs	B

HINT:

If any DTCs other than P2121 are output, troubleshoot those DTCs first.

B ▶ **GO TO DTC CHART**

A ▼

2.	**READ VALUE USING TECHSTREAM (ACCELERATOR POSITION SENSOR)** INFO

NG ▶ **REPLACE ACCELERATOR PEDAL ROD ASSEMBLY**

OK ▶ CHECK FOR INTERMITTENT PROBLEMS

3.	REPLACE ACCELERATOR PEDAL ROD ASSEMBLY

(a) Replace the accelerator pedal rod assembly INFO .

NEXT ▼

4.	CHECK WHETHER DTC OUTPUT RECURS (ACCELERATOR PEDAL POSITION SENSOR DTCS)

(a) Connect the Techstream to the DLC3.

(b) Turn the ignition switch to ON.

(c) Turn the Techstream on.

(d) Clear the DTCs INFO .

(e) Start the engine.

(f) Allow the engine to idle for 15 seconds.

(g) Fully depress and release the accelerator pedal several times quickly.

(h) Enter the following menus: Powertrain / Engine and ECT / Trouble Codes.

(i) Read DTCs.

Result:

RESULT	PROCEED TO
P2121	A
No output	B

B ▶ END

A ▶ REPLACE ECM

Last Modified: 3-10-2010	6.4 C	**From:** 200901
Model Year: 2010	**Model:** Corolla	**Doc ID:** RM0000028K604GX
Title: 2AZ-FE ENGINE CONTROL: SFI SYSTEM: P2237-P2239,P2252,P2253: Oxygen (A/F) Sensor Pumping Current Circuit / Open (Bank 1 Sensor 1) (2010 Corolla)		

DTC	**P2237**	**Oxygen (A/F) Sensor Pumping Current Circuit / Open (Bank 1 Sensor 1)**

DTC	**P2238**	**Oxygen (A/F) Sensor Pumping Current Circuit Low (Bank 1 Sensor 1)**

DTC	**P2239**	**Oxygen (A/F) Sensor Pumping Current Circuit High (Bank 1 Sensor 1)**

DTC	**P2252**	**Oxygen (A/F) Sensor Reference Ground Circuit Low (Bank 1 Sensor 1)**

DTC	**P2253**	**Oxygen (A/F) Sensor Reference Ground Circuit High (Bank 1 Sensor 1)**

DESCRIPTION

HINT:

- Although the DTC titles say oxygen sensor, these DTCs relate to the air fuel ratio sensor.
- Sensor 1 refers to the sensor mounted in front of the three-way catalytic converter and located near the engine assembly.

The air fuel ratio sensor, which is located between the exhaust manifold and catalyst, consists of alloyed metal elements and a heater.

Depending on the engine operating conditions, the heater heats the sensor elements to activate them. Battery voltage is applied to the heater, the sensor ground is controlled by the ECM using a duty ratio.

The sensor elements convert the oxygen concentration in the exhaust gas into voltage values to output. Based on the voltage, the ECM determines the air-fuel ratio and regulates the fuel injection volume depending on the air-fuel ratio and engine operating conditions. The voltage changes between 0.6 V and 4.5 V while the engine is running. If the air-fuel ratio is lean, which means the oxygen concentration in the exhaust gas is high, the voltage is high. If the air-fuel ratio is rich, which means the oxygen concentration in the exhaust gas is low, the voltage is low.

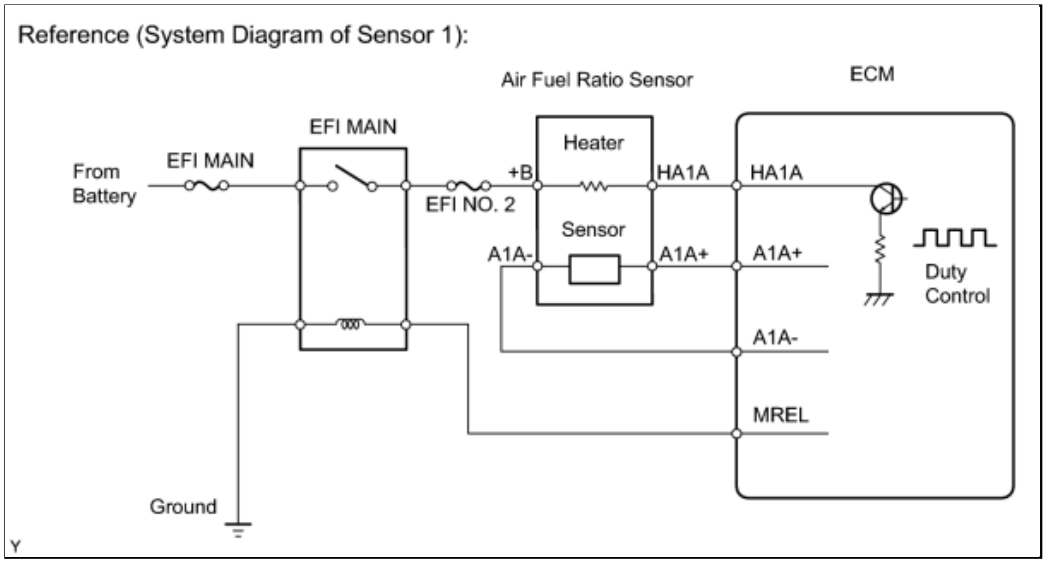

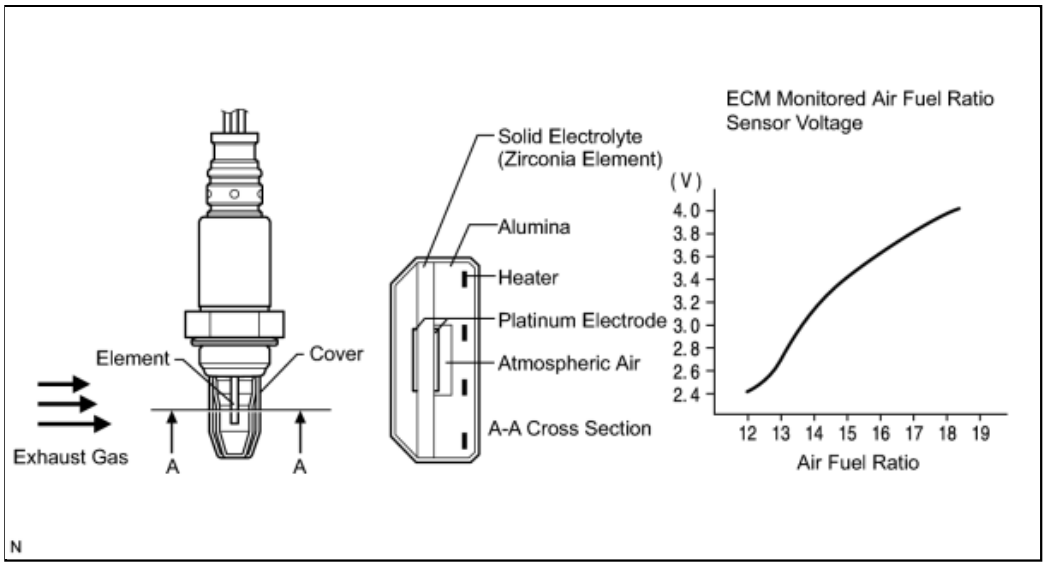

DTC NO.	DTC DETECTION CONDITION	TROUBLE AREA
P2237	Open in the circuit between terminals A1A+ and A1A- of the air fuel ratio sensor while engine is running (2 trip detection logic)	• Open in air fuel ratio sensor (sensor 1) circuit • Air fuel ratio sensor (sensor 1) • ECM
P2238	Any of the following conditions are met (2 trip detection logic) • Air fuel ratio sensor output drops while engine is running. • Voltage at terminal A1A+ is 0.5 V or less. • Voltage difference between terminals A1A+ and A1A- is 0.1 V or less.	• Open or short in air fuel ratio sensor (sensor 1) circuit • Air fuel ratio sensor (sensor 1) • ECM
P2251	A1A+ voltage more than 4.5 V (2 trip detection logic)	• Open or short in air fuel ratio sensor (sensor 1) circuit • Air fuel ratio sensor (sensor 1) • ECM

MONITOR DESCRIPTION

These DTCs are output when there is an open or short in the air fuel ratio sensor circuit, or the air fuel ratio sensor output drops. To detect these problems, the voltage of the air fuel ratio sensor is monitored when turning the ignition switch to the

ON position, and the admittance (admittance is an electrical term that indicates the ease of flow of current) is checked while driving. If the voltage of the air fuel ratio sensor is between 0.6 V and 4.5 V, it is considered normal. If the voltage is out of the specified range, or the admittance is less than the standard value, the ECM will determine that there is a malfunction in the air fuel ratio sensor. If the same malfunction is detected in next driving cycle, the MIL will be illuminated and a DTC will be stored.

MONITOR STRATEGY

Related DTCs	P2237: Air fuel ratio sensor open circuit between A1A+ and A1A- P2238: Air fuel ratio sensor short circuit between A1A+ and A1A- P2238: Air fuel ratio sensor short circuit between A1A+ and GND P2238: Air fuel ratio sensor low impedance P2239: Air fuel ratio sensor short circuit between A1A+ and +B P2252: Air fuel ratio sensor short circuit between A1A- and GND P2253: Air fuel ratio sensor short circuit between A1A- and +B
Required Sensors/Components (Main)	Air fuel ratio sensor
Required Sensors/Components (Related)	Engine coolant temperature sensor Crankshaft position sensor
Frequency of Operation	Continuous
Duration	10 seconds: P2237 (Open circuit) and P2238 (Low Impedance) 5 seconds: Other
MIL Operation	2 driving cycles
Sequence of Operation	None

TYPICAL ENABLING CONDITIONS

Monitor runs whenever following DTCs are not present	P0016 (VVT System Bank 1 - Misalignment) P0031, P0032 (Air Fuel Ratio Sensor Heater - Sensor 1) P0102, P0103 (Mass Air Flow Meter) P0112, P0113 (Intake Air Temperature Sensor) P0115, P0117, P0118 (Engine Coolant Temperature Sensor) P0120, P0121, P0122, P0123, P0220, P0222, P0223, P2135 (Throttle Position Sensor) P0125 (Insufficient Engine Coolant Temperature for Closed Loop) P0128 (Thermostat) P0171, P0172 (Fuel System) P0301, P0302, P0303, P0304 (Misfire) P0335 (Crankshaft Position Sensor) P0340 (Camshaft Position Sensor) P0451, P0452, P0453 (EVAP System) P0500 (Vehicle Speed Sensor) P0505 (IAC Valve)

P2237 (Air Fuel Ratio Sensor Open Circuit Between A1A+ and A1A-)

Estimated sensor temperature	450 to 550°C (842 to 1022°F)
Engine	Running
Battery voltage	11 V or more

P2238 (Air Fuel Ratio Sensor Low Impedance)

Estimated sensor temperature	700 to 800°C (1292 to 1472°F)
Engine coolant temperature	10°C (50°F) or higher
Fuel cut	No executed

Other

Battery voltage	11 V or more
Ignition switch	ON
Time after ignition switch is OFF to ON	5 seconds or more

TYPICAL MALFUNCTION THRESHOLDS

P2237 (Air Fuel Ratio Sensor Open Circuit Between A1A+ and A1A-)

Air fuel ratio sensor admittance	Below 0.002 1/Ω

P2238 (Air Fuel Ratio Sensor Low Impedance)

Air fuel ratio sensor admittance	Below 0.022 1/Ω

P2238 (Air Fuel Ratio Sensor Short Circuit Between A1A+ and GND)

A/F+ terminal voltage	0.5 V or less

P2239 (Air Fuel Ratio Sensor Short Circuit Between A1A+ and +B)

A/F+ terminal voltage	More than 4.5 V

P2252 (Air Fuel Ratio Sensor Short Circuit Between A1A- and GND)

A/F- terminal voltage	0.5 V or less

P2253 (Air Fuel Ratio Sensor Short Circuit Between A1A- and +B)

A/F- terminal voltage	More than 4.5 V

P2238 (Air Fuel Ratio Sensor Short Circuit Between A1A+ and A1A-)

Difference between A/F+ terminal and A/F- terminal voltage	0.1 V or less

COMPONENT OPERATING RANGE

Air fuel ratio sensor admittance	0.002 1/Ω or more
A1A+ terminal voltage	0.5 to 4.5 V
A1A- terminal voltage	0.5 to 4.5 V
Difference between A1A+ and A1A- terminal voltages	0.1 to 0.8 V

CONFIRMATION DRIVING PATTERN

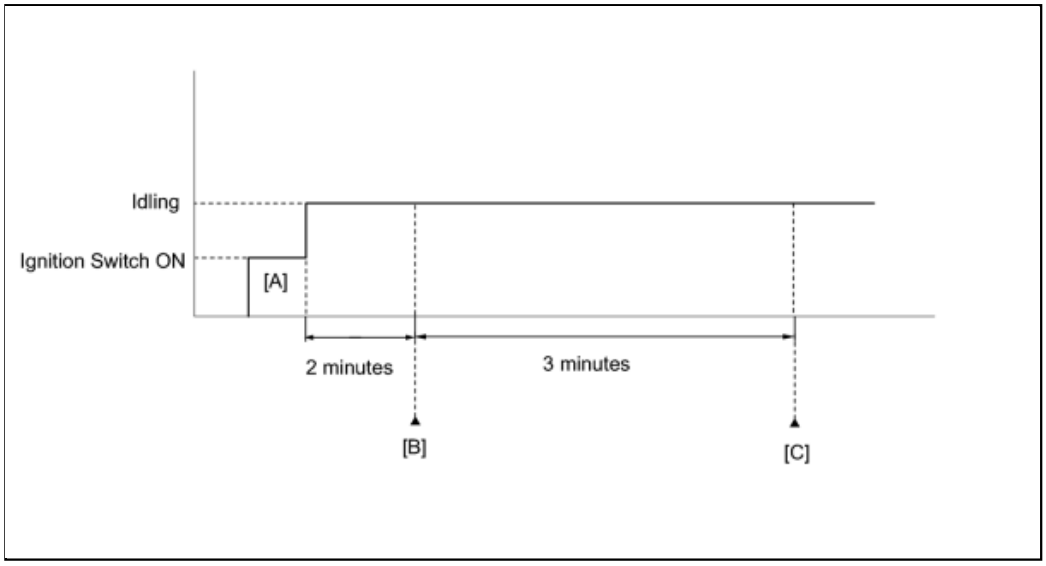

1. Connect the Techstream to the DLC3.
2. Turn the ignition switch to ON and turn the Techstream on.
3. Clear the DTCs (even if no DTCs are stored, perform the clear DTC procedure) INFO .
4. Turn the ignition switch off.
5. Turn the ignition switch to ON and turn the Techstream on [A].
6. Start the engine and wait 2 minutes.
7. Enter the following menus: Powertrain / Engine / Utility / All Readiness.
8. Input the DTC: P2237, P2238, P2239, P2252 or P2253.
9. Check the DTC judgment result [B].

TECHSTREAM DISPLAY	DESCRIPTION
NORMAL	○ DTC judgment completed ○ System normal
ABNORMAL	○ DTC judgment completed ○ System abnormal
INCOMPLETE	○ DTC judgment not completed ○ Perform driving pattern after confirming DTC enabling conditions
UNKNOWN	○ Unable to perform DTC judgment ○ Number of DTCs which do not fulfill DTC preconditions has reached ECU memory limit

HINT:

- If the judgment result shows ABNORMAL, the system has a malfunction.
- If the judgment result shows INCOMPLETE or UNKNOWN, idle the engine for 3 minutes and check the DTC judgment result again [C].

10. If the test result is UNKNOWN, enter the following menus: Powertrain / Engine / Trouble Codes / Pending.
11. Read Pending DTCs.

HINT:

If a pending DTC is output, the system is malfunctioning.

12. If the test result is INCOMPLETE or UNKNOWN and no pending DTC is output, perform a universal trip and check

for permanent DTCs INFO .

HINT:

- If a permanent DTC is output, the system is malfunctioning.
- If no permanent DTC is output, the system is normal.

WIRING DIAGRAM

Refer to DTC P2195 INFO .

INSPECTION PROCEDURE

HINT:

Malfunctioning areas can be identified by performing the Control the Injection Volume for A/F sensor Active Test. The Control the Injection Volume for A/F sensor function can help to determine whether the air fuel ratio sensor, heated oxygen sensor and other potential trouble areas are malfunctioning.

The following instructions describe how to conduct the Control the Injection Volume for A/F sensor operation using the Techstream.

1. Connect the Techstream to the DLC3.
2. Start the engine.
3. Turn the Techstream on.
4. Warm up the engine at 2500 rpm for approximately 90 seconds.
5. Enter the following menus: Powertrain / Engine and ECT / Active Test / Control the Injection Volume for A/F sensor.
6. Perform the Active Test operation with the engine in an idling condition (press the RIGHT or LEFT button to change the fuel injection volume.)
7. Monitor the output voltages of the air fuel and heated oxygen sensors (AFS Voltage B1 S1 and O2S B1 S2) displayed on the Techstream.

HINT:

- The Control the Injection Volume for A/F sensor active test lowers the fuel injection volume by 12.5% or increases the injection volume by 25%.
- Each sensor reacts in accordance with increases and decreases in the fuel injection volume.

TECHSTREAM DISPLAY (SENSOR)	INJECTION VOLUME	STATUS	VOLTAGE
AFS Voltage B1 S1 (Air Fuel Ratio)	+25%	Rich	Less than 3.1 V
	-12.5%	Lean	More than 3.4 V
O2S B1 S2 (Heated Oxygen)	+25%	Rich	More than 0.55 V
	-12.5%	Lean	Less than 0.4 V

NOTICE:

The air fuel ratio sensor has an output delay of a few seconds and the heated oxygen sensor has a maximum output delay of approximately 20 seconds.

CASE	AIR FUEL RATIO SENSOR (SENSOR 1) OUTPUT VOLTAGE	HEATED OXYGEN SENSOR (SENSOR 2) OUTPUT VOLTAGE	MAIN SUSPECTED TROUBLE AREA
1			-

CASE	AIR FUEL RATIO SENSOR (SENSOR 1) OUTPUT VOLTAGE	HEATED OXYGEN SENSOR (SENSOR 2) OUTPUT VOLTAGE	MAIN SUSPECTED TROUBLE AREA
	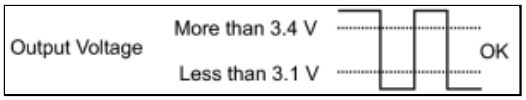	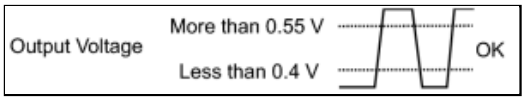	
2	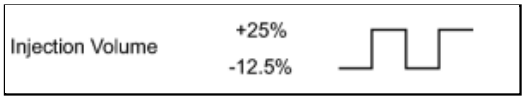 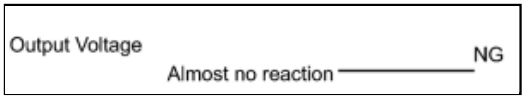	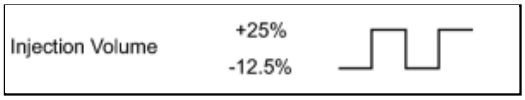 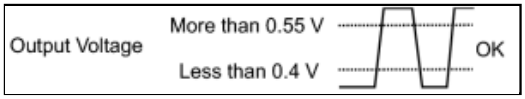	• Air fuel ratio sensor • Air fuel ratio sensor heater • Air fuel ratio sensor circuit
3	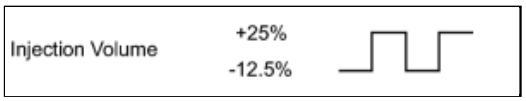 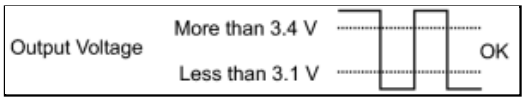	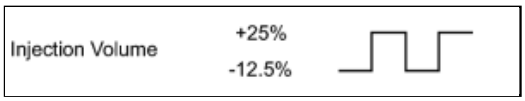 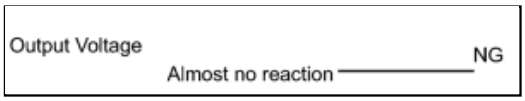	• Heated oxygen sensor • Heated oxygen sensor heater • Heated oxygen sensor circuit
4	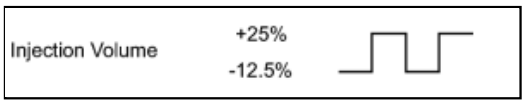 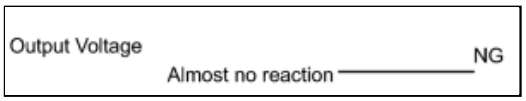	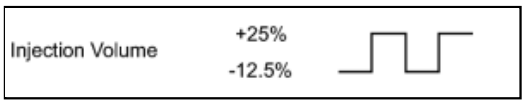 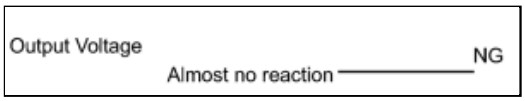	• Injector • Fuel pressure • Gas leak from exhaust system (Air fuel ratio extremely rich or lean)

- Following the Control the Injection Volume for A/F sensor procedure enables technicians to check and graph the voltage outputs of both the air fuel ratio and heated oxygen sensors.
- To display the graph, enter the following menus: Powertrain / Engine and ECT / Active Test / Control the Injection Volume for A/F Sensor / A/F Control System / AFS Voltage B1 S1 and O2S B1 S2; then press the graph button on the Data List view.

HINT:

Read freeze frame data using the Techstream. The ECM records vehicle and driving condition information as freeze frame data the moment a DTC is stored. When troubleshooting, freeze frame data can be helpful in determining whether the vehicle was running or stopped, whether the engine was warmed up or not, whether the air fuel ratio was lean or rich, as well as other data recorded at the time of a malfunction.

PROCEDURE

1.	CHECK HARNESS AND CONNECTOR (AIR FUEL RATIO SENSOR - ECM)

(a) Disconnect the air fuel ratio sensor connector.

(b) Disconnect the ECM connector.

(c) Measure the resistance according to the value(s) in the table below.

Standard Resistance (Check for Open):

TESTER CONNECTION	CONDITION	SPECIFIED CONDITION
B92-1 (HA1A) - B31-109 (HA1A)	Always	Below 1 Ω
B92-3 (A1A+) - B31-112 (A1A+)		
B92-4 (A1A-) - B31-113 (A1A-)		

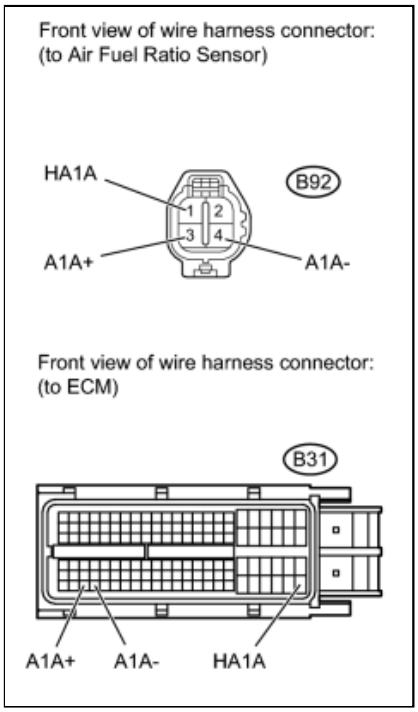

Standard Resistance (Check for Short):

TESTER CONNECTION	CONDITION	SPECIFIED CONDITION
B92-1 (HA1A) or B31-109 (HA1A) - Body ground	Always	10 kΩ or higher
B92-3 (A1A+) or B31-112 (A1A+) - Body ground		
B92-4 (A1A-) or B31-113 (A1A-) - Body ground		

(d) Reconnect the air fuel ratio sensor connector.

(e) Reconnect the ECM connector.

NG ▶ **REPAIR OR REPLACE HARNESS OR CONNECTOR (AIR FUEL RATIO SENSOR - ECM)**

OK ▼

2.	REPLACE AIR FUEL RATIO SENSOR

(a) Replace the air fuel ratio sensor INFO .

NEXT ▼

3.	PERFORM CONFIRMATION DRIVING PATTERN

(a) Drive the vehicle referring to the Confirmation Driving Pattern on DTC P2195 INFO .

NEXT

4.	CHECK WHETHER DTC OUTPUT RECURS

(a) Connect the Techstream to the DLC3.

(b) Turn the ignition switch to ON.

(c) Turn the Techstream on.

(d) Enter the following menus: Powertrain / Engine and ECT / Trouble Codes.

(e) Read pending DTCs.

Result:

RESULT	PROCEED TO
No output	A
P2237, P2238, P2239, P2252 or P2253	B

B ▶ **REPLACE ECM**

A ▶ **END**

Last Modified: 3-10-2010	6.4 C	**From:** 200901
Model Year: 2010	**Model:** Corolla	**Doc ID:** RM000002BHC020X
Title: 2AZ-FE ENGINE CONTROL: SFI SYSTEM: P2420: Evaporative Emission System Switching Valve Control Circuit High (2010 Corolla)		

DTC	**P2420**	**Evaporative Emission System Switching Valve Control Circuit High**

DTC SUMMARY

DTC NO.	MONITORING ITEM	MALFUNCTION DETECTION CONDITION	TROUBLE AREA	DETECTION TIMING	DETECTION LOGIC
P2420	Vent valve stuck open (vent)	Following condition met during key-off EVAP monitor: • EVAP pressure change when vent valve closed (ON) less than 0.3 kPa-g (2.25 mmHg-g)	• Canister pump module (Reference orifice, leak detection pump, vent valve) • Connector/wire harness (Canister pump module - ECM) • ECM	While ignition switch OFF	2 trip

HINT:

The vent valve is built into the canister pump module.

DESCRIPTION

The description can be found in the EVAP (Evaporative Emission) System INFO .

INSPECTION PROCEDURE

Refer to the EVAP System INFO .

HINT:

Unit expressions

- [kPa-a (mmHg-a)] denotes absolute pressure.
- [kPa-g (mmHg-g)] denotes gauge pressure (relative pressure).
- On the Techstream, choose the unit of measurement according to the inspection procedure.

MONITOR DESCRIPTION

5 hours* after the ignition switch is turned off, the leak detection pump creates negative pressure (vacuum) in the EVAP system. The ECM monitors for leaks and actuator malfunctions based on the EVAP pressure.

HINT:

***: If the engine coolant temperature is not below 35°C (95°F) 5 hours after the ignition switch is turned to off, the monitor check starts 2 hours later. If it is still not below 35°C (95°F) 7 hours after the ignition switch is turned to off, the monitor check starts 2.5 hours later.**

SEQUENCE	OPERATION	DESCRIPTION	DURATION
-	ECM activation	The key-off monitor is activated by soak timer 5, 7 or 9.5 hours after ignition switch turned OFF.	-
A	Atmospheric pressure measurement	Vent valve is turned OFF (vent) and the EVAP system pressure is measured by the ECM in order to register atmospheric pressure. If pressure in EVAP system is not between 70 kPa-a and 110 kPa-a (525 mmHg-a and 825 mmHg-a), the ECM cancels EVAP system monitor.	60 seconds
B	First reference pressure measurement	In order to determine the reference pressure, the leak detection pump creates negative pressure (vacuum) through the reference orifice and then the ECM checks if the leak detection pump and vent valve operate normally.	60 seconds
C	EVAP system pressure measurement	Vent valve turned ON (closed) to shut the EVAP system. Negative pressure (vacuum) created in the EVAP system, and the EVAP system pressure then measured. The measured value is memorized as it will be used in the leak check. If the EVAP pressure does not stabilize within 15 minutes, the ECM cancels the EVAP system monitor.	15 minutes*
D	Purge VSV monitor	Purge VSV is opened and then the EVAP system pressure is measured by the ECM. A large increase indicates normality.	10 seconds
E	Second reference pressure measurement	After a second reference pressure measurement, the leak check is performed by comparing the first and second reference pressure. If stabilized system pressure is higher than the second reference pressure, the ECM determines that the EVAP system is leaking.	60 seconds
-	Final check	Atmospheric pressure is measured and then the monitor result is recorded by the ECM.	-

*: If only a small amount of fuel is in the fuel tank, it takes longer for the EVAP pressure to stabilize.

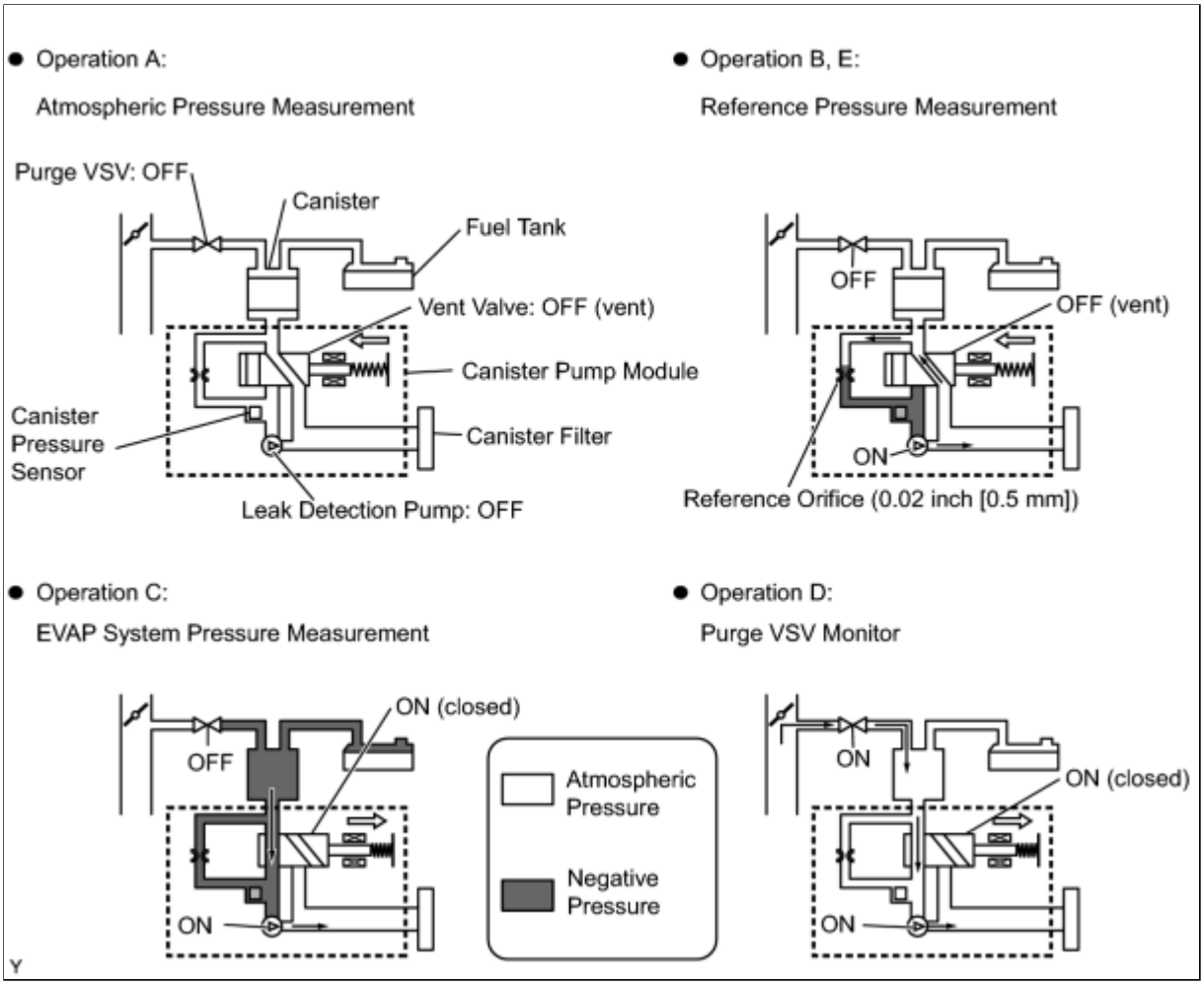

P2420: Vent valve stuck open (vent)

In operation C, the vent valve turns ON (closes) and the EVAP system pressure is then measured by the ECM using the canister pressure sensor to conduct an EVAP leak check. If the pressure does not increase when the vent valve is open, the ECM interprets this as the vent valve being stuck open. The ECM illuminates the MIL and sets the DTC.

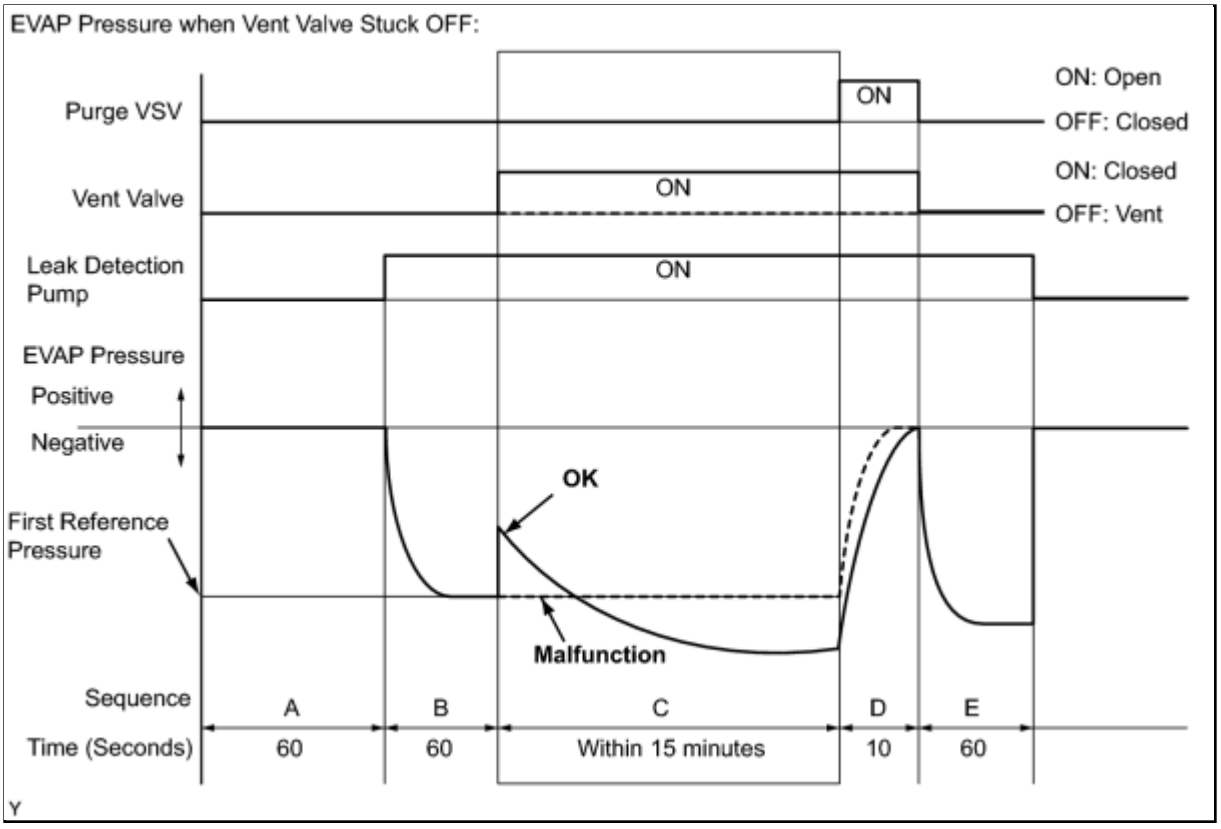

MONITOR STRATEGY

Required Sensors/Components	Purge VSV and canister pump module
Frequency of Operation	Once per driving cycle
Duration	Within 2 minutes (varies with amount of fuel in tank)
MIL Operation	2 driving cycles
Sequence of Operation	None

TYPICAL ENABLING CONDITIONS

Monitor runs whenever following DTCs are not present	None
EVAP key-off monitor runs when all of following conditions are met	-
Atmospheric pressure	70 to 110 kPa-a (525 to 825 mmHg-a)
Battery voltage	10.5 V or more
Vehicle speed	Below 2.5 mph (4 km/h)
Ignition switch	OFF
Time after key off	5 or 7 or 9.5 hours

Canister pressure sensor malfunction (P0451, P0452 and P0453)	Not detected
Purge VSV	Not operated by scan tool
Vent valve	Not operated by scan tool
Leak detection pump	Not operated by scan tool
Both of following conditions are met before key off	Conditions 1 and 2
1. Duration that vehicle driven	5 minutes or more
2. EVAP purge operation	Performed
Engine coolant temperature	4.4 to 35°C (40 to 95°F)
Intake air temperature	4.4 to 35°C (40 to 95°F)

TYPICAL MALFUNCTION THRESHOLDS

EVAP pressure change after EVAP canister vent valve ON	Less than 0.3 kPa-g (2.25 mmHg-g)

CONFIRMATION DRIVING PATTERN

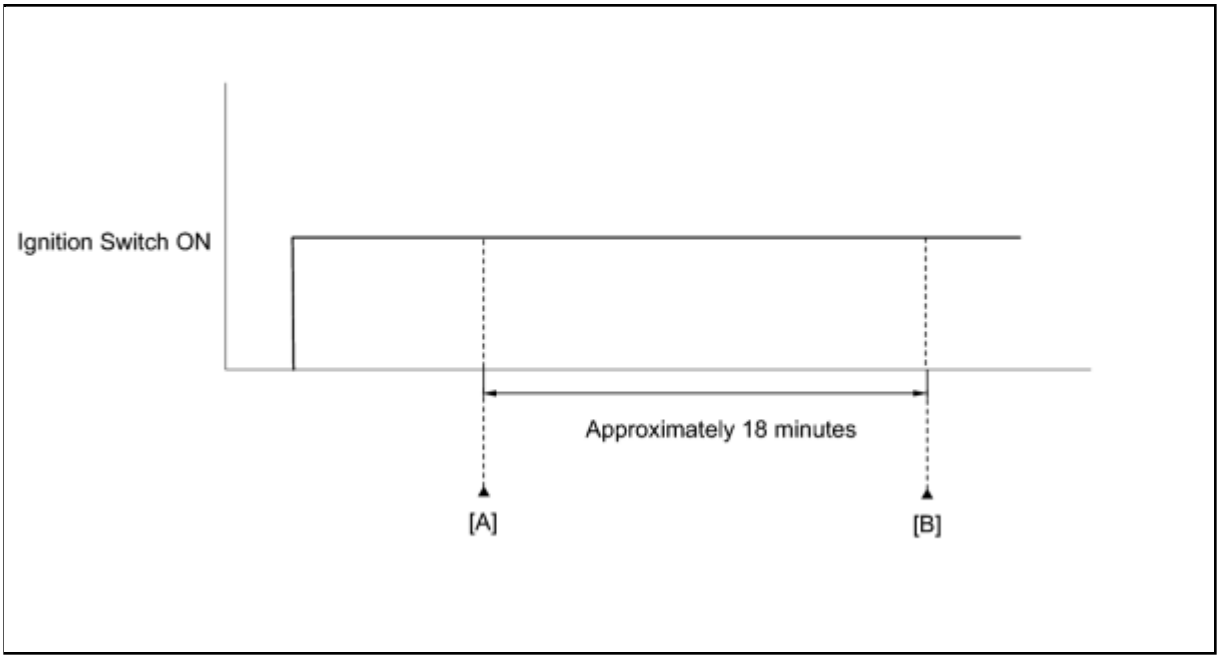

NOTICE:

- The Evaporative System Check (Automatic Mode) consists of 5 steps performed automatically by the Techstream. It takes a maximum of approximately 18 minutes.
- Do not perform the Evaporative System Check when the fuel tank is more than 90% full because the cut-off valve may be closed, making the fuel tank leak check unavailable.
- Do not run the engine during this operation.

- When the temperature of the fuel is 35°C (95°F) or higher, a large amount of vapor forms and any check results become inaccurate. When performing the Evaporative System Check, keep the fuel temperature below 35°C (95°F).

1. Connect the Techstream to the DLC3.
2. Turn the ignition switch to ON and turn the Techstream on.
3. Clear the DTCs (even if no DTCs are stored, perform the clear DTC procedure) INFO .
4. Turn the ignition switch off.
5. Turn the ignition switch to ON and turn the Techstream on [A].
6. Enter the following menus: Powertrain / Engine and ECT / Utility / Evaporative System Check / Automatic Mode.
7. After the "Evaporative System Check" is completed, check for All Readiness by entering the following menus: Powertrain / Engine and ECT / Utility / All Readiness.
8. Input the DTC: P2420.
9. Check the DTC judgment result [B].

TECHSTREAM DISPLAY	DESCRIPTION
NORMAL	○ DTC judgment completed ○ System normal
ABNORMAL	○ DTC judgment completed ○ System abnormal
INCOMPLETE	○ DTC judgment not completed ○ Perform driving pattern after confirming DTC enabling conditions
UNKNOWN	○ Unable to perform DTC judgment ○ Number of DTCs which do not fulfill DTC preconditions has reached ECU memory limit

HINT:

If the judgment result shows ABNORMAL, the system has a malfunction.

10. If the test result is UNKNOWN, enter the following menus: Powertrain / Engine and ECT / Trouble Codes / Pending.
11. Read Pending DTCs.

HINT:

If a pending DTC is output, the system is malfunctioning.

12. If the test result is INCOMPLETE or UNKNOWN and no pending DTC is output, perform a universal trip and check for permanent DTCs INFO .

HINT:

- ○ If a permanent DTC is output, the system is malfunctioning.
- ○ If no permanent DTC is output, the system is normal.

MONITOR RESULT

Refer to Checking Monitor Status INFO .



Last Modified: 3-10-2010	6.4 C	**From:** 200901
Model Year: 2010	**Model:** Corolla	**Doc ID:** RM000000WC205SX
Title: 2AZ-FE ENGINE CONTROL: SFI SYSTEM: P2A00: A/F Sensor Circuit Slow Response (Bank 1 Sensor 1) (2010 Corolla)		

DTC	**P2A00**	**A/F Sensor Circuit Slow Response (Bank 1 Sensor 1)**

DESCRIPTION

HINT:

- Refer to DTC P2195 INFO .
- Sensor 1 refers to the sensor mounted in front of the three-way catalytic converter and located near the engine assembly.

DTC NO.	DTC DETECTION CONDITION	TROUBLE AREA
P2A00	Calculated value for Air Fuel Ratio (A/F) sensor response rate deterioration level is less than threshold	• Air fuel ratio sensor (bank 1 sensor 1) • Air fuel ratio sensor heater (bank 1 sensor 1) • ECM

MONITOR DESCRIPTION

After engine is warmed up, the ECM performs air-fuel ratio feedback control to maintain the air-fuel ratio at the stoichiometric level. In addition, active air fuel ratio control is performed for approximately 10 seconds after preconditions are met in order to measure the air fuel ratio sensor response rate. During active air fuel ratio control, the ECM forcibly increases and decreases the injection volume a certain amount, based on the stoichiometric air-fuel ratio learned during normal air-fuel ratio control, and measures the air fuel ratio sensor response rate. The ECM receives a signal from the air fuel ratio sensor while performing active air fuel ratio control and uses it to calculate the air fuel ratio sensor response rate deterioration level.

If the value for air fuel ratio sensor response rate deterioration level is beyond the threshold, the ECM interprets this as a malfunction and sets the DTC.

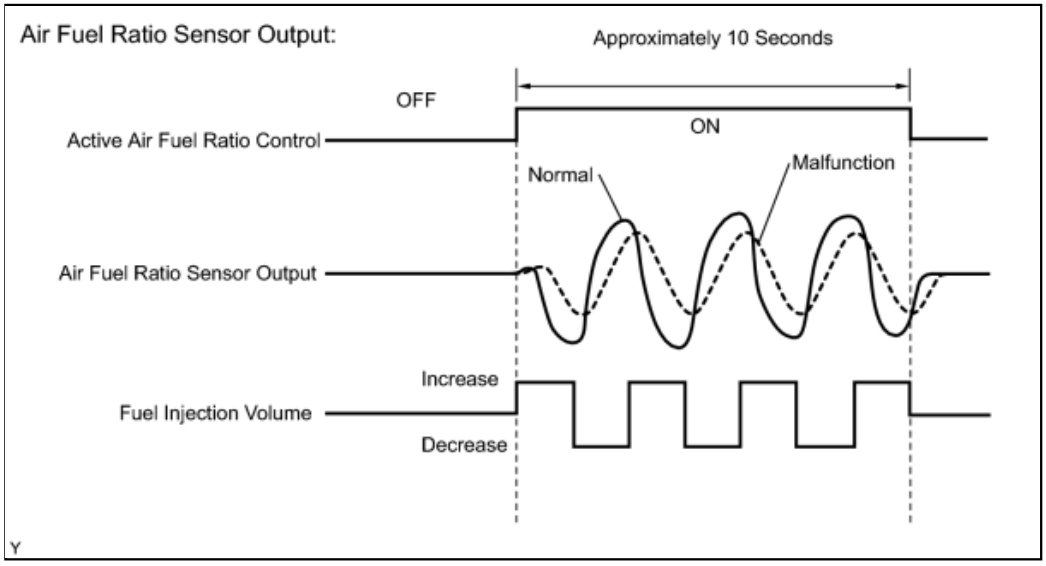

MONITOR STRATEGY

Related DTCs	P2A00: Air fuel ratio sensor (bank 1) slow response
Required Sensors/Components (Main)	Air fuel sensor
Required Sensors/Components (Related)	Vehicle speed sensor, Crankshaft position sensor
Frequency of Operation	Once per driving cycle
Duration	10 to 15 seconds
MIL Operation	2 driving cycles
Sequence of Operation	None

TYPICAL ENABLING CONDITIONS

Monitor runs whenever following DTCs are not present	P0016 (VVT System Bank 1 - Misalignment) P0031, P0032 (Air Fuel Ratio Sensor Heater - Sensor 1) P0102, P0103 (Mass Air Flow Meter) P0112, P0113 (Intake Air Temperature Sensor) P0115, P0117, P0118 (Engine Coolant Temperature Sensor) P0120, P0121, P0122, P0123, P0220, P0222, P0223, P2135 (Throttle Position Sensor) P0125 (Insufficient Engine Coolant Temperature for Closed Loop) P0128 (Thermostat) P0171, P0172 (Fuel System) P0301, P0302, P0303, P0304 (Misfire) P0335 (Crankshaft Position Sensor) P0340 (Camshaft Position Sensor) P0451, P0452, P0453 (EVAP System) P0500 (Vehicle Speed Sensor) P0505 (IAC Valve)
Active A/F control	Performing
Active A/F control performed when following conditions are met	-
Battery voltage	11 V or more
Engine coolant temperature	75°C (167°F) or more
Idling	OFF
Engine RPM	Less than 4000 rpm
Air fuel ratio sensor status	Activated
Fuel-cut	OFF
Engine load	10 to 70%
Shift position	2 or more
Catalyst monitor	Not yet
Intake air amount	4 to 16 g/sec

TYPICAL MALFUNCTION THRESHOLDS

Response rate deterioration level	Less than 0.12 V

MONITOR RESULT

Refer to Checking Monitor Status INFO .

CONFIRMATION DRIVING PATTERN

HINT:

Performing this confirmation pattern will activate the air fuel ratio sensor response monitor.

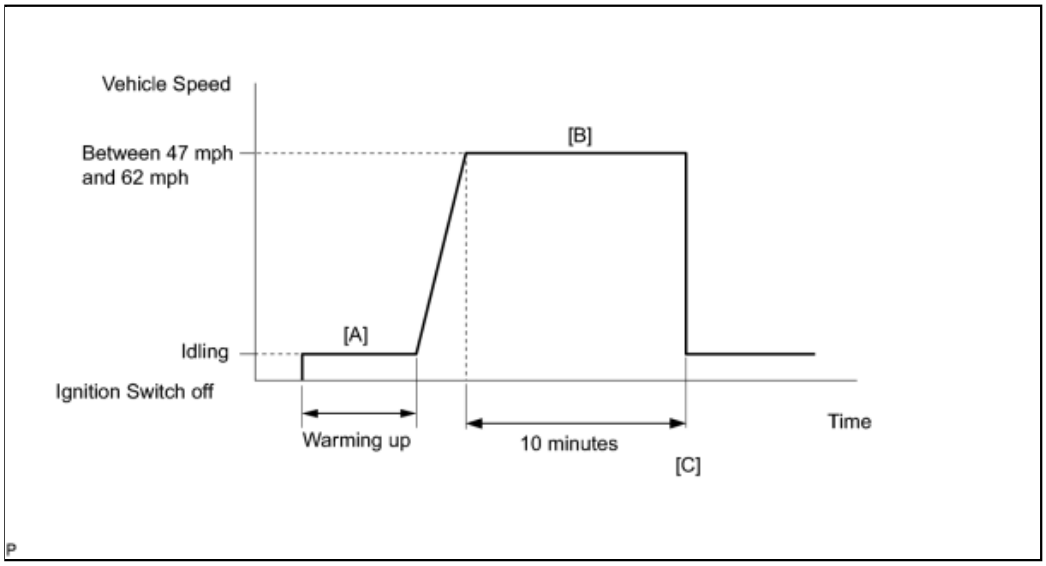

1. Connect the Techstream to the DLC3.
2. Turn the ignition switch to ON.
3. Turn the Techstream on.
4. Clear the DTCs (even if no DTCs are stored, perform the clear DTC procedure) INFO .
5. Turn the ignition switch off.
6. Turn the ignition switch to ON and turn the Techstream on [A].
7. Enter the following menus: Powertrain / Engine and ECT / Monitor / O2 Sensor / Details.
8. Check that RES RATE B1S1 and RES RATE B2S1 are Incomplete.
9. Start the engine and warm it up (until the engine coolant temperature is 75°C (167°F) or more) [A].
10. Drive the vehicle at a constant speed of between 47 and 62 mph (75 and 100 km/h) for 10 minutes [B].
11. Check the monitor result values on the Techstream by entering the following menus: Powertrain / Engine / Monitor / O2 Sensor / Details / RES RATE B1S1 and B2S1.
12. If the values indicated on the Techstream do not change, perform Readiness Monitor Drive Pattern for the air fuel ratio sensor and heated oxygen sensor INFO .
13. Note the value of the Monitor Result.
14. Enter the following menus: Powertrain / Engine and ECT / Utility / All Readiness.
15. Input the DTC: P2A00.
16. Check the DTC judgment result [C].

TECHSTREAM DISPLAY	DESCRIPTION
NORMAL	○ DTC judgment completed ○ System normal

TECHSTREAM DISPLAY	DESCRIPTION
ABNORMAL	○ DTC judgment completed ○ System abnormal
INCOMPLETE	○ DTC judgment not completed ○ Perform driving pattern after confirming DTC enabling conditions
UNKNOWN	○ Unable to perform DTC judgment ○ Number of DTCs which do not fulfill DTC preconditions has reached ECU memory limit

HINT:

If the judgment result shows ABNORMAL, the system has a malfunction.

17. If the test result is UNKNOWN, enter the following menus: Powertrain / Engine and ECT / Trouble Codes / Pending.
18. Read Pending DTCs.

HINT:

If a pending DTC is output, the system is malfunctioning.

19. If the test result is INCOMPLETE or UNKNOWN and no pending DTC is output, perform a universal trip and check for permanent DTCs INFO .

HINT:

- If a permanent DTC is output, the system is malfunctioning.
- If no permanent DTC is output, the system is normal.

WIRING DIAGRAM

Refer to DTC P2195 INFO .

INSPECTION PROCEDURE

HINT:

Malfunctioning areas can be identified by performing the Control the Injection Volume for A/F sensor function provided in the Active Test. The Control the Injection Volume for A/F sensor function can help to determine whether the Air Fuel Ratio sensor, Heated Oxygen sensor and other potential trouble areas are malfunctioning.

The following instructions describe how to conduct the Control the Injection Volume for A/F sensor operation using the Techstream.

1. Connect the Techstream to the DLC3.
2. Start the engine.
3. Turn the Techstream on.
4. Warm up the engine at an engine speed of 2500 rpm for approximately 90 seconds.
5. Enter the following menus: Powertrain / Engine and ECT / Active Test / Control the Injection Volume for A/F sensor.
6. Perform the Active Test operation with the engine in an idling condition (press the RIGHT or LEFT button to change the fuel injection volume.)
7. Monitor the output voltages of the air fuel ratio and heated oxygen sensors (AFS Voltage B1 S1 and O2S B1 S2) displayed on the Techstream.

HINT:

- The Control the Injection Volume for A/F sensor operation lowers the fuel injection volume by 12.5% or increases the injection volume by 25%.
- Each sensor reacts in accordance with increases and decreases in the fuel injection volume.

TECHSTREAM DISPLAY (SENSOR)	INJECTION VOLUME	STATUS	VOLTAGE
AFS Voltage B1 S1 (Air fuel ratio sensor)	+25%	Rich	Less than 3.1 V
	-12.5%	Lean	More than 3.4 V
O2S B1 S2 (Heated oxygen sensor)	+25%	Rich	More than 0.55 V
	-12.5%	Lean	Less than 0.4 V

NOTICE:

The air fuel ratio sensor has an output delay of a few seconds and the heated oxygen sensor has a maximum output delay of approximately 20 seconds.

CASE	AIR FUEL RATIO SENSOR (SENSOR 1) OUTPUT VOLTAGE	HEATED OXYGEN SENSOR (SENSOR 2) OUTPUT VOLTAGE	MAIN SUSPECTED TROUBLE AREA
1	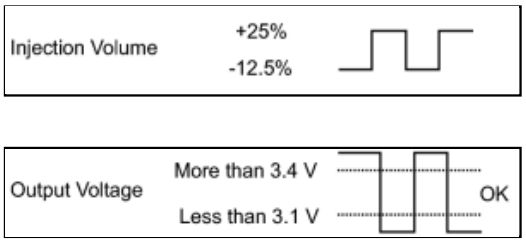	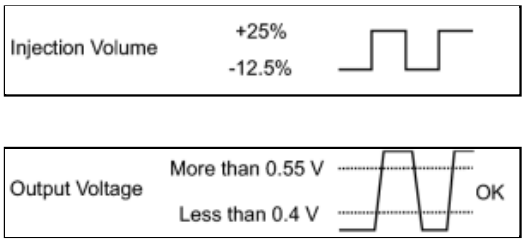	-
2	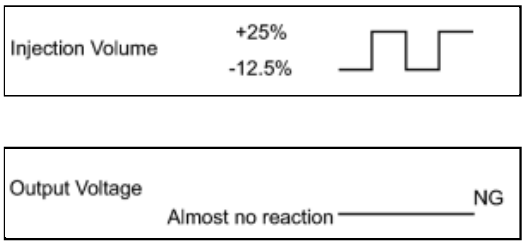	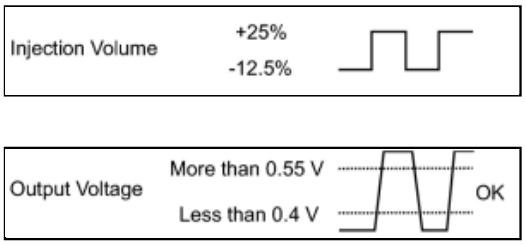	• Air fuel ratio sensor • Air fuel ratio sensor heater • Air fuel ratio sensor circuit
3	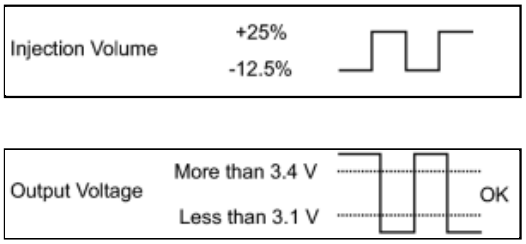	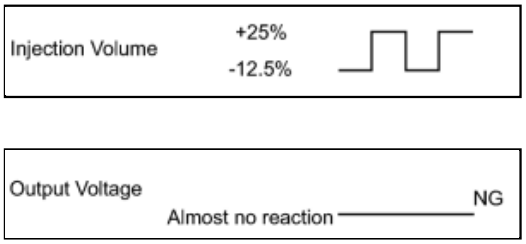	• Heated oxygen sensor • Heated oxygen sensor heater • Heated oxygen sensor circuit
4	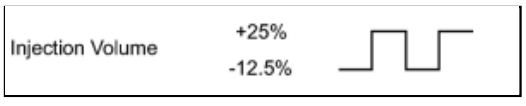	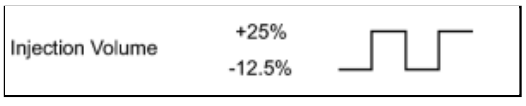	• Injector • Fuel pressure • Gas leak from exhaust system (Air fuel

CASE	AIR FUEL RATIO SENSOR (SENSOR 1) OUTPUT VOLTAGE	HEATED OXYGEN SENSOR (SENSOR 2) OUTPUT VOLTAGE	MAIN SUSPECTED TROUBLE AREA
	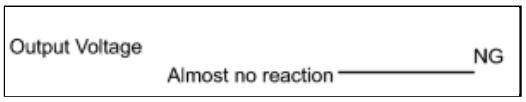	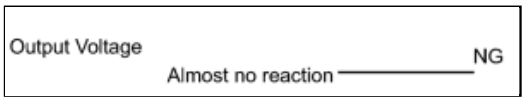	ratio extremely rich or lean)

- Following the Control the Injection Volume for A/F sensor procedure enables technicians to check and graph the voltage outputs of both the air fuel ratio and heated oxygen sensors.
- To display the graph, enter the following menus: Powertrain / Engine and ECT / Active Test / Control the Injection Volume for A/F Sensor / A/F Control System / AFS Voltage B1 S1 and O2S B1 S2; then press the graph button on the Data List view.

HINT:

- DTC P2A00 may be also set when the air-fuel ratio is stuck rich or lean.
- A low air fuel ratio sensor voltage could be caused by a rich air-fuel mixture. Check for conditions that would cause the engine to run rich.
- A high air fuel ratio sensor voltage could be caused by a lean air-fuel mixture. Check for conditions that would cause the engine to run lean.
- Read freeze frame data using the Techstream. The ECM records vehicle and driving condition information as freeze frame data the moment a DTC is stored. When troubleshooting, freeze frame data can be helpful in determining whether the vehicle was running or stopped, whether the engine was warmed up or not, whether the air fuel ratio was lean or rich, as well as other data recorded at the time of a malfunction.

PROCEDURE

1.	**CHECK ANY OTHER DTCS OUTPUT (IN ADDITION TO DTC P2A00)**

(a) Connect the Techstream to the DLC3.

(b) Turn the ignition switch to ON.

(c) Turn the Techstream on.

(d) Enter the following menus: Powertrain / Engine and ECT / Trouble Codes.

(e) Read DTCs.

Result:

RESULT	PROCEED TO
P2A00	A
P2A00 and other DTCs	B

HINT:

If any DTCs other than P2A00 are output, troubleshoot those DTCs first.

B ▶ **GO TO DTC CHART**

A

2.	INSPECT AIR FUEL RATIO SENSOR (HEATER RESISTANCE) INFO

NG ▶ REPLACE AIR FUEL RATIO SENSOR

OK ▼

3.	CHECK HARNESS AND CONNECTOR (AIR FUEL RATIO SENSOR - ECM) INFO

NG ▶ REPAIR OR REPLACE HARNESS OR CONNECTOR (AIR FUEL RATIO SENSOR - ECM)

OK ▼

4.	PERFORM CONFIRMATION DRIVING PATTERN

(a) Drive the vehicle referring the Confirmation Driving Pattern.

NEXT ▼

5.	CHECK WHETHER DTC OUTPUT RECURS (DTC P2A00)

(a) Connect the Techstream to the DLC3.

(b) Turn the ignition switch to ON.

(c) Turn the Techstream on.

(d) Enter the following menus: Powertrain / Engine and ECT / Trouble Codes / Pending.

(e) Read DTCs.

Result:

RESULT	PROCEED TO

RESULT	PROCEED TO
P2A00	A
No output	B

B ▶ **CHECK FOR INTERMITTENT PROBLEMS**

A
▼

6.	REPLACE AIR FUEL RATIO SENSOR

(a) Replace the air fuel ratio sensor INFO .

NEXT
▼

7.	PERFORM CONFIRMATION DRIVING PATTERN

(a) Drive the vehicle referring to the Confirmation Driving Pattern.

NEXT
▼

8.	CHECK WHETHER DTC OUTPUT RECURS (DTC P2A00)

(a) Connect the Techstream to the DLC3.

(b) Turn the ignition switch to ON.

(c) Turn the Techstream on.

(d) Enter the following menus: Powertrain / Engine and ECT / Trouble Codes / Pending.

(e) Read DTCs.

Result:

RESULT	PROCEED TO
No output	A
P2A00	B

B ▶ CHECK ENGINE TO DETERMINE CAUSE OF EXTREMELY RICH OR LEAN ACTUAL AIR FUEL RATIO

A ▶ END

Last Modified: 3-10-2010	6.4 C	**From:** 200901
Model Year: 2010	**Model:** Corolla	**Doc ID:** RM000000T6X054X
Title: 2AZ-FE ENGINE CONTROL: SFI SYSTEM: P2610: ECM / PCM Internal Engine Off Timer Performance (2010 Corolla)		

DTC	**P2610**	**ECM / PCM Internal Engine Off Timer Performance**

DTC SUMMARY

DTC NO.	MONITORING ITEM	MALFUNCTION DETECTION CONDITION	TROUBLE AREA	DETECTION TIMING	DETECTION LOGIC
P2610	Soak timer (built into ECM)	ECM internal malfunction	ECM	Engine running	2 trip

DESCRIPTION

To ensure the accuracy of the EVAP (Evaporative Emission) monitor values, the soak timer, which is built into the ECM, measures 5 hours (+/-15 minutes) from when the ignition switch is turned off, before the monitor is run. This allows the fuel to cool down, which stabilizes the EVAP pressure. When 5 hours have elapsed, the ECM turns on the EVAP system monitor.

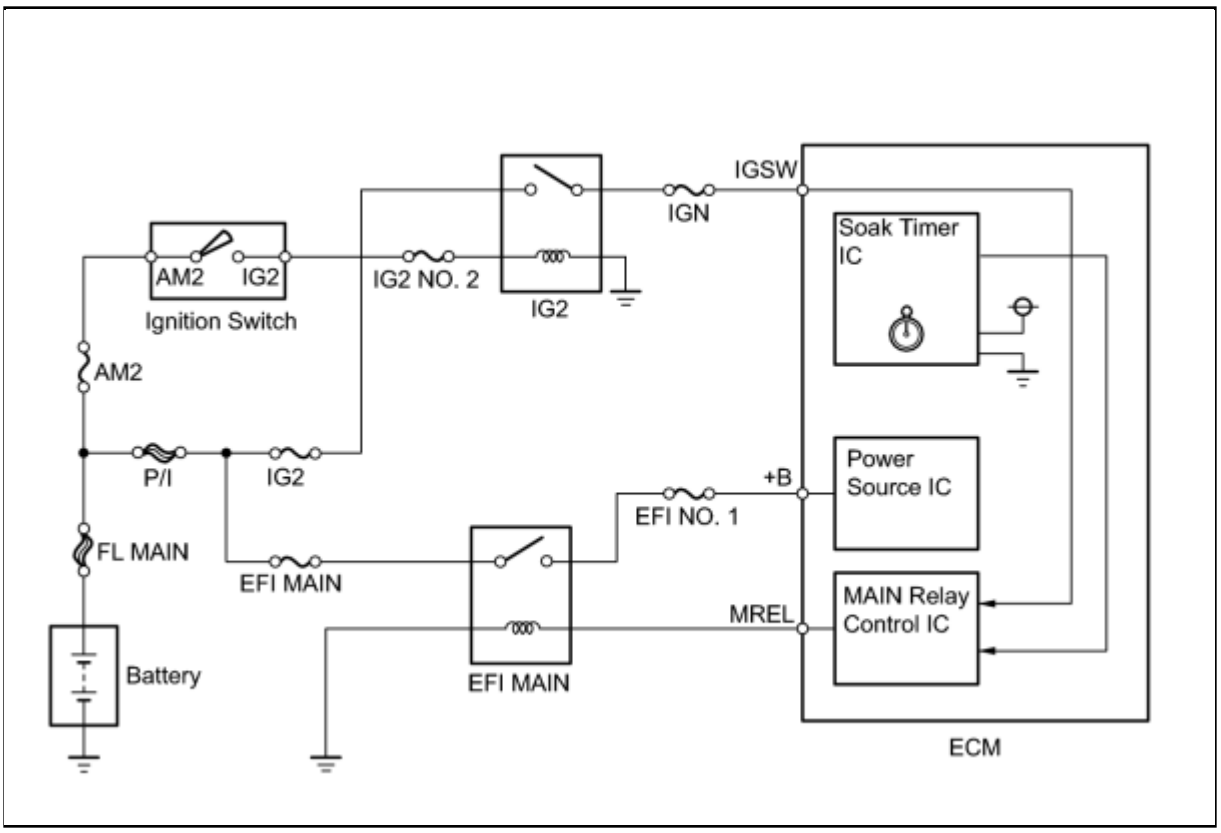

MONITOR DESCRIPTION

5 hours after the ignition switch is turned off, the soak timer activates the ECM to begin the EVAP system monitor. While the engine is running, the ECM monitors the synchronization of the soak timer and the CPU clock. If these two are not synchronized, the ECM interprets this as a malfunction, illuminates the MIL and sets the DTC (2 trip detection logic).

MONITOR STRATEGY

Required Sensors/Components	ECM
Frequency of Operation	Once per driving cycle
Duration	10 minutes
MIL Operation	2 driving cycles
Sequence of Operation	None

TYPICAL ENABLING CONDITIONS

Monitor runs whenever following DTC are not present	None
Ignition switch	ON
Engine	Running
Battery voltage	8 V or more
Starter	OFF

TYPICAL MALFUNCTION THRESHOLDS

Soak timer measurement when ECM CPU clock counts 10 minutes	Less than 7 minutes, or more than 13 minutes

CONFIRMATION DRIVING PATTERN

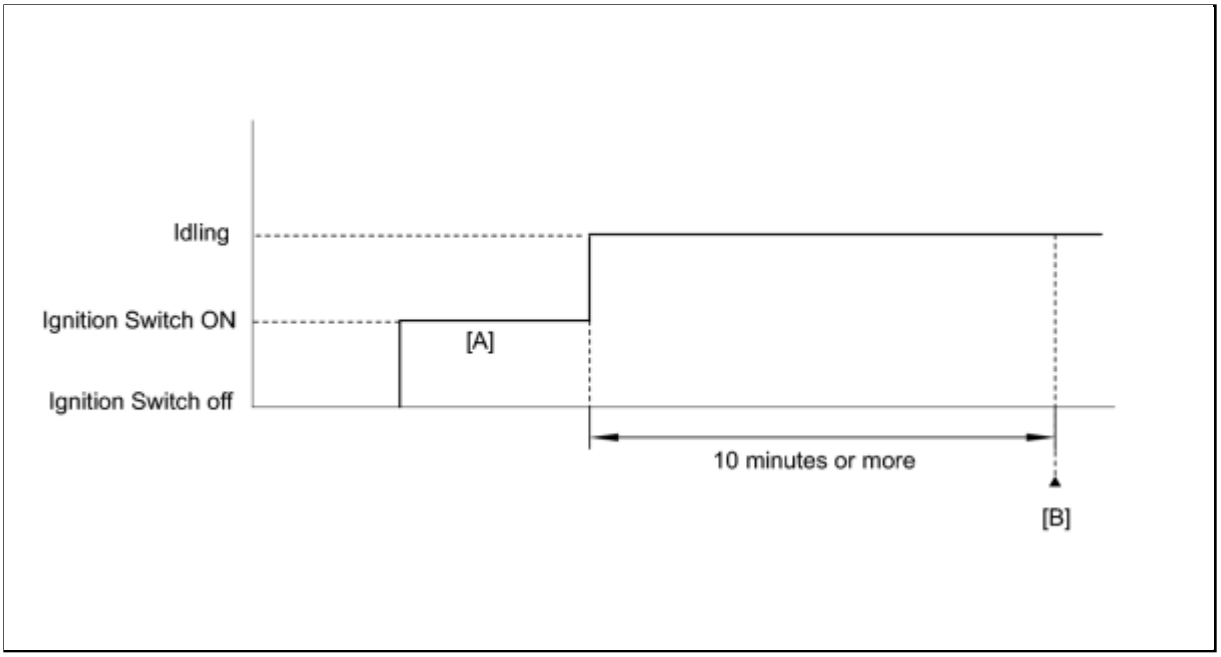

1. Connect the Techstream to the DLC3.
2. Turn the ignition switch to ON and turn the Techstream on.
3. Turn the ignition switch off.
4. Turn the ignition switch to ON and turn the Techstream on [A].
5. Clear the DTCs (even if no DTCs are stored, perform the clear DTC procedure) INFO .
6. Start the engine.
7. Idle the engine for 10 minutes or more.
8. Enter the following menus: Powertrain / Engine and ECT / Utility / All Readiness.
9. Input the DTC: P2610.
10. Check the DTC judgment result [B].

TECHSTREAM DISPLAY	DESCRIPTION
NORMAL	○ DTC judgment completed ○ System normal
ABNORMAL	○ DTC judgment completed ○ System abnormal
INCOMPLETE	○ DTC judgment not completed ○ Perform driving pattern after confirming DTC enabling conditions
UNKNOWN	○ Unable to perform DTC judgment ○ Number of DTCs which do not fulfill DTC preconditions has reached ECU memory limit

HINT:

If the judgment result shows ABNORMAL, the system has a malfunction.

11. If the test result is UNKNOWN, enter the following menus: Powertrain / Engine and ECT / Trouble Codes / Pending.
12. Read Pending DTCs.

    HINT:

    If a pending DTC is output, the system is malfunctioning.

13. If the test result is INCOMPLETE or UNKNOWN and no pending DTC is output, perform a universal trip and check for permanent DTCs INFO .

    HINT:

    - If a permanent DTC is output, the system is malfunctioning.
    - If no permanent DTC is output, the system is normal.

INSPECTION PROCEDURE

HINT:

- DTC P2610 is set if an internal ECM problem is detected. Diagnostic procedures are not required. ECM replacement is necessary.
- Read freeze frame data using the Techstream. The ECM records vehicle and driving condition information as freeze frame data the moment a DTC is stored. When troubleshooting, freeze frame data can be helpful in determining whether the vehicle was running or stopped, whether the engine was warmed up or not, whether the air fuel ratio was lean or rich, as well as other data recorded at the time of a malfunction.

PROCEDURE

1.	**REPLACE ECM**

(a) Replace the ECM INFO .

NEXT

2.	**CHECK WHETHER DTC OUTPUT RECURS (DTC P2610)**

(a) Connect the Techstream to the DLC3.

(b) Turn the ignition switch to ON.

(c) Turn the Techstream on.

(d) Clear the DTCs INFO .

(e) Start the engine and wait for 10 minutes or more.

(f) Enter the following menus: Powertrain / Engine and ECT / Trouble Codes / Pending.

(g) If no pending DTC is displayed, the repair has been successfully completed.

NEXT END

Last Modified: 3-10-2010	6.4 J	**From:** 200901
Model Year: 2010	**Model:** Corolla	**Doc ID:** RM000001F7101CX
Title: 2AZ-FE ENGINE CONTROL: SFI SYSTEM: ECM Power Source Circuit (2010 Corolla)		

ECM Power Source Circuit

DESCRIPTION

When the ignition switch is turned to ON, the battery voltage is applied to the IGSW terminal of the ECM. The output signal from the MREL terminal of the ECM causes a current to flow to the EFI MAIN relay coil, closing the EFI relay contacts and supplying power to terminal +B of the ECM.

WIRING DIAGRAM

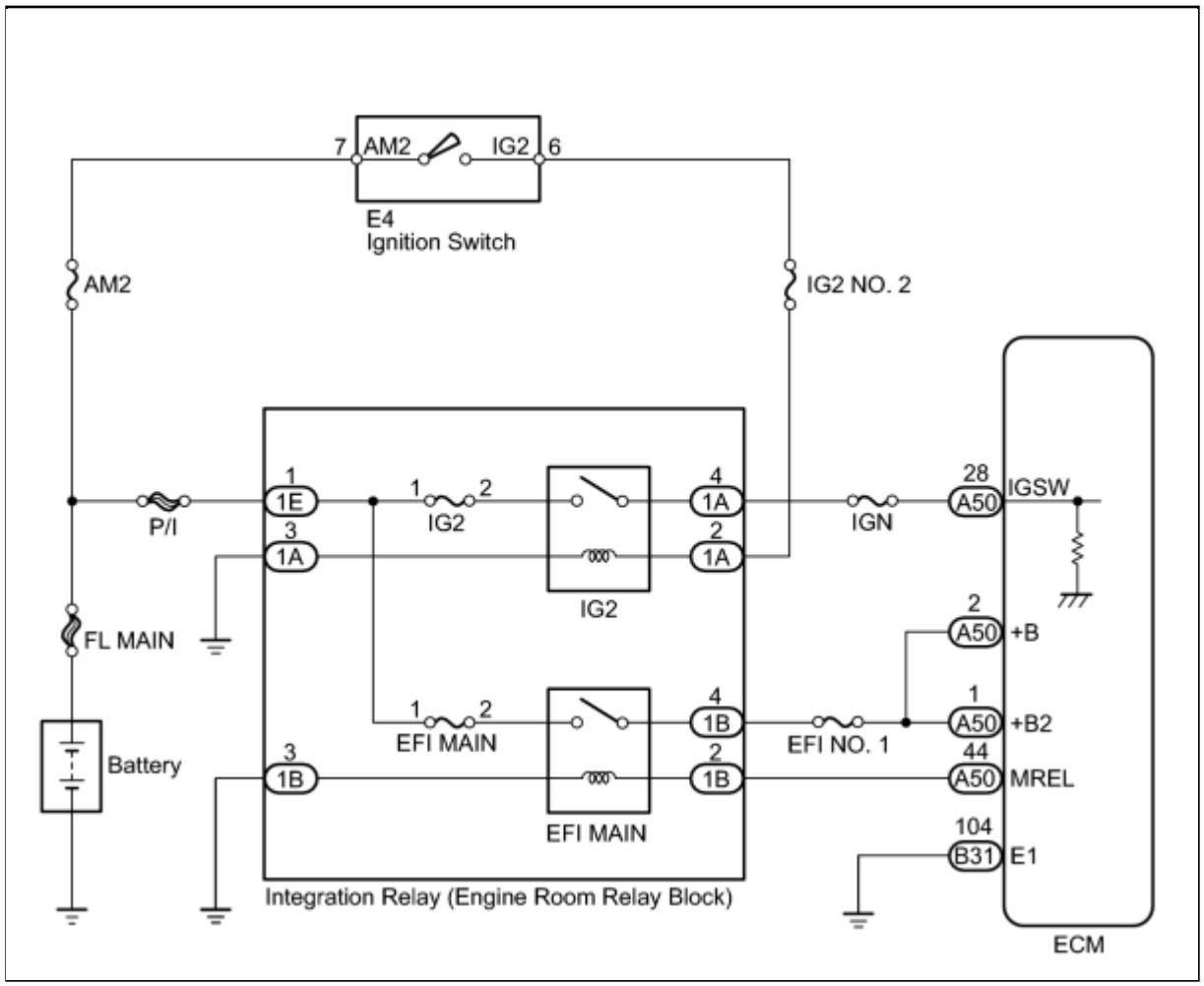

INSPECTION PROCEDURE

PROCEDURE

1.	INSPECT INTEGRATION NO.1 RELAY (POWER SOURCE)

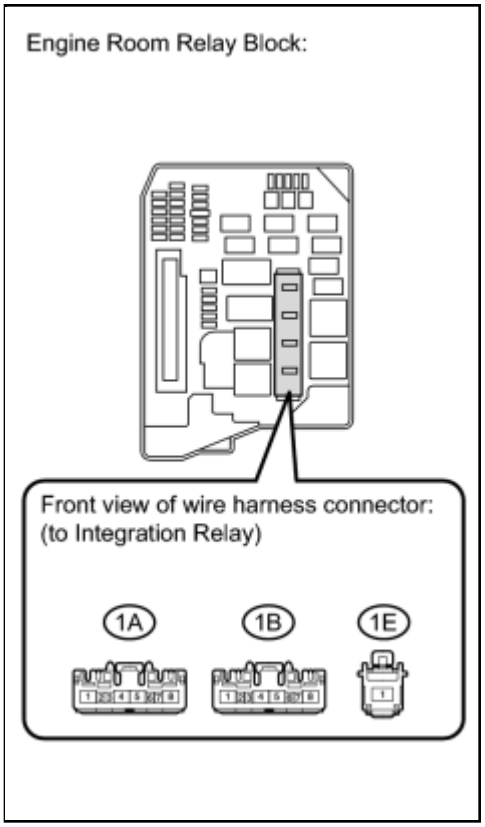

(a) Remove the integration relay from the engine room relay block.

(b) Measure the voltage according to the value(s) in the table below.

Standard Voltage:

TESTER CONNECTION	CONDITION	SPECIFIED CONDITION
1E-1 - Body ground	Always	11 to 14 V

(c) Reinstall the integration relay.

NG ▶ **REPAIR OR REPLACE HARNESS OR CONNECTOR (INTEGRATION RELAY - BATTERY)**

OK ▼

2.	INSPECT FUSES (EFI MAIN, IG2, AND EFI NO. 1 FUSES)

(a) Remove the EFI MAIN fuse, IG2 fuse and EFI No. 1 fuse from the engine room relay block.

(b) Measure the resistance according to the value(s) in the table below.

Standard Resistance:

TESTER CONNECTION	CONDITION	SPECIFIED CONDITION
EFI MAIN fuse	Always	Below 1 Ω

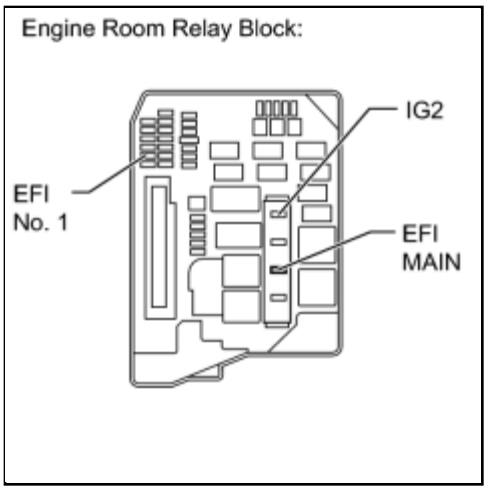

TESTER CONNECTION	CONDITION	SPECIFIED CONDITION
IG2 fuse		
EFI No. 1 fuse		

(c) Reinstall the fuses.

NG ▶ **REPLACE FUSE (EFI MAIN, IG2 OR EFI NO. 1 FUSE)**

OK ▼

3.	INSPECT INTEGRATION NO.1 RELAY (EFI MAIN RELAY AND IG2 RELAY)

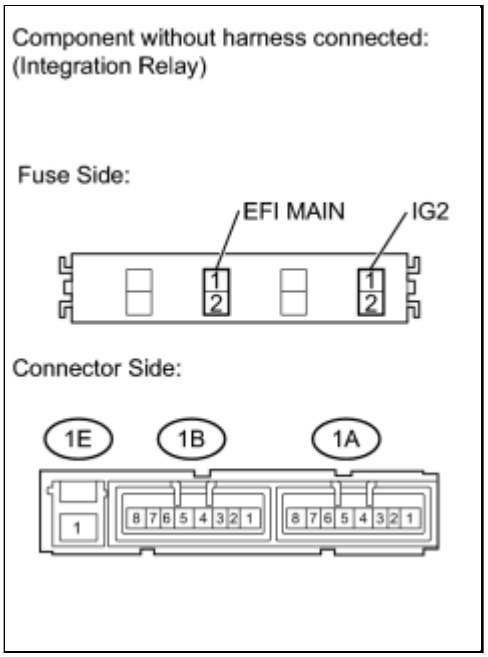

(a) Remove the integration relay from the engine room relay block.

(b) Measure the resistance according to the value(s) in the table below.

Standard Resistance:

TESTER CONNECTION	CONDITION	SPECIFIED CONDITION
1E-1 - 1B-4	When battery voltage absent	10 kΩ or higher
	When battery voltage applied to terminals 1B-2 and 1B-3	Below 1 Ω
1E-1 - 1A-4	When battery voltage absent	10 kΩ or higher
	When battery voltage applied to terminals 1A-2 and 1A-3	Below 1 Ω

(c) Reinstall the integration relay.

NG ▶ **REPLACE INTEGRATION NO.1 RELAY**

OK ▼

4.	CHECK HARNESS AND CONNECTOR (INTEGRATION RELAY - ECM)

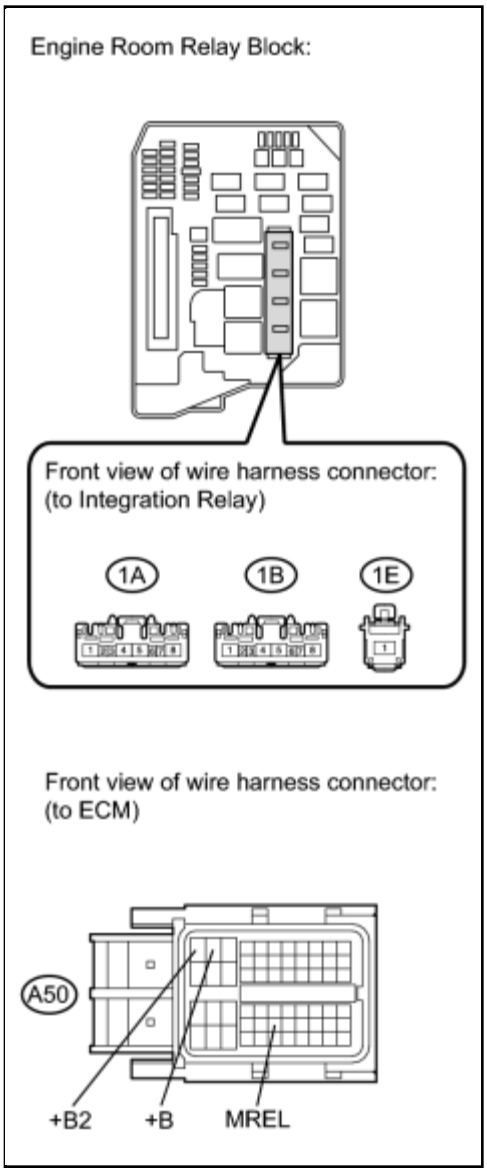

(a) Remove the integration relay from the engine room relay block.

(b) Disconnect the ECM connector.

(c) Measure the resistance according to the value(s) in the table below.

Standard Resistance (Check for Open):

TESTER CONNECTION	CONDITION	SPECIFIED CONDITION
A50-44 (MREL) - 1B-2	Always	Below 1 Ω
A50-2 (+B) - 1B-4	Always	Below 1 Ω
A50-1 (+B2) - 1B-4	Always	Below 1 Ω

Standard Resistance (Check for Short):

TESTER CONNECTION	CONDITION	SPECIFIED CONDITION
A50-44 (MREL) - Body ground	Always	10 kΩ or higher
A50-2 (+B) - Body ground	Always	10 kΩ or higher
A50-1 (+B2) - Body ground	Always	10 kΩ or higher

(d) Reinstall the integration relay.

(e) Reconnect the ECM connector.

NG ▶ **REPAIR OR**

REPLACE HARNESS OR CONNECTOR (INTEGRATION RELAY - ECM)

OK

5.	**CHECK HARNESS AND CONNECTOR (ECM - BODY GROUND)**

(a) Disconnect the ECM connector.

(b) Measure the resistance according to the value(s) in the table below.

Standard Resistance (Check for Open):

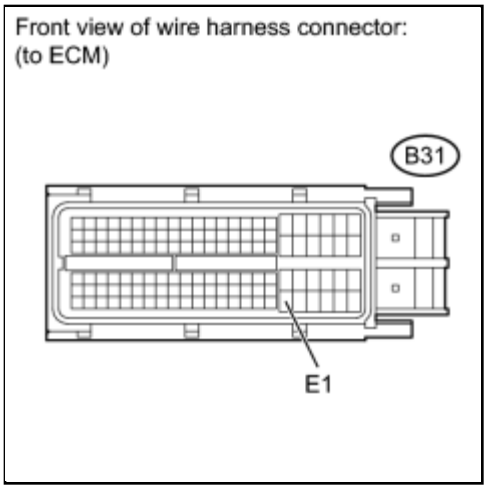

TESTER CONNECTION	CONDITION	SPECIFIED CONDITION
B31-104 (E1) - Body ground	Always	Below 1 Ω

(c) Reconnect the ECM connector.

NG **REPAIR OR REPLACE HARNESS OR CONNECTOR (ECM - BODY GROUND)**

OK

6.	**INSPECT ECM (IGSW TERMINAL VOLTAGE)**

(a) Disconnect the ECM connectors.

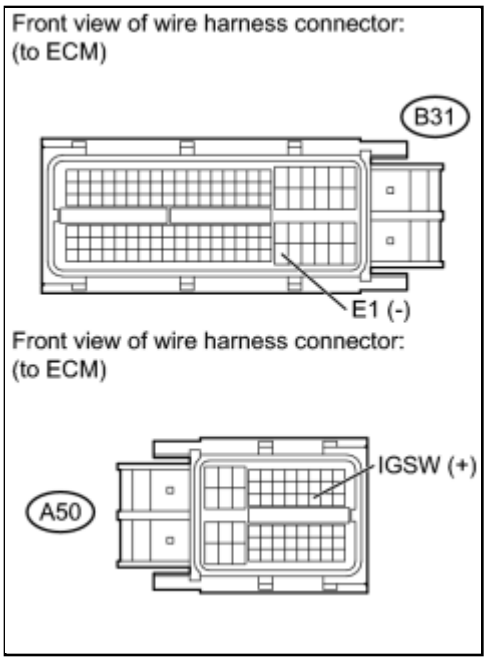

(b) Turn the ignition switch to ON.

(c) Measure the voltage according to the value(s) in the table below.

Standard Voltage:

TESTER CONNECTION	CONDITION	SPECIFIED CONDITION
A50-28 (IGSW) - B31-104 (E1)	Ignition switch ON	11 to 14 V

(d) Reconnect the ECM connectors.

NG ▶ **INSPECT FUSE (IGN FUSE)**

OK ▶ **REPLACE ECM**

7.	**INSPECT FUSE (IGN FUSE)**

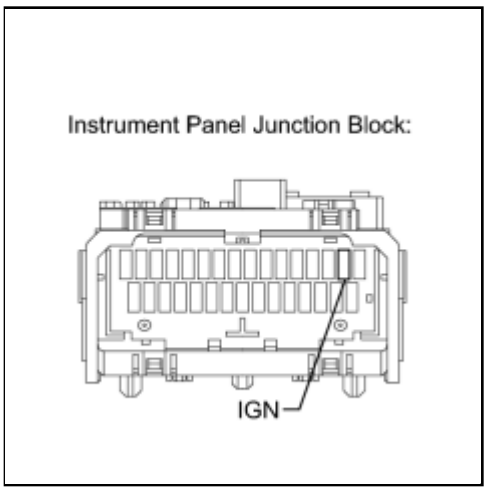

(a) Remove the IGN fuse from the instrument panel junction block.

(b) Measure the resistance according to the value(s) in the table below.

Standard Resistance:

TESTER CONNECTION	CONDITION	SPECIFIED CONDITION
IGN fuse	Always	Below 1 Ω

(c) Reinstall the IGN fuse.

NG ▶ **REPLACE FUSE (IGN FUSE)**

OK ▼

8.	**CHECK HARNESS AND CONNECTOR (ECM - INTEGRATION RELAY)**

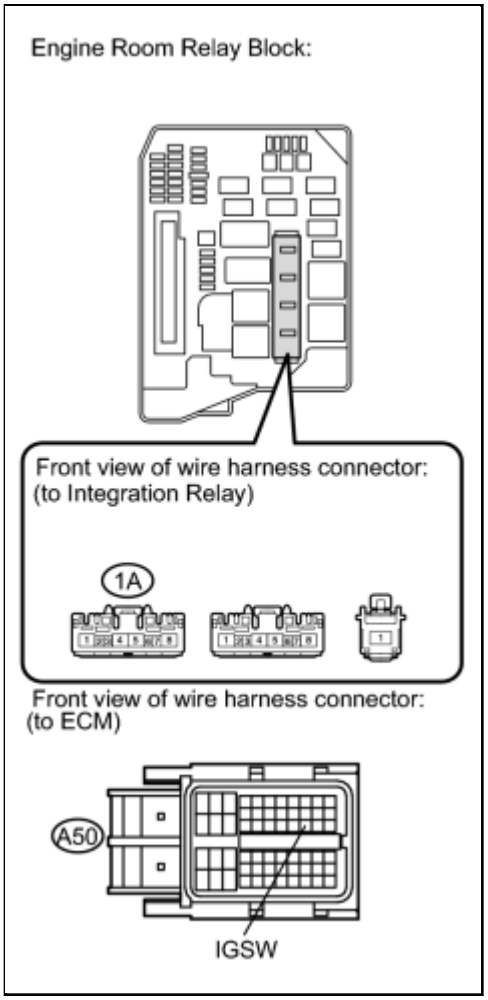

(a) Remove the integration relay from the engine room relay block.

(b) Disconnect the ECM connector.

(c) Measure the resistance according to the value(s) in the table below.

Standard Resistance (Check for Open):

TESTER CONNECTION	CONDITION	SPECIFIED CONDITION
A50-28 (IGSW) - 1A-4	Always	Below 1 Ω

Standard Resistance (Check for Short):

TESTER CONNECTION	CONDITION	SPECIFIED CONDITION
A50-28 (IGSW) - Body ground	Always	10 kΩ or higher

(d) Reinstall the integration relay.

(e) Reconnect the ECM connector.

NG ▶ **REPAIR OR REPLACE HARNESS OR CONNECTOR (ECM - INTEGRATION RELAY)**

OK ▼

9.	**INSPECT FUSE (IG2 NO. 2 FUSE)**

(a) Remove the IG2 No. 2 fuse from the engine room relay block.

(b) Measure the resistance according to the value(s) in the table below.

Engine Room Relay Block:

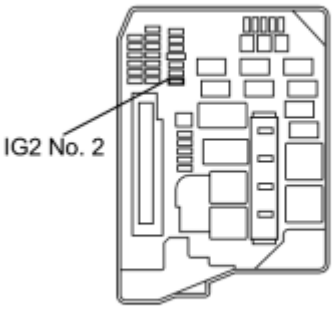

Standard Resistance:

TESTER CONNECTION	CONDITION	SPECIFIED CONDITION
IG2 No. 2 fuse	Always	Below 1 Ω

(c) Reinstall the fuse.

NG ▶ **REPLACE FUSE (IG2 NO. 2 FUSE)**

OK ▼

10.	CHECK HARNESS AND CONNECTOR (INTEGRATION RELAY - IGNITION SWITCH)

(a) Remove the integration relay from the engine room relay block.

(b) Disconnect the ignition switch connector.

(c) Measure the resistance according to the value(s) in the table below.

Standard Resistance (Check for Open):

TESTER CONNECTION	CONDITION	SPECIFIED CONDITION
1A-2 - E4-6 (IG2)	Always	Below 1 Ω
1A-3 - Body ground	Always	Below 1 Ω

Standard Resistance (Check for Short):

TESTER CONNECTION	CONDITION	SPECIFIED CONDITION

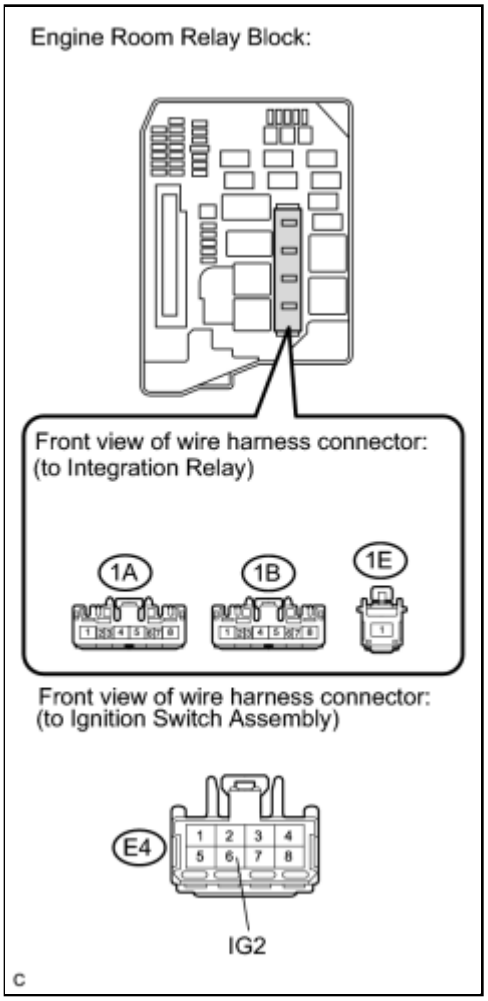

TESTER CONNECTION	CONDITION	SPECIFIED CONDITION
E4-6 (IG2) - Body ground	Always	10 kΩ or higher

(d) Reinstall the integration relay.

(e) Reconnect the ignition switch connector.

NG ▶ **REPAIR OR REPLACE HARNESS OR CONNECTOR (INTEGRATION RELAY - ECM)**

OK ▼

11.	INSPECT IGNITION SWITCH

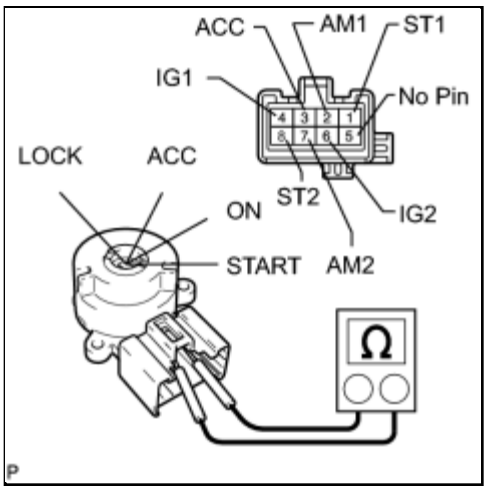

(a) Remove the ignition switch.

(b) Measure the resistance according to the value(s) in the table below.

Standard Resistance:

TESTER CONNECTION	SWITCH CONDITION	SPECIFIED CONDITION
All Terminals	LOCK	10 kΩ or higher
2 (AM1) - 3 (ACC)	ACC	Below 1 Ω
2 (AM1) - 3 (ACC) - 4 (IG1)	ON	

TESTER CONNECTION	SWITCH CONDITION	SPECIFIED CONDITION
7 (AM2) - 6 (IG2)	START	
2 (AM1) - 4 (IG1) - 1 (ST1)		
7 (AM2) - 6 (IG2) - 8 (ST2)		

(c) Reinstall the ignition switch.

NG ▶ **REPLACE IGNITION SWITCH**

OK ▶ **REPAIR OR REPLACE HARNESS OR CONNECTOR (IGNITION SWITCH - BATTERY)**

Last Modified: 3-10-2010	6.4 J	**From:** 200901
Model Year: 2010	**Model:** Corolla	**Doc ID:** RM000001DN7022X
Title: 2AZ-FE ENGINE CONTROL: SFI SYSTEM: Fuel Pump Control Circuit (2010 Corolla)		

Fuel Pump Control Circuit

DESCRIPTION

When the engine is cranked, the starter relay drive signal from the ignition switch is input into the STA terminal of the ECM, and the NE signal generated by the crankshaft position sensor is also input into the NE+ terminal. Thus, the ECM interprets that the engine is being cranked, and turns transistor Tr1 in the ECM internal circuit ON. The current flows to the C/OPN (Circuit Opening) relay by turning Tr1 ON. Then, the fuel pump operates.

While the NE signal is input into the ECM, and the engine is running, the ECM turns Tr1 on continuously.

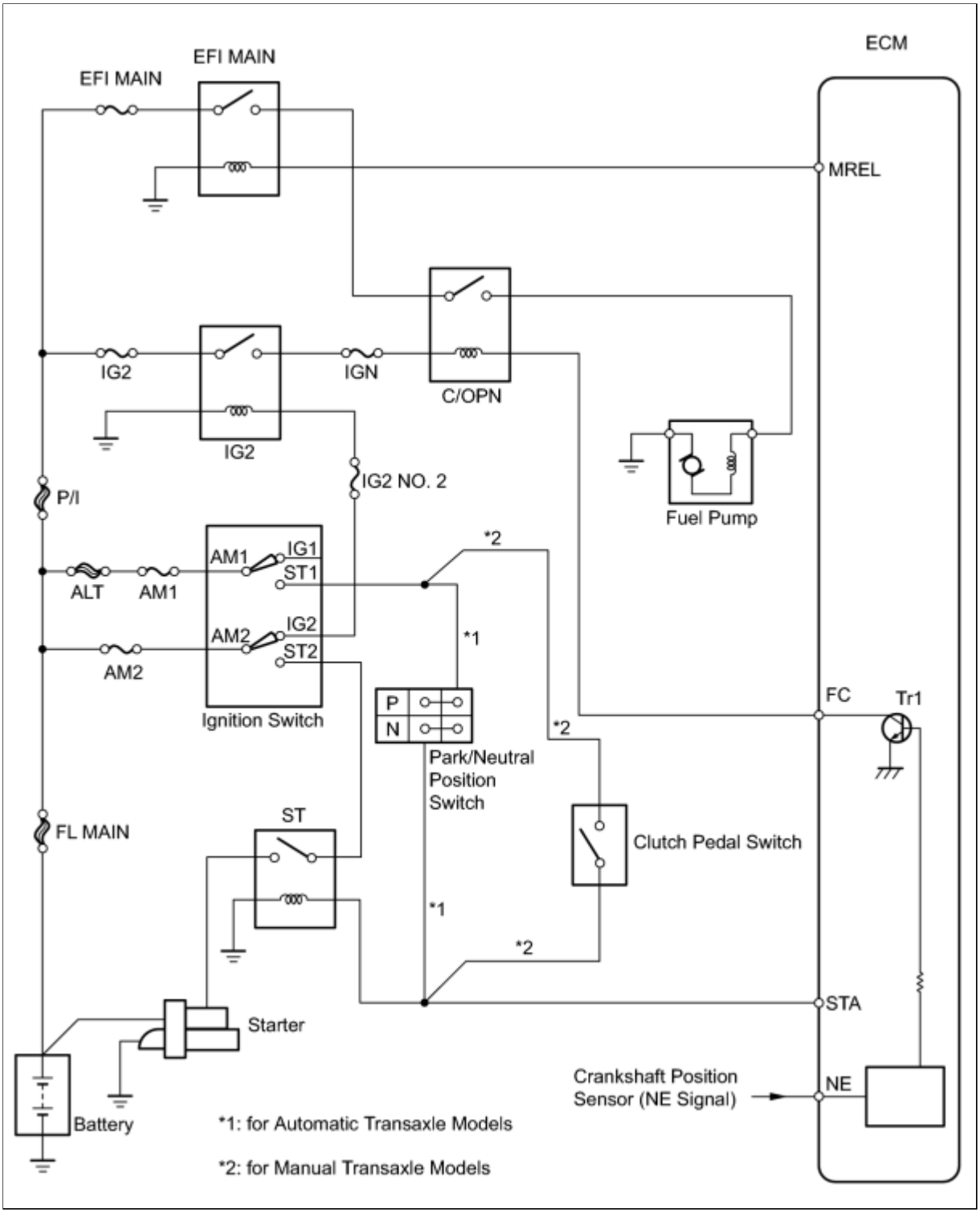

WIRING DIAGRAM

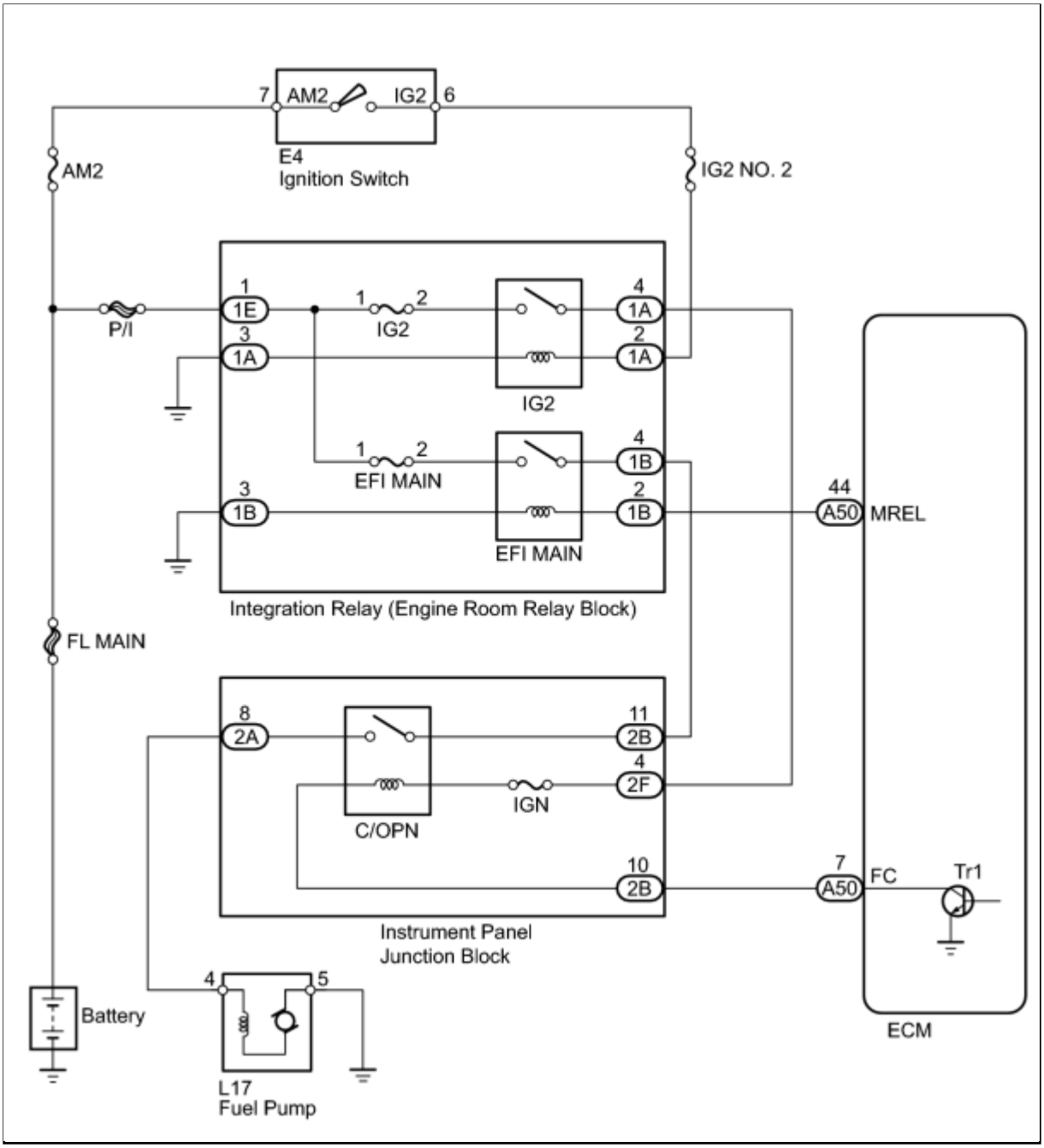

INSPECTION PROCEDURE

PROCEDURE

1.	**PERFORM ACTIVE TEST USING TECHSTREAM (FUEL PUMP/SPD)**

(a) Connect the Techstream to the DLC3.

(b) Turn the ignition switch to ON.

(c) Turn the Techstream on.

(d) Enter the following menus: Powertrain / Engine and ECT / Active Test / Control the Fuel Pump/Speed.

(e) Check whether the fuel pump operating sound occurs when performing the Active Test using the Techstream.

Result:

RESULT	PROCEED TO
Fuel pump operating sound does not occur	A
Fuel pump operating sound occurs	B

B ▶ **READ VALUE USING TECHSTREAM (STARTER SIG)**

A ▼

2.	**INSPECT MAIN BODY ECU (C/OPN RELAY INPUT VOLTAGE)**

(a) Measure the voltage between the terminal of the instrument panel junction block and the body ground when the ignition switch is turned to ON and OFF.

Standard Voltage:

TESTER CONNECTION	SWITCH CONDITION	SPECIFIED CONDITION
2B-11 - Body ground	Ignition switch OFF	Below 1 V
2F-4 - Body ground		
2B-11 - Body ground	Ignition switch ON	11 to 14 V
2F-4 - Body ground		

Result:

RESULT	PROCEED TO
Outside standard range	A
Within standard range	B

Component without harness connected:
(Instrument Panel Junction Block)

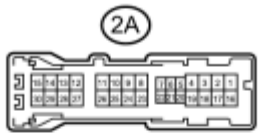

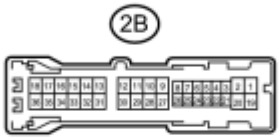



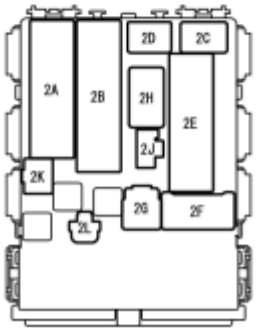

B ▶ **INSPECT INSTRUMENT PANEL JUNCTION BLOCK (C/OPN RELAY)**

A ▼

3.	**CHECK HARNESS AND CONNECTOR (INSTRUMENT PANEL JUNCTION BLOCK - INTEGRATION RELAY)**

(a) Remove the integration relay from the engine room relay block.

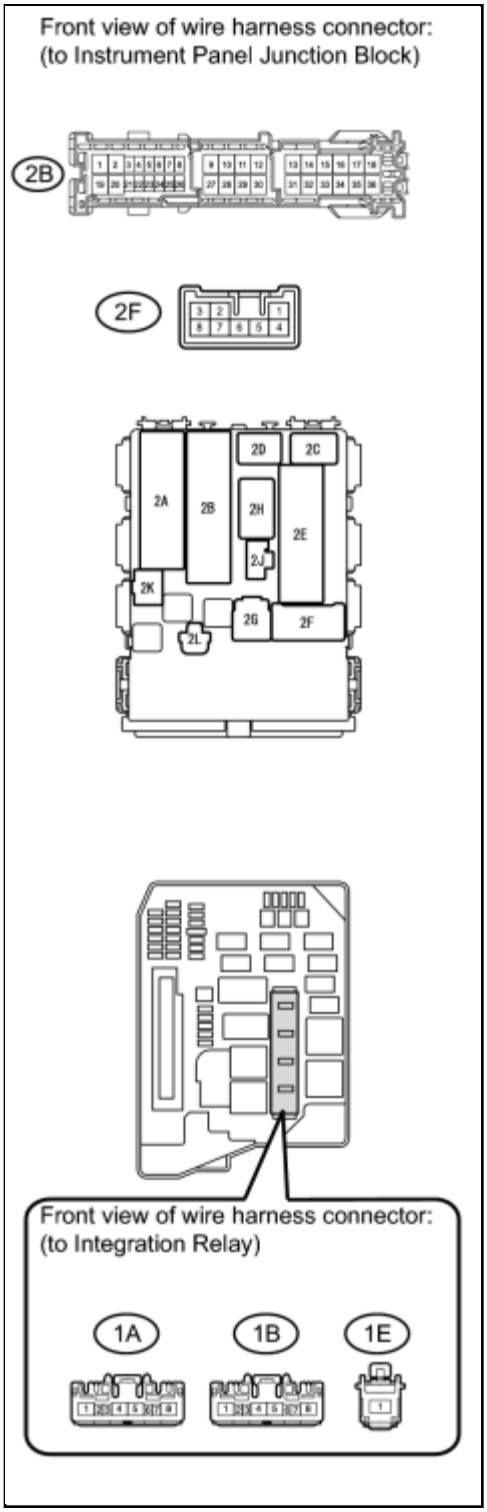

(b) Disconnect the instrument panel junction block connectors.

(c) Measure the resistance according to the value(s) in the table below.

Standard Resistance (Check for Open):

TESTER CONNECTION	CONDITION	SPECIFIED CONDITION
1A-4 - 2F-4	Always	Below 1 Ω
1B-4 - 2B-11	Always	Below 1 Ω

Standard Resistance (Check for Short):

TESTER CONNECTION	CONDITION	SPECIFIED CONDITION
2F-4 - Body ground	Always	10 kΩ or higher
2B-11 - Body ground	Always	10 kΩ or higher

(d) Reinstall the integration relay.

(e) Reconnect the instrument panel junction block connectors.

NG ▶ **REPAIR OR REPLACE HARNESS OR CONNECTOR (INSTRUMENT PANEL JUNCTION BLOCK - INTEGRATION RELAY)**

OK ▶ **GO TO ECM POWER SOURCE CIRCUIT**

4.	**INSPECT INSTRUMENT PANEL JUNCTION BLOCK (C/OPN RELAY)**

(a) Remove the instrument panel junction block.

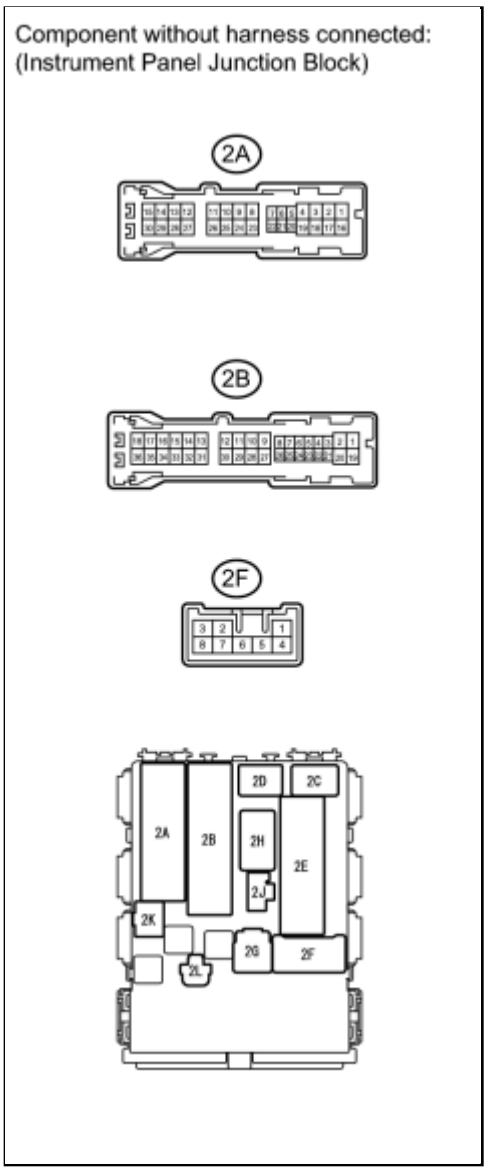

(b) Measure the resistance according to the value(s) in the table below.

Standard Resistance:

TESTER CONNECTION	CONDITION	SPECIFIED CONDITION
2B-11 - 2A-8	When battery voltage absent	10 kΩ or higher
	When battery voltage applied to terminals 2F-4 and 2B-10	Below 1 Ω

(c) Reinstall the instrument panel junction block.

NG ▶ **REPLACE INSTRUMENT PANEL JUNCTION BLOCK**

OK

5.	**CHECK HARNESS AND CONNECTOR (C/OPN RELAY - ECM)**

Front view of wire harness connector:
(to Instrument Panel Junction Block)

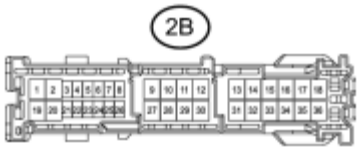



Front view of wire harness connector:
(to ECM)

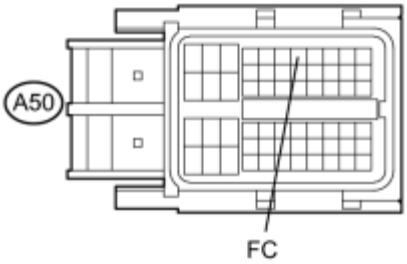

(a) Disconnect the ECM connector.

(b) Disconnect the instrument panel junction block connector.

(c) Measure the resistance according to the value(s) in the table below.

Standard Resistance (Check for Open):

TESTER CONNECTION	CONDITION	SPECIFIED CONDITION

TESTER CONNECTION	CONDITION	SPECIFIED CONDITION
2B-10 - A50-7 (FC)	Always	Below 1 Ω

Standard Resistance (Check for Short):

TESTER CONNECTION	CONDITION	SPECIFIED CONDITION
2B-10 or A50-7 (FC) - Body ground	Always	10 kΩ or higher

(d) Reconnect the instrument panel junction block connector.

(e) Reconnect the ECM connector.

NG ▶ **REPAIR OR REPLACE HARNESS OR CONNECTOR (C/OPN RELAY - ECM)**

OK ▼

6.	**CHECK HARNESS AND CONNECTOR (INSTRUMENT PANEL JUNCTION BLOCK - FUEL PUMP)**

(a) Disconnect the instrument panel junction block connector.

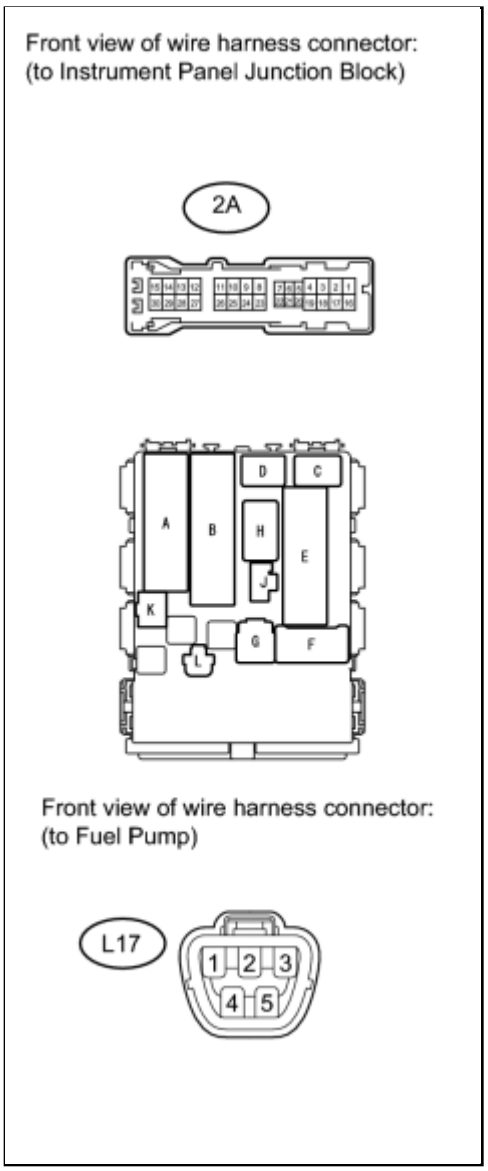

(b) Disconnect the fuel pump connector.

(c) Measure the resistance according to the value(s) in the table below.

Standard Resistance (Check for Open):

TESTER CONNECTIONS	CONDITION	SPECIFIED CONDITIONS
2A-8 - L17-4	Always	Below 1 Ω

Standard Resistance (Check for Short):

TESTER CONNECTIONS	CONDITION	SPECIFIED CONDITIONS
2A-8 or L17-4 - Body ground	Always	10 kΩ or higher

(d) Reconnect the fuel pump connector.

(e) Reconnect the instrument panel junction block connector.

NG → **REPAIR OR REPLACE HARNESS OR CONNECTOR (INSTRUMENT PANEL JUNCTION BLOCK - FUEL PUMP)**

OK ▼

7.	**CHECK HARNESS AND CONNECTOR (FUEL PUMP GROUND CIRCUIT)**

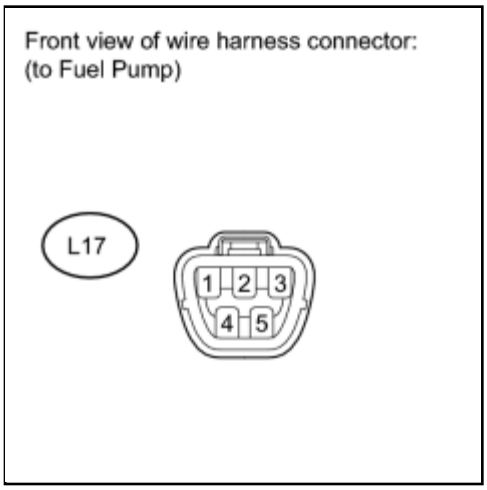

(a) Disconnect the fuel pump connector.

(b) Measure the resistance according to the value(s) in the table below.

Standard Resistance (Check for Open):

TESTER CONNECTIONS	CONDITION	SPECIFIED CONDITIONS
L17-5 - Body ground	Always	Below 1 Ω

(c) Reconnect the fuel pump connector.

NG → **REPAIR OR REPLACE HARNESS OR CONNECTOR (FUEL PUMP GROUND CIRCUIT)**

OK ▼

8.	**READ VALUE USING TECHSTREAM (STARTER SIG)**

(a) Connect the Techstream to the DLC3.

(b) Turn the ignition switch to ON.

(c) Turn the Techstream on.

(d) Enter the following menus: Powertrain / Engine and ECT / Data List / All Data / Starter Signal.

(e) Check the result when the ignition switch is turned to ON and START.

Result:

IGNITION SWITCH POSITION	STARTER SIGNAL
ON	OFF
START	ON

NG ▶ **REPAIR OR REPLACE STARTING SYSTEM**

OK ▼

9.	**READ VALUE USING TECHSTREAM (ENGINE SPD)**

(a) Connect the Techstream to the DLC3.

(b) Turn the ignition switch to ON.

(c) Turn the Techstream on.

(d) Enter the following menus: Powertrain / Engine and ECT / Data List / All Data / Engine Speed.

(e) Read the values displayed on the Techstream while cranking.

OK:

Values are displayed continuously.

NG ▶ **REPAIR OR REPLACE CRANKSHAFT POSITION SENSOR CIRCUIT**

OK ▶ **REPLACE ECM**

Last Modified: 3-10-2010	6.4 J	**From:** 200901
Model Year: 2010	**Model:** Corolla	**Doc ID:** RM000001D6V08HX
Title: 2AZ-FE ENGINE CONTROL: SFI SYSTEM: VC Output Circuit (2010 Corolla)		

VC Output Circuit

DESCRIPTION

The ECM constantly generates 5 V power from the battery voltage supplied to the +B (BATT) terminal to operate the microprocessor. The ECM also provides this power to the sensors through the VC output circuit.

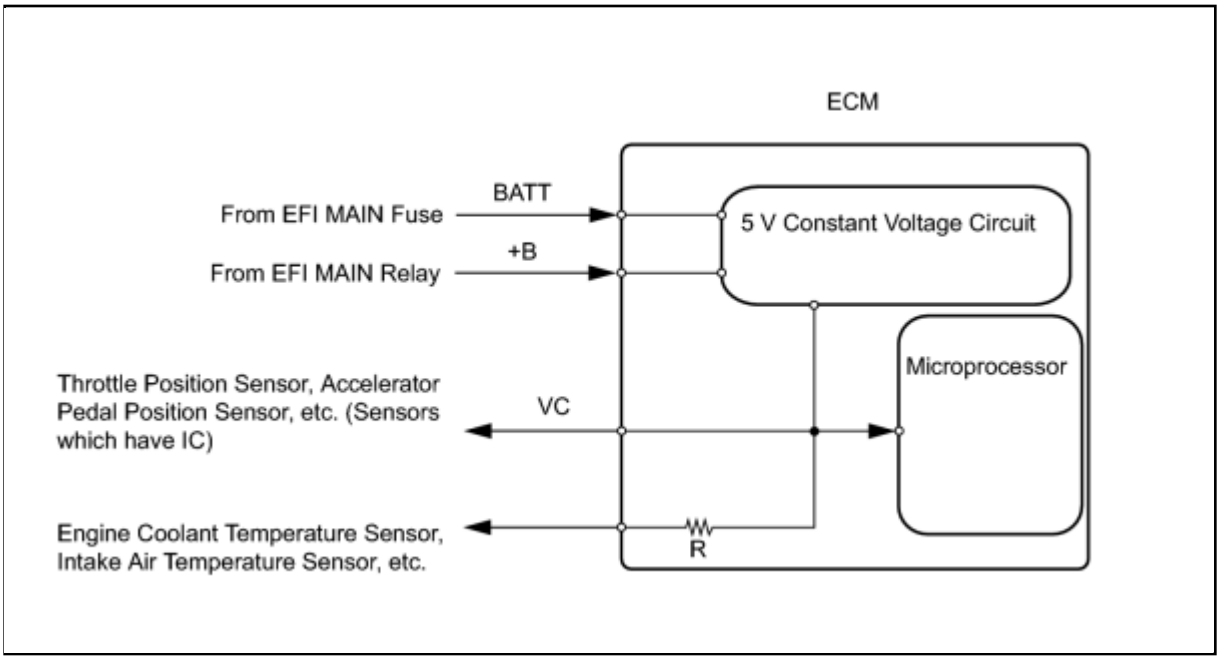

When the VC circuit is short-circuited, the microprocessor in the ECM and sensors that are supplied with power through the VC circuit are inactivated because the power is not supplied from the VC circuit. Under this condition, the system does not start up and the MIL does not illuminate even if the system malfunctions.

HINT:

Under normal conditions, the MIL is illuminated for several seconds when the ignition switch is first turned ON. The MIL goes off when the engine is started.

WIRING DIAGRAM

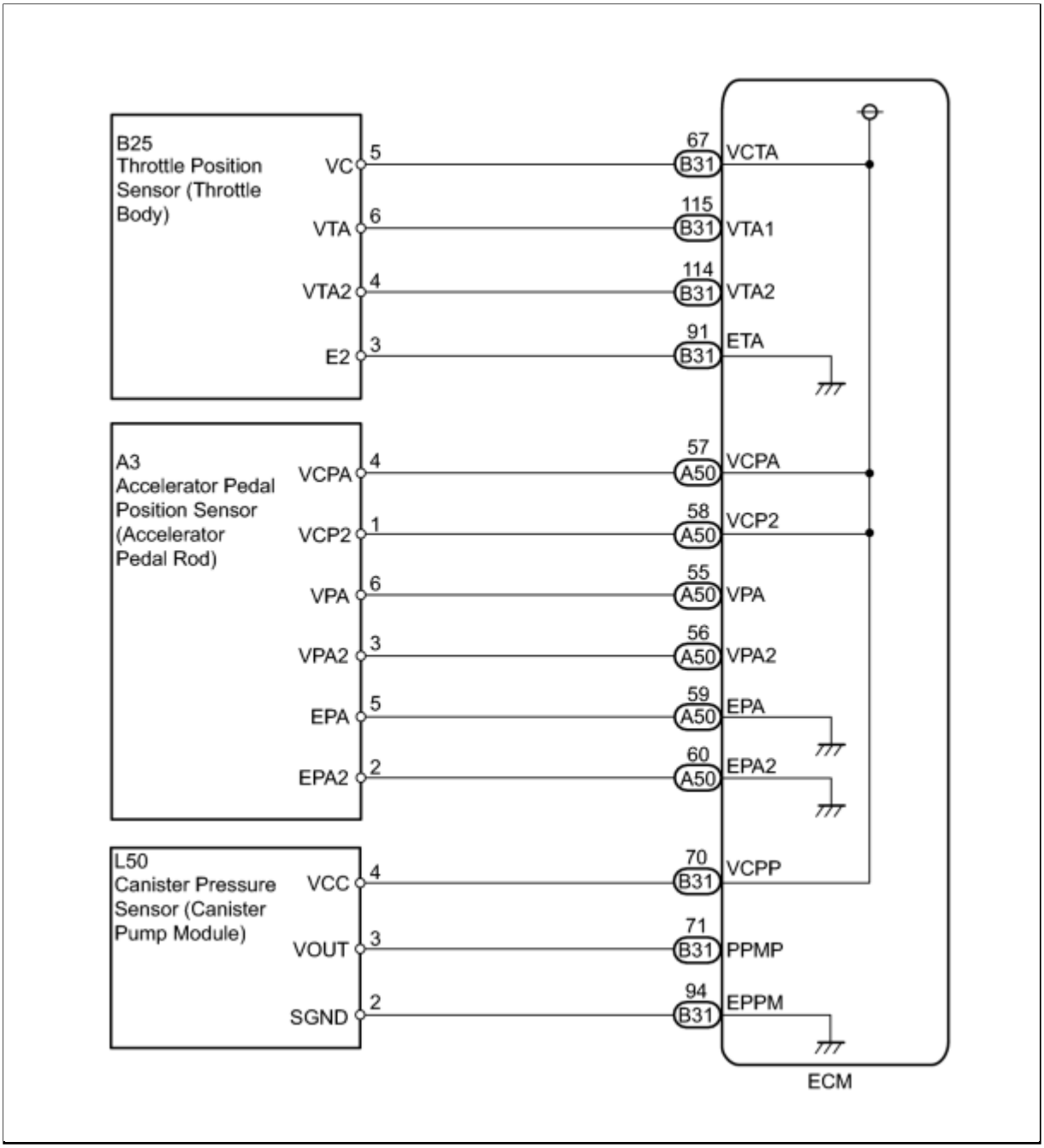

INSPECTION PROCEDURE

PROCEDURE

1.	**CHECK MIL**

(a) Check that the Malfunction Indicator Lamp (MIL) lights up when turning the ignition switch to ON.

OK:

MIL lights up

NG ▶ CHECK COMMUNICATION BETWEEN TECHSTREAM AND ECM

OK ▶ SYSTEM OK

2.	CHECK COMMUNICATION BETWEEN TECHSTREAM AND ECM

(a) Connect the Techstream to the DLC3.

(b) Turn the ignition switch to ON.

(c) Turn the Techstream on.

(d) Check the communication between the Techstream and ECM.

Result:

RESULT	PROCEED TO
Communication is possible	A
Communication is not possible	B

A ▶ GO TO MIL CIRCUIT

B ▼

3.	CHECK MIL (THROTTLE POSITION SENSOR)

(a) Disconnect the throttle body connector.

(b) Turn the ignition switch to ON.

(c) Check the MIL.

Result:

RESULT	PROCEED TO
MIL illuminates	A
MIL does not illuminate	B

(d) Reconnect the throttle body connector.

A ▶ REPLACE THROTTLE BODY

B ▼

4.	CHECK MIL (ACCELERATOR PEDAL POSITION SENSOR)

(a) Disconnect the accelerator pedal position sensor connector.

(b) Turn the ignition switch to ON.

(c) Check the MIL.

Result:

RESULT	PROCEED TO
MIL illuminates	A
MIL does not illuminate	B

(d) Reconnect the accelerator pedal position sensor connector.

A ▶ REPLACE ACCELERATOR PEDAL ROD ASSEMBLY

B ▼

5.	CHECK MIL (CANISTER PUMP MODULE)

(a) Disconnect the canister pump module connector.

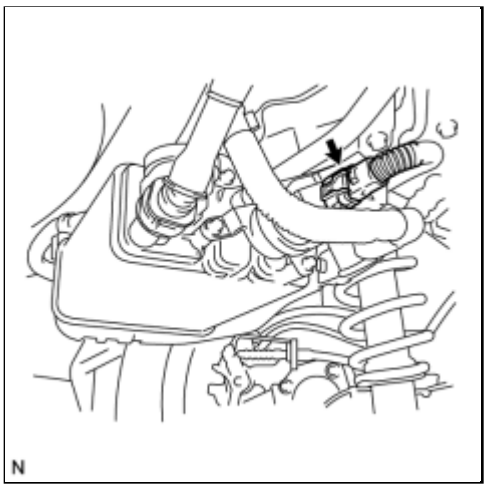

(b) Turn the ignition switch to ON.

(c) Check the MIL.

Result:

RESULT	PROCEED TO
MIL illuminates	A
MIL does not illuminate	B

(d) Reconnect the canister pump module connector.

A ▶ **REPLACE CANISTER**

B ▼

6.	**CHECK HARNESS AND CONNECTOR (VC CIRCUIT)**

(a) Disconnect the throttle body connector.

(b) Disconnect the accelerator pedal position sensor connector.

(c) Disconnect the canister pump module connector.

(d) Disconnect the ECM connectors.

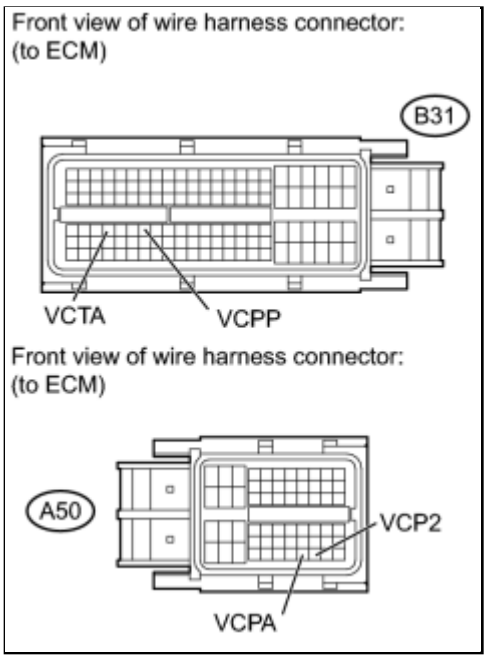

(e) Measure the resistance.

Standard Resistance (Check for Short):

TESTER CONNECTION	CONDITION	SPECIFIED CONDITION
B31-67 (VCTA) - Body ground	Always	10 kΩ or higher
A50-57 (VCPA) - Body ground	Always	10 kΩ or higher
A50-58 (VCP2) - Body ground	Always	10 kΩ or higher
B31-70 (VCPP) - Body ground	Always	10 kΩ or higher

(f) Reconnect the throttle body connector.

(g) Reconnect the accelerator pedal position sensor connector.

(h) Reconnect the canister pump module connector.

(i) Reconnect the ECM connectors.

NG ▶ **REPAIR OR REPLACE HARNESS OR CONNECTOR**

OK ▶ **REPLACE ECM**

Last Modified: 3-10-2010	6.4 J	**From:** 200901
Model Year: 2010	**Model:** Corolla	**Doc ID:** RM000000ZRM04AX
Title: 2AZ-FE ENGINE CONTROL: SFI SYSTEM: Fuel Injector Circuit (2010 Corolla)		

Fuel Injector Circuit

DESCRIPTION

The fuel injectors are located on the intake manifold. They inject fuel into the cylinders based on the signals from the ECM.

WIRING DIAGRAM

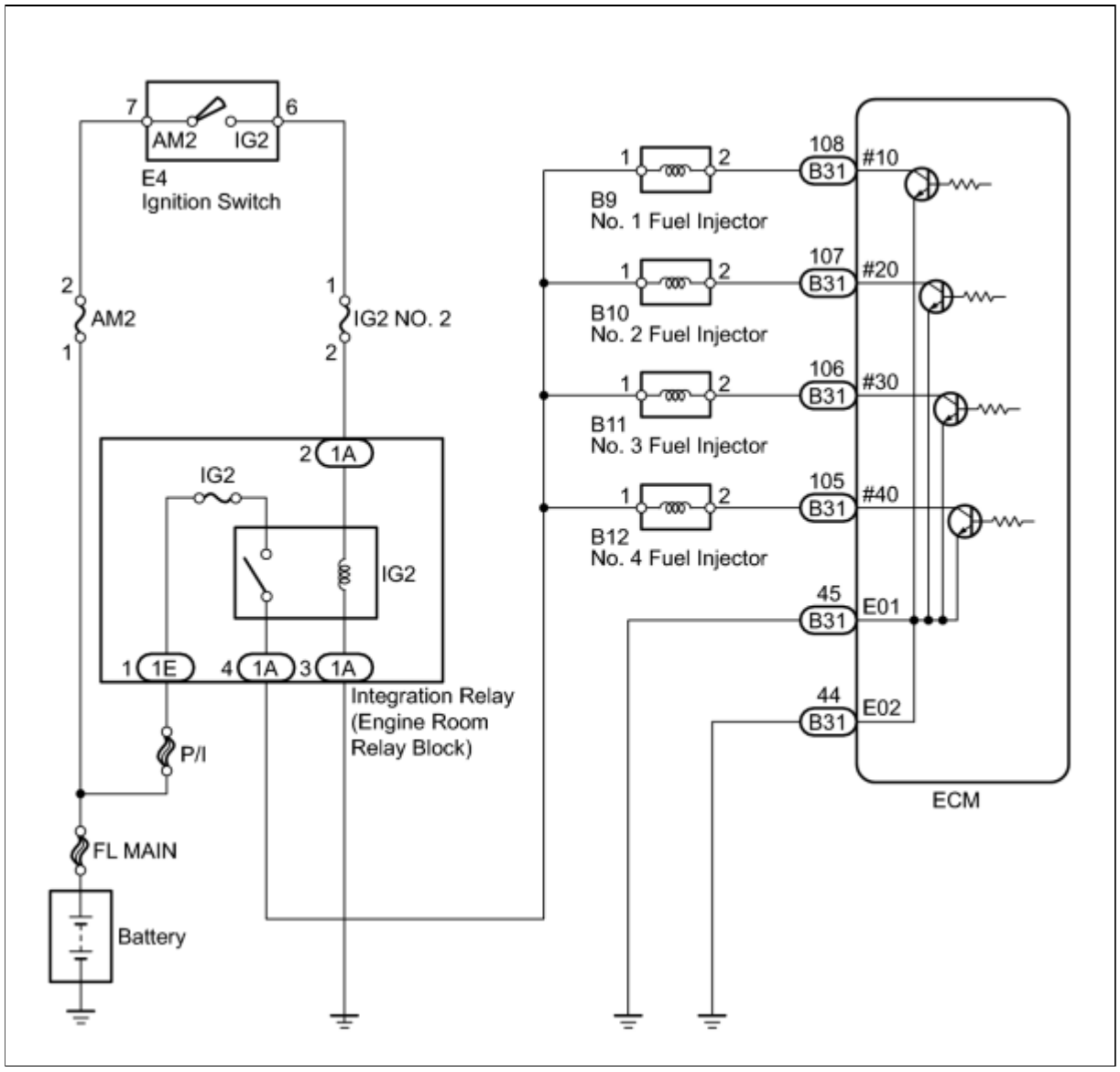

INSPECTION PROCEDURE

PROCEDURE

1.	**INSPECT FUEL INJECTOR (POWER SOURCE)**

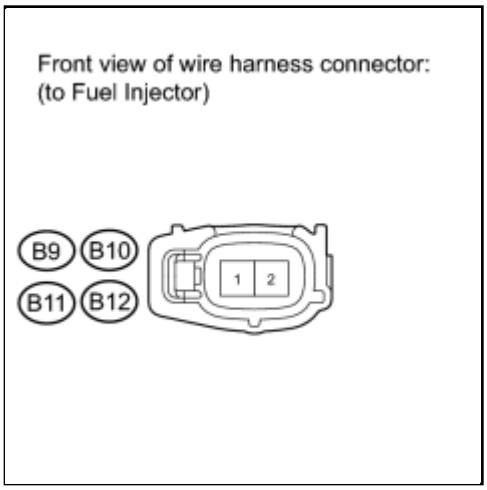

(a) Disconnect the fuel injector connectors.

(b) Turn the ignition switch to ON.

(c) Measure the voltage according to the value(s) in the table below.

Standard Voltage:

TESTER CONNECTION	SWITCH CONDITION	SPECIFIED CONDITION
B9-1 - Body ground	Ignition switch ON	11 to 14 V
B10-1 - Body ground	Ignition switch ON	11 to 14 V
B11-1 - Body ground	Ignition switch ON	11 to 14 V
B12-1 - Body ground	Ignition switch ON	11 to 14 V

(d) Reconnect the fuel injector connectors.

NG ▶ **CHECK HARNESS AND CONNECTOR (FUEL INJECTOR - INTEGRATION RELAY)**

OK ▼

2.	**INSPECT FUEL INJECTOR (INJECTOR RESISTANCE)**

(a) Disconnect the fuel injector connectors.

(b) Measure the resistance according to the value(s) in the table below.

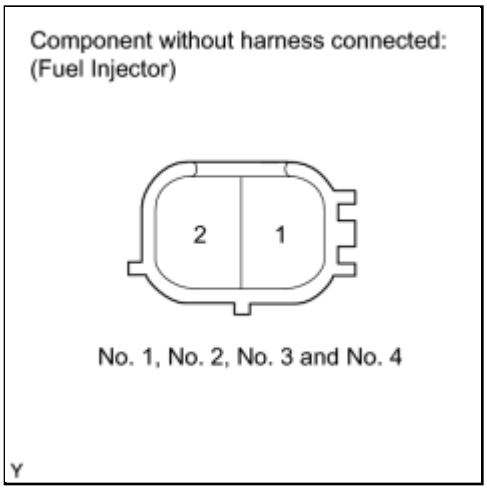

Standard Resistance:

TESTER CONNECTION	CONDITION	SPECIFIED CONDITION
1 - 2	20°C (68°F)	11.6 to 12.4 Ω

(c) Reconnect the fuel injector connectors.

NG ▶ **REPLACE FUEL INJECTOR**

OK ▼

3.	CHECK HARNESS AND CONNECTOR (FUEL INJECTOR - ECM)

(a) Disconnect the ECM connector.

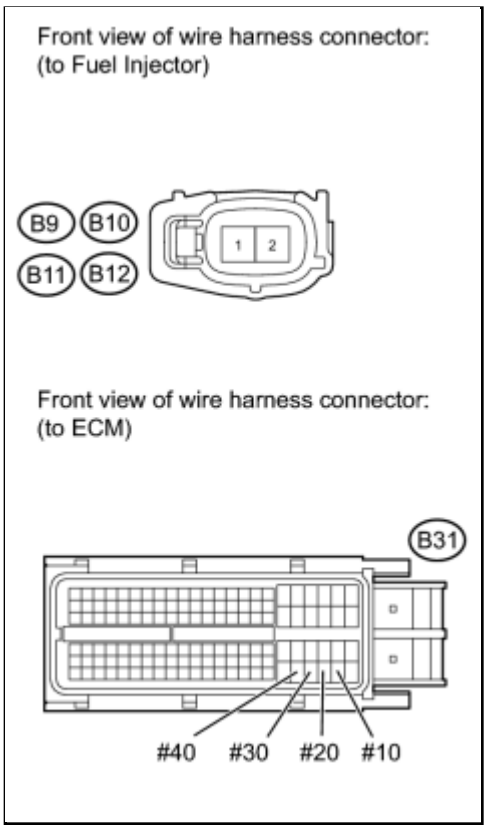

(b) Disconnect the fuel injector connectors.

(c) Measure the resistance according to the value(s) in the table below.

Standard Resistance (Check for Open):

TESTER CONNECTION	CONDITION	SPECIFIED CONDITION
B9-2 - B31-108 (#10)	Always	Below 1 Ω
B10-2 - B31-107 (#20)	Always	Below 1 Ω
B11-2 - B31-106 (#30)	Always	Below 1 Ω
B12-2 - B31-105 (#40)	Always	Below 1 Ω

Standard Resistance (Check for Short):

TESTER CONNECTION	CONDITION	SPECIFIED CONDITION
B9-2 or B31-108 (#10) - Body ground	Always	10 kΩ or higher
B10-2 or B31-107 (#20) - Body ground	Always	10 kΩ or higher
B11-2 or B31-106 (#30) - Body ground	Always	10 kΩ or higher
B12-2 or B31-105 (#40) - Body ground	Always	10 kΩ or higher

(d) Reconnect the fuel injector connectors.

(e) Reconnect the ECM connector.

NG ▶ **REPAIR OR REPLACE HARNESS OR CONNECTOR (FUEL INJECTOR - ECM)**

OK ▼

4.	**CHECK HARNESS AND CONNECTOR (ECM - BODY GROUND)**

(a) Disconnect the ECM connector.

(b) Measure the resistance according to the value(s) in the table below.

Standard Resistance (Check for Open):

TESTER CONNECTION	CONDITION	SPECIFIED CONDITION
B31-45 (E01) - Body ground	Always	Below 1 Ω
B31-44 (E02) - Body ground	Always	Below 1 Ω

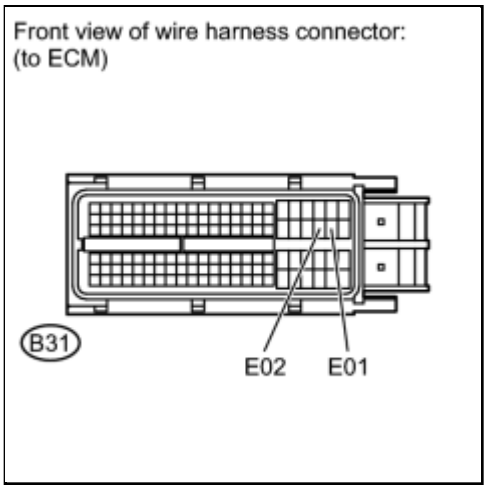

(c) Reconnect the ECM connector.

NG ▶ **REPAIR OR REPLACE HARNESS OR CONNECTOR (ECM - BODY GROUND)**

OK ▼

5.	**INSPECT FUEL INJECTOR (INJECTION AND VOLUME)**

(a) Check the fuel injector injection and volume INFO .

NG ▶ **REPLACE FUEL INJECTOR**

OK ▶ PROCEED TO NEXT CIRCUIT INSPECTION SHOWN IN PROBLEM SYMPTOMS TABLE

6.	CHECK HARNESS AND CONNECTOR (FUEL INJECTOR - INTEGRATION RELAY)

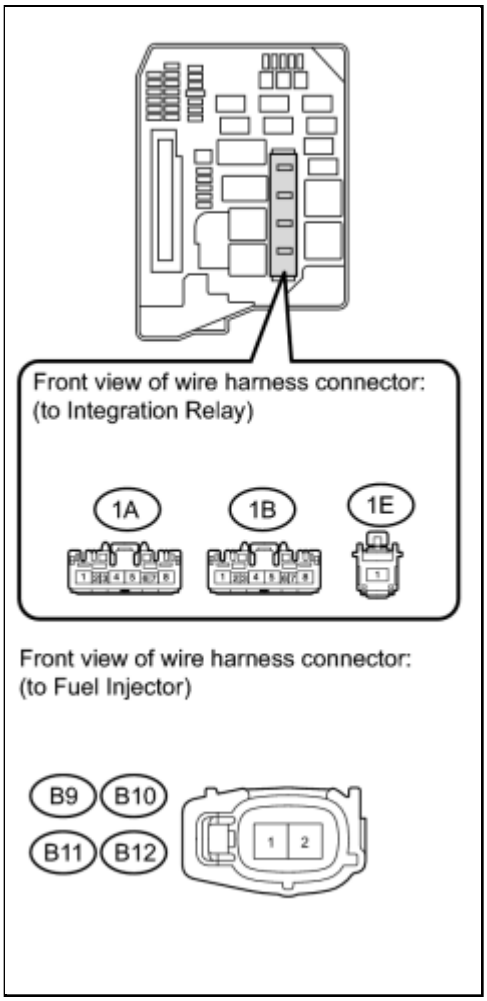

(a) Disconnect the fuel injector connectors.

(b) Remove the integration relay from the engine room relay block.

(c) Measure the resistance according to the value(s) in the table below.

Standard Resistance (Check for Open):

TESTER CONNECTION	CONDITION	SPECIFIED CONDITION
B9-1 - 1A-4	Always	Below 1 Ω
B10-1 - 1A-4	Always	Below 1 Ω
B11-1 - 1A-4	Always	Below 1 Ω
B12-1 - 1A-4	Always	Below 1 Ω

Standard Resistance (Check for Short):

TESTER CONNECTION	CONDITION	SPECIFIED CONDITION
B9-1 or 1A-4 - Body ground	Always	10 kΩ or higher
B10-1 or 1A-4 - Body ground	Always	10 kΩ or higher
B11-1 or 1A-4 - Body ground	Always	10 kΩ or higher
B12-1 or 1A-4 - Body ground	Always	10 kΩ or higher

(d) Reconnect the fuel injector connectors.

(e) Reinstall the integration relay.

NG ▶ REPAIR OR REPLACE HARNESS OR

CONNECTOR (FUEL INJECTOR - INTEGRATION RELAY)

OK ▶ REPAIR OR REPLACE ECM POWER SOURCE CIRCUIT

Last Modified: 3-10-2010	6.4 J	**From:** 200901
Model Year: 2010	**Model:** Corolla	**Doc ID:** RM000000WZ10B4X
Title: 2AZ-FE ENGINE CONTROL: SFI SYSTEM: MIL Circuit (2010 Corolla)		

MIL Circuit

DESCRIPTION

The MIL (Malfunction Indicator Lamp) is used to indicate vehicle malfunction detections by the ECM. When the ignition switch is turned to ON, power is supplied to the MIL circuit, and the ECM provides the circuit ground which illuminates the MIL.

The MIL operation can be checked visually: When the ignition switch is first turned to ON, the MIL should illuminate and should then turn off. If the MIL remains illuminated or does not illuminate, conduct the following troubleshooting procedure using the Techstream.

WIRING DIAGRAM

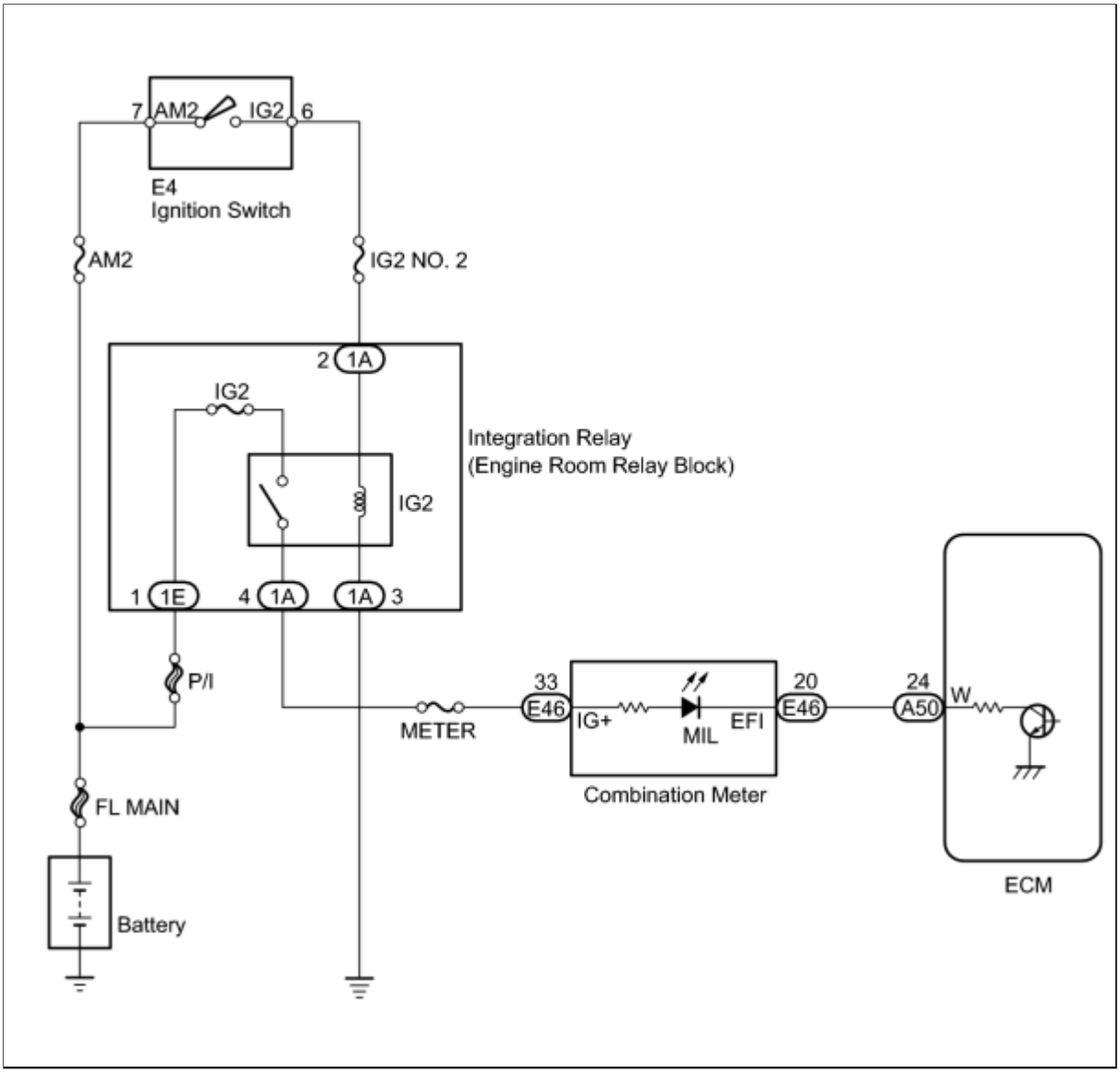

INSPECTION PROCEDURE

PROCEDURE

1.	**CHECK THAT MIL ILLUMINATES**

(a) Perform troubleshooting in accordance with the table below.

Result:

MIL CONDITION	PROCEED TO
MIL remains ON	A
MIL does not illuminate	B

B ▶ CHECK THAT MIL IS ILLUMINATED

A ▼

2.	CHECK WHETHER MIL TURNS OFF

(a) Connect the Techstream to the DLC3.

(b) Turn the ignition switch to ON.

(c) Turn the Techstream on.

(d) Enter the following menus: Powertrain / Engine and ECT / Trouble Codes.

(e) Check if any DTCs have been detected. Write down any DTCs.

Result:

RESULT	PROCEED TO
No DTC detected	A
DTCs are detected	B

HINT:

Check for detected DTCs output from other ECUs which relate to the MIL.

B ▶ REPAIR CIRCUITS INDICATED BY OUTPUT DTCS

A ▼

3.	CHECK HARNESS AND CONNECTOR (CHECK FOR SHORT IN WIRE HARNESS)

(a) Disconnect the ECM connector.

(b) Turn the ignition switch to ON.

(c) Check that the MIL does not illuminate.

Front view of wire harness connector:
(to ECM)

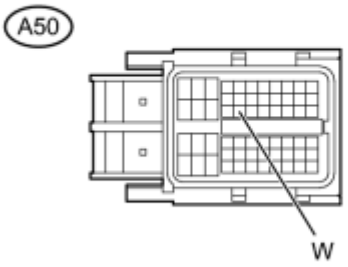

OK:

MIL not illuminated.

(d) Reconnect the ECM connector.

NG ▶ **CHECK HARNESS AND CONNECTOR (COMBINATION METER - ECM)**

OK ▶ **REPLACE ECM**

4.	CHECK HARNESS AND CONNECTOR (COMBINATION METER - ECM)

(a) Disconnect the ECM connector.

(b) Disconnect the combination meter connector.

Front view of wire harness connector:
(to Combination Meter)

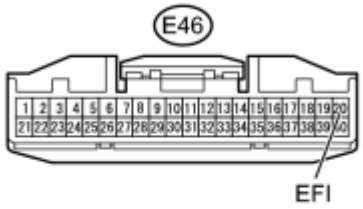

Front view of wire harness connector:
(to ECM)

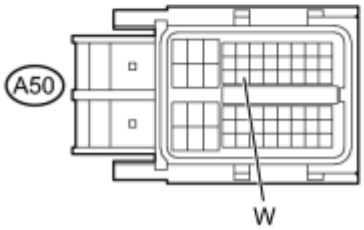

(c) Measure the resistance according to the value(s) in the table below.

Standard Resistance (Check for Short):

TESTER CONNECTION	CONDITION	SPECIFIED CONDITION
A50-24 (W) or E46-20 (EFI) - Body ground	Always	10 kΩ or higher

(d) Reconnect the ECM connector.

(e) Reconnect the combination meter connector.

NG ▶ **REPAIR OR REPLACE HARNESS OR CONNECTOR (COMBINATION METER - ECM)**

OK ▶ **REPLACE COMBINATION METER**

5.	**CHECK THAT MIL IS ILLUMINATED**

(a) Check if the MIL is illuminated when the ignition switch is turned to ON.

OK:

MIL should be illuminated.

NG ▶ **CHECK THAT ENGINE STARTS**

OK ▶ **SYSTEM OK**

6.	**CHECK THAT ENGINE STARTS**

(a) Turn the ignition switch to ON.

(b) Start the engine.

Result:

RESULT	PROCEED TO
Engine starts	A
Engine does not start*	B

HINT:

***: The Techstream cannot communicate with the ECM.**

B ▶ **GO TO VC OUTPUT CIRCUIT**

A ▼

7.	**CHECK HARNESS AND CONNECTOR (COMBINATION METER - ECM)**

(a) Disconnect the ECM connector.

(b) Disconnect the combination meter connector.

Front view of wire harness connector:
(to Combination Meter)

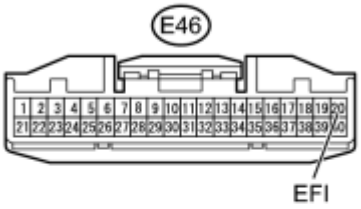

Front view of wire harness connector:
(to ECM)

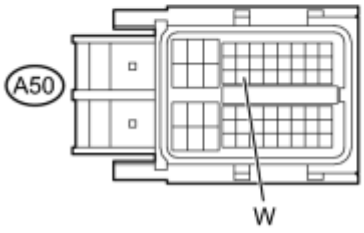

(c) Measure the resistance according to the value(s) in the table below.

Standard Resistance (Check for Open):

TESTER CONNECTION	CONDITION	SPECIFIED CONDITION
A50-24 (W) - E46-20 (EFI)	Always	Below 1 Ω

(d) Reconnect the ECM connector.

(e) Reconnect the combination meter connector.

NG ▶ **REPAIR OR REPLACE HARNESS OR CONNECTOR (COMBINATION METER - ECM)**

OK ▶ **REPLACE COMBINATION METER**

Last Modified: 3-10-2010	6.4 L	**From:** 200901
Model Year: 2010	**Model:** Corolla	**Doc ID:** RM000000PD804HX
Title: 2ZR-FE ENGINE CONTROL: SFI SYSTEM: PRECAUTION (2010 Corolla)		

PRECAUTION

1. INITIALIZATION

NOTICE:

- Perform RESET MEMORY (AT initialization) when replacing the automatic transaxle assembly, engine assembly or ECM INFO .
- Perform REGISTRATION (VIN registration) when replacing the ECM INFO .

HINT:

Reset memory or initial initialization cannot be completed by only disconnecting and reconnecting the cable to the negative (-) battery terminal.

2. EXPRESSION OF IGNITION SWITCH

HINT:

The type of ignition switch used on this model differs according to the specifications of the vehicle. The expressions listed in the table below are used in this section.

EXPRESSION	IGNITION SWITCH (POSITION)	ENGINE SWITCH (CONDITION)
Ignition switch off	LOCK	Off
Ignition switch ON	ON	On (IG)
Ignition switch ACC	ACC	On (ACC)
Engine Start	START	Start

3. FOR USING TECHSTREAM

CAUTION:

Observe the following items for safety reasons:

- Read its instruction books before using the Techstream.
- Prevent the Techstream cable from being caught on the pedals, shift lever or steering wheel when driving with the Techstream connected to the vehicle.
- When driving the vehicle for testing purposes using the Techstream, two persons are required. One person drives the vehicle, and the other operates the Techstream.

4. DISCONNECTING AND RECONNECTING OF NEGATIVE BATTERY TERMINAL CABLE

(a) Before performing work on electric components, disconnect the cable from the negative (-) battery terminal in order to prevent damage to the electrical system or components.

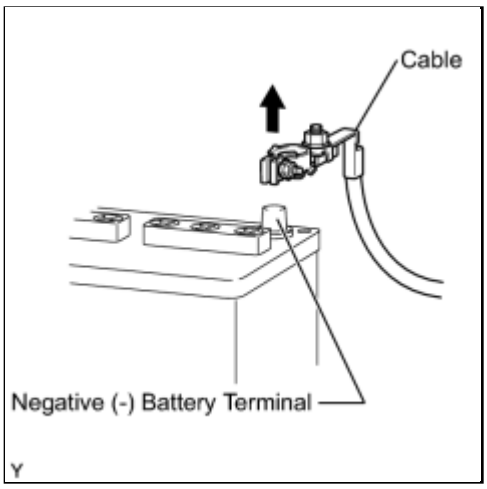

(b) Before disconnecting and reconnecting the battery cable, turn the ignition switch off and the headlight switch OFF. Then loosen the terminal nut completely. Do not damage the cable or terminal.

(c) When the battery cable is disconnected, the clock and radio settings and stored DTCs are cleared. Therefore, before disconnecting the battery cable, make a note of the settings.

Last Modified: 3-10-2010	6.4 D	**From:** 200901
Model Year: 2010	**Model:** Corolla	**Doc ID:** RM000000PDC07TX
Title: 2ZR-FE ENGINE CONTROL: SFI SYSTEM: DEFINITION OF TERMS (2010 Corolla)		

DEFINITION OF TERMS

TERMS	DEFINITION
Monitor Description	Description of what the ECM monitors and how it detects malfunctions (monitoring purpose and its details).
Related DTCs	A group of diagnostic trouble codes that are output by the ECM based on the same malfunction detection logic.
Typical Enabling Condition	Preconditions that allow the ECM to detect malfunctions. With all preconditions satisfied, the ECM sets DTCs when monitored value(s) exceeds malfunction threshold(s).
Sequence of Operation	Order of monitor priority, applied if multiple sensors and components are involved in a single malfunction detection process. Each sensor and component is monitored in turn, when previous detection operation has completed.
Required Sensor/Components	The sensors and components used by the ECM to detect each malfunction.
Frequency of Operation	The number of times the ECM checks for each malfunction during each driving cycle. "Once per driving cycle" means ECM only performs checks for that malfunction once during a single driving cycle. "Continuous" means the ECM performs checks for that malfunction whenever enabling conditions are met.
Duration	Minimum time for which the ECM must detect a continuous deviation in monitored value(s) in order to set a DTC. Timing begins when Typical Enabling Conditions met.
Malfunction Thresholds	The value beyond which the ECM determines malfunctions exist and sets DTCs.
MIL Operation	Timing of MIL illumination after a malfunction is detected. "Immediate" means the ECM illuminates the MIL as soon as a malfunction is detected. "2 driving cycle" means the ECM illuminates the MIL if the same malfunction is detected a second time during the next sequential driving cycle.

Last Modified: 3-10-2010	6.4 R	**From:** 200901
Model Year: 2010	**Model:** Corolla	**Doc ID:** RM000000PDA04WX
Title: 2ZR-FE ENGINE CONTROL: SFI SYSTEM: PARTS LOCATION (2010 Corolla)		

PARTS LOCATION

ILLUSTRATION

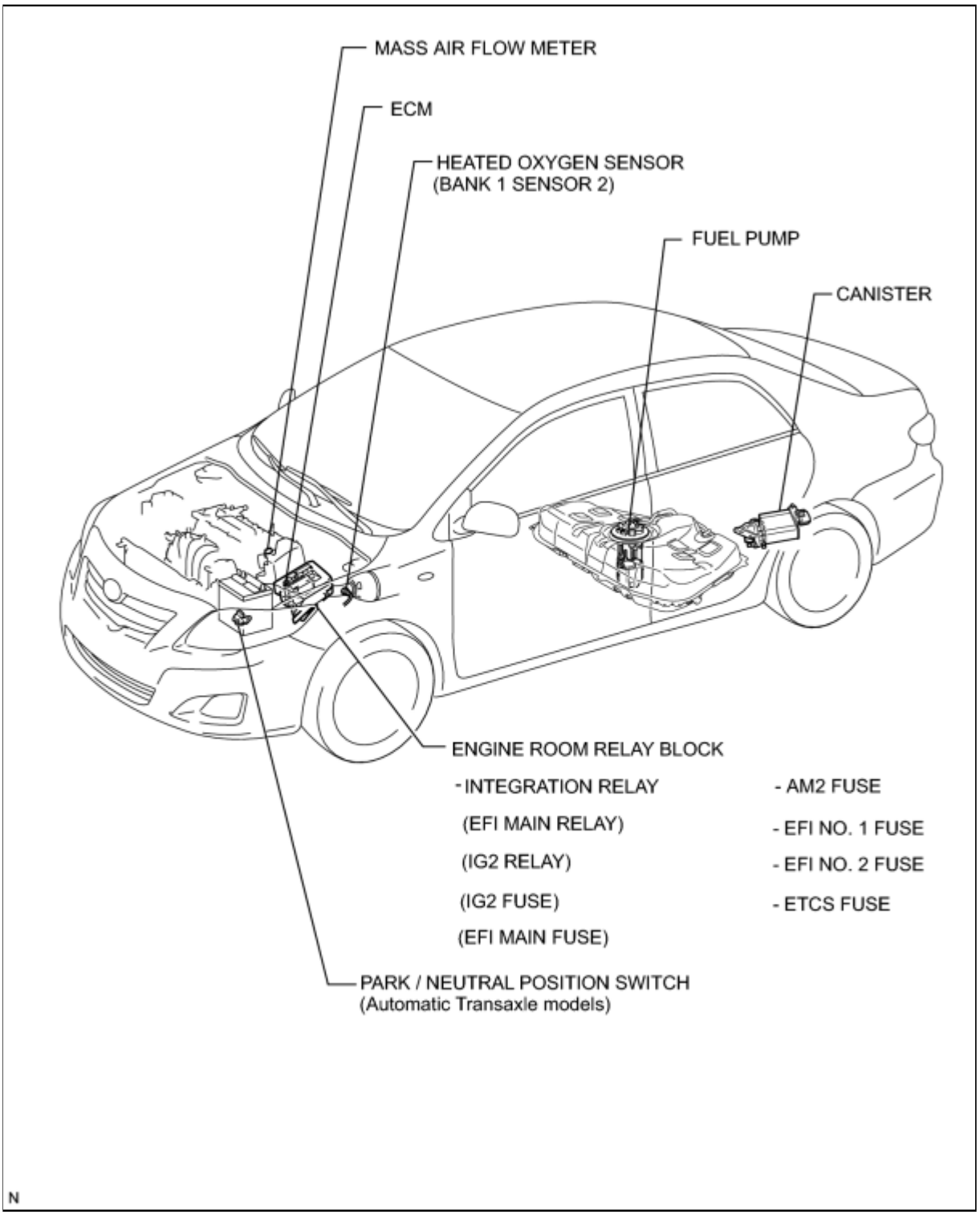

ILLUSTRATION

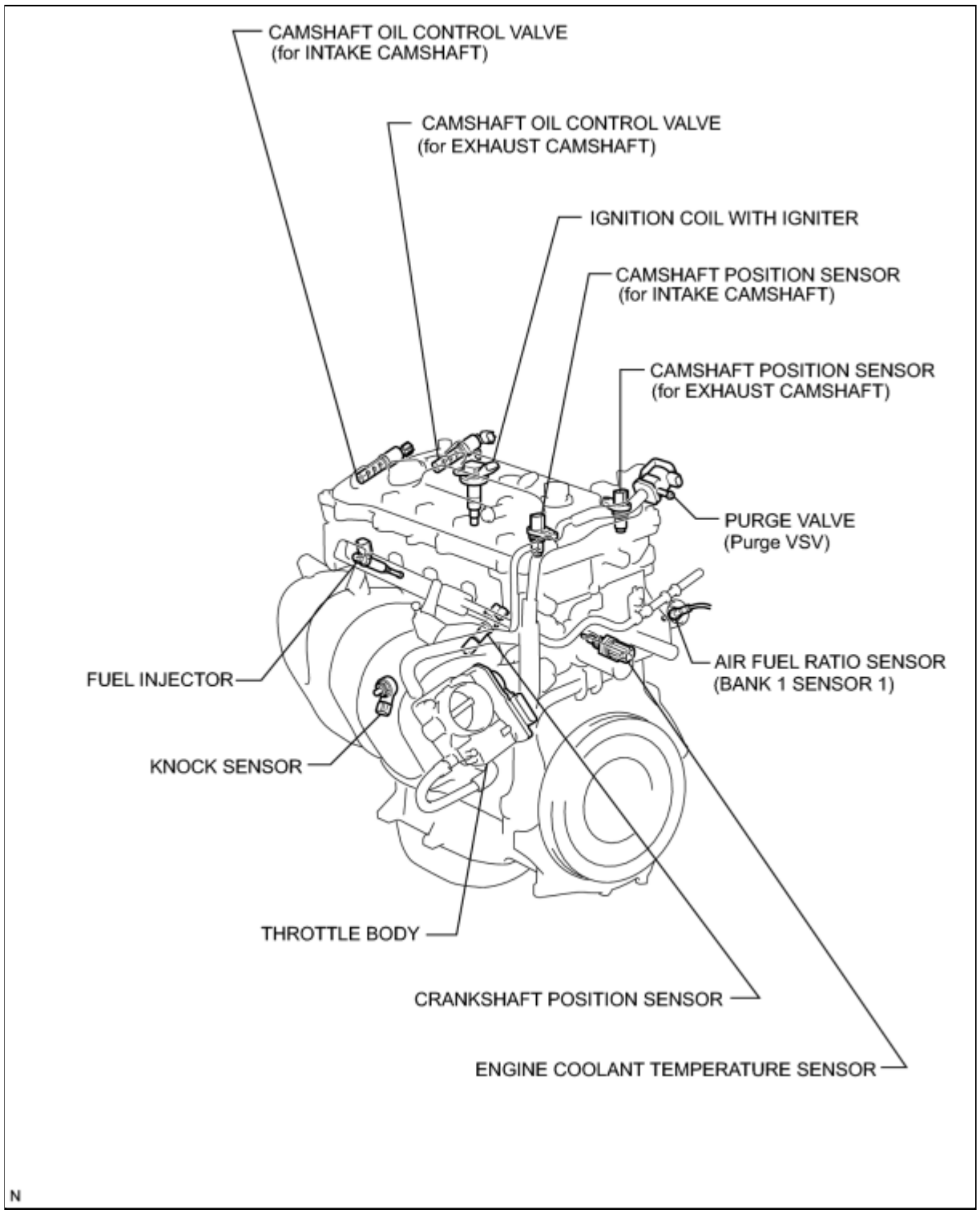

ILLUSTRATION

except TMC Made:

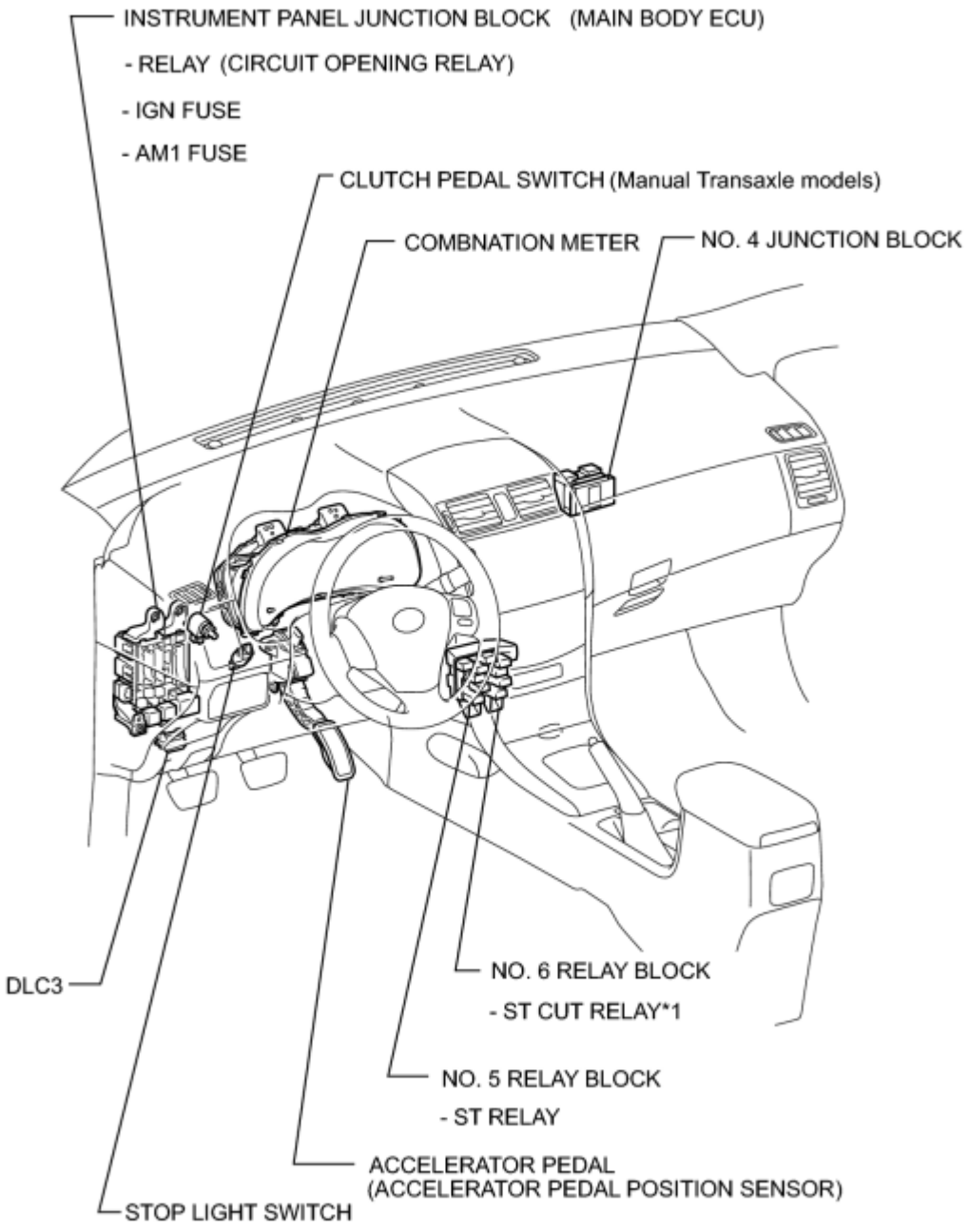

*1: w/ Smart Key System

ILLUSTRATION

TMC Made:

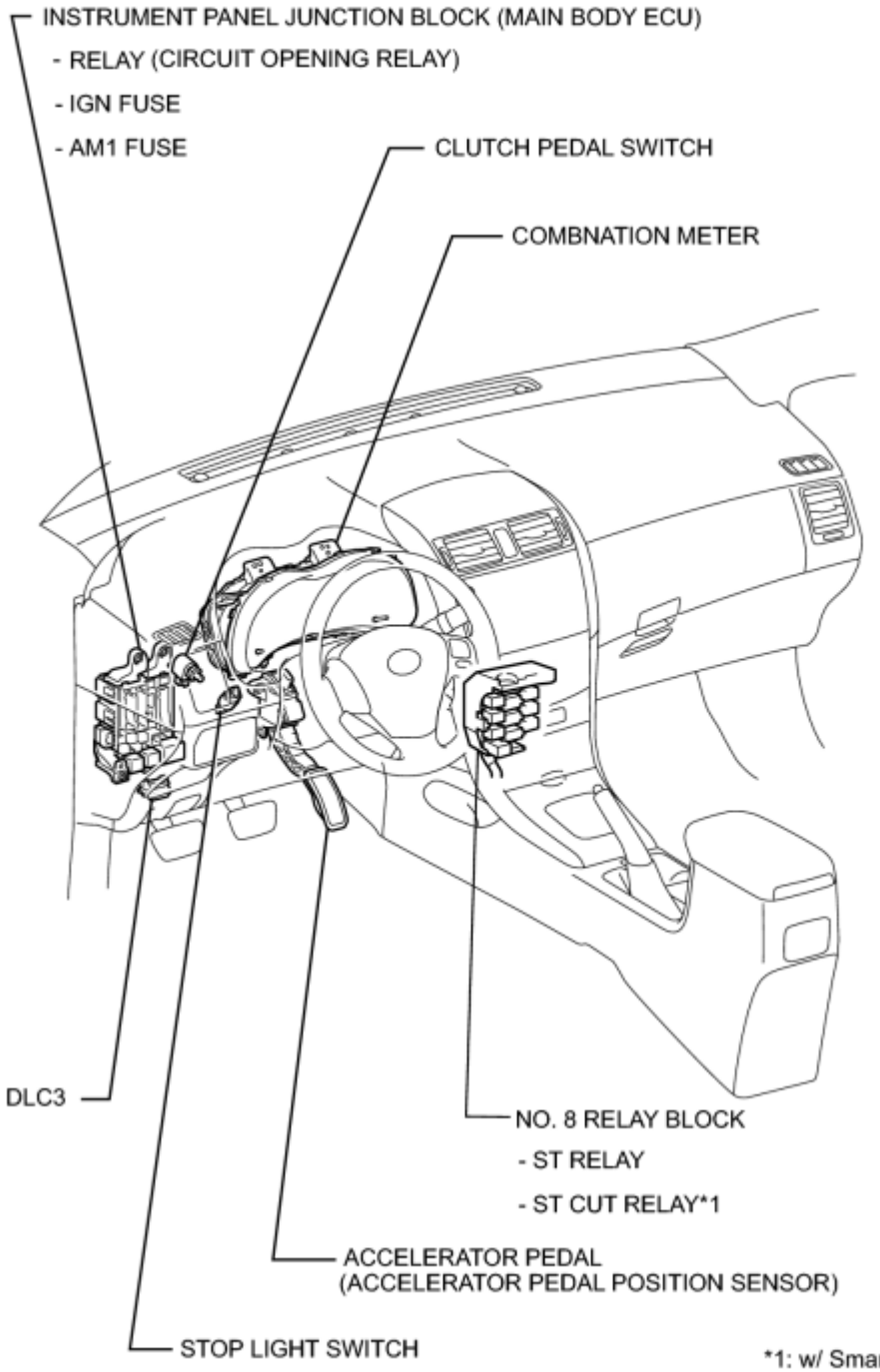

*1: w/ Smart Key System

Last Modified: 3-10-2010	6.4 U	**From:** 200901
Model Year: 2010	**Model:** Corolla	**Doc ID:** RM000000PDB05PX
Title: 2ZR-FE ENGINE CONTROL: SFI SYSTEM: SYSTEM DIAGRAM (2010 Corolla)		

SYSTEM DIAGRAM

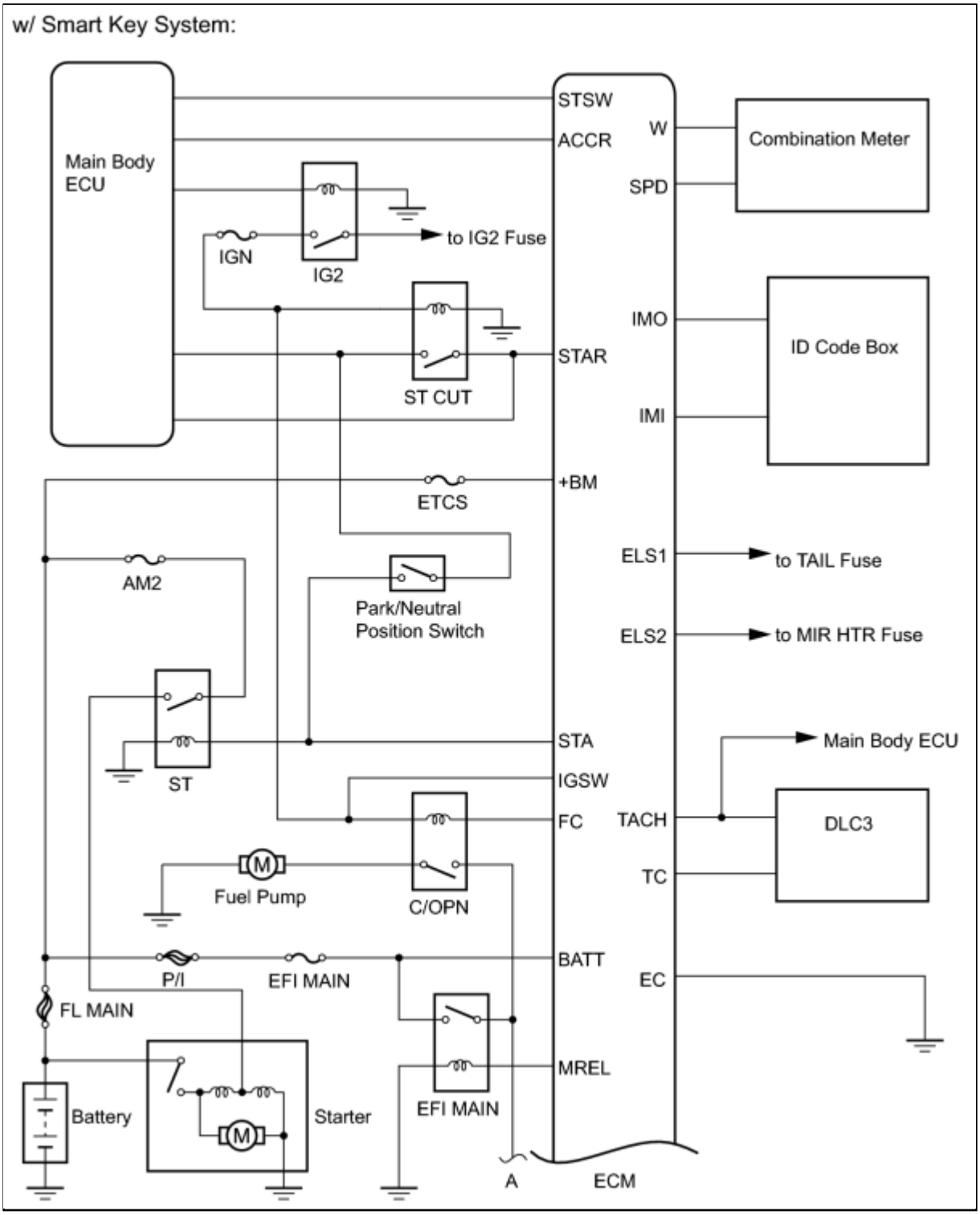

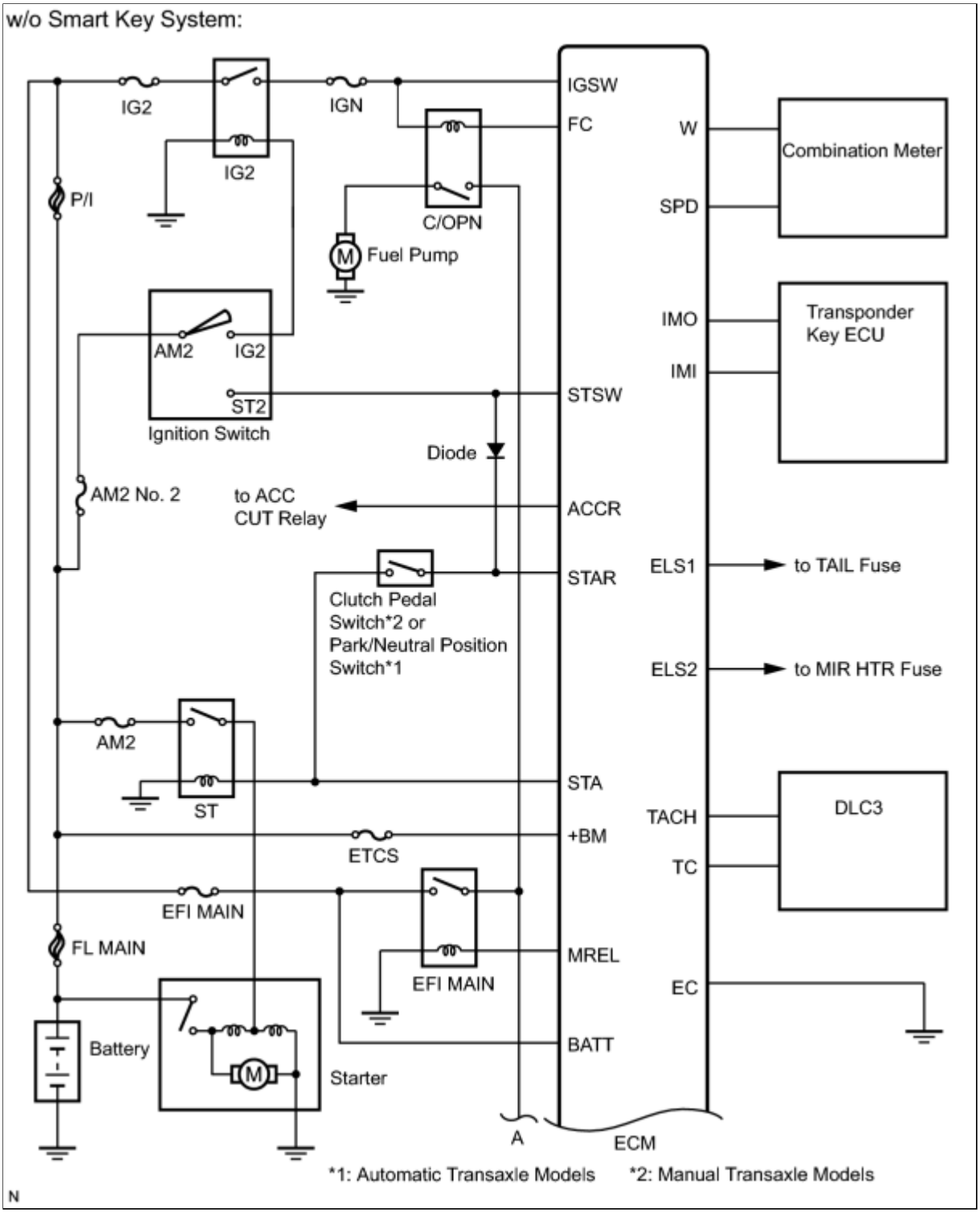
w/o Smart Key System:
IG2
IGN
IG2
P/I
C/OPN
Fuel Pump
AM2
IG2
ST2
Ignition Switch
Diode
AM2 No. 2
to ACC
CUT Relay
Clutch Pedal
Switch*2 or
Park/Neutral Position
Switch*1
AM2
ST
ETCS
EFI MAIN
FL MAIN
EFI MAIN
Battery
Starter
IGSW
FC
STSW
ACCR
STAR
STA
+BM
MREL
BATT
A
ECM
W
SPD
IMO
IMI
ELS1
ELS2
TACH
TC
EC
Combination Meter
Transponder
Key ECU
to TAIL Fuse
to MIR HTR Fuse
DLC3
*1: Automatic Transaxle Models
*2: Manual Transaxle Models
N

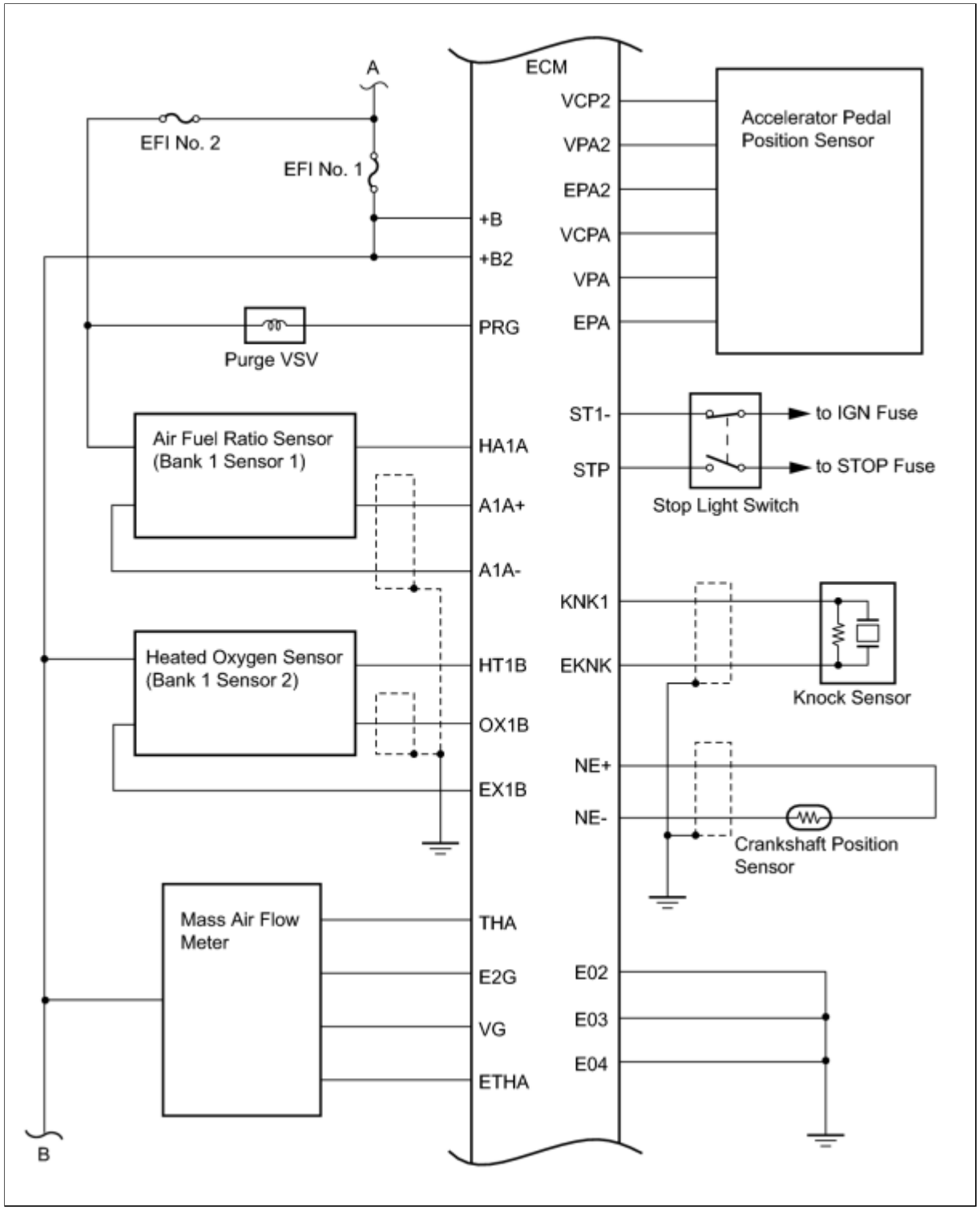
A
ECM
EFI No. 2
EFI No. 1
+B
+B2
PRG
Purge VSV
VCP2
VPA2
EPA2
VCPA
VPA
EPA
Accelerator Pedal Position Sensor
ST1-
STP
to IGN Fuse
to STOP Fuse
Stop Light Switch
Air Fuel Ratio Sensor (Bank 1 Sensor 1)
HA1A
A1A+
A1A-
KNK1
EKNK
Knock Sensor
Heated Oxygen Sensor (Bank 1 Sensor 2)
HT1B
OX1B
EX1B
NE+
NE-
Crankshaft Position Sensor
Mass Air Flow Meter
THA
E2G
VG
ETHA
E02
E03
E04
B

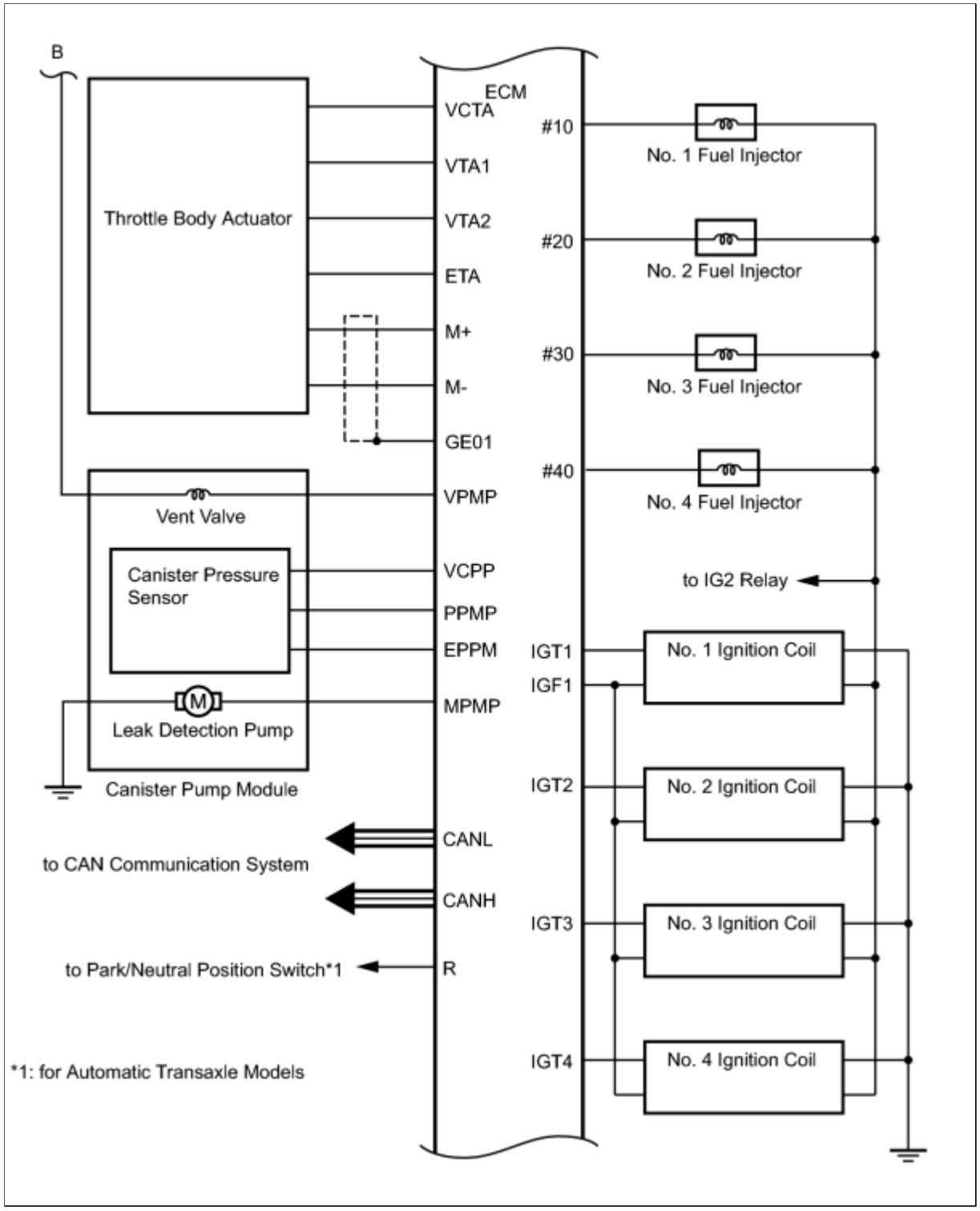
B
ECM
VCTA
VTA1
VTA2
ETA
M+
M-
GE01
VPMP
VCPP
PPMP
EPPM
MPMP
CANL
CANH
R
Throttle Body Actuator
Vent Valve
Canister Pressure Sensor
Leak Detection Pump
Canister Pump Module
to CAN Communication System
to Park/Neutral Position Switch*1
*1: for Automatic Transaxle Models
#10
#20
#30
#40
No. 1 Fuel Injector
No. 2 Fuel Injector
No. 3 Fuel Injector
No. 4 Fuel Injector
to IG2 Relay
IGT1
IGF1
IGT2
IGT3
IGT4
No. 1 Ignition Coil
No. 2 Ignition Coil
No. 3 Ignition Coil
No. 4 Ignition Coil

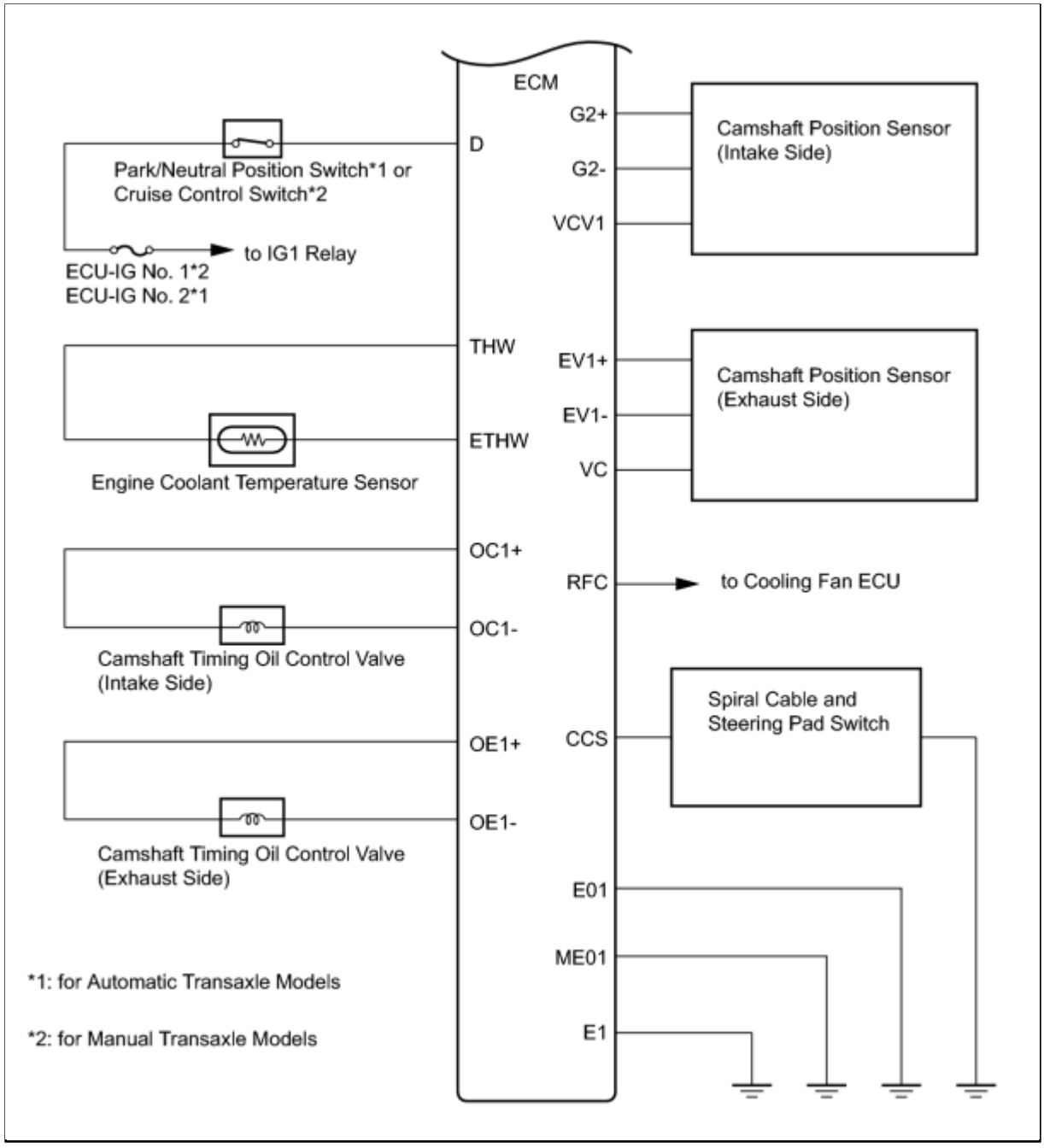
ECM
G2+
G2-
VCV1
Camshaft Position Sensor
(Intake Side)
D
Park/Neutral Position Switch*1 or
Cruise Control Switch*2
to IG1 Relay
ECU-IG No. 1*2
ECU-IG No. 2*1
THW
ETHW
Engine Coolant Temperature Sensor
EV1+
EV1-
VC
Camshaft Position Sensor
(Exhaust Side)
OC1+
OC1-
Camshaft Timing Oil Control Valve
(Intake Side)
RFC
to Cooling Fan ECU
OE1+
OE1-
Camshaft Timing Oil Control Valve
(Exhaust Side)
CCS
Spiral Cable and
Steering Pad Switch
E01
ME01
E1
*1: for Automatic Transaxle Models
*2: for Manual Transaxle Models

Last Modified: 3-10-2010	6.4 D	**From:** 200901
Model Year: 2010	**Model:** Corolla	**Doc ID:** RM000000PD90BHX
Title: 2ZR-FE ENGINE CONTROL: SFI SYSTEM: HOW TO PROCEED WITH TROUBLESHOOTING (2010 Corolla)		

HOW TO PROCEED WITH TROUBLESHOOTING

HINT:

***: Use the Techstream.**

1.	**VEHICLE BROUGHT TO WORKSHOP**

NEXT

2.	**CUSTOMER PROBLEM ANALYSIS**

NEXT

3.	**CONNECT TECHSTREAM TO DLC3**

HINT:

If the display indicates a communication fault in the Techstream, inspect the DLC3.

NEXT

4.	**CHECK DTC AND FREEZE FRAME DATA***

HINT:

Record or print DTCs and freeze frame data, if necessary.

NEXT

5.	CLEAR DTC AND FREEZE FRAME DATA*

NEXT

6.	CONDUCT VISUAL INSPECTION

NEXT

7.	SELECT CHECK MODE DIAGNOSIS*

NEXT

8.	CONFIRM PROBLEM SYMPTOMS

HINT:

If the engine does not start, first perform the "Check DTC" procedures and "Conduct Basic Inspection" procedures below.

RESULT	PROCEED TO

RESULT	PROCEED TO
Malfunction does not occur	A
Malfunction occurs	B

B ▶ **GO TO STEP 10**

A
▼

9.	**SIMULATE SYMPTOMS**

NEXT
▼

10.	**CHECK DTC***

RESULT	PROCEED TO
Trouble code	A
No code	B

B ▶ **GO TO STEP 12**

A
▼

11.	**REFER TO DTC CHART**

NEXT

12.	**CONDUCT BASIC INSPECTION**

RESULT	PROCEED TO
Malfunctioning parts not confirmed	A
Malfunctioning parts confirmed	B

B ▶ **GO TO STEP 17**

A

▼

13.	**REFER TO PROBLEM SYMPTOMS TABLE**

RESULT	PROCEED TO
Malfunctioning circuit confirmed	A
Malfunctioning parts confirmed	B

B ▶ **GO TO STEP 17**

A

▼

14.	**CHECK ECM POWER SOURCE CIRCUIT**

NEXT

15.	CONDUCT CIRCUIT INSPECTION

RESULT	PROCEED TO
Malfunction not confirmed	A
Malfunction confirmed	B

B ▶ **GO TO STEP 18**

A

16.	CHECK FOR INTERMITTENT PROBLEMS

NEXT

17.	CONDUCT PARTS INSPECTION

NEXT

18.	IDENTIFY PROBLEM

NEXT

19.	ADJUST AND/OR REPAIR

NEXT

20.	CONDUCT CONFIRMATION TEST

NEXT END

Last Modified: 3-10-2010	6.4 D	**From:** 200901
Model Year: 2010	**Model:** Corolla	**Doc ID:** RM000000PDM0AIX
Title: 2ZR-FE ENGINE CONTROL: SFI SYSTEM: BASIC INSPECTION (2010 Corolla)		

BASIC INSPECTION

When a malfunction is not confirmed by the DTC check, troubleshooting should be carried out in all circuits considered to be possible causes of the problem. In many cases, by carrying out the basic engine check shown in the following flowchart, the location of the problem can be found quickly and efficiently. Therefore, using this check is essential when engine troubleshooting.

1.	**CHECK BATTERY VOLTAGE**

NOTICE:

Carry out this check with the engine stopped and the ignition switch off.

Result:

RESULT	PROCEED TO
11 V or more	OK
Below 11 V	NG

NG ▶ **CHARGE OR REPLACE BATTERY**

OK ▼

2.	**CHECK WHETHER ENGINE CRANKS**

NG ▶ INFO **PROCEED TO PROBLEM SYMPTOMS TABLE**

OK ▼

3.	**CHECK WHETHER ENGINE STARTS**

NG ▶ GO TO STEP 6

OK ▼

4.	CHECK AIR FILTER

(a) Visually check that the air filter is not excessively contaminated with dirt or oil.

NG ▶ INFO REPLACE AIR FILTER

OK ▼

5.	CHECK IDLING SPEED

NG ▶ TROUBLESHOOT IDLING SPEED AND PROCEED TO NEXT STEP

OK ▼

6.	CHECK FUEL PRESSURE

NG ▶ TROUBLESHOOT FUEL PRESSURE AND PROCEED TO NEXT STEP

OK ▼

7.	CHECK FOR SPARK

NG ▶ TROUBLESHOOT SPARK AND PROCEED TO NEXT STEP

OK ▶ INFO PROCEED TO PROBLEM SYMPTOMS TABLE

Last Modified: 3-10-2010	6.4 D	**From:** 200901
Model Year: 2010	**Model:** Corolla	**Doc ID:** RM000000PDQ0BKX
Title: 2ZR-FE ENGINE CONTROL: SFI SYSTEM: CHECK FOR INTERMITTENT PROBLEMS (2010 Corolla)		

CHECK FOR INTERMITTENT PROBLEMS

HINT:

Inspect the vehicle's ECM using check mode. Intermittent problems are easier to detect with the Techstream when the ECM is in check mode. In check mode, the ECM uses 1 trip detection logic, which is more sensitive to malfunctions than normal mode (default), which uses 2 trip detection logic.

1. Clear DTCs INFO .
2. Switch the ECM from normal mode to check mode using the Techstream INFO .
3. Perform a simulation test INFO .
4. Check and wiggle the harness(es), connector(s) and terminal(s) INFO .

Last Modified: 3-10-2010	6.4 M	**From:** 200901
Model Year: 2010	**Model:** Corolla	**Doc ID:** RM000000PDT056X
Title: 2ZR-FE ENGINE CONTROL: SFI SYSTEM: REGISTRATION (2010 Corolla)		

REGISTRATION

NOTICE:

The Vehicle Identification Number (VIN) must be input into a replacement ECM.

HINT:

The VIN is a 17-digit alphanumeric vehicle identification number. The Techstream is required to register the VIN.

1. DESCRIPTION

HINT:

This registration section consists of two parts: Read VIN and Write VIN.

(a) Read VIN: This process allows the VIN stored in the ECM to be read in order to confirm that the two VINs, provided with the vehicle and stored in the vehicle's ECM, are the same.

(b) Write VIN: This process allows the VIN to be input into the ECM. If the ECM is changed, or the ECM VIN and vehicle VIN do not match, the VIN can be registered, or overwritten in the ECM by following this procedure.

2. READ VIN

(a) Confirm the vehicle VIN.

(b) Connect the Techstream to the DLC3.

(c) Turn the ignition switch to ON.

(d) Turn the Techstream on.

(e) Enter the following menus: Powertrain / Engine and ECT / Utility / VIN / VIN Read.

3. WRITE VIN

(a) Confirm the vehicle VIN.

(b) Connect the Techstream to the DLC3.

(c) Turn the ignition switch to ON.

(d) Turn the Techstream on.

(e) Enter the following menus: Powertrain / Engine and ECT / Utility / VIN / VIN Write.

Last Modified: 3-10-2010	6.4 U	**From:** 200901
Model Year: 2010	**Model:** Corolla	**Doc ID:** RM000000PDH08SX
Title: 2ZR-FE ENGINE CONTROL: SFI SYSTEM: TERMINALS OF ECM (2010 Corolla)		

TERMINALS OF ECM

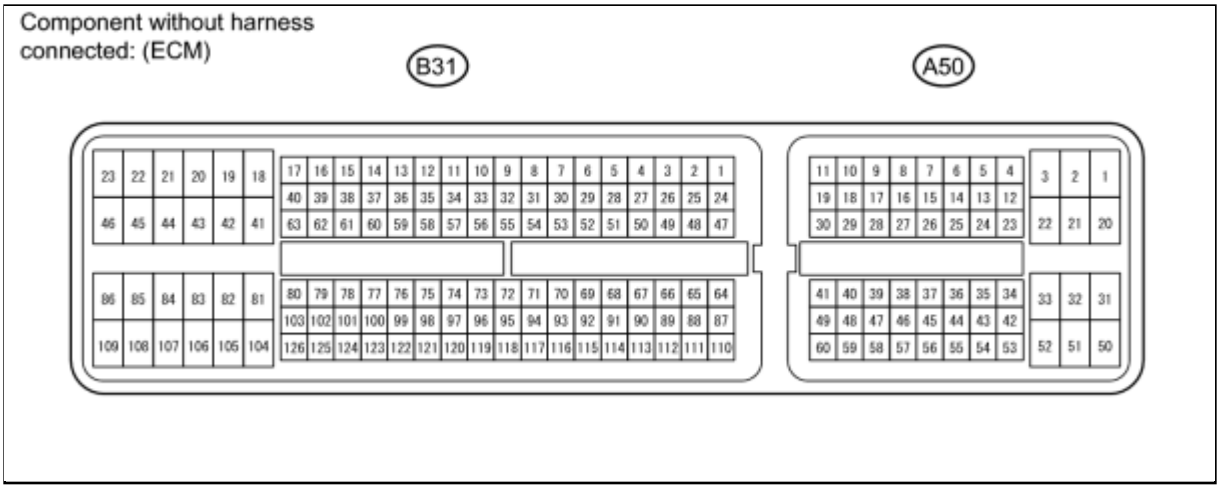

HINT:

The standard normal voltage between each pair of the ECM terminals is shown in the table below. The appropriate conditions for checking each pair of the terminals are also indicated. The result of checks should be compared with the standard normal voltage for that pair of the terminals, and displayed in the "Specified Conditions" column. The illustration above can be used as a reference to identify the ECM terminal locations.

TERMINAL NO. (SYMBOL)	WIRING COLORS	TERMINAL DESCRIPTIONS	CONDITIONS	SPECIFIED CONDITIONS
A50-20 (BATT) - B31-104 (E1)	P - BR	Battery (for measuring battery voltage and for ECM memory)	Always	11 to 14 V
A50-2 (+B) - B31-104 (E1)	B - BR	Power source of ECM	Ignition switch to ON	11 to 14 V
A50-1 (+B2) - B31-104 (E1)	B - BR	Power source of ECM	Ignition switch to ON	11 to 14 V
A50-3 (+BM) - B31-104 (E1)	B - BR	Power source of throttle actuator	Always	11 to 14 V
B31-85 (IGT1) - B31-104 (E1)	W-L - BR	Ignition coil (ignition signal)	Idling	Pulse generation (see waveform 1)
B31-84 (IGT2) - B31-104 (E1)	B - BR			
B31-83 (IGT3) - B31-104 (E1)	L-B - BR			

TERMINAL NO. (SYMBOL)	WIRING COLORS	TERMINAL DESCRIPTIONS	CONDITIONS	SPECIFIED CONDITIONS
B31-82 (IGT4) - B31-104 (E1)	B - BR			
B31-81 (IGF1) - B31-104 (E1)	Y - BR	Ignition coil (ignition confirmation signal)	Ignition switch to ON	4.5 to 5.5 V
			Idling	Pulse generation (see waveform 1)
B31-122 (NE+) - B31-121 (NE-)	R - G	Crankshaft position sensor	Idle after engine warmed-up	Pulse generation (see waveform 2)
B31-99 (G2+) - B31-98 (G2-)	R - W	Camshaft position sensor (for intake camshaft)	Idle after engine warmed-up	Pulse generation (see waveform 2)
B31-76 (EV1+) - B31-75 (EV1-)	R - W	Camshaft position sensor (for exhaust camshaft)	Idle after engine warmed-up	Pulse generation (see waveform 2)
B31-108 (#10) - B31-45 (E01)	V - W-B	Fuel injector	Ignition switch to ON	11 to 14 V
B31-107 (#20) - B31-45 (E01)	Y - W-B			
B31-106 (#30) - B31-45 (E01)	G - W-B		Idling	Pulse generation (see waveform 3)
B31-105 (#40) - B31-45 (E01)	LG - W-B			
B31-109 (HA1A) - B31-46 (E04)	R - W-B	Air fuel ratio sensor (sensor 1) heater	Ignition switch to ON	11 to 14 V
			Idling with warm engine	Pulse generation (see waveform 4)
B31-112 (A1A+) - B31-113 (A1A-)	Y - L	Air fuel ratio sensor (sensor 1)	Idling	Below 3.3 V*1
B31-47 (HT1B) - B31-86 (E03)	P - W-B	Heated oxygen sensor (sensor 2) heater	Ignition switch to ON	11 to 14 V
			Idling	Below 3.0 V
B31-64 (OX1B) - B31-87 (EX1B)	B - LG-B	Heated oxygen sensor (sensor 2)	Engine speed maintained at 2500 rpm for 2 minutes after warming up engine	Pulse generation (see waveform 5)
B31-110 (KNK1) -	B - W	Knock sensor	Engine speed maintained at 4000 rpm after	Pulse generation (see waveform

TERMINAL NO. (SYMBOL)	WIRING COLORS	TERMINAL DESCRIPTIONS	CONDITIONS	SPECIFIED CONDITIONS
B31-111 (EKNK)			warming up engine	6)
A50-8 (SPD) - B31-104 (E1)	V - BR	Speed signal from combination meter	Rotate driving wheel slowly	Pulse generation (see waveform 7)
B31-97 (THW) - B31-96 (ETHW)	B - BR	Engine coolant temperature sensor	Idling, Engine coolant temperature 80°C (176°F)	0.2 to 1.0 V
B31-65 (THA) - B31-88 (ETHA)	P - BR-W	Intake air temperature sensor (built into mass air flow meter	Idling, Intake air temperature 20°C (68°F)	0.5 to 3.4 V
B31-118 (VG) - B31-116 (E2G)	V - B	Mass air flow meter	Idling, shift lever in P or N, A/C switch OFF	0.5 to 3.0 V
A50-24 (W) - B31-104 (E1)	R - BR	MIL	Ignition switch to ON (MIL goes ON)	Below 3.0 V
			Idling	11 to 14 V
A50-48 (STA) - B31-104 (E1)	LG - BR	Starter signal	Ignition switch to ON	Below 1.5 V
			Cranking	5.5 V or more
B31-52 (STAR) - B31-104 (E1)	W - BR	Starter relay control	Ignition switch to ON Shift position P or N	Below 1.5 V
			Cranking	5.5 V or more
A50-13 (ACCR) - B31-104 (E1)	L-Y - BR	ACC (cut) relay control signal	Ignition switch to ON	8 to 14 V
			Cranking	0.1 to 0.8 V
A50-14 (STSW) - B31-104 (E1)	W-G - BR	Starter relay operation signal	Ignition switch to ON	Below 1.5 V
			Ignition switch START Shift position P or N	5.5 V or more
B31-115 (VTA1) - B31-91 (ETA)	LG - BR	Throttle position sensor (for engine control)	Ignition switch to ON, Accelerator pedal released (Throttle valve fully closed)	0.5 to 1.1 V
			Ignition switch to ON, Accelerator pedal depressed (Throttle valve fully open)	3.2 to 4.8 V

TERMINAL NO. (SYMBOL)	WIRING COLORS	TERMINAL DESCRIPTIONS	CONDITIONS	SPECIFIED CONDITIONS
B31-114 (VTA2) - B31-91 (ETA)	R-G - BR	Throttle position sensor (for sensor malfunction detection)	Ignition switch to ON, Accelerator pedal released (Throttle valve fully closed)	2.1 to 3.1 V
			Ignition switch to ON, Accelerator pedal depressed (Throttle valve fully open)	4.6 to 5.0 V
B31-67 (VCTA) - B31-91 (ETA)	Y - BR	Power source of sensor (specific voltage)	Ignition switch to ON	4.5 to 5.5 V
A50-57 (VCPA) - A50-59 (EPA)	P - R	Power source of accelerator pedal position sensor (for VPA)	Ignition switch to ON	4.5 to 5.5 V
A50-55 (VPA) - A50-59 (EPA)	L - R	Accelerator pedal position sensor (for engine control)	Ignition switch to ON, Accelerator pedal released	0.5 to 1.1 V
			Ignition switch to ON, Accelerator pedal fully depressed	2.5 to 4.5 V
A50-56 (VPA2) - A50-60 (EPA2)	Y - O	Accelerator pedal position sensor (for sensor malfunctioning detection)	Ignition switch to ON, Accelerator pedal released	1.2 to 2.0 V
			Ignition switch to ON, Accelerator pedal fully depressed	3.4 to 5.5 V
A50-58 (VCP2) - A50-60 (EPA2)	B - O	Power source of accelerator pedal position sensor (for VPA2)	Ignition switch to ON	4.5 to 5.5 V
B31-42 (M+) - B31-43 (ME01)	P - W-B	Throttle actuator	Idling with warm engine	Pulse generation (see waveform 8)
B31-41 (M-) - B31-43 (ME01)	L - W-B	Throttle actuator	Idling with warm engine	Pulse generation (see waveform 9)
A50-36 (STP) - B31-104 (E1)	L - BR	Stop light switch	Brake pedal depressed	11 to 14 V
			Brake pedal released	Below 1.5 V

TERMINAL NO. (SYMBOL)	WIRING COLORS	TERMINAL DESCRIPTIONS	CONDITIONS	SPECIFIED CONDITIONS
A50-35 (ST1-) - B31-104 (E1)	R - BR	Stop light switch	Ignition switch to ON, Brake pedal depressed	Below 1.5 V
			Ignition switch to ON, Brake pedal released	11 to 14 V
B31-49 (PRG) - B31-104 (E1)	L-B - BR	Purge VSV	Ignition switch to ON	11 to 14 V
			Idling, under purge control	Pulse generation (see waveform 10)
A50-7 (FC) - B31-104 (E1)	O - BR	Fuel pump control	Ignition switch to ON	11 to 14 V
			Idling	Below 1.5 V
A50-15 (TACH) - B31-104 (E1)	GR - BR	Engine speed	Idling	Pulse generation (see waveform 11)
A50-27 (TC) - B31-104 (E1)	P - BR	Terminal TC of DLC3	Ignition switch to ON	11 to 14 V
B31-100 (OC1+) - B31-123 (OC1-)	B - V-Y	Camshaft timing oil control valve (for intake camshaft)	Idling	Pulse generation (see waveform 12)
A50-41 (CANH) - B31-104 (E1)	Y - BR	CAN communication line	Engine stopped and ignition switch to ON	Pulse generation (see waveform 13)
A50-49 (CANL) - B31-104 (E1)	W - BR	CAN communication line	Engine stopped and ignition switch to ON	Pulse generation (see waveform 14)
A50-28 (IGSW) - B31-104 (E1)	B - BR	Ignition switch	Ignition switch to ON	11 to 14 V
A50-44 (MREL) - B31-104 (E1)	L - BR	EFI MAIN relay	Ignition switch to ON	11 to 14 V
B31-60 (OE1+) - B31-61 (OE1-)	BR-B - P	Camshaft timing oil control valve (for exhaust camshaft)	Idling	Pulse generation (see waveform 15)
B31-70 (VCV1) - B31-104 (E1)	BR-R - BR	Power source of camshaft position sensor (for intake camshaft)	Ignition switch to ON	4.5 to 5.5 V
B31-117 (VC) - B31-104 (E1)	BR-R - BR	Power source of camshaft position sensor (for exhaust camshaft)	Ignition switch to ON	4.5 to 5.5 V

TERMINAL NO. (SYMBOL)	WIRING COLORS	TERMINAL DESCRIPTIONS	CONDITIONS	SPECIFIED CONDITIONS
A50-31 (ELS1) - B31-104 (E1)	G - BR	Electric load	Taillight switch ON	7.5 to 14 V
			Taillight switch OFF	Below 1.5 V
A50-33 (ELS2) - B31-104 (E1)	B - BR	Electric load	Defogger switch ON	7.5 to 14 V
			Defogger switch OFF	Below 1.5 V
A50-42 (VPMP) - B31-104 (E1)	W - BR	Vent valve (built into canister pump module)	Ignition switch to ON	11 to 14 V
A50-34 (MPMP) - B31-104 (E1)	R - BR	Leak detection pump (built into canister pump module)	Leak detection pump OFF	Below 3 V
			Leak detection pump ON	11 to 14 V
B31-69 (VCPP) - B31-92 (EPPM)	V - G	Power source for canister pressure sensor (specific voltage)	Ignition switch to ON	4.5 to 5.5 V
B31-68 (PPMP) - B31-92 (EPPM)	Y - G	Canister pressure sensor (built into canister pump module)	Ignition switch to ON	3 to 3.6 V
A50-43 (RFC) - B31-104 (E1)	R-G - BR	Cooling fan control	Ignition switch to ON	Below 1.5 V

HINT:

***1: The ECM terminal voltage is constant regardless of the output voltage from the sensor.**

1. WAVEFORM 1

Igniter IGT Signal (from ECM to Igniter)

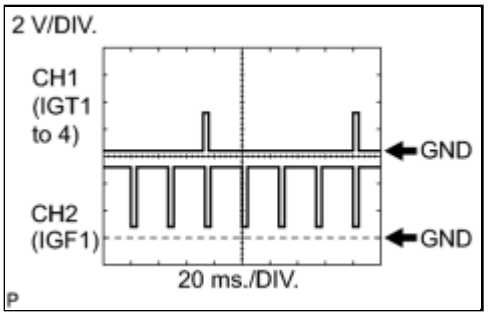

ECM Terminal Name	Between IGT (1 to 4) and E1 Between IGF1 and E1
Tester Range	2 V/DIV, 20 ms/DIV
Condition	Idling

HINT:

The wavelength becomes shorter as the engine rpm increases.

2. WAVEFORM 2

Crankshaft Position Sensor and Camshaft Position Sensors

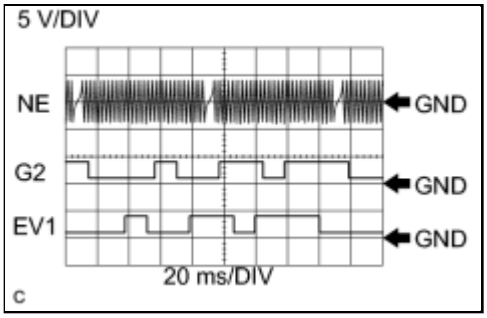

ECM Terminal Name	Between NE+ and NE- Between G2+ and G2- Between EV1+ and EV1-
Tester Range	5 V/DIV, 20 ms/DIV
Condition	Idle after engine warmed-up

HINT:

The wavelength becomes shorter as the engine rpm increases.

3. WAVEFORM 3

No. 1 (to No. 4) Injector Signal

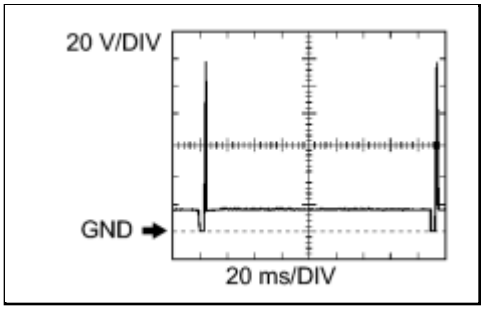

ECM Terminal Name	Between #10 (to #40) and E01
Tester Range	20 V/DIV, 20 ms/DIV
Condition	Idling

HINT:

The wavelength becomes shorter as the engine rpm increases.

4. WAVEFORM 4

Air Fuel Ratio Sensor (Sensor 1) Heater

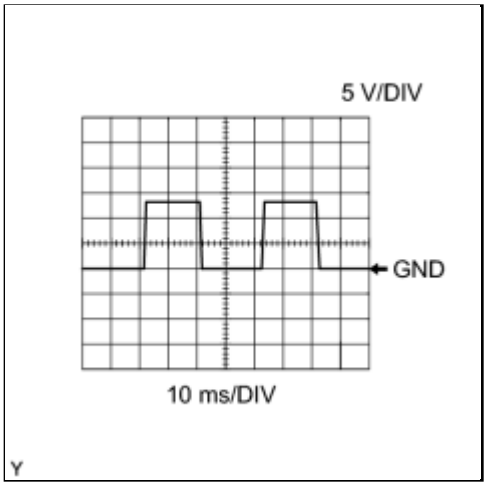

ECM Terminal Name	Between HA1A and E04
Tester Range	5 V/DIV, 10 ms/DIV
Condition	Idling with warm engine

HINT:

The wavelength varies in accordance with the engine operating condition.

5. WAVEFORM 5

Heated Oxygen Sensor (Sensor 2)

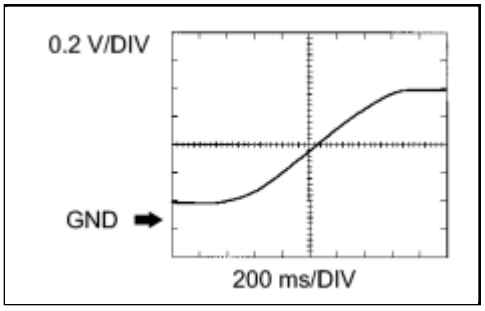

ECM Terminal Name	Between OX1B and EX1B
Tester Range	0.2 V/DIV. 200 ms/DIV
Condition	Engine speed maintained at 2500 rpm for 2 minutes after warming up engine

HINT:

In the Data List, the items O2S B1 S2 show the values input to the ECM from the heated oxygen sensor.

6. WAVEFORM 6

Knock Sensor

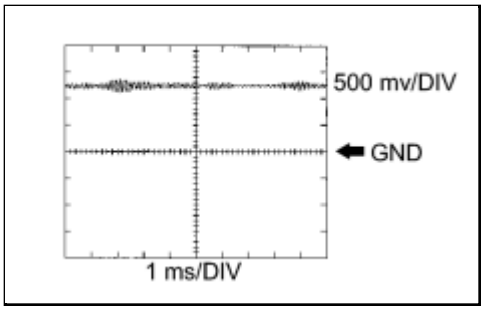

ECM Terminal Name	Between KNK1 and EKNK
Tester Range	500 mv/DIV, 1 ms/DIV
Condition	Engine speed maintained at 4000 rpm after engine warmed-up engine

HINT:

- The wavelength becomes shorter as the engine rpm increases.
- The waveforms and amplitudes displayed differ slightly depending on the vehicle condition.

7. WAVEFORM 7

Vehicle Speed Signal

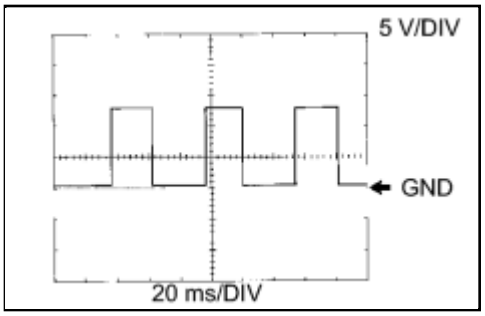

ECM Terminal Name	Between SPD and E1
Tester Range	5 V/DIV, 20 ms/DIV
Condition	Rotate driving wheel slowly

HINT:

The wavelength becomes shorter as the vehicle speed increases.

8. WAVEFORM 8

Throttle Actuator Positive Terminal

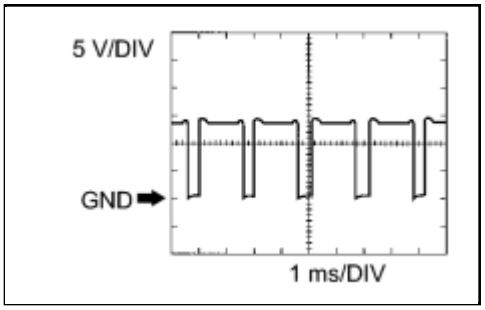

ECM Terminal Name	Between M+ and ME01
Tester Range	5 V/DIV, 1 ms/DIV
Condition	Idling with warm engine

HINT:

The duty ratio varies depending on the throttle actuator operation.

9. WAVEFORM 9

Throttle Actuator Negative Terminal

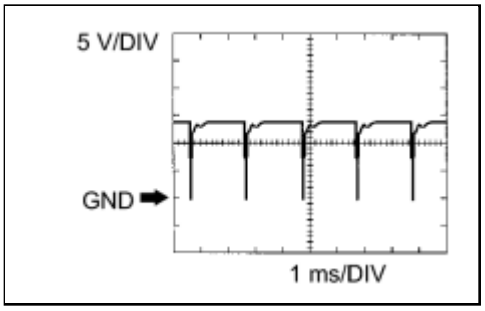

ECM Terminal Name	Between M- and ME01
Tester Range	5 V/DIV, 1 ms/DIV
Condition	Idling with warm engine

HINT:

The duty ratio varies depending on the throttle actuator operation.

10. WAVEFORM 10

11. WAVEFORM 11

Purge VSV
Engine Speed Signal

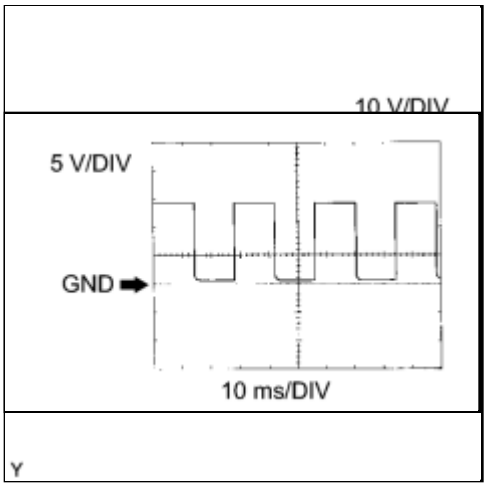

ECM Terminal Name	Between PRG and E1
ECM Terminal Name	Between TACH and E1
Tester Range	10 V/DIV, 20 ms/DIV
Tester Range	5 V/DIV, 10 ms/DIV
Condition	Idling, under purge control
Condition	Idling

HINT:

HINT:

If the waveform is not similar to the illustration, check the waveform again after idling for 10 minutes or more.

The wavelength becomes shorter as the engine rpm increases.

12. WAVEFORM 12

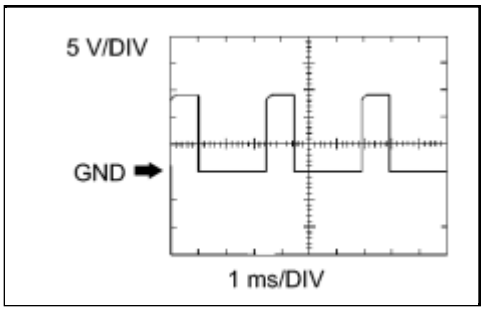

Camshaft Timing Oil Control Valve (for Intake Camshaft)

ECM Terminal Name	Between OC1+ and OC1-
Tester Range	5 V/DIV, 1 ms/DIV
Condition	Idling

13. WAVEFORM 13

CAN Communication Signal (Reference)

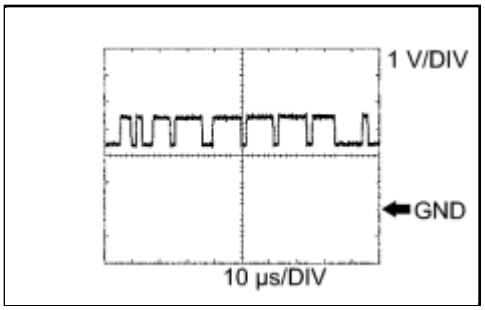

ECM Terminal Name	Between CANH and E1
Tester Range	1 V/DIV, 10 µs/DIV
Condition	Engine stopped and ignition switch to ON

HINT:

The waveform varies depending on the CAN communication signal.

14. WAVEFORM 14

CAN Communication Signal (Reference)

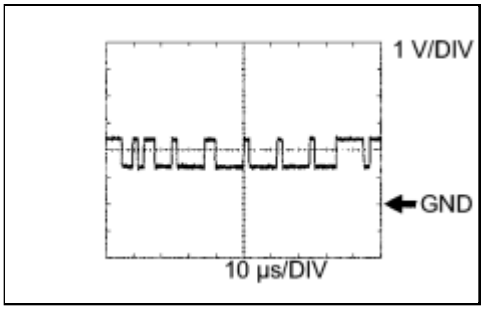

ECM Terminal Name	Between CANL and E1
Tester Range	1 V/DIV, 10 µs/DIV
Condition	Engine stopped and ignition switch to ON

HINT:

The waveform varies depending on the CAN communication signal.

15. WAVEFORM 15

Camshaft Timing Oil Control Valve (for

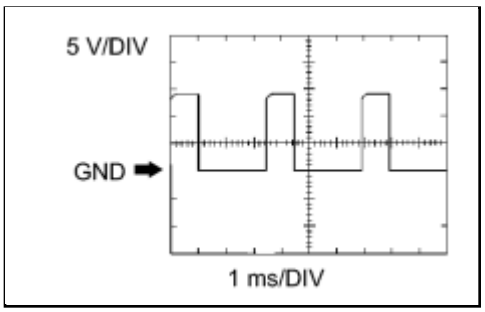

Exhaust Camshaft)

ECM Terminal Name	Between OE1+ and OE1-
Tester Range	5 V/DIV, 1 ms/DIV
Condition	Idling

Last Modified: 3-10-2010	6.4 D	**From:** 200901
Model Year: 2010	**Model:** Corolla	**Doc ID:** RM000000PDR05VX
Title: 2ZR-FE ENGINE CONTROL: SFI SYSTEM: CHECKING MONITOR STATUS (2010 Corolla)		

CHECKING MONITOR STATUS

The purpose of the monitor result (mode 06) is to allow access to the results for on-board diagnostic monitoring tests of specific components/systems that are not continuously monitored. Examples are the catalyst, evaporative emission (EVAP) and thermostat monitors.

The monitor result allows an OBD II scan tool to display the monitor status, test value, minimum test limit and maximum test limit. These data are displayed after the vehicle has been driven to cause it to run the monitor.

When the test value is not between the minimum test limit and maximum test limit, the ECM (PCM) interprets this as a malfunction. When the component is not malfunctioning, if the difference of the test value and test limit is very small, the component may malfunction in the near future.

Perform the following instruction to view the monitor status. Although these instructions reference the Techstream, the monitors can be checked using a generic OBD II scan tool. Refer to your scan tool operator's manual for specific procedures.

1. PERFORM MONITOR DRIVE PATTERN

(a) Connect the Techstream to the DLC3.

(b) Turn the ignition switch to ON.

(c) Turn the Techstream on.

(d) Clear DTCs INFO .

(e) Operate the vehicle in accordance with the applicable drive pattern described in Readiness Monitor Drive Pattern INFO . Do not turn the ignition switch off.

NOTICE:

The test results will be lost if the ignition switch is turned off.

2. ACCESS MONITOR RESULT

(a) Enter the following menus: Powertrain / Engine and ECT / Monitor / Result. The monitor status appears after the component name.

- Pass: The component is functioning normally.
- Fail: The component is malfunctioning.

(b) Confirm that the component is either Pass or Fail.

(c) Select the component and press ENTER. The accuracy test value appears if the monitor status is either Pass or Fail.

3. CHECK COMPONENT STATUS

(a) Compare the test value with the minimum test limit and maximum test limit.

(b) If the test value is between the minimum test limit and maximum test limit, the component is functioning normally. If not, the component is malfunctioning. The test value is usually significantly higher or lower than the test limit. If the test value is on the borderline of the test limit, the component may malfunction in the near future.

HINT:

The monitor result might show a Pass on rare occasions even if the malfunction indicator lamp (MIL) is illuminated. This indicates the system malfunctioned on a previous driving cycle. This might be caused by an intermittent problem.

4. MONITOR RESULT INFORMATION

If you use a generic scan tool, multiply the value by the scaling value listed below.

Air Fuel Ratio Sensor (Sensor 1)

MONITOR ID	TEST ID	SCALING	UNIT	DESCRIPTION
$01	$8E	Multiply by 0.001	V	Air Fuel Ratio sensor deterioration level
$01	$91	Multiply by 0.004	mA	Air Fuel Ratio sensor current

Heated Oxygen Sensor (Sensor 2)

MONITOR ID	TEST ID	SCALING	UNIT	DESCRIPTION
$02	$07	Multiply by 0.001	V	Minimum sensor voltage
$02	$08	Multiply by 0.001	V	Maximum sensor voltage
$02	$8B	Multiply by 0.001	Seconds	0.35 - 0.2 V sensor switch time
$02	$8D	Multiply by 0.001	Seconds	Duration that sensor voltage drops to 0.2 V during fuel cut
$02	$8F	Multiply by 0.0003	g	Maximum oxygen storage capacity

Catalyst

MONITOR ID	TEST ID	SCALING	UNIT	DESCRIPTION
$21	$A9	Multiply by 0.0003	No dimension	Oxygen storage capacity of catalyst

Advance Intake Side

MONITOR ID	TEST ID	SCALING	UNIT	DESCRIPTION
$35	$81	Multiply by 0.01	Second	Forced movement of oil control valve time

Advance Exhaust Side

MONITOR ID	TEST ID	SCALING	UNIT	DESCRIPTION
$35	$85	Multiply by 0.01	Second	Forced movement of oil control valve time

EVAP

MONITOR ID	TEST ID	SCALING	UNIT	DESCRIPTION
$3D	$C9	Multiply by 0.001	kPa	Test value for small leak (P0456)
$3D	$CA	Multiply by 0.001	kPa	Test value for gross leak (P0455)
$3D	$CE	Multiply by 0.001	kPa	Test value for vent valve stuck OFF (P2420)
$3D	$CF	Multiply by 0.001	kPa	Test value for vent valve stuck ON (P2419)
$3D	$D4	Multiply by 0.001	kPa	Test value for purge VSV stuck closed (P0441)
$3D	$D5	Multiply by 0.001	kPa	Test value for purge VSV stuck open (P0441)
$3D	$D7	Multiply by 0.001	kPa	Test value for purge flow insufficient (P0441)

Misfire

MONITOR ID	TEST ID	SCALING	UNIT	DESCRIPTION
$A1	$0B	Multiply by 1	Time	Total EWMA misfire count of all cylinders in last ten driving cycles EWMA: Exponential Weighted Moving Average
$A1	$0C	Multiply by 1	Time	• When ignition switch is ON, total misfire count of all cylinders in last driving cycle is displayed. • While engine is running, total misfire count of all cylinders in current driving cycle is displayed.
$A2	$0B	Multiply by 1	Time	Total EWMA misfire count for cylinder 1 in last ten driving cycles
$A2	$0C	Multiply by 1	Time	• When ignition switch is ON, total misfire count of cylinder 1 in last driving cycle is displayed. • While engine is running, total misfire count of cylinder 1 in current driving cycle is displayed.
$A3	$0B	Multiply by 1	Time	Total EWMA misfire count for cylinder 2 in last ten driving cycles
$A3	$0C	Multiply by 1	Time	• When ignition switch is ON, total misfire count of cylinder 2 in last driving cycle is displayed. • While engine is running, total misfire count of cylinder 2 in current driving cycle is displayed.
$A4	$0B	Multiply by 1	Time	Total EWMA misfire count for cylinder 3 in last ten driving cycles
$A4	$0C	Multiply by 1	Time	• When ignition switch is ON, total misfire count of cylinder 3 in last driving cycle is displayed. • While engine is running, total misfire count of cylinder 3 in current driving cycle is displayed.

TOYOTA

Last Modified: 3-10-2010	6.4 D	**From:** 200901
Model Year: 2010	**Model:** Corolla	**Doc ID:** RM000000SXQ039X
Title: 2ZR-FE ENGINE CONTROL: SFI SYSTEM: READINESS MONITOR DRIVE PATTERN (2010 Corolla)		

READINESS MONITOR DRIVE PATTERN

1. PURPOSE OF READINESS TESTS

- The On-Board Diagnostic (OBD II) system is designed to monitor the performance of emission related components, and indicate any detected abnormalities using DTCs (Diagnostic Trouble Codes). Since various components need to be monitored during different driving conditions, the OBD II system is designed to run separate monitoring programs called Readiness Monitors.
- To view the status, enter the following menus: Powertrain / Engine and ECT / Monitor / Status2.
- When the status of a Readiness Monitor reads Complete, the necessary conditions have been met for running the performance tests for that Readiness Monitor.
- A generic OBD II scan tool can also be used to view the Readiness Monitor status.

HINT:

Many state Inspection and Maintenance (I/M) programs require the status of vehicle Readiness Monitors to show Complete before beginning emission tests.

The Readiness Monitors will be reset to Incomplete if:

- The ECM has lost battery power or blown a fuse.
- DTCs have been cleared.
- The conditions for running the Readiness Monitor have not been met.

If a Readiness Monitor status shows Incomplete, follow the appropriate Readiness Monitor Drive Pattern to change the status to Complete.

CAUTION:

Strictly observe posted speed limits, traffic laws, and road conditions when performing these drive patterns.

NOTICE:

These drive patterns represent the fastest method of satisfying all conditions necessary to achieve complete status for each specific Readiness Monitor.

In the event of a drive pattern being interrupted (possibly due to factors such as traffic conditions), the drive pattern can be resumed. In most cases, the Readiness Monitor will still achieve complete status upon completion of the drive pattern.

To ensure completion of the Readiness Monitors, avoid sudden changes in vehicle load and speed (driving up and down hills and/or sudden acceleration).

2. CATALYST MONITOR (ACTIVE AIR FUEL RATIO CONTROL TYPE)

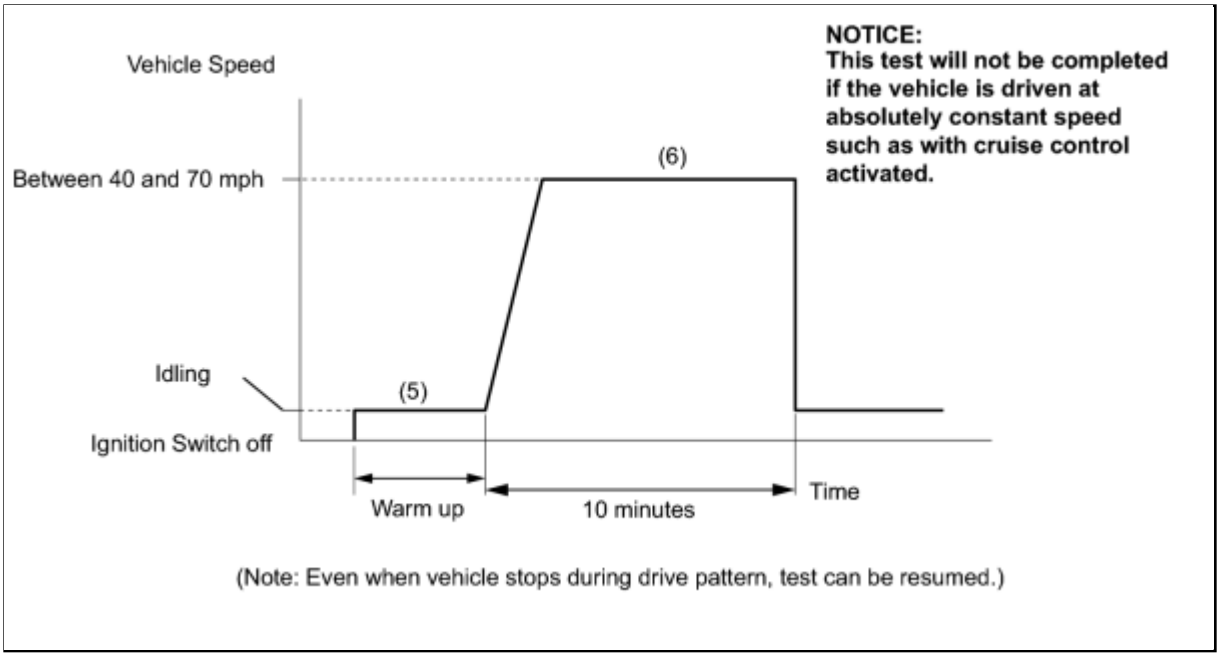

(a) Preconditions

- The monitor will not run unless:
    - The MIL is OFF.

(b) Drive Pattern

(1) Connect the Techstream to the DLC3.

(2) Turn the ignition switch to ON.

(3) Turn the Techstream on.

(4) Clear DTCs (if set) INFO .

(5) Start the engine and warm it up.

(6) Drive the vehicle at between 40 mph and 70 mph (64 km/h and 113 km/h) for at least 10 minutes.

(c) Monitor Status

Check the Readiness Monitor status displayed on the Techstream.

If the status does not switch to Complete, extend the driving time.

3. EVAP SYSTEM MONITOR (KEY OFF TYPE)

(a) Preconditions

- The monitor will not run unless:
    - The fuel tank is less than 90% full.
    - The altitude is less than 8000 ft. (2438 m).
    - The vehicle is stationary.
    - The engine coolant temperature is between 4.4°C and 35°C (40°F and 95°F).
    - The intake air temperature is between 4.4°C and 35°C (40°F and 95°F).
    - The vehicle was driven in a city area (or on a free-way) for 10 minutes or more.

(b) Monitor Conditions

(1) Turn the ignition switch off and wait for 5 to 10 hours.

HINT:

Do not start the engine until checking Readiness Monitor status. If the engine is started, the step described above must be repeated.

(c) Monitor Status

(1) Connect the Techstream to the DLC3.

(2) Turn the ignition switch to ON.

(3) Turn the Techstream on.

(4) Check the Readiness Monitor status displayed on the Techstream.

If the status does not switch to Complete, restart the engine, make sure that the preconditions have been met, and then perform the Monitor Conditions again.

4. AIR FUEL RATIO AND HEATED OXYGEN SENSOR MONITORS (ACTIVE AIR FUEL RATIO CONTROL TYPE)

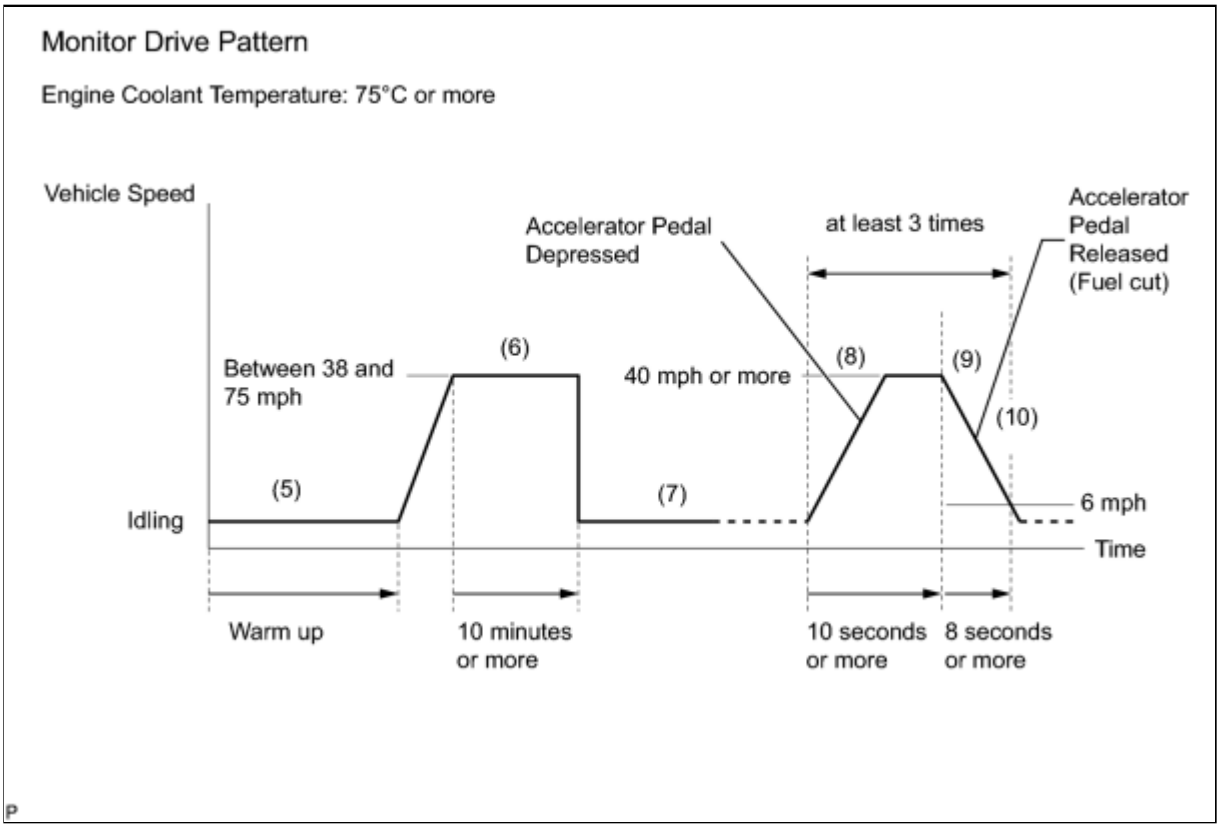

(a) Preconditions

- The monitor will not run unless:
    - 2 minutes or more have elapsed since the engine was started.
    - The engine coolant temperature is 75°C (167°F) or more.
    - Cumulative driving time at a vehicle speed of 30 mph (48 km/h) or more exceeds 6 minutes.
    - Air fuel ratio feedback control is performed.

(b) Drive Pattern for front air fuel ratio sensor and heated oxygen sensor

(1) Connect the Techstream to the DLC3.

(2) Turn the ignition switch to ON.

(3) Turn the Techstream on.

(4) Clear DTCs INFO .

(5) Start the engine and warm it up until the engine coolant temperature reaches 75°C (167°F).

(6) Drive the vehicle at between 38 mph (60 km/h) and 75 mph (120 km/h) for at least 10 minutes.

(7) Change the transmission to 2nd gear.

(8) Accelerate the vehicle to 40 mph (64 km/h) or more by depressing the accelerator pedal for at least 10 seconds.

(9) Soon after performing step (8) above, release the accelerator pedal for at least 8 seconds without depressing the brake pedal, in order to execute fuel-cut control.

(10) Allow the vehicle to decelerate until the vehicle speed declines to less than 6 mph (10 km/h).

(11) Repeat steps from (8) through (10) above at least 3 times in one driving cycle.

(c) Monitor Status

(1) Check the Readiness Monitor status displayed on the Techstream.

(2) If the status does not switch to Complete, make sure that the preconditions have been met, and then perform steps from (5) through (11) in Drive Pattern above.

5. AIR FUEL RATIO AND HEATED OXYGEN SENSOR HEATER MONITORS (FRONT AIR FUEL RATIO AND REAR HEATED OXYGEN SENSOR TYPE)

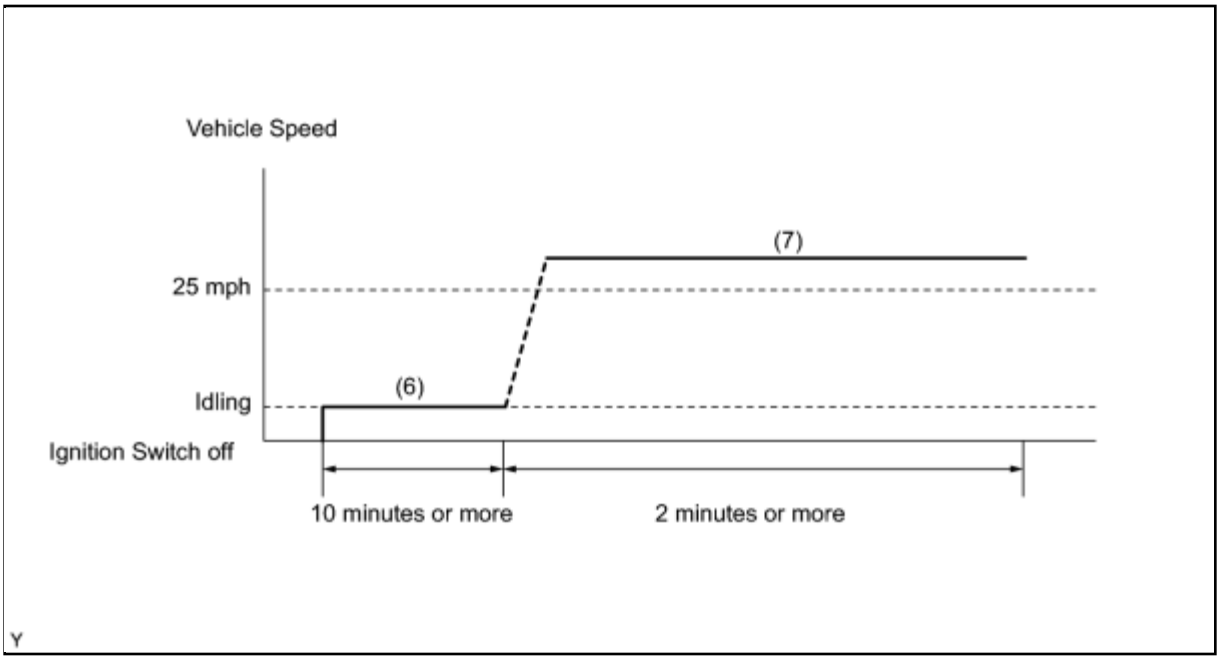

(a) Preconditions

- The monitor will not run unless:
  - The MIL is OFF.

(b) Drive Pattern

(1) Connect the Techstream to the DLC3.

(2) Turn the ignition switch to ON.

(3) Turn the Techstream on.

(4) Clear DTCs (if set) 

.

(5) Start the engine.

(6) Allow the engine to idle for 10 minutes or more.

(7) Drive the vehicle at 25 mph (40 km/h) or more for at least 2 minutes.

(c) Monitor Status

(1) Check the Readiness Monitor status displayed on the Techstream.

If the status does not switch to Complete, make sure that the preconditions have been met, and repeat steps (5) to (7) described in the Drive Pattern above.

Last Modified: 3-10-2010	6.4 T	**From:** 200901
Model Year: 2010	**Model:** Corolla	**Doc ID:** RM000000PDG0A3X
Title: 2ZR-FE ENGINE CONTROL: SFI SYSTEM: PROBLEM SYMPTOMS TABLE (2010 Corolla)		

PROBLEM SYMPTOMS TABLE

HINT:

- Use the table below to help determine the cause of problem symptoms. If multiple suspected areas are listed, the potential causes of the symptoms are listed in order of probability in the "Suspected Area" column of the table. Check each symptom by checking the suspected areas in the order they are listed. Replace parts as necessary.
- Inspect the fuses and relays related to this system before inspecting the suspected areas below.

SFI System

SYMPTOM	SUSPECTED AREA	SEE PAGE
Engine does not crank (Does not start)	Battery	INFO
	Immobiliser system (w/ SMART KEY SYSTEM)	INFO
	Immobiliser system (w/o SMART KEY SYSTEM)	INFO
	Cranking holding function circuit	INFO
	Starter	INFO
	Clutch pedal switch	INFO
No initial combustion (Does not start)	ECM power source circuit	INFO
	Camshaft position sensor (for intake camshaft)	INFO
	Camshaft position sensor (for exhaust camshaft)	INFO
	VC output circuit	INFO
	Crankshaft position sensor	INFO
	Fuel pump control circuit	INFO
	Ignition system	INFO
	Fuel injector circuit	INFO
	Valve timing	INFO
	ECM	INFO
Engine cranks normally but difficult to start	Fuel pump control circuit	INFO

SYMPTOM	SUSPECTED AREA	SEE PAGE
	Fuel pump	INFO
	Engine coolant temperature sensor	INFO
	Ignition system	INFO
	Spark plug	INFO
	Injector	INFO
	Compression	INFO
	Intake system	INFO
	Fuel injector circuit	INFO
	Throttle body	INFO
Incomplete intermittent combustion occurs (Does not start)	Fuel pump control circuit	INFO
	Fuel pump	INFO
	Ignition circuit	INFO
	Ignition system	INFO
	Fuel injector circuit	INFO
	ECM power source circuit	INFO
	Crankshaft position sensor	INFO
	Camshaft position sensor (for intake camshaft)	INFO
	Camshaft position sensor (for exhaust camshaft)	INFO
	Valve timing	INFO
High engine idle speed	A/C signal circuit (for manual air conditioning system)	INFO
	A/C signal circuit (for automatiic air conditioning system)	INFO
	Throttle body	INFO
	Intake system	INFO
	Engine coolant temperature sensor	INFO
	PCV valve and hose	INFO
	ECM power source circuit	INFO

SYMPTOM	SUSPECTED AREA	SEE PAGE
Low engine idle speed (Poor idle)	Fuel pump control circuit	INFO
	Fuel pump	INFO
	Throttle body	INFO
	A/C signal circuit (for manual air conditioning system)	INFO
	A/C signal circuit (for automatiic air conditioning system)	INFO
	Intake system	INFO
	PCV valve and hose	INFO
Rough idle	Compression	INFO
	Air fuel ratio sensor	INFO
	Heated oxygen sensor	INFO
	Mass air flow meter	INFO
	Ignition system	INFO
	Spark plug	INFO
	Intake system	INFO
	Throttle body	INFO
	PCV valve and hose	INFO
	Fuel injector circuit	INFO
	Fuel pump control circuit	INFO
	Fuel pump	INFO
Idle hunting	Throttle body	INFO
	Intake system	INFO
	PCV valve and hose	INFO
	Air fuel ratio sensor	INFO
	Mass air flow meter	INFO
Hesitation/Poor acceleration	Fuel pump control circuit	INFO
	Fuel pump	INFO
	Spark plug	INFO

SYMPTOM	SUSPECTED AREA	SEE PAGE
	Ignition system	INFO
	Fuel injector circuit	INFO
	ECM power source circuit	INFO
	Mass air flow meter	INFO
	Throttle body	INFO
	Intake system	INFO
	Valve timing	INFO
	Compression	INFO
Surging (Poor driveability)	Spark plug	INFO
	Fuel pump control circuit	INFO
	Fuel pump	INFO
	Ignition system	INFO
	Fuel injector circuit	INFO
	ECM power source circuit	INFO
	Mass air flow meter	INFO
	Variable valve timing (VVT) system	INFO
	Compression	INFO
Engine stalls soon after starting	Fuel pump control circuit	INFO
	Fuel pump	INFO
	Spark plug	INFO
	Ignition system	INFO
	Fuel injector circuit	INFO
	ECM power source circuit	INFO
	Mass air flow meter	INFO
	Variable valve timing (VVT) system	INFO
	Throttle body	INFO
	Intake system	INFO
	PCV valve and hose	INFO

SYMPTOM	SUSPECTED AREA	SEE PAGE
	Compression	INFO
Engine stalls only during A/C operation	A/C signal circuit (for manual air conditioning system)	INFO
	A/C signal circuit (for automatiic air conditioning system)	INFO
	ECM	INFO
Unable/difficult to refuel	Refueling valve (canister)	INFO

Last Modified: 3-10-2010	6.4 U	**From:** 200901
Model Year: 2010	**Model:** Corolla	**Doc ID:** RM000000PDN0ADX
Title: 2ZR-FE ENGINE CONTROL: SFI SYSTEM: DATA LIST / ACTIVE TEST (2010 Corolla)		

DATA LIST / ACTIVE TEST

1. DATA LIST

HINT:

Using the Techstream to read the Data List allows the values or states of switches, sensors, actuators and other items to be read without removing any parts. This non-intrusive inspection can be very useful because intermittent conditions or signals may be discovered before parts or wiring is disturbed. Reading the Data List information early in troubleshooting is one way to save diagnostic time.

NOTICE:

In the table below, the values listed under Normal Condition are reference only. Do not depend solely on these values when determining whether or not a part is faulty.

(a) Warm up the engine.

(b) Turn the ignition switch off.

(c) Connect the Techstream to the DLC3.

(d) Turn the ignition switch to ON.

(e) Turn the Techstream on.

(f) Enter the following menus: Powertrain / Engine and ECT / Data List.

(g) According to the display on the Techstream, read the Data List.

TESTER DISPLAY	MEASUREMENT ITEM/RANGE	NORMAL CONDITION*1	DIAGNOSTIC NOTE
Vehicle Speed	Vehicle speed: Min.: 0 mph (0 km/h), Max.: 158.4 mph (255 km/h)	Actual vehicle speed	Speed indicated on speedometer
Engine Speed	Engine speed: Min.: 0 rpm, Max.: 16383.75 rpm	650 to 750 rpm: Idling (Automatic transaxle) 600 to 700 rpm: Idling (Manual transaxle)	-
Calculate Load	Calculated load by ECM: Min.: 0%, Max.: 100%	• 20 to 40%: Idling • 15 to 35%: Running without load (2500 rpm)	-
Vehicle Load	Vehicle load: Min.: 0%, Max.:	Actual vehicle load	Load percentage in terms of maximum intake air flow amount

TESTER DISPLAY	MEASUREMENT ITEM/RANGE	NORMAL CONDITION*1	DIAGNOSTIC NOTE
	25700%		
MAF	Air flow rate from Mass Air Flow meter: Min.: 0 g/sec, Max.: 655.35 g/sec	1 to 3 g/sec: Idling 4.5 to 8.5 g/sec: Running without load (2500 rpm)	If value approximately 0.0 g/sec: • Mass air flow meter power source circuit open • VG circuit open or short If value 271.0 g/sec or more: • E2G circuit open
Atmosphere Pressure	Atmospheric pressure: Min.: 0 kPa (0 mmHg) , Max.: 255 kPa (1912.5 mmHg)	Equivalent to atmospheric pressure	-
Coolant Temp	Engine coolant temperature: Min.: -40°C (-40°F), Max.: 140°C (284°F)	80 to 100°C (176 to 212°F): After warming up	• If value -40°C (-40°F): sensor circuit open • If value 140°C (284°F): sensor circuit shorted
Intake Air	Intake air temperature: Min.: -40°C (-40°F), Max.: 140°C (284°F)	Equivalent to ambient air temperature	• If value -40°C (-40°F): sensor circuit open • If value 140°C (284°F): sensor circuit shorted
Engine Run Time	Engine run time: Min.: 0 seconds, Max.: 65535 seconds	Time since engine started	-
Initial Engine Coolant Temp	Initial engine coolant temperature: Min.: -40°C (-40°F), Max.: 120°C (248°F)	Coolant temperature when engine started	Service data
Initial Intake Air Temp	Initial intake air temperature: Min.: -40°C (-40°F), Max.: 120°C (248°F)	Intake air temperature when engine started	Service data

TESTER DISPLAY	MEASUREMENT ITEM/RANGE	NORMAL CONDITION*1	DIAGNOSTIC NOTE
Battery Voltage	Battery voltage: Min.: 0 V, Max.: 65.535 V	11 to 14 V: Idling	-
Accel Sens. No. 1 Volt %	Accelerator pedal position No. 1: Min.: 0%, Max.: 100%	10 to 22%: Accelerator pedal released 52 to 90%: Accelerator pedal fully depressed	-
Accel Sens. No. 2 Volt %	Accelerator pedal position No. 2: Min.: 0%, Max.: 100%	24 to 40%: Accelerator pedal released 68 to 100%: Accelerator pedal fully depressed	-
Accel Sensor Out No. 1	Accelerator pedal position sensor No. 1 voltage: Min.: 0 V, Max.: 4.98 V	-	Electronic throttle control system service data
Accel Sensor Out No. 2	Accelerator pedal position sensor No. 2 voltage: Min.: 0 V, Max.: 4.98 V	-	Electronic throttle control system service data
Accel Sensor Out No. 1	Accelerator pedal position sensor No. 1 voltage: Min.: 0 V, Max.: 5 V	0.5 to 1.1 V: Accelerator pedal released 2.5 to 4.5 V: Accelerator pedal fully depressed	-
Accel Sensor Out No. 2	Accelerator pedal position sensor No. 2 voltage: Min.: 0 V, Max.: 5 V	1.2 to 2.0 V: Accelerator pedal released 3.4 to 5.0 V: Accelerator pedal fully depressed	-
Accelerator Idle Position	Whether or not accelerator pedal position sensor detecting idle: ON or OFF	ON: Idling	-
Accel Fully Close #1 (AD)	Accelerator fully closed value No. 1 (AD): Min.: 0 V, Max.: 4.98 V	-	Electronic throttle control system service data
Accel Fully Close Learn #1	Accelerator fully closed learning value No. 1:	-	Electronic throttle control system service data

TESTER DISPLAY	MEASUREMENT ITEM/RANGE	NORMAL CONDITION*1	DIAGNOSTIC NOTE
	Min.: 0 deg, Max.: 124.512 deg		
Accel Fully Close Learn #2	Accelerator fully closed learning value No. 2: Min.: 0 deg., Max.: 124.512 deg.	-	Electronic throttle control system service data
Throttle Sensor Volt %	Throttle valve opening percentage according to throttle position sensor: Min.: 0%, Max.: 100%	• 10 to 22%: Accelerator pedal released • 64 to 96%: Accelerator pedal fully depressed	Value calculated based on the voltage at terminal VTA1
Throttl Sensor #2 Volt %	Throttle valve opening percentage according to throttle position sensor No. 2: Min.: 0%, Max.: 100%	• 42 to 62%: Accelerator pedal released • 92 to 100%: Accelerator pedal fully depressed	Value calculated based on the voltage at terminal VTA2
ST1	Brake pedal signal: ON or OFF	ON: Brake pedal released	-
System Guard	System guard: ON or OFF	-	Electronic throttle control system service data
Open Side Malfunction	Open side malfunction: ON or OFF	-	Electronic throttle control system service data
Throttle Idle Position	Whether or not throttle position sensor detecting idle: ON or OFF	• ON: Accelerator pedal released • OFF: Accelerator pedal fully depressed	-
Throttle Require Position	Required position: Min.: 0 V, Max.: 5 V	0.5 to 1.1 V: Idling	-
Throttle Sensor Position*3	Throttle sensor positioning: Min.: 0%, Max.: 100%	• 0%: Accelerator pedal released • 50 to 80%: Accelerator pedal fully depressed	Recognition value for throttle opening angle on ECM

TESTER DISPLAY	MEASUREMENT ITEM/RANGE	NORMAL CONDITION*1	DIAGNOSTIC NOTE
Throttle Position No. 1	Throttle position sensor No. 1 output voltage: Min.: 0 V, Max.: 4.98 V	-	Electronic throttle control system service data
Throttle Position No. 2	Throttle position sensor No. 2 output voltage: Min.: 0 V, Max.: 4.98 V	-	Electronic throttle control system service data
Throttle Position No. 1	Throttle position No. 1: Min.: 0 V, Max.: 5 V	• 0.5 to 1.1 V: Accelerator pedal released • 3.2 to 4.8 V: Accelerator pedal fully depressed • 0.6 to 1.4 V: Fail-safe operating	-
Throttle Position No. 2	Throttle position No. 2: Min.: 0 V, Max.: 5 V	• 2.1 to 3.1 V: Accelerator pedal released • 4.6 to 5.0 V: Accelerator pedal fully depressed • 2.1 to 3.1 V: Fail-safe operating	-
Throttle Position Command	Throttle position command value: Min.: 0 V, Max.: 4.9804 V	0.5 to 4.8 V	-
Throttle Sens Open Pos #1	Throttle sensor opener position No. 1: Min.: 0 V, Max.: 4.9804 V	0.6 to 1.4 V	Electronic throttle control system service data
Throttle Sens Open Pos #2	Throttle sensor opener position No. 2: Min.: 0 V, Max.:	1.7 to 2.5 V	Electronic throttle control system service data

TESTER DISPLAY	MEASUREMENT ITEM/RANGE	NORMAL CONDITION*1	DIAGNOSTIC NOTE
	4.9804 V		
Throttle Sens Open #1 (AD)	Throttle sensor opener position No. 1 (AD): Min.: 0 V, Max.: 4.9804 V	0.5 to 4.8 V	-
Throttle Motor	Whether or not throttle actuator control permitted: ON or OFF	• ON: Ignition switch ON • OFF: ETCS has failed	-
Throttle Motor Current	Throttle actuator current: Min.: 0 A, Max.: 20 A	0 to 3.0 A: Idling	Electronic throttle control system service data
Throttle Motor DUTY	Throttle actuator: Min.: 0%, Max.: 100%	10 to 22%: Idling after engine warmed up	Electronic throttle control system service data
Throttle Motor Current	Throttle actuator current: Min.: 0 A, Max.: 19.92 A	0 to 3.0 A: Idling	-
Throttle Motor Open Duty	Throttle actuator open duty ratio: Min.: 0%, Max.: 100%	0 to 40%: Idling	When accelerator pedal depressed, duty ratio increased
Throttle Motor Close Duty	Throttle actuator close duty ratio: Min.: 0%, Max.: 100%	0 to 40%: Idling	When accelerator pedal released quickly, duty ratio increased
Throttle Motor Duty (Open)	Throttle actuator duty ratio (open): Min.: 0%, Max.: 100%	0 to 40%: Idling	Electronic throttle control system service data
Throttle Motor Duty (Close)	Throttle actuator duty ratio (close): Min.: 0%, Max.: 100%	0 to 40%: Idling	Electronic throttle control system service data
Throttle Fully Close Learn	Throttle valve fully closed (learned value): Min.: 0 V, Max.: 5 V	0.4 to 1.0 V: Accelerator pedal released	-

TESTER DISPLAY	MEASUREMENT ITEM/RANGE	NORMAL CONDITION*1	DIAGNOSTIC NOTE
ETCS Actuator Power	ETCS power supply: ON or OFF	• ON: Ignition switch ON and system normal • OFF: ETCS has failed	-
+BM Voltage	+BM voltage: Min.: 0, Max.: 19.92 V	11 to 14 V: Ignition switch ON and system normal	Electronic throttle control system service data
Actuator Power Supply	Actuator power supply ON or OFF	ON: Idling	-
Clutch Current	Clutch current: Min.: 0 A, Max.: 2.49 A	-	-
Fail Safe Drive	Whether or not fail safe function executed: ON or OFF	• ON: Electronic throttle control system has failed • OFF: Electronic throttle control system normal	Electronic throttle control system service data
Fail Safe Drive (Main CPU)	Whether or not fail safe function executed: ON or OFF	• ON: Electronic throttle control system has failed • OFF: Electronic throttle control system normal	Electronic throttle control system service data
Injector (Port)	Injection duration for cylinder 1: Min.: 0 ms, Max.: 32.64 ms	1.0 to 3.0 ms: Idling	-
Injection Volum (Cylinder1)	Injection volume (Cylinder 1): Min.: 0 ml, Max.: 2.048 ml	0.05 to 0.15 ml: Idling	Quantity of fuel injection volume for 10 times
Fuel Pump/Speed Status	Fuel pump/status: ON or OFF	-	Active Test support data
Vacuum Pump	Key-off EVAP system leak detection pump	-	Active Test support data

TESTER DISPLAY	MEASUREMENT ITEM/RANGE	NORMAL CONDITION*1	DIAGNOSTIC NOTE
	status: ON or OFF		
EVAP (Purge) VSV	EVAP (Purge) VSV control duty: Min.: 0%, Max.: 100%	10 to 50%: Idling, under purge control	Order signal from ECM
Evap Purge Flow	Ratio of evaporative purge flow to intake air volume: Min.: 0%, Max.: 102.4%	0 to 10%: Idling	Service data
Purge Density Learn Value	Learning value of purge density: Min.: -50, Max.: 350 %	-40 to 10 %/%: Idling	Service data
Vapor Pressure Pump	Vapor pressure: Min.: 33.8 kPa (254 mmHg), Max.: 125.596 kPa (942 mmHg)	Approximately 100 kPa (760 mmHg) (absolute): Ignition switch ON	EVAP system pressure monitored by canister pressure sensor
Vapor pressure (calculated)	Vapor pressure (calculated): Min.: -5.632 kPa (-42.3 mmHg), Max.: 715.264 kPa (5366 mmHg)	Approximately 100 kPa (760 mmHg) (absolute): Ignition switch ON	EVAP system pressure monitored by canister pressure sensor
EVAP System Vent Valve	Key-off EVAP system vent valve status: ON or OFF	-	Active Test support data
EVAP Purge VSV	VSV status for EVAP control: ON or OFF	-	Active Test support data
Target Air-Fuel Ratio	Ratio compared to stoichiometric level: Min.: 0, Max.: 1.999	0.8 to 1.2: Idling	-
AF Lambda B1 S1	Short-term fuel trim associated with bank 1 sensor 1: Min.: 0, Max.: 1.999	• Value less than 1 (0.000 to 0.999) = Rich • Stoichiometric air fuel ratio = 1	-

TESTER DISPLAY	MEASUREMENT ITEM/RANGE	NORMAL CONDITION*1	DIAGNOSTIC NOTE
		• Value greater than 1 (1.001 to 1.999) = Lean	
AFS Voltage B1 S1	Air fuel ratio sensor output voltage for bank 1 sensor 1: Min.: 0 V, Max.: 7.999 V	2.6 to 3.8 V: Idling, engine warmed up	Performing Control the Injection Volume or Control the Injection Volume for A/F Sensor function of Active Test enables technician to check output voltage of sensors
AFS Current B1 S1	Air fuel ratio sensor output current for bank 1 sensor 1: Min.: -128 mA, Max.: 127.99 mA	-0.5 to 0.5 mA: Idling, engine warmed up	Value becomes higher when fuel-cut executed under high engine speed
O2S B1 S2	Heated oxygen sensor output voltage for bank 1 sensor 2: Min.: 0 V, Max.: 1.275 V	0.0 to 0.9 V: Driving at 44 mph (70 km/h)	Performing Control the Injection Volume or Control the Injection Volume for A/F Sensor function of Active Test enables technician to check output voltage of sensors
O2S Impedance B1S2	Sub heated oxygen sensor impedance (bank 1 sensor 2): Min.: 0 ohm, Max.: 21247.68 ohm	5 to 15000 ohm: After driving for 10 minutes or more in urban area	-
Short FT #1	Short-term fuel trim of bank 1: Min.: -100%, Max.: 99.2%	-20 to 20%	Short-term fuel compensation used to maintain air fuel ratio at stoichiometric air fuel ratio
Long FT #1	Long-term fuel trim of bank 1: Min.: -100%, Max.: 99.2%	-20 to 20%	Overall fuel compensation carried out long-term to compensate continual deviation of short-term fuel trim from central value
Total FT #1	Total fuel trim of bank 1 Average value for fuel trim system of bank 1: Min.: -0.5, Max.: 0.496	-0.28 to 0.2: Idling	-

TESTER DISPLAY	MEASUREMENT ITEM/RANGE	NORMAL CONDITION*1	DIAGNOSTIC NOTE
Fuel System Status #1	Fuel system status (bank 1): OL or CL or OLDrive or OLFault or CLFault	CL: Idling after warming up	• OL (Open Loop): Has not yet satisfied conditions to go closed loop • CL (Closed Loop): Using air fuel ratio sensor as feedback for fuel control • OLDrive: Open loop due to driving conditions (fuel enrichment) • OLFault: Open loop due to detected system fault • CLFault: Closed loop but air fuel ratio sensor, which used for fuel control malfunctioning
Fuel System Status #2	Fuel system status (bank 2): OL or CL or OLDrive or OLFault or CLFault	CL: Idling after warming up	• OL (Open Loop): Has not yet satisfied conditions to go closed loop • CL (Closed Loop): Using air fuel ratio sensor as feedback for fuel control • OLDrive: Open loop due to driving conditions (fuel enrichment) • OLFault: Open loop due to detected system fault • CLFault: Closed loop but air fuel ratio sensor, which used for fuel control malfunctioning
IGN Advance	Ignition timing advance for No. 1 cylinder: Min.: -64 deg., Max.:	BTDC 0 to 15 deg.: Idling	-

TESTER DISPLAY	MEASUREMENT ITEM/RANGE	NORMAL CONDITION*1	DIAGNOSTIC NOTE
	63.5 deg.		
Knock Feedback Value	Feedback value of knocking: Min.: -64°CA, Max.: 1984°CA	-20 to 0°CA: Driving at 44 mph (70 km/h)	Service data
Knock Correct Learn Value	Correction learning value of knocking: Min.: -64°CA, Max.: 1984°CA	0 to 20°CA: Driving at 44 mph (70 km/h)	Service data
VVT Control Status #1	VVT control (bank 1) status: ON or OFF	-	Active Test support data
VVT Aim Angle #1*2	VVT aim angle (bank 1): Min.: 0%, Max.: 100%	0 to 100%	VVT duty signal value during intrusive operation
VVT Change Angle #1*2	VVT change angle (bank 1): Min.: 0 DegFR, Max.: 60 DegFR	0 to 56 DegFR: Idling	Displacement angle during intrusive operation
VVT OCV Duty #1*2	VVT camshaft timing oil control valve operation duty: Min.: 0%, Max.: 100%	0 to 100%	Requested duty value for intrusive operation
VVT Ex Hold Lrn Val #1*2	VVT exhaust hold duty ratio learning value (bank 1): Min.: 0%, Max.: 100%	0 to 100%: Idling	-
VVT Ex Chg Angle #1*2	VVT exhaust change angle (bank 1): Min.: 0 DegFR, Max.: 60 DegFR	0 DegFR: Idling	Displacement angle during intrusive operation (Active Test)
VVT Ex OCV Duty #1*2	VVT exhaust camshaft timing oil control valve duty (bank 1): Min.: 0%, Max.: 100%	0 to 100%: Idling	Requested duty value for intrusive operation (Active Test)
Catalyst Temp B1 S1	Catalyst temperature	Close to catalyst inlet temperature	-

TESTER DISPLAY	MEASUREMENT ITEM/RANGE	NORMAL CONDITION*1	DIAGNOSTIC NOTE
	(associated with sensor 1): Min.: -40°C (-40°F), Max.: 6513.5°C (11756.3°F)		
Catalyst Temp B1 S2	Catalyst temperature (associated with sensor 2): Min.: -40°C (-40°F), Max.: 6513.5°C (11756.3°F)	Close to catalyst outlet temperature	-
Starter Signal	Starter signal (STA terminal input status): ON or OFF	ON: Cranking	-
Starter Control	Ignition or engine switch signal (STSW terminal input status): ON or OFF	ON: Cranking (during ignition switch or engine switch operation)	-
Starter Relay	Starter relay (STAR terminal output status): ON or OFF	ON: Cranking	-
ACC Relay	ACC (cut) relay (ACCR terminal output status): ON or OFF	ON: Cranking	-
Neutral Position SW Signal*3	Park/neutral position switch status: ON or OFF	ON: P or N position	-
Stop Light Switch	Stop light switch status: ON or OFF	ON: Brake pedal depressed	-
A/C Signal	Air conditioning signal: ON or OFF	ON: Air conditioning ON	-
Closed Throttle Position SW	Closed throttle position switch: ON or OFF	• ON: Throttle fully closed • OFF: Throttle	-

TESTER DISPLAY	MEASUREMENT ITEM/RANGE	NORMAL CONDITION*1	DIAGNOSTIC NOTE
		open	
Fuel Cut Condition	Fuel cut determination flag: ON or OFF	-	-
Electrical Load Signal	Electrical load signal: ON or OFF	ON: Headlights or defogger turned ON	-
Check Mode	Check mode: ON or OFF	ON: Check mode ON	INFO
SPD Test Result	Check mode result for vehicle speed sensor: COMPL or INCMPL	-	-
Misfire Test Result	Check mode result for misfire monitor: COMPL or INCMPL	-	-
OXS1 Test Result	Check mode result for heated oxygen sensor (bank 1): COMPL or INCMPL	-	-
A/F Test Results #1	Check mode result for air fuel ratio sensor (bank 1) COMPL or INCMPL	-	-
Complete Parts Monitor	Comprehensive component monitor: Not Avl or Avail	-	-
Fuel System Monitor	Fuel system monitor: Not Avl or Avail	-	-
Misfire Monitor	Misfire monitor: Not Avl or Avail	-	-
EGR/VVT Monitor	EGR monitor: Not Avl or Avail	-	-
EGR/VVT Monitor	EGR monitor: Compl or Incmpl	-	-
O2S(A/FS) Heater Monitor	O2S (A/FS) heater monitor: Not Avl or Avail	-	-

TESTER DISPLAY	MEASUREMENT ITEM/RANGE	NORMAL CONDITION*1	DIAGNOSTIC NOTE
O2S(A/FS) Heater Monitor	O2S (A/FS) heater monitor: Compl or Incmpl	-	-
O2S(A/FS) Monitor	O2S (A/FS) monitor: Not Avl or Avail	-	-
O2S(A/FS) Monitor	O2S (A/FS) monitor: Compl or Incmpl	-	-
A/C Monitor	A/C monitor: Not Avl or Avail	-	-
A/C Monitor	A/C monitor: Compl or Incmpl	-	-
2nd Air Monitor	2nd air monitor: Not Avl or Avail	-	-
2nd Air Monitor	2nd air monitor: Compl or Incmpl	-	-
EVAP Monitor	EVAP monitor: Not Avl or Avail	-	-
EVAP Monitor	EVAP monitor: Compl or Incmpl	-	-
Heated Catalyst Monitor	Heated catalyst monitor: Not Avl or Avail	-	-
Heated Catalyst Monitor	Heated catalyst monitor: Compl or Incmpl	-	-
Catalyst Monitor	Catalyst monitor: Not Avl or Avail	-	-
Catalyst Monitor	Catalyst monitor: Compl or Incmpl	-	-
Component Monitor ENA	Comprehensive component monitor: Unable or Enable	-	-
Component Monitor CMPL	Comprehensive component monitor: Compl or Incmpl	-	-
Fuel System Monitor ENA	Fuel system monitor: Unable or Enable	-	-

TESTER DISPLAY	MEASUREMENT ITEM/RANGE	NORMAL CONDITION*1	DIAGNOSTIC NOTE
Fuel System Monitor CMPL	Fuel system monitor: Compl or Incmpl	-	-
Misfire Monitor ENA	Misfire monitor: Unable or Enable	-	-
Misfire Monitor CMPL	Misfire monitor: Compl or Incmpl	-	-
EGR/VVT Monitor ENA	EGR monitor: Unable or Enable	-	-
EGR/VVT Monitor CMPL	EGR monitor: Compl or Incmpl	-	-
Heater Monitor ENA	O2S (A/FS) heater monitor: Unable or Enable	-	-
Heater Monitor CMPL	O2S (A/FS) heater monitor: Compl or Incmpl	-	-
O2S(A/FS) Monitor ENA	O2S (A/FS) monitor: Unable or Enable	-	-
O2S(A/FS) Monitor CMPL	O2S (A/FS) monitor: Compl or Incmpl	-	-
A/C Monitor ENA	A/C monitor: Unable or Enable	-	-
A/C Monitor CMPL	A/C monitor: Compl or Incmpl	-	-
2nd Air Monitor ENA	2nd air monitor: Unable or Enable	-	-
2nd Air Monitor CMPL	2nd air monitor: Compl or Incmpl	-	-
EVAP Monitor ENA	EVAP monitor: Unable or Enable	-	-
EVAP Monitor CMPL	EVAP monitor: Compl or Incmpl	-	-
Heated Cat Monitor ENA	Heated catalyst monitor: Unable or Enable	-	-
Heated Cat Monitor CMPL	Heated catalyst monitor: Compl or Incmpl	-	-

TESTER DISPLAY	MEASUREMENT ITEM/RANGE	NORMAL CONDITION*1	DIAGNOSTIC NOTE
Catalyst Monitor ENA	Catalyst monitor: Unable or Enable	-	-
Catalyst Monitor CMPL	Catalyst monitor: Compl or Incmpl	-	-
# Codes (Include History)	Number of emission related DTCs	0: No emission related DTC detected	-
MIL	MIL status: ON or OFF	ON: MIL ON	-
MIL ON Run Distance	Distance traveled since MIL turned ON: Min.: 0 km (0 mile), Max.: 65535 km (40722 mile)	Distance since DTC detected	-
Running Time from MIL ON	Running time since MIL turned ON: Min.: 0 min, Max.: 65535 min	Equivalent to running time since MIL turned ON	-
Time after DTC Cleared	Time since DTCs cleared: Min.: 0 min., Max.: 65535 min.	Equivalent to time since DTCs cleared	-
Distance from DTC Cleared	Distance traveled since DTCs cleared: Min.: 0 km (0 mile), Max.: 65535 km (40722 mile)	Equivalent to distance driven since DTCs cleared	-
Warmup Cycle Cleard DTC	Warm-up cycles since DTCs cleared: Min.: 0, Max.: 255	-	Number of warm-up cycles since DTCs cleared
OBD Requirements	OBD requirement	OBD2	-
Number of Emission DTC	Emission related DTCs	-	Number of emission related DTCs
TC and TE1	TC and CG (TE1) terminals of DLC3: ON or OFF	-	Active Test support data
Ignition Trig. Count	Ignition counter for calculated misfire rate:	0 to 400	-

TESTER DISPLAY	MEASUREMENT ITEM/RANGE	NORMAL CONDITION*1	DIAGNOSTIC NOTE
	Min.: 0, Max.: 800		
Cylinder #1 Misfire Count	Misfire count of cylinder 1: Min.: 0, Max.: 255	0	-
Cylinder #2 Misfire Count	Misfire count of cylinder 2: Min.: 0, Max.: 255	0	-
Cylinder #3 Misfire Count	Misfire count of cylinder 3: Min.: 0, Max.: 255	0	-
Cylinder #4 Misfire Count	Misfire count of cylinder 4: Min.: 0, Max.: 255	0	-
All Cylinders Misfire Count	All cylinders misfire count: Min.: 0, Max.: 255	0	-
Misfire RPM	Average of engine speed when misfire occurs: Min.: 0 rpm, Max.: 6375 rpm	0 rpm: Misfire 0	-
Misfire Load	Average of engine load when misfire occurred: Min.: 0 g/rev, Max.: 3.98 g/rev	0 g/rev: Misfire 0	-
Misfire Margin	Margin to detect engine misfire: Min.: -100%, Max.: 99.22%	-100 to 99.22%	Misfire detection margin
Catalyst OT MF F/C	Catalyst overheat misfire prevention fuel cut function availability: NOT AVL or AVAIL	Avail: Catalyst overheat misfire prevention fuel cut function available Not Avl: Catalyst overheat misfire prevention fuel cut function not available	Service data
Cat OT MF F/C History	Catalyst overheat misfire prevention fuel cut function history: ON or OFF	ON: Fuel cut operation history exists	Service data

TESTER DISPLAY	MEASUREMENT ITEM/RANGE	NORMAL CONDITION*1	DIAGNOSTIC NOTE
Cat OT MF F/C Cylinder#1	Display of fuel cut operation for No. 1 cylinder (if certain level of misfire is detected): ON or OFF	ON: Fuel cut is operating	-
Cat OT MF F/C Cylinder#2	Display of fuel cut operation for No. 2 cylinder (if certain level of misfire is detected): ON or OFF	ON: Fuel cut is operating	-
Cat OT MF F/C Cylinder#3	Display of fuel cut operation for No. 3 cylinder (if certain level of misfire is detected): ON or OFF	ON: Fuel cut is operating	-
Cat OT MF F/C Cylinder#4	Display of fuel cut operation for No. 4 cylinder (if certain level of misfire is detected): ON or OFF	ON: Fuel cut is operating	-
Electric Fan Motor	Electric cooling fan motor: ON or OFF	ON: Electric cooling fan motor operating	Active Test support data
Idle Fuel Cut	Fuel cut idle: ON or OFF	ON: Fuel cut operating	Idle Fuel Cut = "ON" when throttle valve fully closed and engine speed over 2800 rpm
FC TAU	Fuel cut TAU (Fuel cut with very light load): ON or OFF	ON: Fuel cut operating	Fuel cut being performed during very light load to prevent incomplete engine combustion
Model Code	Model code	-	Identifies model code: ZRE14#
Engine Type	Engine type	-	Identifies engine type: 2ZRFE
Cylinder Number	Cylinder number: Min.: 0, Max.: 255	-	Identifies number of cylinders: 4
Transmission Type	Transmission type	-	Identifies transmission type: ECT 4th or M/T

TESTER DISPLAY	MEASUREMENT ITEM/RANGE	NORMAL CONDITION*1	DIAGNOSTIC NOTE
Destination	Destination	-	Identifies destination: A (America)
Model Year	Model year: Min.: 1900, Max.: 2155	-	Identifies model year: 200#
System Identification	System identification	-	Identifies engine system: Gasoline (gasoline engine)
Engine Speed of Cyl #1	Engine RPM for cylinder 1: Min.: 0 rpm, Max.: 25600 rpm	-	Output only when Check the Cylinder Compression performed using Active Test 51199 rpm: Active Test not performed
Engine Speed of Cyl #2	Engine RPM for cylinder 2: Min.: 0 rpm, Max.: 25600 rpm	-	Output only when Check the Cylinder Compression performed using Active Test 51199 rpm: Active Test not performed
Engine Speed of Cyl #3	Engine RPM for cylinder 3: Min.: 0 rpm, Max.: 25600 rpm	-	Output only when Check the Cylinder Compression performed using Active Test 51199 rpm: Active Test not performed
Engine Speed of Cyl #4	Engine RPM for cylinder 4: Min.: 0 rpm, Max.: 25600 rpm	-	Output only when Check the Cylinder Compression performed using Active Test 51199 rpm: Active Test not performed
Av Engine Speed of All Cyl	Engine RPM for all cylinders: Min.: 0 rpm, Max.: 25600 rpm	-	Output only when Check the Cylinder Compression performed using Active Test 51199 rpm: Active Test not performed

HINT:

- *1: If no idling conditions are specified, the shift lever should be in N or P, and the A/C switch and all accessory switches should be off.
- *2: Values are only displayed when performing the Active Tests: Control the VVT Linear (Bank1). For other Active Tests, the value will be 0.
- *3: Automatic transaxle models only

2. ACTIVE TEST

HINT:

Using the Techstream to perform the Active Tests allows relays, VSVs, actuators and other items to be operated without removing any parts. This non-intrusive functional inspection can be very useful because intermittent operation may be discovered before parts or wiring is disturbed. Performing Active Tests early in troubleshooting is one way to save diagnostic time. Data List information can be displayed while performing Active Tests.

(a) Warm up the engine.

(b) Turn the ignition switch off.

(c) Connect the Techstream to the DLC3.

(d) Turn the ignition switch to ON.

(e) Turn the Techstream on.

(f) Enter the following menus: Powertrain / Engine and ECT / Active Test.

(g) According to the display on the Techstream, perform the Active Test.

TESTER DISPLAY	TEST PART	CONTROL RANGE	DIAGNOSTIC NOTE
Control the Injection Volume	Change injection volume	-12.5 to 24.8%	• All injectors tested at the same time • Perform test at less than 3000 rpm • Injection volume can be changed in 1% graduations within control range
Control the Injection Volume for A/F Sensor	Change injection volume	Lower by 12.5% or increase by 24.8%	• Perform test at less than 3000 rpm • Control the Injection Volume for A/F Sensor enables checking and graphing of air fuel ratio sensor and heated oxygen sensor voltage outputs • When conducting the test, select the following items: Active Test / Control the Injection Volume for A/F Sensor / Data List / AFS Voltage B1 S1 and O2S B1 S2
Activate the VSV for EVAP Control	Activate purge VSV control	ON/OFF	-

TESTER DISPLAY	TEST PART	CONTROL RANGE	DIAGNOSTIC NOTE
Control the Fuel Pump / Speed	Activate fuel pump (C/OPN Relay)	ON/OFF	Test possible when following conditions met: • Ignition switch ON • Engine is stopped
Connect the TC and TE1	Turn on and off TC and CG (TE1) connection	ON/OFF	• ON: TC and TE1 connected • OFF: TC and TE1 disconnected
Control the Idle Fuel Cut Prohibit	Prohibit idling fuel cut control	ON/OFF	Idling fuel-cut turned ON when throttle valve fully closed and engine speed over 2800 rpm
Prohibit the Catalyst OT Misfire prevent F/C	Prohibit catalyst overheat malfunction prevention fuel cut operation during misfire	ON/OFF ON: Fuel cut prohibited	Confirm that vehicle is stopped and engine speed is 3000 rpm or less
Control the Electric Cooling Fan	Control electric cooling fan motor	ON/OFF	-
Activate the Starter Relay	Starter	ON/OFF	-
Activate the ACC Cut Relay	Activate ACC cut relay	ON/OFF	Test is possible when following conditions are met: • Ignition switch ON • Engine is stopped
Control the ETCS Open/Close Slow Speed	Throttle actuator	Close/Open	Test possible when following conditions met: • Ignition switch ON • Engine is stopped • Accelerator pedal fully depressed (Accelerator pedal position: 58 degrees or more)
Control the ETCS Open/Close Fast Speed	Throttle actuator	Close/Open	
Control the VVT Linear (Bank1)	Control VVT (bank 1)	Between -128 and 127% This value added to present camshaft	• Engine stall or rough idle when VVT actuator operated by 100%. • Test possible during idle.

TESTER DISPLAY	TEST PART	CONTROL RANGE	DIAGNOSTIC NOTE
		timing oil control valve control duty 100%: Maximum advance -100%: Maximum retard	
Control the VVT System (Bank1)	Turn on and off intake camshaft timing oil control valve	ON/OFF	• Engine stalls or idles roughly when camshaft timing oil control valve turned ON • Normal engine running or idling when camshaft timing oil control valve OFF • Test possible during idle.
Control the VVT Exhaust Linear (Bank 1)	Control VVT (Bank 1)	Between -128 and 127% This value added to present camshaft timing oil control valve control duty (Exhaust camshaft) 100%: Maximum retard -100%: Maximum advance	-
Activate the Vacuum Pump	Leak detection pump	ON/OFF	-
Activate the VSV for Vent Valve	Vent valve	ON/OFF	-
Control the Cylinder #1 Fuel Cut	Cylinder #1 injector fuel cut	ON/OFF	Test possible while vehicle stopped and engine idling*1
Control the Cylinder #2 Fuel Cut	Cylinder #2 injector fuel cut	ON/OFF	
Control the Cylinder #3 Fuel Cut	Cylinder #3 injector fuel cut	ON/OFF	
Control the Cylinder #4 Fuel Cut	Cylinder #4 injector fuel cut	ON/OFF	

TESTER DISPLAY	TEST PART	CONTROL RANGE	DIAGNOSTIC NOTE
Control the All Cylinder Fuel Cut	All cylinder fuel cut	ON/OFF	
Check the Cylinder Compression *2	Check the cylinder compression pressure (measuring engine speed for each cylinder)	ON/OFF	Fuel injection and ignition stop in all cylinders

NOTICE:

***1: If the display of the Data List Catalyst OT MF F/C item is Not Avl, perform this Active Test with the vehicle stopped and the engine idling. If the display of the Data List Catalyst OT MF F/C item is Avail, perform this Active Test as described below.**

1. Stop the engine and turn the ignition switch to ON to turn Control the Cylinder #1 Fuel Cut (to #4 Fuel Cut) ON.
2. Start the engine.

HINT:

***2: While the Active Test item Check the Cylinder Compression is being performed, the fuel and ignition of all cylinders is cut. At this time, the ECM measures the speed of each cylinder while the engine is being cranked.**

If one cylinder's speed is higher than the others, that cylinder's compression pressure can be concluded to be lower than the others.

1. Warm up the engine.
2. Turn the ignition switch off.
3. Connect the Techstream to the DLC3.
4. Turn the ignition switch to ON.
5. Turn the Techstream ON.
6. Enter the following menus: Powertrain / Engine and ECT / Active Test / Check the Cylinder Compression.
7. Enter the following menus: Compression / Engine Speed of Cyl #1 to #4, Av Engine Speed of All Cyl
8. Press the RIGHT or LEFT button to change the Check the Cylinder Compression to ON.

   HINT:

   Fuel injection and ignition for all cylinders are prohibited at this time, and each cylinder's engine speed measurement will enter standby mode.

9. Crank the engine until the monitor item values Engine speed of Cyl #1 to #4 and Av Engine Speed of All Cyl change.
10. Monitor the engine speed (Engine Speed of Cyl #1 to #4, Av Engine Speed of All Cyl) displayed on the Techstream.

    HINT:

    The Techstream displays extremely high values before cranking the engine. Each cylinder's engine speed is measured while cranking the engine and then the Techstream displays the actual engine

speed values.

NOTICE:

- The Active Test item Check the Cylinder Compression will automatically turn off 255 seconds after the Active Test is turned on.
- When the Check the Cylinder Compression is OFF and the engine is cranked, the engine will start.
- If the Check the Cylinder Compression test needs to be performed again after each cylinder's engine speed measurement has been performed once, press EXIT to return to the Active Test menu screen. Then perform the Check the Cylinder Compression test again.
- Use a fully-charged battery.

3. SYSTEM CHECK

HINT:

Performing a System Check in the Utility menu enables the system, which consists of multiple actuators, to be operated without removing any parts. In addition, it can show whether or not any DTCs are set, and can detect potential malfunctions in the system.

(a) Connect the Techstream to the DLC3.

(b) Turn the ignition switch to ON.

(c) Turn the Techstream on.

(d) Enter the following menus: Powertrain / Engine and ECT / Utility.

(e) Perform the System Check by referring to the table below.

TESTER DISPLAY	TEST PART	CONTROL RANGE	DIAGNOSTIC NOTE
Evaporative System Check (Automatic Mode)	Perform 5 steps in order to operate EVAP key-off monitor automatically	35°C (95°F) or less	• If no DTCs in Pending after performing this test, system functioning normally • Refer to EVAP System INFO
Evaporative System Check (Manual Mode)	Perform 5 steps in order to operate EVAP key-off monitor manually	35°C (95°F) or less	• Used to detect malfunctioning parts • Refer to EVAP System INFO

Last Modified: 3-10-2010	6.4 D	**From:** 200901
Model Year: 2010	**Model:** Corolla	**Doc ID:** RM000000PDJ0D3X
Title: 2ZR-FE ENGINE CONTROL: SFI SYSTEM: DIAGNOSIS SYSTEM (2010 Corolla)		

DIAGNOSIS SYSTEM

1. DESCRIPTION

When troubleshooting OBD II (On-Board Diagnostics) vehicles, an OBD II scan tool (complying with SAE J1987) must be connected to the DLC3 (Data Link Connector 3) of the vehicle. Various data in the vehicle ECM (Engine Control Module) can be then read.

OBD II regulations require that the vehicle on-board computer illuminate the MIL (Malfunction Indicator Lamp) on the instrument panel when the computer detects a malfunction in:



a. The emission control system and components.
b. The powertrain control components (which affect vehicle emissions).
c. The computer itself.

In addition, the applicable DTCs prescribed by SAE J2012 are recorded in the ECM memory. If the malfunction does not recur in 3 consecutive trips, the MIL turns off automatically but the DTCs remain recorded in the ECM memory.

To check the DTCs, connect the Techstream to the DLC3. The Techstream displays DTCs, freeze frame data, and a variety of the engine data. The DTCs and freeze frame data can be cleared with the Techstream. In order to enhance OBD function on vehicles and develop the Off-Board diagnosis system, Controller Area Network (CAN) communication is used in this system. CAN is a network which uses a pair of data transmission lines spanning multiple computers and sensors. It allows for high speed communications between the systems and simplification of the wire harness connections.

2. NORMAL MODE AND CHECK MODE

The diagnosis system operates in normal mode during normal vehicle use. In normal mode, 2 trip detection logic is used to ensure accurate detection of malfunctions. Check mode is also available as an option for technicians. In check mode, 1 trip detection logic is used for simulating malfunction symptoms and increasing the system's ability to detect malfunctions, including intermittent problems (the Techstream only).

3. 2 TRIP DETECTION LOGIC

When a malfunction is first detected, the malfunction is temporarily stored in the ECM memory (1st trip). If the same malfunction is detected during the subsequent drive cycle, the MIL is illuminated (2nd trip).

4. DLC3 (Data Link Connector 3)

(a) Check DLC3 INFO .

5. FREEZE FRAME DATA

The ECM records vehicle and driving condition information as freeze frame data the moment a DTC is stored. When troubleshooting, freeze frame data can be helpful in determining whether the vehicle was running or stopped, whether the engine was warmed up or not, whether the air fuel ratio was lean or rich, as well as other data recorded at the time of a malfunction.

6. BATTERY VOLTAGE

Standard voltage:
11 to 14 V

If voltage is below 11 V, replace or recharge the battery before proceeding.

7. MIL (Malfunction Indicator Lamp)

(a) The MIL is illuminate when the ignition switch is first turned to ON (the engine is not running).

(b) The MIL should turn off when the engine is started. If the MIL remains illuminated, the diagnosis system has detected a malfunction or abnormality in the system.

HINT:

If the MIL does not illuminate when the ignition switch is first turned to ON, check the MIL circuit INFO .

8. ALL READINESS

HINT:

- With "ALL READINESS", you can check whether or not the DTC judgment has been completed by using the Techstream.
- You should check "ALL READINESS" after simulating malfunction symptoms or for validation after finishing repairs.

(a) Connect the Techstream to the DLC3.

(b) Turn the ignition switch to ON.

(c) Turn the Techstream on.

(d) Clear DTCs INFO .

(e) Turn the ignition switch off.

(f) Turn the ignition switch to ON and turn the Techstream on.

(g) Perform the DTC judgment driving pattern to run the DTC judgment.

(h) Enter the following menus: Powertrain / Engine and ECT / Utility / All Readiness.

(i) Input the DTCs to be confirmed.

(j) Check the DTC judgment result.

Techstream

TECHSTREAM DISPLAY	DESCRIPTION
NORMAL	• DTC judgment completed

TECHSTREAM DISPLAY	DESCRIPTION
	• System normal
ABNORMAL	• DTC judgment completed • System abnormal
INCOMPLETE	• DTC judgment not completed • Perform the driving pattern after confirming the DTC enabling conditions
UNKNOWN	• Unable to perform DTC judgment • Number of DTCs which do not fulfill DTC preconditions has reached ECU's memory limit

Last Modified: 3-10-2010	6.4 S	**From:** 200901
Model Year: 2010	**Model:** Corolla	**Doc ID:** RM000000PDF07UX
Title: 2ZR-FE ENGINE CONTROL: SFI SYSTEM: DIAGNOSTIC TROUBLE CODE CHART (2010 Corolla)		

DIAGNOSTIC TROUBLE CODE CHART

HINT:

Parameters listed in the chart may not be exactly the same as your readings due to the type of instrument or other factors. If a trouble code is displayed during the DTC check, inspect the trouble areas listed for that code. For details of the code, refer to the "See page" below.

*1: The MIL flashes when a catalyst damaging misfire is detected

*2: Automatic Transaxle models

*3: Manual Transaxle models

SFI System

DTC CODE	DETECTION ITEM	TROUBLE AREA	MIL	MEMORY	DTC FOR MEXICO MODELS	SEE PAGE
P0010	Camshaft Position "A" Actuator Circuit (Bank 1)	1. Open or short in camshaft timing oil control valve assembly (for intake camshaft) circuit 2. Camshaft timing oil control valve assembly (for intake camshaft) 3. ECM	Comes on	DTC stored	Applies	INFO
P0011	Camshaft Position "A" - Timing Over-Advanced or System Performance (Bank 1)	1. Valve timing 2. Camshaft timing oil control valve assembly (for intake camshaft) 3. Oil control valve filter 4. Camshaft timing gear assembly (for intake camshaft) 5. ECM	Comes on	DTC stored	Applies	INFO
P0012	Camshaft Position "A" - Timing Over-Retarded (Bank 1)	1. Valve timing 2. Camshaft timing oil control valve assembly (for intake camshaft) 3. Oil control valve filter 4. Camshaft timing gear assembly (for intake	Comes on	DTC stored	Applies	INFO

DTC CODE	DETECTION ITEM	TROUBLE AREA	MIL	MEMORY	DTC FOR MEXICO MODELS	SEE PAGE
		camshaft) 5. ECM				
P0013	Camshaft Position "B" Actuator Circuit / Open (Bank 1)	1. Open or short in camshaft timing oil control valve assembly (for exhaust camshaft) circuit 2. Camshaft timing oil control valve assembly (for exhaust camshaft) 3. ECM	Comes on	DTC stored	Applies	INFO
P0014	Camshaft Position "B" - Timing Over-Advanced or System Performance (Bank 1)	1. Valve timing 2. Camshaft timing oil control valve assembly (for exhaust camshaft) 3. Oil control valve filter 4. Camshaft timing gear assembly (for exhaust camshaft) 5. ECM	Comes on	DTC stored	Applies	INFO
P0015	Camshaft Position "B" - Timing Over-Retarded (Bank 1)	1. Valve timing 2. Camshaft timing oil control valve assembly (for exhaust camshaft) 3. Oil control valve filter 4. Camshaft timing gear assembly (for exhaust camshaft) 5. ECM	Comes on	DTC stored	Applies	INFO
P0016	Crankshaft Position - Camshaft Position Correlation (Bank 1 Sensor A)	1. Mechanical system (Timing chain has jumped tooth or chain stretched) 2. Camshaft timing oil control valve assembly (for intake camshaft) 3. Camshaft timing gear assembly (for intake camshaft) 4. ECM	Comes on	DTC stored	Applies	INFO
P0017	Crankshaft Position - Camshaft Position Correlation (Bank 1	1. Mechanical system (Timing chain has jumped tooth or chain	Comes on	DTC stored	Applies	INFO

DTC CODE	DETECTION ITEM	TROUBLE AREA	MIL	MEMORY	DTC FOR MEXICO MODELS	SEE PAGE
	Sensor B)	stretched) 2. Camshaft timing oil control valve assembly (for exhaust camshaft) 3. Camshaft timing gear assembly (for exhaust camshaft) 4. ECM				
P0031	Oxygen (A/F) Sensor Heater Control Circuit Low (Bank 1 Sensor 1)	1. Open in air fuel ratio sensor heater circuit 2. Air fuel ratio sensor heater (sensor 1) 3. ECM	Comes on	DTC stored	Applies	INFO
P0032	Oxygen (A/F) Sensor Heater Control Circuit High (Bank 1 Sensor 1)	1. Short in air fuel ratio sensor heater circuit 2. Air fuel ratio sensor heater (sensor 1) 3. ECM	Comes on	DTC stored	Applies	INFO
P0037	Oxygen Sensor Heater Control Circuit Low (Bank 1 Sensor 2)	1. Open in heated oxygen sensor (sensor 2) heater circuit 2. Heated oxygen sensor (sensor 2) heater 3. ECM	Comes on	DTC stored	Applies	INFO
P0038	Oxygen Sensor Heater Control Circuit High (Bank 1 Sensor 2)	1. Short in heated oxygen sensor (sensor 2) heater circuit 2. Heated oxygen sensor (sensor 2) heater 3. ECM	Comes on	DTC stored	Applies	INFO
P0101	Mass Air Flow Circuit Range / Performance Problem	1. Mass air flow meter 2. Intake system 3. PCV hose connections	Comes on	DTC stored	-	INFO
P0102	Mass or Volume Air Flow Circuit Low Input	1. Open or short in mass air flow meter circuit 2. Mass air flow meter 3. ECM	Comes on	DTC stored	Applies	INFO

DTC CODE	DETECTION ITEM	TROUBLE AREA	MIL	MEMORY	DTC FOR MEXICO MODELS	SEE PAGE
P0103	Mass or Volume Air Flow Circuit High Input	1. Open or short in mass air flow meter circuit 2. Mass air flow meter 3. ECM	Comes on	DTC stored	Applies	INFO
P0111	Intake Air Temperature Sensor Gradient Too High	Mass air flow meter	Comes on	DTC stored	-	INFO
P0112	Intake Air Temperature Circuit Low Input	1. Short in intake air temperature sensor circuit 2. Intake air temperature sensor (built into mass air flow meter) 3. ECM	Comes on	DTC stored	Applies	INFO
P0113	Intake Air Temperature Circuit High Input	1. Open in intake air temperature sensor circuit 2. Intake air temperature sensor (built into mass air flow meter) 3. ECM	Comes on	DTC stored	Applies	INFO
P0115	Engine Coolant Temperature Circuit Malfunction	1. Open or short in engine coolant temperature sensor circuit 2. Engine coolant temperature sensor 3. ECM	Comes on	DTC stored	Applies	INFO
P0116	Engine Coolant Temperature Circuit Range / Performance Problem	1. Thermostat 2. Engine coolant temperature sensor	Comes on	DTC stored	-	INFO
P0117	Engine Coolant Temperature Circuit Low Input	1. Short in engine coolant temperature sensor circuit 2. Engine coolant temperature sensor 3. ECM	Comes on	DTC stored	Applies	INFO

DTC CODE	DETECTION ITEM	TROUBLE AREA	MIL	MEMORY	DTC FOR MEXICO MODELS	SEE PAGE
P0118	Engine Coolant Temperature Circuit High Input	1. Open in engine coolant temperature sensor circuit 2. Engine coolant temperature sensor 3. ECM	Comes on	DTC stored	Applies	INFO
P011B	Engine Coolant Temperature / Intake Air Temperature Correlation	1. Intake air temperature sensor 2. Engine coolant temperature sensor 3. ECM	Comes on	DTC stored	-	INFO
P0120	Throttle / Pedal Position Sensor / Switch "A" Circuit Malfunction	1. Throttle position sensor (built into throttle body) 2. ECM	Comes on	DTC stored	Applies	INFO
P0121	Throttle / Pedal Position Sensor / Switch "A" Circuit Range / Performance Problem	1. Throttle positon sensor (built into throttle body) 2. Throttle position sensor circuit 3. ECM	Comes on	DTC stored	Applies	INFO
P0122	Throttle / Pedal Position Sensor / Switch "A" Circuit Low Input	1. Throttle position sensor (built into throttle body) 2. Short in VTA1 circuit 3. Open in VC circuit 4. ECM	Comes on	DTC stored	Applies	INFO
P0123	Throttle / Pedal Position Sensor / Switch "A" Circuit High Input	1. Throttle position sensor (built into throttle body) 2. Open in VTA1 circuit 3. Open in E2 circuit 4. Short between VC and VTA1 circuits 5. ECM	Comes on	DTC stored	Applies	INFO
P0125	Insufficient Coolant Temperature for Closed Loop Fuel Control	1. Cooling system 2. Engine coolant temperature sensor 3. Thermostat	Comes on	DTC stored	-	INFO
P0128	Coolant Thermostat (Coolant Temperature Below Thermostat	1. Thermostat 2. Cooling system 3. Engine coolant	Comes on	DTC stored	Applies	INFO

DTC CODE	DETECTION ITEM	TROUBLE AREA	MIL	MEMORY	DTC FOR MEXICO MODELS	SEE PAGE
	Regulating Temperature)	temperature sensor 4. ECM				
P0136	Oxygen Sensor Circuit Malfunction (Bank 1 Sensor 2)	1. Open or short in heated oxygen sensor (sensor 2) circuit 2. Heated oxygen sensor (sensor 2) 3. Heated oxygen sensor heater (bank 2) 4. Air fuel ratio sensor (sensor 1) 5. Gas leaks from exhaust system	Comes on	DTC stored	-	INFO
P0137	Oxygen Sensor Circuit Low Voltage (Bank 1 Sensor 2)	1. Open or short in heated oxygen sensor (sensor 2) circuit 2. Heated oxygen sensor (sensor 2) 3. Heated oxygen sensor heater (bank 2) 4. Air fuel ratio sensor (sensor 1) 5. Gas leaks from exhaust system	Comes on	DTC stored	Applies	INFO
P0138	Oxygen Sensor Circuit High Voltage (Bank 1 Sensor 2)	1. Short in heated oxygen sensor (sensor 2) circuit 2. Heated oxygen sensor (sensor 2) 3. ECM	Comes on	DTC stored	-	INFO
P0139	Oxygen Sensor Circuit Slow Response (Bank 1 Sensor 2)	1. Short in heated oxygen sensor (sensor 2) circuit 2. Heated oxygen sensor (sensor 2) 3. ECM	Comes on	DTC stored	-	INFO
P0141	Oxygen Sensor Heater Circuit Malfunction (Bank 1 Sensor 2)	1. Open or short in heated oxygen sensor (sensor 2) heater circuit 2. Heated oxygen sensor (sensor 2) heater 3. ECM	Comes on	DTC stored	-	INFO

DTC CODE	DETECTION ITEM	TROUBLE AREA	MIL	MEMORY	DTC FOR MEXICO MODELS	SEE PAGE
P0171	System Too Lean (Bank 1)	1. Intake system 2. Injector blockage 3. Mass air flow meter 4. Engine coolant temperature sensor 5. Fuel pressure 6. Gas leaks from exhaust system 7. Open or short in air fuel ratio sensor (sensor 1) circuit 8. Air fuel ratio sensor (sensor 1) 9. PCV valve and hose 10. PCV hose connections 11. ECM	Comes on	DTC stored	Applies	INFO
P0172	System Too Rich (Bank 1)	1. Injector leak or blockage 2. Mass air flow meter 3. Engine coolant temperature sensor 4. Ignition system 5. Fuel pressure 6. Gas leaks from exhaust system 7. Open or short in air fuel ratio sensor (sensor 1) circuit 8. Air fuel ratio sensor (sensor 1) 9. ECM	Comes on	DTC stored	Applies	INFO
P0220	Throttle / Pedal Position Sensor / Switch "B" Circuit	1. Throttle position sensor (built into throttle body) 2. ECM	Comes on	DTC stored	Applies	INFO
P0222	Throttle / Pedal Position Sensor / Switch "B" Circuit Low Input	1. Throttle position sensor (built into throttle body) 2. Short in VTA2 circuit 3. Open in VC circuit 4. ECM	Comes on	DTC stored	Applies	INFO

DTC CODE	DETECTION ITEM	TROUBLE AREA	MIL	MEMORY	DTC FOR MEXICO MODELS	SEE PAGE
P0223	Throttle / Pedal Position Sensor / Switch "B" Circuit High Input	1. Throttle position sensor (built into throttle body) 2. Open in VTA2 circuit 3. Open in E2 circuit 4. Short between VC and VTA2 circuits 5. ECM	Comes on	DTC stored	Applies	INFO
P0300	Random / Multiple Cylinder Misfire Detected	1. Open or short in engine wire harness 2. Connector connection 3. Vacuum hose connections 4. Ignition system 5. Fuel injector 6. Fuel pressure 7. Mass air flow meter 8. Engine coolant temperature sensor 9. Compression pressure 10. Valve timing 11. PCV valve and hose 12. PCV hose connections 13. Intake system 14. ECM	Comes on / Blinks*1	DTC stored	Applies	INFO
P0301	Cylinder 1 Misfire Detected	Same as DTC P0300	Comes on / Blinks*1	DTC stored	Applies	INFO
P0302	Cylinder 2 Misfire Detected	Same as DTC P0300	Comes on / Blinks*1	DTC stored	Applies	INFO
P0303	Cylinder 3 Misfire Detected	Same as DTC P0300	Comes on / Blinks*1	DTC stored	Applies	INFO
P0304	Cylinder 4 Misfire Detected	Same as DTC P0300	Comes on / Blinks*1	DTC stored	Applies	INFO
P0325	Knock Sensor 1 Circuit	1. Open or short in knock sensor circuit	Comes on	DTC stored	Applies	INFO

DTC CODE	DETECTION ITEM	TROUBLE AREA	MIL	MEMORY	DTC FOR MEXICO MODELS	SEE PAGE
		2. Knock sensor 3. ECM				
P0327	Knock Sensor 1 Circuit Low Input (Bank 1 or Single Sensor)	1. Short in knock sensor circuit 2. Knock sensor 3. ECM	Comes on	DTC stored	Applies	INFO
P0328	Knock Sensor 1 Circuit High Input (Bank 1 or Single Sensor)	1. Open in knock sensor circuit 2. Knock sensor 3. ECM	Comes on	DTC stored	Applies	INFO
P0335	Crankshaft Position Sensor "A" Circuit	1. Open or short in crankshaft position sensor circuit 2. Crankshaft position sensor 3. Crankshaft position sensor plate 4. ECM	Comes on	DTC stored	Applies	INFO
P0339	Crankshaft Position Sensor "A" Circuit Intermittent	1. Open or short in crankshaft position sensor circuit 2. Crankshaft position sensor 3. Crankshaft position sensor plate 4. ECM	Does not come on	DTC stored	Applies	INFO
P0340	Camshaft Position Sensor Circuit Malfunction	1. Open or short in camshaft position sensor circuit for intake camshaft 2. Camshaft position sensor for intake camshaft 3. Camshaft timing gear for intake camshaft 4. Jumped tooth of timing chain for intake camshaft 5. ECM	Comes on	DTC stored	Applies	INFO
P0342	Camshaft Position Sensor "A" Circuit Low Input (Bank 1 or Single Sensor)	1. Open or short in camshaft position sensor circuit for intake camshaft	Comes on	DTC stored	Applies	INFO

DTC CODE	DETECTION ITEM	TROUBLE AREA	MIL	MEMORY	DTC FOR MEXICO MODELS	SEE PAGE
		2. Camshaft position sensor for intake camshaft 3. Camshaft timing gear for intake camshaft 4. Jumped tooth of timing chain for intake camshaft 5. ECM				
P0343	Camshaft Position Sensor "A" Circuit High Input (Bank 1 or Single Sensor)	1. Open or short in camshaft position sensor circuit for intake camshaft 2. Camshaft position sensor for intake camshaft 3. Camshaft timing gear for intake camshaft 4. Jumped tooth of timing chain for intake camshaft 5. ECM	Comes on	DTC stored	Applies	INFO
P0351	Ignition Coil "A" Primary / Secondary Circuit	1. Ignition system 2. Open or short in IGF1 or IGT1 circuit between ignition coil and ECM 3. No. 1 ignition coil 4. ECM	Comes on	DTC stored	Applies	INFO
P0352	Ignition Coil "B" Primary / Secondary Circuit	1. Ignition system 2. Open or short in IGF1 or IGT2 circuit between ignition coil and ECM 3. No. 2 ignition coil 4. ECM	Comes on	DTC stored	Applies	INFO
P0353	Ignition Coil "C" Primary / Secondary Circuit	1. Ignition system 2. Open or short in IGF1 or IGT3 circuit between ignition coil and ECM 3. No. 3 ignition coil 4. ECM	Comes on	DTC stored	Applies	INFO

DTC CODE	DETECTION ITEM	TROUBLE AREA	MIL	MEMORY	DTC FOR MEXICO MODELS	SEE PAGE
P0354	Ignition Coil "D" Primary / Secondary Circuit	1. Ignition system 2. Open or short in IGF1 or IGT4 circuit between ignition coil and ECM 3. No. 4 ignition coil 4. ECM	Comes on	DTC stored	Applies	INFO
P0365	Camshaft Position Sensor "B" Circuit (Bank 1)	1. Open or short in exhaust camshaft position sensor circuit 2. Exhaust camshaft position sensor 3. Camshaft timing gear for exhaust camshaft 4. Jumped tooth of timing chain for exhaust camshaft 5. ECM	Comes on	DTC stored	Applies	INFO
P0367	Camshaft Position Sensor "B" Circuit Low Input (Bank 1)	1. Open or short in exhaust camshaft position sensor circuit 2. Exhaust camshaft position sensor 3. Camshaft timing gear for exhaust camshaft 4. Jumped tooth of timing chain for exhaust camshaft 5. ECM	Comes on	DTC stored	Applies	INFO
P0368	Camshaft Position Sensor "B" Circuit High Input (Bank 1)	1. Open or short in exhaust camshaft position sensor circuit 2. Exhaust camshaft position sensor 3. Camshaft timing gear for exhaust camshaft 4. Jumped tooth of timing chain for exhaust camshaft 5. ECM	Comes on	DTC stored	Applies	INFO
P0420	Catalyst System Efficiency Below Threshold (Bank 1)	1. Gas leaks from exhaust system 2. Air fuel ratio sensor (sensor 1)	Comes on	DTC stored	Applies	INFO

DTC CODE	DETECTION ITEM	TROUBLE AREA	MIL	MEMORY	DTC FOR MEXICO MODELS	SEE PAGE
		3. Heated oxygen sensor (sensor 2) 4. Front exhaust pipe assembly (TWC: three-way catalytic converter)				
P043E	Evaporative Emission System Reference Orifice Clog Up	1. Canister pump module (Reference orifice, leak detection pump, vent valve) 2. Connector/wire harness (Canister pump module - ECM) 3. EVAP system hose (pipe from air inlet port to canister pump module, canister filter, fuel tank vent hose) 4. ECM	Comes on	DTC stored	-	INFO
P043F	Evaporative Emission System Reference Orifice High Flow	1. Canister pump module (Reference orifice, leak detection pump, vent valve) 2. Connector/wire harness (Canister pump module - ECM) 3. EVAP system hose (pipe from air inlet port to canister pump module, canister filter, fuel tank vent hose) 4. ECM	Comes on	DTC stored	-	INFO
P0441	Evaporative Emission Control System Incorrect Purge Flow	1. Purge VSV 2. Connector/wire harness (Purge VSV - ECM) 3. ECM 4. Canister pump module 5. Leak from EVAP system 6. Leak from EVAP line (Purge VSV - Intake manifold)	Comes on	DTC stored	-	INFO

DTC CODE	DETECTION ITEM	TROUBLE AREA	MIL	MEMORY	DTC FOR MEXICO MODELS	SEE PAGE
P0451	Evaporative Emission Control System Pressure Sensor Range / Performance	1. Canister pump module 2. Connector/wire harness (Canister pump module - ECM) 3. EVAP system hose (pipe from air inlet port to canister pump module, canister filter, fuel tank vent hose) 4. ECM	Comes on	DTC stored	-	INFO
P0452	Evaporative Emission Control System Pressure Sensor / Switch Low Input	1. Canister pump module 2. Connector/wire harness (Canister pump module - ECM) 3. EVAP system hose (pipe from air inlet port to canister pump module, canister filter, fuel tank vent hose) 4. ECM	Comes on	DTC stored	-	INFO
P0453	Evaporative Emission Control System Pressure Sensor / Switch High Input	1. Canister pump module 2. Connector/wire harness (Canister pump module - ECM) 3. EVAP system hose (pipe from air inlet port to canister pump module, canister filter, fuel tank vent hose) 4. ECM	Comes on	DTC stored	-	INFO
P0455	Evaporative Emission Control System Leak Detected (Gross Leak)	1. Fuel tank cap (loose) 2. Leaks from EVAP line (Canister - Fuel tank) 3. Leaks from EVAP line (Purge VSV - Canister) 4. Canister pump module 5. Leaks from fuel tank 6. Leaks from canister	Comes on	DTC stored	-	INFO

DTC CODE	DETECTION ITEM	TROUBLE AREA	MIL	MEMORY	DTC FOR MEXICO MODELS	SEE PAGE
P0456	Evaporative Emission Control System Leak Detected (Very Small Leak)	1. Fuel tank cap (loose) 2. Leaks from EVAP line (Canister - Fuel tank) 3. Leaks from EVAP line (Purge VSV - Canister) 4. Canister pump module 5. Leaks from fuel tank 6. Leaks from canister	Comes on	DTC stored	-	INFO
P0500	Vehicle Speed Sensor "A"	1. Open or short in speed signal circuit 2. Speed meter circuit (wheel speed sensor, skid control ECU) 3. Combination meter 4. ECM	Comes on	DTC stored	-	INFO
P0504	Brake Switch "A" / "B" Correlation	1. Short in stop light switch signal circuit 2. STOP fuse 3. IGN fuse 4. Stop light switch 5. ECM	Does not come on	DTC stored	Applies	INFO
P0505	Idle Control System Malfunction	1. Electronic throttle control system 2. Intake system 3. PCV hose connections 4. ECM	Comes on	DTC stored	Applies	INFO
P050A	Cold Start Idle Air Control System Performance	1. Throttle body 2. Mass air flow meter 3. PCV system 4. Air cleaner filter element 5. Intake system 6. VVT system 7. ECM	Comes on	DTC stored	-	INFO
P0560	System Voltage	1. Open in back up power source circuit 2. Battery 3. Battery terminals 4. EFI MAIN fuse 5. ECM	Comes on	DTC stored	Applies	INFO

DTC CODE	DETECTION ITEM	TROUBLE AREA	MIL	MEMORY	DTC FOR MEXICO MODELS	SEE PAGE
P0601	Internal Control Module Memory Check Sum Error	ECM	Comes on	DTC stored	Applies	INFO
P0604	Random Access Memory (RAM)	ECM	Comes on	DTC stored	Applies	INFO
P0606	ECM / PCM Processor	ECM	Comes on	DTC stored	Applies	INFO
P0607	Control Module Performance	1. Exhaust gas leak 2. Heated oxygen sensor (bank 1 sensor 2) 3. ECM	Comes on	DTC stored	Applies	INFO
P060A	Internal Control Module Monitoring Processor Performance	ECM	Comes on	DTC stored	Applies	INFO
P060D	Internal Control Module Accelerator Pedal Position Performance	ECM	Comes on	DTC stored	Applies	INFO
P060E	Internal Control Module Throttle Position Performance	ECM	Comes on	DTC stored	Applies	INFO
P0617	Starter Relay Circuit High	1. Cranking holding function circuit 2. Park/neutral position switch*2 3. Ignition switch*3 4. ECM	Comes on	DTC stored	Applies	INFO
P0630	VIN not Programmed or Mismatch - ECM / PCM	ECM	Comes on	DTC stored	-	INFO
P0657	Actuator Supply Voltage Circuit / Open	ECM	Comes on	DTC stored	Applies	INFO
P0724	Brake Switch "B" Circuit High	1. Short in stop light switch signal circuit 2. Stop light switch 3. ECM	Comes on	DTC stored	Applies	INFO
P1607	Cruise Control Input Processor	ECM	Comes on	DTC stored	Applies	INFO

DTC CODE	DETECTION ITEM	TROUBLE AREA	MIL	MEMORY	DTC FOR MEXICO MODELS	SEE PAGE
P2102	Throttle Actuator Control Motor Circuit Low	1. Open in throttle actuator circuit 2. Throttle actuator 3. ECM	Comes on	DTC stored	Applies	INFO
P2103	Throttle Actuator Control Motor Circuit High	1. Short in throttle actuator circuit 2. Throttle actuator 3. Throttle valve 4. Throttle body 5. ECM	Comes on	DTC stored	Applies	INFO
P2111	Throttle Actuator Control System - Stuck Open	1. Throttle actuator 2. Throttle body 3. Throttle valve 4. ECM	Comes on	DTC stored	Applies	INFO
P2112	Throttle Actuator Control System - Stuck Closed	1. Throttle actuator 2. Throttle body 3. Throttle valve 4. ECM	Comes on	DTC stored	Applies	INFO
P2118	Throttle Actuator Control Motor Current Range / Performance	1. Open in ETCS power source circuit 2. Battery 3. Battery terminals 4. ETCS fuse 5. ECM	Comes on	DTC stored	Applies	INFO
P2119	Throttle Actuator Control Throttle Body Range / Performance	1. Electronic throttle control system 2. ECM	Comes on	DTC stored	Applies	INFO
P2120	Throttle / Pedal Position Sensor / Switch "D" Circuit	1. Accelerator pedal position sensor 2. ECM	Comes on	DTC stored	Applies	INFO
P2121	Throttle / Pedal Position Sensor / Switch "D" Circuit Range / Performance	1. Accelerator pedal position sensor 2. ECM	Comes on	DTC stored	Applies	INFO
P2122	Throttle / Pedal Position Sensor / Switch "D" Circuit Low Input	1. Accelerator pedal position sensor 2. Open in VCP1 circuit 3. Open or ground short in VPA circuit 4. ECM	Comes on	DTC stored	Applies	INFO

DTC CODE	DETECTION ITEM	TROUBLE AREA	MIL	MEMORY	DTC FOR MEXICO MODELS	SEE PAGE
P2123	Throttle / Pedal Position Sensor / Switch "D" Circuit High Input	1. Accelerator pedal position sensor 2. Open in EPA circuit 3. ECM	Comes on	DTC stored	Applies	INFO
P2125	Throttle / Pedal Position Sensor / Switch "E" Circuit	1. Accelerator pedal position sensor 2. ECM	Comes on	DTC stored	Applies	INFO
P2127	Throttle / Pedal Position Sensor / Switch "E" Circuit Low Input	1. Accelerator pedal position sensor 2. Open in VCP2 circuit 3. Open or ground short in VPA2 circuit 4. ECM	Comes on	DTC stored	Applies	INFO
P2128	Throttle / Pedal Position Sensor / Switch "E" Circuit High Input	1. Accelerator pedal position sensor 2. Open in EPA2 circuit 3. ECM	Comes on	DTC stored	Applies	INFO
P2135	Throttle / Pedal Position Sensor / Switch "A" / "B" Voltage Correlation	1. Short between VTA1 and VTA2 circuits 2. Throttle position sensor (built into throttle body) 3. ECM	Comes on	DTC stored	Applies	INFO
P2138	Throttle / Pedal Position Sensor / Switch "D" / "E" Voltage Correlation	1. Short between VPA and VPA2 circuits 2. Accelerator pedal position sensor 3. ECM	Comes on	DTC stored	Applies	INFO
P2195	Oxygen (A/F) Sensor Signal Stuck Lean (Bank 1 Sensor 1)	1. Open or short in air fuel ratio sensor (sensor 1) circuit 2. Air fuel ratio sensor (sensor 1) 3. Air fuel ratio sensor (sensor 1) heater 4. Air fuel ratio sensor heater circuit 5. Intake system 6. Fuel pressure 7. Fuel injector 8. ECM	Comes on	DTC stored	-	INFO

DTC CODE	DETECTION ITEM	TROUBLE AREA	MIL	MEMORY	DTC FOR MEXICO MODELS	SEE PAGE
P2196	Oxygen (A/F) Sensor Signal Stuck Rich (Bank 1 Sensor 1)	1. Open or short in air fuel ratio sensor (sensor 1) circuit 2. Air fuel ratio sensor (sensor 1) 3. Air fuel ratio sensor (sensor 1) heater 4. Air fuel ratio sensor heater circuit 5. Intake system 6. Fuel pressure 7. Fuel injector 8. ECM	Comes on	DTC stored	-	INFO
P2237	Oxygen (A/F) Sensor Pumping Current Circuit / Open (Bank 1 Sensor 1)	1. Open in air fuel ratio sensor (sensor 1) circuit 2. Air fuel ratio sensor (sensor 1) 3. ECM	Comes on	DTC stored	Applies	INFO
P2238	Oxygen (A/F) Sensor Pumping Current Circuit Low (Bank 1 Sensor 1)	1. Open or short in air fuel ratio sensor (sensor 1) circuit 2. Air fuel ratio sensor (sensor 1) 3. ECM	Comes on	DTC stored	Applies	INFO
P2239	Oxygen (A/F) Sensor Pumping Current Circuit High (Bank 1 Sensor 1)	1. Open or short in air fuel ratio sensor (sensor 1) circuit 2. Air fuel ratio sensor (sensor 1) 3. ECM	Comes on	DTC stored	Applies	INFO
P2252	Oxygen (A/F) Sensor Reference Ground Circuit Low (Bank 1 Sensor 1)	1. Open or short in air fuel ratio sensor (sensor 1) circuit 2. Air fuel ratio sensor (sensor 1) 3. ECM	Comes on	DTC stored	Applies	INFO
P2253	Oxygen (A/F) Sensor Reference Ground Circuit High (Bank 1 Sensor 1)	1. Open or short in air fuel ratio sensor (sensor 1) circuit 2. Air fuel ratio sensor (sensor 1) 3. ECM	Comes on	DTC stored	Applies	INFO

DTC CODE	DETECTION ITEM	TROUBLE AREA	MIL	MEMORY	DTC FOR MEXICO MODELS	SEE PAGE
P2401	Evaporative Emission Leak Detection Pump Stuck OFF	1. Canister pump module (Reference orifice, leak detection pump, vent valve) 2. Connector/wire harness (Canister pump module - ECM) 3. EVAP system hose (pipe from air inlet port to canister pump module, canister filter, fuel tank vent hose) 4. ECM	Comes on	DTC stored	-	INFO
P2402	Evaporative Emission Leak Detection Pump Stuck ON	1. Canister pump module (Reference orifice, leak detection pump, vent valve) 2. Connector/wire harness (Canister pump module - ECM) 3. EVAP system hose (pipe from air inlet port to canister pump module, canister filter, fuel tank vent hose) 4. ECM	Comes on	DTC stored	-	INFO
P2419	Evaporative Emission System Switching Valve Control Circuit Low	1. Canister pump module (Reference orifice, leak detection pump, vent valve) 2. Connector/wire harness (Canister pump module - ECM) 3. EVAP system hose (pipe from air inlet port to canister pump module, canister filter, fuel tank vent hose) 4. ECM	Comes on	DTC stored	-	INFO
P2420	Evaporative Emission System Switching Valve Control Circuit High	1. Canister pump module (Reference orifice, leak detection pump, vent valve) 2. Connector/wire harness (Canister pump	Comes on	DTC stored	-	INFO

DTC CODE	DETECTION ITEM	TROUBLE AREA	MIL	MEMORY	DTC FOR MEXICO MODELS	SEE PAGE
		module - ECM) 3. ECM				
P2610	ECM / PCM Internal Engine Off Timer Performance	ECM	Comes on	DTC stored	-	INFO
P2A00	A/F Sensor Circuit Slow Response (Bank 1 Sensor 1)	1. Air fuel ratio sensor 2. Air fuel ratio sensor heater 3. ECM	Comes on	DTC stored	-	INFO

Last Modified: 3-10-2010	6.4 D	**From:** 200901
Model Year: 2010	**Model:** Corolla	**Doc ID:** RM000000PDS0AZX
Title: 2ZR-FE ENGINE CONTROL: SFI SYSTEM: FREEZE FRAME DATA (2010 Corolla)		

FREEZE FRAME DATA

1. DESCRIPTION

The ECM records vehicle and driving condition information as freeze frame data the moment a DTC is stored. When troubleshooting, freeze frame data can be helpful in determining whether the vehicle was moving or stationary, whether the engine was warmed up or not, whether the air fuel ratio was lean or rich, as well as other data recorded at the time of a malfunction.

HINT:

If it is impossible to replicate the problem even though a DTC is detected, confirm the freeze frame data.

The ECM records engine conditions in the form of freeze frame data every 0.5 seconds. Using the Techstream, five separate sets of freeze frame data, including the data values at the time when the DTC was set, can be checked.

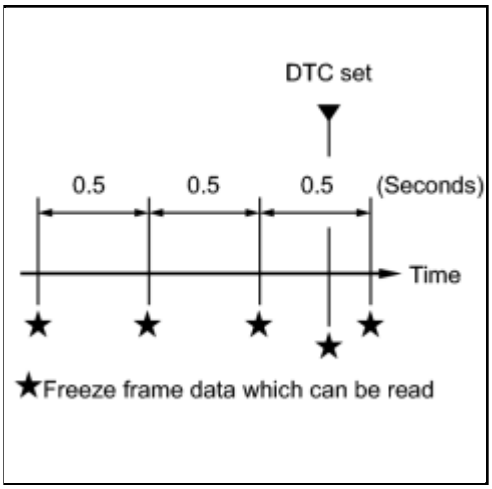

- 3 data sets before the DTC was set.
- 1 data set when the DTC was set.
- 1 data set after the DTC was set.

2. LIST OF FREEZE FRAME DATA

TESTER DISPLAY	MEASUREMENT ITEM	DIAGNOSTIC NOTE
Vehicle Speed	Vehicle speed	Speed indicated on speedometer
Engine Speed	Engine speed	-
Calculate Load	Calculated load by ECM	-
Vehicle Load	Vehicle load	Load percentage in terms of maximum intake air flow amount

TESTER DISPLAY	MEASUREMENT ITEM	DIAGNOSTIC NOTE
MAF	Air flow rate from mass air flow meter	If value approximately 0.0 gm/sec: • Mass air flow meter power source circuit open • VG circuit open or short If value 271.0 gm/sec or more: • E2G circuit open
Atmosphere Pressure	Atmosphere pressure	-
Coolant Temp	Engine coolant temperature	• If value -40°C (-40°F): sensor circuit open • If value 140°C (284°F): sensor circuit shorted
Intake Air	Intake air temperature	• If value -40°C (-40°F): sensor circuit open • If value 140°C (284°F): sensor circuit shorted
Engine Run Time	Engine run time	-
Initial Engine Coolant Temp	Initial engine coolant temperature	Service data
Initial Intake Air Temp	Initial intake air temperature	Service data
Battery Voltage	Battery voltage	-
Accel Sens. No. 1 Volt %	Accelerator pedal position No. 1	-
Accel Sens. No. 2 Volt %	Accelerator pedal position No. 2	-
Throttle Sensor Volt %	Throttle sensor positioning	Recognition value for throttle opening angle on ECM Read value with ignition switch ON
Throttl Sensor #2 Volt %	Absolute throttle sensor positioning #2	Recognition value for throttle opening angle on ECM Read value with ignition switch ON
Throttle Sensor Position	Throttle sensor positioning	Recognition value for throttle opening angle on ECM Read value with ignition switch ON
Throttle Motor DUTY	Throttle actuator	-
Injector (Port)	Injection direction for cylinder 1	-

TESTER DISPLAY	MEASUREMENT ITEM	DIAGNOSTIC NOTE
Injection Volum (Cylinder1)	Injection volume (Cylinder 1)	Quantity of fuel injection volume for 10 times
Fuel Pump/Speed Status	Fuel pump/status	Active Test support data
Vacuum Pump	Key-off EVAP system leak detection pump status	Active Test support data
EVAP (Purge) VSV	EVAP (Purge) VSV control duty	Order signal from ECM
Evap Purge Flow	Ratio of evaporative purge flow to intake air volume	Service data
Purge Density Learn Value	Learning value of purge density	Service data
EVAP System Vent Valve	key-off EVAP system vent valve status	Active Test support data
EVAP Purge VSV	VSV status for EVAP control	Active Test support data
Target Air-Fuel Ratio	Ratio compared to stoichiometric level	-
AF Lambda B1 S1	Short-term fuel trim associated with bank 1 sensor 1	-
AFS Voltage B1 S1	Air fuel ratio sensor output voltage for bank 1 sensor 1	Performing Control the Injection Volume or Control the Injection Volume for A/F Sensor function of Active Test enables technician to check output voltage of sensors
AFS Current B1 S1	Air fuel ratio sensor output current for bank 1 sensor 1	Value becomes higher when fuel-cut executed under high engine speed
O2S B1 S2	Heated oxygen sensor output voltage for bank 1 sensor 2	Performing Control the Injection Volume or Control the Injection Volume for A/F Sensor function of Active Test enables technician to check output voltage of sensors
O2S Impedance B1S2	Sub heated oxygen sensor impedance (bank 1 sensor 2)	-
Short FT #1	Short-term fuel trim of bank 1	Short-term fuel compensation used to maintain air fuel ratio at stoichiometric air fuel ratio
Long FT #1	Long-term fuel trim of bank 1	Overall fuel compensation carried out in long-term to compensate continual deviation of short-term fuel trim from central value

TESTER DISPLAY	MEASUREMENT ITEM	DIAGNOSTIC NOTE
Total FT #1	Total fuel trim	-
Fuel System Status #1	Fuel system status (bank 1)	• OL (Open Loop): Has not yet satisfied conditions to go closed loop • CL (Closed Loop): Using heated oxygen sensor as feedback for fuel control • OLDrive: Open loop due to driving conditions (fuel enrichment) • OLFault: Open loop due to detected system fault • CLFault: Closed loop but heated oxygen sensor, which is used for fuel control, malfunctioning
Fuel System Status #2	Fuel system status (bank 2)	• OL (Open Loop): Has not yet satisfied conditions to go closed loop • CL (Closed Loop): Using air fuel ratio sensor as feedback for fuel control • OLDrive: Open loop due to driving conditions (fuel enrichment) • OLFault: Open loop due to detected system fault • CLFault: Closed loop but air fuel ratio sensor, witch is used for fuel control, malfunctioning
IGN Advance	Ignition timing advance for cylinder 1	-
Knock Feedback Value	Feedback value of knocking	Service data
Knock Correct Learn Value	Correction learning value of knocking	Service data
VVT Control Status #1	VVT control (bank 1) status	Active Test support data
Catalyst Temp B1 S1	Catalyst temperature (associated sensor 1)	-
Catalyst Temp B1 S2	Catalyst temperature (associated sensor 2)	-
Starter Signal	Starter signal	-
Starter Control	Starter control	-

TESTER DISPLAY	MEASUREMENT ITEM	DIAGNOSTIC NOTE
Starter Relay	Starter relay	-
ACC Relay	ACC relay	-
Neutral Position SW Signal*	Neutral position switch signal	-
Stop Light Switch	Stop light switch status	-
A/C Signal	A/C signal	-
Closed Throttle Position SW	Closed throttle position switch	-
Fuel Cut Condition	Fuel cut condition ON or OFF	-
Electrical Load Signal	Electrical load signal	-
Time after DTC Cleared	Time since DTCs cleared	-
Distance from DTC Cleared	Distance traveled since DTCs cleared	-
Warmup Cycle Cleard DTC	Warm-up cycles since DTCs cleared	Number of warm-up cycles since DTCs cleared
TC and TE1	TC and CG (TE1) terminals of DLC3	Active Test support data
Ignition Trig. Count	Ignition counter to calculated misfire count	-
Cylinder #1 Misfire Count	Misfire count for cylinder 1	-
Cylinder #2 Misfire Count	Misfire count for cylinder 2	-
Cylinder #3 Misfire Count	Misfire count for cylinder 3	-
Cylinder #4 Misfire Count	Misfire count for cylinder 4	-
All Cylinders Misfire Count	All cylinders misfire count	-
Misfire RPM	Average engine speed when misfire occurs	-
Misfire Load	Average engine load when misfire occurred	-

TESTER DISPLAY	MEASUREMENT ITEM	DIAGNOSTIC NOTE
Misfire Margin	Margin to detect engine misfire	Misfire detection margin
Catalyst OT MF F/C	Catalyst over temperature misfire prevention F/C not available	-
Cat OT MF F/C History	Catalyst over temperature misfire prevention F/C history OFF	-
Cat OT MF F/C Cylinder#1	Catalyst over temperature misfire prevention F/C history OFF	-
Cat OT MF F/C Cylinder#2	Catalyst over temperature misfire prevention F/C history OFF	-
Cat OT MF F/C Cylinder#3	Catalyst over temperature misfire prevention F/C history OFF	-
Cat OT MF F/C Cylinder#4	Catalyst over temperature misfire prevention F/C history OFF	-
Electric Fan Motor	Electric cooling fan motor	Active Test support data
Idle Fuel Cut	Fuel cut idle	Idle Fuel Cut = "ON" when throttle valve fully closed and engine speed over 2800 rpm
FC TAU	FC TAU	Fuel cut being performed under very light load to prevent engine combustion from becoming incomplete

*: Automatic transaxle models only

Last Modified: 3-10-2010	6.4 D	**From:** 200901
Model Year: 2010	**Model:** Corolla	**Doc ID:** RM000000PDK0BYX
Title: 2ZR-FE ENGINE CONTROL: SFI SYSTEM: DTC CHECK / CLEAR (2010 Corolla)		

DTC CHECK / CLEAR

NOTICE:

When the diagnosis system is changed from normal mode to check mode or vice versa, all DTCs and freeze frame data recorded in normal mode are cleared. Before changing modes, always check and record DTCs and freeze frame data.

HINT:

- DTCs which are stored in the ECM can be displayed on the Techstream. The Techstream can display the current and pending DTCs.
- Some DTCs are only set if the ECM detects the same malfunction again during a second consecutive driving cycle. However, such malfunctions, detected on only one occasion, are stored as pending DTCs.

1. CHECK DTC

(a) Connect the Techstream to the DLC3.

(b) Turn the ignition switch to ON.

(c) Turn the Techstream on.

(d) Enter the following menus: Powertrain / Engine and ECT / Trouble Codes.

(e) Check the DTC(s) and freeze frame data, and then save or write them down.

(f) Check the details of the DTC(s) INFO .

2. CLEAR DTC

(a) Connect the Techstream to the DLC3.

(b) Turn the ignition switch to ON.

(c) Turn the Techstream on.

(d) Enter the following menus: Powertrain / Engine and ECT / Trouble Codes.

(e) Clear DTCs.

3. CLEAR DTC (Without using Techstream)

(a) Perform either of the following operations:

(1) Disconnect the cable from the negative (-) battery terminal for more than 1 minute.

(2) Remove the EFI MAIN and ETCS fuses from the engine room relay block located inside the engine compartment for more than 1 minute.

Last Modified: 3-10-2010	6.4 D	**From:** 200901
Model Year: 2010	**Model:** Corolla	**Doc ID:** RM000000PDL0ACX
Title: 2ZR-FE ENGINE CONTROL: SFI SYSTEM: CHECK MODE PROCEDURE (2010 Corolla)		

CHECK MODE PROCEDURE

Compared to normal mode, check mode is more sensitive to malfunctions. Therefore, check mode can detect malfunctions that cannot be detected in normal mode.

NOTICE:

All the stored DTCs and freeze frame data are cleared if: 1) the ECM is changed from normal mode to check mode or vice versa; or 2) the ignition switch is turned from ON to ACC or OFF while in check mode. Before changing modes, always check and note any DTCs and freeze frame data.

1. CHECK MODE PROCEDURE

(a) Check and ensure the following conditions:

(1) Battery voltage 11 V or more.

(2) Throttle valve fully closed.

(3) Transmission in P or N.

(4) A/C switch OFF.

(b) Turn the ignition switch off.

(c) Connect the Techstream to the DLC3.

(d) Turn the ignition switch to ON.

(e) Turn the Techstream on.

(f) Enter the following menus: Powertrain / Engine and ECT / Utility / Check Mode.

(g) Switch the ECM from normal mode to check mode.

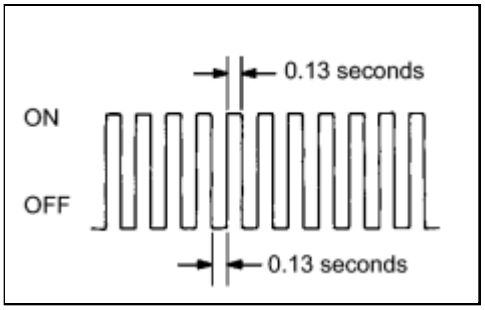

(h) Make sure that the MIL flashes as shown in the illustration.

(i) Start the engine.

(j) Make sure that the MIL turns off.

(k) Simulate that the conditions of the malfunction described by the customer.

(l) Check DTCs and freeze frame data using the Techstream.

Last Modified: 3-10-2010	6.4 U	**From:** 200901
Model Year: 2010	**Model:** Corolla	**Doc ID:** RM000000PDO08DX
Title: 2ZR-FE ENGINE CONTROL: SFI SYSTEM: FAIL-SAFE CHART (2010 Corolla)		

FAIL-SAFE CHART

If any of the following DTCs are set, the ECM enters fail-safe mode to allow the vehicle to be driven temporarily or stops fuel injection.

DTC	COMPONENT	FAIL-SAFE OPERATION	FAIL-SAFE DEACTIVATION CONDITION
P0031 P0032	Air fuel ratio sensor heater	ECM turns off air fuel ratio sensor heater	Ignition switch off
P0037 P0038	Heated oxygen sensor heater	ECM turns off heated oxygen sensor heater	Ignition switch off
P0102 P0103	Mass air flow meter	ECM calculates ignition timing according to engine speed and throttle valve position	Pass condition detected
P0112 P0113	Intake air temperature sensor	ECM estimates intake air temperature to be 20°C (68°F)	Pass condition detected
P0115 P0117 P0118	Engine coolant temperature sensor	ECM estimates engine coolant temperature to be 80°C (176°F)	Pass condition detected
P0120 P0121 P0122 P0123 P0220 P0222 P0223 P0601 P0604 P0606 P0607 P060A P060D P060E P0657 P1607 P2102 P2103 P2111 P2112 P2118	Electronic throttle control system	ECM cuts off throttle actuator current and throttle valve returns to the 6° throttle position by return spring ECM then adjusts engine output by controlling fuel injection (intermittent fuel-cut) and ignition timing in accordance with accelerator pedal opening angle, to allow vehicle to continue at minimal speed *1	Pass condition detected and then ignition switch turned off

DTC	COMPONENT	FAIL-SAFE OPERATION	FAIL-SAFE DEACTIVATION CONDITION
P2119 P2135			
P0300 P0301 P0302 P0303 P0304 *2	• Fuel injector • Electronic throttle control system	When a catalyst damaging misfire occurs (MIL blinking), following fail-safe operation performed for catalyst overheat malfunction prevention 1. Under low load and low engine speed ○ Fuel cut performed on malfunctioning cylinder 2. Under high load and high engine speed ○ Throttle valve opening angle control is performed ○ All cylinder fuel cut or malfunctioning cylinder fuel cut performed	Pass condition detected and then ignition switch turned off
P0325 P0327 P0328	Knock Sensor	ECM sets ignition timing to maximum retard	Ignition switch off
P0351 to P0354	Igniter	ECM cuts fuel	Pass condition detected
P2120 P2121 P2122 P2123 P2125 P2127 P2128 P2138	Accelerator pedal position sensor	Accelerator pedal position sensor has 2 sensor circuits: Main and Sub. If either circuit malfunctions, ECM controls engine using the other circuit. If both circuits malfunction, the ECM regards the accelerator pedal as being released. As a result, the throttle valve is closed and the engine idles.	Pass condition detected and then ignition switch turned off

HINT:

- *1: The vehicle can be driven slowly when the accelerator pedal is depressed firmly and slowly. If the accelerator pedal is depressed quickly, the vehicle may speed up and slow down erratically.
- *2: Misfire related fail-safe operations occur when catalyst overheat malfunctions occur.

Last Modified: 3-10-2010	6.4 C	**From:** 200901
Model Year: 2010	**Model:** Corolla	**Doc ID:** RM000000PDW08UX
Title: 2ZR-FE ENGINE CONTROL: SFI SYSTEM: P0010: Camshaft Position "A" Actuator Circuit (Bank 1) (2010 Corolla)		

DTC	**P0010**	**Camshaft Position "A" Actuator Circuit (Bank 1)**

DESCRIPTION

The VVT (variable valve timing) system adjusts the intake valve timing to improve driveability. The engine oil pressure turns the VVT controller to adjust the valve timing.

The camshaft timing oil control valve is a solenoid valve and switches the engine oil line. The valve moves when the ECM applies the 12 V to the solenoid. The ECM changes the energizing time to the solenoid (duty-cycle) in accordance with the camshaft position, crankshaft position, throttle position, etc.

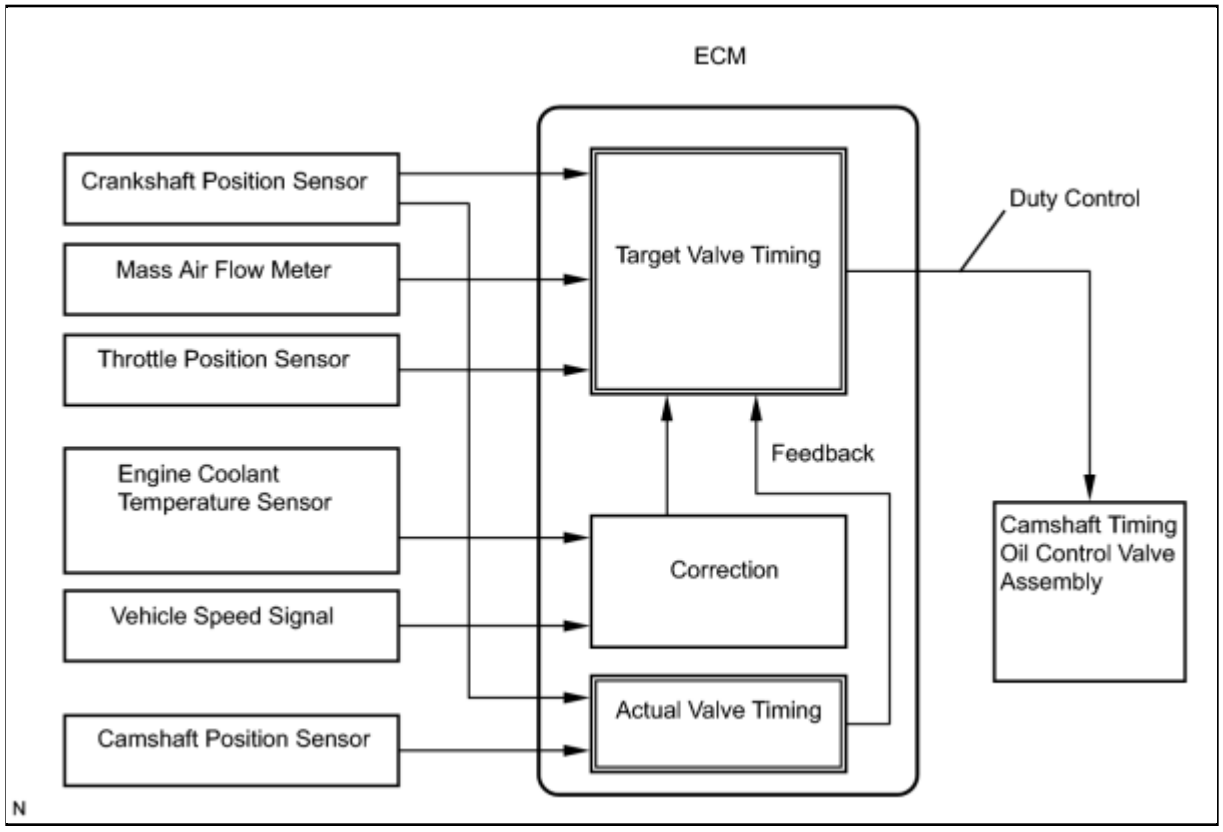

DTC NO.	DTC DETECTION CONDITION	TROUBLE AREA
P0010	Open or short in camshaft timing oil control valve (for intake camshaft) circuit	• Open or short in camshaft timing oil control valve assembly (for intake camshaft) circuit

DTC NO.	DTC DETECTION CONDITION	TROUBLE AREA
	(1 trip detection logic)	• Camshaft timing oil control valve assembly (for intake camshaft) • ECM

MONITOR DESCRIPTION

This DTC is designed to detect open or short circuits in the camshaft timing oil control valve (for intake camshaft) circuit. If the camshaft timing oil control valve's duty-cycle is excessively high or low while the engine is running, the ECM will illuminate the MIL and set the DTC.

MONITOR STRATEGY

Related DTCs	P0010 Camshaft timing oil control valve range check (bank 1)
Required Sensors/Components (Main)	Camshaft timing oil control valve
Required Sensors/Components (Related)	-
Frequency of Operation	Continuous
Duration	1 second
MIL Operation	Immediate
Sequence of Operation	None

TYPICAL ENABLING CONDITIONS

Monitor runs whenever following DTCs not present	None
All of following conditions met	-
Starter	OFF
Ignition switch	ON
Time after ignition switch off to ON	0.5 seconds or more

TYPICAL MALFUNCTION THRESHOLDS

One of following conditions met	-
A. All of following conditions met	-
Battery voltage	11 to 13 V

Target duty ratio	Less than 70 %
Output signal duty ratio	100 %
B. All of following conditions met	-
Battery voltage	13 V or more
Target duty ratio	Less than 80 %
Current cut status	Not cut
Output signal duty	3 % or less

COMPONENT OPERATING RANGE

Camshaft timing oil control valve duty ratio	3 to 100 %

WIRING DIAGRAM

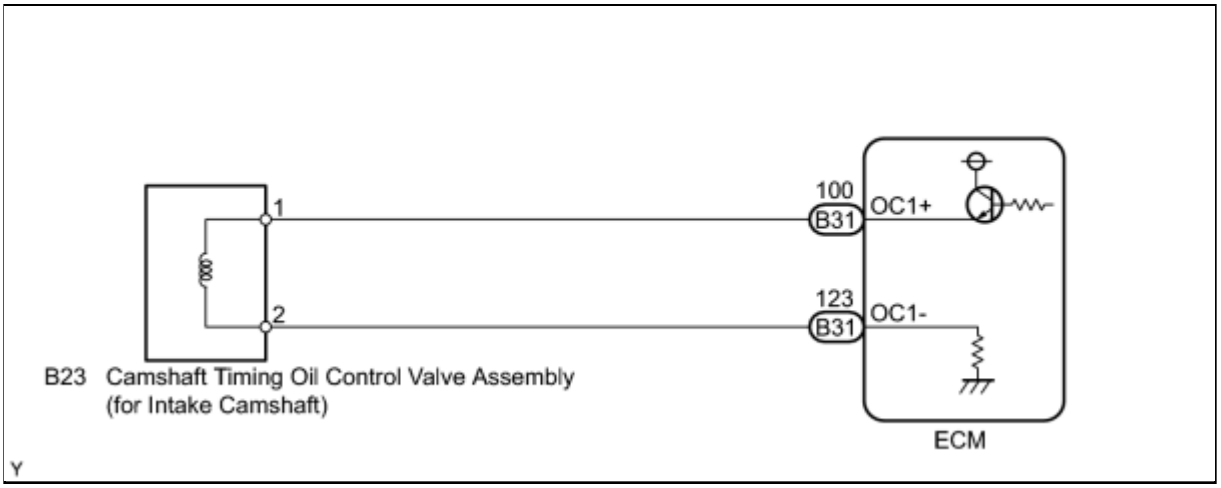

INSPECTION PROCEDURE

HINT:

Read freeze frame data using the Techstream. The ECM records vehicle and driving condition information as freeze frame data the moment a DTC is stored. When troubleshooting, freeze frame data can help determine if the vehicle was moving or stationary, if the engine was warmed up or not, if the air fuel ratio was lean or rich, and other data from the time the malfunction occurred.

PROCEDURE

1.	**PERFORM ACTIVE TEST USING TECHSTREAM (OPERATE CAMSHAFT TIMING OIL CONTROL VALVE ASSEMBLY)**

(a) Connect the Techstream to the DLC3.

(b) Start the engine.

(c) Turn the Techstream on.

(d) Turn the A/C switch to ON.

(e) Enter the following menus: Powertrain / Engine and ECT / Active Test / Control the VVT System (Bank 1).

(f) Check the engine speed while operating the camshaft timing oil control valve assembly (for intake camshaft) using the Techstream.

Result:

TECHSTREAM OPERATION	SPECIFIED CONDITION
Camshaft timing oil control valve assembly OFF	Normal engine speed
Camshaft timing oil control valve assembly ON	Engine idles roughly or stalls (soon after camshaft timing oil control valve assembly switched from OFF to ON)

HINT:

If the result is not acceptable, cool the engine and perform the Active Test again.

(g) Start the engine when the engine coolant temperature is 30°C (86°F) or less.

(h) Turn the Techstream on.

(i) Turn the A/C switch to ON.

(j) Enter the following menus: Powertrain / Engine and ECT / Active Test / Control the VVT System (Bank 1).

(k) Check the engine speed while operating the camshaft timing oil control valve assembly (for intake camshaft) using the Techstream with the engine coolant temperature is 50°C (122°F) or less.

Result:

TECHSTREAM OPERATION	SPECIFIED CONDITION
Camshaft timing oil control valve assembly OFF	Normal engine speed
Camshaft timing oil control valve assembly ON	Engine idles roughly or stalls (soon after camshaft timing oil control valve assembly switched from OFF to ON)

NG ▶ **INSPECT CAMSHAFT TIMING OIL CONTROL VALVE ASSEMBLY (FOR INTAKE CAMSHAFT)**

OK ▶ **CHECK FOR INTERMITTENT PROBLEMS**

2.	**INSPECT CAMSHAFT TIMING OIL CONTROL VALVE ASSEMBLY (FOR INTAKE CAMSHAFT)**

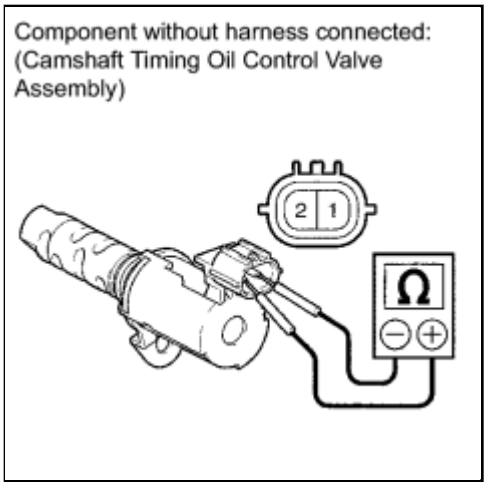

(a) Remove the camshaft timing oil control valve assembly (for intake camshaft).

(b) Measure the resistance according to the value(s) in the table below.

Standard Resistance:

TESTER CONNECTION	CONDITION	SPECIFIED CONDITION
1 - 2	20°C (68°F)	6.9 to 7.9 Ω

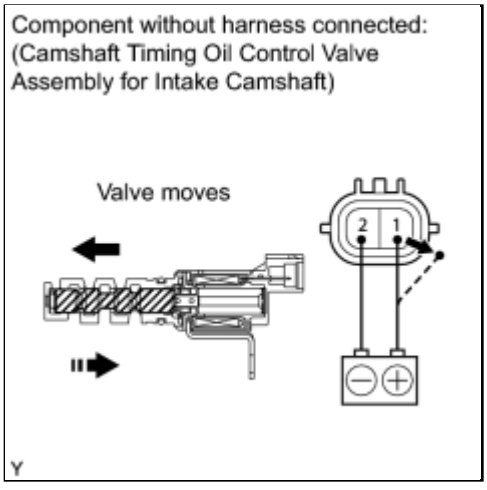

(c) Apply battery voltage to terminals of the camshaft timing oil control valve assembly (for intake camshaft). Check the valve operation.

OK:

Valve moves quickly.

(d) Reinstall the camshaft timing oil control valve assembly (for intake camshaft).

NG ▶ **REPLACE CAMSHAFT TIMING OIL CONTROL VALVE ASSEMBLY (FOR INTAKE CAMSHAFT)**

OK

3.	**CHECK HARNESS AND CONNECTOR (CAMSHAFT TIMING OIL CONTROL VALVE ASSEMBLY - ECM)**

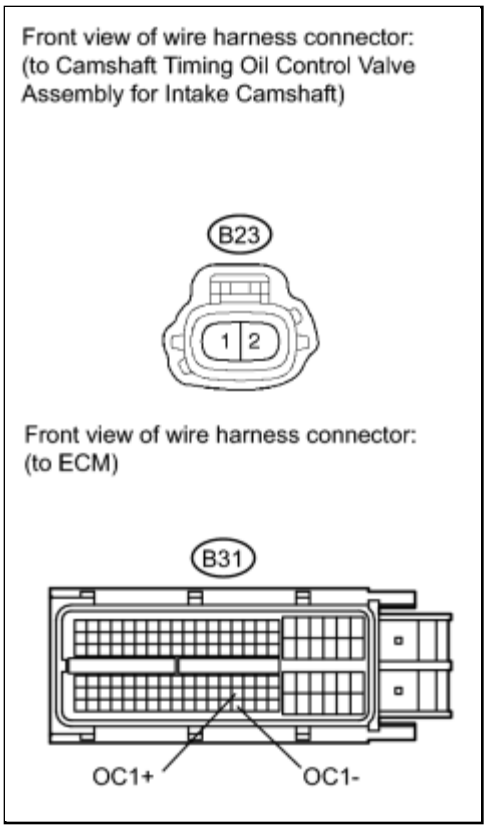

(a) Disconnect the camshaft timing oil control valve assembly (for intake camshaft) connector.

(b) Disconnect the ECM connector.

(c) Measure the resistance according to the value(s) in the table below.

Standard Resistance (Check for Open):

TESTER CONNECTION	CONDITION	SPECIFIED CONDITION
B23-1 - B31-100 (OC1+)	Always	Below 1 Ω
B23-2 - B31-123 (OC1-)	Always	Below 1 Ω

Standard Resistance (Check for Short):

TESTER CONNECTION	CONDITION	SPECIFIED CONDITION

TESTER CONNECTION	CONDITION	SPECIFIED CONDITION
B23-1 or B31-100 (OC1+) - Body ground	Always	10 kΩ or higher
B23-2 or B31-123 (OC1-) - Body ground	Always	10 kΩ or higher

(d) Reconnect the camshaft timing oil control valve assembly (for intake camshaft) connector.

(e) Reconnect the ECM connector.

NG ▶ **REPAIR OR REPLACE HARNESS OR CONNECTOR (CAMSHAFT TIMING OIL CONTROL VALVE ASSEMBLY - ECM)**

OK ▶ **REPLACE ECM**

Last Modified: 3-10-2010	6.4 C	**From:** 200901
Model Year: 2010	**Model:** Corolla	**Doc ID:** RM000000PDU09GX
Title: 2ZR-FE ENGINE CONTROL: SFI SYSTEM: P0011,P0012: Camshaft Position "A" - Timing Over-Advanced or System Performance (Bank 1) (2010 Corolla)		

DTC	**P0011**	**Camshaft Position "A" - Timing Over-Advanced or System Performance (Bank 1)**

DTC	**P0012**	**Camshaft Position "A" - Timing Over-Retarded (Bank 1)**

DESCRIPTION

Refer to DTC P0010 INFO .

DTC NO.	DTC DETECTION CONDITION	TROUBLE AREA
P0011	Valve timing is not adjusted in valve timing advance range (1 trip detection logic)	• Valve timing • Camshaft timing oil control valve assembly (for intake camshaft) • Oil control valve filter • Camshaft timing gear assembly (for intake camshaft) • ECM
P0012	Valve timing is not adjusted in valve timing retard range (2 trip detection logic)	

MONITOR DESCRIPTION

The ECM optimizes the intake valve timing using the VVT (Variable Valve Timing) system to control the intake camshaft. The VVT system includes the ECM, the camshaft timing oil control valve and the VVT controller (camshaft timing gear assembly). The ECM sends a target duty-cycle control signal to the camshaft timing oil control valve assembly. This control signal regulates the oil pressure supplied to the VVT controller. The VVT controller can advance or retard the intake camshaft.

If the difference between the target and actual intake valve timing is large, and changes in the actual intake valve timing are small, the ECM interprets this as a VVT controller stuck malfunction and sets a DTC.

Example:
A DTC is set when the following conditions "A" and "B" are met:

a. It takes 5 seconds or more to change the valve timing by 5°CA (Condition "A").
b. After the above condition is met, the camshaft timing oil control valve is forcibly activated 10 seconds (Condition "B").

The monitor will run if all of the following conditions are met:
DTC P0011 (Advanced Cam Timing) is subject to 1 trip detection logic.

DTC P0012 (Retarded Cam Timing) is subject to 2 trip detection logic.
These DTCs indicate that the VVT controller cannot operate properly due to camshaft timing oil control valve assembly malfunctions or the presence of foreign objects in the camshaft timing oil control valve assembly.

- The engine is warm (the engine coolant temperature is 75°C [167°F] or more).
- The vehicle has been driven at more than 40 mph (64 km/h) for 3 minutes.
- The engine has idled for 3 minutes.

MONITOR STRATEGY

Related DTCs	P0011: Advanced camshaft timing P0012: Retarded camshaft timing
Required Sensors/Components (Main)	Camshaft timing oil control valve and VVT controller
Required Sensors/Components (Related)	Crankshaft position sensor Camshaft position sensor Engine coolant temperature sensor
Frequency of Operation	Once per driving cycle
Duration	Within 10 seconds
MIL Operation	Advanced camshaft timing: Immediate Retarded camshaft timing: 2 driving cycles
Sequence of Operation	None

TYPICAL ENABLING CONDITIONS

Monitor runs whenever following DTCs not present	P0010 (VVT Oil Control Valve Bank 1) P0016 (VVT System Bank 1 - Misalignment) P0102, P0103 (Mass Air Flow Meter) P0115, P0117, P0118 (Engine Coolant Temperature Sensor) P0125 (Insufficient Engine Coolant Temperature for Closed Loop Fuel Control) P0335 (Crankshaft Position Sensor) P0340 (Camshaft Position Sensor)
Battery voltage	11 V or more
Engine RPM	500 to 4000 rpm
Engine coolant temperature	75 to 100°C (167 to 212°F)

TYPICAL MALFUNCTION THRESHOLDS

Advanced Camshaft Timing

All of following conditions are met	-
Deviation of actual valve timing and target valve timing	More than 5°CA (crankshaft angle)
Valve timing	No change at advanced (retarded) valve timing

Retarded Camshaft Timing

All of following conditions are met	-
Deviation of actual valve timing and target valve timing	More than 5°CA (crankshaft angle)
Valve timing	No change at retarded valve timing

If the difference between the target and actual camshaft timing is greater than the specified value, the ECM operates the VVT actuator (camshaft timing oil control valve assembly).

Then, the ECM monitors the camshaft timing change for 10 seconds.

WIRING DIAGRAM

Refer to DTC P0010 INFO .

INSPECTION PROCEDURE

NOTICE:

DTC P0011 or P0012 may be set when foreign objects in the engine oil are caught in some parts of the system. The DTC will remain set even if the system returns to normal after a short time. Foreign objects are filtered out by the oil filter.

HINT:

Read freeze frame data using the Techstream. The ECM records vehicle and driving condition information as freeze frame data the moment a DTC is stored. When troubleshooting, freeze frame data can help determine if the vehicle was moving or stationary, if the engine was warmed up or not, if the air fuel ratio was lean or rich, and other data from the time the malfunction occurred.

PROCEDURE

1.	**CHECK ANY OTHER DTCS OUTPUT (IN ADDITION TO DTC P0011 OR P0012)**

(a) Connect the Techstream to the DLC3.

(b) Turn the ignition switch to ON.

(c) Turn the Techstream on.

(d) Enter the following menus: Powertrain / Engine and ECT / Trouble Codes.

(e) Read the DTCs.

Result:

RESULT	PROCEED TO
DTC P0011 or P0012 is output	A
DTC P0011 or P0012 and other DTCs are output	B

HINT:

If any DTCs other than P0011 or P0012 are output, troubleshoot those DTCs first.

B ▶ **GO TO DTC CHART**

A ▼

2.	**PERFORM ACTIVE TEST USING TECHSTREAM (OPERATE CAMSHAFT TIMING OIL CONTROL VALVE)**

(a) Connect the Techstream to the DLC3.

(b) Start the engine.

(c) Turn the Techstream on.

(d) Turn the A/C switch to ON.

(e) Enter the following menus: Powertrain / Engine and ECT / Active Test / Control the VVT System (Bank 1).

(f) Check the engine speed while operating the camshaft timing oil control valve assembly (for intake camshaft) using the Techstream.

Result:

TECHSTREAM OPERATION	SPECIFIED CONDITION
Camshaft timing oil control valve assembly OFF	Normal engine speed
Camshaft timing oil control valve assembly ON	Engine idles roughly or stalls (soon after camshaft timing oil control valve assembly switched from OFF to ON)

HINT:

If the result is not acceptable, cool the engine and perform the Active Test again.

(g) Start the engine when the engine coolant temperature is 30°C (86°F) or less.

(h) Turn the Techstream on.

(i) Turn the A/C switch to ON.

(j) Enter the following menus: Powertrain / Engine and ECT / Active Test / Control the VVT System (Bank 1).

(k) Check the engine speed while operating the camshaft timing oil control valve assembly (for intake camshaft) using the Techstream with the engine coolant temperature is 50°C (122°F) or less.

Result:

TECHSTREAM OPERATION	SPECIFIED CONDITION
Camshaft timing oil control valve assembly OFF	Normal engine speed
Camshaft timing oil control valve assembly ON	Engine idles roughly or stalls (soon after camshaft timing oil control valve assembly switched from OFF to ON)

NG ▶ **INSPECT CAMSHAFT TIMING OIL CONTROL VALVE ASSEMBLY (FOR INTAKE CAMSHAFT)**

OK ▼

3.	**CHECK WHETHER DTC OUTPUT RECURS (DTC P0011 OR P0012)**

(a) Connect the Techstream to the DLC3.

(b) Turn the ignition switch to ON.

(c) Turn the Techstream on.

(d) Clear DTCs INFO .

(e) Start the engine and warm it up.

(f) Allow the engine to idle for 3 minutes or more.

(g) Drive the vehicle for more than 10 minutes.

(h) Select the following menu items: Powertrain / Engine and ECT / Trouble Codes / Pending.

(i) Read DTCs.

Result:

RESULT	PROCEED TO
DTC is not output	A
DTC P0011 or P0012 is output	B

B ▶ ADJUST VALVE TIMING

A ▶ CHECK FOR INTERMITTENT PROBLEMS

4.	**INSPECT CAMSHAFT TIMING OIL CONTROL VALVE ASSEMBLY (FOR INTAKE CAMSHAFT)**

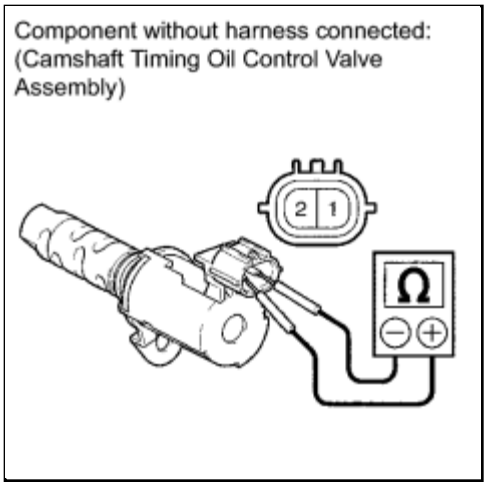

(a) Remove the camshaft timing oil control valve assembly (for intake camshaft) INFO .

(b) Measure the resistance according to the value(s) in the table below.

Standard Resistance:

TESTER CONNECTION	CONDITION	SPECIFIED CONDITION
1 - 2	20°C (68°F)	6.9 to 7.9 Ω

(c) Apply the positive battery voltage to terminal 1 and negative battery voltage to terminal 2. Check the valve operation.

OK:

Valve moves quickly.

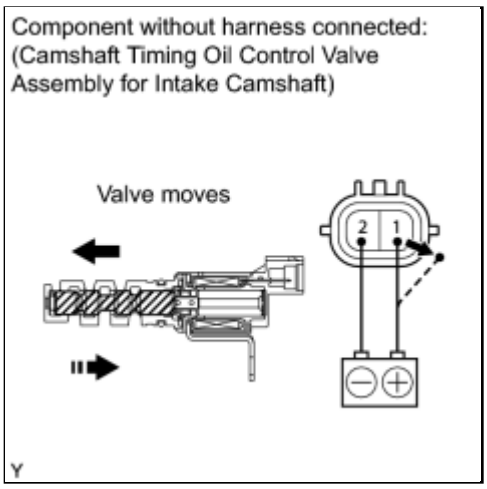

(d) Reinstall the camshaft timing oil control valve assembly (for intake camshaft) INFO .

NG ▶ **REPLACE CAMSHAFT TIMING OIL CONTROL VALVE ASSEMBLY (FOR INTAKE CAMSHAFT)**

OK ▼

5.	**INSPECT CAMSHAFT TIMING GEAR ASSEMBLY (FOR INTAKE CAMSHAFT)**

(a) Inspect the camshaft timing gear assembly (for intake camshaft) INFO .

NG ▶ **REPLACE CAMSHAFT TIMING GEAR ASSEMBLY (FOR INTAKE CAMSHAFT)**

OK ▼

6.	**INSPECT OIL CONTROL VALVE FILTER**

(a) Remove the oil control valve filter INFO .

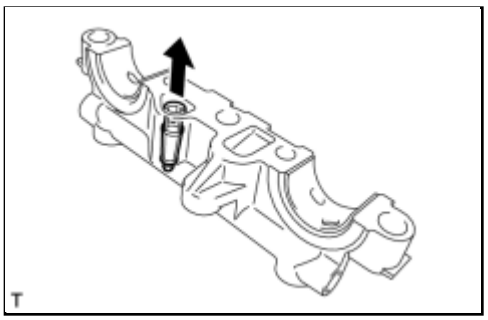

(b) Check that the filter is not clogged.

OK:
Filter is not clogged.

(c) Reinstall the oil control valve filter INFO .

NG ▶ **REPLACE OIL CONTROL VALVE FILTER**

OK ▼

7.	**ADJUST VALVE TIMING**

HINT:

There are no marks on the cylinder head to match-up for the purpose of checking valve timing. Valve timing can only be inspected by lining up the colored plates on the timing chain with the marks on the pulleys. It may be necessary to remove and reinstall the chain to match-up the alignment marks INFO .

NEXT ▼

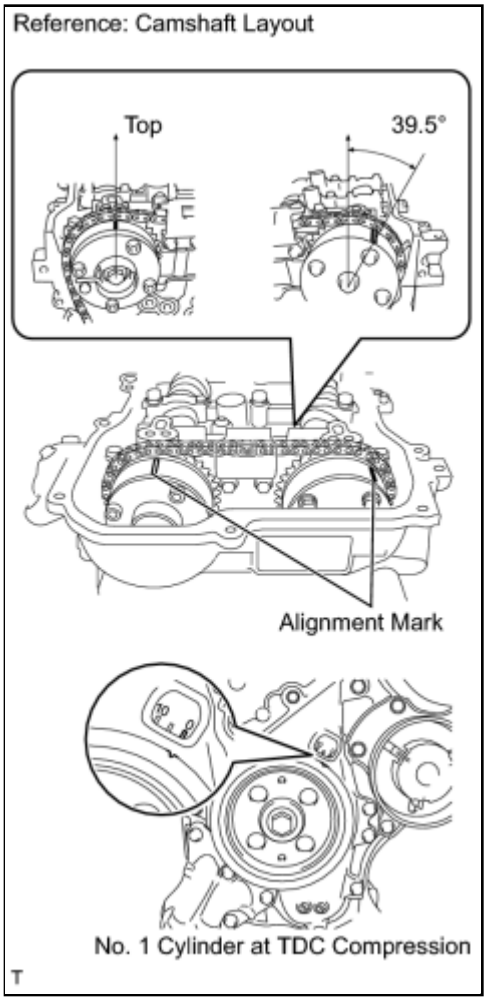

8.	CHECK WHETHER DTC OUTPUT RECURS (DTC P0011 OR P0012)

(a) Connect the Techstream to the DLC3.

(b) Turn the ignition switch to ON.

(c) Turn the Techstream on.

(d) Clear DTCs INFO .

(e) Start the engine and warm it up.

(f) Allow the engine to idle for 3 minutes or more.

(g) Drive the vehicle for more than 10 minutes.

(h) Select the following menu items: Powertrain / Engine and ECT / Trouble Codes / Pending.

(i) Read DTCs.

Result:

RESULT	PROCEED TO
DTC is not output	A
DTC P0011 or P0012 is output	B

B ▶ **REPLACE ECM**

A ▶ **END**

Last Modified: 3-10-2010	6.4 C	**From:** 200901
Model Year: 2010	**Model:** Corolla	**Doc ID:** RM000000XH705BX
Title: 2ZR-FE ENGINE CONTROL: SFI SYSTEM: P0013: Camshaft Position "B" Actuator Circuit / Open (Bank 1) (2010 Corolla)		

DTC	**P0013**	**Camshaft Position "B" Actuator Circuit / Open (Bank 1)**

DESCRIPTION

The VVT (variable valve timing) system adjusts the exhaust valve timing to improve driveability. The engine oil pressure turns the VVT controller to adjust the valve timing.

The camshaft timing oil control valve is a solenoid valve and switches the engine oil line. The valve moves when the ECM applies 12 V to the solenoid. The ECM changes the energizing time to the solenoid (duty-cycle) in accordance with the camshaft position, crankshaft position, throttle position, etc.

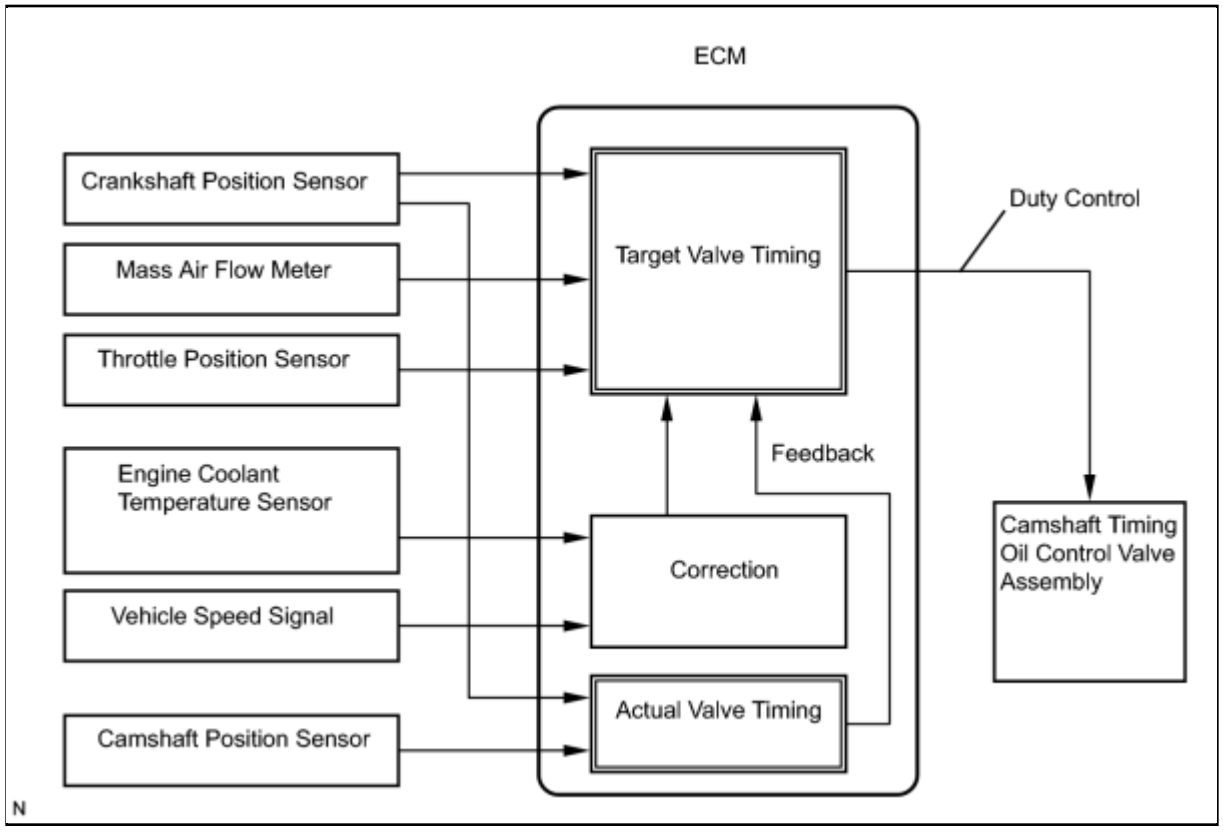

DTC NO.	DTC DETECTION CONDITION	TROUBLE AREA
P0013	Open or short in camshaft timing oil control valve (for exhaust camshaft) circuit	• Open or short in camshaft timing oil control valve assembly (for exhaust camshaft) circuit

DTC NO.	DTC DETECTION CONDITION	TROUBLE AREA
	(1 trip detection logic)	• Camshaft timing oil control valve assembly (for exhaust camshaft) • ECM

MONITOR DESCRIPTION

This DTC is designed to detect open or short circuits in the camshaft timing oil control valve (for exhaust camshaft) circuit. If the camshaft timing oil control valve assembly's duty-cycle is excessively high or low while the engine is running, the ECM will illuminate the MIL and set the DTC.

MONITOR STRATEGY

Related DTCs	P0013 Exhaust camshaft timing oil control valve range check
Required Sensors/Components (Main)	Exhaust camshaft timing oil control valve
Required Sensors/Components (Related)	-
Frequency of Operation	Continuous
Duration	1 second
MIL Operation	Immediate
Sequence of Operation	None

TYPICAL ENABLING CONDITIONS

Monitor runs whenever following DTCs not present	None
All of following conditions met	-
Starter	OFF
Ignition switch	ON
Time after ignition switch off to ON	0.5 seconds or more

TYPICAL MALFUNCTION THRESHOLDS

One of following conditions met	-
A. All of following conditions met	-
Battery voltage	11 to 13 V

Target duty ratio	Less than 70 %
Output signal duty ratio	100 %
B. All of following conditions met	-
Battery voltage	13 V or more
Target duty ratio	Less than 80 %
Current cut status	Not cut
Output signal duty	3 % or less

COMPONENT OPERATING RANGE

Camshaft timing oil control valve duty ratio	3 to 100 %

WIRING DIAGRAM

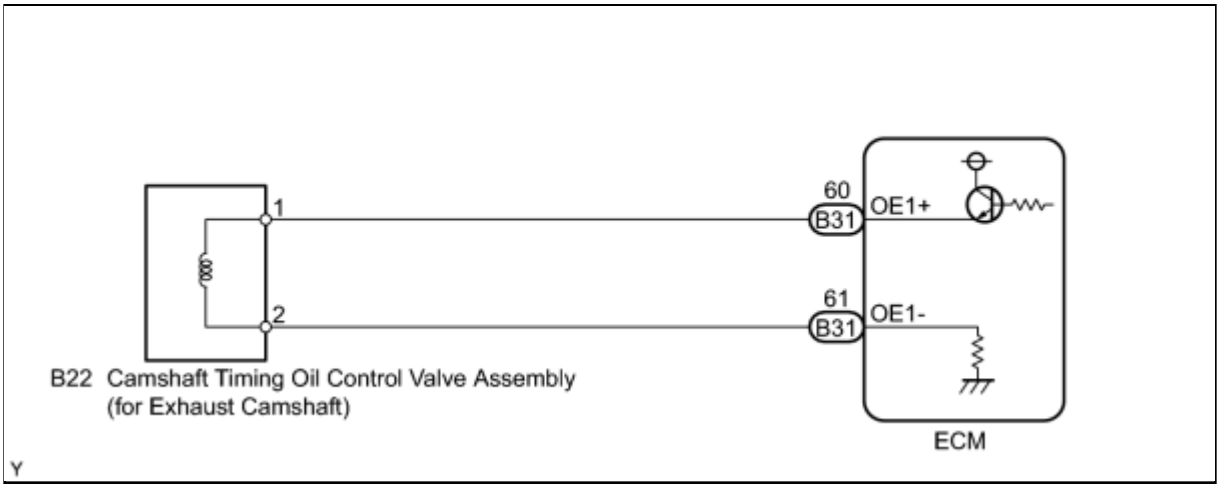

INSPECTION PROCEDURE

HINT:

- If DTC P0013 is displayed, check the VVT system (for exhaust camshaft) circuit.
- Read freeze frame data using the Techstream. The ECM records vehicle and driving condition information as freeze frame data the moment a DTC is stored. When troubleshooting, freeze frame data can be helpful in determining whether the vehicle was running or stopped, whether the engine was warmed up or not, whether the air fuel ratio was lean or rich, as well as other data recorded at the time of a malfunction.

PROCEDURE

1.	**PERFORM ACTIVE TEST USING USING TECHSTREAM (OPERATE CAMSHAFT TIMING OIL CONTROL VALVE)**

(a) Connect the Techstream to the DLC3.

(b) Start the engine.

(c) Turn the Techstream on.

(d) Turn the A/C switch to ON.

(e) Enter the following menus: Powertrain / Engine and ECT / Active Test / Control the VVT Exhaust Linear (Bank 1).

(f) Check the engine speed while operating the camshaft timing oil control valve assembly (for exhaust camshaft) using the Techstream.

Result:

TECHSTREAM OPERATION	SPECIFIED CONDITION
0% (OFF)	Normal engine speed
127% (ON)	Engine idles roughly or stalls (soon after camshaft timing oil control valve assembly switched from OFF to ON)

HINT:

If the result is not acceptable, cool the engine and perform the Active Test again.

(g) Start the engine when the engine coolant temperature is 30°C (86°F) or less.

(h) Turn the Techstream on.

(i) Turn the A/C switch to ON.

(j) Enter the following menus: Powertrain / Engine and ECT / Active Test / Control the VVT Exhaust Linear (Bank 1).

(k) Check the engine speed while operating the camshaft timing oil control valve assembly (for exhaust camshaft) using the Techstream with the engine coolant temperature is 50°C (122°F) or less.

Result:

TECHSTREAM OPERATION	SPECIFIED CONDITION
0% (OFF)	Normal engine speed

TECHSTREAM OPERATION	SPECIFIED CONDITION
127% (ON)	Engine idles roughly or stalls (soon after camshaft timing oil control valve assembly switched from OFF to ON)

NG ▶ **INSPECT CAMSHAFT TIMING OIL CONTROL VALVE ASSEMBLY (FOR EXHAUST CAMSHAFT)**

OK ▶ **CHECK FOR INTERMITTENT PROBLEMS**

2.	**INSPECT CAMSHAFT TIMING OIL CONTROL VALVE ASSEMBLY (FOR EXHAUST CAMSHAFT)**

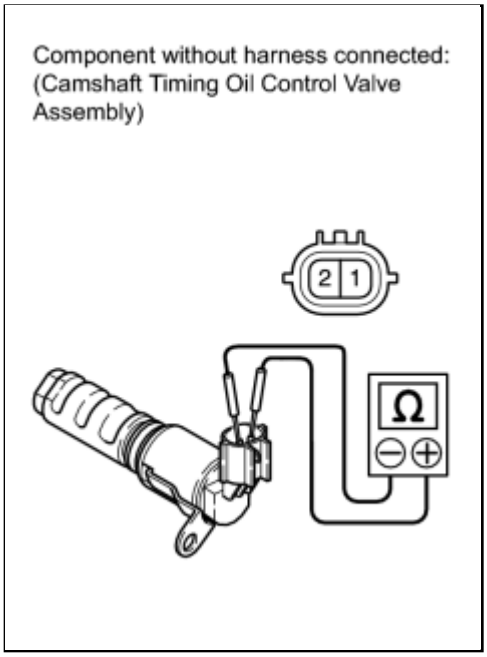

(a) Remove the camshaft timing oil control valve assembly (for exhaust camshaft).

(b) Measure the resistance according to the value(s) in the table below.

Standard Resistance:

TESTER CONNECTION	CONDITION	SPECIFIED CONDITION
1 - 2	20°C (68°F)	6.9 to 7.9 Ω

(c) Apply battery voltage to terminals of the camshaft timing oil control valve assembly (for exhaust camshaft). Check the valve operation.

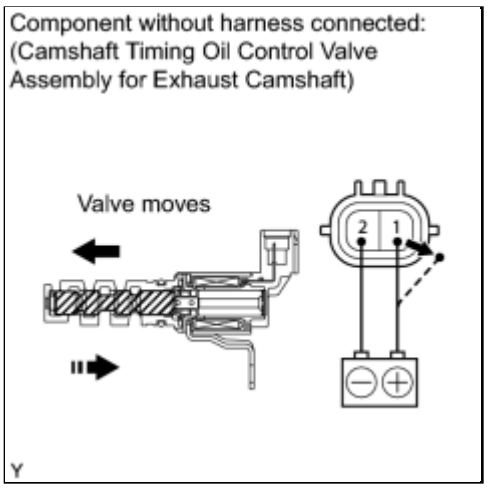

OK:
Valve moves quickly.

(d) Reinstall the camshaft timing oil control valve assembly (for exhaust camshaft).

NG ▶ **REPLACE CAMSHAFT TIMING OIL CONTROL VALVE ASSEMBLY (FOR EXHAUST CAMSHAFT)**

OK ▼

3.	**CHECK HARNESS AND CONNECTOR (CAMSHAFT TIMING OIL CONTROL VALVE ASSEMBLY - ECM)**

(a) Disconnect the camshaft timing oil control valve assembly (for exhaust camshaft) connector.

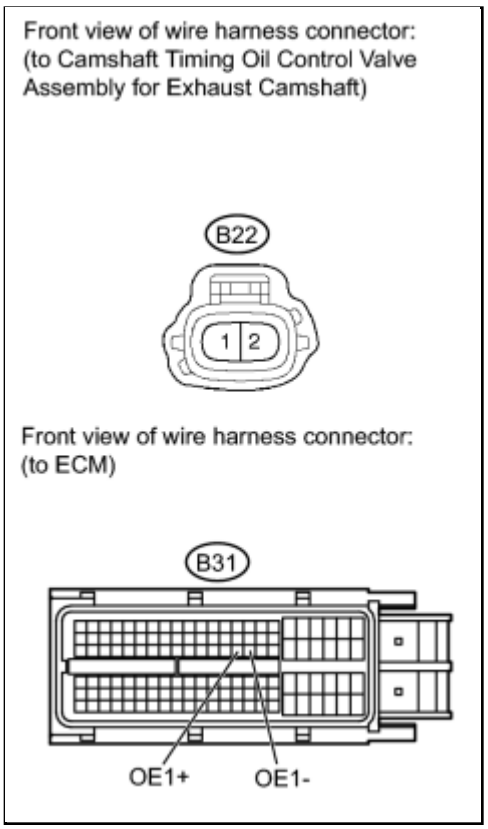

(b) Disconnect the ECM connector.

(c) Measure the resistance according to the value(s) in the table below.

Standard Resistance (Check for Open):

TESTER CONNECTION	CONDITION	SPECIFIED CONDITION
B22-1 - B31-60 (OE1+)	Always	Below 1 Ω
B22-2 - B31-61 (OE1-)	Always	Below 1 Ω

Standard Resistance (Check for Short):

TESTER CONNECTION	CONDITION	SPECIFIED CONDITION
B22-1 or B31-60 (OE1+) - Body ground	Always	10 kΩ or higher
B22-2 or B31-61 (OE1-) - Body ground	Always	10 kΩ or higher

(d) Reconnect the camshaft timing oil control valve assembly (for exhaust camshaft) connector.

(e) Reconnect the ECM connector.

NG ▶ **REPAIR OR REPLACE HARNESS OR CONNECTOR (CAMSHAFT TIMING OIL CONTROL VALVE ASSEMBLY - ECM)**

OK ▶ **REPLACE ECM**

Last Modified: 3-10-2010	6.4 C	**From:** 200901
Model Year: 2010	**Model:** Corolla	**Doc ID:** RM000000XH805EX
Title: 2ZR-FE ENGINE CONTROL: SFI SYSTEM: P0014,P0015: Camshaft Position "B" - Timing Over-Advanced or System Performance (Bank 1) (2010 Corolla)		

DTC	**P0014**	**Camshaft Position "B" - Timing Over-Advanced or System Performance (Bank 1)**

DTC	**P0015**	**Camshaft Position "B" - Timing Over-Retarded (Bank 1)**

DESCRIPTION

Refer to DTC P0013 INFO .

DTC NO.	DTC DETECTION CONDITION	TROUBLE AREA
P0014	Valve timing is not adjusted in exhaust valve timing advance range (2 trip detection logic)	• Valve timing • Camshaft timing oil control valve assembly (for exhaust camshaft) • Oil control valve filter • Camshaft timing gear assembly (for exhaust camshaft) • ECM
P0015	Valve timing is not adjusted in exhaust valve timing retard range (1 trip detection logic)	

MONITOR DESCRIPTION

The ECM optimizes the exhaust valve timing using the VVT (Variable Valve Timing) system to control the exhaust camshaft. The VVT system includes the ECM, the camshaft timing oil control valve and the VVT controller (camshaft timing gear assembly). The ECM sends a target duty-cycle control signal to the camshaft timing oil control valve assembly. This control signal regulates the oil pressure supplied to the VVT controller. The VVT controller can advance or retard the exhaust camshaft.

If the difference between the target and actual exhaust valve timing is large, and changes in the actual exhaust valve timing are small, the ECM interprets this as the VVT controller stuck malfunction and sets a DTC.

Example:
A DTC is set when the following conditions 1, 2 and 3 are met:

a. The difference between the target and actual exhaust valve timing is more than 5°CA (Crankshaft Angle) and the condition continues for more than 4.5 seconds.
b. It takes 5 seconds or more to change the valve timing by 5°CA.
c. After above conditions 1 and 2 are met, the camshaft timing oil control valve assembly is forcibly activated during 10 seconds.

DTC P0014 (Advanced Cam Timing) is subject to 2 trip detection logic.
DTC P0015 (Retarded Cam Timing) is subject to 1 trip detection logic.
These DTCs indicate that the VVT controller cannot operate properly due to camshaft timing oil control valve assembly malfunctions or the presence of foreign objects in the camshaft timing oil control valve assembly.
The monitor will run if all of the following conditions are met:

- The engine is warm (the engine coolant temperature is 75°C [167°F] or more).
- The vehicle has been driven at more than 40 mph (64 km/h) for 3 minutes.
- The engine has idled for 3 minutes.

MONITOR STRATEGY

Related DTCs	P0014: Advanced camshaft timing P0015: Retarded camshaft timing
Required Sensors/Components (Main)	Camshaft timing oil control valve and VVT controller
Required Sensors/Components (Related)	Crankshaft position sensor Camshaft position sensor Engine coolant temperature sensor
Frequency of Operation	Once per driving cycle
Duration	Within 10 seconds
MIL Operation	Advanced camshaft timing: 2 driving cycles Retarded camshaft timing: Immediate
Sequence of Operation	None

TYPICAL ENABLING CONDITIONS

Monitor runs whenever following DTCs not present	P0013 (Exhaust Oil Control Valve) P0017 (Exhaust VVT System - Misalignment) P0102, P0103 (Mass Air Flow Meter) P0115, P0117, P0118 (Engine Coolant Temperature Sensor) P0125 (Insufficient Engine Coolant Temperature for Closed Loop Fuel Control) P0335 (Crankshaft Position Sensor) P0340 (Camshaft Position Sensor)
Battery voltage	11 V or more
Engine RPM	500 to 4000 rpm
Engine coolant temperature	75 to 100°C (167 to 212°F)

TYPICAL MALFUNCTION THRESHOLDS

Advanced Camshaft Timing

All of following conditions are met	-
Valve timing	No change
Valve timing	Advance position

Retarded Camshaft Timing

All of following conditions are met	-
Valve timing	No change
Valve timing	Retarded position

WIRING DIAGRAM

Refer to DTC P0013 INFO .

INSPECTION PROCEDURE

HINT:

Read freeze frame data using the Techstream. The ECM records vehicle and driving condition information as freeze frame data the moment a DTC is stored. When troubleshooting, freeze frame data can be helpful in determining whether the vehicle was running or stopped, whether the engine was warmed up or not, whether the air fuel ratio was lean or rich, as well as other data recorded at the time of a malfunction.

PROCEDURE

1.	**CHECK ANY OTHER DTCS OUTPUT (IN ADDITION TO DTC P0014 OR P0015)**

(a) Connect the Techstream to the DLC3.

(b) Turn the ignition switch to ON.

(c) Turn the Techstream on.

(d) Enter the following menus: Powertrain / Engine and ECT / Trouble Codes.

(e) Read the DTCs.

Result:

RESULT	PROCEED TO
DTC P0014 or P0015 is output	A
DTC P0014 or P0015 and other DTCs are output	B

HINT:

If any DTCs other than P0014 or P0015 are output, troubleshoot those DTCs first.

B ▶ **GO TO DTC CHART**

A ▼

2.	**PERFORM ACTIVE TEST USING TECHSTREAM (OPERATE CAMSHAFT TIMING OIL CONTROL VALVE ASSEMBLY)**

(a) Connect the Techstream to the DLC3.

(b) Start the engine.

(c) Turn the Techstream on.

(d) Turn the A/C switch to ON.

(e) Enter the following menus: Powertrain / Engine and ECT / Active Test / Control the VVT Exhaust Linear (Bank 1).

(f) Check the engine speed while operating the camshaft timing oil control valve assembly (for exhaust camshaft) using the Techstream.

Result:

TECHSTREAM OPERATION	SPECIFIED CONDITION
0% (OFF)	Normal engine speed
127% (ON)	Engine idles roughly or stalls (soon after camshaft timing oil control valve assembly switched from OFF to ON)

HINT:

If the result is not acceptable, cool the engine and perform the Active Test again.

(g) Start the engine when the engine coolant temperature is 30°C (86°F) or less.

(h) Turn the Techstream on.

(i) Turn the A/C switch to ON.

(j) Enter the following menus: Powertrain / Engine and ECT / Active Test / Control the VVT Exhaust Linear (Bank 1).

(k) Check the engine speed while operating the camshaft timing oil control valve assembly (for exhaust camshaft) using the Techstream with the engine coolant temperature is 50°C

(122°F) or less.

Result:

TECHSTREAM OPERATION	SPECIFIED CONDITION
0% (OFF)	Normal engine speed
127% (ON)	Engine idles roughly or stalls (soon after camshaft timing oil control valve assembly switched from OFF to ON)

NG ▶ **INSPECT CAMSHAFT TIMING OIL CONTROL VALVE ASSEMBLY (FOR EXHAUST CAMSHAFT)**

OK ▼

3.	**CHECK WHETHER DTC OUTPUT RECURS (DTC P0014 OR P0015)**

(a) Connect the Techstream to the DLC3.

(b) Turn the ignition switch to ON.

(c) Turn the Techstream on.

(d) Clear DTCs INFO .

(e) Start the engine and warm it up.

(f) Allow the engine to idle for 3 minutes or more.

(g) Drive the vehicle for more than 10 minutes.

(h) Select the following menu items: Powertrain / Engine and ECT / Trouble Codes / Pending.

(i) Read DTCs.

Result:

RESULT	PROCEED TO
DTC is not output	A
DTC P0014 or P0015 is output	B

B ▶ **ADJUST VALVE TIMING**

A ▶ CHECK FOR INTERMITTENT PROBLEMS

4.	**INSPECT CAMSHAFT TIMING OIL CONTROL VALVE ASSEMBLY (FOR EXHAUST CAMSHAFT)**

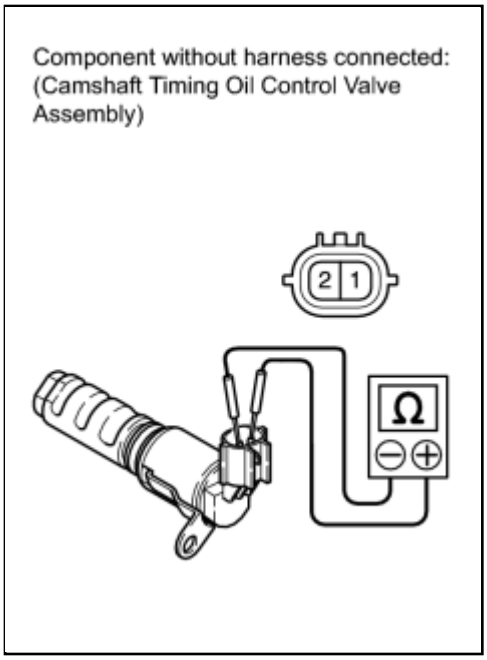

(a) Remove the camshaft timing oil control valve assembly (for exhaust camshaft) INFO .

(b) Measure the resistance according to the value(s) in the table below.

Standard Resistance:

TESTER CONNECTION	CONDITION	SPECIFIED CONDITION
1 - 2	20°C (68°F)	6.9 to 7.9 Ω

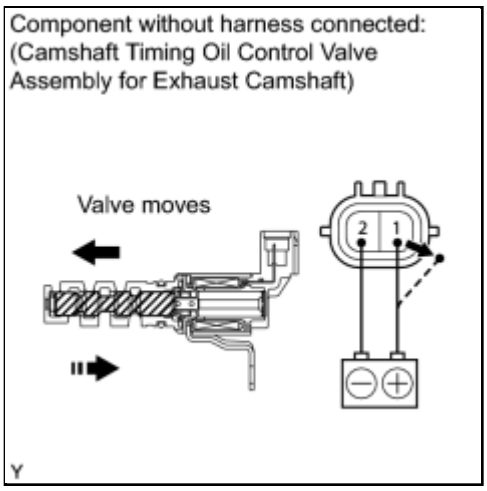

(c) Apply the positive battery voltage to terminal 1 and negative battery voltage to terminal 2. Check the valve operation.

OK:

Valve moves quickly.

(d) Reinstall the camshaft timing oil control valve assembly (for exhaust camshaft) INFO .

NG ▶ **REPLACE CAMSHAFT TIMING OIL CONTROL VALVE ASSEMBLY (FOR EXHAUST CAMSHAFT)**

OK
▼

5.	**INSPECT CAMSHAFT TIMING GEAR ASSEMBLY (FOR EXHAUST CAMSHAFT)**

(a) Inspect the camshaft timing gear assembly (for exhaust camshaft) INFO .

NG ▶ **REPLACE CAMSHAFT TIMING GEAR ASSEMBLY (FOR EXHAUST CAMSHAFT)**

OK
▼

6.	**INSPECT OIL CONTROL VALVE FILTER**

(a) Remove the oil control valve filter INFO .

(b) Check that the filter is not clogged.

OK:
Filter is not clogged.

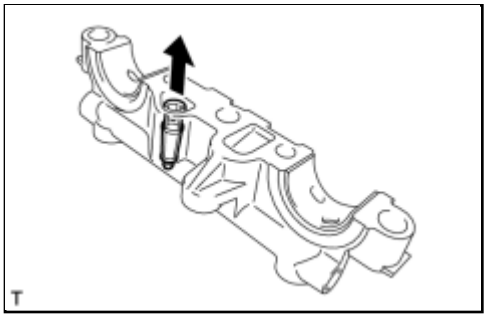

(c) Reinstall the oil control valve filter INFO .

NG ▶ **REPLACE OIL CONTROL VALVE FILTER**

OK

7.	ADJUST VALVE TIMING

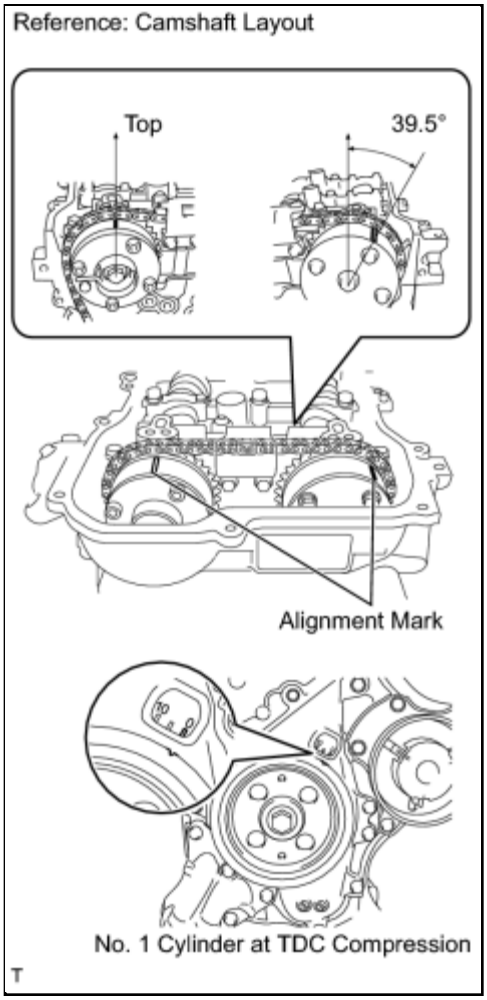

HINT:

There are no marks on the cylinder head to match-up for the purpose of checking valve timing. Valve timing can only be inspected by lining up the colored plates on the timing chain with the marks on the pulleys. It may be necessary to remove and reinstall the chain to match-up the alignment marks INFO .

NEXT

8.	CHECK WHETHER DTC OUTPUT RECURS (DTC P0014 OR P0015)

(a) Connect the Techstream to the DLC3.

(b) Turn the ignition switch to ON.

(c) Turn the Techstream on.

(d) Clear DTCs INFO .

(e) Start the engine and warm it up.

(f) Allow the engine to idle for 3 minutes or more.

(g) Drive the vehicle for more than 10 minutes.

(h) Select the following menu items: Powertrain / Engine and ECT / Trouble Codes / Pending.

(i) Read DTCs.

Result:

RESULT	PROCEED TO
DTC is not output	A
DTC P0014 or P0015 is output	B

B ▶ **REPLACE ECM**

A ▶ **END**

Last Modified: 3-10-2010	6.4 C	**From:** 200901
Model Year: 2010	**Model:** Corolla	**Doc ID:** RM000000PDV093X
Title: 2ZR-FE ENGINE CONTROL: SFI SYSTEM: P0016,P0017: Crankshaft Position - Camshaft Position Correlation (Bank 1 Sensor A) (2010 Corolla)		

DTC	**P0016**	**Crankshaft Position - Camshaft Position Correlation (Bank 1 Sensor A)**

DTC	**P0017**	**Crankshaft Position - Camshaft Position Correlation (Bank 1 Sensor B)**

DESCRIPTION

The ECM optimizes the valve timing by using the VVT (Variable Valve Timing) system to control the intake and exhaust camshaft. The VVT system includes the ECM, the camshaft timing oil control valve and the VVT controller (camshaft timing gear assembly). The ECM sends a target duty-cycle control signal to the camshaft timing oil control valve assembly.

This control signal regulates the oil pressure supplied to the VVT controller. The VVT controller can advance or retard the intake and exhaust camshafts.

DTC NO.	DETECTION CONDITION	TROUBLE AREA
P0016	Deviation in crankshaft position sensor signal and camshaft position sensor (for intake camshaft) signal (2 trip detection logic)	• Mechanical system (Timing chain has jumped tooth or chain stretched) • Camshaft timing oil control valve assembly (for intake camshaft) • Camshaft timing gear assembly (for intake camshaft) • ECM
P0017	Deviation in crankshaft position sensor signal and camshaft position sensor (for exhaust camshaft) signal (2 trip detection logic)	• Mechanical system (Timing chain has jumped tooth or chain stretched) • Camshaft timing oil control valve assembly (for exhaust camshaft) • Camshaft timing gear assembly (for exhaust camshaft) • ECM

MONITOR DESCRIPTION

To monitor the correlation of the intake camshaft position and crankshaft position, the ECM checks the VVT learning value while the engine is idling. The VVT learning value is calibrated based on the

camshaft position and crankshaft position. The intake valve timing is set to the most retarded angle while the engine is idling. If the VVT learning value is out of specified range in consecutive driving cycles, the ECM illuminates the MIL and sets the DTC P0016.

To monitor the correlation of the exhaust camshaft position and crankshaft position, the ECM checks the VVT learning value while the engine is idling. The VVT learning value is calibrated based on the camshaft position and crankshaft position. The exhaust valve timing is set to the most advanced angle while the engine is idling. If the VVT learning value is out of specified range in consecutive driving cycles, the ECM illuminates the MIL and sets the DTC P0017.

This DTC indicates that the intake camshaft has been installed toward the crankshaft at an incorrect angle, caused by factors such as the timing chain having jumped a tooth.

This monitor begins to run after the engine has idled for 5 minutes.

MONITOR STRATEGY

Related DTCs	P0016: Camshaft Timing Misalignment at idling (for intake camshaft) P0017: Camshaft Timing Misalignment at idling (for exhaust camshaft)
Required Sensors/Components (Main)	VVT controller (camshaft timing gear assembly)
Required Sensors/Components (Related)	Camshaft position sensor Crankshaft position sensor
Frequency of Operation	Once per driving cycle
Duration	Less than 1 minute
MIL Operation	2 driving cycles
Sequence of Operation	None

TYPICAL ENABLING CONDITIONS

P0016

Monitor runs whenever following DTCs not present	P0010 (VVT Oil Control Valve Bank 1) P0016 (VVT System Bank 1 - Misalignment) P0102, P0103 (Mass Air Flow Meter) P0115, P0117, P0118 (Engine Coolant Temperature Sensor) P0125 (Insufficient Engine Coolant Temperature for Closed Loop Fuel Control) P0335 (Crankshaft Position Sensor) P0340 (Camshaft Position Sensor)
Engine RPM	500 to 1000 rpm

P0017

Monitor runs whenever following DTCs not present	P0013 (Exhaust Oil Control Valve) P0017 (Exhaust VVT System - Misalignment) P0102, P0103 (Mass Air Flow Meter) P0115, P0117, P0118 (Engine Coolant Temperature Sensor) P0125 (Insufficient Engine Coolant Temperature for Closed Loop Fuel Control) P0335 (Crankshaft Position Sensor) P0340 (Camshaft Position Sensor)
Engine RPM	500 to 1000 rpm

TYPICAL MALFUNCTION THRESHOLDS

P0016 (Intake Side)

One of following conditions is met	-
VVT learning value at maximum retarded valve timing	Less than 22°CA (crankshaft angle)
VVT learning value at maximum retarded valve timing	More than 47°CA (crankshaft angle)

P0017 (Exhaust Side)

One of following conditions is met	-
VVT learning value at maximum retarded valve timing	Less than 82.5°CA (crankshaft angle)
VVT learning value at maximum retarded valve timing	More than 104.4°CA (crankshaft angle)

INSPECTION PROCEDURE

HINT:

Read freeze frame data using the Techstream. Freeze frame data records the engine conditions when malfunctions are detected. When troubleshooting, freeze frame data can help determine if the vehicle was moving or stationary, if the engine was warmed up or not, if the air fuel ratio was lean or rich, and other data from the time the malfunction occurred.

PROCEDURE

1.	**CHECK ANY OTHER DTCS OUTPUT (IN ADDITION TO DTC P0016 AND P0017)**

(a) Connect the Techstream to the DLC3.

(b) Turn the ignition switch to ON.

(c) Turn the Techstream on.

(d) Enter the following menus: Powertrain / Engine and ECT / Trouble Codes.

(e) Read the DTCs.

Result:

RESULT	PROCEED TO
DTC P0016 or P0017 is output	A
DTC P0016 or P0017 and other DTCs are output	B

HINT:

If any DTCs other than P0016 or P0017 are output, troubleshoot those DTCs first.

B ▶ **GO TO DTC CHART**

A ▼

2.	**PERFORM ACTIVE TEST USING TECHSTREAM (OPERATE CAMSHAFT TIMING OIL CONTROL VALVE ASSEMBLY)**

(a) Connect the Techstream to the DLC3.

(b) Start the engine.

(c) Turn the Techstream on.

(d) Warm up the engine.

(e) Check the camshaft timing oil control valve assembly for intake camshaft.

(1) Enter the following menus: Powertrain / Engine and ECT / Active Test / Control the VVT System (Bank 1).

(2) Select the following Data List items: VVT Change Angle (Bank 1) and VVT OCV Duty (Bank 1).

(3) Check that the VVT Change Angle (Bank 1) varies when operating the camshaft timing oil control valve assembly (for intake camshaft) using the Techstream.

OK:

The VVT Change Angle (Bank 1) value and engine speed vary.

(f) Check the camshaft timing oil control valve assembly for exhaust camshaft.

(1) Enter the following menus: Powertrain / Engine and ECT / Active Test / Control the VVT Exhaust Linear (Bank 1).

(2) Select the following monitor items: VVT Ex Chg Angle (Bank 1) and VVT Ex OCV Duty (Bank 1).

(3) Check that the VVT Ex Chg Angle (Bank 1) value varies when operating the camshaft timing oil control valve assembly (for exhaust camshaft) using the Techstream.

OK:

The VVT Ex Chg Angle (Bank1) value and engine speed vary.

HINT:

If the VVT system can be operated using the Active Test, it can be assumed that the VVT system is operating normally.

NG ▶ **INSPECT CAMSHAFT TIMING OIL CONTROL VALVE ASSEMBLY (FOR INTAKE AND/OR EXHAUST CAMSHAFT)**

OK
▼

3.	**ADJUST VALVE TIMING**

HINT:

There are no marks on the cylinder head to match-up for the purpose of checking valve timing. Valve timing can only be inspected by lining up the colored plates on the timing chain with the marks on the pulleys. It may be necessary to remove and reinstall the chain to match-up the alignment marks INFO **.**

NEXT
▼

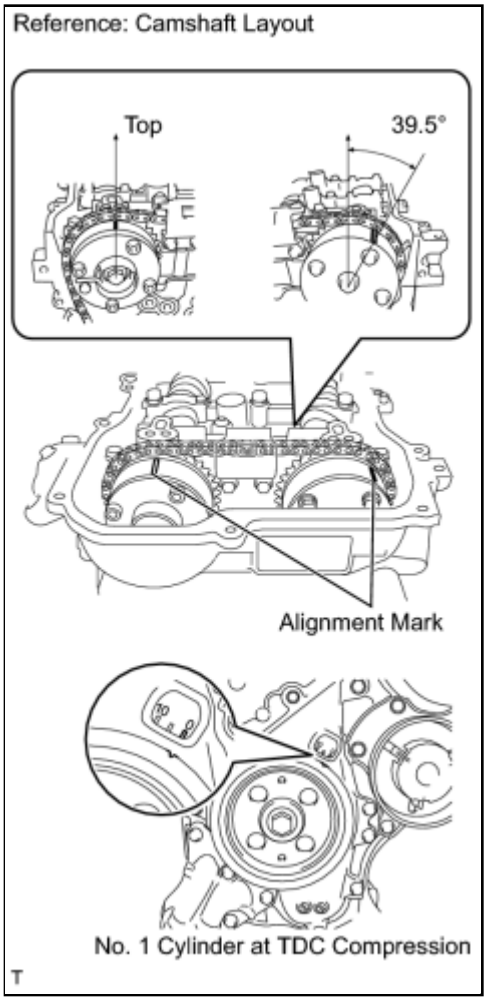

4.	CONFIRM WHETHER MALFUNCTION HAS BEEN SUCCESSFULLY REPAIRED

(a) In order to clear the ECM's learned values for valve timing, disconnect the cable from the negative (-) battery terminal for 1 minute.

(b) Reconnect the cable to the negative (-) battery terminal.

(c) Connect the Techstream to the DLC 3.

(d) Turn the ignition switch to ON.

(e) Turn the Techstream on.

(f) Clear DTCs INFO .

(g) Start the engine and warm it up.

(h) Allow the engine to idle for 5 minutes or more.

(i) Drive the vehicle with a city drive pattern for more than 10 minutes.

(j) Enter the following menus: Powertrain / Engine and ECT / Trouble Codes / pending.

(k) Read the DTCs.

Result:

RESULT	PROCEED TO
DTC is not output	A
DTC P0016 or P0017 is output	B

B ▶ **REPLACE ECM**

A ▶ **END**

5.	**INSPECT CAMSHAFT TIMING OIL CONTROL VALVE ASSEMBLY (FOR INTAKE AND/OR EXHAUST CAMSHAFT)**

HINT:

Inspect the specified camshaft timing oil control valve assembly (for intake or exhaust camshaft) in accordance with the inspection result of step 2.

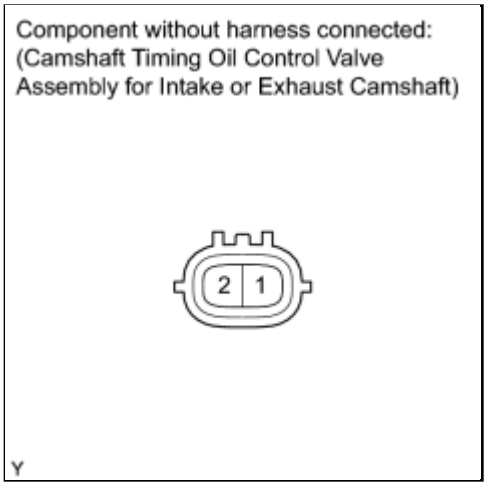

(a) Remove the camshaft timing oil control valve assembly (for intake or exhaust camshaft) INFO .

(b) Measure the resistance according to the value(s) in the table below.

Standard Resistance:

TESTER CONNECTION	CONDITION	SPECIFIED CONDITION
1 - 2	20°C (68°F)	6.9 to 7.9 Ω

(c) Apply battery voltage to terminals of the camshaft timing oil control valve assembly (for intake or exhaust camshaft). Check the valve operation.

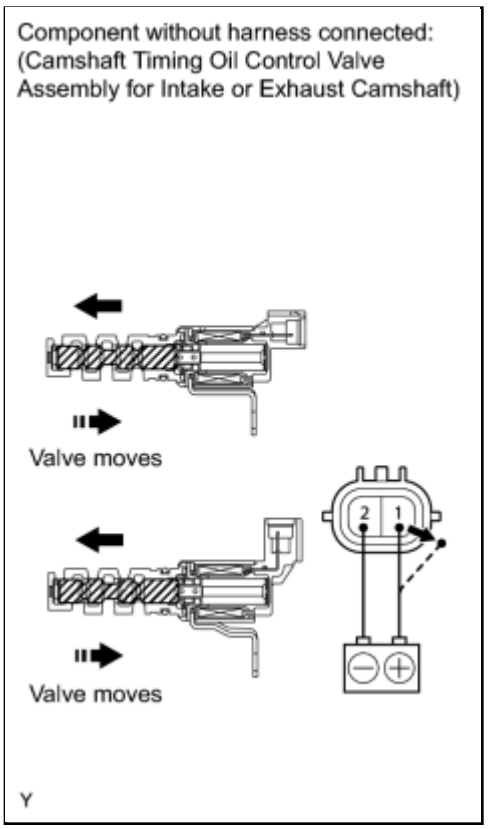

OK:
Valve moves quickly.

(d) Reinstall the camshaft timing oil control valve assembly (for intake or exhaust camshaft) INFO .

NG ▶ **REPLACE CAMSHAFT TIMING OIL CONTROL VALVE ASSEMBLY (INTAKE AND/OR EXHAUST)**

OK ▼

6.	**INSPECT OIL CONTROL VALVE FILTER**

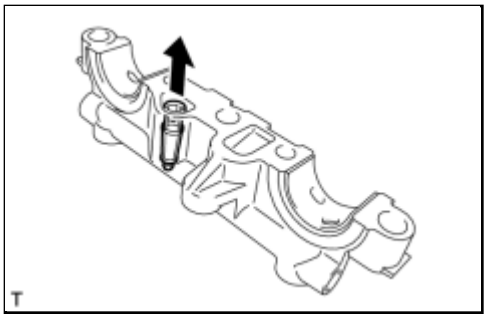

(a) Remove the oil control valve filter INFO .

(b) Check that the filter is not clogged.

OK:

Filter is not clogged.

(c) Reinstall the oil control valve filter INFO .

NG ▶ **REPLACE OIL CONTROL VALVE FILTER**

OK
▼

7.	REPLACE CAMSHAFT TIMING GEAR ASSEMBLY (INTAKE AND/OR EXHAUST)

HINT:

Replace the specified camshaft timing gear (camshaft timing gear for intake camshaft or exhaust camshaft) in accordance with the inspection result of step 2.

(a) Replace the camshaft timing gear assembly (camshaft timing gear for intake camshaft or exhaust camshaft) INFO .

NEXT
▼

8.	CONFIRM WHETHER MALFUNCTION HAS BEEN SUCCESSFULLY REPAIRED

(a) In order to clear the ECM learned values for valve timing, disconnect the cable from the negative (-) battery terminal for 1 minute.

(b) Reconnect the cable to the negative (-) battery terminal.

(c) Connect the Techstream to the DLC3.

(d) Turn the ignition switch to ON.

(e) Turn the Techstream on.

(f) Clear DTCs INFO .

(g) Start the engine and warm it up.

(h) Allow the engine to idle for 5 minutes or more.

(i) Drive the vehicle with a city drive pattern for more than 10 minutes.

(j) Enter the following menus: Powertrain / Engine and ECT / Trouble Codes.

(k) Select the following menu items: Powertrain / Engine and ECT / Trouble Codes / Pending.

(l) Read the DTCs.

Result:

RESULT	PROCEED TO
DTC is not output	A
DTC P0016 or P0017 is output	B

B ▶ **REPLACE ECM**

A ▶ **END**

Last Modified: 3-10-2010	6.4 C	**From:** 200901
Model Year: 2010	**Model:** Corolla	**Doc ID:** RM000000WC10A1X
Title: 2ZR-FE ENGINE CONTROL: SFI SYSTEM: P0031,P0032: Oxygen (A/F) Sensor Heater Control Circuit Low (Bank 1 Sensor 1) (2010 Corolla)		

DTC	**P0031**	**Oxygen (A/F) Sensor Heater Control Circuit Low (Bank 1 Sensor 1)**

DTC	**P0032**	**Oxygen (A/F) Sensor Heater Control Circuit High (Bank 1 Sensor 1)**

DESCRIPTION

Refer to DTC P2195 INFO .

HINT:

- When either of these DTCs is set, the ECM enters fail-safe mode. The ECM turns off the air fuel ratio sensor heater in fail-safe mode. Fail-safe mode continues until the ignition switch is turned off.
- Although the DTC titles say the oxygen sensor, these DTCs relate to the air fuel ratio sensor.
- Sensor 1 refers to the sensor mounted in front of the Three-way catalytic converter and located near the engine assembly.
- The ECM uses pulse width modulation to adjust the current through the heater. The air fuel ratio sensor heater circuit uses a relay on the +B side of the circuit.

Reference (System Diagram of Sensor 1):

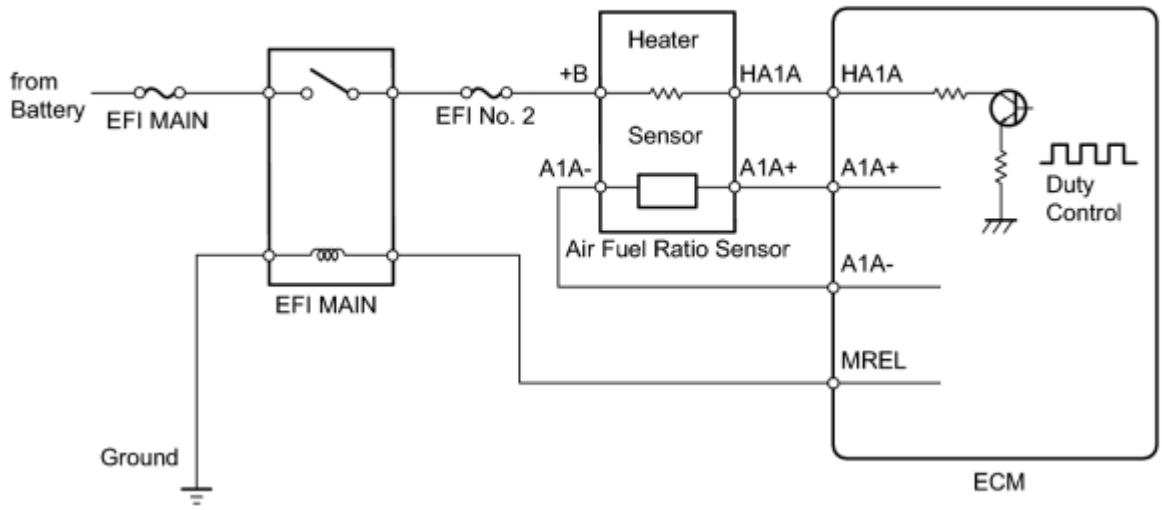

DTC NO.	DTC DETECTION CONDITION	TROUBLE AREA

DTC NO.	DTC DETECTION CONDITION	TROUBLE AREA
P0031	Air fuel ratio sensor heater current less than 0.8 A (1 trip detection logic)	• Open in air fuel ratio sensor heater circuit • Air fuel ratio sensor heater (sensor 1) • ECM
P0032	Air fuel ratio sensor heater current fail (1 trip detection logic)	• Short in air fuel ratio sensor heater circuit • Air fuel ratio sensor heater (sensor 1) • ECM

HINT:

- Sensor 1 refers to the sensor closest to the engine assembly.
- Sensor 2 refers to the sensor farthest away from the engine assembly.

MONITOR DESCRIPTION

The ECM uses information from the air fuel ratio sensor to regulate the air fuel ratio and keep it close to the stoichiometric level. This maximizes the ability of the three-way catalytic converter to purify the exhaust gases.

The air fuel ratio sensor detects oxygen levels in the exhaust gas and transmits the information to the ECM. The inner surface of the sensor element is exposed to the outside air. The outer surface of the sensor element is exposed to the exhaust gas. The sensor element is made of platinum coated zirconia and includes an integrated heating element.

The zirconia element generates a small voltage when there is a large difference in the oxygen concentrations between the exhaust gas and outside air. The platinum coating amplifies this voltage generation.

The air fuel ratio sensor is more efficient when heated. When the exhaust gas temperature is low, the sensor cannot generate useful voltage signals without supplementary heating. The ECM regulates the supplementary heating using a duty-cycle approach to adjust the average current in the sensor heater element. If the heater current is outside the normal range, the signal transmitted by the air fuel ratio sensor becomes inaccurate, as a result, the ECM is unable to regulate air fuel ratio properly.

When the current in the air fuel ratio sensor heater is outside the normal operating range, the ECM interprets this as a malfunction in the sensor heater and sets a DTC.

MONITOR STRATEGY

Related DTCs	P0031: Air fuel ratio sensor heater open/short (Low electrical current) P0032: Air fuel ratio sensor heater open/short (High

	electrical current)
Required Sensors/Components (Main)	Air fuel ratio sensor heater
Required Sensors/Components (Related)	-
Frequency of Operation	Continuous
Duration	10 seconds
MIL Operation	Immediate
Sequence of Operation	None

TYPICAL ENABLING CONDITIONS

All

Monitor runs whenever following DTCs not present	None

P0031

Battery voltage	10.5 V or more
Air fuel ratio sensor heater duty-cycle ratio	50% or more
Time after engine start	10 seconds or more

P0032

Battery voltage	Less than 20 V
Time after engine start	10 seconds or more
Heater output duty	0%

TYPICAL MALFUNCTION THRESHOLDS

P0031

Air fuel ratio sensor heater current	Less than 0.8 A

P0032

Hybrid IC high current limiter port	Fail

COMPONENT OPERATING RANGE

Air fuel ratio sensor heater resistance	1.8 to 3.4 Ω at 20°C (68°F)

WIRING DIAGRAM

Refer to DTC P2195 INFO .

INSPECTION PROCEDURE

HINT:

Read freeze frame data using the Techstream. The ECM records vehicle and driving condition information as freeze frame data the moment a DTC is stored. When troubleshooting, freeze frame data can be helpful in determining whether the vehicle was running or stopped, whether the engine was warmed up or not, whether the air fuel ratio was lean or rich, as well as other data recorded at the time of a malfunction.

PROCEDURE

1.	**INSPECT AIR FUEL RATIO SENSOR (HEATER RESISTANCE)**

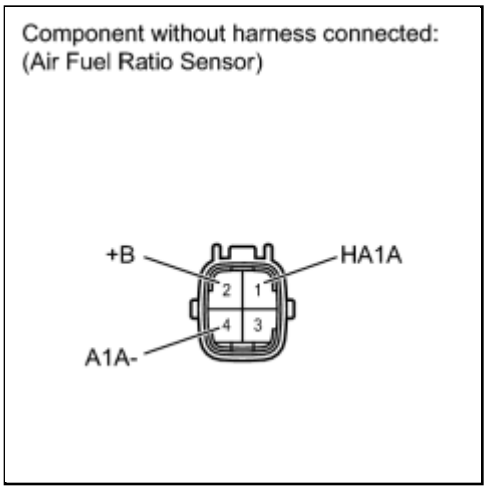

(a) Disconnect the air fuel ratio sensor connector.

(b) Measure the resistance according to the value(s) in the table below.

Standard Resistance:

TESTER CONNECTION	CONDITION	SPECIFIED CONDITION
1 (HA1A) - 2 (+B)	20°C (68°F)	1.8 to 3.4 Ω
1 (HA1A) - 4 (A1A-)	Always	10 kΩ or higher

(c) Reconnect the air fuel ratio sensor connector.

NG ▶ **REPLACE AIR FUEL RATIO SENSOR**

OK

2.	CHECK TERMINAL VOLTAGE (POWER SOURCE)

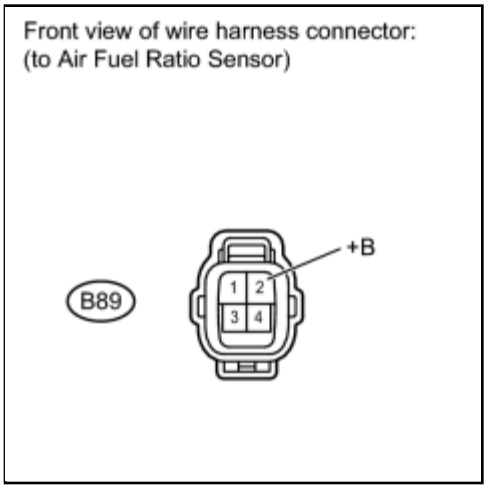

(a) Disconnect the air fuel ratio sensor connector.

(b) Turn the ignition switch to ON.

(c) Measure the voltage according to the value(s) in the table below.

Standard Voltage:

TESTER CONNECTION	SWITCH CONDITION	SPECIFIED CONDITION
B89-2 (+B) - Body ground	Ignition switch ON	11 to 14 V

(d) Reconnect the air fuel ratio sensor connector.

NG ▶ **INSPECT FUSE (EFI NO. 2 FUSE)**

OK

3.	CHECK HARNESS AND CONNECTOR (AIR FUEL RATIO SENSOR - ECM)

(a) Disconnect the air fuel ratio sensor connector.

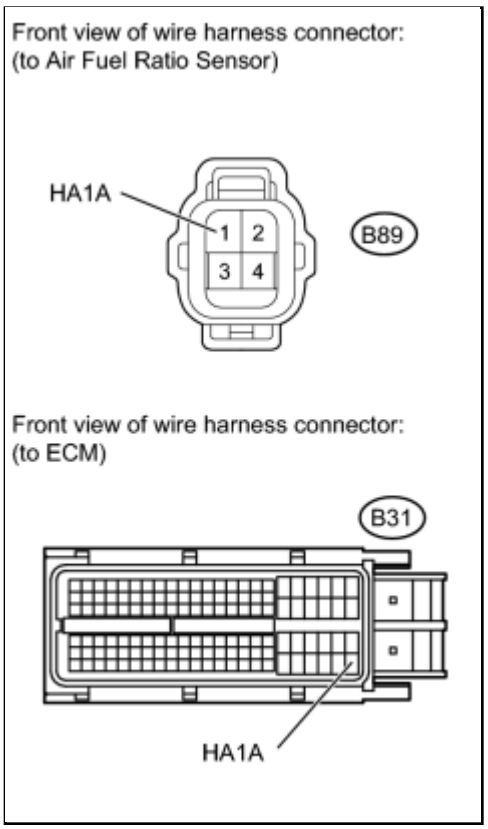

(b) Disconnect the ECM connector.

(c) Measure the resistance according to the value(s) in the table below.

Standard Resistance (Check for Open):

TESTER CONNECTION	CONDITION	SPECIFIED CONDITION
B89-1 (HA1A) - B31-109 (HA1A)	Always	Below 1 Ω

Standard Resistance (Check for Short):

TESTER CONNECTION	CONDITION	SPECIFIED CONDITION
B89-1 (HA1A) or B31-109 (HA1A) - Body ground	Always	10 kΩ or higher

(d) Reconnect the air fuel ratio sensor connector.

(e) Reconnect the ECM connector.

NG ▶ **REPAIR OR REPLACE HARNESS OR CONNECTOR (AIR FUEL RATIO SENSOR - ECM)**

OK ▼

4.	CHECK WHETHER DTC OUTPUT RECURS (DTC P0031 OR P0032)

(a) Connect the Techstream to the DLC3.

(b) Turn the ignition switch to ON.

(c) Turn the Techstream on.

(d) Clear DTCs INFO .

(e) Start the engine.

(f) Allow the engine to idle for 1 minute or more.

(g) Enter the following menus: Powertrain / Engine and ECT / Trouble Codes.

(h) Read the DTCs.

Result:

RESULT	PROCEED TO
DTC is not output	A
DTC P0031 or P0032 is output	B

B ▶ **REPLACE ECM**

A ▶ **CHECK FOR INTERMITTENT PROBLEMS**

5.	INSPECT FUSE (EFI NO. 2 FUSE)

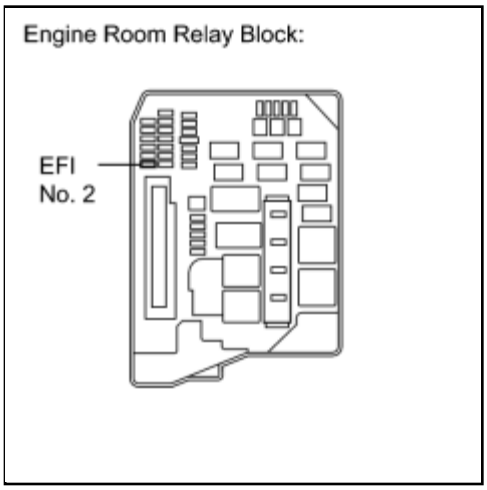

(a) Remove the EFI No. 2 fuse from the engine room relay block.

(b) Measure the resistance according to the value(s) in the table below.

Standard Resistance:

TESTER CONNECTION	CONDITION	SPECIFIED CONDITION
EFI No. 2 fuse	Always	Below 1 Ω

(c) Reinstall the EFI No. 2 fuse.

NG ▶ **REPLACE FUSE (EFI NO. 2)**

OK ▶ **REPAIR OR REPLACE HARNESS OR CONNECTOR (INTEGRATION RELAY (EFI MAIN RELAY) - AIR FUEL RATIO SENSOR)**

Last Modified: 3-10-2010	6.4 C	**From:** 200901
Model Year: 2010	**Model:** Corolla	**Doc ID:** RM000000PFA09WX
Title: 2ZR-FE ENGINE CONTROL: SFI SYSTEM: P0037,P0038,P0141: Oxygen Sensor Heater Control Circuit Low (Bank 1 Sensor 2) (2010 Corolla)		

DTC	**P0037**	**Oxygen Sensor Heater Control Circuit Low (Bank 1 Sensor 2)**

DTC	**P0038**	**Oxygen Sensor Heater Control Circuit High (Bank 1 Sensor 2)**

DTC	**P0141**	**Oxygen Sensor Heater Circuit Malfunction (Bank 1 Sensor 2)**

DESCRIPTION

Refer to DTC P0136 INFO .

HINT:

- Sensor 2 refers to the sensor mounted behind the three-way catalytic converter and located far from the engine assembly.
- When any of these DTCs are set, the ECM enters fail-safe mode. The ECM turns off the heated oxygen sensor heater in fail-safe mode. Fail-safe mode continues until the ignition switch is turned off.
- The ECM uses pulse width modulation to adjust the current through the heater. The heated oxygen sensor heater circuit uses a relay on the +B side of the circuit.

Reference (System Diagram of Sensor 2):

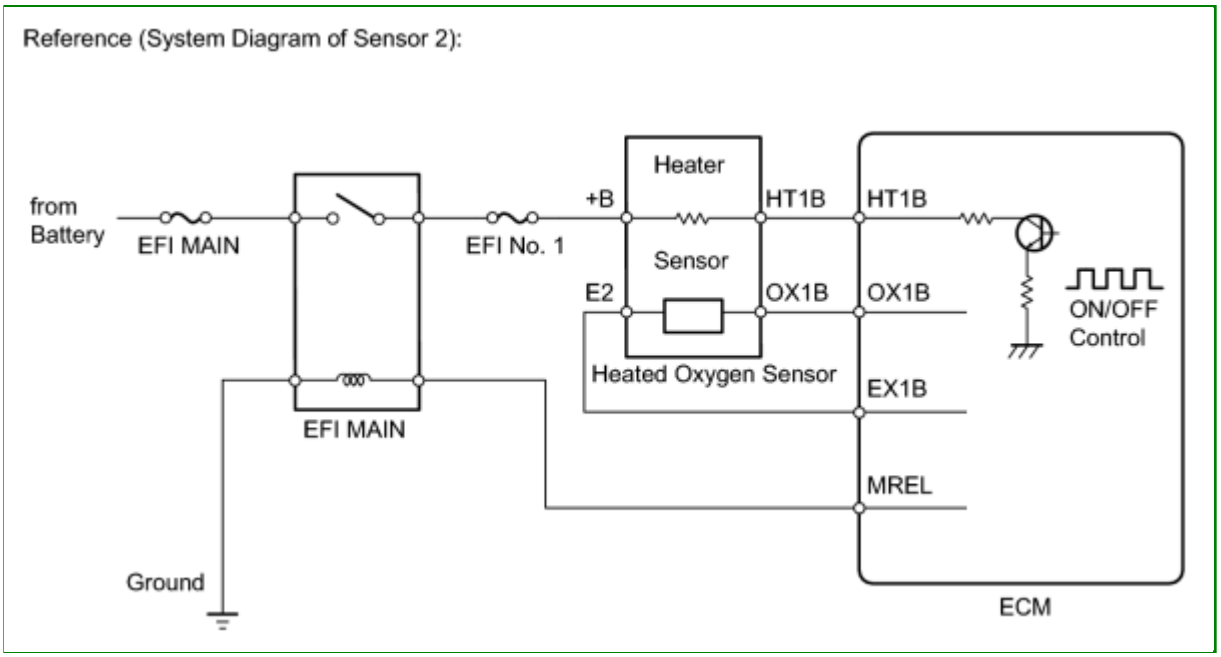

DTC NO.	DTC DETECTION CONDITION	TROUBLE AREA
P0037	Heated oxygen sensor (sensor 2) heater current less than 0.3 A (1 trip detection logic)	• Open in heated oxygen sensor (sensor 2) heater circuit • Heated oxygen sensor (sensor 2) heater • ECM
P0038	Heated oxygen sensor (sensor 2) heater current more than 2 A (1 trip detection logic)	• Short in heated oxygen sensor (sensor 2) heater circuit • Heated oxygen sensor (sensor 2) heater • ECM
P0141	Cumulative heater resistance correction value exceeds the acceptable threshold (2 trip detection logic)	• Open or short in heated oxygen sensor (sensor 2) heater circuit • Heated oxygen sensor (sensor 2) heater • ECM

HINT:

- Sensor 1 refers to the sensor closest to the engine assembly.
- Sensor 2 refers to the sensor farthest away from the engine assembly.

MONITOR DESCRIPTION

The sensing portion of the heated oxygen sensor has a zirconia element which is used to detect the oxygen concentration in the exhaust gas. If the zirconia element is at the appropriate temperature, and the difference between the oxygen concentrations surrounding the inside and outside surfaces of the sensor is large, the zirconia element generates voltage signals. In order to increase the oxygen concentration detecting capacity of the zirconia element, the ECM supplements the heat from the exhaust with heat from a heating element inside the sensor.

Heated Oxygen Sensor Heater Range Check (P0037 and P0038):

The ECM monitors the current applied to the heated oxygen sensor heater to check the heater for malfunctions. If the current is below the threshold value, the ECM will determine that there is an open circuit in the heater. If the current is above the threshold value, the ECM will determine that there is a short circuit in the heater.

Example:

The ECM sets DTC P0038 when the current in the heated oxygen sensor heater is more than 2 A. Conversely, when the heater current is less than 0.3 A, DTC P0037 is set.

Heated Oxygen Sensor Heater Performance (P0141):

After the accumulated heater ON time exceeds 100 seconds, the ECM calculates the heater resistance using the battery voltage and the current applied to the heater. If the resistance is above the threshold

value, the ECM will determine that there is a malfunction in the heated oxygen sensor heater and set DTC P0141.

MONITOR STRATEGY

Related DTCs	P0037: Heated oxygen sensor heater (sensor 2) open/short (Low electrical current) P0038: Heated oxygen sensor heater (sensor 2) open/short (High electrical current) P0141: Heated oxygen sensor heater performance (sensor 2)
Required sensors/Components (Main)	Heated oxygen sensor heater (sensor 2)
Required sensors/Components (Related)	-
Frequency of operation	Continuous: P0037, P0038 Once per driving cycle: P0141
Duration	0.5 seconds: P0037 1 second: P0038 10 seconds: P0141
MIL operation	Immediate: P0037, P0038 2 driving cycles: P0141
Sequence of operation	None

TYPICAL ENABLING CONDITIONS

All

Monitor runs whenever following DTCs are not present	None

P0037

Battery voltage	10.5 to 20 V

P0038 (Case 1)

Battery voltage	10.5 V or more
Engine	Running
Starter	OFF

P0038 (Case 2)

Battery voltage	10.5 to 20 V

P0141

One of the following conditions is met:	Condition A or B
A. All of the following conditions are met:	Condition 1, 2, 3, 4 and 5
1. Battery voltage	10.5 V or more
2. Fuel cut	OFF
3. Time after fuel cut ON to OFF	30 seconds or more
4. Accumulated heater ON time	100 seconds or more
5. Learned heater OFF current operation	Completed
B. Duration that rear heated oxygen sensor impedance is less than 15 kΩ	2 seconds or more

TYPICAL MALFUNCTION THRESHOLDS

P0037

Learned heater OFF current	Less than 0.3 A

P0038

Learned heater OFF current	More than 2 A

P0141 (Heater Performance Monitor Check)

Accumulated heater resistance	Varies with sensor element temperature (Example: More than 23 Ω)

COMPONENT OPERATING RANGE

Heated oxygen sensor heater current	0.3 to 2 A (when engine idles, heated oxygen sensor warmed up and battery voltage 11 to 14 V)

MONITOR RESULT

Refer to Checking Monitor Status INFO .

WIRING DIAGRAM

Refer to DTC P0136 INFO .

INSPECTION PROCEDURE

HINT:

Read freeze frame data using the Techstream. The ECM records vehicle and driving condition information as freeze frame data the moment a DTC is stored. When troubleshooting, freeze frame data can be helpful in

determining whether the vehicle was running or stopped, whether the engine was warmed up or not, whether the air fuel ratio was lean or rich, as well as other data recorded at the time of a malfunction.

PROCEDURE

1.	**INSPECT HEATED OXYGEN SENSOR (HEATER RESISTANCE)**

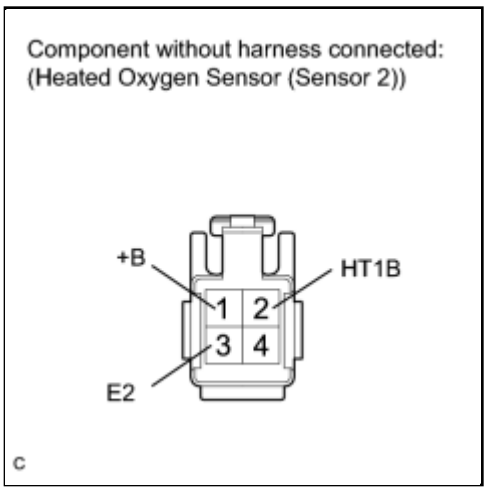

(a) Disconnect the heated oxygen sensor connector.

(b) Measure the resistance according to the value(s) in the table below.

Standard Resistance:

TESTER CONNECTION	CONDITION	SPECIFIED CONDITION
2 (HT1B) - 1 (+B)	20°C (68°F)	11 to 16 Ω
2 (HT1B) - 3 (E2)	Always	10 kΩ or higher

(c) Reconnect the heated oxygen sensor connector.

NG ▶ **REPLACE HEATED OXYGEN SENSOR**

OK ▼

2.	**CHECK TERMINAL VOLTAGE (POWER SOURCE)**

(a) Disconnect the heated oxygen sensor connector.

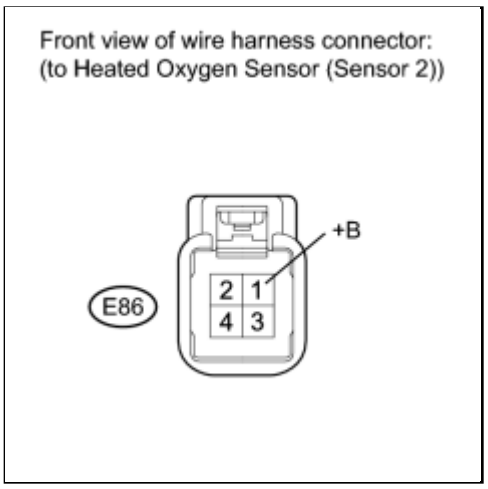

(b) Turn the ignition switch to ON.

(c) Measure the voltage according to the value(s) in the table below.

Standard Voltage:

TESTER CONNECTION	SWITCH CONDITION	SPECIFIED CONDITION
E86-1 (+B) - Body ground	Ignition switch ON	11 to 14 V

(d) Reconnect the heated oxygen sensor connector.

NG ▶ **INSPECT FUSE (EFI NO. 1 FUSE)**

OK ▼

3.	**CHECK HARNESS AND CONNECTOR (HEATED OXYGEN SENSOR - ECM)**

(a) Disconnect the heated oxygen sensor connector.

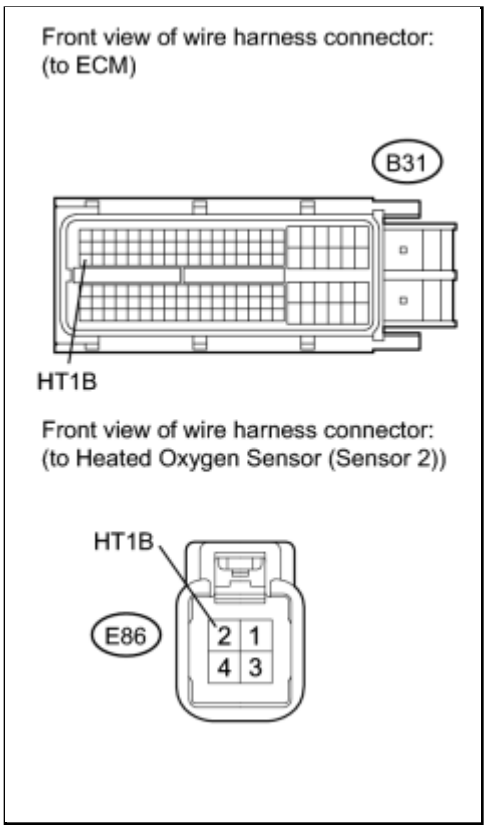

(b) Disconnect the ECM connector.

(c) Measure the resistance according to the value(s) in the table below.

Standard Resistance (Check for Open):

TESTER CONNECTION	CONDITION	SPECIFIED CONDITION
E86-2 (HT1B) - B31-47 (HT1B)	Always	Below 1 Ω

Standard Resistance (Check for Short):

TESTER CONNECTION	CONDITION	SPECIFIED CONDITION
E86-2 (HT1B) or B31-47 (HT1B) - Body ground	Always	10 kΩ or higher

(d) Reconnect the heated oxygen sensor connector.

(e) Reconnect the ECM connector.

NG ▶ **REPAIR OR REPLACE HARNESS OR CONNECTOR (HEATED OXYGEN SENSOR - ECM)**

OK ▼

4.	CHECK WHETHER DTC OUTPUT RECURS (DTC P0037, P0038 OR P0141)

(a) Connect the Techstream to the DLC3.

(b) Turn the ignition switch to ON.

(c) Turn the Techstream on.

(d) Clear DTCs INFO .

(e) Start the engine.

(f) Select the ECM from normal mode to check mode using the Techstream.

(g) Allow the engine to idle for 1 minute or more.

(h) Enter the following menus: Powertrain / Engine and ECT / Trouble Codes.

(i) Read the DTCs.

Result:

RESULT	PROCEED TO
DTC is not output	A
DTC P0037, P0038 or P0141 is output	B

B ▶ **REPLACE ECM**

A ▶ **CHECK FOR INTERMITTENT PROBLEMS**

5.	INSPECT FUSE (EFI NO. 1 FUSE)

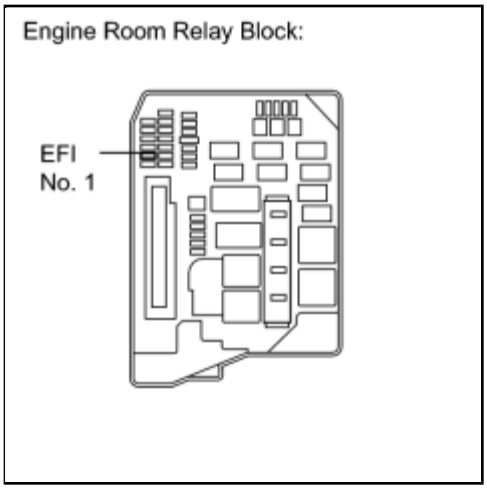

(a) Remove the EFI No.1 fuse from the engine room relay block.

(b) Measure the resistance according to the value(s) in the table below.

Standard Resistance:

TESTER CONNECTION	CONDITION	SPECIFIED CONDITION
EFI No. 1 fuse	Always	Below 1 Ω

(c) Reinstall the EFI No. 1 fuse.

NG ▶ **REPLACE FUSE (EFI NO. 1)**

OK ▶ **REPAIR OR REPLACE HARNESS OR CONNECTOR (INTEGRATION RELAY (EFI MAIN RELAY) - HEATED OXYGEN SENSOR)**

Last Modified: 3-10-2010	6.4 C	**From:** 200901
Model Year: 2010	**Model:** Corolla	**Doc ID:** RM000000PF404LX
Title: 2ZR-FE ENGINE CONTROL: SFI SYSTEM: P0101: Mass Air Flow Circuit Range / Performance Problem (2010 Corolla)		

DTC	**P0101**	**Mass Air Flow Circuit Range / Performance Problem**

DESCRIPTION

Refer to DTC P0102 INFO .

DTC NO.	DTC DETECTION CONDITION	TROUBLE AREA
P0101	Conditions (a), (b), (c), (d) and (e) continue for more than 10 seconds (2 trip detection logic): (a) Engine running (b) Engine coolant temperature 70°C (158°F) or higher (c) Throttle position sensor voltage 0.24 to 2 V (d) Average engine load value ratio less than 0.85, or more than 1.28 (varies with estimated engine load) Average engine load value ratio = Average engine load based on mass air flow meter output / Average engine load estimated from driving conditions (e) Average air fuel ratio less than -20%, or more than 20%	• Mass air flow meter • Intake system • PCV hose connections

MONITOR DESCRIPTION

The mass air flow meter is a sensor that measures the amount of air flowing through the throttle valve. The ECM uses this information to determine the fuel injection time and to provide an appropriate air fuel ratio. Inside the mass air flow meter, there is a heated platinum wire which is exposed to the flow of intake air. By applying a specific electrical current to the wire, the ECM heats it to a specific temperature. The flow of incoming air cools both the wire and an internal thermistor, affecting their resistance. To maintain a constant current value, the ECM varies the voltage applied to the mass air flow meter. The voltage level is proportional to the air flow through the sensor, and the ECM uses it to calculate the intake air volume.

The ECM monitors the average engine load value ratio to check the mass air flow meter for malfunctions. The average engine load value ratio is obtained by comparing the average engine load calculated from the mass air flow meter output to the average engine load estimated from the driving conditions, such as the engine speed and the throttle opening angle. If the average engine load value ratio is below the threshold value, the ECM determines that the intake air volume is low, and if the average engine load value ratio is above the threshold value, the ECM determines that the intake air volume is high.

If this is detected in 2 consecutive driving cycles, the MIL is illuminated and the DTC is set.

MONITOR STRATEGY

Related DTCs	P0101: Mass air flow meter rationality
Required Sensors/Components (Main)	Mass air flow meter
Required Sensors/Components (Related)	Crankshaft position sensor Camshaft position sensor Engine coolant temperature sensor Throttle position sensor
Frequency of Operation	Continuous
Duration	10 times
MIL Operation	2 driving cycles
Sequence of Operation	None

TYPICAL ENABLING CONDITIONS

Monitor runs whenever following DTCs not present	None
Time after engine starts	5 seconds or more
Battery voltage	10.5 V or more
Throttle position (Throttle position sensor voltage)	0.24 to 2 V
Estimated Load	30 to 70 %
Engine coolant temperature	70°C (158°F) or more
Intake air temperature sensor circuit	OK
Engine coolant temperature sensor circuit	OK
Crankshaft position sensor circuit	OK
Throttle position sensor circuit	OK
EVAP system pressure sensor circuit	OK
EVAP leak detection pump	OK
EVAP system vent valve	OK

TYPICAL MALFUNCTION THRESHOLDS

Both of following conditions 1 and 2 met	-
1. Averaged engine load value ratio	Less than 0.85, or more than 1.28 (varies with estimated engine load)

2. Averaged air fuel ratio	Less than -20%, or more than 20%

WIRING DIAGRAM

Refer to DTC P0102 INFO .

CONFIRMATION DRIVING PATTERN

HINT:

Performing this confirmation pattern will activate the mass air flow performance monitor.

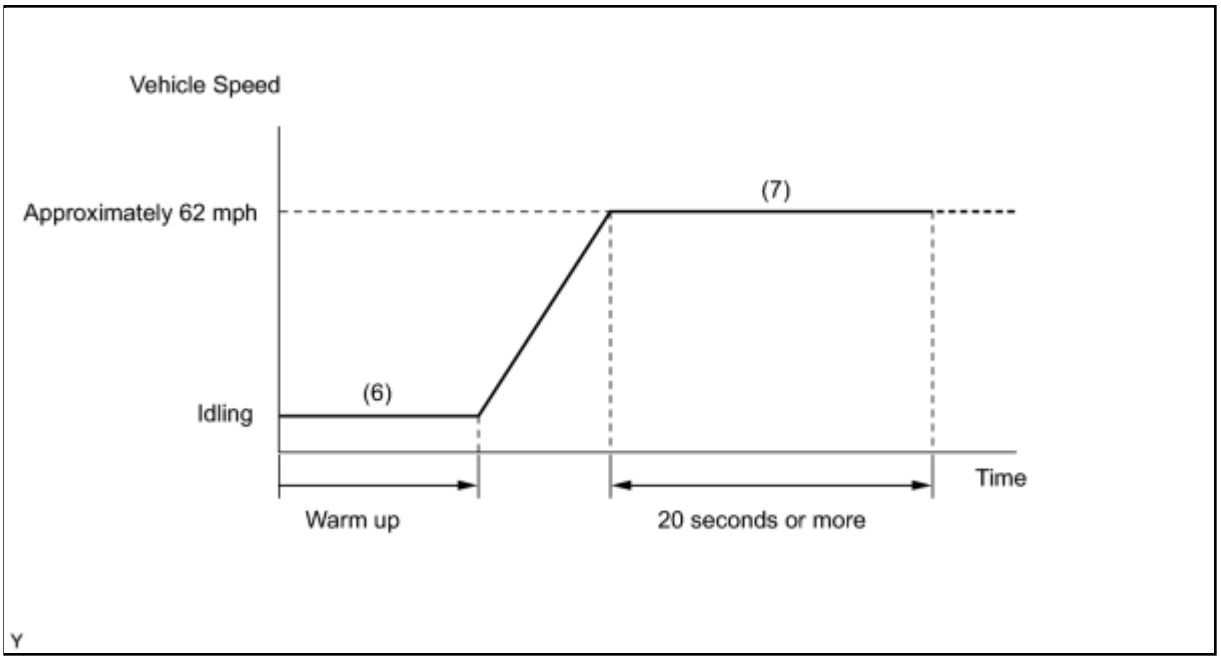

1. Connect the Techstream to the DLC3.
2. Turn the ignition switch to ON.
3. Turn the Techstream on.
4. Clear DTCs INFO .
5. Switch the ECM from normal mode to check mode using the Techstream.
6. Start the engine, and warm it up until the engine coolant temperature reaches 70°C (158°F) or higher.
7. Drive the vehicle at approximately 62 mph (100 km/h) for 20 seconds or more.
8. Enter the following menus: Powertrain / Engine and ECT / Trouble Codes.
9. Read the DTCs.

INSPECTION PROCEDURE

HINT:

Read freeze frame data using the Techstream. The ECM records vehicle and driving condition information as freeze frame data the moment a DTC is stored. When troubleshooting, freeze frame data can be helpful in determining whether the vehicle was running or stopped, whether the engine was warmed up or not, whether the air fuel ratio was lean or rich, as well as other data recorded at the time of a malfunction.

PROCEDURE

1.	**CHECK ANY OTHER DTCS OUTPUT (IN ADDITION TO DTC P0101)**

(a) Connect the Techstream to the DLC3.

(b) Turn the ignition switch to ON.

(c) Turn the Techstream on.

(d) Enter the following menus: Powertrain / Engine and ECT / Trouble Codes.

(e) Read the DTCs.

Result:

RESULT	PROCEED TO
DTC P0101 is output	A
DTC P0101 and other DTCs are output	B

HINT:

If any DTCs other than P0101 are output, troubleshoot those DTCs first.

B ▶ **GO TO DTC CHART**

A
▼

2.	**CHECK INTAKE SYSTEM**

(a) Check the intake system for vacuum leaks INFO .

OK:

No leaks from intake system.

NG ▶ **REPAIR OR REPLACE INTAKE SYSTEM**

OK
▼

3.	CHECK PCV HOSE CONNECTIONS

(a) Check the PCV hose connections INFO .

OK:

PCV hose is connected correctly and is not damaged.

NG ▶ **REPAIR OR REPLACE PCV HOSE**

OK ▶ **REPLACE MASS AIR FLOW METER**

Last Modified: 3-10-2010	6.4 C	**From:** 200901
Model Year: 2010	**Model:** Corolla	**Doc ID:** RM000000U5B09BX
Title: 2ZR-FE ENGINE CONTROL: SFI SYSTEM: P0102,P0103: Mass or Volume Air Flow Circuit Low Input (2010 Corolla)		

DTC	**P0102**	**Mass or Volume Air Flow Circuit Low Input**

DTC	**P0103**	**Mass or Volume Air Flow Circuit High Input**

DESCRIPTION

The mass air flow meter is a sensor that measures the amount of air flowing through the throttle valve.

The ECM uses this information to determine the fuel injection time and to provide the appropriate air fuel ratio.

Inside the mass air flow meter, there is a heated platinum wire which is exposed to the flow of intake air by applying a specific electrical current to the wire.

The flow of incoming air cools both the wire and an internal thermistor, affecting their resistance. To maintain a constant temperature value of the hot wire, current is applied to these components in the mass air flow meter. The voltage level is proportional to the airflow through the sensor, and the ECM uses it to calculate the intake air volume.

The circuit is constructed so that the platinum hot wire and the temperature sensor create a bridge circuit, and the power transistor is controlled so that the potentials of A and B remain equal to maintain the predetermined temperature.

HINT:

When any of these DTCs are set, the ECM enters fail-safe mode. During fail-safe mode, the ignition timing is calculated by the ECM, according to the engine RPM and throttle valve position. Fail-safe mode continues until a pass condition is detected.

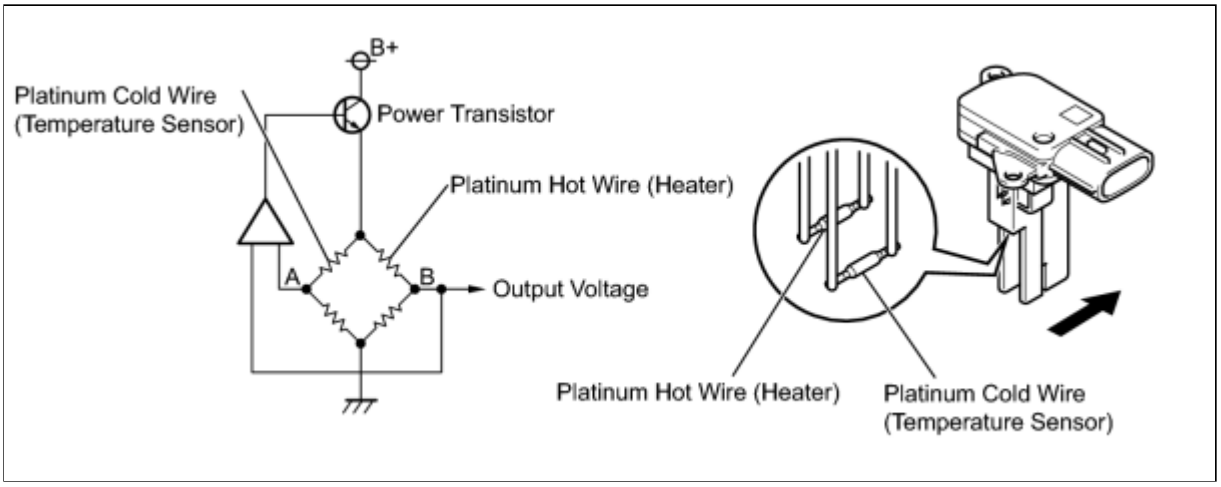

DTC NO.	DTC DETECTION CONDITION	TROUBLE AREA
P0102	Mass air flow meter voltage less than 0.2 V for 3 seconds (1 trip detection logic)	• Open or short in mass air flow meter circuit • Mass air flow meter • ECM
P0103	Mass air flow meter voltage more than 4.9 V for 3 seconds (1 trip detection logic)	• Open or short in mass air flow meter circuit • Mass air flow meter • ECM

HINT:

When any of these DTCs are set, check the air-flow rate by entering the following menus: Powertrain / Engine and ECT / Data List / MAF.

MASS AIR FLOW RATE (GM/SEC)	CONDITION	MALFUNCTION
Approximately 0.0	• Engine not running • 30 seconds after ignition switch turned to ON	• Open in Mass air flow meter power source circuit • Open or short in VG circuit
0.26 or more		• Open in E2G circuit

HINT:

- Perform the inspection with the vehicle indoors and on a level surface.
- Perform the inspection of the mass air flow meter sub-assembly while it is installed to the air cleaner case (installed to the vehicle).
- During the test, do not use an exhaust air duct on the exhaust tail pipe assembly.

MONITOR DESCRIPTION

If there is a defect in the mass air flow meter or an open or short circuit, the voltage level deviates from the normal operating range. The ECM interprets this deviation as a malfunction in the mass air flow meter circuit and sets a DTC.

Example:

When the sensor output voltage remains less than 0.2 V, or more than 4.9 V, for more than 3 seconds, the ECM sets a DTC.

If the malfunction is not repaired successfully, a DTC is set 3 seconds after the engine is next started.

MONITOR STRATEGY

Related DTCs	P0102: Mass air flow meter range check (Low voltage) P0103: Mass air flow meter range check (High voltage)
Required Sensors/Components (Main)	Mass air flow meter
Required Sensors/Components (Related)	Crankshaft position sensor Throttle position sensor
Frequency of Operation	Continuous
Duration	3 seconds
MIL Operation	Immediate: Engine RPM less than 4000 rpm 2 driving cycles: Engine RPM 4000 rpm or more
Sequence of Operation	None

TYPICAL ENABLING CONDITIONS

Monitor runs whenever following DTCs not present	None

TYPICAL MALFUNCTION THRESHOLDS

P0102:

Mass air flow meter voltage	Less than 0.2 V

P0103:

Mass air flow meter voltage	More than 4.9 V

COMPONENT OPERATING RANGE

Mass air flow meter voltage	Between 0.2 V and 4.9 V

WIRING DIAGRAM

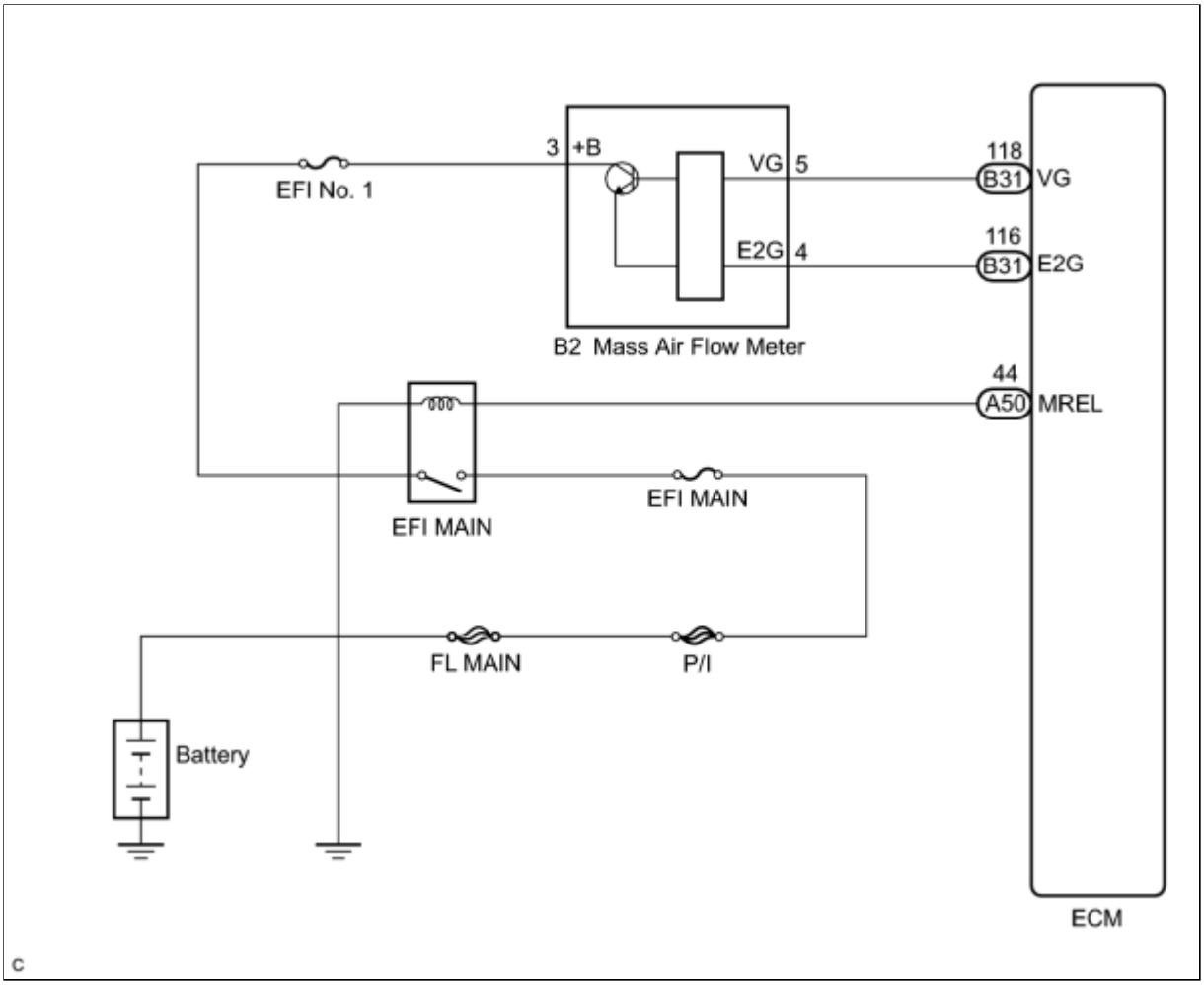

INSPECTION PROCEDURE

HINT:

Read freeze frame data using the Techstream. The ECM records vehicle and driving condition information as freeze frame data the moment a DTC is stored. When troubleshooting, freeze frame data can be helpful in determining whether the vehicle was running or stopped, whether the engine was warmed up or not, whether the air fuel ratio was lean or rich, as well as other data recorded at the time of a malfunction.

PROCEDURE

1.	**READ DTC OUTPUT**

(a) Connect the Techstream to the DLC3.

(b) Turn the Ignition switch to On.

(c) Enter the following menus: Powertrain / Engine and ECT / DTC.

(d) Read the DTCs.

Result:

RESULT	PROCEED TO
DTC P0102 is output	A
DTC P0103 is output	B

HINT:

***: The value should change when the throttle valve is opened or closed with the engine running.**

B ▶ **CHECK HARNESS AND CONNECTOR (SENSOR GROUND)**

A ▼

2.	INSPECT MASS AIR FLOW METER (POWER SOURCE VOLTAGE)

(a) Disconnect the mass air flow meter connector.

(b) Turn the ignition switch to ON.

(c) Measure the voltage according to the value(s) in the table below.

Standard Voltage:

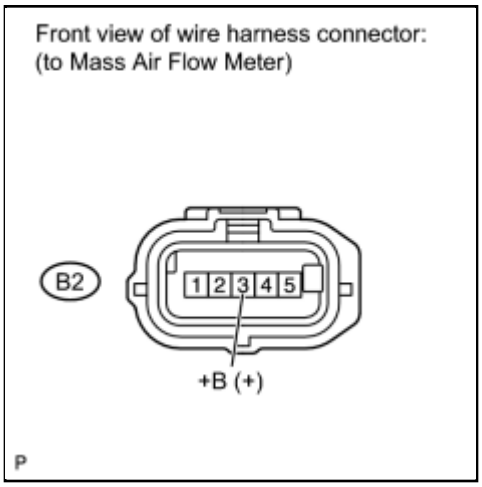

TESTER CONNECTION	SWITCH CONDITION	SPECIFIED CONDITION
B2-3 (+B) - Body ground	Ignition switch ON	11 to 14 V

(d) Reconnect the mass air flow meter connector.

NG ▶ **REPAIR OR REPLACE HARNESS OR CONNECTOR (INTEGRATION RELAY (EFI MAIN RELAY) - MASS AIR FLOW METER)**

OK

3.	**CHECK HARNESS AND CONNECTOR (MASS AIR FLOW METER - ECM)**

(a) Disconnect the mass air flow meter meter connector.

(b) Disconnect the ECM connector.

(c) Measure the resistance according to the value(s) in the table below.

Standard Resistance (Check for Open):

TESTER CONNECTION	CONDITION	SPECIFIED CONDITION
B2-5 (VG) - B31-118 (VG)	Always	Below 1 Ω
B2-4 (E2G) - B31-116 (E2G)		

Standard Resistance (Check for Short):

TESTER CONNECTION	CONDITION	SPECIFIED CONDITION
B2-5 (VG) or B31-118 (VG) - Body ground	Always	10 kΩ or higher

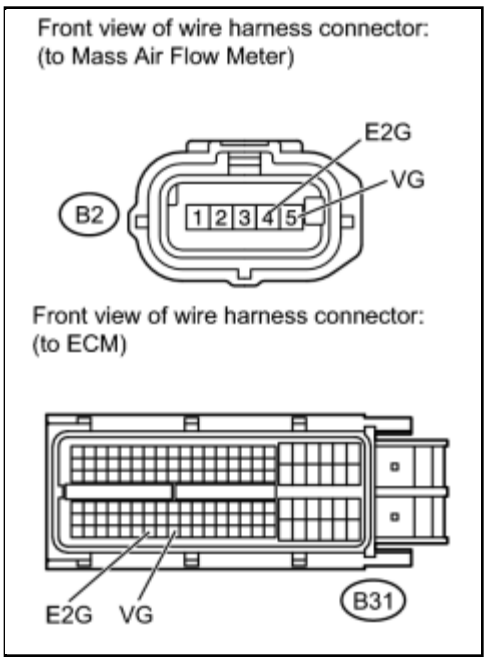

(d) Reconnect the mass air flow meter meter connector.

(e) Reconnect the ECM connector.

NG → **REPAIR OR REPLACE HARNESS OR CONNECTOR (MASS AIR FLOW METER - ECM)**

OK

4.	INSPECT MASS AIR FLOW METER

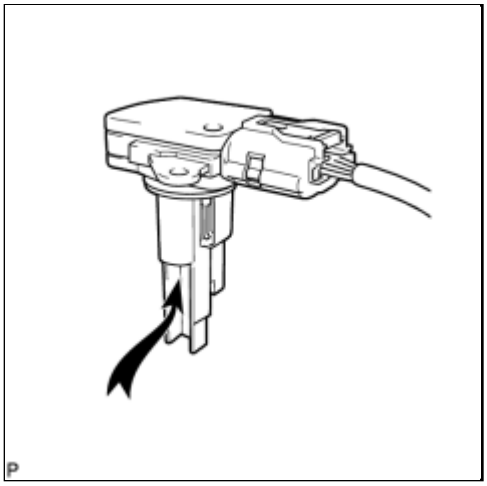

(a) Perform On-vehicle inspection INFO .

(b) Perform Inspection INFO .

(c) Inspect the function of the mass air flow meter.

(1) Remove the mass air flow meter with the connector connected.

(2) Connect the Techstream to the DLC3.

(3) Turn the engine switch on.

(4) Turn the Techstream on.

(5) Enter the following menus: Powertrain / Engine / Data List / MAF.

(6) Blow air to the mass air flow meter and check that the intake air amount reading changes.

OK:

The reading changes.

NG ▶ **REPLACE MASS AIR FLOW METER**

OK ▶ **REPLACE ECM**

5.	CHECK HARNESS AND CONNECTOR (SENSOR GROUND)

(a) Disconnect the mass air flow meter meter connector.

(b) Measure the resistance according to the value(s) in the table below.

Standard Resistance:

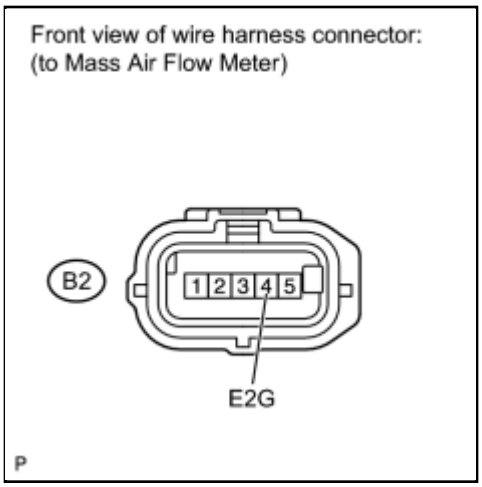

TESTER CONNECTION	CONDITION	SPECIFIED CONDITION
B2-4 (E2G) - Body ground	Always	Below 1 Ω

(c) Reconnect the mass air flow meter meter connector.

NG ▶ **CHECK HARNESS AND CONNECTOR (MASS AIR FLOW METER - ECM)**

OK ▶ **REPLACE MASS AIR FLOW METER**

6. CHECK HARNESS AND CONNECTOR (MASS AIR FLOW METER - ECM)

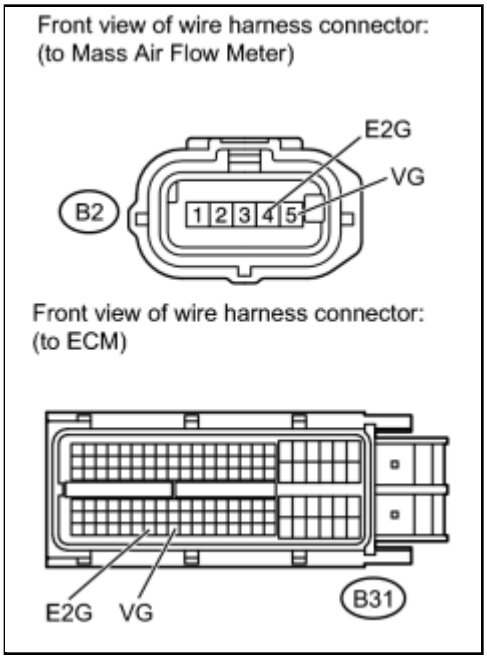

(a) Disconnect the mass air flow meter meter connector.

(b) Disconnect the ECM connector.

(c) Measure the resistance according to the value(s) in the table below.

Standard Resistance (Check for Open):

TESTER CONNECTION	CONDITION	SPECIFIED CONDITION
B2-5 (VG) - B31-118 (VG)	Always	Below 1 Ω
B2-4 (E2G) - B31-116 (E2G)		

Standard Resistance (Check for Short):

TESTER CONNECTION	CONDITION	SPECIFIED CONDITION

TESTER CONNECTION	CONDITION	SPECIFIED CONDITION
B2-5 (VG) or B31-118 (VG) - Body ground	Always	10 kΩ or higher

(d) Reconnect the mass air flow meter meter connector.

(e) Reconnect the ECM connector.

NG ▶ **REPAIR OR REPLACE HARNESS OR CONNECTOR (MASS AIR FLOW METER - ECM)**

OK ▶ **REPLACE ECM**

Last Modified: 3-10-2010	6.4 C	**From:** 200901
Model Year: 2010	**Model:** Corolla	**Doc ID:** RM000000PF3093X
Title: 2ZR-FE ENGINE CONTROL: SFI SYSTEM: P0112,P0113: Intake Air Temperature Circuit Low Input (2010 Corolla)		

DTC	**P0112**	**Intake Air Temperature Circuit Low Input**

DTC	**P0113**	**Intake Air Temperature Circuit High Input**

DESCRIPTION

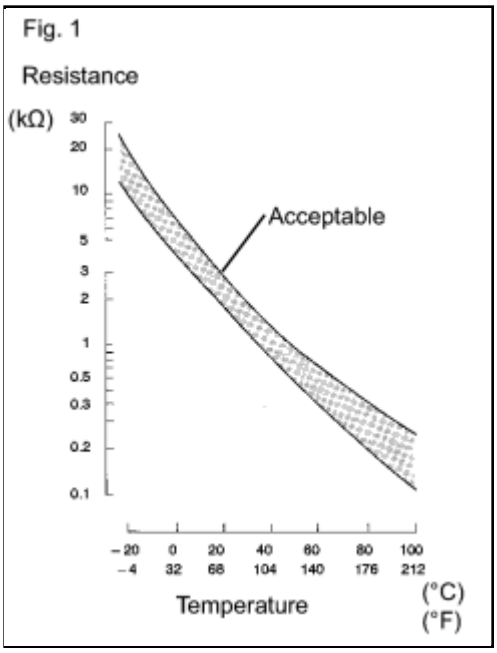

The intake air temperature sensor, mounted in the mass air flow meter, monitors the intake air temperature. The intake air temperature sensor has a built-in thermistor with a resistance that varies according to the temperature of the intake air. When the intake air temperature becomes low, the resistance of the thermistor increases. When the temperature becomes high, the resistance drops. These variations in resistance are transmitted to the ECM as voltage changes (see Fig. 1).
The intake air temperature sensor is powered by a 5 V supply from the THA terminal of the ECM, via resistor R which is located inside the ECM.
Resistor R and the intake air temperature sensor are connected in series. When the resistance value of the intake air temperature sensor changes, according to changes in the intake air temperature, the voltage at terminal THA also varies. Based on this signal, the ECM increases the fuel injection volume when the engine is cold to improve driveability.

HINT:

When any of DTCs P0112 and P0113 are set, the ECM enters fail-safe mode. During fail-safe mode, the intake air temperature is estimated to be 20°C (68°F) by the ECM. Fail-safe mode continues until a pass condition is

detected.

DTC NO.	DTC DETECTION CONDITION	TROUBLE AREA
P0112	Short in intake air temperature sensor circuit for 0.5 seconds (1 trip detection logic)	• Short in intake air temperature sensor circuit • Intake air temperature sensor (built into mass air flow meter) • ECM
P0113	Open in intake air temperature sensor circuit for 0.5 seconds (1 trip detection logic)	• Open in intake air temperature sensor circuit • Intake air temperature sensor (built into mass air flow meter) • ECM

HINT:

When any of these DTCs are set, check the intake air temperature by entering the following menus: Powertrain / Engine and ECT / Intake Air.

TEMPERATURE DISPLAYED	MALFUNCTION
-40°C (-40°F)	Open circuit
140°C (284°F) or higher	Short circuit

MONITOR DESCRIPTION

The ECM monitors the sensor voltage and uses this value to calculate the intake air temperature. When the sensor output voltage deviates from the normal operating range, the ECM interprets this as a malfunction in the intake air temperature sensor and sets a DTC.

Example:

If the sensor output voltage is more than 4.91 V for 0.5 seconds or more, the ECM determines that there is an open in the intake air temperature sensor circuit, and sets DTC P0113. Conversely, if the output voltage is less than 0.18 V for 0.5 seconds or more, the ECM determines that there is a short in the sensor circuit, and sets DTC P0112.

If the malfunction is not repaired successfully, a DTC is set 0.5 seconds after the engine is next started.

MONITOR STRATEGY

Related DTCs	P0112: Intake Air Temperature sensor range check (Low voltage) P0113: Intake air temperature sensor range check (High voltage)
Required Sensors/Components (Main)	Intake air temperature sensor
Required Sensors/Components (Related)	-
Frequency of Operation	Continuous
Duration	0.5 seconds
MIL Operation	Immediate
Sequence of Operation	None

TYPICAL ENABLING CONDITIONS

Monitor runs whenever following DTCs not present	None

TYPICAL MALFUNCTION THRESHOLDS

P0112

Intake air temperature sensor voltage [intake air temperature]	Less than 0.18 V [More than 140°C (284°F)]

P0113

Intake air temperature sensor voltage [intake air temperature]	More than 4.91 V [Less than -40°C (-40°F)]

COMPONENT OPERATING RANGE

Intake air temperature sensor voltage [intake air temperature]	0.18 to 4.91 V [-40 to 140°C (-40 to 284°F)]

WIRING DIAGRAM

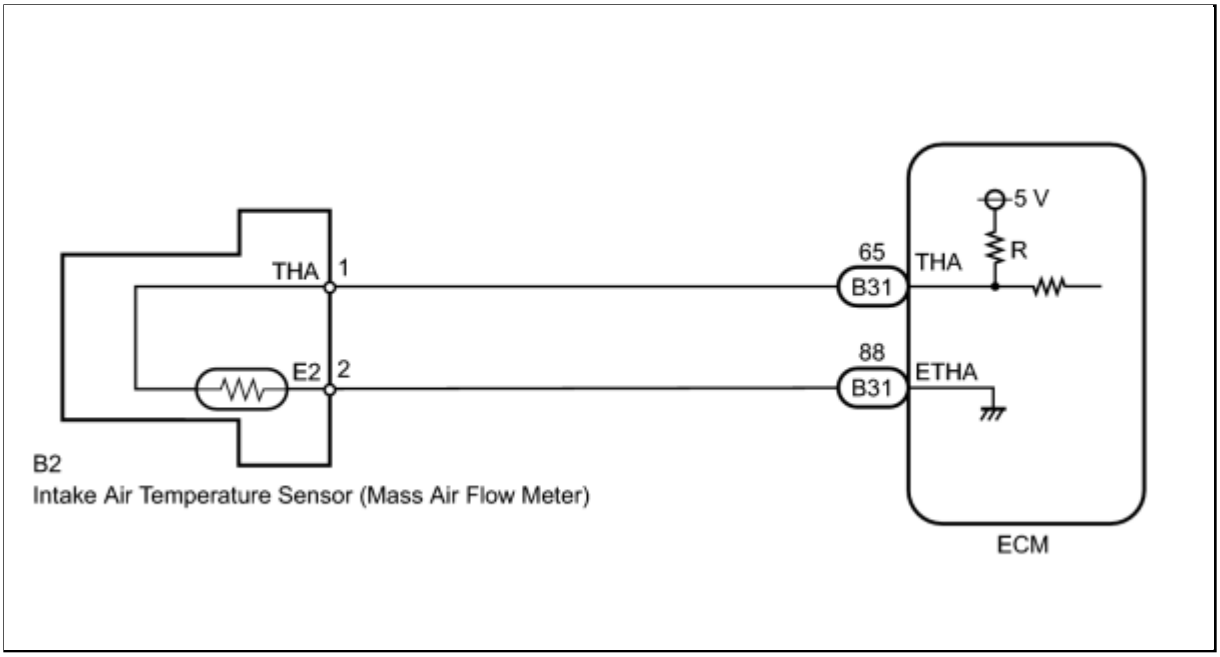

INSPECTION PROCEDURE

HINT:

Read freeze frame data using the Techstream. The ECM records vehicle and driving condition information as freeze frame data the moment a DTC is stored. When troubleshooting, freeze frame data can be helpful in determining whether the vehicle was running or stopped, whether the engine was warmed up or not, whether the air fuel ratio was lean or rich, as well as other data recorded at the time of a malfunction.

PROCEDURE

1.	**READ VALUE USING TECHSTREAM (INTAKE AIR TEMPERATURE)**

(a) Connect the Techstream to the DLC3.

(b) Turn the ignition switch to ON.

(c) Turn the Techstream on.

(d) Enter the following menus: Powertrain / Engine and ECT / Intake Air.

(e) Read the value displayed on the Techstream.

OK:

Same as actual intake air temperature.

Result:

RESULT	PROCEED TO
-40°C (-40°F)	A

RESULT	PROCEED TO
140°C (284°F) or higher	B
Same as actual intake air temperature	C

HINT:

- If there is an open circuit, the Techstream indicates -40°C (-40°F).
- If there is a short circuit, the Techstream indicates 140°C (284°F) or higher.

C ▶ **CHECK FOR INTERMITTENT PROBLEMS**

B ▶ **READ VALUE USING TECHSTREAM (CHECK FOR SHORT IN WIRE HARNESS)**

A ▼

2.	READ VALUE USING TECHSTREAM (CHECK FOR OPEN IN WIRE HARNESS)

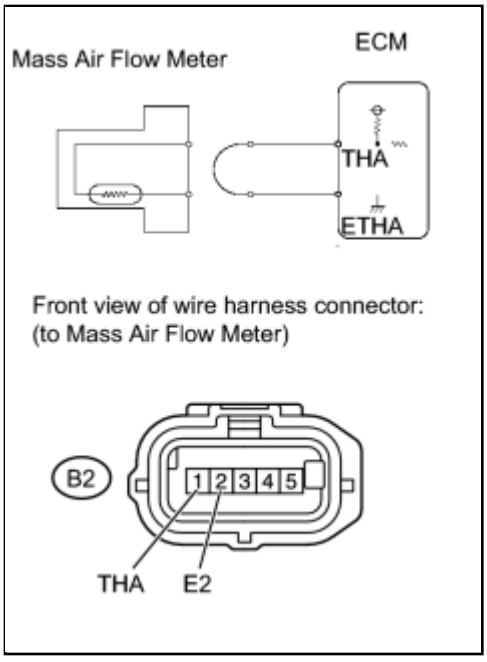

(a) Disconnect the mass air flow meter connector.

(b) Connect terminals 1 (THA) and 2 (E2) of the mass air flow meter wire harness side connector.

(c) Connect the Techstream to the DLC3.

(d) Turn the ignition switch to ON.

(e) Turn the Techstream on.

(f) Enter the following menus: Powertrain / Engine and ECT / Intake Air.

(g) Read the value displayed on the Techstream.

Standard value:
140°C (284°F) or higher

(h) Reconnect the mass air flow meter connector.

NG ▶ **CHECK HARNESS AND CONNECTOR (MASS AIR FLOW METER - ECM)**

OK ▶ **REPLACE MASS AIR FLOW METER**

3.	CHECK HARNESS AND CONNECTOR (MASS AIR FLOW METER - ECM)

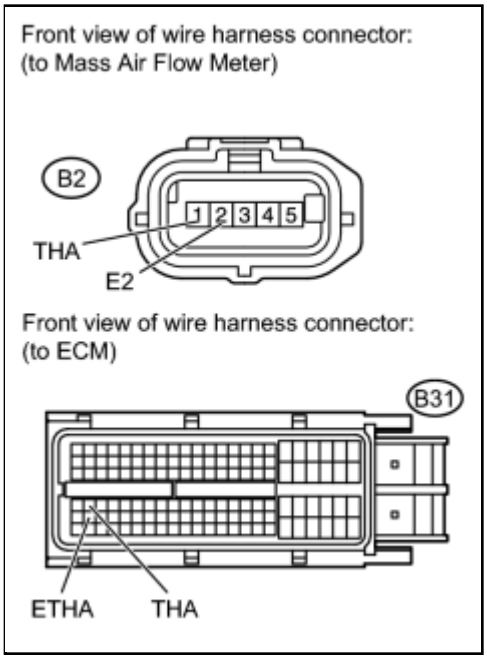

(a) Disconnect the mass air flow meter connector.

(b) Disconnect the ECM connector.

(c) Measure the resistance according to the value(s) in the table below.

Standard Resistance:

TESTER CONNECTION	CONDITION	SPECIFIED CONDITION
B2-1 (THA) - B31-65 (THA)	Always	Below 1 Ω

TESTER CONNECTION	CONDITION	SPECIFIED CONDITION
B2-2 (E2) - B31-88 (ETHA)	Always	Below 1 Ω

(d) Reconnect the mass air flow meter connector.

(e) Reconnect the ECM connector.

NG ▶ **REPAIR OR REPLACE HARNESS OR CONNECTOR (MASS AIR FLOW METER - ECM)**

OK ▶ **REPLACE ECM**

4.	READ VALUE USING TECHSTREAM (CHECK FOR SHORT IN WIRE HARNESS)

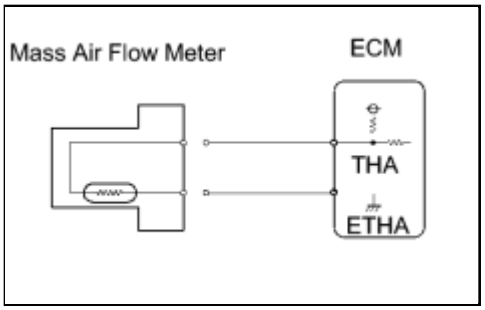

(a) Disconnect the mass air flow meter connector.

(b) Connect the Techstream to the DLC3.

(c) Turn the ignition switch to ON.

(d) Turn the Techstream on.

(e) Enter the following menus: Powertrain / Engine and ECT / Intake Air.

(f) Read the value displayed on the Techstream.

Standard value:
-40°C (-40°F)

(g) Reconnect the mass air flow meter connector.

NG ▶ **CHECK HARNESS AND CONNECTOR (MASS AIR FLOW METER - ECM)**

OK ▶ **REPLACE MASS AIR FLOW METER**

5.	CHECK HARNESS AND CONNECTOR (MASS AIR FLOW METER - ECM)

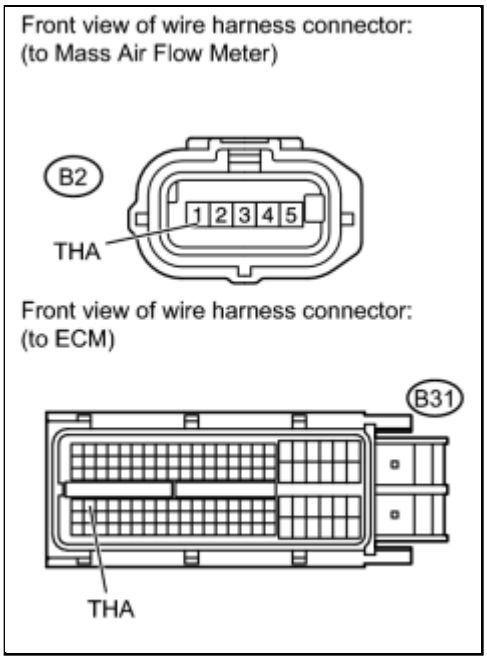

(a) Disconnect the mass air flow meter connector.

(b) Disconnect the ECM connector.

(c) Measure the resistance according to the value(s) in the table below.

Standard Resistance:

TESTER CONNECTION	CONDITION	SPECIFIED CONDITION
B2-1 (THA) or B31-65 (THA) - Body ground	Always	10 kΩ or higher

(d) Reconnect the mass air flow meter connector.

(e) Reconnect the ECM connector.

NG ▶ **REPAIR OR REPLACE HARNESS OR CONNECTOR (MASS AIR FLOW METER - ECM)**

OK ▶ **REPLACE ECM**

Last Modified: 3-10-2010	6.4 C	**From:** 200901
Model Year: 2010	**Model:** Corolla	**Doc ID:** RM000001WPH02OX
Title: 2ZR-FE ENGINE CONTROL: SFI SYSTEM: P0111: Intake Air Temperature Sensor Gradient Too High (2010 Corolla)		

DTC	**P0111**	**Intake Air Temperature Sensor Gradient Too High**

DESCRIPTION

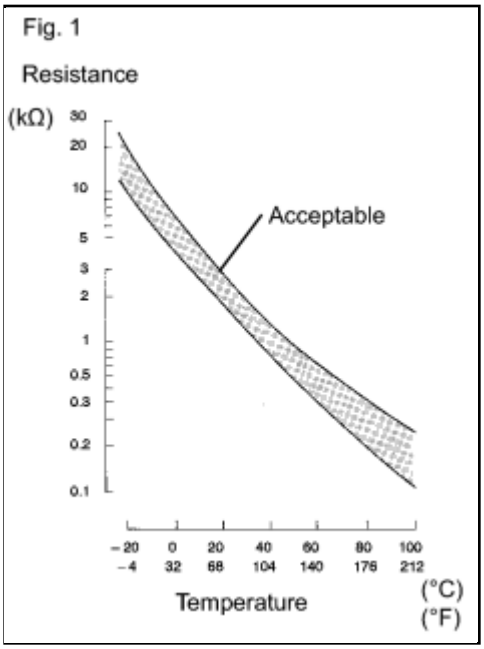

The intake air temperature sensor, mounted in the mass air flow meter, monitors the intake air temperature. The intake air temperature sensor has a built-in thermistor with a resistance that varies according to the temperature of the intake air. When the intake air temperature becomes low, the resistance of the thermistor increases. When the temperature becomes high, the resistance drops. These variations in resistance are transmitted to the ECM as voltage changes (See Fig. 1).
The intake air temperature sensor is powered by a 5 V supply from the THA terminal of the ECM, via resistor R which is located inside the ECM.
Resistor R and the intake air temperature sensor are connected in series. When the resistance value of the intake air temperature sensor changes, according to changes in the intake air temperature, the voltage at terminal THA also varies. Based on this signal, the ECM increases the fuel injection volume when the engine is cold to improve driveability.

DTC NO.	DTC DETECTION CONDITION	TROUBLE AREA
P0111	When either of following conditions are met (2 trip detection logic): • In duration between engine warmed up and next engine starts, change in intake air temperature sensor output below threshold	Mass air flow meter

DTC NO.	DTC DETECTION CONDITION	TROUBLE AREA
	• During engine warming up after cold engine starts, change in intake air temperature sensor output bellow threshold	

MONITOR DESCRIPTION

After warmed engine stop

The ECM monitors the intake air temperature variation in the period from when the engine was warmed up on the previous trip until the next engine start. If the change in the intake air temperature sensor output is less than the threshold, it is determined that a malfunction has occurred in the intake air temperature sensor. When this is detected, the MIL is illuminated and the DTC is set.

After a cold engine in started

The monitor runs when the engine is started cold after 5 hours or more have elapsed since the engine stopped. If the intake air temperature sensor output variation until the engine has warmed up completely is less than the threshold, it is determined that a malfunction has occurred in the intake air temperature sensor. When this is detected in 2 consecutive driving cycles, the MIL is illuminated and the DTC is set.

MONITOR STRATEGY

Related DTCs	P0111: Intake air temperature sensor rationality (After engine stop) P0111: Intake air temperature sensor rationality (After cold engine start)
Required Sensors/Components (Main)	Intake air temperature sensor
Required Sensors/Components (Sub)	-
Frequency of Operation	Once per driving cycle
Duration	5 hours or more
MIL Operation	2 driving cycles
Sequence of Operation	None

TYPICAL ENABLING CONDITIONS

All

Monitor runs whenever following DTCs are not present	None

After Engine Stop

Time after engine start	10 seconds or more
Battery voltage	10.5 V or more
Engine coolant temperature sensor circuit	OK
Engine coolant temperature before engine stop	70°C (158°F) or more
Time that mass air flow is low before engine stop	2100 seconds
Accumulated mass air flow amount before engine stop	1222 g or more (Manual transaxle), 2720 g or more (Automatic transaxle)
Key-off duration	30 minutes

After Cold Engine Start

Key-off duration	5 hours
Time after engine start	10 seconds or more
Engine coolant temperature sensor circuit	OK
Engine coolant temperature	70°C (158°F) or more
Accumulated mass air flow amount	1222 g or more (Manual transaxle), 2720 g or more (Automatic transaxle)
Either of the following conditions 1 or 2 is met:	-
1. Duration while engine load is low	120 seconds or more
2. Duration while engine load is high	10 seconds or more

TYPICAL MALFUNCTION THRESHOLDS

After Engine Stop

Intake air temperature change	Less than 1°C (33.8°F)

After Cold Engine Start

Intake air temperature change	Less than 1°C (33.8°F)

WIRING DIAGRAM

Refer to DTC P0112 INFO .

INSPECTION PROCEDURE

PROCEDURE

1.	**CHECK ANY OTHER DTCS OUTPUT (IN ADDITION TO DTC P0111)**

(a) Connect the Techstream to the DLC3.

(b) Turn the ignition switch to ON.

(c) Turn the Techstream on.

(d) Enter the following menus: Powertrain / Engine and ECT / Trouble Codes.

(e) Read the DTCs.

Result:

RESULT	PROCEED TO
DTC P0111 and other DTCs are output	A
DTC P0111 is output	B

HINT:

If any DTCs other than P0111 are output, troubleshoot those DTCs first.

B ▶ **REPLACE MASS AIR FLOW METER**

A ▶ **GO TO DTC CHART**

Last Modified: 3-10-2010	6.4 C	**From:** 200901
Model Year: 2010	**Model:** Corolla	**Doc ID:** RM000000PF509UX
Title: 2ZR-FE ENGINE CONTROL: SFI SYSTEM: P0115,P0117,P0118: Engine Coolant Temperature Circuit Malfunction (2010 Corolla)		

DTC	**P0115**	**Engine Coolant Temperature Circuit Malfunction**

DTC	**P0117**	**Engine Coolant Temperature Circuit Low Input**

DTC	**P0118**	**Engine Coolant Temperature Circuit High Input**

DESCRIPTION

A thermistor, whose resistance value varies according to the engine coolant temperature, is built into the engine coolant temperature sensor.

The structure of the sensor and its connection to the ECM are the same as those of the intake air temperature sensor.

HINT:

When any of DTCs P0115, P0117 and P0118 are set, the ECM enters fail-safe mode. During fail-safe mode, the engine coolant temperature is estimated to be 80°C (176°F) by the ECM. Fail-safe mode continues until a pass condition is detected.

DTC NO.	DTC DETECTION CONDITION	TROUBLE AREA
P0115	Open or short in Engine Coolant Temperature sensor circuit for 0.5 seconds (1 trip detection logic)	• Open or short in engine coolant temperature sensor circuit • Engine coolant temperature sensor • ECM
P0117	Short in Engine Coolant Temperature sensor circuit for 0.5 seconds (1 trip detection logic)	• Short in engine coolant temperature sensor circuit • Engine coolant temperature sensor • ECM
P0118	Open in Engine Coolant Temperature sensor circuit for 0.5 seconds (1 trip detection logic)	• Open in engine coolant temperature sensor circuit

DTC NO.	DTC DETECTION CONDITION	TROUBLE AREA
		• Engine coolant temperature sensor • ECM

HINT:

When any of these DTCs are set, check the engine coolant temperature by entering the following menus: Powertrain / Engine and ECT / Data List / Coolant Temp.

TEMPERATURE DISPLAYED	MALFUNCTION
-40°C (-40°F)	Open circuit
140°C (284°F) or higher	Short circuit

MONITOR DESCRIPTION

The engine coolant temperature sensor is used to monitor the engine coolant temperature. The engine coolant temperature sensor has a thermistor with a resistance that varies according to the temperature of the engine coolant. When the coolant temperature becomes low, the resistance in the thermistor increases. When the temperature becomes high, the resistance drops. These variations in resistance are reflected in the output voltage from the sensor. The ECM monitors the sensor voltage and uses this value to calculate the engine coolant temperature. When the sensor output voltage deviates from the normal operating range, the ECM interprets this as a fault in the engine coolant temperature sensor circuit and sets a DTC.

Example:

If the sensor output voltage is more than 4.91 V for 0.5 seconds or more, the ECM determines that there is an open in the engine coolant temperature sensor circuit, and sets DTC P0118. Conversely, if the voltage output is less than 0.14 V for 0.5 seconds or more, the ECM determines that there is a short in the sensor circuit, and sets DTC P0117.

If the malfunction is not repaired successfully, a DTC is set 0.5 seconds after the engine is next started.

MONITOR STRATEGY

Related DTCs	P0115: Engine coolant temperature sensor range check (Fluctuating) P0117: Engine coolant temperature sensor range check (Low voltage) P0118: Engine coolant temperature sensor range check (High voltage)

Required Sensors/Components (Main)	Engine coolant temperature sensor
Required Sensors/Components (Related)	-
Frequency of Operation	Continuous
Duration	0.5 seconds
MIL Operation	Immediate
Sequence of Operation	None

TYPICAL ENABLING CONDITIONS

Monitor runs whenever following DTCs not present	None

TYPICAL MALFUNCTION THRESHOLDS

P0115

Engine coolant temperature sensor voltage	Less than 0.14 V, or more than 4.91 V

P0117

Engine coolant temperature sensor voltage [engine coolant temperature]	Less than 0.14 V [More than 140°C (284°F)]

P0118

Engine coolant temperature sensor voltage [engine coolant temperature]	More than 4.91 V [Less than -40°C (-40°F)]

COMPONENT OPERATING RANGE

Engine coolant temperature sensor voltage [engine coolant temperature]	0.14 to 4.91 V [-40 to 140°C (-40 to 284°F)]

WIRING DIAGRAM

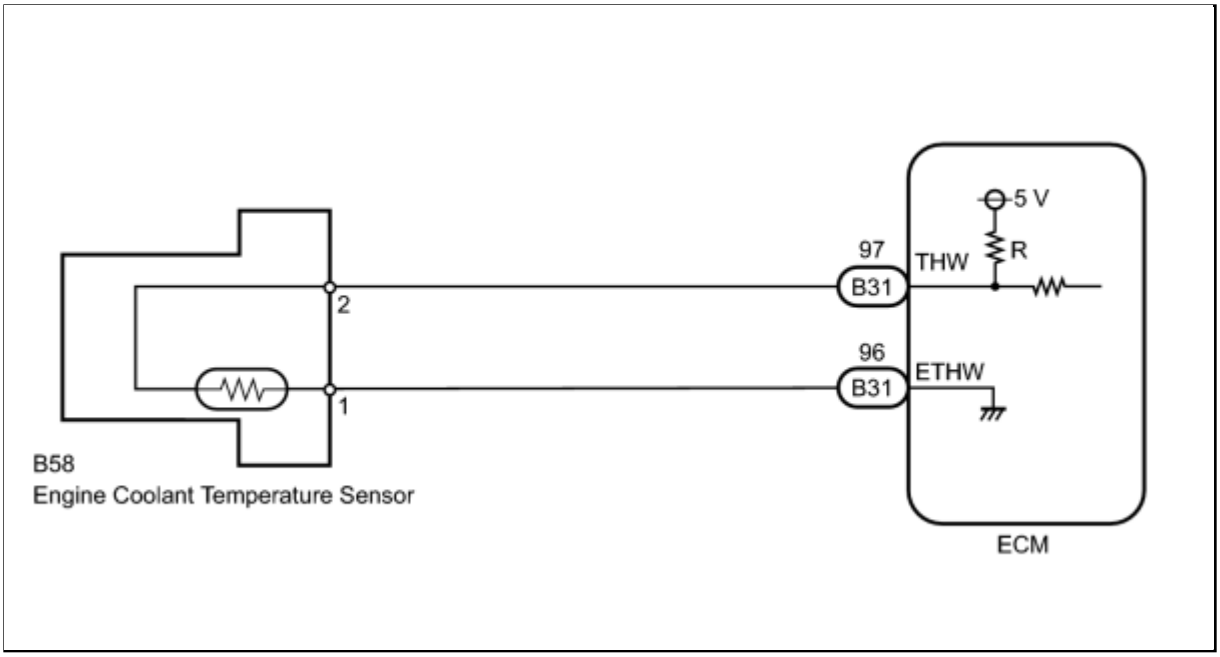

INSPECTION PROCEDURE

HINT:

Read freeze frame data using the Techstream. The ECM records vehicle and driving condition information as freeze frame data the moment a DTC is stored. When troubleshooting, freeze frame data can be helpful in determining whether the vehicle was running or stopped, whether the engine was warmed up or not, whether the air fuel ratio was lean or rich, as well as other data recorded at the time of a malfunction.

PROCEDURE

1.	**READ VALUE USING TECHSTREAM (ENGINE COOLANT TEMPERATURE)**

(a) Connect the Techstream to the DLC3.

(b) Turn the ignition switch to ON.

(c) Turn the Techstream on.

(d) Enter the following menus: Powertrain / Engine and ECT / Data List / Coolant Temp.

(e) Read the value displayed on the Techstream.

Standard value:
Between 80°C and 100°C (167°F and 212°F) with warm engine.
Result:

RESULT	PROCEED TO
-40°C (-40°F)	A

RESULT	PROCEED TO
140°C (284°F) or higher	B
Between 80°C and 100°C (176°F and 212°F)	C

HINT:

- If there is an open circuit, the Techstream indicates -40°C (-40°F).
- If there is a short circuit, the Techstream indicates 140°C (284°F) or higher.

C ▶ **CHECK FOR INTERMITTENT PROBLEMS**

B ▶ **READ VALUE USING TECHSTREAM (CHECK FOR SHORT IN WIRE HARNESS)**

A ▼

2.	**READ VALUE USING TECHSTREAM (CHECK FOR OPEN IN WIRE HARNESS)**

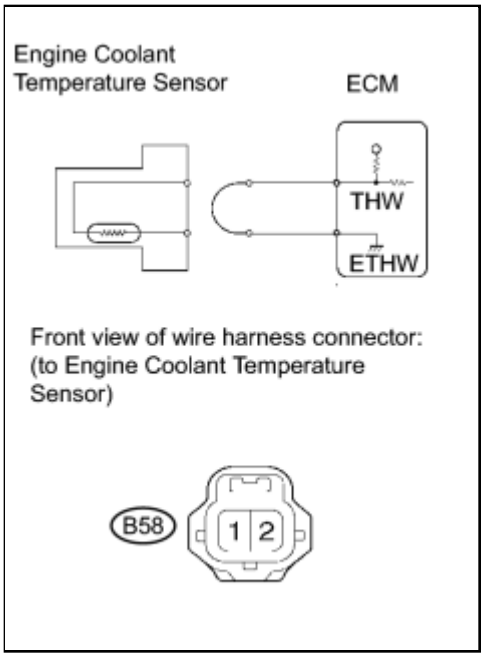

(a) Disconnect the engine coolant temperature sensor connector.

(b) Connect terminals 1 and 2 of the engine coolant temperature sensor connector on the wire harness side.

(c) Connect the Techstream to the DLC3.

(d) Turn the ignition switch to ON.

(e) Turn the Techstream on.

(f) Enter the following menus: Powertrain / Engine and ECT / Data List / Coolant Temp.

(g) Read the value displayed on the Techstream.

Standard value:
140°C (284°F) or higher.

(h) Reconnect the engine coolant temperature sensor connector.

NG ▶ **CHECK HARNESS AND CONNECTOR (ENGINE COOLANT TEMPERATURE SENSOR - ECM)**

OK ▶ **REPLACE ENGINE COOLANT TEMPERATURE SENSOR**

3.	**CHECK HARNESS AND CONNECTOR (ENGINE COOLANT TEMPERATURE SENSOR - ECM)**

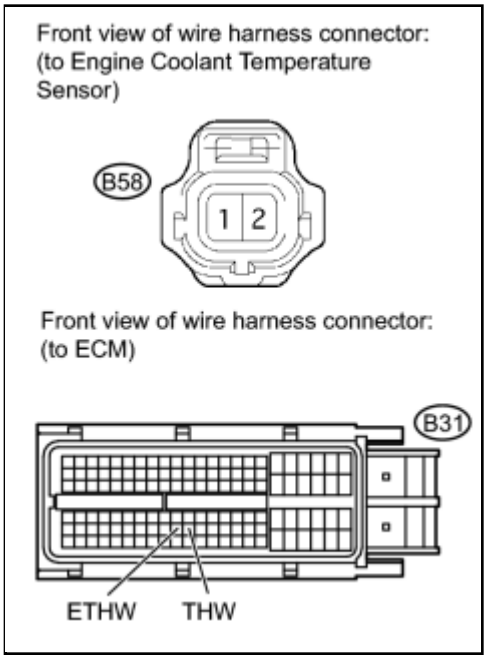

(a) Disconnect the engine coolant temperature sensor connector.

(b) Disconnect the ECM connector.

(c) Measure the resistance according to the value(s) in the table below.

Standard Resistance:

TESTER CONNECTION	CONDITION	SPECIFIED CONDITION

TESTER CONNECTION	CONDITION	SPECIFIED CONDITION
B58-2 - B31-97 (THW)	Always	Below 1 Ω
B58-1 - B31-96 (ETHW)	Always	Below 1 Ω

(d) Reconnect the engine coolant temperature sensor connector.

(e) Reconnect the ECM connector.

NG ▶ **REPAIR OR REPLACE HARNESS OR CONNECTOR (ENGINE COOLANT TEMPERATURE SENSOR - ECM)**

OK ▶ **REPLACE ECM**

4.	READ VALUE USING TECHSTREAM (CHECK FOR SHORT IN WIRE HARNESS)

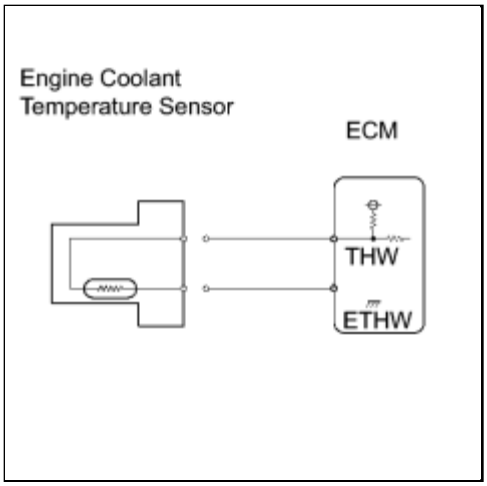

(a) Disconnect the engine coolant temperature sensor connector.

(b) Connect the Techstream to the DLC3.

(c) Turn the ignition switch to ON.

(d) Turn the Techstream on.

(e) Enter the following menus: Powertrain / Engine and ECT / Data List / Coolant Temp.

(f) Read the value displayed on the Techstream.

Standard value:
-40°C (-40°F)

(g) Reconnect the engine coolant temperature sensor connector.

NG ▶ **CHECK HARNESS AND CONNECTOR (ENGINE COOLANT TEMPERATURE SENSOR - ECM)**

OK ▶ REPLACE ENGINE COOLANT TEMPERATURE SENSOR

5.	CHECK HARNESS AND CONNECTOR (ENGINE COOLANT TEMPERATURE SENSOR - ECM)

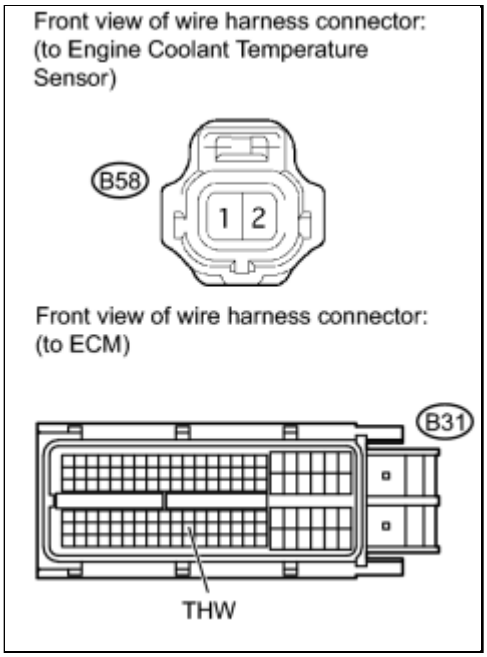

(a) Disconnect the engine coolant temperature sensor connector.

(b) Disconnect the ECM connector.

(c) Measure the resistance according to the value(s) in the table below.

Standard Resistance:

TESTER CONNECTION	CONDITION	SPECIFIED CONDITION
B58-2 or B31-97 (THW) - Body ground	Always	10 kΩ or higher

(d) Reconnect the engine coolant temperature sensor connector.

(e) Reconnect the ECM connector.

NG ▶ REPAIR OR REPLACE HARNESS OR CONNECTOR (ENGINE COOLANT TEMPERATURE SENSOR - ECM)

OK ▶ REPLACE ECM

Last Modified: 3-10-2010	6.4 C	**From:** 200901
Model Year: 2010	**Model:** Corolla	**Doc ID:** RM000000WBY06YX
Title: 2ZR-FE ENGINE CONTROL: SFI SYSTEM: P0136-P0139: Oxygen Sensor Circuit Malfunction (Bank 1 Sensor 2) (2010 Corolla)		

DTC	**P0136**	**Oxygen Sensor Circuit Malfunction (Bank 1 Sensor 2)**

DTC	**P0137**	**Oxygen Sensor Circuit Low Voltage (Bank 1 Sensor 2)**

DTC	**P0138**	**Oxygen Sensor Circuit High Voltage (Bank 1 Sensor 2)**

DTC	**P0139**	**Oxygen Sensor Circuit Slow Response (Bank 1 Sensor 2)**

DESCRIPTION

HINT:

Sensor 2 refers to the sensor mounted behind the three-way catalytic converter and located far from the engine assembly.

In order to obtain a high purification rate of the carbon monoxide (CO), hydrocarbon (HC) and nitrogen oxide (NOx) components in the exhaust gas, a three-way catalytic converter is used. For the most efficient use of the three-way catalytic converter, the air fuel ratio must be precisely controlled so that it is always close to the stoichiometric air fuel level. For the purpose of helping the ECM to deliver accurate air fuel ratio control, a heated oxygen sensor is used.

The heated oxygen sensor is located behind the three-way catalytic converter, and detects the oxygen concentration in the exhaust gas. Since the sensor is integrated with the heater that heats the sensing portion, it is possible to detect the oxygen concentration even when the intake air volume is low (the exhaust gas temperature is low).

When the air fuel ratio becomes lean, the oxygen concentration in the exhaust gas is rich. The heated oxygen sensor informs the ECM that the post-three-way catalytic converter air fuel ratio is lean (low voltage, i.e. less than 0.45 V).

Conversely, when the air fuel ratio is richer than the stoichiometric air fuel level, the oxygen concentration in the exhaust gas becomes lean. The heated oxygen sensor informs the ECM that the post-three-way catalytic converter air fuel ratio is rich (high voltage, i.e. more than 0.45 V). The heated oxygen sensor has the property of changing its output voltage drastically when the air fuel ratio is close to the stoichiometric level.

The ECM uses the supplementary information from the heated oxygen sensor to determine whether the air fuel ratio after the three-way catalytic converter is rich or lean, and adjusts the fuel injection time accordingly. Thus, if the heated oxygen sensor is working improperly due to internal malfunctions, the ECM is unable to compensate for deviations in the primary air fuel ratio control.

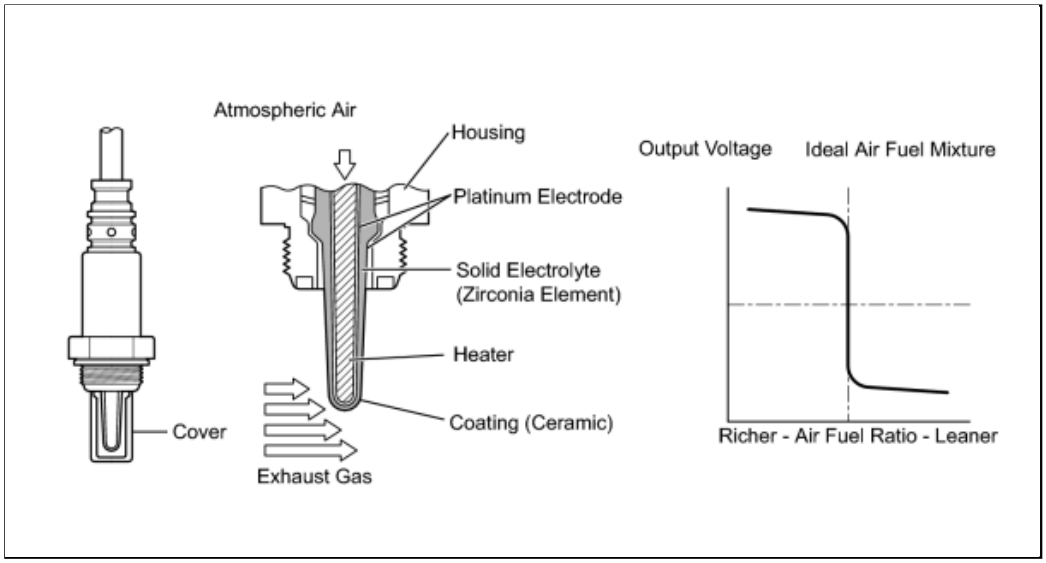

DTC NO.	DTC DETECTION CONDITION	TROUBLE AREA
P0136	• Abnormal voltage output: During active air fuel ratio control, following conditions (a) and (b) met for certain period of time (2 trip detection logic) (a) Heated oxygen sensor voltage does not decrease to less than 0.21 V (b) Heated oxygen sensor voltage does not increase to more than 0.59 V • Low impedance: Sensor impedance less than 5 Ω for more than 30 seconds when ECM presumes sensor to being warmed up and operating normally (2 trip detection logic)	• Open or short in heated oxygen sensor (sensor 2) • Heated oxygen sensor (sensor 2) • Heated oxygen sensor heater (sensor 2) • Air fuel ratio sensor (sensor 1) • Gas leak from exhaust system
P0137	• Low voltage (open): During active air fuel ratio control, following conditions (a) and (b) met for certain period of time (2 trip detection logic) (a) Heated oxygen sensor voltage output less than 0.21 V (b) Target air fuel ratio rich • High impedance: Sensor impedance 15 kΩ or more for more than 90 seconds when ECM presumes sensor to be warmed up and operating normally (2 trip detection logic)	• Open or short in heated oxygen sensor (sensor 2) • Heated oxygen sensor (sensor 2) • Heated oxygen sensor heater (sensor 2) • Air fuel ratio sensor (sensor 1) • Gas leak from exhaust system
P0138	• High voltage (short): During active air fuel ratio control, following conditions (a) and (b) met for certain period of time (2 trip detection logic) (a) Heated oxygen sensor voltage output 0.59 V or more (b) Target air fuel ratio lean	• Short in heated oxygen sensor (sensor 2) circuit • Heated oxygen sensor (sensor 2) • ECM

DTC NO.	DTC DETECTION CONDITION	TROUBLE AREA
	• Extremely high voltage (short): Heated oxygen sensor voltage output exceeds 1.2 V for more than 10 seconds (2 trip detection logic)	
P0139	• Heated oxygen sensor (sensor 2) voltage does not drop to below 0.2 V immediately after fuel cut starts • Heated oxygen sensor (voltage does not drop from 0.35 to 0.2 V immediately after air fuel cut starts. (2 trip detection logic))	• Short in heated oxygen sensor (sensor 2) circuit • Heated oxygen sensor (sensor 2) • ECM

for Mexico Models

DTC NO.	DTC DETECTION CONDITIONS	TROUBLE AREAS
P0136	Not applicable	None
P0137	• Low voltage (open): During active air-fuel ratio control, both of the following conditions are met for a certain period of time (2 trip detection logic): (a) The Heated oxygen sensor voltage output is below 0.21 V. (b) The target air-fuel ratio is rich.	• Open in Heated oxygen sensor (sensor 2) circuit • Heated oxygen sensor (sensor 2) • Heated oxygen sensor heater (sensor 2) • EFI relay • Gas leak from exhaust system
P0138	Not applicable	None
P0139	Not applicable	None

MONITOR DESCRIPTION

1. Active Air Fuel Ratio Control

The ECM usually performs air fuel ratio feedback control so that the air fuel ratio sensor output indicates a near stoichiometric air fuel level. This vehicle includes active air fuel ratio control in addition to regular air fuel ratio control. The ECM performs active air fuel ratio control to detect any deterioration in the three-way catalytic converter and heated oxygen sensor malfunctions (refer to the diagram below).

Active air fuel ratio control is performed for approximately 15 to 20 seconds while driving with a warm engine. During active air fuel ratio control, the air fuel ratio is forcibly regulated to become lean or rich by the ECM. If the ECM detects a malfunction, a DTC is set.

2. Abnormal Voltage Output of Heated Oxygen Sensor (DTC P0136)

While the ECM is performing active air fuel ratio control, the air fuel ratio is forcibly regulated to become rich or lean. If the sensor is not functioning properly, the voltage output variation is small. For example, when the heated oxygen sensor voltage does not decrease to less than 0.21 V or does not increase to more than 0.59 V during active air fuel ratio control, the ECM determines that the sensor voltage output is abnormal and sets DTCs P0136.

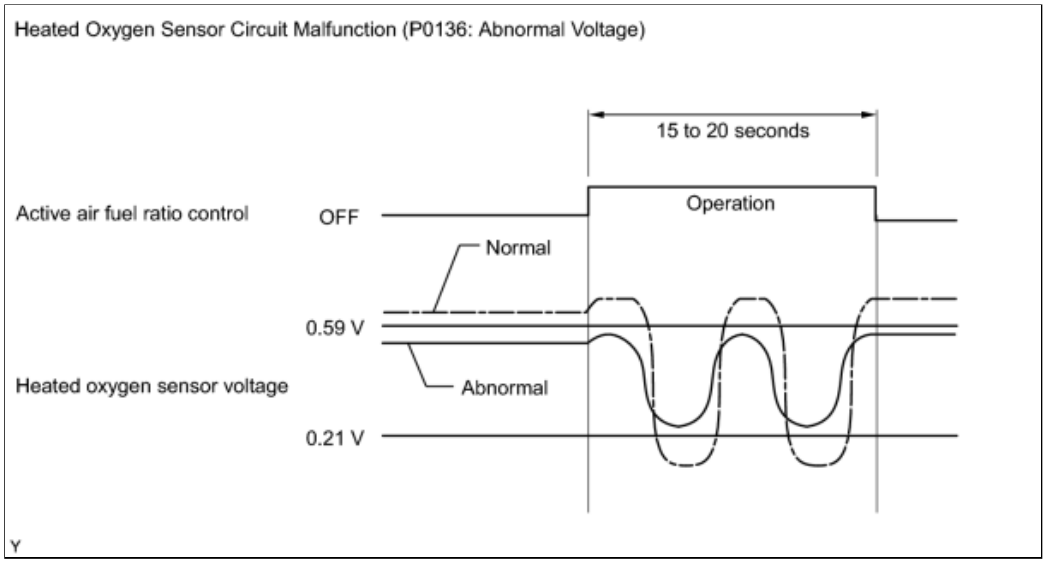

3. Open or Short in Heated Oxygen Sensor Circuit (DTCs P0137 or P0138)

During active air fuel ratio control, the ECM calculates the oxygen storage capacity * of the three-way catalytic converter by forcibly regulating the air fuel ratio to become rich or lean.

If the heated oxygen sensor has an open or short, or the voltage output of the sensor noticeably decreases, the oxygen storage capacity indicates an extraordinarily high value. Even if the ECM attempts to continue regulating the air fuel ratio to become rich or lean, the heated oxygen sensor output does not change.

While performing active air fuel ratio control, when the target air fuel ratio is rich and the heated oxygen sensor voltage output is less than 0.21 V (lean), the ECM interprets this as an abnormally low sensor output voltage and sets DTC P0137. When the target air fuel ratio is lean and the voltage output is 0.59 V or more (rich) during active air fuel ratio control, the ECM determines that the sensor voltage output is abnormally high, and sets DTC P0138.

HINT:

DTC P0138 is also set if the heated oxygen sensor voltage output is more than 1.2 V for 10 seconds or more.

***: The three-way catalytic converter has the capability to store oxygen. The oxygen storage capacity and the emission purification capacity of the three-way catalytic converter are mutually related. The ECM determines whether the catalyst has deteriorated, based on the calculated oxygen storage capacity value** INFO **.**

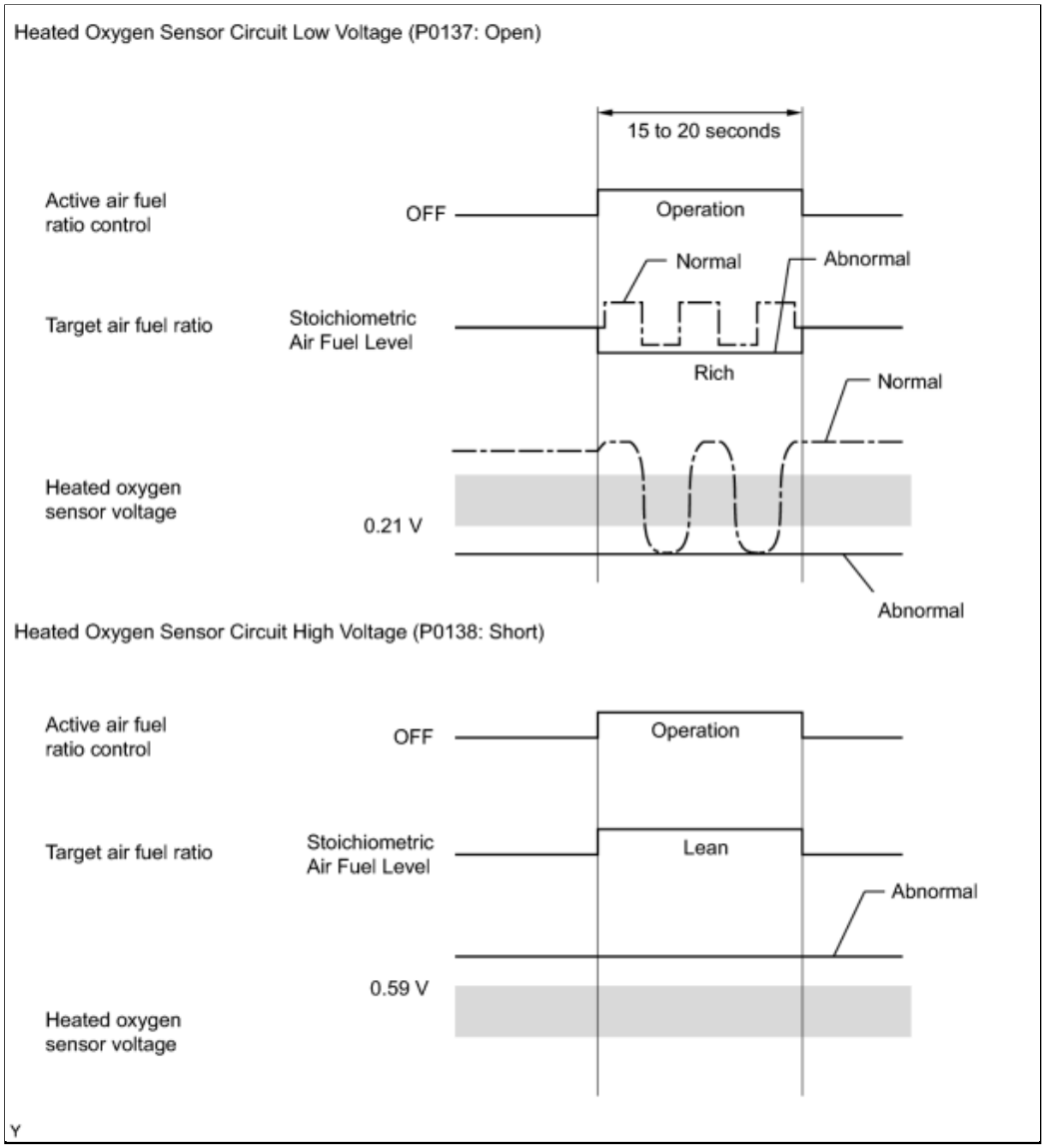

4. High or Low Impedance of Heated Oxygen (HO2) Sensor (DTCs P0136 or P0137)

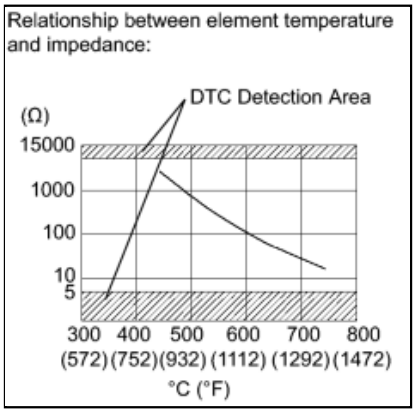

During normal air fuel ratio feedback control, there are small variations in the exhaust gas oxygen concentration. In order to continuously monitor the slight variation of the heated oxygen sensor signal while the engine is running, the impedance* of the sensor is measured by the ECM. The ECM determines that there is a malfunction in the sensor when the measured impedance deviates from the standard range.

*: The effective resistance in an alternating current electrical circuit.

HINT:

- The impedance cannot be measured using an ohmmeter.
- DTC P0136 indicates the deterioration of the heated oxygen sensor. The ECM sets the DTCs by calculating the impedance of the sensor when the typical enabling conditions are satisfied (2 driving cycles).
- DTC P0137 indicates an open or short circuit in the heated oxygen sensor (2 driving cycles). The ECM sets the DTCs when the impedance of the sensor exceeds the threshold of 15 kΩ.

5. Abnormal Voltage Output of Heated Oxygen Sensor During Fuel-cut (DTC P0139)

The sensor output voltage drops to below 0.2 V (extremely Lean status) immediately when the vehicle decelerates and fuel

cut is operating. If the voltage does not drop to below 0.2 V for 7 seconds or more, or the voltage does not drop from 0.35 to 0.2 V for 1 second, the ECM determines that the sensor response has deteriorated, illuminates the MIL and sets a DTC.

MONITOR STRATEGY

Related DTCs	P0136: Heated oxygen sensor output voltage (Output voltage) P0136: Heated oxygen sensor impedance (Low) P0137: Heated oxygen sensor output voltage (Low voltage) P0137: Heated oxygen sensor impedance (High) P0138: Heated oxygen sensor output voltage (High voltage) P0138: Heated oxygen sensor output voltage (Extremely high) P0139: Heated oxygen sensor output voltage during fuel cut
Required Sensors/Components (Main)	Heated oxygen sensor (sensor 2)
Required Sensors/Components (Related)	Crankshaft position sensor Engine coolant temperature sensor Mass air flow meter Throttle position sensor
Frequency of Operation	Once per driving cycle: Active air fuel ratio control detection, Heated oxygen sensor output voltage during fuel cut Continuous: Other
Duration	20 seconds: Heated oxygen sensor output (Output voltage, High voltage, Low voltage) 30 seconds: Heated oxygen sensor impedance (Low) 90 seconds: Heated oxygen sensor impedance (High) 10 seconds: Heated oxygen sensor voltage (Extremely high) 7 seconds: Heated oxygen sensor voltage during fuel cut
MIL Operation	2 driving cycles
Sequence of Operation	None

TYPICAL ENABLING CONDITIONS

All

Monitor runs whenever following DTCs not present	P0016 (VVT System Bank 1 - Misalignment) P0017 (Exhaust VVT System - Misalignment) P0031, P0032 (Air Fuel Ratio Sensor Heater - Sensor 1) P0037, P0038 (Heated Oxygen Sensor Heater - Sensor 2) P0102, P0103 (Mass Air Flow Meter) P0112, P0113 (Intake Air Temperature Sensor) P0115, P0117, P0118 (Engine Coolant Temperature Sensor) P0120, P0121 P0122, P0123, P0220, P0222, P0223, P2135 (Throttle Position Sensor) P0125 (Insufficient Engine Coolant Temperature for Closed Loop Fuel Control) P0128 (Thermostat) P0171, P0172 (Fuel System) P0301, P0302, P0303, P0304 (Misfire) P0335 (Crankshaft Position Sensor) P0340 (Camshaft Position Sensor) P0451, P0452 (EVAP System) P0500 (Vehicle Speed Sensor) P2195, P2196, P2237, P2238, P2239, P2252, P2253, P2A00 (Air Fuel Ratio

	Sensor - Sensor 1)

Heated Oxygen Sensor Output Voltage (Output Voltage, High Voltage and Low Voltage)

Active air fuel ratio control	Performing
Active air fuel ratio control begins when all of following conditions met:	-
Battery voltage	11 V or more
Engine coolant temperature	75°C (167°F) or more
Idling	OFF
Engine RPM	Less than 4000 rpm
Air fuel ratio sensor status	Activated
Fuel system status	Closed loop
Fuel cut	OFF
Engine load	10 to 80%
Shift position	4th or more

Heated Oxygen Sensor Impedance (Low)

Battery voltage	11 V or more
Estimated sensor temperature	Less than 700°C (1292°F)
ECM monitor	Completed
DTC P0607	Not set

Heated Oxygen Sensor Impedance (High)

Battery voltage	11 V or more
Estimated sensor temperature	450 to 750°C (842 to 1382°F) or higher
DTC P0607	Not set

Heated Oxygen Sensor Output Voltage (Extremely High)

Battery voltage	11 V or more
Time after engine start	2 seconds or more

Heated Oxygen Sensor Voltage During Fuel-cut

Engine coolant temperature	75°C (167°F) or more
Catalyst temperature	400°C (752°F) or more
Fuel cut	ON

TYPICAL MALFUNCTION THRESHOLDS

Heated Oxygen Sensor Output Voltage (Output Voltage)

Either of following conditions met:	1 or 2
1. All of following conditions (a), (b) and (c) met	-

(a) Commanded air fuel ratio	14.2 or less
(b) Heated oxygen sensor voltage	0.21 to 0.59 V
(c) Oxygen storage capacity of catalyst	2 g or more
2. All of following conditions (d), (e) and (f) met	-
(d) Commanded air fuel ratio	15 or more
(e) Heated oxygen sensor voltage	0.21 to 0.59 V
(f) Oxygen storage capacity of catalyst	2 g or more

Heated Oxygen Sensor Output Voltage (Low Output Voltage)

All of following conditions (a), (b) and (c) met	-
(a) Commanded air fuel ratio	14.2 or less
(b) Heated oxygen sensor voltage	Less than 0.21 V
(c) Oxygen storage capacity of catalyst	2 g or more

Heated Oxygen Sensor Output Voltage (High Output Voltage)

All of following conditions (a), (b) and (c) met	-
(a) Commanded air fuel ratio	15 or more
(b) Heated oxygen sensor voltage	More than 0.59 V
(c) Oxygen storage capacity of catalyst	2 g or more

Heated Oxygen Sensor Impedance (Low)

Duration of following condition	30 seconds or more
Heated oxygen sensor impedance	Less than 5 Ω

Heated Oxygen Sensor Impedance (High)

Duration of following condition	90 seconds or more
Heated oxygen sensor impedance	15 kΩ or more

Heated Oxygen Sensor Output Voltage (Extremely High)

Duration of following condition	10 seconds or more
Heated oxygen sensor voltage	1.2 V or higher

Heated Oxygen Sensor Voltage During Fuel-cut

Duration until rear heated oxygen sensor voltage drops to 0.2 V after fuel cut	7 seconds or more
Duration until rear heated oxygen sensor voltage drops to from 0.35 to 0.2 V after fuel cut	1 second or more

COMPONENT OPERATING RANGE

Duration of following condition	30 seconds or more

Heated oxygen sensor voltage	Varies between 0.1 V and 0.9 V

MONITOR RESULT

Refer to Checking Monitor Status INFO .

CONFIRMATION DRIVING PATTERN

P0136, P0137 and P0138

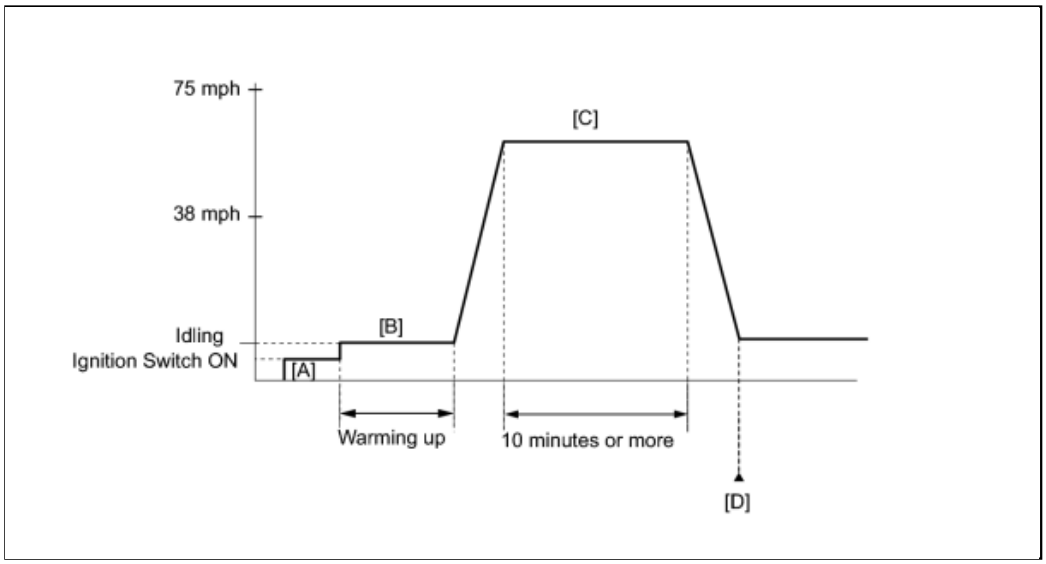

1. Clear the DTCs (even if no DTCs are stored, perform the clear DTC procedure) INFO .
2. Turn the ignition switch off.
3. Turn the ignition switch to ON and turn the Techstream on [A].
4. Start the engine and warm it up until the engine coolant temperature reaches 75°C (167°F) or higher [B].
5. With the transmission in 4th gear or higher, drive the vehicle at 38 to 75 mph (60 to 120 km/h) for 10 minutes or more [C].
6. Enter the following menus: Powertrain / Engine / Utility / All Readiness.
7. Input the DTC: P0136, P0137 or P0138.
8. Check the DTC judgment result [D].

TECHSTREAM DISPLAY	DESCRIPTION
NORMAL	○ DTC judgment completed ○ System normal
ABNORMAL	○ DTC judgment completed ○ System abnormal
INCOMPLETE	○ DTC judgment not completed ○ Perform driving pattern after confirming DTC enabling conditions
UNKNOWN	○ Unable to perform DTC judgment ○ Number of DTCs which do not fulfill DTC preconditions has reached ECU memory limit

CAUTION:

When performing the confirmation driving pattern, obey all speed limits and traffic laws.

HINT:

If the judgment result shows INCOMPLETE or UNKNOWN, perform steps [C] and [D].

9. If the test result is UNKNOWN, enter the following menus: Powertrain / Engine / Trouble Codes / Pending.
10. Read Pending DTCs.

HINT:

If a pending DTC is output, the system is malfunctioning.

11. If the test result is INCOMPLETE or UNKNOWN and no pending DTC is output, perform a universal trip and check for permanent DTCs INFO .

HINT:

- If a permanent DTC is output, the system is malfunctioning.
- If no permanent DTC is output, the system is normal.

P0139

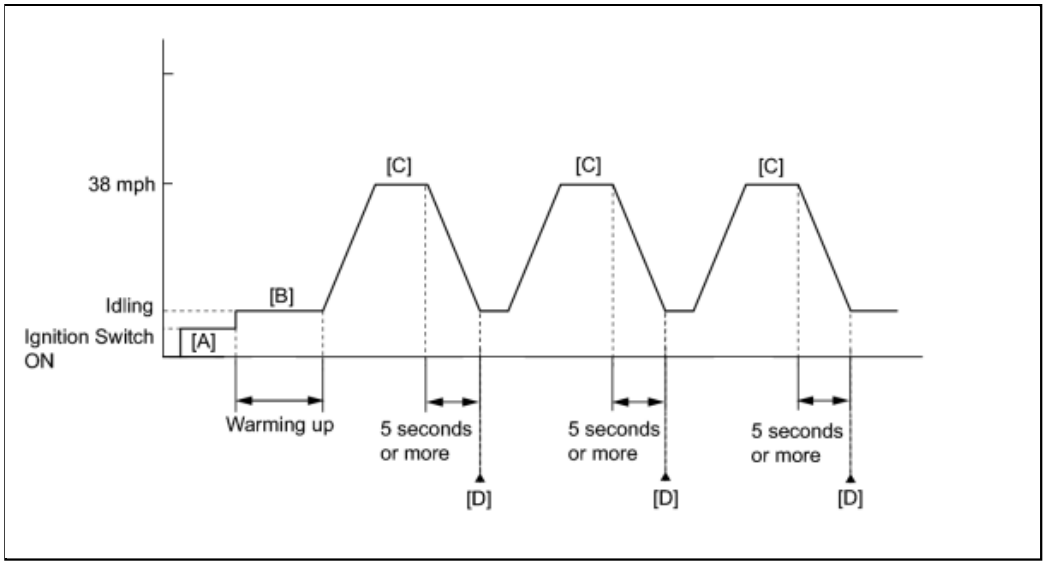

1. Clear the DTCs (even if no DTCs are stored, perform the clear DTC procedure) INFO .
2. Turn the ignition switch off.
3. Turn the ignition switch to ON and turn the Techstream on [A].
4. Start the engine and warm it up until the engine coolant temperature reaches 75°C (167°F) or higher [B].
5. Drive the vehicle at 38 mph (60 km/h), and then decelerate the vehicle by releasing the accelerator pedal for 5 seconds or more to perform the fuel-cut [C].
6. Enter the following menus: Powertrain / Engine / Utility / All Readiness.
7. Input the DTC: P0139.
8. Check the DTC judgment result [D].

TECHSTREAM DISPLAY	DESCRIPTION
NORMAL	○ DTC judgment completed ○ System normal
ABNORMAL	○ DTC judgment completed ○ System abnormal

TECHSTREAM DISPLAY	DESCRIPTION
INCOMPLETE	○ DTC judgment not completed ○ Perform driving pattern after confirming DTC enabling conditions
UNKNOWN	○ Unable to perform DTC judgment ○ Number of DTCs which do not fulfill DTC preconditions has reached ECU memory limit

CAUTION:

When performing the confirmation driving pattern, obey all speed limits and traffic laws.

HINT:

If the judgment result shows INCOMPLETE or UNKNOWN, move the shift lever to 2 and then perform steps [C] through [D] again.

9. If the test result is UNKNOWN, enter the following menus: Powertrain / Engine / Trouble Codes / Pending.
10. Read Pending DTCs.

HINT:

If a pending DTC is output, the system is malfunctioning.

11. If the test result is INCOMPLETE or UNKNOWN and no pending DTC is output, perform a universal trip and check for permanent DTCs INFO .

HINT:

- If a permanent DTC is output, the system is malfunctioning.
- If no permanent DTC is output, the system is normal.

WIRING DIAGRAM

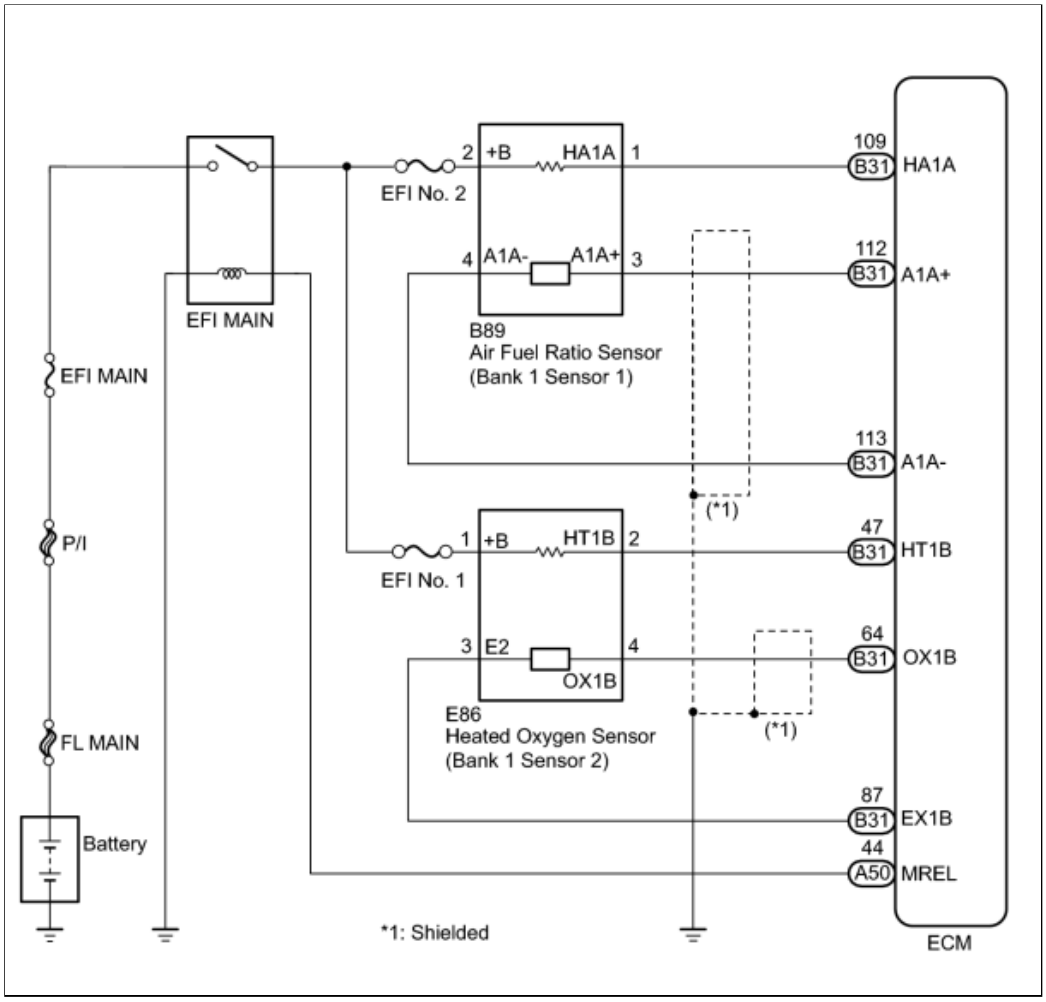

INSPECTION PROCEDURE

HINT:

Malfunctioning areas can be identified by performing the Control the Injection Volume for A/F sensor function provided in the Active Test. The Control the Injection Volume for A/F sensor function can help to determine whether the air fuel ratio sensor, heated oxygen sensor and other potential trouble areas are malfunctioning.

The following instructions describe how to conduct the Control the Injection Volume for A/F sensor operation using the Techstream.

1. Connect the Techstream to the DLC3.
2. Start the engine.
3. Turn the Techstream on.
4. Warm up the engine at an engine speed of 2500 rpm for approximately 90 seconds.
5. Enter the following menus: Powertrain / Engine and ECT / Active Test / Control the Injection Volume for A/F sensor.
6. Perform the Active Test operation with the engine idling (press the RIGHT or LEFT button to change the fuel injection volume.)
7. Monitor the output voltages of the air fuel ratio and heated oxygen sensors (AFS Voltage B1 S1 and O2S B1 S2) displayed on the Techstream.

HINT:

- The Control the Injection Volume for A/F sensor operation lowers the fuel injection volume by 12.5% or increases the injection volume by 25%.
- Each sensor reacts in accordance with increases and decreases in the fuel injection volume.

TECHSTREAM DISPLAY (SENSOR)	INJECTION VOLUME	STATUS	VOLTAGE

TECHSTREAM DISPLAY (SENSOR)	INJECTION VOLUME	STATUS	VOLTAGE
AFS Voltage B1 S1 (air fuel ratio)	+25%	Rich	Less than 3.1 V
	-12.5%	Lean	More than 3.4 V
O2S B1 S2 (heated oxygen)	+25%	Rich	More than 0.55 V
	-12.5%	Lean	Less than 0.4 V

NOTICE:

The air fuel ratio sensor has an output delay of a few seconds and the heated oxygen sensor has a maximum output delay of approximately 20 seconds.

CASE	AIR FUEL RATIO SENSOR (SENSOR 1) OUTPUT VOLTAGE	HEATED OXYGEN SENSOR (SENSOR 2) OUTPUT VOLTAGE	MAIN SUSPECTED TROUBLE AREA
1	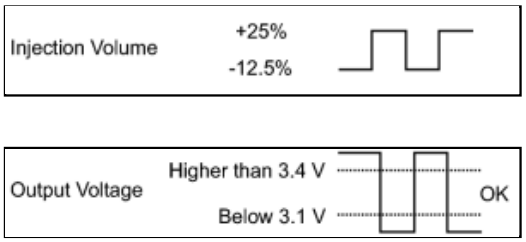	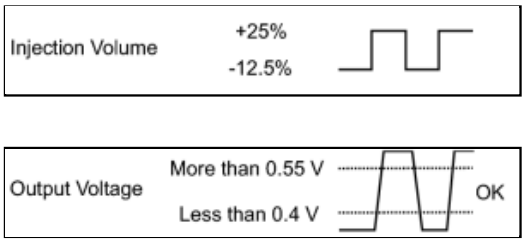	-
2	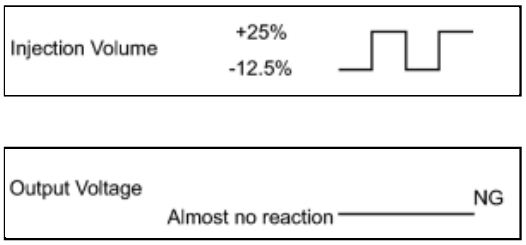	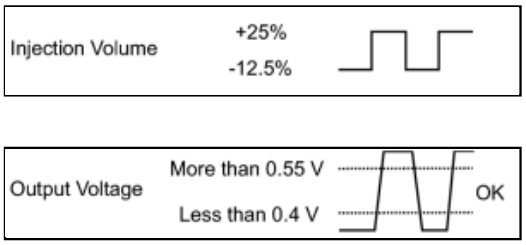	• Air fuel ratio sensor • Air fuel ratio sensor heater • Air fuel ratio sensor circuit
3	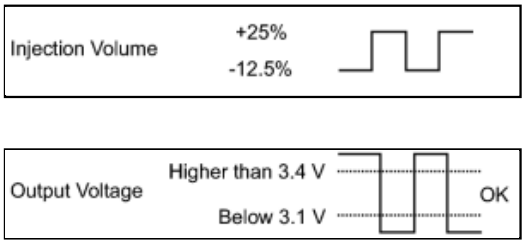	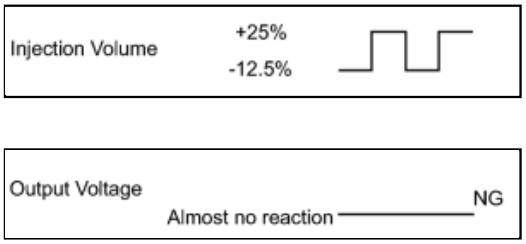	• Heated oxygen sensor • Heated oxygen sensor heater • Heated oxygen sensor circuit
4	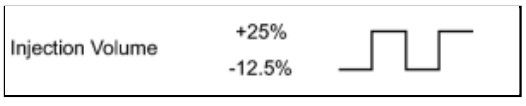	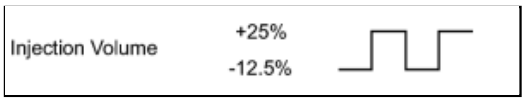	• Injector • Fuel pressure • Gas leak from exhaust system (Air fuel

CASE	AIR FUEL RATIO SENSOR (SENSOR 1) OUTPUT VOLTAGE	HEATED OXYGEN SENSOR (SENSOR 2) OUTPUT VOLTAGE	MAIN SUSPECTED TROUBLE AREA
	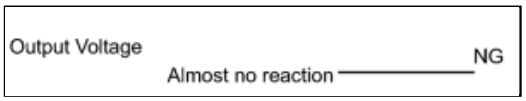	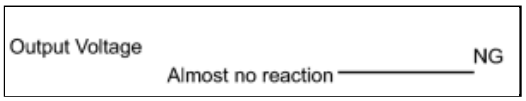	ratio extremely rich or lean)

- Following the Control the Injection Volume for A/F sensor procedure enables technicians to check and graph the voltage outputs of both the air fuel ratio and heated oxygen sensors.
- To display the graph, enter the following menus: Powertrain / Engine and ECT / Active Test / Control the Injection Volume for A/F Sensor / AFS Voltage B1 S1 and O2S B1 S2; then press the graph button on the Data List view.

HINT:

Read freeze frame data using the Techstream. The ECM records vehicle and driving condition information as freeze frame data the moment a DTC is stored. When troubleshooting, freeze frame data can be helpful in determining whether the vehicle was running or stopped, whether the engine was warmed up or not, whether the air fuel ratio was lean or rich, as well as other data recorded at the time of a malfunction.

PROCEDURE

1.	**READ DTC OUTPUT (DTC P0136, P0137, P0138 OR P0139)**

(a) Connect the Techstream to the DLC3.

(b) Turn the ignition switch to ON.

(c) Turn the Techstream on.

(d) Select the following menu items: Powertrain / Engine and ECT / Trouble Codes.

(e) Read DTCs.

Result:

RESULT	PROCEED TO
P0138	A
P0137	B
P0136	C
P0139	D

D ▶ **READ VALUE USING TECHSTREAM**

C ▶ **READ VALUE USING TECHSTREAM (OUTPUT VOLTAGE OF HEATED OXYGEN SENSOR)**

B ▶ **CHECK EXHAUST GAS LEAK (HEATER RESISTANCE)**

A

2.	**READ VALUE USING TECHSTREAM (OUTPUT VOLTAGE OF HEATED OXYGEN SENSOR)**

(a) Connect the Techstream to the DLC3.

(b) Turn the ignition switch to ON.

(c) Turn the Techstream on.

(d) Select the following menu items: Powertrain / Engine and ECT / Data List / A/F Control System / O2S B1 S2.

(e) Allow the engine to idle.

(f) Read the heated oxygen sensor output voltage while idling.

Result:

RESULT	PROCEED TO
1.0 V or more	A
Less than 1.0 V	B

B ▶ **PERFORM ACTIVE TEST USING TECHSTREAM (INJECTION VOLUME)**

A

3.	**INSPECT HEATED OXYGEN SENSOR (CHECK FOR SHORT)**

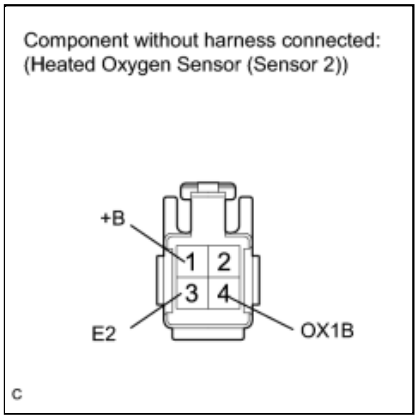

(a) Disconnect the heated oxygen sensor connector.

(b) Measure the resistance according to the value(s) in the table below.

Standard Resistance:

TESTER CONNECTION	CONDITION	SPECIFIED CONDITION
1 (+B) - 3 (E2)	Always	10 kΩ or higher
1 (+B) - 4 (OX1B)		

(c) Reconnect the heated oxygen sensor connector.

NG ▶ **REPLACE HEATED OXYGEN SENSOR**

OK

4.	CHECK HARNESS AND CONNECTOR

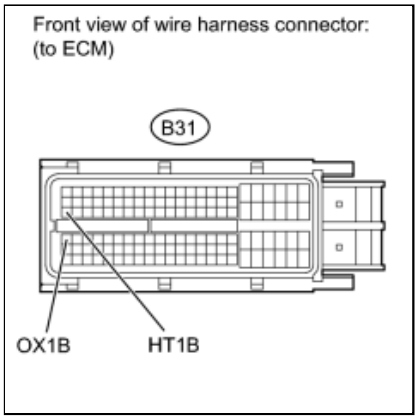

(a) Turn the ignition switch to off and wait for 5 minutes or more.

(b) Disconnect the ECM connector.

(c) Measure the resistance according to the value(s) in the table below.

Standard Resistance:

TESTER CONNECTION	CONDITION	SPECIFIED CONDITION
B31-47 (HT1B) - B31-64 (OX1B)	Always	10 kΩ or higher

(d) Reconnect the ECM connector.

NG ▶ **REPAIR OR REPLACE HARNESS OR CONNECTOR**

OK ▶ **REPLACE ECM**

5.	PERFORM ACTIVE TEST USING TECHSTREAM (INJECTION VOLUME)

(a) Connect the Techstream to the DLC3.

(b) Turn the ignition switch to ON.

(c) Turn the Techstream on.

(d) Start the engine and warm it up.

(e) Select the following menu items: Powertrain / Engine and ECT / Active Test / Control the Injection Volume.

(f) Change the fuel injection volume using the Techstream, and monitor the voltage output of air fuel ratio and heated oxygen sensors displayed on the Techstream.

HINT:

- Change the fuel injection volume within the range of -12% and +12%. The injection volume can be changed in 1% graduations within the range.
- The A/F sensor is displayed as AFS Voltage B1 S1, and the HO2 sensor is displayed as O2S B1 S2 on the Techstream.

Result:

TECHSTREAM DISPLAY (SENSOR)	VOLTAGE VARIATION	PROCEED TO
AFS Voltage B1 S1 (A/F)	Alternates between more and less than 3.3 V	OK
	Remains at more than 3.3 V	NG

TECHSTREAM DISPLAY (SENSOR)	VOLTAGE VARIATION	PROCEED TO
	Remains at less than 3.3 V	NG

HINT:

A normal heated oxygen sensor voltage (O2S B1 S2) reacts in accordance with increases and decreases in fuel injection volumes. When the air fuel ratio sensor voltage remains at either less or more than 3.3 V despite the heated oxygen sensor indicating a normal reaction, the air fuel ratio sensor is malfunctioning.

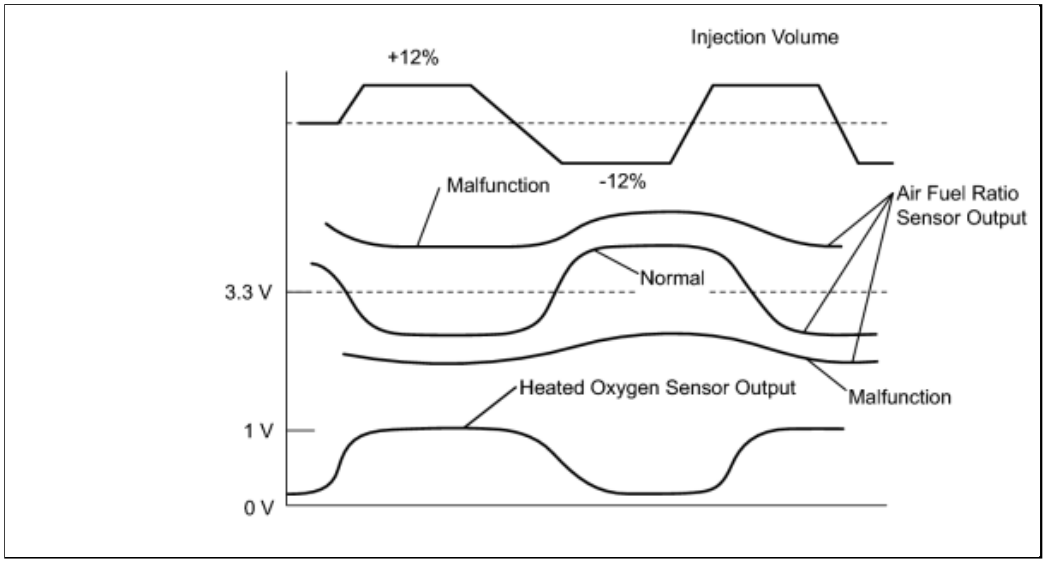

NG ▶ **REPLACE AIR FUEL RATIO SENSOR**

OK ▼

6.	INSPECT AIR FUEL RATIO SENSOR

HINT:

This air fuel ratio sensor test is to check the air fuel ratio sensor current during the fuel-cut. When the sensor is normal, the sensor current will indicate below 3.0 mA in this test.

(a) Connect the Techstream to the DLC3.

(b) Turn the ignition switch to ON.

(c) Turn the Techstream on.

(d) Drive the vehicle according to the drive pattern listed below:

(1) Warm up the engine until the engine coolant temperature reaches 75°C (167°F) or more.

(2) Drive the vehicle at 60 km/h (40 mph) or more and decelerate the vehicle for 5 seconds or more.

(3) Repeat the deceleration above at least 3 times.

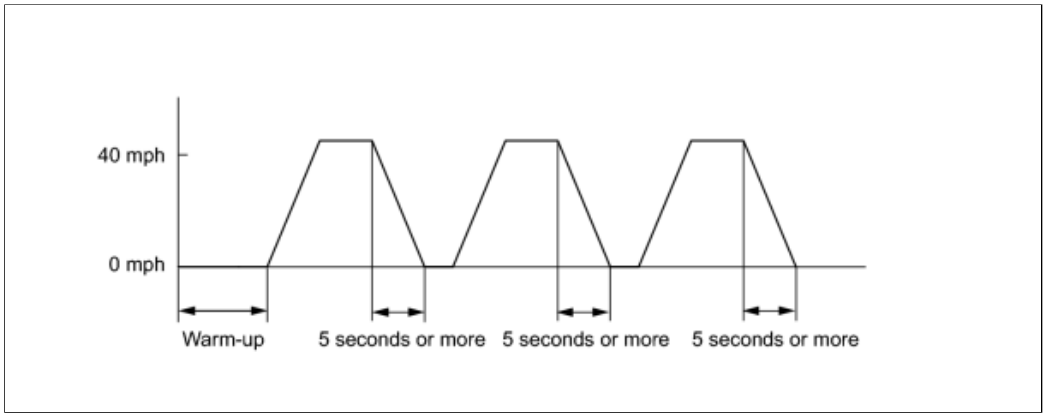

(e) Select the following menu items: Powertrain / Engine and ECT / Monitor / O2 Sensor / Details.

(f) Confirm that RANGE B1S1 is either Pass or Fail. If the Techstream shows Incomplete, re-check RANGE B1S1 after performing the drive pattern.

(g) Select the RANGE B1S1.

(h) Read the Test Value.

Standard current:
Less than 3.0 mA

HINT:

If the Techstream shows Incomplete again, increase the vehicle speed and use second gear to decelerate the vehicle.

NG ▶ **REPLACE AIR FUEL RATIO SENSOR**

OK ▶ **REPLACE HEATED OXYGEN SENSOR**

7.	READ VALUE USING TECHSTREAM (OUTPUT VOLTAGE OF HEATED OXYGEN SENSOR)

(a) Connect the Techstream to the DLC3.

(b) Turn the ignition switch to ON.

(c) Turn the Techstream on.

(d) Start the engine.

(e) Select the following menu items: Powertrain / Engine and ECT / Data List / A/F Control System / O2S B1 S2.

(f) After warming up the engine, run the engine at an engine speed of 2500 rpm for 3 minutes.

(g) Read the output voltage of the heated oxygen sensor when the engine rpm is suddenly increased.

HINT:

Quickly accelerate the engine to 4000 rpm 3 times using the accelerator pedal.

Standard:
Fluctuates between 0.4 V or less and 0.5 V or more.

NG ▶ **CHECK EXHAUST GAS LEAK (HEATER RESISTANCE)**

OK

8.	PERFORM ACTIVE TEST USING TECHSTREAM (INJECTION VOLUME)

(a) Connect the Techstream to the DLC3.

(b) Turn the ignition switch to ON.

(c) Turn the Techstream on.

(d) Start the engine and warm it up.

(e) Select the following menu items: Powertrain / Engine and ECT / Active Test / Control the Injection Volume.

(f) Change the fuel injection volume using the Techstream, and monitor the voltage output of air fuel ratio and heated oxygen sensors displayed on the Techstream.

HINT:

- Change the fuel injection volume within the range of -12% and +12%. The injection volume can be changed in 1% graduations within the range.
- The A/F sensor is displayed as AFS Voltage B1 S1, and the HO2 sensor is displayed as O2S B1 S2 on the Techstream.

Result:

TECHSTREAM DISPLAY (SENSOR)	VOLTAGE VARIATION	PROCEED TO
AFS Voltage B1 S1 (A/F)	Alternates between more and less than 3.3 V	OK
	Remains at more than 3.3 V	NG
	Remains at less than 3.3 V	NG

HINT:

A normal heated oxygen sensor voltage (O2S B1 S2) reacts in accordance with increases and decreases in fuel injection volumes. When the air fuel ratio sensor voltage remains at either less or more than 3.3 V despite the heated oxygen sensor indicating a normal reaction, the air fuel ratio sensor is malfunctioning.

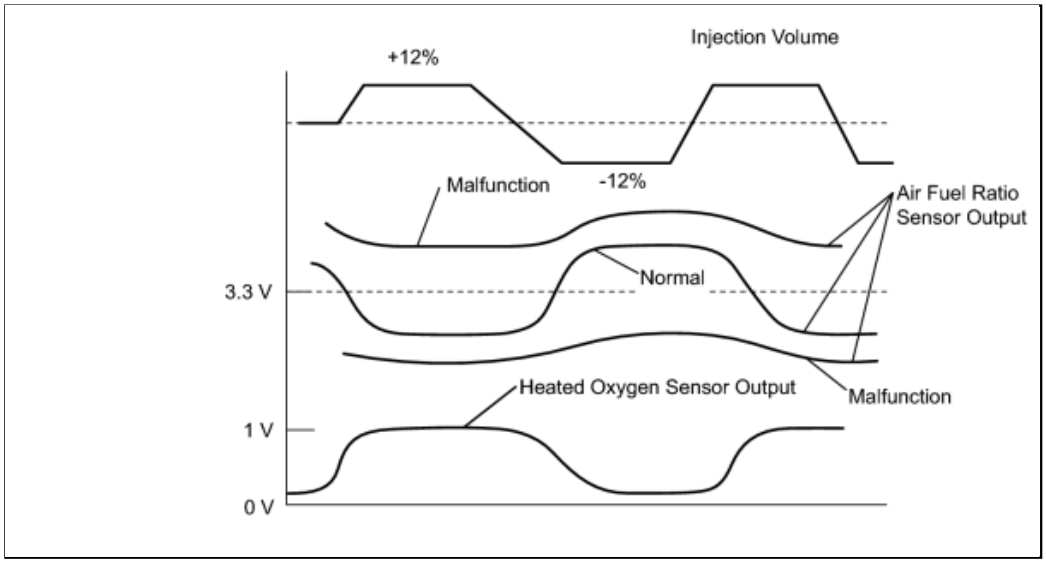

NG ▶ **REPLACE AIR FUEL RATIO SENSOR**

OK ▶ **CHECK AND REPLACE EXTREMELY RICH OR LEAN ACTUAL AIR FUEL RATIO (FUEL INJECTOR, FUEL PRESSURE, GAS LEAK FROM SYSTEM, ETC)**

9.	CHECK EXHAUST GAS LEAK (HEATER RESISTANCE)

OK:
No gas leaks.

NG ▶ **REPAIR OR REPLACE EXHAUST GAS LEAKAGE POINT**

OK ▼

10.	INSPECT HEATED OXYGEN SENSOR (HEATER RESISTANCE)

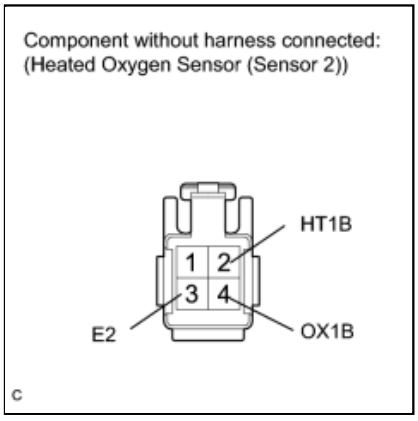

(a) Disconnect the heated oxygen sensor connector.

(b) Measure the resistance according to the value(s) in the table below.

Standard Resistance:

TESTER CONNECTION	CONDITION	SPECIFIED CONDITION
2 (HT1B) - 2 (+B)	20°C (68°F)	11to 16 Ω or higher
2 (HT1B) - 4 (E2)	Always	10 kΩ or higher

(c) Reconnect the heated oxygen sensor connector.

NG ▶ **REPLACE HEATED OXYGEN**

SENSOR

OK

11.	CHECK HARNESS AND CONNECTOR (HEATED OXYGEN SENSOR - ECM)

(a) Disconnect the heated oxygen sensor connector.

(b) Disconnect the ECM connector.

(c) Measure the resistance according to the value(s) in the table below.

Standard resistance (Check for open):

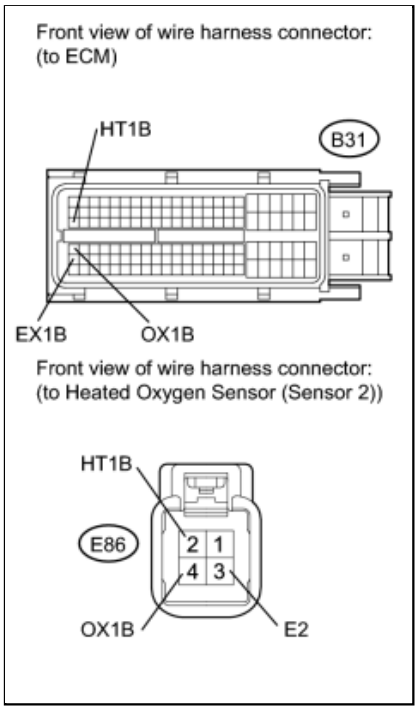

TESTER CONNECTION	CONDITION	SPECIFIED CONDITION
E86-2 (HT1B) - B31-47 (HT1B)	Always	Below 1 Ω
E86-4 (OX1B) - B31-64 (OX1B)		
E86-3 (E2) - B31-87 (EX1B)		

Standard resistance (Check for short):

TESTER CONNECTION	CONDITION	SPECIFIED CONDITION
E86-2 (HT1B) or B31-47 (HT1B) - Body ground	Always	10 kΩ or higher
E86-4 (OX1B) or B31-64 (OX1B) - Body ground		

(d) Reconnect the heated oxygen sensor connector.

(e) Reconnect the ECM connector.

NG ▶ **REPAIR OR REPLACE HARNESS OR CONNECTOR**

OK

12.	REPLACE HEATED OXYGEN SENSOR

(a) Replace the heated oxygen sensor INFO.

NEXT

13.	PERFORM CONFIRMATION DRIVING PATTERN

HINT:

Refer to the Confirmation Driving Pattern for P0136, P0137 and P0138.

NEXT

14.	CHECK WHETHER DTC OUTPUT RECURS (P0136, P0137 OR P0138)

(a) Connect the Techstream to the DLC3.

(b) Turn the ignition switch to ON.

(c) Turn the Techstream on.

(d) Select the following menu items: Powertrain / Engine and ECT / Utility / All Readiness.

(e) Input DTCs: P0136, P0137 and P0138. Check the DTC MONITOR is Normal. If DTC MONITOR is Incomplete, perform the drive pattern increasing the vehicle speed and using second gear to decelerate the vehicle.

Result:

RESULT	PROCEED TO
NORMAL (No DTC output)	A
ABNORMAL (P0136, P0137 or P0138 detected)	B

B **REPLACE AIR FUEL RATIO SENSOR**

A **END**

15.	REPLACE AIR FUEL RATIO SENSOR

(a) Replace the air fuel ratio sensor INFO .

NEXT

16.	PERFORM CONFIRMATION DRIVING PATTERN

HINT:

Refer to the Confirmation Driving Pattern for P0136, P0137 and P0138.

NEXT

17.	CHECK WHETHER DTC OUTPUT RECURS (P0136 OR P0138)

(a) Connect the Techstream to the DLC3.

(b) Turn the ignition switch to ON.

(c) Turn the Techstream on.

(d) Select the following menu items: Powertrain / Engine and ECT / Utility / All Readiness.

(e) Input DTCs: P0136 or P0138. Check the DTC MONITOR is Normal. If DTC MONITOR is Incomplete, perform the drive pattern increasing the vehicle speed and using second gear to decelerate the vehicle.

Result:

RESULT	PROCEED TO
NORMAL (No DTC output)	A
ABNORMAL (P0136 or P0138 detected)	B

B **REPLACE HEATED OXYGEN SENSOR**

A **END**

18.	READ VALUE USING TECHSTREAM

(a) Connect the Techstream to the DLC3.

(b) Turn the ignition switch to ON.

(c) Turn the Techstream on.

(d) Select the following menu items: Powertrain / Engine and ECT / Data List / A/F Control System / O2S B1 S2.

(e) Allow the engine to idle.

(f) Read the heated oxygen sensor output voltage while idling.

Result:

RESULT	PROCEED TO
1.0 V or higher	A
Below 1.0 V	B

NG ▶ **READ DTC OUTPUT (DTC P0139 IS OUTPUT AGAIN)**

A
▼

19.	INSPECT HEATED OXYGEN SENSOR

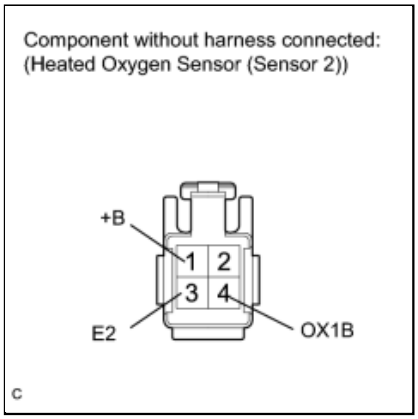

(a) Disconnect the heated oxygen sensor connector.

(b) Measure the resistance according to the value(s) in the table below.

Standard resistance:

TESTER CONNECTION	CONDITION	SPECIFIED CONDITION
1 (+B) - 3 (E2)	Always	10 kΩ or higher
1 (+B) - 4 (OX1B)		

(c) Reconnect the heated oxygen sensor connector.

NG ▶ **REPLACE HEATED OXYGEN SENSOR**

OK
▼

20.	CHECK HARNESS OR CONNECTOR (CHECK FOR SHORT)

(a) Turn the ignition switch off and wait for 5 minutes or more.

(b) Disconnect the ECM connector.

(c) Measure the resistance according to the value(s) in the table below.

Standard resistance:

TESTER CONNECTION	CONDITION	SPECIFIED CONDITION
B31-47 (HT1B) - B31-64 (OX1B)	Always	10 kΩ or higher

(d) Reconnect the ECM connector.

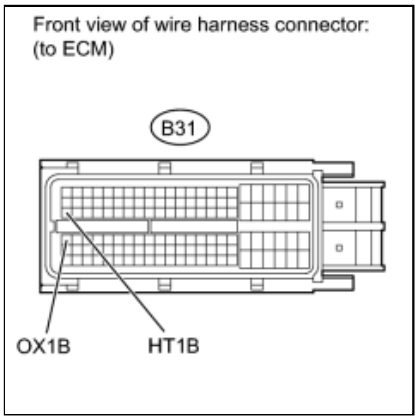

NG ▶ **REPAIR OR REPLACE HARNESS OR CONNECTOR**

OK ▶ **REPLACE ECM**

21.	READ DTC OUTPUT (DTC P0139 IS OUTPUT AGAIN)

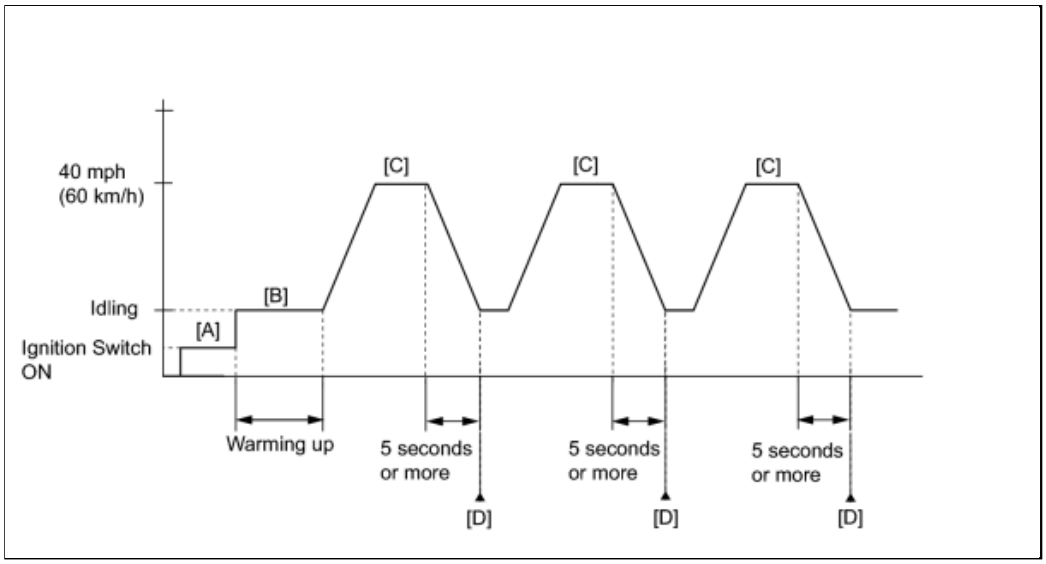

(a) Connect the Techstream to the DLC3.

(b) Turn the ignition switch to ON and turn the Techstream on.

(c) Clear the DTC (even if no DTC are stored, perform the clear DTC Procedure) INFO .

(d) Turn the ignition switch off.

(e) Turn the ignition switch to ON and turn the Techstream on [A].

(f) Start the engine and warm it up until the engine coolant temperature reaches 75°C (167°F) or more [B].

(g) Drive the vehicle at 37 mph (60 km/h), and then decelerate the vehicle by releasing the accelerator pedal for 5 seconds or more to perform the fuel cut [C].

(h) Select the following menu items: Powertrain / Engine and ECT / Utility / All Readiness.

(i) Input DTC: P0139. Check the DTC MONITOR is NORMAL. If DTC MONITOR is INCOMPLETE, perform the drive pattern increasing the vehicle speed and using second gear to decelerate the vehicle.

Result:

RESULT	PROCEED TO
ABNORMAL (P0139 detected)	A
NORMAL (No DTC output)	B

B ▶ **CHECK FOR INTERMITTENT PROBLEMS**

A ▶ **REPLACE HEATED OXYGEN SENSOR**

Last Modified: 3-10-2010	6.4 C	**From:** 200901
Model Year: 2010	**Model:** Corolla	**Doc ID:** RM000000PF609TX
Title: 2ZR-FE ENGINE CONTROL: SFI SYSTEM: P0120-P0123,P0220,P0222,P0223,P2135: Throttle / Pedal Position Sensor / Switch "A" Circuit Malfunction (2010 Corolla)		

DTC	**P0120**	**Throttle / Pedal Position Sensor / Switch "A" Circuit Malfunction**

DTC	**P0121**	**Throttle / Pedal Position Sensor / Switch "A" Circuit Range / Performance Problem**

DTC	**P0122**	**Throttle / Pedal Position Sensor / Switch "A" Circuit Low Input**

DTC	**P0123**	**Throttle / Pedal Position Sensor / Switch "A" Circuit High Input**

DTC	**P0220**	**Throttle / Pedal Position Sensor / Switch "B" Circuit**

DTC	**P0222**	**Throttle / Pedal Position Sensor / Switch "B" Circuit Low Input**

DTC	**P0223**	**Throttle / Pedal Position Sensor / Switch "B" Circuit High Input**

DTC	**P2135**	**Throttle / Pedal Position Sensor / Switch "A" / "B" Voltage Correlation**

DESCRIPTION

HINT:

- These DTCs relate to the throttle position sensor.

The throttle position sensor is mounted on the throttle body, and detects the opening angle of the throttle valve. This sensor is a non-contact type. It uses Hall-effect elements in order to yield accurate signals even in extreme conditions.

The throttle position sensor has 2 sensor circuits, each of which transmits a signal, VTA1 and VTA2. VTA1 is used to detect the throttle valve angle and VTA2 is used to detect malfunctions in VTA1. The sensor signal voltages vary between 0 V and 5 V in proportion to the throttle valve opening angle, and are transmitted to the VTA terminals of the ECM.

As the valve closes, the sensor output voltage decreases and as the valve opens, the sensor output voltage increases. The ECM calculates the throttle valve opening angle according to these signals and controls the throttle actuator in response to driver inputs. These signals are also used in calculations such as air fuel ratio correction, power enrichment correction and fuel-cut control.

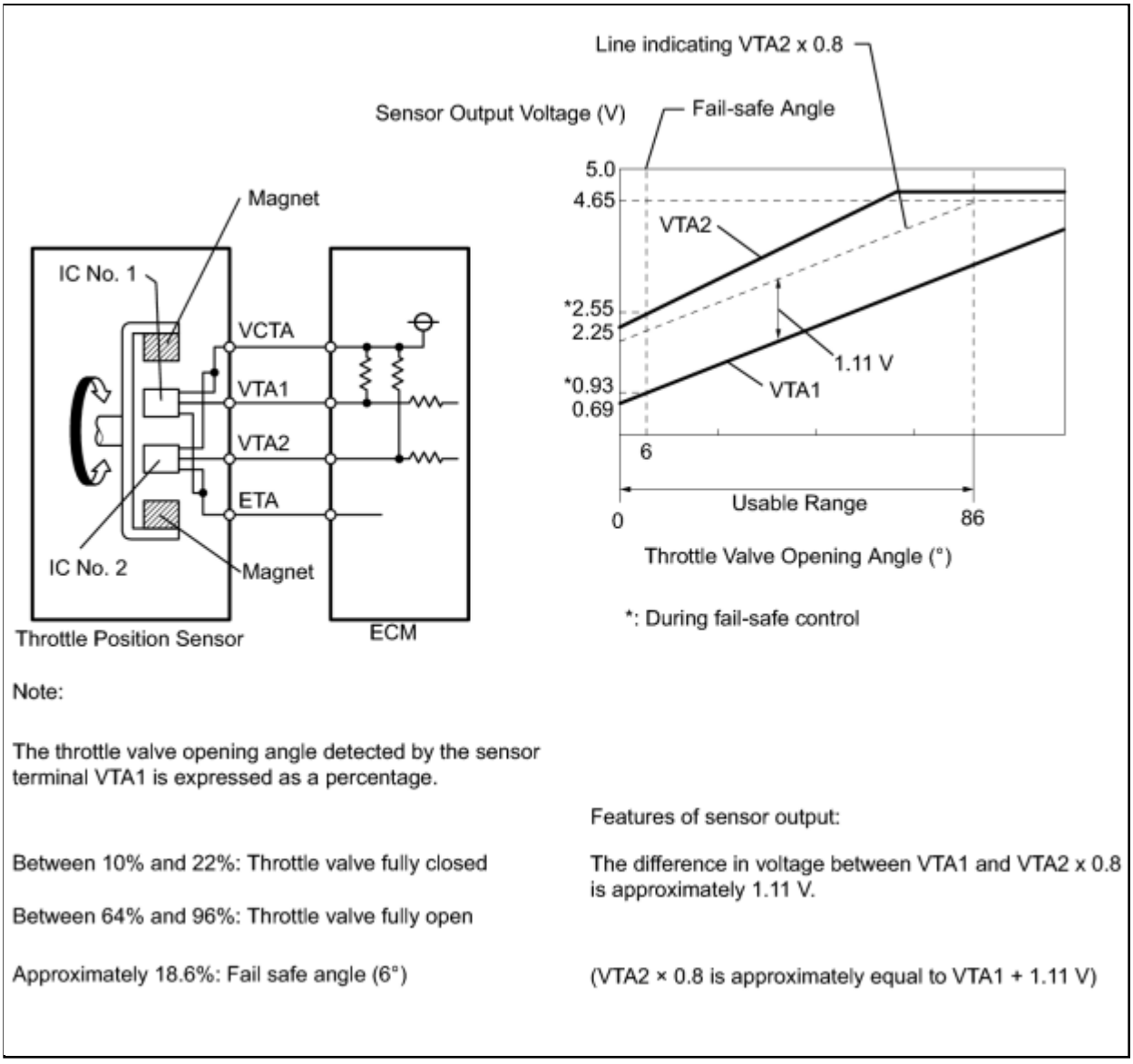

Note:

The throttle valve opening angle detected by the sensor terminal VTA1 is expressed as a percentage.

Between 10% and 22%: Throttle valve fully closed

Between 64% and 96%: Throttle valve fully open

Approximately 18.6%: Fail safe angle (6°)

Features of sensor output:

The difference in voltage between VTA1 and VTA2 x 0.8 is approximately 1.11 V.

(VTA2 × 0.8 is approximately equal to VTA1 + 1.11 V)

DTC NO.	DTC DETECTION CONDITION	TROUBLE AREA
P0120	Output voltage of VTA1 quickly fluctuates beyond lower and upper malfunction thresholds for 2 seconds or more (1 trip detection logic)	• Throttle position sensor (built into throttle body) • ECM

HINT:

- When any of these DTC s are set, check the throttle valve opening angle by entering the following menus: Powertrain / Engine and ECT / Data List / Throttle Position No. 1 and Throttle Position

No. 2.

- Throttle Position No. 1 denotes the VTA1 signal, and Throttle Position No. 2 denotes the VTA2 signal.

Reference (Normal Condition):

TECHSTREAM DISPLAY	ACCELERATOR PEDAL FULLY RELEASED	ACCELERATOR PEDAL FULLY DEPRESSED
Throttle Position No.1	0.5 to 1.1 V	3.2 to 4.8 V
Throttle Position No.2	2.1 to 3.1 V	4.6 to 5.0 V

MONITOR DESCRIPTION

P0120, P0122, P0123, P0220, P0222, P0223, P2135

The ECM uses the throttle position sensor to monitor the throttle valve opening angle. There are several checks that the ECM performs to confirm the proper operation of the throttle position sensor.

- A specific voltage difference is expected between the sensor terminals, VTA1 and VTA2, for each throttle valve opening angle. If the difference between VTA1 and VTA2 is incorrect, the ECM interprets this as a malfunction in the sensor circuit, and sets a DTC.
- VTA1 and VTA2 each have a specific voltage range. If VTA1 or VTA2 is outside the normal operating range, the ECM interprets this as a malfunction in the sensor circuit, and sets a DTC.
- VTA1 and VTA2 should never be close to the same voltage level. If VTA1 is within 0.02 V of VTA2, the ECM determines that there is a short circuit in the sensor circuit, and sets a DTC.

If the malfunction is not repaired successfully, a DTC is set 10 seconds after the engine is next started.

P0121

This sensor transmits two signals: VTA1 and VTA2. VTA1 is used to detect the throttle opening angle and VTA2 is used to detect malfunctions in VTA1. The ECM performs several checks to confirm the proper operation of the TP sensor and VTA1.

For each throttle opening angle, a specific voltage difference is expected between the outputs of VTA1 and VTA2. If the output voltage difference between the two signals deviates from the normal operating range, the ECM interprets this as a malfunction in the TP sensor. The ECM illuminates the MIL and stores the DTC.

If the malfunction is not repaired successfully, the DTC is stored 2 seconds after the engine is next started.

MONITOR STRATEGY

Related DTCs	P0120: Throttle position sensor 1 range check (Fluctuating)

	P0121: Throttle position sensor rationality P0122: Throttle position sensor 1 range check (Low voltage) P0123: Throttle position sensor 1 range check (High voltage) P0220: Throttle position sensor 2 range check (Fluctuating) P0222: Throttle position sensor 2 range check (Low voltage) P0223: Throttle position sensor 2 range check (High voltage) P2135: Throttle position sensor range check (Correlation)
Required Sensors/Components (Main)	Throttle position sensor
Required Sensors/Components (Related)	-
Frequency of Operation	Continuous
Duration	2 seconds: P0120, P0122, P0123, P0220, P0222 and P0223 Within 2 seconds: P0121 0.5 seconds: P2135 Case 1 0.4 seconds: P2135 Case 2
MIL Operation	Immediate
Sequence of Operation	None

TYPICAL ENABLING CONDITIONS

P0120, P0122, P0123, P0220, P0222, P0223, P2135:

Monitor runs whenever following DTCs not present	None
Either of following conditions A or B is met	-
A. Ignition switch ON	0.012 seconds or more
B. Electronic throttle actuator power	ON

P0121:

Either of following conditions A or B set	-
A. Ignition switch	ON
B. Electric throttle motor power	ON
Throttle position sensor malfunction (P0120, P0121, P0122, P0123, P0220, P0222, P0223, P2135)	Not detected

TYPICAL MALFUNCTION THRESHOLDS

P0120

VTA1 voltage	0.2 V or less, or 4.54 V or more

P0121

Either of following conditions set	-
Difference of throttle position sensor voltage between VTA1 and (VTA2 x 0.8)	Higher than 1.6 V
Difference of throttle position sensor voltage between VTA1 and (VTA2 x 0.8)	Lower than 0.8 V

P0122

VTA1 voltage	0.2 V or less

P0123

VTA1 voltage	4.54 V or more

P0220

VTA2 voltage	1.75 V or less, or 4.8 V or more

P0222

VTA2 voltage	1.75 V or less

P0223

VTA2 voltage when VTA1 0.2 V or more, and 2.02 V or less	4.8 V or more

P2135 Case 1

Difference between VTA1 and VTA2 voltages	0.02 V or less

P2135 Case 2

VTA1 voltage	0.2 V or less
VTA2 voltage	1.75 V or less

COMPONENT OPERATING RANGE

VTA1 voltage	0.2 to 4.54 V
VTA2 voltage	1.75 to 4.8 V

CONFIRMATION DRIVING PATTERN

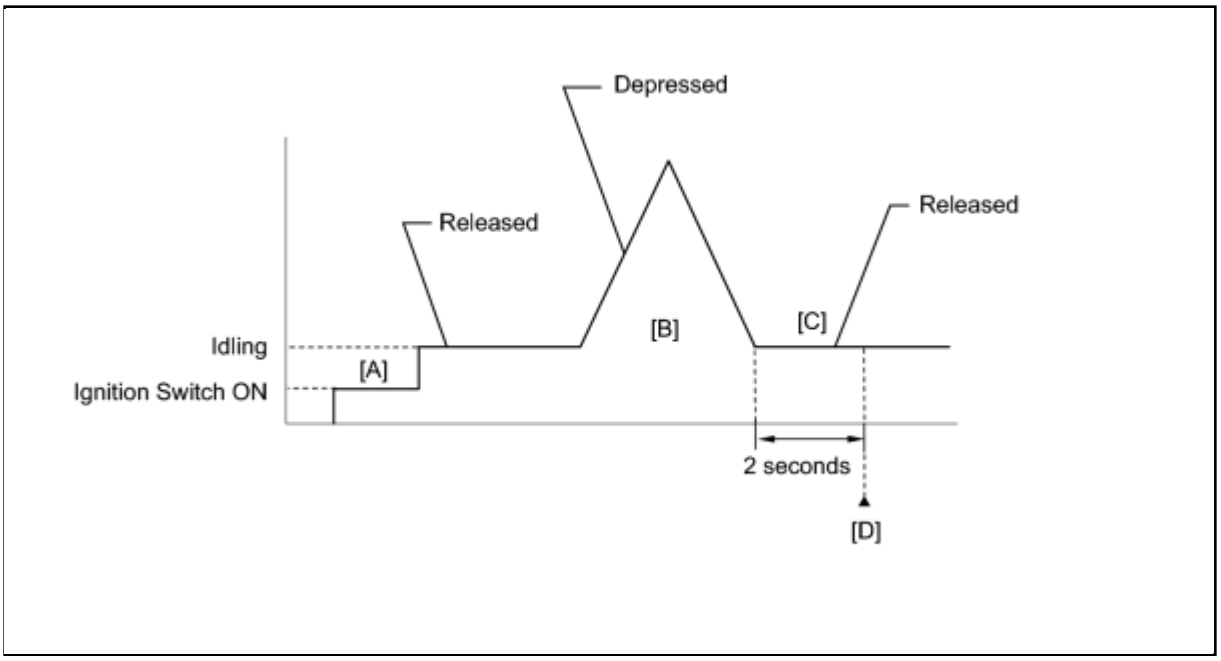

1. Connect the Techstream to the DLC3.
2. Turn the ignition switch to ON and turn the Techstream on.
3. Clear the DTCs (even if no DTCs are stored, perform the clear DTC procedure) INFO .
4. Turn the ignition switch off.
5. Turn the ignition switch to ON and turn the Techstream on [A].
6. Start the engine.
7. With the vehicle stationary, fully depress and release the accelerator pedal [B].
8. Idle the engine for 2 seconds or more [C].
9. Enter the following menus: Powertrain / Engine / Utility / All Readiness.
10. Input the DTC: P0120, P0121, P0122, P0123, P0220, P0222, P0223 or P2135.
11. Check the DTC judgment result [D].

TECHSTREAM DISPLAY	DESCRIPTION
NORMAL	○ DTC judgment completed ○ System normal
ABNORMAL	○ DTC judgment completed ○ System abnormal

TECHSTREAM DISPLAY	DESCRIPTION
INCOMPLETE	○ DTC judgment not completed ○ Perform driving pattern after confirming DTC enabling conditions
UNKNOWN	○ Unable to perform DTC judgment ○ Number of DTCs which do not fulfill DTC preconditions has reached ECU memory limit

HINT:

- If the judgment result shows ABNORMAL, the system has a malfunction.
- If the judgment result shows INCOMPLETE or UNKNOWN, perform steps [B] and [D] again.

12. If the test result is UNKNOWN, enter the following menus: Powertrain / Engine / Trouble Codes / Pending.
13. Read Pending DTCs.

HINT:

If a pending DTC is output, the system is malfunctioning.

14. If the test result is INCOMPLETE or UNKNOWN and no pending DTC is output, perform a universal trip and check for permanent DTCs INFO .

HINT:

- If a permanent DTC is output, the system is malfunctioning.
- If no permanent DTC is output, the system is normal.

FAIL-SAFE

When any of these DTCs, as well as other DTCs relating to electronic throttle control system malfunctions, are set, the ECM enters fail-safe mode. During fail-safe mode, the ECM cuts the current to the throttle actuator, and the throttle valve is returned to a 6° throttle angle by the return spring. The ECM then adjusts the engine output by controlling the fuel injection (intermittent fuel-cut) and ignition timing, in accordance with the accelerator pedal angle, to allow the vehicle to continue at a minimal speed. If the accelerator pedal is depressed firmly and gently, the vehicle can be driven slowly.

Fail-safe mode continues until a pass condition is detected, and the ignition switch is then turned off.

WIRING DIAGRAM

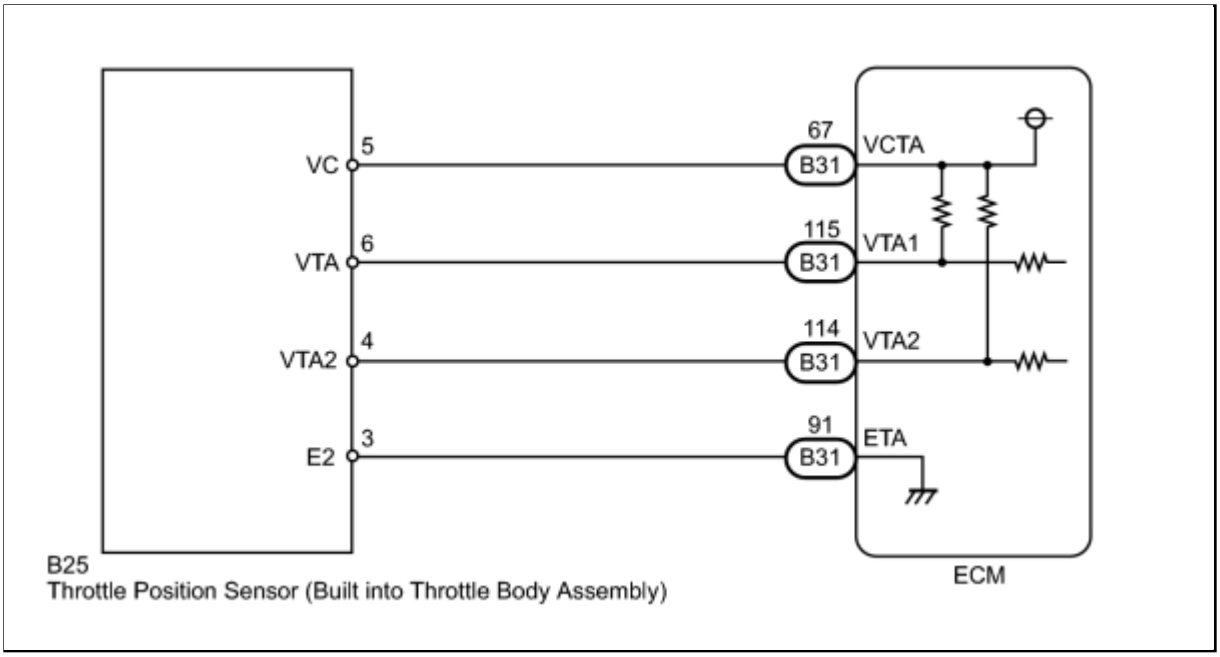

INSPECTION PROCEDURE

HINT:

Read freeze frame data using the Techstream. The ECM records vehicle and driving condition information as freeze frame data the moment a DTC is stored. When troubleshooting, freeze frame data can be helpful in determining whether the vehicle was running or stopped, whether the engine was warmed up or not, whether the air fuel ratio was lean or rich, as well as other data recorded at the time of a malfunction.

PROCEDURE

1.	**READ VALUE USING TECHSTREAM (THROTTLE POSITION SENSOR)**

(a) Connect the Techstream to the DLC3.

(b) Turn the ignition switch to ON.

(c) Turn the Techstream on.

(d) Enter the following menus: Powertrain / Engine and ECT / Data List / Throttle Position No.1 and Throttle Position No.2.

(e) Read the values displayed on the Techstream.

Result:

WHEN ACCELERATOR PEDAL RELEASED		WHEN ACCELERATOR PEDAL DEPRESSED		TROUBLE AREA	PROCEED TO
THROTTLE POSITION	THROTTLE POSITION	THROTTLE POSITION	THROTTLE POSITION		

NO.1	NO.2	NO.1	NO.2		
0 to 0.2 V	0 to 0.2 V	0 to 0.2 V	0 to 0.2 V	VC circuit open	A
4.5 to 5.0 V	4.5 to 5.0 V	4.5 to 5.0 V	4.5 to 5.0 V	E2 circuit open	
0 to 0.2 V, or 4.5 to 5.0 V	2.1 V to 3.1 V (Fail-safe)	0 to 0.2 V, or 4.5 to 5.0 V	2.1 V to 3.1 V (Fail-safe)	VTA1 circuit open or ground short	
0.6 V to 1.4 V (Fail-safe)	0 to 0.2 V, or 4.5 to 5.0 V	0.6 V to 1.4 V (Fail-safe)	0 to 0.2 V, or 4.5 to 5.0 V	VTA2 circuit open or ground short	
0.5 to 1.1 V	2.1 to 3.1 V	3.2 to 4.8 V (Not fail-safe)	4.6 to 5.0 V (Not fail-safe)	Throttle position sensor circuit normal	B

HINT:

- DTC P0121 is stored when the voltages output from VTA1 and VTA2 are not consistent with the characteristics of the sensors. Therefore, check the Freeze Frame Data when this DTC is output. Use the following formula to confirm relative fluctuations in voltage.

  Features of sensor output:

  VTA2 x 0.8 is approximately equal to VTA1 + 1.11 V

  VTA1: Throttle Position No. 1

  VTA2: Throttle Position No. 2
- If DTC P0121 is output, proceed to the "CHECK HARNESS AND CONNECTOR (THROTTLE POSITION SENSOR - ECM)".

B ▶ **CHECK WHETHER DTC OUTPUT RECURS (THROTTLE POSITION SENSOR DTCS)**

A ▼

2.	CHECK HARNESS AND CONNECTOR (THROTTLE POSITION SENSOR - ECM)

(a) Disconnect the throttle body assembly connector.

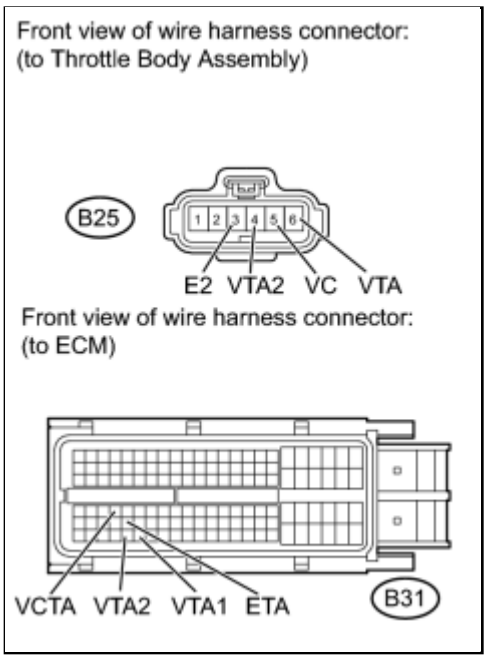

(b) Disconnect the ECM connector.

(c) Measure the resistance according to the value(s) in the table below.

Standard Resistance (Check for Open):

TESTER CONNECTION	CONDITION	SPECIFIED CONDITION
B25-5 (VC) - B31-67 (VCTA)	Always	Below 1 Ω
B25-6 (VTA) - B31-115 (VTA1)	Always	Below 1 Ω
B25-4 (VTA2) - B31-114 (VTA2)	Always	Below 1 Ω
B25-3 (E2) - B31-91 (ETA)	Always	Below 1 Ω

Standard Resistance (Check for Short):

TESTER CONNECTION	CONDITION	SPECIFIED CONDITION
B25-5 (VC) or B31-67 (VCTA) - Body ground	Always	10 kΩ or higher
B25-6 (VTA) or B31-115 (VTA1) - Body ground	Always	10 kΩ or higher
B25-4 (VTA2) or B31-114 (VTA2) - Body ground	Always	10 kΩ or higher

(d) Reconnect the throttle body assembly connector.

(e) Reconnect the ECM connector.

NG ▶ **REPAIR OR REPLACE HARNESS OR CONNECTOR (THROTTLE POSITION SENSOR - ECM)**

OK

3.	**INSPECT ECM (VC VOLTAGE)**

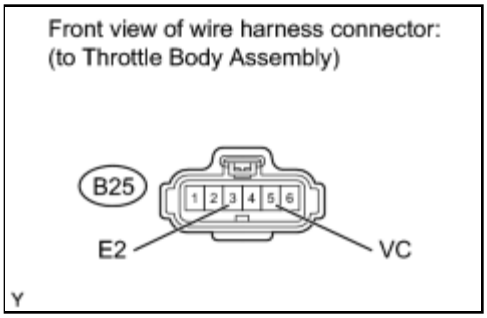

(a) Disconnect the throttle body assembly connector.

(b) Turn the ignition switch to ON.

(c) Measure the voltage according to the value(s) in the table below.

Standard Voltage:

TESTER CONNECTION	CONDITION	SPECIFIED CONDITION
B25-5 (VC) - B25-3 (E2)	Ignition switch ON	4.5 to 5.5 V

(d) Reconnect the throttle body assembly connector.

NG ▶ **REPLACE ECM**

OK

4.	**REPLACE THROTTLE BODY ASSEMBLY**

(a) Replace the throttle body assembly INFO .

NEXT

5.	CHECK WHETHER DTC OUTPUT RECURS (THROTTLE POSITION SENSOR DTCS)

(a) Connect the Techstream to the DLC3.

(b) Turn the ignition switch to ON.

(c) Turn the Techstream on.

(d) Clear DTCs INFO .

(e) Start the engine.

(f) Allow the engine to idle for 15 seconds or more.

(g) Enter the following menus: Powertrain / Engine and ECT / Trouble Codes.

(h) Read the DTCs.

Result:

RESULT	PROCEED TO
DTC P0120, P0121, P0122, P0123, P0220, P0222, P0223 and/or P2135 is output	A
DTC is not output	B

B ▶ **END**

A ▶ **REPLACE ECM**

Last Modified: 3-10-2010	6.4 C	**From:** 200901
Model Year: 2010	**Model:** Corolla	**Doc ID:** RM000000PFB0A6X
Title: 2ZR-FE ENGINE CONTROL: SFI SYSTEM: P0116: Engine Coolant Temperature Circuit Range / Performance Problem (2010 Corolla)		

DTC	**P0116**	**Engine Coolant Temperature Circuit Range / Performance Problem**

DESCRIPTION

Refer to DTC P0115 INFO .

DTC NO.	DTC DETECTION CONDITION	TROUBLE AREA
P0116	When either of the following conditions is met (2 trip detection logic): • During engine warm up after cold engine starts, change in Engine Coolant Temperature sensor output is below threshold • In duration between warmed engine stopped and next cold engine starts, change in engine coolant temperature sensor output below threshold	• Thermostat • Engine coolant temperature sensor
	For Mexico Models: Case 1: Engine Coolant Temperature (ECT) between 35°C and 60°C (95°F and 140°F) when engine started, and conditions (a) and (b) met (2 trip detection logic) • (a) Vehicle driven at varying speeds (accelerated and decelerated) • (b) ECT remains within 3°C (37.4°F) of initial ECT Case 2: ECT more than 60°C (140°F) when engine started, and conditions (a) and (b) met (6 trip detection logic) • (a) Vehicle driven at varying speeds (accelerated and decelerated) • (b) ECT measurements remain within 1°C (33.8°F) of initial ECT on 6 successive occasions	• Thermostat • ECT sensor

MONITOR DESCRIPTION

Engine Coolant Temperature Sensor Cold Start Monitor

The monitor runs when the engine is started cold. If the change in engine coolant temperature sensor output until the engine warmed up completely is less than the threshold, it is determined that a

malfunction has occurred in the engine coolant temperature sensor. When this is detected in 2 consecutive driving cycles, the MIL is illuminated and the DTC is set.

Engine Coolant Temperature Sensor Soak Monitor

The ECM compares the engine coolant temperature when the warmed engine is stopped and when the engine is started on the next trip when more than 5 hours has elapsed since the engine was stopped. If the change in engine coolant temperature sensor output is less than the threshold, it is determined that a malfunction has occurred in the engine coolant temperature sensor. When this is detected in 2 consecutive driving cycles, the MIL is illuminated and the DTC is set.

ECT sensor high side stuck monitor (only for Mexico models)

The ECM monitors the sensor voltage and uses this value to calculate the ECT. If the sensor voltage output deviates from the normal operating range, the ECM interprets this deviation as a malfunction in the ECT sensor and sets the DTC.

Examples:

- Upon starting the engine, the ECT is between 35°C and 60°C (95°F and 140°F). If after driving for 250 seconds, the ECT remains within 3°C (37.4°F) of the starting temperature, the DTC is set (2 trip detection logic).
- Upon starting the engine, the ECT is over 60°C (140°F). If after driving for 250 seconds, the ECM remains within 1°C (33.8°F) of the starting temperature, the DTC is set (6 trip detection logic).

MONITOR STRATEGY

Related DTCs	None
Required Sensors/Components (Main)	Engine coolant temperature sensor
Required Sensors/Components (Related)	None
Frequency of Operation	Once per driving cycle
Duration	5 hours or more
MIL Operation	2 driving cycles
Sequence of Operation	None

TYPICAL ENABLING CONDITIONS

Engine Coolant Temperature Sensor Cold Start Monitor

Monitor runs whenever following DTCs not present	None
Battery voltage	10.5 V or more
Time after engine start	1 second or more
Engine coolant temperature at engine start	Less than 60°C (140°F)

Intake air temperature sensor circuit	OK
Soak time	0 sec or more
Accumulated mass air flow	825 g or more (Manual transaxle), 1422 g or more (Automatic transaxle)
Fuel cut	OFF
Difference between engine coolant temperature at engine start and intake air temperature	Less than 40°C (72°F)

Engine Coolant Temperature Sensor Soak Monitor

Monitor runs whenever following DTCs not present	None
Battery voltage	10.5 V or more
Engine	Running
Soak time	5 hours or more
Either (a) or (b) condition met	-
(a) Engine coolant temperature	60°C (140°F) or more
(b) Accumulated mass air flow	1661 g or more (Manual transaxle), 3185 g or more (Automatic transaxle)

TYPICAL MALFUNCTION THRESHOLDS

Engine Coolant Temperature Sensor Cold Start Monitor

Engine coolant temperature sensor value change	Less than 5°C (41°F)

Engine Coolant Temperature Sensor Soak Monitor

Difference between current engine coolant temperature sensor value and previous engine coolant temperature sensor value when engine stopped	Less than 5°C (41°F)

COMPONENT OPERATING RANGE

Engine coolant temperature	Engine coolant temperature sensor value changes in accordance with actual engine coolant temperature

INSPECTION PROCEDURE

HINT:

- If any of DTCs P0115, P0117, P0118 or P0125 are set simultaneously with DTC P0116, the

engine coolant temperature sensor may have an open or a short circuit. Troubleshoot those DTCs first.

- Read freeze frame data using the Techstream. The ECM records vehicle and driving condition information as freeze frame data the moment a DTC is stored. When troubleshooting, freeze frame data can be helpful in determining whether the vehicle was running or stopped, whether the engine was warmed up or not, whether the air fuel ratio was lean or rich, as well as other data recorded at the time of a malfunction.

PROCEDURE

1.	**CHECK ANY OTHER DTCS OUTPUT (IN ADDITION TO DTC P0116)**

(a) Connect the Techstream to the DLC3.

(b) Turn the ignition switch to ON.

(c) Turn the Techstream on.

(d) Enter the following menus: Powertrain / Engine and ECT / Trouble Codes.

(e) Read the DTCs.

Result:

RESULT	PROCEED TO
DTC P0116 is output	A
DTC P0116 and other DTCs are output	B

HINT:

If any DTCs other than P0116 are output, troubleshoot those DTCs first.

B ▶ **GO TO DTC CHART**

A ▼

2.	**INSPECT THERMOSTAT**

(a) Remove the thermostat INFO .

(b) Measure the valve opening temperature of the thermostat.

Standard value:

80 to 84°C (176 to 183°F)

HINT:

In addition to the above check, confirm that the valve is completely closed when the temperature is below the standard.

(c) Reinstall the thermostat INFO .

NG ▶ **REPLACE THERMOSTAT**

OK ▶ **REPLACE ENGINE COOLANT TEMPERATURE SENSOR**

Last Modified: 3-10-2010	6.4 C	**From:** 200901
Model Year: 2010	**Model:** Corolla	**Doc ID:** RM000000XH30AFX
Title: 2ZR-FE ENGINE CONTROL: SFI SYSTEM: P0300-P0304: Random / Multiple Cylinder Misfire Detected (2010 Corolla)		

DTC	**P0300**	**Random / Multiple Cylinder Misfire Detected**

DTC	**P0301**	**Cylinder 1 Misfire Detected**

DTC	**P0302**	**Cylinder 2 Misfire Detected**

DTC	**P0303**	**Cylinder 3 Misfire Detected**

DTC	**P0304**	**Cylinder 4 Misfire Detected**

DESCRIPTION

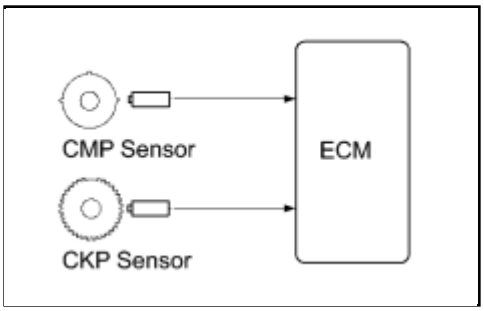

When the engine misfires, high concentrations of hydrocarbons (HC) enter the exhaust gas. High HC concentration levels can cause an increase in exhaust emission levels. Extremely high concentrations of HC can also cause increases in the three-way catalytic converter temperature, which may cause damage to the three-way catalytic converter. To prevent this increase in emissions and to limit the possibility of thermal damage, the ECM monitors the misfire rate. When the temperature of the three-way catalytic converter reaches the point of thermal degradation, the ECM blinks the MIL. To monitor misfires, the ECM uses both the Camshaft Position (CMP) sensor and the Crankshaft Position (CKP) sensor. The camshaft position sensor is used to identify any misfiring cylinders and the crankshaft position sensor is used to measure variations in the crankshaft rotation speed. Misfires are counted when the crankshaft rotation speed variations exceed predetermined thresholds. If the misfire count exceeds the threshold levels, and could cause emission control system performance

deterioration, the ECM illuminates the MIL and sets a DTC.

DTC NO.	DTC DETECTION CONDITION	TROUBLE AREA
P0300	When one of following conditions below is detected (2 trip detection logic): • High temperature misfire occurs in three-way catalytic converter (MIL blinks) • Emission deterioration misfire occurs (MIL illuminates) • Simultaneous misfiring of several cylinders occurs	• Open or short in engine wire harness • Connector connection • Vacuum hose connections • Ignition system • Fuel injector • Fuel pressure • Mass air flow meter • Engine coolant temperature sensor • Compression pressure • Valve timing • PCV valve and hose • PCV hose connections • Intake system • ECM
P0301 P0302 P0303 P0304	When one of following conditions below is detected (2 trip detection logic): • High temperature misfire occurs in three-way catalytic converter (MIL blinks) • Emission deterioration misfire occurs (MIL illuminates) • Misfiring of specific cylinder occurs	

When DTCs for misfiring cylinders are randomly set, but DTC P0300 is not set, it indicates that misfires have been detected in different cylinders at different times. DTC P0300 is only set when several misfiring cylinders are detected at the same time.

MONITOR DESCRIPTION

The ECM illuminates the MIL and sets a DTC when either one of the following conditions, which could cause emission control system performance deterioration, is detected (2 trip detection logic).

- Within the first 1000 crankshaft revolutions of the engine starting, an excessive misfiring rate (approximately 20 to 50 misfires per 1000 crankshaft revolutions) occurs once.
- An excessive misfiring rate (approximately 20 to 50 misfires per 1000 crankshaft revolutions) occurs a total of 4 times.

The ECM flashes the MIL and sets a DTC when either one of the following conditions, which could cause the three-way catalytic converter damage, is detected (2 trip detection logic).

HINT:

If a catalyst damage misfire occurs, the monitor informs the driver by blinking the MIL (1 trip).

- In every 200 crankshaft revolutions at a high engine rpm, the threshold misfiring percentage is recorded once.
- In every 200 crankshaft revolutions at a normal engine rpm, the threshold misfiring percentage is recorded 3 times.

Misfire Monitor for Mexico Models

The ECM illuminates the MIL and sets a DTC when either one of the following conditions, which could

cause emission deterioration, is detected (2 trip detection logic).

- Within the first 1000 crankshaft revolutions of the engine starting, an excessive misfiring rate (approximately 1000 misfires per 1000 crankshaft revolutions) occurs once.
- An excessive misfiring rate (approximately 500 misfires per 1000 crankshaft revolutions) occurs a total of 4 times.

The ECM flashes the MIL and sets a DTC when the following condition, which could cause the Three-Way Catalytic Converter (TWC) damage, is detected (2 trip detection logic).

- A catalyst damage misfire, which is monitored every 200 crankshaft revolutions, occurs 3 times.

MONITOR STRATEGY

Related DTCs	P0300: Multiple cylinder misfire P0301: Cylinder 1 misfire P0302: Cylinder 2 misfire P0303: Cylinder 3 misfire P0304: Cylinder 4 misfire
Required Sensors/Components (Main)	Crankshaft position sensor Camshaft position sensor
Required Sensors/Components (Related)	Engine coolant temperature Intake air temperature sensor Mass air flow meter
Frequency of Operation	Continuous
Duration	1000 to 4000 crankshaft revolutions: Emission related misfire 200 to 600 crankshaft revolutions: Catalyst damaging misfire
MIL Operation	2 driving cycles: Emission related misfire MIL flashes immediately: Catalyst damaging misfire
Sequence of Operation	None

TYPICAL ENABLING CONDITIONS

Misfire

Monitor runs whenever following DTCs not present	P0016 (VVT System Bank 1 - Misalignment) P0017 (Exhaust VVT System - Misalignment) P0102, P0103 (Mass Air Flow Meter) P0112, P0113 (Intake Air Temperature Sensor) P0115, P0117, P0118 (Engine Coolant Temperature Sensor) P0120, P0121 P0122, P0123, P0220, P0222, P0223, P2135 (Throttle Position Sensor) P0125 (Insufficient Engine Coolant Temperature for Closed

	Loop Fuel Control) P0327, P0328 (Knock Sensor) P0335 (Crankshaft Position Sensor) P0340 (Camshaft Position Sensor) P0351, P0352, P0353, P0354 (Igniter) P0500 (Vehicle Speed Sensor)
Battery voltage	8 V or more
VVT system	Not operated by scan tool
Engine RPM	450 to 6400 rpm
Either of following conditions (a) or (b) met	-
(a) Engine coolant temperature at engine start	More than -7°C (19°F)
(b) Engine coolant temperature	More than 20°C (68°F)
Fuel cut	OFF

Monitor Period of Emission-Related Misfire

First 1000 revolutions after engine start, or Check Mode	Crankshaft 1000 revolutions
Except above	Crankshaft 1000 revolutions x 4

Monitor Period of Catalyst Damaging Misfire (MIL Blinks)

All of following conditions 1, 2 and 3 met	Crankshaft 200 revolutions x 3
1. Driving cycles	1st
2. Check mode	OFF
3. Engine RPM	Less than 2450 rpm
Except above	Crankshaft 200 revolutions

FOR MEXICO MODELS:

Misfire: for Mexico models

The monitor will run whenever these DTCs are not present	P0016 (VVT System Bank 1 - Misalignment) P0017 (Exhaust VVT System - Misalignment) P0102, P0103 (Mass Air Flow Meter) P0112, P0113 (Intake Air Temperature Sensor) P0115, P0117, P0118 (Engine Coolant Temperature Sensor) P0120, P0121 P0122, P0123, P0220, P0222, P0223, P2135 (Throttle Position Sensor)

	P0125 (Insufficient Engine Coolant Temperature for Closed Loop Fuel Control) P0327, P0328 (Knock Sensor) P0335 (Crankshaft Position Sensor) P0340 (Camshaft Position Sensor) P0351, P0352, P0353, P0354 (Igniter) P0500 (Vehicle Speed Sensor)
Battery voltage	8 V or more
VVT system	Not operated by scan tool
Engine RPM	450 to 4500 rpm
Engine coolant temperature sensor	More than 65°C (149°F)
Fuel cut	OFF

Monitor period of emission-related-misfire: for Mexico models

First 1000 revolutions after engine start, or check mode	Crankshaft 1000 revolutions
Except above	Crankshaft 1000 revolutions x 4

Monitor period of catalyst-damaged-misfire (MIL blinks): for Mexico models

All of following conditions 1, 2 and 3 met	Crankshaft 200 revolutions
1. Driving cycles	1st
2. Check mode	OFF
Except above	Crankshaft 200 revolutions x 3

TYPICAL MALFUNCTION THRESHOLDS

Monitor Period of Emission Related Misfire

Misfire rate	1% or more

Monitor Period of Catalyst Damaging Misfire (MIL Blinks)

Number of misfire per 200 revolutions	124 or more (varies with intake air amount per RPM)

FOR MEXICO MODELS:

Monitor period of emission-related-misfire: for Mexico models

Misfire rate	50.0 % or more: for 1st 2000 revolutions 25.0 % or more: after 1st 2000 revolutions

Monitor period of catalyst-damaged-misfire (MIL blinks): for Mexico models

Number of misfire per 200 revolutions	94 or more (varies with intake air amount and RPM)
Paired cylinder misfire (MIL blinks immediately)	Detected

MONITOR RESULT

Refer to Checking Monitor Status INFO .

WIRING DIAGRAM

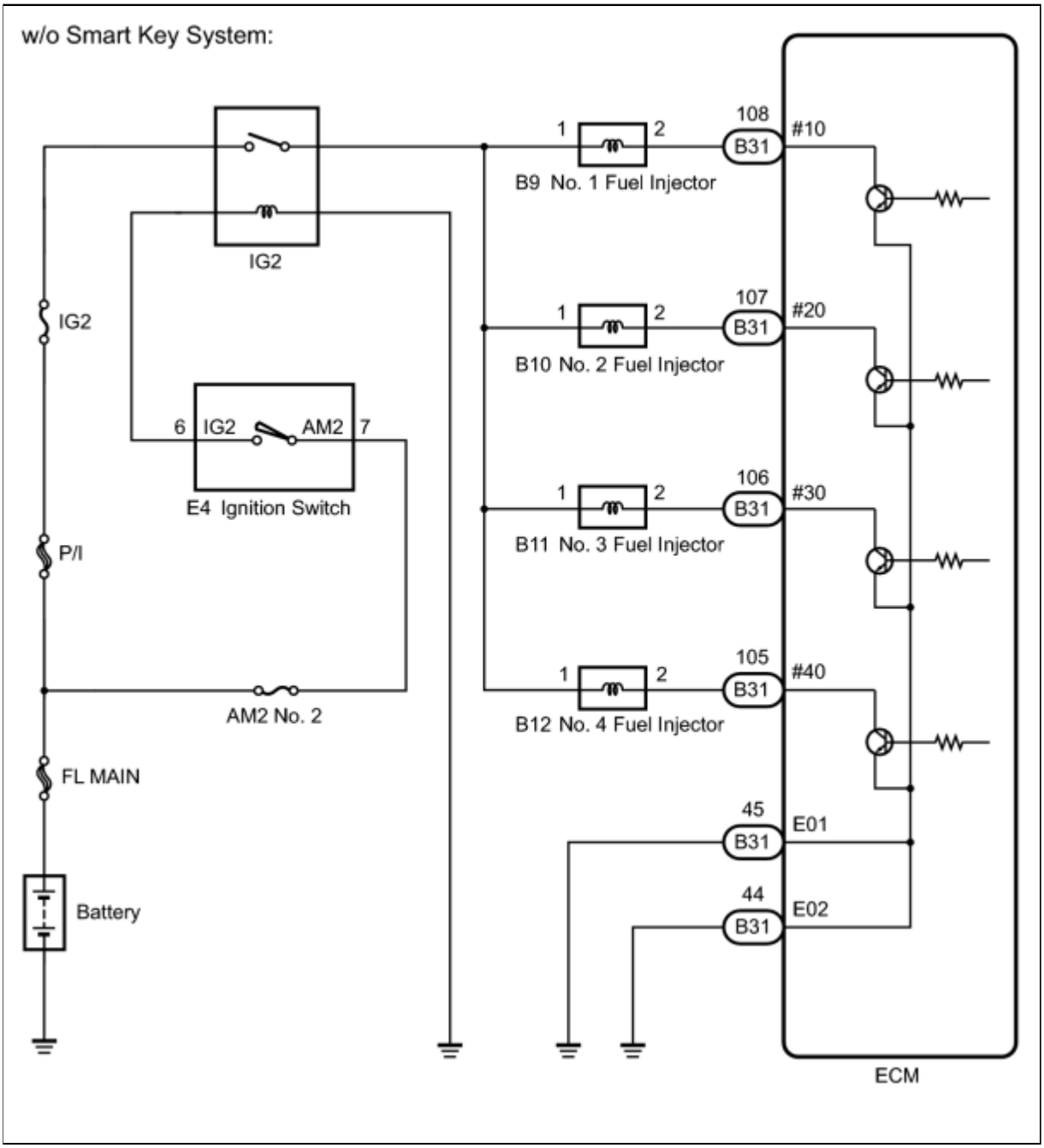

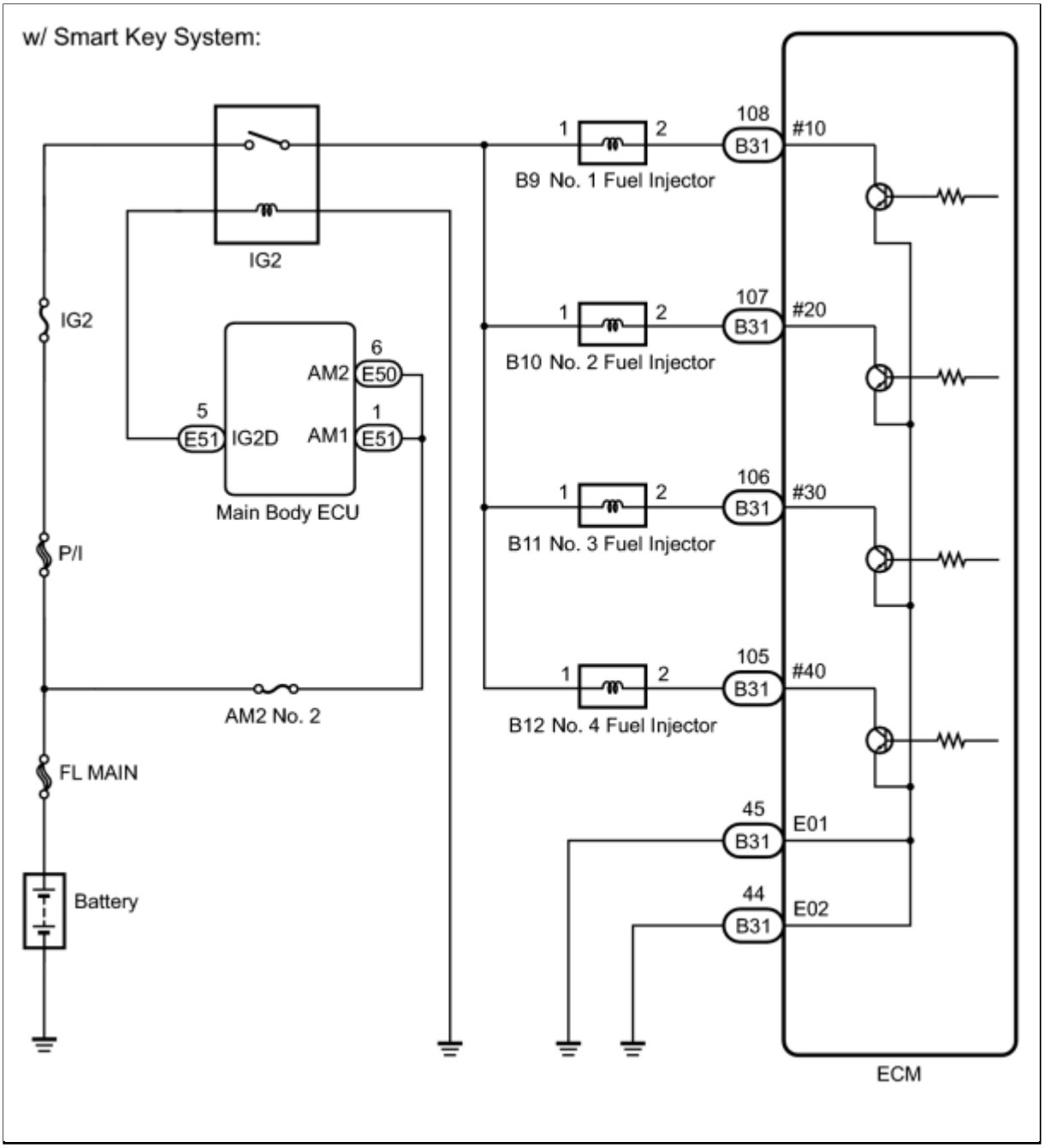

CONFIRMATION DRIVING PATTERN

1. Connect the Techstream to the DLC3.
2. Turn the ignition switch to ON.
3. Turn the Techstream on.
4. Record the DTC(s) and freeze frame data.
5. Using the Techstream, switch the ECM from normal mode to check mode INFO .
6. Read the misfire counts of each cylinder, Cylinder #1 Misfire Count to Cylinder #4 Misfire Count, with the engine idling. If any misfire count is displayed, skip the following confirmation driving pattern.
7. Drive the vehicle several times with the conditions, such as engine rpm and engine load, shown in Misfire RPM and Misfire Load in the Data List.

HINT:

- In order to store misfire DTCs, it is necessary to operate the vehicle for the period of time shown in the table below, using the Misfire RPM and Misfire Load in the Data List.

ENGINE RPM	DURATION
Idling	8 minutes or more
1000	4.5 minutes or more
2000	2.5 minutes or more
3000	1.5 minute or more

8. Check whether misfires have occurred by checking DTCs and freeze frame data.

HINT:

Do not turn the ignition switch off until the stored DTC(s) and freeze frame data have been recorded. When the ECM returns to normal mode (default), the stored DTC(s), freeze frame data and other data will be erased.

9. Record the DTC(s), freeze frame data and misfire counts.
10. Turn the ignition switch off and wait for at least 5 seconds.

INSPECTION PROCEDURE

HINT:

- If any DTCs other than misfire DTCs are output, troubleshoot those DTCs first.
- Read freeze frame data using the Techstream. The ECM records vehicle and driving condition information as freeze frame data the moment a DTC is stored. When troubleshooting, freeze frame data can be helpful in determining whether the vehicle was running or stopped, whether the engine was warmed up or not, whether the air fuel ratio was lean or rich, as well as other data recorded at the time of a malfunction.
- If the misfire does not recur when the vehicle is brought to the workshop, reproduce the conditions stored in the ECM as freeze frame data.
- If the misfire still cannot be reproduced even though the conditions stored in the ECM as freeze frame data have been reproduced, one of the following factors is considered to be a possible cause of the problem:
    a. There was insufficient fuel in the tank.
    b. Improper fuel is used.
    c. The spark plugs have been contaminated.
    d. The problem requires further diagnosis.
- After finishing repairs, check the misfire counts of the cylinders Cylinder #1 Misfire Count to Cylinder #4 Misfire Count.
- Be sure to confirm that no misfiring cylinder DTCs are set again by conducting the confirmation driving pattern after finishing repairs.
- When one of Short FT #1, Long FT #1, Short FT #2 or Long FT #2 in the freeze frame data is outside the range of +/-20%, the air fuel ratio may be Rich (-20% or less) or Lean (+20% or more).
- When the Coolant Temp in the freeze frame data is less than 75°C (167°F), the misfire have occurred only while warming up the engine.
- An extremely imbalanced drive wheel which causes body vibration may cause misfire DTCs detected.

PROCEDURE

1.	**CHECK ANY OTHER DTCS OUTPUT (IN ADDITION TO MISFIRE DTCS)**

(a) Connect the Techstream to the DLC3.

(b) Turn the ignition switch to ON.

(c) Turn the Techstream on.

(d) Enter the following menus: Powertrain / Engine and ECT / Trouble Codes.

(e) Read the DTCs.

HINT:

Write down indicated DTCs.

Result:

RESULT	PROCEED TO
DTC P0300, P0301, P0302, P0303 and/or P0304 is output	A
DTC P0300, P0301, P0302, P0303 and/or P0304 and other DTCs are output	B

HINT:

If any DTCs other than P0300, P0301, P0302, P0303 and P0304 are output, troubleshoot those DTCs first.

B ▶ **GO TO DTC CHART**

A ▼

2.	**READ VALUE USING TECHSTREAM (MISFIRE RPM AND MISFIRE LOAD)**

(a) Connect the Techstream to the DLC3.

(b) Turn the ignition switch to ON.

(c) Turn the Techstream on.

(d) Enter the following menus: Powertrain / Engine and ECT / Data List / Misfire RPM and Misfire Load.

(e) Read and note the Misfire RPM and Misfire Load values.

HINT:

The Misfire RPM and Misfire Load values indicate the vehicle conditions under which the misfire occurred.

NEXT

3.	**CHECK PCV HOSE CONNECTIONS**

(a) Check the PCV hose connected.

OK:

PCV hose is correctly connected and is not damaged.

NG → **REPAIR OR REPLACE PCV HOSE**

OK

4.	**READ VALUE USING TECHSTREAM (CATALYST OT MF F/C)**

(a) Connect the Techstream to the DLC3.

(b) Turn the ignition switch to ON.

(c) Turn the Techstream on.

(d) Enter the following menus: Powertrain / Engine and ECT / Data List / Catalyst OT MF F/C.

(e) Read the value displayed on the Techstream.

Result:

DATA LIST	TECHSTREAM DISPLAY	PROCEED TO
Catalyst OT MF F/C	Avail	A
	Not Avl	B

B → **READ VALUE USING TECHSTREAM (CYLINDER #1 MISFIRE COUNT, #2, #3 AND #4)**

A

5.	**PERFORM ACTIVE TEST USING TECHSTREAM (PROHIBIT CATALYST OT MISFIRE PREVENT F/C)**

(a) Connect the Techstream to the DLC3.

(b) Turn the ignition switch to ON.

(c) Turn the Techstream on.

(d) Enter the following menus: Powertrain / Engine and ECT / Active Test / Prohibit the Catalyst OT Misfire prevent F/C.

(e) Perform the Active Test.

NOTICE:

When performing the Active Test, make sure the vehicle is stopped and either idling or being revved within 3000 rpm.

NEXT

6.	**READ VALUE USING TECHSTREAM (CYLINDER #1 MISFIRE COUNT, #2, #3 AND #4)**

(a) Enter the following menus: Powertrain / Engine and ECT / Data List / Misfire / Cylinder #1 Misfire Count, #2, #3 and #4.

(b) Start the engine and allow the engine to idle.

(c) Read each value for Cylinder #1 Misfire Count to #4 displayed on the Techstream. If no misfire counts occur in any cylinders, perform steps (d) and (e), and then check the misfire counts again.

(d) Drive the vehicle with the Misfire RPM and Misfire Load noted in the "READ VALUE USING TECHSTREAM (MISFIRE RPM AND MISFIRE LOAD)" procedures above.

(e) Read the Cylinder #1 Misfire Count to #4 or DTCs displayed on the Techstream.

Result:

RESULT	PROCEED TO

(MISFIRE COUNT)	
Most misfires occur in only 1 or 2 cylinders	A
3 cylinders or more have equal misfire counts	B

HINT:

- If it is difficult to reproduce misfires for each cylinder, check the Data List item called Misfire Margin. Try to find vehicle driving conditions that lower the Misfire Margin value. Values above 30% are considered normal.
- If the freeze frame data record of the engine coolant temperature is below 75°C (167°F), it may only be possible to detect the misfire when the engine is cold.
- If the freeze frame data record of the Engine Run Time is below 120 seconds, the misfire may be detected immediately after the engine is started.

B ▶ **CHECK INTAKE SYSTEM**

A ▼

7.	INSPECT SPARK PLUG

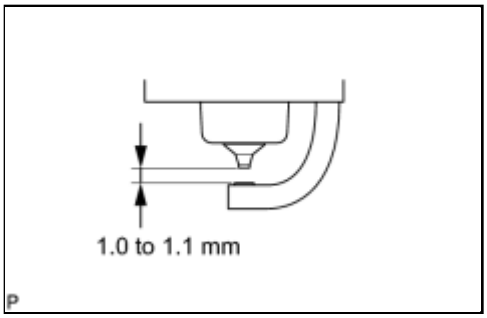

(a) Remove the ignition coil assembly and the spark plug from the misfiring cylinder.

(b) Measure the spark plug electrode gap.

Standard gap:
1.0 to 1.1 mm (0.0394 to 0.0433 in.)

(c) Check the electrode for carbon deposits.

Recommended Spark Plug

MANUFACTURER	PRODUCT
DENSO	SC20HR11

NOTICE:

If the electrode gap is larger than standard, replace the spark plug. Do not adjust the electrode gap.

(d) Reinstall the ignition coil assembly.

NG ▶ **REPLACE SPARK PLUG**

OK ▼

8.	CHECK FOR SPARK AND IGNITION

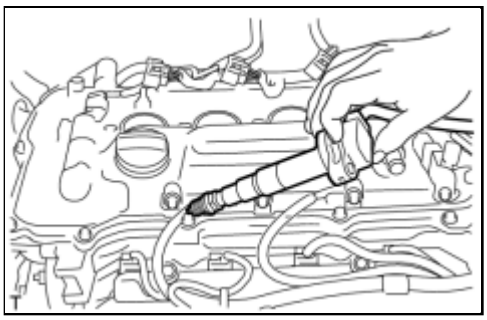

(a) Disconnect the injector connectors to prevent the engine from starting.

CAUTION:

Always disconnect all injector connectors.

(b) Remove the ignition coil assembly from the cylinder head.

(c) Install the spark plug onto the ignition coil.

(d) Touch the spark plug tip to the cylinder head.

(e) Crank the engine for less than 2 seconds and check for sparks.

NOTICE:

Do not crank the engine for more than 2 seconds.

OK:

Sparks jump across electrode gap.

(f) Install the ignition coil assembly.

(g) Reconnect the injector connectors.

NG ▶ **CHANGE TO KNOWN GOOD SPARK PLUG AND CHECK SPARK OF MISFIRING CYLINDER**

OK ▼

9.	**CHECK CYLINDER COMPRESSION PRESSURE**

(a) Measure the cylinder compression pressure of the misfiring cylinder INFO .

NG ▶ **CHECK ENGINE TO DETERMINE CAUSE OF LOW COMPRESSION**

OK ▼

10.	**INSPECT ECM TERMINAL OF MISFIRING CYLINDER (#10, #20, #30 AND/OR #40 VOLTAGE)**

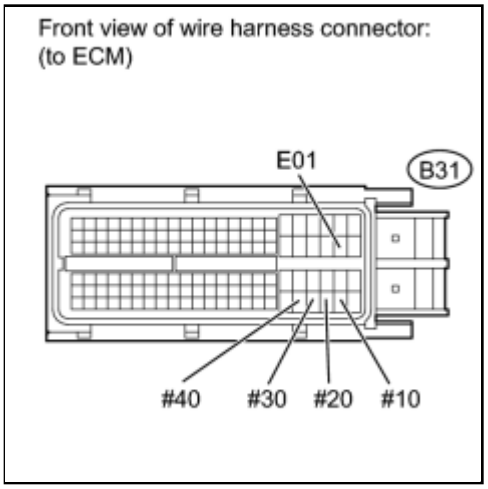

(a) Disconnect the ECM connector.

(b) Turn the ignition switch to ON.

(c) Measure the voltage according to the value(s) in the table below.

Standard Voltage:

TESTER CONNECTION	SWITCH CONDITION	SPECIFIED CONDITION
B31-108 (#10) - B31-45 (E01)	Ignition switch ON	11 to 14 V
B31-107 (#20) - B31-45 (E01)	Ignition switch ON	11 to 14 V
B31-106 (#30) - B31-45 (E01)	Ignition switch ON	11 to 14 V
B31-105 (#40) - B31-45 (E01)	Ignition switch ON	11 to 14 V

(d) Reconnect the ECM connector.

NG ▶ GO TO FUEL INJECTOR CIRCUIT

OK ▼

11.	CHECK FUEL INJECTOR OF MISFIRING CYLINDER

(a) Check the injector injection (whether fuel volume is high or low, and whether injection pattern is poor) INFO .

NG ▶ REPLACE FUEL INJECTOR

OK ▼

12.	CHECK INTAKE SYSTEM

(a) Check the intake system for vacuum leaks INFO .

OK:

No leaks in intake system.

NG ▶ REPAIR OR REPLACE INTAKE SYSTEM

OK ▼

13.	INSPECT MASS AIR FLOW METER

(a) Inspect the mass air flow meter INFO .

NG ▶ REPLACE MASS AIR FLOW METER

OK

14.	**CHECK FUEL PRESSURE**

(a) Check the fuel pressure INFO .

NG → **REPAIR OR REPLACE FUEL PUMP, PRESSURE REGULATOR, FUEL PIPE LINE OR FILTER**

OK

15.	**READ VALUE USING TECHSTREAM (COOLANT TEMP)** INFO

NG → **REPLACE ENGINE COOLANT TEMPERATURE SENSOR**

OK

16.	**CHECK VALVE TIMING** INFO

NG → **ADJUST VALVE TIMING**

OK → **REPLACE ECM**

17.	**CHECK INTAKE SYSTEM**

(a) Check the intake system for vacuum leaks INFO .

OK:

No leaks in intake system.

NG ▶ REPAIR OR REPLACE INTAKE SYSTEM

OK ▼

18.	INSPECT MASS AIR FLOW METER

(a) Inspect the mass air flow meter INFO .

NG ▶ REPLACE MASS AIR FLOW METER

OK ▼

19.	CHECK FUEL PRESSURE

(a) Check the fuel pressure INFO .

NG ▶ REPAIR OR REPLACE FUEL PUMP, PRESSURE REGULATOR, FUEL PIPE LINE OR FILTER

OK ▼

20.	READ VALUE USING TECHSTREAM (COOLANT TEMP) INFO

NG ▶ REPLACE ENGINE COOLANT TEMPERATURE SENSOR

OK

21.	**INSPECT SPARK PLUG**

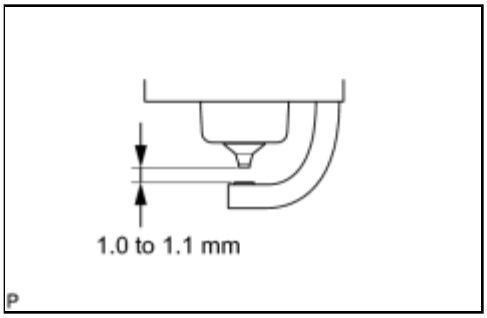

(a) Remove the ignition coil assembly and the spark plug of the misfiring cylinder.

(b) Measure the spark plug electrode gap.

Standard gap:
1.0 to 1.1 mm (0.0394 to 0.0433 in.)

(c) Check the electrode for carbon deposits.

Recommended Spark Plug

MANUFACTURER	PRODUCT
DENSO	SC20HR11

NOTICE:
If the electrode gap is larger than standard, replace the spark plug. Do not adjust the electrode gap.

(d) Reinstall the ignition coil assembly.

NG ▶ **REPLACE SPARK PLUG**

OK

22.	**CHECK FOR SPARKS AND IGNITION**

(a) Disconnect the injector connectors to prevent the

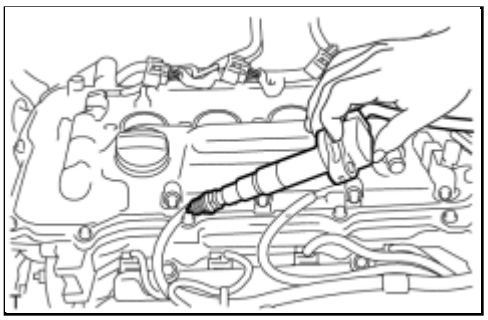

engine from starting.

CAUTION:

Always disconnect all injector connectors.

(b) Remove the ignition coil assembly from the cylinder head.

(c) Install the spark plug onto the ignition coil assembly.

(d) Touch the spark plug tip to the cylinder head.

(e) Crank the engine for less than 2 seconds and check for spark.

NOTICE:

Do not crank the engine for more than 2 seconds.

OK:

Sparks jump across electrode gap.

(f) Install the ignition coil assembly.

(g) Reconnect the injector connectors.

NG ▶ **CHANGE TO KNOWN GOOD SPARK PLUG AND CHECK SPARK OF MISFIRING CYLINDER**

OK ▼

23.	**CHECK CYLINDER COMPRESSION PRESSURE**

(a) Measure the cylinder compression pressure of the misfiring cylinder INFO .

NG ▶ **CHECK ENGINE TO DETERMINE CAUSE OF LOW COMPRESSION**

OK ▼

24.	**INSPECT ECM TERMINAL OF MISFIRING CYLINDER (#10, #20, #30 AND/OR #40 VOLTAGE)**

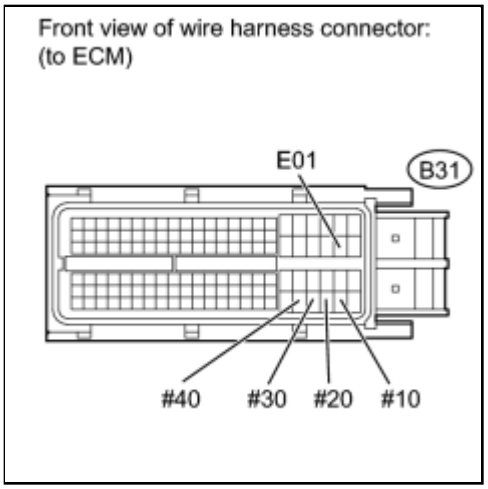

(a) Disconnect the ECM connector.

(b) Turn the ignition switch to ON.

(c) Measure the voltage according to the value(s) in the table below.

Standard Voltage:

TESTER CONNECTION	SWITCH CONDITION	SPECIFIED CONDITION
B31-108 (#10) - B31-45 (E01)	Ignition switch ON	11 to 14 V
B31-107 (#20) - B31-45 (E01)	Ignition switch ON	11 to 14 V
B31-106 (#30) - B31-45 (E01)	Ignition switch ON	11 to 14 V
B31-105 (#40) - B31-45 (E01)	Ignition switch ON	11 to 14 V

(d) Reconnect the ECM connector.

NG ▶ **GO TO FUEL INJECTOR CIRCUIT**

OK ▼

25.	**CHECK FUEL INJECTOR OF MISFIRING CYLINDER**

(a) Check the injector injection (whether fuel volume is high or low, and whether injection

pattern is poor) INFO .

NG ▶ REPLACE FUEL INJECTOR

OK ▼

26.	CHECK VALVE TIMING INFO

NG ▶ ADJUST VALVE TIMING

OK ▶ REPLACE ECM

27.	CHANGE TO KNOWN GOOD SPARK PLUG AND CHECK SPARK OF MISFIRING CYLINDER

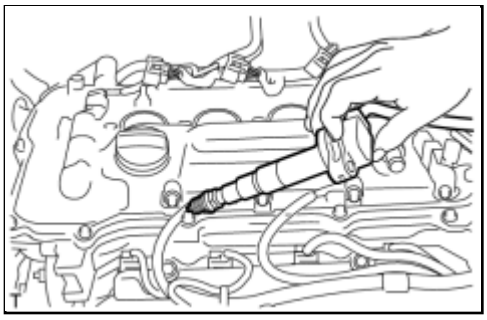

(a) Change the installed spark plug to a known good spark plug.

(b) Perform a spark test.

CAUTION:

Always disconnect all injector connectors.

NOTICE:

Do not crank the engine for more than 2 seconds.

(1) Install the spark plug into the ignition coil assembly and connect the ignition coil assembly connector.

(2) Disconnect the injector connectors.

(3) Ground the spark plug.

(4) Check if sparks occur while the engine is being cranked.

OK:

Sparks jump across electrode gap.

NG ▶ CHANGE TO KNOWN GOOD IGNITION COIL AND CHECK SPARK OF MISFIRING CYLINDER

OK ▶ REPLACE SPARK PLUG

28.	CHANGE TO KNOWN GOOD IGNITION COIL AND CHECK SPARK OF MISFIRING CYLINDER

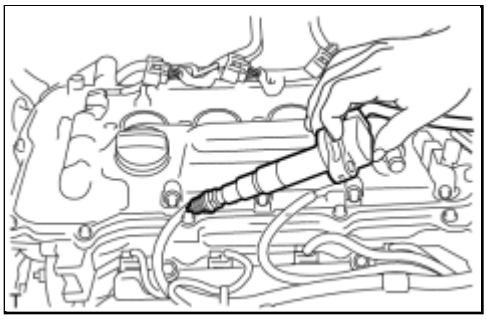

(a) Change the ignition coil assembly to a known good ignition coil.

(b) Perform a spark test.

CAUTION:

Always disconnect all injector connectors.

NOTICE:

Do not crank the engine for more than 2 seconds.

(1) Install the spark plug into the ignition coil assembly and connect the ignition coil assembly connector.

(2) Disconnect the injector connector.

(3) Ground the spark plug.

(4) Check if sparks occur while the engine is being cranked.

OK:

Sparks jump across electrode gap.

NG ▶ REPLACE ECM

OK ▶ REPLACE IGNITION COIL ASSEMBLY

Last Modified: 3-10-2010	6.4 C	**From:** 200901
Model Year: 2010	**Model:** Corolla	**Doc ID:** RM0000010BK05AX
Title: 2ZR-FE ENGINE CONTROL: SFI SYSTEM: P011B: Engine Coolant Temperature / Intake Air Temperature Correlation (2010 Corolla)		

DTC	**P011B**	**Engine Coolant Temperature / Intake Air Temperature Correlation**

DESCRIPTION

The engine has two temperature sensors, an engine coolant temperature sensor and an intake air temperature sensor, to detect the temperature while the engine is operating. A thermistor, whose resistance value varies according to the temperature, is built into each sensor. When the temperature is low, the resistance of the thermistor increases. When the temperature is high, the resistance drops. These variations in resistance are transmitted to the ECM as voltage changes. Based on these temperature signals output from the sensors, the ECM determines the fuel injection duration and the ignition timing to control the engine.

DTC NO.	DTC DETECTION CONDITION	TROUBLE AREA
P011B	• All of following conditions are met: (2 trip detection logic) a. Battery voltage 10.5 V or more b. 7 hours or more elapsed from engine stops on previous trip c. 39 seconds after cold engine starts d. Minimum intake air temperature after engine starts more than -10°C (14°F) e. Average engine coolant temperature before engine starts more than -10°C (14°F) f. Difference between readings of engine coolant temperature and intake air temperature greater than 20°C (68°F)	• Intake air temperature sensor • Engine coolant temperature sensor • ECM

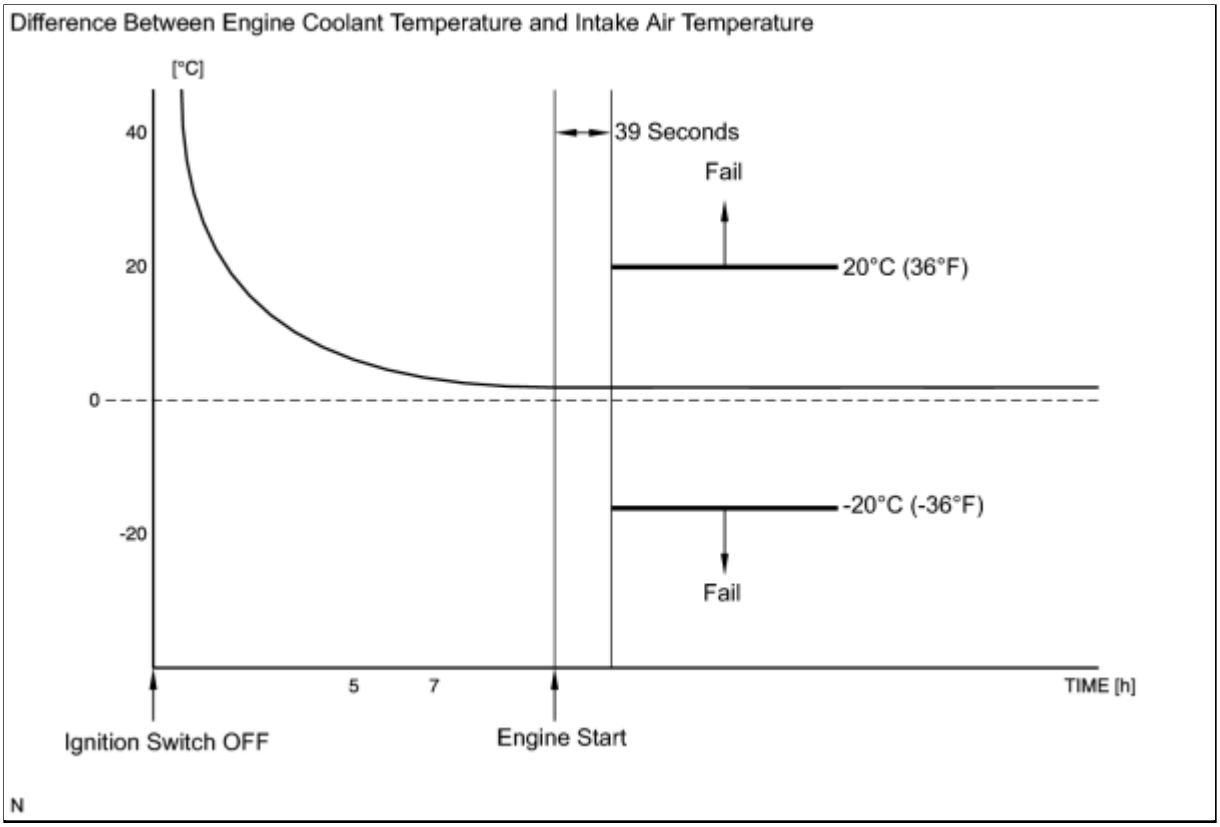

HINT:

- Waiting is required to prevent the temperature of the engine from affecting the readings. If the engine has been operated recently, it will not be possible to accurately compare the readings.
- For diagnosis, in order to duplicate the detection conditions of the DTC, it is necessary to park the vehicle for 7 hours. Parking the vehicle for 7 hours ensures that the actual temperature of the engine coolant temperature and intake air temperature are very similar. When the vehicle has been parked for less than 7 hours, differences in the readings may exist, this does not necessarily indicate a fault.

MONITOR DESCRIPTION

The ECM monitors the difference between the engine coolant temperature and the intake air temperature when the engine is started cold to detect the engine temperature conditions accurately. The monitor runs when the engine started cold after 7 hours or more has elapsed since the engine was stopped (ignition switch turned off) on the previous trip. If the difference between the engine coolant temperature and the intake air temperature on a cold start exceeds 20°C (36°F), the ECM interprets this as a malfunction in the engine coolant temperature sensor circuit and intake air temperature sensor circuit, and sets the DTC.

MONITOR STRATEGY

Related DTCs	P011B: Engine coolant temperature / Intake air temperature sensor correlation
Required Sensors/Components (Main)	Engine coolant temperature Intake air temperature sensor

Required Sensors/Components (Related)	-
Frequency of Operation	Once per driving cycle
Duration	7 hours or more
MIL Operation	2 driving cycles
Sequence of Operation	None

TYPICAL ENABLING CONDITIONS

The monitor will run whenever these DTCs are not present	None
All of following conditions are met	Conditions 1 and 2
1. All of following conditions are met	Conditions (a), (b), (c) and (d)
(a) After ignition switch ON and engine not running time	Less than 20 seconds
(b) Soak Time	7 hours or more
(c) Battery voltage	10.5 V or more
(d) Time after engine start	39 seconds or more
2. Either of the following conditions is met	Condition (a) and (b)
(a) Minimum intake air temperature after engine start	-10°C (14°F) or more
(b) Engine coolant temperature before engine start	-10°C (14°F) or more

TYPICAL MALFUNCTION THRESHOLDS

Deviated engine coolant temperature and intake air temperature	Less than -20°C (-36°F) or more than 20°C (36°F)

INSPECTION PROCEDURE

PROCEDURE

1.	**CHECK ANY OTHER DTCS OUTPUT (IN ADDITION TO P011B)**

(a) Connect the Techstream to the DLC3.

(b) Turn the ignition switch to ON.

(c) Turn the Techstream on.

(d) Enter the following menus: Powertrain / Engine and ECT / Trouble Codes.

(e) Read DTCs.

Result:

RESULT	PROCEED TO
DTC P011B is output	A
DTC P011B and other DTCs are output	B

HINT:

If any DTCs other than P011B are output, troubleshoot those DTCs first.

B ▶ **GO TO DTC CHART**

A ▼

2.	**READ VALUE USING TECHSTREAM (INTAKE AIR TEMPERATURE)**

(a) Leave the vehicle for 7 hours or more.

HINT:

It is necessary leave the vehicle for 7 hours or more to allow conditions similar to the DTC detection conditions.

(b) Connect the Techstream to the DLC3.

(c) Turn the ignition switch to ON.

(d) Turn the Techstream on.

(e) Enter the following menus: Powertrain / Engine and ECT / Intake Air.

(f) Read the value displayed on the Techstream.

OK:

The difference between the intake air temperature and the actual outside air temperature is within 10°C (18°F).

HINT:

Temperature readings on the vehicle's outside temperature gauge (if equipped) are not suitable for comparing to the intake air temperature reading. The outside temperature gauge has a significant delay built in to prevent temperature swings from being displayed on its display. Use an accurate thermometer to determine the outside air temperature.

NG ▶ REPLACE MASS AIR FLOW METER

OK ▼

3.	READ VALUE USING TECHSTREAM (COOLANT TEMPERATURE)

(a) Connect the Techstream to the DLC3.

(b) Turn the ignition switch to ON.

(c) Turn the Techstream on.

(d) Enter the following menus: Powertrain / Engine and ECT / Coolant Temp.

(e) Read the value displayed on the Techstream.

OK:

The difference between the coolant temperature and the actual outside air temperature is within 10°C (18°F).

HINT:

If the result is not as specified, check if there are heat sources such as a block heater in the engine compartment.

NG ▶ REPLACE ENGINE COOLANT TEMPERATURE SENSOR

OK ▶ REPLACE ECM

Last Modified: 3-10-2010	6.4 C	**From:** 200901
Model Year: 2010	**Model:** Corolla	**Doc ID:** RM000000T9P05IX
Title: 2ZR-FE ENGINE CONTROL: SFI SYSTEM: P0125: Insufficient Coolant Temperature for Closed Loop Fuel Control (2010 Corolla)		

DTC	**P0125**	**Insufficient Coolant Temperature for Closed Loop Fuel Control**

DESCRIPTION

Refer to DTC P0115 INFO .

DTC NO.	DTC DETECTION CONDITION	TROUBLE AREA
P0125	Engine coolant temperature does not reach closed-loop enabling temperature for 20 minutes (this period varies with engine start engine coolant temperature) (2 trip detection logic)	• Cooling system • Engine coolant temperature sensor • Thermostat

MONITOR DESCRIPTION

The resistance of the engine coolant temperature sensor varies in proportion to the actual engine coolant temperature. The ECM supplies a constant voltage to the sensor and monitors the signal output voltage of the sensor. The signal output voltage varies according to the changing resistance of the sensor. After the engine is started, the engine coolant temperature is monitored through this signal. If the engine coolant temperature sensor indicates that the engine is not yet warm enough for closed-loop fuel control, despite a specified period of time having elapsed since the engine was started, the ECM interprets this as a malfunction in the sensor or cooling system and sets the DTC.

Example:

The engine coolant temperature is 5°C (41°F) at engine start. After about 1 minute running time, the engine coolant temperature sensor still indicates that the engine is not warm enough to begin closed-loop fuel (air fuel ratio feedback) control. The ECM interprets this as a malfunction in the sensor or cooling system and sets the DTC.

MONITOR STRATEGY

Related DTCs	P0125: Insufficient engine coolant temperature for closed-loop fuel control
Required Sensors/Components (Main)	Engine coolant temperature sensor Thermostat Cooling system

Required Sensors/Components (Related)	-
Frequency of Operation	Once per driving cycle
Duration	65 seconds: Engine coolant temperature at engine start -3.33°C (26°F) or more 129 seconds: Engine coolant temperature at engine start -3.33 to -14.44°C (26 to 6°F) 1200 seconds: Engine coolant temperature at engine start less than -14.44°C (6°F)
MIL Operation	2 driving cycles
Sequence of Operation	None

TYPICAL ENABLING CONDITIONS

Monitor runs whenever following DTCs not present	None
Thermostat fail	Not detected

TYPICAL MALFUNCTION THRESHOLDS

Time until actual engine coolant temperature reaches closed-loop fuel control enabling temperature	65 seconds: Engine coolant temperature at engine start -3.33°C (26°F) or more 129 seconds: Engine coolant temperature at engine start -3.33 to -14.44°C (26 to 6°F) 1200 seconds: Engine coolant temperature at engine start less than -14.44°C (6°F)

WIRING DIAGRAM

Refer to DTC P0115 INFO .

INSPECTION PROCEDURE

HINT:

- If any of DTCs P0115, P0116, P0117 or P0118 are set simultaneously with DTC P0125, the engine coolant temperature sensor may have an open or a short circuit. Troubleshoot those DTCs first.
- Read freeze frame data using the Techstream. The ECM records vehicle and driving condition information as freeze frame data the moment a DTC is stored. When troubleshooting, freeze frame data can be helpful in determining whether the vehicle was running or stopped, whether the engine was warmed up or not, whether the air fuel ratio was lean or rich, as well as other data recorded at the time of a malfunction.

PROCEDURE

1.	**CHECK ANY OTHER DTCS OUTPUT (IN ADDITION TO DTC P0125)**

(a) Connect the Techstream to the DLC3.

(b) Turn the ignition switch to ON.

(c) Turn the Techstream ON.

(d) Enter the following menus: Powertrain / Engine and ECT / Trouble Codes.

(e) Read the DTCs.

Result:

RESULT	PROCEED TO
DTC P0125 is output	A
DTC P0125 and other DTCs are output	B

HINT:

If any DTCs other than P0125 are output, troubleshoot those DTCs first.

B ▶ **GO TO DTC CHART**

A ▼

2.	**INSPECT THERMOSTAT**

(a) Remove the thermostat INFO .

(b) Check the valve opening temperature of the thermostat.

Standard value:
80 to 84°C (176 to 183°F)

HINT:

In addition to the above check, confirm that the valve is completely closed when the temperature is below the standard.

(c) Reinstall the thermostat INFO .

NG ▶ REPLACE THERMOSTAT

OK ▼

3.	CHECK COOLING SYSTEM

(a) Check for defects in the cooling system that might cause the system to be too cold, such as abnormal radiator fan operation or any modifications.

NG ▶ REPAIR OR REPLACE COOLING SYSTEM

OK ▶ REPLACE ENGINE COOLANT TEMPERATURE SENSOR

Last Modified: 3-10-2010	6.4 C	**From:** 200901
Model Year: 2010	**Model:** Corolla	**Doc ID:** RM000000WC3090X
Title: 2ZR-FE ENGINE CONTROL: SFI SYSTEM: P0171,P0172: System Too Lean (Bank 1) (2010 Corolla)		

DTC	**P0171**	**System Too Lean (Bank 1)**

DTC	**P0172**	**System Too Rich (Bank 1)**

DESCRIPTION

The fuel trim is related to the feedback compensation value, not to the basic injection duration. The fuel trim consists of both the short-term and long-term fuel trim.

The short-term fuel trim is fuel compensation that is used to constantly maintain the air fuel ratio at stoichiometric levels. The signal from the air fuel ratio sensor indicates whether the air fuel ratio is rich or lean compared to the stoichiometric ratio. This triggers a reduction in the fuel injection volume if the air fuel ratio is rich and an increase in the fuel injection volume if it is lean.

Factors such as individual engine differences, wear over time and changes in operating environment cause short-term fuel trim to vary from the central value. The long-term fuel trim, which controls overall fuel compensation, compensates for long-term deviations in the fuel trim from the central value caused by the short- term fuel trim compensation.

If both the short-term and long-term fuel trim are lean or rich beyond predetermined values, it is interpreted as a malfunction, and the ECM illuminates the MIL and sets a DTC.

DTC NO.	DTC DETECTION CONDITION	TROUBLE AREA
P0171	With warm engine and stable air fuel ratio feedback, fuel trim considerably in error to lean side (2 trip detection logic)	• Intake system • Injector blockage • Mass air flow meter • Engine coolant temperature sensor • Fuel pressure • Gas leaks from exhaust system • Open or short in air fuel ratio sensor (sensor 1) circuit • Air fuel ratio sensor (sensor 1) • PCV valve and hose • PCV hose connections • ECM
P0172	With warm engine and stable air fuel ratio feedback, fuel trim considerably in error to rich side (2 trip detection logic)	• Injector leak or blockage • Mass air flow meter • Engine coolant temperature sensor • Ignition system • Fuel pressure • Gas leaks from exhaust system • Open or short in air fuel ratio sensor (sensor 1) circuit • Air fuel ratio sensor (sensor 1) • ECM

HINT:

- When DTC P0171 is set, the actual air fuel ratio is on the lean side. When DTC P0172 is set, the actual air fuel ratio is on the rich side.
- If the vehicle runs out of fuel, the air fuel ratio is lean and DTC P0171 may be set. The MIL is then illuminated.
- When the total of the short-term and long-term fuel trim values is within the malfunction threshold (and the engine coolant temperature is more than 75°C [167°F]), the system is functioning normally.

MONITOR DESCRIPTION

Under closed-loop fuel control, a fuel injection volume that deviates from that estimated by the ECM cause changes in the long-term fuel trim compensation value. The long-term fuel trim is adjusted when there are persistent deviations in the short-term fuel trim value. Deviations from the ECM's estimated fuel injection volume also affects the average fuel trim learning value, which is a combination of the average short-term fuel trim (fuel feedback compensation value) and the average long-term fuel trim (learning value of the air fuel ratio). If the average fuel trim learning value exceeds a malfunction threshold, the ECM interprets this a fault in the fuel system and sets a DTC.

Example:

The average fuel trim learning value is more than +35% or less than -35%, the ECM interprets this as a fuel system malfunction.

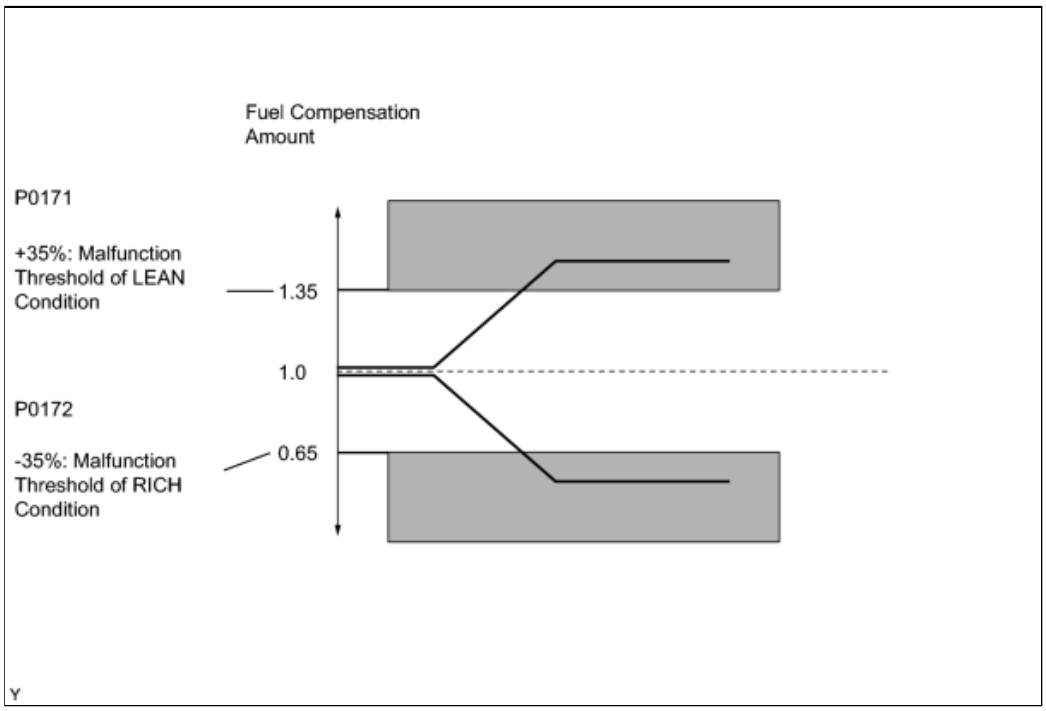

MONITOR STRATEGY

Related DTCs	P0171: Fuel trim Lean (bank 1) P0172: Fuel trim Rich (bank 1)
Required Sensors/Components (Main)	Fuel system
Required Sensors/Components (Related)	Air fuel ratio sensor Mass air flow meter Crankshaft position sensor
Frequency of Operation	Continuous
Duration	Within 10 seconds
MIL Operation	2 driving cycles
Sequence of Operation	None

TYPICAL ENABLING CONDITIONS

Fuel-trim

Monitor runs whenever following DTCs not present	P0010 (VVT Oil Control Valve Bank 1) P0011 (VVT System Bank 1- Advance) P0012 (VVT System Bank 1- Retard) P0013 (Exhaust Oil Control Valve) P0014 (Exhaust System - Advance) P0016 (VVT System Bank 1 - Misalignment) P0017 (Exhaust VVT System - Misalignment) P0031, P0032 (Air Fuel Ratio Snesor Heater - Sensor 1) P0102, P0103 (Mass Air Flow Meter) P0115, P0117, P0118 (Engine Coolant Temperature Sensor) P0120, P0121 P0122, P0123, P0220, P0222, P0223, P2135 (Throttle Position Sensor) P0125 (Insufficient Engine Coolant Temperature for Closed Loop Fuel Control) P0335 (Crankshaft Position Sensor) P0340, P0342, P0343 (Camshaft Position Sensor) P0351, P0352, P0353, P0354 (Igniter) P0365, P0367, P0368 (Exhaust Camshaft Position Sensor) P0500 (Vehicle Speed Sensor)
Fuel system status	Closed-loop
Battery voltage	11 V or more
Either of following conditions 1 or 2 set	-
1. Engine RPM	720 rpm or less
2. Intake air amount per revolution	0.16 g/rev or more
Catalyst monitor	No executed

TYPICAL MALFUNCTION THRESHOLDS

Fuel-trim

Purge-cut	Executing
Either of following conditions 1 or 2 met	-
1. Average between short-term fuel trim and long-term fuel trim	35% or more (varies with engine coolant temperature)
2. Average between short-term fuel trim and long-term fuel trim	-35% or less (varies with engine coolant temperature)

WIRING DIAGRAM

Refer to DTC P2195 INFO .

INSPECTION PROCEDURE

HINT:

Malfunctioning areas can be identified by performing the Control the Injection Volume for A/F sensor function provided in the Active Test. The Control the Injection Volume for A/F sensor function can help to determine whether the air fuel ratio sensor, heated oxygen sensor and other potential trouble areas are malfunctioning.

The following instructions describe how to conduct the Control the Injection Volume for A/F sensor operation using the Techstream.

1. Connect the Techstream to the DLC3.
2. Start the engine.
3. Turn the Techstream on.
4. Warm up the engine at an engine speed of 2500 rpm for approximately 90 seconds.
5. Enter the following menus: Powertrain / Engine and ECT / Active Test / Control the Injection Volume for A/F sensor.
6. Perform the Active Test operation with the engine idling (press the RIGHT or LEFT button to change the fuel injection volume.)
7. Monitor the output voltages of the air fuel ratio and heated oxygen sensors (AFS Voltage B1 S1 and O2S B1 S2) displayed on the Techstream.

HINT:

- The Control the Injection Volume for A/F sensor operation lowers the fuel injection volume by 12.5% or increases the injection volume by 25%.
- Each sensor reacts in accordance with increases and decreases in the fuel injection volume.

TECHSTREAM DISPLAY (SENSOR)	INJECTION VOLUME	STATUS	VOLTAGE
AFS Voltage B1 S1 (air fuel ratio)	+25%	Rich	Less than 3.1 V
	-12.5%	Lean	More than 3.4 V
O2S B1 S2 (heated oxygen)	+25%	Rich	More than 0.55 V
	-12.5%	Lean	Less than 0.4 V

NOTICE:

The air fuel ratio sensor has an output delay of a few seconds and the heated oxygen sensor has a maximum output delay of approximately 20 seconds.

CASE	AIR FUEL RATIO SENSOR (SENSOR 1) OUTPUT VOLTAGE	HEATED OXYGEN SENSOR (SENSOR 2) OUTPUT VOLTAGE	MAIN SUSPECTED TROUBLE AREA
1	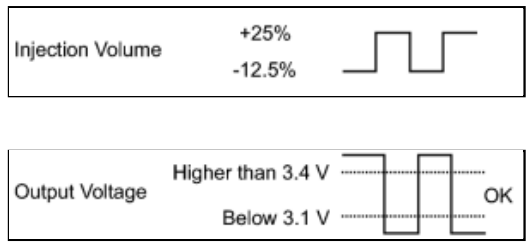	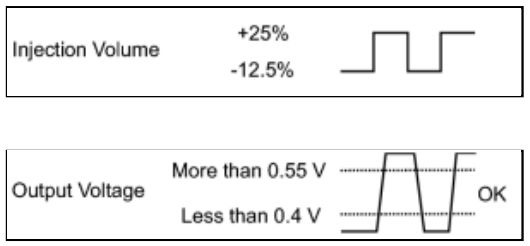	-
2	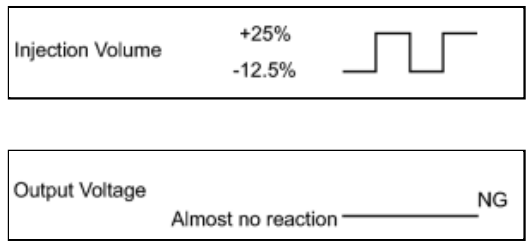	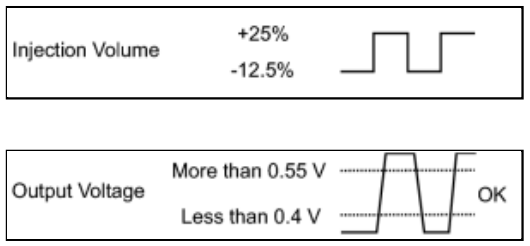	• Air fuel ratio sensor • Air fuel ratio sensor heater • Air fuel ratio sensor circuit
3	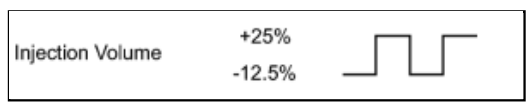	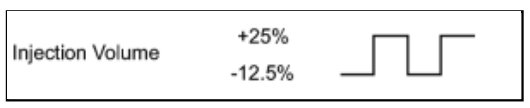	• Heated oxygen sensor • Heated oxygen

CASE	AIR FUEL RATIO SENSOR (SENSOR 1) OUTPUT VOLTAGE	HEATED OXYGEN SENSOR (SENSOR 2) OUTPUT VOLTAGE	MAIN SUSPECTED TROUBLE AREA
	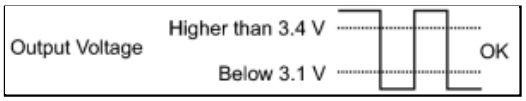	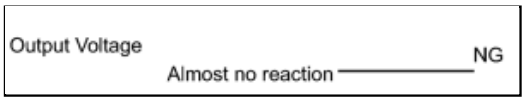	sensor heater • Heated oxygen sensor circuit
4	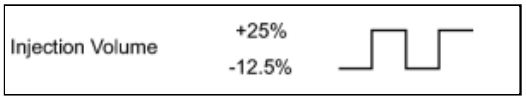 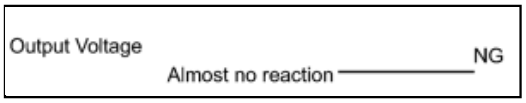	 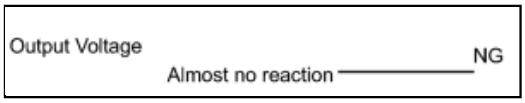	• Injector • Fuel pressure • Gas leak from exhaust system (Air fuel ratio extremely rich or lean)

- Following the Control the Injection Volume for A/F sensor procedure enables technicians to check and graph the voltage outputs of both the air fuel ratio and heated oxygen sensors.
- To display the graph, enter the following menus: Powertrain / Engine and ECT / Active Test / Control the Injection Volume for A/F Sensor / AFS Voltage B1 S1 and O2S B1 S2; then press the graph button on the Data List view.

HINT:

- Read freeze frame data using the Techstream. The ECM records vehicle and driving condition information as freeze frame data the moment a DTC is stored. When troubleshooting, freeze frame data can be helpful in determining whether the vehicle was running or stopped, whether the engine was warmed up or not, whether the air fuel ratio was lean or rich, as well as other data recorded at the time of a malfunction.
- A low air fuel ratio sensor voltage could be caused by a rich air fuel mixture. Check for conditions that would cause the engine to run rich.
- A high air fuel ratio sensor voltage could be caused by a lean air fuel mixture. Check for conditions that would cause the engine to run lean.

PROCEDURE

1.	**CHECK ANY OTHER DTCS OUTPUT (IN ADDITION TO DTC P0171 OR P0172)**

(a) Connect the Techstream to the DLC3.

(b) Turn the ignition switch to ON.

(c) Turn the Techstream on.

(d) Enter the following menus: Powertrain / Engine and ECT / Trouble Codes.

(e) Read the DTCs.

Result:

RESULT	PROCEED TO

RESULT	PROCEED TO
DTC P0171 or P0172 is output	A
DTC P0171 or P0172 and other DTCs are output	B

HINT:

If any DTCs other than P0171 or P0172 are output, troubleshoot those DTCs first.

B ▶ **GO TO DTC CHART**

A ▼

2.	CHECK PCV HOSE CONNECTIONS

(a) Inspect the PCV hose connections INFO.

OK:

PCV hose is connected correctly and is not damaged.

NG ▶ **REPAIR OR REPLACE PCV HOSE**

OK ▼

3.	CHECK INTAKE SYSTEM

(a) Check the intake system for vacuum leaks INFO.

OK:

No leaks in intake system.

NG ▶ **REPAIR OR REPLACE INTAKE SYSTEM**

OK ▼

4.	PERFORM ACTIVE TEST USING TECHSTREAM (A/F CONTROL)

(a) Connect the Techstream to the DLC3.

(b) Start the engine.

(c) Turn the Techstream on.

(d) Warm up the engine at an engine speed of 2500 rpm for approximately 90 seconds.

(e) Enter the following menus: Powertrain / Engine and ECT / Active Test / Control the Injection Volume for A/F Sensor.

(f) Perform the Control the Injection Volume for A/F Sensor operation with the engine idling (press the RIGHT or LEFT button to change the fuel injection volume).

(g) Monitor the voltage outputs of the air fuel ratio sensor and the heated oxygen sensor (AFS Voltage B1S1 and O2S B1S2) displayed on the Techstream.

HINT:

- The Control the Injection Volume for A/F Sensor operation lowers the fuel injection volume by 12.5% or increases the injection volume by 25%.
- Each sensor reacts in accordance with increases and decreases in the fuel injection volume.

Standard:

TECHSTREAM DISPLAY (SENSOR)	INJECTION VOLUME	STATUS	VOLTAGE
AFS Voltage B1S1 (air fuel ratio)	+25%	Rich	Less than 3.1 V
	-12.5%	Lean	More than 3.4 V
O2S B1S2 (heated oxygen)	+25%	Rich	More than 0.55 V
	-12.5%	Lean	Less than 0.4 V

Result

STATUS AFS VOLTAGE B1S1	STATUS O2S B1S2	AIR FUEL RATIO CONDITION AND AIR FUEL RATIO SENSOR CONDITION	MISFIRE	SUSPECTED TROUBLE AREA	PROCEED TO
Lean/Rich	Lean/Rich	Normal	-	-	C
Lean	Lean	Actual air fuel ratio lean	May occur	• PCV valve and hose • PCV hose connections • Injector blockage • Gas leak from exhaust system • Intake system • Fuel pressure • Mass air flow meter • Engine coolant temperature sensor	A
Rich	Rich	Actual air fuel ratio rich	-	• Injector blockage or blockage • Gas leak from exhaust system • Ignition system • Fuel pressure • Mass air flow meter • Engine coolant temperature sensor	
Lean	Lean/Rich	Air fuel ratio sensor malfunction	-	• Air fuel ratio sensor	B

STATUS AFS VOLTAGE B1S1	STATUS O2S B1S2	AIR FUEL RATIO CONDITION AND AIR FUEL RATIO SENSOR CONDITION	MISFIRE	SUSPECTED TROUBLE AREA	PROCEED TO
Rich	Lean/Rich	Air fuel ratio sensor malfunction	-	• Air fuel ratio sensor	

Lean: During Control the Injection Volume for A/F Sensor, the air fuel ratio sensor output voltage (AFS Voltage) is consistently more than 3.4 V, and the heated oxygen sensor output voltage (O2S) is consistently less than 0.4 V.

Rich: During Control the Injection Volume for A/F Sensor, the AFS Voltage is consistently less than 3.1 V, and the O2S is consistently more than 0.55 V.

Lean/Rich: During Control the Injection Volume for A/F Sensor of the Active Test, the output voltage of the heated oxygen sensor alternates correctly.

C ▶ **PERFORM CONFIRMATION DRIVING PATTERN**

B ▶ **INSPECT AIR FUEL RATIO SENSOR (HEATER RESISTANCE)**

A ▼

5.	READ VALUE USING TECHSTREAM (COOLANT TEMP)

(a) Connect the Techstream to the DLC3.

(b) Turn the ignition switch to ON.

(c) Turn the Techstream on.

(d) Enter the following menus: Powertrain / Engine and ECT / Data List / Coolant Temp.

(e) Read the Data List twice, when the engine is both cold and warmed up.

Standard value:
With cold engine: Same as ambient air temperature.
With warm engine: 80 to 100°C (176 to 212°F).

NG ▶ **REPLACE ENGINE COOLANT TEMPERATURE SENSOR**

OK ▼

6.	INSPECT MASS AIR FLOW METER

(a) Inspect the mass air flow meter INFO .

NG ▶ **REPLACE MASS AIR FLOW METER**

OK

7.	**CHECK FUEL PRESSURE**

(a) Check the fuel pressure INFO .

NG **REPAIR OR REPLACE FUEL SYSTEM**

OK

8.	**INSPECT FOR EXHAUST GAS LEAK**

(a) Inspect for exhaust gas leaks.

OK:
No gas leaks.

NG **REPAIR OR REPLACE EXHAUST SYSTEM**

OK

9.	**CHECK SPARK AND IGNITION**

HINT:

- Refer to the ignition system inspection procedure INFO .
- If the spark plugs or ignition system malfunctions, engine misfires may occur. The misfire count can be read using the Techstream. Enter the following menus: Powertrain / Engine and ECT / Data List / Cylinder #1 Misfire Count (to Cylinder #4 Misfire Count)

NG **REPAIR OR REPLACE IGNITION SYSTEM**

OK

10.	**INSPECT FUEL INJECTOR ASSEMBLY (INJECTION AND VOLUME)**

HINT:

- Refer to the fuel injector inspection procedure INFO .
- If the injectors malfunction, engine misfires may occur. The misfire count can be read using the Techstream. Enter the following menus: Powertrain / Engine and ECT / Data List / Cylinder #1 Misfire Count (to Cylinder #4 Misfire Count).

NG ▶ **REPLACE FUEL INJECTOR ASSEMBLY**

OK ▼

11.	**INSPECT AIR FUEL RATIO SENSOR (HEATER RESISTANCE)** INFO

NG ▶ **REPLACE AIR FUEL RATIO SENSOR**

OK ▼

12.	**CHECK TERMINAL VOLTAGE (POWER SOURCE OF AIR FUEL RATIO SENSOR)** INFO

NG ▶ **INSPECT FUSE (EFI NO. 2 FUSE)**

OK ▼

13.	**CHECK HARNESS AND CONNECTOR (AIR FUEL RATIO SENSOR - ECM)** INFO

NG ▶ **REPAIR OR REPLACE HARNESS OR CONNECTOR (AIR FUEL RATIO SENSOR - ECM)**

OK ▼

14.	**REPLACE AIR FUEL RATIO SENSOR**

(a) Replace the air fuel ratio sensor INFO .

NEXT

15.	PERFORM CONFIRMATION DRIVING PATTERN

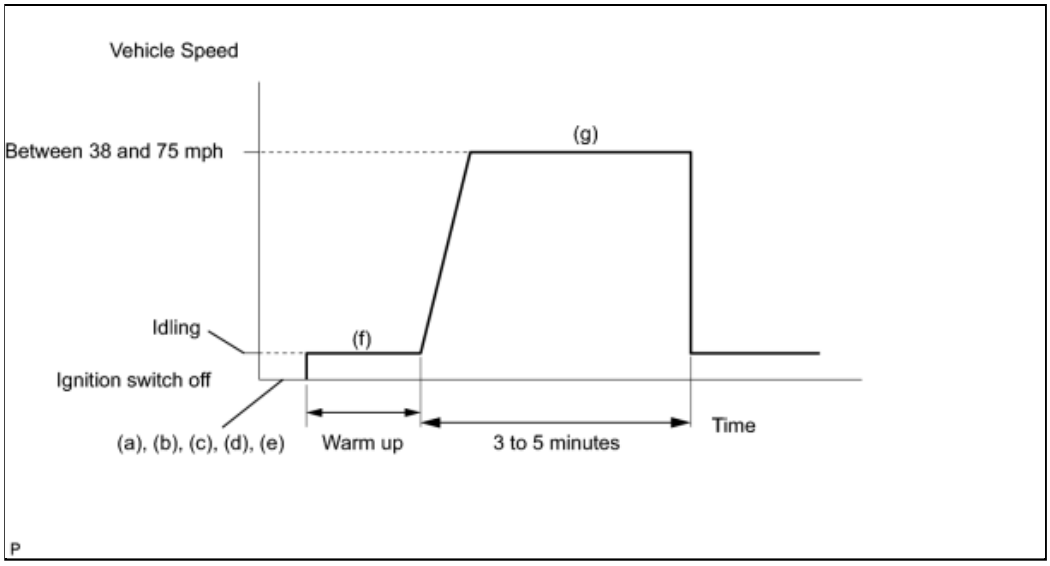

(a) Connect the Techstream to the DLC3.
(b) Turn the ignition switch to ON.
(c) Turn the Techstream on.
(d) Clear DTCs INFO .
(e) Switch the ECM from normal mode to check mode using the Techstream INFO .
(f) Start the engine and warm it up with all the accessories switched off.
(g) Drive the vehicle at between 38 mph and 75 mph (60 km/h and 120 km/h) and at an engine speed of between 1400 rpm and 3200 rpm for 3 to 5 minutes.

HINT:

If the system is still malfunctioning, the MIL will be illuminated during step (g).

NOTICE:

If the conditions in this test are not strictly followed, no malfunction will be detected.

NEXT

16.	CHECK WHETHER DTC OUTPUT RECURS (DTC P0171 OR P0172)

(a) Connect the Techstream to the DLC3.

(b) Turn the ignition switch to ON.

(c) Turn the Techstream on.

(d) Enter the following menus: Powertrain / Engine and ECT / Trouble Codes.

(e) Read the DTCs.

Result:

RESULT	PROCEED TO
DTC is not output	A
DTC P0171 or P0172 is output	B

B ▶ **REPLACE ECM**

A ▶ **END**

17.	**INSPECT FUSE (EFI NO. 2 FUSE)**

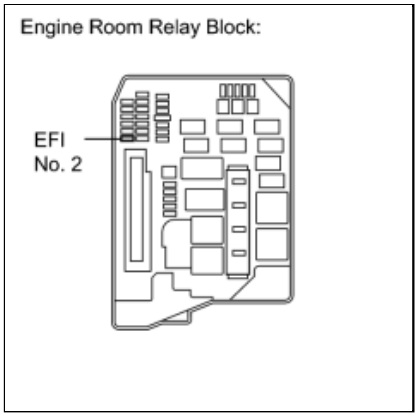

(a) Remove the EFI No. 2 fuse from the engine room relay block.

(b) Measure the resistance according to the value(s) in the table below.

Standard Resistance:

TESTER CONNECTION	CONDITION	SPECIFIED CONDITION
EFI No. 2 fuse	Always	Below 1 Ω

(c) Reinstall the EFI No. 2 fuse.

NG ▶ **REPLACE FUSE (EFI NO. 2 FUSE)**

OK ▶ **REPAIR OR REPLACE HARNESS OR CONNECTOR (INTEGRATION RELAY (EFI MAIN RELAY) - AIR FUEL RATIO SENSOR)**

Last Modified: 3-10-2010	6.4 C	**From:** 200901
Model Year: 2010	**Model:** Corolla	**Doc ID:** RM000000TB3049X
Title: 2ZR-FE ENGINE CONTROL: SFI SYSTEM: P0128: Coolant Thermostat (Coolant Temperature Below Thermostat Regulating Temperature) (2010 Corolla)		

DTC	**P0128**	**Coolant Thermostat (Coolant Temperature Below Thermostat Regulating Temperature)**

DESCRIPTION

HINT:

- This DTC relates to the thermostat.

This DTC is set when the engine coolant temperature does not reach 75°C (167°F) despite sufficient engine warm-up time having elapsed.

DTC NO.	DTC DETECTION CONDITION	TROUBLE AREA
P0128	• Conditions (a), (b) and (c) are met for 5 seconds (2 trip detection logic): • (a) Cold start • (b) Engine warmed up • (c) Engine coolant temperature less than 75°C (167°F)	• Thermostat • Cooling system • Engine coolant temperature sensor • ECM

MONITOR DESCRIPTION

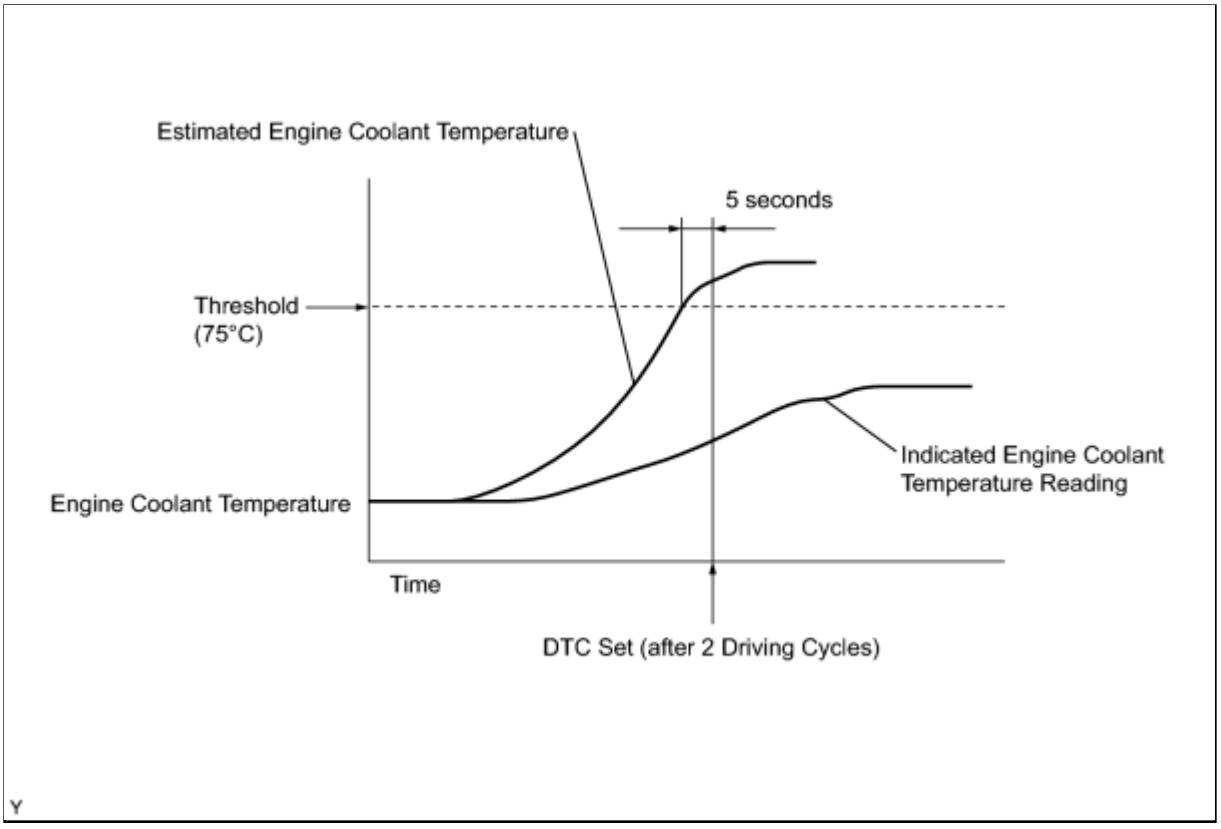

The ECM estimates the engine coolant temperature based on the starting temperature, engine loads, and engine speeds. The ECM then compares the estimated temperature with the actual engine coolant temperature. When the estimated engine coolant temperature reaches 75°C (167°F), the ECM checks the actual engine coolant temperature. If the actual engine coolant temperature is less than 75°C (167°F), the ECM interprets this as a malfunction in the thermostat or the engine cooling system and sets the DTC.

MONITOR STRATEGY

Related DTCs	P0128: Coolant Thermostat
Required Sensors/Components (Main)	Thermostat Engine coolant temperature sensor
Required Sensors/Components (Related)	Intake air temperature sensor Vehicle speed sensor
Frequency of Operation	Once per driving cycle
Duration	900 seconds
MIL Operation	2 driving cycles
Sequence of Operation	None

TYPICAL ENABLING CONDITIONS

Monitor runs whenever following DTCs not present	P0010 (VVT Oil Control Valve Bank 1) P0011 (VVT System Bank 1 - Advance) P0012 (VVT System Bank 1 - Retard) P0013 (Exhaust Oil Control Valve) P0014 (Exhaust System - Advance) P0016 (VVT System Bank 1 - Misalignment) P0017 (Exhaust VVT System - Misalignment) P0031, P0032 (Air Fuel Ratio Sensor Heater - Sensor 1) P0102, P0103 (Mass Air Flow Meter) P0112, P0113 (Intake Air Temperature Sensor) P0115, P0117, P0118 (Engine Coolant Temperature Sensor) P0120, P0121 P0122, P0123, P0220, P0222, P0223, P2135 (Throttle Position Sensor) P0171, P0172 (Fuel System) P0301, P0302, P0303, P0304 (Misfire) P0335 (Crankshaft Position Sensor) P0340, P0342, P0343 (Camshaft Position Sensor) P0351, P0352, P0353, P0354 (Igniter) P0365, P0367, P0368 (Exhaust Camshaft Position Sensor) P0500 (Vehicle Speed Sensor) P2195, P2196, P2237, P2238, P2239, P2252, P2253, P2A00 (Air Fuel Ratio Sensor - Sensor 1)
Battery voltage	11 V or more
Either of following conditions 1 or 2 is met:	-
1. All of following conditions are met:	-
• Engine coolant temperature at engine start - Intake air temperature at engine start	-15 to 7°C (-27 to 12.6°F)
• Engine coolant temperature at engine start	-10 to 56°C (14 to 133°F)
• Intake air temperature at engine start	-10 to 56°C (14 to 133°F)
2. All of following conditions are met:	-
• Engine coolant temperature at engine start - Intake air temperature at engine start	More than 7°C (12.6°F)

• Engine coolant temperature at engine start	56°C (133°F) or less
• Intake air temperature at engine start	-10°C (14°F) or more
Accumulated time at 128 km/h (80 mph) or more of vehicle speed	Less than 20 seconds

TYPICAL MALFUNCTION THRESHOLDS

Duration that both of following conditions (a) and (b) are met	5 seconds or more
(a) Estimated engine coolant temperature	75°C (167°F) or more
(b) Engine coolant temperature sensor output	Below 75°C (167°F)

INSPECTION PROCEDURE

HINT:

Read freeze frame data using the Techstream. The ECM records vehicle and driving condition information as freeze frame data the moment a DTC is stored. When troubleshooting, freeze frame data can be helpful in determining whether the vehicle was running or stopped, whether the engine was warmed up or not, whether the air fuel ratio was lean or rich, as well as other data recorded at the time of a malfunction.

PROCEDURE

1.	**CHECK ANY OTHER DTCS OUTPUT (IN ADDITION TO DTC P0128)**

(a) Connect the Techstream to the DLC3.

(b) Turn the ignition switch to ON.

(c) Turn the Techstream on.

(d) Enter the following menus: Powertrain / Engine and ECT / Trouble Codes.

(e) Read the DTCs.

Result:

RESULT	PROCEED TO
DTC P0128 is output	A
DTC P0128 and other DTCs are output	B

HINT:

If any DTCs other than P0128 are output, troubleshoot those DTCs first.

B ▶ **GO TO DTC CHART**

A
▼

2.	**CHECK COOLING SYSTEM**

(a) Check for defects in the cooling system that might cause the system to be too cold, such as abnormal radiator fan operation or any modifications.

NG ▶ **REPAIR OR REPLACE COOLING SYSTEM**

OK
▼

3.	**INSPECT THERMOSTAT**

(a) Remove the thermostat INFO .

(b) Measure the valve opening temperature of the thermostat.

Standard value:
80 to 84°C (176 to 183°F)

HINT:

In addition to the above check, confirm that the valve is completely closed when the temperature is below the standard.

(c) Reinstall the thermostat INFO .

NG ▶ **REPLACE THERMOSTAT**

OK ▶ **REPLACE ECM**

Last Modified: 3-10-2010	6.4 C	**From:** 200901
Model Year: 2010	**Model:** Corolla	**Doc ID:** RM000000SVT097X
Title: 2ZR-FE ENGINE CONTROL: SFI SYSTEM: P0325,P0327,P0328: Knock Sensor 1 Circuit (2010 Corolla)		

DTC	**P0325**	**Knock Sensor 1 Circuit**

DTC	**P0327**	**Knock Sensor 1 Circuit Low Input (Bank 1 or Single Sensor)**

DTC	**P0328**	**Knock Sensor 1 Circuit High Input (Bank 1 or Single Sensor)**

DESCRIPTION

A flat type knock sensor is used. Flat type knock sensors (non-resonant type) have a structure that can detect vibrations over a wide band of frequencies: between approximately 6 kHz and 15 kHz.

Knock sensors are fitted onto the engine block to detect engine knocking.

The knock sensor contains a piezoelectric element which generates a voltage when it becomes deformed.

The voltage is generated when the engine block vibrates due to knocking. Occurrence of engine knocking can be suppressed by delaying the ignition timing.

DTC NO.	DTC DETECTION CONDITION	TROUBLE AREA
P0325	Output voltage of knock sensor less than 0.5 V or more than 4.5 V for 1 second or more (1 trip detection logic)	• Open or short in knock sensor circuit • Knock sensor • ECM
P0327	Output voltage of knock sensor less than 0.5 V for 1 second or more (1 trip detection logic)	• Short in knock sensor circuit • Knock sensor • ECM
P0328	Output voltage of knock sensor more than 4.5 V for 1 second or more (1 trip detection logic)	• Open in knock sensor circuit

DTC NO.	DTC DETECTION CONDITION	TROUBLE AREA
		• Knock sensor • ECM

HINT:

When any of DTCs P0325, P0327 and P0328 are set, the ECM enters fail-safe mode. During fail-safe mode, the ignition timing is delayed to its maximum retardation. Fail-safe mode continues until the ignition switch is turned off.

Reference: Inspection using an oscilloscope

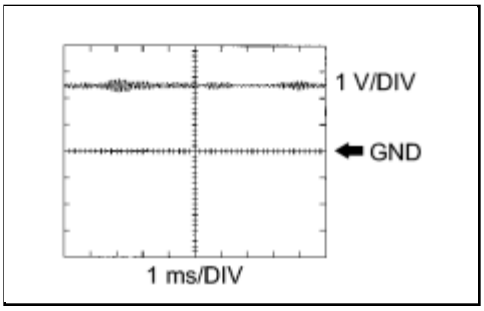

The correct waveform is as shown.

ECM Terminal Name	Between KNK1 and EKNK
Tester Range	1 V/DIV, 1 ms/DIV
Condition	Engine speed maintained at 4000 rpm after warming up engine

MONITOR DESCRIPTION

If the output voltage transmitted by the knock sensor remains low or high for more than 1 second, the ECM interprets this as a malfunction in the sensor circuit, and sets a DTC.

The monitor for DTCs P0325, P0327 and P0328 begins to run when 5 seconds have elapsed since the engine was started.

If the malfunction is not repaired successfully, DTC P0325, P0327 or P0328 is set 5 seconds after the engine is next started.

MONITOR STRATEGY

Related DTCs	P0325: Knock sensor (bank 1) range check (Chattering) P0327: Knock sensor (bank 1) range check (Low voltage)

	P0328: Knock sensor (bank 1) range check (High voltage)
Required Sensors/Components (Main)	Knock sensor
Required Sensors/Components (Related)	-
Frequency of Operation	Continuous
Duration	1 second
MIL Operation	Immediate
Sequence of Operation	None

TYPICAL ENABLING CONDITIONS

Monitor runs whenever following DTCs not present	None
Battery voltage	10.5 V or more
Time after engine start	5 seconds or more

TYPICAL MALFUNCTION THRESHOLDS

Knock Sensor Range Check (Chattering) P0325

Knock sensor voltage	Less than 0.5 V or more than 4.5 V

Knock Sensor Range Check (Low Voltage) P0327

Knock sensor voltage	Less than 0.5 V

Knock Sensor Range Check (High Voltage) P0328

Knock sensor voltage	More than 4.5 V

WIRING DIAGRAM

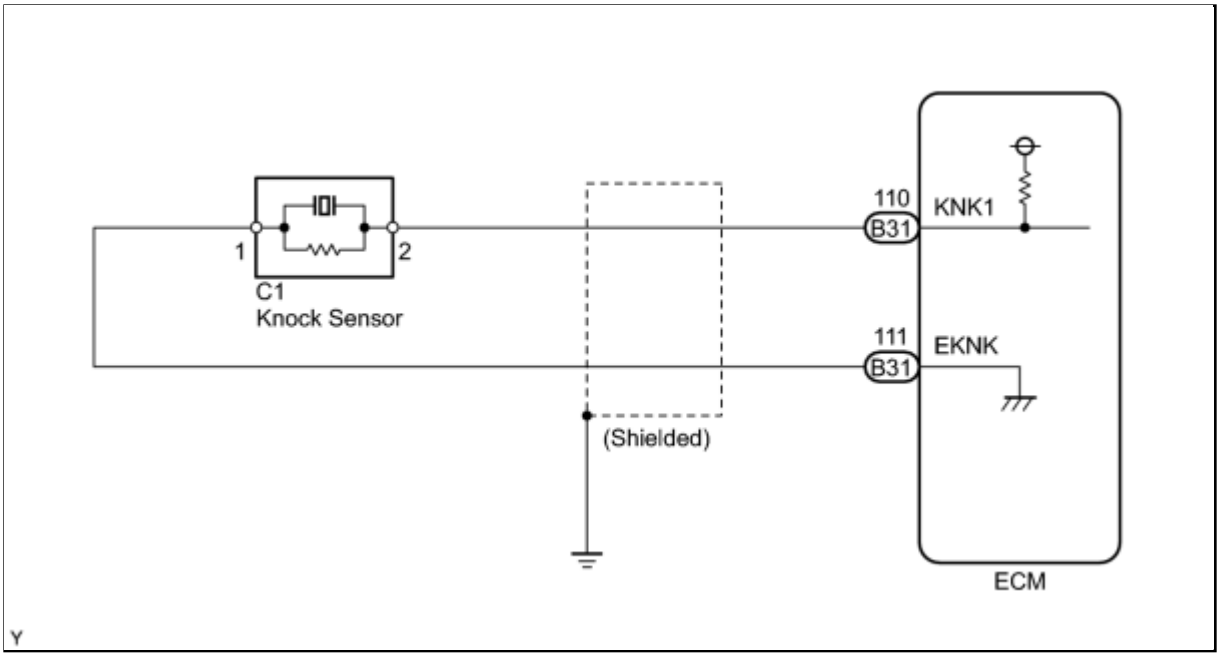

INSPECTION PROCEDURE

HINT:

Read freeze frame data using the Techstream. The ECM records vehicle and driving condition information as freeze frame data the moment a DTC is stored. When troubleshooting, freeze frame data can be helpful in determining whether the vehicle was running or stopped, whether the engine was warmed up or not, whether the air fuel ratio was lean or rich, as well as other data recorded at the time of a malfunction.

PROCEDURE

1.	**READ VALUE USING TECHSTREAM (KNOCK FEEDBACK VALUE)**

(a) Connect the Techstream to the DLC3.

(b) Start the engine.

(c) Turn the Techstream on.

(d) Warm up the engine.

(e) Enter the following menus: Powertrain / Engine and ECT / Knock Feedback Value.

(f) Read the value while driving the vehicle.

OK:

The value changes.

Malfunction does not occur	Knock Feedback Value changes
Malfunctions occur	Knock Feedback Value does not change

HINT:

The knock feedback value change can be confirmed by running the engine with a high load, for example, by activating the air conditioning system and racing the engine.

NG ▶ **INSPECT ECM (KNK1 VOLTAGE)**

OK ▶ **CHECK FOR INTERMITTENT PROBLEMS**

2.	**INSPECT ECM (KNK1 VOLTAGE)**

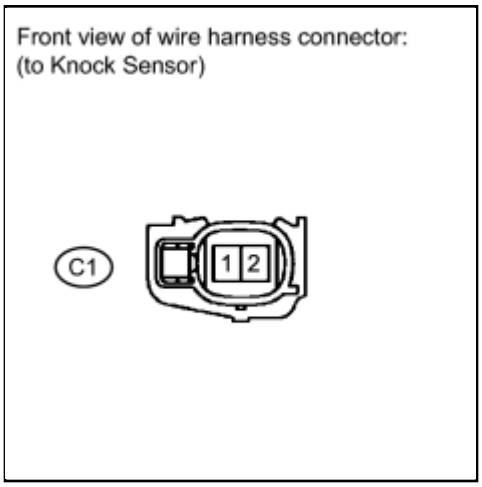

(a) Disconnect the knock sensor connector.

(b) Turn the ignition switch to ON.

(c) Measure the voltage according to the value(s) in the table below.

Standard Voltage:

TESTER CONNECTION	SWITCH CONDITION	SPECIFIED CONDITION
C1-2 - C1-1	Ignition switch ON	4.5 to 5.5 V

(d) Reconnect the knock sensor connector.

NG ▶ **CHECK HARNESS AND CONNECTOR (ECM - KNOCK SENSOR)**

OK ▼

3.	INSPECT KNOCK SENSOR

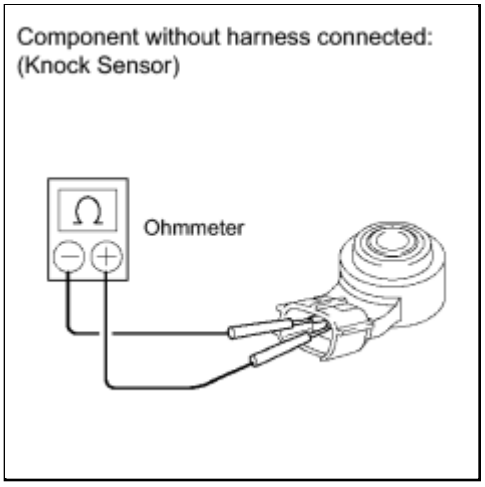

(a) Remove the knock sensor.

(b) Measure the resistance according to the value(s) in the table below.

Standard Resistance:

TESTER CONNECTION	CONDITION	SPECIFIED CONDITION
1 - 2	20°C (68°F)	120 to 280 kΩ

(c) Reinstall the knock sensor.

NG ▶ **REPLACE KNOCK SENSOR**

OK ▶ **REPLACE ECM**

4.	CHECK HARNESS AND CONNECTOR (ECM - KNOCK SENSOR)

(a) Disconnect the knock sensor connector.

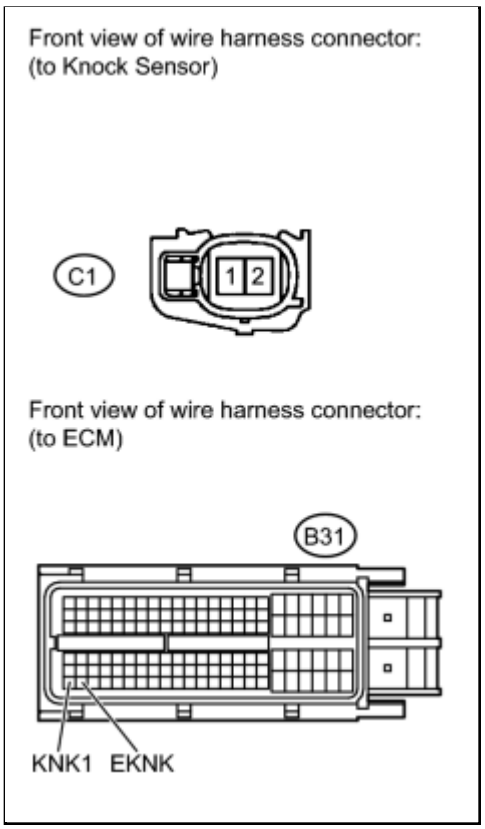

(b) Disconnect the ECM connector.

(c) Measure the resistance according to the value(s) in the table below.

Standard Resistance (Check for Open):

TESTER CONNECTION	CONDITION	SPECIFIED CONDITION
C1-2 - B31-110 (KNK1)	Always	Below 1 Ω
C1-1 - B31-111 (EKNK)	Always	Below 1 Ω

Standard Resistance (Check for Short):

TESTER CONNECTION	CONDITION	SPECIFIED CONDITION
C1-2 or B31-110 (KNK1) - Body ground	Always	10 kΩ or higher
C1-1 or B31-111 (EKNK) - Body ground	Always	10 kΩ or higher

(d) Reconnect the knock sensor connector.

(e) Reconnect the ECM connector.

NG ▶ **REPAIR OR REPLACE HARNESS OR CONNECTOR (ECM - KNOCK SENSOR)**

OK ▶ **REPLACE ECM**

Last Modified: 3-10-2010	6.4 C	**From:** 200901
Model Year: 2010	**Model:** Corolla	**Doc ID:** RM000000TCW0BEX
Title: 2ZR-FE ENGINE CONTROL: SFI SYSTEM: P0335,P0339: Crankshaft Position Sensor "A" Circuit (2010 Corolla)		

DTC	**P0335**	**Crankshaft Position Sensor "A" Circuit**

DTC	**P0339**	**Crankshaft Position Sensor "A" Circuit Intermittent**

DESCRIPTION

The crankshaft position sensor system consists of a crankshaft position sensor plate and a pickup coil.

The sensor plate has 34 teeth and is installed on the crankshaft. The pickup coil is made of wound copper wire, an iron core and magnet. The sensor plate rotates and, as each tooth passes by the pickup coil, a pulse signal is created. The pickup coil generates 34 signals per engine revolution. Based on these signals, the ECM calculates the crankshaft position and engine RPM. Using these calculations, the fuel injection time and ignition timing are controlled.

DTC NO.	DTC DETECTION CONDITION	TROUBLE AREA
P0335	When either of following conditions are met: (1 trip detection logic) • Missing crankshaft position sensor signal despite camshaft position sensor signal inputs normal after engine cranked • No crankshaft position sensor signal to ECM at engine speed of 600 rpm or more	• Open or short in crankshaft position sensor circuit • Crankshaft position sensor • Crankshaft position sensor plate • ECM
P0339	Following conditions (a), (b) and (c) are met: (1 trip detection logic) (a) Engine speed 1000 rpm or more (b) No crankshaft position sensor signal for 0.05 seconds or more (c) 3 seconds or more have elapsed since starter signal switched from ON to OFF	• Open or short in crankshaft position sensor circuit • Crankshaft position sensor • Crankshaft position sensor plate • ECM

Reference: Inspection using an oscilloscope.

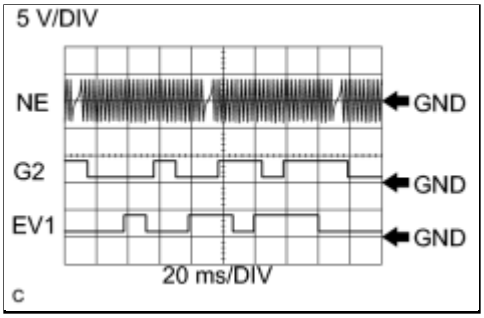

HINT:

- The correct waveform is as shown.
- G2+ and EV1+ are camshaft position sensor signals, and NE+ is the crankshaft position sensor signal.
- A failure of the ground for the shielding of the wiring may result in noisy waveforms.

ECM Terminal Name	Between G2+ and G2- Between NE+ and NE- Between EV1+ and EV1-
Tester Range	5 V/DIV, 20 ms/DIV
Condition	Idling after engine warmed-up

MONITOR DESCRIPTION

If there is no signal from the crankshaft position sensor despite the engine rotating, the ECM interprets this as a malfunction of the sensor.

If the malfunction is not repaired successfully, a DTC is set 10 seconds after the engine is next started.

MONITOR STRATEGY

Related DTCs	P0335: Crankshaft position sensor range check or rationality
Required Sensors/Components (Main)	Crankshaft position sensor
Required Sensors/Components (Related)	Camshaft position sensor
Frequency of Operation	Continuous
Duration	3 times
MIL Operation	Immediate
Sequence of Operation	None

TYPICAL ENABLING CONDITIONS

All

Monitor runs whenever following DTCs not present	None

Case 1

Time after starter OFF to ON	3 seconds or more
Number of camshaft position sensor signal pulse	6 times
Battery voltage	7 V or more
Ignition switch	ON

Case 2

Starter	OFF
Engine speed	600 rpm or more
Time after starter from ON to OFF	3 seconds or more

TYPICAL MALFUNCTION THRESHOLDS

Case 1

Number of crankshaft position sensor signal pulse	132 or less, and 174 or more

Case 2

Engine speed signal	No signal

COMPONENT OPERATING RANGE

Crankshaft position sensor	• Crankshaft position sensor output voltage fluctuates while crankshaft revolving • 34 crankshaft position sensor signals per crankshaft revolution

WIRING DIAGRAM

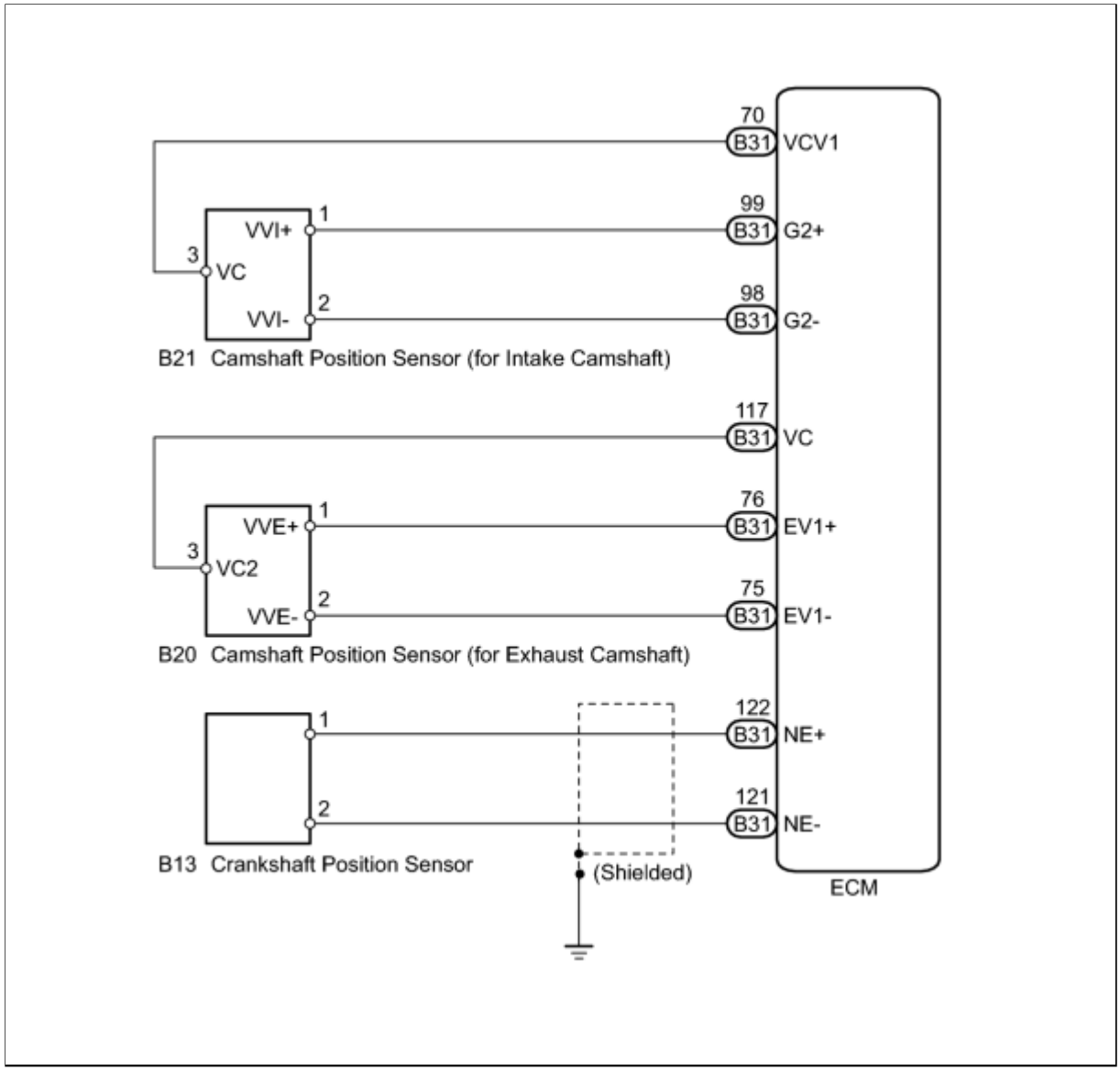

INSPECTION PROCEDURE

HINT:

- If no problem is found through this diagnostic troubleshooting procedure, troubleshoot the engine mechanical systems.
- Check the engine speed. The engine speed can be checked using the Techstream. To check, follow the operation below:

    a. Connect the Techstream to the DLC3.
    b. Start the engine.
    c. Turn the Techstream on.
    d. Enter the following menus: Powertrain / Engine and ECT / Data List / Engine Speed.

- Read freeze frame data using the Techstream. The ECM records vehicle and driving condition information as freeze frame data the moment a DTC is stored. When troubleshooting, freeze frame data can be helpful in determining whether the vehicle was running or stopped, whether the engine was warmed up or not, whether the air fuel ratio was lean or rich, as well as other data recorded at the time of a malfunction.

PROCEDURE

1.	READ VALUE USING TECHSTREAM (ENGINE SPEED)

(a) Connect the Techstream to the DLC3.

(b) Turn the ignition switch to ON.

(c) Turn the Techstream on.

(d) Enter the following menus: Powertrain / Engine and ECT / Data List / Engine Speed.

(e) Start the engine.

(f) Read the values displayed on the Techstream while the engine is running.

OK:
Correct values are displayed.

HINT:

- To check the engine speed change, display the graph on the Techstream.
- If the engine does not start, check the engine speed while cranking.
- If the engine speed indicated on the Techstream remains at zero (0), there may be an open or short in the crankshaft position sensor circuit.

NG ▶ **INSPECT CRANKSHAFT POSITION SENSOR (RESISTANCE)**

OK ▶ **CHECK FOR INTERMITTENT PROBLEMS**

2.	INSPECT CRANKSHAFT POSITION SENSOR (RESISTANCE)

(a) Disconnect the crankshaft position sensor connector.

(b) Measure the resistance according to the value(s) in the table below.

Standard Resistance:

TESTER CONNECTION	CONDITION	SPECIFIED CONDITION
1 - 2	20°C (68°F)	1850 to 2450 Ω

(c) Reconnect the crankshaft position sensor connector.

Component without harness connected:
(Crankshaft Position Sensor)



NG → REPLACE CRANKSHAFT POSITION SENSOR

OK ↓

3.	CHECK HARNESS AND CONNECTOR (CRANKSHAFT POSITION SENSOR - ECM)

(a) Disconnect the crankshaft position sensor connector.

(b) Disconnect the ECM connector.

(c) Measure the resistance according to the value(s) in the table below.

Front view of wire harness connector:
(to Crankshaft Position Sensor)



Front view of wire harness connector:
(to ECM)

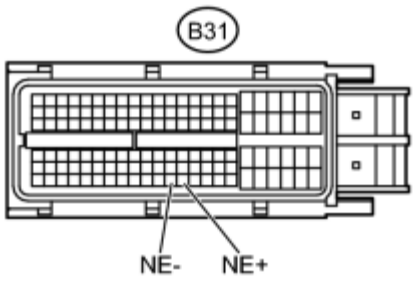

Standard Resistance (Check for Open):

TESTER CONNECTION	CONDITION	SPECIFIED CONDITION
B13-1 - B31-122 (NE+)	Always	Below 1 Ω
B13-2 - B31-121 (NE-)	Always	Below 1 Ω

Standard Resistance (Check for Short):

TESTER CONNECTION	CONDITION	SPECIFIED CONDITION
B13-1 or B31-122 (NE+) - Body ground	Always	10 kΩ or higher
B13-2 or B31-121 (NE-) - Body ground	Always	10 kΩ or higher

(d) Reconnect the crankshaft position sensor connector.

(e) Reconnect the ECM connector.

NG ▶ **REPAIR OR REPLACE HARNESS OR CONNECTOR (CRANKSHAFT POSITION SENSOR - ECM)**

OK ▼

4.	CHECK SENSOR INSTALLATION (CRANKSHAFT POSITION SENSOR)

(a) Check the crankshaft position sensor installation.

OK:

Sensor is installed correctly.

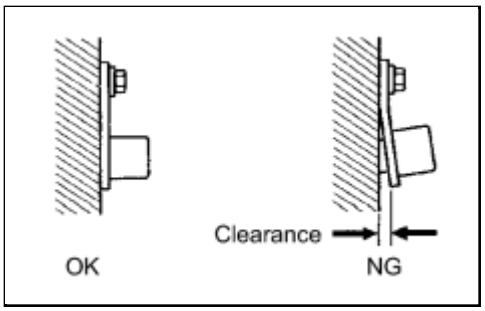

NG ▶ **SECURELY REINSTALL SENSOR**

OK ▼

5.	INSPECT NO. 1 CRANKSHAFT POSITION SENSOR PLATE (TEETH OF SENSOR PLATE)

(a) Check the teeth of the sensor plate INFO.

OK:

Sensor plate does not have any cracks or deformation.

NG ▶ **REPLACE NO. 1 CRANKSHAFT POSITION SENSOR PLATE**

OK

6.	REPLACE CRANKSHAFT POSITION SENSOR

(a) Replace the crankshaft position sensor INFO .

NEXT

7.	CHECK WHETHER DTC OUTPUT RECURS

(a) Connect the Techstream to the DLC3.

(b) Turn the ignition switch to ON.

(c) Turn the Techstream on.

(d) Clear DTCs INFO .

(e) Start the engine.

(f) Enter the following menus: Powertrain / Engine and ECT / Trouble Codes.

(g) Read the DTCs.

Result:

RESULT	PROCEED TO
DTC is not output	A
DTC P0335 or P0339 is output	B

HINT:

If the engine does not start, replace the ECM.

B ▶ **REPLACE ECM**

A ▶ **END**

Last Modified: 3-10-2010	6.4 C	**From:** 200901
Model Year: 2010	**Model:** Corolla	**Doc ID:** RM000000WBZ06GX
Title: 2ZR-FE ENGINE CONTROL: SFI SYSTEM: P0340,P0342,P0343: Camshaft Position Sensor Circuit Malfunction (2010 Corolla)		

DTC	**P0340**	**Camshaft Position Sensor Circuit Malfunction**

DTC	**P0342**	**Camshaft Position Sensor "A" Circuit Low Input (Bank 1 or Single Sensor)**

DTC	**P0343**	**Camshaft Position Sensor "A" Circuit High Input (Bank 1 or Single Sensor)**

DESCRIPTION

The camshaft position sensor for intake camshaft (G signal sensor) consists of a magnet and MRE element.

The camshaft has a timing rotor for the camshaft position sensor. When the camshaft rotates, changes occur in the air gaps between the timing rotor and MRE element, which affects the magnet. As a result, the resistance of the MRE material fluctuates. The camshaft position sensor converts the camshaft rotation data to pulse signals, and uses the pulse signals to determine the camshaft angle, which it sends to the ECM. Then the ECM uses this data to control fuel injection time and injection timing.

DTC NO.	DTC DETECTION CONDITION	TROUBLE AREA
P0340	When one of following conditions is met: • No camshaft position sensor signal to ECM while cranking (2 trip detection logic) • Missing camshaft position sensor signal despite crankshaft position sensor inputs normal at engine speed of 600 rpm or more (1 trip detection logic) • Input voltage to ECM remains less than 0.3 V, or more than 4.7 V for 4 seconds when 2 or more seconds have elapsed after turning ignition switch ON (1 trip detection logic)	• Open or short in camshaft position sensor circuit for intake camshaft • Camshaft position sensor for intake camshaft • Camshaft timing gear for intake camshaft • Jumped tooth of timing chain for intake camshaft • ECM
P0342	Output voltage of camshaft position sensor less than 0.3 V for 4 seconds (1 trip detection logic)	• Open or short in camshaft position sensor circuit for

DTC NO.	DTC DETECTION CONDITION	TROUBLE AREA
		intake camshaft • Camshaft position sensor for intake camshaft • Camshaft timing gear for intake camshaft • Jumped tooth of timing chain for intake camshaft • ECM
P0343	Output voltage of 4.7 V for 4 seconds (1 trip detection logic)	• Open or short in camshaft position sensor circuit for intake camshaft • Camshaft position sensor for intake camshaft • Camshaft timing gear for intake camshaft • Jumped tooth of timing chain for intake camshaft • ECM

HINT:

DTC P0340 indicates a malfunction relating to the camshaft position sensor circuit (the wire harness between the ECM and camshaft position sensor, and the camshaft position sensor itself).

Reference: Inspection using an oscilloscope INFO **.**

MONITOR DESCRIPTION

If no signal is transmitted by the camshaft position sensor despite the engine revolving, or the rotation of the camshaft and the crankshaft is not synchronized, the ECM interprets this as a malfunction of the sensor.

If the malfunction is not repaired successfully, the DTC is set 10 seconds after the engine is nest started.

MONITOR STRATEGY

Related DTCs	P0340: Camshaft position sensor range check (cranking) P0340: Camshaft position/crankshaft position misalignment P0340: Camshaft position sensor range check (fluctuating)

	P0342: Camshaft position sensor range check (Low voltage) P0343: Camshaft position sensor range check (High voltage)
Required Sensors/Components (Main)	Camshaft position sensor
Required Sensors/Components (Related)	Crankshaft position sensor
Frequency of Operation	Continuous
Duration	4 seconds: Camshaft position sensor range check (cranking) (P0340) 5 seconds: Camshaft position /crankshaft position misalignment (P0340) 4 seconds: Camshaft position sensor range check (P0340, P0342, P0343)
MIL Operation	2 driving cycles: Camshaft position sensor range check (cranking) (P0340) Immediate: Camshaft position/crankshaft position misalignment (P0340) Camshaft position sensor range check (P0340, P0342, P0343)
Sequence of Operation	None

TYPICAL ENABLING CONDITIONS

All

Monitor runs whenever following DTCs not present	None

P0340 Camshaft Position Sensor Range Check (Cranking)

Starter	ON
Minimum battery voltage while starter ON	Less than 11 V

P0340 Camshaft Position/Crankshaft Position Misalignment

Engine speed	600 rpm or more
Starter	OFF

P0340, P0342, P0343 Camshaft Position Sensor Range Check

Starter	OFF
Ignition switch	ON
Time after ignition switch off to ON	2 seconds

TYPICAL MALFUNCTION THRESHOLDS

P0340 Camshaft Position Sensor Range Check (Cranking)

Camshaft position sensor signal	No signal

P0340 Camshaft Position/Crankshaft Position Misalignment

Camshaft position and crankshaft position phase	Misaligned

P0340 Camshaft Position Sensor Range Check

Camshaft position sensor voltage	Less than 0.3 V, or more than 4.7 V

P0342 Camshaft Position Sensor Range Check

Camshaft position sensor voltage	Less than 0.3 V

P0343 Camshaft Position Sensor Range Check

Camshaft position sensor voltage	More than 4.7 V

COMPONENT OPERATING RANGE

Camshaft position sensor	Camshaft position sensor output voltage fluctuates while camshaft revolving 3 camshaft position sensor signals per 2 crankshaft revolutions
Camshaft position sensor voltage	0.3 to 4.7 V

WIRING DIAGRAM

Refer to DTC P0335 INFO .

INSPECTION PROCEDURE

HINT:

- Read freeze frame data using the Techstream. The ECM records vehicle and driving condition information as freeze frame data the moment a DTC is stored. When troubleshooting, freeze frame data can be helpful in determining whether the vehicle was running or stopped, whether the engine was warmed up or not, whether the air fuel ratio was lean or rich, as well as other data recorded at the time of a malfunction.
- If no problem is found through this diagnostic troubleshooting procedure, troubleshoot the engine mechanical system.

PROCEDURE

1.	**CHECK ANY OTHER DTCS OUTPUT (IN ADDITION TO DTC P0340, P0342 AND P0343)**

(a) Connect the Techstream to the DLC3.

(b) Turn the ignition switch to ON.

(c) Turn the Techstream on.

(d) Enter the following menus: Powertrain / Engine and ECT / Trouble Codes.

(e) Read the DTCs.

Result:

RESULT	PROCEED TO
DTC P0340, P0342 or P0343 is output	A
DTC P0340, P0342 or P0343 and other DTCs are output	B

HINT:

If any DTCs other than P0340, P0342 and P0343 are output, troubleshoot those DTCs first.

B ▶ **GO TO DTC CHART**

A ▼

2.	**INSPECT CAMSHAFT POSITION SENSOR (FOR INTAKE CAMSHAFT) (POWER SOURCE)**

(a) Disconnect the camshaft position sensor (for intake camshaft) connector.

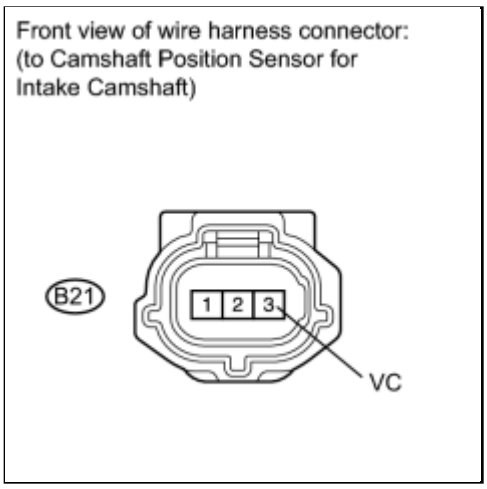

(b) Turn the ignition switch to ON.

(c) Measure the voltage according to the value(s) in the table below.

Standard Voltage:

TESTER CONNECTION	SWITCH CONDITION	SPECIFIED CONDITION
B21-3 (VC) - Body ground	Ignition switch ON	4.5 to 5.0 V

(d) Reconnect the camshaft position sensor (for intake camshaft) connector.

NG ▶ **CHECK HARNESS AND CONNECTOR (CAMSHAFT POSITION SENSOR - ECM)**

OK ▼

3.	**CHECK HARNESS AND CONNECTOR (CAMSHAFT POSITION SENSOR - ECM)**

(a) Disconnect the camshaft position sensor (for intake camshaft) connector.

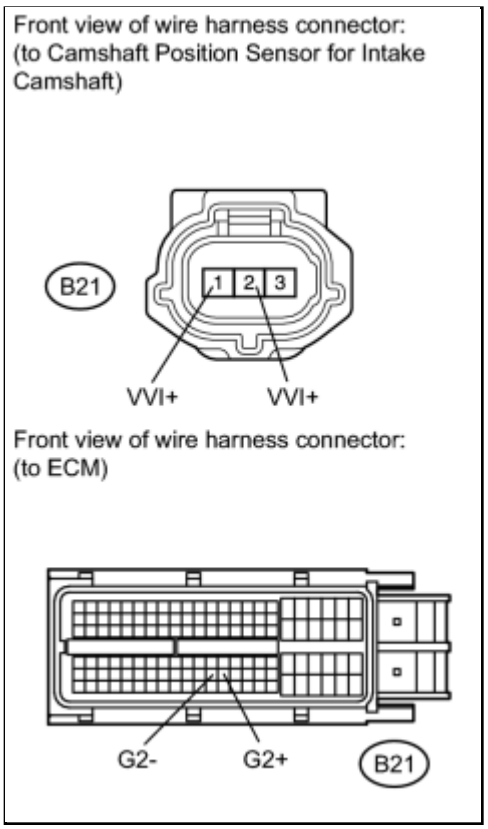

(b) Disconnect the ECM connector.

(c) Measure the resistance according to the value(s) in the table below.

Standard Resistance (Check for Open):

TESTER CONNECTION	CONDITION	SPECIFIED CONDITION
B21-1 (VVI+) - B31-99 (G2+)	Always	Below 1 Ω
B21-2 (VVI-) - B31-98 (G2-)	Always	Below 1 Ω

Standard Resistance (Check for Short):

TESTER CONNECTION	CONDITION	SPECIFIED CONDITION
B21-1 (VVI+) or B31-99 (G2+) - Body ground	Always	10 kΩ or higher
B21-2 (VVI-) or B31-98 (G2-) - Body ground	Always	10 kΩ or higher

(d) Reconnect the camshaft position sensor (for intake camshaft) connector.

(e) Reconnect the ECM connector.

NG ▶ **REPAIR OR REPLACE HARNESS OR CONNECTOR (CAMSHAFT POSITION SENSOR - ECM)**

OK

4.	**CHECK SENSOR INSTALLATION (CAMSHAFT POSITION SENSOR FOR INTAKE CAMSHAFT)**

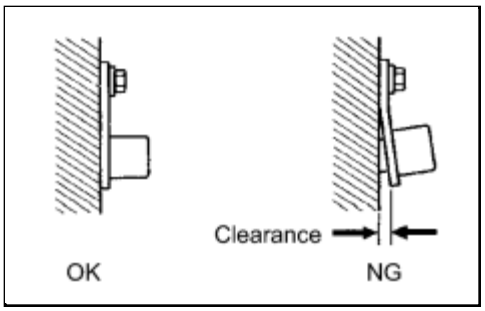

(a) Check the camshaft position sensor (for intake camshaft) installation.

OK:

Sensor is installed correctly.

NG ▶ **SECURELY REINSTALL SENSOR**

OK

5.	**INSPECT INTAKE CAMSHAFT (TIMING ROTOR)**

(a) Check the timing rotor of the intake camshaft.

OK:

Camshaft timing rotor does not have any cracks or deformation.

NG ▶ **REPLACE INTAKE CAMSHAFT**

OK

6.	**REPLACE CAMSHAFT POSITION SENSOR (FOR INTAKE CAMSHAFT)**

(a) Replace the camshaft position sensor INFO .

NEXT

7.	CHECK WHETHER DTC OUTPUT RECURS (P0340, P0342 OR P0343)

(a) Connect the Techstream to the DLC3.

(b) Turn the ignition switch to ON.

(c) Turn the Techstream on.

(d) Clear DTCs INFO .

(e) Start the engine and allow the engine to idle for 10 seconds or more.

(f) Turn the ignition off.

(g) Start the engine again and allow the engine to idle for 10 seconds or more.

(h) Enter the following menus: Powertrain / Engine and ECT / Trouble Codes.

(i) Read the DTCs.

Result:

RESULT	PROCEED TO
DTC P0340, P0342 or P0343 is output	A
DTC is not output	B

HINT:

If the engine does not start, replace the ECM.

B **END**

A

8.	ADJUST VALVE TIMING

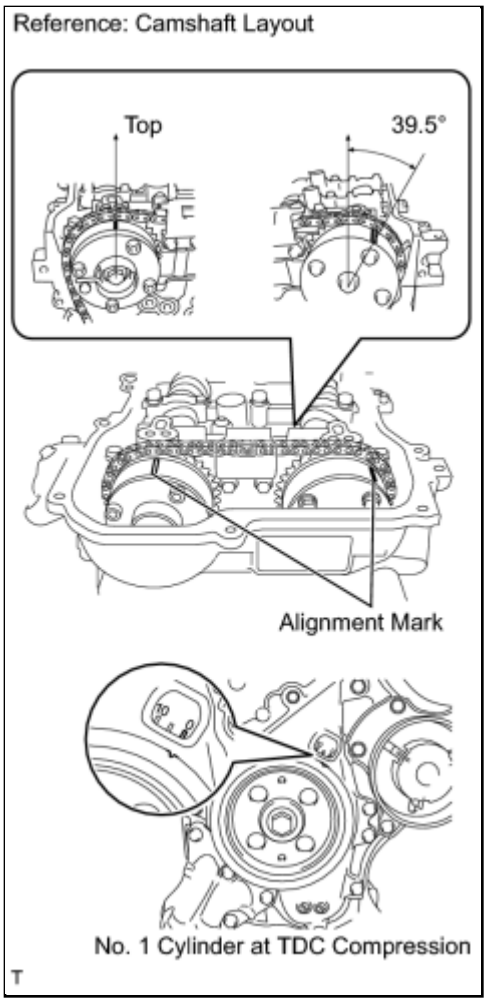

HINT:

There are no marks on the cylinder head to match-up for the purpose of checking valve timing. Valve timing can only be inspected by lining up the colored plates on the timing chain with the marks on the pulleys. It may be necessary to remove and reinstall the chain to match-up the alignment marks INFO **.**

NEXT

9.	**CHECK WHETHER DTC OUTPUT RECURS (P0340, P0342 OR P0343)**

(a) Connect the Techstream to the DLC3.

(b) Turn the ignition switch to ON.

(c) Turn the Techstream on.

(d) Clear DTCs INFO .

(e) Start the engine and allow the engine to idle for 10 seconds or more.

(f) Turn the ignition switch off.

(g) Start the engine again and allow the engine to idle for 10 seconds or more.

(h) Enter the following menus: Powertrain / Engine and ECT / Trouble codes.

(i) Read the DTCs.

Result:

RESULT	PROCEED TO
DTC is not output	A
DTC P0340, P0342 or P0343 is output	B

HINT:

If the engine does not start, replace the ECM.

B ▶ **REPLACE ECM**

A ▶ **END**

10.	CHECK HARNESS AND CONNECTOR (CAMSHAFT POSITION SENSOR - ECM)

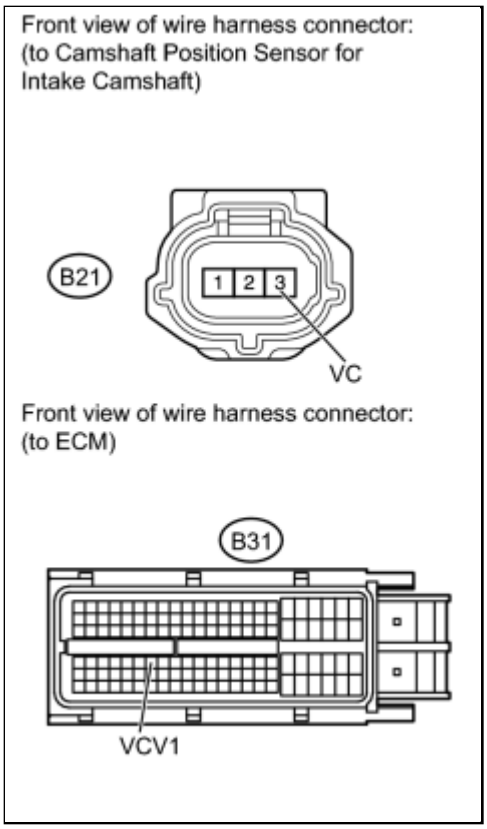

(a) Disconnect the camshaft position sensor (for intake camshaft) connector.

(b) Disconnect the ECM connector.

(c) Measure the resistance according to the value(s) in the table below.

Standard Resistance (Check for Open):

TESTER CONNECTION	CONDITION	SPECIFIED CONDITION

TESTER CONNECTION	CONDITION	SPECIFIED CONDITION
B21-3 (VC) - B31-70 (VCV1)	Always	Below 1 Ω

Standard Resistance (Check for Short):

TESTER CONNECTION	CONDITION	SPECIFIED CONDITION
B21-3 (VC) or B31-70 (VCV1) - Body ground	Always	10 kΩ or higher

(d) Reconnect the camshaft position sensor (for intake camshaft) connector.

(e) Reconnect the ECM connector.

NG ▶ **REPAIR OR REPLACE HARNESS OR CONNECTOR (CAMSHAFT POSITION SENSOR - ECM)**

OK ▶ **REPLACE ECM**

Last Modified: 3-10-2010	6.4 C	**From:** 200901
Model Year: 2010	**Model:** Corolla	**Doc ID:** RM000000XH40A7X
Title: 2ZR-FE ENGINE CONTROL: SFI SYSTEM: P0351-P0354: Ignition Coil "A" Primary / Secondary Circuit (2010 Corolla)		

DTC	**P0351**	**Ignition Coil "A" Primary / Secondary Circuit**

DTC	**P0352**	**Ignition Coil "B" Primary / Secondary Circuit**

DTC	**P0353**	**Ignition Coil "C" Primary / Secondary Circuit**

DTC	**P0354**	**Ignition Coil "D" Primary / Secondary Circuit**

DESCRIPTION

HINT:

- These DTCs indicate malfunctions relating to the primary circuit.
- If DTC P0351 is set, check the No. 1 ignition coil circuit.
- If DTC P0352 is set, check the No. 2 ignition coil circuit.
- If DTC P0353 is set, check the No. 3 ignition coil circuit.
- If DTC P0354 is set, check the No. 4 ignition coil circuit.

A Direct Ignition System (DIS) is used on this vehicle.

The DIS is an ignition system in which each cylinder is ignited by it's own ignition coil and spark plug. The secondary wiring of each ignition coil generates a powerful voltage which is applied directly to each spark plug. The spark passes from the center electrode of the spark plug to the ground electrode.

The ECM determines the ignition timing and transmits the ignition (IGT) signals to each cylinder. Using the IGT signal, the ECM turns the power transistor inside the igniter on and off. The power transistor, in turn, switches on and off the current to the primary coil. When the current to the primary coil is cut off, a powerful voltage is generated in the secondary coil. This voltage is applied to the spark plugs, causing them to spark inside the cylinders. As the ECM cuts the current to the primary coil, the igniter sends back an ignition confirmation (IGF) signal to the ECM, for each cylinder ignition.

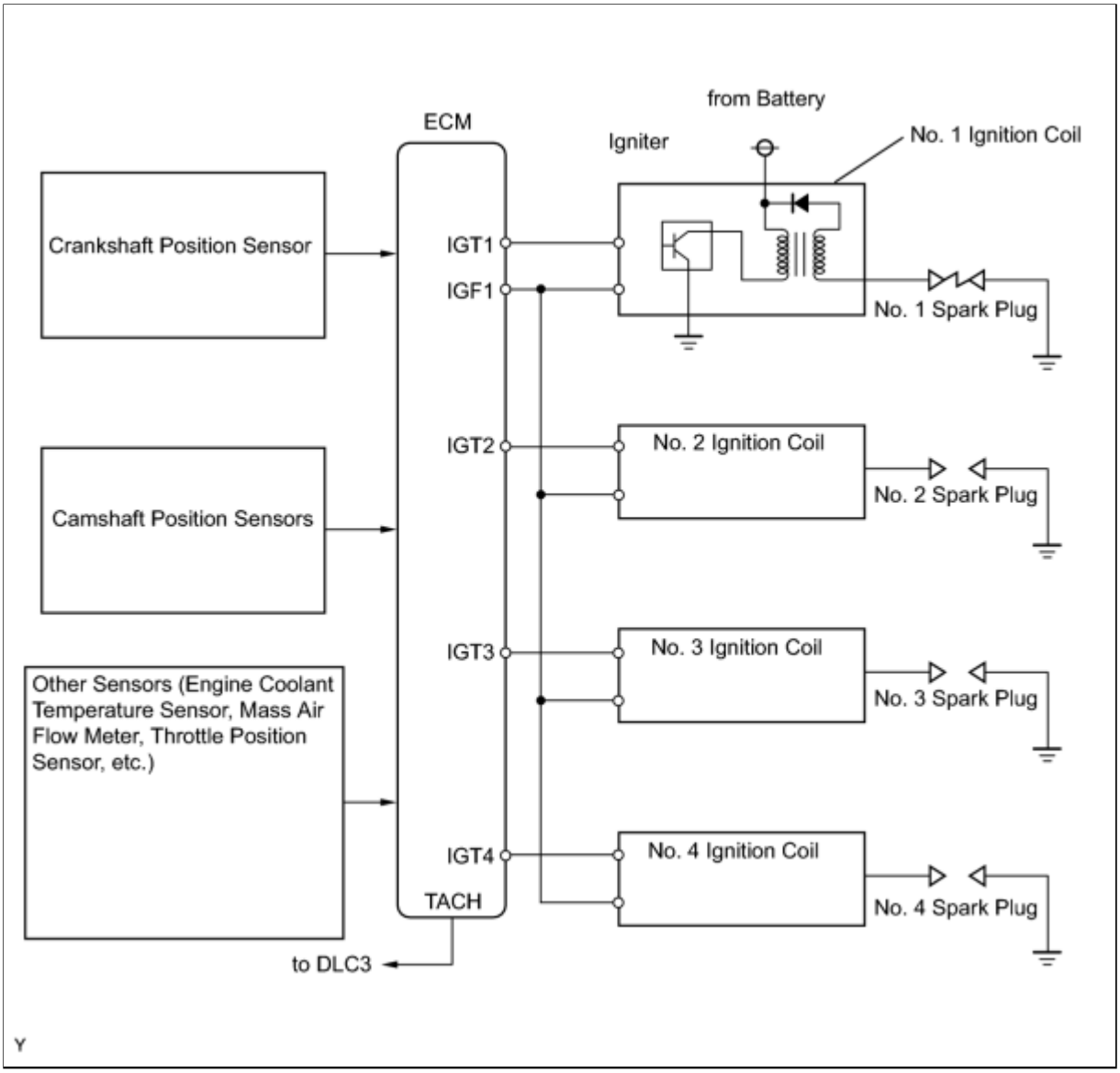

DTC NO.	DTC DETECTION CONDITIONS	TROUBLE AREAS
P0351 P0352 P0353 P0354	No IGF signal to ECM while engine running (1 trip detection logic)	• Ignition system • Open or short in IGF1 or IGT circuit (1 to 4) between ignition coil and ECM • No. 1 to No. 4 ignition coils • ECM

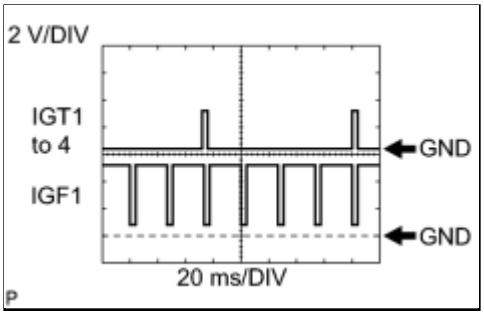

Reference: Inspection using an oscilloscope.
While cranking or idling the engine, check the waveform between terminals IGT (1 to 4) and E1, and IGF1 and E1 of the ECM connector.

ECM Terminal Name	Between IGT (1 to 4) and E1 Between IGF1 and E1
Tester Range	2 V/DIV, 20 ms/DIV
Condition	Idling

MONITOR DESCRIPTION

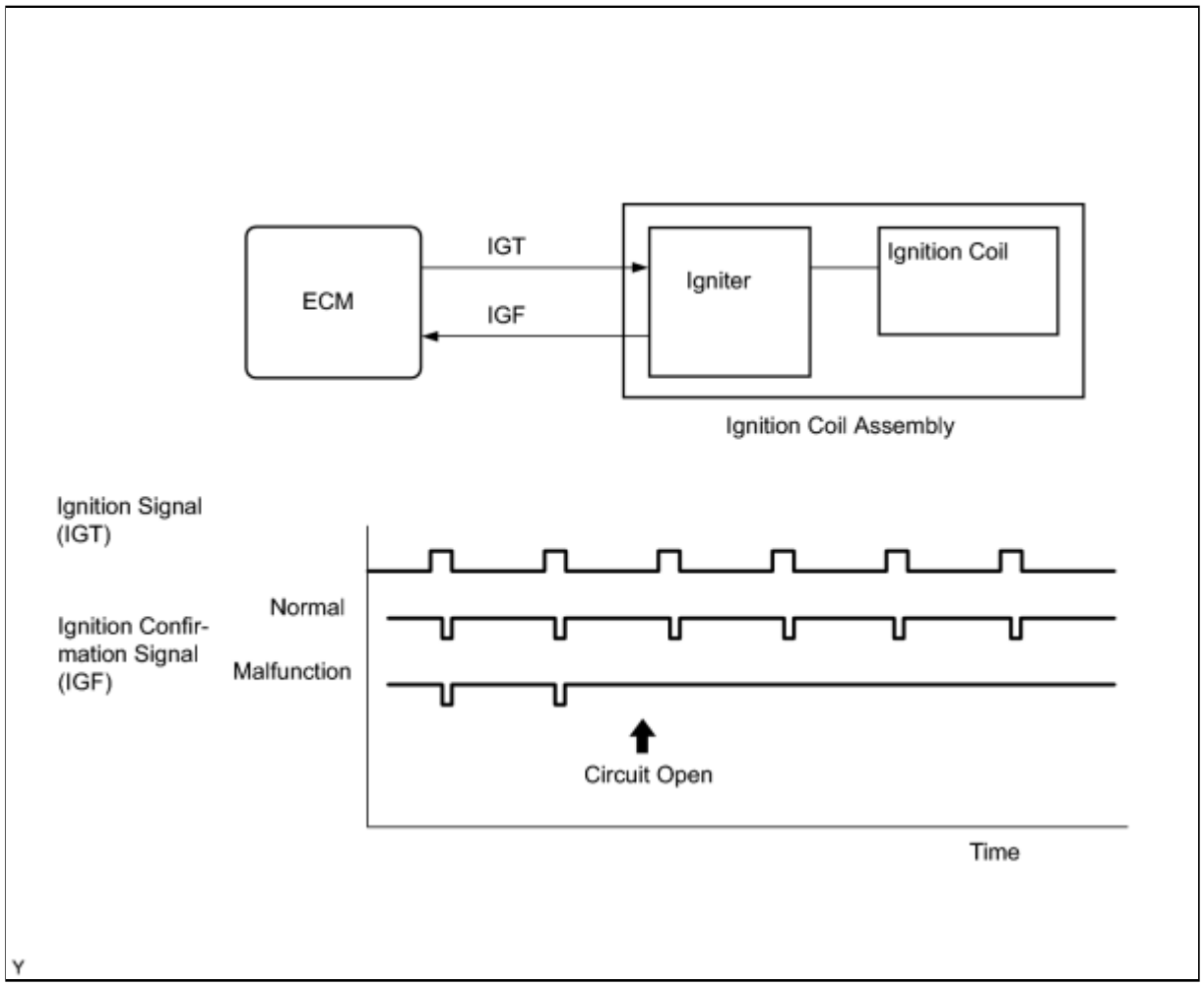

If the ECM does not receive any IGF signals despite transmitting the IGT signal, it interprets this as a fault in the igniter and sets a DTC.

If the malfunction is not repaired successfully, a DTC is set 1 second after the engine is next started.

MONITOR STRATEGY

Related DTCs	P0351: Igniter (cylinder 1) malfunction P0352: Igniter (cylinder 2) malfunction P0353: Igniter (cylinder 3) malfunction P0354: Igniter (cylinder 4) malfunction
Required Sensors/Components (Main)	Igniter
Required Sensors/Components (Related)	Crankshaft position sensor
Frequency of Operation	Continuous
Duration	0.256 seconds
MIL Operation	Immediate
Sequence of Operation	None

TYPICAL ENABLING CONDITIONS

Monitor runs whenever following DTCs not present	None
Either of following conditions A or B is met	-
A. Engine RPM	1500 rpm or less
B. Starter	OFF
Either of following conditions C or D met	-
C. Both of following conditions (a) and (b) are met	-
(a) Engine speed	500 rpm or less
(b) Battery voltage	6 V or more
D. All of following conditions (a), (b) and (c) are met	-
(a) Engine speed	More than 500 rpm
(b) Battery voltage	10 V or more
(c) Number of sparks after CPU reset	5 sparks or more

TYPICAL MALFUNCTION THRESHOLDS

IGF signal	ECM does not receive any IGF signal despite ECM sending IGT signal to igniter

COMPONENT OPERATING RANGE

IGF signal	Igniter transmits IGF signal when it receives IGT signal from ECM

WIRING DIAGRAM

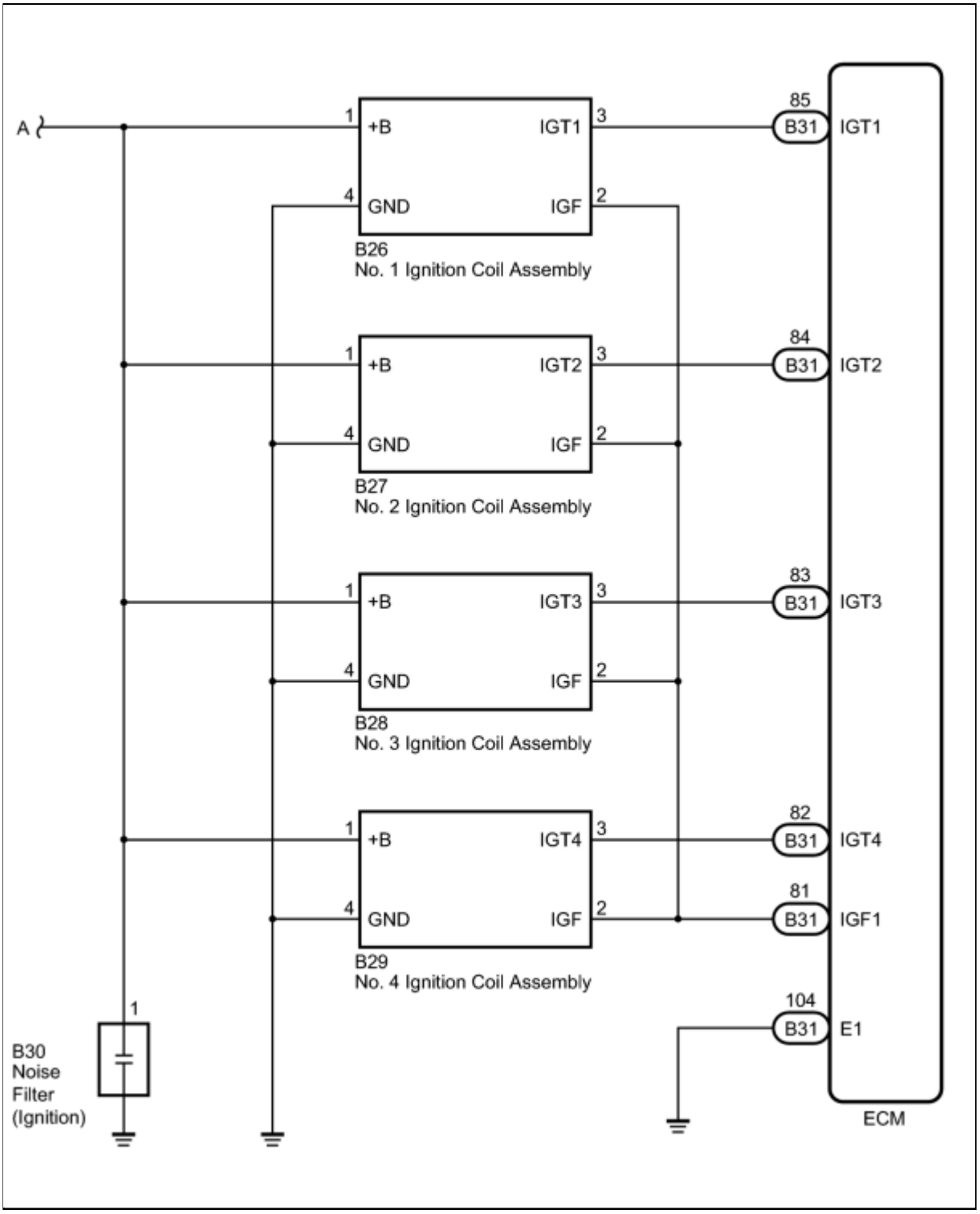

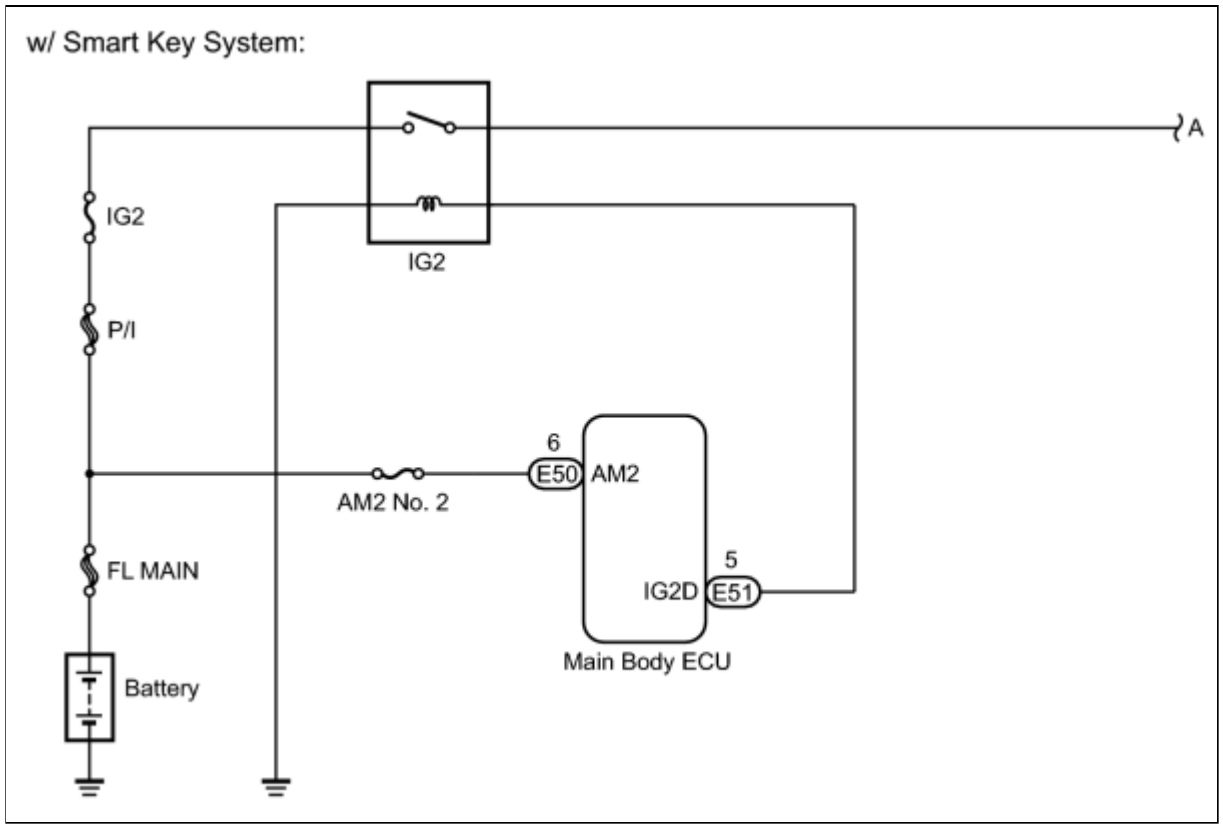

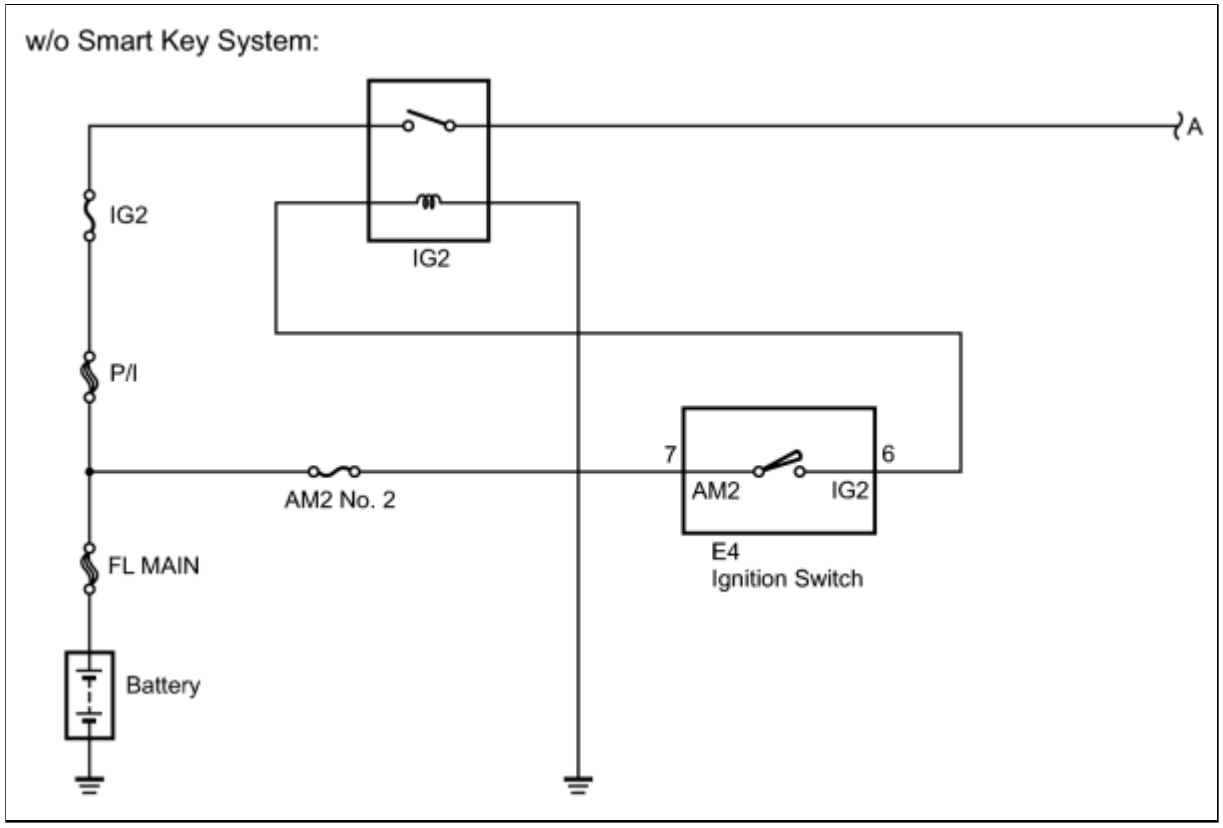

INSPECTION PROCEDURE

HINT:

Read freeze frame data using the Techstream. The ECM records vehicle and driving condition information as freeze frame data the moment a DTC is stored. When troubleshooting, freeze frame data can be helpful in determining whether the vehicle was running or stopped, whether the engine was warmed up or not, whether the air fuel ratio was lean or rich, as well as other data recorded at the time of a malfunction.

PROCEDURE

1.	**CHECK HARNESS AND CONNECTOR (IGNITION COIL ASSEMBLY - BODY GROUND)**

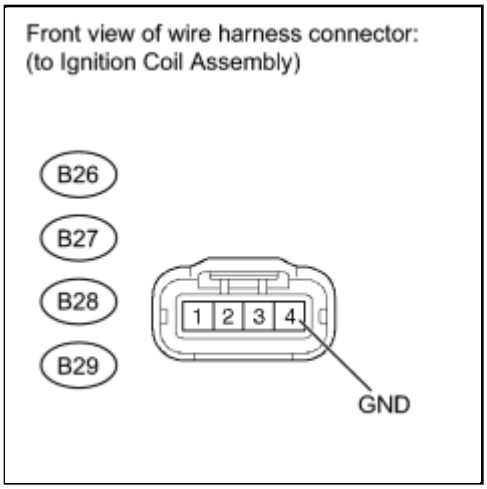

(a) Disconnect the ignition coil assembly connectors.

(b) Measure the resistance according to the value(s) in the table below.

Standard Resistance (Check for Open):

TESTER CONNECTION	CONDITION	SPECIFIED CONDITION
B26-4 (GND) - Body ground	Always	Below 1 Ω
B27-4 (GND) - Body ground	Always	Below 1 Ω
B28-4 (GND) - Body ground	Always	Below 1 Ω
B29-4 (GND) - Body ground	Always	Below 1 Ω

(c) Reconnect the ignition coil assembly connectors.

NG ▶ **REPAIR OR REPLACE HARNESS OR CONNECTOR (IGNITION COIL ASSEMBLY - BODY GROUND)**

OK ▼

2.	**INSPECT IGNITION COIL ASSEMBLY (POWER SOURCE)**

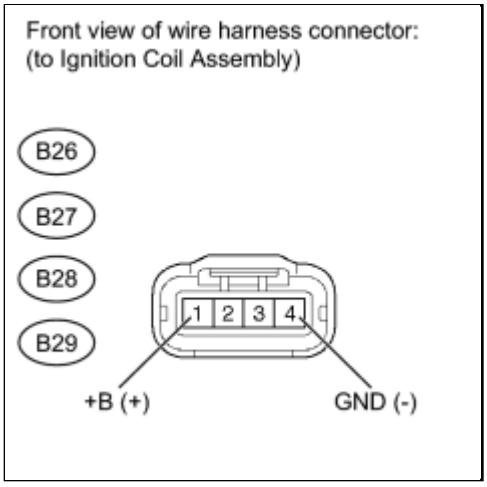

(a) Disconnect the ignition coil assembly connectors.

(b) Turn the ignition switch to ON.

(c) Measure the voltage according to the value(s) in the table below.

Standard Voltage:

TESTER CONNECTION	CONDITION	SPECIFIED CONDITION
B26-1 (+B) - B26-4 (GND)	Ignition switch ON	11 to 14 V
B27-1 (+B) - B27-4 (GND)	Ignition switch ON	11 to 14 V
B28-1 (+B) - B28-4 (GND)	Ignition switch ON	11 to 14 V
B29-1 (+B) - B29-4 (GND)	Ignition switch ON	11 to 14 V

(d) Reconnect the ignition coil assembly connectors.

NG ▶ **CHECK HARNESS AND CONNECTOR (IGNITION COIL ASSEMBLY - INTEGRATION RELAY)**

OK ▼

3.	**CHECK HARNESS AND CONNECTOR (IGNITION COIL ASSEMBLY - ECM)**

(a) Disconnect the ignition coil assembly connectors.

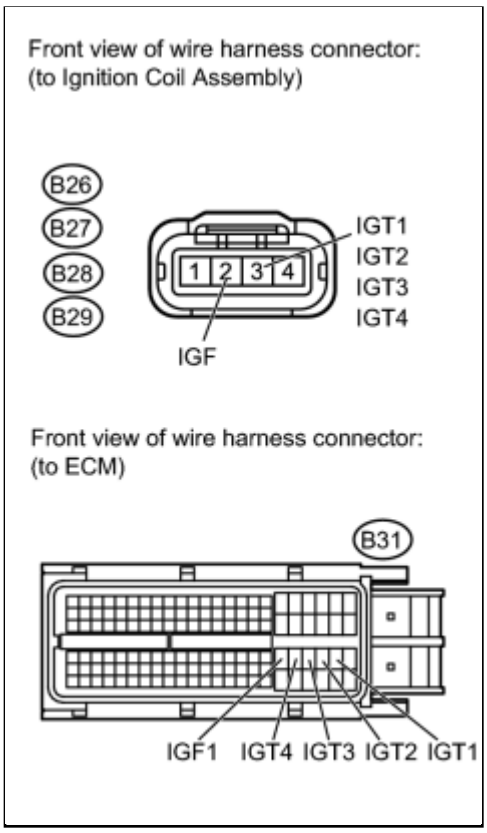

(b) Disconnect the ECM connector.

(c) Measure the resistance according to the value(s) in the table below.

Standard Resistance (Check for Open):

TESTER CONNECTION	CONDITION	SPECIFIED CONDITION
B26-2 (IGF) - B31-81 (IGF1)	Always	Below 1 Ω
B27-2 (IGF) - B31-81 (IGF1)	Always	Below 1 Ω
B28-2 (IGF) - B31-81 (IGF1)	Always	Below 1 Ω
B29-2 (IGF) - B31-81 (IGF1)	Always	Below 1 Ω

Standard Resistance (Check for Open):

TESTER CONNECTION	CONDITION	SPECIFIED CONDITION
B26-3 (IGT1) - B31-85 (IGT1)	Always	Below 1 Ω
B27-3 (IGT2) - B31-84 (IGT2)	Always	Below 1 Ω
B28-3 (IGT3) - B31-83 (IGT3)	Always	Below 1 Ω
B29-3 (IGT4) - B31-82 (IGT4)	Always	Below 1 Ω

Standard Resistance (Check for Short):

TESTER CONNECTION	CONDITION	SPECIFIED CONDITION
B26-2 (IGF) or B31-81 (IGF1) - Body ground	Always	10 kΩ or higher
B27-2 (IGF) or B31-81 (IGF1) - Body ground	Always	10 kΩ or higher
B28-2 (IGF) or B31-81 (IGF1) - Body ground	Always	10 kΩ or higher
B29-2 (IGF) or B31-81 (IGF1) - Body ground	Always	10 kΩ or higher

Standard Resistance (Check for Short):

TESTER CONNECTION	CONDITION	SPECIFIED CONDITION
B26-3 (IGT1) or B31-85 (IGT1) - Body ground	Always	10 kΩ or higher
B27-3 (IGT2) or B31-84 (IGT2) - Body ground	Always	10 kΩ or higher
B28-3 (IGT3) or B31-83 (IGT3) - Body ground	Always	10 kΩ or higher
B29-3 (IGT4) or B31-82 (IGT4) - Body ground	Always	10 kΩ or higher

(d) Reconnect the ECM connector.

(e) Reconnect the ignition coil assembly connectors.

NG ▶ **REPAIR OR REPLACE HARNESS OR CONNECTOR (IGNITION COIL ASSEMBLY - ECM)**

OK ▼

4.	**CHECK WHETHER DTC OUTPUT RECURS (DTC P0351, P0352, P0353 OR P0354)**

(a) Connect the Techstream to the DLC3.

(b) Turn the ignition switch to ON.

(c) Turn the Techstream on.

(d) Clear DTCs INFO .

(e) Shuffle arrangement of the ignition coils with igniters (among No. 1 to No. 4 cylinders).

NOTICE:

Do not shuffle the connectors.

(f) Perform a simulation test.

(g) Enter the following menus: Powertrain / Engine and ECT / Trouble Codes.

(h) Read the DTCs.

Result:

RESULT	PROCEED TO
Same DTC output	A
Different ignition coil DTC output	B

B ▶ **REPLACE IGNITION COIL ASSEMBLY**

A ▶ **REPLACE ECM**

5.	**CHECK HARNESS AND CONNECTOR (IGNITION COIL ASSEMBLY - INTEGRATION RELAY)**

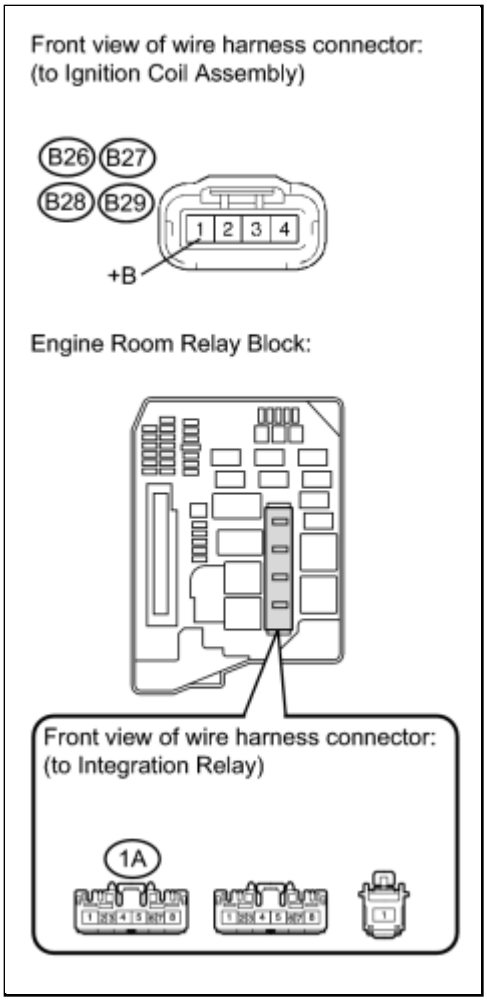

(a) Disconnect the ignition coil assembly connectors.

(b) Remove the integration relay from the engine room relay block.

(c) Disconnect the integration relay connector.

(d) Measure the resistance according to the value(s) in the table below.

Standard Resistance (Check for Open):

TESTER CONNECTION	CONDITION	SPECIFIED CONDITION
B26-1 (+B) - 1A-4	Always	Below 1 Ω
B27-1 (+B) - 1A-4	Always	Below 1 Ω
B28-1 (+B) - 1A-4	Always	Below 1 Ω
B29-1 (+B) - 1A-4	Always	Below 1 Ω

Standard Resistance (Check for Short):

TESTER CONNECTION	CONDITION	SPECIFIED CONDITION
B26-1 (+B) or 1A-4 - Body ground	Always	10 kΩ or higher
B27-1 (+B) or 1A-4 - Body ground	Always	10 kΩ or higher
B28-1 (+B) or 1A-4 - Body ground	Always	10 kΩ or higher
B29-1 (+B) or 1A-4 - Body ground	Always	10 kΩ or higher

(e) Reconnect the integration relay connector.

(f) Reinstall the integration relay.

(g) Reconnect the ignition coil assembly connectors.

NG ▶ **REPAIR OR REPLACE HARNESS OR CONNECTOR (IGNITION COIL ASSEMBLY - INTEGRATION RELAY)**

OK ▶ **CHECK ECM POWER SOURCE CIRCUIT**

Last Modified: 3-10-2010	6.4 C	**From:** 200901
Model Year: 2010	**Model:** Corolla	**Doc ID:** RM000000YTB058X
Title: 2ZR-FE ENGINE CONTROL: SFI SYSTEM: P0365,P0367,P0368: Camshaft Position Sensor "B" Circuit (Bank 1) (2010 Corolla)		

DTC	**P0365**	**Camshaft Position Sensor "B" Circuit (Bank 1)**

DTC	**P0367**	**Camshaft Position Sensor "B" Circuit Low Input (Bank 1)**

DTC	**P0368**	**Camshaft Position Sensor "B" Circuit High Input (Bank 1)**

DESCRIPTION

The camshaft position sensor for exhaust camshaft (EV signal sensor) consists of a magnet and MRE element.

The exhaust camshaft has a timing rotor for camshaft position sensor. When the camshaft rotates, changes occur in the air gaps between the timing rotor and MRE element, which affects the magnet. As a result, the resistance of the MRE material fluctuates. The camshaft position sensor converts the camshaft rotation data to pulse signals, and uses the pulse signals to determine the camshaft angle, which it sends to the ECM. Then the ECM uses this data to control fuel injection duration, injection timing and the Variable Valve Timing (VVT) system.

DTC NO.	DTC DETECTION CONDITION	TROUBLE AREA
P0365	When one of following conditions is met: • Missing exhaust camshaft position sensor signal signal for 5 seconds at engine speed of 600 rpm or more (1 trip detection logic) • Input voltage to ECM remains less than 0.3 V, or more than 4.7 V for 4 seconds when 2 or more seconds have elapsed after turning ignition switch ON (1 trip detection logic)	• Open or short in exhaust camshaft position sensor circuit • Exhaust camshaft position sensor • Camshaft timing gear for exhaust camshaft • Jumped tooth of timing chain for exhaust camshaft • ECM
P0367	Output voltage of exhaust camshaft position sensor less than 0.3 V for 4 seconds (1 trip detection logic)	• Open or short in exhaust camshaft position sensor

DTC NO.	DTC DETECTION CONDITION	TROUBLE AREA
		circuit • Exhaust camshaft position sensor • Camshaft timing gear for exhaust camshaft • Jumped tooth of timing chain for exhaust camshaft • ECM
P0368	Output voltage of exhaust camshaft position sensor 4.7 V for 4 seconds (1 trip detection logic)	• Open or short in exhaust camshaft position sensor circuit • Exhaust camshaft position sensor • Camshaft timing gear for exhaust camshaft • Jumped tooth of timing chain for exhaust camshaft • ECM

HINT:

DTC P0365, P0367 and P0368 indicate a malfunction relating to the exhaust camshaft position sensor circuit (the wire harness between the ECM and exhaust camshaft position sensor, and the exhaust camshaft position sensor itself).

Reference: Inspection using an oscilloscope INFO

MONITOR DESCRIPTION

If no signal is transmitted by the exhaust camshaft position sensor despite the engine revolving, or the rotation of the exhaust camshaft and the crankshaft is not synchronized, the ECM interprets this as a malfunction of the sensor.

If the malfunction is not repaired successfully, the DTC is set 10 seconds after the engine is next started.

MONITOR STRATEGY

Related DTCs	P0365: Exhaust camshaft position sensor range check (running) P0365: Exhaust camshaft position sensor range check (fluctuating)

	P0367: Exhaust camshaft position sensor range check (Low voltage) P0368: Exhaust camshaft position sensor range check (High voltage)
Required Sensors/Components (Main)	Exhaust camshaft position sensor
Required Sensors/Components (Related)	Crankshaft position sensor
Frequency of Operation	Continuous
Duration	4 seconds: Exhaust camshaft position sensor range check (P0365, P0367, P0368) 5 seconds: Exhaust camshaft position sensor range check (running) (P0365)
MIL Operation	Immediate
Sequence of Operation	None

TYPICAL ENABLING CONDITIONS

All

Monitor runs whenever following DTCs not present	None

P0365 Exhaust Camshaft Position/Crankshaft Position Misalignment

Engine speed	600 rpm or more
Ignition switch	ON
Starter	OFF

P0365, P0367, P0368 Exhaust Camshaft Position Sensor Range Check

Starter	OFF
Ignition switch	ON
Time after ignition switch OFF to ON	2 seconds or more

TYPICAL MALFUNCTION THRESHOLDS

P0365 Exhaust Camshaft Position Sensor Range Check (Running)

Exhaust camshaft position signal	No signal

P0365 Exhaust Camshaft Position Sensor Range Check (Fluctuating)

Exhaust camshaft position sensor voltage	Less than 0.3 V, or more than 4.7 V

P0367 Exhaust Camshaft Position Sensor Range Check (Low Voltage)

Exhaust camshaft position sensor voltage	Less than 0.3 V

P0368 Exhaust Camshaft Position Sensor Range Check (High Voltage)

Exhaust camshaft position sensor voltage	More than 4.7 V

COMPONENT OPERATING RANGE

Exhaust camshaft position sensor	• Exhaust camshaft position sensor output voltage fluctuates while camshaft revolving • 3 exhaust camshaft position sensor signals per 2 crankshaft revolutions
Exhaust camshaft position sensor voltage	0.3 to 4.7 V

WIRING DIAGRAM

Refer to DTC P0335 INFO .

INSPECTION PROCEDURE

HINT:

- Read freeze frame data using the Techstream. The ECM records vehicle and driving condition information as freeze frame data the moment a DTC is stored. When troubleshooting, freeze frame data can be helpful in determining whether the vehicle was running or stopped, whether the engine was warmed up or not, whether the air fuel ratio was lean or rich, as well as other data recorded at the time of a malfunction.
- If no problem is found through this diagnostic troubleshooting procedure, troubleshoot the engine mechanical system.

PROCEDURE

1.	**CHECK ANY OTHER DTCS OUTPUT (IN ADDITION TO DTC P0365, P0367 OR P0368)**

(a) Connect the Techstream to the DLC3.

(b) Turn the ignition switch to ON.

(c) Turn the Techstream on.

(d) Enter the following menus: Powertrain / Engine and ECT / Trouble Codes.

(e) Read the DTCs.

Result:

RESULT	PROCEED TO
DTC P0365, P0367 or P0368 is output	A
DTC P0365, P0367 or P0368 and other DTCs are output	B

HINT:

If any DTCs other than P0365, P0367 or P0368 are output, troubleshoot those DTCs first.

B ▶ **GO TO DTC CHART**

A ▼

2.	**INSPECT CAMSHAFT POSITION SENSOR (FOR EXHAUST CAMSHAFT) (POWER SOURCE)**

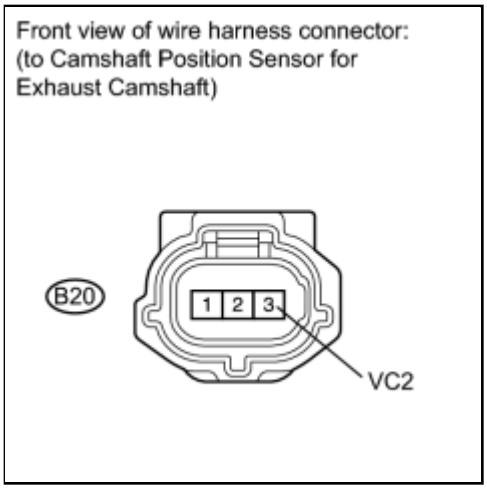

(a) Disconnect the camshaft position sensor (for exhaust camshaft) connector.

(b) Turn the ignition switch to ON.

(c) Measure the voltage according to the value(s) in the table below.

Standard Voltage:

TESTER CONNECTION	SWITCH CONDITION	SPECIFIED CONDITION
B20-3 (VC2) - Body ground	Ignition switch ON	4.5 to 5.5 V

(d) Reconnect the camshaft position sensor (for exhaust camshaft) connector.

NG ▶ **CHECK HARNESS AND CONNECTOR (CAMSHAFT POSITION SENSOR - ECM)**

OK ▼

3.	CHECK HARNESS AND CONNECTOR (CAMSHAFT POSITION SENSOR - ECM)

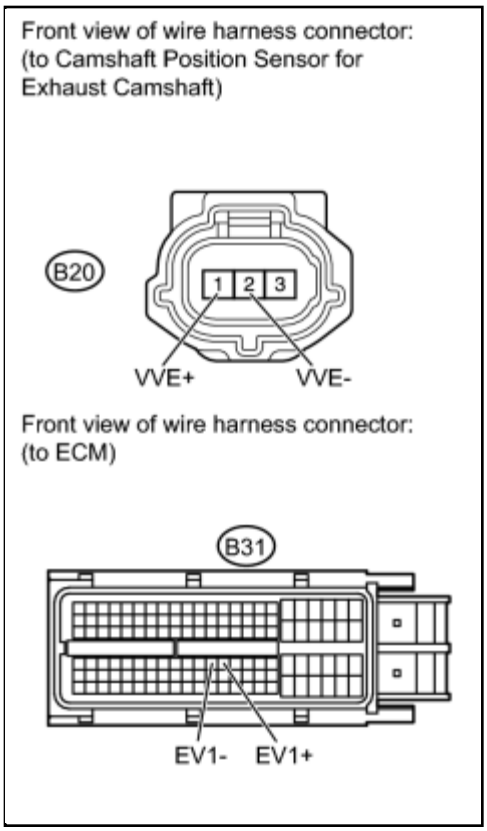

(a) Disconnect the camshaft position sensor (for exhaust camshaft) connector.

(b) Disconnect the ECM connector.

(c) Measure the resistance according to the value(s) in the table below.

Standard Resistance (Check for Open):

TESTER CONNECTION	CONDITION	SPECIFIED CONDITION
B20-1 (VVE+) - B31-76 (EV1+)	Always	Below 1 Ω
B20-2 (VVE-) - B31-75 (EV1-)	Always	Below 1 Ω

Standard Resistance (Check for Short):

TESTER CONNECTION	CONDITION	SPECIFIED CONDITION
B20-1 (VVE+) or B31-76 (EV1+) - Body ground	Always	10 kΩ or higher
B20-2 (VVE-) or B31-75 (EV1-) - Body ground	Always	10 kΩ or higher

(d) Reconnect the camshaft position sensor (for exhaust camshaft) connector.

(e) Reconnect the ECM connector.

NG ▶ **REPAIR OR REPLACE HARNESS OR CONNECTOR (CAMSHAFT POSITION SENSOR - ECM)**

OK ▼

4.	**CHECK SENSOR INSTALLATION (CAMSHAFT POSITION SENSOR FOR EXHAUST CAMSHAFT)**

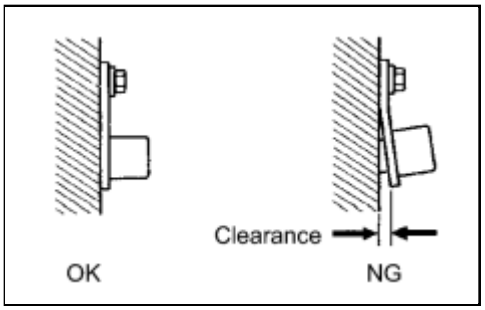

(a) Check the camshaft position sensor (for exhaust camshaft) installation.

OK:

Sensor is installed correctly.

NG ▶ **SECURELY REINSTALL SENSOR**

OK ▼

5.	INSPECT EXHAUST CAMSHAFT (TIMING ROTOR)

(a) Check the timing rotor of the exhaust camshaft.

OK:

Camshaft timing rotor does not have any cracks or deformation.

NG ▶ REPLACE EXHAUST CAMSHAFT

OK ▼

6.	REPLACE CAMSHAFT POSITION SENSOR (FOR EXHAUST CAMSHAFT)

(a) Replace the camshaft position sensor INFO .

NEXT ▼

7.	CHECK WHETHER DTC OUTPUT RECURS (DTC P0365, P0367 OR P0368)

(a) Connect the Techstream to the DLC3.

(b) Turn the ignition switch to ON.

(c) Turn the Techstream on.

(d) Clear DTCs INFO .

(e) Start the engine and allow the engine to idle for 10 seconds or more.

(f) Turn the ignition switch off.

(g) Start the engine again and allow the engine to idle for 10 seconds or more.

(h) Enter the following menus: Powertrain / Engine and ECT / Trouble Codes.

(i) Read the DTCs.

Result:

RESULT	PROCEED TO
DTC P0365, P0367 or P0368 is output	A
DTC is not output	B

HINT:

If the engine does not start, replace the ECM.

B ▶ **END**

A

▼

8.	**ADJUST VALVE TIMING**

HINT:

There are no marks on the cylinder head to match-up for the purpose of checking valve timing. Valve timing can only be inspected by lining up the colored plates on the timing chain with the marks on the pulleys. It may be necessary to remove and reinstall the chain to match-up the alignment marks INFO **.**

NEXT

▼

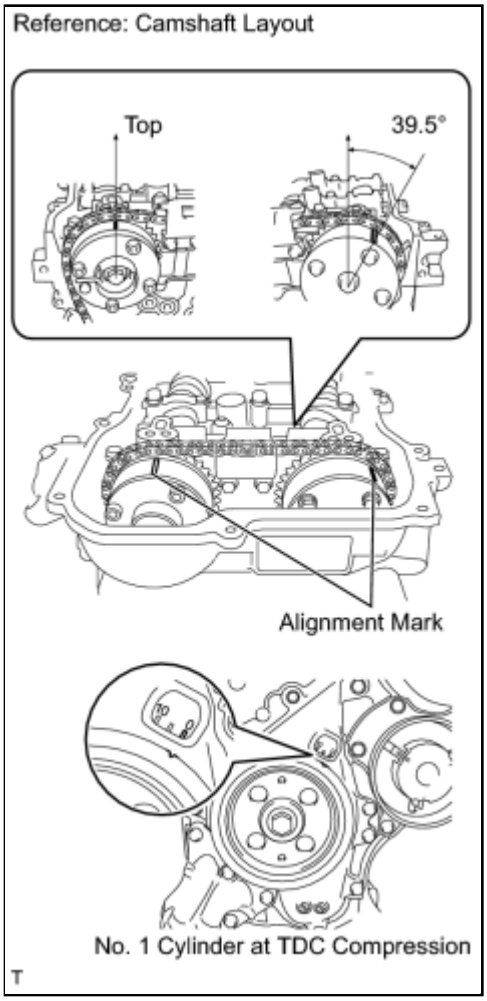

9.	CHECK WHETHER DTC OUTPUT RECURS (DTC P0365, P0367 OR P0368)

(a) Connect the Techstream to the DLC3.

(b) Turn the ignition switch to ON.

(c) Turn the Techstream on.

(d) Clear DTCs INFO .

(e) Start the engine and allow the engine to idle for 10 seconds or more.

(f) Turn the ignition switch off.

(g) Start the engine again and allow the engine to idle for 10 seconds or more.

(h) Enter the following menus: Powertrain / Engine and ECT / Trouble Codes.

(i) Read the DTCs.

Result:

RESULT	PROCEED TO
DTC is not output	A
DTC P0365, P0367 or P0368 is output	B

HINT:

If the engine does not start, replace the ECM.

B ▶ **REPLACE ECM**

A ▶ **END**

10.	CHECK HARNESS AND CONNECTOR (CAMSHAFT POSITION SENSOR - ECM)

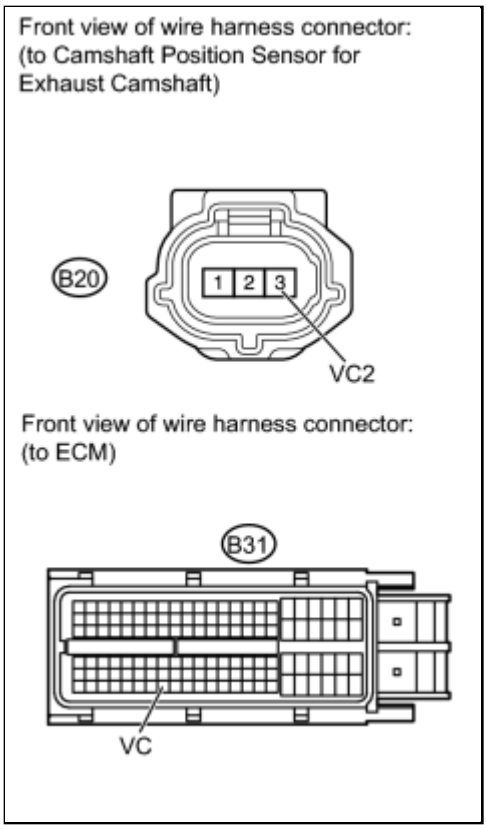

(a) Disconnect the camshaft position sensor (for exhaust camshaft) connector.

(b) Disconnect the ECM connector.

(c) Measure the resistance according to the value(s) in the table below.

Standard Resistance (Check for Open):

TESTER CONNECTION	CONDITION	SPECIFIED CONDITION

TESTER CONNECTION	CONDITION	SPECIFIED CONDITION
B20-3 (VC2) - B31-117 (VC)	Always	Below 1 Ω

Standard Resistance (Check for Short):

TESTER CONNECTION	CONDITION	SPECIFIED CONDITION
B20-3 (VC2) or B31-117 (VC) - Body ground	Always	10 kΩ or higher

(d) Reconnect the camshaft position sensor (for exhaust camshaft) connector.

(e) Reconnect the ECM connector.

NG ▶ **REPAIR OR REPLACE HARNESS OR CONNECTOR (CAMSHAFT POSITION SENSOR - ECM)**

OK ▶ **REPLACE ECM**

Last Modified: 3-10-2010	6.4 C	**From:** 200901
Model Year: 2010	**Model:** Corolla	**Doc ID:** RM000000WC0057X
Title: 2ZR-FE ENGINE CONTROL: SFI SYSTEM: P0420: Catalyst System Efficiency Below Threshold (Bank 1) (2010 Corolla)		

DTC	**P0420**	**Catalyst System Efficiency Below Threshold (Bank 1)**

MONITOR DESCRIPTION

The ECM uses sensors mounted in front of and behind the three-way catalytic converter to monitor its efficiency.

The first sensor, the air fuel ratio sensor, sends pre-catalyst information to the ECM. The second sensor, the heated oxygen sensor, sends post-catalyst information to the ECM.

In order to detect any deterioration in the three-way catalytic converter, the ECM calculates the oxygen storage capacity of the three-way catalytic converter. This calculation is based on the voltage output of the heated oxygen sensor while performing active air fuel ratio control.

The oxygen storage capacity value is an indication of the oxygen storage capacity of the three-way catalytic converter. When the vehicle is being driven with a warm engine, active air fuel ratio control is performed for approximately 15 to 20 seconds. When it is performed, the ECM deliberately sets the air fuel ratio to lean or rich levels. If the cycle of the waveform for the heated oxygen sensor is long, the oxygen storage capacity is great. There is a direct correlation between the heated oxygen sensor and the oxygen storage capacity of the three-way catalytic converter.

The ECM uses the oxygen storage capacity value to determine the state of the three-way catalytic converter. If any deterioration has occurred, it illuminates the MIL and sets the DTC.

DTC NO.	DTC DETECTION CONDITION	TROUBLE AREA
P0420	Oxygen storage capacity value smaller than standard value under active air fuel ratio control (2 trip detection logic)	• Gas leak from exhaust system • Air fuel ratio sensor (sensor 1) • Heated oxygen sensor (sensor 2) • Front exhaust pipe assembly (TWC: Three-way catalytic converter)

HINT:

- Sensor 1 refers to the sensor closest to the engine assembly.
- Sensor 2 refers to the sensor farthest away from the engine assembly.

MONITOR STRATEGY

Related DTCs	P0420: Catalyst Deterioration
Required Sensors/Components (Main)	Air fuel ratio sensor Heated oxygen sensor
Required Sensors/Components (Related)	Intake air temperature sensor Mass air flow meter Crankshaft position sensor Engine coolant temperature sensor
Frequency of Operation	Once per driving cycle
Duration	About 30 seconds

MIL Operation	2 driving cycles
Sequence of Operation	None

TYPICAL ENABLING CONDITIONS

Monitor runs whenever following DTCs not present	P0010 (VVT Oil Control Valve Bank 1) P0011 (VVT System Bank 1 - Advance) P0012 (VVT System Bank 1 - Retard) P0013 (Exhaust Oil Control Valve) P0014 (Exhaust System - Advance) P0016 (VVT System Bank 1 - Misalignment) P0017 (Exhaust VVT System - Misalignment) P0031, P0032 (Air Fuel Ratio Sensor Heater - Sensor 1) P0037, P0038 (Heated Oxygen Sensor Heater - Sensor 2) P0102, P0103 (Mass Air Flow Meter) P0115, P0117, P0118 (Engine Coolant Temperature Sensor) P0120, P0121 P0122, P0123, P0220, P0222, P0223, P2135 (Throttle Position Sensor) P0125 (Insufficient Engine Coolant Temperature for Closed Loop Fuel Control) P0136, P0137, P0138, P0139 (Rear Oxygen sensor - Sensor 2) P0171, P0172 (Fuel System) P0301, P0302, P0303, P0304 (Misfire) P0335 (Crankshaft Position Sensor) P0340 (Camshaft Position Sensor) P0351, P0352, P0353, P0354 (Igniter) P0365, P0367, P0368 (Exhaust Camshaft Position Sensor) P0500 (Vehicle Speed Sensor) P0606, P0607 (Heated Oxygen Sensor - Sensor 2) P2195, P2196, P2237, P2238, P2239, P2252, P2253, P2A00 (Air Fuel Ratio Sensor - Sensor 1)
Battery voltage	11 V or more
Intake air temperature	-10°C (14°F) or more
Engine coolant temperature	75°C (167°F) or more
Atmospheric pressure coefficient	0.75 or more
Idling	OFF
Engine RPM	Less than 4000 rpm
Air fuel ratio sensor status	Activated
Fuel system status	Closed loop
Engine load	10 to 80%
All of the following conditions are met	Condition 1, 2 and 3
1. Mass air flow rate	2.5 to 40 gm/sec
2. Front catalyst temperature (estimated)	Automatic transaxle models: 660 to 840°C (1220 to 1544°F) Manual transaxle models: 635 to 840°C (1175 to 1544°F)
3. Rear catalyst temperature (estimated)	400 to 760°C (752 to 1400°F)
Rear Heated oxygen sensor monitor	Completed
Shift position	4th or more

TYPICAL MALFUNCTION THRESHOLDS

Oxygen storage capacity of three-way catalytic converter	Less than 0.045 g

MONITOR RESULT

Refer to Checking Monitor Status INFO .

CONFIRMATION DRIVING PATTERN

HINT:

Performing this confirmation pattern will activate the catalyst monitor. This is very useful for verifying the completion of a repair.

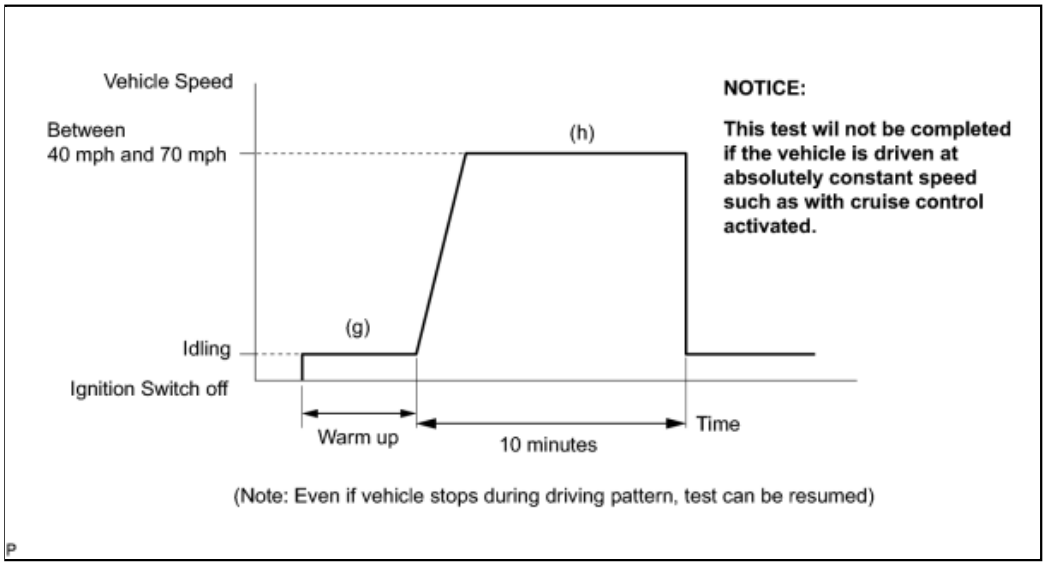

HINT:

(a) Connect the Techstream to the DLC3.
(b) Turn the ignition switch to ON.
(c) Turn the Techstream on.
(d) Clear DTCs (if set) INFO .
(e) Enter the following menus: Powertrain / Engine and ECT / Monitor.
(f) Check that Catalyst / Status2 is Incomplete.
(g) Start the engine and warm it up.
(h) Drive the vehicle at between 40 mph and 70 mph (64 km/h and 113 km/h) for at least 10 minutes.
(i) Those items will change to Complete as Catalyst monitor operates.
(j) Enter the following menus: Powertrain / Engine and ECT / Trouble Codes.
(k) Check if any DTCs (any pending DTCs) are set.

HINT:

If Catalyst does not change to Complete, and any pending DTCs fail to set, extend the driving time.

CATALYST LOCATION

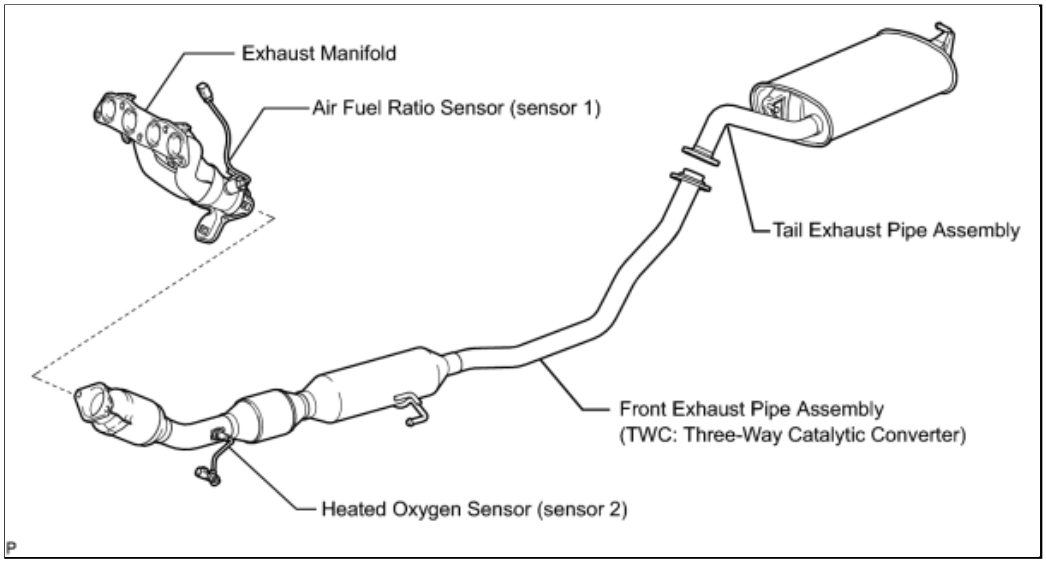

CONDITIONING FOR SENSOR TESTING

HINT:

Perform the operation with the engine speeds and time durations described below prior to checking the waveforms of the air fuel ratio sensor and heated oxygen sensor. This is in order to activate the sensors sufficiently to obtain the appropriate inspection results.

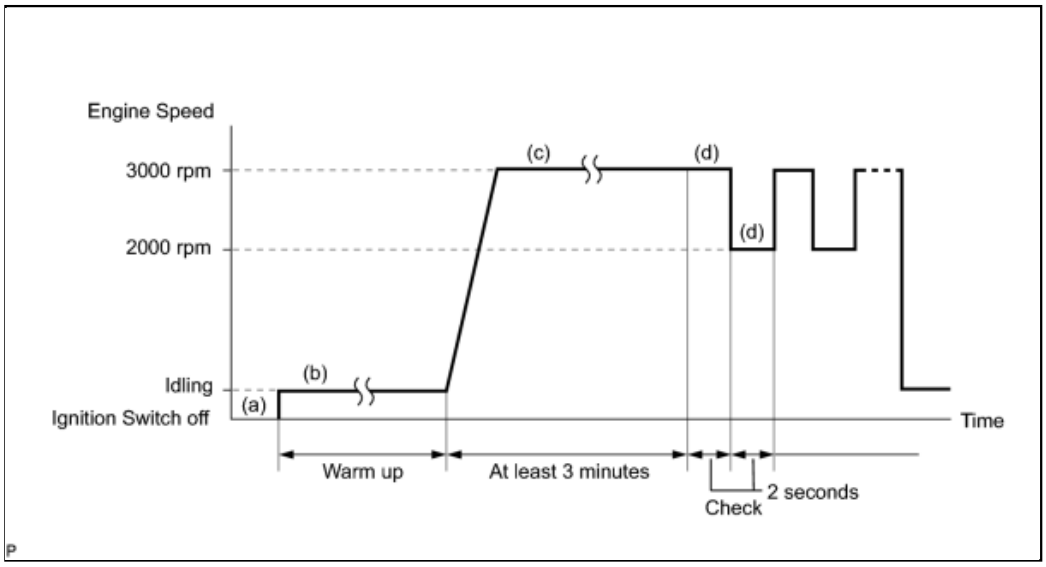

(a) Connect the Techstream to the DLC3.
(b) Start the engine and warm it up with all the accessories switched off until the engine coolant temperature stabilizes.
(c) Run the engine at an engine speed of between 2500 rpm and 3000 rpm for at least 3 minutes.
(d) While running the engine at 3000 rpm for 2 seconds and 2000 rpm for 2 seconds, check the waveforms of the air fuel ratio and heated oxygen sensors using the Techstream.

HINT:

- If either of the voltage outputs of the air fuel ratio or heated oxygen sensor does not fluctuate, or there is noise in the waveform of either sensor, the sensor may be malfunctioning.
- If the voltage outputs of both the sensors remain lean or rich, the air fuel ratio may be extremely lean or rich. In such cases, perform the following menu items: Powertrain / Engine and ECT / Active Test / Control the Injection Volume for A/F sensor.
- If the three-way catalytic converter has deteriorated, the heated oxygen sensor (located behind the three-way catalytic converter) voltage output fluctuates up and down frequently, even under normal driving conditions (active air

fuel ratio control is not performed).

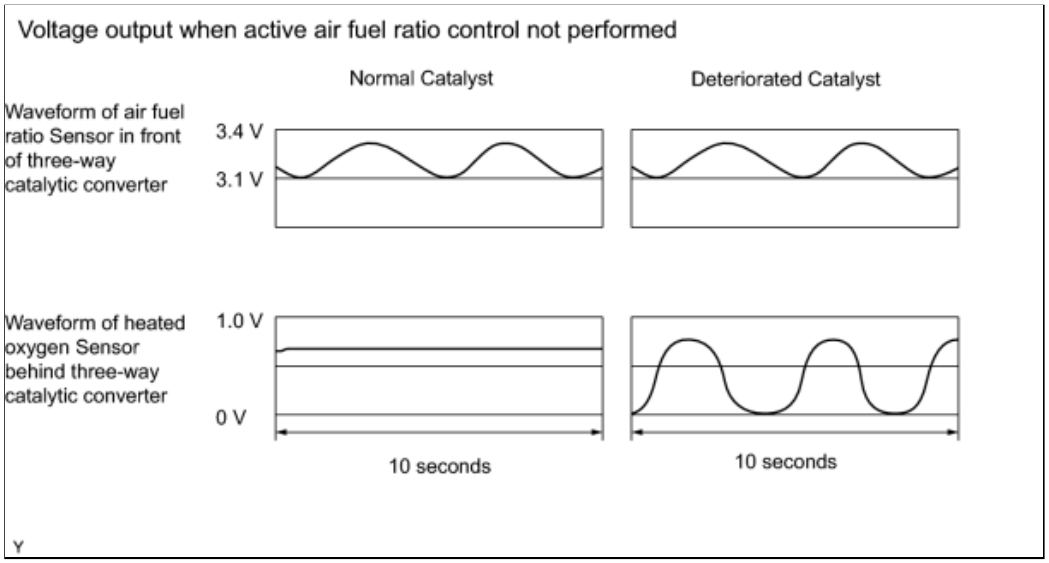

INSPECTION PROCEDURE

HINT:

Malfunctioning areas can be identified by performing the Control the Injection Volume for A/F sensor Active Test. The Control the Injection Volume for A/F sensor function can help to determine whether the air fuel ratio sensor, heated oxygen sensor and other potential trouble areas are malfunctioning.

The following instructions describe how to conduct the Control the Injection Volume for A/F sensor operation using the Techstream.

1. Connect the Techstream to the DLC3.
2. Start the engine.
3. Turn the Techstream on.
4. Warm up the engine at an engine speed of 2500 rpm for approximately 90 seconds.
5. Enter the following menus: Powertrain / Engine and ECT / Active Test / Control the Injection Volume for A/F sensor.
6. Perform the Active Test operation with the engine in an idling condition (press the RIGHT or LEFT button to change the fuel injection volume.)
7. Monitor the output voltages of the air fuel ratio and heated oxygen sensors (AFS Voltage B1 S1 and O2S B1 S2) displayed on the Techstream.

HINT:

- The Control the Injection Volume for A/F sensor operation lowers the fuel injection volume by 12.5% or increases the injection volume by 25%.
- Each sensor reacts in accordance with increases and decreases in the fuel injection volume.

TECHSTREAM DISPLAY (SENSOR)	INJECTION VOLUME	STATUS	VOLTAGE
AFS Voltage B1 S1 (air fuel ratio)	+25%	Rich	Less than 3.1 V
	-12.5%	Lean	More than 3.4 V
O2S B1 S2 (heated oxygen)	+25%	Rich	More than 0.55 V
	-12.5%	Lean	Less than 0.4 V

NOTICE:

The air fuel ratio sensor has an output delay of a few seconds and the heated oxygen sensor has a maximum output delay of approximately 20 seconds.

CASE	AIR FUEL RATIO SENSOR (SENSOR 1)	HEATED OXYGEN SENSOR (SENSOR 2)	MAIN

	OUTPUT VOLTAGE	OUTPUT VOLTAGE	SUSPECTED TROUBLE AREA
1	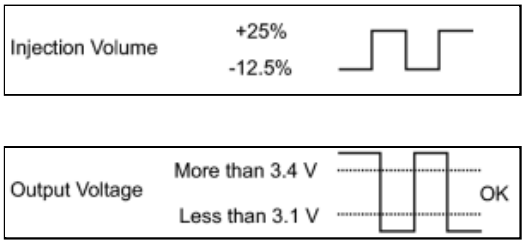	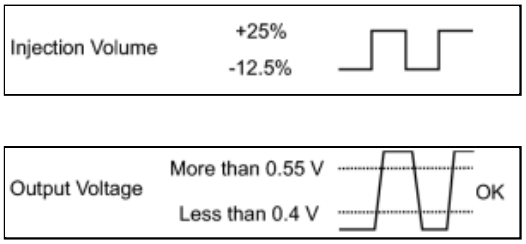	-
2	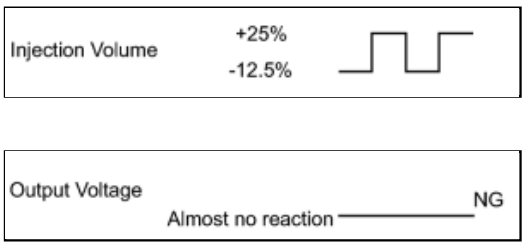	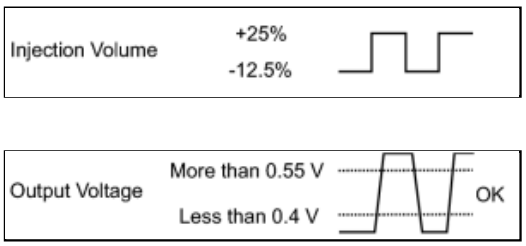	• Air fuel ratio sensor • Air fuel ratio sensor heater • Air fuel ratio sensor circuit
3	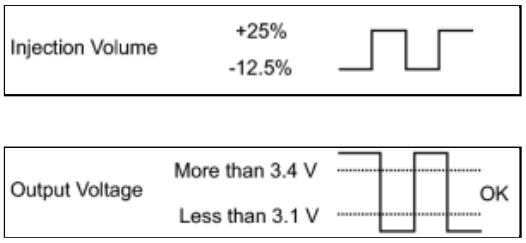	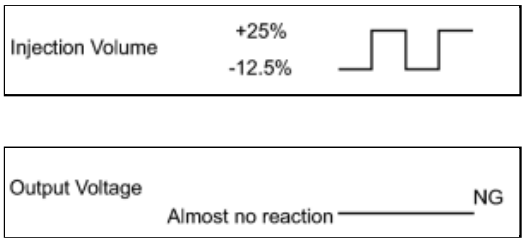	• Heated oxygen sensor • Heated oxygen sensor heater • Heated oxygen sensor circuit
4	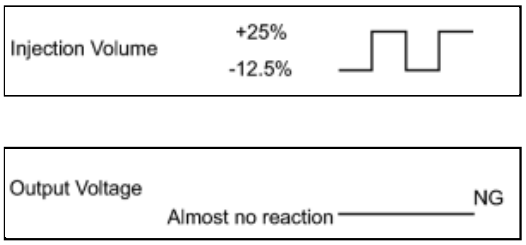	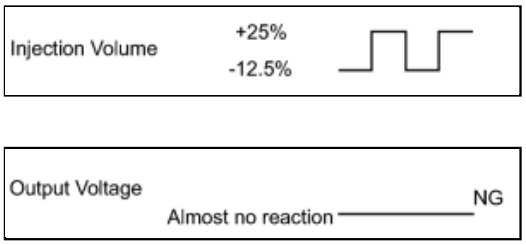	• Injector • Fuel pressure • Gas leak from exhaust system (Air fuel ratio extremely rich or lean)

- Following the Control the Injection Volume for A/F sensor procedure enables technicians to check and graph the voltage outputs of both the air fuel ratio and heated oxygen sensors.
- To display the graph, enter the following menus: Powertrain / Engine and ECT / Active Test / Control the Injection Volume for A/F Sensor / AFS Voltage B1 S1 and O2S B1 S2; then press the graph button on the Data List view.

HINT:

Read freeze frame data using the Techstream. The ECM records vehicle and driving condition information as freeze frame data the moment a DTC is stored. When troubleshooting, freeze frame data can be helpful in determining whether the vehicle was running or

stopped, whether the engine was warmed up or not, whether the air fuel ratio was lean or rich, as well as other data recorded at the time of a malfunction.

PROCEDURE

1.	**CHECK ANY OTHER DTCS OUTPUT (IN ADDITION TO DTC P0420)**

(a) Connect the Techstream to the DLC3.

(b) Turn the ignition switch to ON.

(c) Turn the Techstream on.

(d) Enter the following menus: Powertrain / Engine and ECT / Trouble Codes.

(e) Read the DTCs.

Result:

RESULT	PROCEED TO
DTC P0420 is output	A
DTC P0420 and other DTCs are output	B

HINT:

If any DTCs other than P0420 are output, troubleshoot those DTCs first.

B ▶ **GO TO DTC CHART**

A ▼

2.	**PERFORM ACTIVE TEST USING TECHSTREAM (CONTROL THE INJECTION VOLUME FOR A/F SENSOR)**

(a) Connect the Techstream to the DLC3.

(b) Start the engine and warm it up.

(c) Turn the Techstream on.

(d) Run the engine at an engine speed of 2500 rpm for approximately 90 seconds.

(e) Enter the following menus: Powertrain / Engine and ECT / Active Test / Control the Injection Volume for A/F sensor.

(f) Perform the Active Test operation with the engine in an idling condition (press the RIGHT or LEFT button to change the fuel injection volume).

(g) Monitor the voltage outputs of the air fuel ratio sensor and heated oxygen sensor (AFS Voltage B1S1 and O2S B1S2) displayed on the Techstream.

HINT:

- The Control the Injection Volume for A/F sensor operation lowers the fuel injection volume by 12.5% or increases the injection volume by 25%.

- Each sensor reacts in accordance with increases and decreases in the fuel injection volume.

Standard:

TECHSTREAM DISPLAY (SENSOR)	INJECTION VOLUME	STATUS	VOLTAGE
AFS Voltage B1S1 (air fuel ratio)	+25%	Rich	Less than 3.1 V
	-12.5%	Lean	More than 3.4 V
O2S B1S2 (heated oxygen)	+25%	Rich	More than 0.55 V
	-12.5%	Lean	Less than 0.4 V

Result:

STATUS AFS VOLTAGE B1S1	STATUS O2S B1S2	AIR FUEL RATIO CONDITION AND AIR FUEL RATIO AND HEATED OXYGEN SENSORS CONDITION	MISFIRE	MAIN SUSPECTED TROUBLE AREA	PROCEED TO
Lean/Rich	Lean/Rich	Normal	-	○ Three-way catalytic converter ○ Gas leakage from exhaust system	A
Lean	Lean/Rich	Air fuel ratio sensor malfunction	-	○ Air fuel ratio sensor	B
Rich	Lean/Rich	Air fuel ratio sensor malfunction	-	○ Air fuel ratio sensor	
Lean/Rich	Lean	Heated oxygen sensor malfunction	-	○ Heated oxygen sensor ○ Gas leakage from exhaust system	C
Lean/Rich	Rich	Heated oxygen sensor malfunction	-	○ Heated oxygen sensor ○ Gas leakage from exhaust system	
Lean	Lean	Actual air fuel ratio lean	May occur	○ Extremely rich or lean actual air fuel ratio ○ Gas leakage from exhaust system	D
Rich	Rich	Actual air fuel ratio rich	-	○ Extremely rich or lean actual air fuel ratio ○ Gas leakage from exhaust system	

Lean: During Control the Injection Volume for A/F sensor, the air fuel ratio sensor output voltage (AFS Voltage) is consistently more than 3.4 V, and the heated oxygen sensor output voltage (O2S) is consistently less than 0.4 V.

Rich: During the AFS Voltage is consistently less than 3.1 V, and the O2S is consistently more than 0.55 V.

Lean/Rich: During Control the Injection Volume for A/F sensor of the Active Test, the output voltage of the heated oxygen sensor alternates correctly.

D ▶ CHECK ENGINE TO DETERMINE CAUSE OF EXTREMELY RICH OR LEAN ACTUAL AIR FUEL RATIO, AND GO TO STEP 3

C ▶ INSPECT FOR EXHAUST GAS LEAK

B ▶ REPLACE AIR FUEL RATIO SENSOR (SENSOR 1)

A ▼

3.	INSPECT FOR EXHAUST GAS LEAK

(a) Check for exhaust gas leakage.

OK:

No gas leaks.

NG ▶ REPAIR OR REPLACE EXHAUST GAS LEAK POINT

OK ▶ REPLACE FRONT EXHAUST PIPE ASSEMBLY (TWC: THREE-WAY CATALYTIC CONVERTER)

4.	INSPECT FOR EXHAUST GAS LEAK

(a) Check for exhaust gas leakage.

OK:

No gas leaks.

NG ▶ REPAIR OR REPLACE EXHAUST GAS LEAK POINT

OK ▶ REPLACE HEATED OXYGEN SENSOR (SENSOR 2)

Last Modified: 3-10-2010	6.4 C	**From:** 200901
Model Year: 2010	**Model:** Corolla	**Doc ID:** RM000002BHB01XX
Title: 2ZR-FE ENGINE CONTROL: SFI SYSTEM: P043E,P043F,P2401,P2402,P2419: Evaporative Emission System Reference Orifice Clog Up (2010 Corolla)		

DTC	**P043E**	**Evaporative Emission System Reference Orifice Clog Up**

DTC	**P043F**	**Evaporative Emission System Reference Orifice High Flow**

DTC	**P2401**	**Evaporative Emission Leak Detection Pump Stuck OFF**

DTC	**P2402**	**Evaporative Emission Leak Detection Pump Stuck ON**

DTC	**P2419**	**Evaporative Emission System Switching Valve Control Circuit Low**

DTC SUMMARY

DTC NO.	MONITORING ITEM	MALFUNCTION DETECTION CONDITION	TROUBLE AREA	DETECTION TIMING	DETECTION LOGIC
P043E	Reference orifice clogged	P043E, P043F, P2401, P2402 and P2419 present when one of following conditions met during key-off EVAP monitor: • Reference orifice clogged • Reference orifice high-flow • Leak	• Canister pump module (Reference orifice, leak detection pump, vent valve) • Connector/wire harness (Canister pump module - ECM) • EVAP system hose (pipe	While ignition switch off	2 trip
P043F	Reference orifice high-flow				
P2401	Leak detection pump stuck OFF				

DTC NO.	MONITORING ITEM	MALFUNCTION DETECTION CONDITION	TROUBLE AREA	DETECTION TIMING	DETECTION LOGIC
		detection pump OFF malfunction • Leak detection pump ON malfunction • Vent valve ON (close) malfunction	from air inlet port to canister pump module, canister filter, fuel tank vent hose) • ECM		
P2402	Leak detection pump stuck ON				
P2419	Vent valve stuck closed				

HINT:

The reference orifice is located inside the canister pump module.

DESCRIPTION

The description can be found in the EVAP (Evaporative Emission) System INFO .

HINT:

Unit expressions

- [kPa-a (mmHg-a)] denotes absolute pressure.
- [kPa-g (mmHg-g)] denotes gauge pressure (relative pressure).
- On the Techstream, choose the unit of measurement according to the inspection procedure.

INSPECTION PROCEDURE

Refer to the EVAP System INFO .

MONITOR DESCRIPTION

5 hours* after the ignition switch is turned off, the leak detection pump creates negative pressure (vacuum) in the EVAP system. The ECM monitors for leaks and actuator malfunctions based on the EVAP pressure.

HINT:

***: If the engine coolant temperature is not below 35°C (95°F) 5 hours after the ignition switch is turned off, the monitor check starts 2 hours later. If it is still not below 35°C (95°F) 7 hours after the ignition switch is turned off, the monitor check starts 2.5 hours later.**

SEQUENCE	OPERATION	DESCRIPTION	DURATION
-	ECM activation	The key-off monitor is activated by soak timer 5, 7 or 9.5 hours after ignition switch turned off.	-

SEQUENCE	OPERATION	DESCRIPTION	DURATION
A	Atmospheric pressure measurement	Vent valve is turned OFF (vent) and the EVAP system pressure is measured by ECM in order to register atmospheric pressure. If pressure in EVAP system is not between 70 kPa-a and 110 kPa-a (525 mmHg-a and 825 mmHg-a), the ECM cancels EVAP system monitor.	60 seconds
B	First reference pressure measurement	In order to determine reference pressure, the leak detection pump creates negative pressure (vacuum) through reference orifice and then ECM checks if the leak detection pump and vent valve operate normally.	60 seconds
C	EVAP system pressure measurement	Vent valve turned ON (closed) to shut the EVAP system. Negative pressure (vacuum) created in the EVAP system, and EVAP system pressure then measured. The measured value is memorized as it will be used in the leak check. If the EVAP pressure does not stabilize within 15 minutes, the ECM cancels EVAP system monitor.	15 minutes*
D	Purge VSV monitor	Purge VSV is opened and then the EVAP system pressure is measured by the ECM. A large increase indicates normality.	10 seconds
E	Second reference pressure measurement	After a second reference pressure measurement, the leak check is performed by comparing the first and second reference pressure. If stabilized system pressure is higher than second the reference pressure, the ECM determines that the EVAP system is leaking.	60 seconds
-	Final check	Atmospheric pressure is measured and then the monitor result is recorded by the ECM.	-

*: If only a small amount of fuel is in the fuel tank, it takes longer for the EVAP pressure to stabilize.

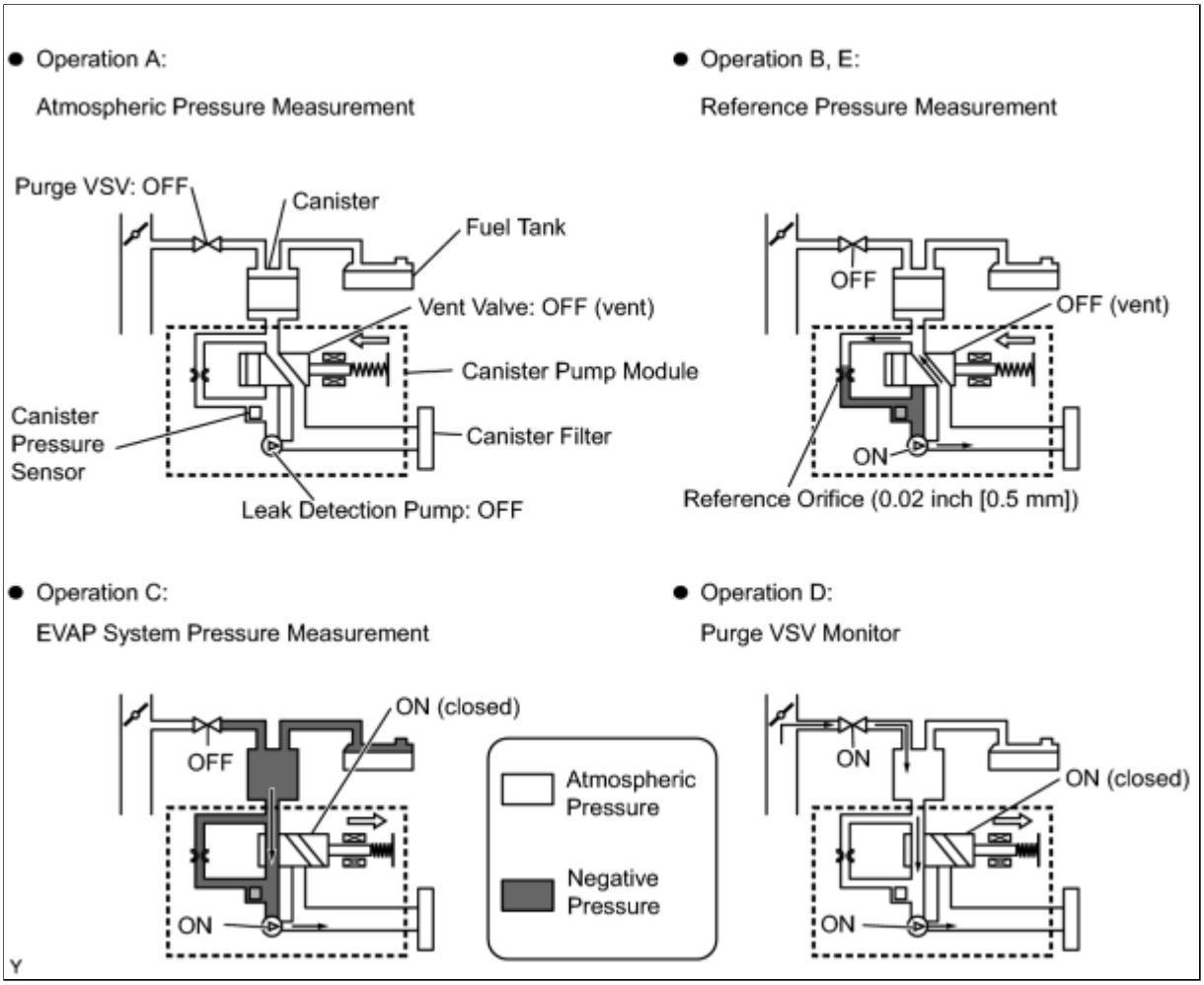

The leak detection pump creates negative pressure through the reference orifice (in operation B and E). When the system is normal, the EVAP pressure is between 724 to 752 mmHg* and saturated within a minute. If not, the ECM interprets this as a malfunction. The ECM will illuminate the MIL and set DTC if this malfunction is detected in consecutive drive cycles.

*: Typical value.

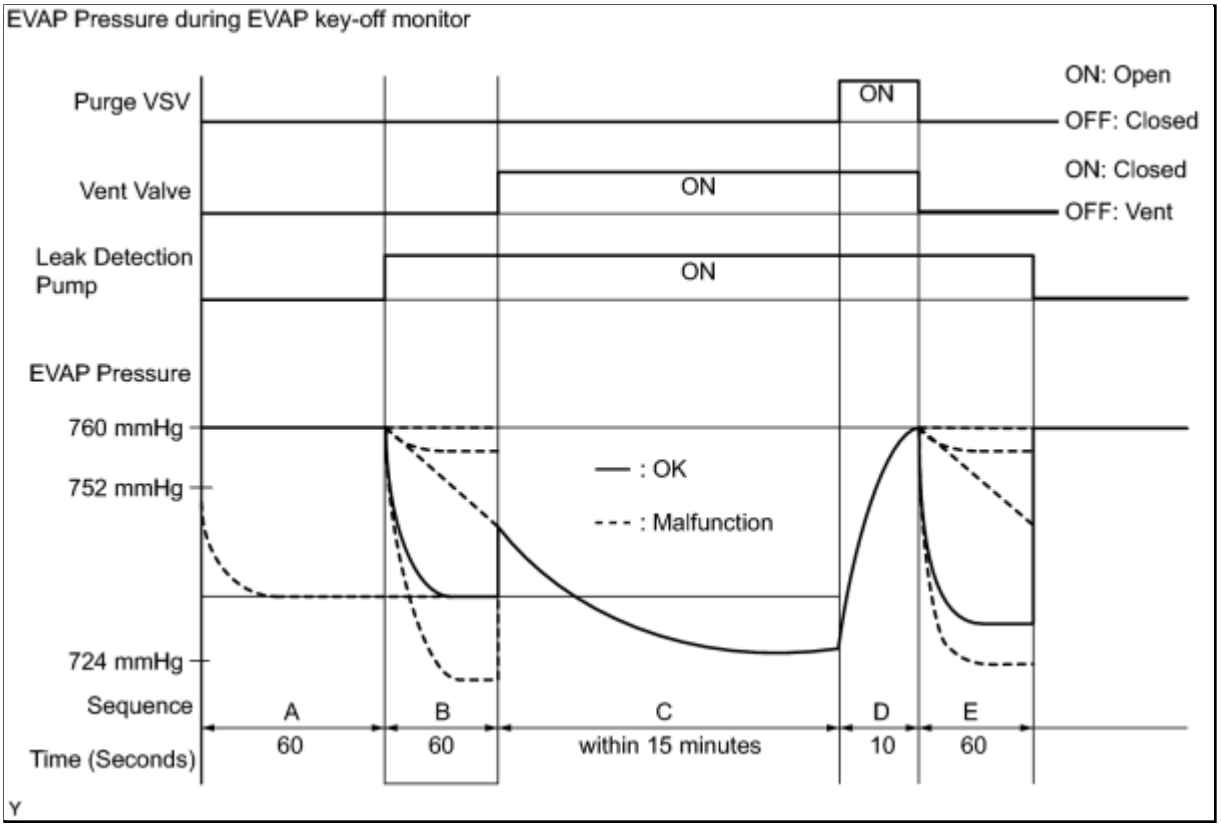

MONITOR STRATEGY

Required Sensors/Components	Canister pump module
Frequency of Operation	Once per driving cycle
Duration	Within 2 minutes
MIL Operation	2 driving cycles
Sequence of Operation	None

TYPICAL ENABLING CONDITIONS

Monitor runs whenever following DTCs not present	None
EVAP key-off monitor runs when all of following conditions are met	-
Atmospheric pressure	70 to 110 kPa-a (525 to 825 mmHg-a)
Battery voltage	10.5 V or more
Vehicle speed	Below 4 km/h (2.5 mph)
Ignition switch	OFF
Time after key off	5, 7 or 9.5 hours

Canister pressure sensor malfunction (P0451, P0452 and P0453)	Not detected
Purge VSV	Not operated by scan tool
Vent valve	Not operated by scan tool
Leak detection pump	Not operated by scan tool
Both of following conditions are met before key off	Conditions 1 and 2
1. Duration that vehicle driven	5 minutes or more
2. EVAP purge operation	Performed
Engine coolant temperature	4.4 to 35°C (40 to 95°F)
Intake air temperature	4.4 to 35°C (40 to 95°F)

TYPICAL MALFUNCTION THRESHOLDS

"Saturated" indicates that the EVAP pressure change is less than 0.286 kPa-g (2.14 mmHg-g) in 60 seconds.

One of following conditions met	-
EVAP pressure just after reference pressure measurement started	More than -1 kPa-g (-7.5 mmHg-g)
Reference pressure	Less than -4.85 kPa-g (-36.4 mmHg-g)
Reference pressure	-1.057 kPa-g (-7.93 mmHg-g) or more
Reference pressure	Not saturated within 60 seconds
Reference pressure difference between first and second	0.7 kPa-g (5.25 mmHg-g) or more

MONITOR RESULT

Refer to Checking Monitor Status INFO .

Last Modified: 3-10-2010	6.4 C	**From:** 200901
Model Year: 2010	**Model:** Corolla	**Doc ID:** RM0000012MC02GX
Title: 2ZR-FE ENGINE CONTROL: SFI SYSTEM: P0451-P0453: Evaporative Emission Control System Pressure Sensor Range / Performance (2010 Corolla)		

DTC	**P0451**	**Evaporative Emission Control System Pressure Sensor Range / Performance**

DTC	**P0452**	**Evaporative Emission Control System Pressure Sensor / Switch Low Input**

DTC	**P0453**	**Evaporative Emission Control System Pressure Sensor / Switch High Input**

DTC SUMMARY

DTC NO.	MONITORING ITEM	MALFUNCTION DETECTION CONDITION	TROUBLE AREA	DETECTION TIMING	DETECTION LOGIC
P0451	Canister pressure sensor noise	Sensor output voltage fluctuates frequently within certain time period.	• Canister pump module • Connector/wire harness (Canister pump module - ECM) • EVAP system hose (pipe from air inlet port to canister pump module, canister filter, fuel tank vent hose) • ECM	• EVAP monitoring (ignition switch off) • Engine running	2 trip
	Canister pressure sensor signal becomes fixed/flat	Sensor output voltage does not vary within certain time period.	• Canister pump module • Connector/wire harness (Canister pump module	• EVAP monitoring (ignition switch off)	2 trip

DTC NO.	MONITORING ITEM	MALFUNCTION DETECTION CONDITION	TROUBLE AREA	DETECTION TIMING	DETECTION LOGIC
			- ECM) • EVAP system hose (pipe from air inlet port to canister pump module, canister filter, fuel tank vent hose) • ECM		
P0452	Canister pressure sensor low input	EVAP pressure less than 42.1 kPa for 0.5 seconds.	• Canister pump module • Connector/wire harness (Canister pump module - ECM) • EVAP system hose (pipe from air inlet port to canister pump module, canister filter, fuel tank vent hose) • ECM	• Ignition switch ON • EVAP monitoring (ignition switch off)	1 trip
P0453	Canister pressure sensor high input	EVAP pressure more than 123.8 kPa for 0.5 seconds.	• Canister pump module • Connector/wire harness (Canister pump module - ECM) • EVAP system hose (pipe from air inlet port to canister pump module, canister filter, fuel tank vent hose)	• Ignition switch ON • EVAP monitoring (ignition switch off)	1 trip

DTC NO.	MONITORING ITEM	MALFUNCTION DETECTION CONDITION	TROUBLE AREA	DETECTION TIMING	DETECTION LOGIC
			• ECM		

HINT:

The canister pressure sensor is built into the canister pump module.

DESCRIPTION

The description can be found in the EVAP (Evaporative Emission) System INFO .

HINT:

Unit expressions

- [kPa-a (mmHg-a)] denotes absolute pressure.
- [kPa-g (mmHg-g)] denotes gauge pressure (relative pressure).
- On the Techstream, choose the unit of measurement according to the inspection procedure.

MONITOR DESCRIPTION

Canister Pressure Sensor Specification:

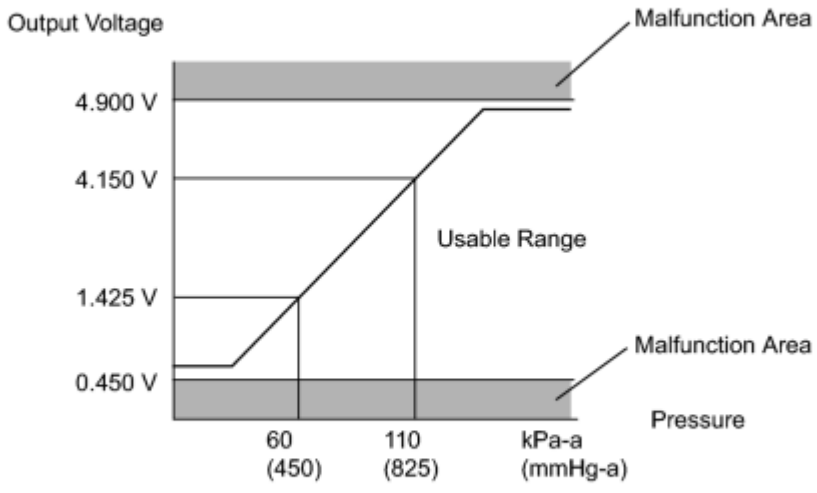

HINT:

Standard atmospheric pressure is 101.3 kPa-a (760 mmHg-a)

1. DTC P0451: Canister pressure sensor noise or fixed/flat

   If the canister pressure sensor voltage output fluctuates rapidly for 10 seconds, the ECM stops the EVAP system monitor. The ECM interprets this as noise from the canister

pressure sensor, and stops the EVAP system monitor. The ECM then illuminates the MIL and sets the DTC.

Alternatively, if the sensor voltage output does not change for 10 seconds, the ECM interprets this as the sensor being fixed/flat, and stops the monitor. The ECM then illuminates the MIL and sets the DTC.

(Both malfunctions are detected by 2 trip detection logic.)

2. DTC P0452: Canister pressure sensor voltage low

If the canister pressure sensor voltage output [pressure] is below 0.45 V [42.1 kPa-a (315.7 mmHg-a)], the ECM interprets this as an open or short circuit malfunction in the canister pressure sensor or its circuit, and stops the EVAP system monitor. The ECM then illuminates the MIL and sets the DTC (1 trip detection logic).

3. DTC P0453: Canister pressure sensor voltage high

If the canister pressure sensor voltage output [pressure] is 4.9 V [123.8 kPa-a (928.5 mmHg-a)] or more, the ECM interprets this as an open or short circuit malfunction in the canister pressure sensor or its circuit, and stops the EVAP system monitor. The ECM then illuminates the MIL and sets the DTC (1 trip detection logic).

MONITOR STRATEGY

Required Sensors/Components	Canister pump module
Frequency of Operation	Once per driving cycle: P0451 sensor fixed/flat Continuous: P0451 sensor noise, P0452 and P0453
Duration	0.5 seconds: P0452 and P0453 15 seconds: P0451 (Noise monitor) 2 minutes: P0451 (Fixed/flat monitor)
MIL Operation	Immediate: P0452 and P0453 2 driving cycles: P0451
Sequence of Operation	None

TYPICAL ENABLING CONDITIONS

P0451 (Noise Monitor)

Monitor runs whenever following DTCs not present	None
Atmospheric pressure (absolute pressure)	70 to 110 kPa-a (525 to 825 mmHg-a)
Battery voltage	10.5 V or more
Intake air temperature	4.4 to 35°C (40 to 95°F)
Canister pressure sensor malfunction (P0452, 0453)	Not detected
Either of following conditions met	A or B
A. Engine condition	Running

B. Time after key off	5 or 7 or 9.5 hours

P0451 (Fixed/flat Monitor)

Monitor runs whenever following DTCs not present	None
Battery voltage	10.5 V or more
Intake air temperature	4.4 to 35°C (40 to 95°F)
Canister pressure sensor malfunction (P0452, 0453)	Not detected
Atmospheric pressure (absolute pressure)	70 to 110 kPa-a (525 to 825 mmHg-a)
Time after key off	5 or 7 or 9.5 hours

P0452 and P0453

Monitor runs whenever following DTCs not present	None
Either of following conditions met	(a) or (b)
(a) Ignition switch	ON
(b) Soak timer	ON

TYPICAL MALFUNCTION THRESHOLDS

P0451: Canister Pressure Sensor Noise

Frequency that EVAP pressure change 0.3 kPa-g (2.25 mmHg-g) or more	10 times or more in 10 seconds

P0451: Canister Pressure Sensor Fixed/flat

EVAP pressure change during reference pressure	Less than 0.65 kPa-g (4.87 mmHg-g)

P0452: Canister Pressure Sensor Low Voltage

EVAP pressure	Less than 42.1 kPa-a (315.8 mmHg-a)

P0453: Canister Pressure Sensor High Voltage

EVAP pressure	More than 123.8 kPa-a (928.3 mmHg-a)

WIRING DIAGRAM

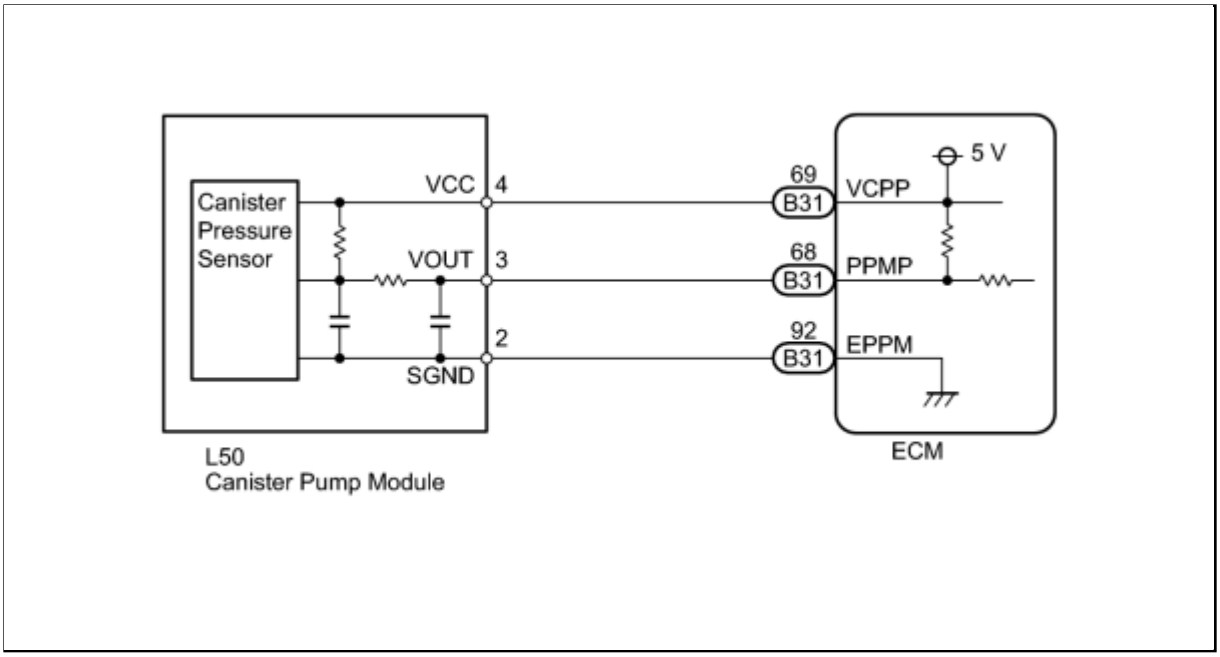

INSPECTION PROCEDURE

NOTICE:

- When a vehicle is brought into the workshop, leave it as it is. Do not change the vehicle condition. For example, do not tighten the fuel cap.
- Do not disassemble the canister pump module.
- The Techstream is required to conduct the following diagnostic troubleshooting procedure.

PROCEDURE

1.	**CONFIRM DTC AND EVAP PRESSURE**

(a) Connect the Techstream to the DLC3.

(b) Turn the ignition switch to ON (do not start the engine).

(c) Turn the Techstream on.

(d) Enter the following menus: Powertrain / Engine and ECT / Trouble Codes.

(e) Read the DTCs.

(f) Enter the following menus: Powertrain / Engine and ECT / Data List / EVAP / Vapor Pressure Pump.

(g) Read the EVAP (Evaporative Emission) pressure displayed on the Techstream.

Result:

DISPLAY (DTC OUTPUT)	TEST RESULT	SUSPECTED TROUBLE AREA	PROCEED TO
P0451	-	Canister pressure sensor	C

DISPLAY (DTC OUTPUT)	TEST RESULT	SUSPECTED TROUBLE AREA	PROCEED TO
P0452	Less than 45 kPa-a (430 mmHg-a)	• Wire harness/connector (ECM - Canister pressure sensor) • Canister pressure sensor • ECM	A
P0453	More than 120 kPa-a (900 mmHg-a)	• Wire harness/connector (ECM - Canister pressure sensor) • Canister pressure sensor • ECM	B

C ▶ **GO TO EVAP SYSTEM**

B ▶ **CHECK HARNESS AND CONNECTOR (CANISTER PUMP MODULE - ECM)**

A ▼

2.	**CHECK HARNESS AND CONNECTOR (CANISTER PUMP MODULE - ECM)**

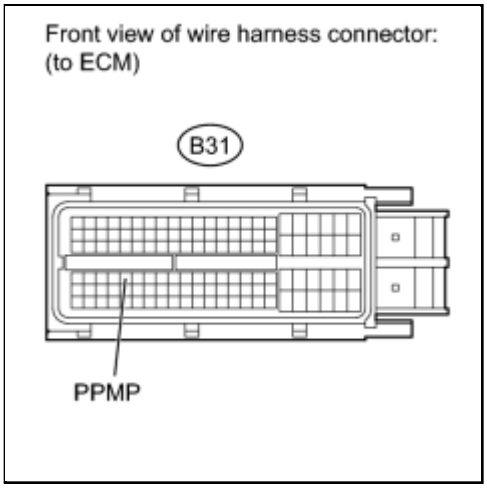

(a) Disconnect the ECM connector.

(b) Measure the resistance according to the value(s) in the table below.

Result:

TESTER CONNECTION	CONDITION	SPECIFIED CONDITION	SUSPECTED TROUBLE AREA	PROCEED TO
B31-68 (PPMP) - Body ground	Always	Below 10 Ω	• Wire harness/connector (ECM - Canister pressure sensor) • Short in canister pressure sensor circuit	A
		10 kΩ or higher	• Wire harness/connector (ECM - Canister pressure sensor) • Short in ECM circuit	B

(c) Reconnect the ECM connector.

B ▶ **REPLACE ECM**

A ▼

3.	**CHECK HARNESS AND CONNECTOR (CANISTER PUMP MODULE - ECM)**

(a) Disconnect the canister pump module connector.

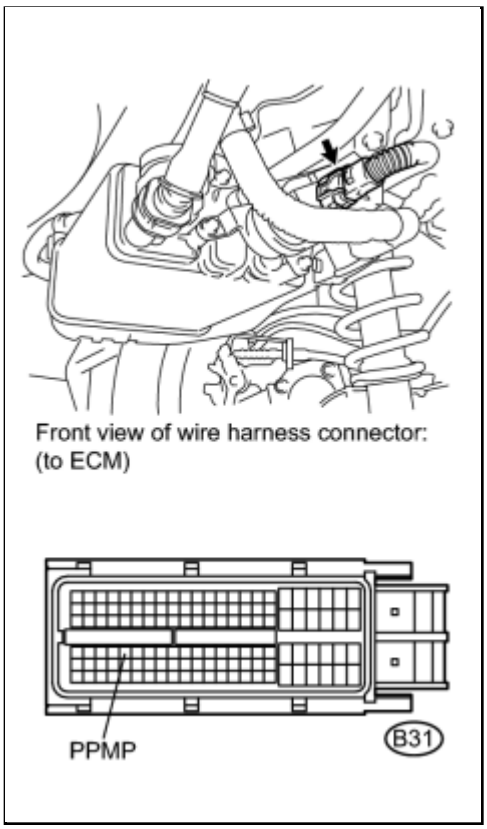

(b) Disconnect the ECM connector.

(c) Measure the resistance according to the value(s) in the table below.

Result:

TESTER CONNECTION	CONDITION	SPECIFIED CONDITION	SUSPECTED TROUBLE AREA	PROCEED TO
B31-68 (PPMP) - Body ground	Always	10 kΩ or higher	Short in canister pressure sensor circuit	A
		Below 10 Ω	Short in wire harness/connector (ECM - Canister pressure sensor)	B

(d) Reconnect the canister pump module connector.

(e) Reconnect the ECM connector.

B ▶ **REPAIR OR REPLACE HARNESS OR CONNECTOR (CANISTER PUMP MODULE - ECM)**

A ▶ **REPLACE CHARCOAL CANISTER ASSEMBLY**

4.	**CHECK HARNESS AND CONNECTOR (CANISTER PUMP MODULE - ECM)**

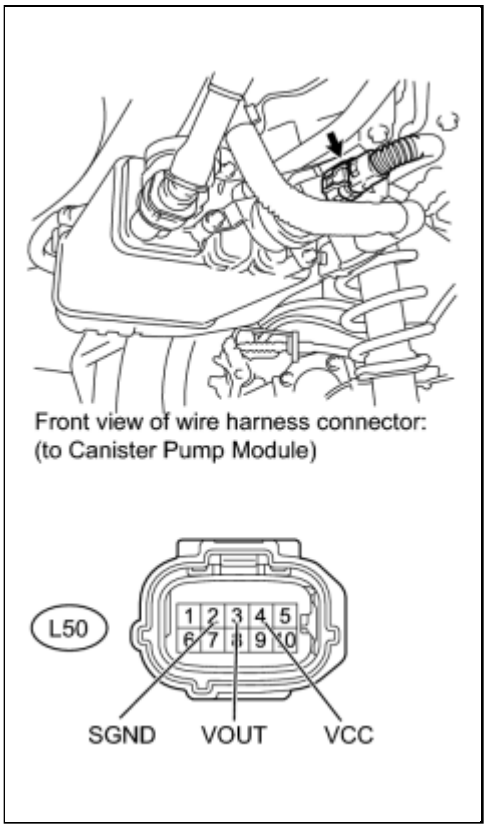

(a) Disconnect the canister pump module connector.

(b) Measure the voltage and resistance according to the value(s) in the table below.

Standard Voltage:

TESTER CONNECTION	SWITCH CONDITION	SPECIFIED CONDITION
L50-4 (VCC) - Body ground	Ignition switch ON	4.5 to 5.5 V
L50-3 (VOUT) - Body ground	Ignition switch ON	4.5 to 5.5 V

Standard Resistance:

TESTER CONNECTION	CONDITION	SPECIFIED CONDITION
L50-2 (SGND) - Body ground	Always	Below 100 Ω

Result:

TEST RESULT	SUSPECTED TROUBLE AREA	PROCEED TO
Voltage and resistance within standard ranges	Open in canister pressure sensor circuit	A
Voltage and resistance outside standard ranges	Open in wire harness/connector (ECM - Canister pressure sensor)	B

(c) Reconnect the canister pump module connector.

B REPAIR OR REPLACE HARNESS OR CONNECTOR (CANISTER PUMP MODULE - ECM)

A

5.	REPLACE CHARCOAL CANISTER ASSEMBLY

(a) Replace the charcoal canister assembly INFO .

NOTICE:

When replacing the charcoal canister assembly, check the canister pump module interior and related pipes for water, fuel and other liquids. If liquids are present, check for disconnections and/or cracks in the following: 1) the pipe from the air inlet port to the canister pump module; 2) the canister filter; and 3) the fuel tank vent hose.

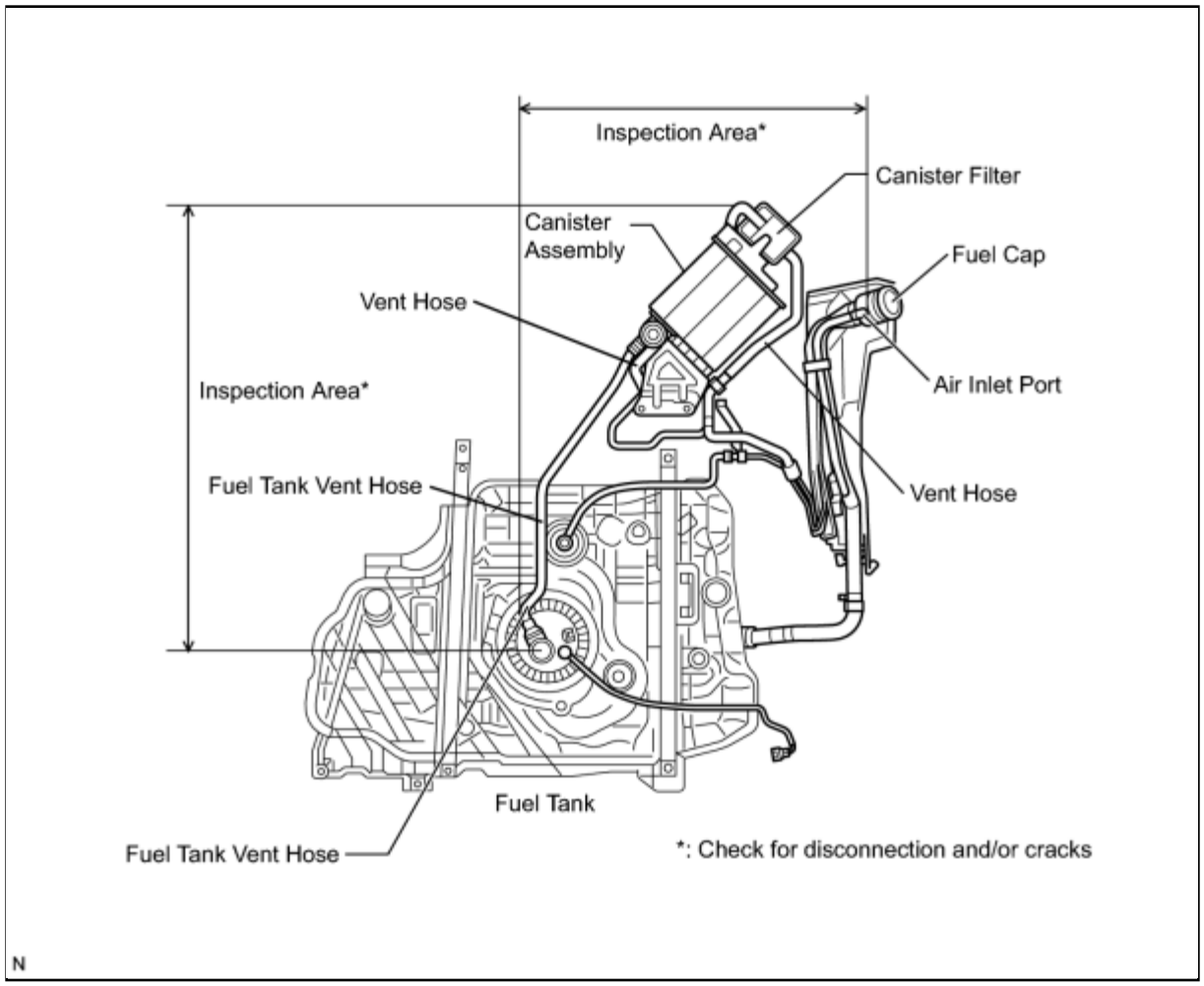

NEXT CHECK WHETHER DTC OUTPUT RECURS (AFTER REPAIR)

6.	REPAIR OR REPLACE HARNESS OR CONNECTOR (CANISTER PUMP MODULE - ECM)

HINT:

If the exhaust tailpipe has been removed, go to the next step before reinstalling it.

NEXT ▶ **CHECK WHETHER DTC OUTPUT RECURS (AFTER REPAIR)**

7.	REPLACE ECM

(a) Replace the ECM INFO .

NEXT ▼

8.	CHECK WHETHER DTC OUTPUT RECURS (AFTER REPAIR)

(a) Connect the Techstream to the DLC3.

(b) Turn the ignition switch to ON.

(c) Turn the Techstream on.

(d) Wait for at least 60 seconds.

(e) Enter the following menus: Powertrain / Engine and ECT / Trouble Codes.

HINT:

If no pending DTCs are displayed on the Techstream, the repair has been successfully completed.

NEXT ▶ **END**

Last Modified: 3-10-2010	6.4 C	**From:** 200901
Model Year: 2010	**Model:** Corolla	**Doc ID:** RM000000SWF05EX
Title: 2ZR-FE ENGINE CONTROL: SFI SYSTEM: P0441: Evaporative Emission Control System Incorrect Purge Flow (2010 Corolla)		

DTC	**P0441**	**Evaporative Emission Control System Incorrect Purge Flow**

DTC SUMMARY

DTC NO.	MONITORING ITEM	MALFUNCTION DETECTION CONDITION	TROUBLE AREA	DETECTION TIMING	DETECTION LOGIC
P0441	Purge VSV (Vacuum Switching Valve) stuck open	Leak detection pump creates negative pressure (vacuum) in EVAP system and EVAP system pressure measured. Reference pressure measured at start and at end of leak check. If stabilized pressure higher than [second reference pressure x 0.4], ECM determines that purge VSV stuck open.	• Purge VSV • Connector/wire harness (Purge VSV - ECM) • ECM • Canister pump module • Leak from EVAP system	While ignition switch off	2 trip
	Purge VSV stuck closed	After EVAP leak check performed, purge VSV turned ON (open), and atmospheric air introduced into EVAP system. Reference pressure measured at start and at end of check. If pressure does not return to near atmospheric pressure, ECM determines that purge VSV stuck closed.	• Purge VSV • Connector/wire harness (Purge VSV - ECM) • ECM • Canister pump module • Leak from EVAP system	While ignition switch off	2 trip
	Purge flow	While engine running, following conditions successively met: • Negative pressure not created in EVAP system when purge VSV turned ON (open)	• Purge VSV • Connector/wire harness (Purge VSV - ECM) • Leak from EVAP line (Purge VSV - Intake manifold)	While engine running	2 trip

DTC NO.	MONITORING ITEM	MALFUNCTION DETECTION CONDITION	TROUBLE AREA	DETECTION TIMING	DETECTION LOGIC
		• EVAP system pressure change less than 0.4 kPa-g (3.0 mmHg-g) when vent valve turned ON (closed) • Atmospheric pressure change before and after purge flow monitor less than 0.1 kPa-g (0.75 mmHg-g)	• ECM		

DESCRIPTION

The description can be found in the EVAP (Evaporative Emission) System INFO .

INSPECTION PROCEDURE

Refer to the EVAP System INFO .

HINT:

Unit expressions

- [kPa-a (mmHg-a)] denotes absolute pressure.
- [kPa-g (mmHg-g)] denotes gauge pressure (relative pressure).
- On the Techstream, chose the unit of measurement according to the inspection procedure.

MONITOR DESCRIPTION

The two monitors, Key-Off and Purge Flow, are used to detect malfunctions relating to DTC P0441. The Key-Off monitor is initiated by the ECM internal timer, known as the soak timer, 5 hours* after the ignition off. The purge flow monitor runs while the engine is running.

1. KEY-OFF MONITOR

   5 hours* after the ignition switch is turned off, the leak detection pump creates negative pressure (vacuum) in the EVAP system. The ECM monitors for leaks and actuator malfunctions based on the EVAP pressure.

HINT:

***: If the engine coolant temperature is not below 35°C (95°F) 5 hours after the ignition switch is turned off, the monitor check starts 2 hours later. If it is still not below 35°C (95°F) 7 hours after the ignition switch is turned off, the monitor check starts 2.5 hours later.**

SEQUENCE	OPERATION	DESCRIPTION	DURATION

SEQUENCE	OPERATION	DESCRIPTION	DURATION
-	ECM activation	The key-off monitor is activated by soak timer 5, 7 or 9.5 hours after ignition switch turned off.	-
A	Atmospheric pressure measurement	Vent valve is turned OFF (vent) and the EVAP system pressure is measured by ECM in order to register atmospheric pressure. If pressure in EVAP system is not between 70 kPa-a and 110 kPa-a (525 mmHg-a and 825 mmHg-a), the ECM cancels EVAP system monitor.	60 seconds
B	First reference pressure measurement	In order to determine reference pressure, the leak detection pump creates negative pressure (vacuum) through reference orifice and then ECM checks if the leak detection pump and vent valve operate normally.	60 seconds
C	EVAP system pressure measurement	Vent valve turned ON (closed) to shut the EVAP system. Negative pressure (vacuum) created in the EVAP system, and EVAP system pressure then measured. The measured value is memorized as it will be used in the leak check. If the EVAP pressure does not stabilize within 15 minutes, the ECM cancels EVAP system monitor.	15 minutes*
D	Purge VSV monitor	Purge VSV is opened and then the EVAP system pressure is measured by the ECM. A large increase indicates normality.	10 seconds
E	Second reference pressure measurement	After a second reference pressure measurement, the leak check is performed by comparing the first and second reference pressure. If stabilized system pressure is higher than second the reference pressure, the ECM determines that the EVAP system is leaking.	60 seconds
-	Final check	Atmospheric pressure is measured and then the monitor result is recorded by the ECM.	-

*: If only a small amount of fuel is in the fuel tank, it takes longer for the EVAP pressure to stabilize.

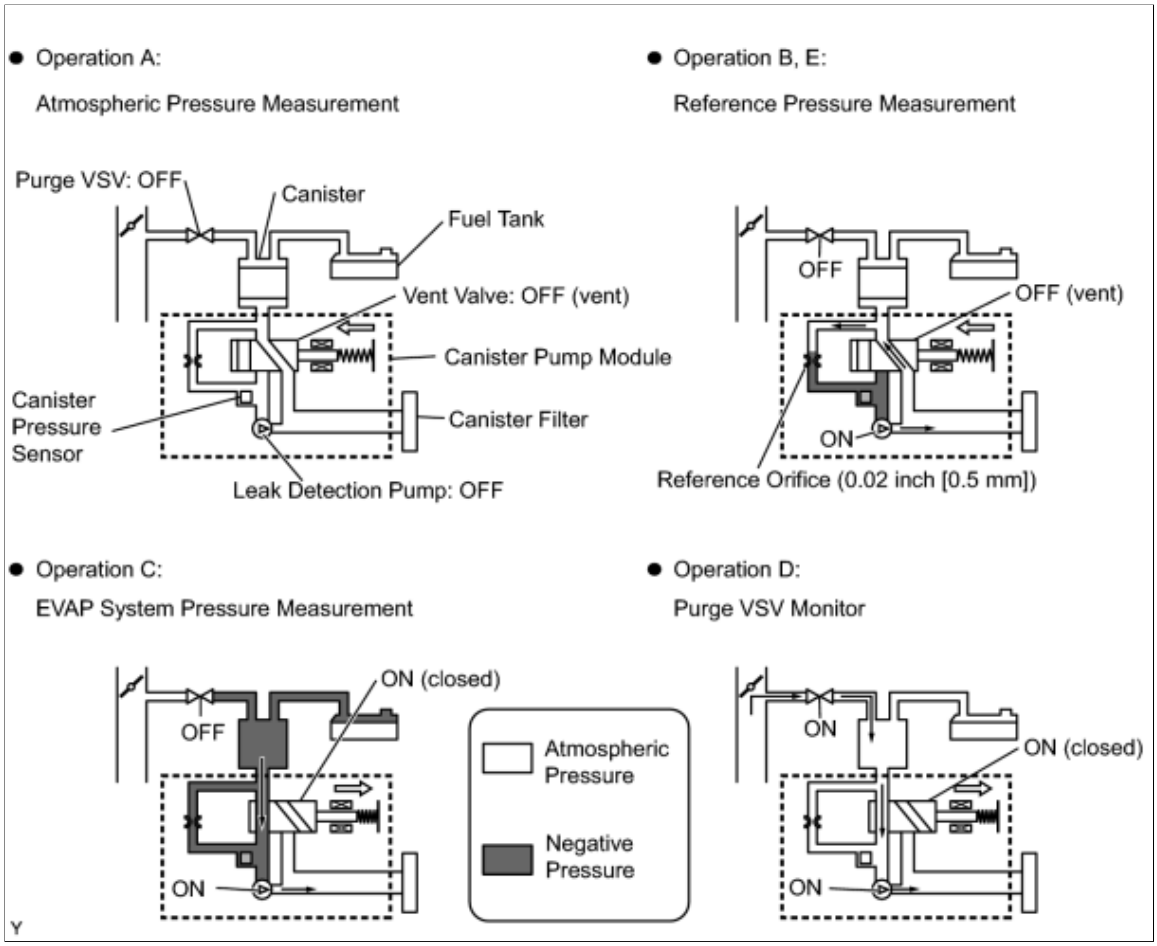

a. Purge VSV stuck open

In operation C, the leak detection pump creates negative pressure (vacuum) in the EVAP system. The EVAP system pressure is then measured by the ECM using the canister pressure sensor. If the stabilized system pressure is higher than [second reference pressure x 0.2], the ECM interprets this as the purge VSV (Vacuum Switching Valve) being stuck open. The ECM illuminates the MIL and sets the DTC (2 trip detection logic).

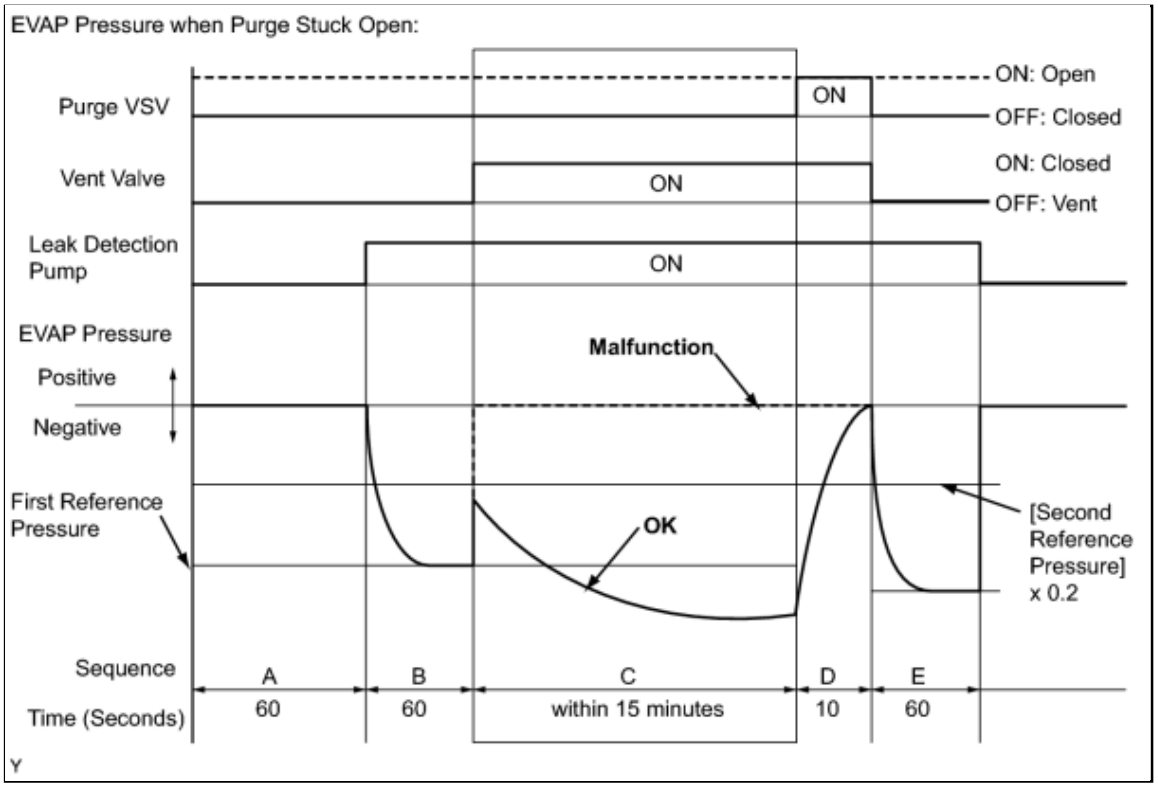

b. Purge VSV stuck closed

In operation D, the canister pressure sensor measures the EVAP system pressure. The pressure measurement for the purge VSV monitor is begun when the purge VSV is turned ON (open) after the EVAP leak check. When the measured pressure indicates an increase of 0.3 kPa-g (2.25 mmHg-g) or more, the purge VSV is functioning normally. If the pressure does not increase, the ECM interprets this as the purge VSV being stuck closed. The ECM illuminates the MIL and sets the DTC (2 trip detection logic).

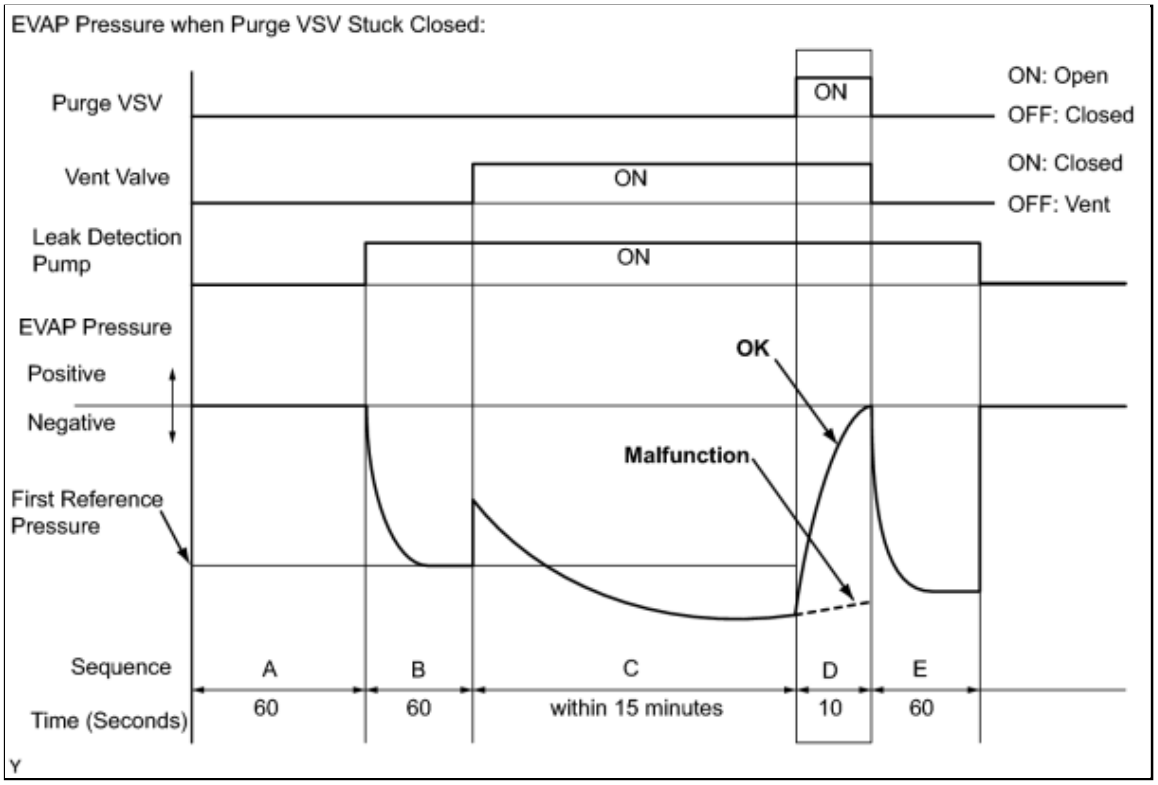

2. PURGE FLOW MONITOR

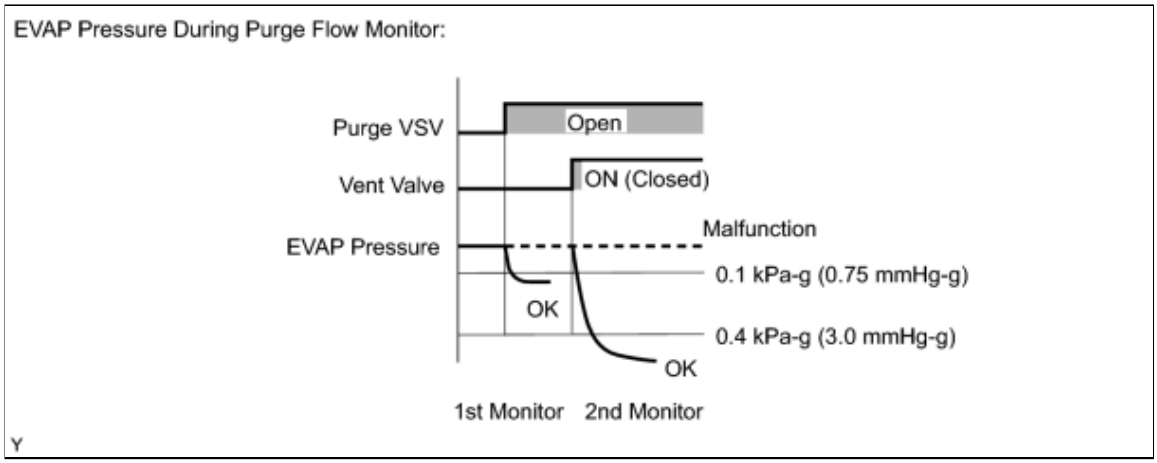

The purge flow monitor consists of two monitors. The 1st monitor is conducted every time and the 2nd monitor is activated if necessary.

- The 1st monitor

  While the engine is running and the purge VSV is ON (open), the ECM monitors the purge flow by measuring the EVAP pressure change. If negative pressure is not created, the ECM begins the 2nd monitor.

- The 2nd monitor

  The vent valve is turned ON (closed) and the EVAP pressure is then measured. If the variation in the pressure is less than 0.4 kPa-g (3.0 mmHg-g), the ECM interprets this as the purge VSV being stuck closed, illuminates the MIL and sets DTC P0441 (2 trip detection logic).

Atmospheric pressure check:

In order to ensure reliable malfunction detection, the variation between the atmospheric pressures, before and after the purge flow monitor is performed, is measured by the ECM.

OBD II MONITOR SPECIFICATIONS

1. Key-off Monitor

Monitor Strategy

Required Sensors/Components	Purge VSV Canister pump module
Frequency of Operation	Once per driving cycle
Duration	Within 15 minutes (varies with fuel in tank)
MIL Operation	2 driving cycles
Sequence of Operation	None

Typical Enabling Conditions

Monitor runs whenever following DTCs not present	None
EVAP key-off monitor runs when all of following conditions met	-
Atmospheric pressure	70 to 110 kPa-a (525 to 825 mmHg-a)
Battery voltage	10.5 V or more
Vehicle speed	Below 4 km/h (2.5 mph)
Ignition switch	OFF
Time after key off	5 or 7 or 9.5 hours
Canister pressure sensor malfunction (P0451, P0452 and P0453)	Not detected
Purge VSV	Not operated by scan tool
Vent valve	Not operated by scan tool
Leak detection pump	Not operated by scan tool
Both of following conditions met before key off	Conditions 1 and 2
1. Duration that vehicle driven	5 minutes or more
2. EVAP purge operation	Performed
Engine coolant temperature	4.4 to 35°C (40 to 95°F)
Intake air temperature	4.4 to 35°C (40 to 95°F)

Typical Malfunction Thresholds

Purge VSV stuck open:	-
EVAP pressure when vacuum introduction complete	Higher than reference pressure x 0.2

Purge VSV stuck closed:	-
EVAP pressure change after purge VSV ON (open)	Less than 0.3 kPa-g (2.25 mmHg-g)

OBD II MONITOR SPECIFICATIONS

1. Purge Flow Monitor

Monitor Strategy

Required Sensors/Components	Purge VSV Canister pump module
Frequency of Operation	Once per driving cycle
Duration	Within 10 minutes
MIL Operation	2 driving cycles
Sequence of Operation	None

Typical Enabling Conditions

Monitor runs whenever following DTCs not present	None
Engine	Running
Engine coolant temperature	4.4°C (40°F) or more
Intake air temperature	4.4°C (40°F) or more
Canister pressure sensor malfunction	Not detected
Purge VSV	Not operated by scan tool
EVAP system check	Not operated by scan tool
Battery voltage	10 V or more
Purge duty cycle	8% or more

Typical Malfunction Thresholds

Both of following conditions met	Conditions 1 and 2
1. EVAP pressure change when purge operation started	Less than 0.1 kPa-g (0.75 mmHg-g)
2. EVAP pressure change during purge operation when vent valve closed	Less than 0.4 kPa-g (3.0 mmHg-g)

MONITOR RESULT

Refer to Checking Monitor Status INFO .

Last Modified: 3-10-2010	6.4 C	**From:** 200901
Model Year: 2010	**Model:** Corolla	**Doc ID:** RM000000SWH04PX
Title: 2ZR-FE ENGINE CONTROL: SFI SYSTEM: P0455,P0456: Evaporative Emission Control System Leak Detected (Gross Leak) (2010 Corolla)		

DTC	**P0455**	**Evaporative Emission Control System Leak Detected (Gross Leak)**

DTC	**P0456**	**Evaporative Emission Control System Leak Detected (Very Small Leak)**

DTC SUMMARY

DTC NO.	MONITORING ITEM	MALFUNCTION DETECTION CONDITION	TROUBLE AREA	DETECTION TIMING	DETECTION LOGIC
P0455	EVAP gross leak	Leak detection pump creates negative pressure (vacuum) in EVAP system and EVAP system pressure measured. Reference pressure measured at start and at end of leak check. If stabilized pressure higher than [second reference pressure x 0.2], ECM determines that EVAP system has large leak.	• Fuel tank cap (loose) • Leaks from EVAP line (Canister - Fuel tank) • Leaks from EVAP line (Purge VSV - Canister) • Canister pump module • Leaks from fuel tank • Leaks from canister	While ignition switch off	2 trip
P0456	EVAP small leak	Leak detection pump creates negative pressure (vacuum) in EVAP system and EVAP	• Fuel tank cap (loose)	While ignition switch off	2 trip

DTC NO.	MONITORING ITEM	MALFUNCTION DETECTION CONDITION	TROUBLE AREA	DETECTION TIMING	DETECTION LOGIC
		system pressure measured. Reference pressure measured at start and at end of leak check. If stabilized pressure higher than second reference pressure, ECM determines that EVAP system has small leak.	• Leaks from EVAP line (Canister - Fuel tank) • Leaks from EVAP line (Purge VSV - Canister) • Canister pump module • Leaks from fuel tank • Leaks from canister		

DESCRIPTION

The description can be found in the EVAP (Evaporative Emission) System INFO .

INSPECTION PROCEDURE

Refer to the EVAP System INFO .

HINT:

Unit expressions

- [kPa-a (mmHg-a)] denotes absolute pressure.
- [kPa-g (mmHg-g)] denotes gauge pressure (relative pressure).
- On the Techstream, choose the unit of measurement according to the inspection procedure.

MONITOR DESCRIPTION

5 hours* after the ignition switch is turned off, the leak detection pump creates negative pressure (vacuum) in the EVAP system. The ECM monitors for leaks and actuator malfunctions based on the EVAP pressure.

HINT:

***: If the engine coolant temperature is not below 35°C (95°F) 5 hours after the ignition switch is turned off, the monitor check starts 2 hours later. If it is still not below 35°C (95°F) 7 hours after the ignition switch is**

turned off, the monitor check starts 2.5 hours later.

SEQUENCE	OPERATION	DESCRIPTION	DURATION
-	ECM activation	The key-off monitor is activated by soak timer 5, 7 or 9.5 hours after ignition switch turned off.	-
A	Atmospheric pressure measurement	Vent valve is turned OFF (vent) and the EVAP system pressure is measured by ECM in order to register atmospheric pressure. If pressure in EVAP system is not between 70 kPa-a and 110 kPa-a (525 mmHg-a and 825 mmHg-a), the ECM cancels EVAP system monitor.	60 seconds
B	First reference pressure measurement	In order to determine reference pressure, the leak detection pump creates negative pressure (vacuum) through reference orifice and then ECM checks if the leak detection pump and vent valve operate normally.	60 seconds
C	EVAP system pressure measurement	Vent valve turned ON (closed) to shut the EVAP system. Negative pressure (vacuum) created in the EVAP system, and EVAP system pressure then measured. The measured value is memorized as it will be used in the leak check. If the EVAP pressure does not stabilize within 15 minutes, the ECM cancels EVAP system monitor.	15 minutes*
D	Purge VSV monitor	Purge VSV is opened and then the EVAP system pressure is measured by the ECM. A large increase indicates normality.	10 seconds
E	Second reference pressure measurement	After a second reference pressure measurement, the leak check is performed by comparing the first and second reference pressure. If stabilized system pressure is higher than second the reference pressure, the ECM determines that the EVAP system is leaking.	60 seconds
-	Final check	Atmospheric pressure is measured and then the monitor result is recorded by the ECM.	-

*: If only a small amount of fuel is in the fuel tank, it takes longer for the EVAP pressure to stabilize.

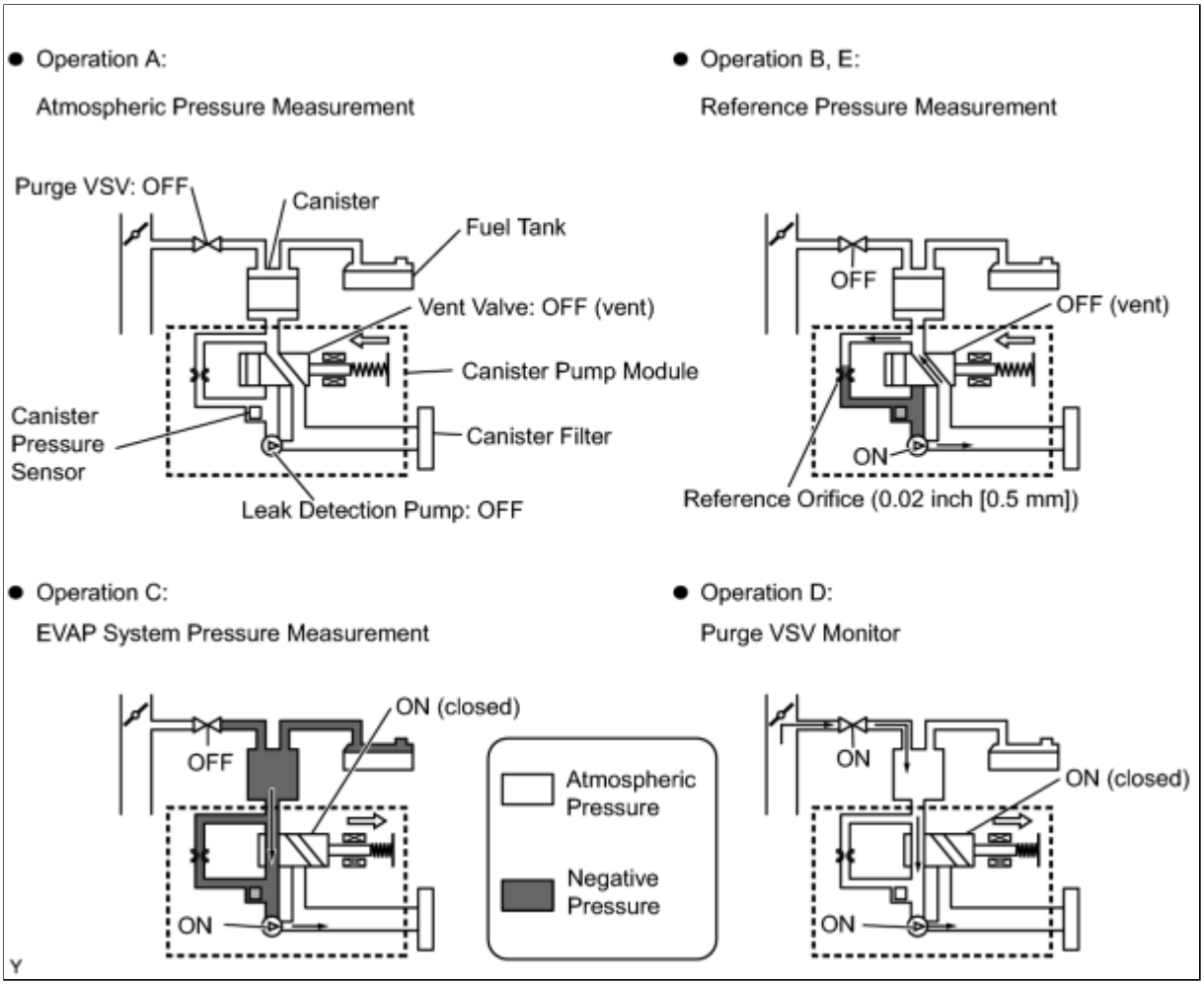

(a) P0455: EVAP gross leak

In operation C, the leak detection pump creates negative pressure (vacuum) in the EVAP system and the EVAP system pressure is measured. If the stabilized system pressure is higher than [second reference pressure x 0.2] (near atmospheric pressure), the ECM determines that the EVAP system has a large leak, illuminates the MIL and sets the DTC (2 trip detection logic).

(b) P0456: EVAP very small leak

In operation C, the leak detection pump creates negative pressure (vacuum) in the EVAP system and the EVAP system pressure is measured. If the stabilized system pressure is higher than the second reference pressure, the ECM determines that the EVAP system has a small leak, illuminates the MIL and sets the DTC (2 trip detection logic).

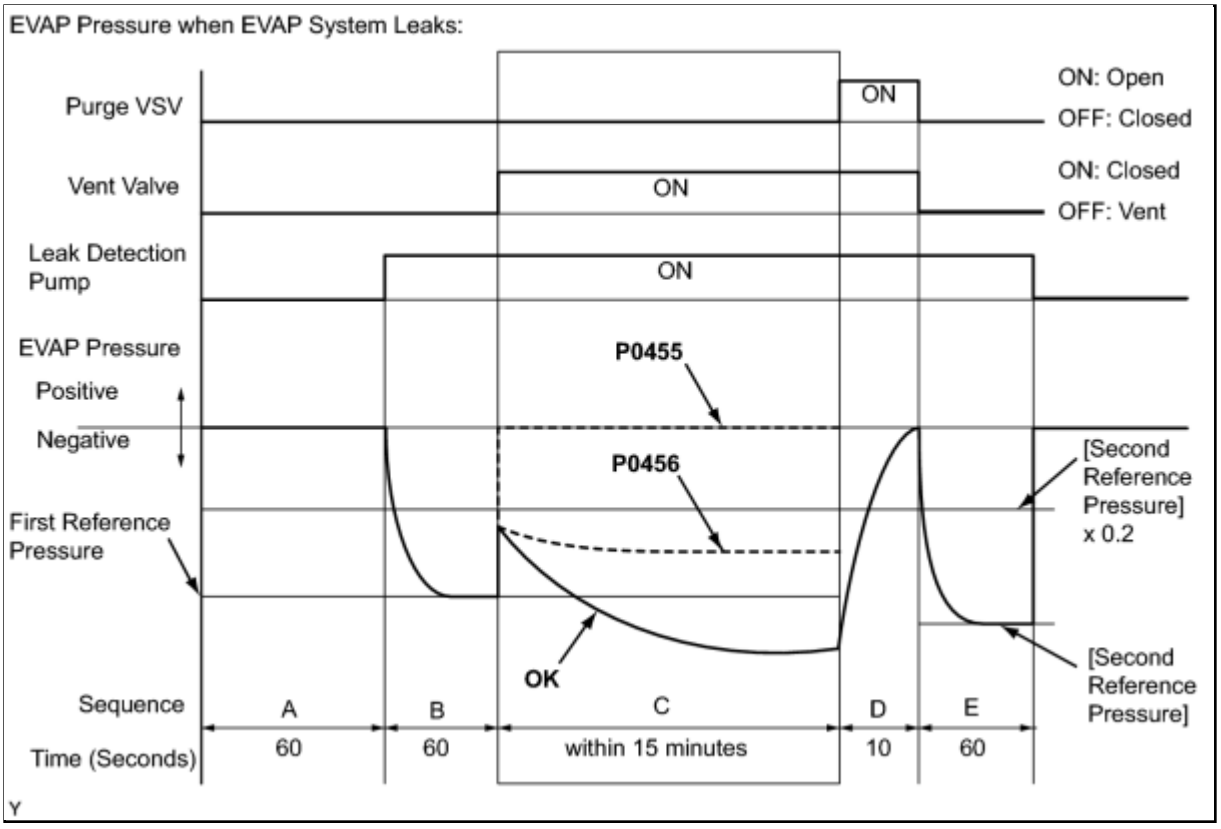

MONITOR STRATEGY

Required Sensors/Components	Purge VSV and canister pump module
Frequency of Operation	Once per driving cycle
Duration	Within 15 minutes (varies with amount of fuel in tank)
MIL Operation	2 driving cycles
Sequence of Operation	None

TYPICAL ENABLING CONDITIONS

P0455, P0456

Monitor runs whenever following DTCs not present	None
EVAP key-off monitor runs when all of following conditions met	-
Atmospheric pressure	70 to 110 kPa-a (525 to 825 mmHg-a)
Battery voltage	10.5 V or more
Vehicle speed	Below 4 km/h (2.5 mph)
Ignition switch	OFF
Time after key off	5 or 7 or 9.5 hours

Canister pressure sensor malfunction (P0451, P0452 and P0453)	Not detected
Purge VSV	Not operated by scan tool
Vent valve	Not operated by scan tool
Leak detection pump	Not operated by scan tool
Both of following conditions met before key off	Conditions 1 and 2
1. Duration that vehicle is driven	5 minutes or more
2. EVAP purge operation	Performed
Engine coolant temperature	4.4 to 35°C (40 to 95°F)
Intake air temperature	4.4 to 35°C (40 to 95°F)

TYPICAL MALFUNCTION THRESHOLDS

P0455 EVAP Gross Leak

EVAP pressure when vacuum introduction complete	Higher than reference pressure x 0.2

P0456 EVAP Small Leak

EVAP pressure when vacuum introduction complete	Between reference pressure and reference pressure x 0.2

MONITOR RESULT

Refer to Checking Monitor Status INFO .

Last Modified: 3-10-2010	6.4 C	**From:** 200901
Model Year: 2010	**Model:** Corolla	**Doc ID:** RM000002Y4K02BX
Title: 2ZR-FE ENGINE CONTROL: SFI SYSTEM: P0500: Vehicle Speed Sensor "A" (2010 Corolla)		

DTC	**P0500**	**Vehicle Speed Sensor "A"**

DESCRIPTION

The speed sensors detect the wheel speed and send the appropriate signals to the skid control ECU. The skid control ECU converts these wheel speed signals into a 4-pulse signal and outputs it to the ECM via the combination meter. The ECM determines the vehicle speed based on the frequency of these pulse signals.

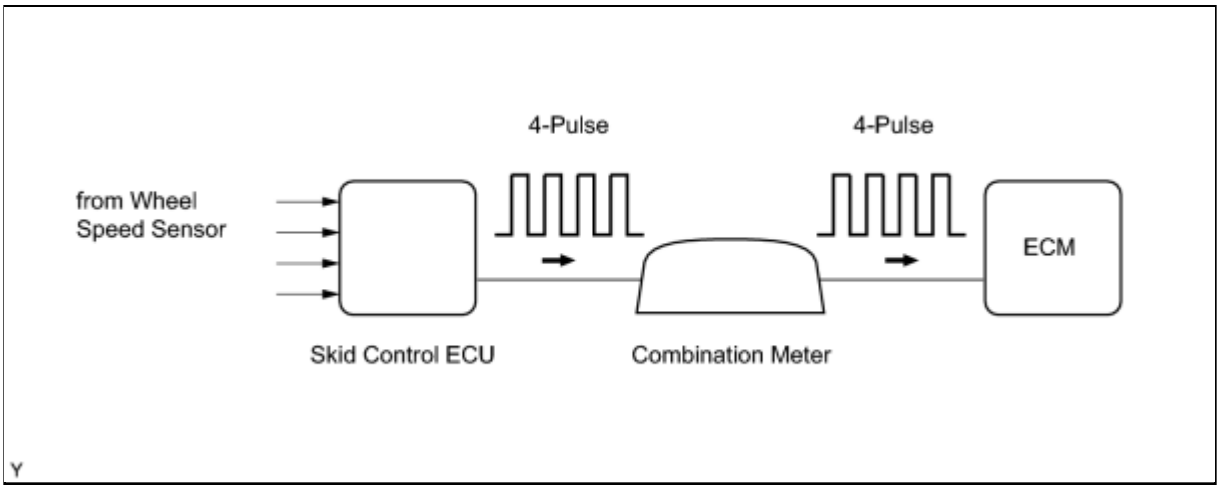

DTC NO.	DTC DETECTION CONDITION	TROUBLE AREA
P0500	While vehicle being driven, no vehicle speed sensor signal transmitted to ECM (2 trip detection logic: manual transaxle models) (1 trip detection logic: automatic transaxle models)	• Open or short in speed signal circuit • Speed meter circuit (wheel speed sensor, skid control ECU) • Combination meter • ECM

MONITOR DESCRIPTION

Automatic Transaxle Models:

The ECM assumes that the vehicle is being driven when the vehicle speed sensor signal is being transmitted by the combination meter. If there is no signal from the combination meter, despite the ECM detecting the speed signal from the speed sensor NC, the ECM interprets this as a malfunction in the speed signal circuit. The ECM then illuminates the MIL and sets the DTC.

Manual Transaxle Models:

The ECM assumes that the vehicle is being driven when the indicated engine speed is more than 2000 rpm and the engine load calculated by the ECM is more than a certain level or the idle fuel-cut operation* is being executed. If there is no signal from the vehicle speed sensor, despite these conditions being met, the ECM interprets this as a malfunction in the speed signal circuit. The ECM then illuminates the MIL and sets the DTC.

*: Idle fuel-cut is executed when the throttle valve is fully closed and engine speed is over 2800 rpm.

MONITOR STRATEGY

Related DTCs	P0500: Vehicle speed sensor "A" pulse input error
Required Sensors/Components (Main)	Vehicle speed sensor Combination meter Skid control ECU
Required Sensors/Components (Related)	Park/neutral position switch Engine coolant temperature sensor Crankshaft position sensor Throttle position sensor Mass air flow meter
Frequency of Operation	Continuous
Duration	2 seconds: automatic transaxle models (IAT is -10°C (14 °F) or more) 8 seconds: manual transaxle models, Case 1 8 seconds: automatic transaxle (IAT is less than -10°C (14 °F)) 4.64 seconds: manual transaxle models, Case 2
MIL Operation	Immediate: automatic transaxle models 2 driving cycles: manual transaxle models
Sequence of Operation	None

TYPICAL ENABLING CONDITIONS

Manual Transaxle Models (Case 1)

Monitor runs whenever following DTCs not present	None
Engine coolant temperature	70°C (158°F) or more
Engine speed	2000 to 5000 rpm
Engine load	31.7 % or more
Fuel-cut at high engine speed	Not operating

Manual Transaxle Models (Case 2)

Monitor runs whenever following DTCs not present	None
Idle	ON
Fuel-cut	ON

Automatic Transaxle Models

Monitor runs whenever following DTCs not present	None
Time after ignition switch OFF to ON	3 seconds or more
Throttle position sensor angle is less than 13°	2070 rpm or more
Throttle position sensor angle is less than 21°	2470 rpm or more
Throttle position sensor angle is less than 30°	2600 rpm or more
Throttle position sensor angle is 30°or more	2910 rpm or more
Battery voltage	8 V or more
Ignition switch	ON
Starter	OFF

TYPICAL MALFUNCTION THRESHOLDS

Vehicle speed sensor signal	No pulse input

WIRING DIAGRAM

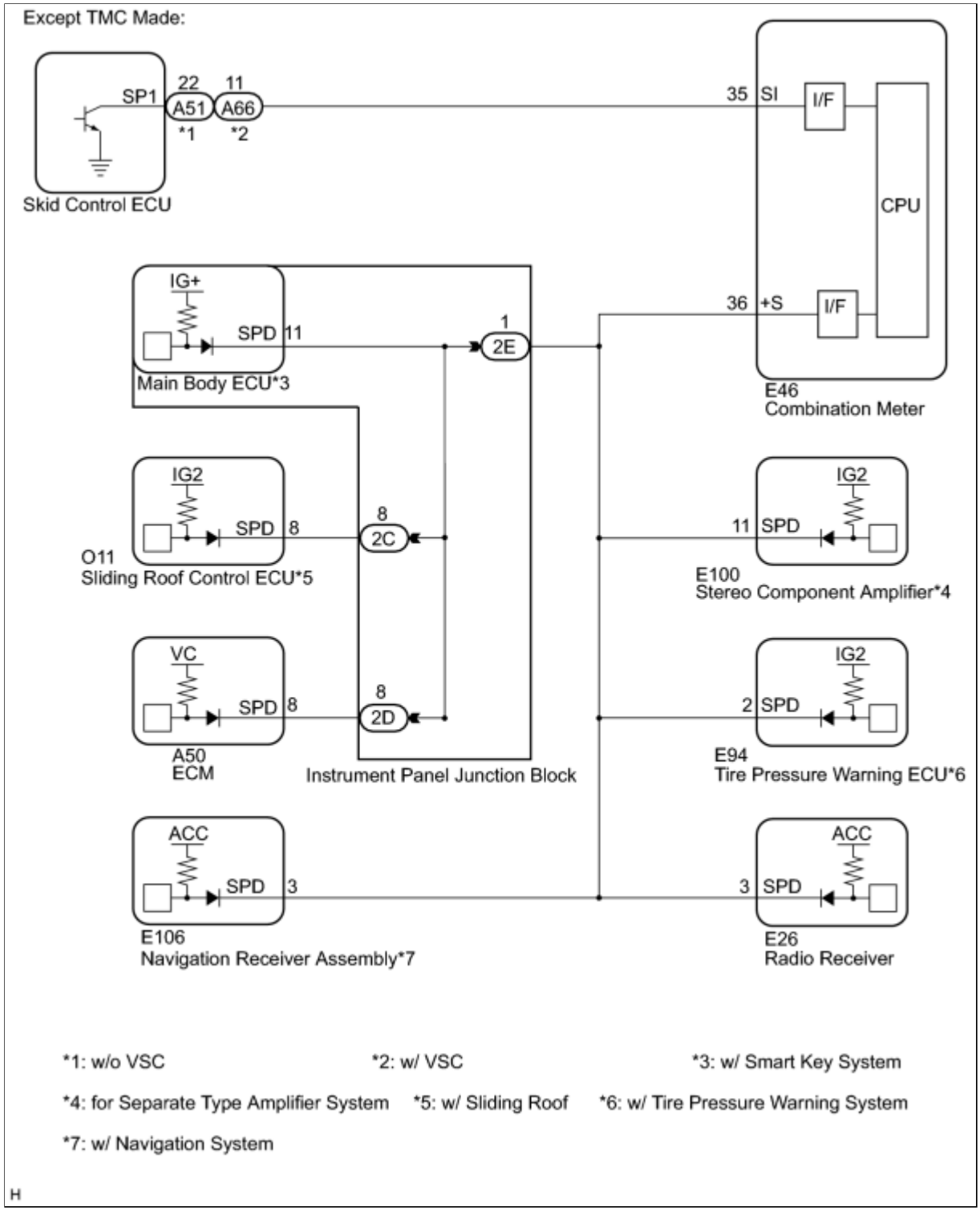

*1: w/o VSC *2: w/ VSC *3: w/ Smart Key System

*4: for Separate Type Amplifier System *5: w/ Sliding Roof *6: w/ Tire Pressure Warning System

*7: w/ Navigation System

H

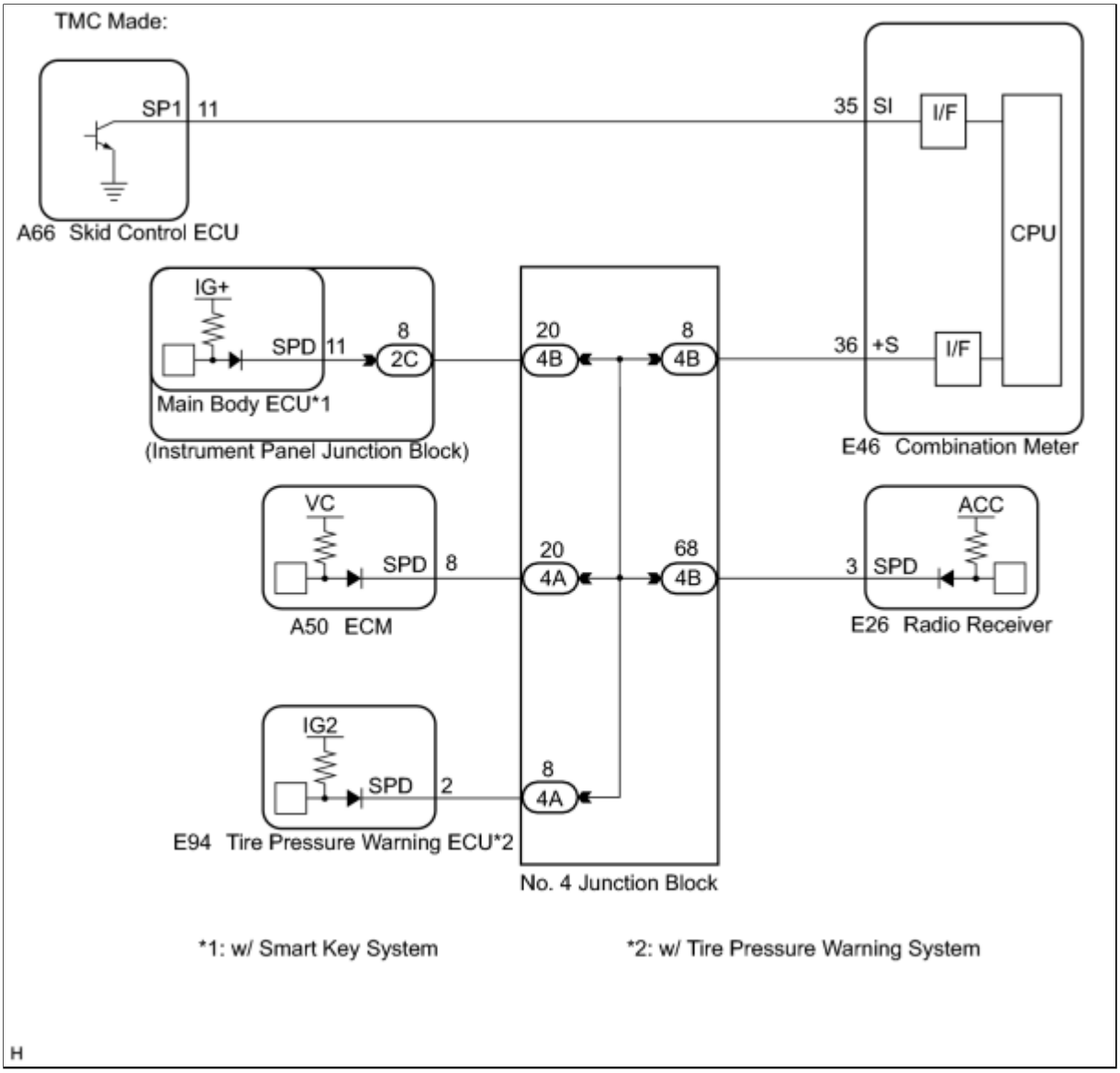

INSPECTION PROCEDURE

HINT:

Read freeze frame data using the Techstream. The ECM records vehicle and driving condition information as freeze frame data the moment a DTC is stored. When troubleshooting, freeze frame data can be helpful in determining whether the vehicle was running or stopped, whether the engine was warmed up or not, whether the air fuel ratio was lean or rich, as well as other data recorded at the time of a malfunction.

PROCEDURE

1.	**READ VALUE USING TECHSTREAM (VEHICLE SPEED)**

(a) Connect the Techstream to the DLC3.

(b) Turn the ignition switch to the ON position.

(c) Turn the Techstream on.

(d) Enter the following menus: Powertrain / Engine and ECT / Data List / Vehicle Speed.

(e) Drive the vehicle.

(f) Read the value displayed on the Techstream.

OK:

Vehicle speeds displayed on the Techstream and speedometer display are equal.

NG ▶ **INSPECT COMBINATION METER ASSEMBLY (OUTPUT WAVEFORM)**

OK ▶ **CHECK FOR INTERMITTENT PROBLEMS**

2.	INSPECT COMBINATION METER ASSEMBLY (OUTPUT WAVEFORM)

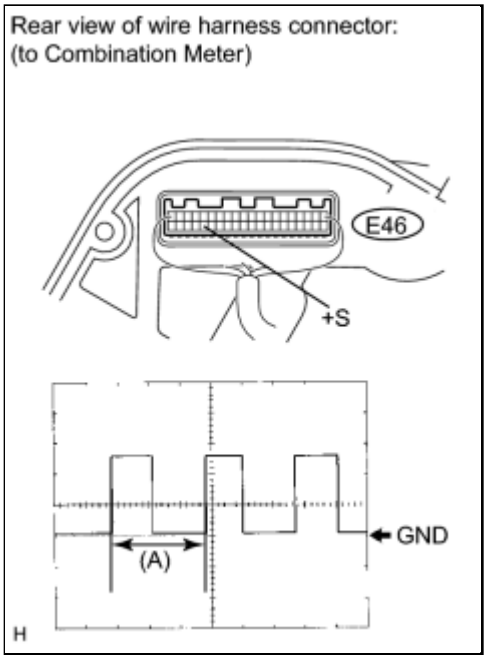

(a) Check the output waveform.

(1) Remove the combination meter assembly with the connector(s) still connected.

(2) Connect an oscilloscope to terminals E46-36 (+S) and body ground.

(3) Turn the ignition switch to ON.

(4) Turn a wheel slowly.

(5) Check the signal waveform according to the condition(s) in the table below.

ITEM	CONDITION
Tool setting	5 V/DIV., 20 ms/DIV.
Vehicle condition	Driving at approx. 20 km/h (12 mph)

OK:

The waveform is displayed as shown in the illustration.

HINT:

When the system is functioning normally, one wheel revolution generates 4 pulses. As the vehicle speed increases, the width indicated by (A) in the illustration narrows.

NG ▶ **GO TO METER / GAUGE SYSTEM**

OK

3.	CHECK HARNESS AND CONNECTOR (ECM - COMBINATION METER)

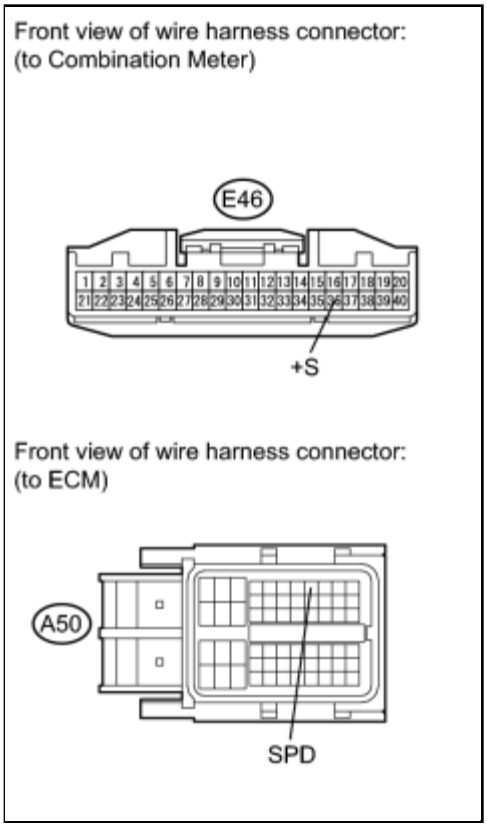

(a) Disconnect the ECM connector.

(b) Disconnect the combination meter connector.

(c) Measure the resistance according to the value(s) in the table below.

Standard Resistance (Check for Open):

TESTER CONNECTION	CONDITION	SPECIFIED CONDITION
E46-36 (+S) - A50-8 (SPD)	Always	Below 1 Ω

(d) Reconnect the ECM connector.

(e) Reconnect the combination meter connector.

NG ▶ **REPAIR OR REPLACE HARNESS OR CONNECTOR (ECM - COMBINATION METER)**

OK ▶ REPLACE ECM

Last Modified: 3-10-2010	6.4 C	**From:** 200901
Model Year: 2010	**Model:** Corolla	**Doc ID:** RM000000XCT08NX
Title: 2ZR-FE ENGINE CONTROL: SFI SYSTEM: P0504: Brake Switch "A" / "B" Correlation (2010 Corolla)		

DTC	**P0504**	**Brake Switch "A" / "B" Correlation**

DESCRIPTION

The stop light switch is a duplex system that transmits two signals: STP and ST1-. These two signals are used by the ECM to monitor whether or not the brake system is working properly. If the signals, which indicate the brake pedal is being depressed and released, are detected simultaneously, the ECM interprets this as a malfunction in the stop light switch and sets the DTC.

HINT:

The normal conditions are as shown in the table below. The signals can be read using the Techstream.

SIGNAL	BRAKE PEDAL RELEASED	IN TRANSITION	BRAKE PEDAL DEPRESSED
STP	OFF	ON	ON
ST1-	ON	ON	OFF

DTC NO.	DTC DETECTION CONDITION	TROUBLE AREA
P0504	Conditions (a), (b) and (c) continue for 0.5 seconds or more (1 trip detection logic): (a) Ignition switch ON (b) Brake pedal released (c) STP signal OFF when ST1- signal OFF	• Short in stop light switch signal circuit • STOP fuse • IGN fuse • Stop light switch • ECM

WIRING DIAGRAM

w/o Smart Key System:

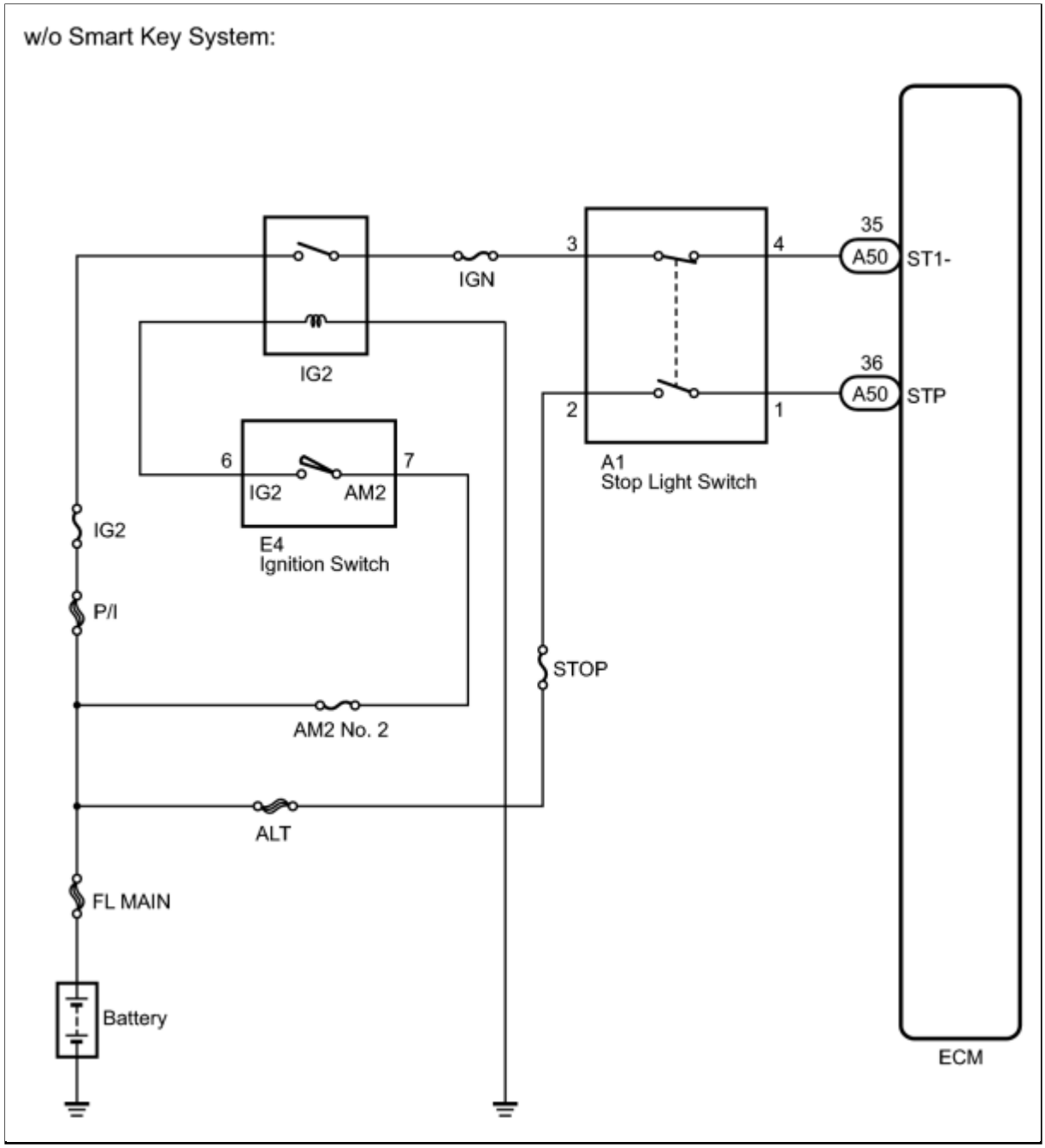

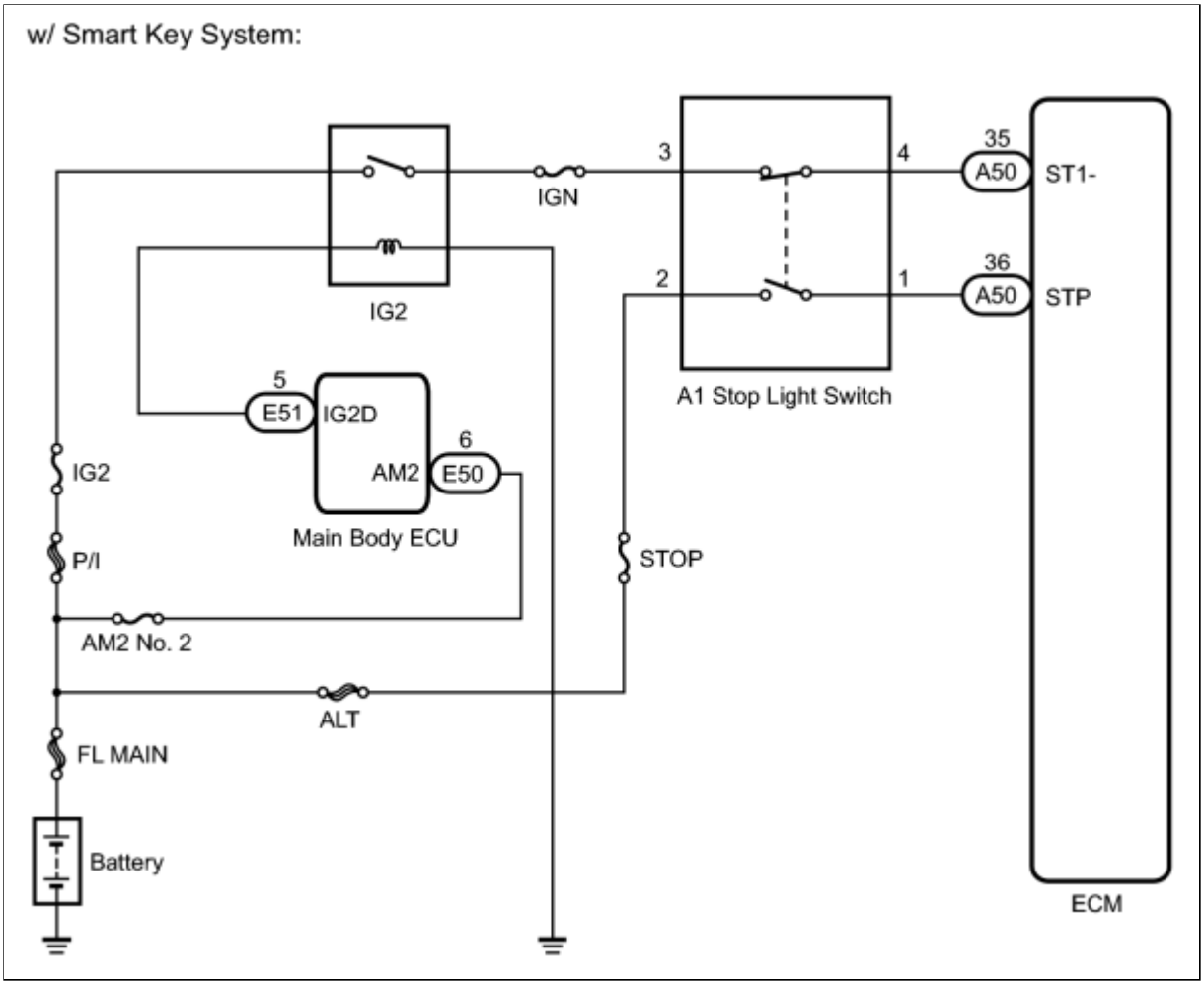

INSPECTION PROCEDURE

HINT:

- Read freeze frame data using the Techstream. The ECM records vehicle and driving condition information as freeze frame data the moment a DTC is stored. When troubleshooting, freeze frame data can be helpful in determining whether the vehicle was running or stopped, whether the engine was warmed up or not, whether the air fuel ratio was lean or rich, as well as other data recorded at the time of a malfunction.
- STP signal conditions can be checked using the Techstream.

  a. Connect the Techstream to the DLC3.
  b. Turn the ignition switch to ON.
  c. Turn the Techstream on.
  d. Enter the following menus: Powertrain / Engine and ECT / Stop Light Switch.
  e. Check the STP signal when the brake pedal is depressed and released.

BRAKE PEDAL OPERATION	SPECIFIED CONDITION
Depressed	STP signal ON
Released	STP signal OFF

PROCEDURE

1.	**INSPECT STOP LIGHT SWITCH (TERMINAL VOLTAGE)**

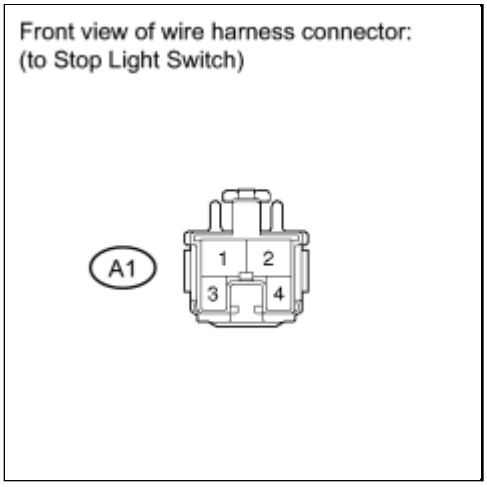

(a) Disconnect the stop light switch connector.

(b) Measure the voltage according to the value(s) in the table below.

Standard Voltage:

TESTER CONNECTION	CONDITION	SPECIFIED CONDITION
A1-2 - Body ground	Always	11 to 14 V
A1-3 - Body ground	Ignition switch ON	11 to 14 V

(c) Reconnect the stop light switch connector.

NG ▶ **INSPECT FUSES (STOP AND IGN FUSES)**

OK ▼

2.	**INSPECT STOP LIGHT SWITCH**

(a) Remove the stop light switch.

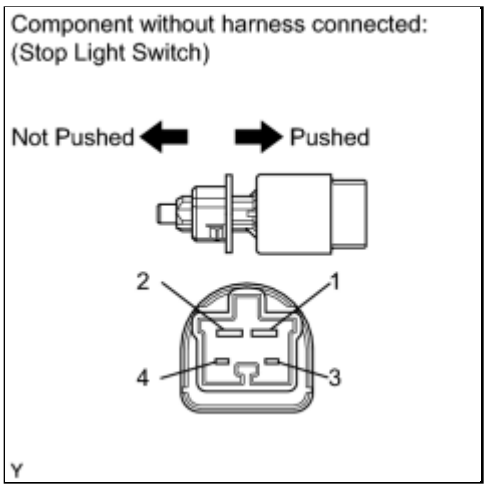

(b) Measure the resistance according to the value(s) in the table below.

Standard Resistance:

TESTER CONNECTION	SWITCH CONDITION	SPECIFIED CONDITION
1 - 2	Switch pin not pushed	Below 1 Ω
	Switch pin pushed	10 kΩ or higher
3 - 4	Switch pin not pushed	10 kΩ or higher
	Switch pin pushed	Below 1 Ω

(c) Reinstall the stop light switch.

NG ▶ **REPLACE STOP LIGHT SWITCH**

OK ▼

3.	**INSPECT ECM (STP AND ST1- VOLTAGE)**

(a) Disconnect the ECM connector.

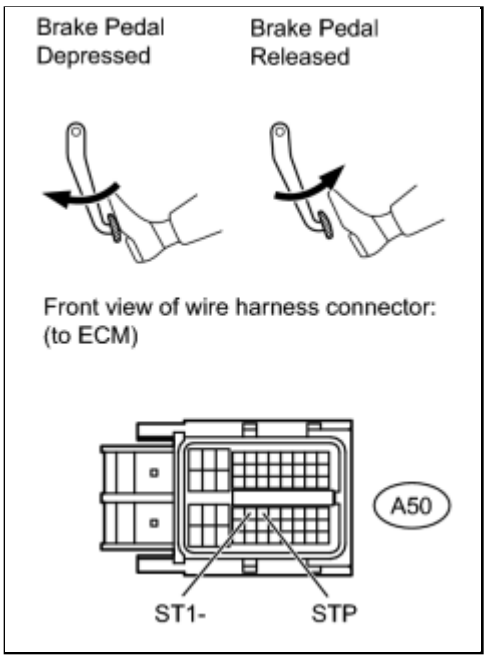

(b) Turn the ignition switch to ON.

(c) Measure the voltage according to the value(s) in the table below.

Standard Voltage:

TESTER CONNECTION	CONDITION	SPECIFIED CONDITION
A50-35 (ST1-) - Body ground	Brake pedal released	11 to 14 V
	Brake pedal depressed	0 to 3 V
A50-36 (STP) - Body ground	Brake pedal released	0 to 3 V
	Brake pedal depressed	11 to 14 V

(d) Reconnect the ECM connector.

NG ▶ **REPAIR OR REPLACE HARNESS OR CONNECTOR (STOP LIGHT SWITCH - ECM)**

OK ▶ **REPLACE ECM**

4.	**INSPECT FUSES (STOP AND IGN FUSES)**

(a) Remove the STOP and IGN fuses from the instrument panel junction block.

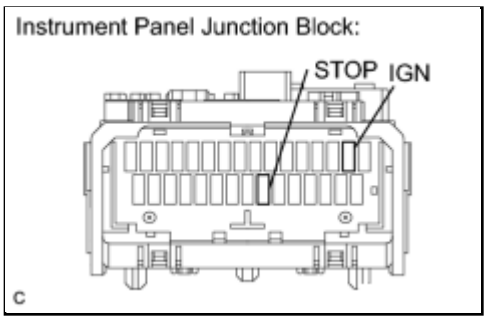

(b) Measure the resistance according to the value(s) in the table below.

Standard Resistance:

TESTER CONNECTION	CONDITION	SPECIFIED CONDITION
STOP fuse	Always	Below 1 Ω
IGN fuse		

(c) Reinstall the STOP and IGN fuses.

NG ▶ **CHECK FOR SHORTS IN ALL HARNESSES AND CONNECTORS CONNECTED TO FUSE AND REPLACE FUSE**

OK ▶ **REPAIR OR REPLACE HARNESS OR CONNECTOR (BATTERY - STOP LIGHT SWITCH - INTEGRATION RELAY)**

Last Modified: 3-10-2010	6.4 C	**From:** 200901
Model Year: 2010	**Model:** Corolla	**Doc ID:** RM000001BFY041X
Title: 2ZR-FE ENGINE CONTROL: SFI SYSTEM: P050A: Cold Start Idle Air Control System Performance (2010 Corolla)		

DTC	**P050A**	**Cold Start Idle Air Control System Performance**

MONITOR DESCRIPTION

This monitor will run when the engine is started at an engine coolant temperature of -10 to 50°C (14 to 122°F). The DTC can be set after the engine idles for 13 seconds (2 trip detection logic).

The DTC is designed to monitor the idle air control at cold start. When the engine is started at an engine coolant temperature of lower than 50°C (122°F), the ECM measures the accumulated mass air flow at idle. If it does not reach the specified level within 10 seconds, the ECM interprets this as a malfunction. The MIL is illuminated and a DTC is set when the malfunction is detected in consecutive driving cycles (2 trip detection logic).

The electronic throttle control system controls the idle speed. The electronic throttle control system operates the throttle actuator to open and close the throttle valve, and adjusts the intake air amount to achieve the target idle speed.

NOTICE:

When the negative battery terminal is disconnected during inspection or repairs, the idle speed control (ISC) learned values are cleared. Idle speed control learning needs to be performed before this DTC can be stored. To perform idle speed control learning, the engine must be warmed up by allowing it to idle for 5 minutes. For idle speed control learning to be successful, when the engine is started to warm it up, there must be at least 10 seconds of idling with the coolant temperature below 30°C before allowing it to continue running for the 5 minute learning period.

HINT:

The idle speed control learning is performed when the engine is warmed up and has been idling for 5 minutes.

P050A Detection Logic:

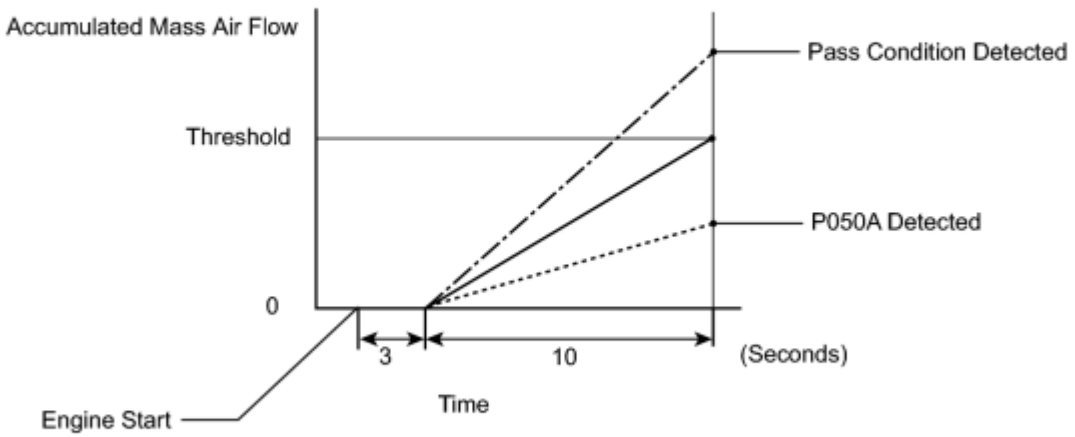

Engine Coolant Temperature: -10 to 50°C

DTC NO.	DTC DETECTION CONDITION	TROUBLE AREA
P050A	Insufficient mass air flow at cold start (2 trip detection logic)	• Throttle body • Mass air flow meter • PCV system • Air cleaner filter element • Intake system • VVT system • ECM

MONITOR STRATEGY

Related DTCs	P050A: Cold start idle air speed control system
Required Sensors/Components (Main)	Throttle body
Required Sensors/Components (Related)	Mass air flow meter Engine coolant temperature sensor
Frequency of Operation	Once per driving cycle
Duration	10 seconds
MIL Operation	2 driving cycles
Sequence of Operation	None

TYPICAL ENABLING CONDITIONS

Monitor runs whenever following DTCs not present	P0010 (VVT Oil Control Valve Bank 1) P0011 (VVT System Bank 1- Advance) P0012 (VVT System Bank 1- Retard) P0013 (Exhaust Oil Control Valve) P0014 (Exhaust System - Advance) P0016 (VVT System Bank 1 - Misalignment) P0017 (Exhaust VVT System - Misalignment) P0102, P0103 (Mass Air Flow Meter) P0115, P0117, P0118 (Engine Coolant Temperature Sensor) P0120, P0121 P0122, P0123, P0220, P0222, P0223, P2135 (Throttle Position Sensor) P0125 (Insufficient Engine Coolant Temperature for Closed Loop Fuel Control) P0171, P0172 (Fuel System) P0301, P0302, P0303, P0304 (Misfire) P0335 (Crankshaft Position Sensor) P0340, P0342, P0343 (Camshaft Position Sensor) P0351, P0352, P0353, P0354 (Igniter) P0365, P0367, P0368 (Exhaust Camshaft Position Sensor) P0500 (Vehicle Speed Sensor) P2195, P2196, P2237, P2238, P2239, P2252, P2253, P2A00 (Air Fuel Ratio Sensor - Sensor 1)
Battery voltage	8 V or more
Time after engine start	3 seconds or more
Starter	OFF
Engine coolant temperature at engine start	-10°C (14°F) or more
Engine coolant temperature	-10 to 50°C (14 to 122°F)
Engine idling time	3 seconds or more
Fuel-cut	OFF
Vehicle speed	Less than 3 km/h (1.875 mph)
Atmospheric pressure	76 kPa (570 mmHg) or more

TYPICAL MALFUNCTION THRESHOLDS

Accumulated mass air flow	Varies with engine coolant temperature (Example: Less than 18.75 g (manual transaxle models) or less than 20 g (automatic transaxle models, N position))

INSPECTION PROCEDURE

HINT:

Read freeze frame data using the Techstream. The ECM records vehicle and driving condition information as freeze frame data the moment a DTC is stored. When troubleshooting, freeze frame data can be helpful in determining whether the vehicle was running or stopped, whether the engine was warmed up or not, whether the air fuel ratio was lean or rich, as well as other data recorded at the time of a malfunction.

PROCEDURE

1.	**CHECK ANY OTHER DTCS OUTPUT (IN ADDITION TO DTC P050A)**

(a) Connect the Techstream to the DLC3.

(b) Turn the ignition switch to ON.

(c) Turn the Techstream on.

(d) Enter the following menus: Powertrain / Engine and ECT / Trouble Codes.

(e) Read the DTCs.

Result:

RESULT	PROCEED TO
DTC P050A is output	A
DTC P050A and other DTCs are output	B

HINT:

If any DTCs other than P050A are output, troubleshoot those DTCs first.

B ▶ **GO TO DTC CHART**

A ▼

2.	**READ VALUE USING TECHSTREAM (FUEL TRIM)**

HINT:

Calculate the total fuel trim values to check the characteristic deviation of the mass air flow meter.

(a) Connect the Techstream to the DLC3.

(b) Turn the ignition switch to ON.

(c) Turn the Techstream on.

(d) Enter the following menus: Powertrain / Engine and ECT / Data List / Short FT #1 and Long FT #1.

(e) Read the values displayed on the Techstream.

(f) Add together the Short FT #1 and Long FT #1 values to obtain the total Fuel Trim.

OK:

Total of Short FT #1 and Long FT #1 values is between -20% and 20%.

NG ▶ **PERFORM ACTIVE TEST USING TECHSTREAM (OPERATE CAMSHAFT TIMING OIL CONTROL VALVE ASSEMBLY)**

OK ▼

3.	**INSPECT THROTTLE BODY ASSEMBLY**

(a) Check that there are no deposits around the throttle valve.

OK:

No deposits around the throttle valve.

NG ▶ **REPLACE THROTTLE BODY ASSEMBLY**

OK ▼

4.	**REPLACE ECM**

(a) Replace ECM INFO .

NEXT ▶ **CHECK WHETHER DTC OUTPUT RECURS (DTC P050A)**

5.	**PERFORM ACTIVE TEST USING TECHSTREAM (OPERATE CAMSHAFT TIMING OIL CONTROL VALVE ASSEMBLY)**

(a) Check the camshaft timing oil control valve assembly for intake camshaft.

(1) Connect the Techstream to the DLC3.

(2) Start the engine.

(3) Turn the Techstream on.

(4) Turn the A/C switch to ON.

(5) Enter the following menus: Powertrain / Engine and ECT / Active Test / Control the VVT System (Bank 1).

(6) Check the engine speed while operating the camshaft timing oil control valve assembly (for intake camshaft) using the Techstream.

Result:

TECHSTREAM OPERATION	SPECIFIED CONDITION
Camshaft timing oil control valve assembly OFF	Normal engine speed
Camshaft timing oil control valve assembly ON	Engine idles roughly or stalls (soon after camshaft timing oil control valve assembly switched from OFF to ON)

HINT:

If the result is not acceptable, cool the engine and perform the Active Test again.

(7) Start the engine when the engine coolant temperature is 30°C (86°F) or less.

(8) Turn the Techstream on.

(9) Turn the A/C switch to ON.

(10) Enter the following menus: Powertrain / Engine and ECT / Active Test / Control the VVT System (Bank 1).

(11) Check the engine speed while operating the camshaft timing oil control valve assembly using the Techstream with the engine coolant temperature is 50°C (122°F) or less.

Result:

TECHSTREAM OPERATION	SPECIFIED CONDITION
Camshaft timing oil control valve assembly OFF	Normal engine speed

TECHSTREAM OPERATION	SPECIFIED CONDITION
Camshaft timing oil control valve assembly ON	Engine idles roughly or stalls (soon after camshaft timing oil control valve assembly switched from OFF to ON)

NG ▶ **CHECK AND REPAIR VVT SYSTEM**

OK ▼

6.	CHECK PCV SYSTEM

(a) Start the engine.

(b) Pinch the positive crankcase ventilation (PCV) hose.

(c) Check the engine rpm.

OK:

The engine rpm rises when the PCV hose is pinched.

NG ▶ **REPAIR OR REPLACE PCV SYSTEM**

OK ▼

7.	CHECK AIR CLEANER FILTER ELEMENT SUB-ASSEMBLY

(a) Visually check that the air cleaner filter element is not excessively contaminated with dirt or oil.

OK:

The air cleaner filter element is not excessively contaminated with dirt or oil.

NG ▶ **REPLACE AIR CLEANER FILTER ELEMENT SUB-ASSEMBLY**

OK

8.	CHECK INTAKE SYSTEM

(a) Check the intake system for vacuum leaks INFO .

OK:

No leaks from the intake system.

NG ▶ **REPAIR OR REPLACE INTAKE SYSTEM**

OK

9.	REPLACE MASS AIR FLOW METER

(a) Replace the mass air flow meter INFO .

NEXT ▶ **CHECK WHETHER DTC OUTPUT RECURS (DTC P050A)**

10.	REPLACE THROTTLE BODY ASSEMBLY

(a) Replace the throttle body assembly INFO .

NEXT ▶ **CHECK WHETHER DTC OUTPUT RECURS (DTC P050A)**

11.	CHECK AND REPAIR VVT SYSTEM

HINT:

Check the VVT system for intake camshaft INFO **.**

NEXT ▶ CHECK WHETHER DTC OUTPUT RECURS (DTC P050A)

12.	REPAIR OR REPLACE PCV SYSTEM

NEXT ▶ CHECK WHETHER DTC OUTPUT RECURS (DTC P050A)

13.	REPLACE AIR CLEANER FILTER ELEMENT SUB-ASSEMBLY

NEXT ▶ CHECK WHETHER DTC OUTPUT RECURS (DTC P050A)

14.	REPAIR OR REPLACE INTAKE SYSTEM

NEXT ▼

15.	CHECK WHETHER DTC OUTPUT RECURS (DTC P050A)

NOTICE:

For this operation, the engine must be cold (the same level as the engine coolant temperature recorded in the freeze frame data).

(a) Connect the Techstream to the DLC3.

(b) Turn the ignition switch to ON.

(c) Turn the Techstream on.

(d) Clear DTCs INFO .

(e) Switch the ECM from normal mode to check mode using the Techstream INFO .

(f) Start the engine and idle it for one minute.

OK:

Stable fast idle

(g) Read the DTCs.

OK:

No DTC is output.

NEXT END

Last Modified: 3-10-2010	6.4 C	**From:** 200901
Model Year: 2010	**Model:** Corolla	**Doc ID:** RM000000T8M09OX
Title: 2ZR-FE ENGINE CONTROL: SFI SYSTEM: P0505: Idle Control System Malfunction (2010 Corolla)		

DTC	**P0505**	**Idle Control System Malfunction**

DESCRIPTION

The idle speed is controlled by the electronic throttle control system. The electronic throttle control system is comprised of: 1) the one valve type throttle body; 2) a throttle actuator, which operates the throttle valve; 3) a throttle position sensor, which detects the opening angle of the throttle valve; 4) an accelerator pedal position sensor, which detects the accelerator pedal position; and 5) the ECM, which controls the electronic throttle control system. Based on the target idle speed, the ECM controls the throttle actuator to provide the proper throttle valve opening angle.

DTC NO.	DTC DETECTION CONDITION	TROUBLE AREA
P0505	Idling speed continues to vary greatly from target idling speed (2 trip detection logic)	• Electronic throttle control system • Intake system • PCV hose connections • ECM

MONITOR DESCRIPTION

The ECM monitors the idle speed and idle air flow volume to conduct Idle Speed Control (ISC). The ECM determines that the idle speed control system is malfunctioning if the following conditions apply:

- The learned idle air flow volume remains at the maximum or minimum volume for 5 seconds or more during a drive cycle.
- After driving at a vehicle speed of 6.25 mph (10 km/h) or more, the actual engine idle speed varies from the target idle speed by less than -100 rpm or 150 rpm or more when the A/C and NSW are off, or less than -100 rpm or 200 rpm or more when the A/C or NSW are on, 5 times or more during a driving cycle, the ECM illuminates the MIL and sets the DTC.

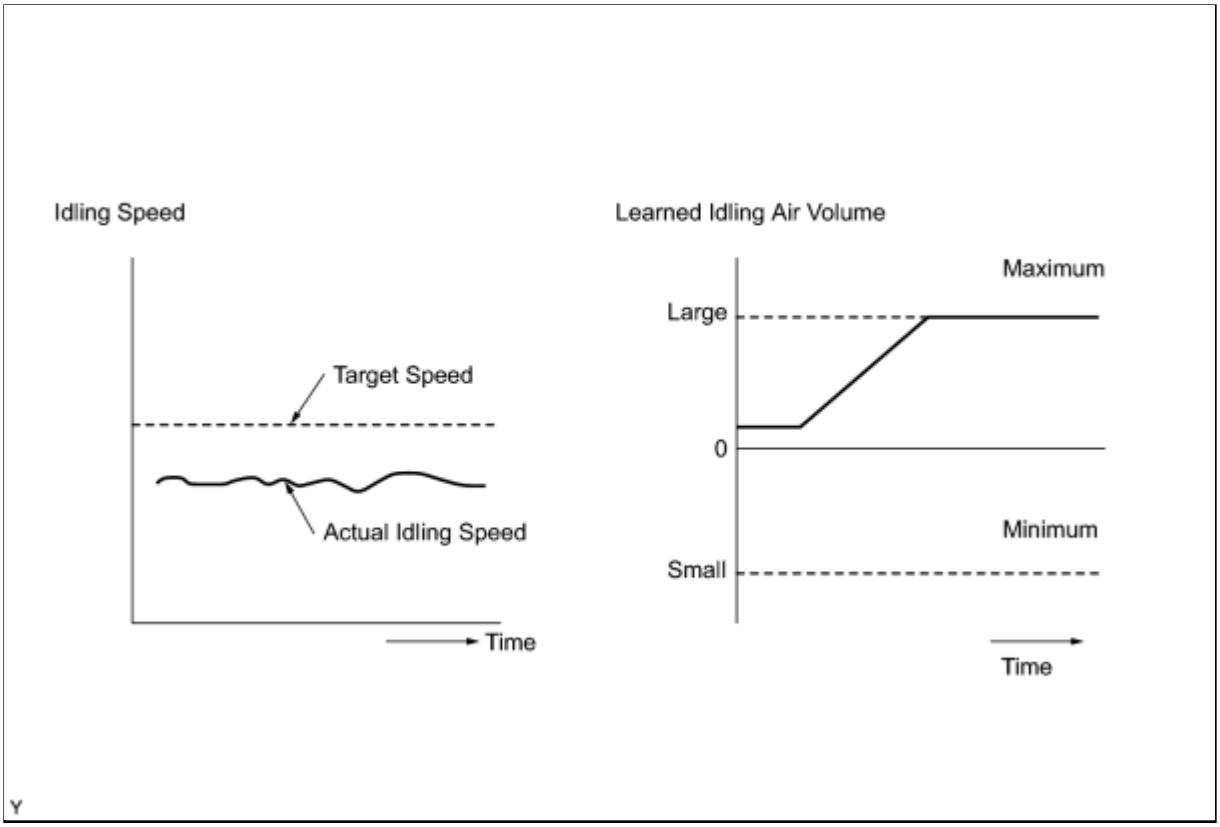

MONITOR STRATEGY

Related DTCs	P0505: ISC function
Required Sensors/Components (Main)	Electronic throttle control system
Required Sensors/Components (Related)	Crankshaft position sensor Engine coolant temperature sensor Vehicle speed sensor
Frequency of Operation	Once per driving cycle
Duration	10 minutes (Idling after warming up)
MIL Operation	2 driving cycles
Sequence of Operation	None

TYPICAL ENABLING CONDITIONS

Monitor runs whenever following DTCs not present	P0010 (VVT Oil Control Valve Bank 1) P0011 (VVT System Bank 1 - Advance) P0012 (VVT System Bank 1 - Retard) P0013 (Exhaust Oil Control Valve) P0014 (Exhaust System - Advance) P0016 (VVT System Bank 1 - Misalignment)

	P0017 (Exhaust VVT System - Misalignment) P0031, P0032 (Air Fuel Ratio Sensor Heater - Sensor 1) P0102, P0103 (Mass Air Flow Meter) P0115, P0117, P0118 (Engine Coolant Temperature Sensor) P0120, P0121 P0122, P0123, P0220, P0222, P0223, P2135 (Throttle Position Sensor) P0125 (Insufficient Engine Coolant Temperature for Closed Loop Fuel Control) P0171, P0172 (Fuel System) P0301, P0302, P0303, P0304 (Misfire) P0335 (Crankshaft Position Sensor) P0340 (Camshaft Position Sensor) P0351, P0352, P0353, P0354 (Igniter) P0365, P0367, P0368 (Exhaust Camshaft Position Sensor) P0451, P0452 (EVAP System) P0500 (Vehicle Speed Sensor) P2195, P2196, P2237, P2238, P2239, P2252, P2253, P2A00 (Air Fuel Ratio Sensor - Sensor 1)
Engine	Running

TYPICAL MALFUNCTION THRESHOLDS

Either of following conditions is met	Condition 1 or 2
1. Frequency that both of following conditions (a) and (b) met	5 times or more
(a) Either of the following conditions (a) and (b) is met	Condition A or B
A. Engine rpm - Target engine rpm	Less than -100 rpm, or 150 rpm or more (A/C off and NSW off)
B. Engine rpm - Target engine rpm	Less than -100 rpm, or 200 rpm or more (A/C on and NSW on)
(b) Vehicle condition	Stop after vehicle was driven at 6.25 mph (10 km/h) or more
2. Frequency that both of following conditions (a) and (b) met	Once
Either of the following condition is met:	Condition A or B
A. Engine rpm - Target engine rpm	Less than -100 rpm, or 150 rpm or more (A/C off and NSW off)
B. Engine rpm - Target engine rpm	Less than -100 rpm, or 200 rpm or more (A/C on and NSW on)
(b) Idle air control flow rate learning valve	0.5 L/sec or less, or 6.1 L/sec or more

INSPECTION PROCEDURE

HINT:

- The following conditions may also cause DTC P0505 to be set:
    a. The floor carpet overlapping slightly onto the accelerator pedal, causing the accelerator pedal to be slightly depressed and therefore the throttle valve position to be slightly open.
    b. The accelerator pedal being not fully released.
- Read freeze frame data using the Techstream. The ECM records vehicle and driving condition information as freeze frame data the moment a DTC is stored. When troubleshooting, freeze frame data can be helpful in determining whether the vehicle was running or stopped, whether the engine was warmed up or not, whether the air fuel ratio was lean or rich, as well as other data recorded at the time of a malfunction.

PROCEDURE

1.	**CHECK ANY OTHER DTCS OUTPUT (IN ADDITION TO DTC P0505)**

(a) Connect the Techstream to the DLC3.

(b) Turn the ignition switch to ON.

(c) Turn the Techstream on.

(d) Enter the following menus: Powertrain / Engine and ECT / Trouble Codes.

(e) Read the DTCs.

Result:

RESULT	PROCEED TO
DTC P0505 is output	A
DTC P0505 and other DTCs are output	B

HINT:

If any DTCs other than P0505 are output, troubleshoot those DTCs first.

B ▶ **GO TO DTC CHART**

A ▼

2.	CHECK PCV HOSE CONNECTIONS

(a) Check the PCV hose connections INFO .

OK:

PCV hose is connected correctly and is not damaged.

NG ▶ REPAIR OR REPLACE PCV HOSE

OK ▼

3.	CHECK INTAKE SYSTEM

(a) Check the intake system for vacuum leaks INFO .

OK:

No leaks from intake system.

NG ▶ REPAIR OR REPLACE INTAKE SYSTEM

OK ▼

4.	INSPECT THROTTLE BODY ASSEMBLY (THROTTLE VALVE)

(a) Check the throttle valve condition.

OK:

Throttle valve is not contaminated with foreign objects and moves smoothly.

NG ▶ REPAIR OR REPLACE THROTTLE BODY ASSEMBLY

OK ▶ REPLACE ECM

Last Modified: 3-10-2010	6.4 C	**From:** 200901
Model Year: 2010	**Model:** Corolla	**Doc ID:** RM000000T8P0D3X
Title: 2ZR-FE ENGINE CONTROL: SFI SYSTEM: P0560: System Voltage (2010 Corolla)		

DTC	**P0560**	**System Voltage**

MONITOR DESCRIPTION

The battery supplies electricity to the ECM even when the ignition switch is off. This power allows the ECM to store data such as DTC history, freeze frame data and fuel trim values. If the battery voltage falls below a minimum level, the memory is cleared and the ECM determines that there is a malfunction in the power supply circuit. The next time the engine is started, the ECM illuminates the MIL and sets the DTC.

DTC NO.	DTC DETECTION CONDITION	TROUBLE AREA
P0560	Open in ECM back up power source circuit (1 trip detection logic)	• Open in back up power source circuit • Battery • Battery terminals • EFI MAIN fuse • ECM

HINT:

If DTC P0560 is set, the ECM does not store other DTCs or the data stored in the ECM may be partly erased.

MONITOR STRATEGY

Related DTCs	P0560: ECM system voltage
Required Sensors/Components (Main)	ECM
Required Sensors/Components (Related)	-
Frequency of Operation	Continuous
Duration	3 seconds
MIL Operation	Immediate (MIL illuminated after next engine start)
Sequence of Operation	None

TYPICAL ENABLING CONDITIONS

Monitor runs whenever following DTCs not present	None

TYPICAL MALFUNCTION THRESHOLDS

ECM power source	Less than 3.5 V

WIRING DIAGRAM

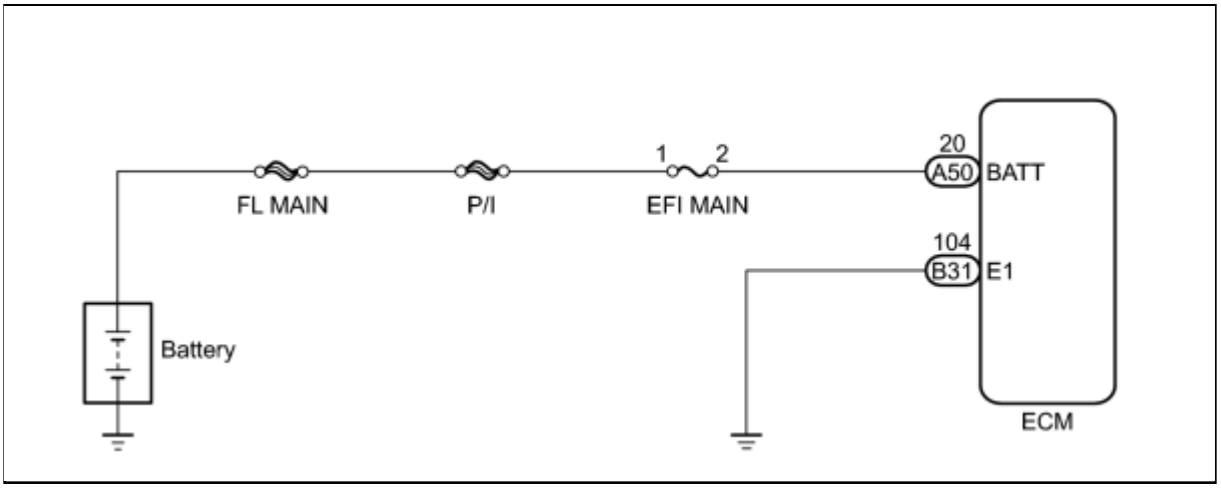

INSPECTION PROCEDURE

HINT:

Read freeze frame data using the Techstream. The ECM records vehicle and driving condition information as freeze frame data the moment a DTC is stored. When troubleshooting, freeze frame data can be helpful in determining whether the vehicle was running or stopped, whether the engine was warmed up or not, whether the air fuel ratio was lean or rich, as well as other data recorded at the time of a malfunction.

PROCEDURE

1.	**INSPECT FUSE (EFI MAIN FUSE)**

(a) Remove the EFI MAIN fuse from the engine room relay block.

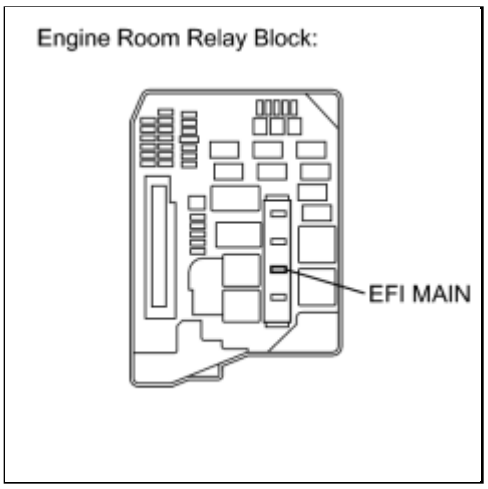

(b) Measure the resistance according to the value(s) in the table below.

Standard Resistance:

TESTER CONNECTION	CONDITION	SPECIFIED CONDITION
EFI MAIN fuse	Always	Below 1 Ω

(c) Reinstall the EFI MAIN fuse.

NG ▶ **CHECK FOR SHORTS IN ALL HARNESSES AND CONNECTORS CONNECTED TO FUSE AND REPLACE FUSE**

OK ▼

2.	**CHECK HARNESS AND CONNECTOR (ECM - EFI MAIN FUSE)**

(a) Disconnect the negative battery terminal.

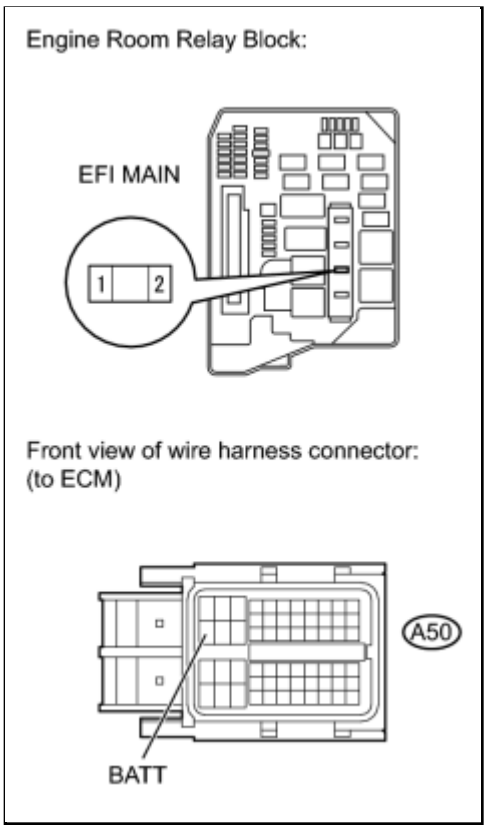

(b) Disconnect the positive battery terminal.

(c) Remove the EFI MAIN fuse from the engine room relay block.

(d) Disconnect the ECM connector.

(e) Measure the resistance according to the value(s) in the table below.

Standard Resistance (Check for Open):

TESTER CONNECTION	CONDITION	SPECIFIED CONDITION
EFI MAIN fuse (2) - A50-20 (BATT)	Always	Below 1 Ω

Standard Resistance (Check for Short):

TESTER CONNECTION	CONDITION	SPECIFIED CONDITION
EFI MAIN fuse (2) or A50-20 (BATT) - Body ground	Always	10 kΩ or higher

(f) Reinstall the EFI MAIN fuse.

(g) Reconnect the ECM connector.

(h) Reconnect the positive battery terminal.

(i) Reconnect the negative battery terminal.

NG ▶ **REPAIR OR REPLACE HARNESS OR CONNECTOR (ECM - EFI MAIN FUSE)**

OK

3.	**CHECK HARNESS AND CONNECTOR (BATTERY - EFI MAIN FUSE)**

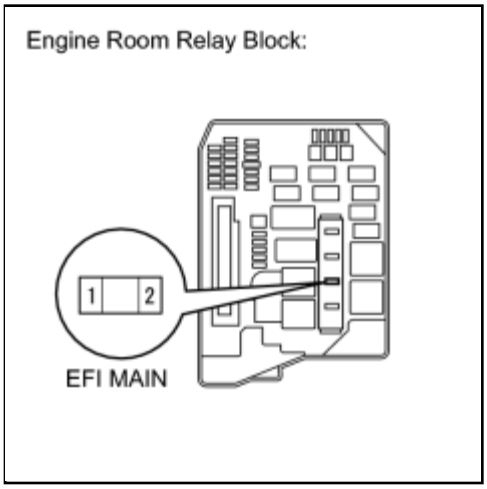

(a) Disconnect the negative battery terminal.

(b) Disconnect the positive battery terminal.

(c) Remove the EFI MAIN fuse from the engine room relay block.

(d) Measure the resistance according to the value(s) in the table below.

Standard Resistance (Check for Open):

TESTER CONNECTION	CONDITION	SPECIFIED CONDITION
Battery positive terminal - EFI MAIN fuse (1)	Always	Below 1 Ω

Standard Resistance (Check for Short):

TESTER CONNECTION	CONDITION	SPECIFIED CONDITION
Battery positive terminal or EFI MAIN fuse (1) - Body ground	Always	10 kΩ or higher

(e) Reinstall the EFI MAIN fuse.

(f) Reconnect the positive battery terminal.

(g) Reconnect the negative battery terminal.

NG ▶ **REPAIR OR REPLACE HARNESS OR CONNECTOR**

(BATTERY - EFI MAIN FUSE)

OK

4.	**INSPECT BATTERY**

(a) Check that the battery is not discharged or weak.

OK:

Battery is not discharged or weak

NG → **CHARGE OR REPLACE BATTERY**

OK

5.	**CHECK BATTERY TERMINAL**

(a) Check that the battery terminals are not loose or corroded.

OK:

Battery terminals are not loose or corroded

NG → **REPAIR OR REPLACE BATTERY TERMINAL**

OK

6.	**CHECK WHETHER DTC OUTPUT RECURS**

(a) Connect the Techstream to the DLC3.

(b) Turn the ignition switch to on.

(c) Turn the Techstream on.

(d) Clear DTCs INFO .

(e) Turn the ignition switch off and turn the Techstream off.

(f) Start the engine and turn the Techstream on.

(g) Enter the following menus: Powertrain / Engine and ECT / Trouble Codes.

(h) Read the DTCs.

Result:

RESULT	PROCEED TO
DTC P0560 is output	A
DTC is not output	B

B ▶ **CHECK FOR INTERMITTENT PROBLEMS**

A ▶ **REPLACE ECM**

Last Modified: 3-10-2010	6.4 C	**From:** 200901
Model Year: 2010	**Model:** Corolla	**Doc ID:** RM00000292G00CX
Title: 2ZR-FE ENGINE CONTROL: SFI SYSTEM: P0601: Internal Control Module Memory Check Sum Error (2010 Corolla)		

DTC	**P0601**	**Internal Control Module Memory Check Sum Error**

MONITOR DESCRIPTION

The ECM continuously monitors its own internal memory status, internal circuits, and output signals transmitted to the throttle actuator. This self-check insures that the ECM is functioning properly. If any malfunction is detected, the ECM sets the appropriate DTC and illuminates the MIL.

The ECM memory status is diagnosed by internal mirroring of the main CPU and the sub CPU to detect Random Access Memory (RAM) errors. The two CPUs also perform continuous mutual monitoring. The ECM illuminates the MIL and sets a DTC if: 1) outputs from the two CPUs are different or deviate from the standards, 2) the signals sent to the throttle actuator deviate from the standards, 3) a malfunction is found in the throttle actuator supply voltage, and 4) any other ECM malfunction is found.

DTC NO.	DTC DETECTION CONDITIONS	TROUBLE AREAS
P0601	ECM internal error (1 trip detection logic)	ECM

MONITOR STRATEGY

Related DTCs	P0601: ECM Check Sum error
Required Sensors/Components (Main)	ECM
Required Sensors/Components (Related)	-
Frequency of Operation	Continuous
Duration	135 seconds
MIL Operation	Immediate
Sequence of Operation	None

TYPICAL ENABLING CONDITIONS

The monitor will run whenever the following DTCs are not present	None

TYPICAL MALFUNCTION THRESHOLDS

ECM Check Sum Error

Check sum	Error

INSPECTION PROCEDURE

HINT:

Read freeze frame data using the Techstream. The ECM records vehicle and driving condition information as freeze frame data the moment a DTC is stored. When troubleshooting, freeze frame data can be helpful in determining whether the vehicle was running or stopped, whether the engine was warmed up or not, whether the air fuel ratio was lean or rich, as well as other data recorded at the time of a malfunction.

PROCEDURE

1.	**REPLACE ECM**

(a) Replace the ECM INFO .

TOYOTA

Last Modified: 3-10-2010	6.4 C	**From:** 200901
Model Year: 2010	**Model:** Corolla	**Doc ID:** RM000002KQO02YX
Title: 2ZR-FE ENGINE CONTROL: SFI SYSTEM: P0604: Random Access Memory (RAM) (2010 Corolla)		

DTC	**P0604**	**Random Access Memory (RAM)**

MONITOR DESCRIPTION

The ECM continuously monitors its internal memory status. This self-check ensures that the ECM is functioning properly. It is diagnosed by internal "mirroring" of the main CPU and sub CPU to detect Random Access Memory (RAM) errors. If outputs from these CPUs are different and deviate from the standards, the ECM will illuminate the MIL and set the DTC immediately.

DTC NO.	DTC DETECTION CONDITION	TROUBLE AREA
P0604	ECM RAM errors	ECM

MONITOR STRATEGY

Related DTCs	P0604: ECM RAM error
Required sensors/Components (Main)	ECM
Required sensors/Components (Related)	None
Frequency of operation	Continuous
Duration	6 times
MIL operation	Immediate
Sequence of operation	None

TYPICAL ENABLING CONDITIONS

Monitor runs whenever following DTCs not present	None

TYPICAL MALFUNCTION THRESHOLDS

Main CPU and sub CPU mirroring	Fail

INSPECTION PROCEDURE

HINT:

Read freeze frame data using the Techstream. The ECM records vehicle and driving condition information as freeze frame data the moment a DTC is stored. When troubleshooting, freeze frame data can be helpful in determining whether the vehicle was running or stopped, whether the engine was warmed up or not, whether the air fuel ratio was lean or rich, as well as other data recorded at the time of a malfunction.

PROCEDURE

1.	**READ OUTPUT DTC (DTC P0604)**

(a) Connect the Techstream to the DLC3.

(b) Turn the ignition switch to ON.

(c) Turn the Techstream on.

(d) Clear DTC INFO .

(e) Turn the ignition switch off and turn the Techstream off.

(f) Disconnect the Techstream.

(g) Disconnect the cable from the battery negative (-) terminal and wait for 1 minute.

(h) Connect the cable to the battery negative (-) terminal.

(i) Connect the Techstream to the DLC3.

(j) Turn the ignition switch to ON.

(k) Turn the Techstream on.

(l) Enter the following menus: Powertrain / Engine and ECT / Trouble Codes.

(m) Read the DTCs.

Result:

RESULT	PROCEED TO
DTC is not output	A
DTC P0604 is output	B

B ▶ **REPLACE ECM**

A ▶ **CHECK FOR INTERMITTENT PROBLEMS**

Last Modified: 3-10-2010	6.4 C	**From:** 200901
Model Year: 2010	**Model:** Corolla	**Doc ID:** RM000002I3S03YX
Title: 2ZR-FE ENGINE CONTROL: SFI SYSTEM: P0607: Control Module Performance (2010 Corolla)		

DTC	**P0607**	**Control Module Performance**

MONITOR DESCRIPTION

The ECM continuously monitors its internal processors (CPUs) and heated oxygen sensor transistors. This self-check ensures that the ECM is functioning properly.

DTC NO.	DTC DETECTION CONDITION	TROUBLE AREA
P0607	• The ECM CPUs malfunction • The heated oxygen sensor transistor (built into the ECM) malfunctions	• ECM • Heated oxygen sensor (bank 1 sensor 2) • Exhaust gas leak
	For Mexico models: ECM CPU error	• ECM

MONITOR STRATEGY

Related DTCs	P0607: Control Module Performance
Required Sensors/Components (Main)	ECM
Required Sensors/Components (Related)	Heated oxygen sensor
Frequency of Operation	Continuous
Duration	60 seconds
MIL Operation	Immediate
Sequence of Operation	None

TYPICAL ENABLING CONDITIONS

Monitor runs whenever the following DTCs are not stored	None
Engine	Running
Estimated heated oxygen sensor temperature	450 to 800°C (842 to 1472°F)

TYPICAL MALFUNCTION THRESHOLDS

Heated oxygen sensor transistors	Fail

CONFIRMATION DRIVING PATTERN

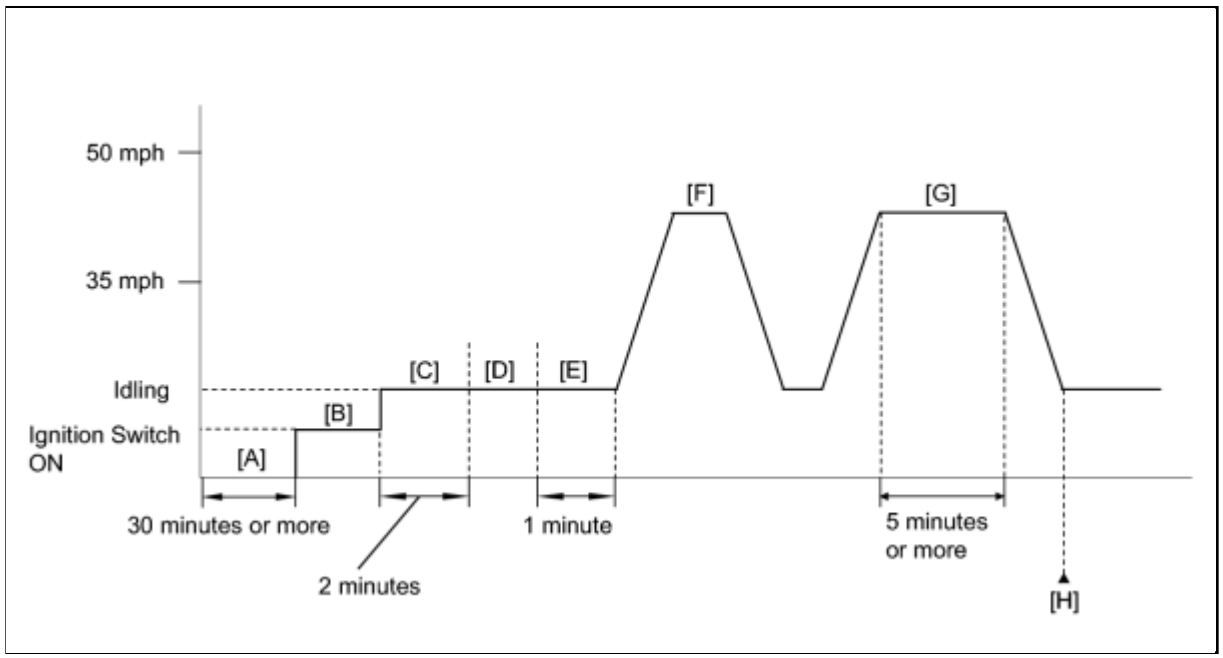

1. Stop the engine for 30 minutes or more [A].
2. Connect the Techstream to the DLC3.
3. Turn the ignition switch to ON and turn the Techstream on.
4. Clear the DTCs (even if no DTCs are stored, perform the clear DTC procedure) INFO .
5. Turn the ignition switch off.
6. Turn the ignition switch to ON and turn the Techstream on [B].
7. Start the engine, and wait 2 minutes [C].
8. Warm up the engine until the engine coolant temperature is 75°C (167°F) or higher [D].
9. Idle the engine for 1 minute [E].
10. Accelerate the vehicle to 50 mph (80 km/h) and stop the vehicle [F].
11. Drive the vehicle at 35 to 50 mph (56 to 80 km/h) for 5 minutes or more [G].
12. Enter the following menus: Powertrain / Engine / Utility / All Readiness.
13. Input the DTC: P0607, P0136, P0137 or P0138.
14. Check the DTC judgment result [H].

TECHSTREAM DISPLAY	DESCRIPTION
NORMAL	○ DTC judgment completed ○ System normal

TECHSTREAM DISPLAY	DESCRIPTION
ABNORMAL	○ DTC judgment completed ○ System abnormal
INCOMPLETE	○ DTC judgment not completed ○ Perform driving pattern after confirming DTC enabling conditions
UNKNOWN	○ Unable to perform DTC judgment ○ Number of DTCs which do not fulfill DTC preconditions has reached ECU memory limit

CAUTION:

When performing the confirmation driving pattern, obey all speed limits and traffic laws.

HINT:

- If the judgment result shows ABNORMAL, the system has a malfunction.
- If the judgment result shows INCOMPLETE or UNKNOWN, perform steps [D] through [H].

15. If the test result is UNKNOWN, enter the following menus: Powertrain / Engine / Trouble Codes / Pending.
16. Read Pending DTCs.

HINT:

If a pending DTC is output, the system is malfunctioning.

17. If the test result is INCOMPLETE or UNKNOWN and no pending DTC is output, perform a universal trip and check for permanent DTCs INFO .

HINT:

- If a permanent DTC is output, the system is malfunctioning.
- If no permanent DTC is output, the system is normal.

INSPECTION PROCEDURE

PROCEDURE

1.	**CHECK ANY OTHER DTCS OUTPUT**

(a) Connect the Techstream to the DLC3.

(b) Turn the ignition switch to ON.

(c) Turn the Techstream on.

(d) Enter the following menus: Powertrain / Engine / Trouble Codes.

(e) Read the DTCs INFO.

Result:

RESULT	PROCEED TO
P0607 and P0136, P0137 or P0138 are output	A
P0607 is output	B

B ▶ **CHECK FOR EXHAUST GAS LEAK**

A ▼

2.	**INSPECT DTC (P0136, P0137 OR P0138)**

(a) Refer to the P0136, P0137 or P0138 flowchart.

HINT:

- If P0136 is output, troubleshoot for that DTC first INFO. Then proceed to "INSPECT ECM".
- If P0137 is output, troubleshoot for that DTC first INFO. Then proceed to "INSPECT ECM".
- If P0138 is output, troubleshoot for that DTC first INFO. Then proceed to "INSPECT ECM".
- If DTC P0607 and P0136, P0137 or P0138 are output, the output voltage of the heated oxygen sensor may remain close to 0 V or become high (around 1 V or higher).

NEXT ▶ **INSPECT ECM**

3.	**CHECK FOR EXHAUST GAS LEAK**

(a) Allow the engine to idle and rev the engine.

(b) Check for exhaust gas leaks around the heated oxygen sensor.

If any exhaust gas leaks are present, repair them and proceed to "PERFORM CONFIRMATION DRIVING PATTERN". If no exhaust gas leaks are present, proceed to "PERFORM CONFIRMATION DRIVING PATTERN".

HINT:

- If no exhaust gas leaks are present, a malfunction in the heated oxygen sensor circuit is suspected.
- If any exhaust gas leaks are present around the heated oxygen sensor, noise appears in the output voltage of the heated oxygen sensor.

NEXT

4.	**PERFORM CONFIRMATION DRIVING PATTERN**

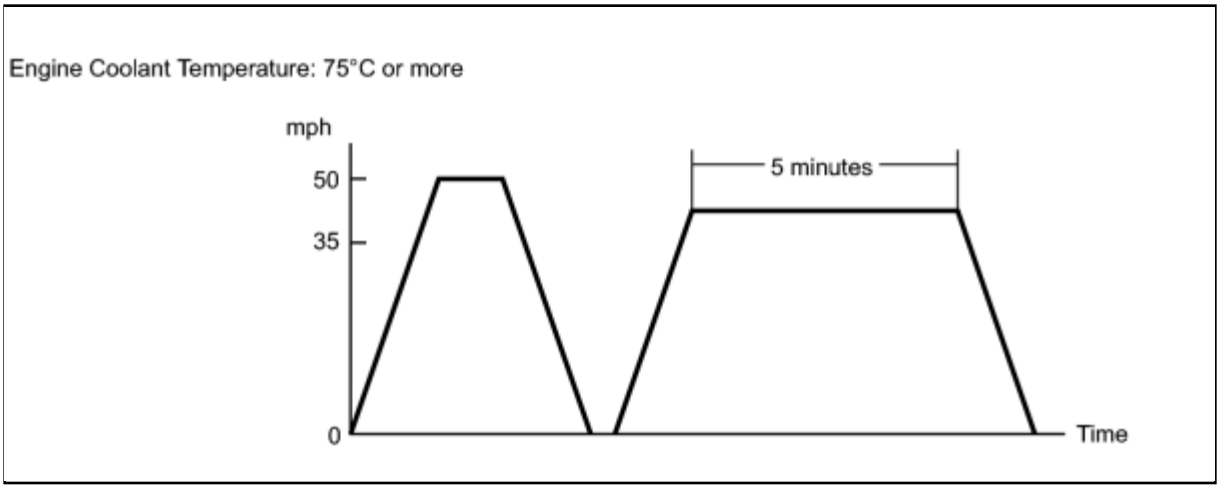

(a) Clear the DTC INFO .

(b) Connect the Techstream to the DLC3.

(c) Start the engine.

(d) Switch the ECM from normal mode to check mode.

(e) Warm up the engine until the engine coolant temperature is 75°C (167°F) or higher.

(f) Perform the driving pattern.

(1) Accelerate the vehicle to 50 mph (80 km/h) and stop the vehicle.

(2) Drive the vehicle between 38 and 50 mph (60 and 80 km/h) for 5 minutes.

(g) Enter the following menus: Powertrain / Engine / Trouble Codes.

(h) Read the DTCs.

Result:

RESULT	PROCEED TO

RESULT	PROCEED TO
P0136, P0137, P0138 and/or P0607	A
Only P0607	B
No DTC output	C

C ▶ **INSPECT ECM**

B ▶ **REPLACE ECM**

A

▼

5.	**INSPECT DTC (P0136, P0137 OR P0138)**

(a) Refer to the P0136, P0137 or P0138 flowchart.

HINT:

- If P0136 is output, troubleshoot for that DTC first INFO. Then proceed to "INSPECT ECM".
- If P0137 is output, troubleshoot for that DTC first INFO. Then proceed to "INSPECT ECM".
- If P0138 is output, troubleshoot for that DTC first INFO. Then proceed to "INSPECT ECM".
- If DTC P0607 and P0136, P0137 or P0138 are output, the output voltage of the heated oxygen sensor may remain close to 0 V or become high (around 1 V or higher).

NEXT

▼

6.	**INSPECT ECM**

(a) Clear the DTC INFO.

(b) Stop the engine and wait for 30 minutes.

(c) Connect the Techstream to the DLC3.

(d) Start the engine and allow it to idle for 2 minutes.

(e) Turn the Techstream on.

(f) Enter the following menus: Powertrain / Engine / Trouble Codes.

(g) Check the DTCs.

Result:

RESULT	PROCEED TO
DTC is not output	A
P0607 is output	B

B ▶ **REPLACE ECM**

A ▶ **END**

Last Modified: 3-10-2010	6.4 C	**From:** 200901
Model Year: 2010	**Model:** Corolla	**Doc ID:** RM000003242023X
Title: 2ZR-FE ENGINE CONTROL: SFI SYSTEM: P0606: ECM / PCM Processor (2010 Corolla)		

DTC	**P0606**	**ECM / PCM Processor**

MONITOR DESCRIPTION

The ECM continuously monitors its main and sub CPUs. This self-check ensures that the ECM is functioning properly. If outputs from the CPUs are different and deviate from the standards, the ECM will illuminate the MIL and set the DTC immediately.

DTC NO.	DTC DETECTION CONDITION	TROUBLE AREA
P0606	ECM main CPU error	ECM

MONITOR STRATEGY

Related DTC	P0606: ECM range check
Required sensors/Components (Main)	ECM
Required sensors/Components (Related)	-
Frequency of Operation	Continuous
Duration	16 seconds
MIL Operation	Immediate
Sequence of Operation	None

TYPICAL ENABLING CONDITIONS

Monitor runs whenever the following DTCs are not present	None

TYPICAL MALFUNCTION THRESHOLDS

CPU reset	Occurred

INSPECTION PROCEDURE

PROCEDURE

1.	**READ OUTPUT DTC (DTC P0606)**

(a) Connect the Techstream to the DLC3.

(b) Turn the ignition switch to on.

(c) Turn the Techstream on.

(d) Clear DTCs INFO .

(e) Turn the ignition switch off and turn the Techstream off.

(f) Disconnect the Techstream.

(g) Disconnect the cable from the battery negative (-) terminal and wait for 1 minute.

(h) Connect the cable to the battery negative (-) terminal.

(i) Connect the Techstream to the DLC3.

(j) Turn the ignition switch to ON.

(k) Turn the Techstream on.

(l) Enter the following menus: Powertrain / Engine and ECT / Trouble Codes.

(m) Read the DTCs.

Result:

RESULT	PROCEED TO
DTC is not output	A
DTC P0606 is output	B

B ▶ **REPLACE ECM**

A ▶ **CHECK FOR INTERMITTENT PROBLEMS**

Last Modified: 3-10-2010	6.4 C	**From:** 200901
Model Year: 2010	**Model:** Corolla	**Doc ID:** RM000002Z1R01ZX
Title: 2ZR-FE ENGINE CONTROL: SFI SYSTEM: P060A: Internal Control Module Monitoring Processor Performance (2010 Corolla)		

DTC	**P060A**	**Internal Control Module Monitoring Processor Performance**

MONITOR DESCRIPTION

The main CPU and sub CPU of the ECM communicate with between each other. The main CPU monitors the communications and WDC pulses from the sub CPU. When the signal malfunctions below deviate, the DTC is stored.

DTC NO.	DTC DETECTION CONDITION	TROUBLE AREA
P060A	ECM sub CPU error	ECM

MONITOR STRATEGY

Related DTCs	P060A: ECM CPU error
Required sensors/Components (Main)	ECM
Required sensors/Components (Related)	-
Frequency of operation	Continuous
Duration	16 seconds
MIL operation	Immediate
Sequence of operation	None

TYPICAL ENABLING CONDITIONS

CPU reset	Occurred

TYPICAL MALFUNCTION THRESHOLDS

When either condition below is met:	Condition 1 or 2
1. When all conditions below are met:	-
- CPU reset	1 time or more

- Learned throttle position - Learned accelerator pedal position	0.4 V or more
- Electronic throttle actuator	OFF
2. CPU reset	2 times or more

INSPECTION PROCEDURE

PROCEDURE

1.	**READ OUTPUT DTC (DTC P060A)**

(a) Connect the Techstream to the DLC3.

(b) Turn the ignition switch to ON.

(c) Turn the Techstream on.

(d) Clear DTC INFO .

(e) Turn the ignition switch off and turn the Techstream off.

(f) Disconnect the Techstream.

(g) Disconnect the cable from the battery negative (-) terminal and wait for 1 minute.

(h) Connect the cable to the battery negative (-) terminal.

(i) Connect the Techstream to the DLC3.

(j) Turn the ignition switch to ON.

(k) Turn the Techstream on.

(l) Enter the following menus: Powertrain / Engine and ECT / Trouble Codes.

(m) Read the DTCs.

Result:

RESULT	PROCEED TO
DTC is not output	A
DTC P060A is output	B

B ▶ **REPLACE ECM**

A ▶ **CHECK FOR INTERMITTENT PROBLEMS**

Last Modified: 3-10-2010	6.4 C	**From:** 200901
Model Year: 2010	**Model:** Corolla	**Doc ID:** RM000000TA00E1X
Title: 2ZR-FE ENGINE CONTROL: SFI SYSTEM: P0617: Starter Relay Circuit High (2010 Corolla)		

DTC	**P0617**	**Starter Relay Circuit High**

DESCRIPTION

While the engine is being cranked, battery voltage is applied to terminal STA of the ECM.

If the ECM detects the starter signal (STA signal) while the vehicle is being driven, it determines that there is a malfunction in the STA circuit. The ECM then illuminates the MIL and sets the DTC.

This monitor runs when the vehicle is driven at 12.4 mph (20 km/h) for over 20 seconds.

DTC NO.	DTC DETECTION CONDITION	TROUBLE AREA
P0617	When conditions (a), (b) and (c) are met, positive (+B) battery voltage 10.5 V or more applied to ECM for 20 seconds (1 trip detection logic): • (a) Vehicle speed more than 12.4 mph (20 km/h) • (b) Engine speed more than 1000 rpm • (c) STA signal ON	• Cranking holding function circuit • Park/neutral position switch*1 • Ignition switch*2 • ECM

- *1: Automatic transaxle models.
- *2: Manual transaxle models.

WIRING DIAGRAM

w/ Smart Key System:

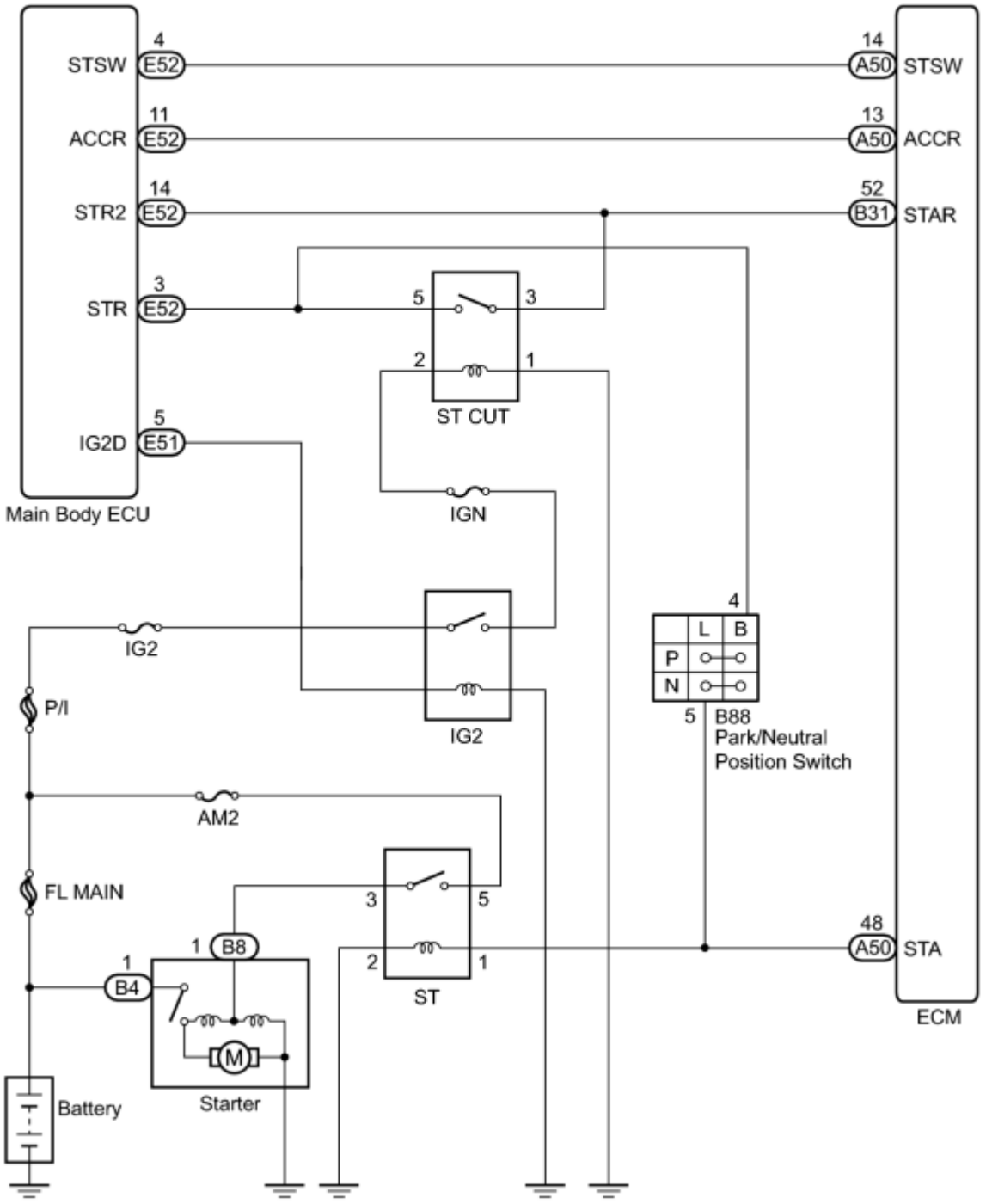

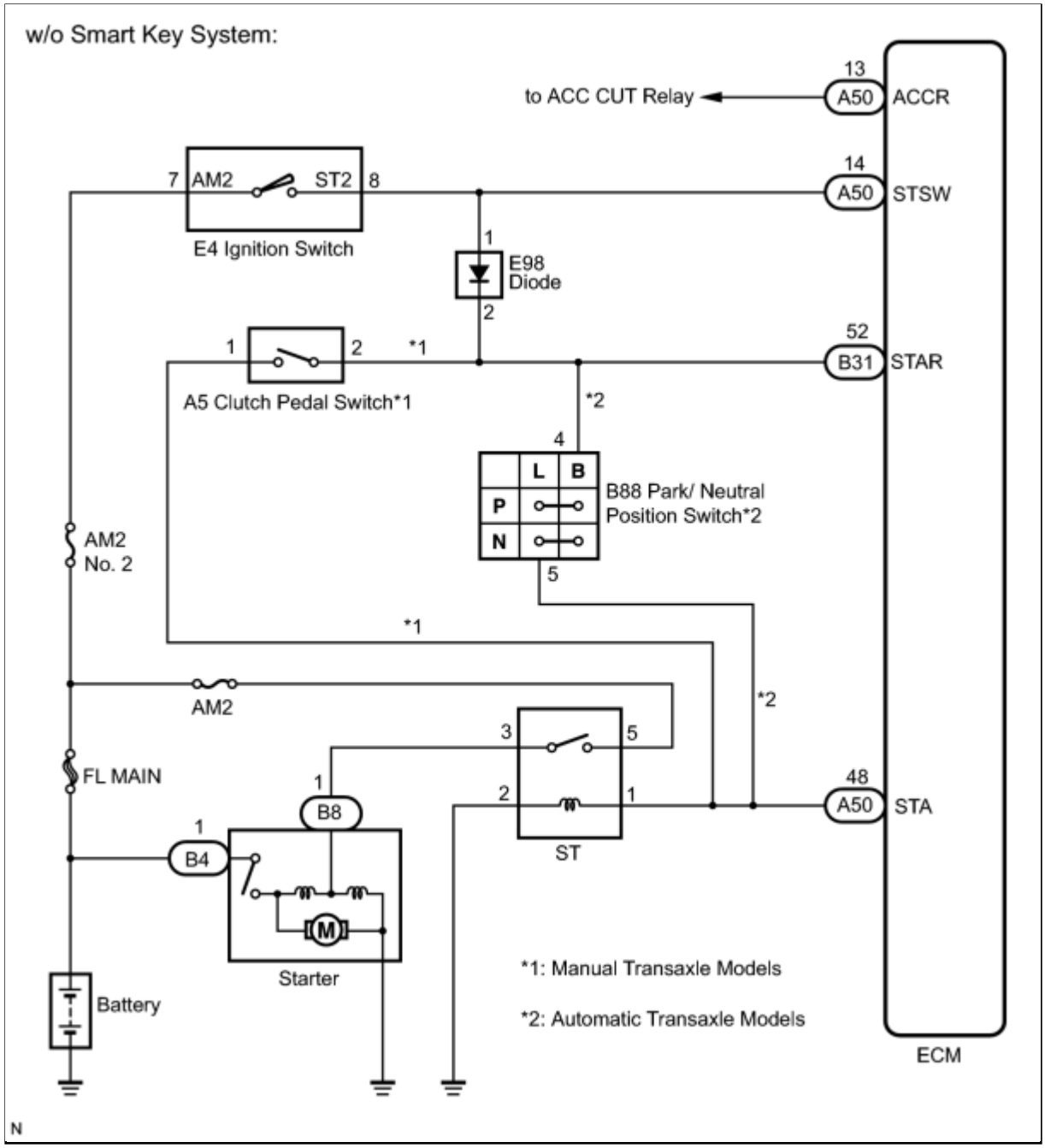

MONITOR STRATEGY

Related DTCs	P0617: Starter signal
Required Sensors/Components (Main)	ST relay Park/Neutral Position (PNP) switch Ignition switch
Required Sensors/Components (Related)	Vehicle speed sensor Crankshaft position sensor
Frequency of Operation	Continuous

Duration	20 seconds
MIL Operation	Immediate
Sequence of Operation	None

TYPICAL ENABLING CONDITIONS

Monitor runs whenever following DTCs not present	None
Battery voltage	10.5 V or more
Vehicle speed	20 km/h (12.4 mph)
Engine speed	1000 rpm or more

TYPICAL MALFUNCTION THRESHOLDS

Starter signal	ON

INSPECTION PROCEDURE

HINT:

Read freeze frame data using the Techstream. Freeze frame data record the engine condition when malfunctions are detected. When troubleshooting, freeze frame data can help determine if the vehicle was moving or stationary, if the engine was warmed up or not, if the air fuel ratio was lean or rich, and other data, from the time the malfunction occurred.

PROCEDURE

1.	**PERFORM ACTIVE TEST USING TECHSTREAM (STARTER SIGNAL)**

(a) Connect to the Techstream the DLC3.

(b) Turn the ignition switch to ON.

(c) Turn the Techstream on.

(d) Enter the following menus: Powertrain / Engine and ECT / Data List / Starter Signal.

(e) Read the value displayed on the Techstream when the ignition switch is turned to the ON and START positions.

OK:

IGNITION SWITCH POSITION	STARTER SIGNAL
Ignition switch ON	OFF
START	ON

Result:

RESULT	PROCEED TO
OK	A
NG (for Automatic transaxle models)	B
NG (for Manual transaxle models)	C

C ▶ **READ VALUE USING TECHSTREAM (STARTER SIGNAL)**

B ▶ **READ VALUE USING TECHSTREAM (STARTER SIGNAL)**

A ▶ **CHECK FOR INTERMITTENT PROBLEMS**

2.	READ VALUE USING TECHSTREAM (STARTER SIGNAL)

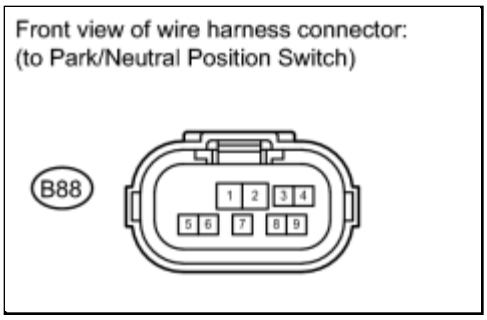

(a) Disconnect the park/neutral position switch connector.

(b) Connect the Techstream to the DLC3.

(c) Turn the ignition switch to ON.

(d) Turn the Techstream on.

(e) Enter the following menus: Powertrain / Engine and ECT / Data List / Starter Signal.

(f) Read the value displayed on the Techstream when the ignition switch is turned to ON.

Result:

STARTER SIGNAL	PROCEED TO
ON	A
OFF	B

(g) Reconnect the park/neutral position switch.

B ▶ **REPLACE PARK/NEUTRAL POSITION SWITCH**

A ▼

3.	**INSPECT ECM (STA TERMINAL VOLTAGE)**

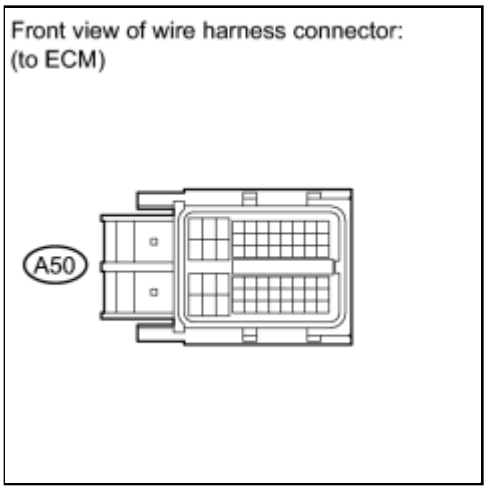

(a) Disconnect the ECM connector.

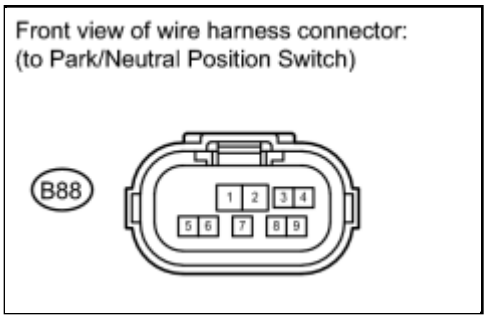

(b) Disconnect the park/neutral position switch connector.

(c) Turn the ignition switch to ON.

(d) Measure the voltage according to the value(s) in the table below.

Result:

TESTER CONNECTION	SWITCH CONDITION	SPECIFIED CONDITION	PROCEED TO
B88-5 - Body ground	Ignition switch ON	11 to 14 V	A
		Below 1.5 V	B

(e) Reconnect the park/neutral position switch connector.

(f) Reconnect the ECM connector.

B ▶ **REPLACE ECM**

A ▶ **REPAIR OR REPLACE HARNESS OR CONNECTOR (ECM - PARK/NEUTRAL POSITION SWITCH - ST RELAY)**

4.	READ VALUE USING TECHSTREAM (STARTER SIGNAL)

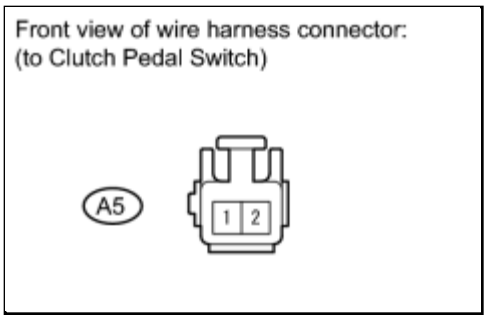

(a) Disconnect the clutch pedal switch connector.

(b) Connect the Techstream to the DLC3.

(c) Turn the ignition switch to ON.

(d) Turn the Techstream on.

(e) Enter the following menus: Powertrain / Engine and ECT / Data List / Starter Signal.

(f) Read the value displayed on the Techstream when the ignition switch is turned to ON.

Result:

STARTER SIGNAL	PROCEED TO
ON	A
OFF	B

(g) Reconnect the clutch pedal switch connector.

B ▶ **INSPECT IGNITION SWITCH ASSEMBLY**

A

5.	INSPECT ECM (STA TERMINAL VOLTAGE)

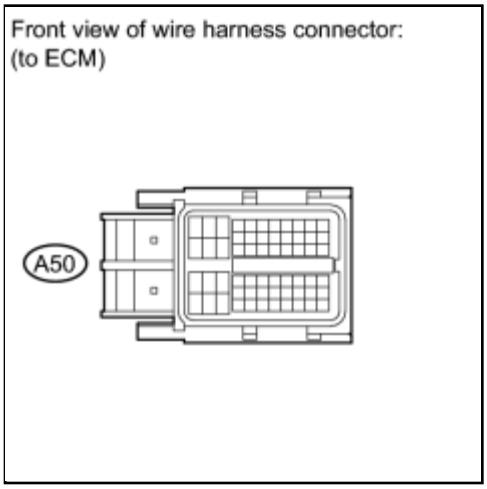

(a) Disconnect the ECM connector.

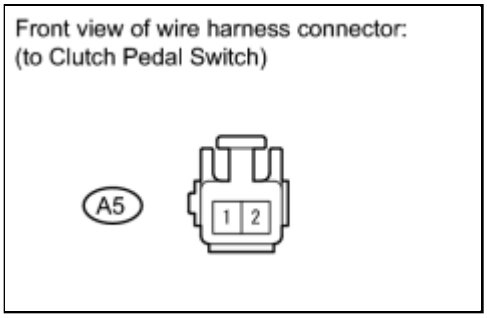

(b) Disconnect the clutch pedal switch connector.

(c) Turn the ignition switch to ON.

(d) Measure the voltage according to the value(s) in the table below.

Result:

TESTER CONNECTION	SWITCH CONDITION	SPECIFIED CONDITION	PROCEED TO
A5-1 - Body ground	Ignition switch ON	11 to 14 V	A
		Below 1.5 V	B

(e) Reconnect the clutch pedal switch connector.

(f) Reconnect the ECM connector.

B ▶ REPLACE ECM

A ▶ REPAIR OR REPLACE HARNESS OR CONNECTOR (ECM - CLUTCH PEDAL SWITCH - ST RELAY)

6.	INSPECT IGNITION SWITCH ASSEMBLY

(a) Inspect the ignition switch assembly INFO .

NG ▶ REPLACE IGNITION SWITCH ASSEMBLY

OK ▶ REPAIR OR REPLACE HARNESS OR CONNECTOR (CLUTCH PEDAL SWITCH - IGNITION SWITCH ASSEMBLY - ECM)

Last Modified: 3-10-2010	6.4 C	**From:** 200901
Model Year: 2010	**Model:** Corolla	**Doc ID:** RM000002Z1S03BX
Title: 2ZR-FE ENGINE CONTROL: SFI SYSTEM: P060D: Internal Control Module Accelerator Pedal Position Performance (2010 Corolla)		

DTC	**P060D**	**Internal Control Module Accelerator Pedal Position Performance**

MONITOR DESCRIPTION

The ECM monitors the input signals of the accelerator pedal position sensor No. 1. If the input signals and control signals deviate, the DTC is output.

DTC NO.	DTC DETECTION CONDITION	TROUBLE AREA
P060D	ECM main CPU error	ECM

MONITOR STRATEGY

Related DTCs	P060D: Internal control module, Accelerator pedal position
Required sensors/Components (Main)	ECM
Required sensors/Components (Related)	-
Frequency of operation	Continuous
Duration	1 second
MIL operation	Immediate
Sequence of operation	None

TYPICAL ENABLING CONDITIONS

None	-

TYPICAL MALFUNCTION THRESHOLDS

Difference of main accelerator pedal position and sub accelerator pedal position	0.3 V or more

INSPECTION PROCEDURE

PROCEDURE

1.	READ OUTPUT DTC (DTC P060D)

(a) Connect the Techstream to the DLC3.

(b) Turn the ignition switch to ON.

(c) Turn the Techstream on.

(d) Clear DTCs INFO .

(e) Turn the ignition switch off and turn the Techstream off.

(f) Disconnect the Techstream.

(g) Disconnect the cable from the battery negative (-) terminal and wait for 1 minute.

(h) Connect the cable to the battery negative (-) terminal.

(i) Connect the Techstream to the DLC3.

(j) Turn the ignition switch to ON.

(k) Turn the Techstream on.

(l) Enter the following menus: Powertrain / Engine and ECT / Trouble Codes.

(m) Read the DTCs.

Result:

RESULT	PROCEED TO
DTC is not output	A
DTC P060D is output	B

B ▶ **REPLACE ECM**

A ▶ **CHECK FOR INTERMITTENT PROBLEMS**

Last Modified: 3-10-2010	6.4 C	**From:** 200901
Model Year: 2010	**Model:** Corolla	**Doc ID:** RM000002Z1T01YX
Title: 2ZR-FE ENGINE CONTROL: SFI SYSTEM: P060E: Internal Control Module Throttle Position Performance (2010 Corolla)		

DTC	**P060E**	**Internal Control Module Throttle Position Performance**

MONITOR DESCRIPTION

The ECM monitors the input signals of the throttle position sensor No. 1 and stop light switch. When the ECM monitors the input signals of the throttle position sensor No. 1 and the STP signal of the stop light switch, if the input signals and control signals deviate, the DTC is stored.

DTC NO.	DTC DETECTION CONDITION	TROUBLE AREA
P060E	ECM main CPU error	ECM

MONITOR STRATEGY

Related DTCs	P060E: Internal control module, Throttle position
Required sensors/Components (Main)	ECM
Required sensors/Components (Related)	-
Frequency of operation	Continuous
Duration	1 second
MIL operation	Immediate
Sequence of operation	None

TYPICAL ENABLING CONDITIONS

Monitor runs whenever the following DTCs are not present	None
DMA communication error	Not detected

TYPICAL MALFUNCTION THRESHOLDS

When one of following conditions is met:	Condition 1 or 2
1. Difference of main throttle position and sub throttle position	0.3 V or more

2. Difference of main brake switch signal and sub brake switch signal	Different

INSPECTION PROCEDURE

PROCEDURE

1.	**READ OUTPUT DTC (DTC P060E)**

(a) Connect the Techstream to the DLC3.

(b) Turn the ignition switch to ON.

(c) Turn the Techstream on.

(d) Clear DTCs INFO .

(e) Turn the ignition switch off and turn the Techstream off.

(f) Disconnect the Techstream.

(g) Disconnect the cable from the battery negative (-) terminal and wait for 1 minute.

(h) Connect the cable to the battery negative (-) terminal.

(i) Connect the Techstream to the DLC3.

(j) Turn the ignition switch to ON.

(k) Turn the Techstream on.

(l) Enter the following menus: Powertrain / Engine and ECT / Trouble Codes.

(m) Read the DTCs.

Result:

RESULT	PROCEED TO
DTC is not output	A
DTC P060E is output	B

B ▶ **REPLACE ECM**

A ▶ **CHECK FOR INTERMITTENT PROBLEMS**

Last Modified: 3-10-2010	6.4 C	**From:** 200901
Model Year: 2010	**Model:** Corolla	**Doc ID:** RM000000PGD03LX
Title: 2ZR-FE ENGINE CONTROL: SFI SYSTEM: P0630: VIN not Programmed or Mismatch - ECM / PCM (2010 Corolla)		

DTC	**P0630**	**VIN not Programmed or Mismatch - ECM / PCM**

MONITOR DESCRIPTION

DTC P0630 is set when the Vehicle Identification Number (VIN) is not stored in the Engine Control Module (ECM) or the input VIN is not accurate. Input the VIN with the Techstream.

DTC NO.	DTC DETECTION CONDITION	TROUBLE AREA
P0630	When either condition below is met: • VIN not stored in ECM • Input VIN in ECM not accurate	ECM

MONITOR STRATEGY

Related DTCs	P0630: VIN not programmed
Required Sensors/Components (Main)	ECM
Required Sensors/Components (Related)	-
Frequency of Operation	Continuous
Duration	0.325 seconds
MIL Operation	Immediate
Sequence of Operation	None

TYPICAL ENABLING CONDITIONS

Battery voltage	8 V or more
Ignition switch	ON
Starter	OFF

TYPICAL MALFUNCTION THRESHOLDS

VIN code	Not programmed

COMPONENT OPERATING RANGE

VIN code	Programmed

INSPECTION PROCEDURE

PROCEDURE

1.	**CHECK ANY OTHER DTCS OUTPUT (IN ADDITION TO DTC P0630)**

(a) Connect the Techstream to the DLC3.

(b) Turn the ignition switch to ON.

(c) Turn the Techstream on.

(d) Enter the following menus: Powertrain / Engine and ECT / Trouble Codes.

(e) Read the DTCs.

Result:

RESULT	PROCEED TO
DTC P0630 is output	A
DTC P0630 and other DTCs are output	B

If any DTCs other than P0630 are output, troubleshoot those DTCs first.

NOTICE:

If P0630 is set, the VIN must be input to the ECM using the Techstream. However, all DTCs are cleared automatically by the Techstream when inputting the VIN. If DTCs other than P0630 are set, check them first.

B ▶ **GO TO DTC CHART**

A ▼

2.	**INPUT VIN**

(a) Input the VIN INFO .

Last Modified: 3-10-2010	6.4 C	**From:** 200901
Model Year: 2010	**Model:** Corolla	**Doc ID:** RM000002I3U04CX
Title: 2ZR-FE ENGINE CONTROL: SFI SYSTEM: P0657: Actuator Supply Voltage Circuit / Open (2010 Corolla)		

DTC	**P0657**	**Actuator Supply Voltage Circuit / Open**

MONITOR DESCRIPTION

The ECM monitors the output voltage to the throttle actuator. This self-check ensures that the ECM is functioning properly. The output voltage is usually 0 V when the ignition switch is turned off. If the output voltage is higher than 7 volts when the ignition switch is turned off, the ECM will illuminate the MIL and set the DTC the next time the ignition switch is turned to ON.

DTC NO.	DTC DETECTION CONDITION	TROUBLE AREA
P0657	Throttle actuator power supply error	ECM

MONITOR STRATEGY

Related DTCs	P0657: Electronic throttle control system power supply
Required sensors/Components (Main)	ECM
Required sensors/Components (Related)	Throttle actuator
Frequency of operation	Once per driving cycle
Duration	Within 1 second
MIL operation	Immediate
Sequence of operation	None

TYPICAL ENABLING CONDITIONS

Ignition switch	ON to off
Throttle actuator power supply	7 V or more

TYPICAL MALFUNCTION THRESHOLDS

None	-

INSPECTION PROCEDURE

HINT:

Read freeze frame data using the Techstream. The ECM records vehicle and driving condition information as freeze frame data the moment a DTC is stored. When troubleshooting, freeze frame data can be helpful in determining whether the vehicle was running or stopped, whether the engine was warmed up or not, whether the air fuel ratio was lean or rich, as well as other data recorded at the time of a malfunction.

PROCEDURE

1.	**READ OUTPUT DTC (DTC P0657)**

(a) Connect the Techstream to the DLC3.

(b) Turn the ignition switch to ON.

(c) Turn the Techstream on.

(d) Clear DTCs INFO .

(e) Turn the ignition switch off and turn the Techstream off.

(f) Disconnect the Techstream.

(g) Disconnect the cable from the battery negative (-) terminal and wait for 1 minute.

(h) Connect the cable to the battery negative (-) terminal.

(i) Turn the ignition switch to ON for 10 seconds.

(j) Turn the ignition switch off.

(k) Connect the Techstream to the DLC3.

(l) Turn the ignition switch to ON.

(m) Turn the Techstream on.

(n) Enter the following menus: Powertrain / Engine and ECT / Trouble Codes.

(o) Read the DTCs.

Result:

RESULT	PROCEED TO
DTC is not output	A
DTC P0657 is output	B

B ▶ REPLACE ECM

A CHECK FOR INTERMITTENT PROBLEMS

Last Modified: 3-10-2010	6.4 C	**From:** 200901
Model Year: 2010	**Model:** Corolla	**Doc ID:** RM000001DN902VX
Title: 2ZR-FE ENGINE CONTROL: SFI SYSTEM: P0724: Brake Switch "B" Circuit High (2010 Corolla)		

DTC	**P0724**	**Brake Switch "B" Circuit High**

DESCRIPTION

The purpose of this circuit is to prevent the engine from stalling when brakes are suddenly applied while driving with the lock-up torque converter clutch on.

When the brake pedal is depressed, this switch sends a signal to the ECM. Then the ECM cancels the operation of the lock-up clutch while braking is in progress.

DTC NO.	DTC DETECTION CONDITION	TROUBLE AREA
P0724	Stop light switch remains ON even when vehicle repeats 5 cycles of STOP (less than 1.86 mph [3 km/h]) and GO (18.65 mph [30 km/h] or more) (2 trip detection logic)	• Short in stop light switch signal circuit • Stop light switch • ECM

MONITOR DESCRIPTION

This DTC indicates that the stop light switch remains ON. When the stop light switch remains ON during "stop and go" driving, the ECM interprets this as a fault in the stop light switch and the MIL comes on and the ECM stores the DTC. The vehicle must stop (less than 1.86 mph [3 km/h]) and go (18.65 mph [30 km/h] or more) 5 times during 2 driving cycles, in order to detect a malfunction.

MONITOR STRATEGY

Related DTCs	P0724: Stop light switch/Range check/Rationality
Required sensors/Components (Main)	Stop light switch
Required sensors/Components (Related)	Speed sensor
Frequency of Operation	Continuous
Duration	5 times
MIL Operation	2 driving cycles
Sequence of Operation	None

TYPICAL ENABLING CONDITIONS

The stop light switch remains ON during GO and STOP 5 times.

GO and STOP are defined as follows

Monitor runs whenever following DTCs not present	None
GO: Vehicle speed	30 km/h (18.65 mph) or more
STOP: Vehicle speed	Less than 3 km/h (1.86 mph)

TYPICAL MALFUNCTION THRESHOLDS

Stop light switch status	Stuck ON

WIRING DIAGRAM

Refer to DTC P0504 INFO .

INSPECTION PROCEDURE

HINT:

Read freeze frame data using the Techstream. The ECM records vehicle and driving condition information as freeze frame data the moment a DTC is stored. When troubleshooting, freeze frame data can be helpful in determining whether the vehicle was running or stopped, whether the engine was warmed up or not, whether the air fuel ratio was lean or rich, as well as other data recorded at the time of a malfunction.

PROCEDURE

1.	**READ VALUE USING TECHSTREAM (STOP LIGHT SWITCH)**

(a) Connect the Techstream to the DLC3.

(b) Turn the ignition switch to ON.

(c) Turn the Techstream on.

(d) Enter the following menus: Powertrain / Engine and ECT / Data List / Stop Light Switch.

(e) Read the values displayed on the Techstream.

Result:

ITEM	MEASUREMENT ITEM: RANGE (DISPLAY)	NORMAL CONDITION

ITEM	MEASUREMENT ITEM: RANGE (DISPLAY)	NORMAL CONDITION
Stop Light Switch	Stop light switch status: ON or OFF	• ON: Brake pedal is depressed • OFF: Brake pedal is released

NG ▶ **INSPECT STOP LIGHT SWITCH**

OK ▶ **CHECK FOR INTERMITTENT PROBLEMS**

2.	**INSPECT STOP LIGHT SWITCH** INFO

NG ▶ **REPLACE STOP LIGHT SWITCH**

OK ▼

3.	**CHECK HARNESS AND CONNECTOR (STOP LIGHT SWITCH - ECM)**

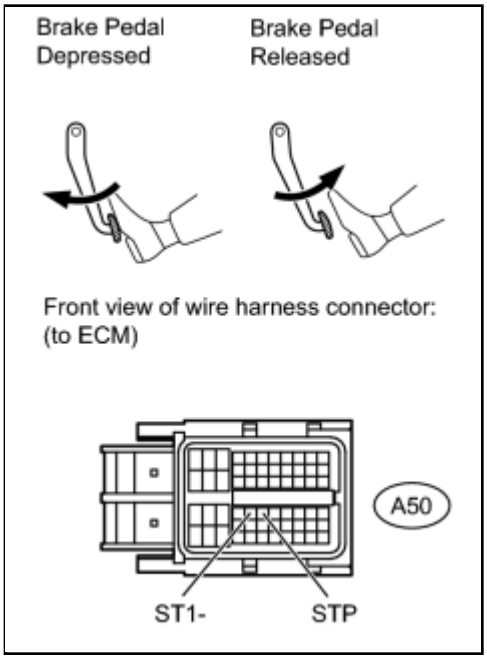

(a) Disconnect the ECM connector.

(b) Turn the ignition switch to ON.

(c) Measure the voltage according to the value(s) in the table below.

Standard Voltage:

TESTER CONNECTION	CONDITION	SPECIFIED CONDITION
A50-35 (ST1-) - Body ground	Brake pedal released	11 to 14 V
	Brake pedal depressed	0 to 3 V
A50-36 (STP) - Body ground	Brake pedal released	0 to 3 V

TESTER CONNECTION	CONDITION	SPECIFIED CONDITION
	Brake pedal depressed	11 to 14 V

(d) Reconnect the ECM connector.

NG ▶ **REPAIR OR REPLACE HARNESS OR CONNECTOR (STOP LIGHT SWITCH - ECM)**

OK ▶ **REPLACE ECM**

Last Modified: 3-10-2010	6.4 C	**From:** 200901
Model Year: 2010	**Model:** Corolla	**Doc ID:** RM000000PFU0ACX
Title: 2ZR-FE ENGINE CONTROL: SFI SYSTEM: P2102,P2103: Throttle Actuator Control Motor Circuit Low (2010 Corolla)		

DTC	**P2102**	**Throttle Actuator Control Motor Circuit Low**

DTC	**P2103**	**Throttle Actuator Control Motor Circuit High**

DESCRIPTION

The throttle actuator is operated by the ECM and opens and closes the throttle valve using an electric motor and gears.

The opening angle of the throttle valve is detected by the throttle position sensor, which is mounted on the throttle body. The throttle position sensor provides feedback to the ECM. This feedback allows the ECM to appropriately control the throttle actuator and monitor the throttle opening angle as the ECM responds to driver inputs.

HINT:

This electronic throttle control system does not use a throttle cable.

DTC NO.	DTC DETECTION CONDITION	TROUBLE AREA
P2102	Conditions (a) and (b) continue for 2 seconds (1 trip detection logic): (a) Throttle actuator duty ratio 80% or more (b) Throttle actuator current less than 0.5 A	• Open in throttle actuator circuit • Throttle actuator • ECM
P2103	Either of following conditions is met (1 trip detection logic): • Hybrid IC diagnosis signal fail • Hybrid IC current limiter port fail	• Short in throttle actuator circuit • Throttle actuator • Throttle valve • Throttle body • ECM

MONITOR DESCRIPTION

The ECM monitors the electrical current through the electronic actuator, and detects malfunctions and

open circuits in the throttle actuator based on the current value. If the current is outside the standard range, the ECM determines that there is a malfunction in the throttle actuator. In addition, if the throttle valve does not function properly (for example, stuck on), the ECM determines that there is a malfunction. The ECM then illuminates the MIL and sets a DTC.

Example:

When the electrical current is less than 0.5 A and the throttle actuator duty ratio exceeds 80%, the ECM interprets this as the current being outside the standard range, illuminates the MIL and sets a DTC.

If the malfunction is not repaired successfully, a DTC is set when the engine is quickly revved to a high rpm several times after the engine has idled for 5 seconds after starting the engine.

MONITOR STRATEGY

Related DTCs	P2102: Throttle actuator current (low current) P2103: Throttle actuator current (high current)
Required Sensors/Components (Main)	Throttle actuator (throttle body)
Required Sensors/Components (Related)	None
Frequency of Operation	Continuous
Duration	P2102: 2 seconds P2103: 0.6 seconds
MIL Operation	Immediate
Sequence of Operation	None

TYPICAL ENABLING CONDITIONS

Monitor runs whenever following DTCs are not present	None

P2102:

Throttle actuator	ON
Duty-cycle ratio to open throttle actuator	80% or more
Throttle actuator power supply	8 V or more
Motor current change during latest 0.016 seconds	Less than 0.2 A

P2103:

Throttle actuator	ON
Either of the following conditions 1 or 2 is met:	-
1. Throttle actuator power supply	8 V or more

2. Throttle actuator power	ON
Battery voltage	8 V or more
Starter	OFF

TYPICAL MALFUNCTION THRESHOLDS

P2102:

Throttle actuator current	Less than 0.5 A

P2103:

Either of following conditions is met:	A or B
A. Hybrid IC diagnosis signal	Fail
B. Hybrid IC current limiter port	Fail

CONFIRMATION DRIVING PATTERN

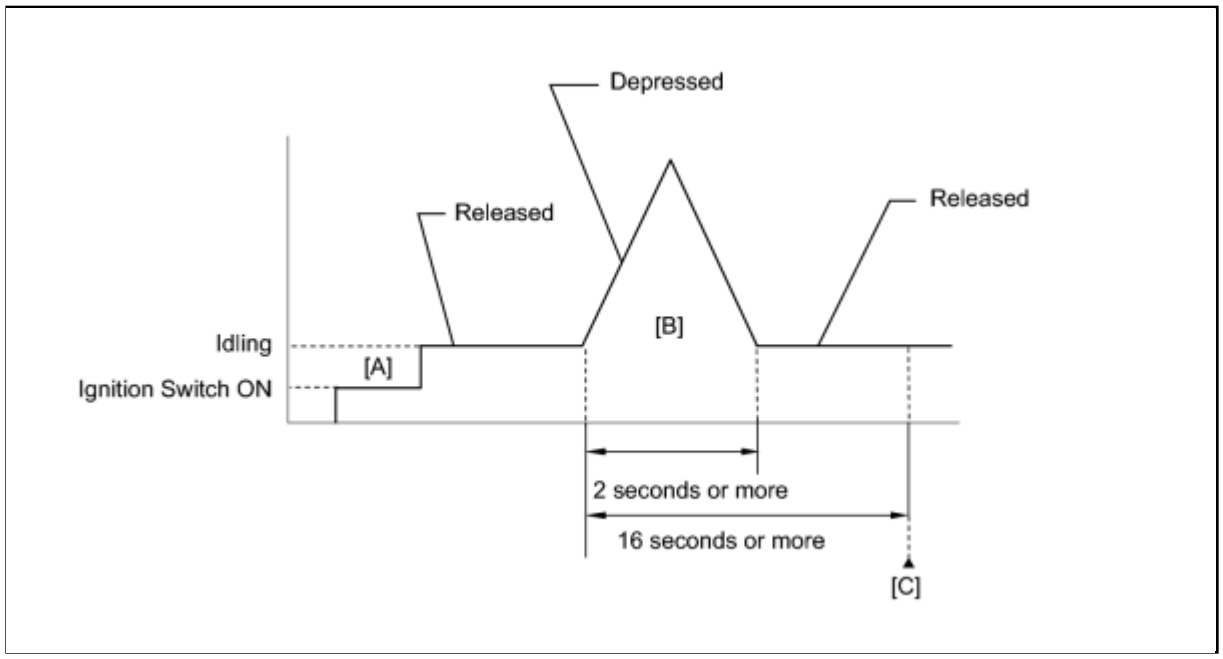

1. Connect the Techstream to the DLC3.
2. Turn the ignition switch to ON and turn the Techstream on.
3. Clear the DTCs (even if no DTCs are stored, perform the clear DTC procedure) INFO .
4. Turn the ignition switch off.
5. Turn the ignition switch to ON and turn the Techstream on [A].
6. Start the engine.
7. With the vehicle stationary, fully depress the accelerator pedal and quickly release it [B].
8. Check that 16 seconds or more have elapsed from the instant when the accelerator pedal is

first depressed.

9. Enter the following menus: Powertrain / Engine / Utility / All Readiness.
10. Input the DTC: P2102 or P2103.
11. Check the DTC judgment result [C].

TECHSTREAM DISPLAY	DESCRIPTION
NORMAL	○ DTC judgment completed ○ System normal
ABNORMAL	○ DTC judgment completed ○ System abnormal
INCOMPLETE	○ DTC judgment not completed ○ Perform driving pattern after confirming DTC enabling conditions
UNKNOWN	○ Unable to perform DTC judgment ○ Number of DTCs which do not fulfill DTC preconditions has reached ECU memory limit

HINT:

- If the judgment result shows ABNORMAL, the system has a malfunction.
- If the judgment result shows INCOMPLETE or UNKNOWN, perform steps [B] through [C] again.

12. If the test result is UNKNOWN, enter the following menus: Powertrain / Engine / Trouble Codes / Pending.
13. Read Pending DTCs.

HINT:

If a pending DTC is output, the system is malfunctioning.

14. If the test result is INCOMPLETE or UNKNOWN and no pending DTC is output, perform a universal trip and check for permanent DTCs INFO .

HINT:

- If a permanent DTC is output, the system is malfunctioning.
- If no permanent DTC is output, the system is normal.

FAIL-SAFE

When either of these DTCs, as well as other DTCs relating to electronic throttle control system malfunctions, is set, the ECM enters fail-safe mode. During fail-safe mode, the ECM cuts the current to the throttle actuator, and the throttle valve is returned to a 6° throttle angle by the return spring. The ECM then adjusts the engine output by controlling the fuel injection (intermittent fuel-cut) and ignition timing, in accordance with the accelerator pedal opening angle, to allow the vehicle to continue running at a minimal speed. If the accelerator pedal is depressed gently, the vehicle can be driven slowly.

Fail-safe mode continues until a pass condition is detected, and the ignition switch is then turned off.

WIRING DIAGRAM

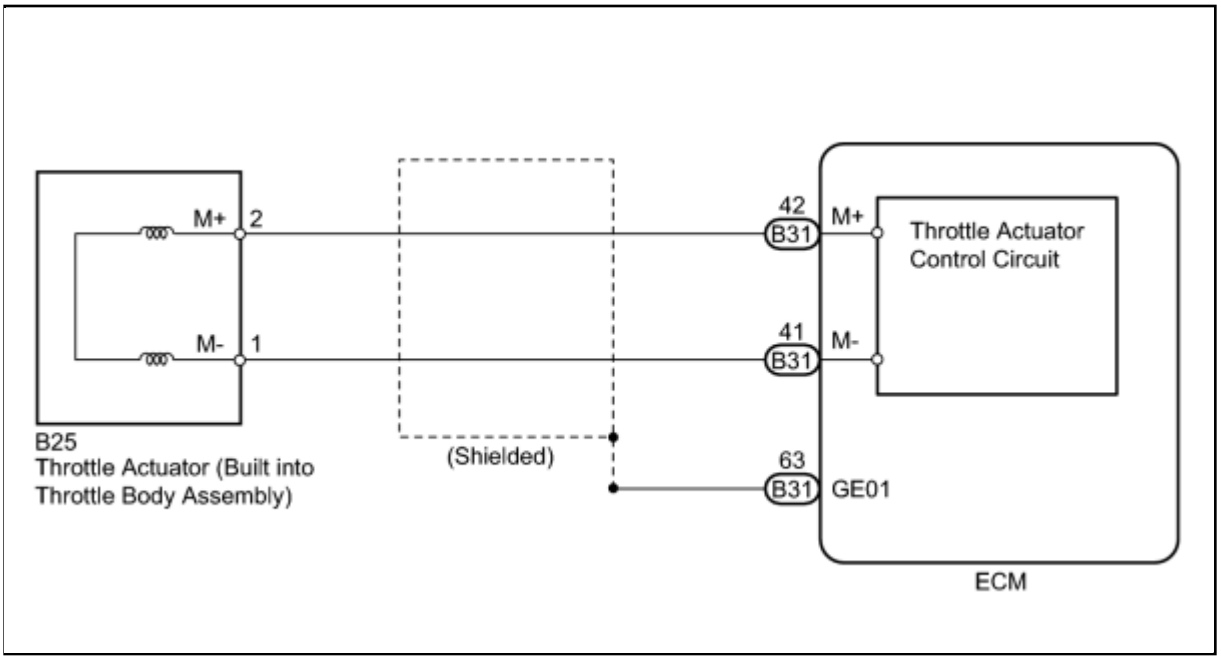

INSPECTION PROCEDURE

HINT:

- Read freeze frame data using the Techstream. The ECM records vehicle and driving condition information as freeze frame data the moment a DTC is stored. When troubleshooting, freeze frame data can be helpful in determining whether the vehicle was running or stopped, whether the engine was warmed up or not, whether the air fuel ratio was lean or rich, as well as other data recorded at the time of a malfunction.
- The throttle actuator current [Throttle Motor Current] and the throttle actuator duty ratio Throttle Motor Open Duty / Throttle Motor Close Duty can be read using the Techstream. However, the ECM shuts off the throttle actuator current when the electronic throttle control system malfunctions.

PROCEDURE

1.	**INSPECT THROTTLE BODY ASSEMBLY (RESISTANCE OF THROTTLE ACTUATOR)**

(a) Disconnect the throttle body assembly connector.

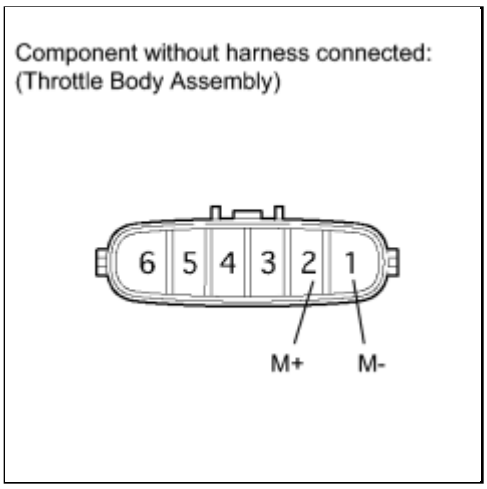

(b) Measure the resistance according to the value(s) in the table below.

Standard Resistance:

TESTER CONNECTION	CONDITION	SPECIFIED CONDITION
2 (M+) - 1 (M-)	20°C (68°F)	0.3 to 100 Ω

(c) Reconnect the throttle body assembly connector.

NG ▶ **REPLACE THROTTLE BODY ASSEMBLY**

OK ▼

2.	**CHECK HARNESS AND CONNECTOR (THROTTLE BODY - ECM)**

(a) Disconnect the throttle body connector.

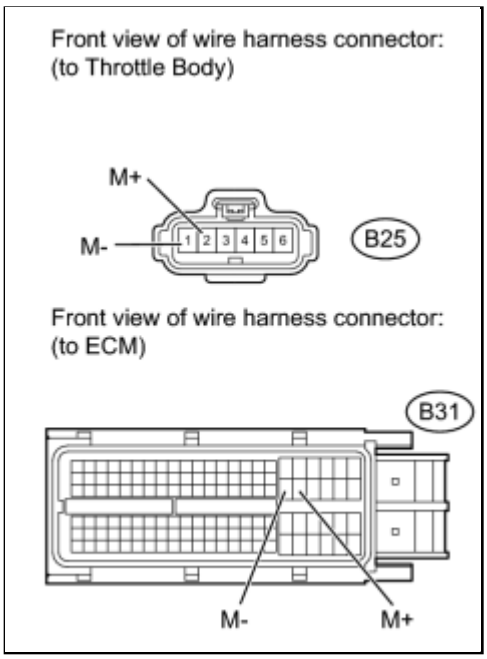

(b) Disconnect the ECM connector.

(c) Measure the resistance according to the value(s) in the table below.

Standard Resistance (Check for Open):

TESTER CONNECTION	CONDITION	SPECIFIED CONDITION
B25-2 (M+) - B31-42 (M+)	Always	Below 1 Ω
B25-1 (M-) - B31-41 (M-)	Always	Below 1 Ω

Standard Resistance (Check for Short):

TESTER CONNECTION	CONDITION	SPECIFIED CONDITION
B25-2 (M+) or B31-42 (M+) - Body ground	Always	10 kΩ or higher
B25-1 (M-) or B31-41 (M-) - Body ground	Always	10 kΩ or higher

(d) Reconnect the ECM connector.

(e) Reconnect the throttle body connector.

NG ▶ **REPAIR OR REPLACE HARNESS OR CONNECTOR (THROTTLE BODY - ECM)**

OK ▼

3.	INSPECT THROTTLE BODY ASSEMBLY (VISUALLY CHECK THROTTLE VALVE)

(a) Check for foreign objects between the throttle valve and the housing.

OK:

No foreign objects between throttle valve and housing.

NG ▶ **REMOVE FOREIGN OBJECT AND CLEAN THROTTLE BODY ASSEMBLY**

OK ▼

4.	INSPECT THROTTLE BODY ASSEMBLY (THROTTLE VALVE)

(a) Check if the throttle valve opens and closes smoothly.

OK:

Throttle valve opens and closes smoothly.

NG ▶ **REPLACE THROTTLE BODY ASSEMBLY**

OK ▶ **REPLACE ECM**

Last Modified: 3-10-2010	6.4 C	**From:** 200901
Model Year: 2010	**Model:** Corolla	**Doc ID:** RM00000324401QX
Title: 2ZR-FE ENGINE CONTROL: SFI SYSTEM: P1607: Cruise Control Input Processor (2010 Corolla)		

DTC	**P1607**	**Cruise Control Input Processor**

MONITOR DESCRIPTION

The ECM continuously monitors its main and sub CPUs for the cruise control. This self-check ensures that the ECM is functioning properly. If outputs from the CPUs are different and deviate from the standards, the ECM will illuminate the MIL and set the DTC immediately.

DTC NO.	DTC DETECTION CONDITION	TROUBLE AREA
P1607	ECM internal error	ECM

MONITOR STRATEGY

Related DTC	P1607: Internal control module range check
Required sensors/Components (Main)	ECM
Required sensors/Components (Related)	Cruise control
Frequency of Operation	Continuous
Duration	0.3 seconds
MIL Operation	Immediate
Sequence of Operation	None

TYPICAL ENABLING CONDITIONS

Monitor runs whenever the following DTCs are not present	None

TYPICAL MALFUNCTION THRESHOLDS

Cruise control	Forbiddance
When either condition below is met:	-

• Cruise control	Operating
• Low speed control	Operating

INSPECTION PROCEDURE

PROCEDURE

1.	**READ OUTPUT DTC (DTC P1607)**

(a) Connect the Techstream to the DLC3.

(b) Turn the ignition switch to ON.

(c) Turn the Techstream on.

(d) Clear DTCs INFO .

(e) Turn the ignition switch off and turn the Techstream off.

(f) Disconnect the Techstream.

(g) Disconnect the cable from the battery negative (-) terminal and wait for 1 minute.

(h) Connect the cable to the battery negative (-) terminal.

(i) Connect the Techstream to the DLC3.

(j) Turn the ignition switch to ON.

(k) Turn the Techstream on.

(l) Enter the following menus: Powertrain / Engine and ECT / Trouble Codes.

(m) Read the DTCs.

Result:

RESULT	PROCEED TO
DTC is not output	A
DTC P1607 is output	B

B ▶ **REPLACE ECM**

A ▶ **CHECK FOR INTERMITTENT PROBLEMS**

Last Modified: 3-10-2010	6.4 C	**From:** 200901
Model Year: 2010	**Model:** Corolla	**Doc ID:** RM000000PFV0B6X
Title: 2ZR-FE ENGINE CONTROL: SFI SYSTEM: P2111,P2112: Throttle Actuator Control System - Stuck Open (2010 Corolla)		

DTC	**P2111**	**Throttle Actuator Control System - Stuck Open**

DTC	**P2112**	**Throttle Actuator Control System - Stuck Closed**

DESCRIPTION

The throttle actuator is operated by the ECM, and opens and closes the throttle valve using an electric motor and gears. The opening angle of the throttle valve is detected by the throttle position sensor, which is mounted on the throttle body. The throttle position sensor provides feedback to the ECM. This feedback allows the ECM to appropriately control the throttle actuator and monitor the throttle opening angle as the ECM responds to driver inputs.

HINT:

This electronic throttle control system does not use a throttle cable.

DTC NO.	DTC DETECTION CONDITION	TROUBLE AREA
P2111	ECM signals throttle actuator to close, but stuck open (1 trip detection logic)	• Throttle actuator • Throttle body • Throttle valve • ECM
P2112	ECM signals throttle actuator to open, but stuck closed (1 trip detection logic)	• Throttle actuator • Throttle body • Throttle valve • ECM

MONITOR DESCRIPTION

The ECM determines that there is a malfunction in the electronic throttle control system when the throttle valve remains at a fixed angle despite a high drive current from the ECM. The ECM illuminates the MIL and sets a DTC.

If the malfunction is not repaired successfully, the DTC can be set when the accelerator pedal is fully depressed and released quickly (to fully open and close the throttle valve) after the subsequent engine is next start.

MONITOR STRATEGY

Related DTCs	P2111: Throttle actuator stuck open P2112: Throttle actuator stuck closed
Required Sensors/Components (Main)	Throttle actuator (throttle body)
Required Sensors/Components (Related)	-
Frequency of Operation	Continuous
Duration	0.5 seconds
MIL Operation	Immediate
Sequence of Operation	None

TYPICAL ENABLING CONDITIONS

All

Monitor runs whenever following DTCs are not present	None

P2111 (Throttle Actuator Stuck Open)

All of following conditions are met:	-
System guard* judge condition	ON
Throttle actuator current	2 A or more
Duty cycle to close throttle	80% or more

P2112 (Throttle Actuator Stuck Closed)

All of following conditions are met:	-
System guard* judge condition	ON
Throttle actuator current	2 A or more
Duty cycle to open throttle	80% or more

*System guard set when following conditions are met:	-
Throttle actuator	ON
Throttle actuator duty calculation	Executing
Throttle position sensor fail	Not detected
Throttle actuator current-cut operation	Not executing
Throttle actuator power supply	5.5 V or more
Throttle actuator fail	Not detected

TYPICAL MALFUNCTION THRESHOLDS

P2111 (Throttle Actuator Stuck Open)

Throttle position sensor voltage change for 0.016 seconds	Less than 0.1 V for 0.5 seconds or more

P2112 (Throttle Actuator Stuck Closed)

Throttle position sensor voltage change for 0.016 seconds	Less than 0.1 V for 0.5 seconds or more

CONFIRMATION DRIVING PATTERN

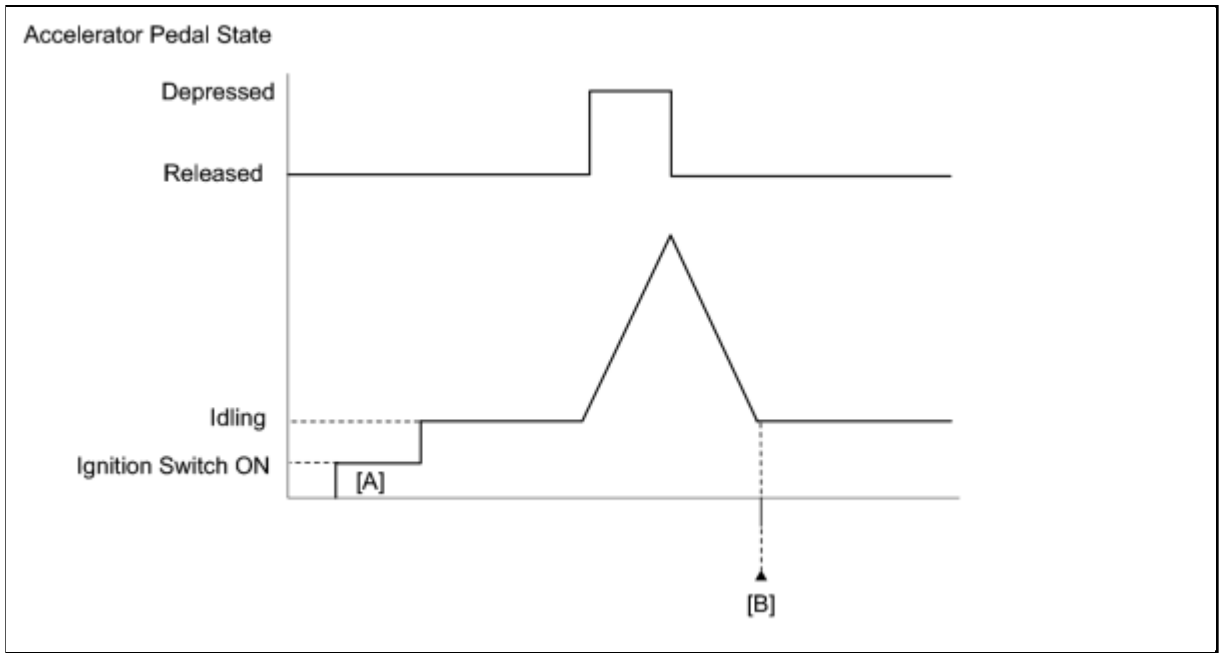

1. Connect the Techstream to the DLC3.
2. Turn the ignition switch to ON and turn the Techstream on.
3. Clear the DTCs (even if no DTCs are stored, perform the clear DTC procedure) INFO .
4. Turn the ignition switch off.
5. Turn the ignition switch to ON and turn the Techstream on [A].
6. Start the engine and fully depress and release the accelerator pedal quickly (to fully open and close the throttle valve).
7. Enter the following menus: Powertrain / Engine / Utility / All Readiness.
8. Input the DTC: P2111 or P2112.
9. Check the DTC judgment result [B].

TECHSTREAM DISPLAY	DESCRIPTION
NORMAL	○ DTC judgment completed ○ System normal

TECHSTREAM DISPLAY	DESCRIPTION
ABNORMAL	○ DTC judgment completed ○ System abnormal
INCOMPLETE	○ DTC judgment not completed ○ Perform driving pattern after confirming DTC enabling conditions
UNKNOWN	○ Unable to perform DTC judgment ○ Number of DTCs which do not fulfill DTC preconditions has reached ECU's memory limit

HINT:

If the judgment result shows ABNORMAL, the system has a malfunction.

10. If the test result is UNKNOWN, enter the following menus: Powertrain / Engine / Trouble Codes / Pending.
11. Read Pending DTCs.

HINT:

If a pending DTC is output, the system is malfunctioning.

12. If the test result is INCOMPLETE or UNKNOWN and no pending DTC is output, perform a universal trip and check for permanent DTCs INFO .

HINT:

- If a permanent DTC is output, the system is malfunctioning.
- If no permanent DTC is output, the system is normal.

FAIL-SAFE

When either of these DTCs, as well as other DTCs relating to electronic throttle control system malfunctions, is set, the ECM enters fail-safe mode. During fail-safe mode, the ECM cuts the current to the throttle actuator, and the throttle valve is returned to a 6° throttle angle by the return spring. The ECM then adjusts the engine output by controlling the fuel injection (intermittent fuel-cut) and ignition timing, in accordance with the accelerator pedal opening angle, to allow the vehicle to continue running at a minimal speed. If the accelerator pedal is depressed gently, the vehicle can be driven slowly.

Fail-safe mode continues until a pass condition is detected, and the ignition switch is then turned off.

WIRING DIAGRAM

Refer to DTC P2102 INFO .

INSPECTION PROCEDURE

HINT:

Read freeze frame data using the Techstream. The ECM records vehicle and driving condition information as freeze frame data the moment a DTC is stored. When troubleshooting, freeze frame data can be helpful in determining whether the vehicle was running or stopped, whether the engine was warmed up or not, whether the air fuel ratio was lean or rich, as well as other data recorded at the time of a malfunction.

PROCEDURE

1.	**INSPECT THROTTLE BODY ASSEMBLY (VISUALLY CHECK THROTTLE VALVE)**

(a) Check for contamination such as carbon between the throttle valve and the housing. If necessary, clean the throttle body. After cleaning check that the throttle valve moves smoothly.

OK:

Throttle valve is not contaminated with foreign objects and moves smoothly.

NG ▶ **REPLACE THROTTLE BODY ASSEMBLY**

OK ▼

2.	**CHECK WHETHER DTC OUTPUT RECURS (DTC P2111 OR P2112)**

(a) Connect the Techstream to the DLC3.

(b) Turn the ignition switch to ON.

(c) Turn the Techstream on.

(d) Clear DTCs INFO .

(e) Start the engine, and fully depress and release the accelerator pedal quickly (to fully open and close the throttle valve).

(f) Enter the following menus: Powertrain / Engine and ECT / Trouble Codes.

(g) Read the DTCs.

Result:

RESULT	PROCEED TO
DTC is not output	A
DTC P2111 or P2112 is output	B

B ▶ REPLACE ECM

A ▶ CHECK FOR INTERMITTENT PROBLEMS

Last Modified: 3-10-2010	6.4 J	**From:** 200901
Model Year: 2010	**Model:** Corolla	**Doc ID:** RM000000YEQ050X
Title: 2ZR-FE ENGINE CONTROL: SFI SYSTEM: EVAP System (2010 Corolla)		

EVAP System

RELATED DTCS

DTC	MONITORING ITEM	SEE PAGE
P043E	Reference orifice clogged (built into canister pump module)	INFO
P043F	Reference orifice high-flow (built into canister pump module)	
P0441	• Purge VSV (Vacuum Switching Valve) stuck closed • Purge VSV stuck open • Purge flow	INFO
P0451	• Canister pressure sensor (built into canister pump module) noise • Canister pressure sensor (built into canister pump module) signal becomes fixed/flat	INFO
P0452	Canister pressure sensor (built into canister pump module) voltage low	
P0453	Canister pressure sensor (built into canister pump module) voltage high	
P0455	EVAP gross leak	INFO
P0456	EVAP small leak	
P2401	Leak detection pump stuck OFF (built into canister pump module)	INFO
P2402	Leak detection pump stuck ON (built into canister pump module)	
P2419	Vent valve stuck closed (built into canister pump module)	INFO
P2420	Vent valve stuck open (vent) (built into canister pump module)	INFO
P2610	Soak timer (built into ECM)	INFO

If any EVAP system DTCs are set, the malfunctioning area can be determined using the table below.

DTC / Malfunctioning Area	P043E P043F	P0441	P0451	P0452	P0453	P0455	P0456	P2401 P2402	P2419	P2420
Reference orifice clogged	●							●	●	
Reference orifice high-flow	●							●	●	
Purge VSV stuck open		●				●				
Purge VSV stuck closed		●								
Canister pressure sensor stuck			●							
Canister pressure sensor noise			●							
Pressure sensor low output				●						
Pressure sensor high output					●					
Gross leak		●				●				
Small leak							●			
Leak detection pump stuck OFF	●							●	●	
Leak detection pump stuck ON	●							●	●	
Vent valve stuck closed	●							●	●	
Vent valve stuck open (vent)										●

Y

NOTICE:

If the reference pressure difference between the first and second checks is greater than the specification, all the DTCs relating to the reference pressure (P043E, P043F, P2401, P2402 and P2419) are stored.

DESCRIPTION

HINT:

Unit expressions

- [kPa-a (mmHg-a)] denotes absolute pressure.
- [kPa-g (mmHg-g)] denotes gauge pressure (relative pressure).
- On the Techstream, choose the unit of measurement according to the inspection procedure.

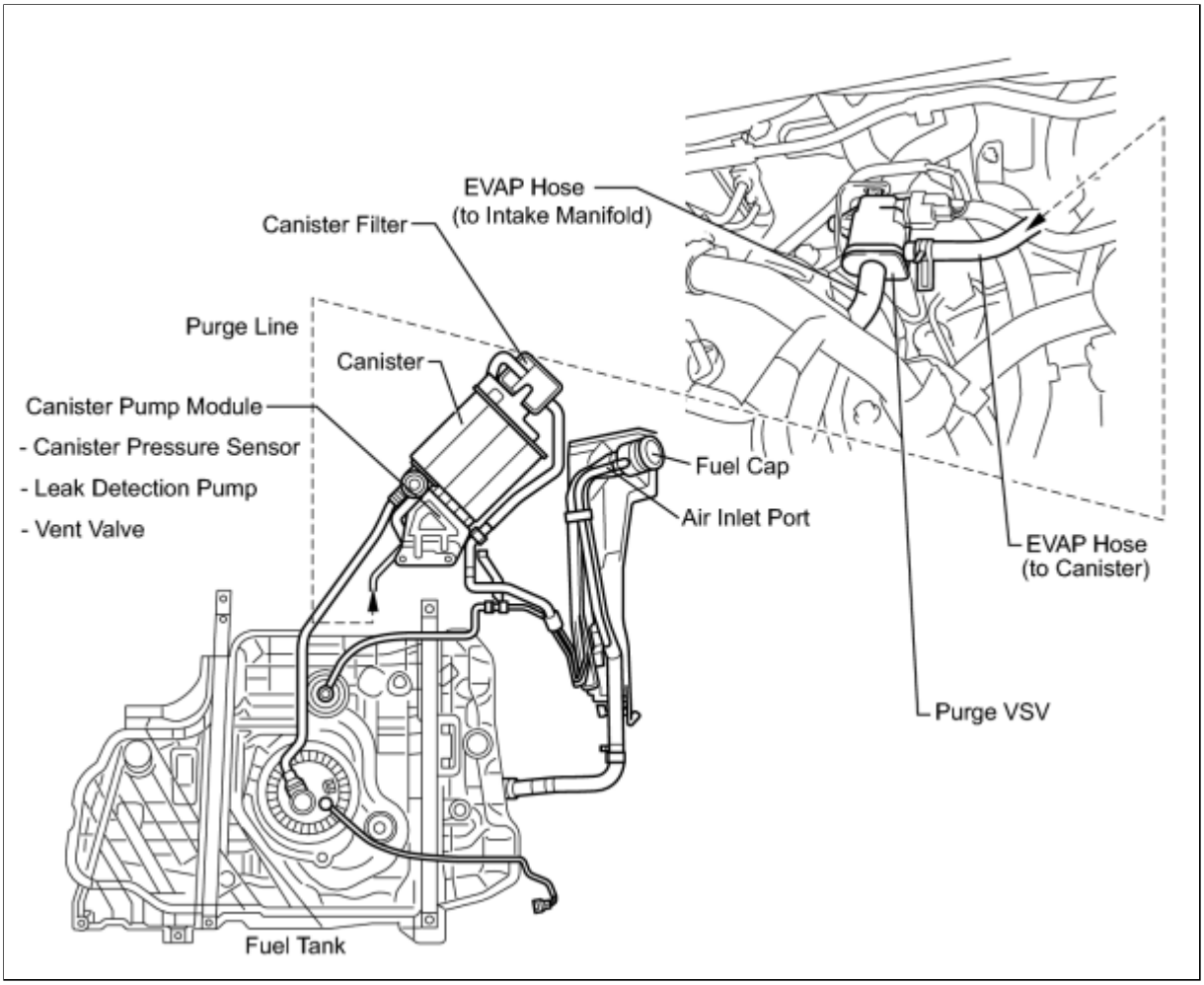

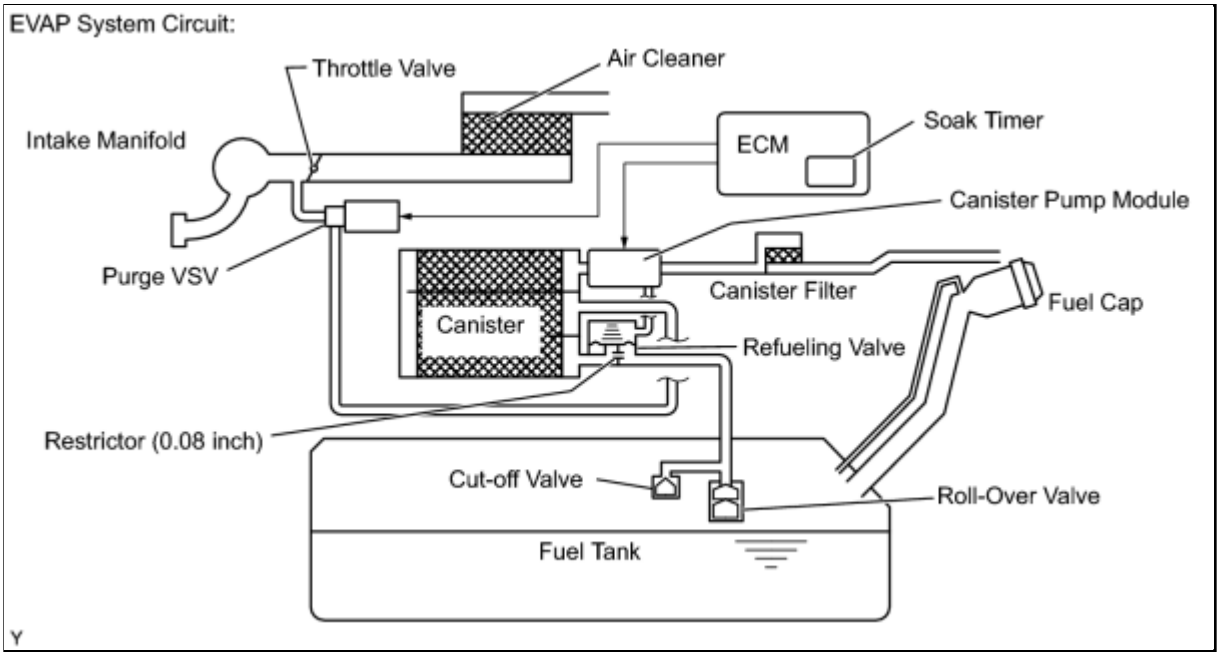

NOTICE:

In this vehicle's EVAP system, turning on the vent valve does not seal off the EVAP system. To check for leaks in the EVAP system, disconnect the air inlet vent hose and apply pressure from the atmospheric side of the canister.

While the engine is running, if a predetermined condition (closed-loop, etc.) is met, the purge VSV is opened by the ECM and stored fuel vapors in the canister are purged into the intake manifold. The ECM changes the duty cycle ratio of the purge VSV to control purge flow volume.

The purge flow volume is also determined by the intake manifold pressure. Atmospheric pressure is allowed into the canister through the vent valve to ensure that the purge flow is maintained when the negative pressure (vacuum) is applied to the canister.

The following two monitors run to confirm the appropriate EVAP system operation.

1. Key-off monitor

This monitor checks for EVAP (Evaporative Emission) system leaks and canister pump module malfunctions. The monitor starts 5 hours* after the ignition switch is turned off. At least 5 hours are required for the fuel to cool down to stabilize the EVAP pressure, thus making the EVAP system monitor more accurate.

The leak detection pump creates negative pressure (vacuum) in the EVAP system and the pressure is measured. Finally, the ECM monitors for leaks from the EVAP system, and malfunctions in both the canister pump module and purge VSV, based on the EVAP pressure.

HINT:

***: If the engine coolant temperature is not below 35°C (95°F) 5 hours after the ignition switch is turned off, the monitor check starts 2 hours later. If it is still not below 35°C (95°F) 7 hours after the ignition switch is turned off, the monitor check starts 2.5 hours later.**

2. Purge flow monitor

The purge flow monitor consists of 2 monitors. The 1st monitor is conducted every time and the 2nd monitor is activated if necessary.

- The 1st monitor

  While the engine is running and the purge VSV (Vacuum Switching Valve) is ON (open), the ECM monitors the purge flow by measuring the EVAP pressure change. If negative pressure is not created, the ECM begins the 2nd monitor.
- The 2nd monitor

  The vent valve is turned ON (closed) and the EVAP pressure is measured. If the variation in the pressure is less than 0.4 kPa-g (3.0 mmHg-g), the ECM interprets this as the purge VSV being stuck closed, illuminates the MIL and sets DTC P0441 (2 trip detection logic).

Atmospheric pressure check:

In order to ensure reliable malfunction detection, the variation between the atmospheric pressures, before and after the purge flow monitor is performed, is measured by the ECM.

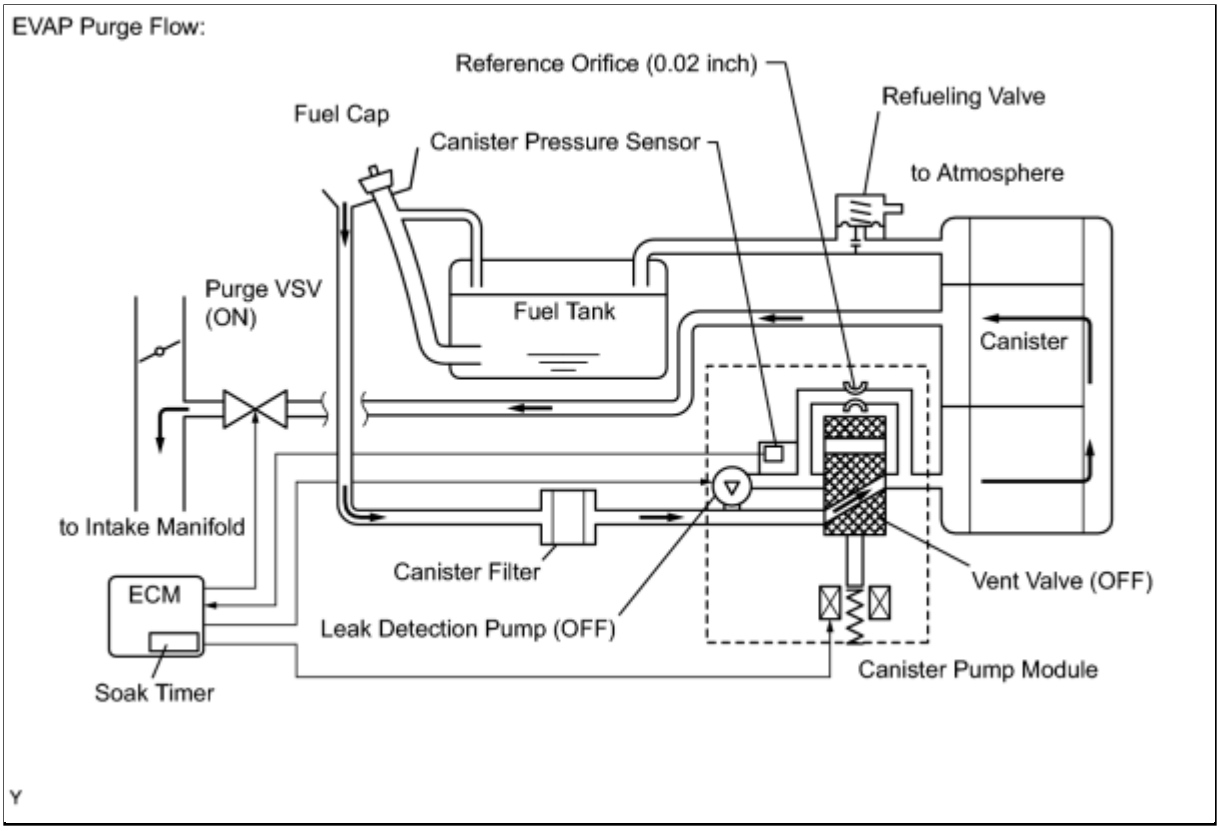

COMPONENT	OPERATION
Canister	Contains activated charcoal to absorb EVAP (Evaporative Emissions) generated in fuel tank.
Cut-off valve	Located in fuel tank. Valve floats and closes when fuel tank 100% full.
Purge VSV (Vacuum Switching Valve)	Opens or closes line between canister and intake manifold. ECM uses purge VSV to control EVAP purge flow. In order to discharge EVAP absorbed by canister to intake manifold, ECM opens purge VSV. EVAP discharge volume to intake manifold controlled by purge VSV duty cycle ratio (current-carrying time) (Open: ON; Closed: OFF).
Refueling valve	Controls EVAP pressure from fuel tank to canister. Valve consists of diaphragm, spring and restrictor (diameter: 0.08 inch). When fuel vapor and pressure inside fuel tank increase, valve opens. While EVAP purged, valve closes and restrictor prevents large amount of vacuum from affecting pressure in fuel tank. Valve opened while refueling.
Roll-over valve	Located in fuel tank. Valve closed by its own weight when vehicle overturns to prevent fuel from spilling out.
Soak timer	Built into ECM. To ensure accurate EVAP monitor, measures 5 hours (+/-15 min.) after ignition switch turned off. This allows fuel to cool down, stabilizing EVAP pressure. When approximately 5 hours elapsed, ECM activates (refer to fig. 3).
Canister pump module	Consists of (a) to (d) below. Canister pump module cannot be disassembled.

COMPONENT	OPERATION
(a) Vent valve	Vents and closes EVAP system. When ECM turns valve ON, EVAP system closed. When ECM turns valve OFF, EVAP system vented. Negative pressure (vacuum) created in EVAP system to check for EVAP leaks by closing purge VSV, turning on vent valve (closed) and operating leak detection pump (refer to fig. 1).
(b) Canister pressure sensor	Indicates pressure as voltages. ECM supplies regulated 5 V to canister pressure sensor, and uses feedback from sensor to monitor EVAP system pressure (refer to fig. 2).
(c) Leak detection pump	Creates negative pressure (vacuum) in EVAP system for leak check.
(d) Reference orifice	Has opening with 0.02 inch diameter. Vacuum produced through orifice by closing purge VSV, turning off vent valve and operating leak detection pump, to monitor reference pressure. Reference pressure indicates small leak of EVAP.

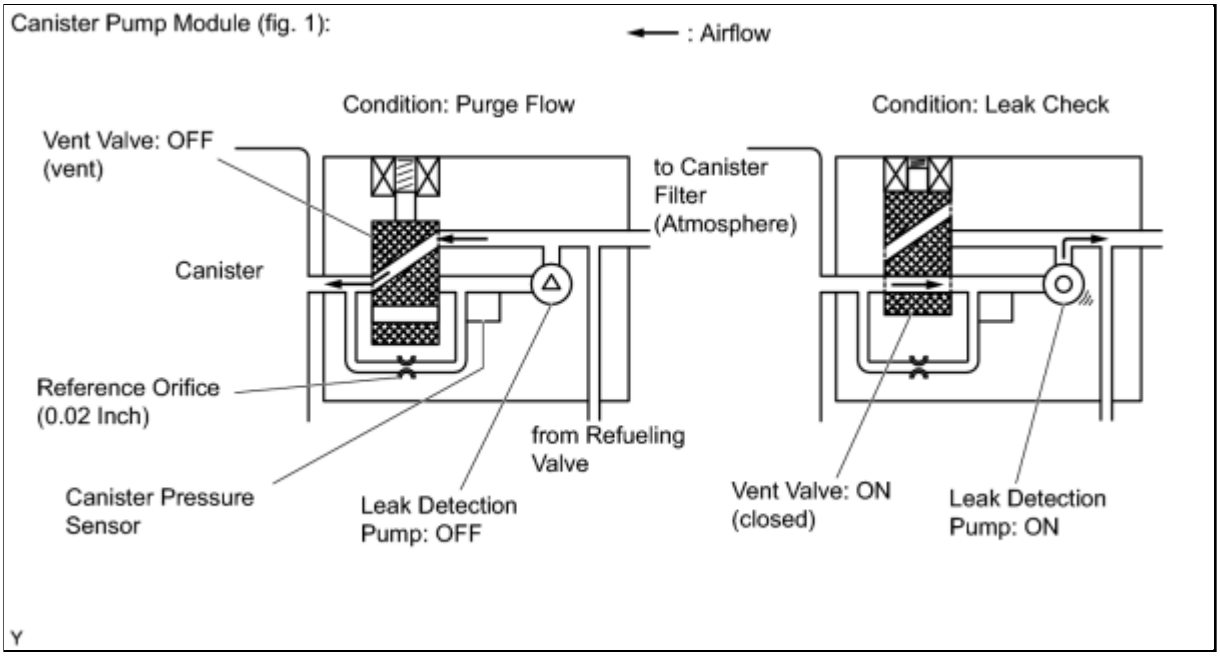

Canister Pressure Sensor Specification (fig. 2):

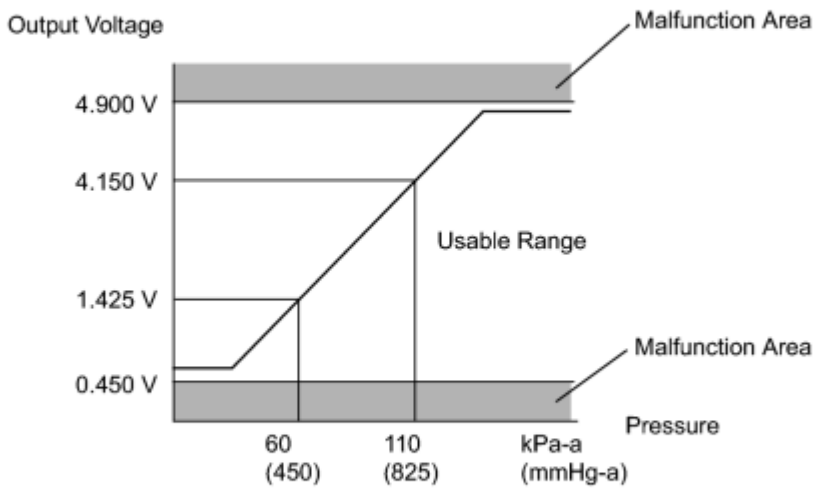

HINT:

Standard atmospheric pressure is 101.3 kPa-a (760 mmHg-a)

w/o Smart Key System:

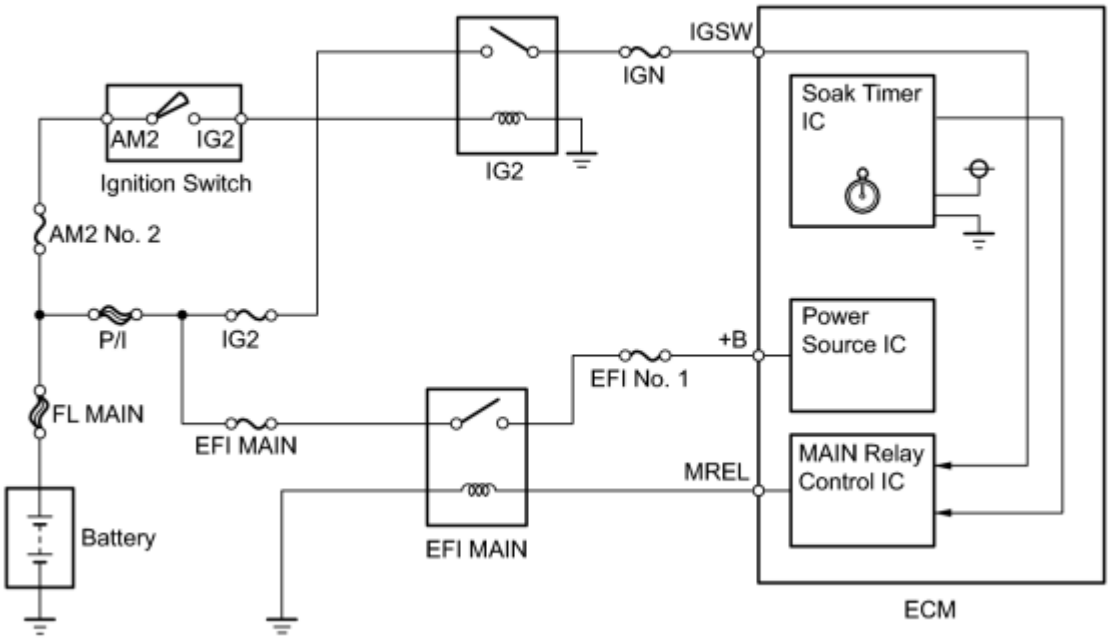

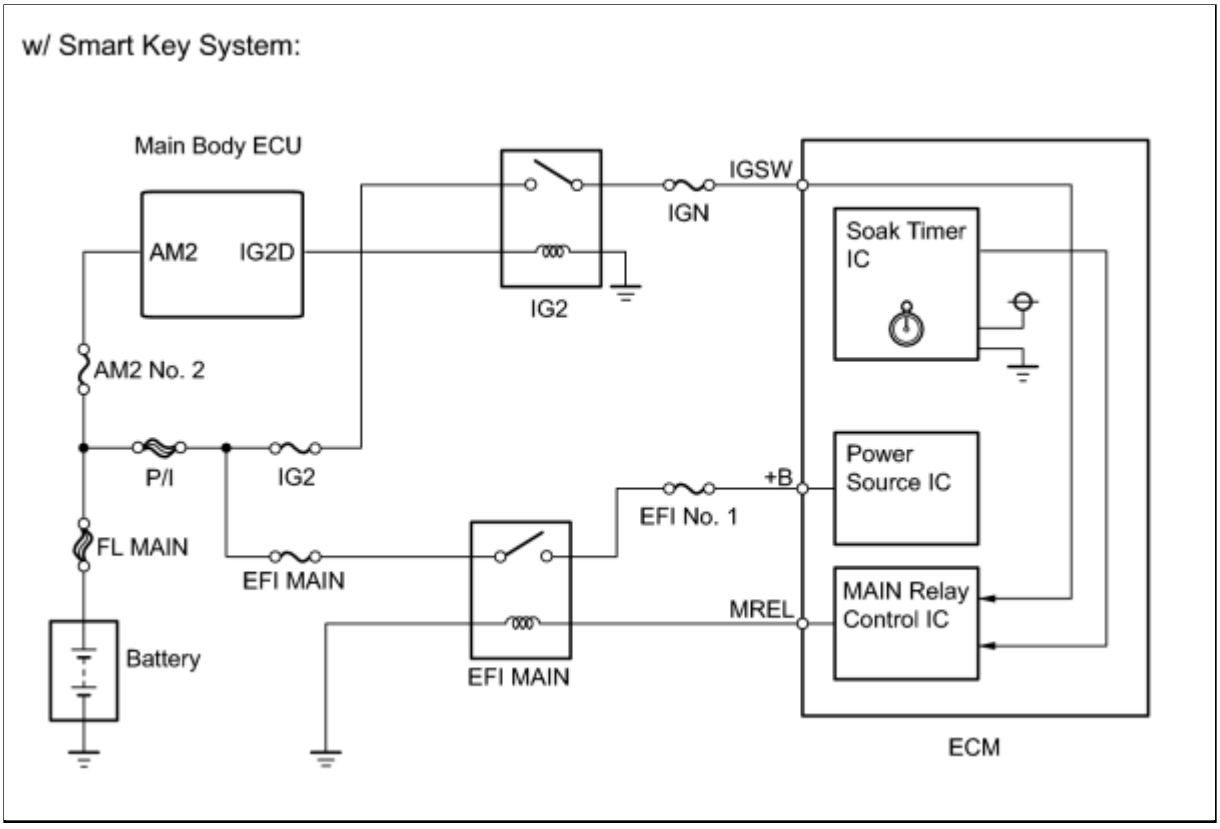

WIRING DIAGRAM

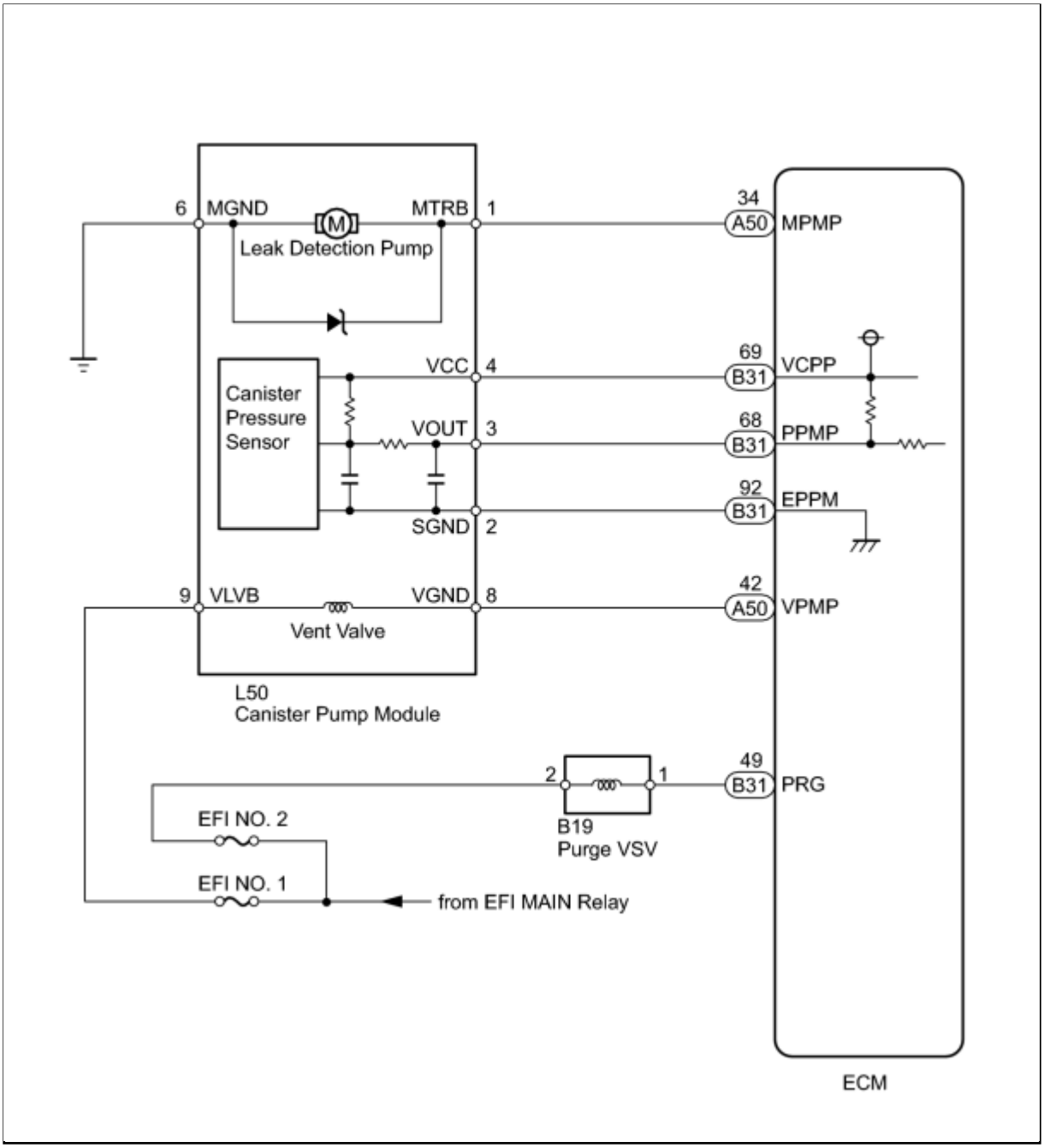

INSPECTION PROCEDURE

NOTICE:

The Techstream is required to conduct the following diagnostic troubleshooting procedure.

HINT:

- Using the Techstream to monitor results enables the EVAP (Evaporative Emission) system to be confirmed.
- Read freeze frame data using the Techstream. The ECM records vehicle and driving condition information as freeze frame data the moment a DTC is stored. When troubleshooting, freeze frame data can be helpful in determining whether the vehicle was running or stopped, whether the engine was warmed up or not, whether the air fuel ratio was lean or rich, as well as other data recorded at the time of a malfunction.

PROCEDURE

1.	**CONFIRM DTC**

(a) Turn the ignition switch off and wait for 10 seconds.

(b) Turn the ignition switch to ON.

(c) Turn the ignition switch off and wait for 10 seconds.

(d) Connect the Techstream to the DLC3.

(e) Turn the ignition switch to ON.

(f) Turn the Techstream on.

(g) Enter the following menus: Powertrain / Engine and ECT / Trouble Codes.

(h) Confirm DTCs and freeze frame data.

If any EVAP system DTCs are set, the malfunctioning area can be determined using the table below.

DTC / Malfunctioning Area	P043E P043F	P0441	P0451	P0452	P0453	P0455	P0456	P2401 P2402	P2419	P2420
Reference orifice clogged	●							●	●	
Reference orifice high-flow	●							●	●	
Purge VSV stuck open		●				●				
Purge VSV stuck closed		●								
Canister pressure sensor stuck			●							
Canister pressure sensor noise			●							
Pressure sensor low output				●						
Pressure sensor high output					●					
Gross leak		●				●				
Small leak							●			
Leak detection pump stuck OFF	●							●	●	
Leak detection pump stuck ON	●							●	●	
Vent valve stuck closed	●							●	●	
Vent valve stuck open (vent)										●

Y

NEXT

2.	**PERFORM EVAPORATIVE SYSTEM CHECK (AUTOMATIC MODE)**

NOTICE:

- The Evaporative System Check (Automatic Mode) consists of five steps performed automatically by the Techstream. It takes a maximum of approximately 18 minutes.
- Do not perform the Evaporative System Check when the fuel tank is more than 90% full because the cut-off valve may be closed. If the cut-off valve is closed, the fuel tank leak check is not possible.
- Do not run the engine during this operation.
- When the temperature of the fuel is 35°C (95°F) or more, a large amount of vapor forms and any check results become inaccurate. When performing the Evaporative System Check, keep the temperature below 35°C (95°F).

(a) Connect the Techstream to the DLC3.

(b) Turn the ignition switch to ON and Techstream on.

(c) Clear DTCs INFO .

(d) Enter the following menus: Powertrain / Engine and ECT / Utility / Evaporative System Check / Automatic Mode.

(e) After the Evaporative System Check is completed, check for pending DTCs by selecting the following menu items: Powertrain / Engine and ECT / Trouble Codes.

HINT:

If no pending DTCs are displayed, perform the CONFIRMATION DRIVING PATTERN. After this confirmation, check for pending DTCs. If no DTCs are displayed, the EVAP system is normal.

NEXT

3.	**PERFORM EVAPORATIVE SYSTEM CHECK (MANUAL MODE)**

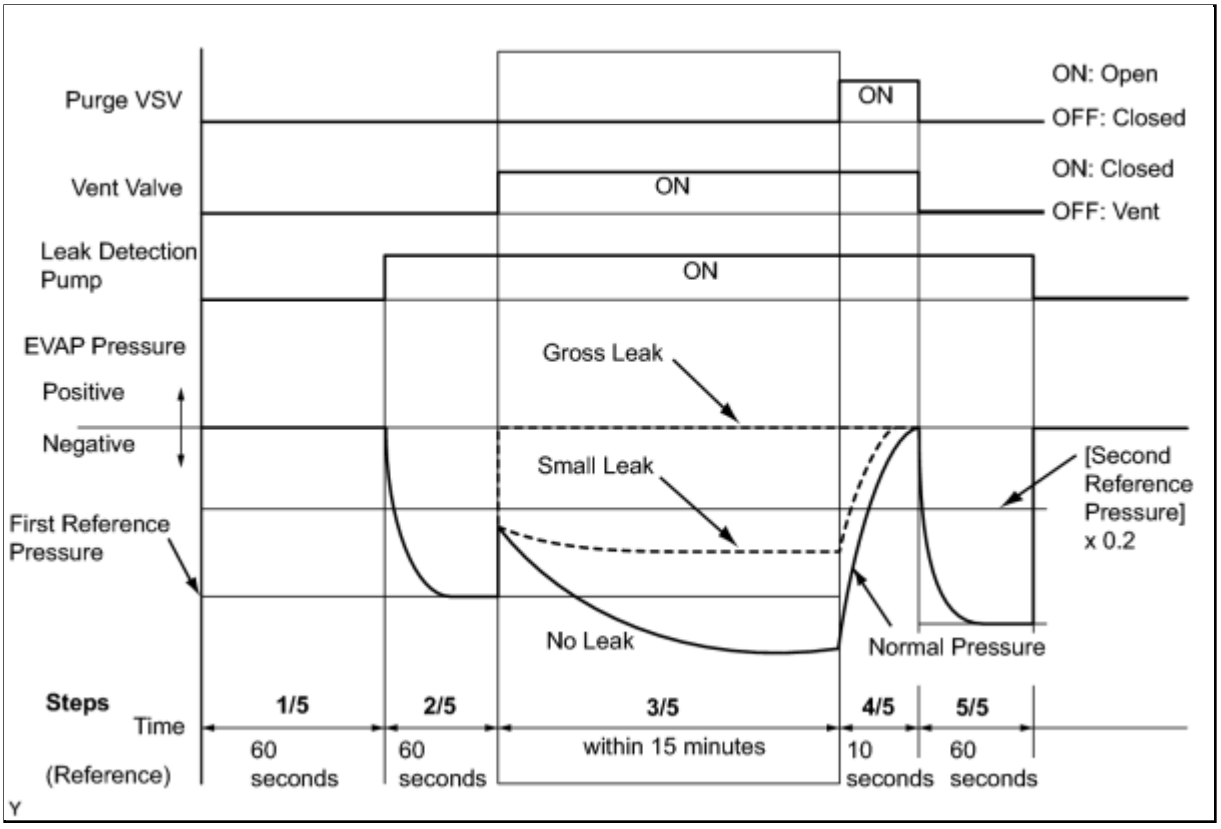

NOTICE:

- In the Evaporative System Check (Manual Mode), perform the series of 5 Evaporative System Check steps manually using the Techstream.
- Do not perform the Evaporative System Check when the fuel tank is more than 90% full because the cut-off valve may be closed. If the cut-off valve is closed, the fuel tank leak check is not possible.
- Do not run the engine during this operation.
- When the temperature of the fuel is 35°C (95°F) or more, a large amount of vapor forms and any check results become inaccurate. When performing the Evaporative System Check, keep the temperature below 35°C (95°F).

(a) Connect the Techstream to the DLC3.

(b) Turn the ignition switch to ON and Techstream on.

(c) Clear DTCs INFO .

(d) Enter the following menus: Powertrain / Engine and ECT / Utility / Evaporative System Check / Manual Mode.

NEXT

4.	**PERFORM EVAPORATIVE SYSTEM CHECK (STEP 1/5)**

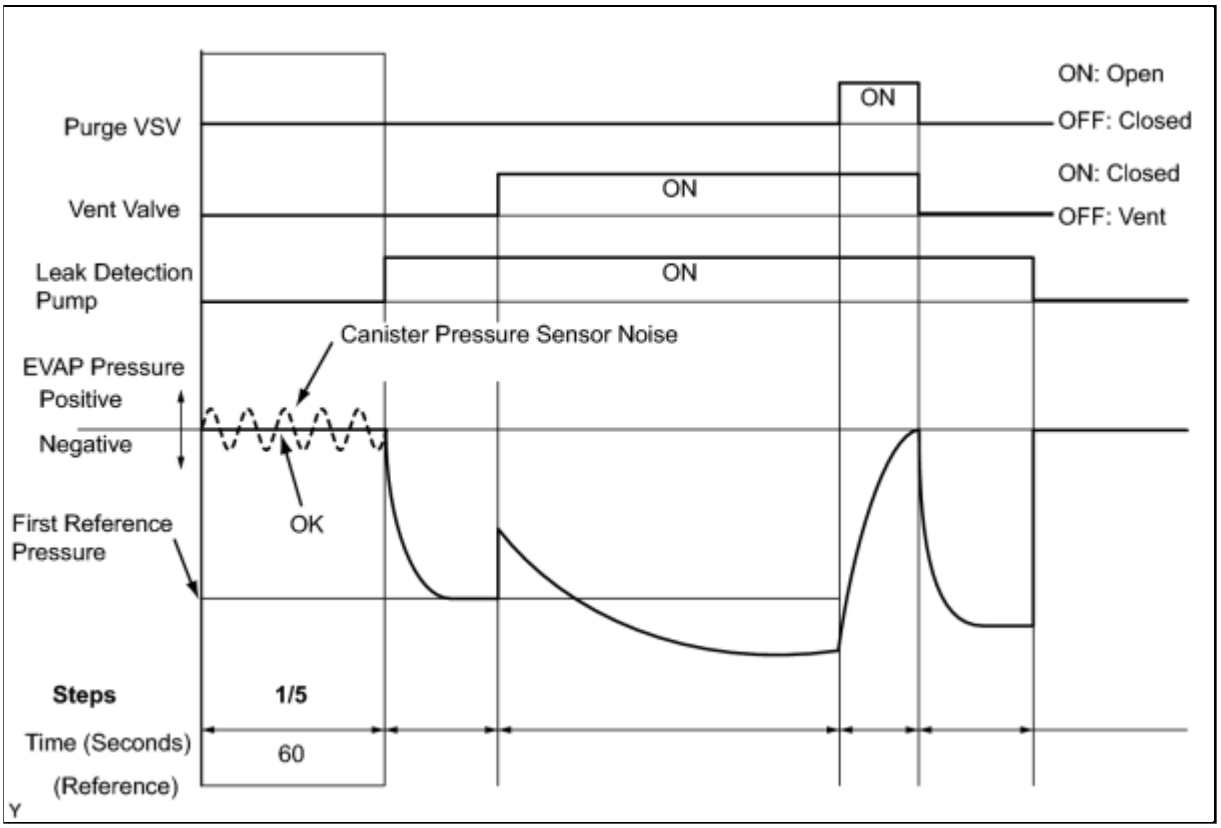

(a) Check the EVAP pressure in step 1/5.

Result:

DTC*	RESULT	SUSPECTED TROUBLE AREA	PROCEED TO
-	Virtually no variation in EVAP pressure	Not yet determined	A
P0451	EVAP pressure fluctuates by +/-0.3 kPa-g (+/-2.25 mmHg-g) or more	Canister pressure sensor noise	B

*: These DTCs are already present in the ECM when the vehicle arrives and are confirmed in the "Confirm DTC" procedures above.

B ▶ **REPLACE CANISTER ASSEMBLY**

A ▼

5.	**PERFORM EVAPORATIVE SYSTEM CHECK (STEP 1/5 TO 2/5)**

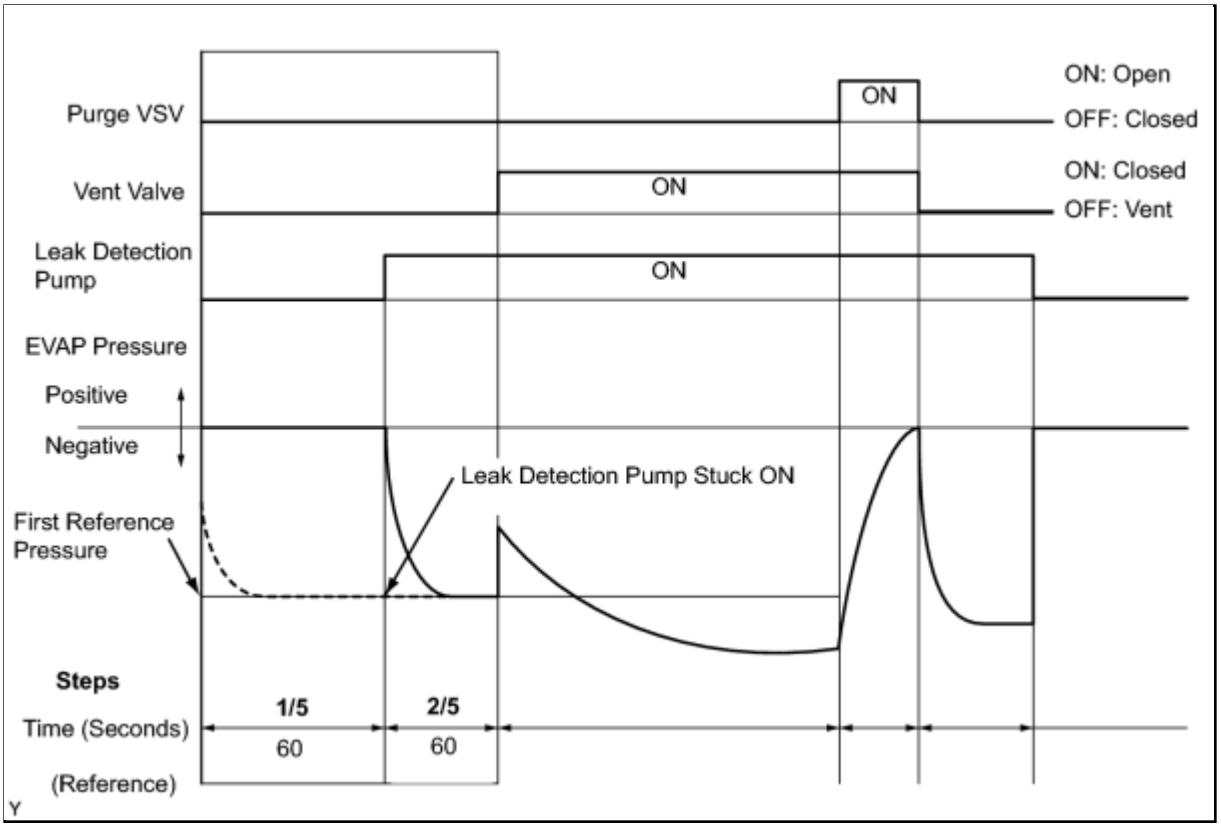

(a) Check the EVAP pressure in steps 1/5 and 2/5.

Result:

DTC*	RESULT	SUSPECTED TROUBLE AREA	PROCEED TO
-	Virtually no variation in EVAP pressure during step 1/5. Then decreases to reference pressure	Not yet determined	A
P2402	Small difference between EVAP pressures during steps 1/5 and 2/5	Leak detection pump stuck ON	B

*: These DTCs are already present in the ECM when the vehicle arrives and are confirmed in the "Confirm DTC" procedures above.

HINT:

The first reference pressure is the value determined in step 2/5.

B ▶ **PERFORM ACTIVE TEST USING TECHSTREAM (FOR LEAK DETECTION PUMP)**

A ▼

6.	PERFORM EVAPORATIVE SYSTEM CHECK (STEP 2/5)

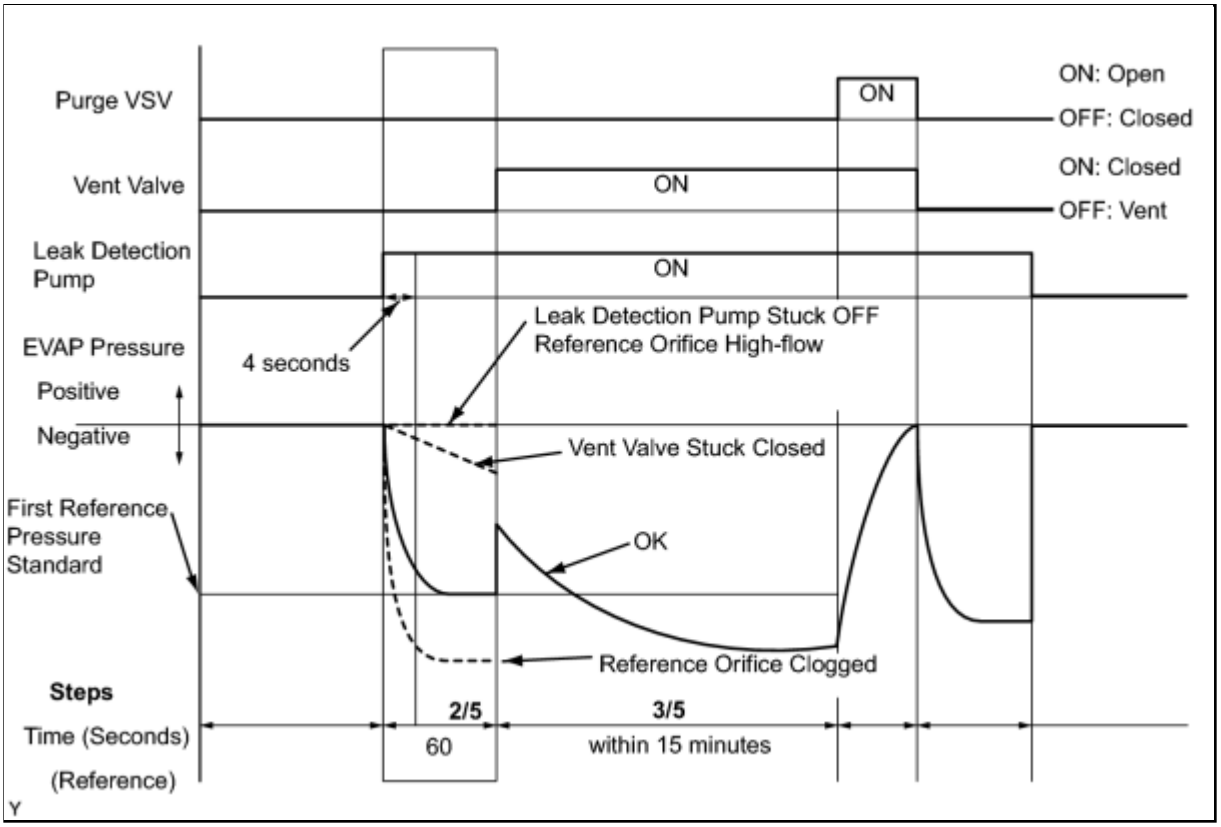

HINT:

Make a note of the pressures checked in steps (a) and (b) below.

(a) Check the EVAP pressure 4 seconds after the leak detection pump is activated*.

*: The leak detection pump begins to operate as step 1/5 finishes and step 2/5 starts.

(b) Check the EVAP pressure again when it has stabilized. This pressure is the reference pressure.

Result:

DTC*	RESULT	SUSPECTED TROUBLE AREA	PROCEED TO
-	EVAP pressure in step (b) between -4.85 kPa-g and -1.057 kPa-g (-36.4 mmHg-g and -7.93 mmHg-g)	Not yet determined	A
P043F and P2401	EVAP pressure in step (b) -1.057 kPa-g (-7.93 mmHg-g) or more	• Reference orifice high-flow • Leak detection pump stuck OFF	B

DTC*	RESULT	SUSPECTED TROUBLE AREA	PROCEED TO
P043E	EVAP pressure in step (b) below -4.85 kPa-g (-36.4 mmHg-g)	Reference orifice clogged	C
P2419	EVAP pressure in step (a) more than -1.057 kPa-g (-7.93 mmHg-g)	Vent valve stuck closed	D

*: These DTCs are already present in the ECM when the vehicle arrives and are confirmed in the "Confirm DTC" procedures above.

D ▶ **INSPECT CANISTER PUMP MODULE (VENT VALVE OPERATION)**

C ▶ **REPLACE CANISTER ASSEMBLY**

B ▶ **PERFORM EVAPORATIVE SYSTEM CHECK (STEP 3/5)**

A ▼

7.	**PERFORM EVAPORATIVE SYSTEM CHECK (STEP 2/5 TO 3/5)**

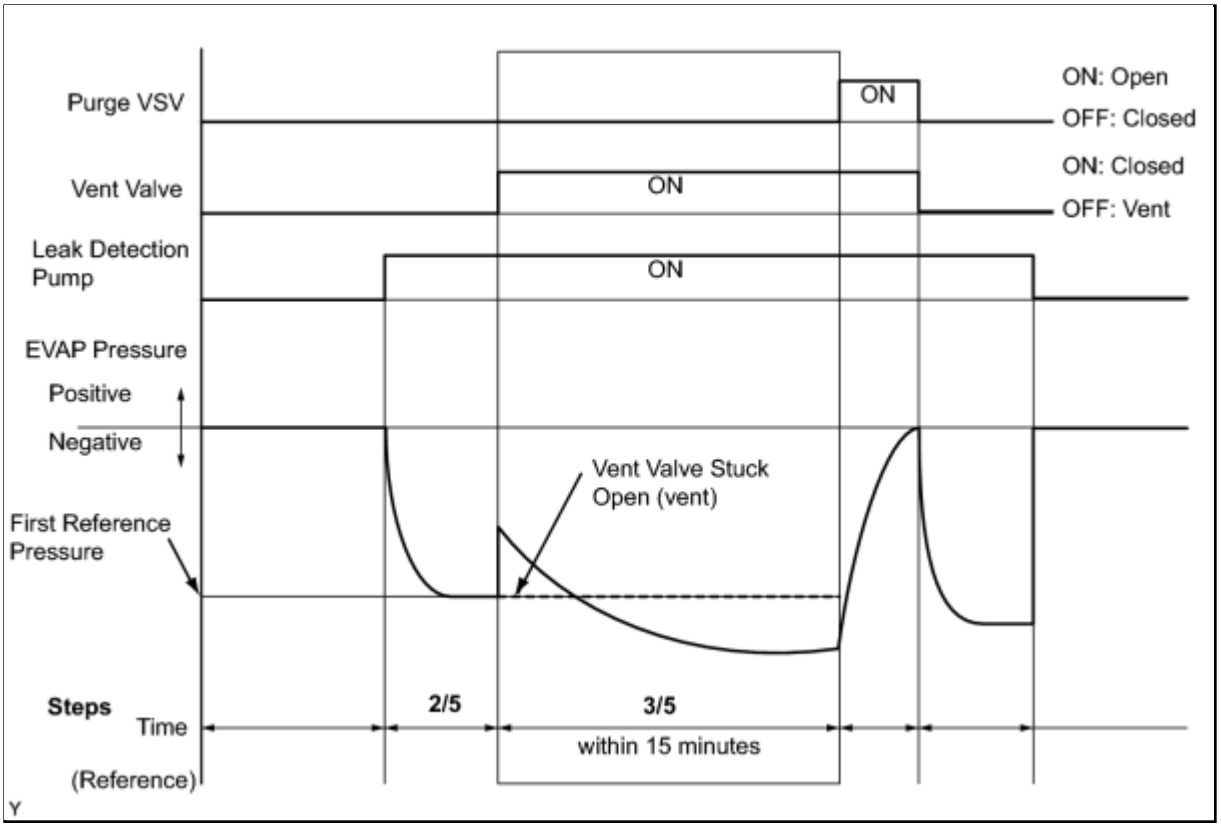

(a) Check the EVAP pressure increase in step 3/5.

Result:

DTC*	RESULT	SUSPECTED TROUBLE AREA	PROCEED TO
-	EVAP pressure increases by 0.3 kPa-g (2.25 mmHg-g) or more within 10 seconds of proceeding from step 2/5 to step 3/5	Not yet determined	A
P2420	No variation in EVAP pressure despite proceeding from step 2/5 to step 3/5	Vent valve stuck open (vent)	B
P0451	No variation in EVAP pressure during steps 1/5 through 3/5	Canister pressure sensor output value stuck	C

*: These DTCs are already present in the ECM when the vehicle arrives and are confirmed in the "Confirm DTC" procedures above.

C ▶ **REPLACE CANISTER ASSEMBLY**

B ▶ **INSPECT CANISTER PUMP MODULE (POWER SOURCE FOR VENT VALVE)**

A

8.	PERFORM EVAPORATIVE SYSTEM CHECK (STEP 3/5)

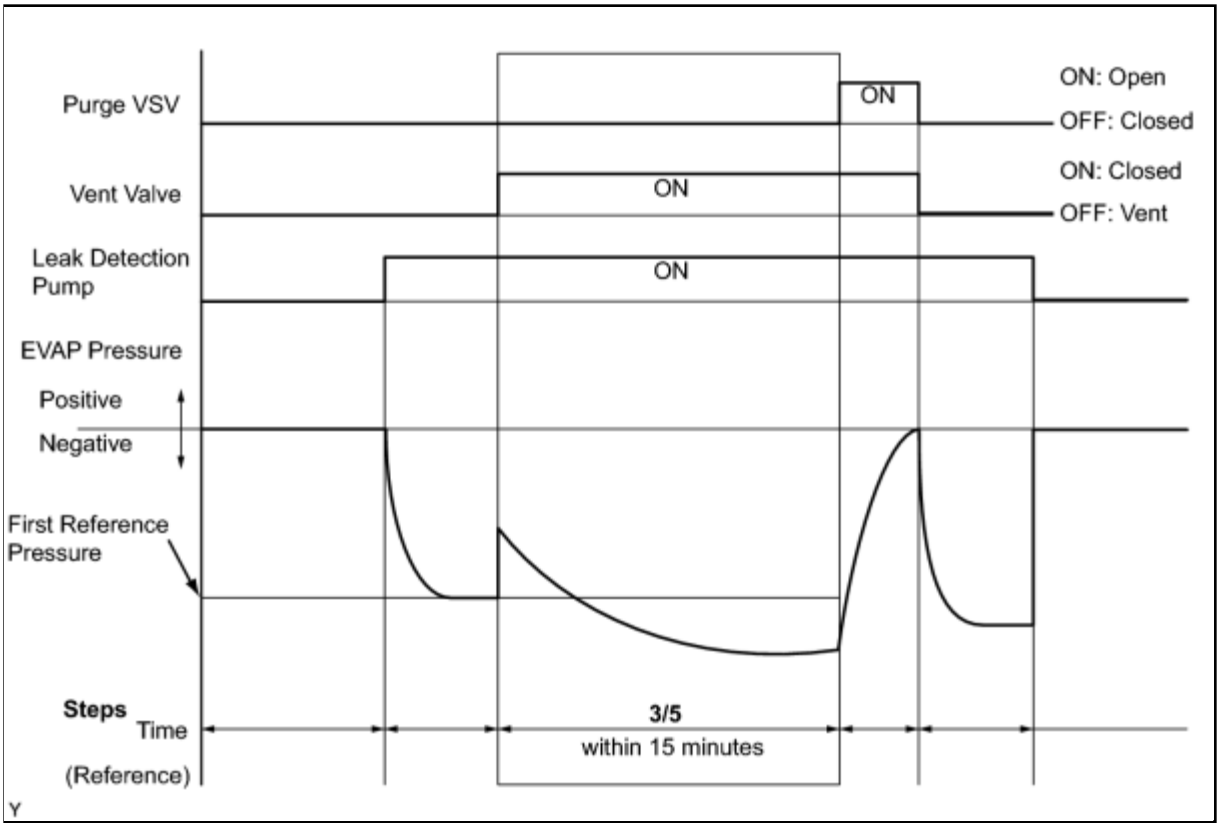

(a) Wait until the EVAP pressure change is less than 0.1 kPa-g (0.75 mmHg-g) for 30 seconds.

(b) Measure the EVAP pressure and record it.

HINT:

A few minutes are required for the EVAP pressure to become saturated. When there is little fuel in the fuel tank, it takes up to 15 minutes.

NEXT

9.	PERFORM EVAPORATIVE SYSTEM CHECK (STEP 4/5)

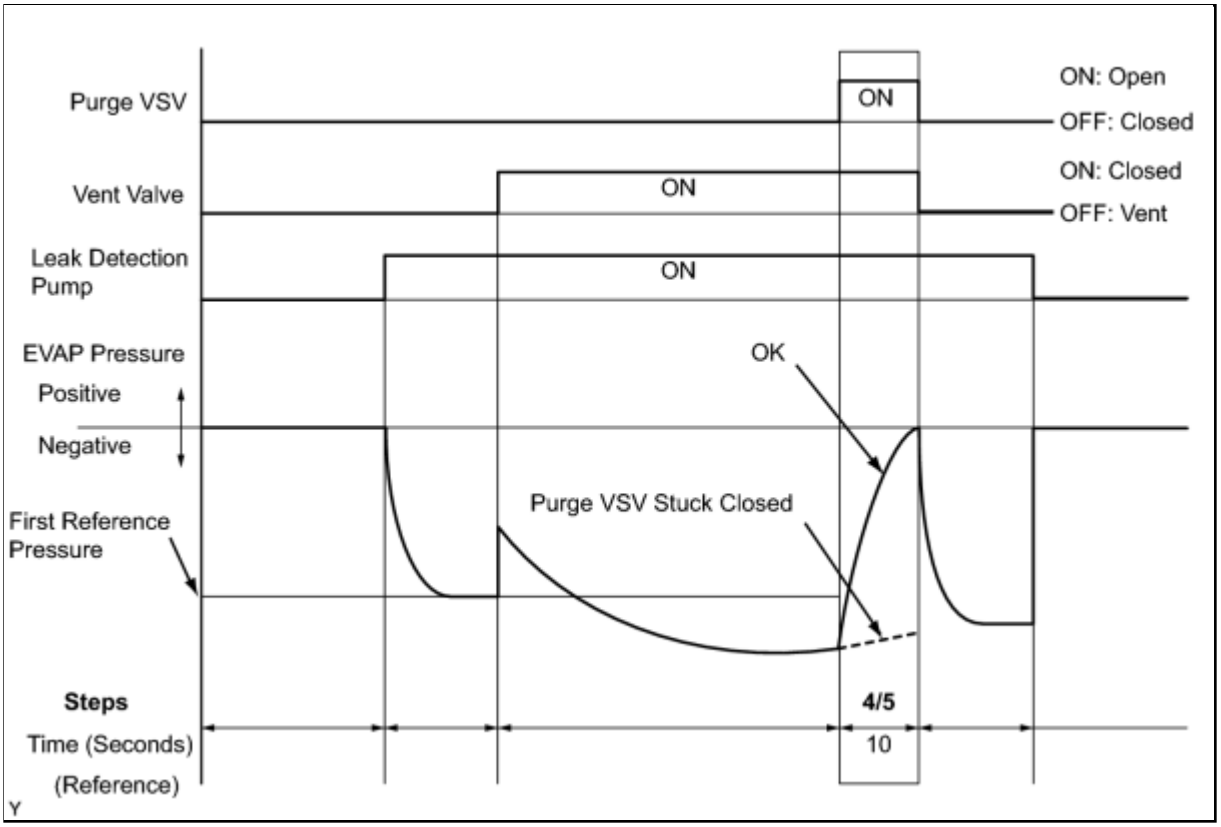

(a) Check the EVAP pressure in step 4/5.

Result:

DTC*	RESULT	SUSPECTED TROUBLE AREA	PROCEED TO
-	EVAP pressure increases by 0.3 kPa-g (2.25 mmHg-g) or more within 10 seconds of proceeding from step 3/5 to step 4/5	Not yet determined	A
P0441	EVAP pressure increases by 0.3 kPa-g (2.25 mmHg-g) or more within 10 seconds of proceeding from step 3/5 to step 4/5	Problems in EVAP hose between purge VSV and intake manifold	B
P0441	Variation in EVAP pressure less than 0.3 kPa-g (2.25 mmHg-g) for 10 seconds, after proceeding from step 3/5 to step 4/5	Purge VSV stuck closed	C

*: These DTCs are already present in the ECM when the vehicle arrives and are confirmed in the "Confirm DTC" procedures above.

B ▶ PERFORM ACTIVE TEST USING TECHSTREAM (PURGE VSV)

CHECK EVAP HOSE (PURGE VSV - INTAKE MANIFOLD)

A

10.	PERFORM EVAPORATIVE SYSTEM CHECK (STEP 5/5)

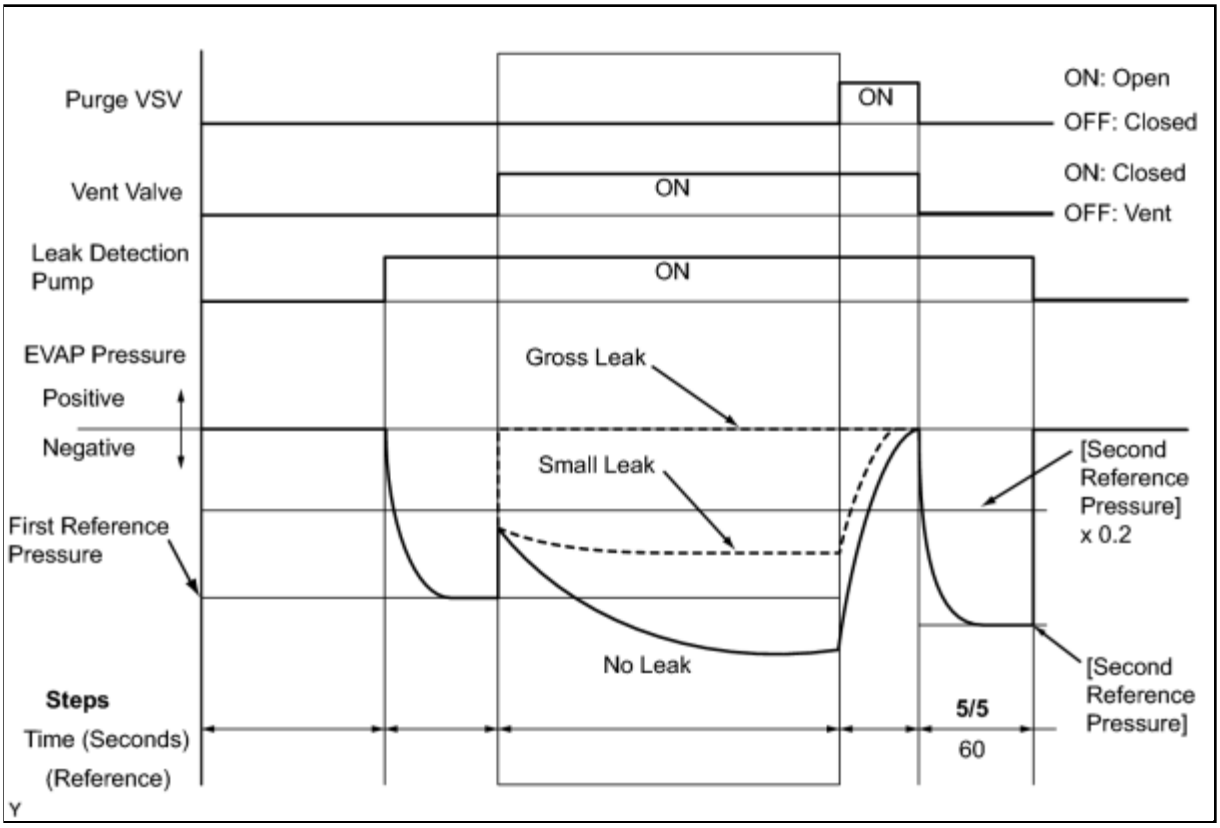

(a) Check the EVAP pressure in step 5/5.

(b) Compare the EVAP pressure in step 3/5 and the second reference pressure (step 5/5).

Result:

DTC*	RESULT	SUSPECTED TROUBLE AREA	PROCEED TO
-	EVAP pressure (step 3/5) lower than second reference pressure (step 5/5)	Not yet determined (no leak from EVAP system)	A
P0441 and P0455	EVAP pressure (step 3/5) higher than [second reference pressure (step 5/5) x 0.2]	• EVAP gross leak • Purge VSV stuck open	B

DTC*	RESULT	SUSPECTED TROUBLE AREA	PROCEED TO
P0456	EVAP pressure (step 3/5) higher than second reference pressure (step 5/5)	EVAP small leak	B

*: These DTCs are already present in the ECM when the vehicle arrives and are confirmed in the "Confirm DTC" procedures above.

B ▶ **PERFORM ACTIVE TEST USING TECHSTREAM (PURGE VSV)**

A ▶ **REPAIR OR REPLACE PARTS AND COMPONENTS INDICATED BY OUTPUT DTCS**

11.	PERFORM EVAPORATIVE SYSTEM CHECK (STEP 3/5)

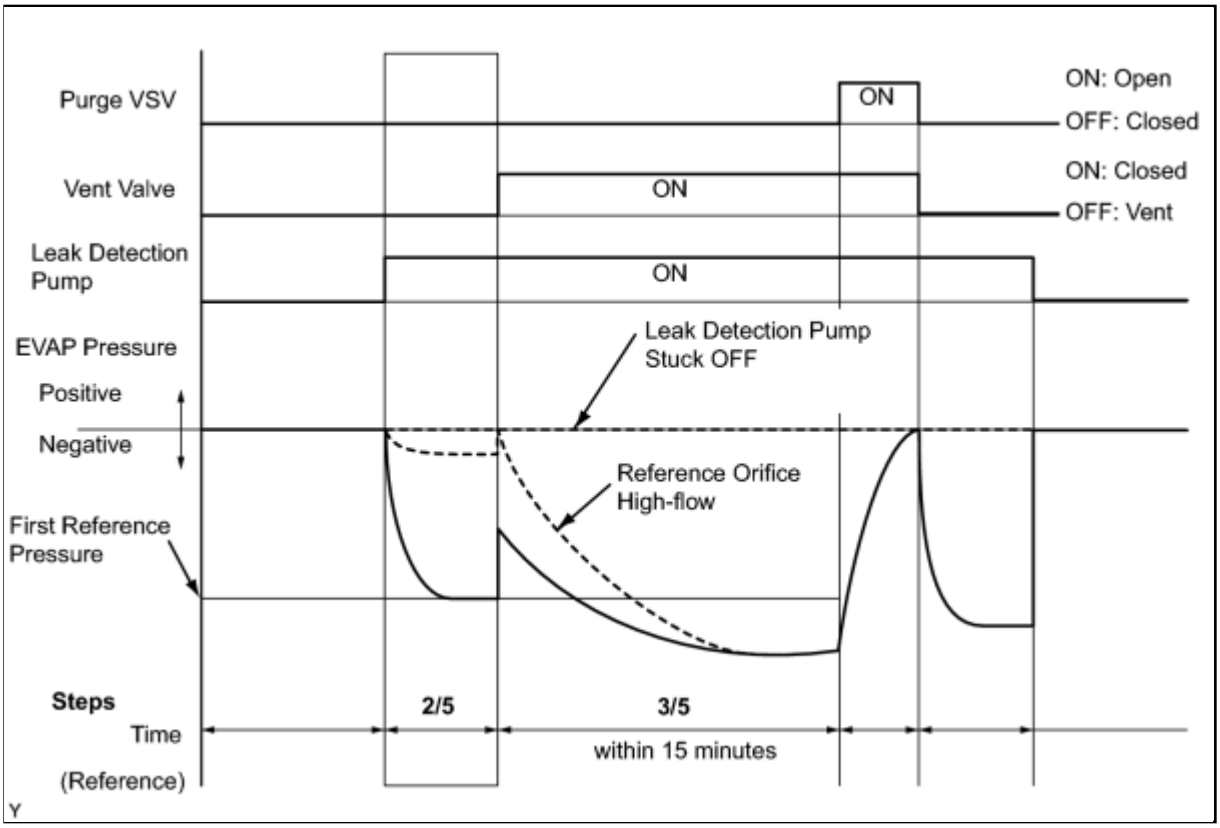

(a) Check the EVAP pressure in step 3/5.

Result:

DTC*	RESULT	SUSPECTED TROUBLE	PROCEED

		AREA	TO
P043F	EVAP pressure less than [reference pressure] measured at 2/5	Reference orifice high-flow	A
P2401	EVAP pressure almost same as [reference pressure] measured at 2/5	Leak detection pump stuck OFF	B

*: These DTCs are already present in the ECM when the vehicle arrives and are confirmed in the "Confirm DTC" procedures above.

HINT:

The first reference pressure is the value determined in step 2/5.

B ▶ **PERFORM ACTIVE TEST USING TECHSTREAM (FOR LEAK DETECTION PUMP)**

A ▶ **REPLACE CANISTER ASSEMBLY**

12.	PERFORM ACTIVE TEST USING TECHSTREAM (PURGE VSV)

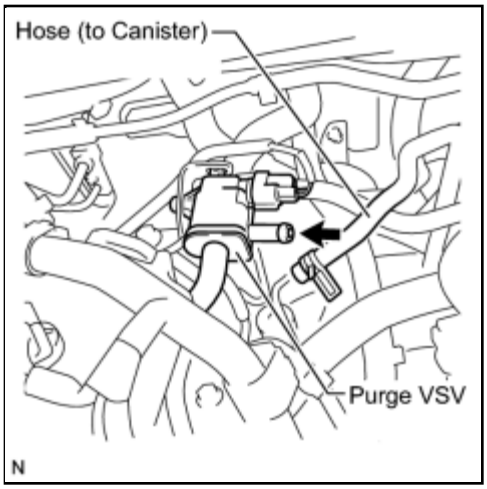

(a) Enter the following menus: Powertrain / Engine and ECT / Active Test / Activate the VSV for EVAP Control.

(b) Disconnect the hose (connected to the canister) from the purge VSV.

(c) Start the engine.

(d) Using the Techstream, turn off the purge VSV (Activate the VSV for EVAP Control: OFF).

(e) Use your finger to confirm that the purge VSV has no suction.

(f) Using the Techstream, turn on the purge VSV (Activate the VSV for EVAP Control: ON).

(g) Use your finger to confirm that the purge VSV has suction.

Result:

RESULT	SUSPECTED TROUBLE AREA	PROCEED TO
No suction when purge VSV turned OFF, and suction applied when turned ON	Purge VSV is normal	A
Suction applied when purge VSV turned OFF	Purge VSV stuck open	B
No suction when purge VSV turned ON	• Purge VSV stuck closed • Problems with EVAP hose between purge VSV and intake manifold	C

(h) Reconnect the hose.

C ▶ **CHECK EVAP HOSE (PURGE VSV - INTAKE MANIFOLD)**

B ▶ **INSPECT PURGE VSV**

A ▼

13.	CHECK FUEL CAP ASSEMBLY

(a) Check that the fuel cap is correctly installed and confirm that the fuel cap meets OEM specifications.

(b) Tighten the fuel cap until a few click sounds are heard.

HINT:

If an EVAP tester is available, check the fuel cap using the tester.

1. Remove the fuel cap and install it onto a fuel cap adapter.
2. Connect an EVAP tester pump hose to the adapter, and pressurize the cap to 3.2 to 3.7 kPa (24 to 28 mmHg) using an EVAP tester pump.
3. Seal the adapter and wait for 2 minutes.
4. Check the pressure. If the pressure is 2 kPa (15 mmHg) or more, the fuel cap is normal.

Result:

RESULT	SUSPECTED TROUBLE AREA	PROCEED TO
Fuel cap correctly installed	-	A

RESULT	SUSPECTED TROUBLE AREA	PROCEED TO
Fuel cap loose	• Fuel cap improperly installed • Defective fuel cap • Fuel cap does not meet OEM specifications	B
Defective fuel cap	-	B
No fuel cap	-	C

C ▶ **REPLACE FUEL TANK CAP**

B ▶ **CORRECTLY REINSTALL OR REPLACE FUEL TANK CAP**

A ▶ **LOCATE EVAP LEAK PART**

14.	INSPECT PURGE VSV

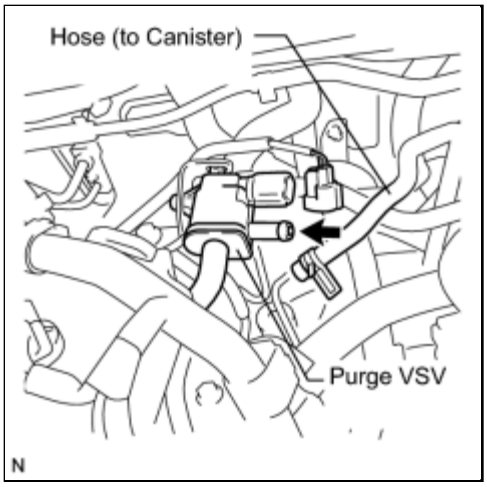

(a) Turn the ignition switch off.

(b) Disconnect the purge VSV connector.

(c) Disconnect the hose (connected to the canister) from the purge VSV.

(d) Start the engine.

(e) Use your finger to confirm that the purge VSV has no suction.

Result:

RESULT	SUSPECTED TROUBLE AREA	PROCEED TO
No suction	ECM	A

RESULT	SUSPECTED TROUBLE AREA	PROCEED TO
Suction applied	Purge VSV	B

(f) Reconnect the purge VSV connector.

(g) Reconnect the hose.

B ▶ **REPLACE PURGE VSV**

A ▶ **REPLACE ECM**

15.	CHECK EVAP HOSE (PURGE VSV - INTAKE MANIFOLD)

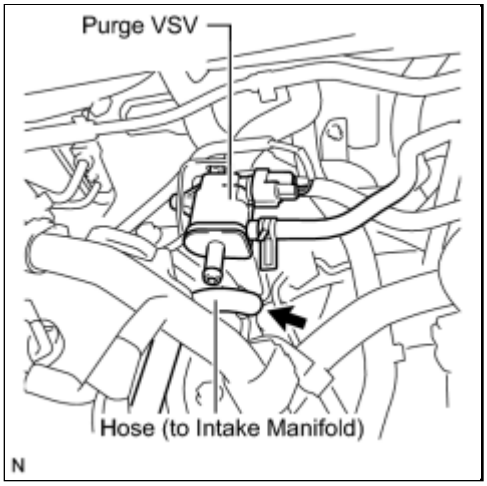

(a) Disconnect the hose (connected to the intake manifold) from the purge VSV.

(b) Start the engine.

(c) Use your finger to confirm that the hose has suction.

Result:

RESULT	SUSPECTED TROUBLE AREA	PROCEED TO
Suction applied	EVAP hose between purge VSV and intake manifold normal	A
No suction	• Intake manifold port • EVAP hose between purge VSV and intake manifold	B

(d) Reconnect the hose.

B ▶ **INSPECT INTAKE MANIFOLD (EVAP PURGE PORT)**

A

16.	INSPECT PURGE VSV

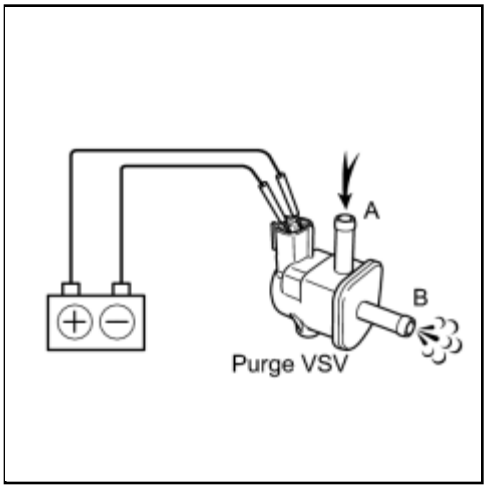

(a) Remove the purge VSV.

(b) Apply battery voltage across the terminals of the purge VSV.

(c) Confirm that air flows from port A to port B.

Result:

RESULT	CONDITION	SUSPECTED TROUBLE AREA	PROCEED TO
Air flows	Apply battery voltage to purge VSV terminals	-	A
No air flow	Apply battery voltage to purge VSV terminals	Purge VSV	B

(d) Reinstall the purge VSV.

B REPLACE PURGE VSV

A

17.	CHECK HARNESS AND CONNECTOR (POWER SOURCE OF PURGE VSV)

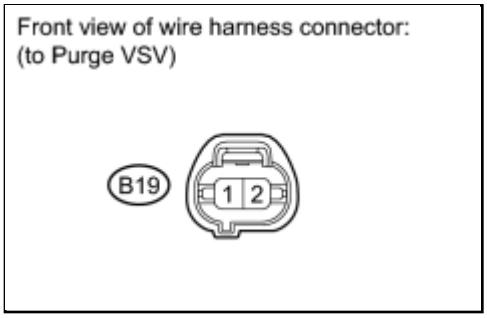

(a) Disconnect the purge VSV connector.

(b) Turn the ignition switch to ON.

(c) Measure the voltage according to the value(s) in the table below.

Result:

TESTER CONNECTION	SWITCH CONDITION	SPECIFIED CONDITION	SUSPECTED TROUBLE AREA	PROCEED TO
B19-2 - Body ground	Ignition switch ON	11 to 14 V	Normal	A
		Other than result above	Wire harness or connectors between purge VSV and battery	B

(d) Reconnect the purge VSV connector.

B ▶ **REPAIR OR REPLACE HARNESS OR CONNECTOR**

A ▼

18.	CHECK HARNESS AND CONNECTOR (PURGE VSV - ECM)

(a) Disconnect the ECM connector.

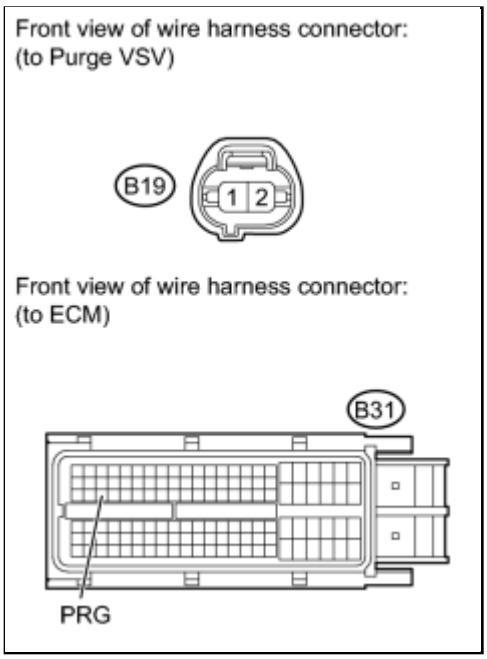

(b) Disconnect the purge VSV connector.

(c) Measure the resistance according to the value(s) in the table below.

Standard Resistance (Check for Open):

TESTER CONNECTION	CONDITION	SPECIFIED CONDITION
B31-49 (PRG) - B19-1	Always	Below 1 Ω

Standard Resistance (Check for Short):

TESTER CONNECTION	CONDITION	SPECIFIED CONDITION
B31-49 (PRG) or B19-1 - Body ground	Always	10 kΩ or higher

(d) Reconnect the ECM connector.

(e) Reconnect the purge VSV connector.

NG ▶ **REPAIR OR REPLACE HARNESS OR CONNECTOR**

OK ▶ **REPLACE ECM**

19.	**INSPECT CANISTER PUMP MODULE (POWER SOURCE FOR VENT VALVE)**

(a) Turn the ignition switch off.

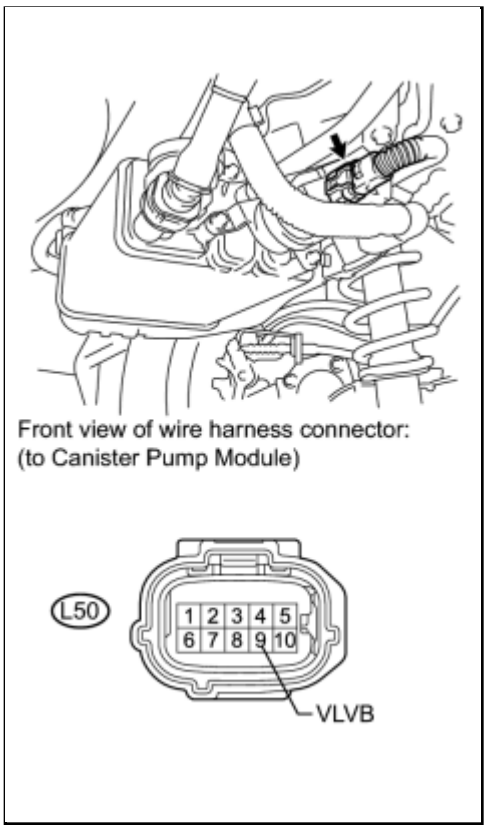

(b) Disconnect the canister pump module connector.

(c) Turn the ignition switch to ON.

(d) Measure the voltage according to the value(s) in the table below.

Result:

TESTER CONNECTION	SWITCH CONDITION	SPECIFIED CONDITION	SUSPECTED TROUBLE AREA	PROCEED TO
L50-9 (VLVB) - Body ground	Ignition switch ON	11 to 14 V	1. Wire harness between vent valve and ECM 2. Vent valve 3. ECM	A
		Below 3 V	Power source wire harness of vent valve	B

(e) Reconnect the canister pump module connector.

B ▶ **REPAIR OR REPLACE HARNESS OR CONNECTOR**

A

20.	INSPECT CANISTER PUMP MODULE (VENT VALVE OPERATION)

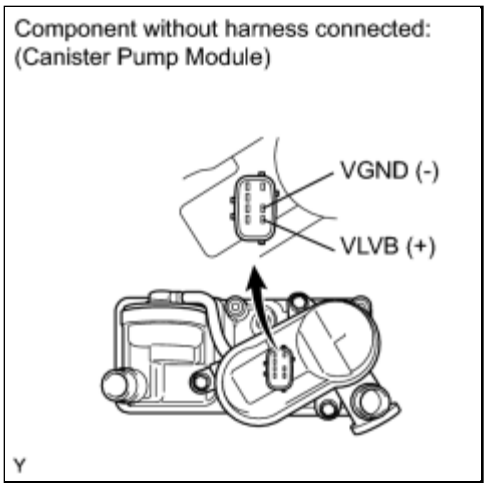

(a) Turn the ignition switch off.

(b) Disconnect the canister pump module connector.

(c) Apply the battery voltage across VLVB and VGND of the canister pump module.

(d) Touch the canister pump module to confirm the vent valve operation.

Result:

CONDITION	TEST RESULT	SUSPECTED TROUBLE AREA	PROCEED TO
Apply battery voltage to terminals VLVB and VGND	Operating	1. Wire harness between vent valve and ECM 2. ECM	A
Apply battery voltage to terminals VLVB and VGND	Not operating	Vent valve	B

(e) Reconnect the canister pump module connector.

B ▶ **REPLACE CANISTER ASSEMBLY**

A

21.	CHECK HARNESS AND CONNECTOR (ECM - CANISTER PUMP MODULE)

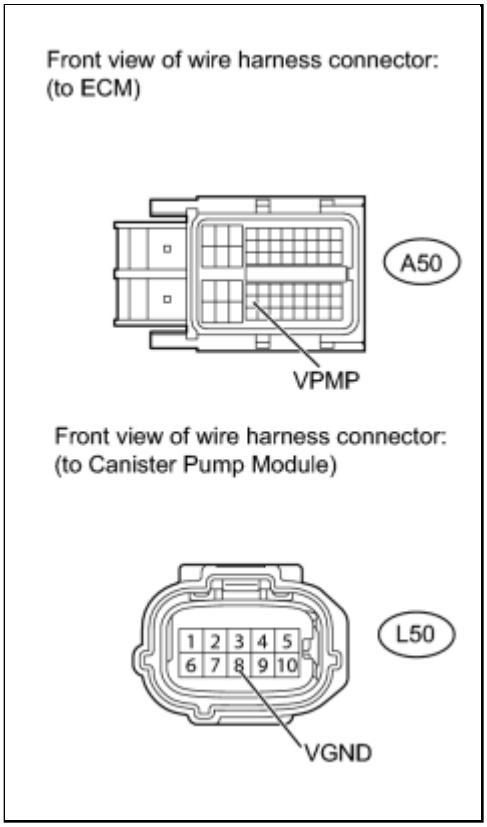

(a) Disconnect the ECM connector.

(b) Disconnect the canister pump module connector.

(c) Measure the resistance according to the value(s) in the table below.

Result:

TESTER CONNECTION	CONDITION	SPECIFIED CONDITION	SUSPECTED TROUBLE AREA	PROCEED TO
A50-42 (VPMP) - L50-8 (VGND)	Always	Below 1 Ω	ECM	A
		10 kΩ or higher	Wire harness between ECM and canister pump module	B

(d) Reconnect the ECM connector.

(e) Reconnect the canister pump module connector.

B ▶ **REPAIR OR REPLACE HARNESS OR CONNECTOR**

A ▶ **REPLACE ECM**

22.	PERFORM ACTIVE TEST USING TECHSTREAM (FOR LEAK DETECTION PUMP)

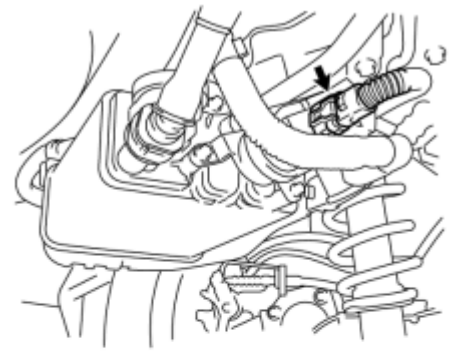

Front view of wire harness connector:
(to Canister Pump Module)

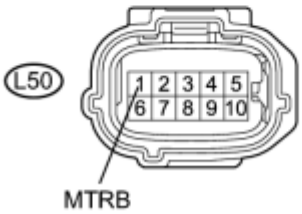

(a) Turn the ignition switch off.

(b) Disconnect the canister pump module connector.

(c) Turn the ignition switch to ON.

(d) Enter the following menus: Powertrain / Engine and ECT / Active Test / Activate the Vacuum Pump.

(e) Measure the voltage according to the value(s) in the table below.

Result:

TESTER CONNECTION	CONDITION	SPECIFIED CONDITION	SUSPECTED TROUBLE AREA	PROCEED TO
L50-1 (MTRB) - Body ground	Leak detection pump ON and OFF (Active Test ON and OFF)	Below 3 V when OFF 11 to 14 V when ON	1. Wire harness between leak detection pump and body ground 2. Leak detection pump	A
		Below 3 V when OFF and ON or	1. Wire harness between leak detection pump and	B

TESTER CONNECTION	CONDITION	SPECIFIED CONDITION	SUSPECTED TROUBLE AREA	PROCEED TO
		11 to 14 V when OFF and ON	ECM 2. ECM	

(f) Reconnect the canister pump module connector.

B CHECK HARNESS AND CONNECTOR (ECM - CANISTER PUMP MODULE)

A

23.	CHECK HARNESS AND CONNECTOR (CANISTER PUMP MODULE - BODY GROUND)

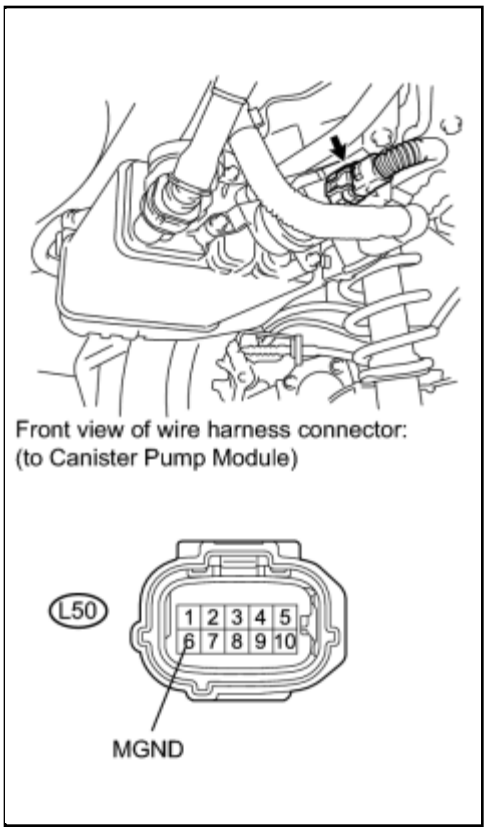

(a) Turn the ignition switch off.

(b) Disconnect the canister pump module connector.

(c) Measure the resistance according to the value(s) in the table below.

Result:

TESTER CONNECTION	CONDITION	SPECIFIED CONDITION	SUSPECTED TROUBLE AREA	PROCEED TO
L50-6 (MGND) - Body ground	Always	Below 1 Ω	Leak detection pump	A
		10 kΩ or higher	Wire harness between canister pump module and body ground	B

(d) Reconnect the canister pump module connector.

B ▶ **REPAIR OR REPLACE HARNESS OR CONNECTOR**

A ▶ **REPLACE CANISTER ASSEMBLY**

24.	CHECK HARNESS AND CONNECTOR (ECM - CANISTER PUMP MODULE)

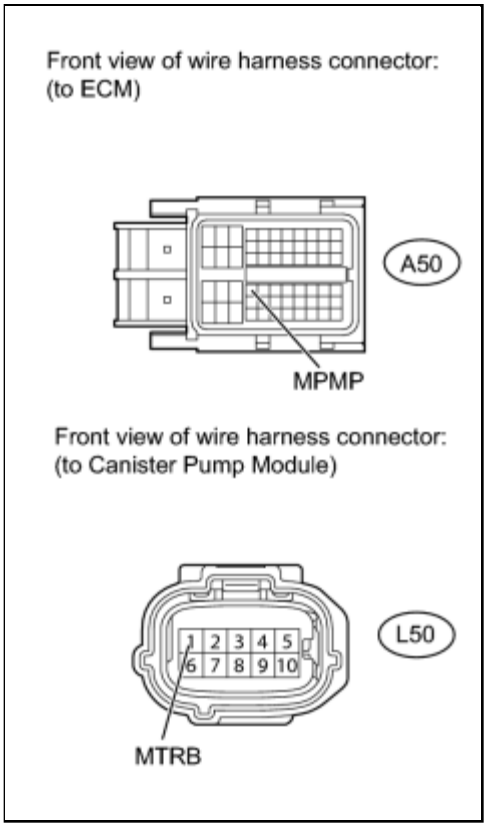

(a) Turn the ignition switch off.

(b) Disconnect the ECM connector.

(c) Disconnect the canister pump module connector.

(d) Measure the resistance according to the value(s) in the table below.

Result:

TESTER CONNECTION	CONDITION	SPECIFIED CONDITION	SUSPECTED TROUBLE AREA	PROCEED TO
A50-34 (MPMP) - L50-1 (MTRB)	Always	Below 1 Ω	ECM	A
		10 kΩ or higher	Wire harness between ECM and canister pump module	B

(e) Reconnect the ECM connector.

(f) Reconnect the canister pump module connector.

B ▶ **REPAIR OR REPLACE HARNESS OR CONNECTOR**

A ▶ **REPLACE ECM**

25.	INSPECT INTAKE MANIFOLD (EVAP PURGE PORT)

(a) Stop the engine.

(b) Disconnect the EVAP hose from the intake manifold.

(c) Start the engine.

(d) Use your finger to confirm that the port of the intake manifold has suction.

Result:

RESULT	SUSPECTED TROUBLE AREA	PROCEED TO
Suction applied	EVAP hose between intake manifold and purge VSV	A
No suction	Intake manifold	B

(e) Reconnect the EVAP hose.

B ▶ **INSPECT INTAKE MANIFOLD (EVAP PURGE PORT)**

A ▶ **REPLACE PURGE LINE HOSE (INTAKE MANIFOLD - PURGE VSV)**

26.	CORRECTLY REINSTALL OR REPLACE FUEL TANK CAP

HINT:

- When reinstalling the fuel tank cap, tighten it until a few click sounds are heard.

- When replacing the fuel tank cap, use a fuel tank cap that meets OEM specifications, and install it until a few click sounds are heard.

NEXT PERFORM EVAPORATIVE SYSTEM CHECK (AUTOMATIC MODE)

27.	**REPLACE FUEL TANK CAP**

HINT:

When replacing the fuel cap, use a fuel cap that meets OEM specifications, and install it until a few click sounds are heard.

NEXT PERFORM EVAPORATIVE SYSTEM CHECK (AUTOMATIC MODE)

28.	**LOCATE EVAP LEAK PART**

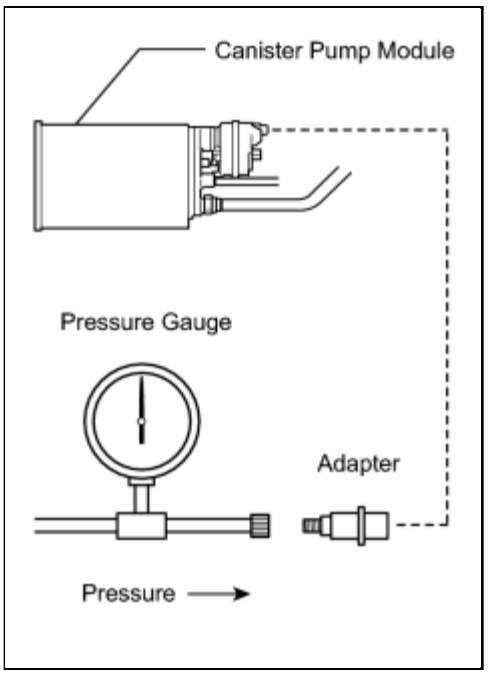

(a) Disconnect the vent hose.

(b) Connect an EVAP tester to the canister pump module with the adapter.

(c) Pressurize the EVAP system to 3.2 to 3.7 kPa (24 to 28 mmHg).

(d) Apply soapy water to the piping and connecting parts of the EVAP system.

(e) Look for areas where bubbles appear. This indicates a leak point.

(f) Repair or replace the leak point.

HINT:

Disconnect the hose between the canister and the fuel tank from the canister. Block the canister side and conduct an inspection. In this way, the fuel tank can be excluded as an area suspected of causing fuel leaks.

NEXT ▶ **PERFORM EVAPORATIVE SYSTEM CHECK (AUTOMATIC MODE)**

29.	REPLACE CANISTER ASSEMBLY

(a) Replace the canister assembly INFO .

NOTICE:

When replacing the canister, check the canister pump module interior and related pipes for water, fuel and other liquids. If liquids are present, check for disconnections and/or cracks in the following: 1) the pipe from the air inlet port to the canister pump module; 2) the canister filter; and 3) the fuel tank vent hose.

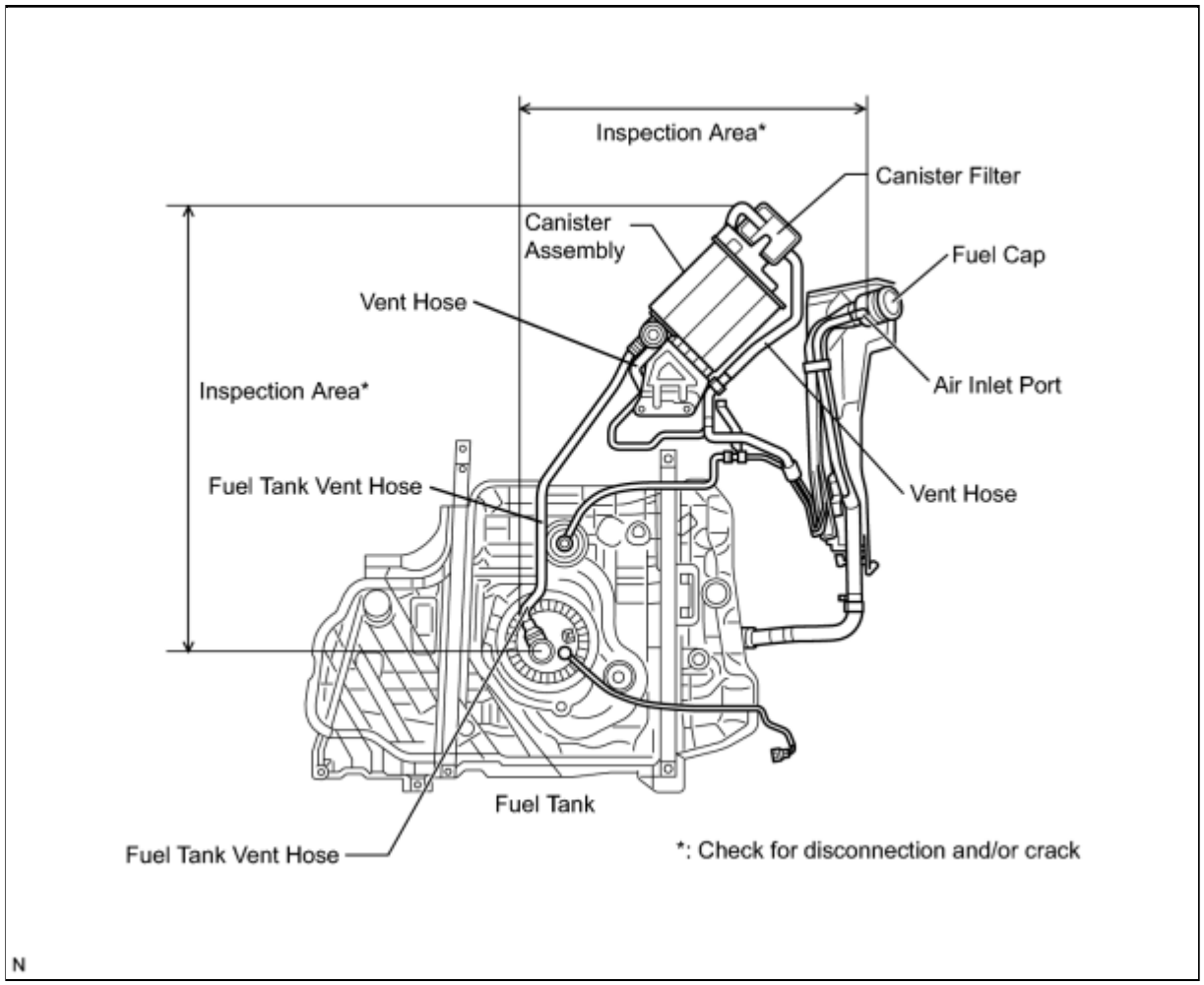

NEXT ▶ **PERFORM EVAPORATIVE SYSTEM CHECK (AUTOMATIC MODE)**

30.	**REPLACE PURGE VSV**

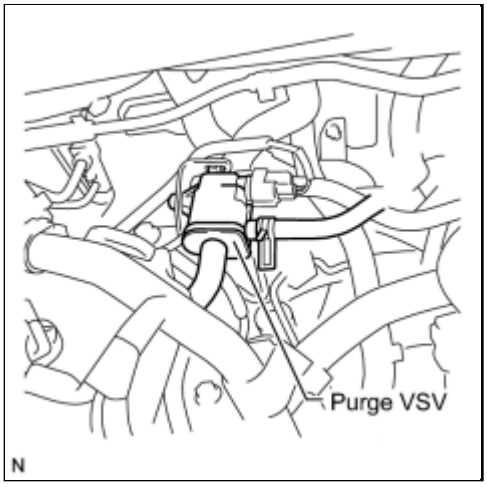

(a) Disconnect the connector and the hoses from the purge VSV.

(b) Remove the purge VSV INFO .

(c) Install a new purge VSV.

(d) Reconnect the connector and hoses.

NEXT ▶ **PERFORM EVAPORATIVE SYSTEM CHECK (AUTOMATIC MODE)**

31.	**REPAIR OR REPLACE HARNESS OR CONNECTOR**

NEXT ▶ **PERFORM EVAPORATIVE SYSTEM CHECK (AUTOMATIC MODE)**

32.	**REPLACE PURGE LINE HOSE (INTAKE MANIFOLD - PURGE VSV)**

NEXT ▶ **PERFORM EVAPORATIVE SYSTEM CHECK (AUTOMATIC MODE)**

33.	**INSPECT INTAKE MANIFOLD (EVAP PURGE PORT)**

(a) Check that the EVAP purge port of the intake manifold is not clogged. If necessary, replace the intake manifold.

NEXT PERFORM EVAPORATIVE SYSTEM CHECK (AUTOMATIC MODE)

34.	REPLACE ECM

(a) Replace the ECM INFO .

NEXT PERFORM EVAPORATIVE SYSTEM CHECK (AUTOMATIC MODE)

35.	REPAIR OR REPLACE PARTS AND COMPONENTS INDICATED BY OUTPUT DTCS

(a) Repair the malfunctioning areas indicated by the DTCs that had been confirmed when the vehicle was brought in.

NEXT

36.	PERFORM EVAPORATIVE SYSTEM CHECK (AUTOMATIC MODE)

NOTICE:

- The Evaporative System Check (Automatic Mode) consists of five steps performed automatically by the Techstream. It takes a maximum of approximately 18 minutes.
- Do not perform the Evaporative System Check when the fuel tank is more than 90% full because the cut-off valve may be closed. If the cut-off valve is closed, the fuel tank leak check is not possible.
- Do not run the engine during this operation.
- When the temperature of the fuel is 35°C (95°F) or more, a large amount of vapor forms and any check results become inaccurate. When performing an Evaporative System Check, keep the temperature below 35°C (95°F).

(a) Connect the Techstream to the DLC3.

(b) Turn the ignition switch to ON and Techstream on.

(c) Clear DTCs INFO .

(d) Enter the following menus: Powertrain / Engine and ECT / Utility / Evaporative System Check / Automatic Mode.

(e) After the Evaporative System Check is completed, check for pending DTCs by selecting

the following menu items: Powertrain / Engine and ECT / Trouble Codes.

HINT:

If no pending DTCs are found, the repair has been successfully completed.

NEXT ▶ END

CONFIRMATION DRIVING PATTERN

HINT:

After a repair, check Monitor Status by performing the Key-off Monitor Confirmation and Purge Flow Monitor Confirmation described below.

1. Key-off monitor confirmation

(a) Preconditions

The monitor will not run unless:

- The vehicle has been driven for 10 minutes or more (in a city area or on a freeway)
- The fuel tank is less than 90% full
- The altitude is less than 8000 ft. (2432 m)
- The engine coolant temperature is between 4.4°C and 35°C (40°F and 95°F)
- The intake air temperature is between 4.4°C and 35°C (40°F and 95°F)
- The vehicle remains stationary (the vehicle speed is 0 mph [0 km/h])

(b) Monitor Conditions

1. Allow the engine to idle for at least 5 minutes.
2. Turn the ignition switch off and wait for 5 hours (7 or 9.5 hours).

HINT:

Do not start the engine until checking Monitor Status. If the engine is started, the steps described above must be repeated.

(c) Monitor Status

1. Connect the Techstream to the DLC3.
2. Turn the ignition switch to ON.
3. Turn the Techstream on.
4. Enter the following menus: Powertrain / Engine and ECT / Monitor / Evaporative System.
5. Check the Monitor Status displayed on the Techstream.

HINT:

If Incomplete is displayed, the monitor is not completed. Make sure that the preconditions have been met, and perform the Monitor Conditions again.

2. Purge flow monitor confirmation (P0441)

HINT:

Perform this monitor confirmation after the Key-Off Monitor Confirmation shows Complete.

(a) Preconditions

The monitor will not run unless:

- The vehicle has been driven for 10 minutes or more (in a city area or on a freeway)
- The engine coolant temperature is between 4.4°C and 35°C (40°F and 95°F)
- The intake air temperature is between 4.4°C and 35°C (40°F and 95°F)

(b) Monitor Conditions

1. Release the pressure from the fuel tank by removing and reinstalling the fuel cap.
2. Warm the engine up until the engine coolant temperature reaches more than 75°C (167°F).
3. Increase the engine speed to 3000 rpm once.
4. Allow the engine to idle and turn the air conditioning on for 1 minute.

(c) Monitor Status

1. Turn the ignition switch off (if ON or the engine is running).
2. Connect the Techstream to the DLC3.
3. Turn the ignition switch to ON.
4. Turn the Techstream on.
5. Enter the following menus: Powertrain / Engine and ECT / Monitor.
6. Check the Monitor Status displayed on the Techstream.

HINT:

If Incomplete is displayed, the monitor did not complete. Make sure that the preconditions have been met, and perform the Monitor Conditions again.

MONITOR RESULT

Refer to Checking Monitor Status INFO .

Last Modified: 3-10-2010	6.4 C	**From:** 200901
Model Year: 2010	**Model:** Corolla	**Doc ID:** RM000000PFW0AEX
Title: 2ZR-FE ENGINE CONTROL: SFI SYSTEM: P2118: Throttle Actuator Control Motor Current Range / Performance (2010 Corolla)		

DTC	**P2118**	**Throttle Actuator Control Motor Current Range / Performance**

DESCRIPTION

The electronic throttle control system has a dedicated power supply circuit. The voltage (+BM) is monitored and when it is low (less than 4 V), the ECM determines that there is a malfunction in the electronic throttle control system and cuts off the current to the throttle actuator.

When the voltage becomes unstable, the electronic throttle control system itself becomes unstable. For this reason, when the voltage is low, the current to the throttle actuator is cut. If repairs are made and the system returns to normal, turn the ignition switch off. On the next restart, the ECM will allow the current to flow to the throttle actuator.

HINT:

The electronic throttle control system does not use a throttle cable.

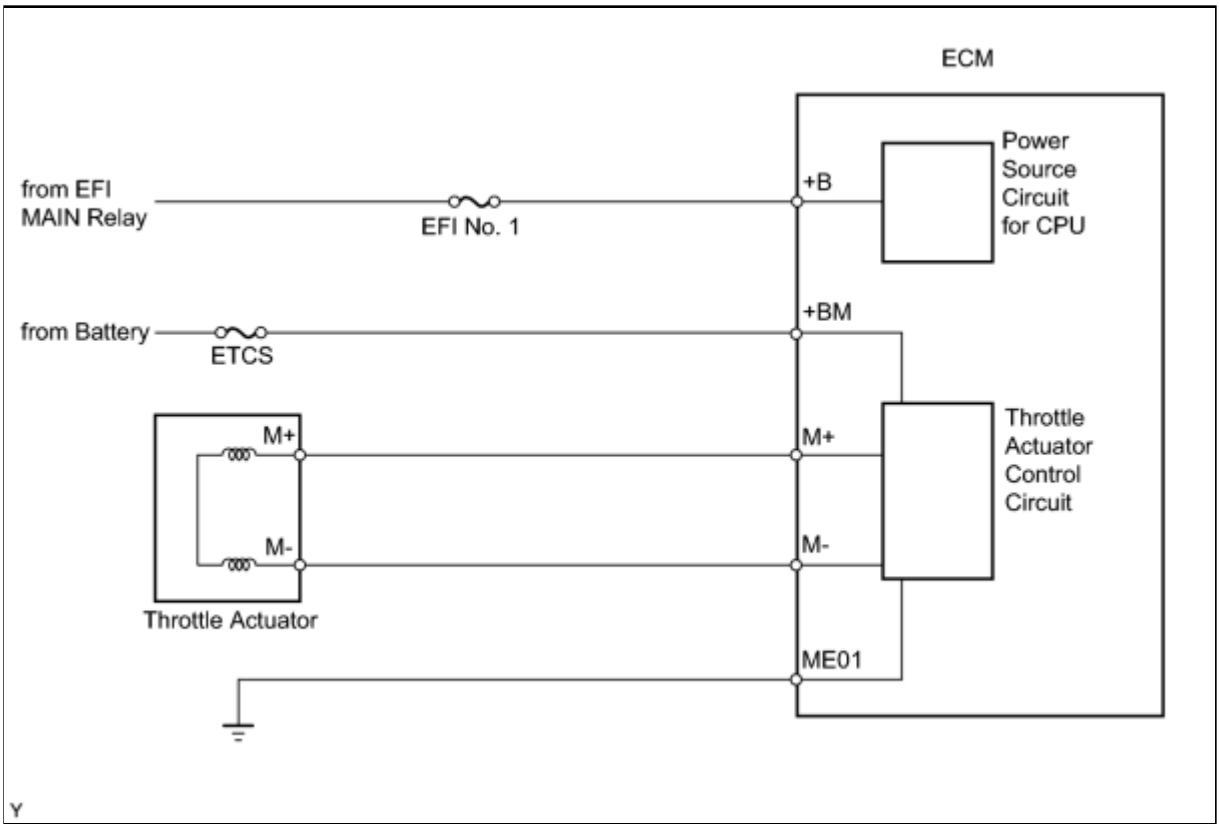

DTC	DTC DETECTION CONDITION	TROUBLE AREA

NO.		
P2118	Open in electronic throttle control system power source (+BM) circuit (1 trip detection logic)	• Open in ETCS power source circuit • Battery • Battery terminals • ETCS fuse • ECM

MONITOR DESCRIPTION

The ECM monitors the battery supply voltage applied to the throttle actuator.

When the power supply voltage (+BM) drops below 4 V for 0.8 seconds or more, the ECM interprets this as an open in the power supply circuit (+BM). The ECM illuminates the MIL and sets the DTC.

If the malfunction is not repaired successfully, the DTC is set 5 seconds after the engine is next started.

MONITOR STRATEGY

Related DTCs	P2118: Throttle actuator power supply
Required Sensors/Components (Main)	Throttle actuator, throttle valve (throttle body) ETCS fuse
Required Sensors/Components (Related)	None
Frequency of Operation	Continuous
Duration	0.8 seconds
MIL Operation	Immediate
Sequence of Operation	None

TYPICAL ENABLING CONDITIONS

Monitor runs whenever following DTCs not present	None
Battery voltage	8 V or more
Electronic throttle actuator power	ON

TYPICAL MALFUNCTION THRESHOLDS

Throttle actuator power supply voltage (+BM)	Less than 4 V

COMPONENT OPERATING RANGE

Throttle actuator power supply voltage (+BM)	11 to 14 V

CONFIRMATION DRIVING PATTERN

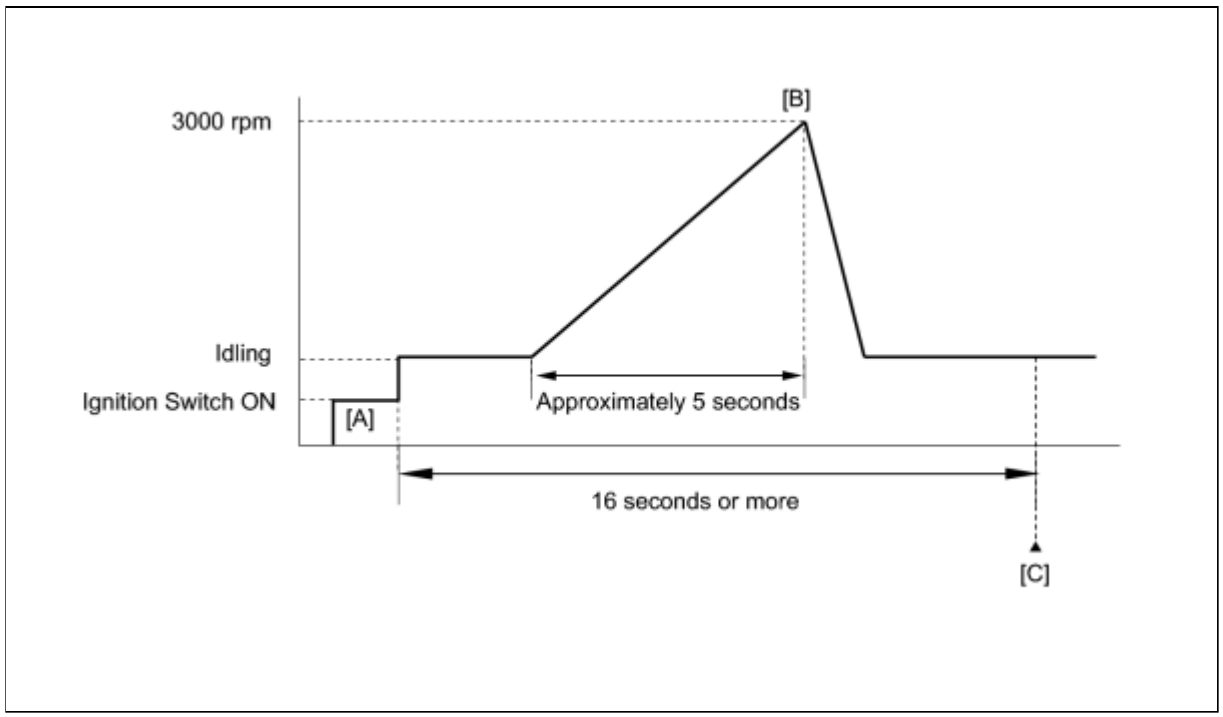

1. Connect the Techstream to the DLC3.
2. Turn the ignition switch to ON and turn the Techstream on.
3. Clear the DTCs (even if no DTCs are stored, perform the clear DTC procedure) INFO .
4. Turn the ignition switch off.
5. Turn the ignition switch to ON and turn the Techstream on [A].
6. Start the engine.
7. Slowly depress the accelerator pedal, raise the engine speed to approximately 3000 rpm for approximately 5 seconds, and then idle the engine [B].
8. Enter the following menus: Powertrain / Engine / Utility / All Readiness.
9. Input the DTC: P2118.
10. Check the DTC judgment result [C].

TECHSTREAM DISPLAY	DESCRIPTION
NORMAL	○ DTC judgment completed ○ System normal
ABNORMAL	○ DTC judgment completed ○ System abnormal

HINT:

○ If the judgment result shows ABNORMAL, the system has a malfunction.

- If the judgment result shows INCOMPLETE or UNKNOWN, perform steps [B] and [C] again.

11. If the test result is UNKNOWN, enter the following menus: Powertrain / Engine / Trouble Codes / Pending.
12. Read Pending DTCs.

    HINT:

    If a pending DTC is output, the system is malfunctioning.

13. If the test result is INCOMPLETE or UNKNOWN and no pending DTC is output, perform a universal trip and check for permanent DTCs INFO .

    HINT:

    - If a permanent DTC is output, the system is malfunctioning.
    - If no permanent DTC is output, the system is normal.

FAIL-SAFE

When this DTC, or other DTCs relating to electronic throttle control system malfunctions, are set, the ECM enters fail-safe mode. During fail-safe mode, the ECM cuts the current to the throttle actuator, and the throttle valve is returned to a 6° throttle angle by the return spring. The ECM then adjusts the engine output by controlling the fuel injection (intermittent fuel-cut) and ignition timing, in accordance with the accelerator pedal opening angle, to allow the vehicle to continue at a minimal speed. If the accelerator pedal is depressed gently, the vehicle can be driven slowly.

Fail-safe mode continues until a pass condition is detected, and the ignition switch is then turned off.

WIRING DIAGRAM

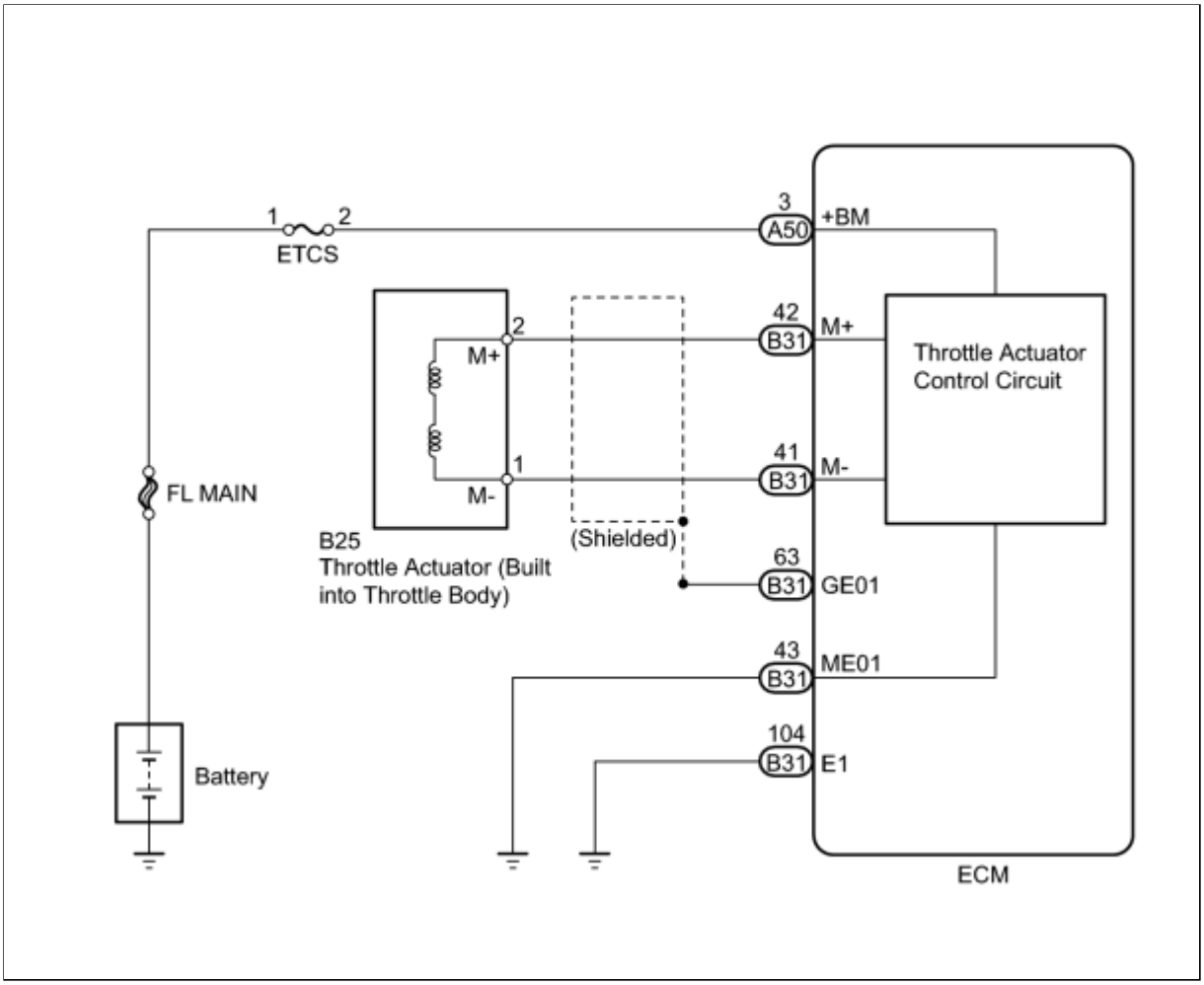

INSPECTION PROCEDURE

HINT:

Read freeze frame data using the Techstream. The ECM records vehicle and driving condition information as freeze frame data the moment a DTC is stored. When troubleshooting, freeze frame data can be helpful in determining whether the vehicle was running or stopped, whether the engine was warmed up or not, whether the air fuel ratio was lean or rich, as well as other data recorded at the time of a malfunction.

PROCEDURE

1.	**READ VALUE USING TECHSTREAM (+BM VOLTAGE)**

(a) Connect the Techstream to the DLC3.

(b) Turn the ignition switch to ON.

(c) Turn the Techstream on.

(d) Enter the following menus: Powertrain / Engine and ECT / Data List / +BM Voltage.

(e) Read the value displayed on the Techstream.

Standard voltage:
11 to 14 V

NG ▶ CHECK HARNESS AND CONNECTOR (ECM - BATTERY, BODY GROUND)

OK ▶ CHECK FOR INTERMITTENT PROBLEMS

2.	CHECK HARNESS AND CONNECTOR (ECM - BATTERY, BODY GROUND)

(a) Disconnect the ECM connectors.

(b) Measure the voltage according to the value(s) in the table below.

Standard Voltage:

TESTER CONNECTION	CONDITION	SPECIFIED CONDITION
A50-3 (+BM) - Body ground	Always	11 to 14 V

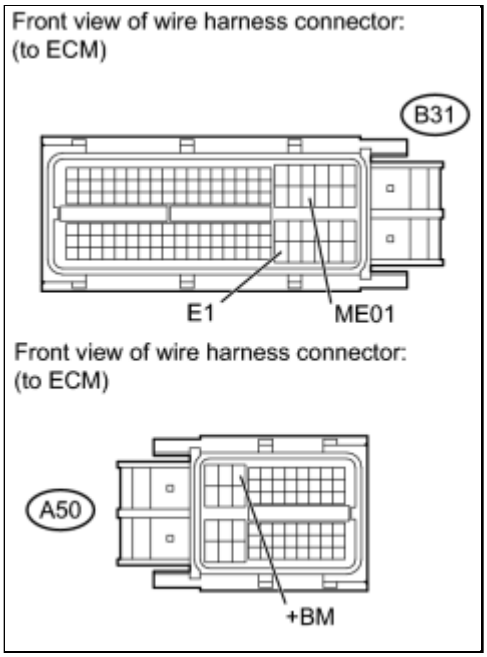

(c) Measure the resistance according to the value(s) in the table below.

Measure the voltage according to the value(s) in the table below.

Standard Voltage:

TESTER CONNECTION	CONDITION	SPECIFIED CONDITION
B31-43 (ME01) - Body ground	Always	11 to 14 V
B31-104 (E1) - Body ground		

(d) Reconnect the ECM connectors.

NG ▶ REPAIR OR REPLACE HARNESS OR CONNECTOR

OK ▶ REPLACE

Last Modified: 3-10-2010	6.4 C	**From:** 200901
Model Year: 2010	**Model:** Corolla	**Doc ID:** RM000000PFY0ADX
Title: 2ZR-FE ENGINE CONTROL: SFI SYSTEM: P2120,P2122,P2123,P2125,P2127,P2128,P2138: Throttle / Pedal Position Sensor / Switch "D" Circuit (2010 Corolla)		

DTC	**P2120**	**Throttle / Pedal Position Sensor / Switch "D" Circuit**

DTC	**P2122**	**Throttle / Pedal Position Sensor / Switch "D" Circuit Low Input**

DTC	**P2123**	**Throttle / Pedal Position Sensor / Switch "D" Circuit High Input**

DTC	**P2125**	**Throttle / Pedal Position Sensor / Switch "E" Circuit**

DTC	**P2127**	**Throttle / Pedal Position Sensor / Switch "E" Circuit Low Input**

DTC	**P2128**	**Throttle / Pedal Position Sensor / Switch "E" Circuit High Input**

DTC	**P2138**	**Throttle / Pedal Position Sensor / Switch "D" / "E" Voltage Correlation**

DESCRIPTION

HINT:

- This electronic throttle control system does not use a throttle cable.
- These DTCs relate to the accelerator pedal position sensor.

The accelerator pedal position sensor is mounted on the accelerator pedal bracket and has 2 sensor circuits: VPA (main) and VPA2 (sub). This sensor is a non-contact type and uses Hall-effect elements in order to yield accurate signals even in extreme conditions. The voltage from this sensor, which is applied to terminals VPA and VPA2 of the ECM, varies between 0.5 V and 4.5 V in proportion to the operating angle of the accelerator pedal (throttle valve). A signal from VPA indicates the actual accelerator pedal opening angle (throttle valve opening angle) and is used for engine control. A signal from VPA2 conveys the status of the VPA circuit and is used to check the accelerator pedal position

sensor itself.

The ECM monitors the actual accelerator pedal opening angle (throttle valve opening angle) through the signals from VPA and VPA2, and controls the throttle actuator according to these signals.

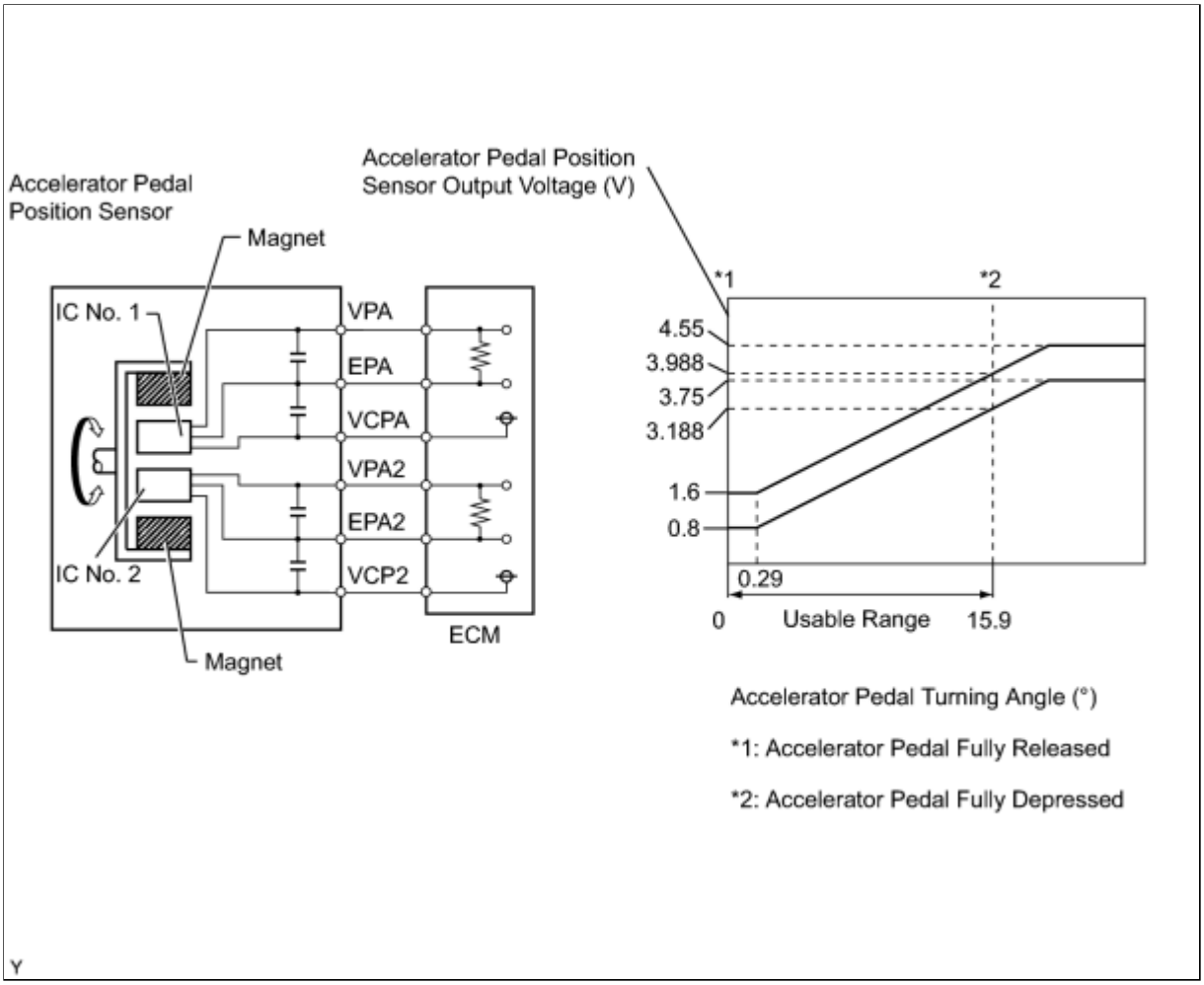

DTC NO.	DTC DETECTION CONDITION	TROUBLE AREA
P2120	VPA fluctuates rapidly beyond upper and lower malfunction thresholds for 0.5 seconds or more (1 trip detection logic)	• Accelerator pedal position sensor • ECM
P2122	VPA is 0.4 V or less for 0.5 seconds or more when accelerator pedal depressed (1 trip detection logic)	• Accelerator pedal position sensor • Open in VCP1 circuit • Open or ground short in VPA circuit • ECM

DTC NO.	DTC DETECTION CONDITION	TROUBLE AREA
P2123	VPA is 4.8 V or more for 2.0 seconds or more (1 trip detection logic)	• Accelerator pedal position sensor • Open in EPA circuit • ECM
P2125	VPA2 fluctuates rapidly beyond upper and lower malfunction thresholds for 0.5 seconds or more (1 trip detection logic)	• Accelerator pedal position sensor • ECM
P2127	VPA2 is 1.2 V or less for 0.5 seconds or more when accelerator pedal depressed (1 trip detection logic)	• Accelerator pedal position sensor • Open in VCP2 circuit • Open or ground short in VPA2 circuit • ECM
P2128	Conditions (a) and (b) continue for 2.0 seconds or more (1 trip detection logic): (a) VPA2 is 4.8 V or more (b) VPA is between 0.4 V and 3.45 V	• Accelerator pedal position sensor • Open in EPA2 circuit • ECM
P2138	Condition (a) or (b) continues for 2.0 seconds or more (1 trip detection logic): (a) Difference between VPA and VPA2 is 0.02 V or less (b) VPA is 0.4 V or less and VPA2 is 1.2 V or less	• Short between VPA and VPA2 circuits • Accelerator pedal position sensor • ECM

HINT:

When any of these DTCs are set, check the accelerator pedal position sensor voltage by entering the following menus using the Techstream: Powertrain / Engine and ECT / Data List / Accel Sensor Out No. 1 and Accel Sensor Out No. 2.

TROUBLE AREA	ACCEL SENSOR OUT NO.1 WHEN ACCELERATOR PEDAL RELEASED	ACCEL SENSOR OUT NO.2 WHEN ACCELERATOR PEDAL RELEASED	ACCEL SENSOR OUT NO.1 WHEN ACCELERATOR PEDAL	ACCEL SENSOR OUT NO.2 WHEN ACCELERATOR PEDAL

			DEPRESSED	DEPRESSED
VCP circuit open	0 to 0.4 V	0 to 0.4 V	0 to 0.4 V	0 to 0.4 V
Open or ground short in VPA circuit	0 to 0.4 V	1.2 to 2.0 V	0 to 0.4 V	3.4 to 5.0 V
Open or ground short in VPA2 circuit	0.5 to 1.1 V	0 to 0.4 V	2.5 to 4.5 V	0 to 0.4 V
EPA circuit open	4.5 to 5.0 V	4.5 to 5.0 V	4.5 to 5.0 V	4.5 to 5.0 V
Normal condition	0.5 to 1.1 V	1.2 to 2.0 V	2.5 to 4.5 V	3.4 to 5.0 V

HINT:

Accelerator pedal positions are expressed as voltages.

MONITOR DESCRIPTION

When either the output voltage of VPA or VPA2 deviates from the standard range, or the difference between the output voltages of the 2 sensor circuits is less than the threshold, the ECM determines that there is a malfunction in the accelerator pedal position sensor. The ECM then illuminates the MIL and sets a DTC.

Example:

When the output voltage of VPA drops below 0.4 V for more than 0.5 seconds when the accelerator pedal is fully depressed, DTC P2122 is set.

If the malfunction is not repaired successfully, a DTC is set 2 seconds after the engine is next started.

MONITOR STRATEGY

Related DTCs	P2120: Accelerator pedal position sensor 1 range check (fluctuating) P2122: Accelerator pedal position sensor 1 range check (low voltage) P2123: Accelerator pedal position sensor 1 range check (high voltage) P2125: Accelerator pedal position sensor 2 range check (fluctuating) P2127: Accelerator pedal position sensor 2 range check (low voltage) P2128: Accelerator pedal position sensor 2 range check (high voltage)

	P2138: Accelerator pedal position sensor range check (correlation)
Required Sensors/Components (Main)	Accelerator pedal position sensor
Required Sensors/Components (Related)	-
Frequency of Operation	Continuous
Duration	0.5 seconds: P2120, P2122, P2125 and P2127 2.0 seconds: P2123, P2128 and P2138
MIL Operation	Immediate
Sequence of Operation	None

TYPICAL ENABLING CONDITIONS

Monitor runs whenever following DTCs are not present	None
Either of following conditions 1 or 2 is met:	-
1. Ignition switch	ON
2. Throttle actuator power	ON

TYPICAL MALFUNCTION THRESHOLDS

P2120:

Either of following conditions 1 or 2 is met:	-
1. VPA voltage when VPA2 voltage 0.04 V or more	0.4 V or less
2. VPA voltage	4.8 V or more

P2122:

VPA voltage when VPA2 voltage 0.04 V or more	0.4 V or less

P2123:

VPA voltage	4.8 V or more

P2125:

Either of following conditions 1 or 2 is met:	-
1. VPA2 voltage when VPA voltage 0.04 V or more	1.2 V or less

2. VPA2 voltage when VPA voltage 0.4 to 3.45 V	4.8 V or more

P2127:

VPA2 voltage when VPA voltage 0.04 V or more	1.2 V or less

P2128:

VPA2 voltage when VPA voltage 0.4 to 3.45 V	4.8 V or more

P2138:

Either of following conditions A or B is met:	-
Condition A	-
Difference between VPA and VPA 2 voltages	0.02 V or less
Condition B	-
VPA voltage	0.4 V or less
VPA2 voltage	1.2 V or less

COMPONENT OPERATING RANGE

VPA voltage	0.4 to 4.8 V
VPA2 voltage	1.2 to 4.8 V
Difference between VPA and VPA2 voltages	More than 0.02 V

FAIL-SAFE

When any of DTCs P2120, P2121, P2122, P2123, P2125, P2127, P2128 and P2138 are set, the ECM enters fail-safe mode. If either of the 2 sensor circuits malfunctions, the ECM uses the remaining circuit to calculate the accelerator pedal position to allow the vehicle to continue driving. If both of the circuits malfunction, the ECM regards the accelerator pedal as being released. As a result, the throttle valve is closed and the engine idles.

Fail-safe mode continues until a pass condition is detected, and the ignition switch is turned off.

WIRING DIAGRAM

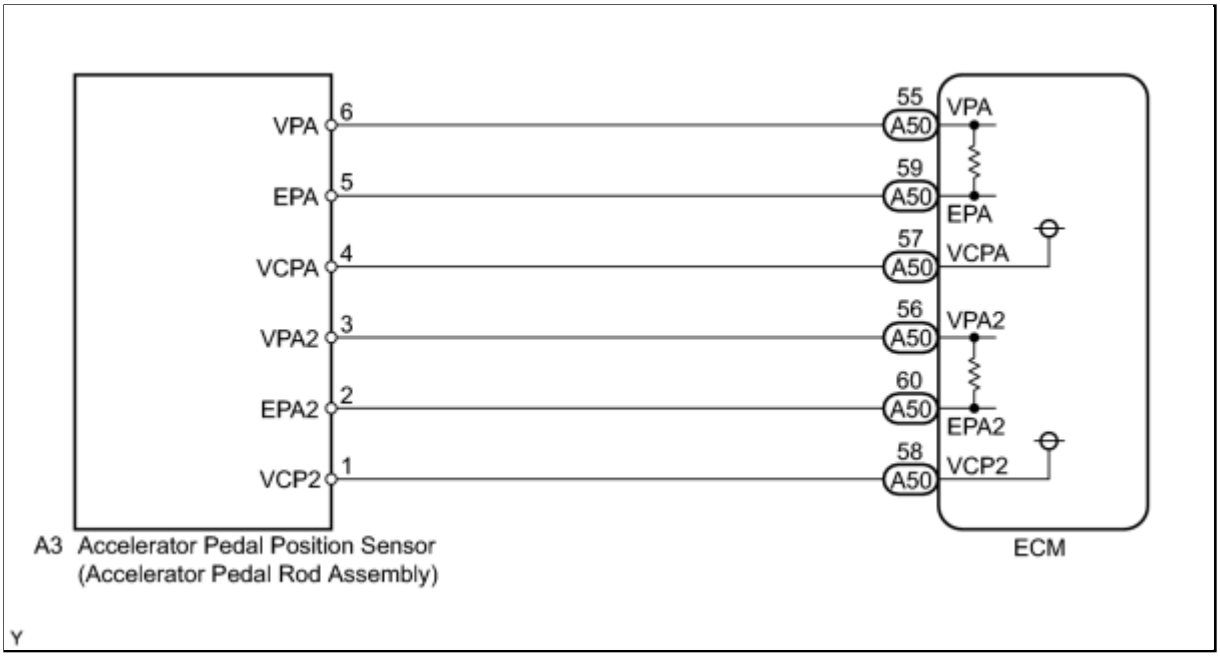

INSPECTION PROCEDURE

HINT:

Read freeze frame data using the Techstream. The ECM records vehicle and driving condition information as freeze frame data the moment a DTC is stored. When troubleshooting, freeze frame data can be helpful in determining whether the vehicle was running or stopped, whether the engine was warmed up or not, whether the air fuel ratio was lean or rich, as well as other data recorded at the time of a malfunction.

PROCEDURE

1.	**READ VALUE USING TECHSTREAM (ACCELERATOR POSITION SENSOR)**

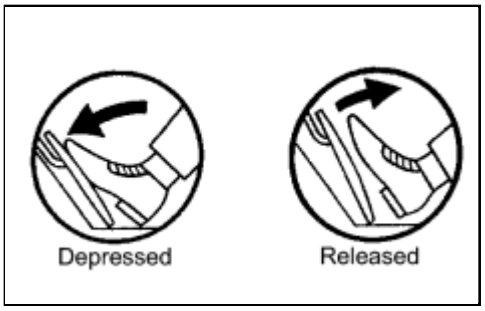

(a) Connect the Techstream to the DLC3.

(b) Turn the ignition switch to ON.

(c) Turn the Techstream on.

(d) Enter the following menus: Powertrain / Engine and ECT / Data List / Accel Sensor Out No.1 and Accel Sensor Out No.2.

(e) Read the value displayed on the Techstream.

Standard Voltage:

ACCELERATOR PEDAL OPERATION	ACCEL SENSOR OUT NO.1	ACCEL SENSOR OUT NO.2
Released	0.5 to 1.1 V	1.2 to 2.0 V
Depressed	2.5 to 4.5 V	3.4 to 5.0 V

NG ▶ **CHECK HARNESS AND CONNECTOR (ACCELERATOR PEDAL POSITION SENSOR - ECM)**

OK ▶ **CHECK FOR INTERMITTENT PROBLEMS**

2.	**CHECK HARNESS AND CONNECTOR (ACCELERATOR PEDAL POSITION SENSOR - ECM)**

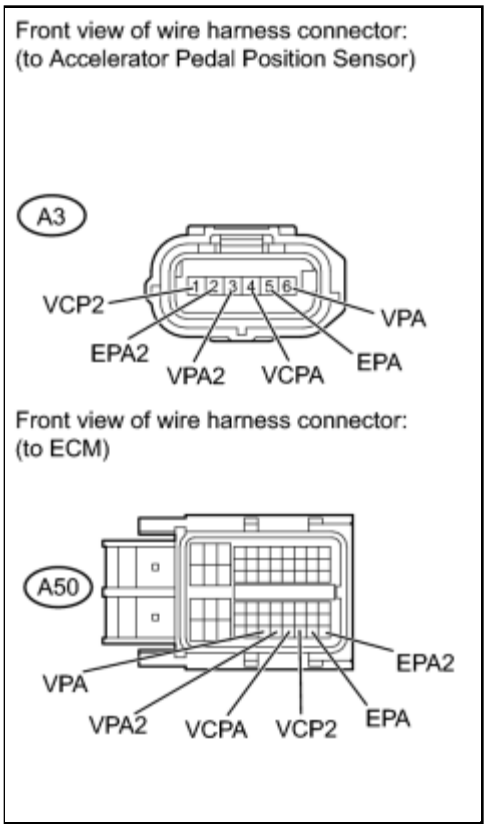

(a) Disconnect the accelerator pedal position sensor connector.

(b) Disconnect the ECM connector.

(c) Measure the resistance according to the value(s) in the table below.

Standard Resistance (Check for Open):

TESTER CONNECTION	CONDITION	SPECIFIED CONDITION

TESTER CONNECTION	CONDITION	SPECIFIED CONDITION
A3-6 (VPA) - A50-55 (VPA)	Always	Below 1 Ω
A3-5 (EPA) - A50-59 (EPA)	Always	Below 1 Ω
A3-4 (VCPA) - A50-57 (VCPA)	Always	Below 1 Ω
A3-3 (VPA2) - A50-56 (VPA2)	Always	Below 1 Ω
A3-2 (EPA2) - A50-60 (EPA2)	Always	Below 1 Ω
A3-1 (VCP2) - A50-58 (VCP2)	Always	Below 1 Ω

Standard Resistance (Check for Short):

TESTER CONNECTION	CONDITION	SPECIFIED CONDITION
A3-6 (VPA) or A50-55 (VPA) - Body ground	Always	10 kΩ or higher
A3-5 (EPA) or A50-59 (EPA) - Body ground	Always	10 kΩ or higher
A3-4 (VCPA) or A50-57 (VCPA) - Body ground	Always	10 kΩ or higher
A3-3 (VPA2) or A50-56 (VPA2) - Body ground	Always	10 kΩ or higher
A3-2 (EPA2) or A50-60 (EPA2) - Body ground	Always	10 kΩ or higher
A3-1 (VCP2) or A50-58 (VCP2) - Body ground	Always	10 kΩ or higher

(d) Reconnect the accelerator pedal position sensor connector.

(e) Reconnect the ECM connector.

NG ▶ **REPAIR OR REPLACE HARNESS OR CONNECTOR (ACCELERATOR PEDAL POSITION SENSOR - ECM)**

OK ▼

3.	**INSPECT ECM (VCPA AND VCP2 VOLTAGE)**

(a) Disconnect the accelerator pedal position sensor connector.

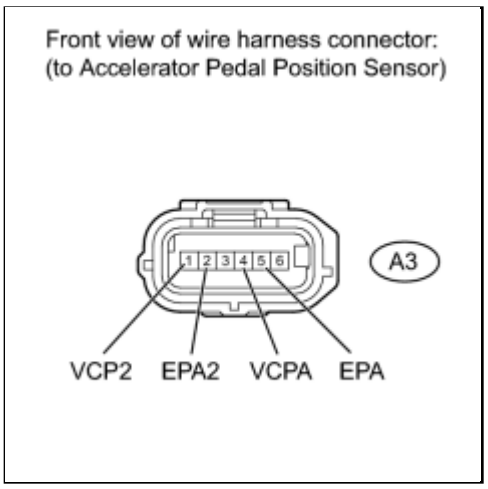

(b) Turn the ignition switch to ON.

(c) Measure the voltage according to the value(s) in the table below.

Standard Voltage:

TESTER CONNECTION	SWITCH CONDITION	SPECIFIED CONDITION
A3-4 (VCPA) - A3-5 (EPA)	Ignition switch ON	4.5 to 5.5 V
A3-1 (VCP2) - A3-2 (EPA2)	Ignition switch ON	4.5 to 5.5 V

(d) Reconnect the accelerator pedal position sensor connector.

NG ▶ **REPLACE ECM**

OK
▼

4.	**REPLACE ACCELERATOR PEDAL ROD ASSEMBLY**

(a) Replace the accelerator pedal rod assembly INFO .

NEXT
▼

5.	**CHECK WHETHER DTC OUTPUT RECURS (ACCELERATOR PEDAL POSITION SENSOR**

	DTCS)

(a) Connect the Techstream to the DLC3.

(b) Turn the ignition switch to ON.

(c) Turn the Techstream on.

(d) Clear DTCs INFO .

(e) Start the engine.

(f) Allow the engine to idle for 15 seconds or more.

(g) Fully depress and release the accelerator pedal several times quickly.

(h) Enter the following menus: Powertrain / Engine and ECT / Trouble Codes.

(i) Read the DTCs.

Result:

RESULT	PROCEED TO
DTC P2120, P2122, P2123, P2125, P2127, P2128, and/or P2138 is output	A
DTC is not output	B

B ▶ **END**

A ▶ **REPLACE ECM**

Last Modified: 3-10-2010	6.4 C	**From:** 200901
Model Year: 2010	**Model:** Corolla	**Doc ID:** RM000000WC409DX
Title: 2ZR-FE ENGINE CONTROL: SFI SYSTEM: P2195,P2196: Oxygen (A/F) Sensor Signal Stuck Lean (Bank 1 Sensor 1) (2010 Corolla)		

DTC	**P2195**	**Oxygen (A/F) Sensor Signal Stuck Lean (Bank 1 Sensor 1)**

DTC	**P2196**	**Oxygen (A/F) Sensor Signal Stuck Rich (Bank 1 Sensor 1)**

DESCRIPTION

HINT:

- Although the DTC titles say oxygen sensor, these DTCs relate to the air fuel ratio sensor.
- Sensor 1 refers to the sensor mounted in front of the three-way catalytic converter and located near the engine assembly.

The air fuel ratio sensor generates a voltage* that corresponds to the actual air fuel ratio. This sensor voltage is used to provide the ECM with feedback so that it can control the air fuel ratio. The ECM determines the deviation from the stoichiometric air fuel ratio level, and regulates the fuel injection time. If the air fuel ratio sensor malfunctions, the ECM is unable to control the air fuel ratio accurately.

The air fuel ratio sensor is the planar type and is integrated with the heater, which heats the solid electrolyte (zirconia element). This heater is controlled by the ECM. When the intake air volume is low (the exhaust gas temperature is low), a current flows into the heater to heat the sensor, in order to facilitate accurate oxygen concentration detection. In addition, the sensor and heater portions are the narrow type. The heat generated by the heater is conducted to the solid electrolyte through the alumina, therefore the sensor activation is accelerated.

In order to obtain a high purification rate of the carbon monoxide (CO), hydrocarbon (HC) and nitrogen oxide (NOx) components in the exhaust gas, a three-way catalytic converter is used. For the most efficient use of the three-way catalytic converter, the air fuel ratio must be precisely controlled so that it is always close to the stoichiometric level.

*: Value changes inside the ECM. Since the air fuel ratio sensor is a current output element, the current is converted into a voltage inside the ECM. Any measurements taken at the air fuel ratio sensor or ECM connectors will show a constant voltage.

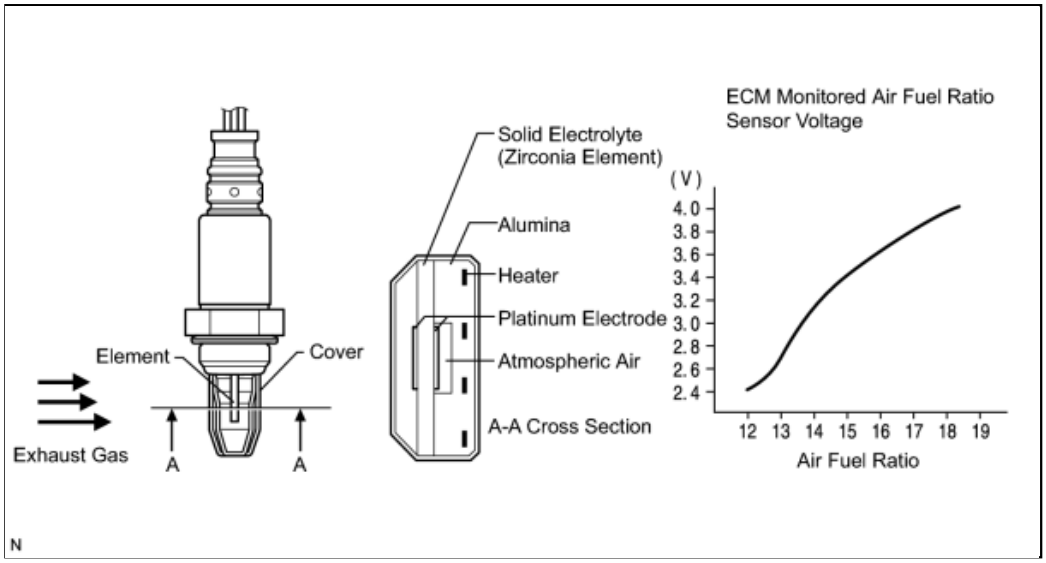

DTC NO.	DTC DETECTION CONDITION	TROUBLE AREA
P2195	Conditions (a) and (b) continue for 5 seconds or more (2 trip detection logic) • (a) Air fuel ratio sensor voltage more than 3.8 V • (b) Heated oxygen sensor voltage is rises from less than 0.21 V to 0.59 V or more	• Open or short in air fuel ratio sensor (sensor 1) circuit • Air fuel ratio sensor (sensor 1) • Air fuel ratio sensor (sensor 1) heater • Air fuel ratio sensor heater circuit • Intake system • Fuel pressure • Fuel injector • ECM
	While fuel-cut operation performed (during vehicle deceleration), air fuel ratio sensor current is 3.6 mA or more for 3 seconds (2 trip detection logic)	• Air fuel ratio sensor (sensor 1) • ECM
P2196	Conditions (a) and (b) continue for 5 seconds or more (2 trip detection logic) • (a) Air fuel ratio sensor voltage less than 2.8 V • (b) Heated oxygen sensor voltage falls from 0.59 V or more to less than 0.21 V	• Open or short in air fuel ratio sensor (sensor 1) circuit • Air fuel ratio sensor (sensor 1) • Air fuel ratio sensor (sensor 1) heater • Air fuel ratio sensor heater circuit • Intake system • Fuel pressure • Fuel injector • ECM
	While fuel-cut operation performed (during vehicle deceleration), air fuel ratio sensor current is less than 1.0 mA for 3 seconds (2 trip detection logic)	• Air fuel ratio sensor (sensor 1) • ECM

HINT:

- When any of these DTCs are set, check the air fuel ratio sensor voltage output by entering the following menus on the Techstream: Powertrain / Engine / Data List / All Data / AFS Voltage B1 S1.
- Short-term fuel trim values can also be read using the Techstream.
- The ECM regulates the voltages at the A1A+ and A1A- terminals of the ECM to a constant level. Therefore, the air fuel ratio sensor voltage output cannot be confirmed without using the Techstream.
- If an air fuel ratio sensor malfunction is detected, the ECM sets a DTC.

MONITOR DESCRIPTION

Sensor Voltage Detection Monitor

Under the air fuel ratio feedback control, if the air fuel ratio sensor voltage output indicates rich or lean for a certain period of time, the ECM determines that there is a malfunction in the air fuel ratio sensor. The ECM illuminates the MIL and stores a DTC.

Example:

If the air fuel ratio sensor voltage output is below 2.8 V (very rich condition) and heated oxygen sensor output voltage falls from 0.59 V or more to less than 0.21 V for 5 seconds, the ECM stores DTC P2196. Alternatively, if the air fuel ratio sensor voltage output is higher than 3.8 V (very lean condition) and heated oxygen sensor output voltage rises from less

than 0.21 V to 0.59 V or more for 5 seconds, DTC P2195 is stored.

Sensor Current Detection Monitor

A rich air fuel mixture causes a low air fuel ratio sensor current, and a lean air fuel mixture causes a high air fuel ratio sensor current. Therefore, the sensor output becomes low during acceleration, and it becomes high during deceleration with the throttle valve fully closed. The ECM monitors the air fuel ratio sensor current during fuel-cut and detects any abnormal current values.

If the air fuel ratio sensor output is 3.6 mA or higher for more than 3 seconds of cumulative time, the ECM interprets this as a malfunction in the air fuel ratio sensor and stores DTC P2195 (stuck on high side). If the air fuel ratio sensor output is below 1.0 mA for more than 3 seconds of cumulative time, the ECM stores DTC P2196 (stuck on low side).

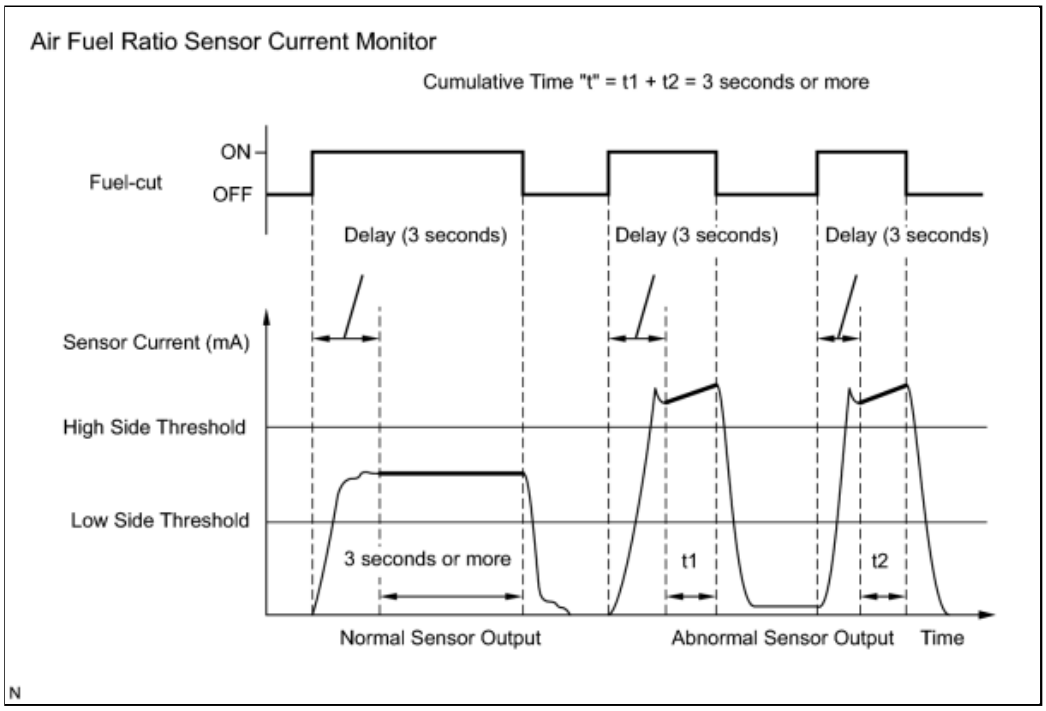

MONITOR STRATEGY

Related DTCs	P2195: Air fuel ratio sensor (Bank 1) signal stuck lean P2196: Air fuel ratio sensor (Bank 1) signal stuck rich
Required Sensors/Components (Main)	Air fuel ratio sensor
Required Sensors/Components (Related)	Heated oxygen sensor
Frequency of Operation	Continuous
Duration	5 seconds: Sensor voltage detection monitor 3 seconds: Sensor current detection monitor
MIL Operation	2 driving cycles
Sequence of Operation	None

TYPICAL ENABLING CONDITIONS

ALL

Monitor runs whenever following DTCs not	P0016 (VVT System Bank 1 - Misalignment)

present	P0017 (Exhaust VVT System - Misalignment) P0031, P0032 (Air Fuel Ratio Sensor Heater - Sensor 1) P0102, P0103 (Mass Air Flow Meter) P0112, P0113 (Intake Air Temperature Sensor) P0115, P0117, P0118 (Engine Coolant Temperature Sensor) P0125 (Insufficient Engine Coolant Temperature for Closed Loop Fuel Control) P0120, P0121 P0122, P0123, P0220, P0222, P0223, P2135 (Throttle Position Sensor) P0128 (Thermostat) P0171, P0172 (Fuel System) P0301, P0302, P0303, P0304 (Misfire) P0335 (Crankshaft Position Sensor) P0340 (Camshaft Position Sensor) P0451, P0452 (EVAP System) P0500 (Vehicle Speed Sensor) P0505 (Vehicle Speed Sensor IAC Valve)

Sensor Voltage Detection Monitor (Lean Side Malfunction P2195)

Time after engine start	30 seconds or more
Fuel system status	Closed-loop

Sensor Voltage Detection Monitor (Rich Side Malfunction P2196)

Time after engine start	30 seconds or more
Fuel system status	Closed-loop

Sensor Current Detection Monitor (P2195, P2196)

Battery voltage	11 V or more
Atmospheric pressure	76 kPa (570 mmHg) or higher
Air fuel ratio sensor status	Activated
Engine coolant temperature	75°C (167°F) or more
Continuous time of fuel cut	3 to 10 seconds

TYPICAL MALFUNCTION THRESHOLDS

Sensor Voltage Detection Monitor (Lean Side Malfunction P2195)

Heated oxygen sensor output voltage	Rises from less than 0.21 V to 0.59 V or more
Air fuel ratio sensor voltage	More than 3.8 V for 0.5 seconds

Sensor Voltage Detection Monitor (Rich Side Malfunction P2196)

Heated oxygen sensor output voltage	Falls from 0.59 V or more to less than 0.21 V
Air fuel ratio sensor voltage	Less than 2.8 V for 0.5 seconds

Sensor Current Detection Monitor (High Side Malfunction P2195)

air fuel ratio sensor current during fuel cut	3.6 mA or more

Sensor Current Detection Monitor (Low Side Malfunction P2196)

air fuel ratio sensor current during fuel cut	Less than 1.0 mA

MONITOR RESULT

Refer to Checking Monitor Status INFO .

WIRING DIAGRAM

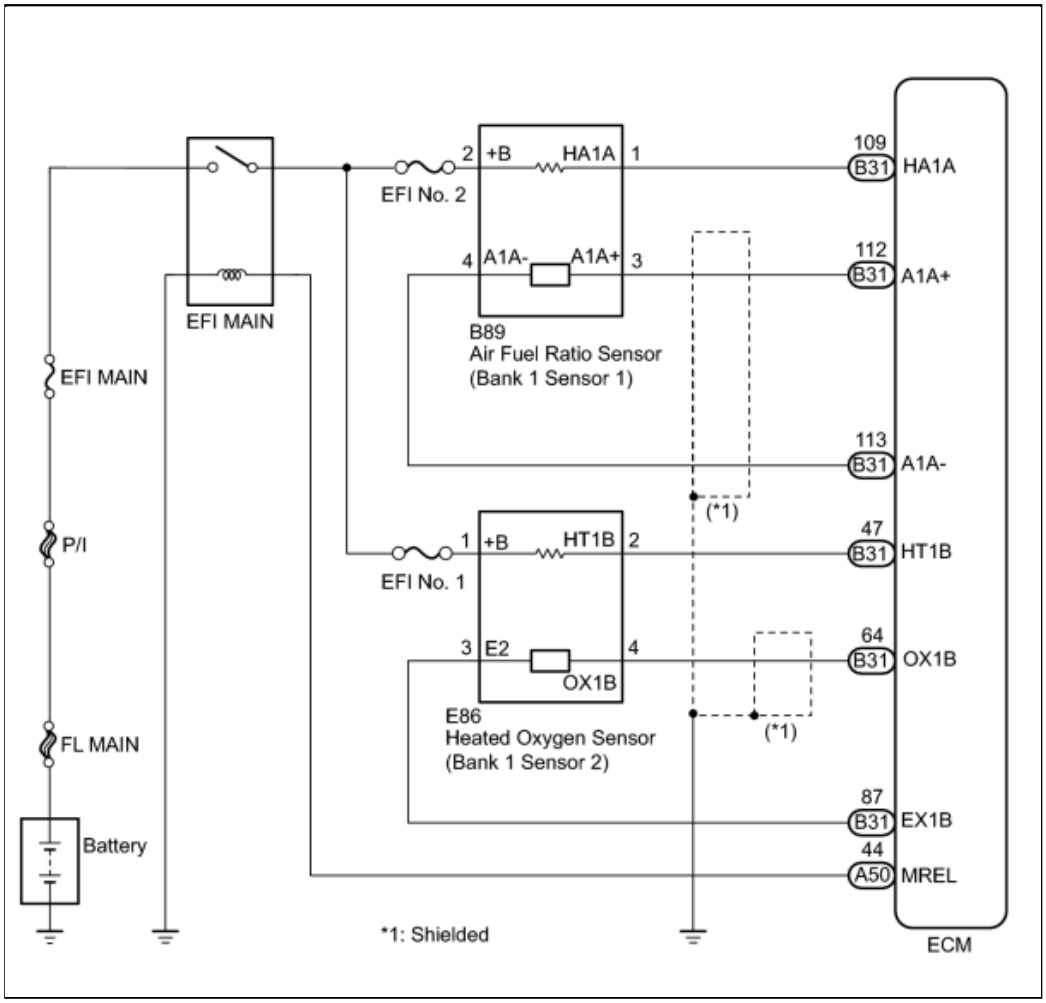

CONFIRMATION DRIVING PATTERN

CAUTION:

Strictly observe posted speed limits, traffic laws, and road conditions when performing these drive patterns.

HINT:

This confirmation driving pattern is used in the "PERFORM CONFIRMATION DRIVING PATTERN" procedure of the following diagnostic troubleshooting procedure.

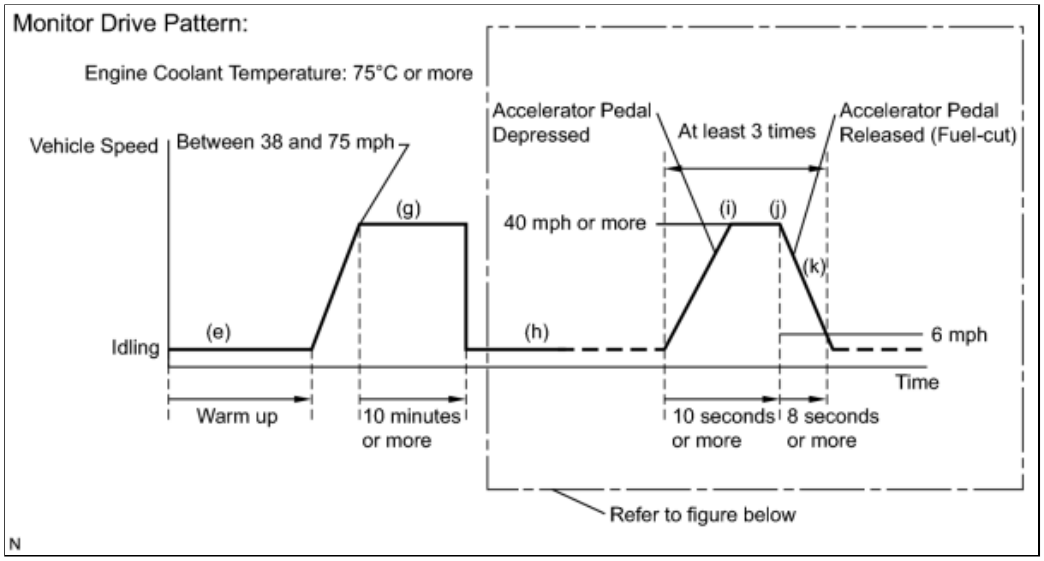

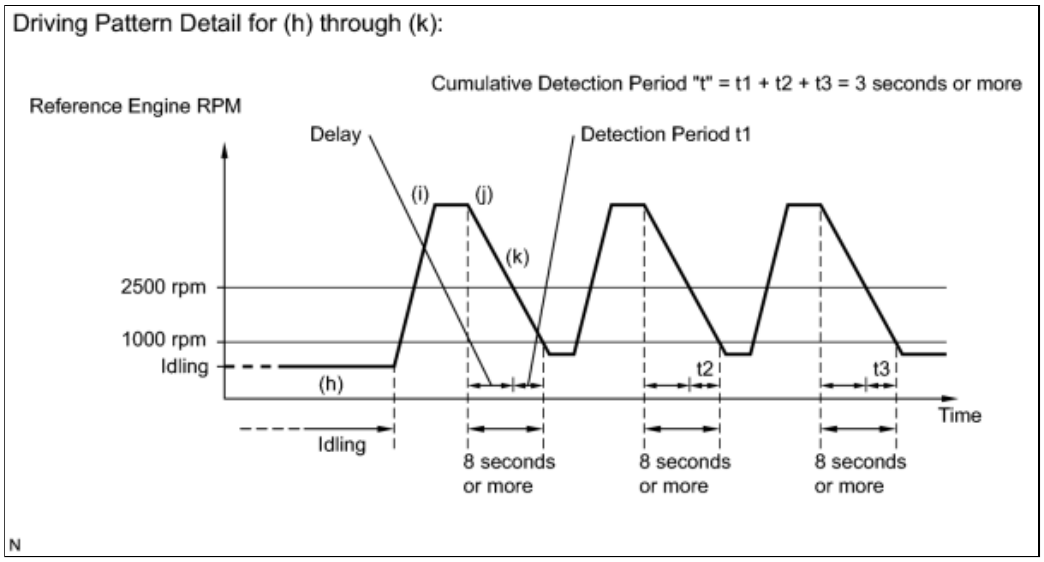

(a) Connect the Techstream to the DLC3.
(b) Turn the ignition switch to ON.
(c) Turn the Techstream on.
(d) Clear DTCs INFO .
(e) Start the engine, and warm it up until the engine coolant temperature reaches 75°C (167°F) or higher.
(f) Enter the following menus to check the fuel-cut status: Powertrain / Engine and ECT / Data List / Idle Fuel Cut.
(g) Drive the vehicle at between 38 mph (60 km/h) and 75 mph (120 km/h) for at least 10 minutes.
(h) Change the transmission to 2nd gear.
(i) Drive the vehicle at the proper vehicle speed to perform fuel-cut operation (refer to the following HINT).

HINT:

Fuel-cut is performed when the following conditions are met:

- Accelerator pedal fully released.
- Engine speed is 2500 rpm or more (fuel injection returns at 1000 rpm).

(j) Accelerate the vehicle to 40 mph (64 km/h) or more by depressing the accelerator pedal for at least 10 seconds.
(k) Soon after performing step (j) above, release the accelerator pedal for at least 8 seconds without depressing the brake pedal, in order to execute fuel-cut control.
(l) Allow the vehicle to decelerate until the vehicle decelerates to less than 6 mph (10 km/h).
(m) Repeat steps from (h) through (k) above at least 3 times in one driving cycle.

HINT:

Completion of all O2S (A/F) Monitor is required to change the value in Monitor.

INSPECTION PROCEDURE

HINT:

Malfunctioning areas can be identified by performing the Control the Injection Volume for A/F sensor function provided in the Active Test. The Control the Injection Volume for A/F sensor function can help to determine whether the air fuel ratio sensor, heated oxygen sensor and other potential trouble areas are malfunctioning.

The following instructions describe how to conduct the Control the Injection Volume for A/F sensor operation using the Techstream.

1. Connect the Techstream to the DLC3.
2. Start the engine.
3. Turn the Techstream on.
4. Warm up the engine at an engine speed of 2500 rpm for approximately 90 seconds.
5. Enter the following menus: Powertrain / Engine and ECT / Active Test / Control the Injection Volume for A/F sensor.
6. Perform the Active Test operation with the engine in an idling condition (press the RIGHT or LEFT button to change the fuel injection volume.)
7. Monitor the output voltages of the air fuel ratio and heated oxygen sensors (AFS Voltage B1 S1 and O2S B1 S2) displayed on the Techstream.

HINT:

- The Control the Injection Volume for A/F sensor operation lowers the fuel injection volume by 12.5% or increases the injection volume by 25%.
- Each sensor reacts in accordance with increases and decreases in the fuel injection volume.

TECHSTREAM DISPLAY (SENSOR)	INJECTION VOLUME	STATUS	VOLTAGE
AFS Voltage B1 S1 (air fuel ratio)	+25%	Rich	Less than 3.1 V
	-12.5%	Lean	More than 3.4 V
O2S B1 S2 (heated oxygen)	+25%	Rich	More than 0.55 V
	-12.5%	Lean	Less than 0.4 V

NOTICE:

The air fuel ratio sensor has an output delay of a few seconds and the heated oxygen sensor has a maximum output delay of approximately 20 seconds.

CASE	AIR FUEL RATIO SENSOR (SENSOR 1) OUTPUT VOLTAGE	HEATED OXYGEN SENSOR (SENSOR 2) OUTPUT VOLTAGE	MAIN SUSPECTED TROUBLE AREA
1	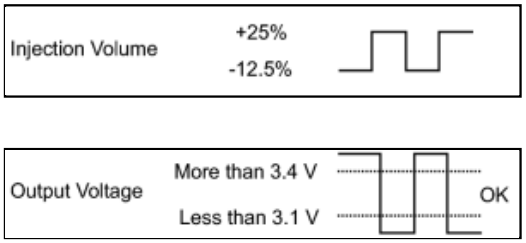	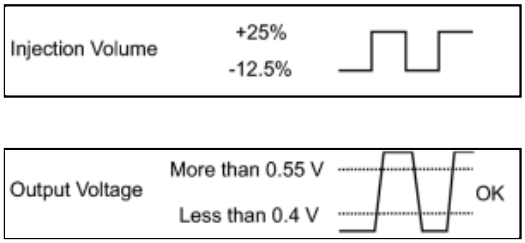	-
2			• Air fuel ratio sensor • Air fuel ratio sensor heater

CASE	AIR FUEL RATIO SENSOR (SENSOR 1) OUTPUT VOLTAGE	HEATED OXYGEN SENSOR (SENSOR 2) OUTPUT VOLTAGE	MAIN SUSPECTED TROUBLE AREA
	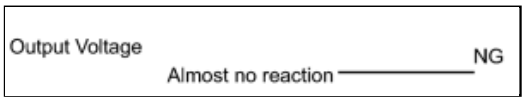	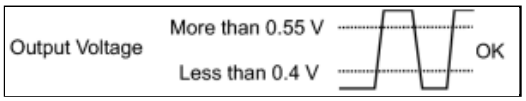	• Air fuel ratio sensor circuit
3	 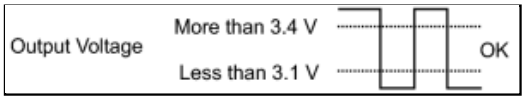	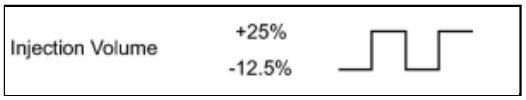 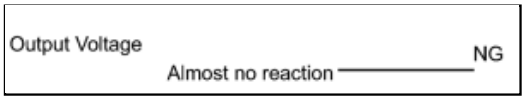	• Heated oxygen sensor • Heated oxygen sensor heater • Heated oxygen sensor circuit
4	 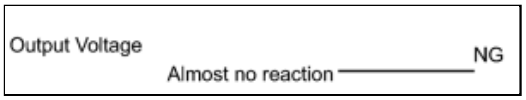	 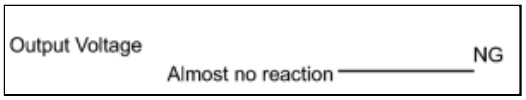	• Injector • Fuel pressure • Gas leak from exhaust system (Air fuel ratio extremely rich or lean)

- Following the Control the Injection Volume for A/F sensor procedure enables technicians to check and graph the voltage outputs of both the air fuel ratio and heated oxygen sensors.
- To display the graph, enter the following menus: Powertrain / Engine and ECT / Active Test / Control the Injection Volume for A/F Sensor / AFS Voltage B1 S1 and O2S B1 S2; then press the graph button on the Data List view.

HINT:

- Read freeze frame data using the Techstream. The ECM records vehicle and driving condition information as freeze frame data the moment a DTC is stored. When troubleshooting, freeze frame data can be helpful in determining whether the vehicle was running or stopped, whether the engine was warmed up or not, whether the air fuel ratio was lean or rich, as well as other data recorded at the time of a malfunction.
- A low air fuel ratio sensor voltage could be caused by a rich air fuel mixture. Check for conditions that would cause the engine to run rich.
- A high air fuel ratio sensor voltage could be caused by a lean air fuel mixture. Check for conditions that would cause the engine to run lean.

PROCEDURE

1.	**CHECK ANY OTHER DTCS OUTPUT (IN ADDITION TO P2195 OR P2196)**

(a) Connect the Techstream to the DLC3.

(b) Turn the ignition switch to ON.

(c) Turn the Techstream on.

(d) Enter the following menus: Powertrain / Engine and ECT / Trouble Codes.

(e) Read the DTCs.

Result:

RESULT	PROCEED TO
DTC P2195 or P2196 is output	A
DTC P2195 or P2196 and other DTCs are output	B

HINT:

If any DTCs other than P2195 and P2196 are output, troubleshoot those DTCs first.

B ▶ **GO TO DTC CHART**

A ▼

2.	**CONFIRM IF VEHICLE HAS RUN OUT OF FUEL IN PAST**

(a) Has the vehicle run out of fuel in the past?

NO ▶ **READ VALUE USING TECHSTREAM (TEST VALUE OF AIR FUEL RATIO SENSOR)**

YES ▶ **DTC CAUSED BY RUNNING OUT OF FUEL**

3.	**READ VALUE USING TECHSTREAM (TEST VALUE OF AIR FUEL RATIO SENSOR)**

(a) Connect the Techstream to the DLC3.

(b) Turn the ignition switch to ON.

(c) Turn the Techstream on.

(d) Clear DTCs INFO .

(e) Allow the vehicle to drive in accordance with the drive pattern described in the CONFIRMATION DRIVING PATTERN.

(f) Enter the following menus: Powertrain / Engine and ECT / Monitor / O2 Sensor / Status 2.

(g) Check that the Status 2 of O2 Sensor is Complete.

If the status is still Incomplete, perform the drive pattern increasing the vehicle speed and using the second gear to decelerate the vehicle.

(h) Enter the following menus: Powertrain / Engine and ECT / Monitor / O2 Sensor / Details / RANGE B1 S1.

(i) Check the test value of the air fuel ratio sensor output current during fuel-cut.

Result:

RESULT	PROCEED TO
Within normal range (1.0 mA or higher, and below 3.6 mA)	A
Outside normal range (Below 1.0 mA, or 3.6 mA or higher)	B

B ▶ REPLACE AIR FUEL RATIO SENSOR

A ▼

4.	**READ VALUE USING TECHSTREAM (OUTPUT VOLTAGE OF AIR FUEL RATIO SENSOR)**

(a) Connect the Techstream to the DLC3.

(b) Start the engine.

(c) Turn the Techstream on.

(d) Warm up the air fuel ratio sensor at an engine speed of 2500 rpm for 90 seconds.

(e) Enter the following menus: Powertrain / Engine and ECT / Data List / AFS Voltage B1 S1 and Engine Speed, then press the Record button.

(f) Check the air fuel ratio sensor voltage three times, when the engine is in each of the following conditions:

(1) While idling (check for at least 30 seconds)
(2) At an engine speed of approximately 2500 rpm (without any sudden changes in engine speed)
(3) Raise the engine speed to 4000 rpm and then quickly release the accelerator pedal so that the throttle valve is fully closed.

Standard Voltage:

CONDITION	AIR FUEL RATIO SENSOR VOLTAGE VARIATION	REFERENCE
(1) and (2)	Changes at approximately 3.3 V	Between 3.1 V and 3.5 V
(3)	Increases to 3.8 V or higher	This occurs during engine deceleration (when fuel-cut performed)

HINT:

For more information, see the diagrams below.

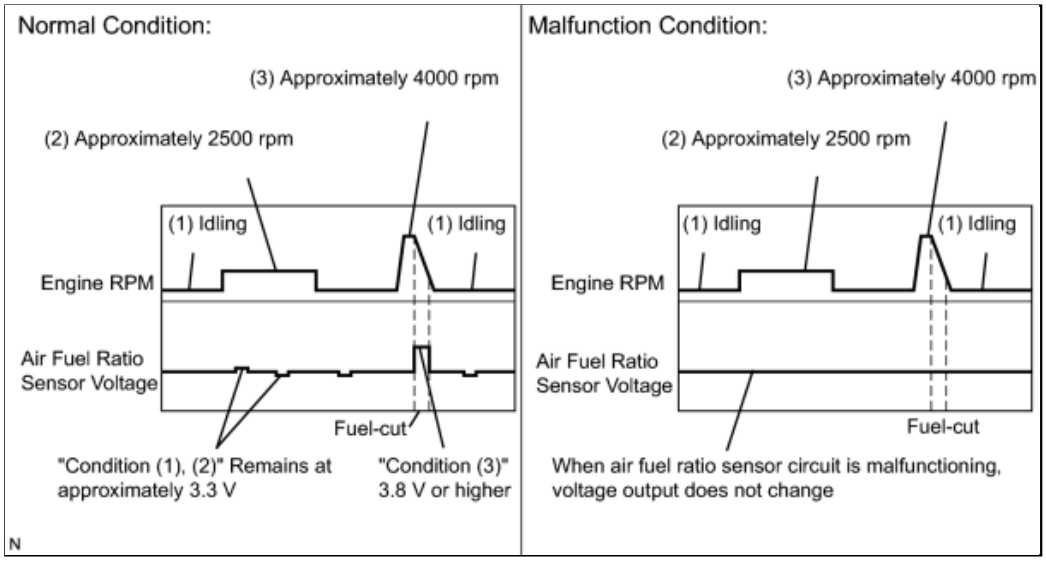

HINT:

- If the output voltage of the air fuel ratio sensor remains at approximately 3.3 V (see Malfunction Condition diagram) under any conditions, including those above, the air fuel ratio sensor may have an open circuit. (This will also happen if the air fuel ratio sensor heater has an open circuit.)
- If the output voltage of the air fuel ratio sensor remains at either approximately 3.8 V or higher, or below 2.8 V (see Malfunction Condition diagram) under any conditions, including those above, the air fuel ratio sensor may have a short circuit.
- The ECM stops fuel injection (fuel cut) during engine deceleration. This causes a lean condition and results in a momentary increase in the air fuel ratio sensor output voltage.
- The ECM must establish a closed throttle valve position learning value to perform fuel cut. If the battery terminal has been reconnected, the vehicle must be driven over 10 mph (16 km/h) to allow the ECM to learn the closed throttle valve position.
- When the vehicle is driven:

  The output voltage of the air fuel ratio sensor may be below 2.8 V during fuel enrichment. For the vehicle, this translates to a sudden increase in speed with the accelerator pedal fully depressed when trying to overtake another vehicle. The air fuel ratio sensor is functioning normally.
- The air fuel ratio sensor is a current output element; therefore, the current is converted into a voltage inside the ECM. Measuring the voltage at the connectors of the air fuel ratio sensor or ECM will show a constant voltage result.

NG ▶ **INSPECT AIR FUEL RATIO SENSOR (HEATER RESISTANCE)**

OK ▼

5.	**PERFORM CONFIRMATION DRIVING PATTERN**

(a) Connect the Techstream to the DLC3.

(b) Turn the ignition switch to ON.

(c) Turn the Techstream on.

(d) Clear DTCs.

(e) Switch the ECM from normal mode to check mode.

(f) Drive the vehicle referring the Confirmation Driving Pattern.

NEXT

6.	**CHECK WHETHER DTC OUTPUT RECURS (DTC P2195 OR P2196)**

(a) Connect the Techstream to the DLC3.

(b) Turn the ignition switch to ON.

(c) Turn the Techstream on.

(d) Enter the following menus: Powertrain / Engine and ECT / Trouble Codes.

(e) Read the DTCs.

Result:

RESULT	PROCEED TO
DTC P2195 or P2196 is output	A
DTC is not output	B

B **CHECK FOR INTERMITTENT PROBLEMS**

A

7.	**REPLACE AIR FUEL RATIO SENSOR**

(a) Replace the air fuel ratio sensor INFO .

NEXT

8.	**PERFORM CONFIRMATION DRIVING PATTERN**

(a) Connect the Techstream to the DLC3.

(b) Turn the ignition switch to ON.

(c) Turn the Techstream on.

(d) Clear DTCs.

(e) Switch the ECM from normal mode to check mode.

(f) Drive the vehicle referring the Confirmation Driving Pattern.

NEXT

9.	**CHECK WHETHER DTC OUTPUT RECURS (DTC P2195 OR P2196)**

(a) Connect the Techstream to the DLC3.

(b) Turn the ignition switch to ON.

(c) Turn the Techstream on.

(d) Enter the following menus: Powertrain / Engine and ECT / Trouble Codes.

(e) Read the DTCs.

Result:

RESULT	PROCEED TO
DTC is not output	A
DTC P2195 or P2196 is output	B

B **REPLACE ECM**

A **END**

10.	**INSPECT AIR FUEL RATIO SENSOR (HEATER RESISTANCE)** INFO

NG **REPLACE AIR FUEL RATIO SENSOR**

OK

11.	**CHECK HARNESS AND CONNECTOR (AIR FUEL RATIO SENSOR - ECM)**

(a) Disconnect the air fuel ratio sensor connector.

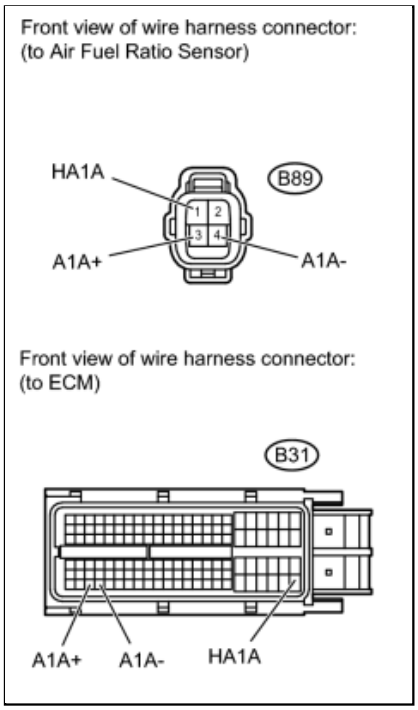

(b) Disconnect the ECM connector.

(c) Measure the resistance according to the value(s) in the table below.

Standard Resistance (Check for Open):

TESTER CONNECTION	CONDITION	SPECIFIED CONDITION
B89-1 (HA1A) - B31-109 (HA1A)	Always	Below 1 Ω
B89-3 (A1A+) - B31-112 (A1A+)		
B89-4 (A1A-) - B31-113 (A1A-)		

Standard Resistance (Check for Short):

TESTER CONNECTION	CONDITION	SPECIFIED CONDITION
B89-1 (HA1A) or B31-109 (HA1A) - Body ground	Always	10 kΩ or higher
B89-3 (A1A+) or B31-112 (A1A+) - Body ground		
B89-4 (A1A-) or B31-113 (A1A-) - Body ground		

(d) Reconnect the air fuel ratio sensor connector.

(e) Reconnect the ECM connector.

NG ▶ **REPAIR OR REPLACE HARNESS OR CONNECTOR (AIR FUEL RATIO SENSOR - ECM)**

OK ▼

12.	**CHECK INTAKE SYSTEM**

(a) Check the intake system for vacuum leak INFO .

OK:
No leaks from intake system.

NG ▶ **REPAIR OR REPLACE INTAKE SYSTEM**

OK ▼

13.	**CHECK FUEL PRESSURE**

(a) Check the fuel pressure INFO .

NG ▶ **REPAIR OR REPLACE FUEL SYSTEM**

OK ▼

14.	**INSPECT FUEL INJECTOR**

(a) Check the injector injection (whether fuel volume is high or low, and whether injection pattern is poor) INFO .

NG ▶ **REPLACE FUEL INJECTOR**

OK ▼

15.	**REPLACE AIR FUEL RATIO SENSOR**

(a) Replace the air fuel ratio sensor INFO .

NEXT ▼

16.	**PERFORM CONFIRMATION DRIVING PATTERN**

(a) Connect the Techstream to the DLC3.

(b) Turn the ignition switch to ON.

(c) Turn the Techstream on.

(d) Clear DTCs.

(e) Switch the ECM from normal mode to check mode.

(f) Drive the vehicle referring the Confirmation Driving Pattern.

NEXT

17.	**CHECK WHETHER DTC OUTPUT RECURS (DTC P2195 OR P2196)**

(a) Connect the Techstream to the DLC3.

(b) Turn the ignition switch to ON.

(c) Turn the Techstream on.

(d) Enter the following menus: Powertrain / Engine and ECT / Trouble Codes.

(e) Read the DTCs.

Result:

RESULT	PROCEED TO
DTC is not output	A
DTC P2195 or P2196 is output	B

B ▶ **REPLACE ECM**

A ▶ **END**

18.	**REPLACE AIR FUEL RATIO SENSOR**

(a) Replace the air fuel ratio sensor INFO .

NEXT

19.	**PERFORM CONFIRMATION DRIVING PATTERN**

(a) Connect the Techstream to the DLC3.

(b) Turn the ignition switch to ON.

(c) Turn the Techstream on.

(d) Clear DTCs.

(e) Switch the ECM from normal mode to check mode.

(f) Drive the vehicle referring the Confirmation Driving Pattern.

NEXT

20.	**CHECK WHETHER DTC OUTPUT RECURS (DTC P2195 OR P2196)**

(a) Connect the Techstream to the DLC3.

(b) Turn the ignition switch to ON.

(c) Turn the Techstream on.

(d) Enter the following menus: Powertrain / Engine and ECT / Trouble Codes.

(e) Read the DTCs.

Result:

RESULT	PROCEED TO
DTC is not output	A
DTC P2195 or P2196 (Air fuel ratio sensor pending DTCs) is output	B

B ▶ **REPLACE ECM**

A ▶ **END**

Last Modified: 3-10-2010	6.4 C	**From:** 200901
Model Year: 2010	**Model:** Corolla	**Doc ID:** RM000000PFX0B8X
Title: 2ZR-FE ENGINE CONTROL: SFI SYSTEM: P2119: Throttle Actuator Control Throttle Body Range / Performance (2010 Corolla)		

DTC	**P2119**	**Throttle Actuator Control Throttle Body Range / Performance**

DESCRIPTION

The electronic throttle control system is composed of the throttle actuator, throttle position sensor, accelerator pedal position sensor, and ECM. The ECM operates the throttle actuator to regulate the throttle valve in response to driver inputs. The throttle position sensor detects the opening angle of the throttle valve, and provides the ECM with feedback so that the throttle valve can be appropriately controlled by the ECM.

DTC NO.	DTC DETECTION CONDITION	TROUBLE AREA
P2119	Throttle valve opening angle continues to vary greatly from target opening angle (1 trip detection logic)	• Electronic throttle control system • ECM

MONITOR DESCRIPTION

The ECM determines the actual opening angle of the throttle valve from the throttle position sensor signal. The actual opening angle is compared to the target opening angle commanded by the ECM. If the difference between these two values is outside the standard range, the ECM interprets this as a malfunction in the electronic throttle control system. The ECM then illuminates the MIL and sets the DTC.

If the malfunction is not repaired successfully, the DTC can be set when the accelerator pedal is quickly released (to close the throttle valve) after the engine speed reaches 5000 rpm by fully depressing the accelerator pedal (fully open the throttle valve).

MONITOR STRATEGY

Related DTCs	P2119: Electronic throttle control system malfunction
Required Sensors/Components (Main)	Throttle actuator (throttle body)
Required Sensors/Components (Related)	-
Frequency of Operation	Continuous
Duration	1 second
MIL Operation	Immediate

Sequence of Operation	None

TYPICAL ENABLING CONDITIONS

Monitor runs whenever following DTCs are not present	None
System guard* judge condition	ON
*System guard set when following conditions are met:	-
Throttle actuator	ON
Throttle actuator duty calculation	Executing
Throttle position sensor fail	Not detected
Throttle actuator current-cut operation	Not executing
Throttle actuator power supply	5.5 V or more
Throttle actuator fail	Not detected

TYPICAL MALFUNCTION THRESHOLDS

Either of following conditions A or B is met	-
A. Commanded closed throttle position - current closed throttle position	0.3 V or more for 1 second
B. Commanded open throttle position - current open throttle position	0.3 V or more for 0.6 seconds

CONFIRMATION DRIVING PATTERN

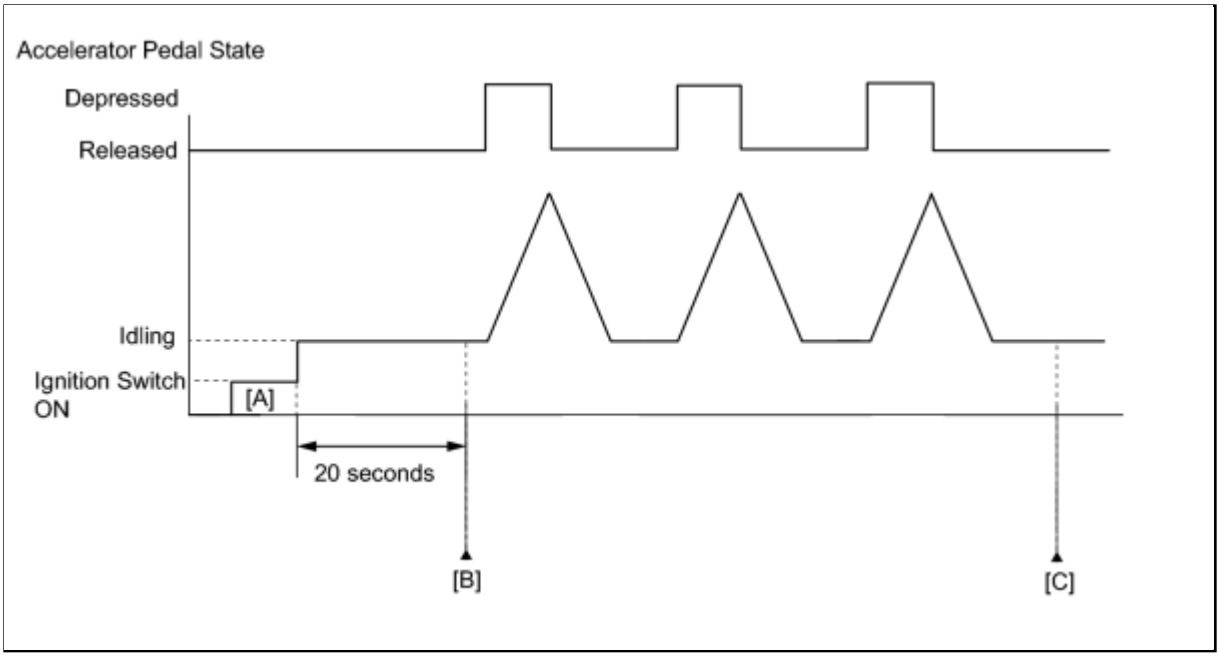

1. Connect the Techstream to the DLC3.
2. Turn the ignition switch to ON and turn the Techstream on.
3. Clear the DTCs (even if no DTCs are stored, perform the clear DTC procedure) INFO .
4. Turn the ignition switch off.
5. Turn the ignition switch to ON and turn the Techstream on [A].
6. Start the engine.
7. Idle the engine for 20 seconds.
8. Enter the following menus: Powertrain / Engine / Utility / All Readiness.
9. Input the DTC: P2119.
10. Check the DTC judgment result [B].

TECHSTREAM DISPLAY	DESCRIPTION
NORMAL	○ DTC judgment completed ○ System normal
ABNORMAL	○ DTC judgment completed ○ System abnormal
INCOMPLETE	○ DTC judgment not completed ○ Perform driving pattern after confirming DTC enabling conditions
UNKNOWN	○ Unable to perform DTC judgment ○ Number of DTCs which do not fulfill DTC preconditions has reached ECU memory limit

HINT:

- If the judgment result shows ABNORMAL, the system has a malfunction.

- If the judgment result shows INCOMPLETE or UNKNOWN, fully depress and release the accelerator pedal 3 times, and then check the DTC judgment result at step [C].

11. If the test result is UNKNOWN, enter the following menus: Powertrain / Engine / Trouble Codes / Pending.
12. Read Pending DTCs.

HINT:

If a pending DTC is output, the system is malfunctioning.

13. If the test result is INCOMPLETE or UNKNOWN and no pending DTC is output, perform a universal trip and check for permanent DTCs INFO .

HINT:

- If a permanent DTC is output, the system is malfunctioning.
- If no permanent DTC is output, the system is normal.

FAIL-SAFE

When this DTC, as well as other DTCs relating to electronic throttle control system malfunctions, is set, the ECM enters fail-safe mode. During fail-safe mode, the ECM cuts the current to the throttle actuator, and the throttle valve is returned to a 6° throttle angle by the return spring. The ECM then adjusts the engine output by controlling the fuel injection (intermittent fuel-cut) and ignition timing, in accordance with the accelerator pedal opening angle, to allow the vehicle to continue running at a minimal speed. If the accelerator pedal is depressed firmly and gently, the vehicle can be driven slowly.

Fail-safe mode continues until a pass condition is detected, and the ignition switch is then turned off.

WIRING DIAGRAM

Refer to DTC P2102 INFO .

INSPECTION PROCEDURE

HINT:

Read freeze frame data using the Techstream. The ECM records vehicle and driving condition information as freeze frame data the moment a DTC is stored. When troubleshooting, freeze frame data can be helpful in determining whether the vehicle was running or stopped, whether the engine was warmed up or not, whether the air fuel ratio was lean or rich, as well as other data recorded at the time of a malfunction.

PROCEDURE

1.	**CHECK ANY OTHER DTCS OUTPUT (IN ADDITION TO DTC P2119)**

(a) Connect the Techstream to the DLC3.

(b) Turn the ignition switch to ON.

(c) Turn the Techstream on.

(d) Enter the following menus: Powertrain / Engine and ECT / Trouble Codes.

(e) Read the DTCs.

Result:

RESULT	PROCEED TO
DTC P2119 is output	A
DTC P2119 and other DTCs are output	B

HINT:

If any DTCs other than P2119 are output, troubleshoot those DTCs first.

B ▶ **GO TO DTC CHART**

A ▼

2.	**INSPECT THROTTLE BODY (RESISTANCE OF THROTTLE ACTUATOR)**

(a) Disconnect the throttle body connector.

(b) Measure the resistance according to the value(s) in the table below.

:

TESTER CONNECTION	CONDITION	SPECIFIED CONDITION
2 (M+) - 1 (M-)	20°C (68°F)	0.3 to 100 Ω

Component without harness connected:
(Throttle Body)

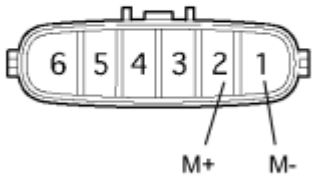

(c) Reconnect the throttle body connector.

NG ▶ **REPLACE THROTTLE BODY**

OK ▼

3.	REPLACE ECM

NEXT

4.	CHECK WHETHER DTC OUTPUT RECURS (DTC P2119)

(a) Connect the Techstream to the DLC3.

(b) Turn the ignition switch to ON.

(c) Turn the Techstream on.

(d) Clear DTCs INFO .

(e) Allow the engine to idle for 15 seconds or more.

(f) Fully depress and release the accelerator pedal several times quickly.

(g) Enter the following menus: Powertrain / Engine and ECT / Trouble Codes.

(h) Read the DTCs.

HINT:

The output voltage of the throttle position sensor can be checked using the Techstream. Variations in the output voltage indicate that the throttle actuator is operating. To check the output voltage using the Techstream, enter the following menus: Powertrain / Engine and ECT / Data List / Throttle Position No. 1.

NG ▶ **REPLACE THROTTLE BODY**

OK ▶ **CHECK FOR INTERMITTENT PROBLEMS**

Last Modified: 3-10-2010	6.4 C	**From:** 200901
Model Year: 2010	**Model:** Corolla	**Doc ID:** RM000000PFZ0AKX
Title: 2ZR-FE ENGINE CONTROL: SFI SYSTEM: P2121: Throttle / Pedal Position Sensor / Switch "D" Circuit Range / Performance (2010 Corolla)		

DTC	**P2121**	**Throttle / Pedal Position Sensor / Switch "D" Circuit Range / Performance**

DESCRIPTION

HINT:

- This DTC relates to the accelerator pedal position sensor.

Refer to DTC P2120 INFO .

DTC NO.	DTC DETECTION CONDITION	TROUBLE AREA
P2121	Difference between VPA and VPA2 less than 0.4 V, or more than 1.2 V for 0.5 seconds (1 trip detection logic)	• Accelerator pedal position sensor • ECM

MONITOR DESCRIPTION

The accelerator pedal position sensor is mounted on the accelerator pedal bracket. The accelerator pedal position sensor has 2 sensor elements and 2 signal outputs: VPA and VPA2. VPA is used to detect the actual accelerator pedal angle (used for engine control) and VPA2 is used to detect malfunctions in VPA. When the difference between the output voltages of VPA and VPA2 deviates from the standard, the ECM determines that the accelerator pedal position sensor is malfunctioning. The ECM turns on the MIL and the DTC is set.

MONITOR STRATEGY

Related DTCs	P2121: Accelerator pedal position sensor rationality
Required Sensors/Components (Main)	Accelerator pedal position sensor
Required Sensors/Components (Related)	-
Frequency of Operation	Continuous
Duration	0.5 seconds
MIL Operation	Immediate
Sequence of Operation	None

TYPICAL ENABLING CONDITIONS

Monitor runs whenever following DTCs are not present	None
Either of following conditions 1 or 2 is met:	-
1. Ignition switch	ON
2. Electronic throttle actuator power	ON

TYPICAL MALFUNCTION THRESHOLDS

Difference between VPA voltage (learned value) and VPA2 voltage (learned value)	Less than 0.4 V, or more than 1.2 V

FAIL-SAFE

The accelerator pedal position sensor has two (main and sub) sensor circuits. If a malfunction occurs in either of the sensor circuits, the ECM detects the abnormal signal voltage difference between the two sensor circuits and switches to limp mode. In limp mode, the functioning circuit is used to calculate the accelerator pedal opening angle to allow the vehicle to continue driving. If both circuits malfunction, the ECM regards the opening angle of the accelerator pedal as being fully closed. In this case, the throttle valve remains closed as if the engine is idling.

If a pass condition is detected and then the ignition switch is turned off, the fail-safe operation stops and the system returns to a normal condition.

WIRING DIAGRAM

Refer to DTC P2120 INFO .

INSPECTION PROCEDURE

HINT:

Read freeze frame data using the Techstream. The ECM records vehicle and driving condition information as freeze frame data the moment a DTC is stored. When troubleshooting, freeze frame data can be helpful in determining whether the vehicle was running or stopped, whether the engine was warmed up or not, whether the air fuel ratio was lean or rich, as well as other data recorded at the time of a malfunction.

PROCEDURE

1.	**CHECK ANY OTHER DTCS OUTPUT (IN ADDITION TO DTC P2121)**

(a) Connect the Techstream to the DLC3.

(b) Turn the ignition switch to ON.

(c) Turn the Techstream on.

(d) Enter the following menus: Powertrain / Engine and ECT / Trouble Codes.

(e) Read the DTCs.

Result:

RESULT	PROCEED TO
DTC P2121 is output	A
DTC P2121 and other DTCs are output	B

HINT:

If any DTCs other than P2121 are output, troubleshoot those DTCs first.

B ▶ **GO TO DTC CHART**

A

2.	**READ VALUE USING TECHSTREAM (ACCELERATOR POSITION SENSOR)** INFO

NG ▶ **REPLACE ACCELERATOR PEDAL ROD ASSEMBLY**

OK ▶ **CHECK FOR INTERMITTENT PROBLEMS**

3.	**REPLACE ACCELERATOR PEDAL ROD ASSEMBLY**

(a) Replace the accelerator pedal rod assembly INFO .

NEXT

4.	**CHECK WHETHER DTC OUTPUT RECURS (ACCELERATOR PEDAL POSITION SENSOR**

	DTCS)

(a) Connect the Techstream to the DLC3.

(b) Turn the ignition switch to ON.

(c) Turn the Techstream on.

(d) Clear DTCs INFO .

(e) Start the engine.

(f) Allow the engine to idle for 15 seconds.

(g) Fully depress and release the accelerator pedal several times quickly.

(h) Enter the following menus: Powertrain / Engine and ECT / Trouble Codes.

(i) Read the DTCs.

Result:

RESULT	PROCEED TO
DTC P2121 is output	A
DTC is not output	B

B ▶ **END**

A ▶ **REPLACE ECM**

Last Modified: 3-10-2010	6.4 C	**From:** 200901
Model Year: 2010	**Model:** Corolla	**Doc ID:** RM0000028K604FX
Title: 2ZR-FE ENGINE CONTROL: SFI SYSTEM: P2237-P2239,P2252,P2253: Oxygen (A/F) Sensor Pumping Current Circuit / Open (Bank 1 Sensor 1) (2010 Corolla)		

DTC	**P2237**	**Oxygen (A/F) Sensor Pumping Current Circuit / Open (Bank 1 Sensor 1)**

DTC	**P2238**	**Oxygen (A/F) Sensor Pumping Current Circuit Low (Bank 1 Sensor 1)**

DTC	**P2239**	**Oxygen (A/F) Sensor Pumping Current Circuit High (Bank 1 Sensor 1)**

DTC	**P2252**	**Oxygen (A/F) Sensor Reference Ground Circuit Low (Bank 1 Sensor 1)**

DTC	**P2253**	**Oxygen (A/F) Sensor Reference Ground Circuit High (Bank 1 Sensor 1)**

DESCRIPTION

HINT:

- Although the DTC titles say oxygen sensor, these DTCs relate to the air fuel ratio sensor.
- Sensor 1 refers to the sensor mounted in front of the three-way catalytic converter and located near the engine assembly.

The air fuel ratio sensor, which is located between the exhaust manifold and catalyst, consists of alloyed metal elements and a heater.

Depending on the engine operating conditions, the heater heats the sensor elements to activate them. Battery voltage is applied to the heater, the sensor ground is controlled by the ECM using a duty ratio.

The sensor elements convert the oxygen concentration in the exhaust gas into voltage values to output. Based on the voltage, the ECM determines the air fuel ratio and regulates the fuel injection volume depending on the air fuel ratio and engine operating conditions. The voltage changes between 0.6 V and 4.5 V while the engine is running. If the air fuel ratio is lean, which means the oxygen concentration in the exhaust gas is high, the voltage is high. If the air fuel ratio is rich, which means the oxygen concentration in the exhaust gas is low, the voltage is low.

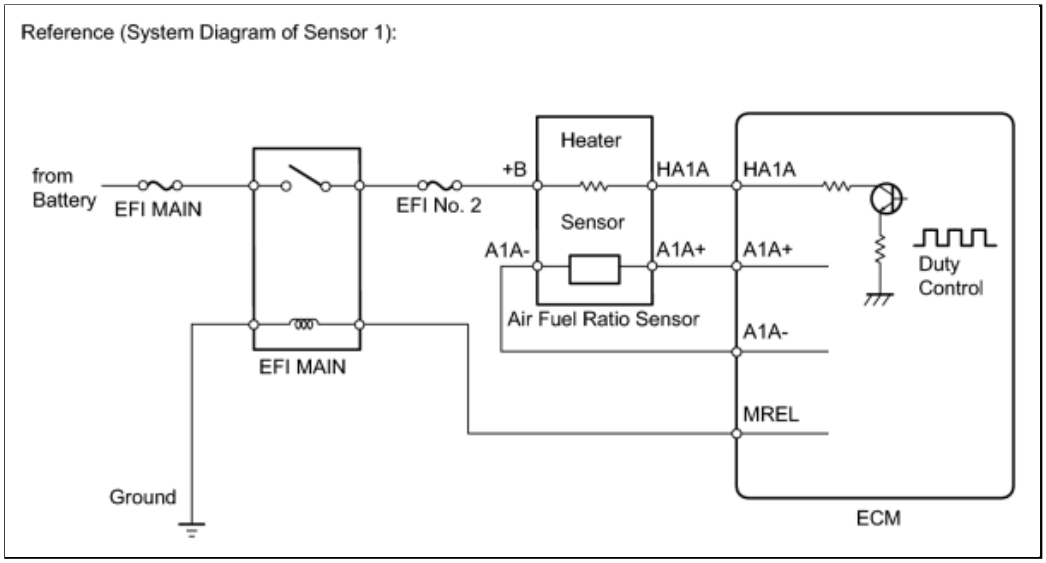

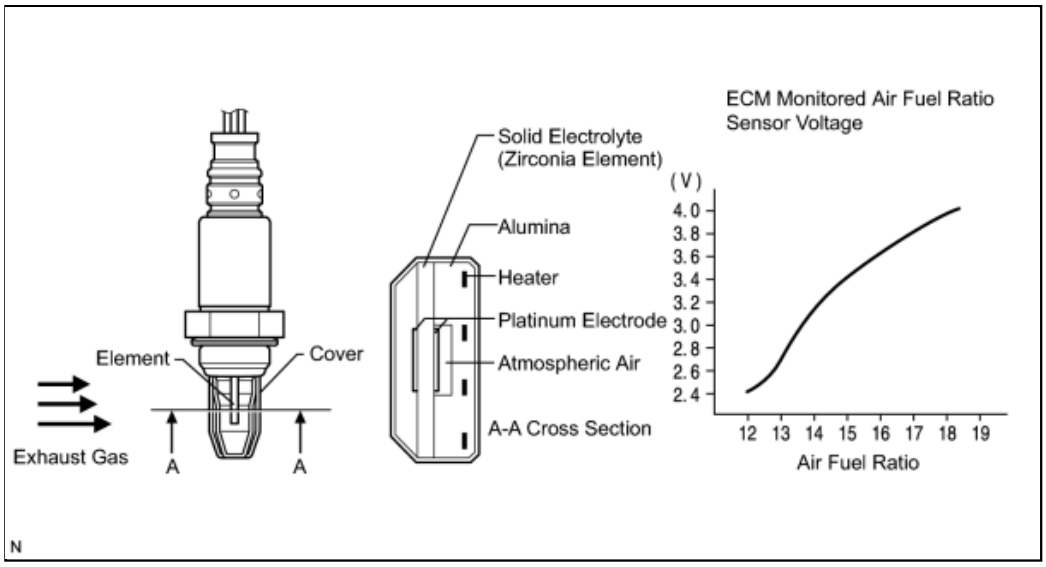

DTC NO.	DTC DETECTION CONDITION	TROUBLE AREA
P2237	Open in the circuit between terminals A1A+ and A1A- of the air fuel ratio sensor while engine is running (2 trip detection logic)	• Open in air fuel ratio sensor (sensor 1) circuit • Air fuel ratio sensor (sensor 1) • ECM
P2238	Any of the following conditions are met (2 trip detection logic) • Air fuel ratio sensor output drops while engine is running. • Voltage at terminal A1A+ voltage is 0.5 V or less. • Voltage difference between terminals A1A+ and A1A- voltage is 0.1 V or less.	• Open or short in air fuel ratio sensor (sensor 1) circuit • Air fuel ratio sensor (sensor 1) • ECM
P2251	A1A- voltage is more than 4.5 V (2 trip detection logic)	• Open or short in air fuel ratio sensor (sensor 1) circuit • Air fuel ratio sensor (sensor 1) • ECM

MONITOR DESCRIPTION

These DTCs are output when there is an open or short in the air fuel ratio sensor circuit, or the air fuel ratio sensor output drops. To detect these problems, the voltage of the air fuel ratio sensor is monitored when turning the ignition switch to the

ON, and the admittance (admittance is an electrical term that indicates the ease of flow of current) is checked while driving. If the voltage of the air fuel ratio sensor is between 0.5 V and 4.5 V, it is considered normal. If the voltage is out of the specified range, or the admittance is less than the standard value, the ECM will determine that there is a malfunction in the air fuel ratio sensor. If the same malfunction is detected in next driving cycle, the MIL will be illuminated and a DTC will be stored.

MONITOR STRATEGY

Related DTCs	P2237: Air fuel ratio sensor open circuit between A1A+ and A1A- P2238: Air fuel ratio sensor short circuit between A1A+ and A1A- P2238: Air fuel ratio sensor short circuit between A1A+ and GND P2238: Air fuel ratio sensor low impedance P2239: Air fuel ratio sensor short circuit between A1A+ and +B P2252: Air fuel ratio sensor short circuit between A1A- and GND P2253: Air fuel ratio sensor short circuit between A1A- and +B
Required Sensors/Components (Main)	Air fuel ratio sensor
Required Sensors/Components (Related)	Engine coolant temperature sensor Crankshaft position sensor
Frequency of Operation	Continuous
Duration	10 seconds
MIL Operation	2 driving cycles
Sequence of Operation	None

TYPICAL ENABLING CONDITIONS

P2237 and P2238

Monitor runs whenever following DTCs are not present	P0016 (VVT System Bank 1 - Misalignment) P0017 (Exhaust VVT System - Misalignment) P0031, P0032 (Air Fuel Ratio Sensor Heater - Sensor 1) P0102, P0103 (Mass Air Flow Meter) P0112, P0113 (Intake Air Temperature Sensor) P0115, P0117, P0118 (Engine Coolant Temperature Sensor) P0125 (Insufficient Engine Coolant Temperature for Closed Loop Fuel Control) P0120, P0121 P0122, P0123, P0220, P0222, P0223, P2135 (Throttle Position Sensor) P0128 (Thermostat) P0171, P0172 (Fuel System) P0301, P0302, P0303, P0304 (Misfire) P0335 (Crankshaft Position Sensor) P0340 (Camshaft Position Sensor) P0451, P0452 (EVAP System) P0500 (Vehicle Speed Sensor) P0505 (Vehicle Speed Sensor IAC Valve)

Other

Monitor runs whenever following DTCs are not present	None

P2237 (Air Fuel Ratio Sensor Open Circuit Between A1A+ and A1A-)

Engine	Running
Battery voltage	11 V or more

P2238 (Air Fuel Ratio Sensor Low Impedance)

Estimated sensor temperature	700 to 800 °C (1292 to 1472°F)
Engine coolant temperature	10°C (50°F) or higher
Fuel cut	No executed

Other

Battery voltage	11 V or more
Ignition switch	ON
Time after ignition switch is OFF to ON	5 seconds or more

TYPICAL MALFUNCTION THRESHOLDS

P2237 (Air Fuel Ratio Sensor Open Circuit Between A1A+ and A1A-)

Air fuel ratio sensor admittance	Below 0.002 1/Ω

P2238 (Air Fuel Ratio Sensor Low Impedance)

Air fuel ratio sensor admittance	Below 0.022 1/Ω

P2238 (Air Fuel Ratio Sensor Short Circuit Between A1A+ and GND)

A1A+ terminal voltage	0.5 V or less

P2239 (Air Fuel Ratio Sensor Short Circuit Between A1A+ and +B)

A1A+ terminal voltage	More than 4.5 V

P2252 (Air Fuel Ratio Sensor Short Circuit Between A1A- and GND)

A1A- terminal voltage	0.5 V or less

P2253 (Air Fuel Ratio Sensor Short Circuit Between A1A- and +B)

A1A- terminal voltage	More than 4.5 V

P2238 (Air Fuel Ratio Sensor Short Circuit Between A1A+ and A1A-)

Difference between A1A+ terminal and A1A- terminal voltage	0.1 V or less

COMPONENT OPERATING RANGE

Air fuel ratio sensor admittance	0.002 1/Ω or more
A1A+ terminal voltage	0.5 to 4.5 V

A1A- terminal voltage	0.5 to 4.5 V
Difference between A1A+ and A1A- terminal voltages	0.1 to 0.8 V

WIRING DIAGRAM

Refer to DTC P2195 INFO .

INSPECTION PROCEDURE

HINT:

Malfunctioning areas can be identified by performing the Control the Injection Volume for A/F sensor Active Test. The Control the Injection Volume for A/F sensor function can help to determine whether the air fuel ratio sensor, heated oxygen sensor and other potential trouble areas are malfunctioning.

The following instructions describe how to conduct the Control the Injection Volume for A/F sensor operation using the Techstream.

1. Connect the Techstream to the DLC3.
2. Start the engine.
3. Turn the Techstream on.
4. Warm up the engine at 2500 rpm for approximately 90 seconds.
5. Enter the following menus: Powertrain / Engine and ECT / Active Test / Control the Injection Volume for A/F sensor.
6. Perform the Active Test operation with the engine in an idling condition (press the RIGHT or LEFT button to change the fuel injection volume.)
7. Monitor the output voltages of the air fuel ratio and heated oxygen sensors (AFS Voltage B1 S1 and O2S B1 S2) displayed on the Techstream.

HINT:

- The Control the Injection Volume for A/F sensor active test lowers the fuel injection volume by 12.5% or increases the injection volume by 25%.
- Each sensor reacts in accordance with increases and decreases in the fuel injection volume.

TECHSTREAM DISPLAY (SENSOR)	INJECTION VOLUME	STATUS	VOLTAGE
AFS Voltage B1 S1 (air fuel ratio)	+25%	Rich	Less than 3.1 V
	-12.5%	Lean	More than 3.4 V
O2S B1 S2 (heated oxygen)	+25%	Rich	More than 0.55 V
	-12.5%	Lean	Less than 0.4 V

NOTICE:

The air fuel ratio sensor has an output delay of a few seconds and the heated oxygen sensor has a maximum output delay of approximately 20 seconds.

CASE	AIR FUEL RATIO SENSOR (SENSOR 1) OUTPUT VOLTAGE	HEATED OXYGEN SENSOR (SENSOR 2) OUTPUT VOLTAGE	MAIN SUSPECTED TROUBLE AREA
1	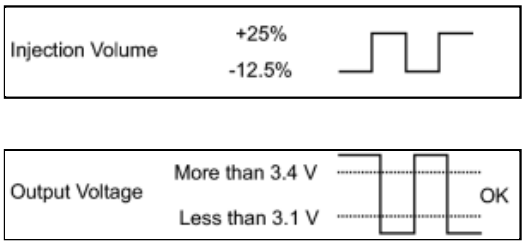	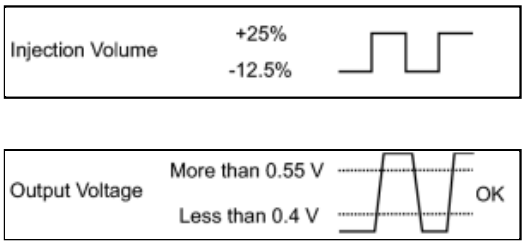	-

CASE	AIR FUEL RATIO SENSOR (SENSOR 1) OUTPUT VOLTAGE	HEATED OXYGEN SENSOR (SENSOR 2) OUTPUT VOLTAGE	MAIN SUSPECTED TROUBLE AREA
2	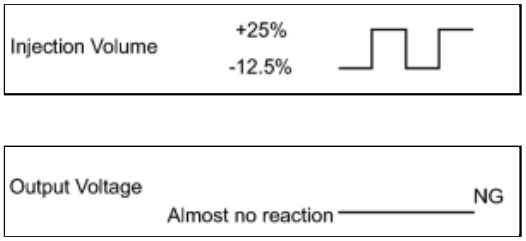	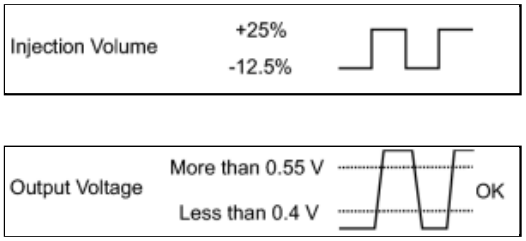	• Air fuel ratio sensor • Air fuel ratio sensor heater • Air fuel ratio sensor circuit
3	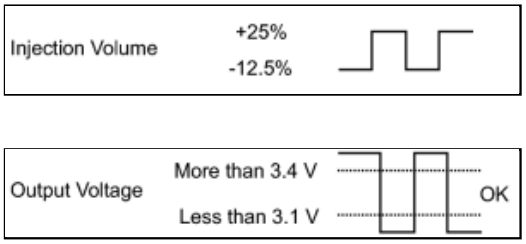	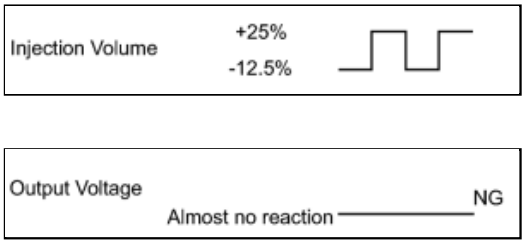	• Heated oxygen sensor • Heated oxygen sensor heater • Heated oxygen sensor circuit
4	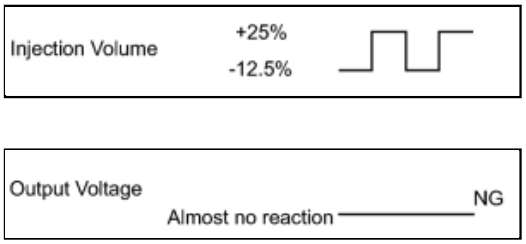	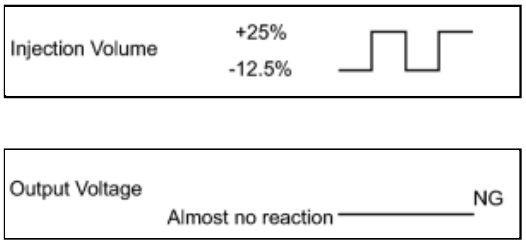	• Injector • Fuel pressure • Gas leak from exhaust system (Air fuel ratio extremely rich or lean)

- Following the Control the Injection Volume for A/F sensor procedure enables technicians to check and graph the voltage outputs of both the air fuel ratio and heated oxygen sensors.
- To display the graph, enter the following menus: Powertrain / Engine and ECT / Active Test / Control the Injection Volume for A/F Sensor / AFS Voltage B1 S1 and O2S B1 S2; then press the graph button on the Data List view.

HINT:

Read freeze frame data using the Techstream. The ECM records vehicle and driving condition information as freeze frame data the moment a DTC is stored. When troubleshooting, freeze frame data can be helpful in determining whether the vehicle was running or stopped, whether the engine was warmed up or not, whether the air fuel ratio was lean or rich, as well as other data recorded at the time of a malfunction.

PROCEDURE

1.	**CHECK HARNESS AND CONNECTOR (AIR FUEL RATIO SENSOR - ECM)** (a) Disconnect the air fuel ratio sensor connector.

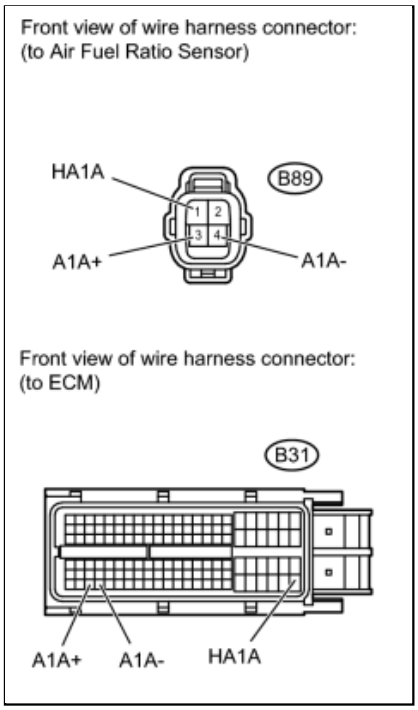

(b) Disconnect the ECM connector.

(c) Measure the resistance according to the value(s) in the table below.

Standard Resistance (Check for Open):

TESTER CONNECTION	CONDITION	SPECIFIED CONDITION
B89-1 (HA1A) - B31-109 (HA1A)	Always	Below 1 Ω
B89-3 (A1A+) - B31-112 (A1A+)		
B89-4 (A1A-) - B31-113 (A1A-)		

Standard Resistance (Check for Short):

TESTER CONNECTION	CONDITION	SPECIFIED CONDITION
B89-1 (HA1A) or B31-109 (HA1A) - Body ground	Always	10 kΩ or higher
B89-3 (A1A+) or B31-112 (A1A+) - Body ground		
B89-4 (A1A-) or B31-113 (A1A-) - Body ground		

(d) Reconnect the air fuel ratio sensor connector.

(e) Reconnect the ECM connector.

NG ▶ **REPAIR OR REPLACE HARNESS OR CONNECTOR (AIR FUEL RATIO SENSOR - ECM)**

OK ▼

2.	**REPLACE AIR FUEL RATIO SENSOR**

(a) Replace the air fuel ratio sensor INFO .

NEXT

3.	PERFORM CONFIRMATION DRIVING PATTERN

(a) Connect the Techstream to the DLC3.

(b) Turn the ignition switch to ON and turn the Techstream on.

(c) Clear DTCs.

(d) Switch the ECM from normal mode to check mode.

(e) Drive the vehicle referring to the Confirmation Driving Pattern on DTC P2195 INFO .

NEXT

4.	CHECK WHETHER DTC OUTPUT RECURS

(a) Connect the Techstream to the DLC3.

(b) Turn the ignition switch to ON.

(c) Turn the Techstream on.

(d) Enter the following menus: Powertrain / Engine and ECT / Trouble Codes.

(e) Read the DTCs.

Result:

RESULT	PROCEED TO
DTC is not output	A
DTC P2237, P2238, P2239, P2252 or P2253 is output	B

B ▶ **REPLACE ECM**

A ▶ **END**

Last Modified: 3-10-2010	6.4 J	**From:** 200901
Model Year: 2010	**Model:** Corolla	**Doc ID:** RM000002769033X
Title: 2ZR-FE ENGINE CONTROL: SFI SYSTEM: ECM Power Source Circuit (2010 Corolla)		

ECM Power Source Circuit

DESCRIPTION

When the ignition switch is turned to the ON, battery voltage is applied to IGSW of the ECM. The output signal from the MREL terminal of the ECM causes a current to flow to the coil, closing the contacts of the integration relay (EFI MAIN relay) and supplying power to either terminal +B and +B2 of the ECM.

WIRING DIAGRAM

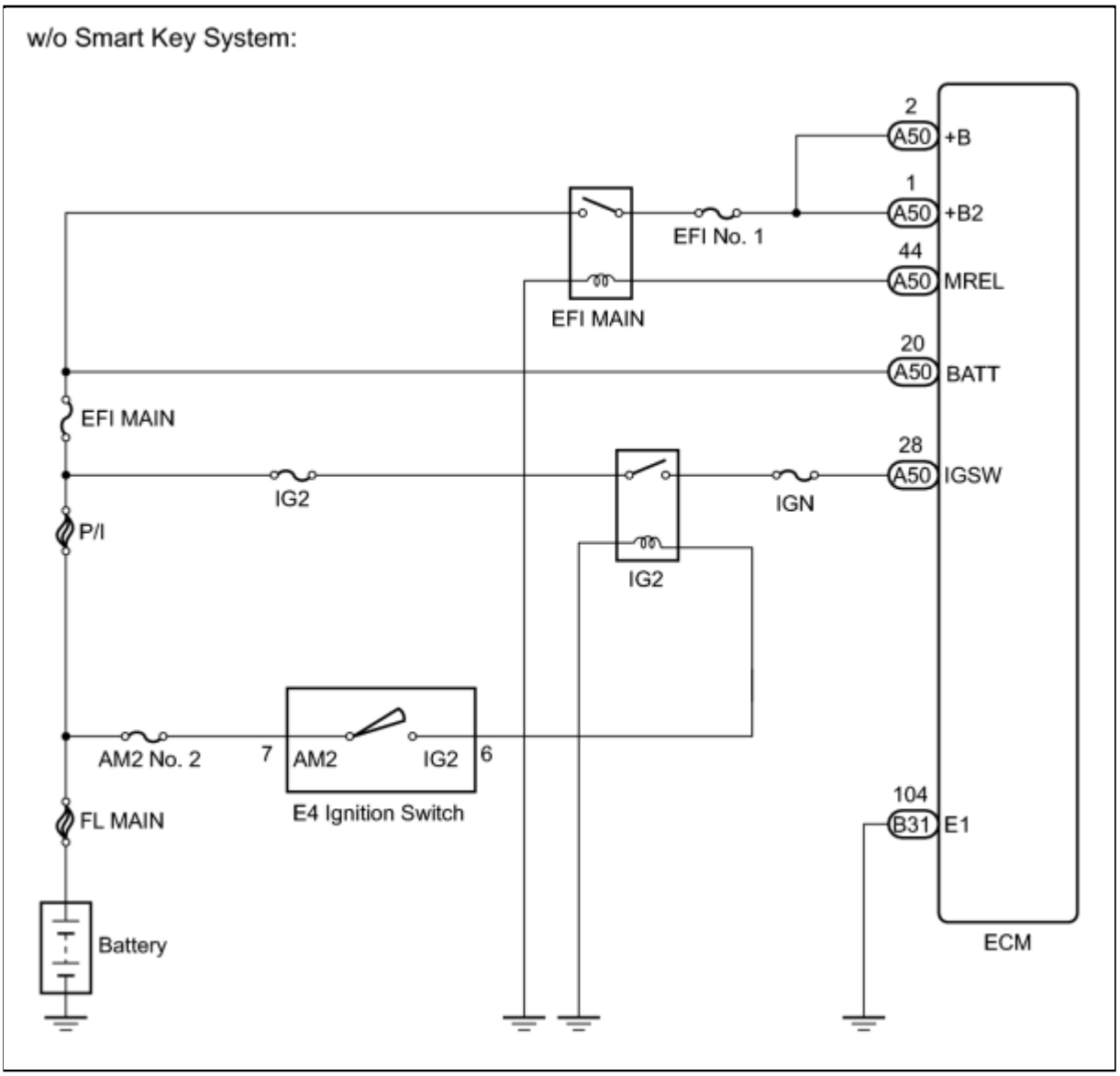

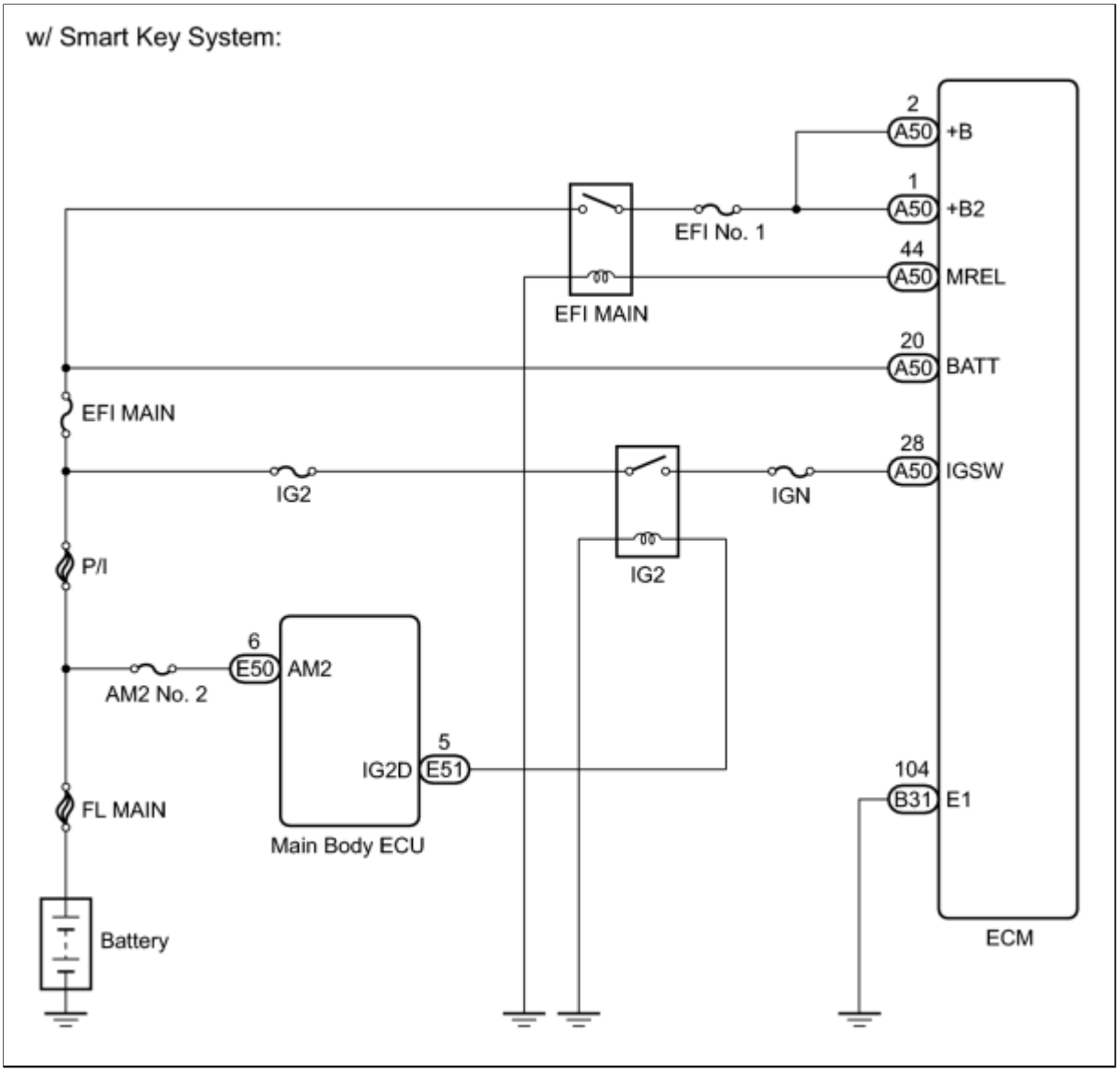

INSPECTION PROCEDURE

PROCEDURE

1.	**CHECK HARNESS AND CONNECTOR (ECM - BODY GROUND)**

(a) Disconnect the ECM connector.

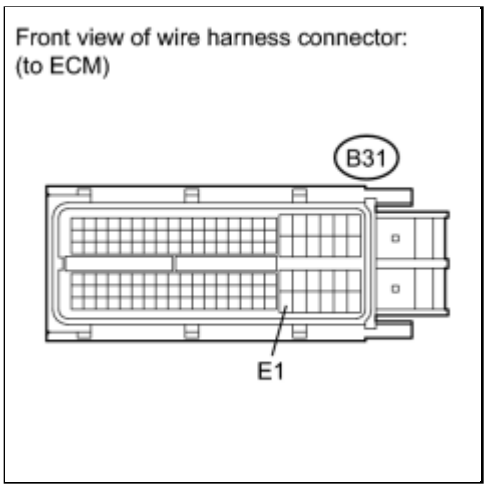

(b) Measure the resistance according to the value(s) in the table below.

Standard Resistance:

TESTER CONNECTION	CONDITION	SPECIFIED CONDITION
B31-104 (E1) - Body ground	Always	Below 1 Ω

(c) Reconnect the ECM connector.

NG ▶ **REPAIR OR REPLACE HARNESS OR CONNECTOR (ECM - BODY GROUND)**

OK ▼

2.	**INSPECT ECM (IGSW VOLTAGE)**

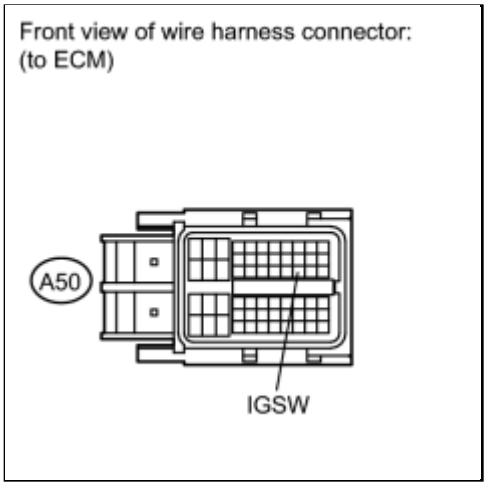

(a) Disconnect the ECM connector.

(b) Turn the ignition switch to ON.

(c) Measure the voltage according to the value(s) in the table below.

Standard Voltage:

TESTER CONNECTION	SWITCH CONDITION	SPECIFIED CONDITION
A50-28 (IGSW) - Body ground	Ignition switch ON	11 to 14 V

(d) Reconnect the ECM connector.

NG ▶ **INSPECT FUSE (IGN FUSE)**

OK ▼

3.	**INSPECT FUSE (EFI MAIN FUSE)**

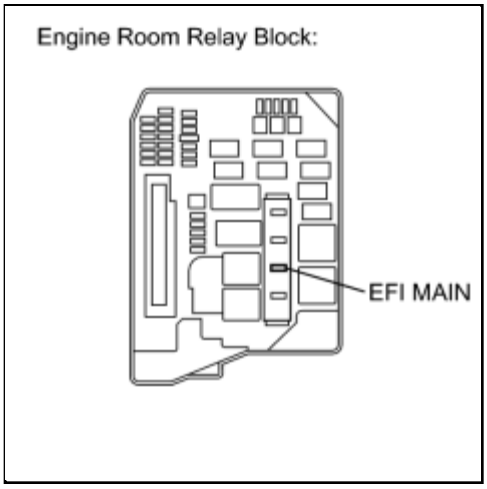

(a) Remove the EFI MAIN fuse from the engine room relay block.

(b) Measure the resistance according to the value(s) in the table below.

Standard Resistance:

TESTER CONNECTION	CONDITION	SPECIFIED CONDITION
EFI MAIN fuse	Always	Below 1 Ω

(c) Reinstall the EFI MAIN fuse.

NG ▶ **CHECK FOR SHORTS IN ALL HARNESSES AND CONNECTORS CONNECTED TO FUSE AND REPLACE**

FUSE

OK

4.	**INSPECT FUSE (EFI NO. 1 FUSE)**

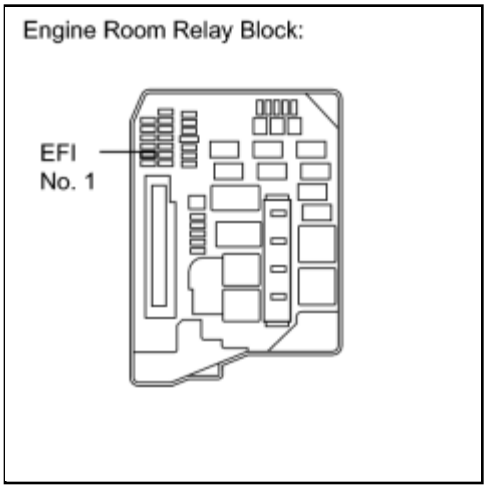

(a) Remove the EFI No. 1 fuse from the engine room relay block.

(b) Measure the resistance according to the value(s) in the table below.

Standard Resistance:

TESTER CONNECTION	CONDITION	SPECIFIED CONDITION
EFI No. 1 fuse	Always	Below 1 Ω

(c) Reinstall the EFI No. 1 fuse.

NG ▶ **CHECK FOR SHORTS IN ALL HARNESSES AND CONNECTORS CONNECTED TO FUSE AND REPLACE FUSE**

OK

5.	**INSPECT INTEGRATION NO.1 RELAY (EFI MAIN RELAY)**

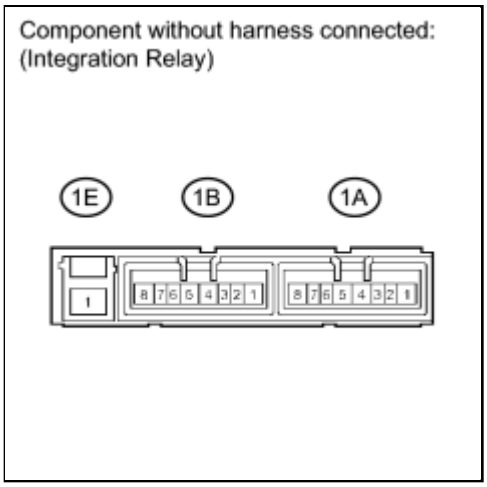

(a) Remove the integration relay from the engine room relay block.

(b) Disconnect the integration relay connector.

(c) Measure the resistance according to the value(s) in the table below.

Standard Resistance:

TESTER CONNECTION	CONDITION	SPECIFIED CONDITION
1E-1 - 1B-4	Always	10 kΩ or higher
	Always	Below 1 Ω (Apply battery voltage terminals 1B-2 and 1B-3)

(d) Reconnect the integration relay connector.

(e) Reinstall the integration relay.

NG ▶ **REPLACE INTEGRATION NO.1 RELAY**

OK ▼

6.	**CHECK HARNESS AND CONNECTOR (INTEGRATION RELAY (EFI MAIN RELAY) - ECM)**

(a) Remove the integration relay from the engine room relay block.

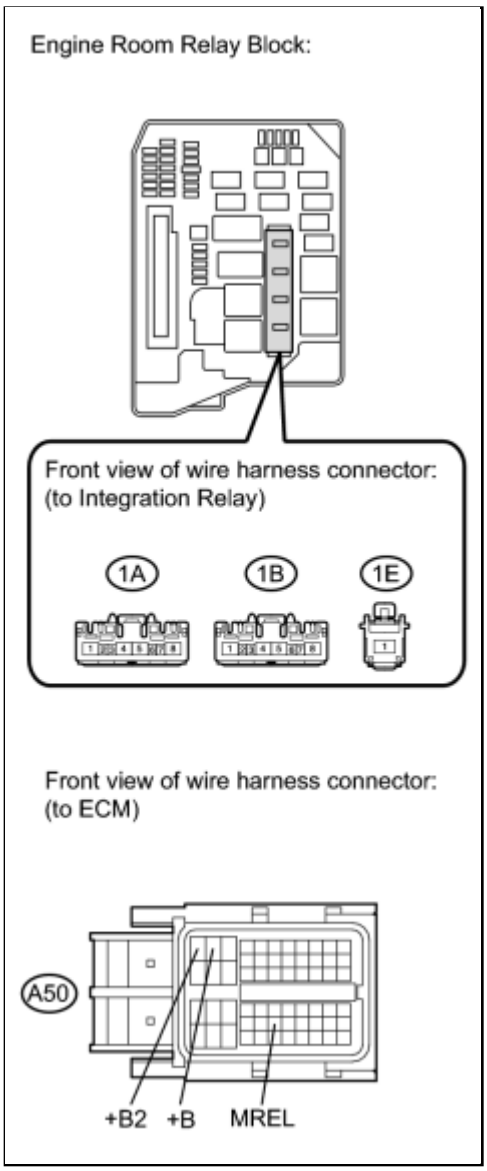

(b) Disconnect the integration relay connector.

(c) Disconnect the ECM connector.

(d) Measure the resistance according to the value(s) in the table below.

Standard Resistance (Check for Open):

TESTER CONNECTION	CONDITION	SPECIFIED CONDITION
1B-4 - A50-1 (+B2)	Always	Below 1 Ω
1B-4 - A50-2 (+B)	Always	Below 1 Ω
1B-2 - A50-44 (MREL)	Always	Below 1 Ω

Standard Resistance (Check for Short):

TESTER CONNECTION	CONDITION	SPECIFIED CONDITION

TESTER CONNECTION	CONDITION	SPECIFIED CONDITION
1B-4 or A50-2 (+B2) - Body ground	Always	10 kΩ or higher
1B-4 or A50-1 (+B) - Body ground	Always	10 kΩ or higher
1B-2 or A50-44 (MREL) - Body ground	Always	10 kΩ or higher

(e) Reconnect the ECM connector.

(f) Reconnect the integration relay connector.

(g) Reinstall the integration relay.

NG ▶ **REPAIR OR REPLACE HARNESS OR CONNECTOR (INTEGRATION RELAY (EFI MAIN RELAY) - ECM)**

OK ▼

7.	**CHECK HARNESS AND CONNECTOR (INTEGRATION RELAY (EFI MAIN RELAY) - BATTERY)**

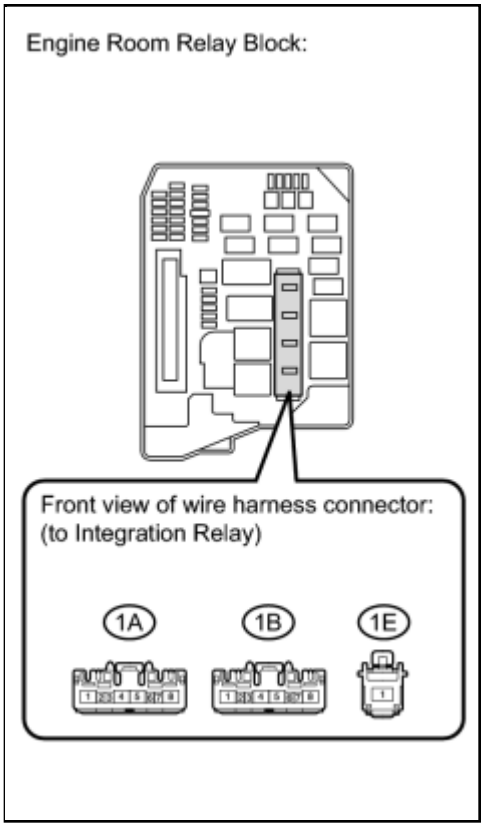

(a) Remove the integration relay from the engine room relay block.

(b) Disconnect the integration relay connector.

(c) Disconnect the negative battery terminal.

(d) Disconnect the positive battery terminal.

(e) Measure the resistance according to the value(s) in the table below.

Standard Resistance (Check for Open):

TESTER CONNECTION	CONDITION	SPECIFIED CONDITION
1E-1 - Battery positive terminal	Always	Below 1 Ω

Standard Resistance (Check for Short):

TESTER CONNECTION	CONDITION	SPECIFIED CONDITION
1E-1 or Battery positive terminal - Body ground	Always	10 kΩ or higher

(f) Reconnect the integration relay connector.

(g) Reinstall the integration relay.

(h) Reconnect the positive battery terminal.

(i) Reconnect the negative battery terminal.

NG ▶ **REPAIR OR REPLACE HARNESS OR CONNECTOR (INTEGRATION RELAY (EFI MAIN RELAY) - BATTERY)**

OK ▼

8.	**CHECK HARNESS AND CONNECTOR (INTEGRATION RELAY (EFI MAIN RELAY) - BODY GROUND)**

(a) Remove the integration relay from the engine room relay block.

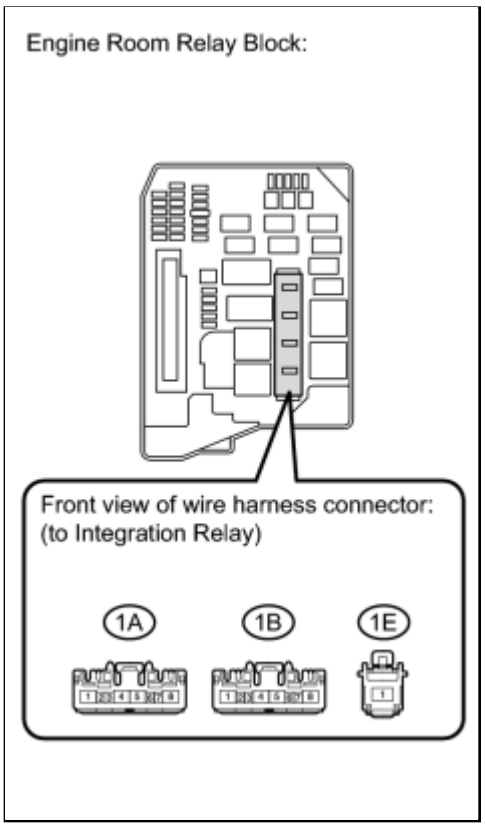

(b) Disconnect the integration relay connector.

(c) Measure the resistance according to the value(s) in the table below.

Standard Resistance:

TESTER CONNECTION	CONDITION	SPECIFIED CONDITION
1B-3 - Body ground	Always	Below 1 Ω

(d) Reconnect the integration relay connector.

(e) Reinstall the integration relay.

NG ▶ **REPAIR OR REPLACE HARNESS OR CONNECTOR (INTEGRATION RELAY (EFI MAIN RELAY) - BODY GROUND)**

OK ▶ **PROCEED TO NEXT INSPECTION PROCEDURE SHOWN IN PROBLEM SYMPTOMS TABLE**

9.	**INSPECT FUSE (IGN FUSE)**

(a) Remove the IGN fuse from the instrument panel junction block.

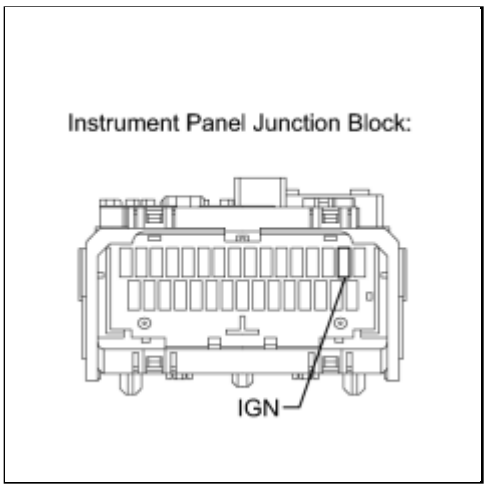

(b) Measure the resistance according to the value(s) in the table below.

Standard Resistance:

TESTER CONNECTION	CONDITION	SPECIFIED CONDITION
IGN fuse	Always	Below 1 Ω

(c) Reinstall the IGN fuse.

NG ▶ **CHECK FOR SHORTS IN ALL HARNESSES AND CONNECTORS CONNECTED TO FUSE AND REPLACE FUSE**

OK ▼

10.	**INSPECT FUSE (IG2 FUSE)**

(a) Remove the IG2 fuse from the engine room relay block.

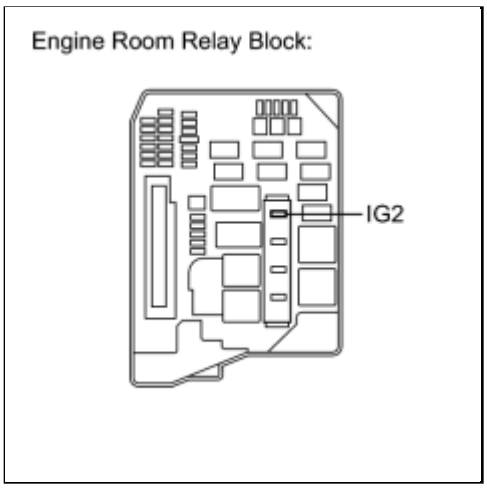

(b) Measure the resistance according to the value(s) in the table below.

Standard Resistance:

TESTER CONNECTION	CONDITION	SPECIFIED CONDITION
IG2 fuse	Always	Below 1 Ω

(c) Reinstall the IG2 fuse.

NG ▶ **CHECK FOR SHORTS IN ALL HARNESSES AND CONNECTORS CONNECTED TO FUSE AND REPLACE FUSE**

OK ▼

11.	**INSPECT INTEGRATION NO.1 RELAY (IG2 RELAY)**

(a) Remove the integration relay from the engine room relay block.

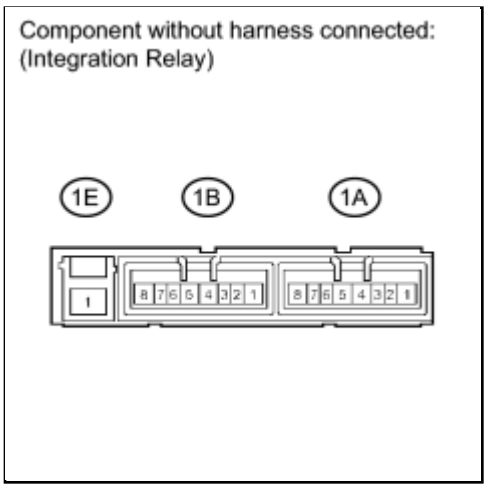

(b) Disconnect the integration relay connector.

(c) Measure the resistance according to the value(s) in the table below.

Standard Resistance:

TESTER CONNECTION	CONDITION	SPECIFIED CONDITION
1E-1 - 1A-4	Always	10 kΩ or higher
	Always	Below 1 Ω (Apply battery voltage terminals 1A-2 and 1A-3)

(d) Reconnect the integration relay connector.

(e) Reinstall the integration relay.

NG ▶ **REPLACE INTEGRATION NO.1 RELAY (IG2 RELAY)**

OK ▼

12.	**CHECK HARNESS AND CONNECTOR (INTEGRATION RELAY (IG2 RELAY) - ECM)**

(a) Disconnect the ECM connector.

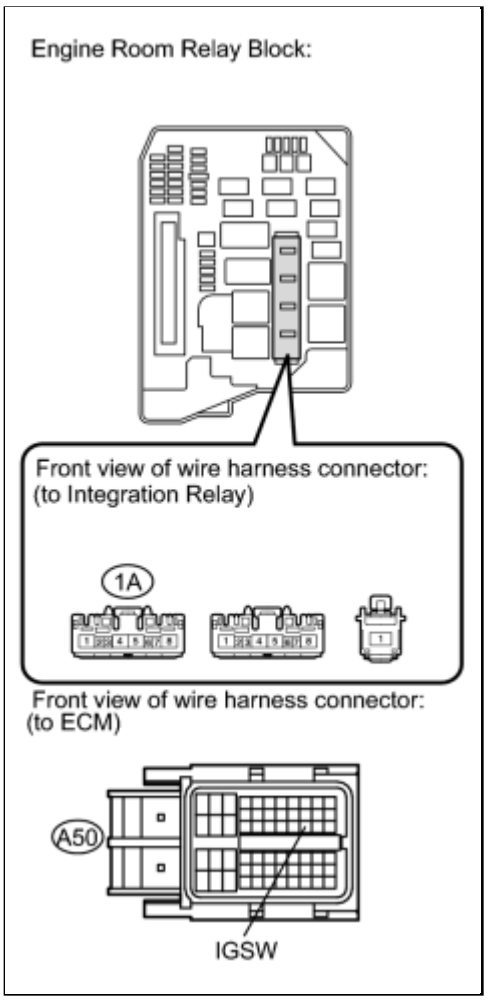

(b) Remove the integration relay from the engine room relay block.

(c) Disconnect the integration relay connector.

(d) Measure the resistance according to the value(s) in the table below.

Standard Resistance (Check for Open):

TESTER CONNECTION	CONDITION	SPECIFIED CONDITION
1A-4 - A50-28 (IGSW)	Always	Below 1 Ω

Standard Resistance (Check for Short):

TESTER CONNECTION	CONDITION	SPECIFIED CONDITION
1A-4 or A50-28 (IGSW) - Body ground	Always	10 kΩ or higher

(e) Reconnect the ECM connector.

(f) Reconnect the integration relay connector.

(g) Reinstall the integration relay.

NG ▶ **REPAIR OR REPLACE HARNESS OR CONNECTOR (INTEGRATION RELAY (IG2 RELAY) - ECM)**

OK ▼

13.	CHECK HARNESS AND CONNECTOR (INTEGRATION RELAY (IG2 RELAY) - BATTERY)

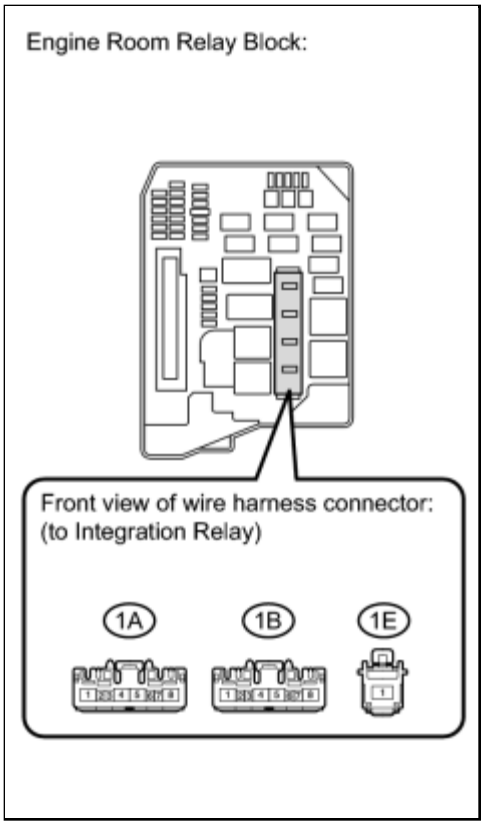

(a) Remove the integration relay from the engine room relay block.

(b) Disconnect the integration relay connector.

(c) Disconnect the negative battery terminal.

(d) Disconnect the positive battery terminal.

(e) Measure the resistance according to the value(s) in the table below.

Standard Resistance (Check for Open):

TESTER CONNECTION	CONDITION	SPECIFIED CONDITION
1E-1 - Battery positive terminal	Always	Below 1 Ω

Standard Resistance (Check for Short):

TESTER CONNECTION	CONDITION	SPECIFIED CONDITION
1E-1 or Battery positive terminal - Body ground	Always	10 kΩ or higher

(f) Reconnect the integration relay connector.

(g) Reinstall the integration relay.

(h) Reconnect the positive battery terminal.

(i) Reconnect the negative battery terminal.

NG ▶ **REPAIR OR REPLACE HARNESS OR CONNECTOR (INTEGRATION RELAY (IG2 RELAY) - BATTERY)**

OK ▼

14.	**CHECK HARNESS AND CONNECTOR (INTEGRATION RELAY (IG2 RELAY) - BODY GROUND)**

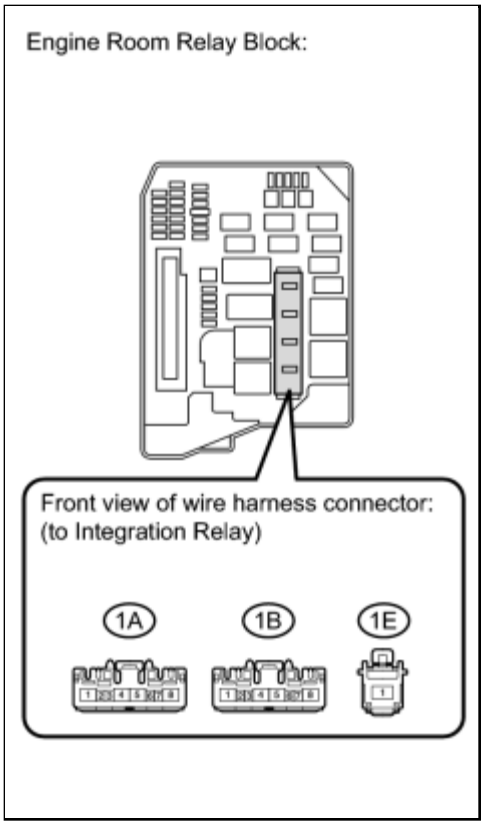

(a) Remove the integration relay from the engine room relay block.

(b) Disconnect the integration relay connector.

(c) Measure the resistance according to the value(s) in the table below.

Standard Resistance:

TESTER CONNECTION	CONDITION	SPECIFIED CONDITION
1A-3 - Body ground	Always	Below 1 Ω

Result:

RESULT	PROCEED TO
OK (w/o SMART KEY SYSTEM)	A
OK (w/ SMART KEY SYSTEM)	B
NG	C

(d) Reconnect the integration relay connector.

(e) Reinstall the integration relay.

C ▶ **REPAIR OR REPLACE HARNESS OR CONNECTOR (INTEGRATION RELAY (IG2 RELAY) - BODY GROUND)**

B ▶ **CHECK HARNESS AND CONNECTOR (MAIN BODY ECU - INTEGRATION RELAY (IG2 RELAY))**

A ▼

15.	**CHECK HARNESS AND CONNECTOR (INTEGRATION RELAY (IG2 RELAY) - IGNITION SWITCH ASSEMBLY)**

(a) Remove the integration relay from the engine room relay block.

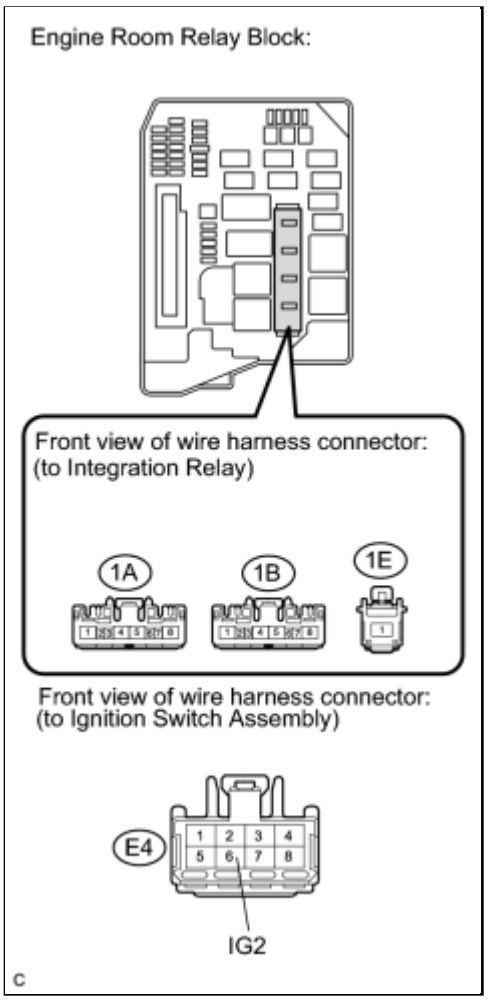

(b) Disconnect the integration relay connector.

(c) Disconnect the ignition switch assembly connector.

(d) Measure the resistance according to the value(s) in the table below.

Standard Resistance (Check for Open):

TESTER CONNECTION	CONDITION	SPECIFIED CONDITION
1A-2 - E4-6 (IG2)	Always	Below 1 Ω

Standard Resistance (Check for Short):

TESTER CONNECTION	CONDITION	SPECIFIED CONDITION
1A-2 or E4-6 (IG2) - Body ground	Always	10 kΩ or higher

(e) Reconnect the integration relay connector.

(f) Reinstall the integration relay.

(g) Reconnect the ignition switch assembly connector.

NG ▶ **REPAIR OR REPLACE HARNESS OR CONNECTOR (INTEGRATION RELAY (IG2 RELAY) - IGNITION SWITCH ASSEMBLY)**

OK ▼

16.	**INSPECT IGNITION SWITCH ASSEMBLY**

(a) Inspect the ignition switch assembly INFO .

NG ▶ **REPLACE IGNITION SWITCH ASSEMBLY**

OK ▼

17.	**INSPECT FUSE (AM2 NO. 2 FUSE)**

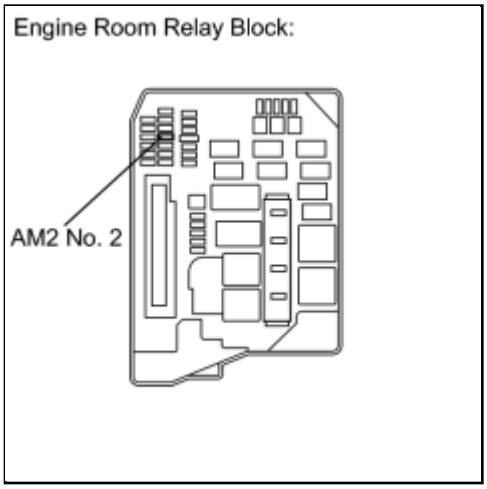

(a) Remove the AM2 No. 2 fuse from the engine room relay block.

(b) Measure the resistance according to the value(s) in the table below.

Standard Resistance:

TESTER CONNECTION	CONDITION	SPECIFIED CONDITION
AM2 No. 2 fuse	Always	Below 1 Ω

(c) Reinstall the AM2 No. 2 fuse.

NG ▶ **CHECK FOR SHORTS IN ALL HARNESSES AND CONNECTORS CONNECTED TO FUSE AND REPLACE FUSE**

OK ▶ **REPAIR OR REPLACE HARNESS OR CONNECTOR (BATTERY - IGNITION SWITCH ASSEMBLY)**

18.	**CHECK HARNESS AND CONNECTOR (MAIN BODY ECU - INTEGRATION RELAY (IG2 RELAY))**

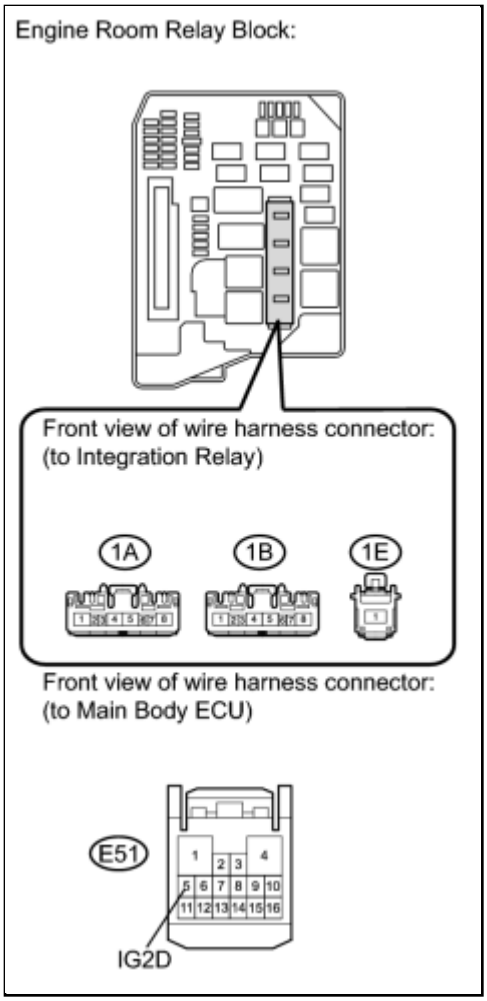

(a) Remove the integration relay from the engine room relay block.

(b) Disconnect the integration relay connector.

(c) Disconnect the main body ECU connector.

(d) Measure the resistance according to the value(s) in the table below.

Standard Resistance:

TESTER CONNECTION	CONDITION	SPECIFIED CONDITION
E51-5 (IG2D) - 1A-2	Always	Below 1 Ω

(e) Reconnect the integration relay connector.

(f) Reinstall the integration relay.

(g) Reconnect the main body ECU connector.

NG ▶ **REPAIR OR REPLACE HARNESS OR CONNECTOR (MAIN BODY ECU - INTEGRATION RELAY (IG2 RELAY))**

OK ▼

19.	INSPECT FUSE (AM2 NO. 2 FUSE)

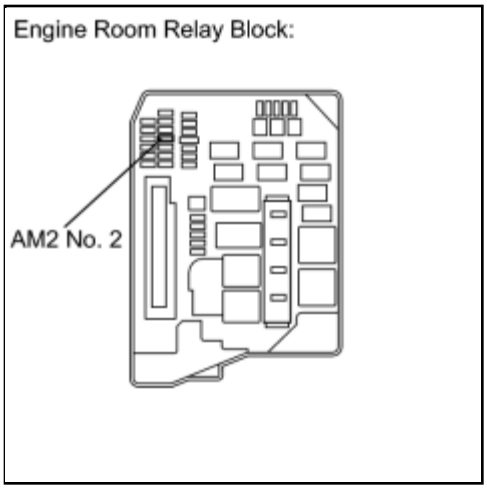

(a) Remove the AM2 No. 2 fuse from the engine room relay block.

(b) Measure the resistance according to the value(s) in the table below.

Standard Resistance:

TESTER CONNECTION	CONDITION	SPECIFIED CONDITION
AM2 No. 2 fuse	Always	Below 1 Ω

(c) Reinstall the AM2 No. 2 fuse.

NG ▶ **CHECK FOR SHORTS IN ALL HARNESSES AND CONNECTORS CONNECTED TO FUSE AND REPLACE**

OK

20.	**CHECK HARNESS AND CONNECTOR (AM2 VOLTAGE)**

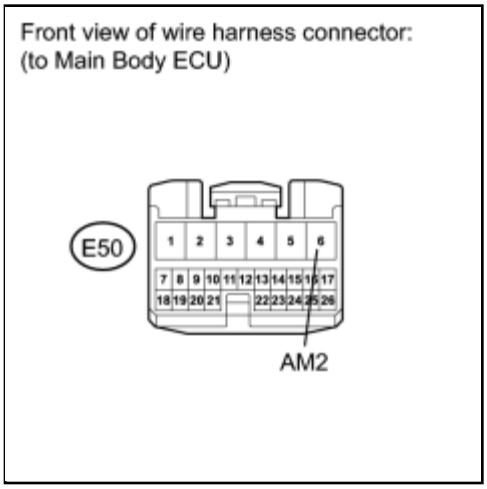

(a) Disconnect the main body ECU connector.

(b) Measure the voltage according to the value(s) in the table below.

Standard Voltage:

TESTER CONNECTION	CONDITION	SPECIFIED CONDITION
E50-6 (AM2) - Body ground	Always	11 to 14 V

(c) Reconnect the main body ECU connector.

NG → **REPAIR OR REPLACE HARNESS OR CONNECTOR (MAIN BODY ECU - BATTERY)**

OK → **CHECK SMART KEY SYSTEM**

Last Modified: 3-10-2010	6.4 C	**From:** 200901
Model Year: 2010	**Model:** Corolla	**Doc ID:** RM000002BHC01ZX
Title: 2ZR-FE ENGINE CONTROL: SFI SYSTEM: P2420: Evaporative Emission System Switching Valve Control Circuit High (2010 Corolla)		

DTC	**P2420**	**Evaporative Emission System Switching Valve Control Circuit High**

DTC SUMMARY

DTC NO.	MONITORING ITEM	MALFUNCTION DETECTION CONDITION	TROUBLE AREA	DETECTION TIMING	DETECTION LOGIC
P2420	Vent valve stuck open (vent)	Following condition met during key-off EVAP monitor: • EVAP pressure change when vent valve closed (ON) less than 0.3 kPa-g (2.25 mmHg-g)	• Canister pump module (Reference orifice, leak detection pump, vent valve) • Connector/wire harness (Canister pump module - ECM) • ECM	While ignition switch off	2 trip

HINT:

The vent valve is built into the canister pump module.

DESCRIPTION

The description can be found in the EVAP (Evaporative Emission) System INFO .

INSPECTION PROCEDURE

Refer to the EVAP System INFO .

HINT:

Unit expressions

- [kPa-a (mmHg-a)] denotes absolute pressure.
- [kPa-g (mmHg-g)] denotes gauge pressure (relative pressure).
- On the Techstream, convert the unit of measurement according to the inspection procedure.

MONITOR DESCRIPTION

5 hours* after the ignition switch is turned off, the leak detection pump creates negative pressure (vacuum) in the EVAP system. The ECM monitors for leaks and actuator malfunctions based on the EVAP pressure.

HINT:

***: If the engine coolant temperature is not below 35°C (95°F) 5 hours after the ignition switch is turned off, the monitor check starts 2 hours later. If it is still not below 35°C (95°F) 7 hours after the ignition switch is turned off, the monitor check starts 2.5 hours later.**

SEQUENCE	OPERATION	DESCRIPTION	DURATION
-	ECM activation	Activated by soak timer 5, 7 or 9.5 hours after ignition switch turned off.	-
A	Atmospheric pressure measurement	Vent valve turned OFF (vent) and EVAP system pressure measured by ECM in order to register atmospheric pressure. If pressure in EVAP system not between 70 kPa-a and 110 kPa-a (525 mmHg-a and 825 mmHg-a), ECM cancels EVAP system monitor.	60 seconds
B	First reference pressure measurement	In order to determine reference pressure, leak detection pump creates negative pressure (vacuum) through reference orifice and then ECM checks if leak detection pump and vent valve operate normally.	60 seconds
C	EVAP system pressure measurement	Vent valve turned ON (closed) to shut EVAP system. Negative pressure (vacuum) created in EVAP system, and EVAP system pressure then measured. Write down measured value as it will be used in leak check. If EVAP pressure does not stabilize within 15 minutes, ECM cancels EVAP system monitor.	15 minutes*
D	Purge VSV monitor	Purge VSV opened and then EVAP system pressure measured by ECM. Large increase indicates normality.	10 seconds
E	Second reference pressure measurement	After second reference pressure measurement, leak check performed by comparing first and second reference pressure. If stabilized system pressure higher than second reference pressure, ECM determines that EVAP system leaking.	60 seconds
-	Final check	Atmospheric pressure measured and then monitoring result recorded by ECM.	-

*: If only a small amount of fuel is in the fuel tank, it takes longer for the EVAP pressure to stabilize.

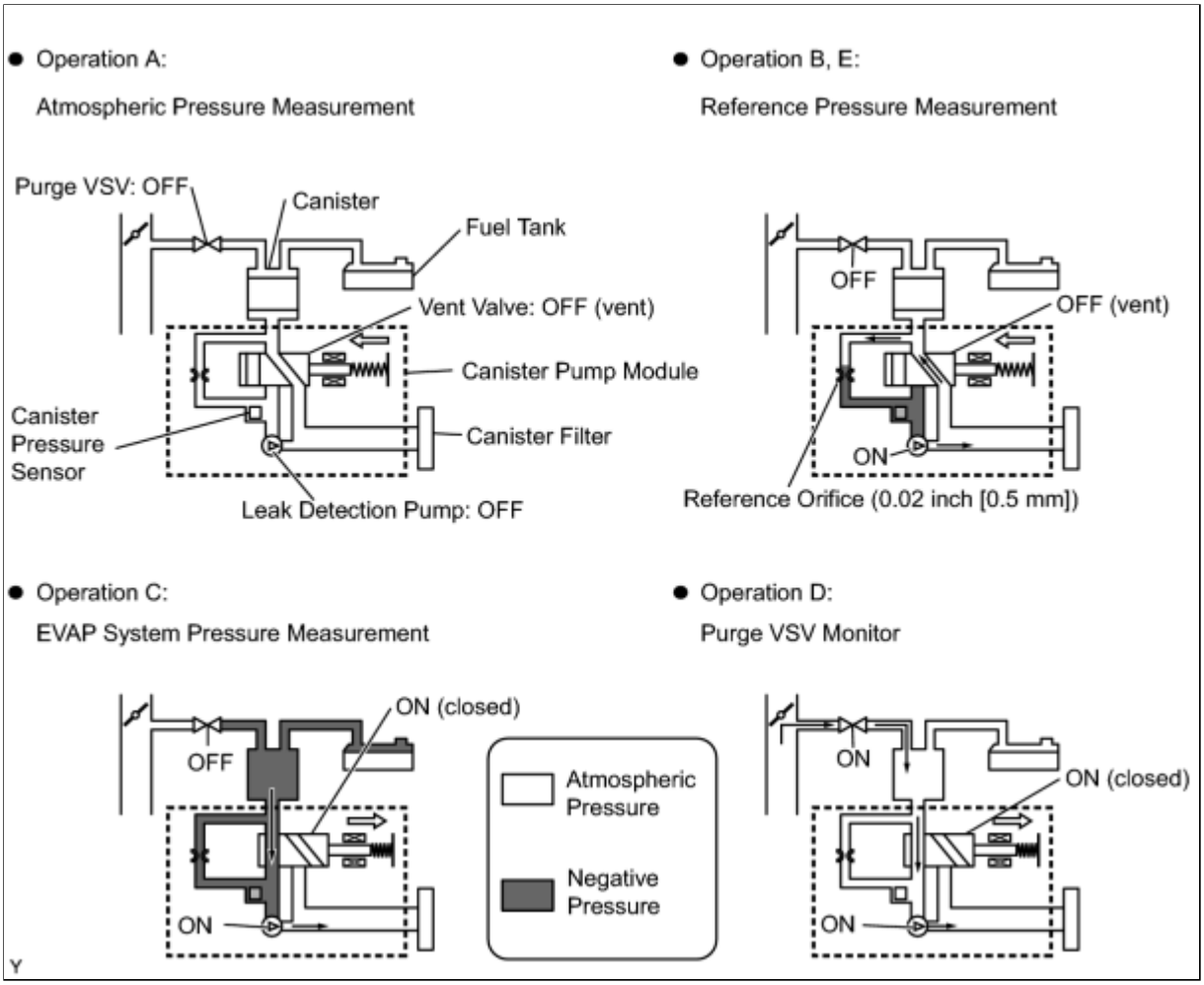

P2420: Vent valve stuck open (vent)

In operation C, the vent valve turns ON (closes) and the EVAP system pressure is then measured by the ECM using the canister pressure sensor to conduct an EVAP leak check. If the pressure does not increase when the vent valve is open, the ECM interprets this as the vent valve being stuck open. The ECM illuminates the MIL and sets the DTC.

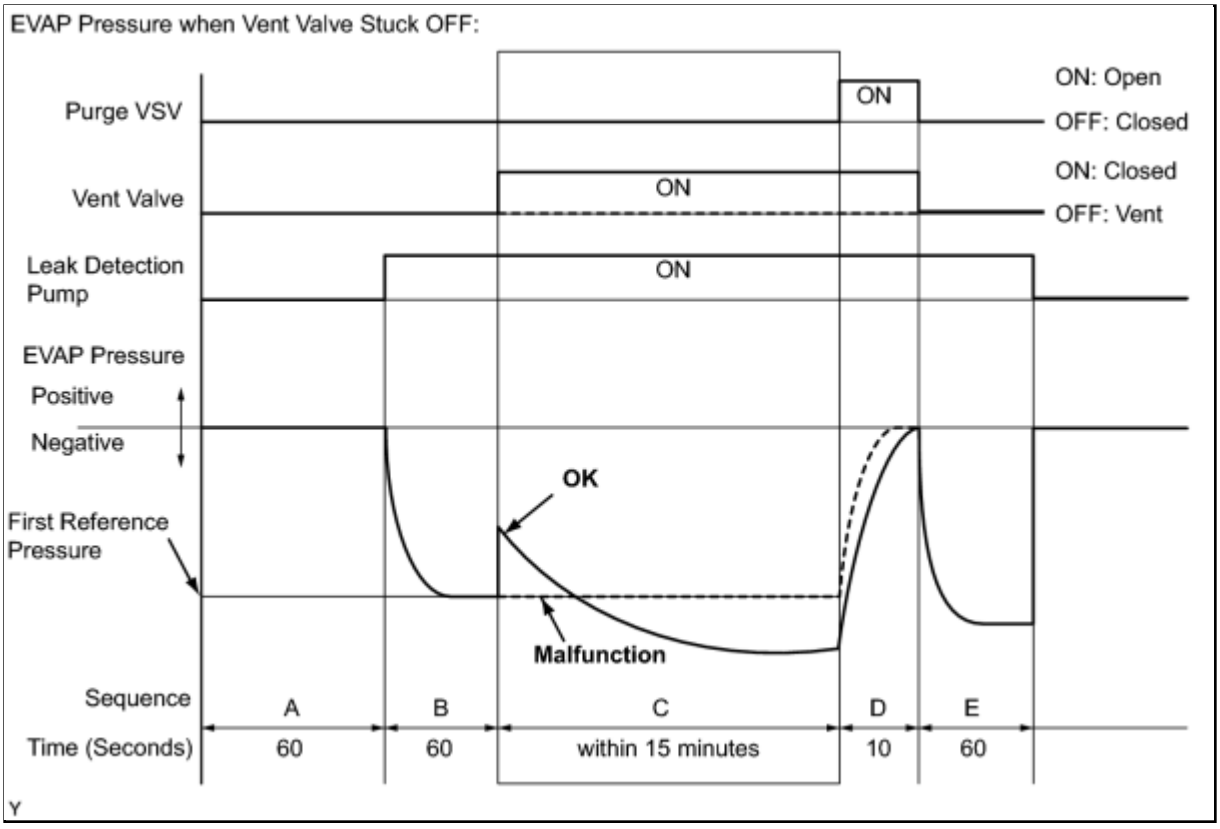

MONITOR STRATEGY

Required Sensors/Components	Purge VSV and canister pump module
Frequency of Operation	Once per driving cycle
Duration	Within 2 minutes (varies with amount of fuel in tank)
MIL Operation	2 driving cycles
Sequence of Operation	None

TYPICAL ENABLING CONDITIONS

Monitor runs whenever following DTCs not present	None
EVAP key-off monitor runs when all of following conditions are met	-
Atmospheric pressure	70 to 110 kPa-a (525 to 825 mmHg-a)
Battery voltage	10.5 V or more
Vehicle speed	Below 4 km/h (2.5 mph)
Ignition switch	OFF
Time after key off	5 or 7 or 9.5 hours

Canister pressure sensor malfunction (P0451, P0452 and P0453)	Not detected
Purge VSV	Not operated by scan tool
Vent valve	Not operated by scan tool
Leak detection pump	Not operated by scan tool
Both of following conditions are met before key off	Conditions 1 and 2
1. Duration that vehicle driven	5 minutes or more
2. EVAP purge operation	Performed
Engine coolant temperature	4.4 to 35°C (40 to 95°F)
Intake air temperature	4.4 to 35°C (40 to 95°F)

TYPICAL MALFUNCTION THRESHOLDS

EVAP pressure change after EVAP canister vent valve ON	Less than 0.3 kPa-g (2.25 mmHg-g)

MONITOR RESULT

Refer to Checking Monitor Status INFO .

Last Modified: 3-10-2010	6.4 C	**From:** 200901
Model Year: 2010	**Model:** Corolla	**Doc ID:** RM000000T6X053X
Title: 2ZR-FE ENGINE CONTROL: SFI SYSTEM: P2610: ECM / PCM Internal Engine Off Timer Performance (2010 Corolla)		

DTC	**P2610**	**ECM / PCM Internal Engine Off Timer Performance**

DTC SUMMARY

DTC NO.	MONITORING ITEM	MALFUNCTION DETECTION CONDITION	TROUBLE AREA	DETECTION TIMING	DETECTION LOGIC
P2610	Soak timer (built into ECM)	ECM internal malfunction	ECM	Engine running	2 trip

DESCRIPTION

To ensure the accuracy of the EVAP (Evaporative Emission) monitor values, the soak timer, which is built into the ECM, measures 5 hours (+/-15 minutes) from when the ignition switch is turned off, before the monitor is run. This allows the fuel to cool down, which stabilizes the EVAP pressure. When 5 hours have elapsed, the ECM turns on the EVAP System monitor.

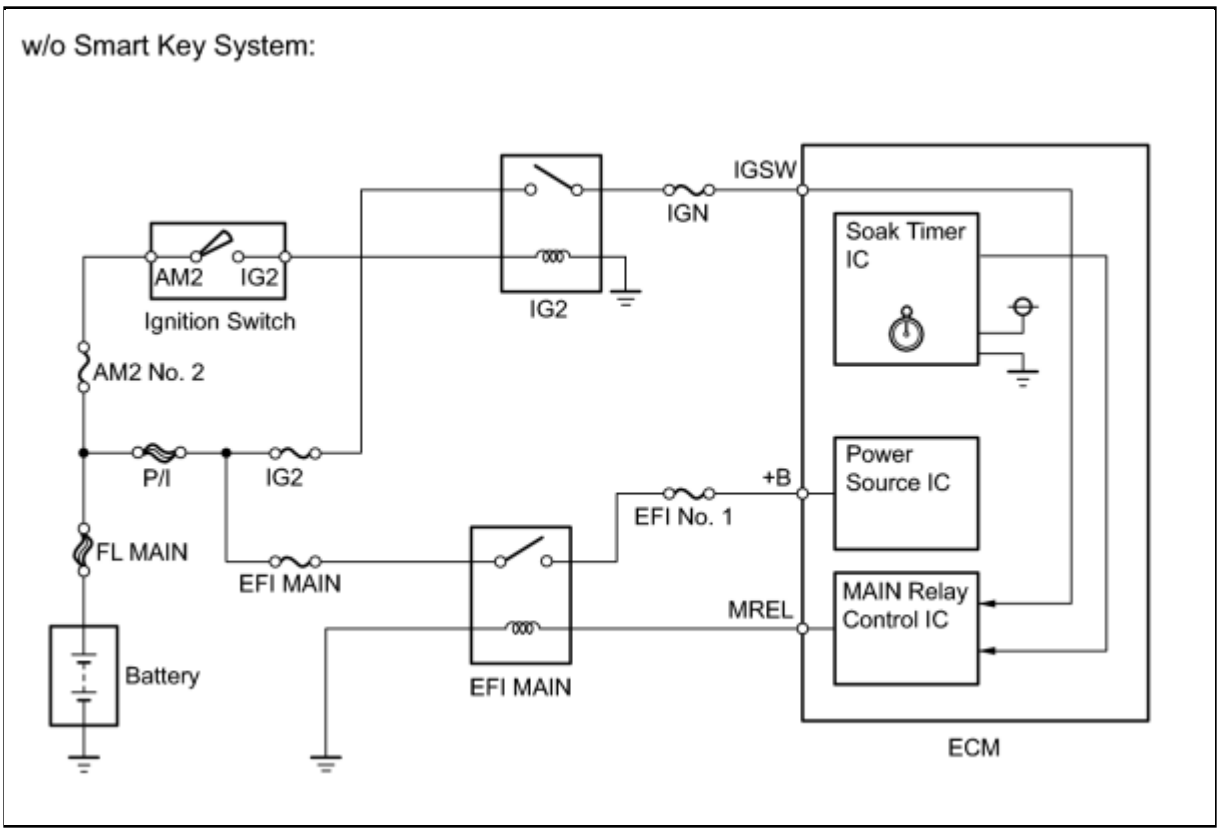

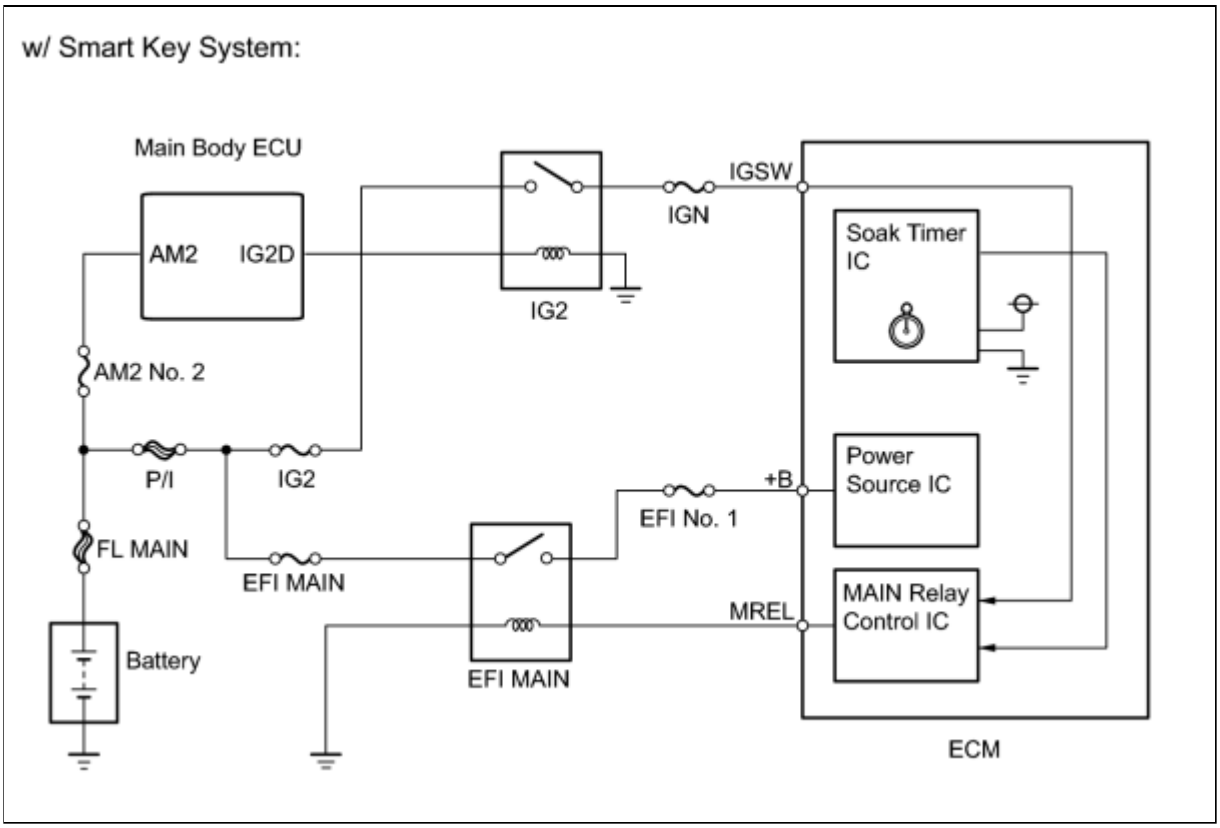

MONITOR DESCRIPTION

5 hours after the ignition switch is turned off, the soak timer activates the ECM to begin the EVAP system monitor. While the engine is running, the ECM monitors the synchronization of the soak timer and the CPU clock. If these two are not synchronized, the ECM interprets this as a malfunction, illuminates the MIL and sets the DTC (2 trip detection logic).

MONITOR STRATEGY

Required Sensors/Components	ECM
Frequency of Operation	Once per driving cycle
Duration	10 minutes
MIL Operation	2 driving cycles
Sequence of Operation	None

TYPICAL ENABLING CONDITIONS

Monitor runs whenever following DTC not present	None
Ignition switch	ON
Engine	Running

Battery voltage	8 V or more
Starter	OFF

TYPICAL MALFUNCTION THRESHOLDS

Soak timer measurement when ECM CPU clock counts 10 minutes	Less than 7 minutes, or more than 13 minutes

INSPECTION PROCEDURE

HINT:

- DTC P2610 is set if an internal ECM problem is detected. Diagnostic procedures are not required. ECM replacement is necessary.
- Read freeze frame data using the Techstream. The ECM records vehicle and driving condition information as freeze frame data the moment a DTC is stored. When troubleshooting, freeze frame data can be helpful in determining whether the vehicle was running or stopped, whether the engine was warmed up or not, whether the air fuel ratio was lean or rich, as well as other data recorded at the time of a malfunction.

PROCEDURE

1.	**REPLACE ECM**

(a) Replace the ECM INFO .

NEXT

2.	**CHECK WHETHER DTC OUTPUT RECURS (DTC P2610)**

(a) Connect the Techstream to the DLC3.

(b) Turn the ignition switch to ON.

(c) Turn the Techstream on.

(d) Clear DTCs INFO .

(e) Switch the ECM from normal mode to check mode.

(f) Start the engine and wait for 10 minutes or more.

(g) Enter the following menus: Powertrain / Engine and ECT / Trouble Codes.

(h) If no pending DTC is displayed, the repair has been successfully completed.

NEXT END

Last Modified: 3-10-2010	6.4 C	**From:** 200901
Model Year: 2010	**Model:** Corolla	**Doc ID:** RM000000WC205RX
Title: 2ZR-FE ENGINE CONTROL: SFI SYSTEM: P2A00: A/F Sensor Circuit Slow Response (Bank 1 Sensor 1) (2010 Corolla)		

DTC	**P2A00**	**A/F Sensor Circuit Slow Response (Bank 1 Sensor 1)**

DESCRIPTION

HINT:

- Refer to DTC P2195 INFO .
- Sensor 1 refers to the sensor mounted in front of the three-way catalytic converter and located near the engine assembly.

DTC NO.	DTC DETECTION CONDITION	TROUBLE AREA
P2A00	Calculated value for air fuel ratio sensor response rate deterioration level is less than threshold (2 trip detection logic)	• Air fuel ratio sensor • Air fuel ratio sensor heater • ECM

MONITOR DESCRIPTION

After engine is warmed up, the ECM performs air fuel ratio feedback control to maintain the air fuel ratio at the stoichiometric level. In addition, active A/F control is performed for approximately 15 to 20 seconds after preconditions are met in order to measure the air fuel ratio sensor response rate. During active A/F control, the ECM forcibly increases and decreases the injection volume a certain amount, based on the stoichiometric air fuel ratio learned during normal air fuel ratio control, and measures the air fuel ratio sensor response rate. The ECM receives a signal from the air fuel ratio sensor while performing active A/F control and uses it to calculate the air fuel ratio sensor response rate deterioration level.

If the value for air fuel ratio sensor response rate deterioration level is beyond the threshold, the ECM interprets this as a malfunction and sets the DTC.

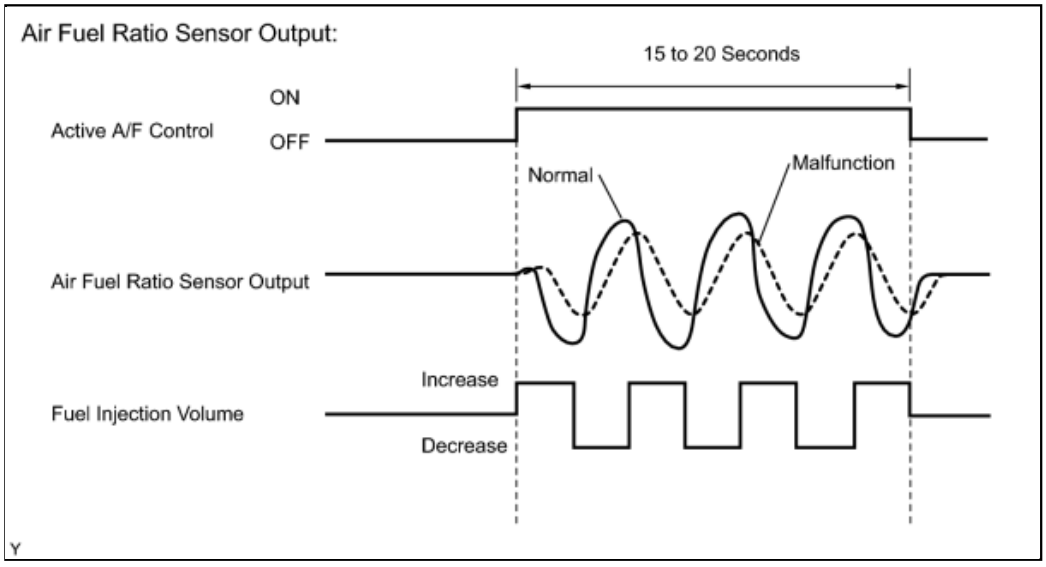

CONFIRMATION DRIVING PATTERN

HINT:

This confirmation driving pattern is used in the "PERFORM CONFIRMATION DRIVING PATTERN" procedure of the following diagnostic troubleshooting procedure.

Performing this confirmation pattern will activate the air fuel ratio sensor response monitor.

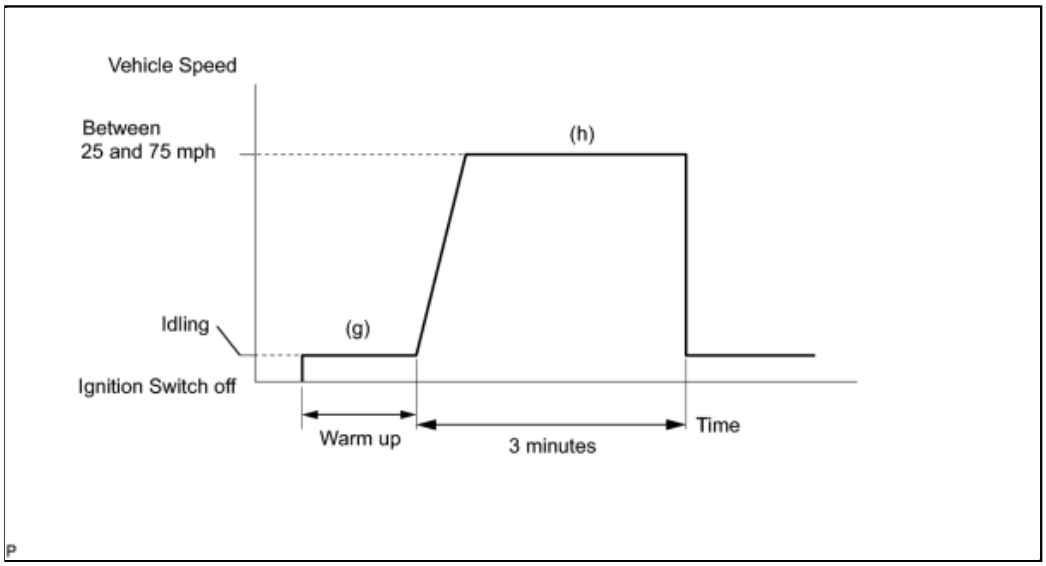

(a) Connect the Techstream to the DLC3.
(b) Turn the ignition switch to ON.
(c) Turn the Techstream on.
(d) Clear DTCs INFO .
(e) Enter the following menus: Powertrain / Engine and ECT / Monitor / O2 Sensor / Details.
(f) Check that RES RATE B1S1 is Fail.
(g) Start the engine and warm it up.
(h) Drive the vehicle at between 25 mph and 75 mph (40 km/h and 120 km/h) for 3 minutes. However, the vehicle should be driven at a constant speed.
(i) Check that RES RATE B1S1 is Pass.
(j) Check the monitor result values on the Techstream by selecting the following menu items: Powertrain / Engine and ECT / Monitor / O2 Sensor / Details / RES RATE B1S1 / Details.
(k) If the values indicated on the Techstream do not change, perform READINESS MONITOR DRIVE PATTERN for the air fuel ratio sensor and the heated oxygen sensor INFO .

HINT:

Completion of all air fuel ratio sensor monitors is required to change the value in RES RATE B1S1.

(l) Note the value of the RES RATE B1S1.
(m) Enter the following menus: Powertrain / Engine and ECT / Trouble Codes.
(n) Check the DTCs.

MONITOR STRATEGY

Related DTCs	P2A00: Air fuel ratio sensor (bank 1) slow response
Required Sensors/Components (Main)	Air fuel ratio sensor
Required Sensors/Components (Related)	Vehicle speed sensor, Crankshaft position sensor
Frequency of Operation	Once per driving cycle

Duration	10 to 15 seconds
MIL Operation	2 driving cycles
Sequence of Operation	None

TYPICAL ENABLING CONDITIONS

Monitor runs whenever following DTCs not present	P0016 (VVT System Bank 1 - Misalignment) P0017 (Exhaust VVT System - Misalignment) P0031, P0032 (Air Fuel Ratio Sensor Heater - Sensor 1) P0102, P0103 (Mass Air Flow Meter) P0112, P0113 (Intake Air Temperature Sensor) P0115, P0117, P0118 (Engine Coolant Temperature Sensor) P0125 (Insufficient Engine Coolant Temperature for Closed Loop Fuel Control) P0120, P0121 P0122, P0123, P0220, P0222, P0223, P2135 (Throttle Position Sensor) P0128 (Thermostat) P0171, P0172 (Fuel System) P0301, P0302, P0303, P0304 (Misfire) P0335 (Crankshaft Position Sensor) P0340 (Camshaft Position Sensor) P0451, P0452 (EVAP System) P0500 (Vehicle Speed Sensor) P0505 (Vehicle Speed Sensor IAC Valve)
Active air fuel ratio control	Performing
Active air fuel ratio control performed when following conditions met	-
Battery voltage	11 V or more
Engine coolant temperature	75°C (167°F) or more
Idling	OFF
Engine RPM	Less than 4000 rpm
Air fuel ratio sensor status	Activated
Fuel-cut	OFF
Engine load	10 to 70%
Shift position	2 or more
Catalyst monitor	Not yet
Intake air amount	4 to 16 gm/sec

TYPICAL MALFUNCTION THRESHOLDS

Response rate deterioration level	Less than 0.12 V

MONITOR RESULT

Refer to Checking Monitor Status 

.

WIRING DIAGRAM

Refer to DTC P2195 INFO .

INSPECTION PROCEDURE

HINT:

Malfunctioning areas can be identified by performing the Control the Injection Volume for A/F sensor function provided in the Active Test. The Control the Injection Volume for A/F sensor function can help to determine whether the air fuel ratio sensor, heated oxygen sensor and other potential trouble areas are malfunctioning.

The following instructions describe how to conduct the Control the Injection Volume for A/F sensor operation using the Techstream.

1. Connect the Techstream to the DLC3.
2. Start the engine.
3. Turn the Techstream on.
4. Warm up the engine at an engine speed of 2500 rpm for approximately 90 seconds.
5. Enter the following menus: Powertrain / Engine and ECT / Active Test / Control the Injection Volume for A/F sensor.
6. Perform the Active Test operation with the engine in an idling condition (press the RIGHT or LEFT button to change the fuel injection volume.)
7. Monitor the output voltages of the air fuel ratio and heated oxygen sensors (AFS Voltage B1 S1 and O2S B1 S2) displayed on the Techstream.

HINT:

- The Control the Injection Volume for A/F sensor operation lowers the fuel injection volume by 12.5% or increases the injection volume by 25%.
- Each sensor reacts in accordance with increases and decreases in the fuel injection volume.

TECHSTREAM DISPLAY (SENSOR)	INJECTION VOLUME	STATUS	VOLTAGE
AFS Voltage B1 S1 (air fuel ratio)	+25%	Rich	Less than 3.1 V
	-12.5%	Lean	More than 3.4 V
O2S B1 S2 (heated oxygen)	+25%	Rich	More than 0.55 V
	-12.5%	Lean	Less than 0.4 V

NOTICE:

The air fuel ratio sensor has an output delay of a few seconds and the heated oxygen sensor has a maximum output delay of approximately 20 seconds.

CASE	AIR FUEL RATIO SENSOR (SENSOR 1) OUTPUT VOLTAGE	HEATED OXYGEN SENSOR (SENSOR 2) OUTPUT VOLTAGE	MAIN SUSPECTED TROUBLE AREA
1	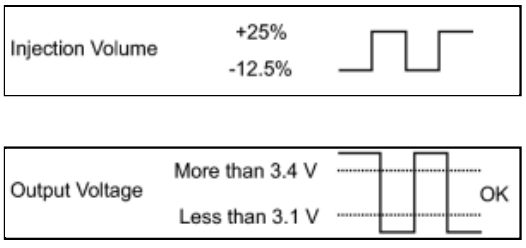	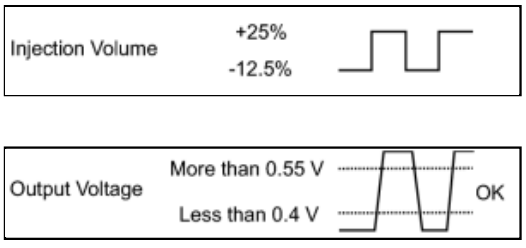	-
2	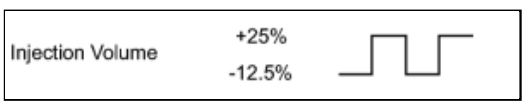	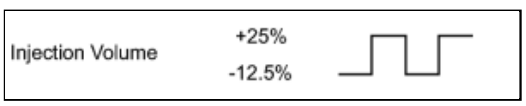	• Air fuel ratio sensor • Air fuel

CASE	AIR FUEL RATIO SENSOR (SENSOR 1) OUTPUT VOLTAGE	HEATED OXYGEN SENSOR (SENSOR 2) OUTPUT VOLTAGE	MAIN SUSPECTED TROUBLE AREA
	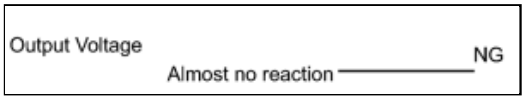	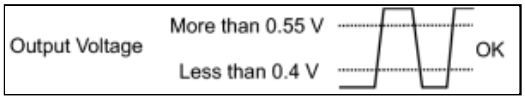	ratio sensor heater • Air fuel ratio sensor circuit
3	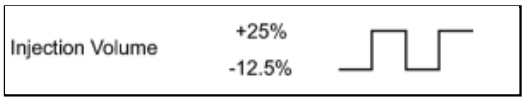 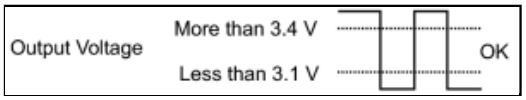	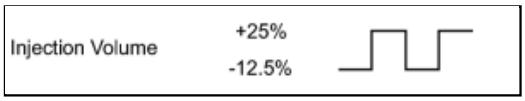 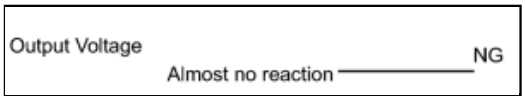	• Heated oxygen sensor • Heated oxygen sensor heater • Heated oxygen sensor circuit
4	 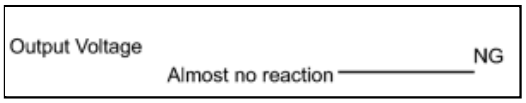	 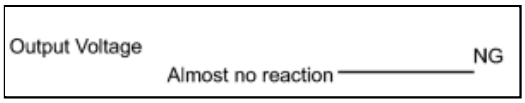	• Injector • Fuel pressure • Gas leak from exhaust system (Air fuel ratio extremely rich or lean)

- Following the Control the Injection Volume for A/F sensor procedure enables technicians to check and graph the voltage outputs of both the air fuel ratio and heated oxygen sensors.
- To display the graph, enter the following menus: Powertrain / Engine and ECT / Active Test / Control the Injection Volume for A/F Sensor / AFS Voltage B1 S1 and O2S B1 S2; then press the graph button on the Data List view.

HINT:

- DTC P2A00 may be also set, when the air fuel ratio is stuck rich or lean.
- A low air fuel ratio sensor voltage could be caused by a rich air fuel mixture. Check for conditions that would cause the engine to run rich.
- A high air fuel ratio sensor voltage could be caused by a lean air fuel mixture. Check for conditions that would cause the engine to run lean.
- Read freeze frame data using the Techstream. The ECM records vehicle and driving condition information as freeze frame data the moment a DTC is stored. When troubleshooting, freeze frame data can be helpful in determining whether the vehicle was running or stopped, whether the engine was warmed up or not, whether the air fuel ratio was lean or rich, as well as other data recorded at the time of a malfunction.

PROCEDURE

1.	**CHECK ANY OTHER DTCS OUTPUT (IN ADDITION TO DTC P2A00)**

(a) Connect the Techstream to the DLC3.

(b) Turn the ignition switch to ON.

(c) Turn the Techstream on.

(d) Enter the following menus: Powertrain / Engine and ECT / Trouble Codes.

(e) Read the DTCs.

Result:

RESULT	PROCEED TO
DTC P2A00 is output	A
DTC P2A00 and other DTCs are output	B

HINT:

If any DTCs other than P2A00 are output, troubleshoot those DTCs first.

B ▶ **GO TO DTC CHART**

A

▼

2.	**INSPECT AIR FUEL RATIO SENSOR (HEATER RESISTANCE)** INFO

NG ▶ **REPLACE AIR FUEL RATIO SENSOR**

OK

▼

3.	**CHECK HARNESS AND CONNECTOR (AIR FUEL RATIO SENSOR - ECM)** INFO

NG ▶ **REPAIR OR REPLACE HARNESS OR CONNECTOR (AIR FUEL RATIO SENSOR - ECM)**

OK

▼

4.	**PERFORM CONFIRMATION DRIVING PATTERN**

(a) Connect the Techstream to the DLC3.

(b) Turn the ignition switch to ON.

(c) Turn the Techstream on.

(d) Clear DTCs.

(e) Switch the ECM from normal mode to check mode.

(f) Drive the vehicle referring the Confirmation Driving Pattern.

NEXT

5.	**CHECK WHETHER DTC OUTPUT RECURS (DTC P2A00)**

(a) Connect the Techstream to the DLC3.

(b) Turn the ignition switch to ON.

(c) Turn the Techstream on.

(d) Enter the following menus: Powertrain / Engine and ECT / Trouble Codes.

(e) Read the DTCs.

Result:

RESULT	PROCEED TO
DTC P2A00 is output	A
DTC is not output	B

B **CHECK FOR INTERMITTENT PROBLEMS**

A

6.	**REPLACE AIR FUEL RATIO SENSOR**

(a) Replace the air fuel ratio sensor INFO .

NEXT

7.	**PERFORM CONFIRMATION DRIVING PATTERN**

(a) Connect the Techstream to the DLC3.

(b) Turn the ignition switch to ON.

(c) Turn the Techstream on.

(d) Clear DTCs.

(e) Switch the ECM from normal mode to check mode.

(f) Drive the vehicle referring to the Confirmation Driving Pattern.

NEXT

8.	**CHECK WHETHER DTC OUTPUT RECURS (DTC P2A00)**

(a) Connect the Techstream to the DLC3.

(b) Turn the ignition switch to ON.

(c) Turn the Techstream on.

(d) Enter the following menus: Powertrain / Engine and ECT / Trouble Codes.

(e) Read the DTCs.

Result:

RESULT	PROCEED TO
DTC is not output	A
DTC P2A00 is output	B

B **CHECK ENGINE TO DETERMINE CAUSE OF EXTREMELY RICH OR LEAN ACTUAL AIR FUEL RATIO**

A **END**

Last Modified: 3-10-2010	6.4 J	**From:** 200901
Model Year: 2010	**Model:** Corolla	**Doc ID:** RM000001FLC045X
Title: 2ZR-FE ENGINE CONTROL: SFI SYSTEM: Cranking Holding Function Circuit (2010 Corolla)		

Cranking Holding Function Circuit

DESCRIPTION

The cranking holding control system keeps energizing the ST relay after the ECM detects the starter signal (STSW signal) from the main body ECU until the ECM performs a judgment of "Engine started". Furthermore, the ECM outputs an accessory cut signal (ACCR signal) to the ACC relay during cranking to prevent flickering of the combination meter, clock, audio system, and other areas.

When the ECM detects the STSW signal, the ECM outputs the starter relay drive signal (STAR signal) to the starter relay through the clutch pedal switch assembly or park/neutral position switch, and then the engine is cranked. When the ECM receives a stable engine speed signal (NE signal) (more specifically, when the NE signal reaches a predetermined value), the ECM stops outputting the STAR signal. Also, the ECM monitors the ST relay operating conditions based on the STA terminal voltage status.

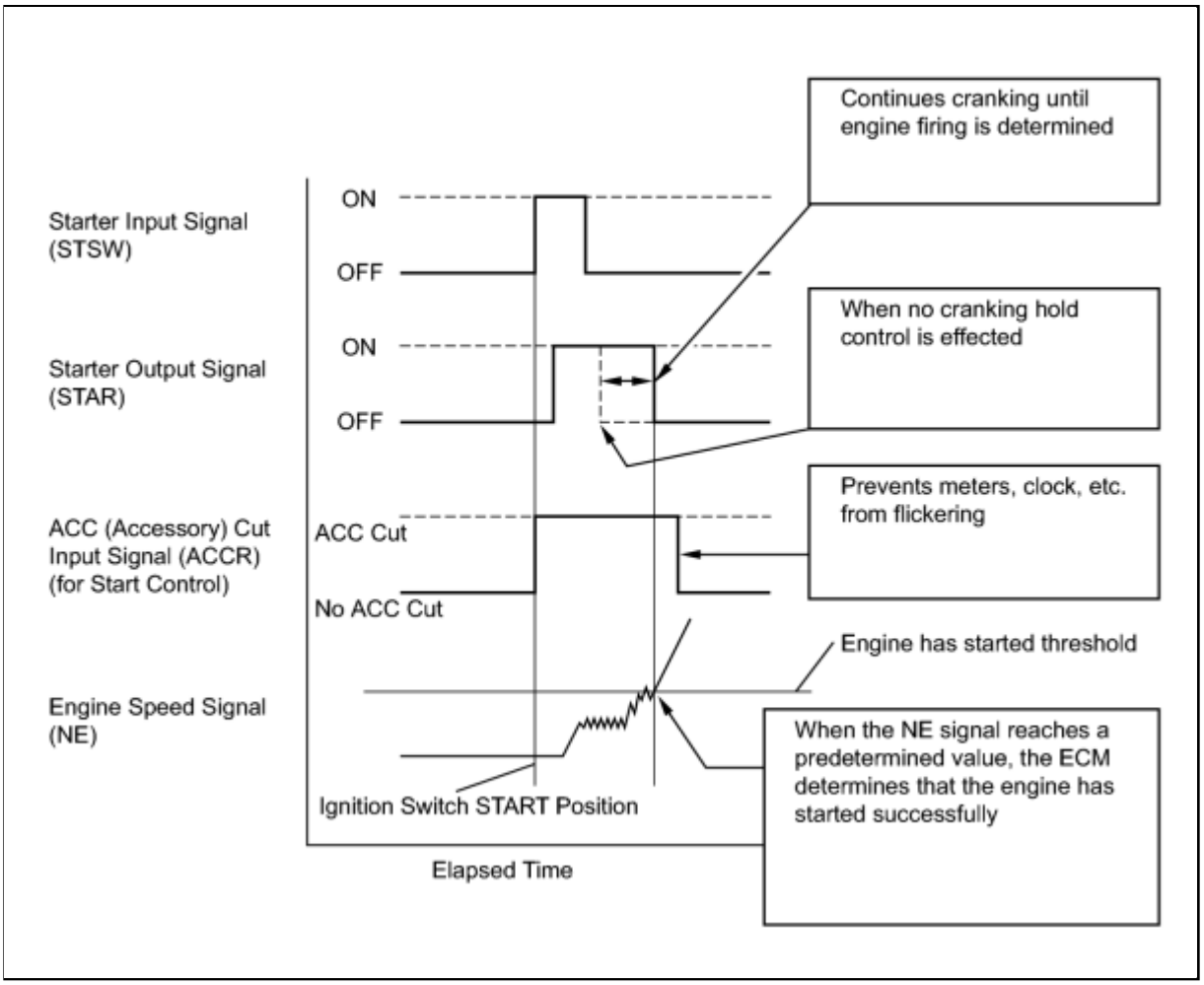

WIRING DIAGRAM

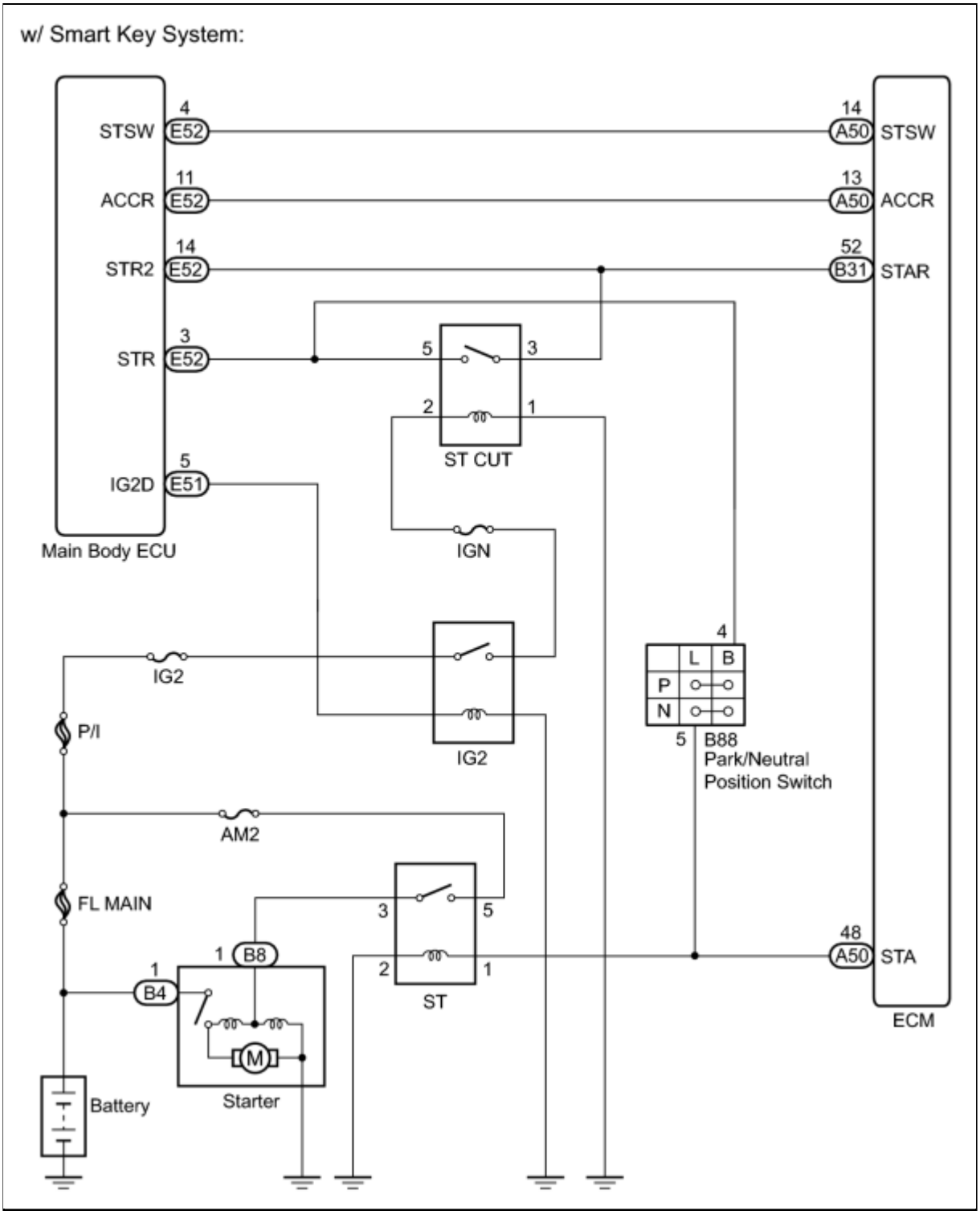

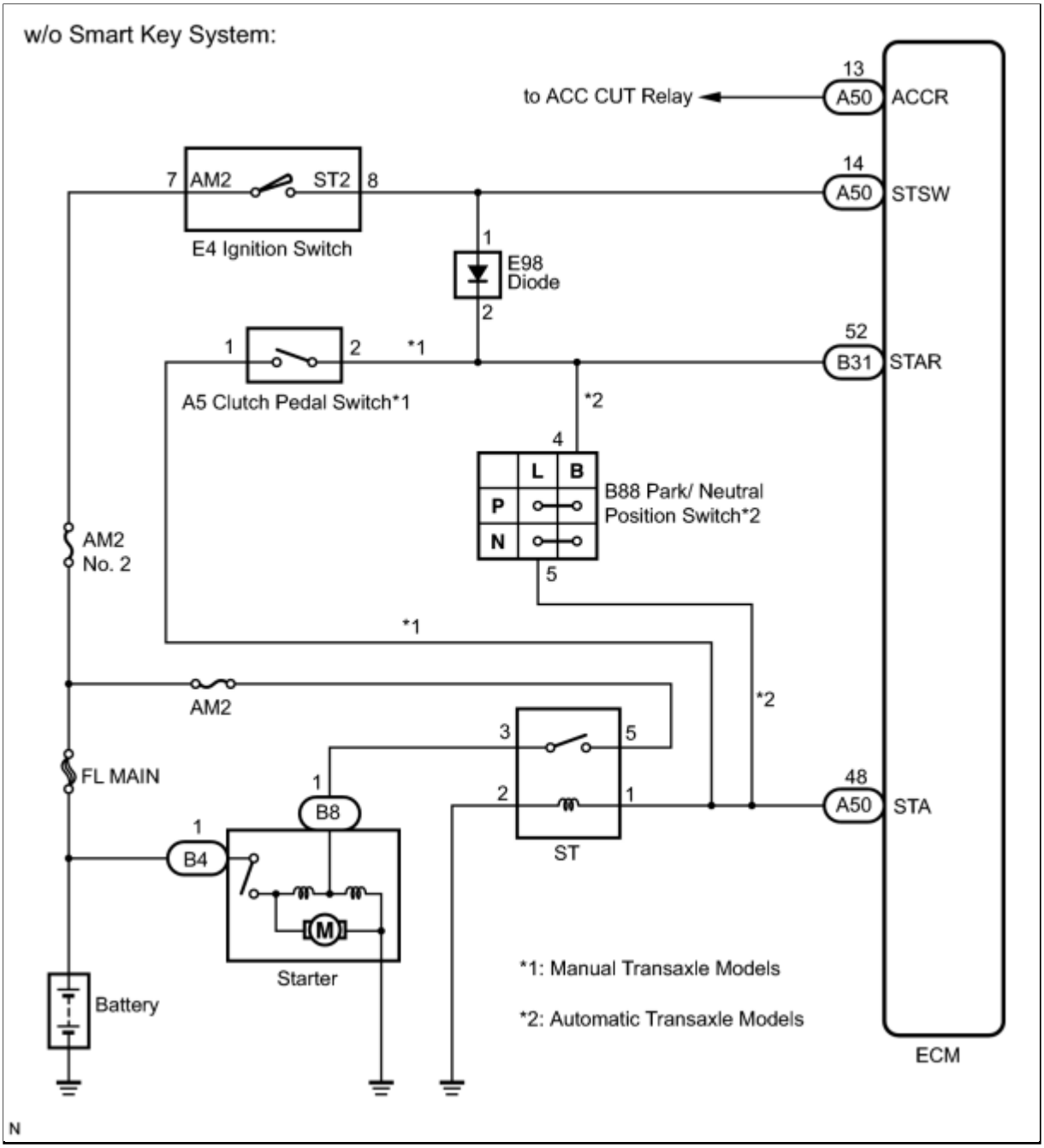

INSPECTION PROCEDURE

PROCEDURE

1.	**READ VALUE USING TECHSTREAM (STARTER SIGNAL)**

(a) Connect the Techstream to the DLC3.

(b) Turn the ignition switch to ON.

(c) Turn the Techstream ON.

(d) Enter the following menus: Powertrain / Engine and ECT / Data List / Starter Signal.

(e) Move the shift lever to P or N (for automatic transaxle models).

(f) Fully depress the clutch pedal (for manual transaxle models).

(g) Depress the brake pedal (w/ Smart Key System).

(h) Check the result when the ignition switch is turned ON and START positions.

OK:

IGNITION SWITCH CONDITION	TECHSTREAM DISPLAY (STARTER SIGNAL)
Ignition switch ON	OFF
START	ON

Result:

RESULT	PROCEED TO
NG (w/o Smart key system)	A
NG (w/ Smart key system)	B
OK	C

C ▶ **INSPECT ST RELAY (VOLTAGE)**

B ▶ **INSPECT ECM (STSW TERMINAL VOLTAGE)**

A ▼

2.	**INSPECT ECM (STSW TERMINAL VOLTAGE)**

(a) Disconnect the ECM connector.

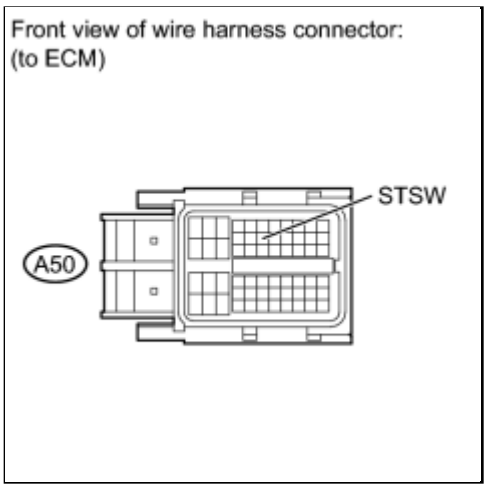

(b) Crank the engine.

(c) Measure the voltage according to the value(s) in the table below.

Standard Voltage:

TESTER CONNECTION	SWITCH CONDITION	SPECIFIED CONDITION
A50-14 (STSW) - Body ground	Ignition switch ON	Below 1 V
A50-14 (STSW) - Body ground	START	8 to 14 V

(d) Reconnect the ECM connector.

HINT:

DTCs related to the communication with other computers may be set due to this inspection. Clear those DTCs after inspection.

NG ▶ **INSPECT FUSE (AM2 NO. 2 FUSE)**

OK
▼

3.	**INSPECT RELAY (ST RELAY VOLTAGE)**

(a) Remove the ST relay from the No. 5 relay block (TMC made).

(b) Remove the ST relay from the No. 8 relay block (except TMC made).

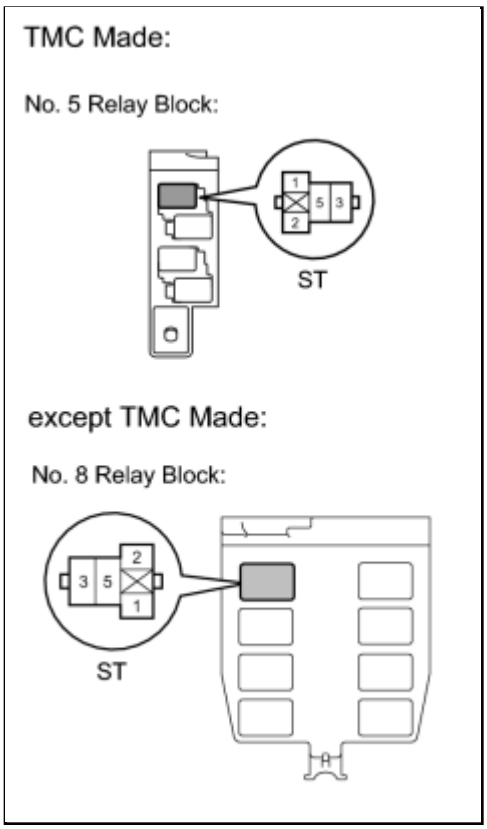

(c) Move the shift lever the P or N position (for automatic transaxle models).

(d) Fully depress the clutch pedal (for manual transaxle models).

(e) Crank the engine.

(f) Measure the voltage according to the value(s) in the table below.

Standard Voltage:

TESTER CONNECTION	SWITCH CONDITION	SPECIFIED CONDITION
ST relay terminal 1 - Body ground	ON	Below 1 V
ST relay terminal 1 - Body ground	START	9 to 13 V

(g) Reinstall the ST relay.

Result:

RESULT	PROCEED TO
OK (for automatic transaxle models)	A
OK (for manual transaxle models)	B
NG (for automatic transaxle models)	C
NG (for manual transaxle models)	D

D INSPECT CLUTCH PEDAL SWITCH

INSPECT PARK/NEUTRAL POSITION SWITCH

B CHECK HARNESS AND CONNECTOR (CLUTCH PEDAL SWITCH - ECM)

A

4.	CHECK HARNESS AND CONNECTOR (PARK/NEUTRAL POSITION SWITCH - ECM)

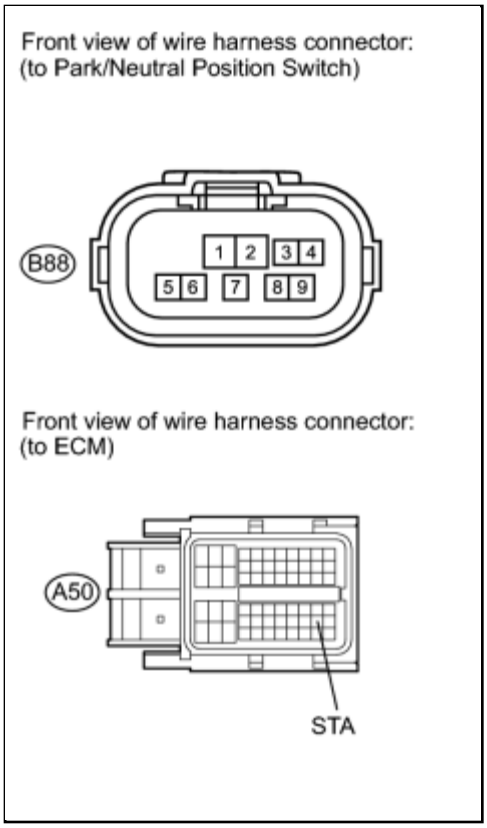

(a) Disconnect the ECM connector.

(b) Disconnect the park/neutral position switch assembly connector.

(c) Measure the resistance according to the value(s) in the table below.

Standard Resistance (Check for open):

TESTER CONNECTION	CONDITION	SPECIFIED CONDITION
B88-5 - A50-48(STA)	Always	Below 1 Ω

Standard Resistance (Check for short):

TESTER CONNECTION	CONDITION	SPECIFIED CONDITION

TESTER CONNECTION	CONDITION	SPECIFIED CONDITION
B88-5 or A50-48(STA) - Body ground	Always	10 kΩ or higher

(d) Reconnect the ECM connector.

(e) Reconnect the park/neutral position switch assembly connector.

NG ▶ **REPAIR OR REPLACE HARNESS OR CONNECTOR (PARK/NEUTRAL POSITION SWITCH - ECM)**

OK ▶ **REPLACE ECM**

5.	CHECK HARNESS AND CONNECTOR (CLUTCH PEDAL SWITCH - ECM)

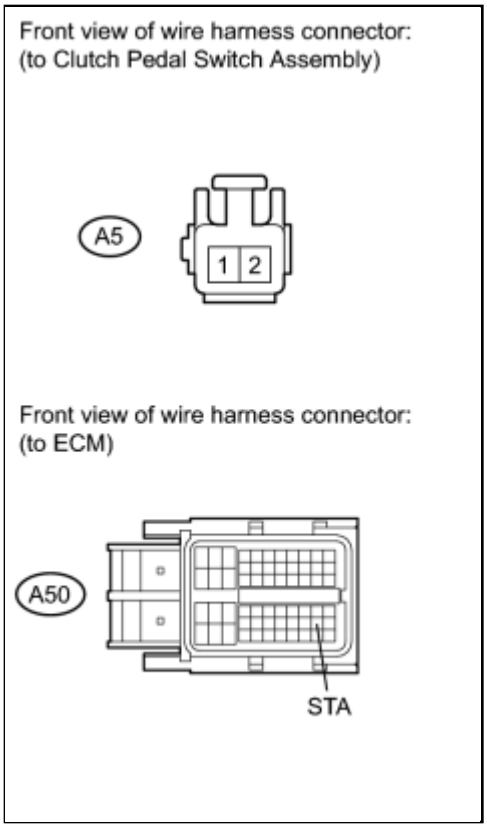

(a) Disconnect the ECM connector.

(b) Disconnect the clutch pedal switch connector.

(c) Measure the resistance according to the value(s) in the table below.

Standard Resistance (Check for Open):

TESTER CONNECTION	CONDITION	SPECIFIED CONDITION
A5-1 - A50-48 (STA)	Always	Below 1 Ω

Standard Resistance (Check for Short):

TESTER CONNECTION	CONDITION	SPECIFIED CONDITION
A5-1 or A50-48 (STA) - Body ground	Always	10 kΩ or higher

(d) Reconnect the ECM connector.

(e) Reconnect the clutch pedal switch connector.

NG ▶ **REPAIR OR REPLACE HARNESS OR CONNECTOR (CLUTCH PEDAL SWITCH - ECM)**

OK ▶ **REPLACE ECM**

6.	**INSPECT PARK/NEUTRAL POSITION SWITCH**

(a) Inspect the park/neutral position switch INFO.

NG ▶ **REPLACE PARK/NEUTRAL POSITION SWITCH**

OK ▼

7.	**CHECK HARNESS AND CONNECTOR (IGNITION SWITCH ASSEMBLY - PARK/NEUTRAL POSITION SWITCH)**

(a) Disconnect the park/neutral position switch connector.

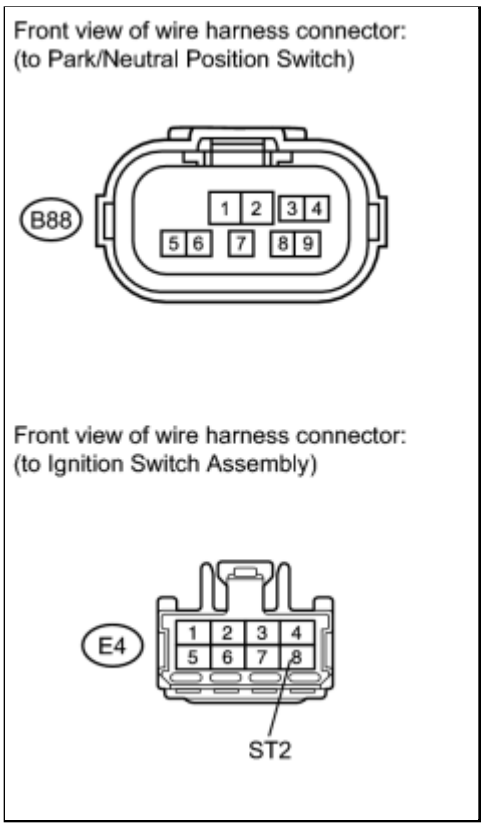

(b) Disconnect the ignition switch assembly connector.

(c) Measure the resistance according to the value(s) in the table below.

Standard Resistance (Check for Open):

TESTER CONNECTION	CONDITION	SPECIFIED CONDITION
E4-8 (ST2) (+) - B88-4 (-)	Always	Below 1 Ω
E4-8 (ST2) (-) - B88-4 (+)	Always	10 kΩ or higher

Standard Resistance (Check for Short):

TESTER CONNECTION	CONDITION	SPECIFIED CONDITION
E4-8 (ST2) or B88-4 - Body ground	Always	10 kΩ or higher

HINT:

When measuring the resistance, it is necessary to reverse the positive (+) and negative (-) tester probes because there is a diode in the wire harness.

(d) Reconnect the park/neutral position switch connector.

(e) Reconnect the ignition switch assembly connector.

NG ▶ **REPAIR OR REPLACE HARNESS OR CONNECTOR (IGNITION SWITCH ASSEMBLY - PARK/NEUTRAL POSITION SWITCH)**

OK

8.	CHECK HARNESS AND CONNECTOR (IGNITION SWITCH ASSEMBLY - ECM)

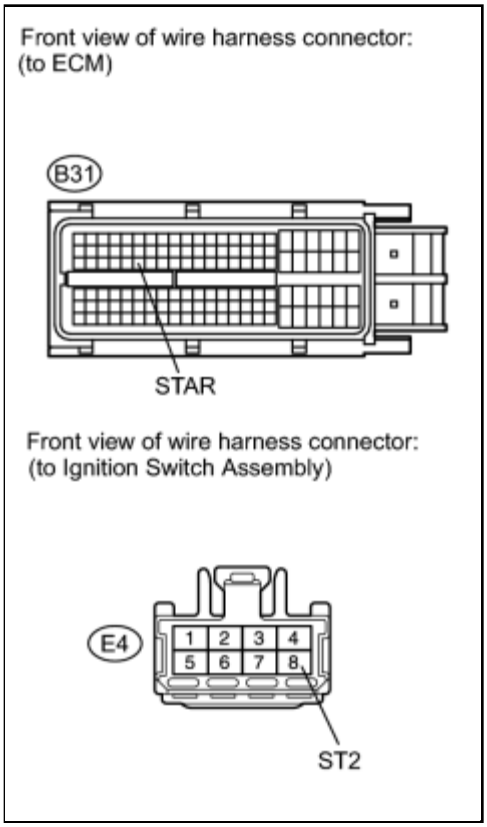

(a) Disconnect the ECM connector.

(b) Disconnect the ignition switch assembly connector.

(c) Measure the resistance according to the value(s) in the table below.

Standard Resistance (Check for Open):

TESTER CONNECTION	CONDITION	SPECIFIED CONDITION
E4-8 (ST2) - E31-52 (STAR)	Always	Below 1 Ω

Standard Resistance (Check for Short):

TESTER CONNECTION	CONDITION	SPECIFIED CONDITION
E4-8 (ST2) or B31-52 (STAR) - Body ground	Always	10 kΩ or higher

(d) Reconnect the ECM connector.

(e) Reconnect the ignition switch assembly connector.

NG ▶ **REPAIR OR REPLACE HARNESS OR CONNECTOR (IGNITION SWITCH ASSEMBLY - ECM)**

OK ▼

9.	**CHECK HARNESS AND CONNECTOR (ST RELAY - PARK/NEUTRAL POSITION SWITCH)**

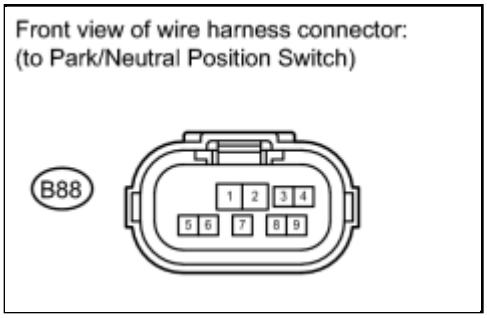

(a) Disconnect the park/neutral position switch connector.

(b) Remove the ST relay from the No. 5 relay block (TMC made).

(c) Remove the ST relay from the No. 8 relay block (except TMC made).

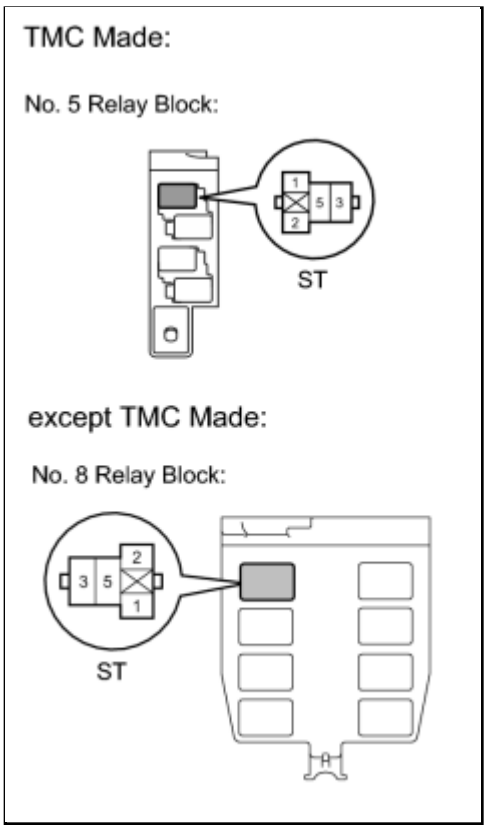

(d) Measure the resistance according to the value(s) in the table below.

Standard Resistance (Check for Open):

TESTER CONNECTION	CONDITION	SPECIFIED CONDITION
ST relay terminal 1 - B88-5	Always	Below 1 Ω

Standard Resistance (Check for Short):

TESTER CONNECTION	CONDITION	SPECIFIED CONDITION
ST relay terminal 1 or B88-5 - Body ground	Always	10 kΩ or higher

(e) Reconnect the park/neutral position switch connector.

(f) Reinstall the ST relay.

NG ▶ **REPAIR OR REPLACE HARNESS OR CONNECTOR (ST RELAY - PARK/NEUTRAL POSITION SWITCH)**

OK ▶ **REPLACE ECM**

10.	**INSPECT CLUTCH PEDAL SWITCH**

(a) Inspect the clutch pedal switch INFO .

NG ▶ **REPLACE CLUTCH PEDAL SWITCH**

OK ▼

11.	**CHECK HARNESS AND CONNECTOR (IGNITION SWITCH ASSEMBLY - CLUTCH PEDAL SWITCH)**

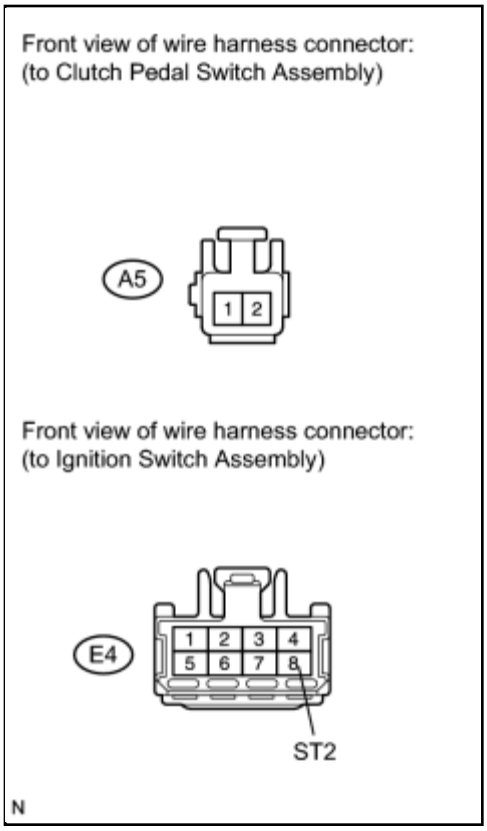

(a) Disconnect the clutch pedal switch connector.

(b) Disconnect the ignition switch assembly connector.

(c) Measure the resistance according to the value(s) in the table below.

Standard Resistance (Check for Open):

TESTER CONNECTION	CONDITION	SPECIFIED CONDITION
E4-8 (ST2) (+) - A5-2 (-)	Always	Below 1 Ω
E4-8 (ST2) (-) - A5-2 (+)	Always	10 kΩ or higher

Standard Resistance (Check for Short):

TESTER CONNECTION	CONDITION	SPECIFIED CONDITION
E4-8 (ST2) or A5-2 - Body ground	Always	10 kΩ or higher

HINT:

When measuring the resistance, it is necessary to reverse the positive (+) and negative (-) tester probes because there is a diode in the wire harness.

(d) Reconnect the clutch pedal switch connector.

(e) Reconnect the ignition switch assembly connector.

NG ▶ **REPAIR OR REPLACE HARNESS OR CONNECTOR (IGNITION SWITCH ASSEMBLY - CLUTCH PEDAL SWITCH)**

OK ▼

12.	**CHECK HARNESS AND CONNECTOR (IGNITION SWITCH ASSEMBLY - ECM)**

(a) Disconnect the ECM connector.

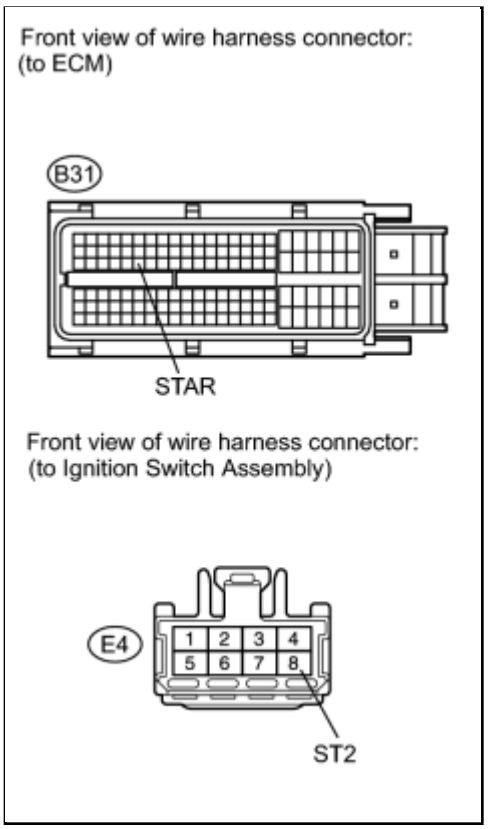

(b) Disconnect the ignition switch assembly connector.

(c) Measure the resistance according to the value(s) in the table below.

Standard Resistance (Check for Open):

TESTER CONNECTION	CONDITION	SPECIFIED CONDITION
E4-8 (ST2) - B31-52 (STAR)	Always	Below 1 Ω

Standard Resistance (Check for Short):

TESTER CONNECTION	CONDITION	SPECIFIED CONDITION
E4-8 (ST2) or B31-52 (STAR) - Body ground	Always	10 kΩ or higher

(d) Reconnect the ECM connector.

(e) Reconnect the ignition switch assembly connector.

NG ▶ **REPAIR OR REPLACE HARNESS OR CONNECTOR (IGNITION SWITCH ASSEMBLY - ECM)**

OK ▼

13.	CHECK HARNESS AND CONNECTOR (ST RELAY - CLUTCH PEDAL SWITCH)

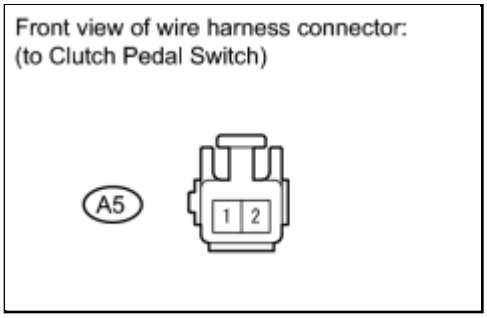

(a) Disconnect the clutch pedal switch connector.

(b) Remove the ST relay from the No. 5 relay block (TMC made).

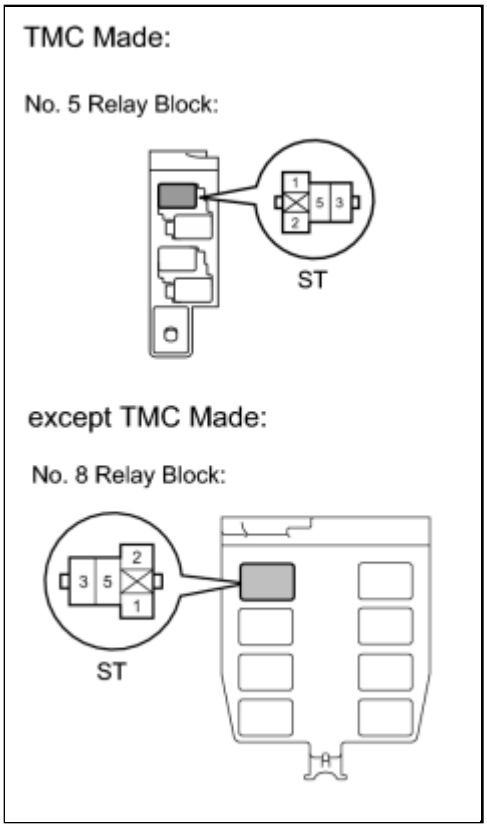

(c) Remove the ST relay from the No. 8 relay block (except TMC made).

(d) Measure the resistance according to the value(s) in the table below.

Standard Resistance (Check for Open):

TESTER CONNECTION	CONDITION	SPECIFIED CONDITION
ST relay terminal 1 - A5-1	Always	Below 1 Ω

Standard Resistance (Check for Short):

TESTER CONNECTION	CONDITION	SPECIFIED CONDITION
ST relay terminal 1 or A5-1 - Body ground	Always	10 kΩ or higher

(e) Reconnect the clutch pedal switch connector.

(f) Reinstall the ST relay.

NG ▶ **REPAIR OR REPLACE HARNESS OR CONNECTOR (ST RELAY - CLUTCH PEDAL SWITCH)**

OK ▶ **REPLACE ECM**

14.	**INSPECT FUSE (AM2 NO. 2 FUSE)**

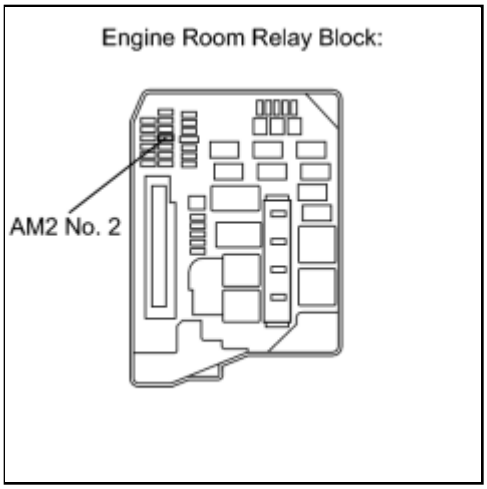

(a) Remove the AM2 No. 2 fuse from the engine room relay block.

(b) Measure the resistance according to the value(s) in the table below.

Standard Resistance:

TESTER CONNECTION	CONDITION	SPECIFIED CONDITION
AM2 No. 2 fuse	Always	Below 1 Ω

(c) Reinstall the AM2 No. 2 fuse.

NG ▶ **CHECK FOR SHORTS IN ALL HARNESSES AND CONNECTORS CONNECTED TO FUSE AND REPLACE FUSE**

OK

15.	INSPECT IGNITION SWITCH ASSEMBLY

(a) Inspect the ignition switch assembly INFO .

NG ▶ REPLACE IGNITION SWITCH ASSEMBLY

OK ▼

16.	CHECK HARNESS AND CONNECTOR (AM2 TERMINAL VOLTAGE)

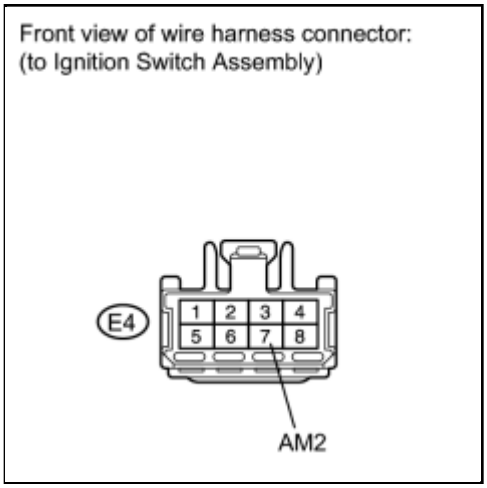

(a) Disconnect the ignition switch assembly connector.

(b) Measure the voltage according to the value(s) in the table below.

Standard Voltage:

TESTER CONNECTION	CONDITION	SPECIFIED CONDITION
E4-7 (AM2) - Body ground	Always	11 to 14 V

(c) Reconnect the ignition switch assembly connector.

NG ▶ REPAIR OR REPLACE HARNESS OR CONNECTOR (BATTERY - IGNITION SWITCH ASSEMBLY)

OK ▶ **REPAIR OR REPLACE HARNESS OR CONNECTOR (IGNITION SWITCH ASSEMBLY - ECM)**

17.	INSPECT ST RELAY (VOLTAGE)

(a) Remove the ST relay from the No. 5 relay block (TMC made).

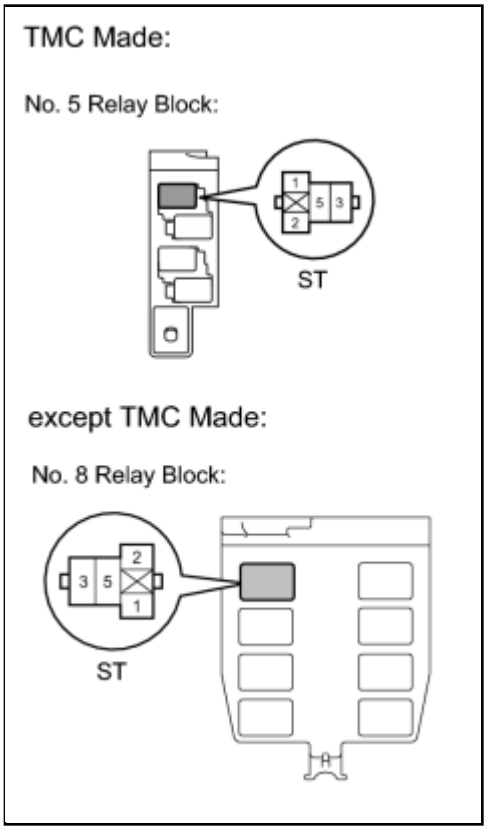

(b) Remove the ST relay from the No. 8 relay block (except TMC made).

(c) Move the shift lever to the P or N position (for automatic transaxle models).

(d) Fully depress the clutch pedal (for manual transaxle models).

(e) Crank the engine.

(f) Measure the voltage according to the value(s) in the table below.

Standard Voltage:

TESTER CONNECTION	SWITCH CONDITION	SPECIFIED CONDITION
ST relay terminal 1 - Body ground	ON	Below 1 V
ST relay terminals 1 - Body ground	START	9 to 13 V

(g) Reinstall the ST relay.

Result:

RESULT	PROCEED TO
OK	A
NG (for automatic transaxle models)	B
NG (for manual transaxle models)	C

C ▶ **REPAIR OR REPLACE HARNESS OR CONNECTOR (ST RELAY - CLUTCH PEDAL SWITCH)**

B ▶ **REPAIR OR REPLACE HARNESS OR CONNECTOR (ST RELAY - PARK/NEUTRAL POSITION SWITCH)**

A ▼

18.	**INSPECT RELAY (ST RELAY)**

(a) Remove the ST relay from the No. 5 relay block (TMC made).

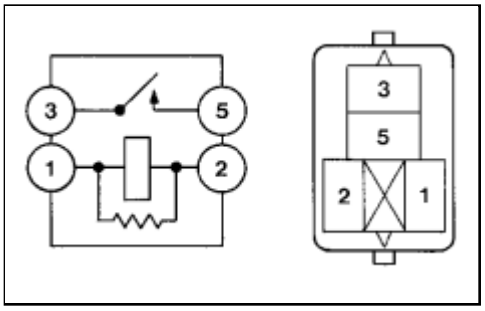

(b) Remove the ST relay from the No. 8 relay block (except TMC made).

(c) Measure the resistance according to the value(s) in the table below.

Standard Resistance:

TESTER CONNECTION	SWITCH CONDITION	SPECIFIED CONDITION
3-5	Always	10kΩ or higher
3-5	Apply battery voltage between terminal 1 and 2	Below 1 Ω

(d) Reinstall the ST relay.

NG ▶ **REPLACE RELAY (ST RELAY)**

OK

19.	INSPECT ST RELAY (VOLTAGE)

(a) Remove the ST relay from the No. 5 relay block (TMC made).

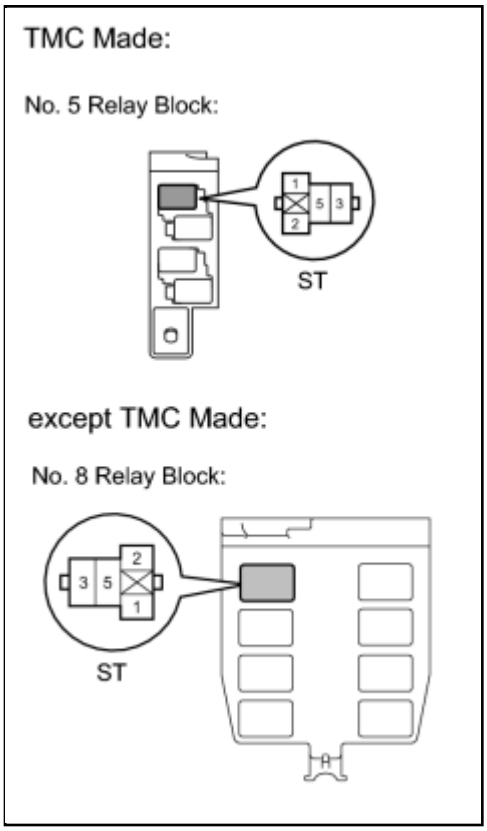

(b) Remove the ST relay from the No. 8 relay block (except TMC made).

(c) Measure the voltage according to the value(s) in the table below.

Standard Voltage:

TESTER CONNECTION	SWITCH CONDITION	SPECIFIED CONDITION
ST relay terminal 5 - Body ground	Ignition switch ON	11 to 14 V

(d) Reinstall the ST relay.

NG ▶ **REPAIR OR REPLACE HARNESS OR CONNECTOR (BATTERY - ST RELAY)**

OK

20.	CHECK HARNESS AND CONNECTOR (ST RELAY - BODY GROUND)

(a) Remove the ST relay from the No. 5 relay block (TMC made).

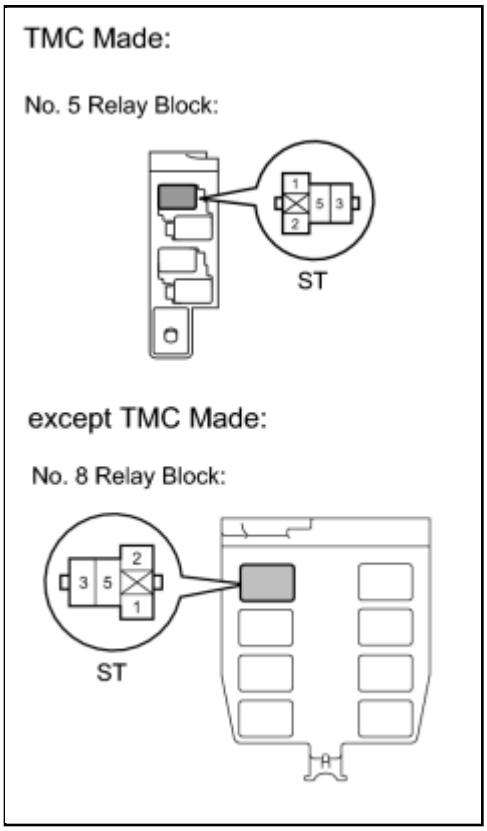

(b) Remove the ST relay from the No. 8 relay block (except TMC made).

(c) Measure the resistance according to the value(s) in the table below.

Standard Resistance (Check for Open):

TESTER CONNECTION	CONDITION	SPECIFIED CONDITION
ST relay terminal 2 - Body ground	Always	Below 1 Ω

(d) Reinstall the ST relay.

NG ▶ **REPAIR OR REPLACE HARNESS OR CONNECTOR (ST RELAY - BODY GROUND)**

OK

21.	INSPECT STARTER ASSEMBLY

(a) Inspect the starter assembly INFO .

NG ▶ **REPLACE STARTER ASSEMBLY**

OK ▶ **REPAIR OR REPLACE HARNESS OR CONNECTOR (BATTERY - STARTER - ST RELAY)**

22.	INSPECT ECM (STSW TERMINAL VOLTAGE)

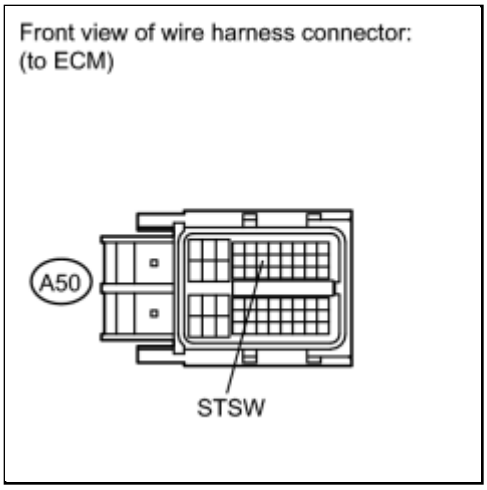

(a) Disconnect the ECM connector.

(b) Move the shift lever to the P or N position.

(c) Crank the engine.

(d) Measure the voltage according to the value(s) in the table below.

Standard Voltage:

TESTER CONNECTION	SWITCH CONDITION	SPECIFIED CONDITION
A50-14 (STSW) - Body ground	ON	Below 1 V
A50-14 (STSW) - Body ground	START	9 to 13 V

(e) Reconnect the ECM connector.

HINT:

DTCs related to the communication with other computers may be set due to this inspection. Clear those DTCs after inspection.

NG ▶ **CHECK HARNESS AND CONNECTOR (MAIN BODY ECU - ECM)**

OK ▼

23.	INSPECT PARK/NEUTRAL POSITION SWITCH (VOLTAGE)

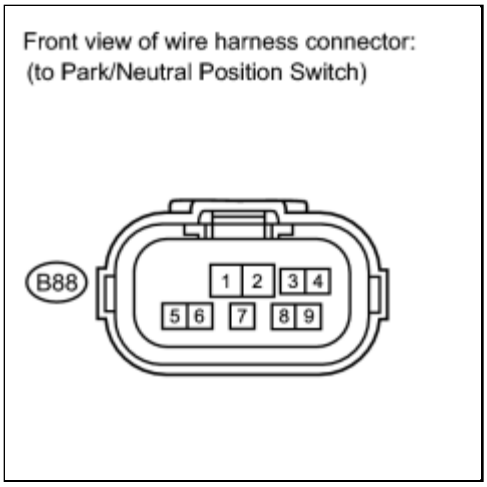

(a) Disconnect the park/neutral position switch connector.

(b) Move the shift lever to the P or N position.

(c) Crank the engine.

(d) Measure the voltage according to the value(s) in the table below.

Standard Voltage:

TESTER CONNECTION	SWITCH CONDITION	SPECIFIED CONDITION
B88-4 - Body ground	ON	Below 1 V
B88-4 - Body ground	START	9 to 13 V

(e) Reconnect the park/neutral position switch connector.

NG ▶ **INSPECT RELAY (ST CUT RELAY)**

OK

24.	INSPECT PARK/NEUTRAL POSITION SWITCH

(a) Inspect the park/neutral position switch INFO .

NG ▶ **REPLACE PARK/NEUTRAL POSITION SWITCH**

OK ▶ **REPAIR OR REPLACE HARNESS OR CONNECTOR (PARK/NEUTRAL POSITION SWITCH - ECM)**

25.	CHECK HARNESS AND CONNECTOR (MAIN BODY ECU - ECM)

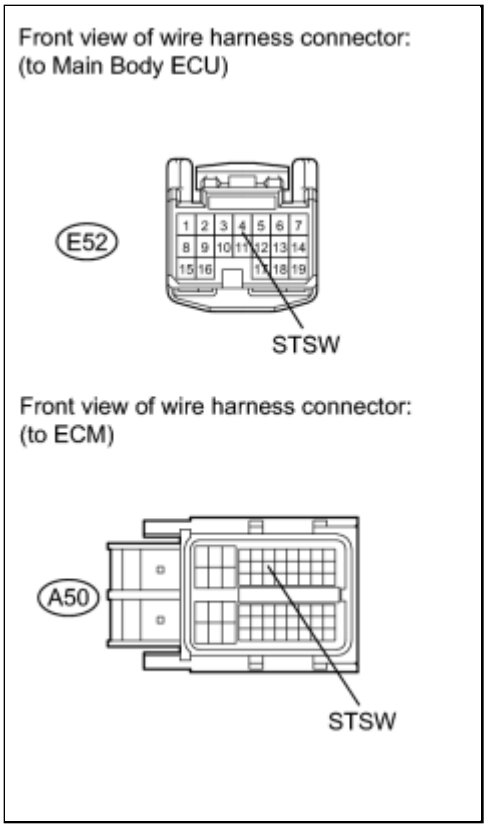

(a) Disconnect the ECM connector.

(b) Disconnect the main body ECU connector.

(c) Measure the resistance according to the value(s) in the table below.

Standard Resistance (Check for Open):

TESTER CONNECTION	CONDITION	SPECIFIED CONDITION
A50-14 (STSW) - E52-4 (STSW)	Always	Below 1 Ω

Standard Resistance (Check for Short):

TESTER CONNECTION	CONDITION	SPECIFIED CONDITION
A50-14 (STSW) or E52-4 (STSW) - Body ground	Always	10 kΩ or higher

(d) Reconnect the ECM connector.

(e) Reconnect the main body ECU connector.

NG ▶ **REPAIR OR REPLACE HARNESS OR CONNECTOR (MAIN BODY ECU - ECM)**

OK ▶ **GO TO SMART KEY SYSTEM**

26.	INSPECT RELAY (ST CUT RELAY)

(a) Remove the ST CUT relay from the No. 6 relay block (TMC made).

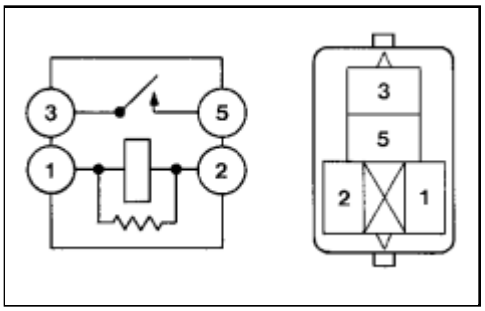

(b) Remove the ST CUT relay from the No. 8 relay block (except TMC made).

(c) Measure the resistance according to the value(s) in the table below.

Standard Resistance:

TESTER CONNECTION	CONDITION	SPECIFIED CONDITION
3-5	Always	10 kΩ or higher
3-5	Apply battery voltage between terminal 1 and 2	Below 1 Ω

(d) Reinstall the ST CUT relay.

NG ▶ **REPLACE RELAY (ST CUT RELAY)**

OK

27.	CHECK HARNESS AND CONNECTOR (ST CUT RELAY - BODY GROUND)

(a) Remove the ST CUT relay from the No. 6 relay block (TMC made).

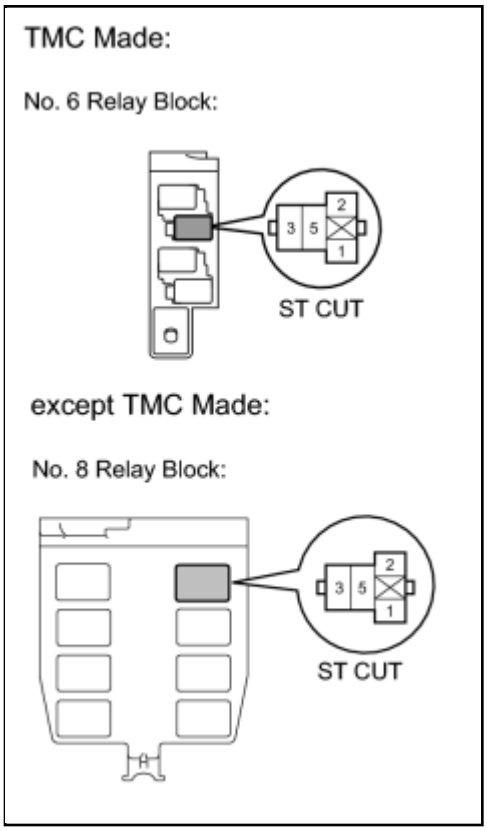

(b) Remove the ST CUT relay from the No. 8 relay block (except TMC made).

(c) Measure the resistance according to the value(s) in the table below.

Standard Resistance (Check for Open):

TESTER CONNECTION	CONDITION	SPECIFIED CONDITION
ST CUT relay terminal 1 - Body ground	Always	Below 1 Ω

(d) Reinstall the ST CUT relay.

NG ▶ **REPAIR OR REPLACE HARNESS OR CONNECTOR (ST CUT RELAY - BODY GROUND)**

OK

28.	**INSPECT FUSE (IGN FUSE)**

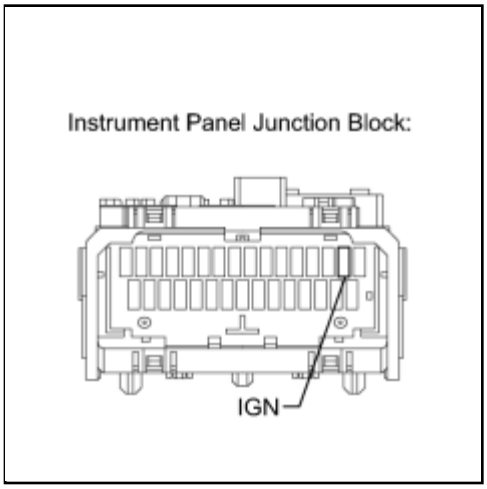

(a) Remove the IGN fuse from the instrument junction block.

(b) Measure the resistance according to the value(s) in the table below.

Standard Resistance:

TESTER CONNECTION	CONDITION	SPECIFIED CONDITION
IGN fuse	Always	Below 1 Ω

(c) Reinstall the IGN fuse.

NG ▶ **CHECK FOR SHORTS IN ALL HARNESSES AND CONNECTORS CONNECTED TO FUSE AND REPLACE FUSE**

OK

29.	**CHECK HARNESS AND CONNECTOR (ST CUT RELAY - INTEGRATION RELAY (IG2 RELAY))**

(a) Remove the ST CUT relay from the No. 6 relay block (TMC made).

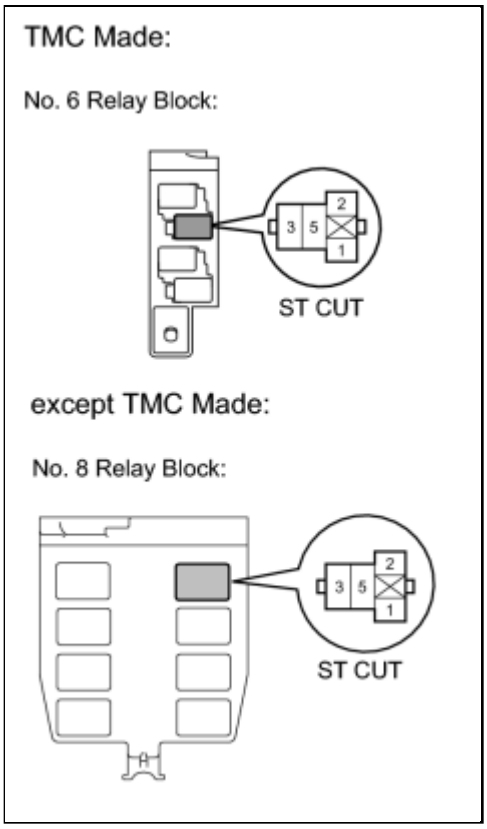

(b) Remove the ST CUT relay from the No. 8 relay block (except TMC made).

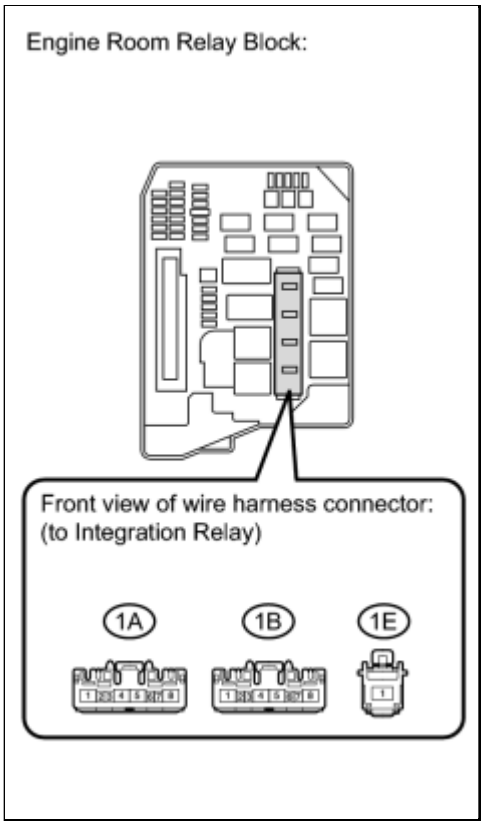

(c) Remove the integration relay from the engine room relay block.

(d) Disconnect the integration relay connector.

(e) Measure the resistance according to the value(s) in the table below.

Standard Resistance (Check for Open):

TESTER CONNECTION	CONDITION	SPECIFIED CONDITION
ST CUT relay terminal 2 - 1A-4	Always	Below 1 Ω

Standard Resistance (Check for Short):

TESTER CONNECTION	CONDITION	SPECIFIED CONDITION
ST CUT relay terminal 2 or 1A-4 - Body ground	Always	10 kΩ or higher

(f) Reinstall the ST CUT relay.

(g) Reconnect the integration relay connector.

(h) Reinstall the integration relay.

NG ▶ **REPAIR OR REPLACE HARNESS OR CONNECTOR (ST CUT RELAY - INTEGRATION RELAY (IG2 RELAY))**

OK ▼

30.	**CHECK HARNESS AND CONNECTOR (ST CUT RELAY - ECM)**

(a) Remove the ST CUT relay from the No. 6 relay block (TMC made).

(b) Remove the ST CUT relay from the No. 8 relay block (except TMC made).

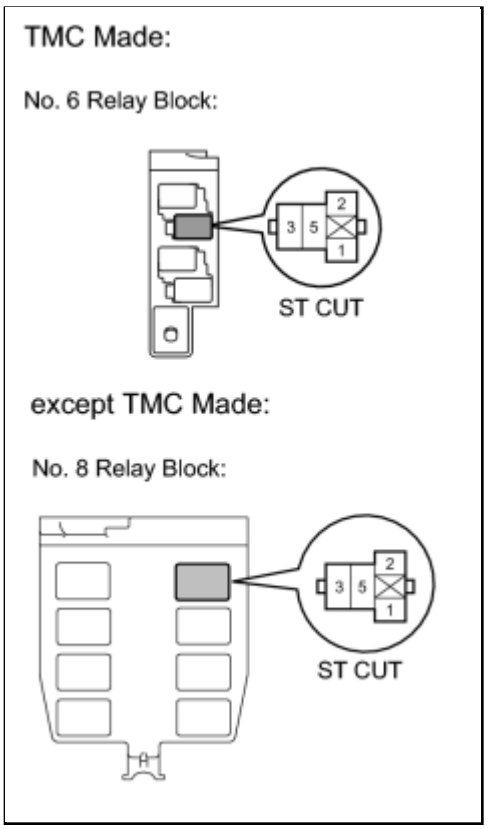

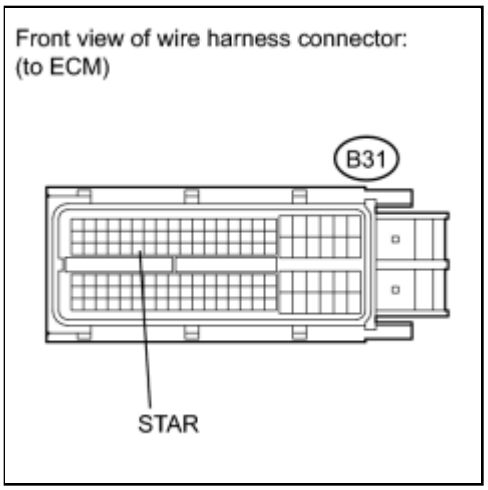

(c) Disconnect the ECM connector.

(d) Measure the resistance according to the value(s) in the table below.

Standard Resistance (Check for Open):

TESTER CONNECTION	CONDITION	SPECIFIED CONDITION
ST CUT relay terminal 3 - B31-52 (STAR)	Always	Below 1 Ω

Standard Resistance (Check for Short):

TESTER CONNECTION	CONDITION	SPECIFIED CONDITION

TESTER CONNECTION	CONDITION	SPECIFIED CONDITION
ST CUT relay terminal 3 or B31-52 (STAR) - Body ground	Always	10 kΩ or higher

(e) Reinstall the ST CUT relay.

(f) Reconnect the ECM connector.

NG ▶ **REPAIR OR REPLACE HARNESS OR CONNECTOR (ST CUT RELAY - ECM)**

OK ▼

31.	CHECK HARNESS AND CONNECTOR (ST CUT RELAY - MAIN BODY ECU)

(a) Remove the ST CUT relay from the No. 6 relay block (TMC made).

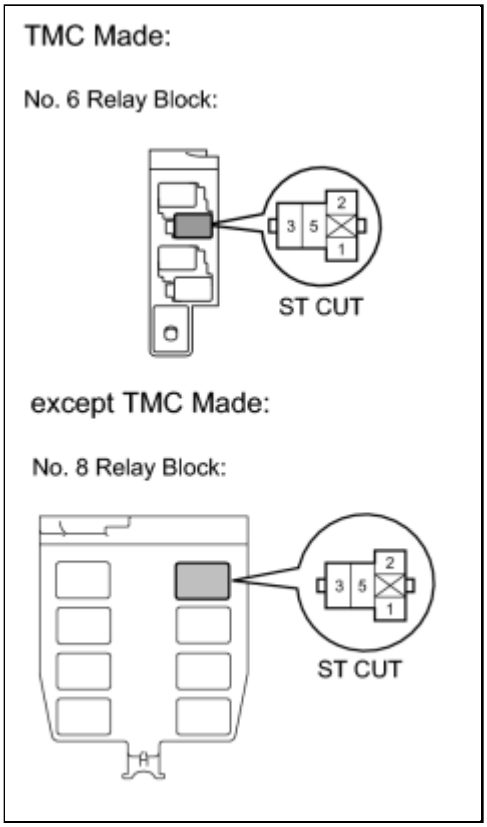

(b) Remove the ST CUT relay from the No. 8 relay block (except TMC made).

(c) Disconnect the main body ECU connector.

(d) Measure the resistance according to the value(s) in the table below.

Standard Resistance (Check for Open):

TESTER CONNECTION	CONDITION	SPECIFIED CONDITION
ST CUT relay terminal 3 - E52-14 (STR2)	Always	Below 1 Ω
ST CUT relay terminal 5 - E52-3 (STR)	Always	Below 1 Ω

Standard Resistance (Check for Short):

TESTER CONNECTION	CONDITION	SPECIFIED CONDITION
ST CUT relay terminal 3 or E52-14 (STR2) - Body ground	Always	10 kΩ or higher
ST CUT relay terminal 5 or E52-3 (STR) - Body ground	Always	10 kΩ or higher

(e) Reinstall the ST CUT relay.

(f) Reconnect the main body ECU connector.

NG ▶ **REPAIR OR REPLACE HARNESS OR CONNECTOR (ST CUT RELAY - MAIN BODY ECU)**

OK ▼

32.	**CHECK HARNESS AND CONNECTOR (MAIN BODY ECU - PARK/NEUTRAL POSITION SWITCH)**

(a) Disconnect the park/neutral position switch connector.

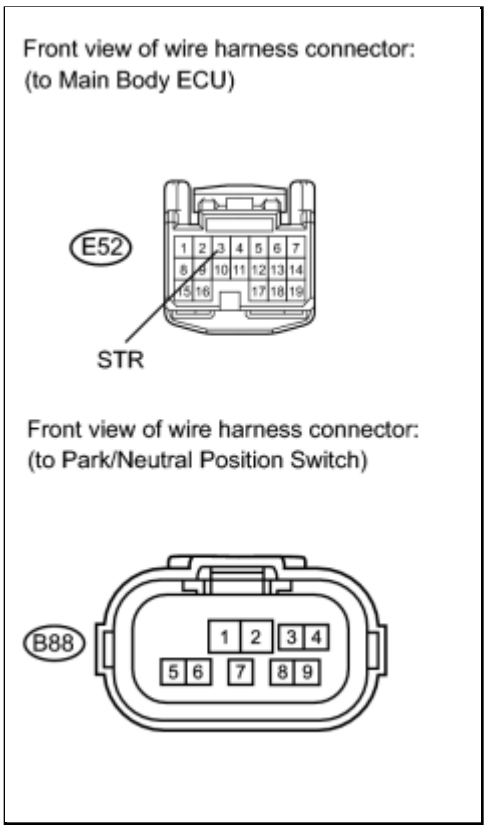

(b) Disconnect the main body ECU connector.

(c) Measure the resistance according to the value(s) in the table below.

Standard Resistance (Check for Open):

TESTER CONNECTION	CONDITION	SPECIFIED CONDITION
E52-3(STR) - B88-4	Always	Below 1 Ω

Standard Resistance (Check for Short):

TESTER CONNECTION	CONDITION	SPECIFIED CONDITION
E52-3(STR) or B88-4 - Body ground	Always	10 kΩ or higher

(d) Reconnect the park/neutral position switch connector.

(e) Reconnect the main body ECU connector.

NG ▶ **REPAIR OR REPLACE HARNESS OR CONNECTOR (MAIN BODY ECU - PARK/NEUTRAL POSITION SWITCH)**

OK ▶ **REPLACE ECM**

Last Modified: 3-10-2010	6.4 J	**From:** 200901
Model Year: 2010	**Model:** Corolla	**Doc ID:** RM000000276803JX
Title: 2ZR-FE ENGINE CONTROL: SFI SYSTEM: Fuel Pump Control Circuit (2010 Corolla)		

Fuel Pump Control Circuit

DESCRIPTION

In the diagram below, when the engine is cranked, current flows from terminal ST1 (STR) of the ignition switch (power source control ECU) to the starter relay coil and current also flows to terminal STA of the ECM (STA signal).

When the STA signal and NE signal are input to the ECM, Tr is turned on, current flows to the coil of the circuit opening relay, the relay switches on, power is supplied to the fuel pump and the fuel pump operates.

While the NE signal is generated (engine running), the ECM keeps Tr on (circuit opening relay on) and the fuel pump also keeps operating.

w/ Smart Key System:

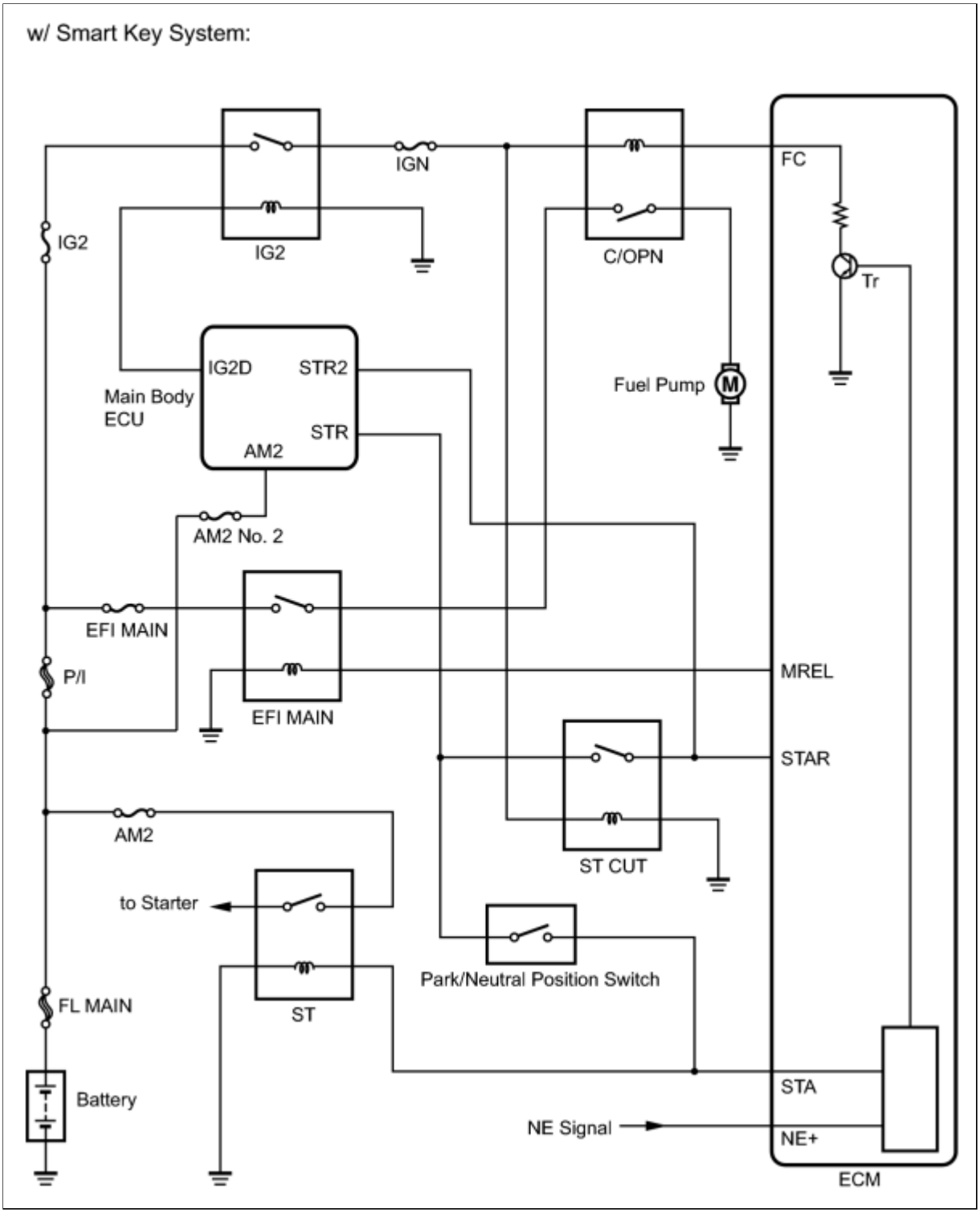

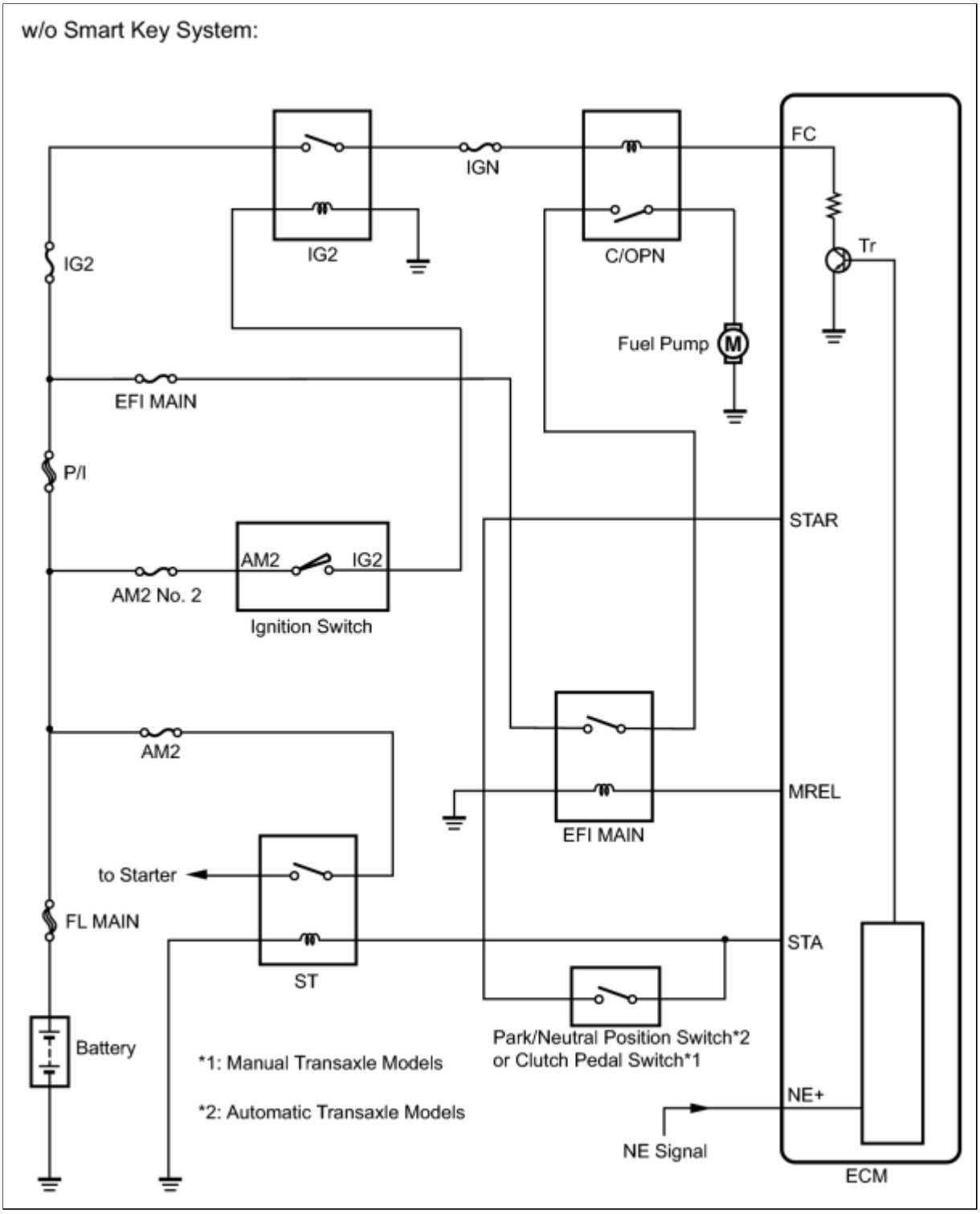

WIRING DIAGRAM

w/ Smart Key System:

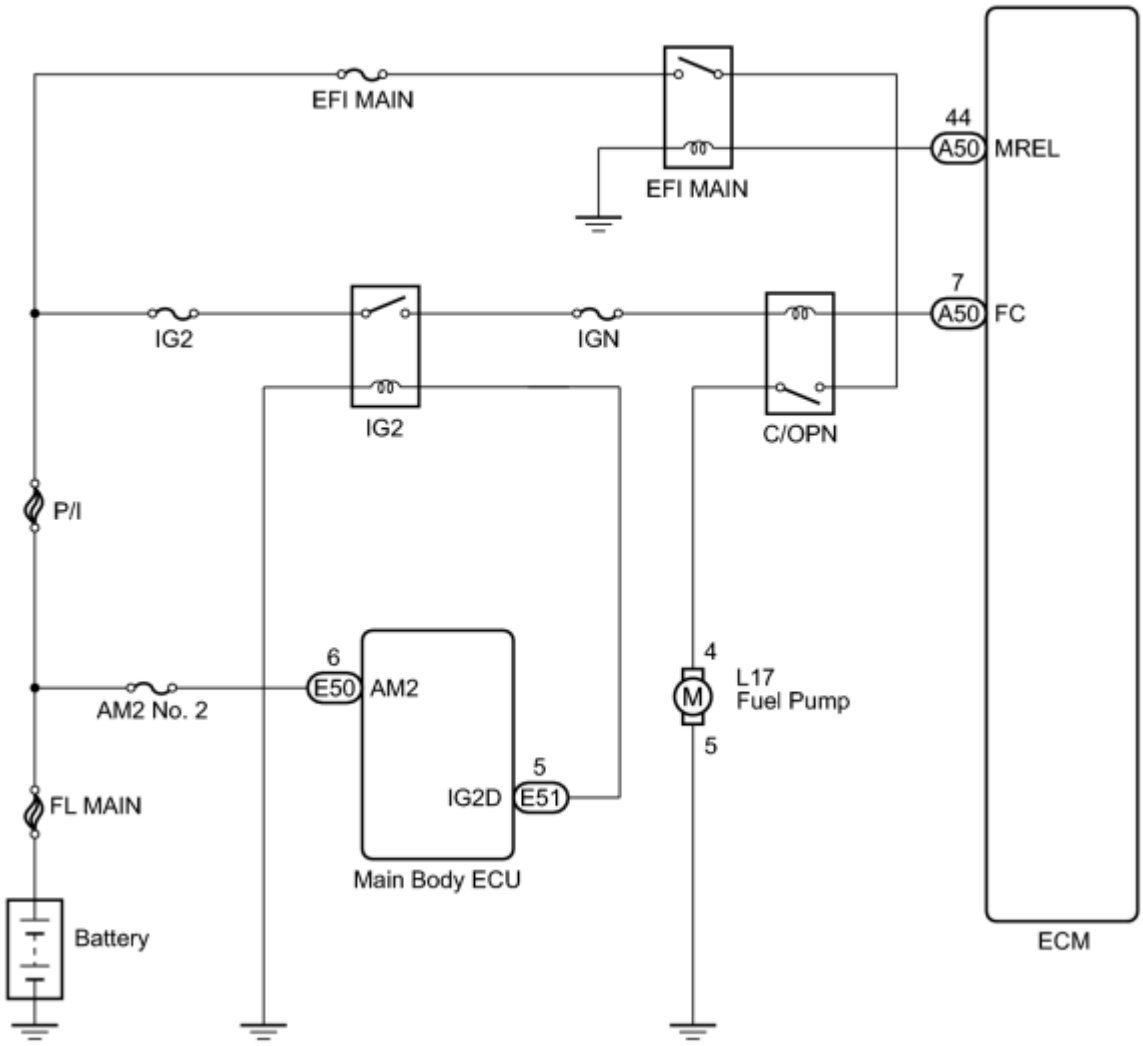

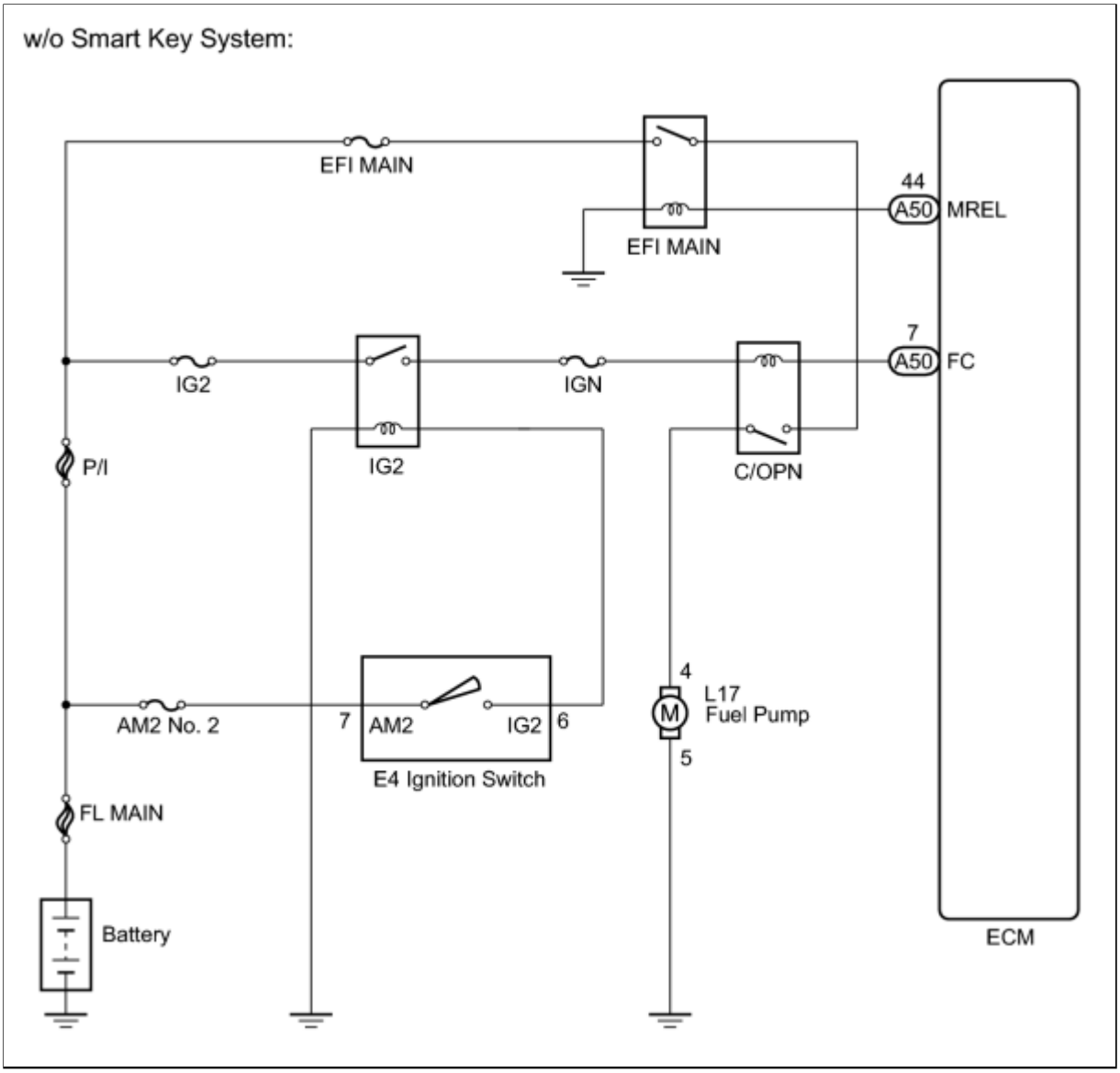

INSPECTION PROCEDURE

PROCEDURE

1.	**PERFORM ACTIVE TEST USING TECHSTREAM (OPERATE C/OPN RELAY)**

(a) Connect the Techstream to the DLC3.

(b) Turn the ignition to switch to ON.

(c) Turn the Techstream on.

(d) Enter the following menus: Powertrain / Engine and ECT / Active Test / Control the Fuel Pump / Speed.

(e) Check whether the fuel pump operation sound occurs when performing the Active Test on

the tester.

OK:

Fuel pump operating sound occurs.

NG ▶ **INSPECT FUSE (IGN FUSE)**

OK ▶ **PROCEED TO NEXT CIRCUIT INSPECTION SHOWN IN PROBLEM SYMPTOMS TABLE**

2.	**INSPECT FUSE (IGN FUSE)**

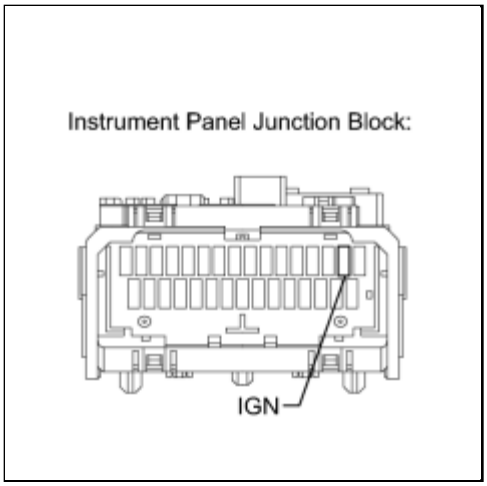

(a) Remove the IGN fuse from the instrument panel junction block.

(b) Measure the resistance according to the value(s) in the table below.

Standard Resistance:

TESTER CONNECTION	CONDITION	SPECIFIED CONDITION
IGN fuse	Always	Below 1 Ω

(c) Reinstall the IGN fuse.

NG ▶ **CHECK FOR SHORTS IN ALL HARNESSES AND CONNECTORS CONNECTED TO FUSE AND REPLACE FUSE**

OK ▼

3.	**INSPECT INSTRUMENT PANEL JUNCTION BLOCK (C/OPN RELAY)**

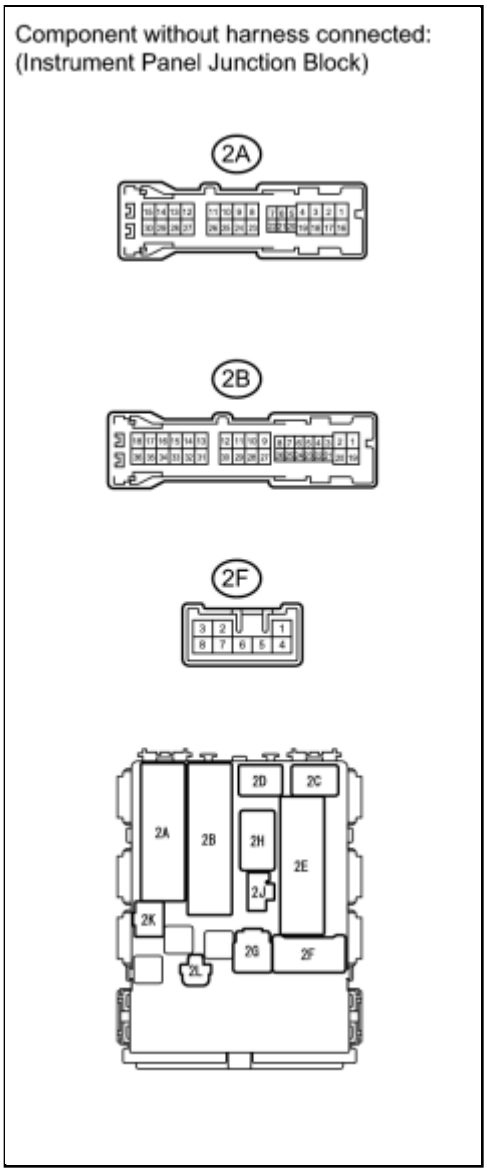

(a) Disconnect the instrument panel junction block connector.

(b) Measure the resistance according to the value(s) in the table below.

Standard Resistance:

TESTER CONNECTION	CONDITION	SPECIFIED CONDITION
2A-8 - 2B-11	Always	10 kΩ or higher
	Apply battery voltage to terminals 2B-10 and 2F-4	Below 1 Ω

(c) Reconnect the instrument panel junction block connector.

NG ▶ **REPLACE INSTRUMENT PANEL JUNCTION BLOCK (C/OPN RELAY)**

OK

4.	CHECK HARNESS AND CONNECTOR (C/OPN RELAY - ECM)

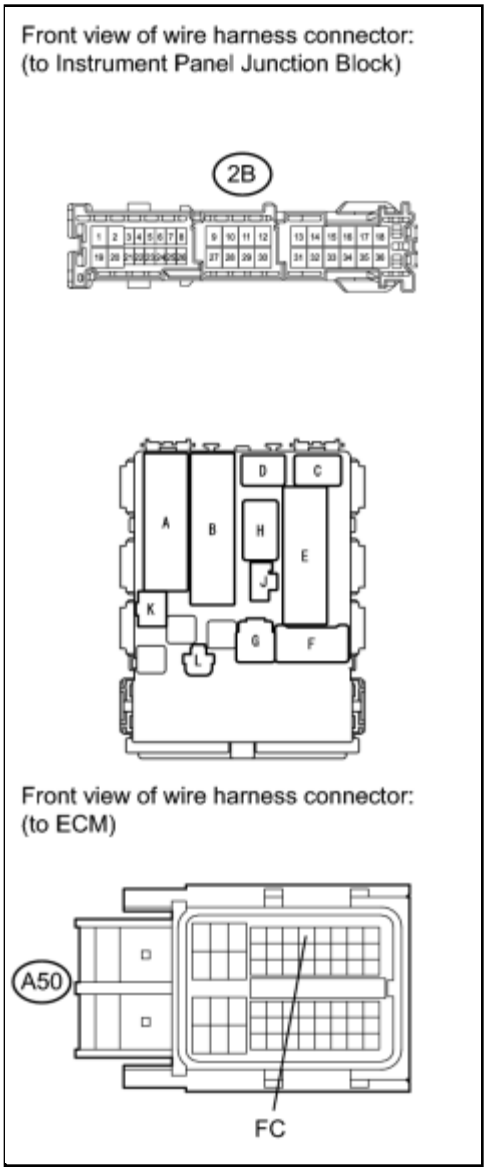

(a) Disconnect the ECM connector.

(b) Disconnect the instrument panel junction block connector.

(c) Measure the resistance according to the value(s) in the table below.

Standard Resistance (Check for Open):

TESTER CONNECTION	CONDITION	SPECIFIED CONDITION

TESTER CONNECTION	CONDITION	SPECIFIED CONDITION
2B-10 - A50-7 (FC)	Always	Below 1 Ω

Standard Resistance (Check for Short):

TESTER CONNECTION	CONDITION	SPECIFIED CONDITION
2B-10 or A50-7 (FC) - Body ground	Always	10 kΩ or higher

(d) Reconnect the ECM connector.

(e) Reconnect the instrument panel junction block connector.

NG ▶ **REPAIR OR REPLACE HARNESS OR CONNECTOR (C/OPN RELAY - ECM)**

OK ▼

5.	**CHECK HARNESS AND CONNECTOR (C/OPN RELAY - INTEGRATION RELAY (EFI MAIN RELAY))**

(a) Remove the integration relay from engine room junction block.

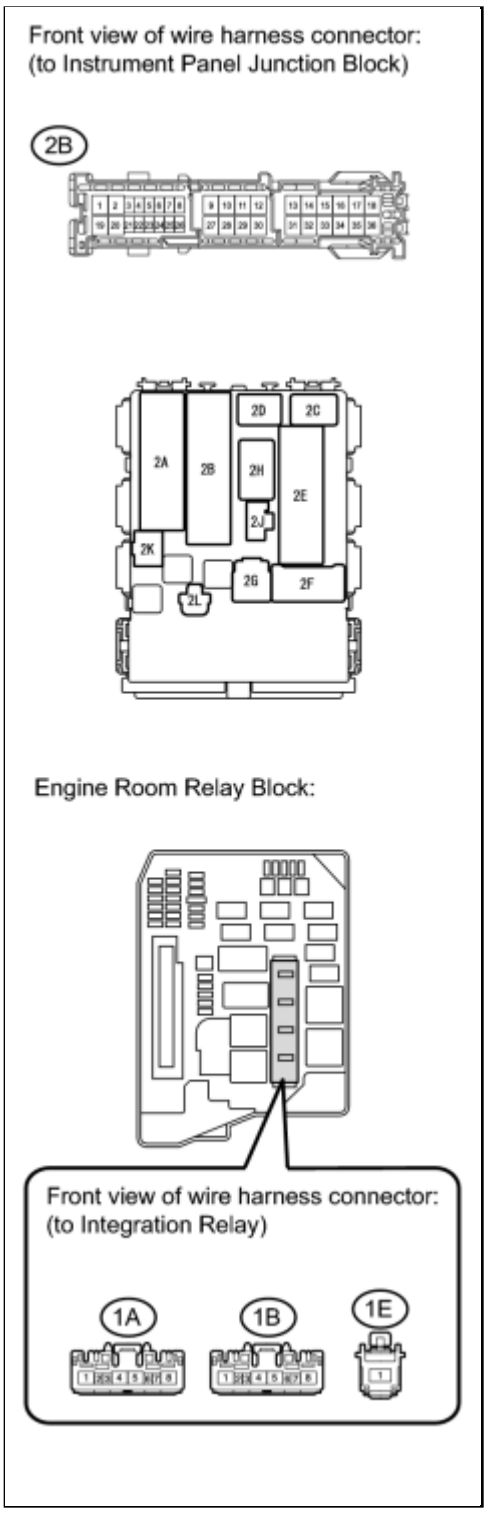

(b) Disconnect the integration relay connector.

(c) Disconnect the instrument panel junction block connector.

(d) Measure the resistance according to the value(s) in the table below.

Standard Resistance (Check for Open):

TESTER CONNECTION	CONDITION	SPECIFIED CONDITION

TESTER CONNECTION	CONDITION	SPECIFIED CONDITION
2B-11 - 1B-4	Always	Below 1 Ω

Standard Resistance (Check for Short):

TESTER CONNECTION	CONDITION	SPECIFIED CONDITION
2B-11 or 1B-4 - Body ground	Always	10 kΩ or higher

(e) Reconnect the instrument panel junction block connector.

(f) Reconnect the integration relay connector.

(g) Reinstall the integration relay.

NG ▶ **REPAIR OR REPLACE HARNESS OR CONNECTOR (C/OPN RELAY - INTEGRATION RELAY (EFI MAIN RELAY))**

OK ▼

6.	**CHECK HARNESS AND CONNECTOR (C/OPN RELAY - FUEL PUMP)**

(a) Disconnect the fuel pump connector.

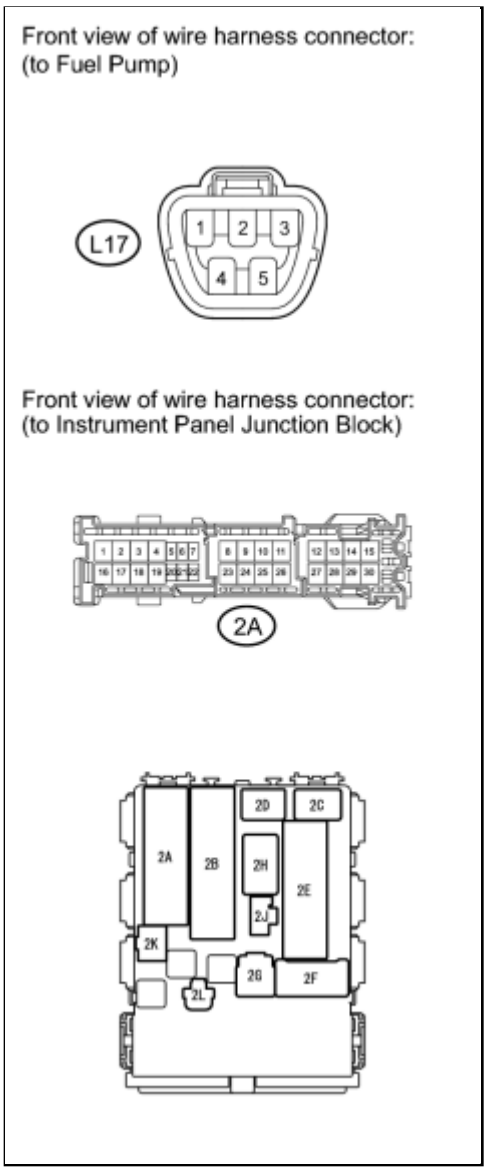

(b) Disconnect the instrument panel junction block connector.

(c) Measure the resistance according to the value(s) in the table below.

Standard Resistance (Check for Open):

TESTER CONNECTION	CONDITION	SPECIFIED CONDITION
2A-8 - L17-4	Always	Below 1 Ω

Standard Resistance (Check for Short):

TESTER CONNECTION	CONDITION	SPECIFIED CONDITION
2A-8 or L17-4 - Body ground	Always	10 kΩ or higher

(d) Reconnect the fuel pump connector.

(e) Reconnect the instrument panel junction block connector.

NG ▶ **REPAIR OR REPLACE HARNESS OR CONNECTOR (C/OPN RELAY - FUEL PUMP)**

OK ▼

7.	**CHECK HARNESS AND CONNECTOR (FUEL PUMP - BODY GROUND)**

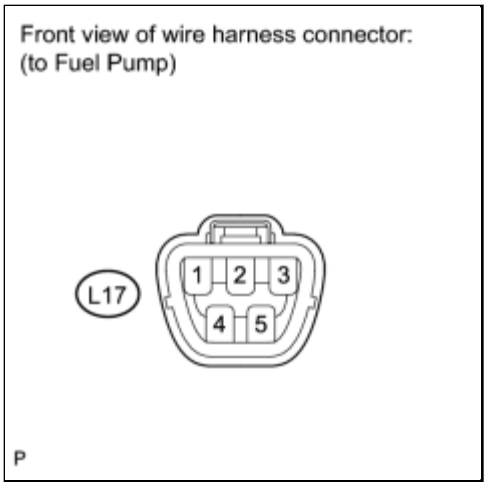

(a) Disconnect the fuel pump connector.

(b) Measure the resistance according to the value(s) in the table below.

Standard Resistance:

TESTER CONNECTION	CONDITION	SPECIFIED CONDITION
L17-5 - Body ground	Always	Below 1 Ω

(c) Reconnect the fuel pump connector.

NG ▶ **REPAIR OR REPLACE HARNESS OR CONNECTOR (FUEL PUMP - BODY GROUND)**

OK ▼

8.	**INSPECT FUEL PUMP ASSEMBLY**

(a) Inspect the fuel pump assembly INFO .

NG ▶ **REPLACE FUEL PUMP ASSEMBLY**

OK ▼

9.	**CHECK ECM POWER SOURCE CIRCUIT**

(a) Check the ECM power source circuit INFO .

NG ▶ **REPAIR OR REPLACE ECM POWER SOURCE CIRCUIT**

OK ▶ **REPLACE ECM**

Last Modified: 3-10-2010	6.4 J	**From:** 200901
Model Year: 2010	**Model:** Corolla	**Doc ID:** RM000001D6V08GX
Title: 2ZR-FE ENGINE CONTROL: SFI SYSTEM: VC Output Circuit (2010 Corolla)		

VC Output Circuit

DESCRIPTION

The ECM constantly generates 5 V power from the battery voltage supplied to the +B (BATT) terminal to operate the microprocessor. The ECM also provides this power to the sensors through the VC output circuit.

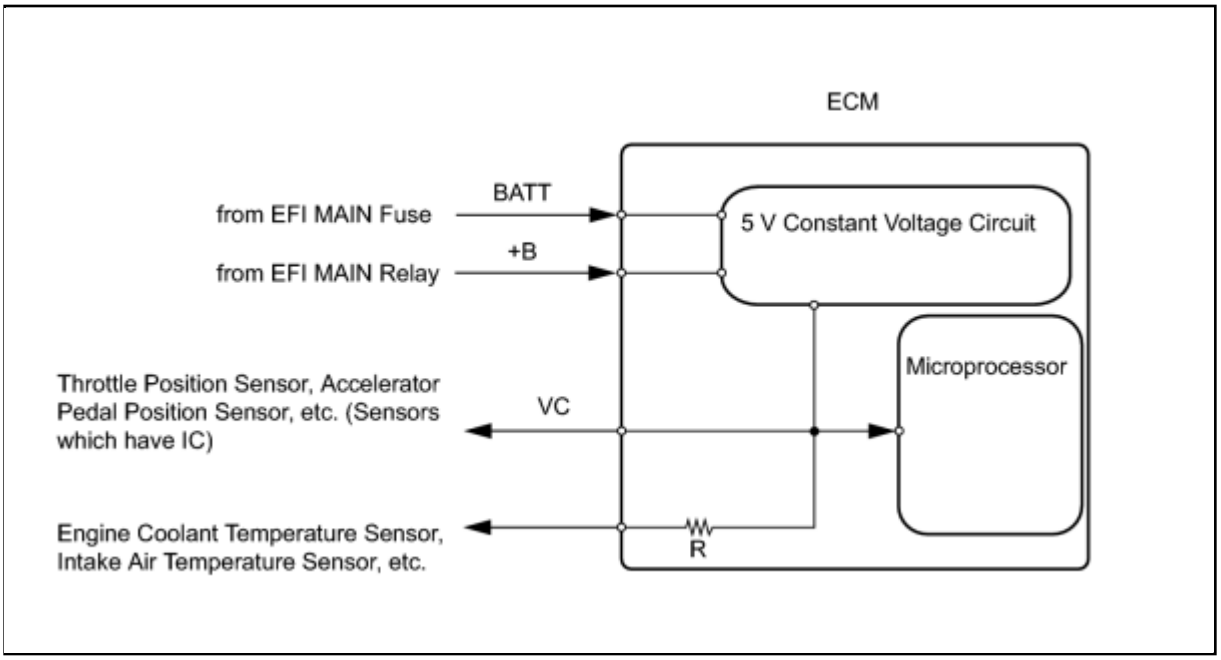

When the VC circuit is short-circuited, the microprocessor in the ECM and sensors that are supplied with power through the VC circuit are inactivated because the power is not supplied from the VC circuit. Under this condition, the system does not start up and the MIL does not illuminate even if the system malfunctions.

HINT:

Under normal conditions, the MIL is illuminated for several seconds when the ignition switch is first turned ON. The MIL goes off when the engine is started.

WIRING DIAGRAM

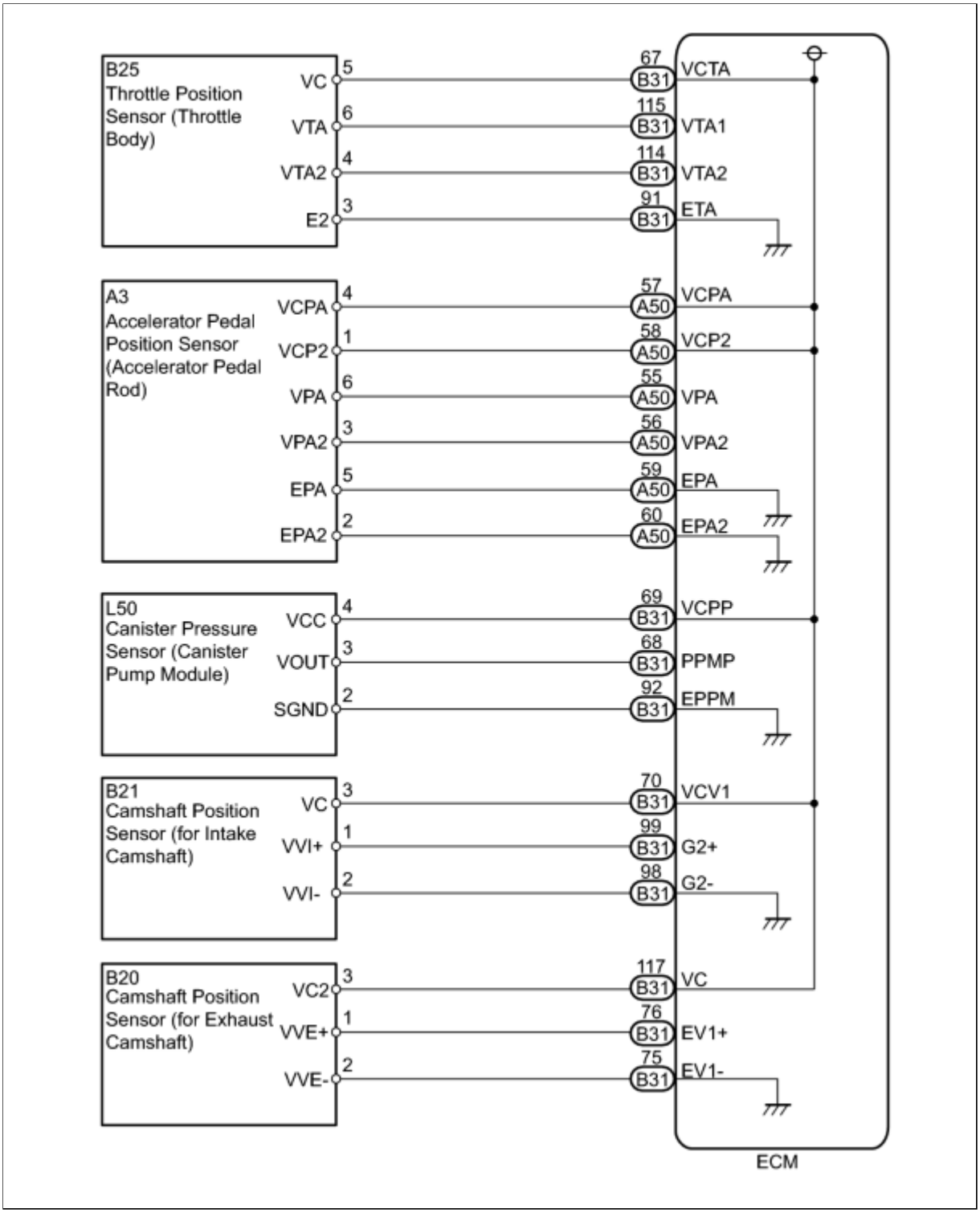

INSPECTION PROCEDURE

PROCEDURE

1.	**CHECK MIL**

(a) Check that the Malfunction Indicator Lamp (MIL) lights up when turning the ignition switch to ON.

OK:

MIL lights up

NG ▶ **CHECK COMMUNICATION BETWEEN TECHSTREAM AND ECM**

OK ▶ **SYSTEM OK**

2.	CHECK COMMUNICATION BETWEEN TECHSTREAM AND ECM

(a) Connect the Techstream to the DLC3.

(b) Turn the ignition switch to ON.

(c) Turn the Techstream on.

(d) Check the communication between the Techstream and ECM.

Result:

RESULT	PROCEED TO
Communication is possible	A
Communication is not possible	B

A ▶ **GO TO MIL CIRCUIT**

B ▼

3.	CHECK MIL (THROTTLE POSITION SENSOR)

(a) Disconnect the throttle body connector.

(b) Turn the ignition switch to ON.

(c) Check the MIL.

Result:

RESULT	PROCEED TO
MIL illuminates	A
MIL does not illuminate	B

(d) Reconnect the throttle body connector.

A ▶ **REPLACE THROTTLE BODY**

B ▼

4.	**CHECK MIL (ACCELERATOR PEDAL POSITION SENSOR)**

(a) Disconnect the accelerator pedal position sensor connector.

(b) Turn the ignition switch to ON.

(c) Check the MIL.

Result:

RESULT	PROCEED TO
MIL illuminates	A
MIL does not illuminate	B

(d) Reconnect the accelerator pedal position sensor connector.

A ▶ **REPLACE ACCELERATOR PEDAL ROD ASSEMBLY**

B ▼

5.	**CHECK MIL (CANISTER PUMP MODULE)**

(a) Disconnect the canister pump module connector.

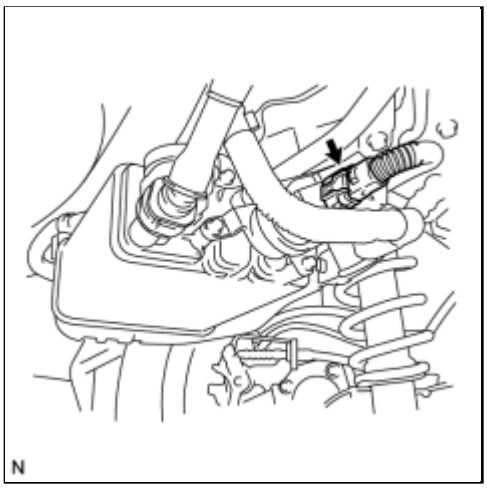

(b) Turn the ignition switch to ON.

(c) Check the MIL.

Result:

RESULT	PROCEED TO
MIL illuminates	A
MIL does not illuminate	B

(d) Reconnect the canister pump module connector.

A ▶ **REPLACE CANISTER**

B ▼

6.	**CHECK MIL (CAMSHAFT POSITION SENSOR FOR INTAKE CAMSHAFT)**

(a) Disconnect the camshaft position sensor (for intake camshaft) connector.

(b) Turn the ignition switch to ON.

(c) Check the MIL.

Result:

RESULT	PROCEED TO
MIL illuminates	A

RESULT	PROCEED TO
MIL does not illuminate	B

(d) Reconnect the camshaft position sensor (for intake camshaft).

A ▶ **REPLACE CAMSHAFT POSITION SENSOR (FOR INTAKE CAMSHAFT)**

B ▼

7.	CHECK MIL (CAMSHAFT POSITION SENSOR FOR EXHAUST CAMSHAFT)

(a) Disconnect the camshaft position sensor (for exhaust camshaft) connector.

(b) Turn the ignition switch to ON.

(c) Check the MIL.

Result:

RESULT	PROCEED TO
MIL illuminates	A
MIL does not illuminate	B

(d) Reconnect the camshaft position sensor (for exhaust camshaft).

A ▶ **REPLACE CAMSHAFT POSITION SENSOR (FOR EXHAUST CAMSHAFT)**

B ▼

8.	CHECK HARNESS AND CONNECTOR (VC CIRCUIT)

(a) Disconnect the throttle body connector.

(b) Disconnect the accelerator pedal position sensor connector.

(c) Disconnect the canister pump module connector.

(d) Disconnect the camshaft position sensor (for intake camshaft) connector.

(e) Disconnect the camshaft position sensor (for exhaust camshaft) connector.

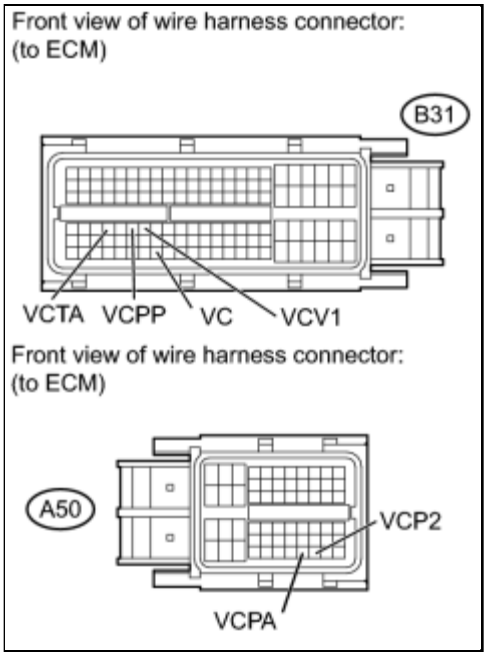

(f) Disconnect the ECM connectors.

(g) Measure the resistance.

Standard Resistance (Check for Short):

TESTER CONNECTION	CONDITION	SPECIFIED CONDITION
B31-67 (VCTA) - Body ground	Always	10 kΩ or higher
A50-57 (VCPA) - Body ground	Always	10 kΩ or higher
A50-58 (VCP2) - Body ground	Always	10 kΩ or higher
B31-69 (VCPP) - Body ground	Always	10 kΩ or higher
B31-70 (VCV1) - Body ground	Always	10 kΩ or higher
B31-117 (VC) - Body ground	Always	10 kΩ or higher

(h) Reconnect the throttle body connector.

(i) Reconnect the accelerator pedal position sensor connector.

(j) Reconnect the canister pump module connector.

(k) Reconnect the camshaft position sensor (for intake camshaft) connector.

(l) Reconnect the camshaft position sensor (for exhaust camshaft) connector.

(m) Reconnect the ECM connectors.

NG ▶ REPAIR OR REPLACE HARNESS OR CONNECTOR

OK ▶ REPLACE ECM

Last Modified: 3-10-2010	6.4 J	**From:** 200901
Model Year: 2010	**Model:** Corolla	**Doc ID:** RM000000ZRM049X
Title: 2ZR-FE ENGINE CONTROL: SFI SYSTEM: Fuel Injector Circuit (2010 Corolla)		

Fuel Injector Circuit

DESCRIPTION

The fuel injectors are located on the intake manifold. They inject fuel into the cylinders based on the signals from the ECM.

WIRING DIAGRAM

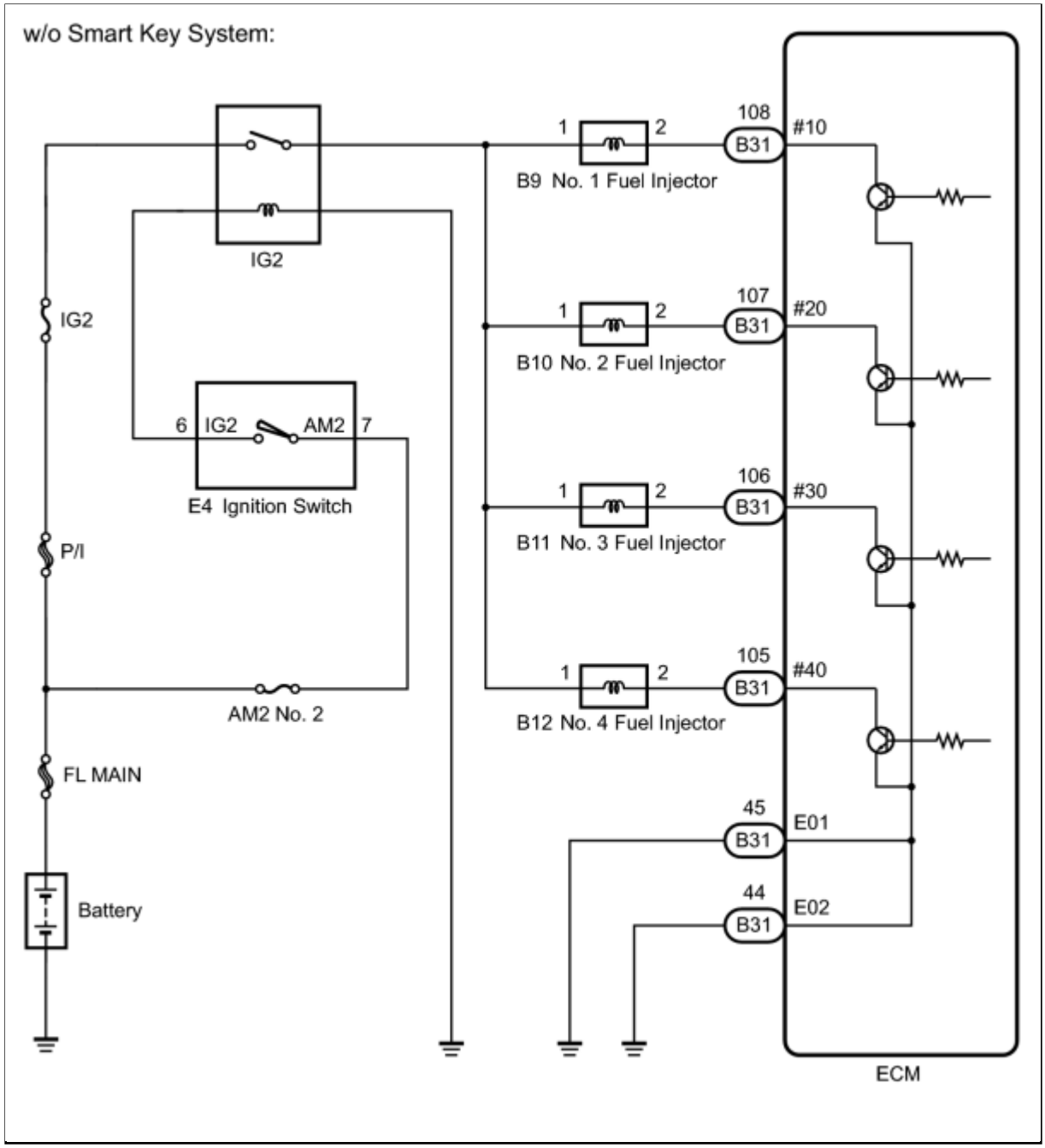
w/o Smart Key System:
IG2
IG2
6
IG2
AM2
7
E4 Ignition Switch
P/I
AM2 No. 2
FL MAIN
Battery
1
2
B9 No. 1 Fuel Injector
B10 No. 2 Fuel Injector
B11 No. 3 Fuel Injector
B12 No. 4 Fuel Injector
108
107
106
105
B31
#10
#20
#30
#40
45
44
E01
E02
ECM

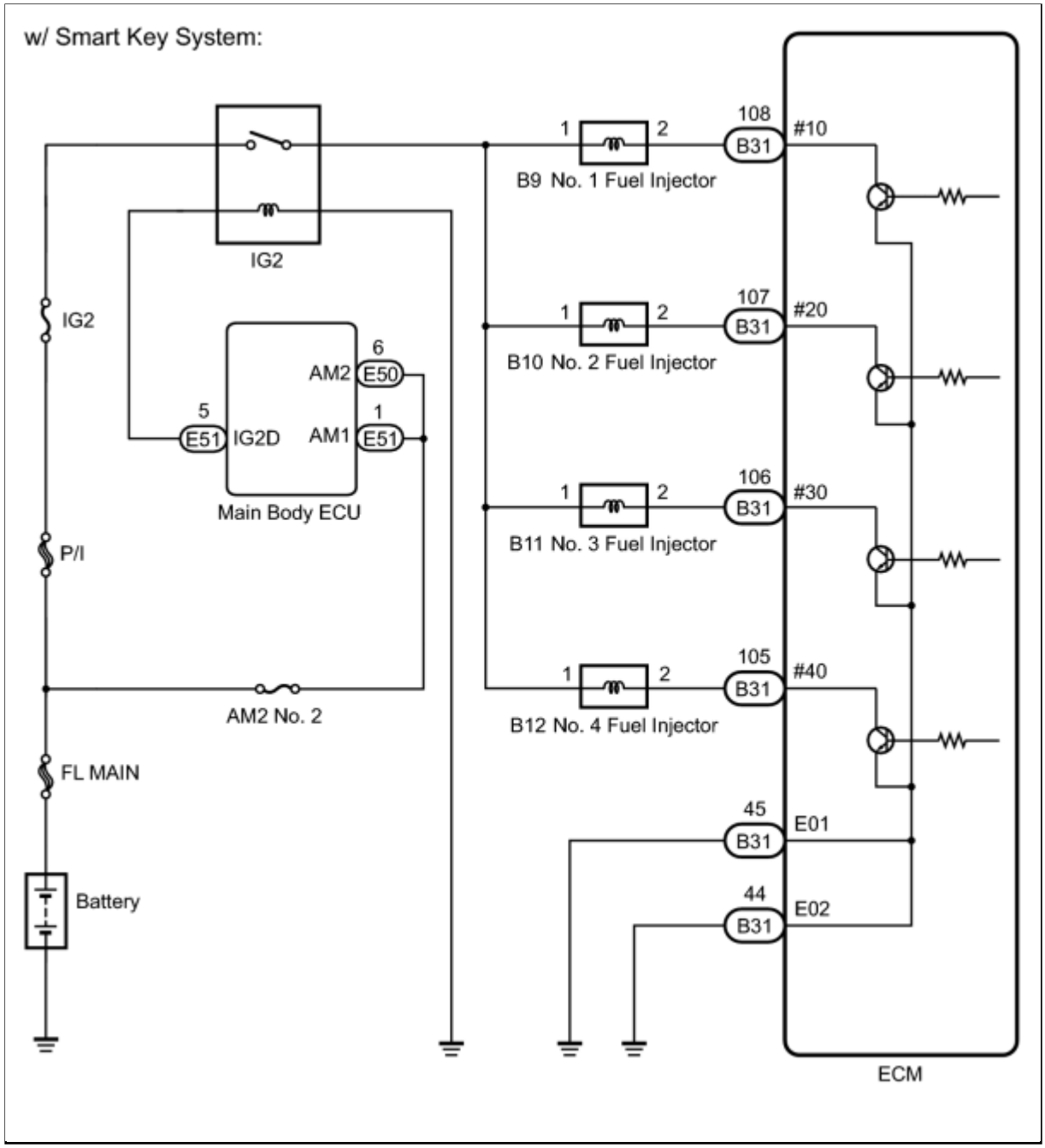

INSPECTION PROCEDURE

PROCEDURE

1.	**CHECK FUEL INJECTOR ASSEMBLY (POWER SOURCE)**

(a) Disconnect the fuel injector assembly connectors.

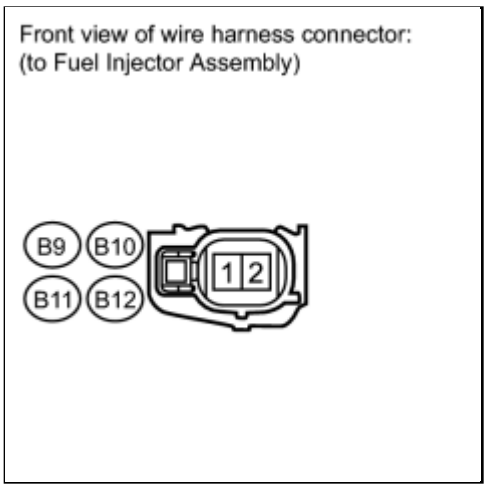

(b) Turn the ignition switch to ON.

(c) Measure the voltage according to the value(s) in the table below.

Standard Voltage:

TESTER CONNECTION	SWITCH CONDITION	SPECIFIED CONDITION
B9-1 - Body ground	Ignition switch ON	11 to 14 V
B10-1 - Body ground	Ignition switch ON	11 to 14 V
B11-1 - Body ground	Ignition switch ON	11 to 14 V
B12-1 - Body ground	Ignition switch ON	11 to 14 V

(d) Turn the ignition switch off.

(e) Reconnect the fuel injector assembly connectors.

NG ▶ **CHECK HARNESS AND CONNECTOR (INTEGRATION RELAY (IG2 RELAY) - FUEL INJECTOR ASSEMBLY)**

OK ▼

2.	**INSPECT FUEL INJECTOR ASSEMBLY**

(a) Inspect the fuel injector assembly INFO.

NG ▶ **REPLACE FUEL INJECTOR ASSEMBLY**

OK

3.	CHECK HARNESS AND CONNECTOR (FUEL INJECTOR ASSEMBLY - ECM)

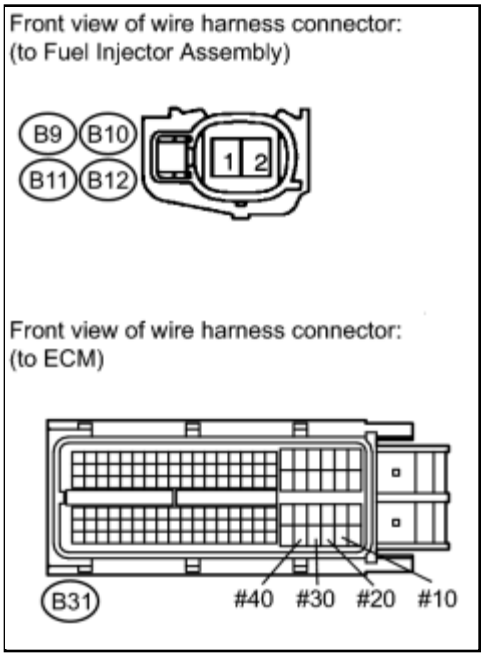

(a) Disconnect the fuel injector assembly connectors.

(b) Disconnect the ECM connector.

(c) Measure the resistance according to the value(s) in the table below.

Standard Resistance (Check for Open):

TESTER CONNECTION	CONDITION	SPECIFIED CONDITION
B9-2 - B31-108 (#10)	Always	Below 1 Ω
B10-2 - B31-107 (#20)	Always	Below 1 Ω
B11-2 - B31-106 (#30)	Always	Below 1 Ω
B12-2 - B31-105 (#40)	Always	Below 1 Ω

Standard Resistance (Check for Short):

TESTER CONNECTION	CONDITION	SPECIFIED CONDITION
B9-2 or B31-108 (#10) - Body ground	Always	10 kΩ or higher
B10-2 or B31-107 (#20) - Body ground	Always	10 kΩ or higher

TESTER CONNECTION	CONDITION	SPECIFIED CONDITION
B11-2 or B31-106 (#30) - Body ground	Always	10 kΩ or higher
B12-2 or B31-105 (#40) - Body ground	Always	10 kΩ or higher

(d) Reconnect the fuel injector assembly connectors.

(e) Reconnect the ECM connector.

NG ▶ **REPAIR OR REPLACE HARNESS OR CONNECTOR (FUEL INJECTOR ASSEMBLY - ECM)**

OK ▶ **PROCEED TO NEXT INSPECTION PROCEDURE SHOWN IN PROBLEM SYMPTOMS TABLE**

4.	**CHECK HARNESS AND CONNECTOR (INTEGRATION RELAY (IG2 RELAY) - FUEL INJECTOR ASSEMBLY)**

(a) Disconnect the fuel injector assembly connectors.

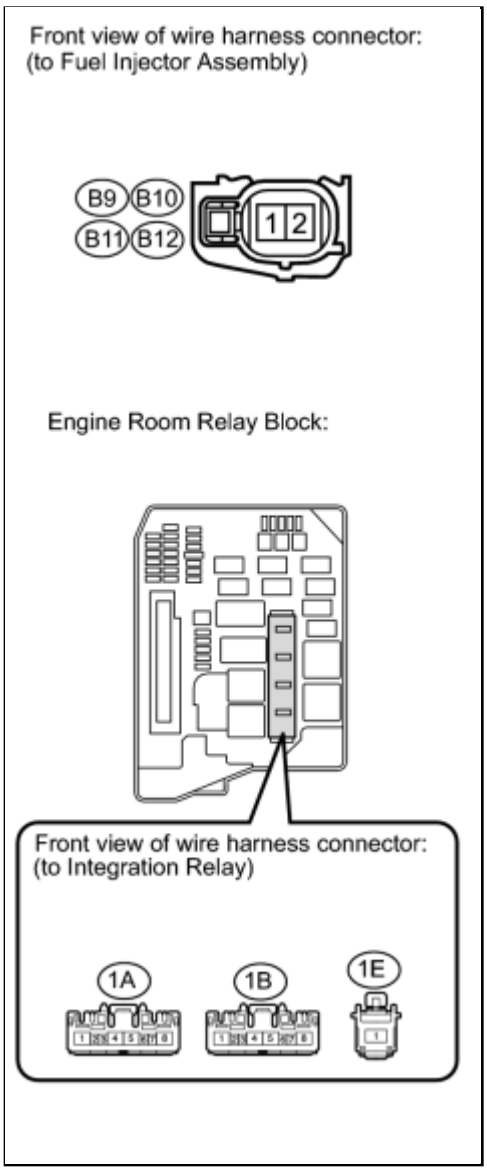

(b) Remove the integration relay from the engine room relay block.

(c) Disconnect the integration relay connector.

(d) Measure the resistance according to the value(s) in the table below.

Standard Resistance (Check for Open):

TESTER CONNECTION	CONDITION	SPECIFIED CONDITION
B9-1 - 1A-4	Always	Below 1 Ω
B10-1 - 1A-4	Always	Below 1 Ω
B11-1 - 1A-4	Always	Below 1 Ω
B12-1 - 1A-4	Always	Below 1 Ω

Standard Resistance (Check for Short):

TESTER CONNECTION	CONDITION	SPECIFIED CONDITION
B9-1 or 1A-4 - Body ground	Always	10 kΩ or higher
B10-1 or 1A-4 - Body ground	Always	10 kΩ or higher
B11-1 or 1A-4 - Body ground	Always	10 kΩ or higher
B12-1 or 1A-4) - Body ground	Always	10 kΩ or higher

(e) Reconnect the fuel injector assembly connectors.

(f) Reconnect the integration relay connector.

(g) Reinstall the integration relay.

NG ▶ **REPAIR OR REPLACE HARNESS OR CONNECTOR (INTEGRATION RELAY (IG2 RELAY) - FUEL INJECTOR ASSEMBLY)**

OK ▶ **CHECK ECM POWER SOURCE CIRCUIT**

Last Modified: 3-10-2010	6.4 J	**From:** 200901
Model Year: 2010	**Model:** Corolla	**Doc ID:** RM000000WZ10B3X
Title: 2ZR-FE ENGINE CONTROL: SFI SYSTEM: MIL Circuit (2010 Corolla)		

MIL Circuit

DESCRIPTION

The MIL (Malfunction Indicator Lamp) is used to indicate vehicle malfunction detected by the ECM. When the ignition switch is turned to ON, power is supplied to the MIL circuit, and the ECM provides the circuit ground which illuminates the MIL.

The MIL operation can be checked visually: When the ignition switch is first turned to ON, the MIL should be illuminated and should then turn off. If the MIL remains illuminated or is not illuminated, conduct the following troubleshooting procedure using the Techstream.

WIRING DIAGRAM

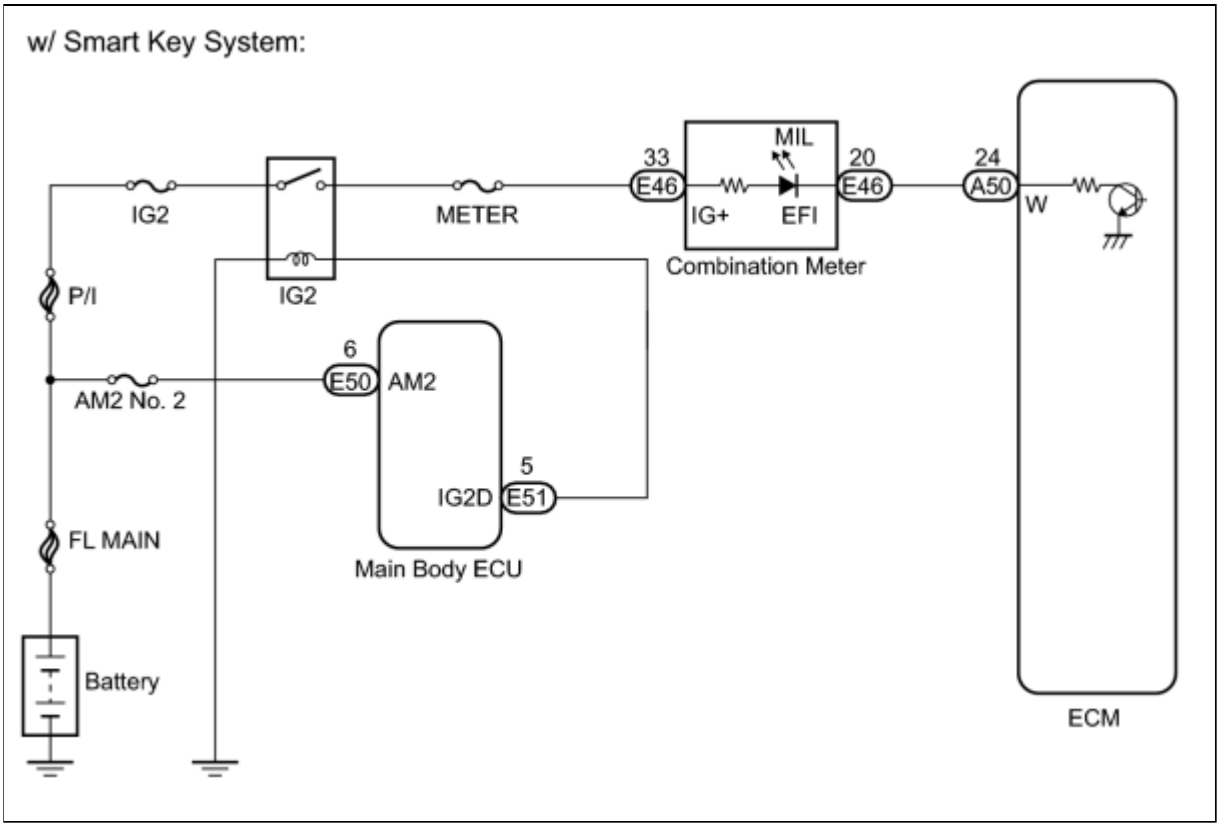

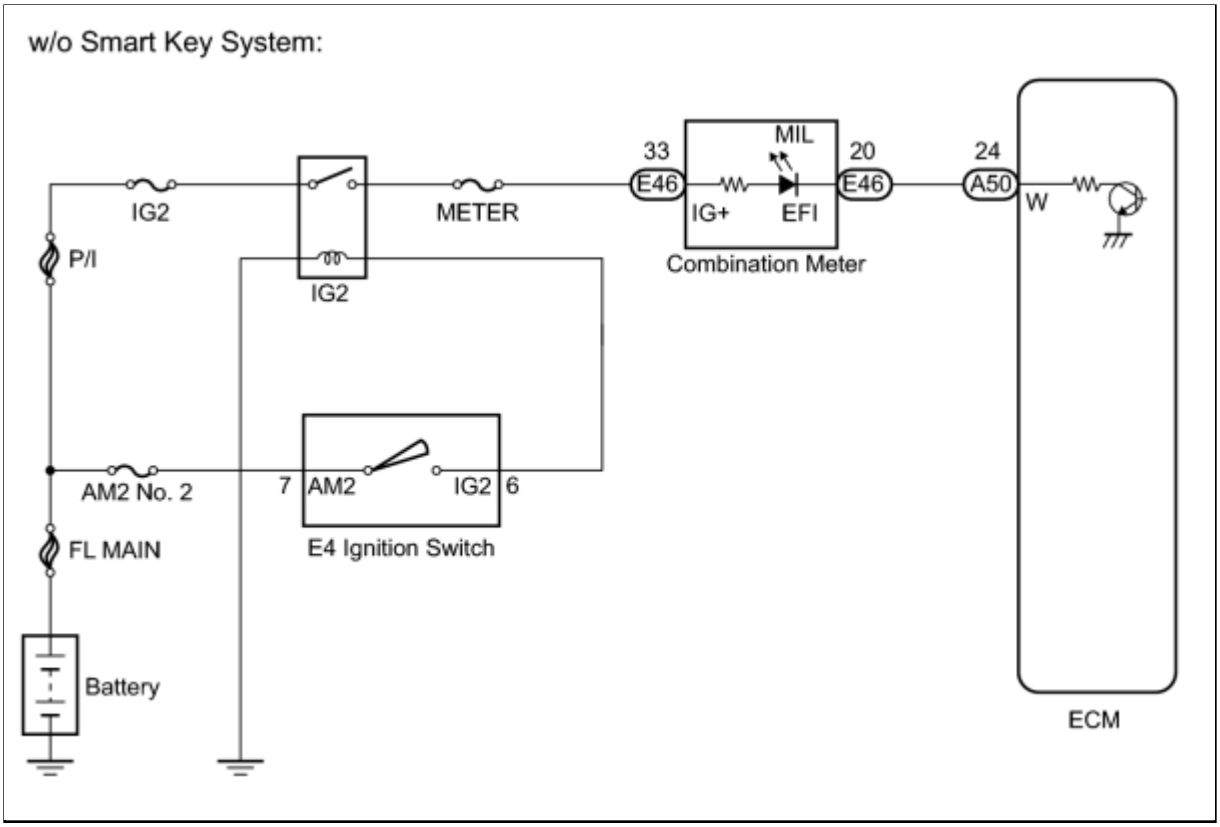

INSPECTION PROCEDURE

PROCEDURE

1.	**CHECK THAT MIL IS ILLUMINATED**

(a) Turn the ignition switch to ON.

(b) Check the illumination of the MIL.

Result:

CONDITION	PROCEED TO
MIL remains illuminated (Even after ignition switch to ON and several seconds have passed, MIL still remains illuminated)	A
MIL remains off (Does not illuminate at all)	B
MIL illuminates for several seconds, but turns off after engine is started	C

C ▶ **SYSTEM OK**

B ▶ **CHECK THAT ENGINE STARTS**

A

2.	CHECK WHETHER MIL TURNS OFF

(a) Connect the Techstream to the DLC3.

(b) Turn the ignition switch to ON.

(c) Turn the Techstream on.

(d) Enter the following menus: Powertrain / Engine and ECT / Trouble Codes.

(e) Check if any DTCs have been stored. Note down any DTCs.

(f) Clear DTCs INFO .

(g) Check if the MIL goes off.

OK:

MIL goes off.

NG ▶ CHECK HARNESS AND CONNECTOR (CHECK FOR SHORT IN WIRE HARNESS)

OK ▶ REPAIR CIRCUITS INDICATED BY OUTPUT DTCS

3.	CHECK HARNESS AND CONNECTOR (CHECK FOR SHORT IN WIRE HARNESS)

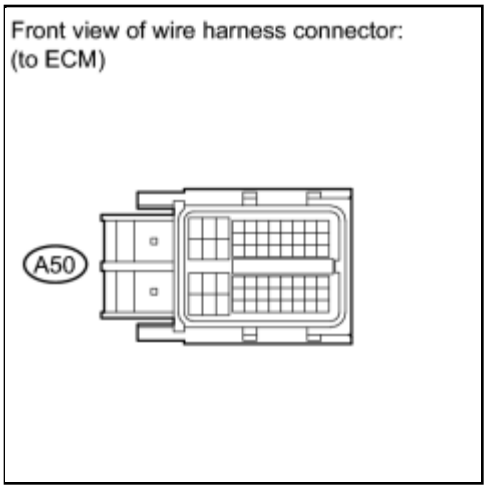

(a) Disconnect the ECM connector.

(b) Turn the ignition switch to ON.

(c) Check that the MIL is not illuminated.

OK:

MIL is not illuminated.

(d) Reconnect the ECM connector.

NG ▶ **CHECK HARNESS AND CONNECTOR (COMBINATION METER - ECM)**

OK ▶ **REPLACE ECM**

4.	CHECK HARNESS AND CONNECTOR (COMBINATION METER - ECM)

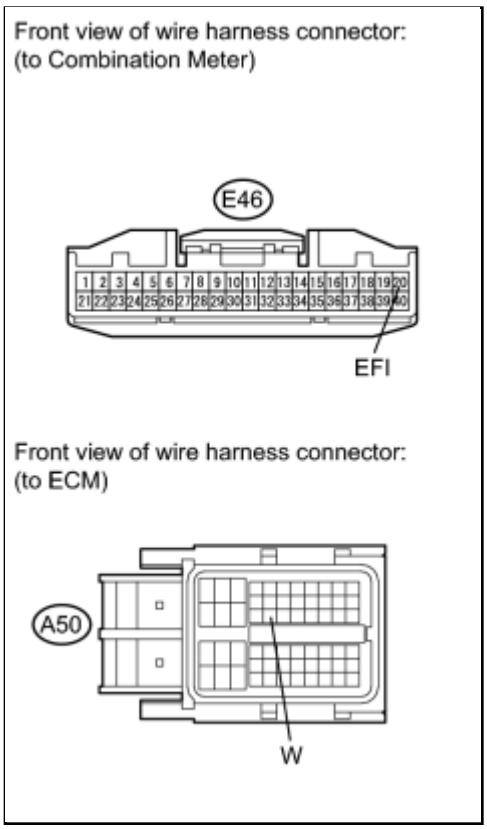

(a) Disconnect the combination meter connector.

(b) Disconnect the ECM connector.

(c) Measure the resistance according to the value(s) in the table below.

Standard Resistance (Check for Short):

TESTER CONNECTION	CONDITION	SPECIFIED CONDITION
E46-20 (EFI) or A50-24 (W) - Body ground	Always	10 kΩ or higher

(d) Reconnect the combination meter connector.

(e) Reconnect the ECM connector.

NG ▶ **REPAIR OR REPLACE HARNESS OR CONNECTOR (COMBINATION METER - ECM)**

OK ▶ **REPLACE COMBINATION METER**

5.	**CHECK THAT ENGINE STARTS**

(a) Turn the ignition switch to ON.

(b) Start the engine.

Result:

RESULT	PROCEED TO
Engine starts	A
Engine does not start*	B

HINT:

***: The Techstream cannot communicate with the ECM.**

B ▶ **GO TO VC OUTPUT CIRCUIT**

A ▼

6.	**CHECK COMBINATION METER ASSEMBLY (COMBINATION METER - BODY GROUND)**

(a) Disconnect the ECM connector.

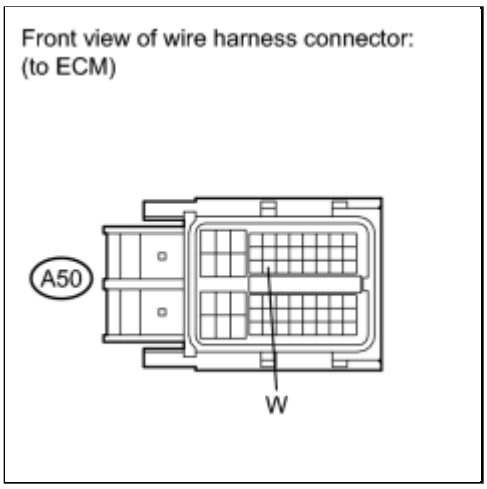

(b) Turn the ignition switch to ON.

(c) Measure the voltage according to the value(s) in the table below.

Standard Voltage:

TESTER CONNECTION	SWITCH CONDITION	SPECIFIED CONDITION
A50-24 (W) - Body ground	Ignition switch ON	11 to 14 V

NG ▶ **CHECK HARNESS AND CONNECTOR (COMBINATION METER - ECM)**

OK ▶ **REPLACE ECM**

7.	**CHECK HARNESS AND CONNECTOR (COMBINATION METER - ECM)**

(a) Disconnect the combination meter connector.

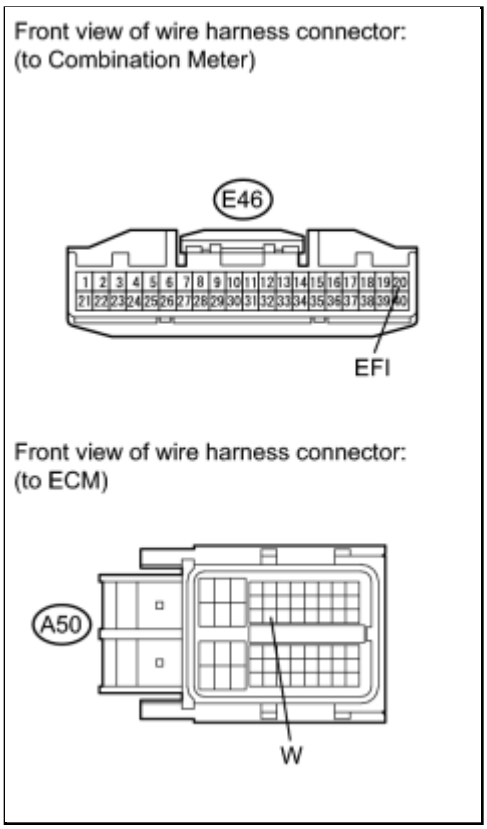

(b) Disconnect the ECM connector.

(c) Measure the resistance according to the value(s) in the table below.

Standard Resistance (Check for Open):

TESTER CONNECTION	CONDITION	SPECIFIED CONDITION
E46-20 (EFI) - A50-24 (W)	Always	Below 1 Ω

(d) Reconnect the ECM connector.

(e) Reconnect the combination meter connector.

NG ▶ **REPAIR OR REPLACE HARNESS OR CONNECTOR (COMBINATION METER - ECM)**

OK ▶ **REPLACE COMBINATION METER**

Last Modified: 3-10-2010	6.4 K	**From:** 200901
Model Year: 2010	**Model:** Corolla	**Doc ID:** RM0000017UC011X
Title: 2AZ-FE ENGINE CONTROL: THROTTLE BODY: COMPONENTS (2010 Corolla)		

COMPONENTS

ILLUSTRATION

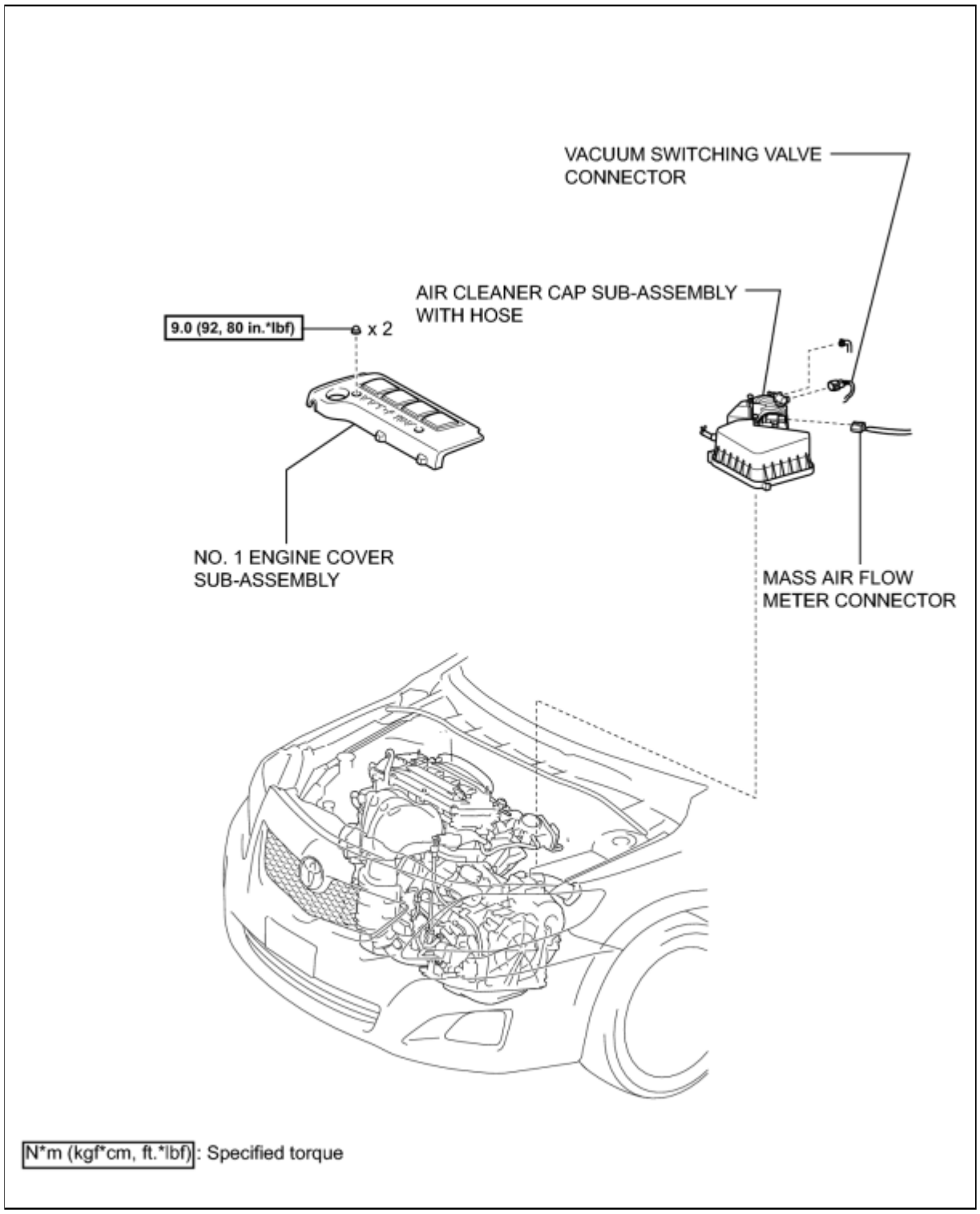

ILLUSTRATION

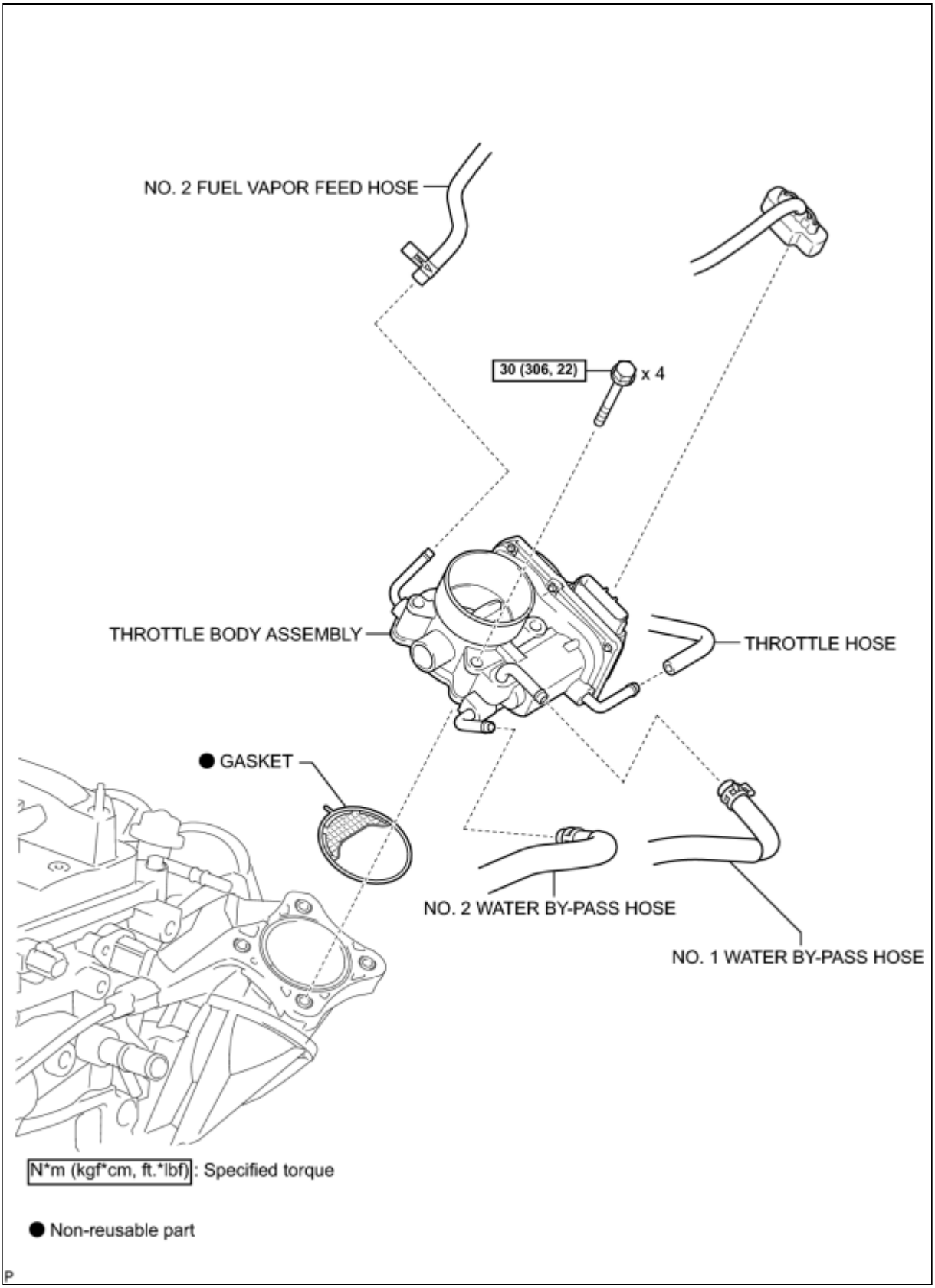

Last Modified: 3-10-2010	6.4 A	**From:** 200901
Model Year: 2010	**Model:** Corolla	**Doc ID:** RM0000017UD022X
Title: 2AZ-FE ENGINE CONTROL: THROTTLE BODY: REMOVAL (2010 Corolla)		

REMOVAL

1. DRAIN ENGINE COOLANT INFO

2. REMOVE NO. 1 ENGINE COVER SUB-ASSEMBLY INFO

3. REMOVE AIR CLEANER CAP SUB-ASSEMBLY WITH HOSE

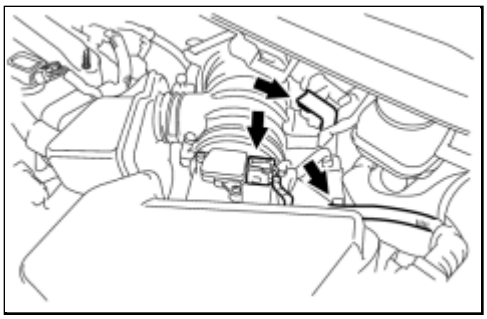

(a) Disconnect the mass air flow meter connector.

(b) Separate the 2 wire harness clamps.

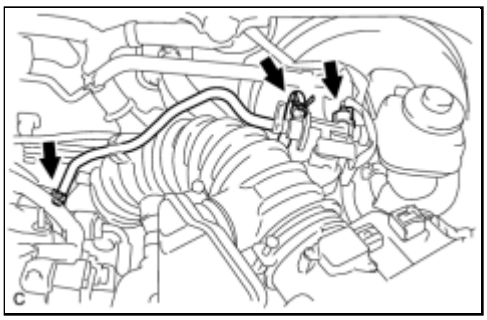

(c) Disconnect the No. 1 vacuum switching valve connector and the 2 vacuum hoses.

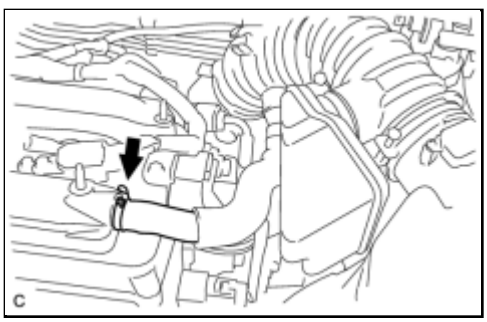

(d) Disconnect the ventilation hose.

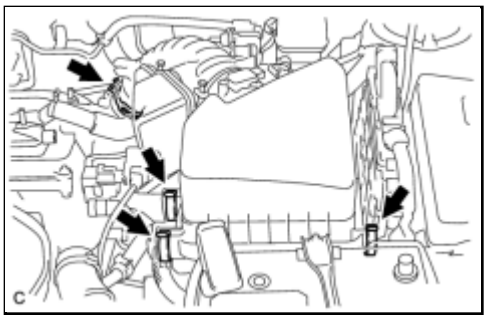

(e) Loosen the No. 1 air cleaner hose clamp, release the 3 air cleaner assembly clamps and remove the air cleaner cap sub-assembly with No. 1 hose.

4. REMOVE THROTTLE BODY ASSEMBLY

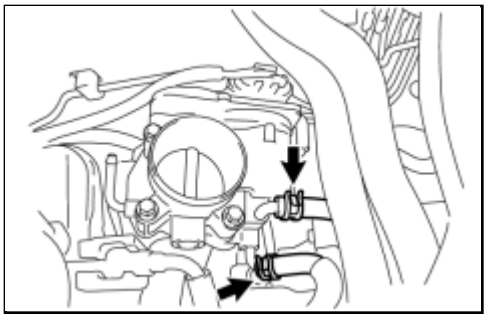

(a) Disconnect the 2 water by-pass hoses.

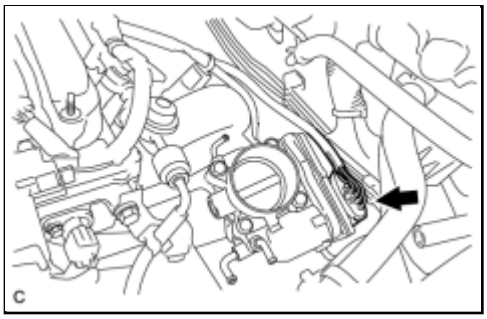

(b) Disconnect the throttle body assembly connector.

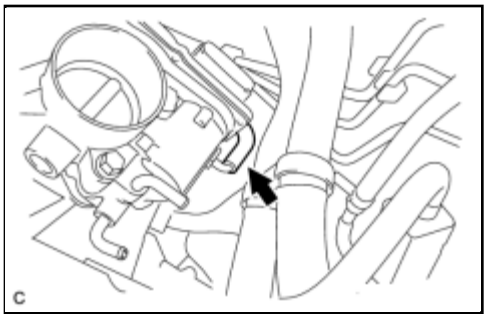

(c) Disconnect the throttle body hose.

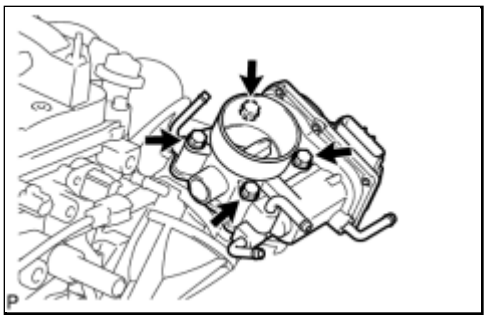

(d) Remove the 4 bolts and throttle body assembly.

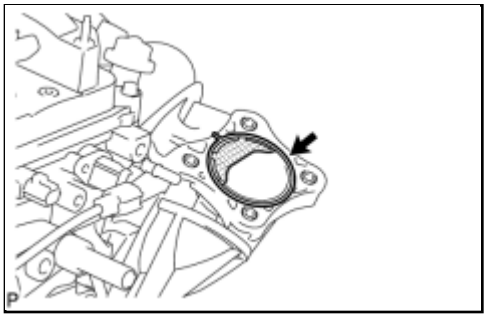

(e) Remove the gasket from the intake manifold.

Last Modified: 3-10-2010	6.4 G	**From:** 200901
Model Year: 2010	**Model:** Corolla	**Doc ID:** RM0000017UE016X
Title: 2AZ-FE ENGINE CONTROL: THROTTLE BODY: ON-VEHICLE INSPECTION (2010 Corolla)		

ON-VEHICLE INSPECTION

1. INSPECT THROTTLE BODY ASSEMBLY

(a) Check the throttle control motor operating sound.

(1) Turn the ignition switch to ON.

(2) When depressing the accelerator pedal, check the operating sound of the motor. Make sure that no friction noises are emitted from the motor.

If any friction noise exists, replace the throttle body assembly.

(b) Check the throttle position sensor.

(1) Connect the Techstream to the DLC3.

(2) Turn the ignition switch to ON.

(3) Turn the Techstream on.

(4) Enter the following menus: Powertrain / Engine and ECT / Data List / Throttle Pos. Sensor Output.

(5) When the throttle valve is fully opened, check that the value of "Throttle Position" is within the specification.

Standard Throttle Valve Opening Percentage:

TESTER DISPLAY	STANDARD VALUE
Throttle Pos. Sensor Output	60% or more

If the percentage is less than 60%, replace the throttle body assembly.

NOTICE:

- When checking the standard throttle valve opening percentage, the shift lever should be in N.
- Fully depress the accelerator pedal.

Last Modified: 3-10-2010	6.4 G	**From:** 200901
Model Year: 2010	**Model:** Corolla	**Doc ID:** RM0000017UB011X
Title: 2AZ-FE ENGINE CONTROL: THROTTLE BODY: INSPECTION (2010 Corolla)		

INSPECTION

1. INSPECT THROTTLE BODY ASSEMBLY

(a) Check the resistance.

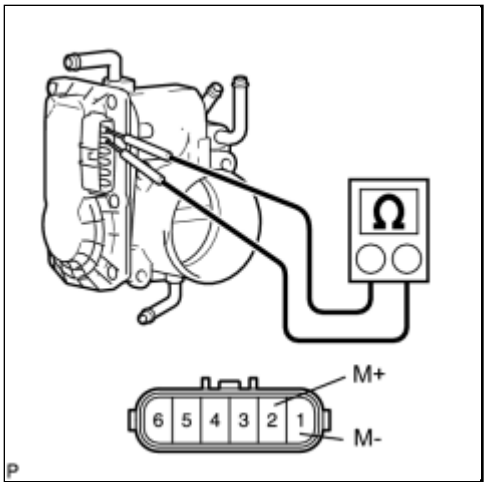

(1) Using an ohmmeter, measure the resistance between the terminals.

Standard Resistance:

TESTER CONNECTION	CONDITION	SPECIFIED CONDITION
1 (M-) - 2 (M+)	20°C (68°F)	0.3 to 100 Ω

If the result is not as specified, replace the throttle body assembly.

Last Modified: 3-10-2010	6.4 A	**From:** 200901
Model Year: 2010	**Model:** Corolla	**Doc ID:** RM0000017UA023X
Title: 2AZ-FE ENGINE CONTROL: THROTTLE BODY: INSTALLATION (2010 Corolla)		

INSTALLATION

1. INSTALL THROTTLE BODY ASSEMBLY

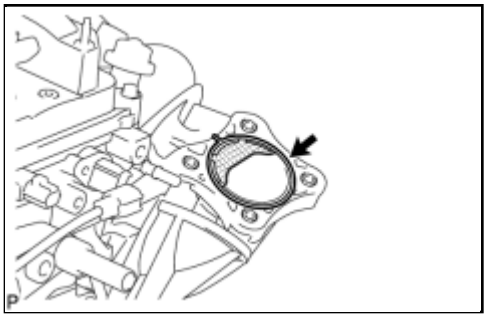

(a) Install a new gasket onto the intake manifold.

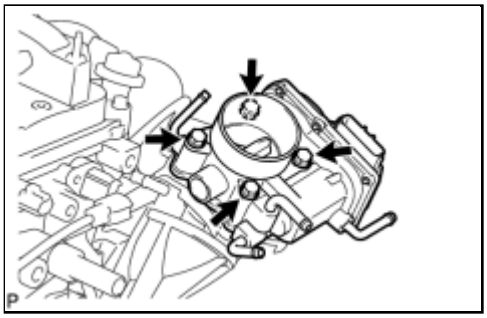

(b) Install the throttle body assembly with the 4 bolts.

Torque: 30 N·m (306 kgf·cm, 22ft·lbf)

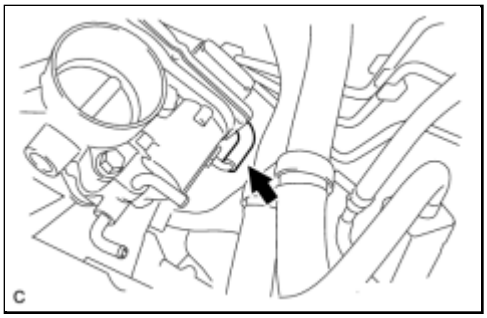

(c) Connect the throttle body hose.

(d) Connect the throttle body connector.

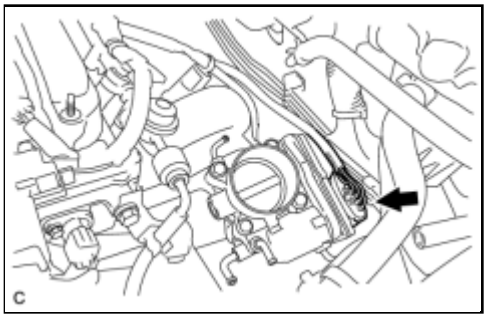

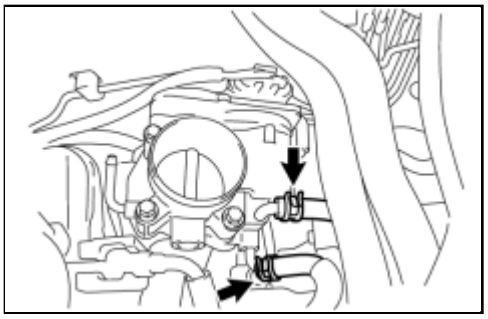

(e) Connect the 2 water by-pass hoses.

2. INSTALL AIR CLEANER CAP SUB-ASSEMBLY WITH HOSE

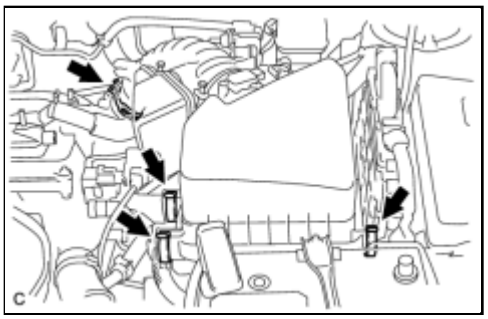

(a) Install the air cleaner cap sub-assembly with hose and lock the 3 clamps.

(b) Tighten the air cleaner hose clamp.

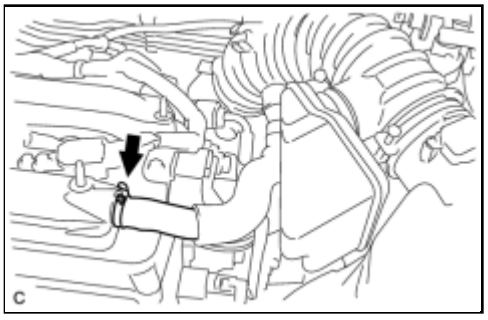

(c) Connect the ventilation hose.

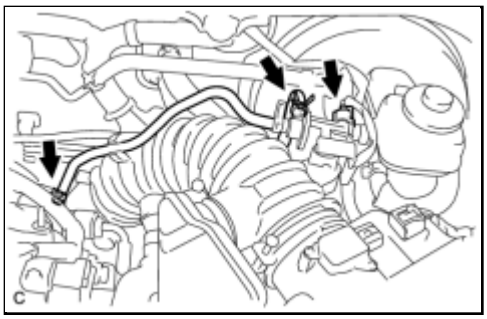

(d) Connect the 2 vacuum hoses and No. 1 vacuum switching valve connector.

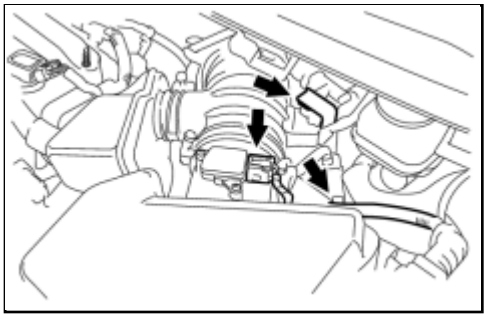

(e) Connect the 2 wire harness clamps and the mass air flow meter connector.

3. ADD ENGINE COOLANT INFO

4. INSPECT FOR COOLANT LEAK INFO

5. INSTALL NO. 1 ENGINE COVER SUB-ASSEMBLY INFO

6. PERFORM INITIALIZATION

NOTICE:

Be sure to perform this procedure after reassembling the throttle body assembly, removing and reinstalling any throttle body component or replacing the ECM.

(a) Disconnect the cable from the negative (-) battery terminal. Wait at least 60 seconds and reconnect the cable.

(b) Turn the ignition switch to ON without operating the accelerator pedal.

NOTICE:

If the accelerator pedal is operated, perform the above steps again.

(c) Connect the Techstream to the DLC3 and clear the DTCs INFO .

(d) Start the engine and check that the MIL is not illuminated and that the idle speed is within the specified range when the air conditioning is switched off after the engine is warmed up.

Standard:

CONDITION	ENGINE IDLE SPEED
A/C switched off	600 to 700 rpm

NOTICE:

- Be sure to perform this step with all accessories off.
- Make sure that the shift lever is in N or P.

(e) Enter the following menus: Powertrain/ Engine and ECT/ Data List/ Throttle Pos. Sensor Output. Fully depress the accelerator pedal and check that the value is 60% or more.

(f) Perform a road test and confirm that there are no abnormalities.



Last Modified: 3-10-2010	6.4 K	**From:** 200901
Model Year: 2010	**Model:** Corolla	**Doc ID:** RM0000030M900AX
Title: 2ZR-FE ENGINE CONTROL: THROTTLE BODY: COMPONENTS (2010 Corolla)		

COMPONENTS

ILLUSTRATION

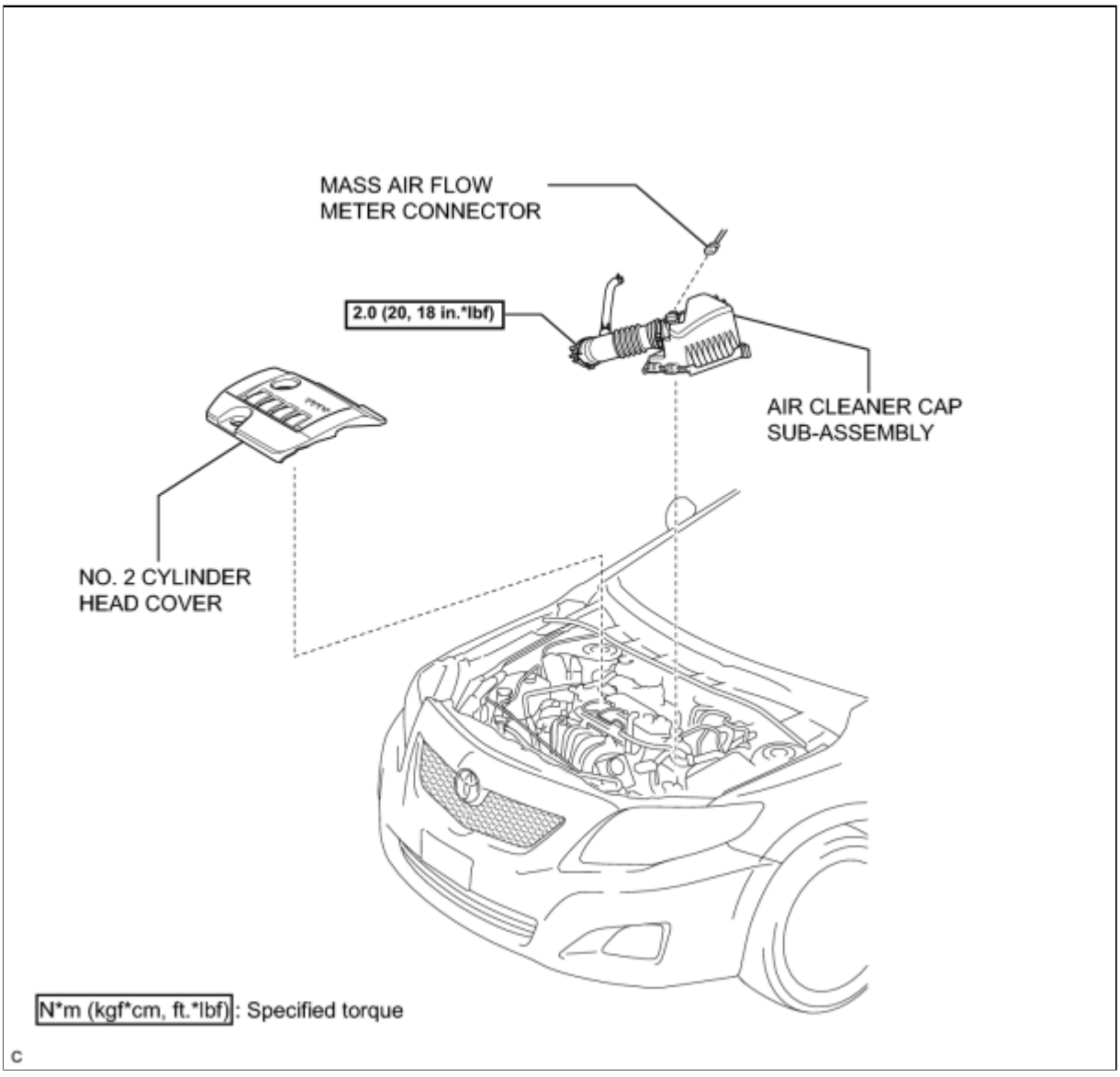

ILLUSTRATION

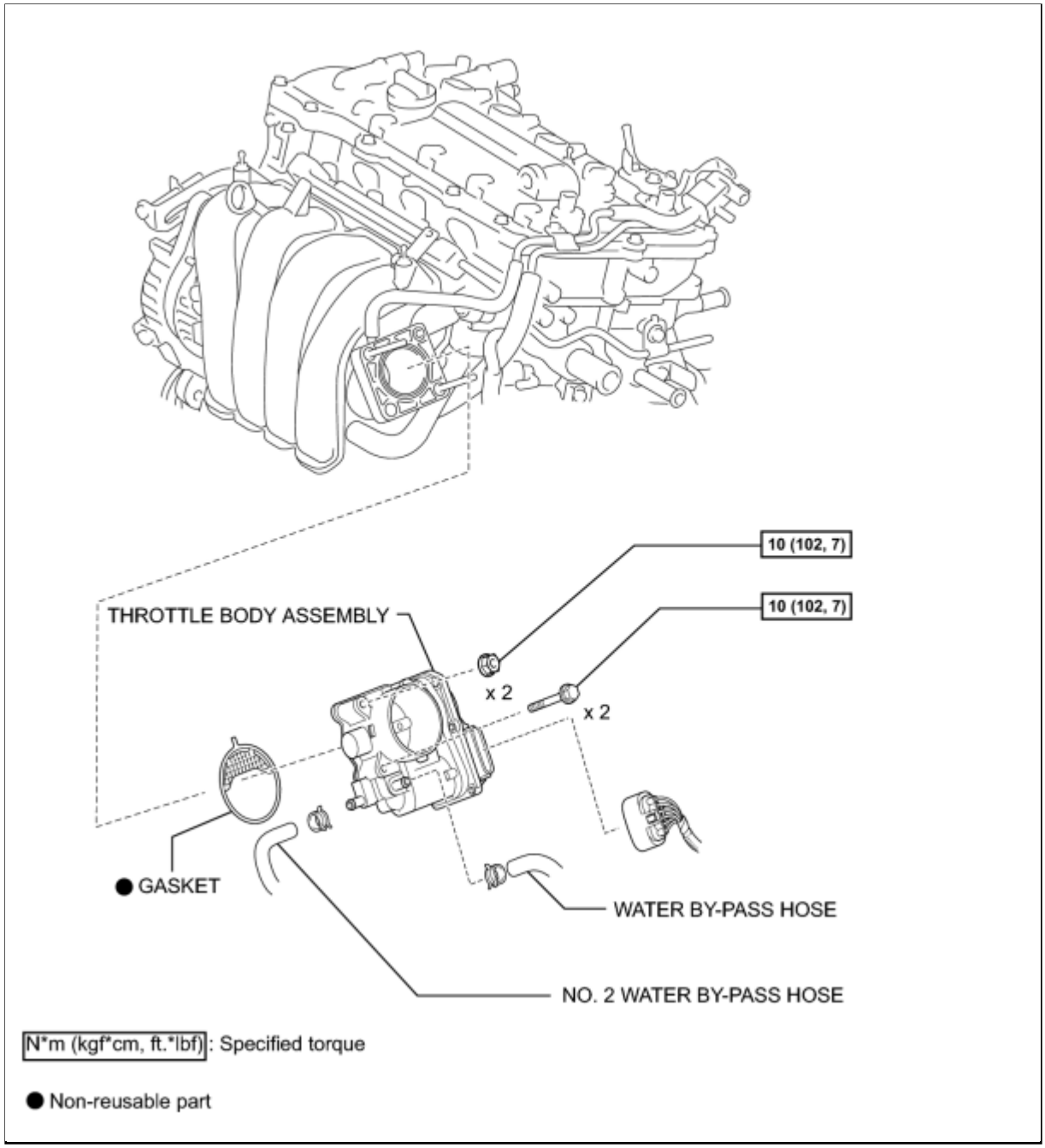

N*m (kgf*cm, ft.*lbf): Specified torque

● Non-reusable part

Last Modified: 3-10-2010	6.4 G	**From:** 200901
Model Year: 2010	**Model:** Corolla	**Doc ID:** RM000001CZB016X
Title: 2ZR-FE ENGINE CONTROL: THROTTLE BODY: ON-VEHICLE INSPECTION (2010 Corolla)		

ON-VEHICLE INSPECTION

1. INSPECT THROTTLE BODY ASSEMBLY

(a) Check for throttle control motor operating sound.

(1) Turn the ignition switch to ON.

(2) When depressing the accelerator pedal, check the operating sound of the motor. Make sure that no friction noises are emitted from the motor. If any friction noise exists, replace the throttle body assembly.

(b) Check the throttle position sensor.

(1) Connect the Techstream to the DLC3.

(2) Turn the ignition switch to ON.

(3) Turn the Techstream on.

(4) Enter the following menus: Powertrain / Engine and ECT / Data List / Throttle Position.

(5) When the throttle valve is fully opened, check that the value of "Throttle Pos. Sensor Output." is within the specification.

Standard Throttle Valve Opening Percentage:

TESTER DISPLAY	STANDARD VALUE
Throttle Pos. Sensor Output	60% or more

NOTICE:

- When checking the throttle valve opening percentage, the shift lever should be in N.
- Fully depress the accelerator pedal.

If the percentage is less than 60%, replace the throttle body assembly.

Last Modified: 3-10-2010	6.4 A	**From:** 200901
Model Year: 2010	**Model:** Corolla	**Doc ID:** RM0000030MA00AX
Title: 2ZR-FE ENGINE CONTROL: THROTTLE BODY: REMOVAL (2010 Corolla)		

REMOVAL

1. DRAIN ENGINE COOLANT INFO

2. REMOVE NO. 2 CYLINDER HEAD COVER INFO

3. REMOVE AIR CLEANER CAP SUB-ASSEMBLY

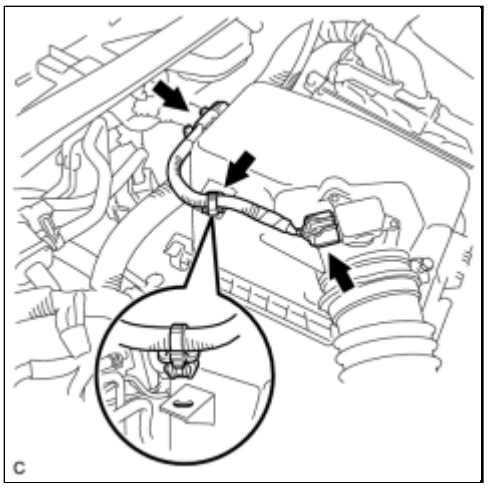

(a) Disconnect the mass air flow meter connector and the 2 wire harness clamps.

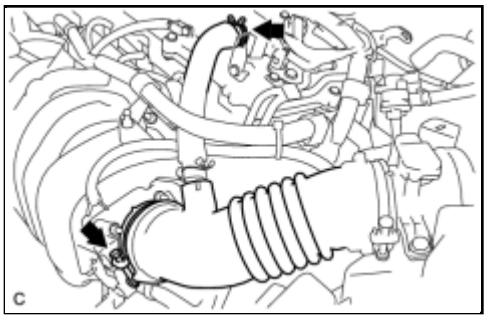

(b) Disconnect the ventilation hose and loosen the hose clamp.

(c) Release the 2 clamps and remove the air cleaner cap sub-assembly with hose.

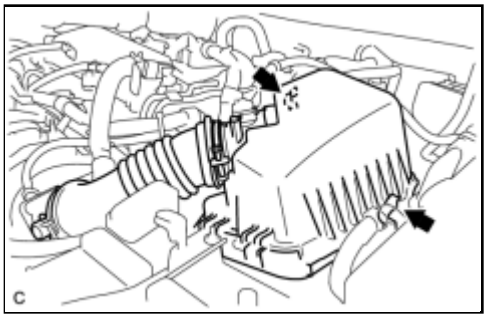

4. REMOVE THROTTLE BODY ASSEMBLY

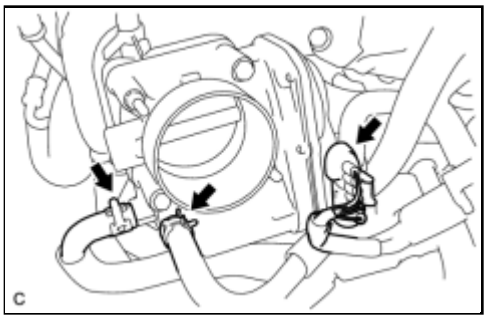

(a) Disconnect the throttle body connector and the 2 water by-pass hoses.

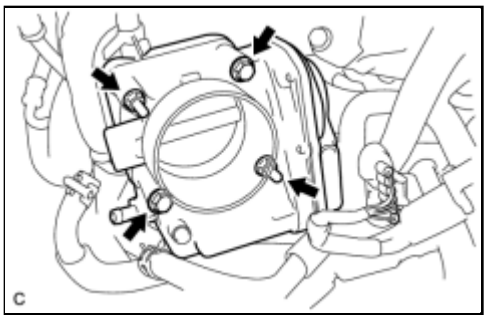

(b) Remove the 2 bolts and 2 nuts, and remove the throttle body assembly.

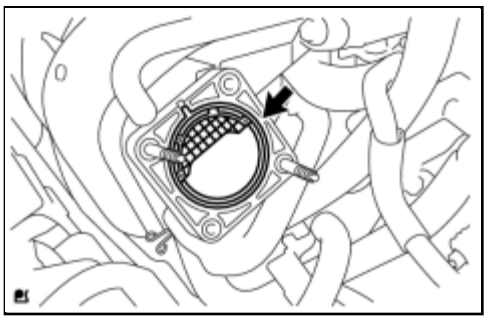

(c) Remove the gasket from the intake manifold.

Last Modified: 3-10-2010	6.4 G	**From:** 200901
Model Year: 2010	**Model:** Corolla	**Doc ID:** RM000001CZ8014X
Title: 2ZR-FE ENGINE CONTROL: THROTTLE BODY: INSPECTION (2010 Corolla)		

INSPECTION

1. INSPECT THROTTLE BODY ASSEMBLY

Component without harness connected:
(Throttle Body)

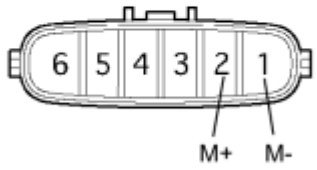

(a) Measure the resistance according to the value(s) in the table below.

Standard Resistance:

TESTER CONNECTION	CONDITION	SPECIFIED CONDITION
1 (M-) - 2 (M+)	20°C (68°F)	0.3 to 100 Ω

If the result is not as specified, replace the throttle body assembly.

Last Modified: 3-10-2010	6.4 A	**From:** 200901
Model Year: 2010	**Model:** Corolla	**Doc ID:** RM0000030M800AX
Title: 2ZR-FE ENGINE CONTROL: THROTTLE BODY: INSTALLATION (2010 Corolla)		

INSTALLATION

1. INSTALL THROTTLE BODY ASSEMBLY

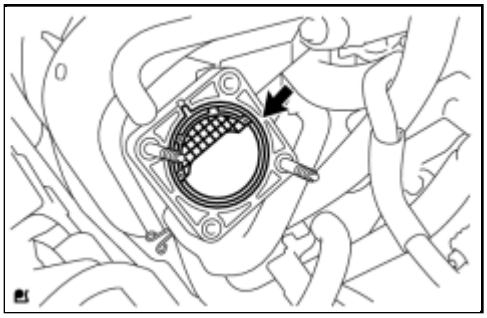

(a) Install a new gasket onto the intake manifold.

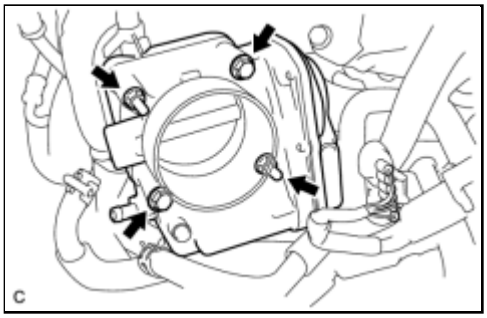

(b) Install the throttle body assembly with the 2 bolts and 2 nuts.

Torque: 10 N·m (102 kgf·cm, 7ft·lbf)

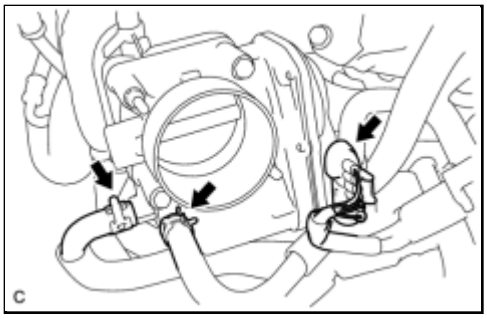

(c) Connect the 2 water by-pass hoses and the throttle body connector.

2. INSTALL AIR CLEANER CAP SUB-ASSEMBLY

(a) Install the air cleaner cap sub-assembly with hose with the 2 clamps.

(b) Tighten the hose clamp to the specified torque.

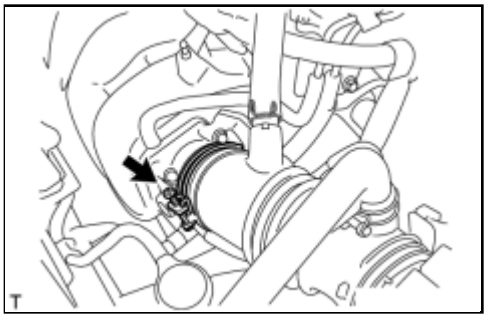

Torque: 2.0 N·m (20 kgf·cm, 18in·lbf)

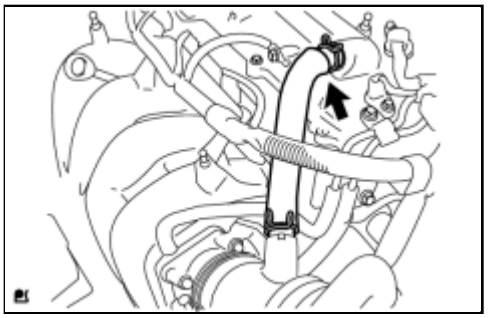

(c) Connect the ventilation hose.

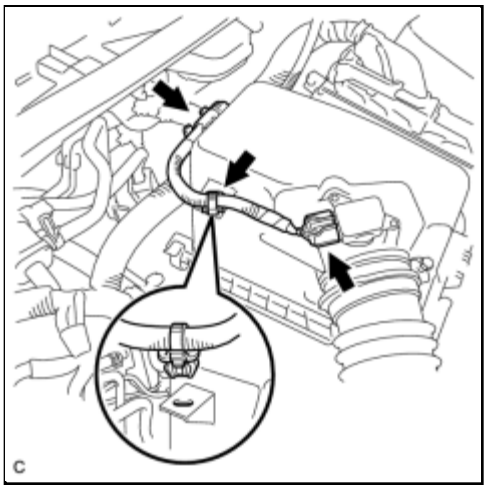

(d) Connect the 2 wire harness clamps and mass air flow meter connector.

3. ADD ENGINE COOLANT INFO

4. INSPECT FOR COOLANT LEAK INFO

5. INSTALL NO. 2 CYLINDER HEAD COVER INFO

6. PERFORM INITIALIZATION

NOTICE:

Be sure to perform this procedure after reassembling the throttle body assembly, removing and reinstalling any throttle body component or replacing the ECM.

(a) Disconnect the cable from the negative (-) battery terminal. Wait at least 60 seconds and

reconnect the cable.

(b) Turn the ignition switch to ON without operating the accelerator pedal.

NOTICE:

If the accelerator pedal is operated, perform the above steps again.

(c) Connect the Techstream to the DLC3 and clear the DTCs INFO .

(d) Start the engine and check that the MIL is not illuminated and that the idle speed is within the specified range when the air conditioning is switched off after the engine is warmed up.

Standard:

CONDITION	ENGINE IDLE SPEED
A/C switched off	600 to 700 rpm

NOTICE:

- Be sure to perform this step with all accessories off.
- Make sure that the shift lever is in N or P.

(e) Enter the following menus: Powertrain/ Engine and ECT/ Data List/ Throttle Pos. Sensor Output. Fully depress the accelerator pedal and check that the value is 60% or more.

(f) Perform a road test and confirm that there are no abnormalities.

Last Modified: 3-10-2010	6.4 K	**From:** 200901
Model Year: 2010	**Model:** Corolla	**Doc ID:** RM0000032YD008X
Title: 2AZ-FE ENGINE MECHANICAL: CAMSHAFT: COMPONENTS (2010 Corolla)		

COMPONENTS

ILLUSTRATION

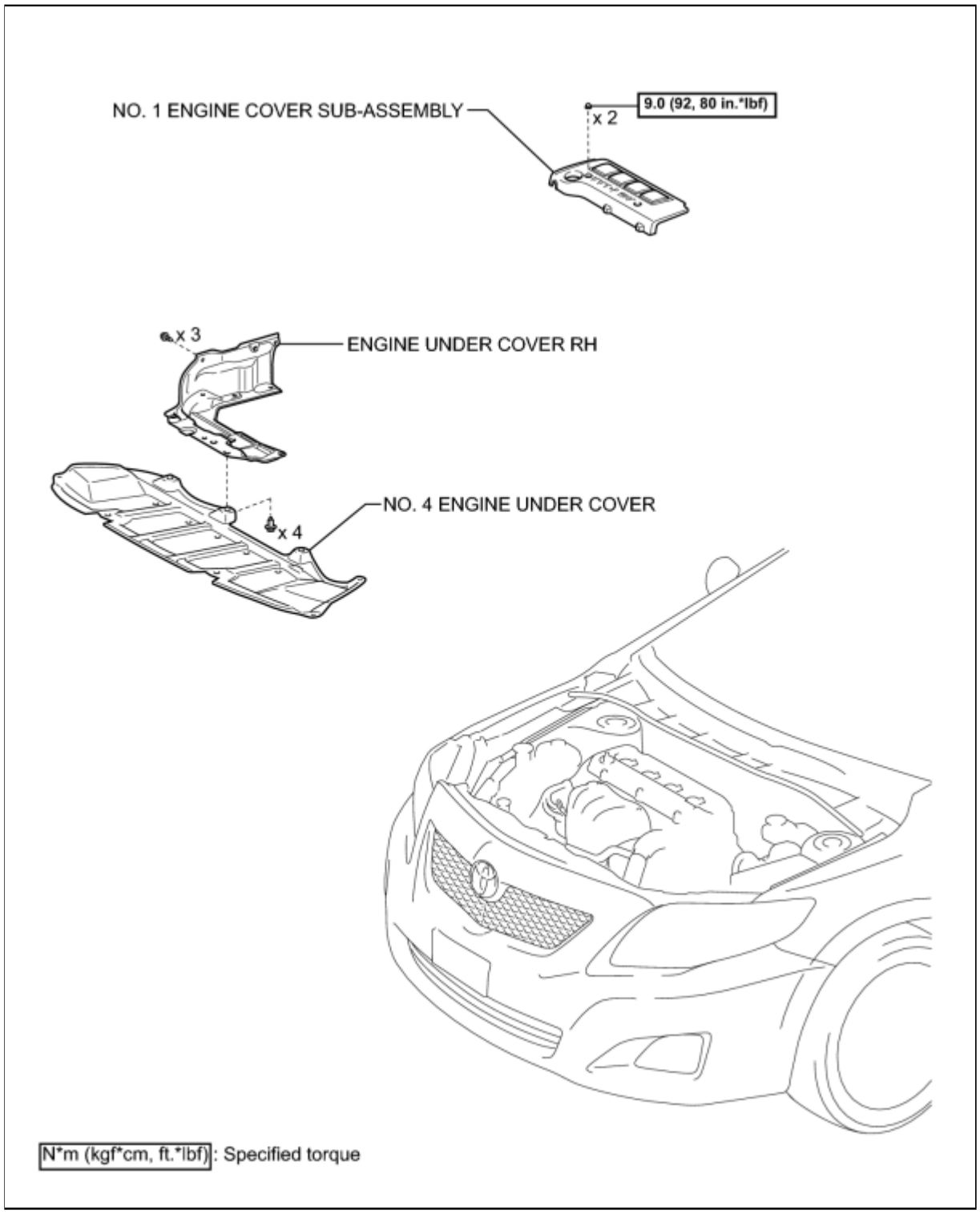

ILLUSTRATION

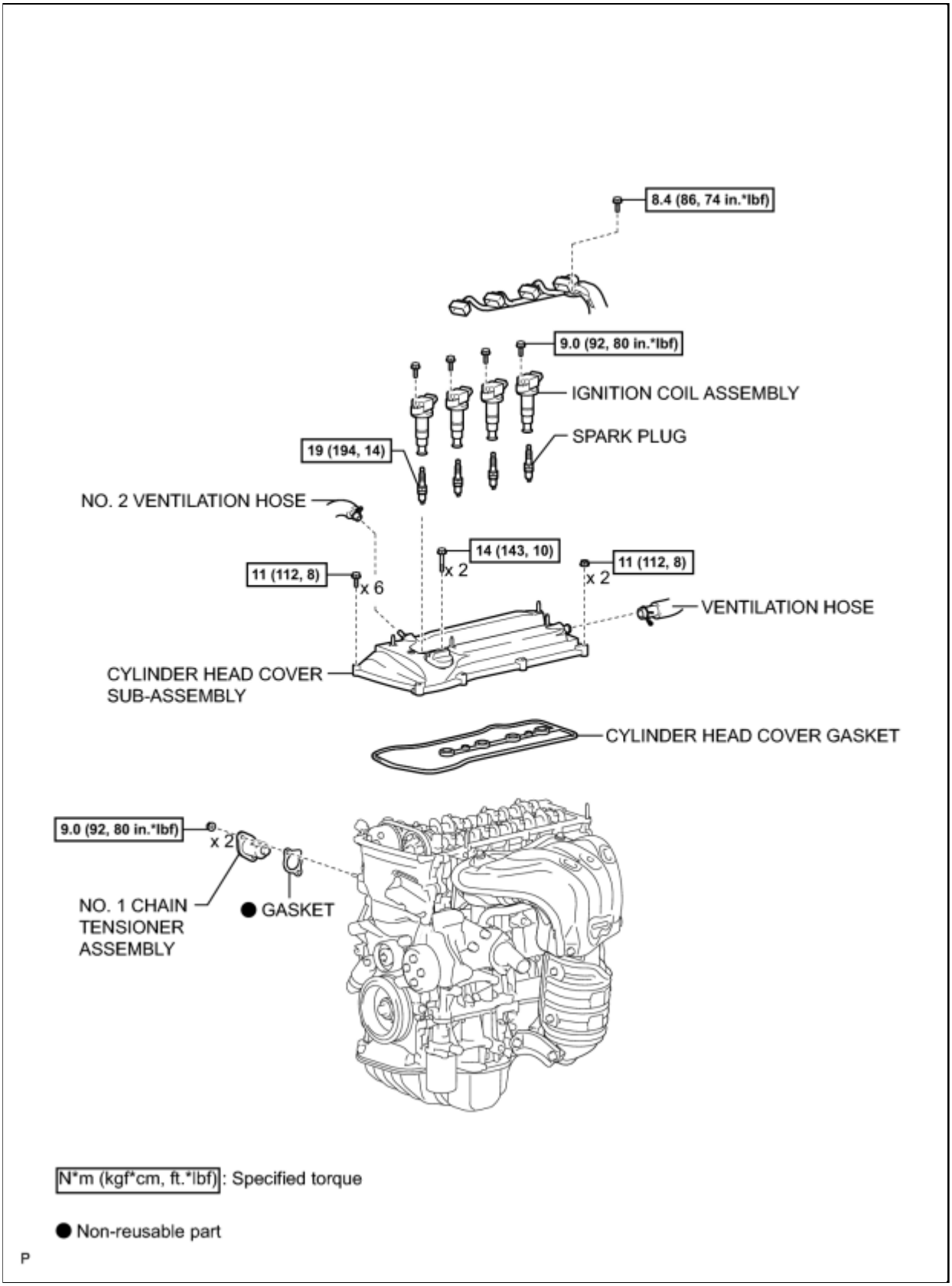

ILLUSTRATION

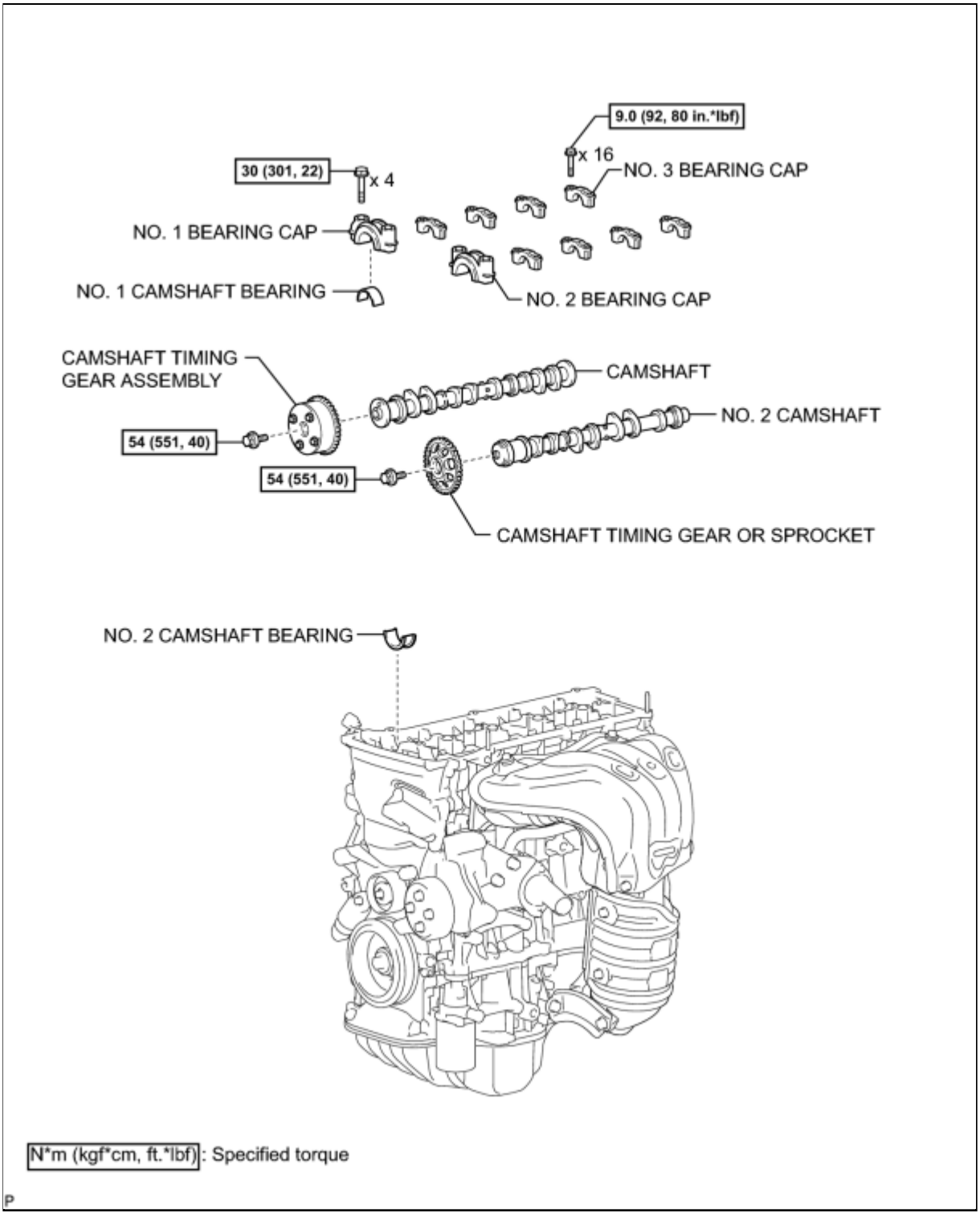

P

Last Modified: 3-10-2010	6.4 A	**From:** 200901
Model Year: 2010	**Model:** Corolla	**Doc ID:** RM0000032Z3008X
Title: 2AZ-FE ENGINE MECHANICAL: CAMSHAFT: REMOVAL (2010 Corolla)		

REMOVAL

1. REMOVE ENGINE UNDER COVER RH

2. REMOVE NO. 1 ENGINE COVER SUB-ASSEMBLY INFO

3. REMOVE IGNITION COIL ASSEMBLY INFO

4. REMOVE SPARK PLUG INFO

5. REMOVE CYLINDER HEAD COVER SUB-ASSEMBLY

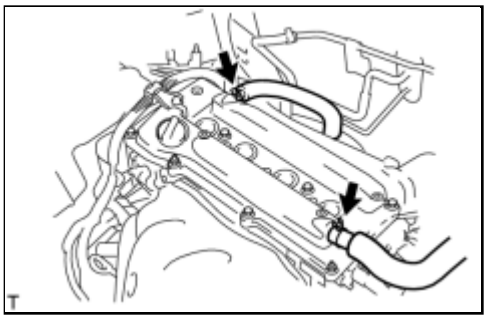

(a) Remove the 2 ventilation hoses from the cylinder head cover sub-assembly.

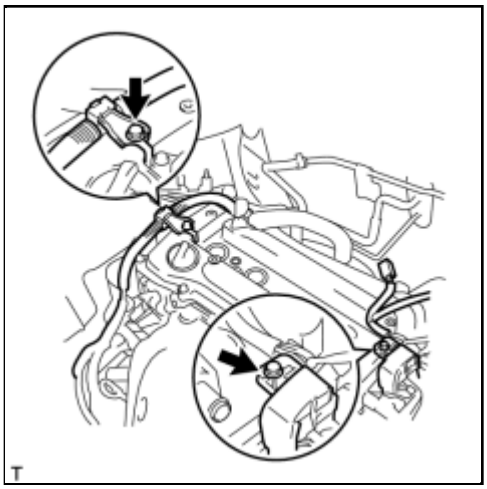

(b) Remove the 2 bolts and separate the 2 wire harness brackets.

(c) Remove the 8 bolts and 2 nuts, then remove the cylinder head cover sub-assembly and gasket.

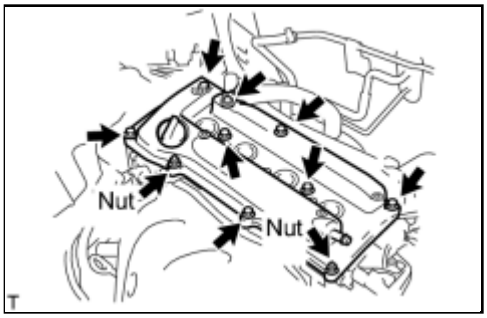

6. SET NO. 1 CYLINDER TO TDC/COMPRESSION

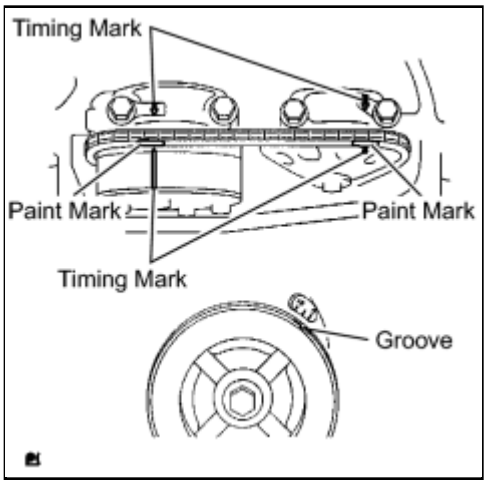

(a) Turn the crankshaft pulley until the groove and the timing mark "0" on the timing chain cover are aligned.

(b) Check that each timing mark on the camshaft timing gear and sprocket is aligned with each timing mark located on the No. 1 and No. 2 bearing caps as shown in the illustration.

If not, turn the crankshaft pulley 1 revolution (360°) to align the timing marks as illustrated.

(c) Place paint marks on the chain in alignment with the timing marks on the camshaft timing gear and camshaft timing sprocket.

7. REMOVE NO. 1 CHAIN TENSIONER ASSEMBLY INFO

8. LOOSEN CAMSHAFT TIMING GEAR OR SPROCKET

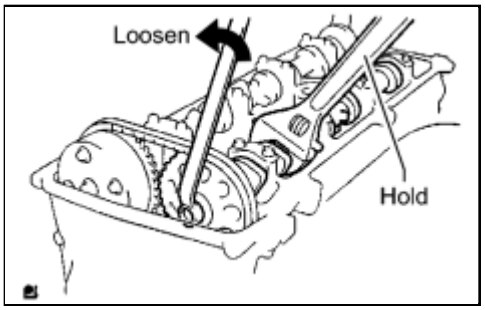

(a) While holding the No. 2 camshaft with a wrench, loosen the No. 2 camshaft timing set bolt.

9. REMOVE NO. 2 CAMSHAFT

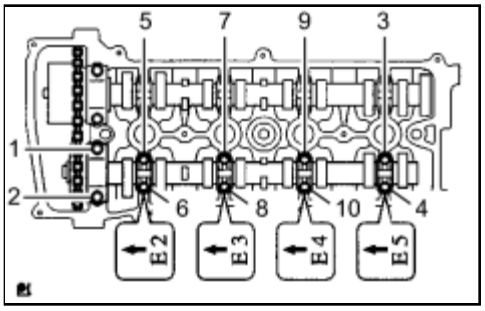

(a) Using several steps, uniformly loosen and remove the 10 bearing cap bolts in the sequence shown in the illustration.

(b) Remove the 5 bearing caps.

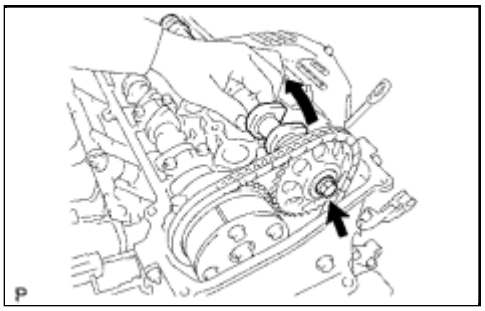

(c) While holding the No. 2 camshaft by hand, remove the camshaft timing sprocket set bolt.

(d) Remove the camshaft timing sprocket from the No. 2 camshaft with the timing chain wrapped on the sprocket.

(e) Remove the camshaft timing sprocket from the timing chain.

10. REMOVE CAMSHAFT

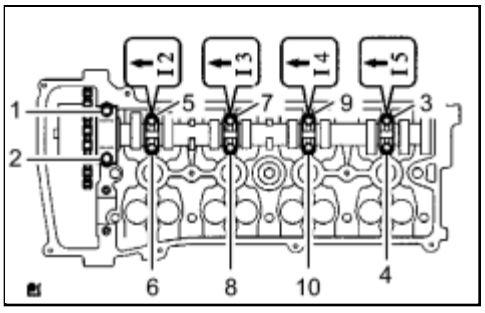

(a) In several steps, uniformly loosen and remove the 10 bearing caps bolts in the sequence shown in the illustration.

(b) Remove the 5 bearing caps.

(c) Remove the camshaft and camshaft timing gear assembly while holding the timing chain by hand.

(d) Support the timing chain with a string to prevent it from slipping off the crankshaft sprocket as shown in the

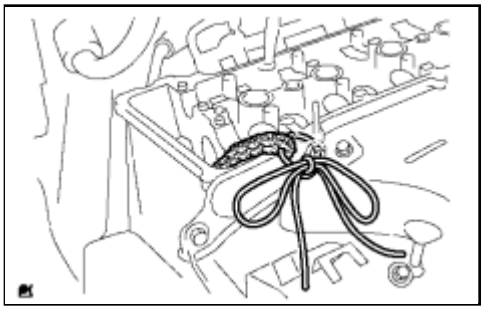

illustration.

NOTICE:

Be careful not to drop anything inside the timing chain cover.

11. REMOVE CAMSHAFT TIMING GEAR ASSEMBLY

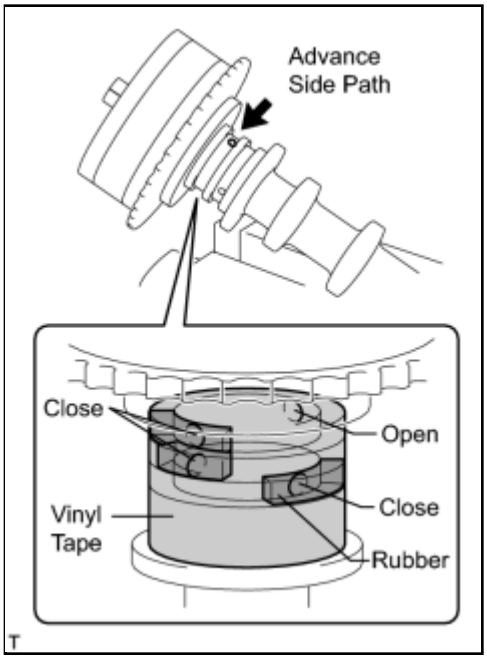

(a) Clamp the camshaft in a vise, and make sure that the camshaft timing gear assembly does not rotate.

(b) Cover all the oil path with vinyl tape except the advance side path shown in the illustration.

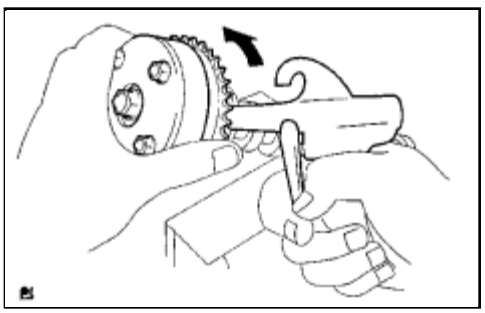

(c) Apply air pressure of 150 kPa (1.5 kgf/cm2, 22 psi) to the oil path, then turn the camshaft timing gear assembly to the advance direction (counterclockwise) by hand.

CAUTION:

Cover the paths with a piece of cloth to avoid oil splashes.

HINT:

Depending on the air pressure, the camshaft timing gear assembly may turn to the advance side without applying force by hand. Also, if the pressure is difficult to apply because of air leakage from a path, the lock pin may be difficult to release.

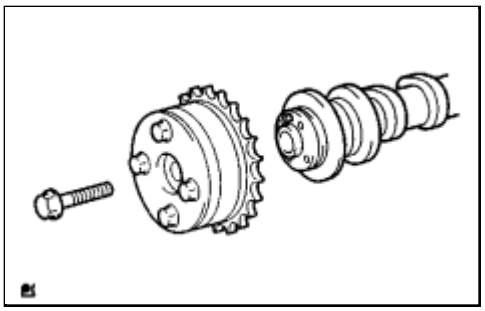

(d) Remove the flange bolt of the camshaft timing gear.

NOTICE:

- Be sure not to remove the other 4 bolts.
- When reusing the camshaft timing gear, release the straight pin lock first, then install the gear.

Last Modified: 3-10-2010	6.4 A	**From:** 200901
Model Year: 2010	**Model:** Corolla	**Doc ID:** RM0000032Z4008X
Title: 2AZ-FE ENGINE MECHANICAL: CAMSHAFT: INSTALLATION (2010 Corolla)		

INSTALLATION

1. INSTALL CAMSHAFT TIMING GEAR ASSEMBLY

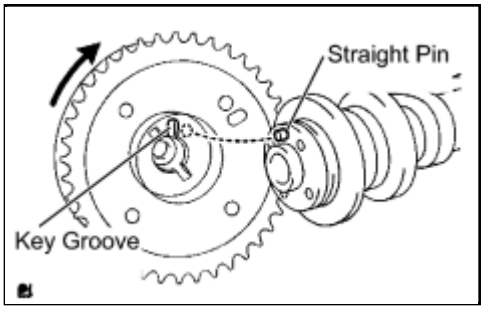

(a) Put the camshaft timing gear and camshaft together with the straight pin and key groove misaligned, as shown in the illustration.

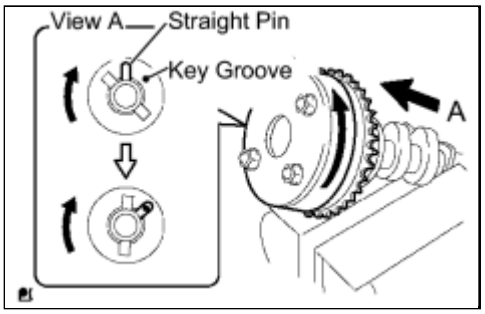

(b) Turn the camshaft timing gear as shown in the illustration while pushing it gently against the camshaft. Push further at the position where the pin fits into the groove.

NOTICE:

Be sure not to turn the camshaft timing gear to the retard direction (clockwise).

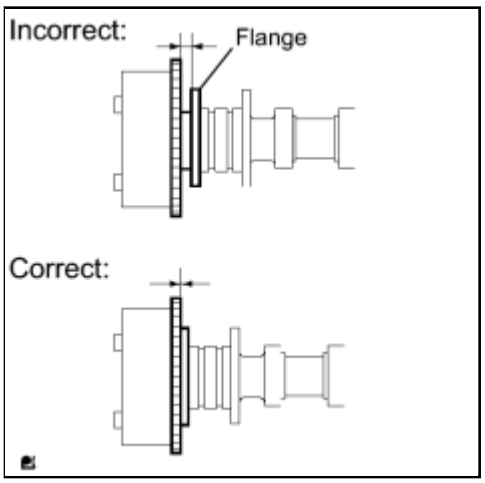

(c) Check that there is no clearance between the timing gear and camshaft flange.

(d) Tighten the flange bolt with the camshaft timing gear

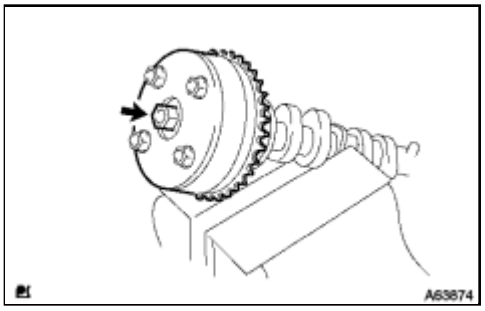

assembly fixed in place.

Torque: 54 N·m (551 kgf·cm, 40ft·lbf)

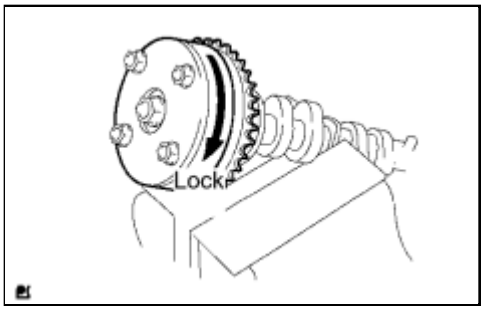

(e) Check that the camshaft timing gear assembly can move to the retard direction (clockwise) and is locked in the most retarded position.

2. INSTALL CAMSHAFT

(a) Apply a light coat of engine oil to the journal portion of the camshaft.

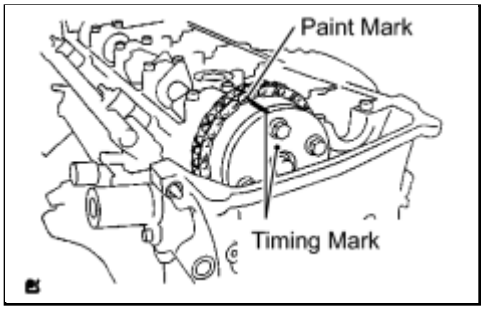

(b) Install the timing chain onto the camshaft timing gear with the paint mark aligned with the timing mark on the camshaft timing gear as shown in the illustration.

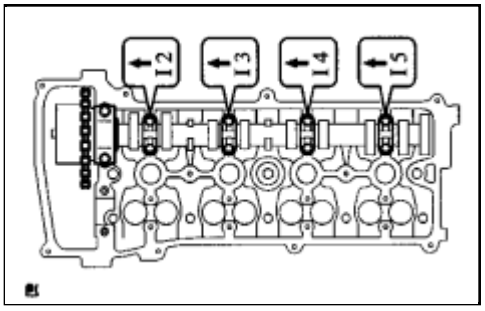

(c) Examine the front marks and numbers, and check that the order is as shown in the illustration. Then install the bearing caps into the cylinder head.

(d) Apply a light coat of engine oil on the threads and under the heads of the bearing cap bolts.

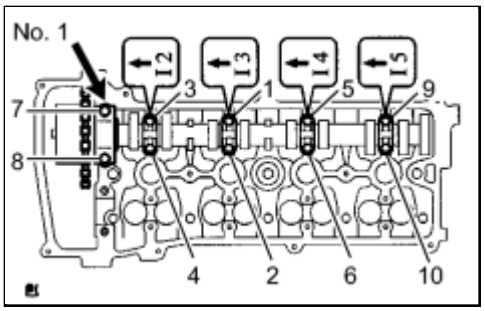

(e) Using several steps, uniformly tighten the 10 bearing cap bolts in the sequence shown in the illustration.

No. 1 bearing - Torque: 30 N·m (301 kgf·cm, 22ft·lbf)
No. 3 bearing - Torque: 9.0 N·m (92 kgf·cm, 80in·lbf)

3. INSTALL NO. 2 CAMSHAFT

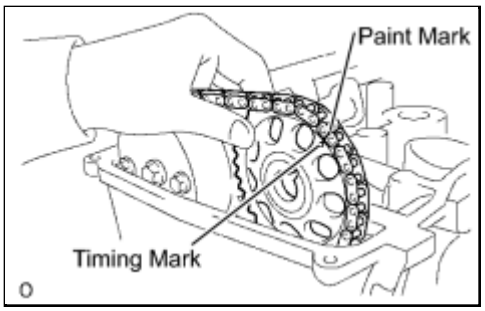

(a) Apply a light coat of engine oil to the journal portion of the No. 2 camshaft.

(b) Put the No. 2 camshaft on the cylinder head with the paint mark on the chain aligned with the timing mark on the camshaft timing sprocket.

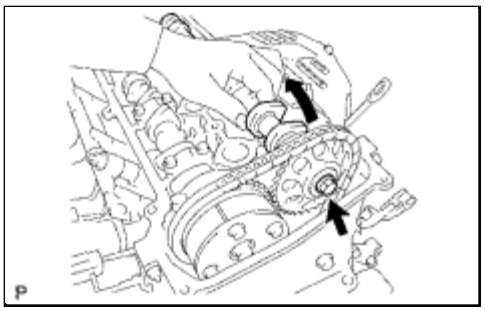

(c) While holding the No. 2 camshaft by hand, temporarily tighten the camshaft timing sprocket set bolt.

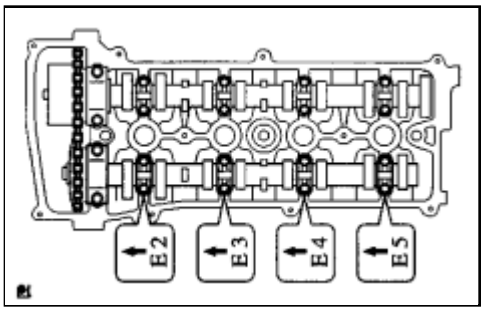

(d) Examine the front marks and numbers, and check that the order is as shown in the illustration. Then install the bearing caps onto the cylinder head.

(e) Apply a light coat of engine oil to the threads and under the heads of the bearing cap bolts.

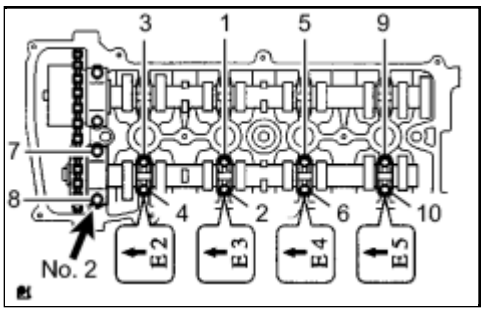

(f) Using several steps, uniformly tighten the 10 bearing cap bolts in the sequence shown in the illustration.

No. 2 bearing - Torque: 30 N·m (301 kgf·cm, 22ft·lbf)

No. 3 bearing - Torque: 9.0 N·m (92 kgf·cm, 80in·lbf)

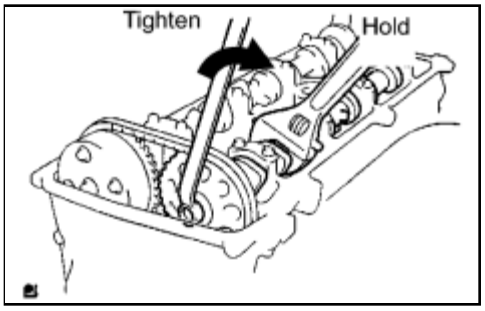

(g) While holding the camshaft with a wrench, tighten the camshaft timing sprocket set bolt.

Torque: 54 N·m (551 kgf·cm, 40ft·lbf)

NOTICE:

Be careful not to damage the valve lifter.

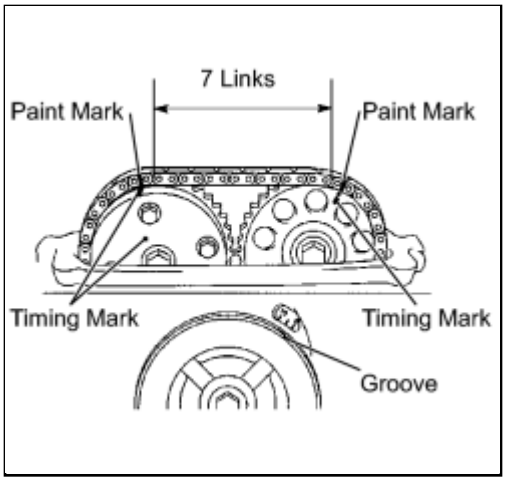

(h) Check that the paint marks on the chain are aligned with the timing marks on the camshaft timing gear and camshaft timing sprocket. Also, check that the crankshaft pulley groove is aligned with the timing mark "0" on the timing mark chain cover.

4. INSTALL NO. 1 CHAIN TENSIONER ASSEMBLY

(a) Release the ratchet pawl, then fully push in the plunger and set the hook to the pin so that the plunger is in the position shown in the illustration.

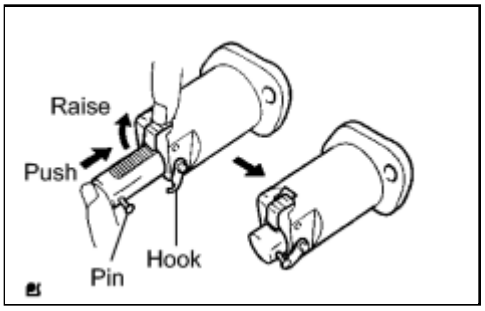

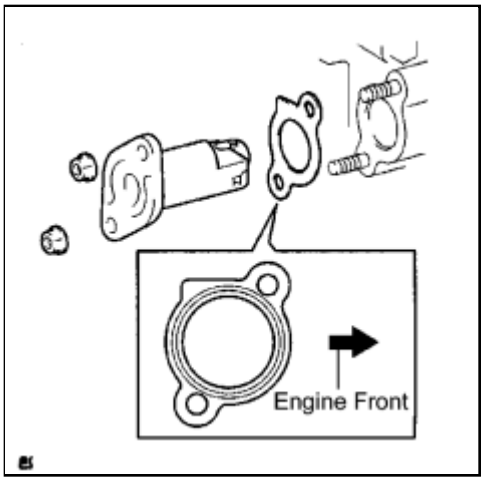

(b) Install a new gasket and the chain tensioner with the 2 nuts.

Torque: 9.0 N·m (92 kgf·cm, 80in·lbf)

NOTICE:

When installing the chain tensioner, set the hook again if the hook releases the plunger.

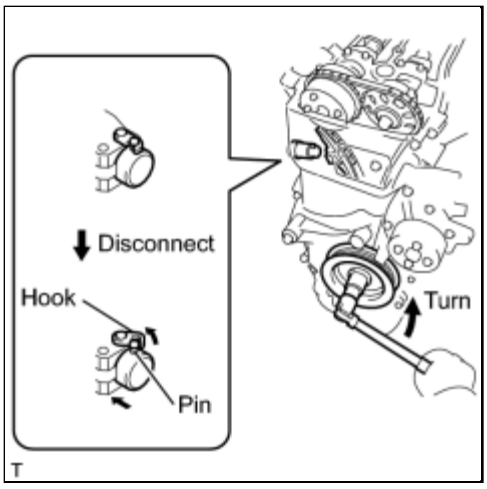

(c) Turn the crankshaft counterclockwise, then disconnect the hook from the pin.

(d) Turn the crankshaft clockwise, then check that the plunger is extended.

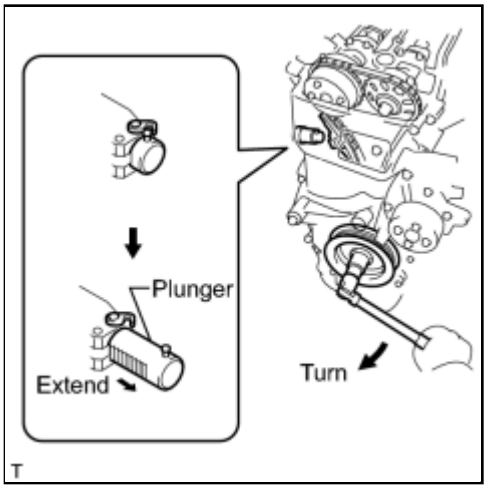

5. SET NO. 1 CYLINDER TO TDC/COMPRESSION INFO

6. CHECK VALVE CLEARANCE INFO

7. ADJUST VALVE CLEARANCE INFO

8. INSTALL CYLINDER HEAD COVER SUB-ASSEMBLY

(a) Remove any old packing material from the contact surface.

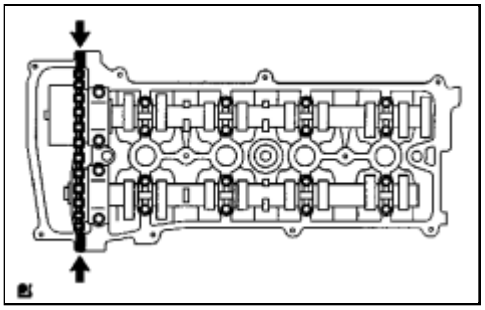

(b) Apply seal packing to the 2 locations shown in the illustration.

Seal packing:
Toyota Genuine Seal Packing Black, Three Bond 1207B or equivalent

NOTICE:

- Remove any oil from the contact surface.
- Install the oil pan within 3 minutes of applying seal packing.
- Do not add engine oil for at least 2 hours after installing the oil pan.

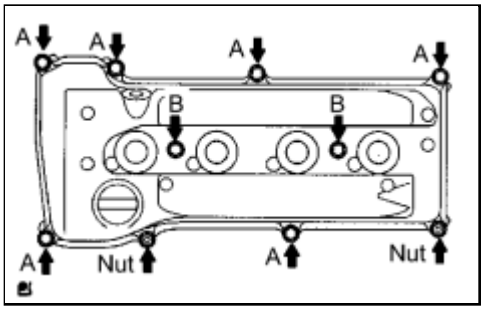

(c) Install the cylinder head cover gasket and sub-assembly with the 8 bolts and 2 nuts.

Bolt A - Torque: 11 N·m (112 kgf·cm, 8ft·lbf)
Bolt B - Torque: 14 N·m (143 kgf·cm, 10ft·lbf)
Nut - Torque: 11 N·m (112 kgf·cm, 8ft·lbf)

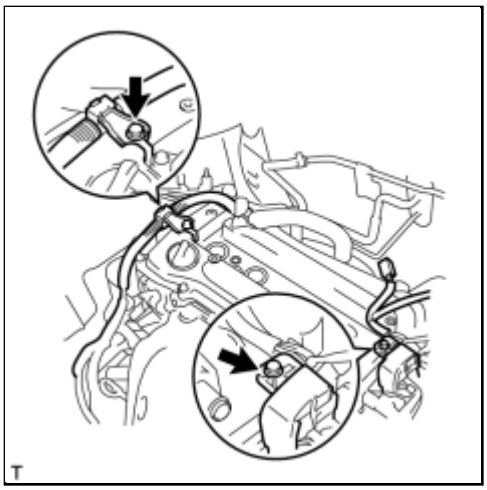

(d) Install the 2 engine wire harness brackets with the 2 bolts.

Torque: 8.4 N·m (86 kgf·cm, 74in·lbf)

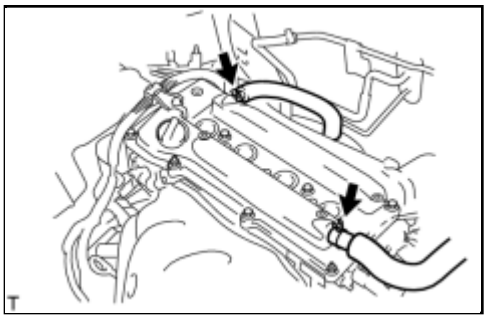

(e) Connect the 2 ventilation hoses to the cylinder head cover.

9. INSTALL SPARK PLUG INFO

10. INSTALL IGNITION COIL ASSEMBLY INFO

11. INSPECT FOR OIL LEAK

12. INSPECT IGNITION TIMING INFO

13. INSTALL NO. 1 ENGINE COVER SUB-ASSEMBLY INFO

14. INSTALL ENGINE UNDER COVER RH

Last Modified: 3-10-2010	6.4 G	**From:** 200901
Model Year: 2010	**Model:** Corolla	**Doc ID:** RM0000033RO008X
Title: 2AZ-FE ENGINE MECHANICAL: CAMSHAFT: INSPECTION (2010 Corolla)		

INSPECTION

1. INSPECT CAMSHAFT TIMING GEAR ASSEMBLY

(a) Install the camshaft timing gear assembly INFO .

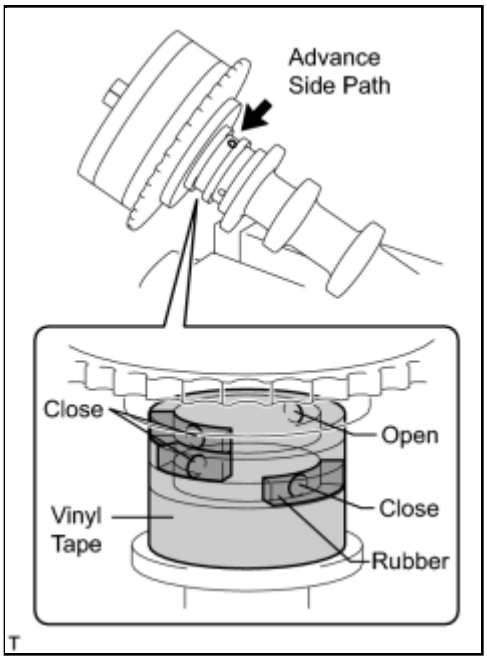

(b) Clamp the camshaft in a vise, and make sure that the camshaft timing gear assembly does not rotate.

(c) Cover all the oil paths with vinyl tape except the advance side path shown in the illustration.

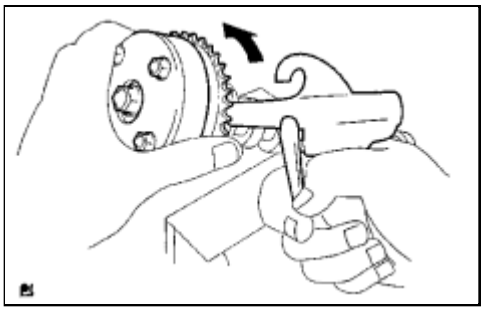

(d) Apply air pressure of 150 kPa (1.5 kgf/cm2, 22 psi) to the oil path

CAUTION:

Cover the paths with a piece of cloth to avoid oil splashes.

(e) Check that the camshaft timing gear revolves in the advance direction (counterclockwise) by hand.

HINT:

Depending on the air pressure, the camshaft timing gear may turn to the advance side without applying force by hand. Also, if enough air pressure cannot be applied because of air leakage from the path, releasing the lock

pin may be difficult.

(f) Check for smooth rotation.

(1) Turn the camshaft timing gear within its movable range (21°) 2 or 3 times, but do not turn it to the most retarded position. Make sure that the gear turns smoothly.

NOTICE:

Do not use air pressure to perform the smooth rotation check.

(g) Check the lock in the most retarded position.

(1) Confirm that the camshaft timing gear is locked at the most retarded position.

(h) Remove the camshaft timing gear assembly INFO .

Last Modified: 3-10-2010	6.4 K	**From:** 200901
Model Year: 2010	**Model:** Corolla	**Doc ID:** RM0000034QB008X
Title: 2ZR-FE ENGINE MECHANICAL: CAMSHAFT: COMPONENTS (2010 Corolla)		

COMPONENTS

ILLUSTRATION

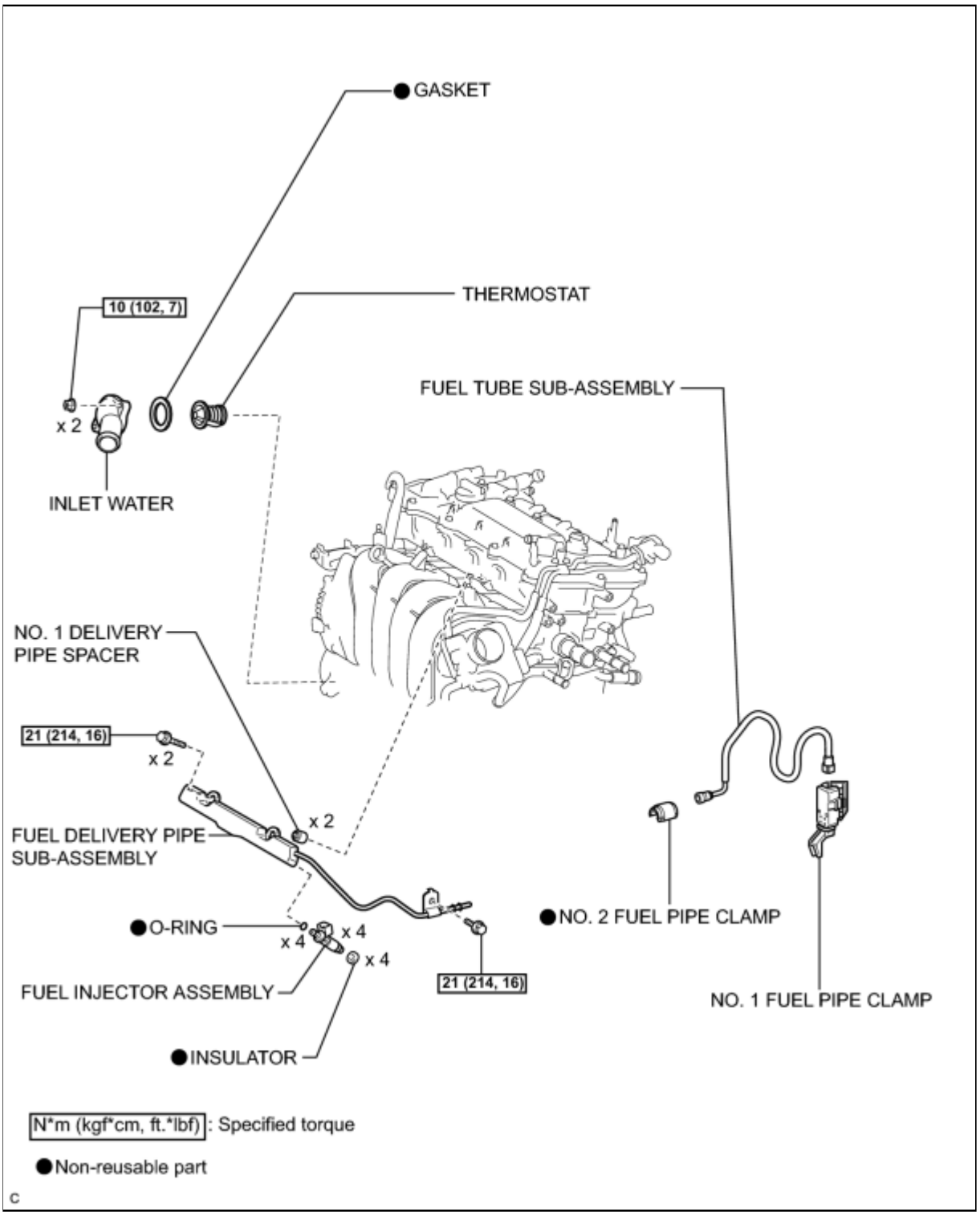

ILLUSTRATION

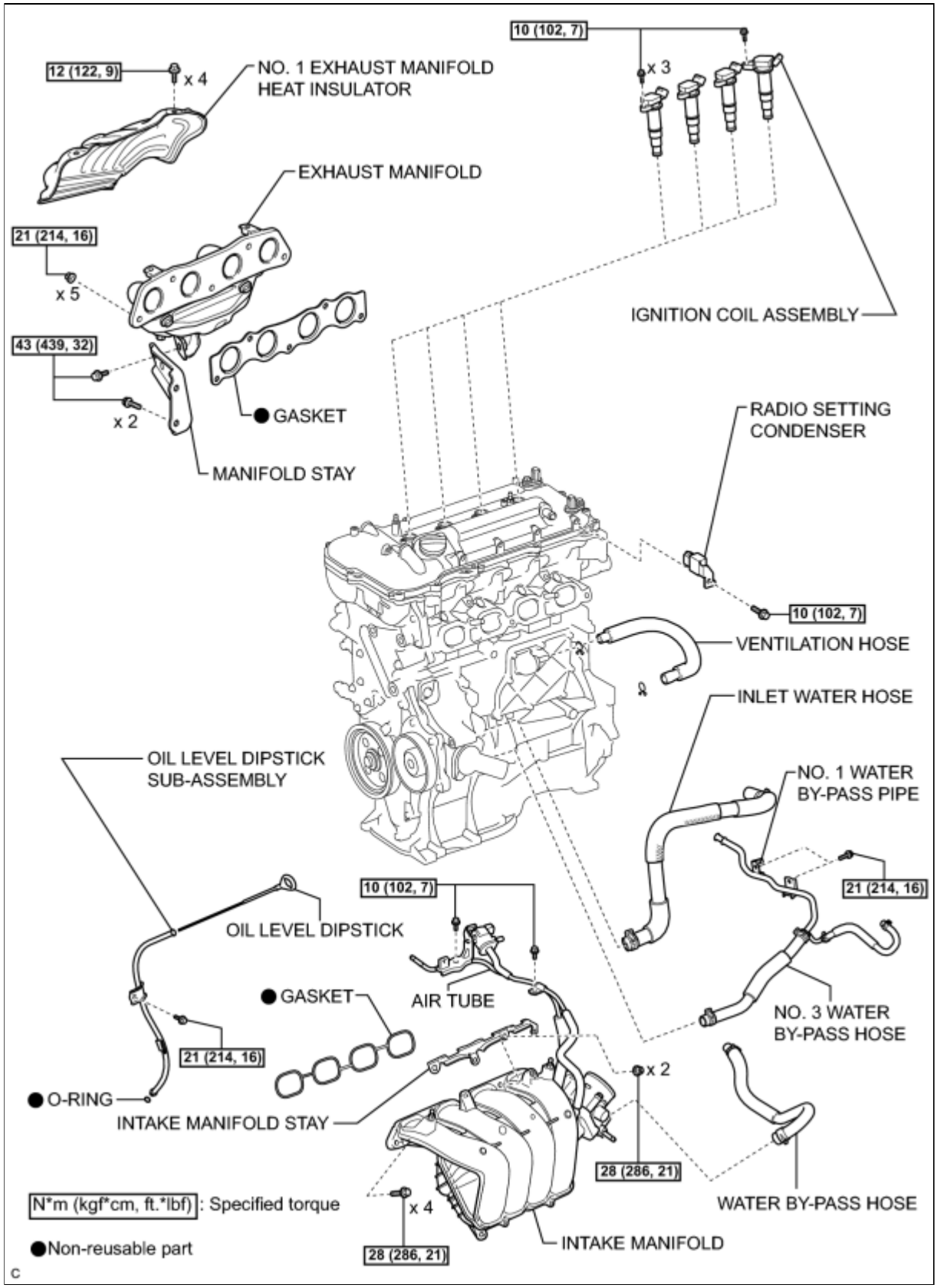

ILLUSTRATION

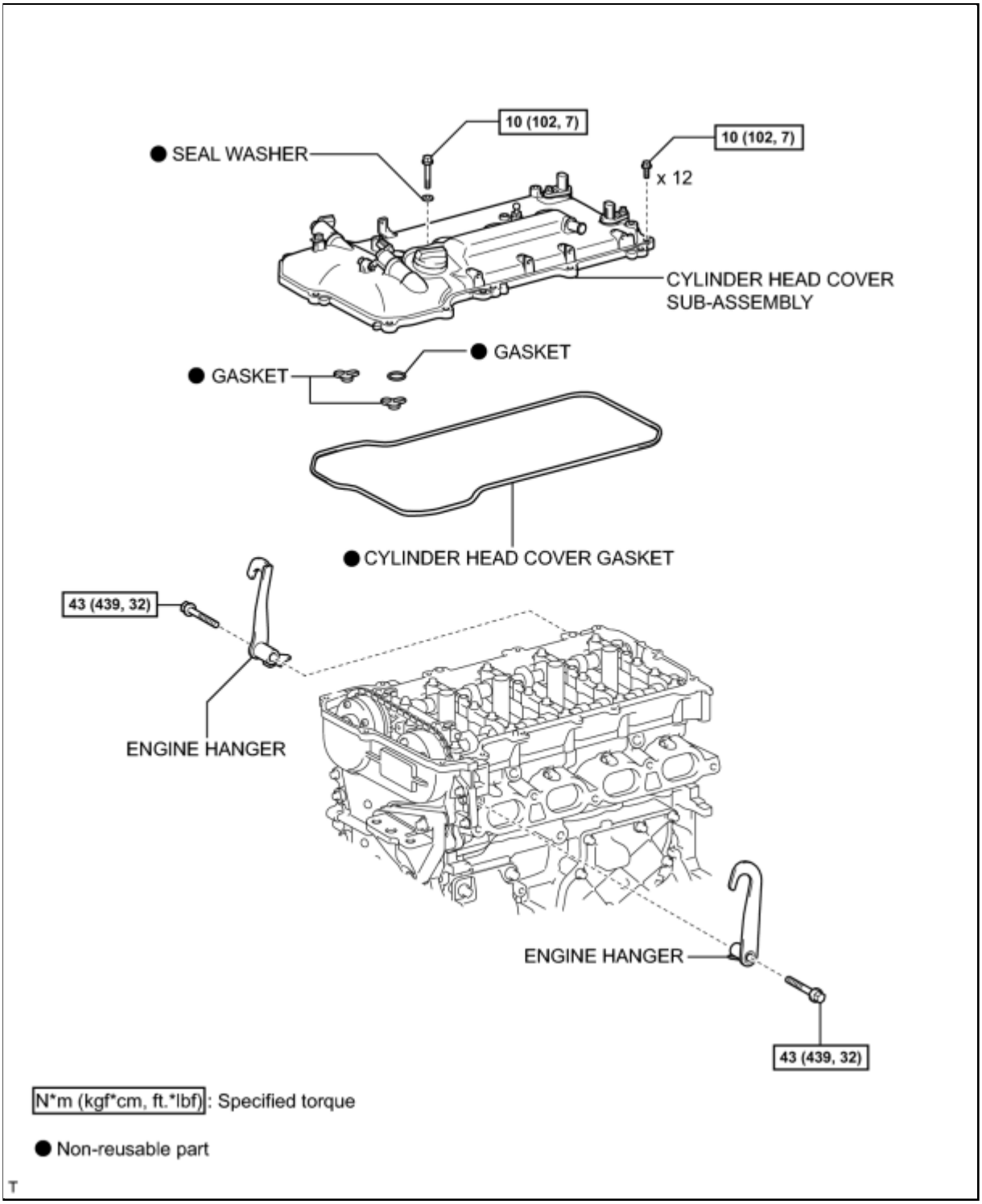

ILLUSTRATION

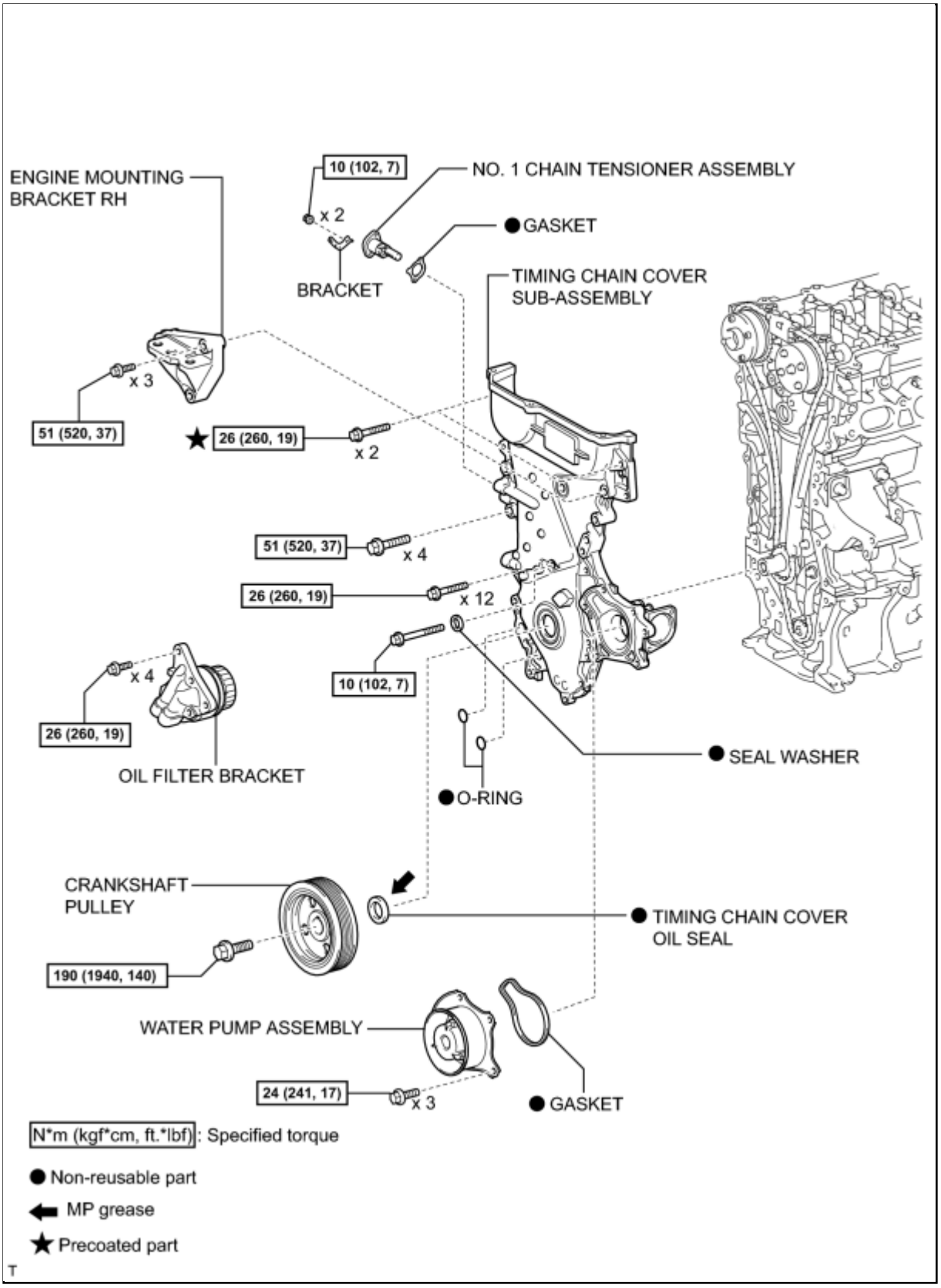

ILLUSTRATION

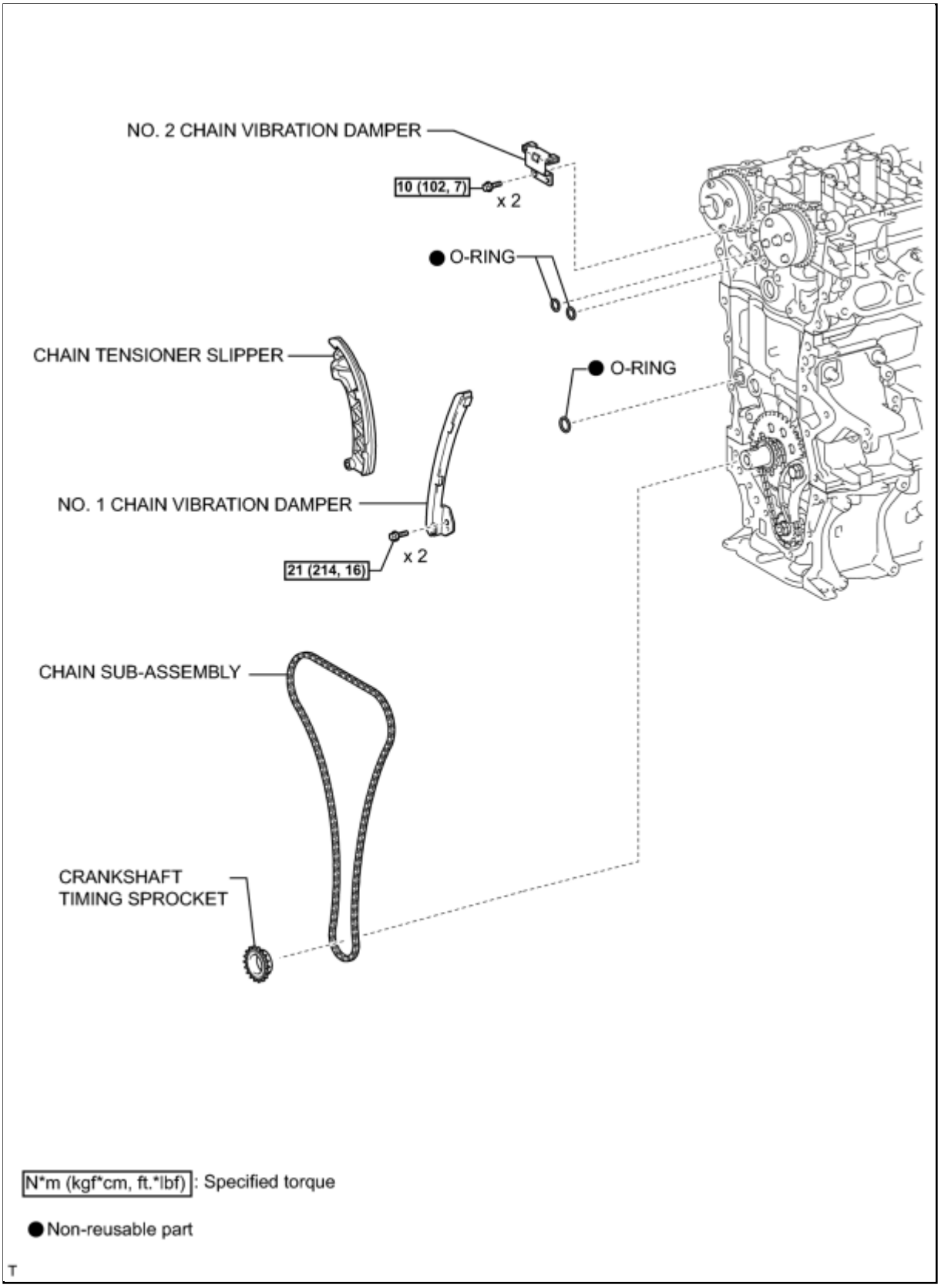

ILLUSTRATION

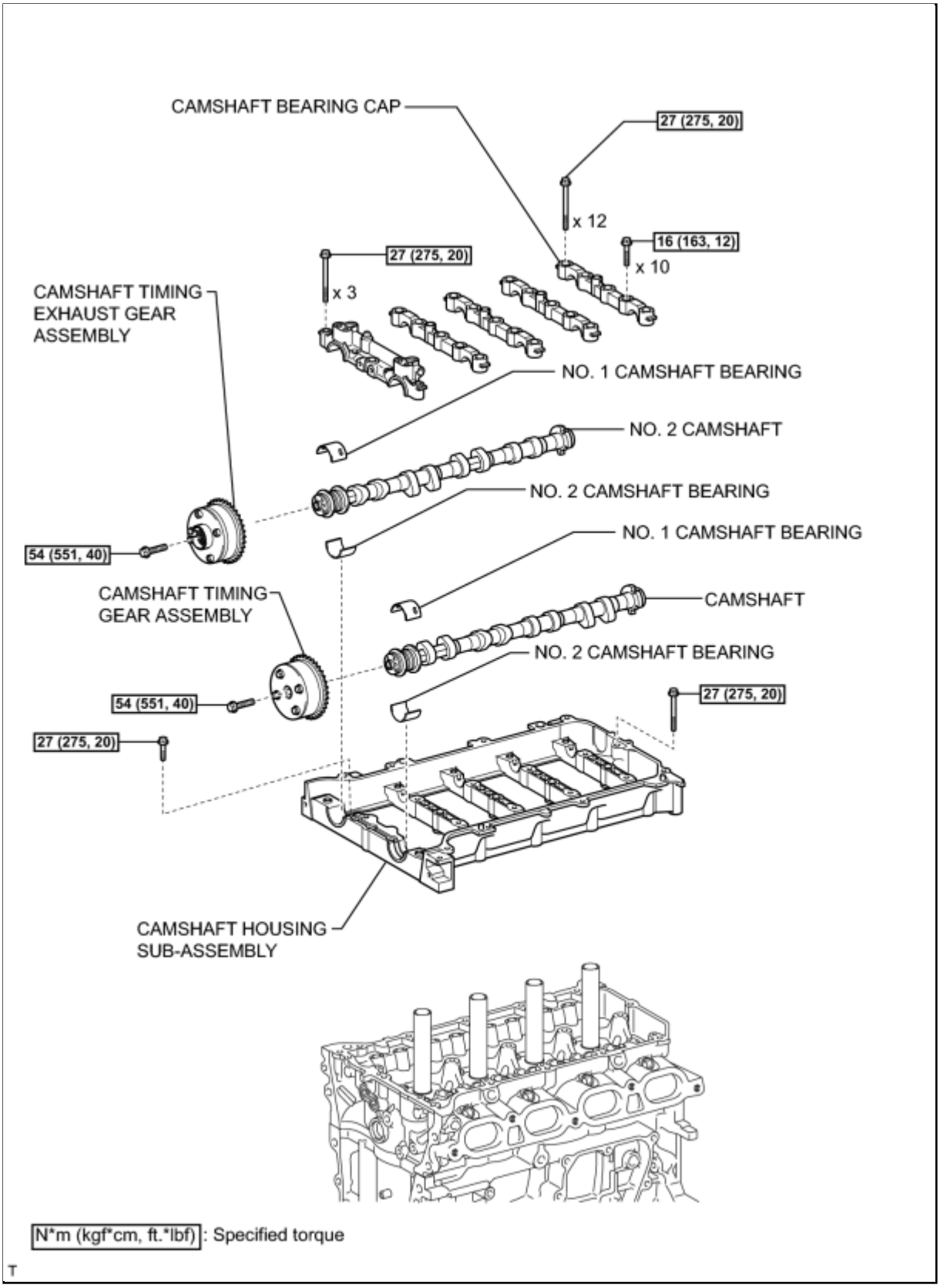
CAMSHAFT BEARING CAP
27 (275, 20)
x 12
16 (163, 12)
x 10
27 (275, 20)
x 3
CAMSHAFT TIMING EXHAUST GEAR ASSEMBLY
NO. 1 CAMSHAFT BEARING
NO. 2 CAMSHAFT
NO. 2 CAMSHAFT BEARING
NO. 1 CAMSHAFT BEARING
54 (551, 40)
CAMSHAFT TIMING GEAR ASSEMBLY
CAMSHAFT
NO. 2 CAMSHAFT BEARING
54 (551, 40)
27 (275, 20)
27 (275, 20)
CAMSHAFT HOUSING SUB-ASSEMBLY
N*m (kgf*cm, ft.*lbf): Specified torque

T

Last Modified: 3-10-2010	6.4 A	**From:** 200901
Model Year: 2010	**Model:** Corolla	**Doc ID:** RM0000027I901HX
Title: 2ZR-FE ENGINE MECHANICAL: CAMSHAFT: INSTALLATION (2010 Corolla)		

INSTALLATION

1. INSTALL VALVE LASH ADJUSTER ASSEMBLY INFO

2. INSTALL NO. 1 VALVE ROCKER ARM SUB-ASSEMBLY INFO

3. INSTALL NO. 1 CAMSHAFT BEARING

(a) Clean both surfaces of the bearings.

(b) Install the 2 No. 1 camshaft bearings.

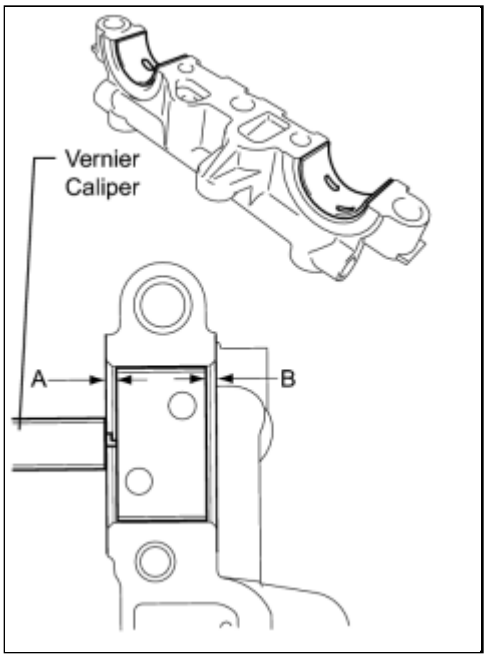

(c) Using a vernier caliper, measure the distance between the bearing cap edge and the camshaft bearing edge.

Dimension (A - B):
0.7 mm (0.0276 in.) or less

NOTICE:

Position the bearings to the center of the bearing cap by measuring dimensions A and B.

4. INSTALL NO. 2 CAMSHAFT BEARING

(a) Clean both surfaces of the bearings.

(b) Install the 2 No. 2 camshaft bearings.

(c) Using a vernier caliper, measure the distance between the bearing cap edge and the camshaft bearing edge.

Dimension (A):
1.05 to 1.75 mm (0.0413 to 0.0689 in.)

NOTICE:

Position the bearings to the center of the bearing cap by measuring dimension A.

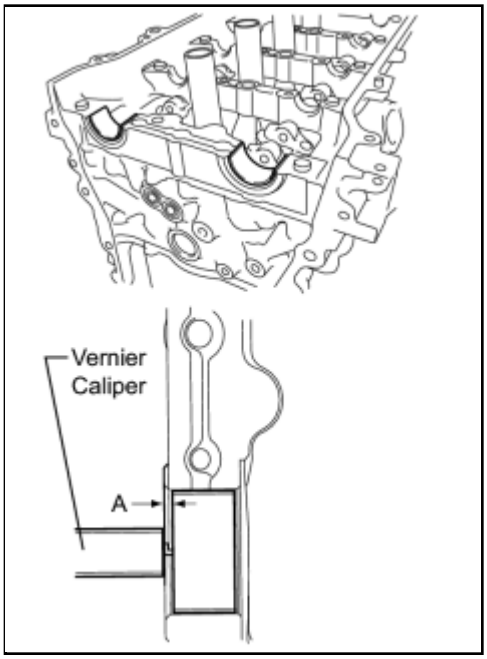

5. INSTALL NO. 2 CAMSHAFT

(a) Clean the camshaft journals.

(b) Apply a light coat of engine oil to the camshaft journals, camshaft housings and bearing caps.

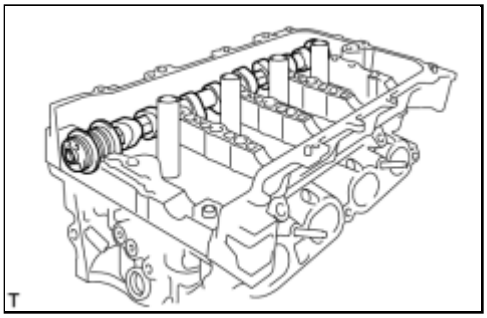

(c) Install the No. 2 camshaft to the camshaft housing.

6. INSTALL CAMSHAFT

(a) Clean the camshaft journals.

(b) Apply a light coat of engine oil to the camshaft journals, camshaft housings and bearing caps.

(c) Install the camshaft to the camshaft housing.

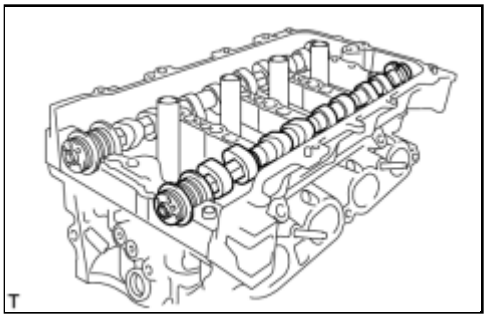

7. INSTALL CAMSHAFT BEARING CAP

(a) Apply engine oil to the camshaft journals, camshaft housings and bearing caps.

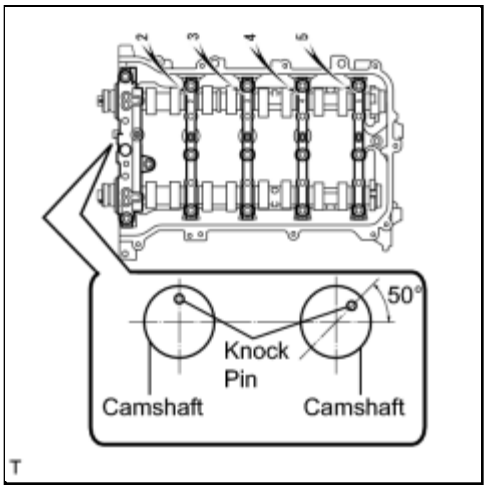

(b) Make sure of the marks and numbers on the camshaft bearing caps and place them in each proper position and direction.

HINT:

Make sure that the knock pin of the camshaft is positioned as shown in the illustration.

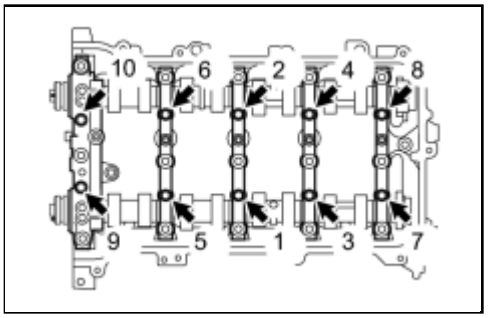

(c) Tighten the 10 bolts in the order shown in the illustration.

Torque: 16 N·m (163 kgf·cm, 12ft·lbf)

8. INSTALL CAMSHAFT HOUSING SUB-ASSEMBLY

(a) Make sure that the valve rocker arm is installed as shown in the illustration.

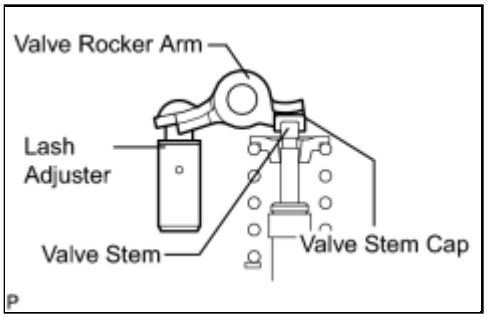

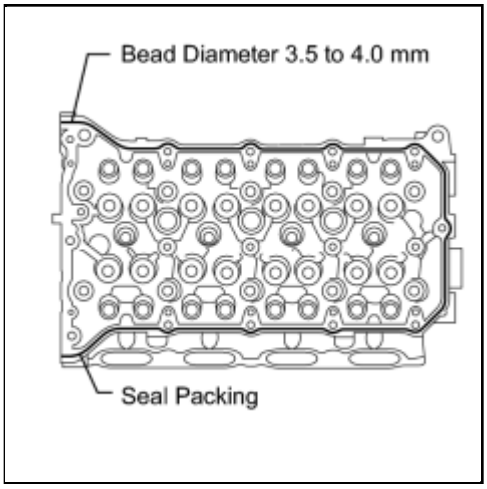

(b) Apply seal packing in a continuous bead as shown in the illustration.

Seal packing:

Toyota Genuine Seal Packing Black, Three Bond 1207B or equivalent

Bead diameter:

3.5 to 4.0 mm (0.138 to 0.158 in.)

NOTICE:

- Remove any oil from the contact surface.
- Install the camshaft housing sub-assembly within 3 minutes and tighten the bolts within 15 minutes after applying seal packing.
- Do not start the engine for at least 2 hours after installing.

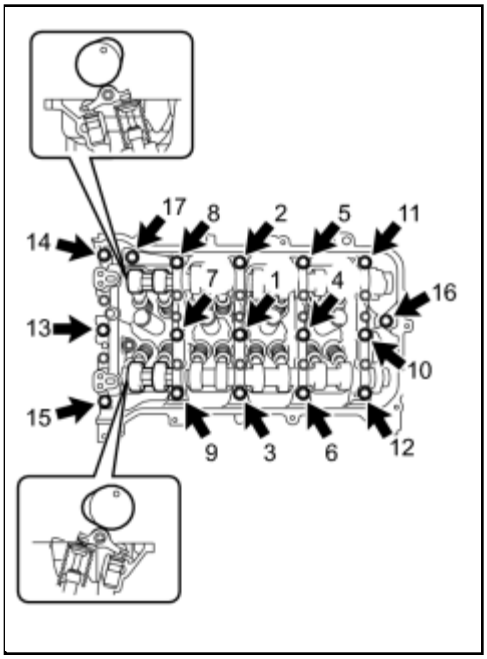

(c) Set the camshaft and No. 2 camshaft as shown in the illustration.

(d) Install the camshaft housing and tighten the 17 bolts in the order shown in the illustration.

Torque: 27 N·m (275 kgf·cm, 20ft·lbf)

NOTICE:

- After installing the camshaft housing, make sure that the cam lobes are positioned as shown in the illustration.
- If any of the bolts are loosened during installation, remove the camshaft housing, clean the installation surfaces, and reapply seal packing.
- If the camshaft housing is removed because any of the bolts are loosened during installation, make sure that the previously applied seal packing does not enter any oil passages.
- After installing the camshaft housing, wipe off any seal packing that seeped out from between the housing and the cylinder head.

9. INSTALL CAMSHAFT TIMING GEAR ASSEMBLY

(a) Check that the knock pin is installed on the camshaft.

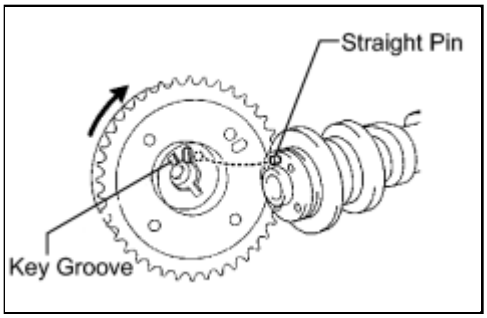

(b) Put the camshaft timing gear and camshaft together with the straight pin and key groove misaligned, as shown in the illustration.

NOTICE:

Do not forcefully push in the camshaft timing gear assembly. This may cause the camshaft knock pin tip to damage the installation surface of the camshaft timing gear assembly.

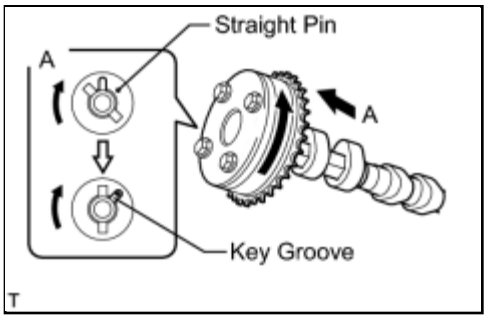

(c) Turn the camshaft timing gear as shown in the illustration while pushing it gently against the camshaft. Push further at the position where the pin fits into the groove.

NOTICE:

Do not turn the camshaft timing gear in the retard direction (clockwise).

(d) Measure the clearance between the gear and the camshaft flange.

Clearance:
0.1 to 0.4 mm (0.004 to 0.016 in.)

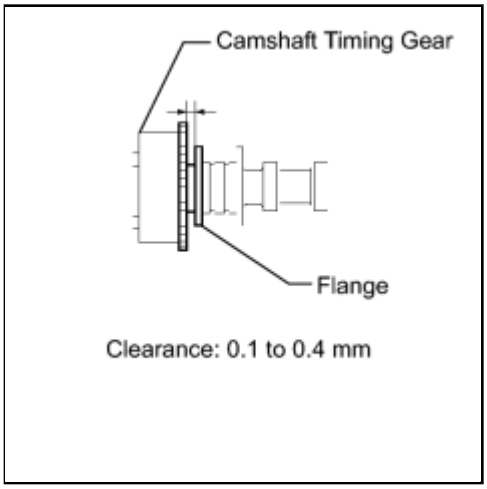

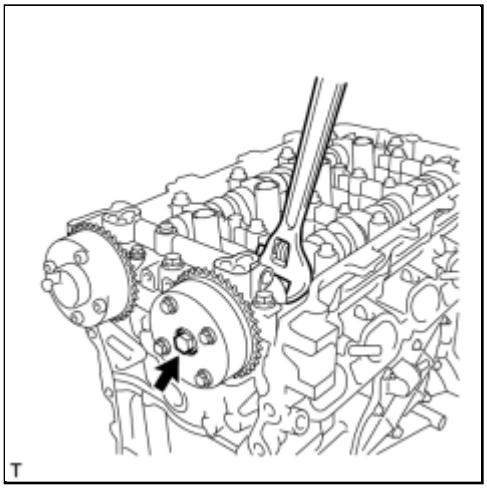

(e) Tighten the flange bolt with the camshaft timing gear secured in place.

Torque: 54 N·m (551 kgf·cm, 40ft·lbf)

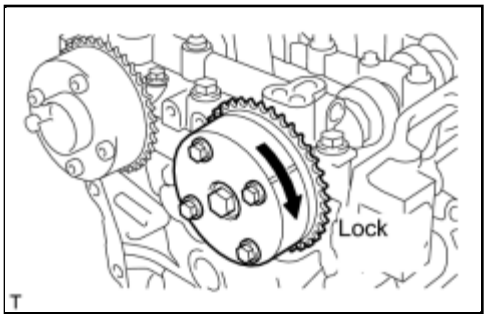

(f) Check that the camshaft timing gear can move in the retard direction (clockwise) and is locked in the most retarded position.

10. INSTALL CAMSHAFT TIMING EXHAUST GEAR ASSEMBLY

(a) Check that the knock pin is installed on the camshaft.

(b) Put the camshaft timing exhaust gear and camshaft together by aligning the key groove and straight pin.

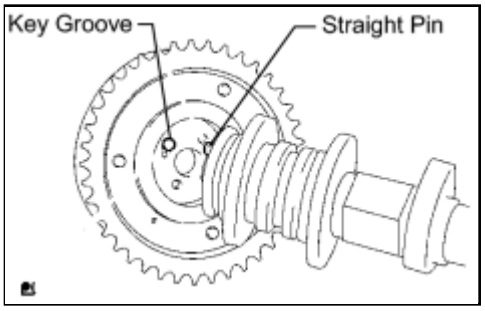

(c) Lightly press the gear against the camshaft, and turn the gear. Push further at the position where the pin enters the groove.

NOTICE:

Be sure not to turn the camshaft timing exhaust gear in the retard direction (clockwise).

(d) Check that there is no clearance between the gear and the camshaft flange.

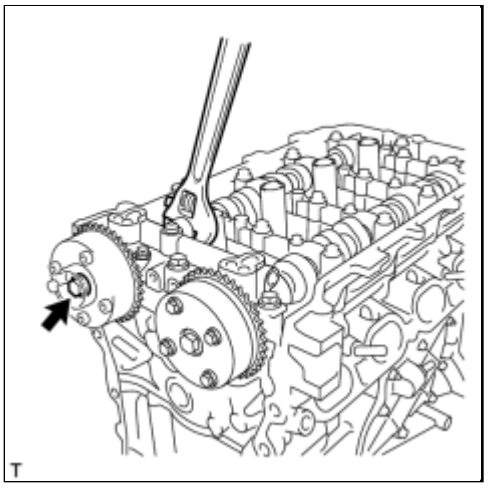

(e) Tighten the flange bolt with the camshaft timing exhaust gear secured.

Torque: 54 N·m (551 kgf·cm, 40ft·lbf)

(f) Check the camshaft timing exhaust gear lock.

(1) Make sure that the camshaft timing exhaust gear is locked.

11. INSTALL NO. 1 CHAIN VIBRATION DAMPER INFO

12. INSTALL NO. 2 CHAIN VIBRATION DAMPER INFO

13. INSTALL CHAIN SUB-ASSEMBLY INFO

14. INSTALL CHAIN TENSIONER SLIPPER INFO

15. INSTALL TIMING CHAIN COVER OIL SEAL INFO

16. INSTALL TIMING CHAIN COVER SUB-ASSEMBLY INFO

17. INSTALL CRANKSHAFT PULLEY INFO

18. INSTALL NO. 1 CHAIN TENSIONER ASSEMBLY INFO

19. INSTALL CYLINDER HEAD COVER SUB-ASSEMBLY INFO

20. INSTALL RADIO SETTING CONDENSER INFO

21. INSTALL THERMOSTAT INFO

22. INSTALL INLET WATER INFO

23. INSTALL INLET WATER HOSE INFO

24. INSTALL WATER BY-PASS HOSE INFO

25. INSTALL NO. 1 WATER BY-PASS PIPE INFO

26. CONNECT NO. 3 WATER BY-PASS HOSE

27. INSTALL VENTILATION HOSE INFO

28. INSPECT EXHAUST MANIFOLD INFO

29. INSTALL EXHAUST MANIFOLD INFO

30. INSTALL MANIFOLD STAY INFO

31. INSTALL NO. 1 EXHAUST MANIFOLD HEAT INSULATOR INFO

32. INSTALL OIL LEVEL DIPSTICK SUB-ASSEMBLY INFO

33. INSTALL IGNITION COIL ASSEMBLY INFO

34. INSTALL FUEL INJECTOR ASSEMBLY INFO

35. INSTALL NO. 1 DELIVERY PIPE SPACER INFO

36. INSTALL FUEL DELIVERY PIPE SUB-ASSEMBLY INFO

37. INSTALL FUEL TUBE SUB-ASSEMBLY INFO

38. INSTALL INTAKE MANIFOLD INFO

39. REMOVE ENGINE STAND INFO

40. INSTALL ENGINE ASSEMBLY WITH TRANSAXLE

HINT: INFO .

Last Modified: 3-10-2010	6.4 A	**From:** 200901
Model Year: 2010	**Model:** Corolla	**Doc ID:** RM0000027IB01HX
Title: 2ZR-FE ENGINE MECHANICAL: CAMSHAFT: REMOVAL (2010 Corolla)		

REMOVAL

1. REMOVE ENGINE ASSEMBLY WITH TRANSAXLE

HINT: INFO .

2. INSTALL ENGINE STAND INFO

3. REMOVE INTAKE MANIFOLD INFO

4. REMOVE FUEL TUBE SUB-ASSEMBLY INFO

5. REMOVE FUEL DELIVERY PIPE SUB-ASSEMBLY INFO

6. REMOVE FUEL INJECTOR ASSEMBLY INFO

7. REMOVE IGNITION COIL ASSEMBLY INFO

8. REMOVE OIL LEVEL DIPSTICK SUB-ASSEMBLY INFO

9. REMOVE NO. 1 EXHAUST MANIFOLD HEAT INSULATOR INFO

10. REMOVE MANIFOLD STAY INFO

11. REMOVE EXHAUST MANIFOLD INFO

12. REMOVE VENTILATION HOSE INFO

13. DISCONNECT NO. 3 WATER BY-PASS HOSE INFO

14. REMOVE NO. 1 WATER BY-PASS PIPE INFO

15. REMOVE WATER BY-PASS HOSE INFO

16. REMOVE INLET WATER HOSE INFO

17. REMOVE INLET WATER INFO

18. REMOVE THERMOSTAT INFO

19. REMOVE RADIO SETTING CONDENSER INFO

20. REMOVE CYLINDER HEAD COVER SUB-ASSEMBLY INFO

21. SET NO. 1 CYLINDER TO TDC/COMPRESSION INFO

22. REMOVE CRANKSHAFT PULLEY INFO

23. REMOVE NO. 1 CHAIN TENSIONER ASSEMBLY INFO

24. REMOVE TIMING CHAIN COVER SUB-ASSEMBLY INFO

25. REMOVE TIMING CHAIN COVER OIL SEAL INFO

26. REMOVE CHAIN TENSIONER SLIPPER INFO

27. REMOVE NO. 1 CHAIN VIBRATION DAMPER INFO

28. REMOVE CHAIN SUB-ASSEMBLY INFO

29. REMOVE NO. 2 CHAIN VIBRATION DAMPER INFO

30. INSPECT CAMSHAFT TIMING GEAR ASSEMBLY

(a) Inspect the lock of the camshaft timing gear.

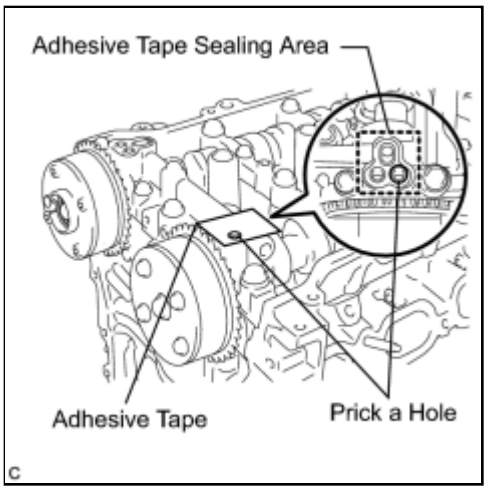

(b) After cleaning and degreasing the VVT oil hole on the intake side of the No. 1 camshaft bearing cap, completely seal the oil hole with adhesive tape or equivalent as shown in the illustration to prevent air from leaking.

NOTICE:

Be sure to cover the oil hole completely because air leaks due to insufficient sealing will prevent the lock pin from being released.

(c) Prick a hole in the tape covering the oil hole as shown in the illustration. (Procedure A)

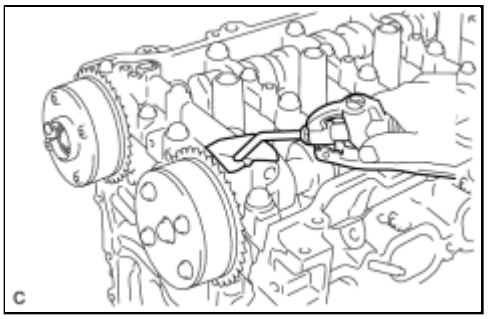

(d) Apply approximately 150 kPa (1.5 kgf/cm2, 22 psi) of air pressure to the hole pricked in procedure A to release the lock pin.

NOTICE:

- If air leaks out, reattach the adhesive tape.
- Cover the oil hole with a piece of cloth when applying air pressure to prevent oil from spraying.

(e) Forcibly turn the camshaft timing gear assembly in the advance direction (counterclockwise).

HINT:

Depending on the air pressure applied, the camshaft timing gear assembly may turn in the advance direction without assistance by hand.

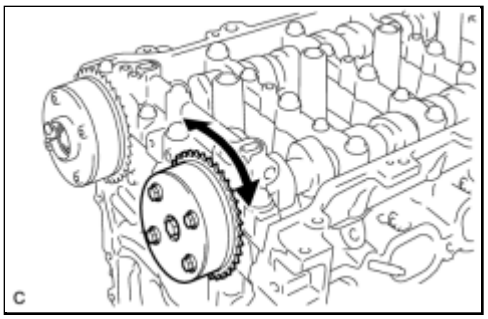

(f) Turn the camshaft timing gear assembly within its movable range (26.5 to 28.5°) 2 or 3 times without turning it to the most retarded position. Make sure that the camshaft timing gear assembly turns smoothly.

(g) Remove the adhesive tape from the No. 1 camshaft bearing cap.

31. INSPECT CAMSHAFT TIMING EXHAUST GEAR ASSEMBLY

(a) Check the lock of the camshaft timing exhaust gear.

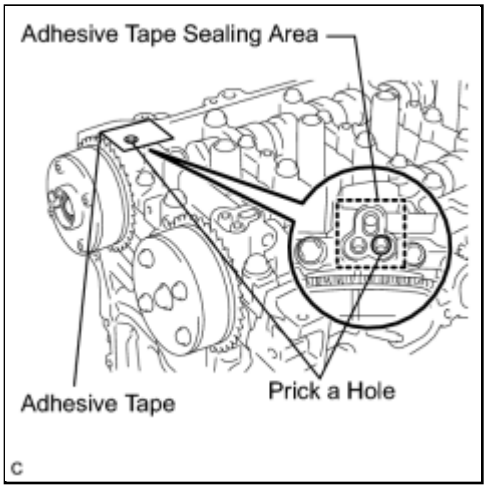

(b) After cleaning and degreasing the VVT oil hole on the exhaust side of the No. 1 camshaft bearing cap, completely seal the oil hole with adhesive tape or equivalent as shown in the illustration to prevent air from leaking.

NOTICE:

Be sure to cover the oil hole completely because air leaks due to insufficient sealing will prevent the lock pin from being released.

(c) Prick a hole in the tape covering the oil hole as shown in the illustration. (Procedure B)

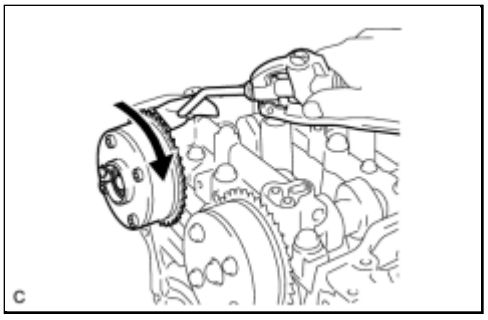

(d) Apply approximately 200 kPa (2.0 kgf/cm2, 28 psi) of air pressure to the hole pricked in procedure B to release the lock pin.

NOTICE:

- If air leaks out, reattach the adhesive tape.
- Cover the oil hole with a shop rag or a piece of cloth when applying air pressure to prevent oil from spraying.

(e) Using a screwdriver with its tip wrapped with tape, forcibly turn the camshaft timing exhaust gear in the retard direction (clockwise).

NOTICE:

- Be sure to keep the camshaft timing exhaust gear in the retard direction using a screwdriver. If

the gear is released, it will return to the most advanced position automatically due to force from the spring.

- Do not damage the camshaft timing exhaust gear.

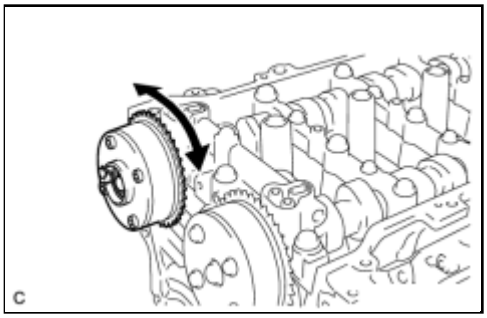

(f) Using a screwdriver with its tip wrapped with tape, turn the camshaft timing exhaust gear within its movable range (19 to 21°) 2 or 3 times without turning it to the most advanced position. Make sure that the camshaft timing exhaust gear turns smoothly.

(g) Remove the adhesive tape from the No. 1 camshaft bearing cap.

32. REMOVE CAMSHAFT TIMING GEAR ASSEMBLY

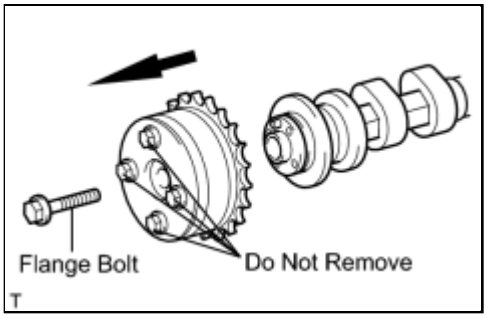

(a) Remove the flange bolt while holding the hexagonal portion of the camshaft, then remove the camshaft timing gear assembly.

NOTICE:

- Before removing the camshaft timing gear, make sure that the lock pin has been released.
- Be sure not to remove the other 4 bolts.
- Keep the camshaft timing gear assembly horizontal while removing it from the camshaft.

33. REMOVE CAMSHAFT TIMING EXHAUST GEAR ASSEMBLY

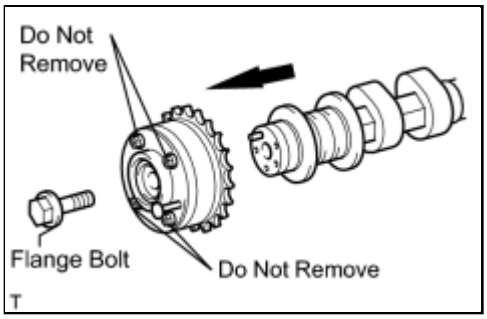

(a) Remove the flange bolt while holding the hexagonal portion of the camshaft, then remove the camshaft timing exhaust gear assembly.

NOTICE:

- Be sure not to remove the other 4 bolts.
- Keep the camshaft timing exhaust gear assembly horizontal while removing it from the camshaft.

34. REMOVE CAMSHAFT BEARING CAP

(a) Uniformly loosen and remove the 10 bearing cap bolts in the sequence shown in the illustration.

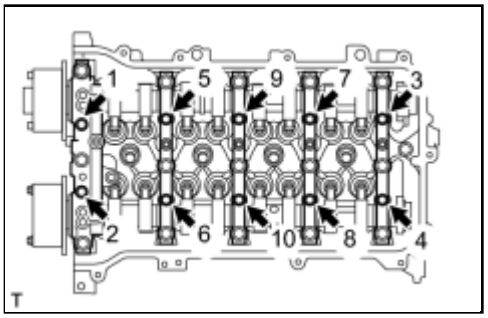

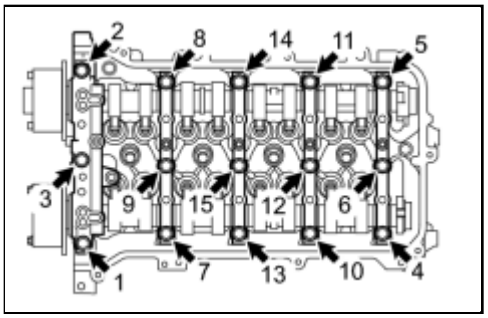

(b) Uniformly loosen and remove the 15 bearing cap bolts in the sequence shown in the illustration.

NOTICE:

Uniformly loosen the bolts while keeping the camshaft level.

(c) Remove the 5 bearing caps.

HINT:

Arrange the removed parts in the correct order.

35. REMOVE CAMSHAFT

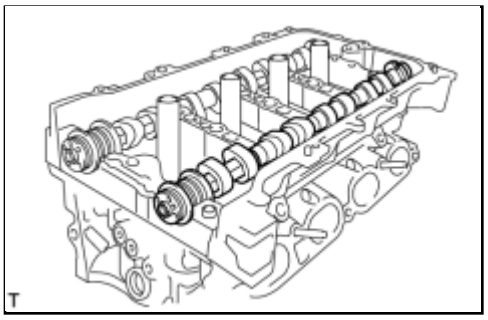

(a) Remove the camshaft.

36. REMOVE NO. 2 CAMSHAFT

(a) Remove the No. 2 camshaft.

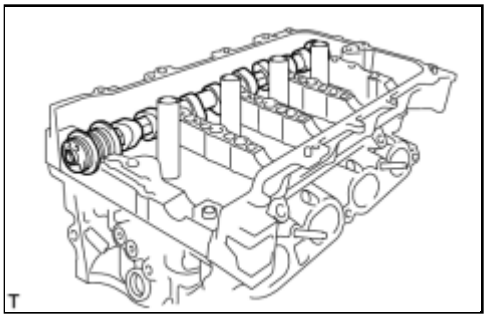

37. REMOVE NO. 1 VALVE ROCKER ARM SUB-ASSEMBLY INFO

38. REMOVE VALVE LASH ADJUSTER ASSEMBLY INFO

39. REMOVE NO. 1 CAMSHAFT BEARING

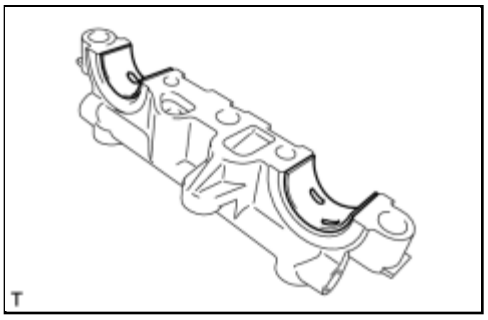

(a) Remove the 2 No. 1 camshaft bearings.

40. REMOVE NO. 2 CAMSHAFT BEARING

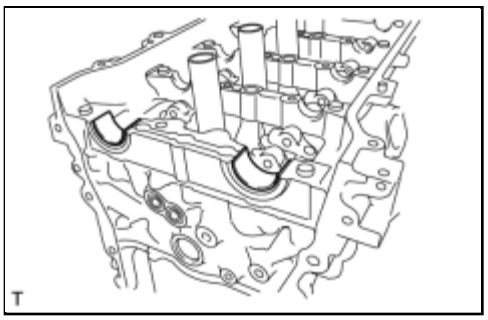

(a) Remove the 2 No. 2 camshaft bearings.

41. REMOVE CAMSHAFT HOUSING SUB-ASSEMBLY

(a) Remove the 2 bolts.

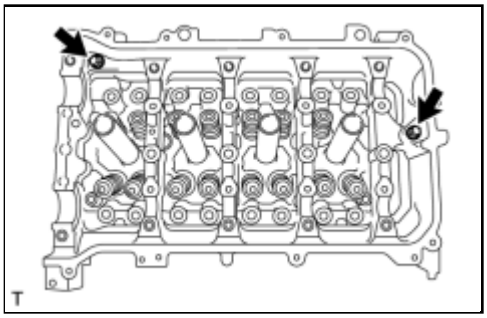

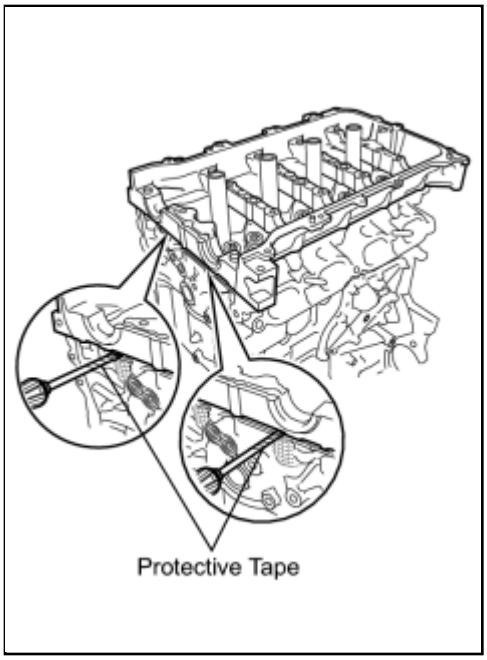

(b) Remove the camshaft housing by prying between the cylinder head and camshaft housing with a screwdriver.

NOTICE:

Be careful not to damage the contact surfaces of the cylinder head and camshaft housing.

HINT:

Tape the screwdriver tip before use.

42. INSPECT NO. 1 VALVE ROCKER ARM SUB-ASSEMBLY INFO

43. INSPECT VALVE LASH ADJUSTER ASSEMBLY INFO

Last Modified: 3-10-2010	6.4 G	**From:** 200901
Model Year: 2010	**Model:** Corolla	**Doc ID:** RM0000026TQ019X
Title: 2AZ-FE ENGINE MECHANICAL: CYLINDER BLOCK: INSPECTION (2010 Corolla)		

INSPECTION

1. INSPECT CONNECTING ROD THRUST CLEARANCE

(a) Install the connecting rod cap INFO .

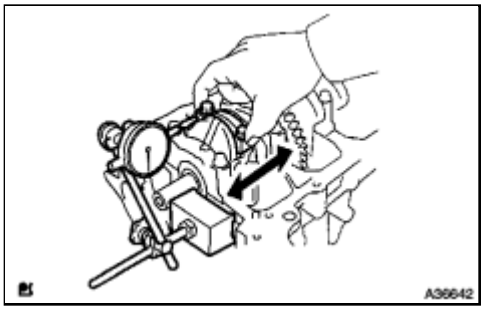

(b) Using a dial indicator, measure the thrust clearance while moving the connecting rod back and forth.

Standard thrust clearance:
0.160 to 0.362 mm (0.00630 to 0.0143 in.)
Maximum thrust clearance:
0.362 mm (0.0143 in.)

If the thrust clearance is greater than the maximum, replace the connecting rod assemblies as necessary. If necessary, replace the crankshaft.

2. INSPECT CONNECTING ROD OIL CLEARANCE

(a) Clean the crank pin and bearing.

(b) Check the crank pin and bearing for pitting and scratches.

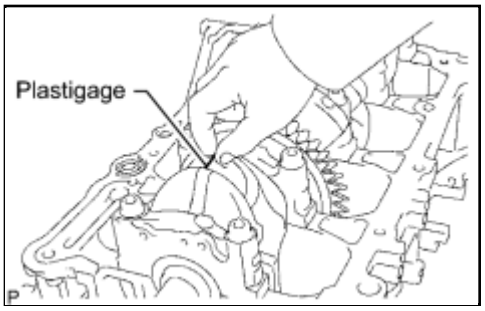

(c) Lay a strip of Plastigage on the crank pin.

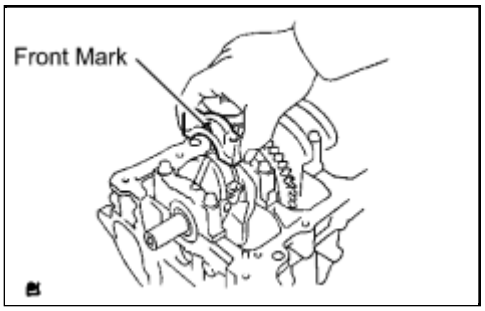

(d) Check that the front mark of the connecting rod cap is facing forward.

(e) Install the connecting rod cap INFO .

NOTICE:

Do not turn the crankshaft.

(f) Remove the 2 bolts and connecting rod cap INFO .

(g) Measure the Plastigage at its widest point.

Standard oil clearance:
0.024 to 0.048 mm (0.000945 to 0.00189 in.)
Maximum oil clearance:
0.063 mm (0.00248 in.)

NOTICE:

Completely remove the Plastigage after the measurement.

If the oil clearance is greater than the maximum, replace the connecting rod bearings. If necessary, inspect the crankshaft.

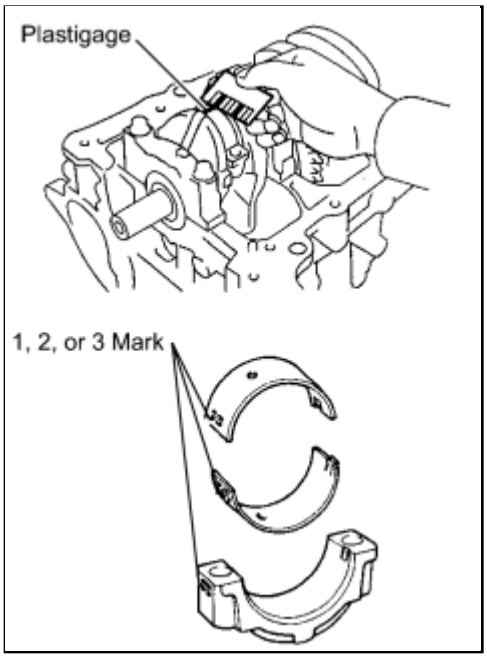

HINT:

If replacing a bearing, replace it with one that has the same number as its respective connecting rod cap. Each bearing's standard thickness is indicated by a 1, 2, or 3 mark on its surface.

Standard Connecting Rod Large End Bore Diameter:

MARK	SPECIFIED CONDITION
Mark 1	51.000 to 51.007 mm (2.0079 to 2.0082 in.)
Mark 2	51.008 to 51.013 mm (2.0082 to 2.0084 in.)
Mark 3	51.014 to 51.020 mm (2.0084 to 2.0087 in.)

Standard Connecting Rod Bearing Thickness:

MARK	SPECIFIED CONDITION
Mark 1	1.485 to 1.488 mm (0.0585 to 0.0586 in.)
Mark 2	1.489 to 1.491 mm (0.0586 to 0.0587 in.)
Mark 3	1.492 to 1.494 mm (0.0587 to 0.0588 in.)

Standard crankshaft pin diameter:
47.990 to 48.000 (1.8894 to 1.8898 in.)

3. INSPECT CYLINDER BLOCK FOR WARPAGE

(a) Using a precision straightedge and feeler gauge, measure the warpage of the surface that contacts the cylinder head

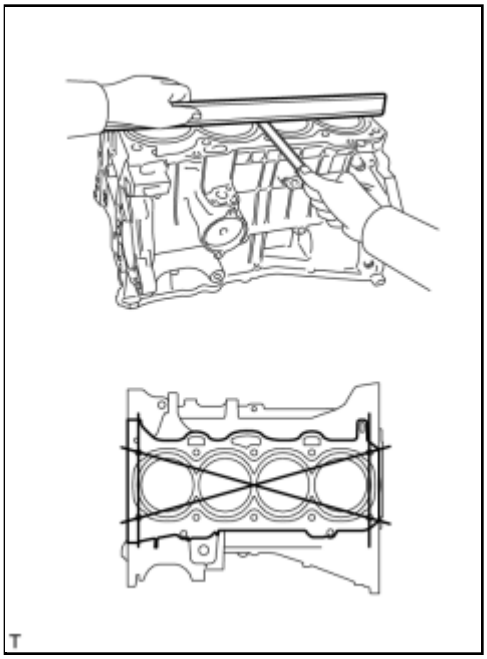

gasket.

Maximum warpage:
0.05 mm (0.00197 in.)

If the warpage is greater than the maximum, replace the cylinder block.

4. INSPECT CYLINDER BORE

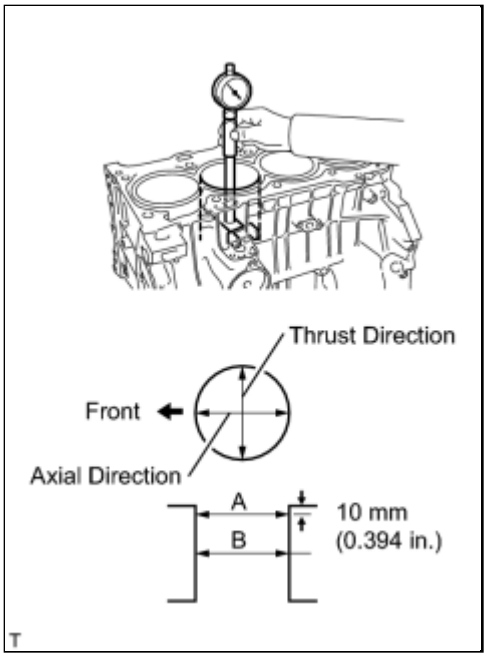

(a) Using a cylinder gauge, measure the cylinder bore diameter at positions A and B in the thrust and axial directions.

Standard diameter:
88.500 to 88.513 mm (3.4843 to 3.4847 in.)
Maximum diameter:
88.613 mm (3.4887 in.)

If the average diameter of the 4 positions is greater than the maximum, replace the cylinder block.

5. INSPECT PISTON

(a) Using a gasket scraper, remove the carbon from the top of the piston.

NOTICE:
Do not damage the piston.

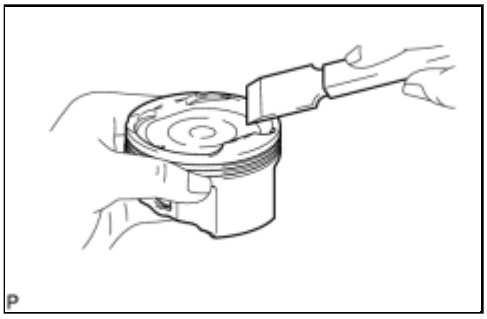

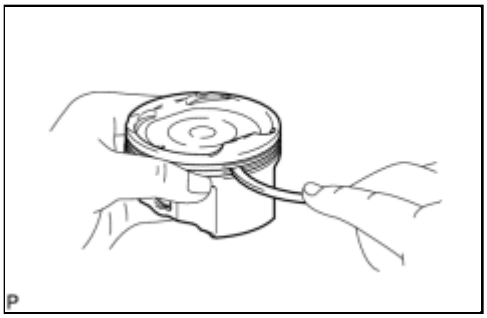

(b) Using a groove cleaning tool or a broken ring, clean the piston ring grooves.

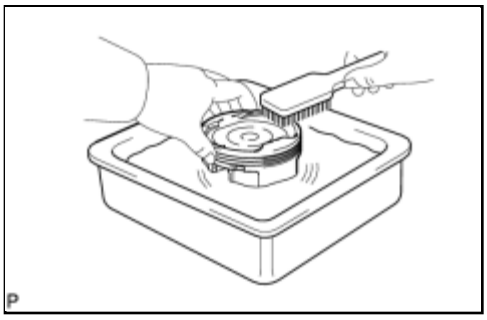

(c) Using a brush and solvent, thoroughly clean the piston.

NOTICE:

Do not use a wire brush.

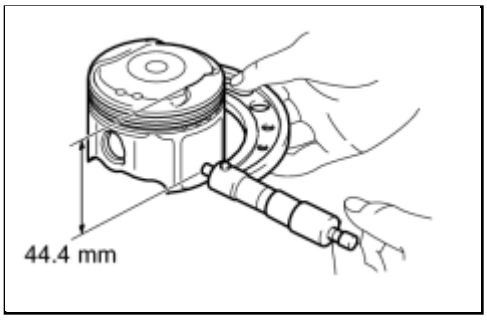

(d) Using a micrometer, measure the piston diameter at right angles to the piston pin hole, and at the piston 44.4 mm (1.748 in.) from the piston head.

Standard piston diameter:
88.469 to 88.479 mm (3.4830 to 3.4834 in.)

If the diameter is not as specified, replace the piston.

6. INSPECT PISTON OIL CLEARANCE

(a) Subtract the piston diameter measurement from the cylinder bore diameter measurement.

Standard oil clearance:
0.021 to 0.044 mm (0.000827 to 0.00173 in.)

Maximum oil clearance:
0.10 mm (0.00394 in.)

If the oil clearance is greater than the maximum, replace all the pistons. If necessary, replace the cylinder block.

7. INSPECT RING GROOVE CLEARANCE

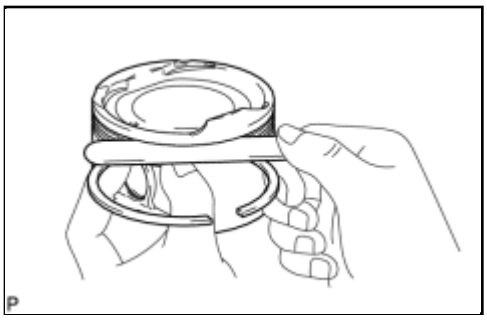

(a) Using a feeler gauge, measure the clearance between a new piston ring and the wall of the ring groove.

Standard Ring Groove Clearance:

ITEM	SPECIFIED CONDITION
No. 1 Ring	0.020 to 0.070 mm (0.000787 to 0.00276 in.)
No. 2 Ring	0.020 to 0.060 mm (0.000787 to 0.00236 in.)
Oil Ring	0.020 to 0.070 mm (0.000787 to 0.00276 in.)

If the groove clearance is not as specified, replace the piston.

8. INSPECT PISTON RING END GAP

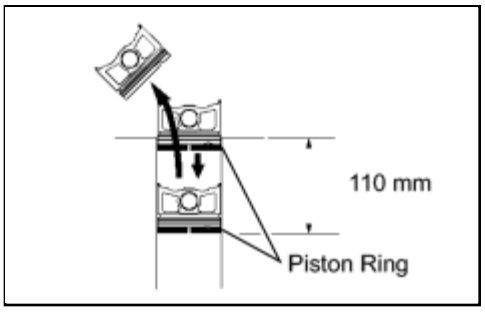

(a) Using a piston, push the piston ring a little beyond the bottom of the ring travel, 110 mm (4.33 in.) from the top of the cylinder block.

(b) Using a feeler gauge, measure the end gap.

Standard End Gap:

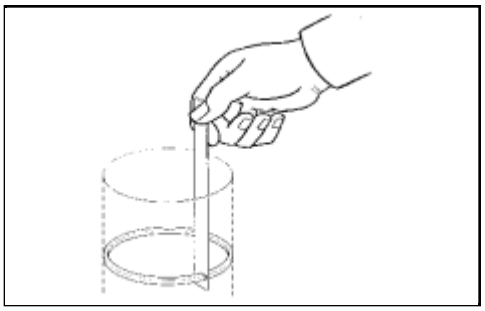

ITEM	SPECIFIED CONDITION
No. 1 Ring	0.24 to 0.31 mm (0.00945 to 0.0122 in.)
No. 2 Ring	0.33 to 0.43 mm (0.0130 to 0.0169 in.)
Oil Ring	0.10 to 0.30 mm (0.00394 to 0.0118 in.)

Maximum End Gap:

ITEM	SPECIFIED CONDITION
No. 1 Ring	0.31 mm (0.0122 in.)
No. 2 Ring	0.43 mm (0.0169 in.)
Oil Ring	0.30 mm (0.0118 in.)

If the end gap is greater than the maximum, replace the piston ring. If the end gap is greater than the maximum with a new piston ring, replace the cylinder block.

9. INSPECT PISTON PIN OIL CLEARANCE

(a) Using a caliper gauge, measure the piston pin bore diameter.

Standard piston pin bore diameter:
22.001 to 22.010 mm (0.8662 to 0.8665 in.)
:

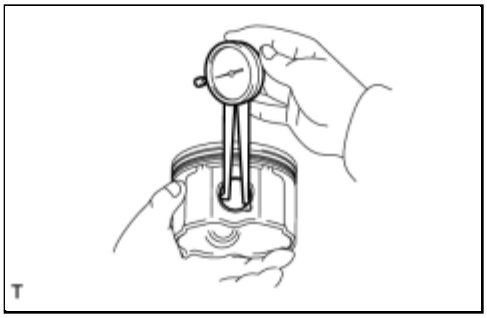

ITEM	SPECIFIED CONDITION
A	22.001 to 22.004 mm (0.8662 to 0.8663 in.)
B	22.005 to 22.007 mm (0.8663 to 0.8664 in.)
C	22.008 to 22.010 mm (0.8665 to 0.8665 in.)

If the diameter is not as specified, replace the piston.

(b) Using a micrometer, measure the piston pin diameter.

Standard piston pin diameter:
21.997 to 22.006 mm (0.8660 to 0.8664 in.)
:

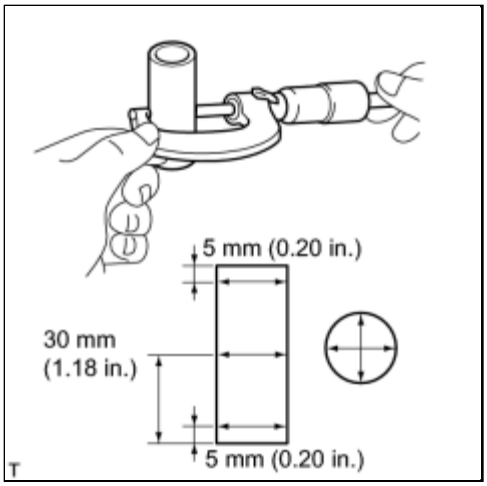

ITEM	SPECIFIED CONDITION
A	21.997 to 22.000 mm (0.8660 to 0.8661 in.)
B	22.001 to 22.003 mm (0.8662 to 0.8663 in.)
C	22.004 to 22.006 mm (0.8663 to 0.8664 in.)

If the diameter is not as specified, replace the piston pin.

(c) Using a caliper gauge, measure the connecting rod small end bore diameter.

Standard connecting rod small end bore diameter:
22.005 to 22.014 mm (0.8663 to 0.8667 in.)
:

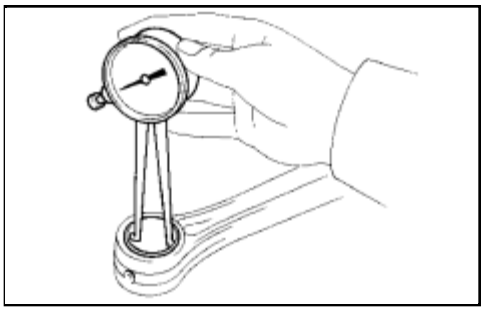

ITEM	SPECIFIED CONDITION
A	22.005 to 22.008 mm (0.8663 to 0.8665 in.)
B	22.009 to 22.011 mm (0.8665 to 0.8666 in.)
C	22.012 to 22.014 mm (0.8666 to 0.8667 in.)

If the diameter is not as specified, replace the connecting rod.

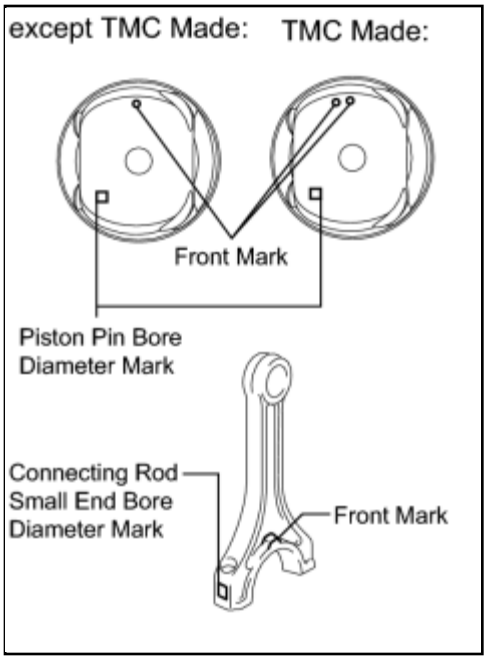

(d) Subtract the piston pin diameter measurement from the piston pin bore diameter measurement.

Standard oil clearance:
0.001 to 0.007 mm (0.00004 to 0.0003 in.)
Maximum oil clearance:
0.010 mm (0.0004 in.)

If the oil clearance is greater than the maximum, replace the connecting rod. If necessary, replace the piston and piston pin as a set.

(e) Subtract the piston pin diameter measurement from the connecting rod small end bore diameter measurement.

Standard oil clearance:
0.005 to 0.011 mm (0.0002 to 0.0004 in.)
Maximum oil clearance:
0.011 mm (0.0004 in.)

If the oil clearance is greater than the maximum, replace the connecting rod. If necessary, replace the connecting rod and piston pin as a set.

10. INSPECT CONNECTING ROD BOLT

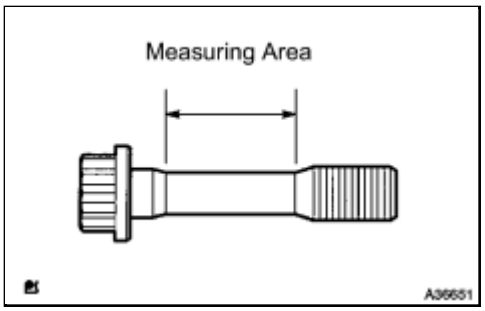

(a) Using a vernier caliper, measure the tension portion diameter of the bolt.

Standard diameter:
7.2 to 7.3 mm (0.283 to 0.287 in.)
Minimum diameter:
7.0 mm (0.276 in.)

If the diameter is less than the minimum, replace the connecting rod bolt.

11. INSPECT CONNECTING ROD SUB-ASSEMBLY

(a) Using a connecting rod aligner and feeler gauge, check the connecting rod alignment.

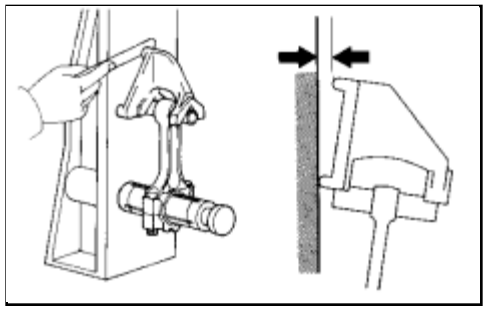

(1) Check for misalignment.

Maximum misalignment:
0.05 mm (0.0020 in.) per 100 mm (3.94 in.)

If the misalignment is greater than the maximum, replace the connecting rod.

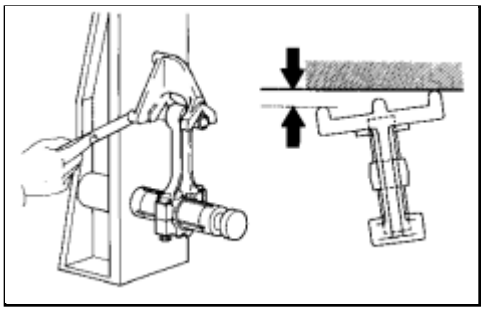

(2) Check for twist.

Maximum twist:
0.05 mm (0.0020 in.) per 100 mm (3.94 in.)

If the twist is greater than the maximum, replace the connecting rod.

12. INSPECT CRANKSHAFT

(a) Using a dial indicator and V-blocks, measure the circle runout as shown in the illustration.

Maximum circle runout:
0.03 mm (0.0012 in.)

If the circle runout is greater than the maximum, replace

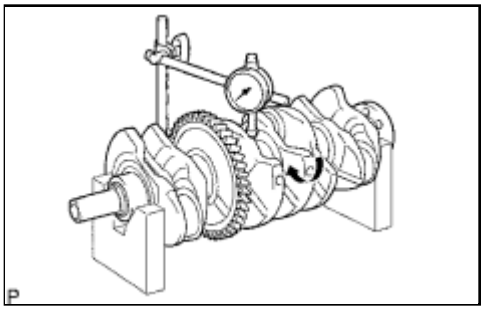

the crankshaft.

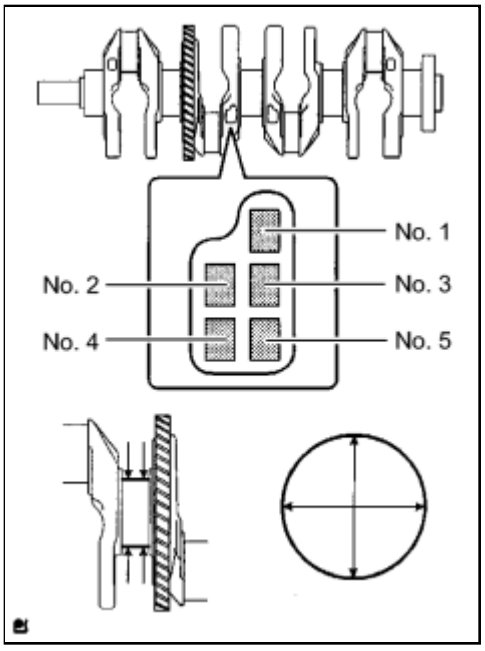

(b) Using a micrometer, measure the diameter of each main journal.

Standard diameter:
54.988 to 55.000 mm (2.1649 to 2.1654 in.)

If the diameter is not as specified, check the crankshaft oil clearance.

(c) Check each main journal for taper and distortion as shown in the illustration.

Maximum taper and distortion:
0.003 mm (0.0001 in.)

If the taper and distortion are greater than the maximum, replace the crankshaft.

Standard Diameter (Reference):

MARK	SPECIFIED CONDITION
0	54.999 to 55.000 mm (2.16531 to 2.16535 in.)
1	54.997 to 54.998 mm (2.16523 to 2.16527 in.)
2	54.995 to 54.996 mm (2.16515 to 2.16519 in.)
3	54.993 to 54.994 mm (2.16507 to 2.16511 in.)
4	54.991 to 54.992 mm (2.16500 to 2.16503 in.)
5	54.988 to 54.990 mm (2.1649 to 2.1650 in.)

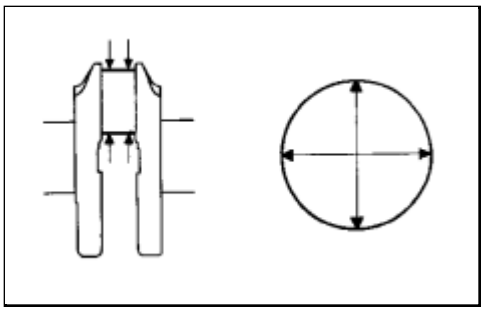

(d) Using a micrometer, measure the diameter of each crank pin.

Standard diameter:
47.990 to 48.000 mm (1.8894 to 1.8898 in.)

If the diameter is not as specified, check the connecting rod oil clearance.

(e) Inspect each crank pin for taper and distortion as shown in the illustration.

Maximum taper and distortion:
0.003 mm (0.000118 in.)

If the taper and distortion are greater than the maximum, replace the crankshaft.

13. INSPECT CRANKSHAFT THRUST CLEARANCE

(a) Install the main bearing cap INFO .

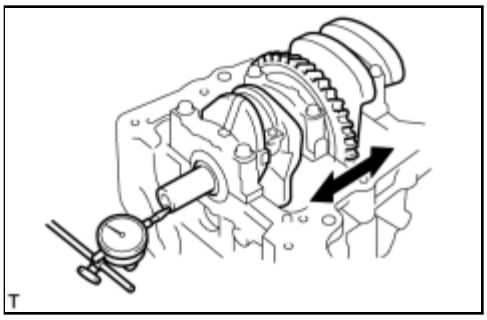

(b) Using a dial indicator, measure the thrust clearance while prying the crankshaft back and forth with a screwdriver.

Standard thrust clearance:
0.04 to 0.24 mm (0.00157 to 0.00945 in.)
Maximum thrust clearance:
0.30 mm (0.0118 in.)

If the thrust clearance is greater than the maximum, replace the thrust washers as a set.

HINT:

The thrust washer thickness is 1.93 to 1.98 mm (0.0760 to 0.0780 in.).

14. INSPECT CRANKSHAFT OIL CLEARANCE

(a) Check the crank journal and bearing for pitting and scratches.

(b) Install the crankshaft bearing INFO .

(c) Place the crankshaft on the cylinder block.

(d) Lay a strip of Plastigage across each journal.

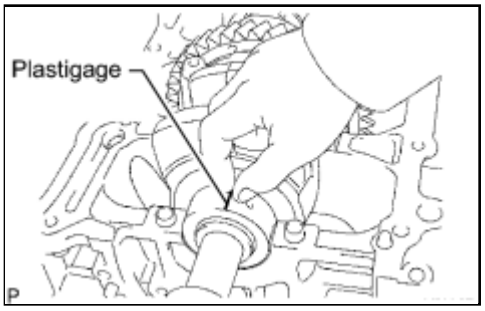

(e) Examine the front marks and numbers and install the bearing caps on the cylinder block.

HINT:

A number is marked on each main bearing cap to indicate the installation position.

(f) Install the main bearing caps INFO .

NOTICE:

Do not turn the crankshaft.

(g) Remove the main bearing caps INFO .

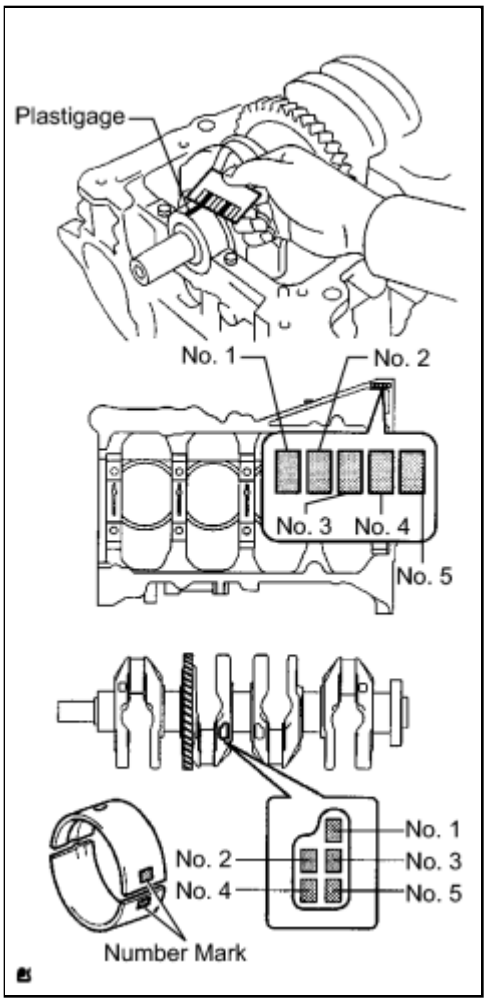

(h) Measure the Plastigage at its widest point.

Standard oil clearance:
0.017 to 0.040 mm (0.000669 to 0.00157 in.)
Maximum oil clearance:
0.060 mm (0.00236 in.)

NOTICE:

Remove the Plastigage completely after the measurement.

If the oil clearance is greater than the maximum, replace the crankshaft bearing. If necessary, replace the crankshaft.

HINT:

- If replacing a bearing, select a new one with the same number. If the number of the bearing cannot be determined, calculate the correct bearing number by adding together the numbers imprinted on the cylinder block and crankshaft. Then select a new bearing with the calculated number. There are 4 sizes of standard bearings, marked "1", "2", "3" and "4" accordingly.
- EXAMPLE: Cylinder block "3" + Crankshaft "5" = Total number 8 (Use bearing "3")

Cylinder block + Crankshaft	0 to 2	3 to 5	6 to 8	9 to 11
Bearing to be used	"1"	"2"	"3"	"4"

Standard Cylinder Block Journal Bore Diameter:

MARK	SPECIFIED CONDITION
0	59.000 to 59.002 mm (2.32283 to 2.32291 in.)
1	59.003 to 59.004 mm (2.32295 to 2.32299 in.)
2	59.005 to 59.006 mm (2.32303 to 2.32307 in.)
3	59.007 to 59.009 mm (2.32311 to 2.32318 in.)
4	59.010 to 59.011 mm (2.32322 to 2.32326 in.)
5	59.012 to 59.013 mm (2.32330 to 2.32334 in.)
6	59.014 to 59.016 mm (2.32338 to 2.32346 in.)

Standard Crankshaft Journal Diameter:

MARK	SPECIFIED CONDITION
0	54.999 to 55.000 mm (2.16531 to 2.16535 in.)
1	54.997 to 54.998 mm (2.16523 to 2.16527 in.)
2	54.995 to 54.996 mm (2.16515 to 2.16519 in.)
3	54.993 to 54.994 mm (2.16507 to 2.16511 in.)
4	54.991 to 54.992 mm (2.16500 to 2.16504 in.)
5	54.988 to 54.990 mm (2.16488 to 2.16496 in.)

Standard Bearing Center Wall Thickness:

MARK	SPECIFIED CONDITION
1	1.993 to 1.996 mm (0.078464 to 0.078583 in.)
2	1.997 to 1.999 mm (0.078622 to 0.078701 in.)
3	2.000 to 2.002 mm (0.078740 to 0.078819 in.)
4	2.003 to 2.005 mm (0.078858 to 0.078937 in.)

15. INSPECT CRANKSHAFT BEARING CAP SET RING PIN

(a) Using a vernier caliper, measure the tension portion diameter of the bolts.

Standard diameter:
7.5 to 7.6 mm (0.295 to 0.299 in.)
Minimum diameter:
7.5 mm (0.295 in.)

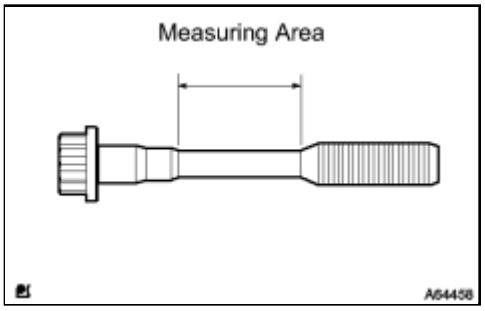

If the diameter is less than the minimum, replace the bolt.

Last Modified: 3-10-2010	6.4 A	**From:** 200901
Model Year: 2010	**Model:** Corolla	**Doc ID:** RM00000224E00CX
Title: 2AZ-FE ENGINE MECHANICAL: CYLINDER BLOCK: REASSEMBLY (2010 Corolla)		

REASSEMBLY

1. INSTALL RING PIN

(a) Using a plastic hammer, tap in the ring pins.

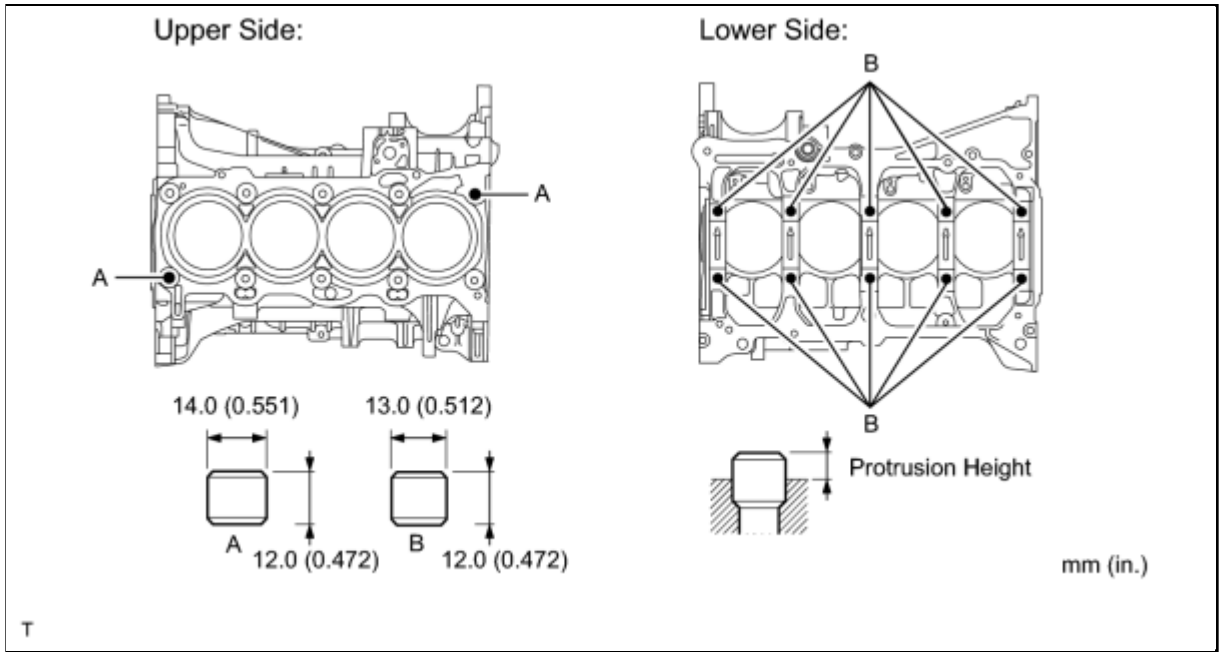

Standard Protrusion:

ITEM	PROTRUSION
A	6 mm (0.236 in.)
B	5 mm (0.197 in.)

2. INSTALL STUD BOLT

(a) Install the stud bolts as shown in the illustration.

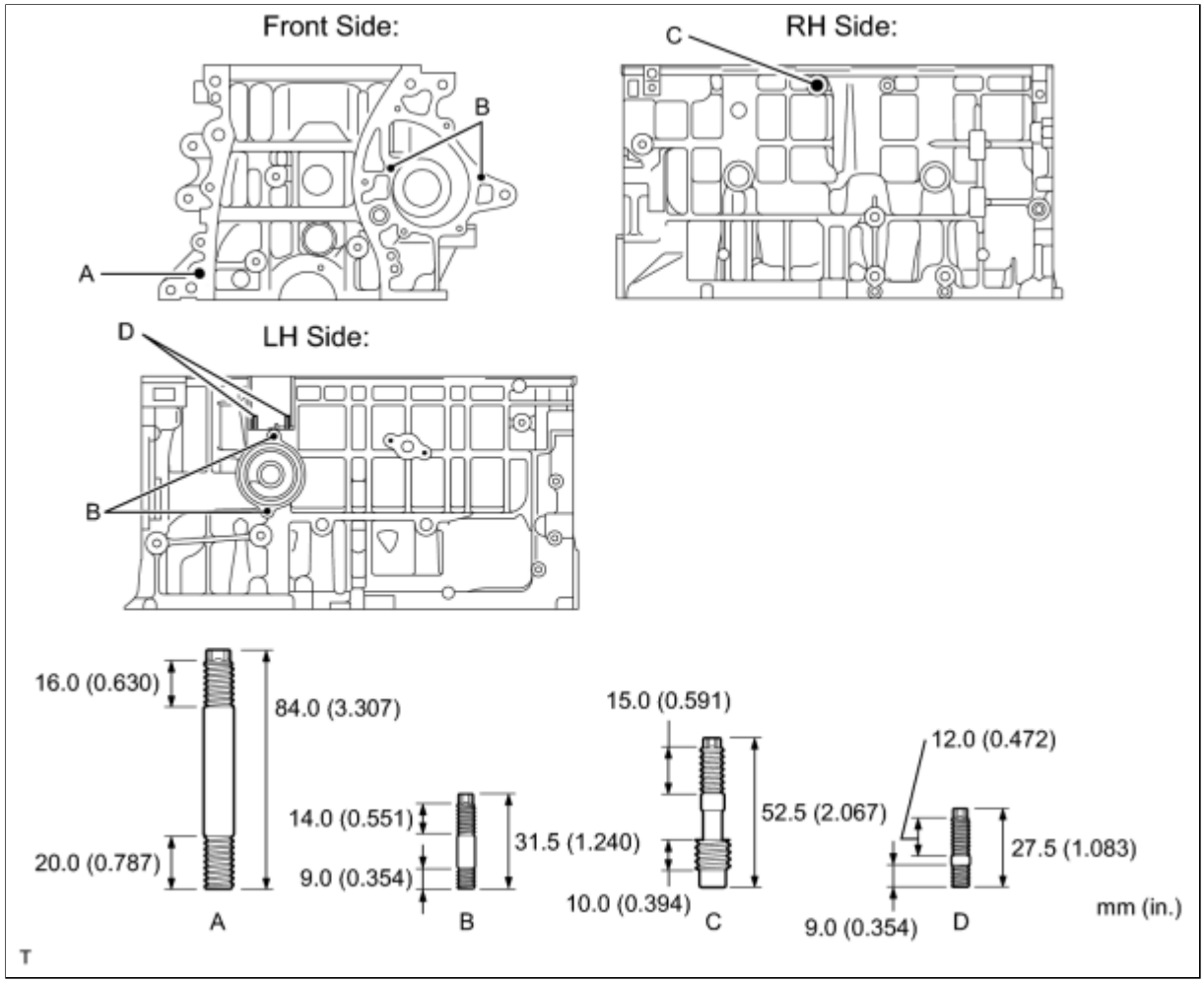

Stud Bolt A - Torque: 22 N·m (220 kgf·cm, 16ft·lbf)
Stud Bolt B - Torque: 5.0 N·m (51 kgf·cm, 44in·lbf)
Stud Bolt C - Torque: 9.5 N·m (97 kgf·cm, 84in·lbf)
Stud Bolt D - Torque: 5.0 N·m (51 kgf·cm, 44in·lbf)

3. INSTALL STRAIGHT PIN

(a) Using a plastic hammer, tap in the straight pins.

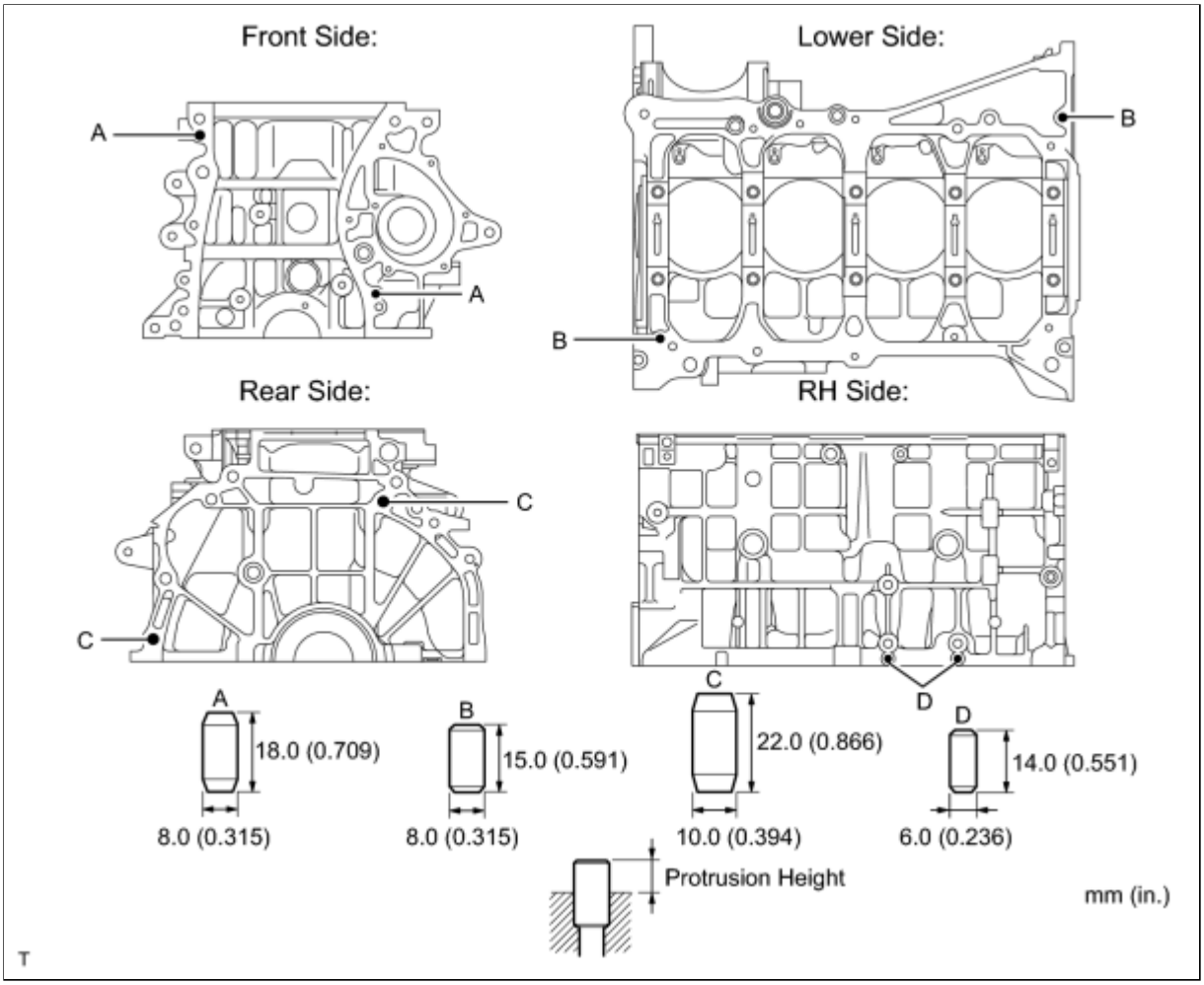

Standard Protrusion:

ITEM	PROTRUSION
A	8 mm (0.315 in.)
B	7.5 mm (0.295 in.)
C	12 mm (0.472 in.)
D	5 mm (0.197 in.)

4. INSPECT CRANKSHAFT OIL CLEARANCE INFO

5. INSTALL NO. 1 OIL NOZZLE SUB-ASSEMBLY

(a) Using a 5 mm hexagon wrench, install the oil nozzles with the bolts.

Torque: 7.0 N·m (71 kgf·cm, 62in·lbf)

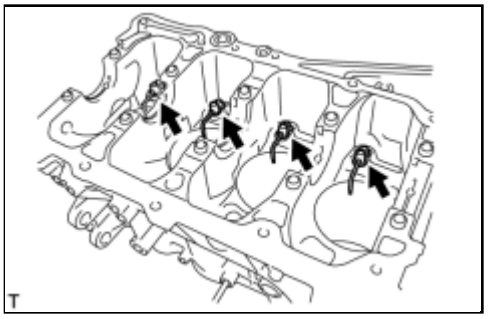

6. INSTALL PISTON

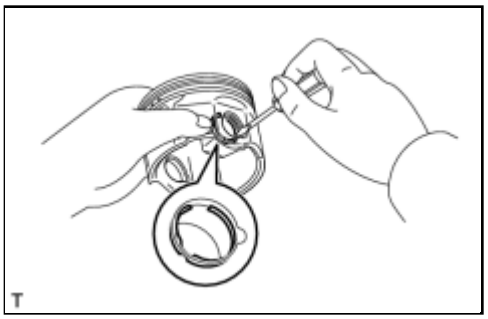

(a) Using a screwdriver, install a new snap ring at one end of the piston pin hole.

HINT:

Make sure that the end gap on the snap ring is not aligned with the pin hole cutout portion of the piston.

(b) Gradually heat the piston to approximately 80 to 90 °C (176 to 194°F).

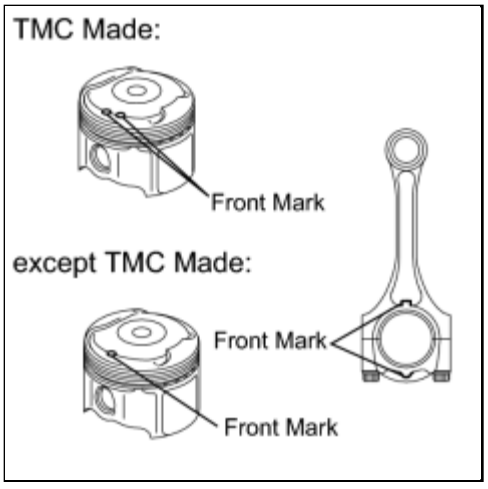

(c) Align the front marks on the piston and connecting rod, and push in the piston with a thumb.

(d) Using a screwdriver, install a new snap ring on the other end of the piston pin hole.

HINT:

Make sure that the end gap on the snap ring is not aligned with the pin hole cutout portion of the piston.

(e) Check the fitting condition between the piston and piston

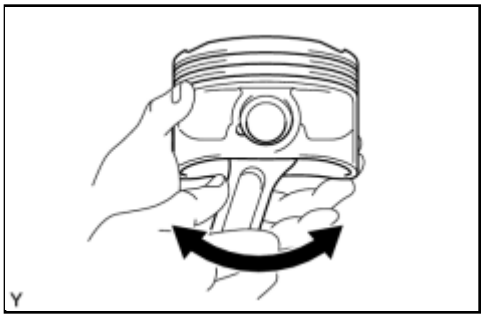

pin by trying to move the piston back and forth on the piston pin.

7. INSTALL PISTON RING SET

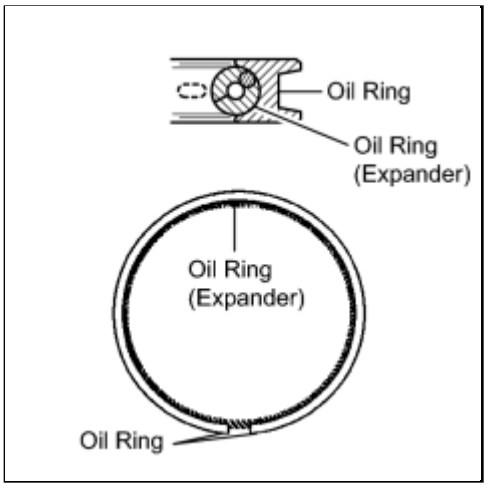

(a) Install the oil ring expander and oil ring rail by hand.

NOTICE:

- Install the expander and oil ring so that their ring ends are at opposite sides.
- Securely install the expander into the inner groove of the oil ring.

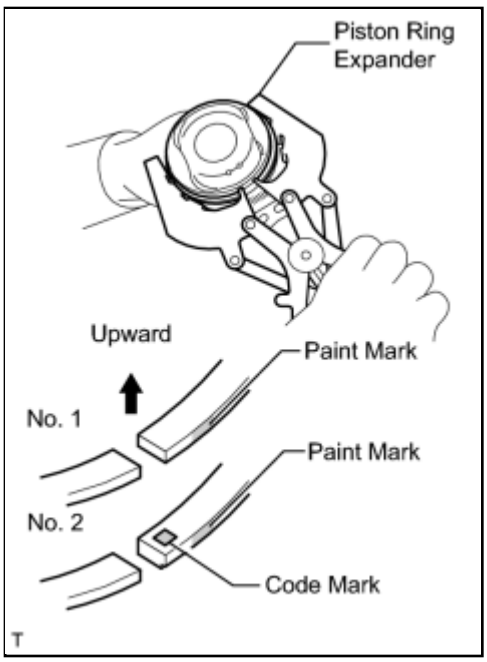

(b) Using a piston ring expander, install the 2 compression rings so that the paint marks are positioned as shown in the illustration.

NOTICE:

Install compression ring No. 2 with the code mark (2N or 2A) facing upward.

HINT:

Supply part compression springs (No. 1 and No. 2) do not have paint marks.

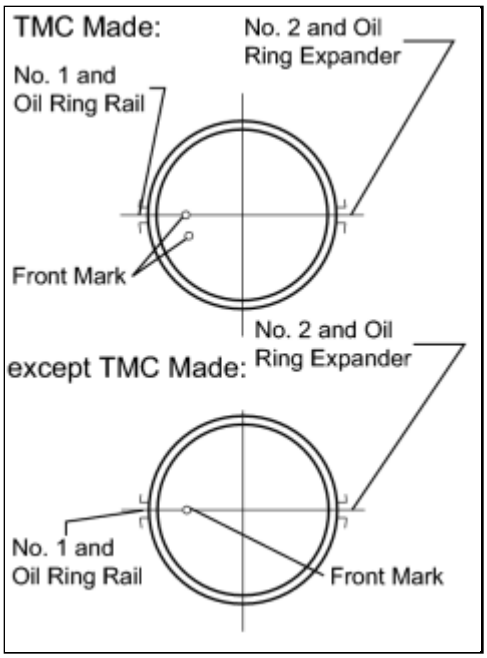

(c) Position the piston rings so that the ring ends are as shown in the illustration.

8. INSTALL CRANKSHAFT BEARING

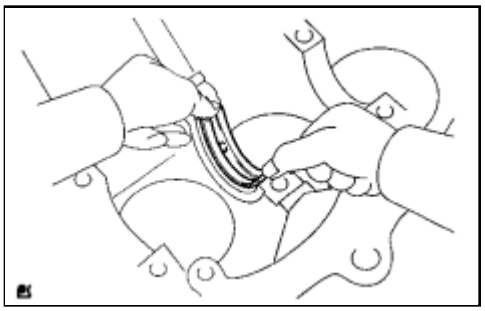

(a) Install the upper bearing with an oil groove on the cylinder block.

NOTICE:

Do not apply engine oil to the bearing inner surface or bearing cap contact surfaces.

9. INSTALL NO. 2 CRANKSHAFT BEARING

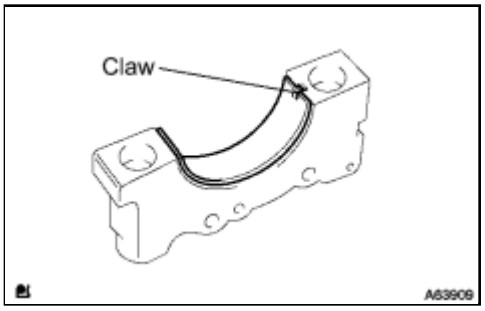

(a) Install the No. 2 crankshaft bearing on the bearing cap.

NOTICE:

Clean the backside of the bearing and the bearing surface of the connecting rod. The surface should be free of dust and oils.

10. INSTALL UPPER CRANKSHAFT THRUST WASHER

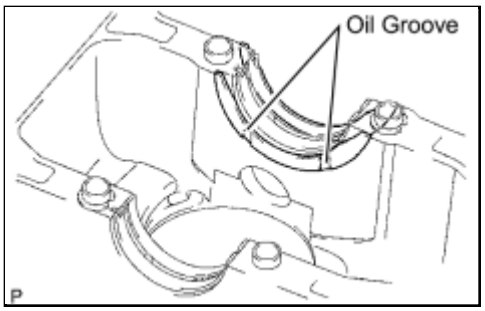

(a) Install the 2 thrust washers under the No. 3 journal of the cylinder block with the oil grooves facing outward.

NOTICE:

Make sure to install the proper thrust washers.

(b) Apply engine oil to the crankshaft thrust washers.

11. INSTALL CRANKSHAFT

(a) Apply engine oil to the upper bearings and place the crankshaft on the cylinder block.

(b) Apply engine oil to the lower bearings.

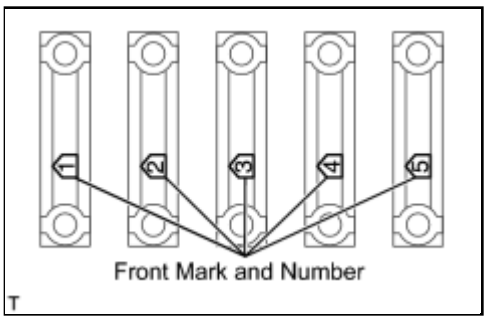

(c) Examine the front marks and install the bearing caps on the cylinder block.

(d) Apply a light coat of engine oil to the threads and under the bearing cap bolts.

(e) Install the crankshaft bearing cap bolts.

NOTICE:

The main bearing cap bolts are tightened in 2 progressive steps.

(f) Step 1

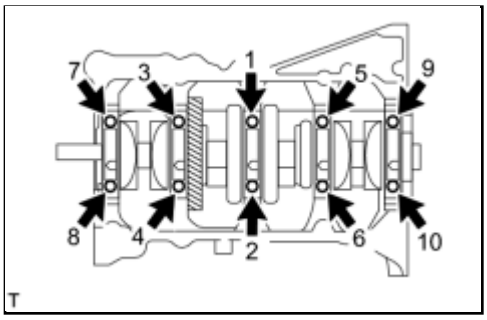

(1) Install and uniformly tighten the 10 main bearing cap bolts in the sequence shown in the illustration.

Torque: 20 N·m (204 kgf·cm, 15ft·lbf)

(2) Retighten the 10 main bearing cap bolts in the

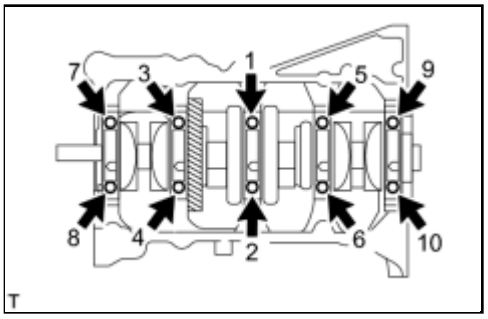

sequence shown in the illustration.

Torque: 40 N·m (408 kgf·cm, 30ft·lbf)

(g) Step 2

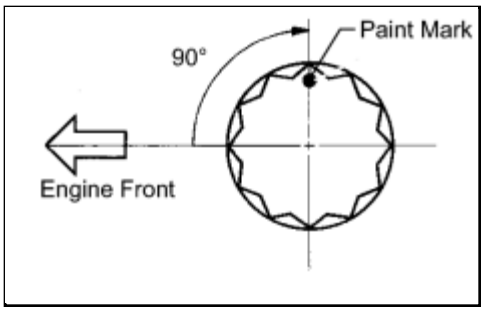

(1) Mark the front of the bearing cap bolts with paint.

(2) Retighten the bearing cap bolts 90° in the numerical order shown in the illustration.

(h) Check that the paint mark is now at a 90° angle to the front.

(i) Check that the crankshaft turns smoothly.

(j) Check the crankshaft thrust clearance INFO .

12. INSTALL CONNECTING ROD BEARING

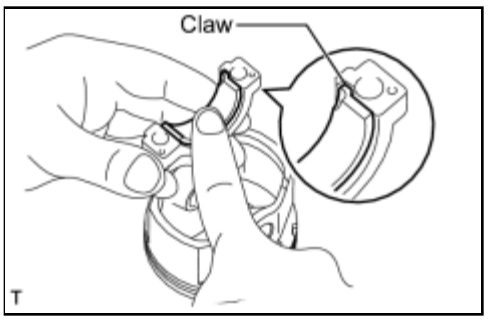

(a) Align the bearing claw with the groove on the connecting rod or connecting cap.

NOTICE:

Do not apply engine oil to the bearing inner surface or connecting rod contact surface.

13. INSTALL PISTON SUB-ASSEMBLY WITH CONNECTING ROD

NOTICE:

The connecting rod cap bolts are tightened in 2 progressive steps.

(a) Apply engine oil to the cylinder walls, the pistons, and the surfaces of connecting rod bearings.

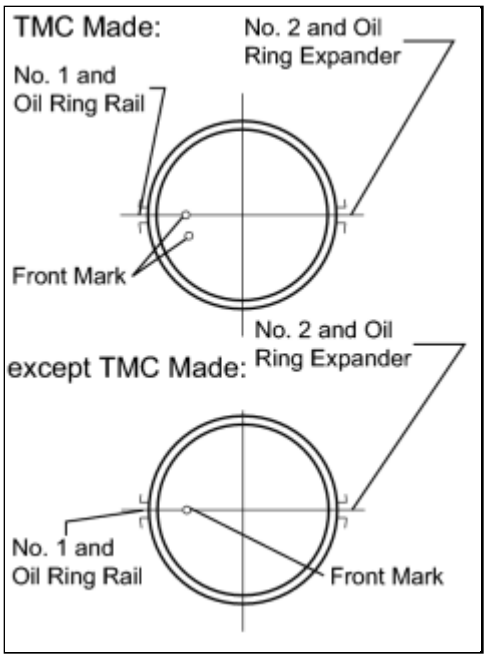

(b) Check the position of the piston ring ends.

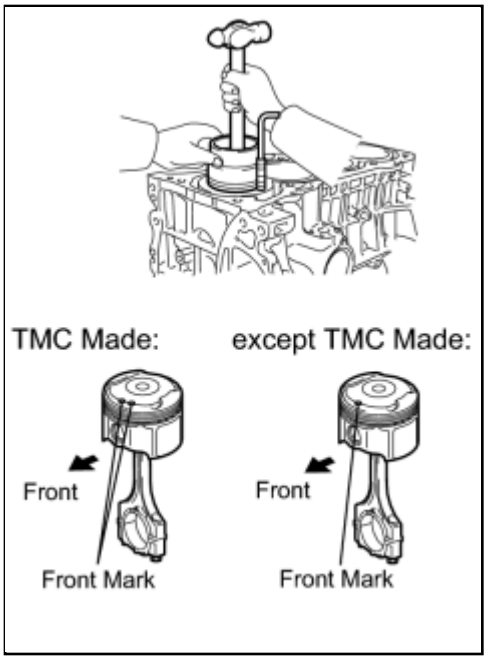

(c) Using a piston ring compressor, push the correctly numbered piston and connecting rod assemblies into each cylinder with the front mark of the piston facing forward.

NOTICE:

Match the numbered connecting rod cap with the connecting rod.

(d) Check that the protrusion on the connecting rod cap is facing in the correct direction.

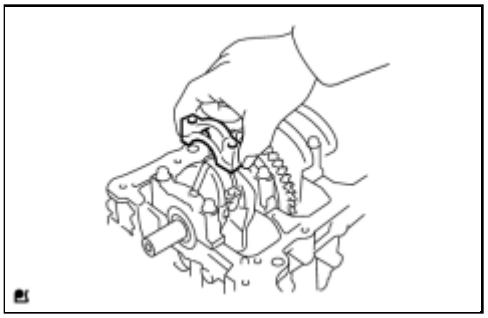

(e) Apply a light coat of engine oil to the threads and under the heads of the connecting rod cap bolts.

(f) Install the connecting cap bolts.

NOTICE:

The connecting cap bolts should be tightened in 2 progressive steps.

(g) Step 1

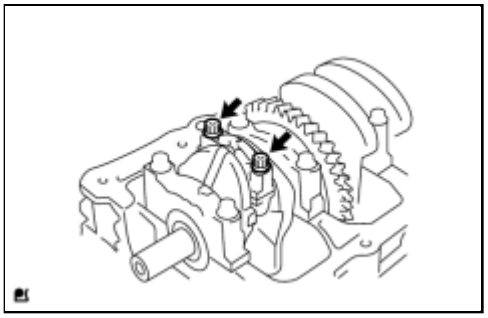

(1) Install and alternately tighten the bolts of the connecting rod cap in several steps.

Torque: 25 N·m (250 kgf·cm, 18ft·lbf)

(h) Step 2

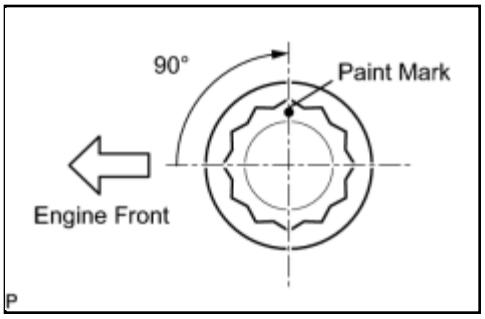

(1) Mark the front of the connecting rod cap bolts with paint.

(2) Retighten the cap bolts 90° as shown in the illustration.

(i) Check that the crankshaft turns smoothly.

(j) Check the connecting rod thrust clearance INFO .

Last Modified: 3-10-2010	6.4 K	**From:** 200901
Model Year: 2010	**Model:** Corolla	**Doc ID:** RM00000224C00CX
Title: 2AZ-FE ENGINE MECHANICAL: CYLINDER BLOCK: COMPONENTS (2010 Corolla)		

COMPONENTS

ILLUSTRATION

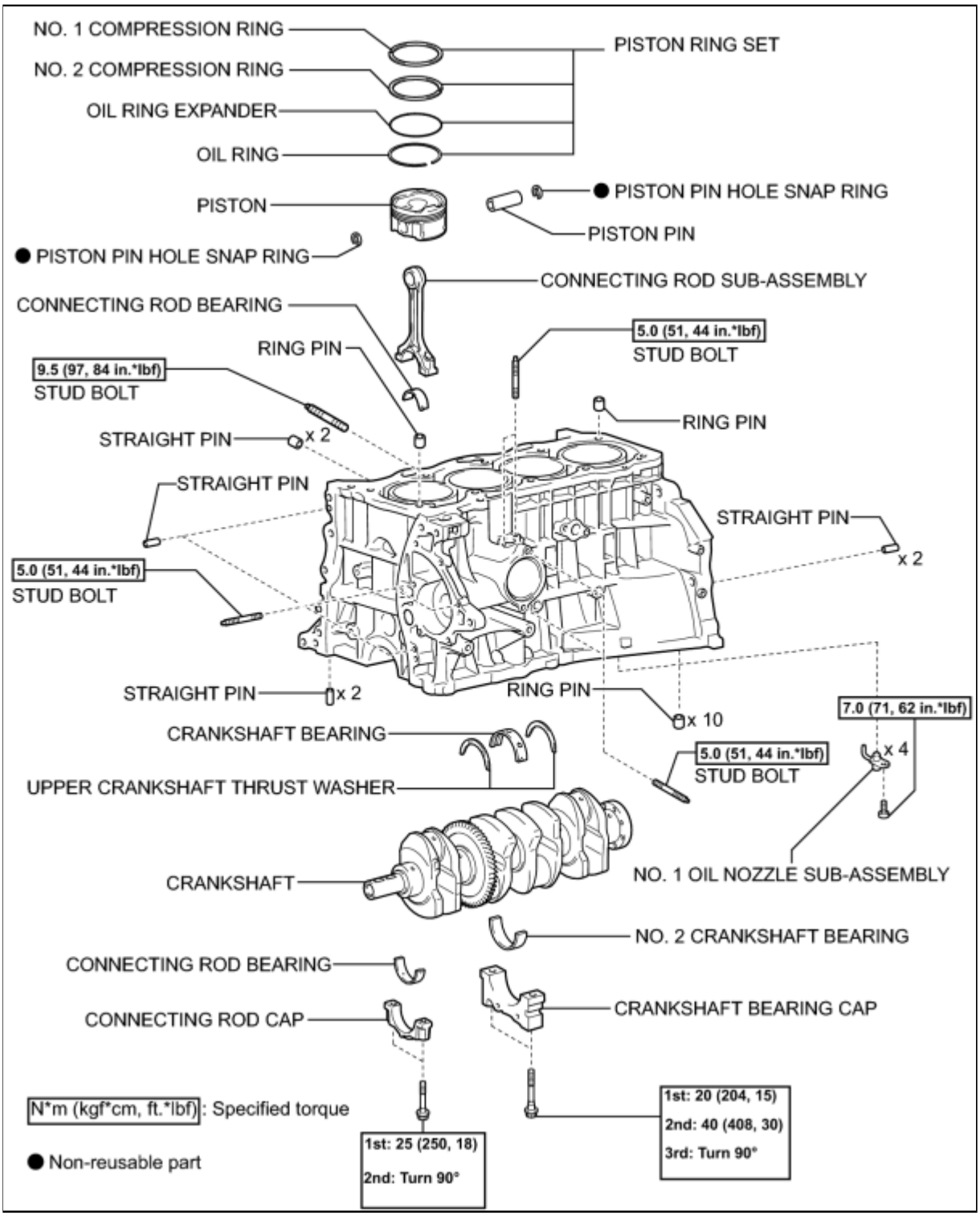

Last Modified: 3-10-2010	6.4 A	**From:** 200901
Model Year: 2010	**Model:** Corolla	**Doc ID:** RM00000224D00CX
Title: 2AZ-FE ENGINE MECHANICAL: CYLINDER BLOCK: DISASSEMBLY (2010 Corolla)		

DISASSEMBLY

1. INSPECT CONNECTING ROD THRUST CLEARANCE INFO

2. INSPECT CONNECTING ROD OIL CLEARANCE INFO

3. REMOVE PISTON SUB-ASSEMBLY WITH CONNECTING ROD

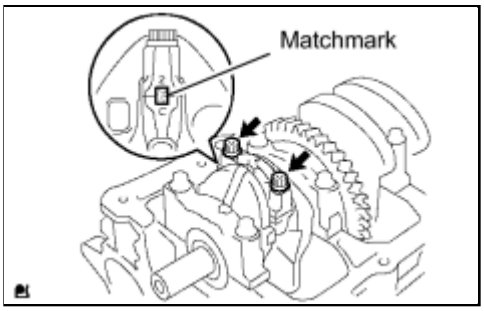

(a) Check that the matchmarks on the connecting rod and cap are aligned to ensure the correct reassembly.

HINT:

The matchmarks on the connecting rods and caps are provided for ensuring the correct reassembly.

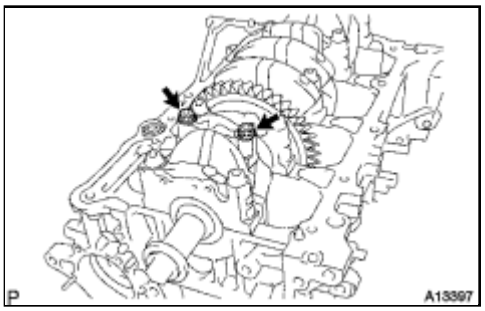

(b) Using a 12 mm socket wrench, uniformly loosen and remove the 2 bolts.

(c) Using the 2 removed connecting rod cap bolts, remove the connecting rod cap and lower bearing by wiggling the connecting rod cap right and left.

HINT:

Keep the lower bearing inserted in the connecting rod cap.

(d) Push the piston, connecting rod assembly and upper bearing through the top of the cylinder block.

HINT:

- Keep the bearing, connecting rod and cap together.
- Arrange the piston and connecting rod assemblies in the correct order.

4. REMOVE CONNECTING ROD BEARING

(a) Remove the connecting rod bearings.

HINT:

Arrange the removed parts in the correct order.

5. REMOVE PISTON RING SET

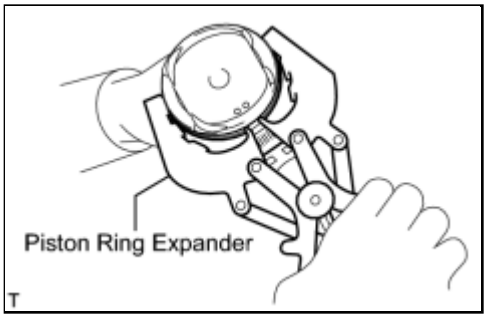

(a) Using a piston ring expander, remove the 2 compression rings.

(b) Remove the oil ring rail and oil ring expander by hand.

HINT:

Arrange the removed parts in the correct order.

6. REMOVE PISTON PIN HOLE SNAP RING

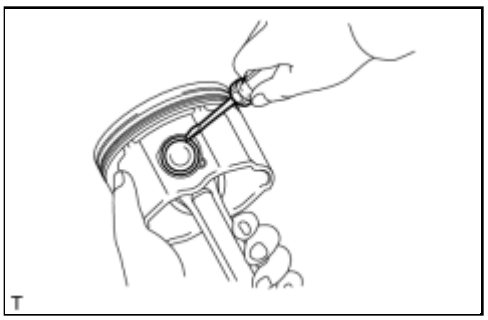

(a) Using a screwdriver, pry out the 2 snap rings.

7. REMOVE PISTON

(a) Gradually heat the piston to between 80 and 90°C (176 and 194°F).

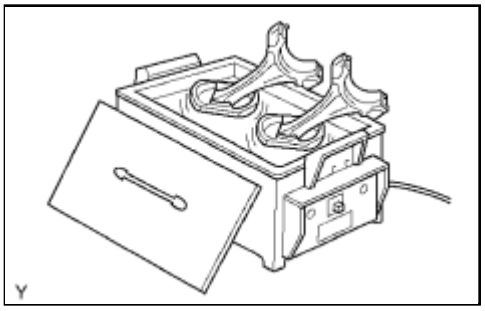

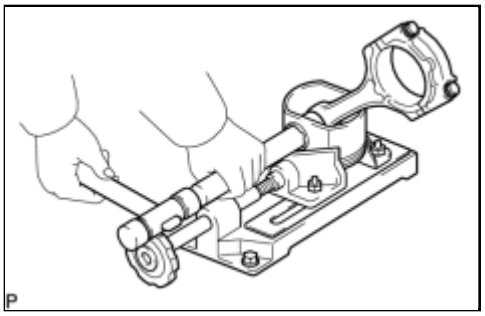

(b) Using a plastic hammer and brass bar, lightly tap out the piston pin and remove the connecting rod.

HINT:

- The piston and pin are a matched set.
- Arrange the pistons, pin, rings, connecting rods and bearings in the correct order.

8. INSPECT CRANKSHAFT THRUST CLEARANCE INFO

9. REMOVE CRANKSHAFT

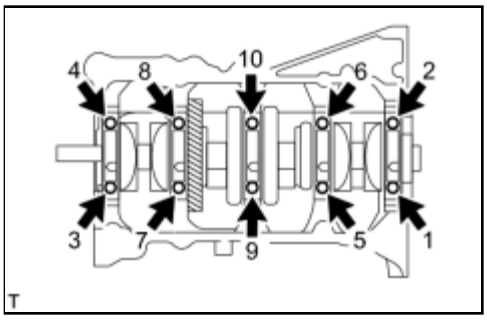

(a) Uniformly loosen and remove the 10 main bearing cap bolts in the sequence shown in the illustration.

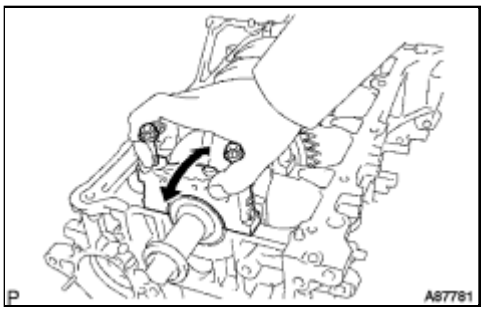

(b) Use 2 removed main bearing cap bolts to remove the 5 main bearing caps and 5 lower bearings.

NOTICE:

Insert the bolts into one of the caps. Ease the cap out by gently pulling up and applying force toward the front and back side of the cylinder block, as shown in the illustration. Take care not to damage the contact surfaces of the cap and cylinder block.

HINT:

- Keep the lower bearing and main bearing cap.
- Arrange the main bearing caps in the correct order.

(c) Lift out the crankshaft.

10. REMOVE UPPER CRANKSHAFT THRUST WASHER

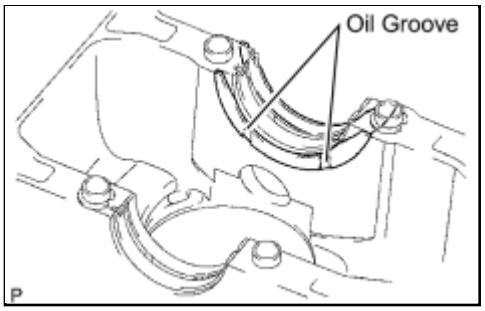

(a) Remove the upper thrust washers from the cylinder block.

11. REMOVE CRANKSHAFT BEARING

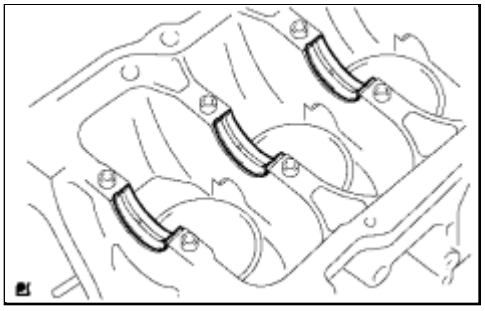

(a) Remove the 5 crankshaft bearings from the cylinder block.

HINT:

Arrange the removed parts in the correct order.

12. REMOVE NO. 2 CRANKSHAFT BEARING

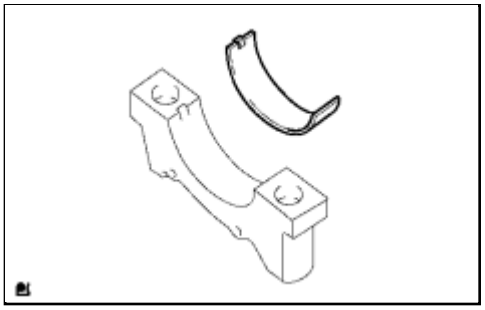

(a) Remove the 5 No. 2 crankshaft bearings from the 5 main bearing caps.

HINT:

Arrange the removed parts in the correct order.

13. REMOVE NO. 1 OIL NOZZLE SUB-ASSEMBLY

(a) Using a 5 mm hexagon wrench, remove the bolts and oil nozzles.

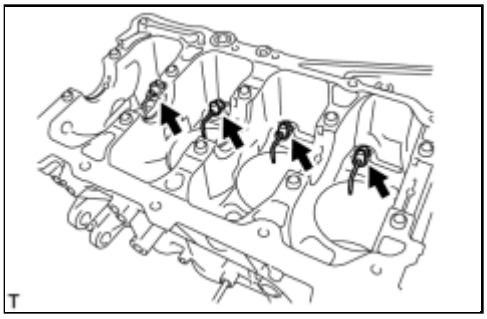

14. REMOVE STUD BOLT

15. REMOVE RING PIN

16. REMOVE STRAIGHT PIN

Last Modified: 3-10-2010	6.4 G	**From:** 200901
Model Year: 2010	**Model:** Corolla	**Doc ID:** RM000002XA201UX
Title: 2ZR-FE ENGINE MECHANICAL: CYLINDER BLOCK: INSPECTION (2010 Corolla)		

INSPECTION

1. INSPECT CONNECTING ROD THRUST CLEARANCE

(a) Install the connecting rod cap INFO .

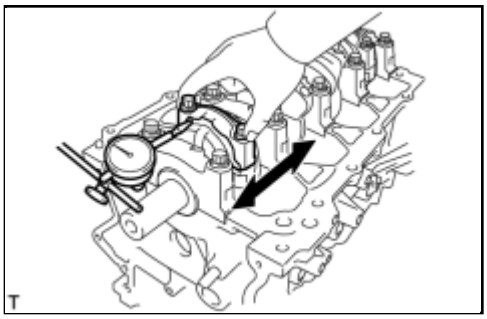

(b) Using a dial indicator, measure the thrust clearance while moving the connecting rod back and forth.

Standard thrust clearance:
0.160 to 0.342 mm (0.0063 to 0.0135 in.)
Maximum thrust clearance:
0.342 mm (0.0135 in.)

If the thrust clearance is greater than the maximum, replace the connecting rod assemblies as necessary. If necessary, replace the crankshaft.

2. INSPECT CONNECTING ROD OIL CLEARANCE

(a) Clean the crank pin and bearing.

(b) Check the crank pin and bearing for pitting and scratches.

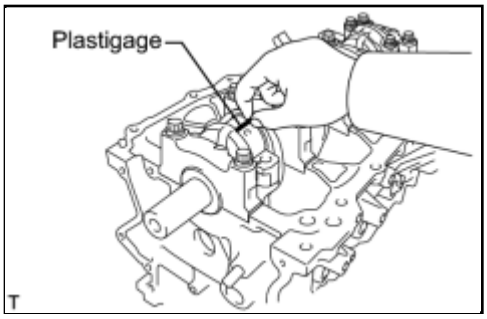

(c) Lay a strip of Plastigage on the crank pin.

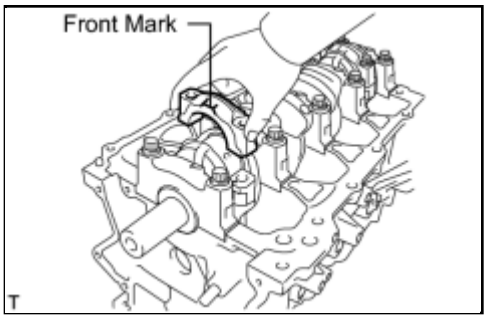

(d) Check that the front mark of the connecting rod cap is facing forward.

(e) Install the connecting rod cap INFO .

NOTICE:

Do not turn the crankshaft.

(f) Remove the 2 bolts and connecting rod cap INFO .

(g) Measure the Plastigage at its widest point.

Standard oil clearance:
0.030 to 0.062 mm (0.0012 to 0.0024 in.)
Maximum oil clearance:
0.07 mm (0.0028 in.)

If the oil clearance is greater than the maximum, replace the connecting rod bearings. If necessary, inspect the crankshaft.

NOTICE:

Completely remove the Plastigage after the measurement.

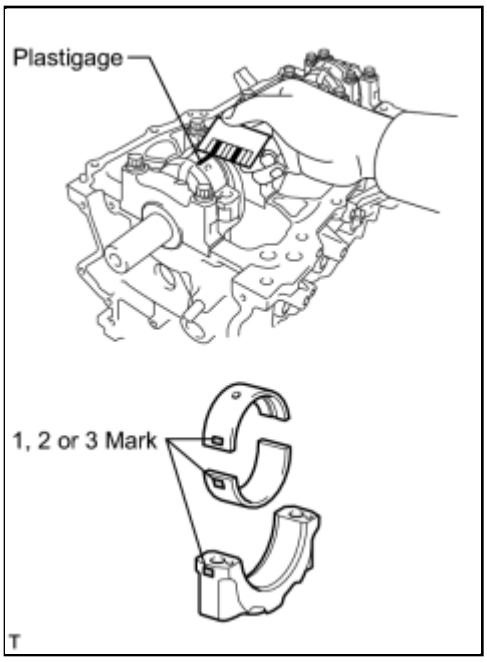

HINT:

If replacing a bearing, replace it with one that has the same number as its respective connecting rod cap. Each standard bearing thickness is indicated by a 1, 2, or 3 mark on its surface.

Standard Connecting Rod Large End Bore Diameter:

MARK	SPECIFIED CONDITION
Mark 1	47.000 to 47.008 mm (1.8504 to 1.8507 in.)
Mark 2	47.009 to 47.016 mm (1.8507 to 1.8510 in.)
Mark 3	47.017 to 47.024 mm (1.8511 to 1.8513 in.)

Standard Connecting Rod Bearing Thickness:

MARK	SPECIFIED CONDITION
Mark 1	1.489 to 1.493 mm (0.0586 to 0.0588 in.)
Mark 2	1.494 to 1.497 mm (0.0588 to 0.0589 in.)
Mark 3	1.498 to 1.501 mm (0.0590 to 0.0591 in.)

Standard Crankshaft Pin Diameter:

MARK	SPECIFIED CONDITION
Mark 1,2,3	43.992 to 44.000 mm (1.7320 to 1.7323 in.)

3. INSPECT CYLINDER BLOCK FOR WARPAGE

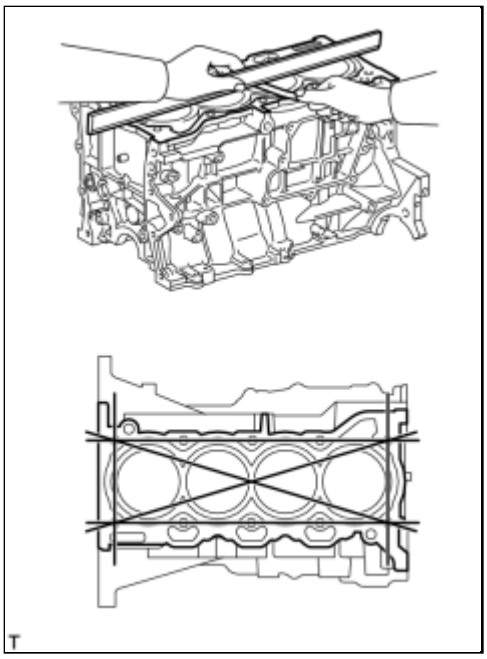

(a) Using a precision straightedge and feeler gauge, measure the warpage of the surface that is in contact with the cylinder head gasket.

Maximum warpage:
0.05 mm (0.0020 in.)

If the warpage is greater than the maximum, replace the cylinder block.

4. INSPECT CYLINDER BORE

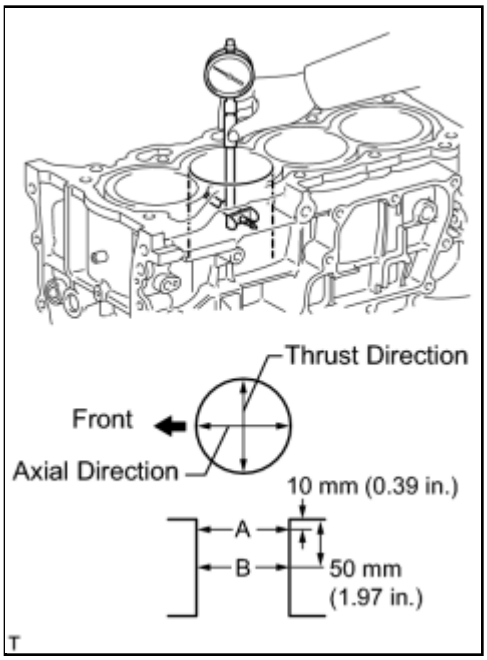

(a) Using a cylinder gauge, measure the cylinder bore diameter at positions A and B in both thrust and axial directions.

Standard diameter:
80.500 to 80.513 mm (3.1693 to 3.1698 in.)
Maximum diameter:
80.633 mm (3.1745 in.)

If the average diameter of the 4 positions is greater than the maximum, replace the cylinder block.

5. INSPECT PISTON

(a) Using a gasket scraper, remove the carbon from the top of the piston.

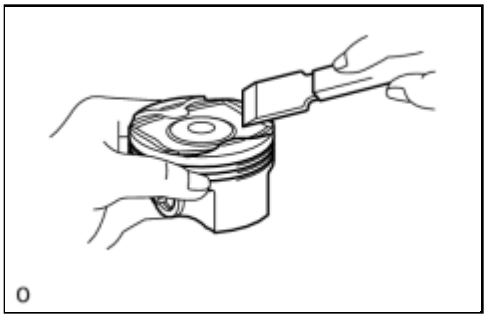

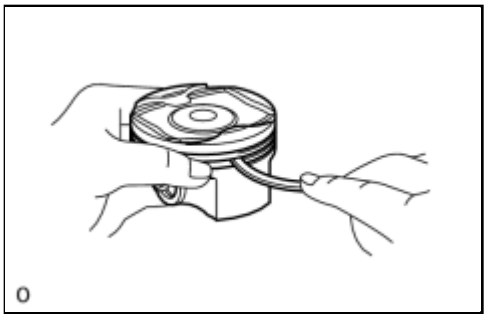

(b) Using a groove cleaning tool or broken ring, clean the piston ring grooves.

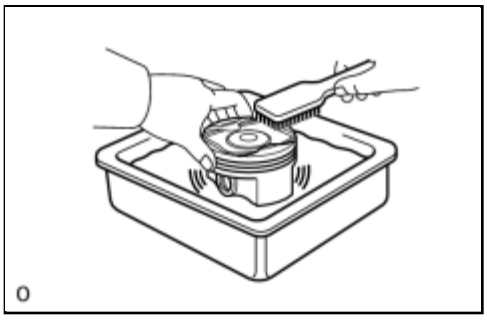

(c) Using a brush and solvent, thoroughly clean the piston.

NOTICE:

Do not use a wire brush.

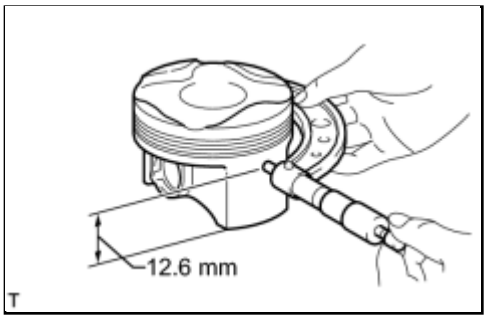

(d) Using a micrometer, measure the piston diameter at right angles to the piston pin hole, and at a point 12.6 mm (0.4961 in.) from the piston head.

Standard piston diameter:
80.461 to 80.471 mm (3.1677 to 3.1681 in.)

If the diameter is not as specified, replace the piston.

6. INSPECT PISTON OIL CLEARANCE

(a) Subtract the piston diameter measurement from the cylinder bore diameter measurement.

Standard oil clearance:
0.029 to 0.052 mm (0.0011 to 0.0020 in.)

Maximum oil clearance:
0.09 mm (0.0035 in.)

If the oil clearance is greater than the maximum, replace all the pistons. If necessary, replace the cylinder block.

7. INSPECT RING GROOVE CLEARANCE

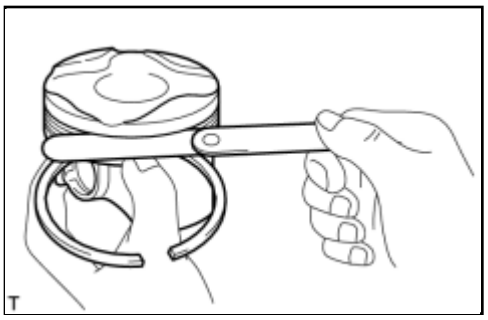

(a) Using a feeler gauge, measure the clearance between a new piston ring and the wall of the ring groove.

Standard Ring Groove Clearance:

ITEM	SPECIFIED CONDITION
No. 1 Ring	0.02 to 0.07 mm (0.0008 to 0.0028 in.)
No. 2 Ring	0.02 to 0.06 mm (0.0008 to 0.0024 in.)
Oil Ring	0.02 to 0.065 mm (0.0008 to 0.0026 in.)

If the groove clearance is not as specified, replace the piston.

8. INSPECT PISTON RING END GAP

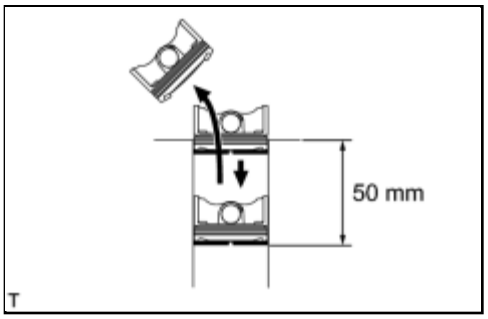

(a) Using a piston, push the piston ring a little beyond the bottom of the ring travel, 50 mm (1.97 in.) from the top of the cylinder block.

(b) Using a feeler gauge, measure the end gap.

Standard End Gap:

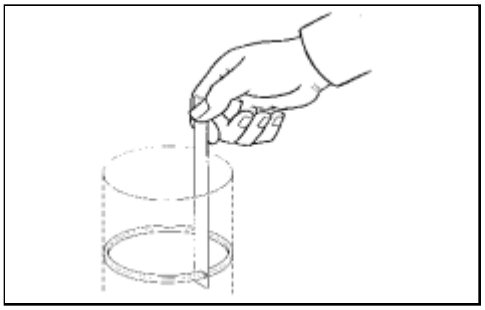

ITEM	SPECIFIED CONDITION
No. 1 Ring	0.2 to 0.3 mm (0.0079 to 0.0118 in.)
No. 2 Ring	0.3 to 0.5 mm (0.0118 to 0.0197 in.)
Oil Ring	0.1 to 0.4 mm (0.0039 to 0.0157 in.)

Maximum End Gap:

ITEM	SPECIFIED CONDITION
No. 1 Ring	0.5 mm (0.0197 in.)
No. 2 Ring	0.7 mm (0.0276 in.)
Oil Ring	0.7 mm (0.0276 in.)

If the end gap is greater than the maximum, replace the piston ring. If the end gap is greater than the maximum, even with a new piston ring, replace the cylinder block.

9. INSPECT PISTON PIN OIL CLEARANCE

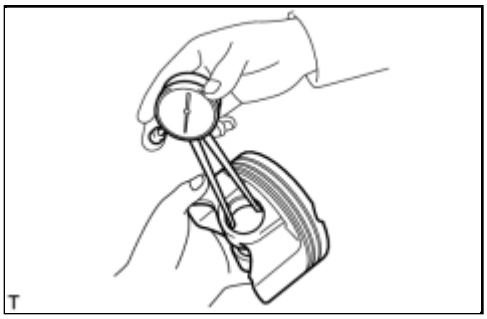

(a) Using a caliper gauge, measure the piston pin bore diameter.

Standard piston pin bore diameter:
20.006 to 20.015 mm (0.7876 to 0.7880 in.)

ITEM	SPECIFIED CONDITION
A	20.006 to 20.009 mm (0.7876 to 0.7878 in.)
B	20.010 to 20.012 mm (0.7878 to 0.7879 in.)
C	20.013 to 20.015 mm (0.7879 to 0.7880 in.)

If the diameter is not as specified, replace the piston.

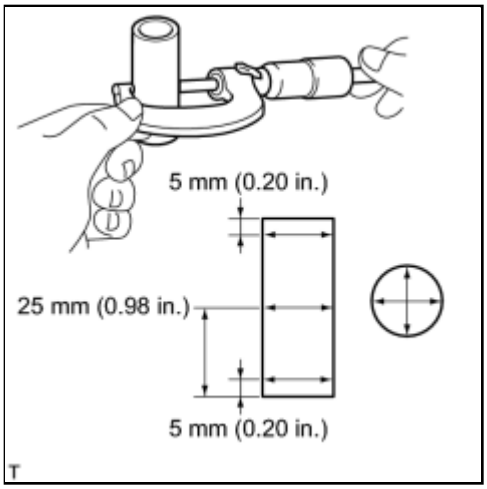

(b) Using a micrometer, measure the piston pin diameter.

Standard piston pin diameter:
20.004 to 20.013 mm (0.7876 to 0.7879 in.)

ITEM	SPECIFIED CONDITION
A	20.004 to 20.007 mm (0.7876 to 0.7877 in.)
B	20.008 to 20.010 mm (0.7877 to 0.7878 in.)
C	20.011 to 20.013 mm (0.7878 to 0.7879 in.)

If the diameter is not as specified, replace the piston pin.

(c) Using a caliper gauge, measure the connecting rod small

end bore diameter.

Standard connecting rod small end bore diameter:
20.012 to 20.021 mm (0.7879 to 0.7882 in.)

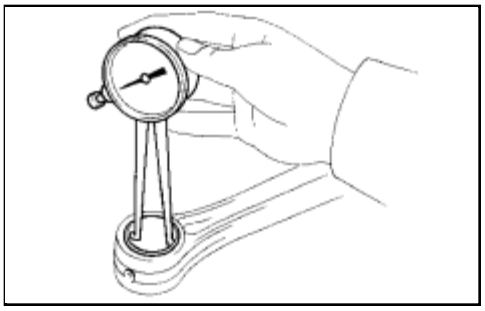

ITEM	SPECIFIED CONDITION
A	20.012 to 20.015 mm (0.7879 to 0.7880 in.)
B	20.016 to 20.018 mm (0.7880 to 0.7881 in.)
C	20.019 to 20.021 mm (0.7881 to 0.7882 in.)

If the diameter is not as specified, replace the connecting rod.

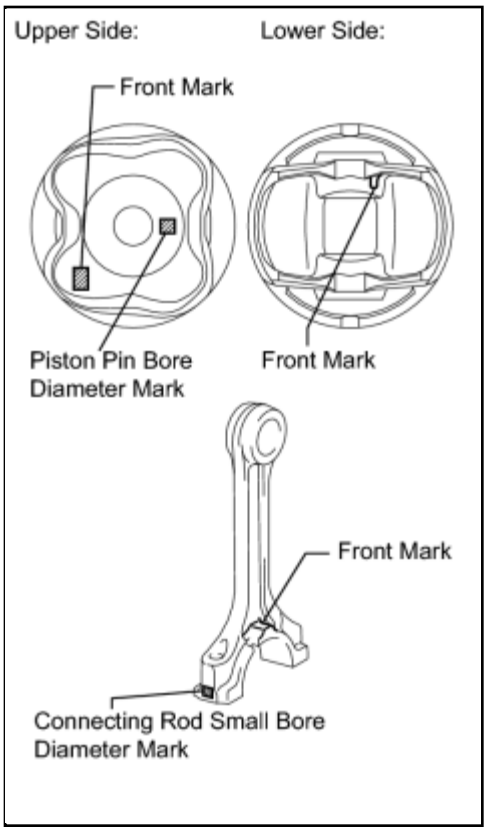

(d) Subtract the piston pin diameter measurement from the piston pin bore diameter measurement.

Standard oil clearance:
-0.001 to 0.005 mm (-0.00004 to 0.0002 in.)
Maximum oil clearance:
0.010 mm (0.0004 in.)

If the oil clearance is greater than the maximum, replace the connecting rod. If necessary, replace the piston and piston pin as a set.

(e) Subtract the piston pin diameter measurement from the connecting rod small end bore diameter measurement.

Standard oil clearance:
0.005 to 0.011 mm (0.0002 to 0.0004 in.)
Maximum oil clearance:
0.014 mm (0.0006 in.)

If the oil clearance is greater than the maximum, replace the connecting rod. If necessary, replace the connecting rod and piston pin as a set.

10. INSPECT CONNECTING ROD BOLT

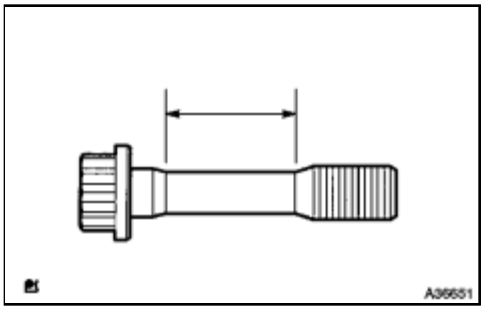

(a) Using a vernier caliper, measure the tension portion diameter of the bolt.

Standard diameter:
6.6 to 6.7 mm (0.2598 to 0.2638 in.)
Minimum diameter:
6.4 mm (0.2520 in.)

If the diameter is less than the minimum, replace the connecting rod bolt.

11. INSPECT CONNECTING ROD SUB-ASSEMBLY

(a) Using a connecting rod aligner and feeler gauge, check the connecting rod alignment.

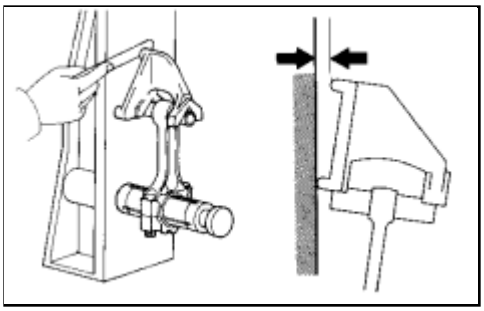

(1) Check for misalignment.

Maximum misalignment:
0.05 mm (0.0020 in.) per 100 mm (3.94 in.)

If the misalignment is greater than the maximum, replace the connecting rod.

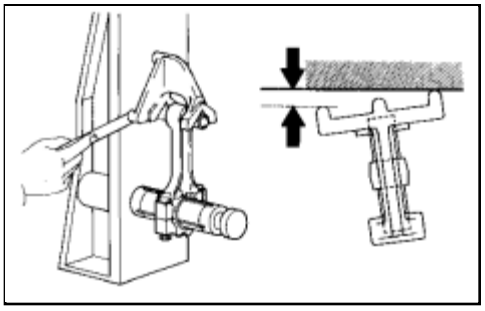

(2) Check for twist.

Maximum twist:
0.15 mm (0.0059 in.) per 100 mm (3.94 in.)

If the twist is greater than the maximum, replace the connecting rod.

12. INSPECT CRANKSHAFT

(a) Using a dial indicator and V-blocks, measure the circle runout as shown in the illustration.

Maximum circle runout:

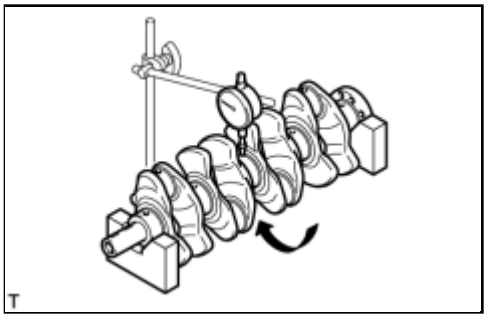

0.03 mm (0.0012 in.)

If the taper and distortion are greater than the maximum, replace the crankshaft.

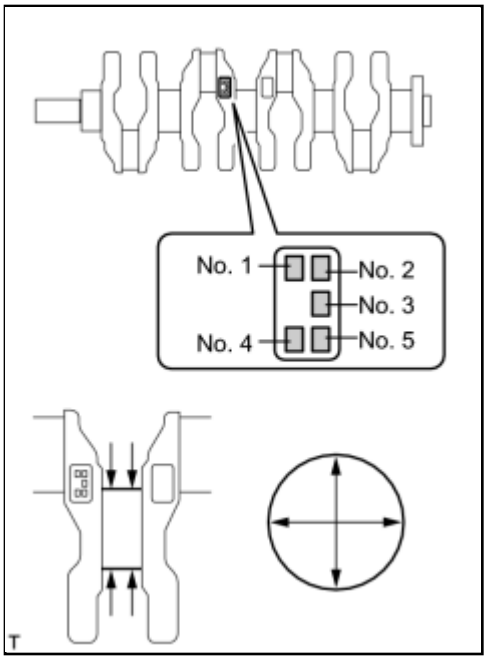

(b) Using a micrometer, measure the diameter of each main journal.

Standard diameter:
47.988 to 48.000 mm (1.8893 to 1.8898 in.)

If the diameter is not as specified, check the crankshaft oil clearance.

(c) Check each main journal for taper and distortion as shown in the illustration.

Maximum taper and distortion:
0.004 mm (0.0002 in.)

If the taper and distortion are greater than the maximum, replace the crankshaft.

Standard Diameter (Reference):

MARK	SPECIFIED CONDITION
0	47.999 to 48.000 mm (1.8897 to 1.8898 in.)
1	47.997 to 47.998 mm (1.8896 to 1.8897 in.)
2	47.995 to 47.996 mm (1.8896 to 1.8896 in.)
3	47.993 to 47.994 mm (1.8895 to 1.8895 in.)
4	47.991 to 47.992 mm (1.8894 to 1.8894 in.)
5	47.988 to 47.990 mm (1.8893 to 1.8894 in.)

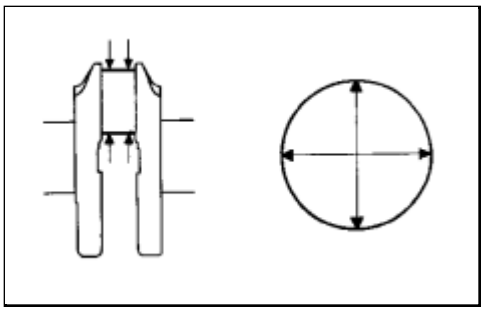

(d) Using a micrometer, measure the diameter of each crank pin.

Standard diameter:
43.992 to 44.000 mm (1.7320 to 1.7323 in.)

If the diameter is not as specified, check the connecting rod oil clearance.

(e) Inspect each crank pin for taper and distortion as shown in the illustration.

Maximum taper and distortion:
0.004 mm (0.0002 in.)

If the taper and distortion are greater than the maximum, replace the crankshaft.

13. INSPECT CRANKSHAFT THRUST CLEARANCE

(a) Install the main bearing cap INFO .

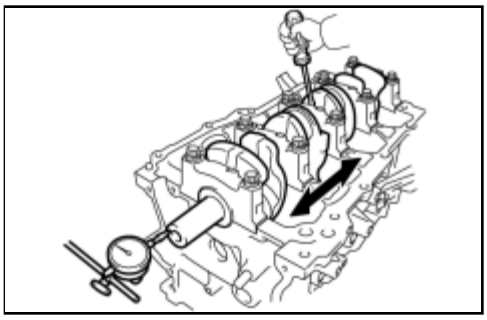

(b) Using a dial indicator, measure the thrust clearance while prying the crankshaft back and forth with a screwdriver.

Standard thrust clearance:
0.04 to 0.14 mm (0.0016 to 0.0055 in.)
Maximum thrust clearance:
0.18 mm (0.0071 in.)

If the thrust clearance is greater than the maximum, replace the thrust washers as a set.

HINT:

The thrust washer thickness is 2.43 to 2.48 mm (0.0957 to 0.0976 in.).

14. INSPECT CRANKSHAFT OIL CLEARANCE

(a) Check the crank journal and bearing for pitting and scratches.

(b) Install the crankshaft bearing INFO .

(c) Place the crankshaft on the cylinder block.

(d) Lay a strip of Plastigage across each journal.

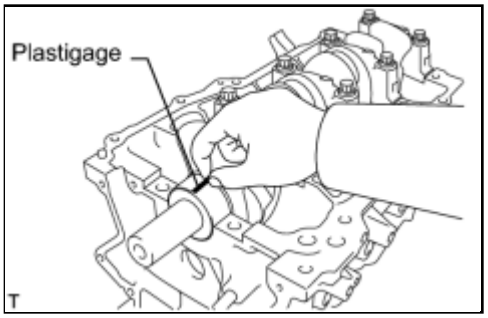

(e) Examine the front marks and numbers and install the bearing caps on the cylinder block.

HINT:

A number is marked on each main bearing cap to indicate the installation position.

(f) Install the main bearing cap INFO .

NOTICE:

Do not turn the crankshaft.

(g) Remove the main bearing caps INFO .

(h) Measure the Plastigage at its widest point.

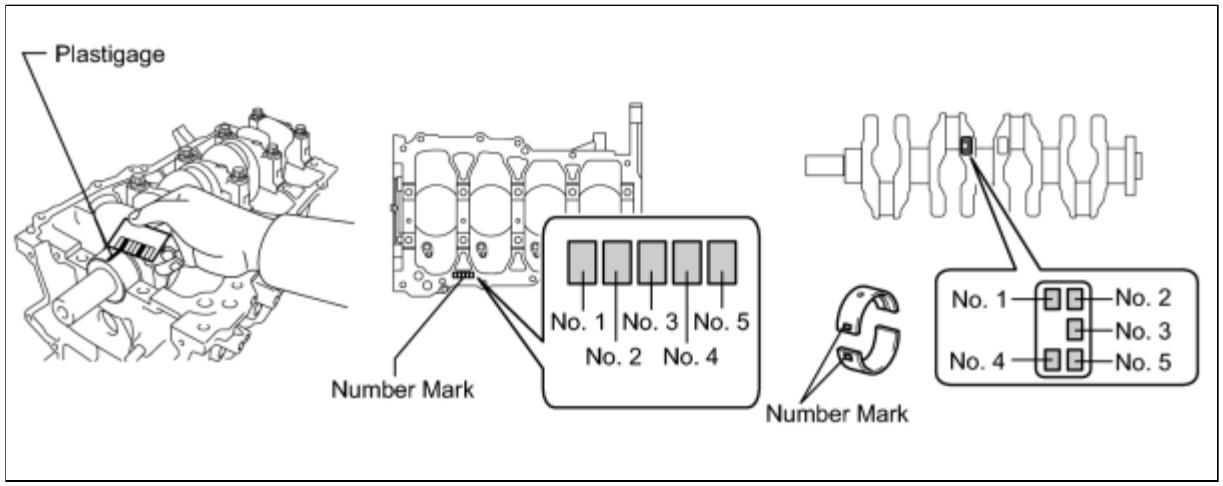

Standard oil clearance:
0.016 to 0.039 mm (0.0006 to 0.0015 in.)
Maximum oil clearance:
0.050 mm (0.0020 in.)

If the oil clearance is greater than the maximum, replace the crankshaft bearing. If necessary, replace the crankshaft.

NOTICE:

Remove the Plastigage completely after the measurement.

HINT:

- If replacing a bearing, select a new one with the same number. If the number of the bearing cannot be determined, calculate the correct bearing number by adding together the numbers imprinted on the cylinder block and crankshaft. Then select a new bearing with the calculated number

according to the chart below. There are 4 sizes of standard bearings, marked "1", "2", "3" and "4" accordingly.

- EXAMPLE: Cylinder block "3" + Crankshaft "5" = Total number 8 (Use bearing "3")

Cylinder block + Crankshaft	0 to 2	3 to 5	6 to 8	9 to 11
Bearing to be used	"1"	"2"	"3"	"4"

Standard Cylinder Block Journal Bore Diameter:

MARK	SPECIFIED CONDITION
0	52.000 to 52.003 mm (2.0472 to 2.0474 in.)
1	52.003 to 52.005 mm (2.04736 to 2.04744 in.)
2	52.005 to 52.007 mm (2.0474 to 2.0475 in.)
3	52.007 to 52.010 mm (2.0475 to 2.0476 in.)
4	52.010 to 52.012 mm (2.0476 to 2.0477 in.)
5	52.012 to 52.014 mm (2.0477 to 2.0478 in.)
6	52.014 to 52.016 mm (2.0478 to 2.0479 in.)

Standard Crankshaft Journal Diameter:

MARK	SPECIFIED CONDITION
0	47.999 to 48.000 mm (1.8897 to 1.8898 in.)
1	47.997 to 47.998 mm (1.8896 to 1.8897 in.)
2	47.995 to 47.996 mm (1.88956 to 1.88960 in.)
3	47.993 to 47.994 mm (1.8895 to 1.8895 in.)
4	47.991 to 47.992 mm (1.8894 to 1.8894 in.)
5	47.988 to 47.990 mm (1.8893 to 1.8894 in.)

Standard Bearing Center Wall Thickness:

MARK	SPECIFIED CONDITION
1	1.994 to 1.997 mm (0.0785 to 0.0786 in.)
2	1.998 to 2.000 mm (0.07866 to 0.07874 in.)
3	2.001 to 2.003 mm (0.0788 to 0.0789 in.)
4	2.004 to 2.006 mm (0.0789 to 0.0790 in.)

15. INSPECT CYLINDER HEAD SET BOLT

(a) Using a vernier caliper, measure the tension portion

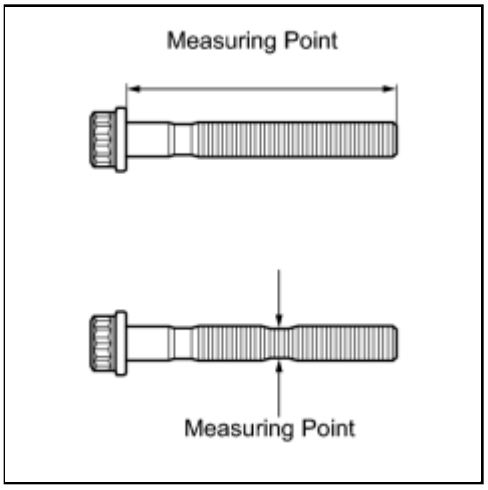

diameter of the bolts.

Standard bolt length:
84.3 to 85.7 mm (3.3189 to 3.3740 in.)
Maximum bolt length:
86.7 mm (3.4134 in.)

If the bolt length is greater than the maximum, replace the bolt.

(b) Using a vernier caliper, measure the minimum diameter of the elongated thread at the measuring point.

Standard outside diameter:
9.77 to 9.96 mm (0.3846 to 0.3921 in.)
Minimum outside diameter:
9.1 mm (0.3583 in.)

HINT:

Using a straightedge, visually check thinner areas of the threaded part of the crankshaft bearing cap bolt.

If the diameter is less than the minimum, replace the bolt.

16. INSPECT NO. 1 OIL NOZZLE SUB-ASSEMBLY

(a) Check the oil nozzles for damage or clogging.

HINT:

If there is damage or clogging, replace the oil nozzle.

Last Modified: 3-10-2010	6.4 A	**From:** 200901
Model Year: 2010	**Model:** Corolla	**Doc ID:** RM000002XA302PX
Title: 2ZR-FE ENGINE MECHANICAL: CYLINDER BLOCK: DISASSEMBLY (2010 Corolla)		

DISASSEMBLY

1. REMOVE NO. 1 VENTILATION CASE

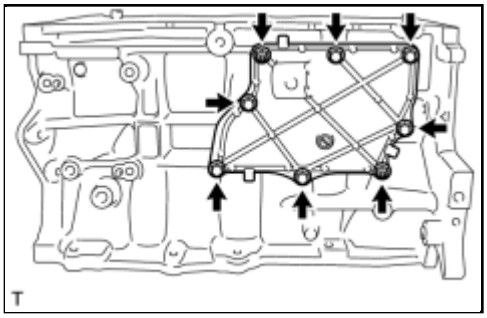

(a) Remove the 6 bolts and 2 nuts.

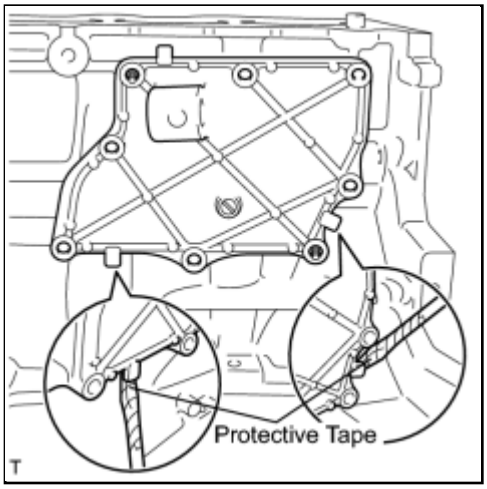

(b) Remove the No. 1 ventilation case by prying between the No. 1 ventilation case and cylinder block with a screwdriver as shown in the illustration.

NOTICE:

Be careful not to damage the contact surfaces of the cylinder block and No. 1 ventilation case.

HINT:

Tape the screwdriver tip before use.

2. REMOVE PISTON SUB-ASSEMBLY WITH CONNECTING ROD

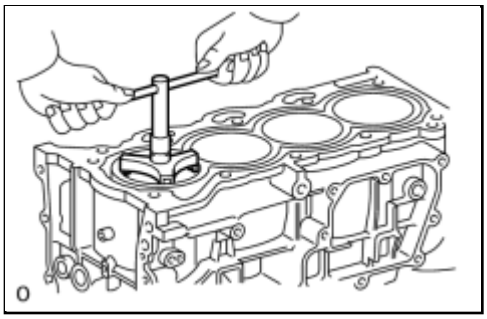

(a) Using a ridge reamer, remove all the carbon from the top of the cylinder.

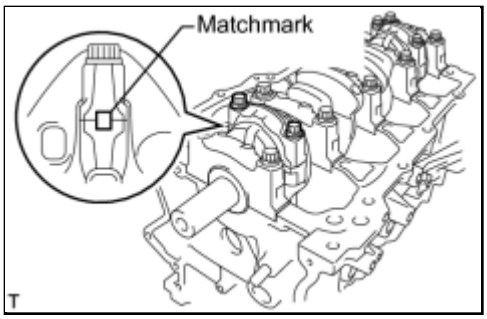

(b) Check that the matchmarks on the connecting rod and cap are aligned to ensure correct reassembly.

HINT:

The matchmarks on the connecting rods and caps are provided to ensure correct reassembly.

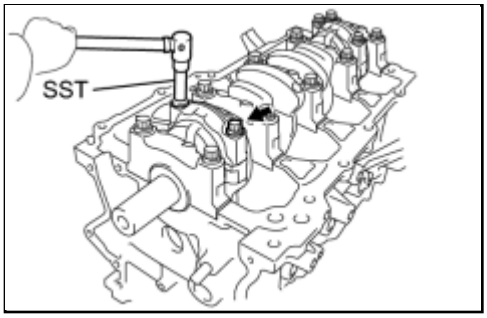

(c) Using SST, uniformly loosen the 2 bolts.

SST: 09205-16010

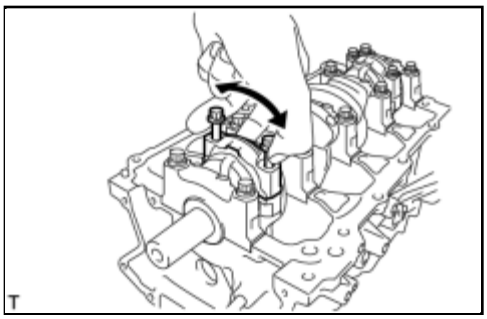

(d) Using the 2 removed connecting rod cap bolts, remove the connecting rod cap and lower bearing by wiggling the connecting rod cap right and left.

HINT:

Keep the lower bearing inserted in the connecting rod cap.

(e) Push the piston, connecting rod assembly and upper bearing through the top of the cylinder block.

HINT:

- Keep the bearing, connecting rod and cap as a set.
- Arrange the piston and connecting rod assemblies in the correct order.

3. REMOVE CONNECTING ROD BEARING

(a) Remove the connecting rod bearings.

HINT:

Arrange the removed parts in the correct order.

4. REMOVE PISTON RING SET

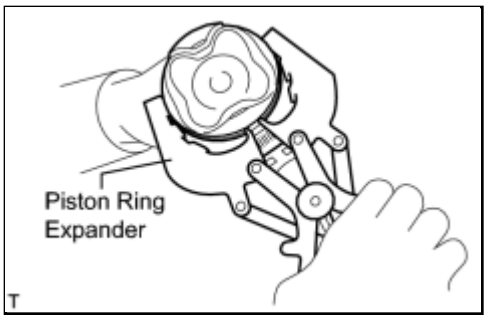

(a) Using a piston ring expander, remove the 2 compression rings.

(b) Remove the oil ring rail and oil ring expander by hand.

HINT:

Arrange the removed parts in the correct order.

5. REMOVE PISTON

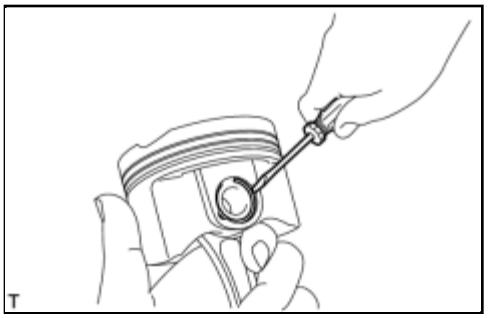

(a) Using a screwdriver, pry out the 2 snap rings.

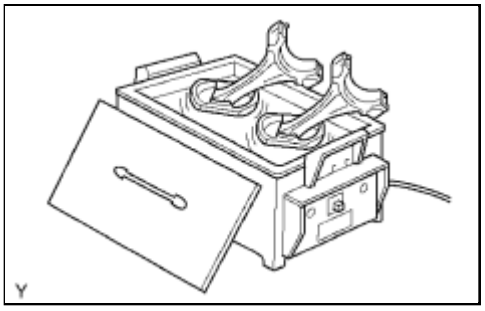

(b) Gradually heat each piston to approximately 80 to 90°C (176 to 194°F).

(c) Using a plastic hammer and brass bar, lightly tap out the piston pin and remove the connecting rod.

HINT:

- The piston and pin are a matched set.
- Arrange the pistons, pins, rings, connecting rods and bearings in the correct order.

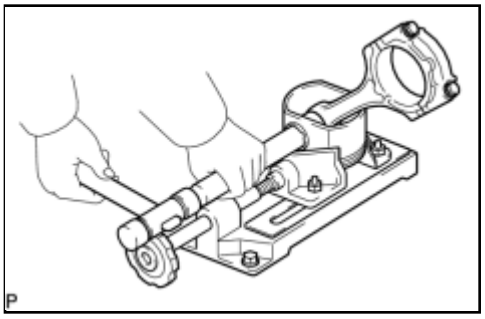

6. REMOVE CRANKSHAFT

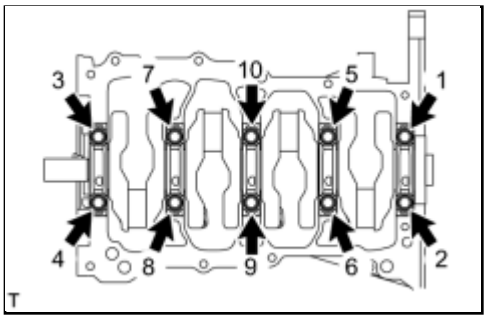

(a) Uniformly loosen and remove the 10 main bearing cap bolts in the sequence shown in the illustration.

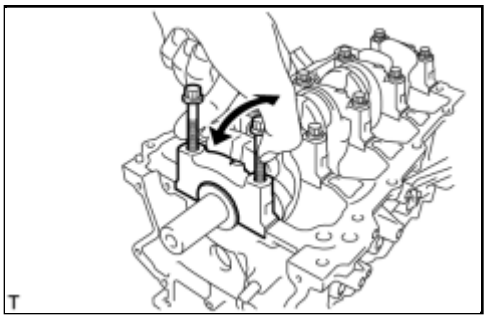

(b) Use 2 removed main bearing cap bolts to remove the 5 main bearing caps and 5 lower bearings.

NOTICE:

Insert the bolts into the caps in turn. Ease the cap out by gently pulling up and applying force toward the front and back sides of the cylinder block, as shown in the illustration. Take care not to damage the contact surfaces of the cap and cylinder block.

HINT:

- Keep the lower bearing and main bearing cap as a set.
- Arrange the main bearing caps in the correct order.

(c) Lift out the crankshaft.

7. REMOVE UPPER CRANKSHAFT THRUST WASHER

(a) Remove the upper crankshaft thrust washers from the cylinder block.

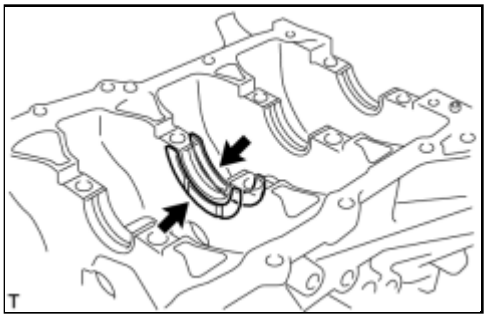

8. REMOVE CRANKSHAFT BEARING

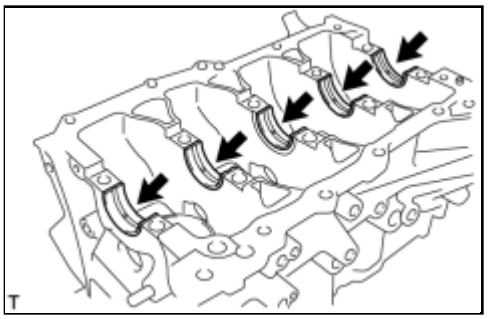

(a) Remove the 5 upper main bearings from the cylinder block.

HINT:

Arrange the bearings in the correct order.

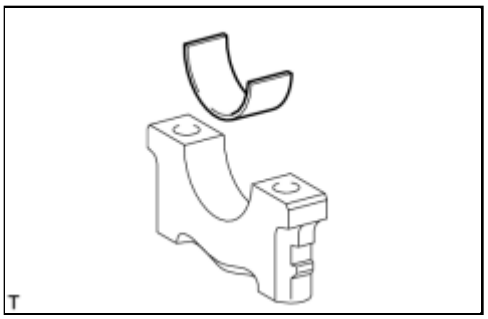

(b) Remove the 5 lower main bearings from the 5 main bearing caps.

HINT:

Arrange the bearings in the correct order.

9. REMOVE NO. 1 OIL NOZZLE SUB-ASSEMBLY

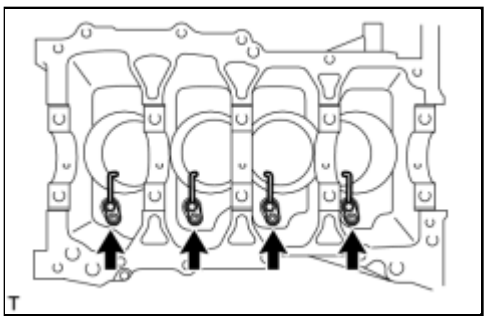

(a) Using a 5 mm socket hexagon wrench, remove the bolts and oil nozzles.

10. CLEAN CYLINDER BLOCK

NOTICE:

If the cylinder is washed at high temperature, the cylinder liner will stick out beyond the cylinder block. Always wash the cylinder block at a temperature of 45°C (113°F) or less.



Last Modified: 3-10-2010	6.4 K	**From:** 200901
Model Year: 2010	**Model:** Corolla	**Doc ID:** RM000002XA700QX
Title: 2ZR-FE ENGINE MECHANICAL: CYLINDER BLOCK: COMPONENTS (2010 Corolla)		

COMPONENTS

ILLUSTRATION

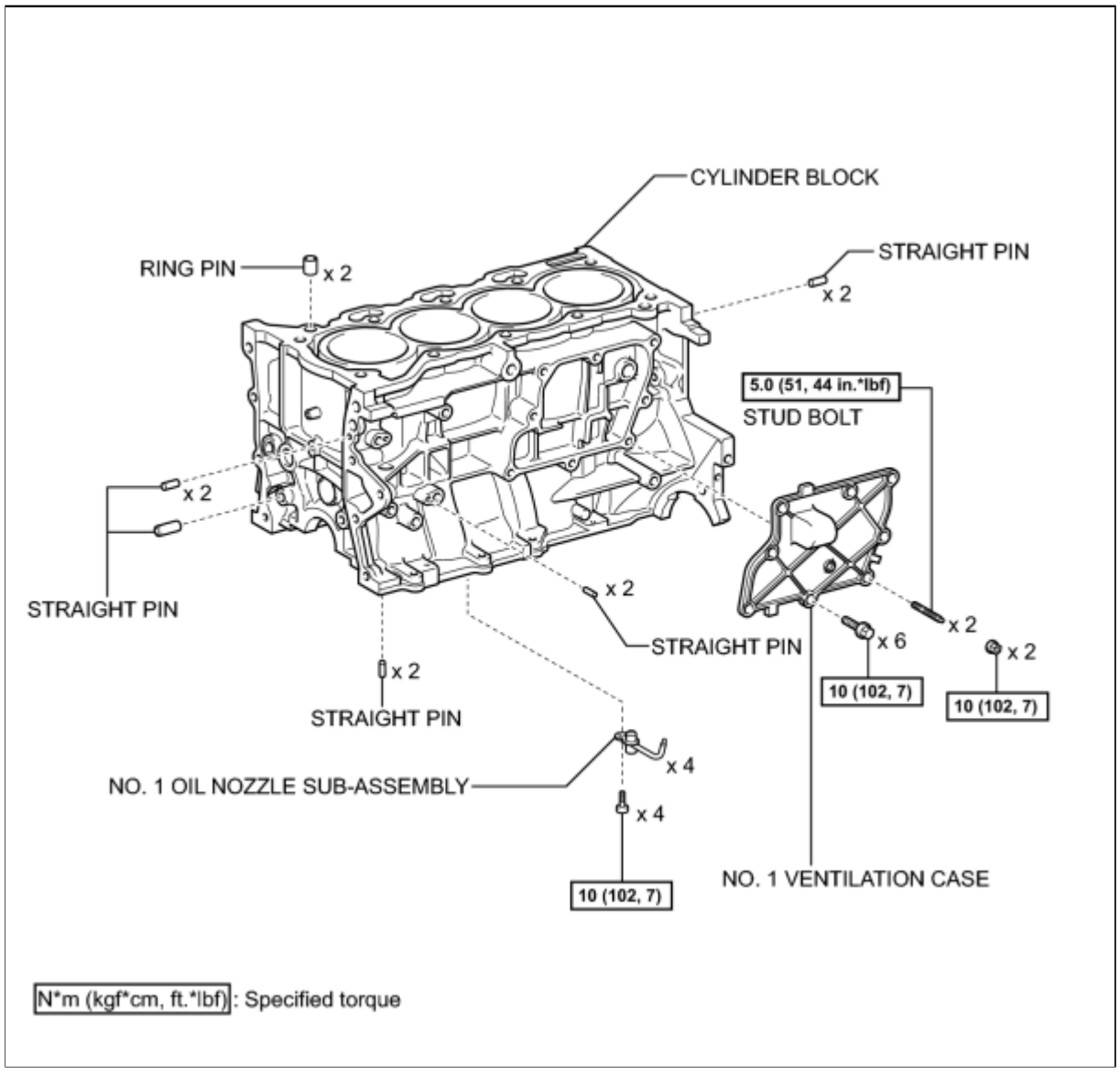

ILLUSTRATION

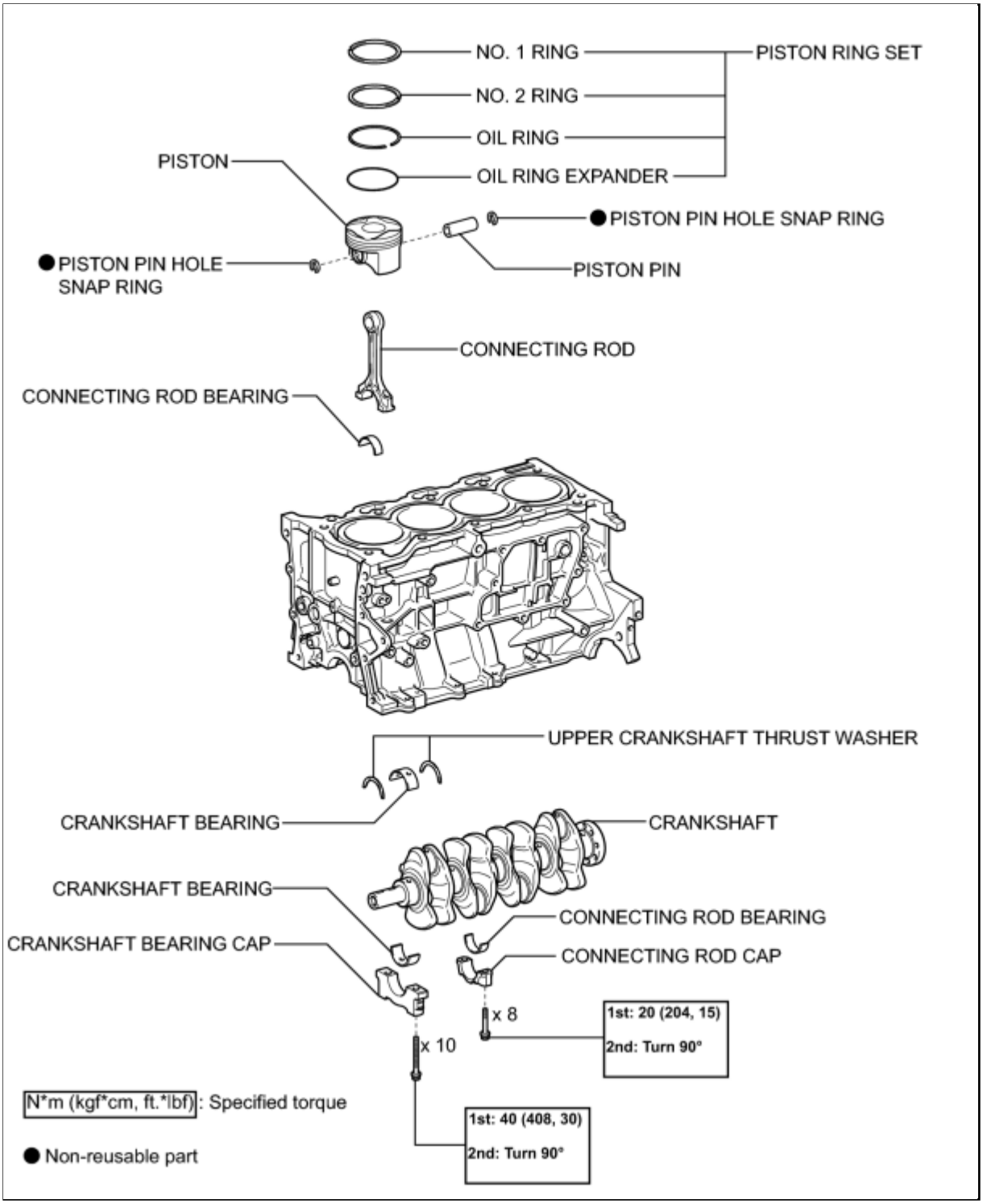
NO. 1 RING
NO. 2 RING
OIL RING
OIL RING EXPANDER
PISTON RING SET
PISTON
PISTON PIN HOLE SNAP RING
PISTON PIN HOLE SNAP RING
PISTON PIN
CONNECTING ROD
CONNECTING ROD BEARING
UPPER CRANKSHAFT THRUST WASHER
CRANKSHAFT BEARING
CRANKSHAFT
CRANKSHAFT BEARING
CONNECTING ROD BEARING
CRANKSHAFT BEARING CAP
CONNECTING ROD CAP
x 8
1st: 20 (204, 15)
2nd: Turn 90°
x 10
1st: 40 (408, 30)
2nd: Turn 90°
N*m (kgf*cm, ft.*lbf): Specified torque
Non-reusable part

Last Modified: 3-10-2010	6.4 A	**From:** 200901
Model Year: 2010	**Model:** Corolla	**Doc ID:** RM000002XA402QX
Title: 2ZR-FE ENGINE MECHANICAL: CYLINDER BLOCK: REASSEMBLY (2010 Corolla)		

REASSEMBLY

1. INSTALL NO. 1 OIL NOZZLE SUB-ASSEMBLY

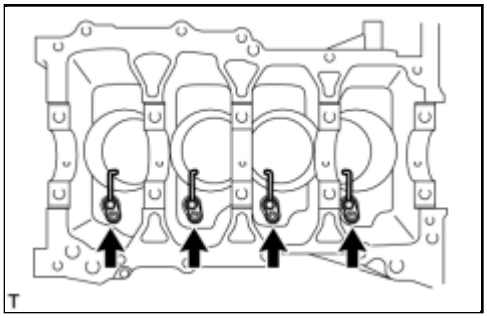

(a) Using a 5 mm socket hexagon wrench, install the oil nozzles with the bolts.

Torque: 10 N·m (102 kgf·cm, 7ft·lbf)

2. INSTALL PISTON

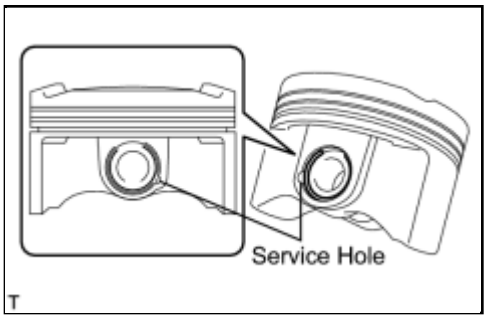

(a) Using a screwdriver, install a new snap ring at one end of the piston pin hole.

HINT:

Make sure that the end gap of the snap ring is not aligned with the pin hole cutout portion of the piston.

(b) Gradually heat the piston to approximately 80 to 90°C (176 to 194°F).

(c) Align the front marks of the piston and connecting rod, and push in the piston with your thumb.

HINT:

The piston and pin are a matched set.

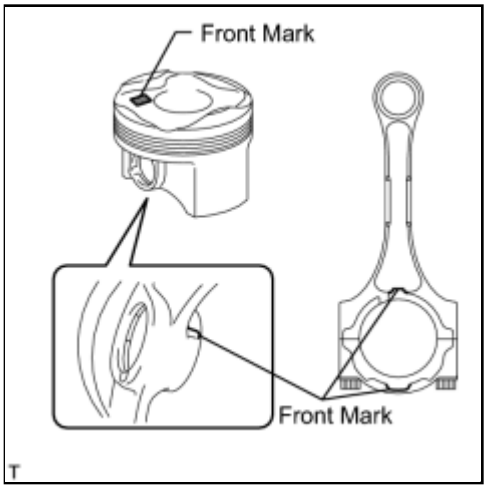

(d) Using a screwdriver, install a new snap ring on the other end of the piston pin hole.

HINT:

Make sure that the end gap of the snap ring is not aligned with the pin hole cutout portion of the piston.

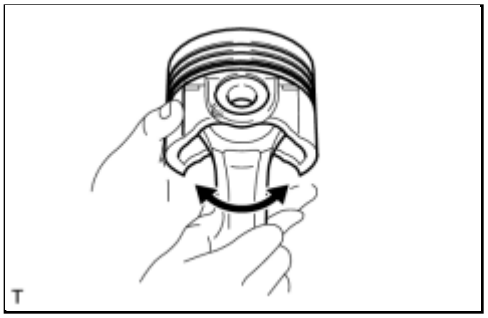

(e) Check the fitting condition between the piston and piston pin by trying to move the piston back and forth on the piston pin.

3. INSTALL PISTON RING SET

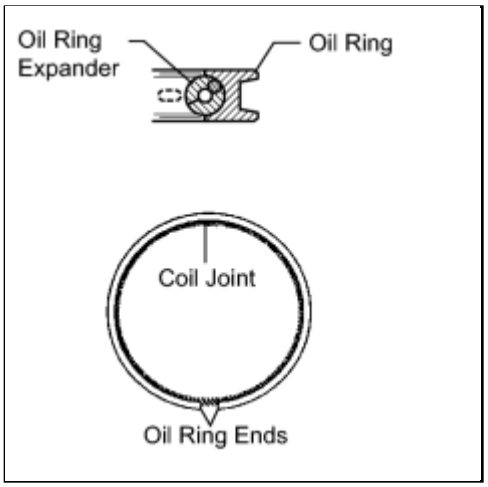

(a) Install the oil ring expander and oil ring rail by hand.

NOTICE:

- Install the expander and oil ring so that their ring ends are at opposite sides.
- Securely install the expander to the inner groove of the oil ring.

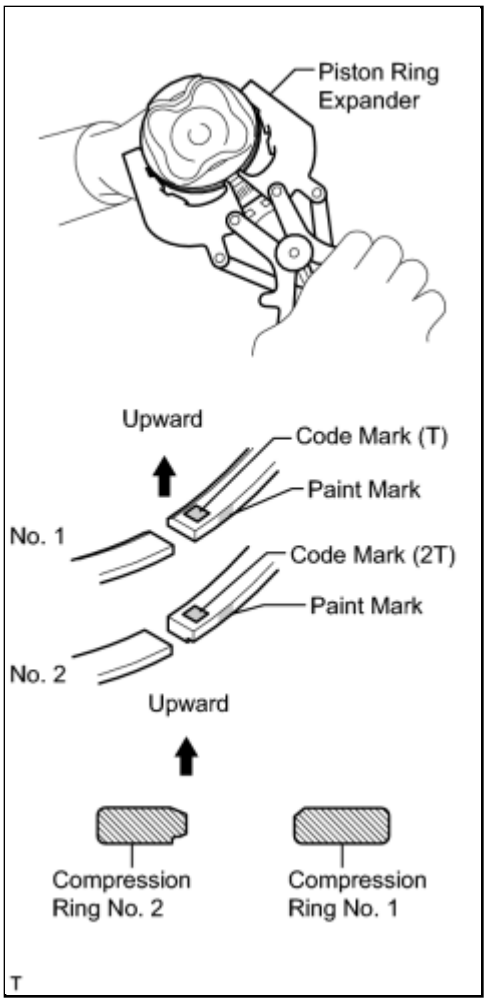

(b) Using a piston ring expander, install the 2 compression rings so that the paint marks are positioned as shown in the illustration.

NOTICE:

- Install the compression ring No. 1 with the code mark (T) facing upward.
- Install the compression ring No. 2 with the code mark (2T) facing upward.
- Paint marks can only be checked on new piston rings. When reusing piston rings, check each piston ring profile in order to install them into the correct positions.

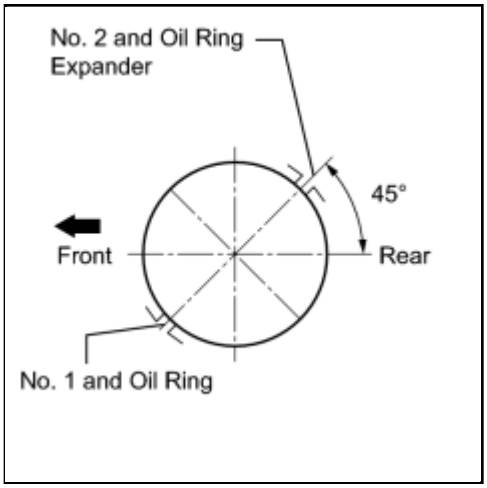

(c) Position the piston rings so that the ring ends are as shown in the illustration.

4. INSTALL CRANKSHAFT BEARING

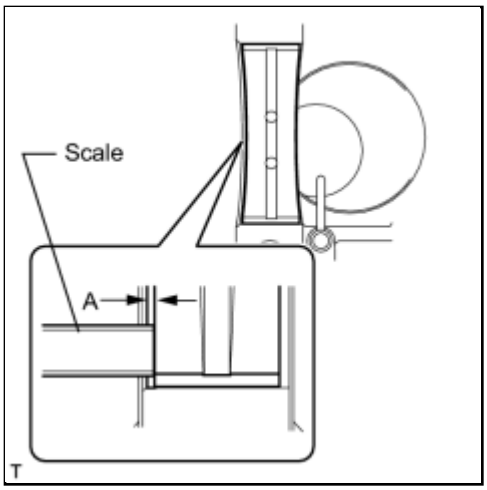

(a) Install the upper bearing (for except No. 3 journal).

(1) Install the upper bearing with an oil groove on the cylinder block.

(2) Using a scale, measure the distance between the cylinder block edge and the upper bearing edge.

NOTICE:

Do not apply engine oil to the bearing inner surface or journal contact surfaces.

Dimension (A):

0.5 to 1.0 mm (0.020 to 0.039 in.)

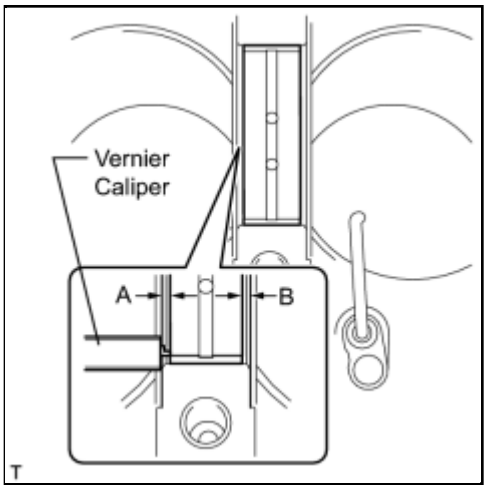

(b) Install the upper bearing (for No. 3 journal).

(1) Install the upper bearing with an oil groove on the cylinder block.

(2) Using a vernier caliper, measure the distance between the cylinder block edge and the upper bearing edge.

NOTICE:

Do not apply engine oil to the bearing inner surface or journal contact surfaces.

Dimension (A - B):

0.5 mm (0.0197 in.) or less

(c) Install the lower bearing.

(1) Install the lower bearing onto the bearing cap.

(2) Using a vernier caliper, measure the distance between the bearing cap edge and the lower bearing edge.

Dimension (A - B):

0.5 mm (0.0197 in.) or less

NOTICE:

Do not apply engine oil to the bearing inner surface or bearing cap contact surfaces.

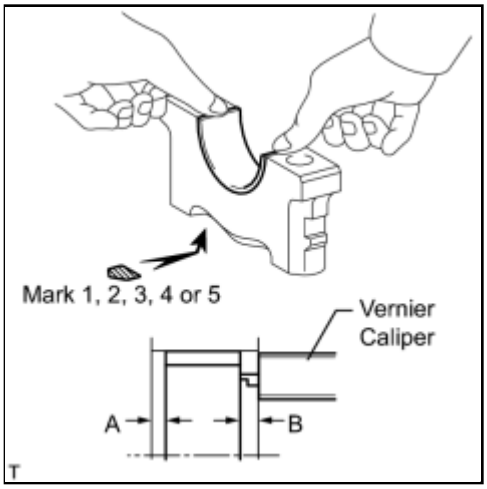

5. INSTALL UPPER CRANKSHAFT THRUST WASHER

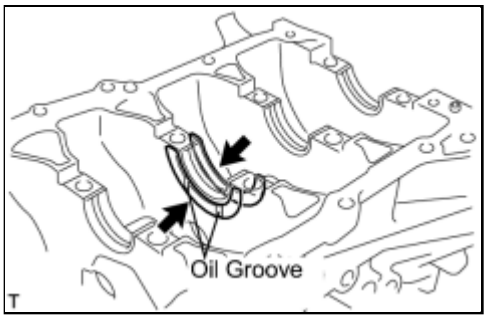

(a) Install the 2 thrust washers under the No. 3 journal of the cylinder block with the oil grooves facing outward.

(b) Apply engine oil to the crankshaft thrust washer.

6. INSTALL CRANKSHAFT

(a) Apply engine oil to the upper bearing and install the crankshaft on the cylinder block.

(b) Apply engine oil to the lower bearing.

(c) Examine the number marks and install the bearing caps on the cylinder block.

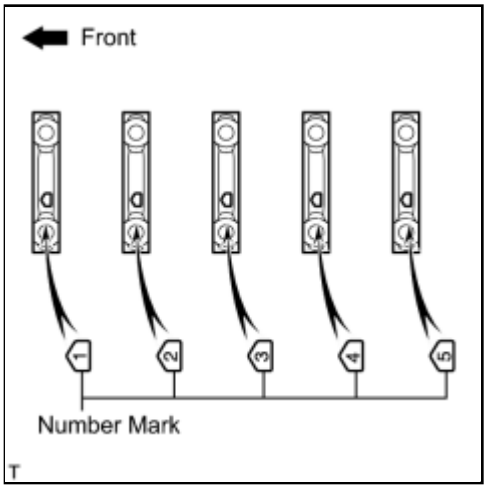

(d) Apply a light coat of engine oil to the threads and under the bearing cap bolts.

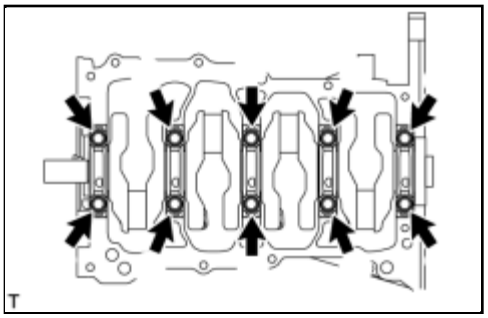

(e) Temporarily install the 10 main bearing cap bolts.

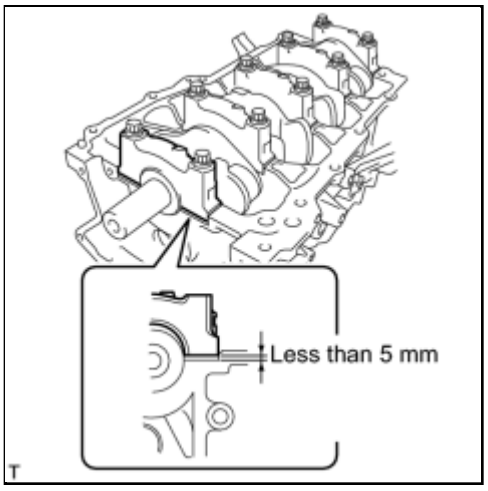

(f) Insert the main bearing cap by hand until the clearance between the main bearing cap and the cylinder block is less than 5 mm (0.20 in.) using the 2 internal bearing cap bolts as guides.

(g) Using a plastic hammer, lightly tap the bearing cap to ensure a proper fit.

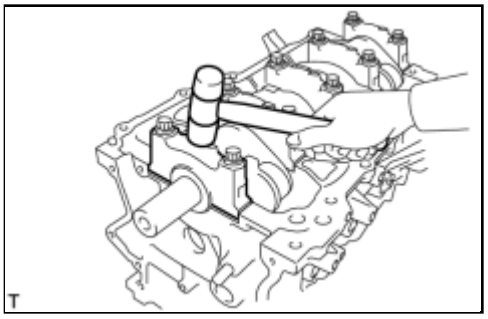

(h) Install the crankshaft bearing cap bolts.

NOTICE:

Tighten the main bearing cap bolts in 2 progressive steps.

(i) Step 1

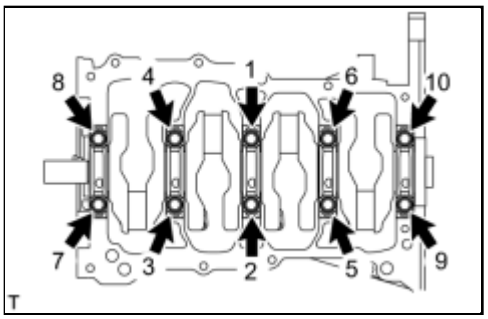

(1) Install and uniformly tighten the 10 main bearing cap bolts in the sequence shown in the illustration.

Torque: 40 N·m (408 kgf·cm, 30ft·lbf)

(j) Step 2

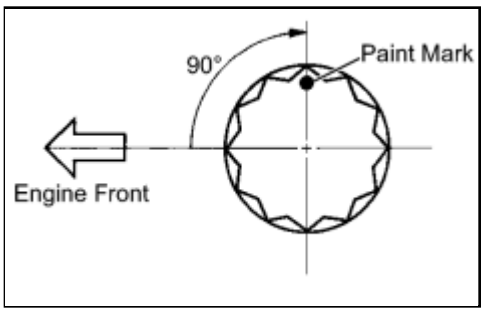

(1) Mark the front of the bearing cap bolts with paint.

(2) Further tighten the bearing cap bolts an additional 90° in the numerical order shown in the previous illustration.

(k) Check that the paint mark is now at a 90° angle to the front.

(l) Check that the crankshaft turns smoothly.

(m) Check the crankshaft thrust clearance INFO .

7. INSTALL CONNECTING ROD BEARING

(a) Install the connecting rod bearing to the connecting rod and bearing cap.

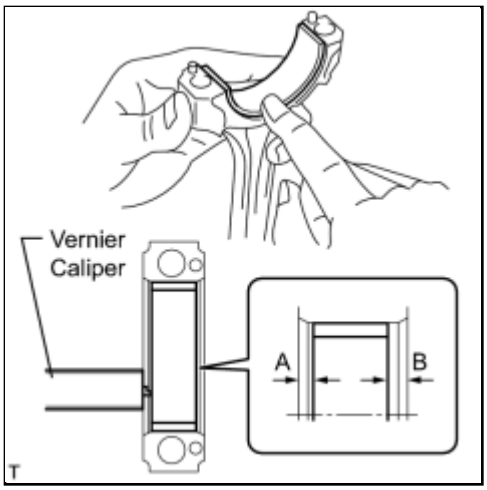

(b) Using a vernier caliper, measure the distance between the connecting rod and bearing cap edges and the connecting rod bearing edge.

Dimension (A - B):
0.7 mm (0.0276 in.) or less

NOTICE:

Do not apply engine oil to the bearing inner surface or connecting rod contact surfaces.

8. INSTALL PISTON SUB-ASSEMBLY WITH CONNECTING ROD

(a) Apply engine oil to the cylinder walls, the pistons, and the surfaces of the connecting rod bearings.

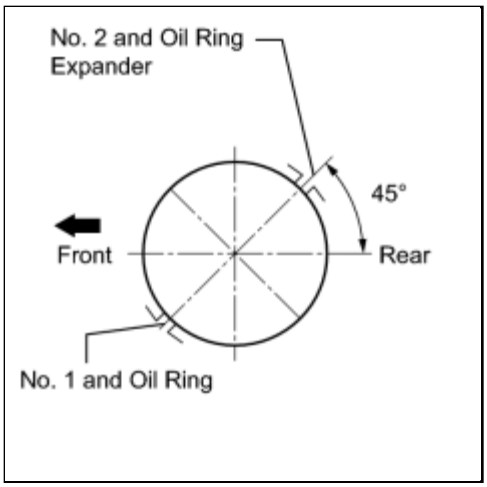

(b) Position the piston rings so that the ring ends are as shown in the illustration.

NOTICE:

Do not align the ring ends.

(c) Using a piston ring compressor, push the correctly numbered piston and connecting rod assembly into the cylinder with the front mark of the piston facing forward.

NOTICE:

- When inserting the piston with connecting rod, do not allow it to make contact with the oil nozzle.
- Match the numbered connecting rod cap with the connecting rod.

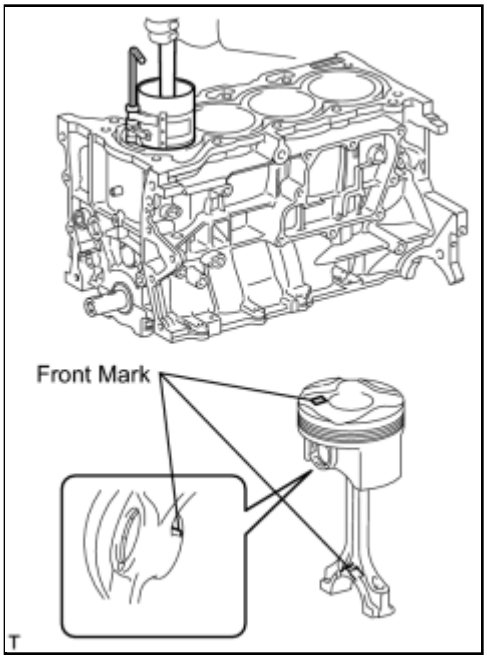

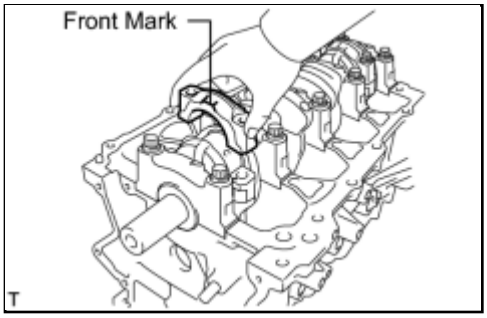

(d) Check that the protrusion of the connecting rod cap is facing in the correct direction.

(e) Apply a light coat of engine oil to the threads and under the heads of the connecting rod cap bolts.

(f) Install the connecting rod cap bolts.

NOTICE:

Tighten the connecting rod cap bolts in 2 progressive steps.

(g) Step 1

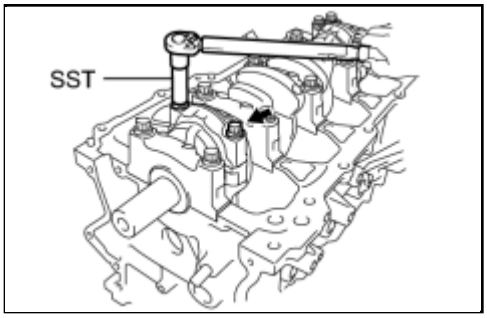

(1) Using SST, install and alternately tighten the bolts of the connecting rod cap in several steps.

SST: 09205-16010

Torque: 20 N·m (204 kgf·cm, 15ft·lbf)

(h) Step 2

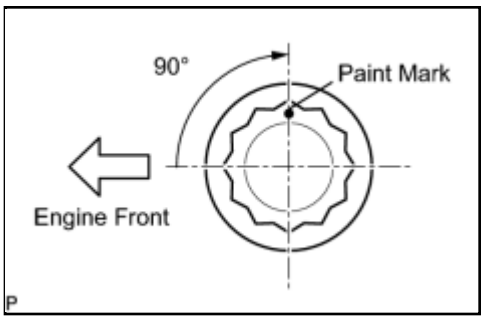

(1) Mark the front of the connecting rod cap bolts with paint.

(2) Further tighten the cap bolts an additional 90° as shown in the illustration.

(i) Check that the crankshaft turns smoothly.

(j) Check the connecting rod thrust clearance INFO .

9. INSTALL NO. 1 VENTILATION CASE

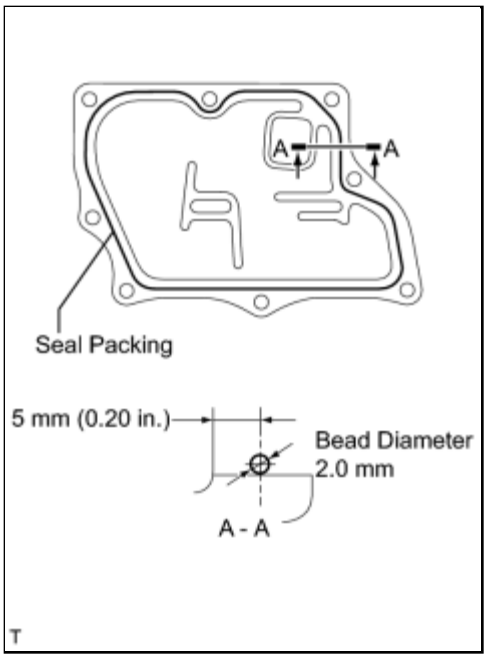

(a) Apply seal packing in a continuous bead as shown in the illustration.

Seal packing:
Toyota Genuine Seal Packing Black, Three Bond 1207B or equivalent
Bead diameter:
2.0 mm (0.0787 in.)

NOTICE:

- Remove any oil from the contact surface.
- Install the No. 1 ventilation case within 3 minutes and tighten the bolts and nuts within 15 minutes after applying seal packing.
- Do not start the engine for at least 2 hours after installing.

(b) Install the No. 1 ventilation case with the 6 bolts and 2 nuts.

Torque: 10 N·m (102 kgf·cm, 7ft·lbf)

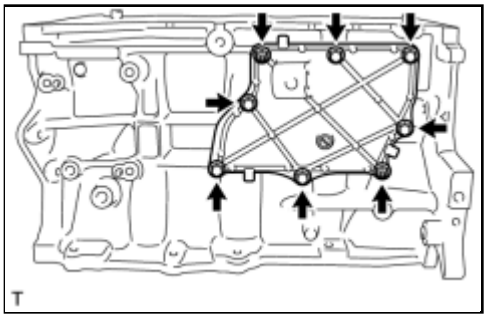

T

Last Modified: 3-10-2010	6.4 A	**From:** 200901
Model Year: 2010	**Model:** Corolla	**Doc ID:** RM000002XA101QX
Title: 2ZR-FE ENGINE MECHANICAL: CYLINDER BLOCK: REPLACEMENT (2010 Corolla)		

REPLACEMENT

1. REPLACE RING PIN

NOTICE:

It is not necessary to remove the ring pins unless they are being replaced.

(a) Remove the ring pins.

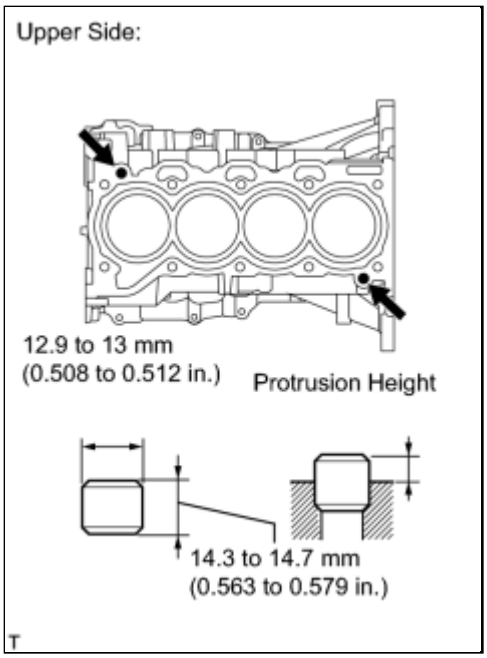

(b) Using a plastic hammer, tap in the ring pins.

Standard protrusion:
7.5 to 8.5 mm (0.295 to 0.335 in.)

2. REPLACE STUD BOLT

NOTICE:

If any of the stud bolts is deformed or the threads are damaged, replace it.

(a) Remove the stud bolts.

(b) Using a "TORX" socket E6, install the stud bolts as shown in the illustration.

Torque: 5.0 N·m (51 kgf·cm, 44in·lbf)

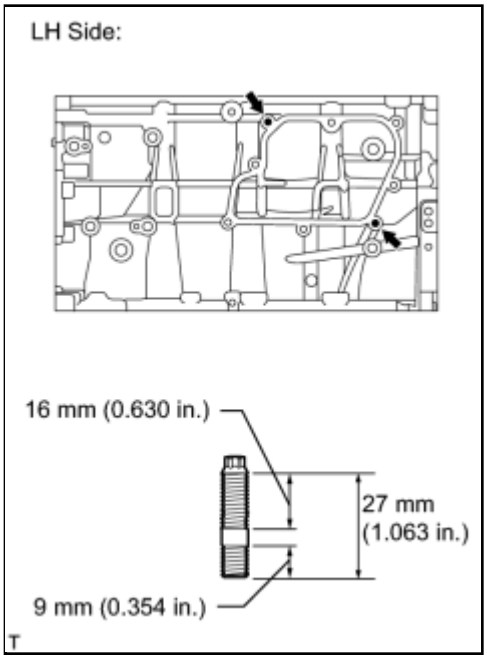

3. REPLACE STRAIGHT PIN

NOTICE:

It is not necessary to remove the straight pins unless they are being replaced.

(a) Remove the straight pins.

(b) Using a plastic hammer, tap in the straight pins.

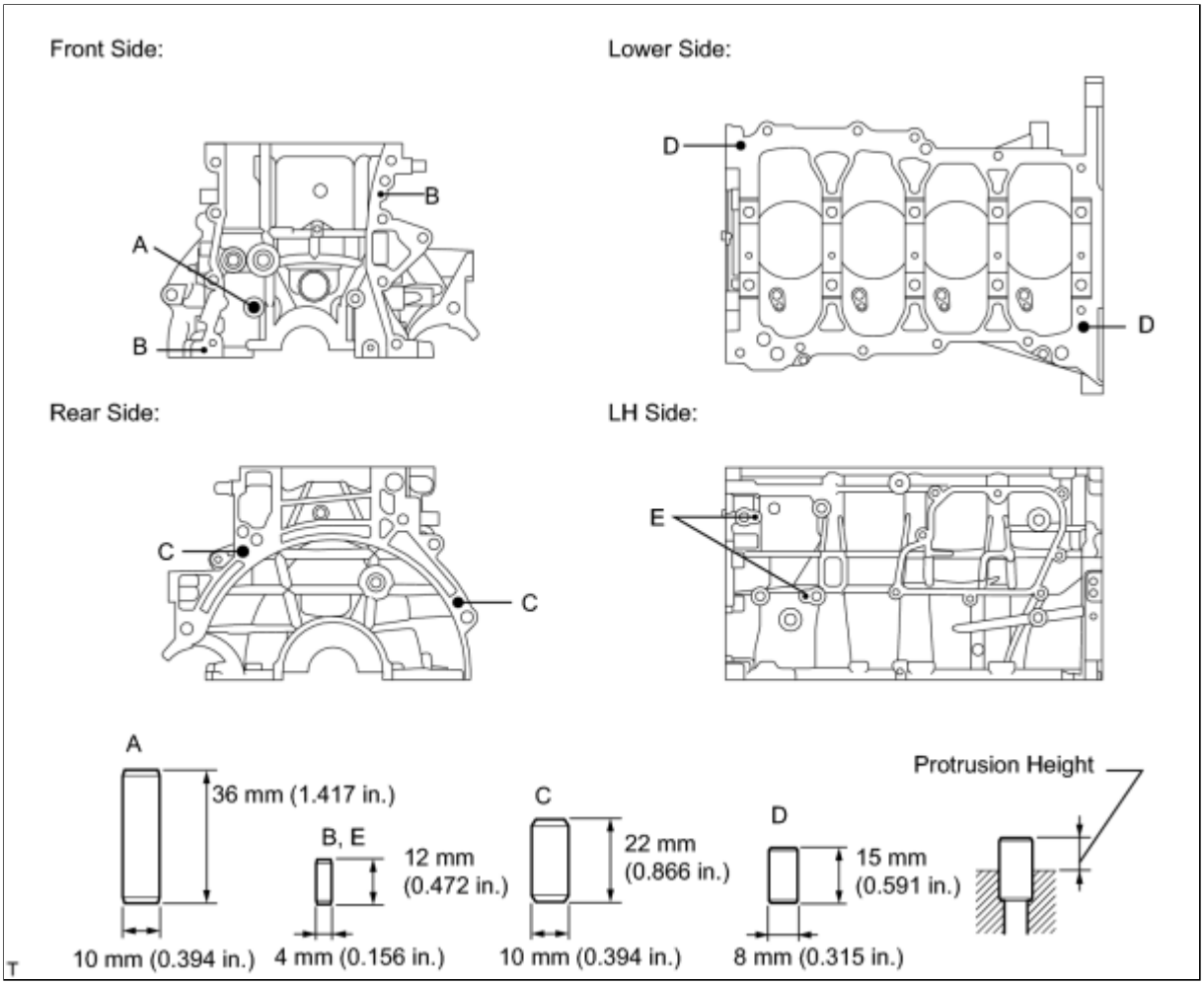

Standard Protrusion:

ITEM	PROTRUSION
Pin A	18.5 to 19.5 mm (0.729 to 0.768 in.)
Pin B	5.0 to 7.0 mm (0.197 to 0.276 in.)
Pin C	11 to 13 mm (0.433 to 0.512 in.)
Pin D	5.0 to 7.0 mm (0.197 to 0.276 in.)
Pin E	5.0 to 6.0 mm (0.197 to 0.236 in.)

Last Modified: 3-10-2010	6.4 K	**From:** 200901
Model Year: 2010	**Model:** Corolla	**Doc ID:** RM00000224900BX
Title: 2AZ-FE ENGINE MECHANICAL: CYLINDER HEAD: COMPONENTS (2010 Corolla)		

COMPONENTS

ILLUSTRATION

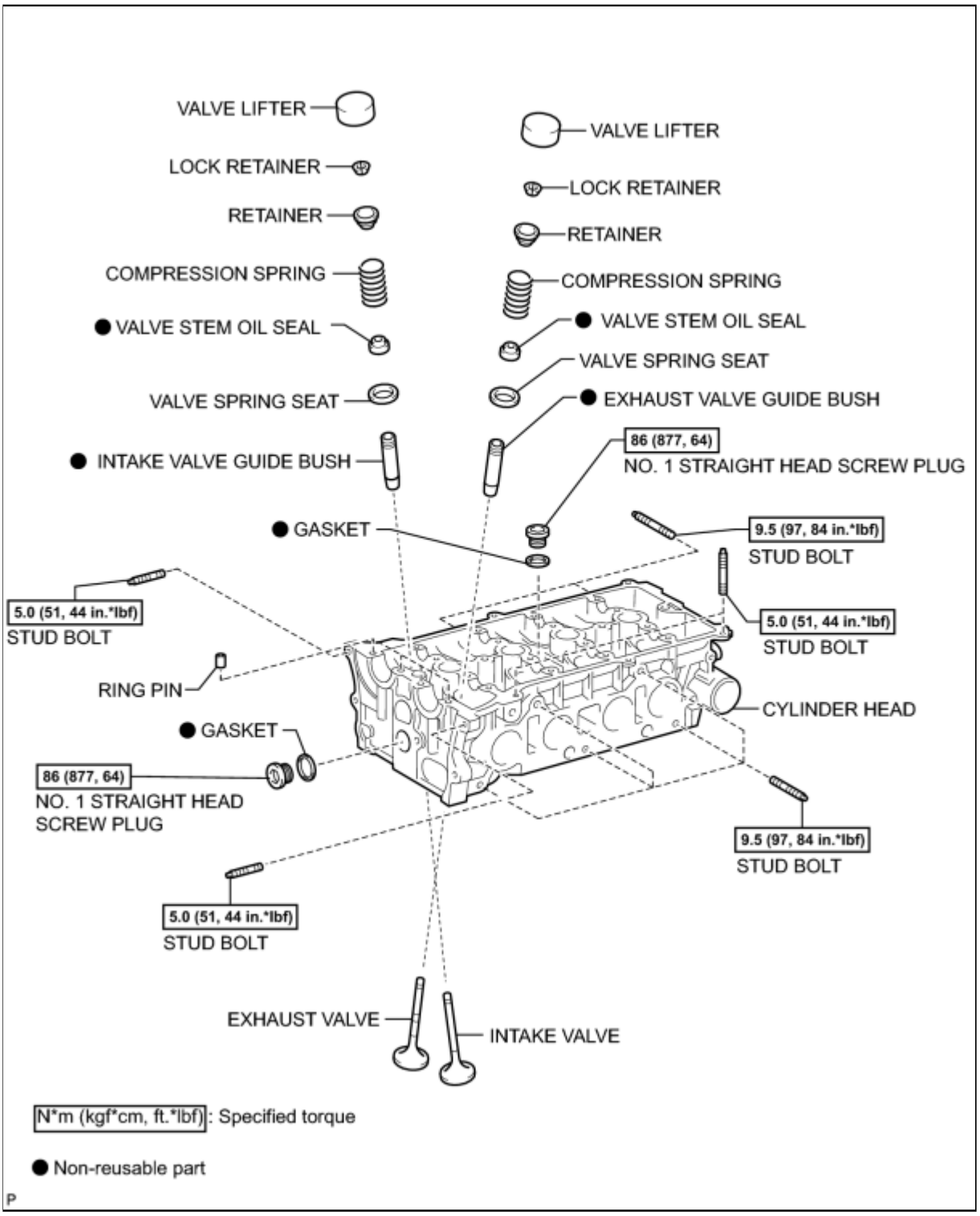

Last Modified: 3-10-2010	6.4 G	**From:** 200901
Model Year: 2010	**Model:** Corolla	**Doc ID:** RM000000YIC012X
Title: 2AZ-FE ENGINE MECHANICAL: CYLINDER HEAD: INSPECTION (2010 Corolla)		

INSPECTION

1. INSPECT CYLINDER HEAD FOR WARPAGE

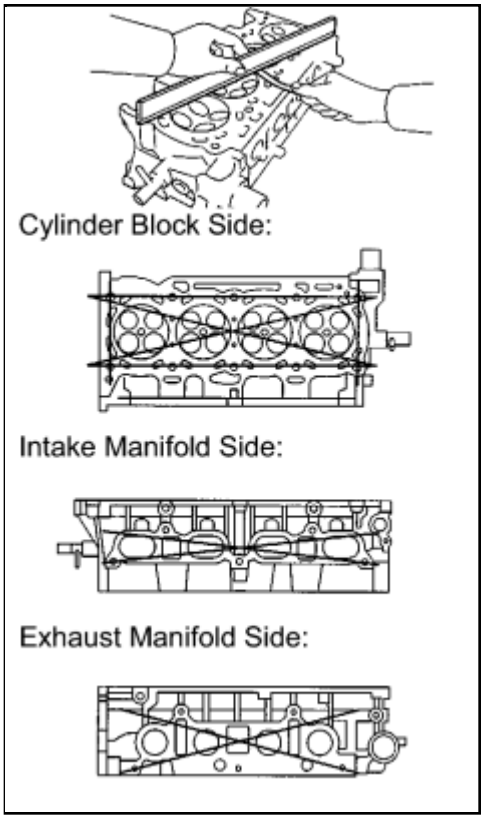

(a) Using a precision straight edge and a feeler gauge, measure the surface contacting the cylinder block and the manifolds for warpage.

Maximum Warpage:

ITEM	SPECIFIED CONDITION
Cylinder block side	0.08 mm (0.00315 in.)
Intake manifold side	0.08 mm (0.00315 in.)
Exhaust manifold side	0.08 mm (0.00315 in.)

If the warpage is greater than the maximum, replace the cylinder head.

2. INSPECT CYLINDER HEAD FOR CRACKS

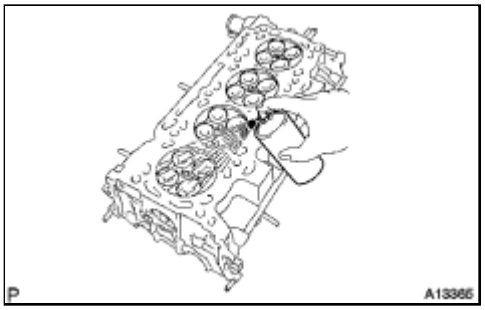

(a) Using a dye penetrant, check the intake ports, exhaust ports and cylinder surface for cracks.

If cracked, replace the cylinder head.

3. INSPECT CAMSHAFT THRUST CLEARANCE

(a) Install the camshafts INFO .

(b) Using a dial indicator, measure the thrust clearance while moving the camshaft back and forth.

Standard Thrust Clearance:

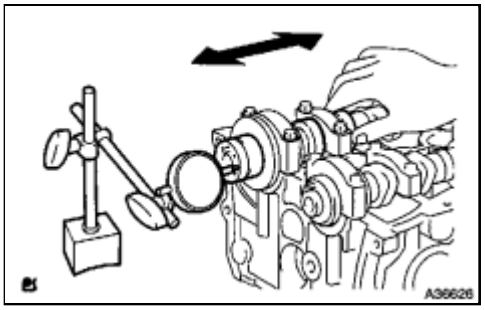

ITEM	SPECIFIED CONDITION
Intake	0.040 to 0.095 mm (0.00157 to 0.00374 in.)
Exhaust	0.090 to 0.145 mm (0.00354 to 0.00570 in.)

Maximum Thrust Clearance:

ITEM	SPECIFIED CONDITION
Intake	0.110 mm (0.00433 in.)
Exhaust	0.150 mm (0.00591 in.)

If the thrust clearance is greater than the maximum, replace the cylinder head. If the thrust surface is damaged, replace the camshaft.

4. INSPECT CAMSHAFT OIL CLEARANCE

(a) Clean the bearing caps and camshaft journals.

(b) Place the camshafts on the cylinder head.

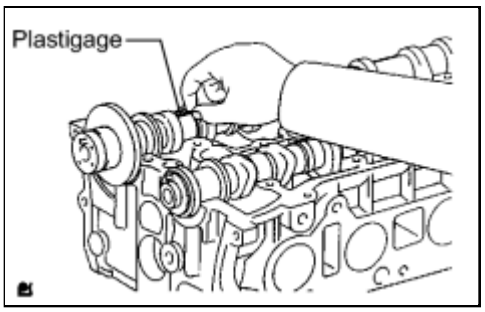

(c) Lay a strip of Plastigage across each of the camshaft journals.

(d) Install the bearing caps INFO .

NOTICE:

Do not turn the camshaft.

(e) Remove the bearing caps INFO .

(f) Measure the Plastigage at its widest point.

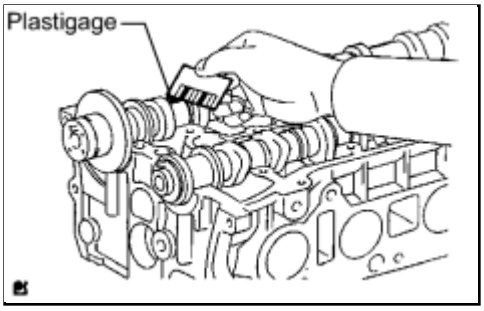

Standard Oil Clearance:

ITEM	SPECIFIED CONDITION
Camshaft No. 1 journal bearing mark 1	0.007 to 0.038 mm (0.000276 to 0.00150 in.)
Camshaft No. 1 journal bearing mark 2	0.008 to 0.038 mm (0.000315 to 0.00150 in.)
Camshaft No. 1 journal bearing mark 3	0.008 to 0.038 mm (0.000315 to 0.00150 in.)
Camshaft other journals	0.025 to 0.062 mm (0.000984 to 0.00244 in.)
No. 2 camshaft No. 1 journal	0.040 to 0.072 mm (0.00157 to 0.00283 in.)
No. 2 camshaft other journals	0.025 to 0.062 mm (0.000984 to 0.00244 in.)

Maximum Oil Clearance:

ITEM	SPECIFIED CONDITION
Intake	0.070 mm (0.00276 in.)
Exhaust	0.100 mm (0.00394 in.)

NOTICE:

Completely remove the Plastigage after the inspection.

- If the oil clearance is greater than the maximum, replace the camshaft. If necessary, replace the cylinder head.
- If the oil clearance on the camshaft No. 1 journal is greater than the maximum, choose a new bearing and install it.

(1) Check the number mark shown in the illustration.

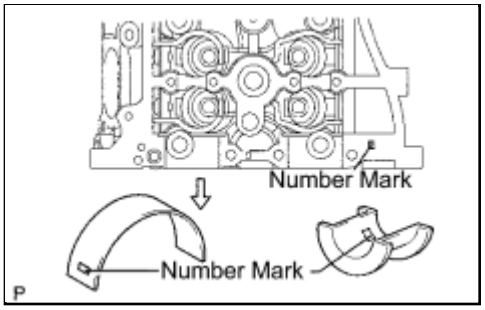

Cylinder Head Journal Bore Diameter:

MARK 1	MARK 2	MARK 3
40.000 to 40.009 mm (1.5748 to 1.5752 in.)	40.010 to 40.017 mm (1.5752 to 1.5755 in.)	40.018 to 40.025 mm (1.5755 to 1.5758 in.)

Standard Bearing Center Wall Thickness:

MARK 1	MARK 2	MARK 3
2.000 to 2.004 mm (0.0787 to 0.0789 in.)	2.005 to 2.008 mm (0.0789 to 0.0791 in.)	2.009 to 2.012 mm (0.0791 to 0.0792 in.)

Camshaft journal diameter:
35.971 to 35.985 mm (1.4162 to 1.4167 in.)

5. INSPECT INNER COMPRESSION SPRING

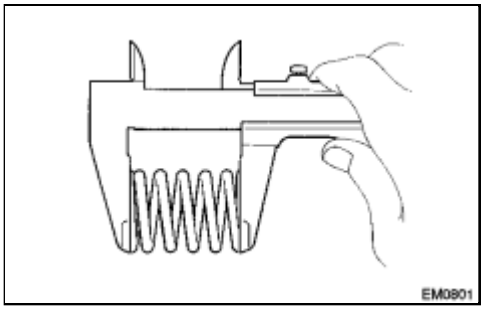

(a) Using a vernier caliper, measure the free length of the valve spring.

Free length:
47.43 mm (1.867 in.)

If the free length is not as specified, replace the valve spring.

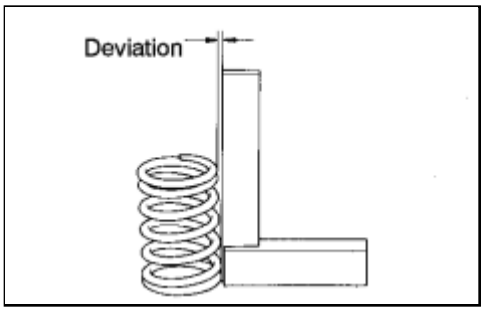

(b) Using a steel set square, measure the deviation of the valve spring.

Maximum deviation:
1.6 mm (0.063 in.)

If the deviation is greater than the maximum, replace the valve spring.

6. INSPECT INTAKE VALVE

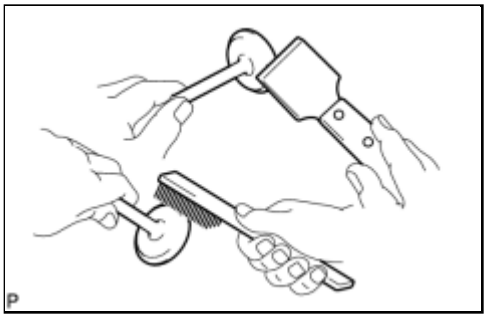

(a) Using a gasket scraper, scrape off any carbon on the valve head.

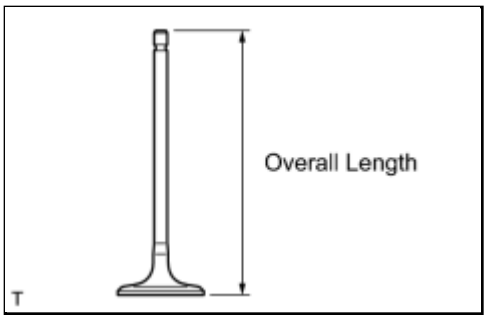

(b) Using a vernier caliper, measure the overall length of the valve.

Standard overall length:
101.71 mm (4.0043 in.)
Minimum overall length:
101.21 mm (3.9846 in.)

If the overall length is less than the minimum, replace the valve.

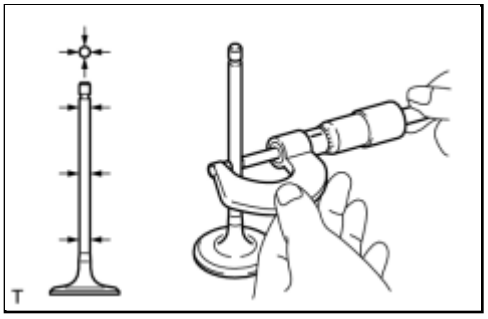

(c) Using a micrometer, measure the diameter of the valve stem.

Valve stem diameter:
5.470 to 5.485 mm (0.2154 to 0.2159 in.)

If the valve stem is not as specified, check the oil clearance.

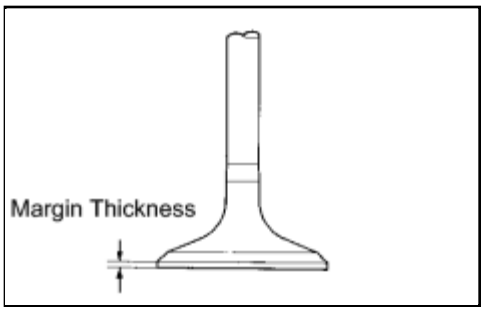

(d) Using a vernier caliper, measure the valve head margin thickness.

Standard margin thickness:
1.05 to 1.45 mm (0.0413 to 0.0571 in.)
Minimum margin thickness:
0.50 mm (0.0197 in.)

If the margin thickness is less than the minimum, replace the valve.

7. INSPECT EXHAUST VALVE

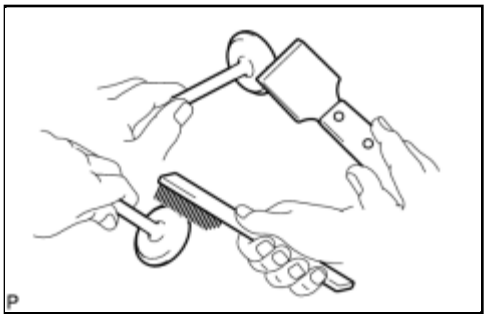

(a) Using a gasket scraper, scrape off any carbon on the valve head.

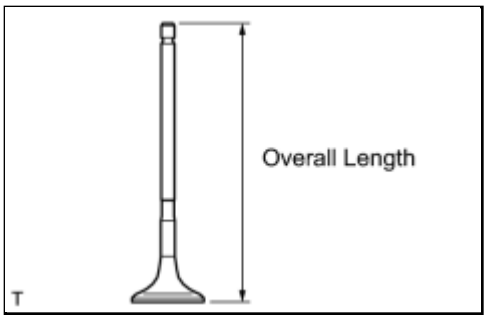

(b) Using a vernier caliper, measure the overall length of the valve.

Standard overall length:
101.15 mm (3.9823 in.)
Minimum overall length:
100.70 mm (3.9646 in.)

If the overall length is less than the minimum, replace the valve.

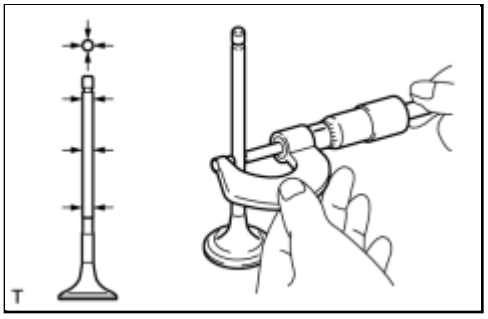

(c) Using a micrometer, measure the diameter of the valve stem.

Valve stem diameter:
5.465 to 5.480 mm (0.2152 to 0.2157 in.)

If the valve stem is not as specified, check the oil clearance.

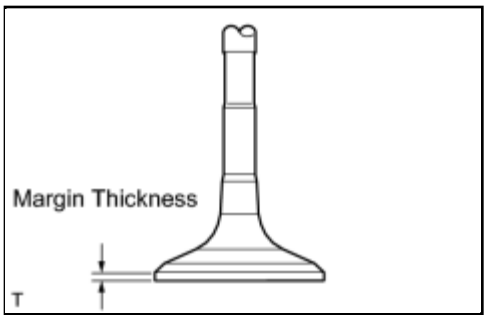

(d) Using a vernier caliper, measure the valve head margin thickness.

Standard margin thickness:
1.20 to 1.60 mm (0.0472 to 0.0630 in.)
Minimum margin thickness:
0.50 mm (0.0197 in.)

If the margin thickness is less than the minimum, replace the valve.

8. INSPECT INTAKE VALVE GUIDE BUSH

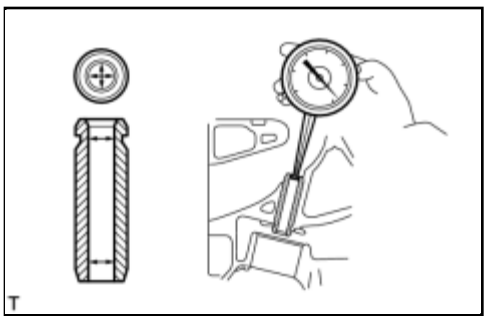

(a) Using a caliper gauge, measure the inside diameter of the guide bush.

Bushing inside diameter:
5.510 to 5.530 mm (0.2169 to 0.2177 in.)

(b) Subtract the valve stem diameter measurement from the guide bush inside diameter measurement.

Standard oil clearance:
0.025 to 0.060 mm (0.0010 to 0.0024 in.)
Maximum oil clearance:
0.090 mm (0.0035 in.)

If the clearance is greater than the maximum, replace the valve and guide bush.

9. INSPECT EXHAUST VALVE GUIDE BUSH

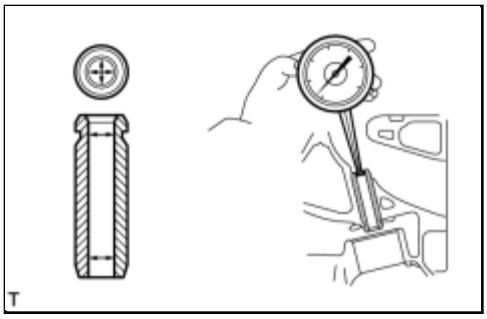

(a) Using a caliper gauge, measure the inside diameter of the guide bush.

Bushing inside diameter:
5.510 to 5.530 mm (0.2169 to 0.2177 in.)

(b) Subtract the valve stem diameter measurement from the guide bushing inside diameter measurement.

Standard oil clearance:
0.030 to 0.065 mm (0.0012 to 0.0026 in.)
Maximum oil clearance:
0.095 mm (0.0037 in.)

If the clearance is greater than the maximum, replace the valve and guide bush.

10. INSPECT VALVE LIFTER

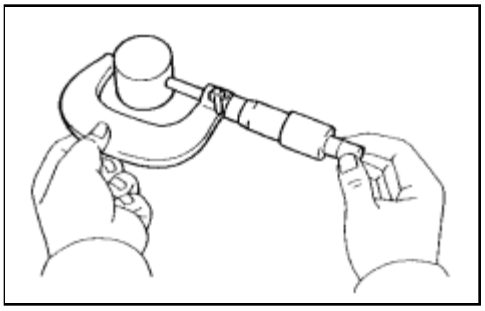

(a) Using a micrometer, measure the lifter diameter.

Lifter diameter:
30.966 to 30.976 mm (1.2191 to 1.2195 in.)

(b) Using a caliper gauge, measure the lifter bore diameter of the cylinder head.

Standard lifter bore diameter:
31.009 to 31.025 mm (1.2208 to 1.2215 in.)

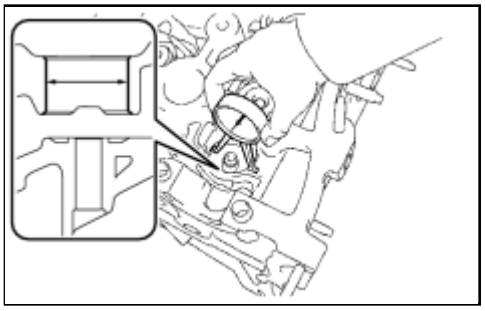

(c) Subtract the lifter diameter measurement from the lifter bore diameter measurement.

Standard oil clearance:
0.033 to 0.059 mm (0.00130 to 0.00232 in.)
Maximum oil clearance:
0.079 mm (0.00311 in.)

If the oil clearance is greater than the maximum, replace the lifter. If necessary, replace the cylinder head.

11. INSPECT CYLINDER HEAD SET BOLT

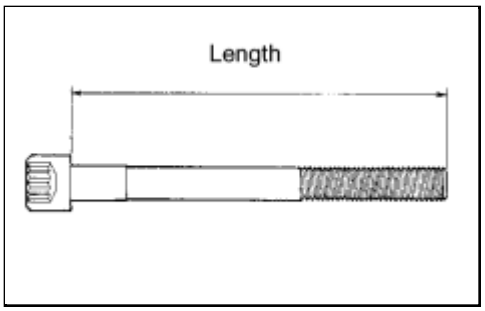

(a) Using a vernier caliper, measure the length of the head bolts from the seat to the end.

Standard bolt length:
141.3 to 142.7 mm (5.563 to 5.618 in.)
Maximum bolt length:
144.2 mm (5.677 in.)

If the bolt length is greater than the maximum, replace the cylinder head set bolt.

Last Modified: 3-10-2010	6.4 A	**From:** 200901
Model Year: 2010	**Model:** Corolla	**Doc ID:** RM00000224A00BX
Title: 2AZ-FE ENGINE MECHANICAL: CYLINDER HEAD: DISASSEMBLY (2010 Corolla)		

DISASSEMBLY

1. REMOVE VALVE LIFTER

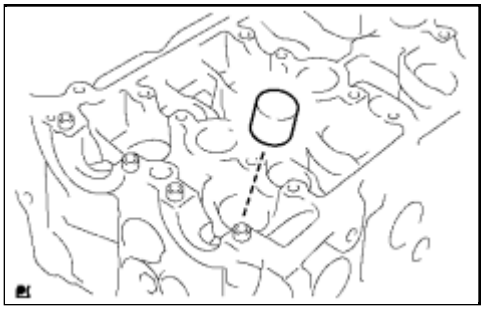

(a) Remove the 16 valve lifters from the cylinder head.

HINT:

Arrange the valve lifters in the correct order.

2. REMOVE INTAKE VALVE

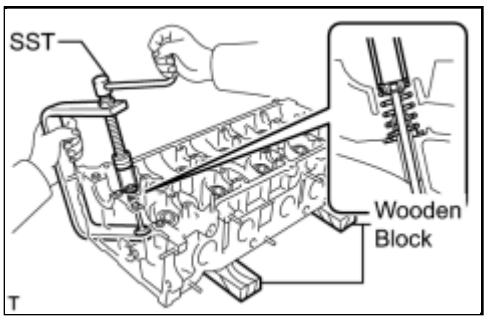

(a) Using SST and wooden blocks, remove the 16 retainer locks.

SST: 09202-70020

09202-00010

(b) Remove the 8 retainers, compression springs and intake valves.

HINT:

Arrange the removed parts in the correct order.

3. REMOVE EXHAUST VALVE

(a) Using SST and wooden blocks, remove the 16 retainer locks.

SST: 09202-70020

09202-00010

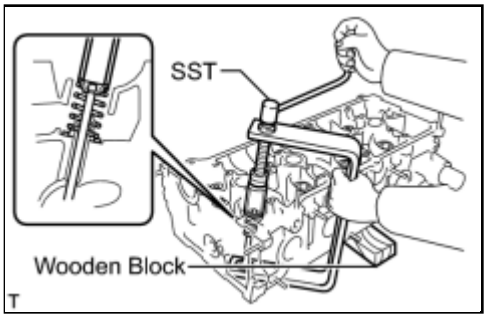

(b) Remove the 8 retainers, compression springs and exhaust valves.

HINT:

Arrange the removed parts in the correct order.

4. REMOVE VALVE STEM OIL SEAL

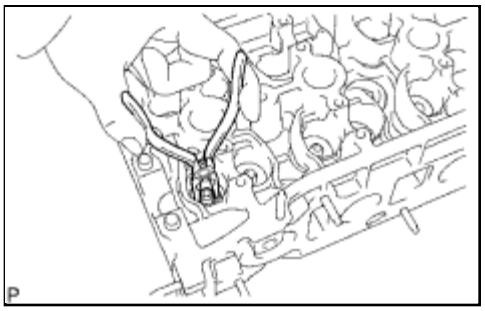

(a) Using needle nose pliers, remove the oil seals.

5. REMOVE VALVE SPRING SEAT

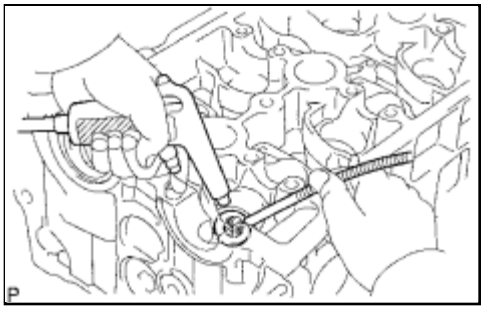

(a) Using compressed air and a magnetic pick-up tool, remove the valve spring seats by blowing air onto them.

6. REMOVE NO. 1 STRAIGHT HEAD SCREW PLUG

(a) Using a 14 mm straight hexagon wrench, remove the 2 screw plugs and 2 gaskets.

NOTICE:

If water leaks from the straight screw plug or the plug is

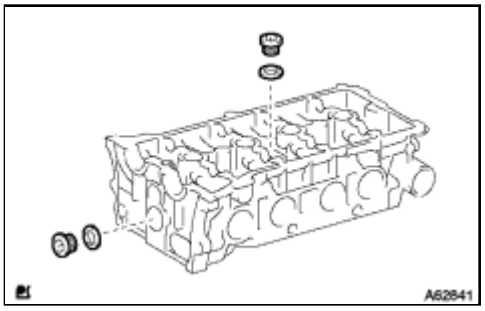

corroded, replace it.

7. REMOVE STUD BOLT

8. REMOVE RING PIN

Last Modified: 3-10-2010	6.4 A	**From:** 200901
Model Year: 2010	**Model:** Corolla	**Doc ID:** RM00000224B00BX
Title: 2AZ-FE ENGINE MECHANICAL: CYLINDER HEAD: REASSEMBLY (2010 Corolla)		

REASSEMBLY

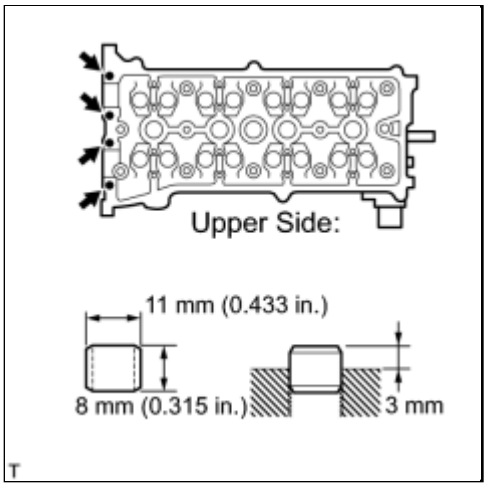

1. INSTALL RING PIN

(a) Using a plastic-faced hammer, tap in a new ring pin to the specified protrusion height.

Protrusion height:
3 mm (0.118 in.)

2. INSTALL STUD BOLT

NOTICE:
If any stud bolt is deformed or the threads are damaged, replace it.

(a) Using E5 and E7 "TORX" sockets, install the stud bolts.

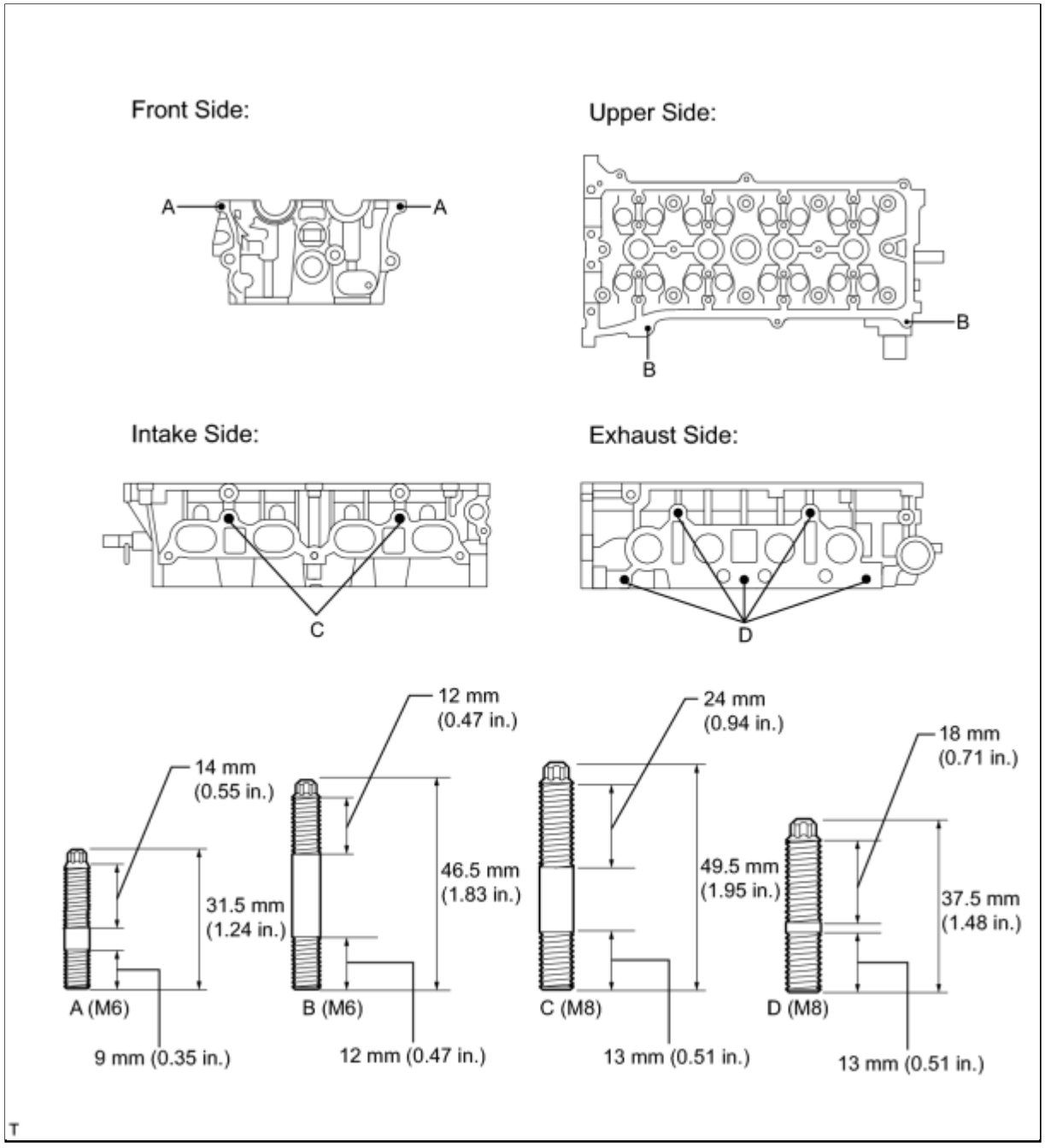

Bolt A - Torque: 5.0 N·m (51 kgf·cm, 44in·lbf)
Bolt B - Torque: 5.0 N·m (51 kgf·cm, 44in·lbf)
Bolt C - Torque: 9.5 N·m (97 kgf·cm, 84in·lbf)
Bolt D - Torque: 9.5 N·m (97 kgf·cm, 84in·lbf)

3. INSTALL NO. 1 STRAIGHT HEAD SCREW PLUG

(a) Using a 14 mm straight hexagon wrench, install 2 new gaskets and the 2 straight screw plugs.

Torque: 86 N·m (877 kgf·cm, 64ft·lbf)

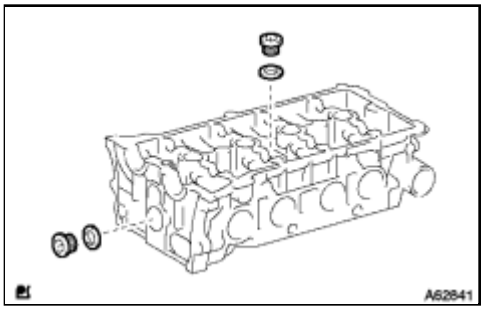

4. INSTALL VALVE SPRING SEAT

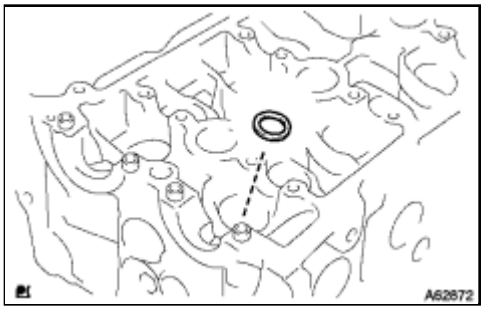

(a) Install the valve spring seats into the cylinder head.

5. INSTALL VALVE STEM OIL SEAL

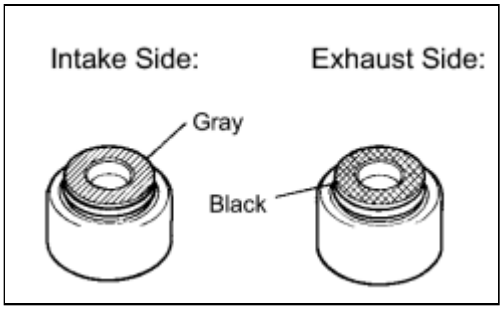

(a) Apply a light coat of engine oil to a new oil seal.

NOTICE:

Pay close attention when installing the intake and exhaust oil seals. Installing the intake oil seal into the exhaust side or installing the exhaust oil seal into the intake side may cause installation problems later.

HINT:

The intake valve oil seal is gray and the exhaust valve oil seal is black.

(b) Using SST, push in the oil seal.

SST: 09201-41020

NOTICE:

Failure to use SST will cause the seal to be damaged or improperly seated.

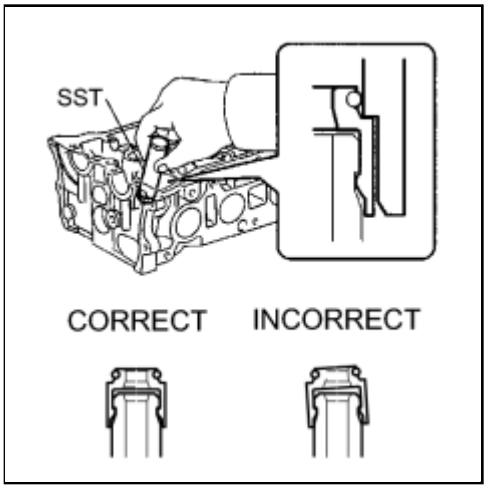

6. INSTALL INTAKE VALVE

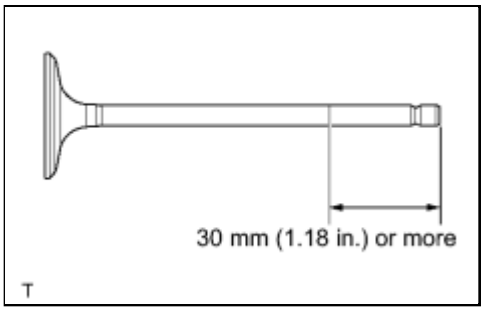

(a) Apply a sufficient coat of engine oil to the tip area of the intake valve shown in the illustration.

(b) Install the valve, compression spring and spring retainer to the cylinder head.

NOTICE:

Install the same parts in the same combination to the original locations.

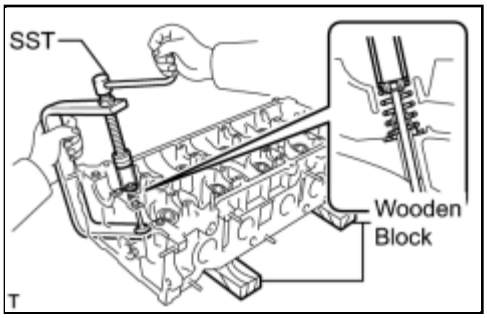

(c) Using SST and wooden blocks, compress the spring and install the 2 retainer locks.

SST: 09202-70020

09202-00010

(d) Using a 5 mm pin punch and plastic hammer, lightly tap the valve stem tip to ensure a proper fit.

NOTICE:

Be careful not to damage the valve stem tip.

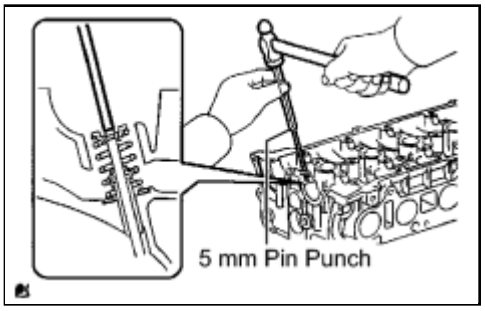

7. INSTALL EXHAUST VALVE

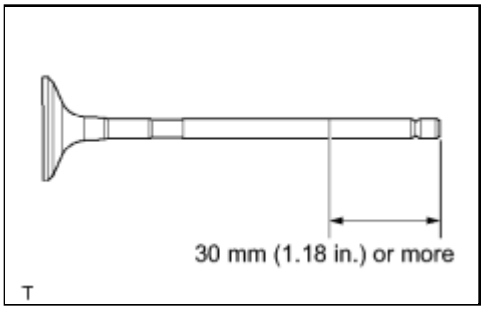

(a) Apply a sufficient coat of engine oil to the tip area of the intake valve shown in the illustration.

(b) Install the valve, compression spring and spring retainer to the cylinder head.

NOTICE:

Install the same parts in the same combination to the original locations.

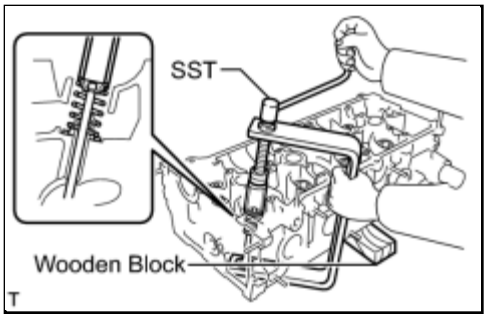

(c) Using SST and wooden blocks, compress the spring and install the 2 retainer locks.

SST: 09202-70020

09202-00010

(d) Using a 5 mm pin punch and plastic hammer, lightly tap the valve stem tip to ensure a proper fit.

NOTICE:

Be careful not to damage the valve stem tip.

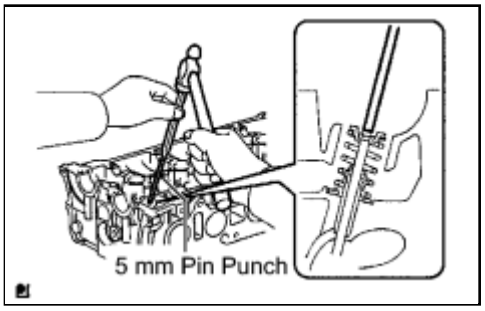

8. INSTALL VALVE LIFTER

(a) Apply a light coat of engine oil.

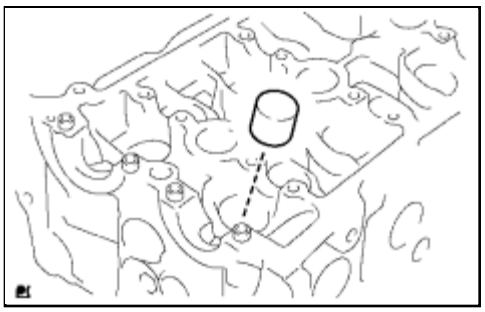

(b) Assemble the valve lifter and the tip of the valve stem.

NOTICE:

Install the same parts in the same combination to the original locations.

Last Modified: 3-10-2010	6.4 A	**From:** 200901
Model Year: 2010	**Model:** Corolla	**Doc ID:** RM0000033OR006X
Title: 2AZ-FE ENGINE MECHANICAL: CYLINDER HEAD: REPLACEMENT (2010 Corolla)		

REPLACEMENT

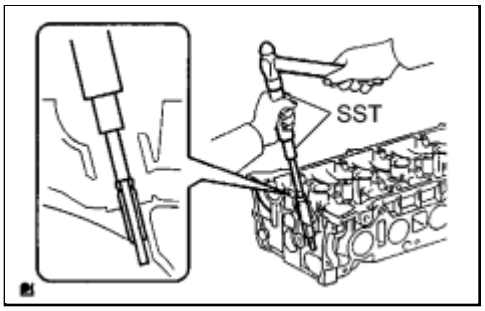

1. REMOVE INTAKE VALVE GUIDE BUSH

(a) Heat the cylinder head to 80 to 100°C (176 to 212 °F).

(b) Place the cylinder head on wooden blocks.

(c) Using SST and a hammer, tap out the guide bush.

SST: 09202-70020

09202-00010

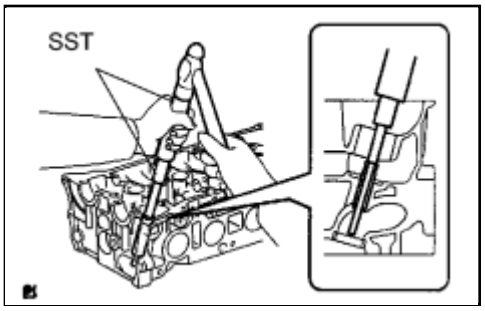

2. REMOVE EXHAUST VALVE GUIDE BUSH

(a) Heat the cylinder head to 80 to 100°C (176 to 212 °F).

(b) Place the cylinder head on wooden blocks.

(c) Using SST and a hammer, tap out the guide bush.

SST: 09202-70020

09202-00010

3. INSTALL INTAKE VALVE GUIDE BUSH

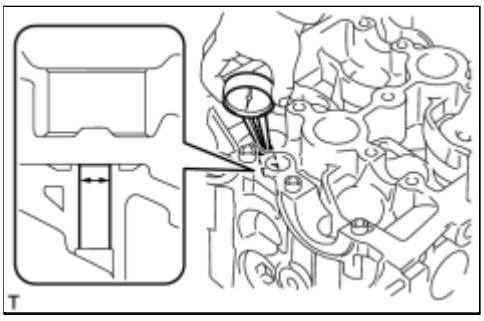

(a) Using a caliper gauge, measure the bush bore diameter of the cylinder head.

Cylinder bore diameter:
10.285 to 10.306 mm (0.4049 to 0.4057 in.)
Select a New Guide Bush (STD or O/S 0.05):

BUSH SIZE	BUSH BORE DIAMETER

BUSH SIZE	BUSH BORE DIAMETER
Use STD	10.285 to 10.306 mm (0.4049 to 0.4057 in.)
Use O/S 0.05	10.335 to 10.356 mm (0.4069 to 0.4077 in.)

If the cylinder head bush bore diameter is greater than 10.306 mm (0.4057 in.), machine the bush bore to a dimension of 10.335 to 10.356 mm (0.4069 to 0.4077 in.) and install an O/S 0.05 valve guide bush. If the bush bore diameter of the cylinder head is greater than 10.356 mm (0.4077 in.), replace the cylinder head.

(b) Heat the cylinder head to 80 to 100°C (176 to 212 °F).

(c) Place the cylinder head on wooden blocks.

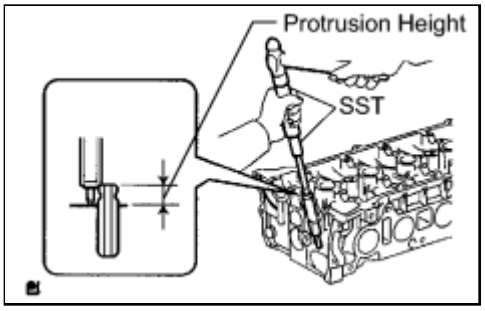

(d) Using SST and a hammer, tap in a new guide bush to the specified protrusion height.

SST: 09201-10000

09201-01050

SST: 09950-70010

09951-07100

Protrusion height:
9.6 to 10.0 mm (0.3779 to 0.3937 in.)

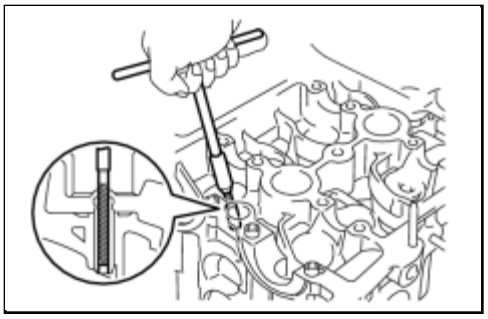

(e) Using a sharp 5.5 mm reamer, ream the guide bush to obtain the standard specified clearance between the guide bush and valve stem.

Standard oil clearance:
0.025 to 0.060 mm (0.0010 to 0.0024 in.)

4. INSTALL EXHAUST VALVE GUIDE BUSH

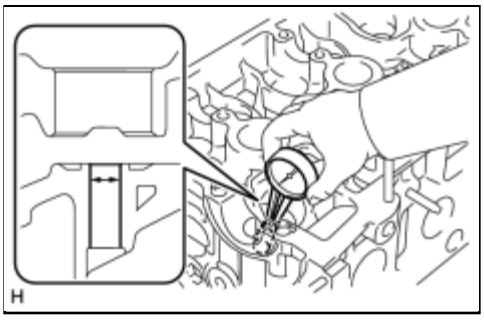

(a) Using a caliper gauge, measure the bush bore diameter of the cylinder head.

Cylinder bore diameter:

10.285 to 10.306 mm (0.4049 to 0.4057 in.)

Select a New Guide Bush (STD or O/S 0.05):

BUSH SIZE	BUSH BORE DIAMETER
Use STD	10.285 to 10.306 mm (0.4049 to 0.4057 in.)
Use O/S 0.05	10.335 to 10.356 mm (0.4069 to 0.4077 in.)

If the cylinder head bush bore diameter is greater than 10.306 mm (0.4057 in.), machine the bush bore to a dimension of 10.335 to 10.356 mm (0.4069 to 0.4077 in.) and install an O/S 0.05 valve guide bush. If the bush bore diameter of the cylinder head is greater than 10.356 mm (0.4077 in.), replace the cylinder head.

(b) Heat the cylinder head to 80 to 100°C (176 to 212 °F).

(c) Place the cylinder head on wooden blocks.

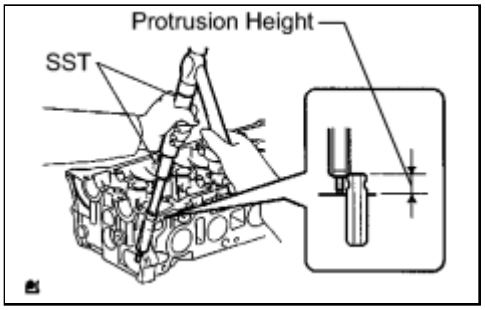

(d) Using SST and a hammer, tap in a new guide bush to the specified protrusion height.

SST: 09201-10000

09201-01050

SST: 09950-70010

09951-07100

Protrusion height:

9.6 to 10.0 mm (0.3779 to 0.3937 in.)

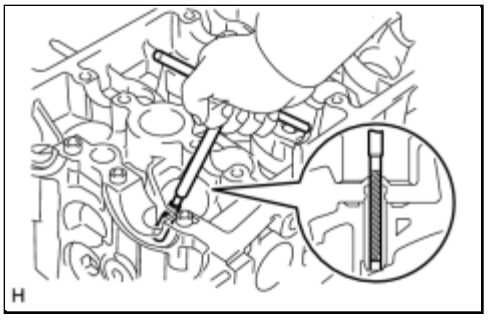

(e) Using a sharp 5.5 mm reamer, ream the guide bush to obtain the standard specified clearance between the guide bush and valve stem.

Standard oil clearance:

0.030 to 0.065 mm (0.00118 to 0.00256 in.)

Last Modified: 3-10-2010	6.4 A	**From:** 200901
Model Year: 2010	**Model:** Corolla	**Doc ID:** RM0000033OS006X
Title: 2AZ-FE ENGINE MECHANICAL: CYLINDER HEAD: REPAIR (2010 Corolla)		

REPAIR

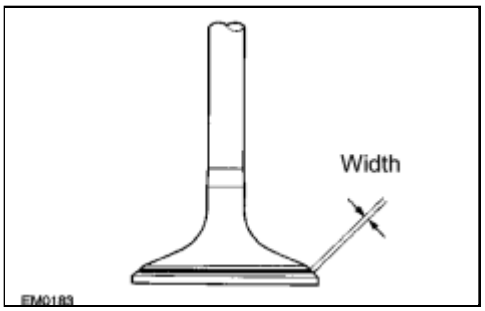

1. INSPECT VALVE SEATS

(a) Apply a light coat of prussian blue to the valve face.

(b) Lightly press the valve face against the valve seat.

(c) Check the valve face and valve seat according to the following procedure:

(1) If prussian blue appears 360° around the valve face, the valve face is concentric. If not, replace the valve.

(2) If prussian blue appears 360° around the valve seat, the guide and valve face are concentric. If not, resurface the valve seat.

(3) Check that the valve seat contact is in the middle of the valve face with the width between 1.0 to 1.4 mm (intake side (0.039 to 0.055 in.)).

(4) Check that the valve face width is between 1.2 to 1.6 mm (Exhaust side (0.047 to 0.063 in.)).

2. REPAIR VALVE SEATS

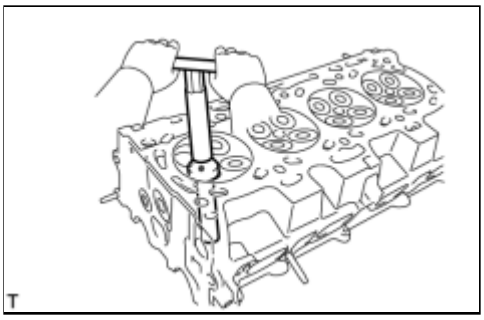

NOTICE:

- Repair the seat while checking the seating position.
- Keep the lip free from foreign matter.

(a) Using a 45° cutter, resurface the valve seat so that the valve seat width is more than the specification.

(b) Using 30° to 75° cutters, correct the valve seat so that the valve contacts the entire circumference of the seat. The contact should be in the center of the valve seat, and

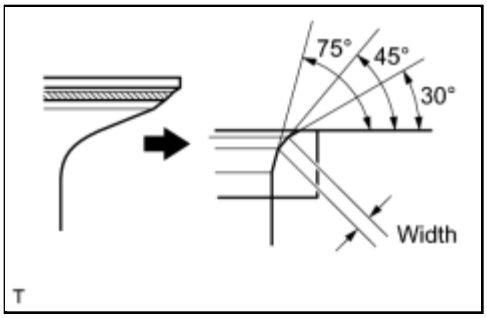

the valve seat width should be maintained within the specified range around the entire circumference of the seat.

Valve Seat Width:

ITEM	SPECIFIED CONDITION
Intake Side	1.0 to 1.4 mm (0.039 to 0.055 in.)
Exhaust Side	1.2 to 1.6 mm (0.047 to 0.063 in.)

(c) Handrub the valve and valve seat with an abrasive compound.

(d) Check the valve seating position.

Last Modified: 3-10-2010	6.4 K	**From:** 200901
Model Year: 2010	**Model:** Corolla	**Doc ID:** RM000002XA600WX
Title: 2ZR-FE ENGINE MECHANICAL: CYLINDER HEAD: COMPONENTS (2010 Corolla)		

COMPONENTS

ILLUSTRATION

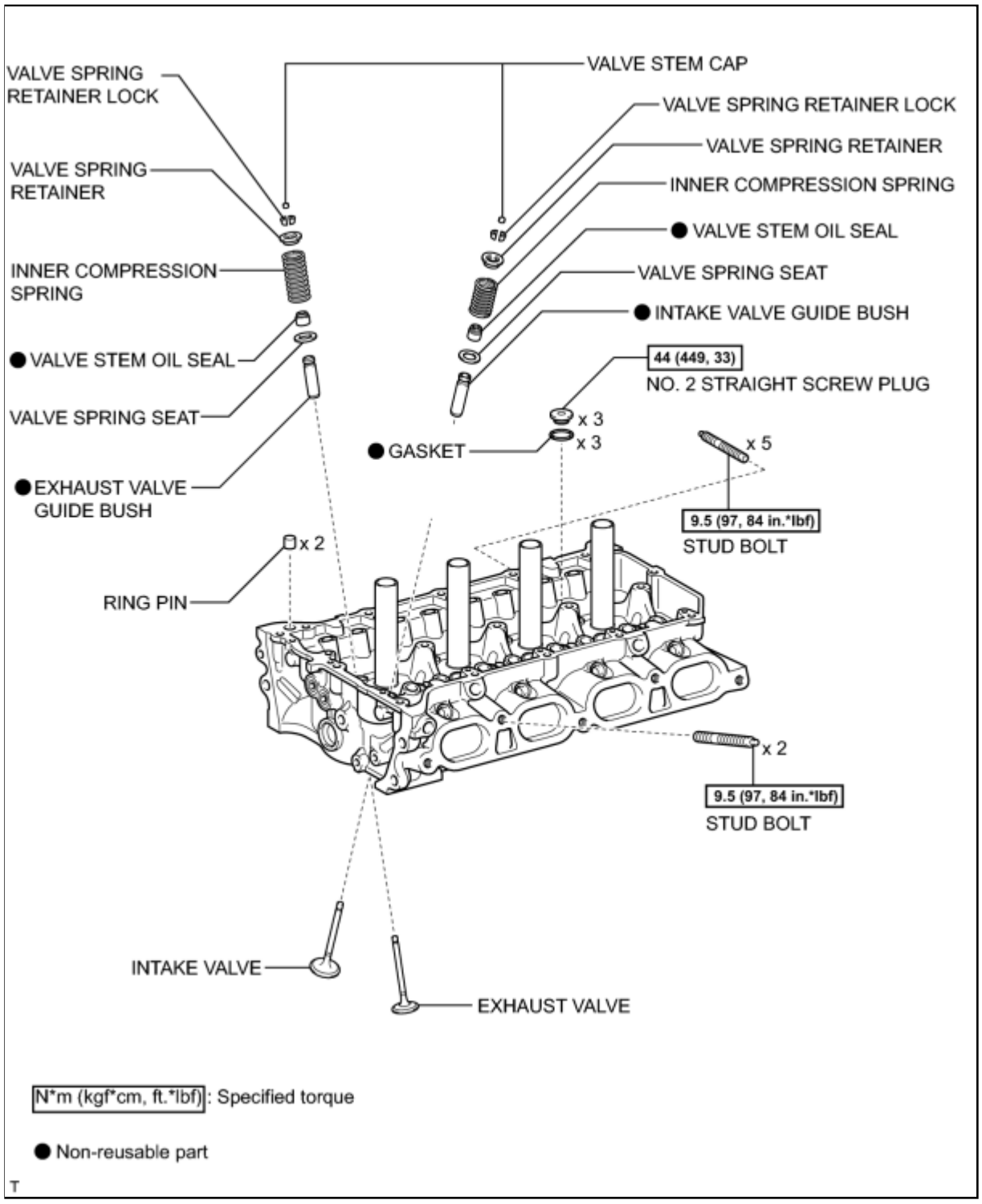

Last Modified: 3-10-2010	6.4 G	**From:** 200901
Model Year: 2010	**Model:** Corolla	**Doc ID:** RM000002XA201TX
Title: 2ZR-FE ENGINE MECHANICAL: CYLINDER HEAD: INSPECTION (2010 Corolla)		

INSPECTION

1. INSPECT CYLINDER HEAD FOR FLATNESS

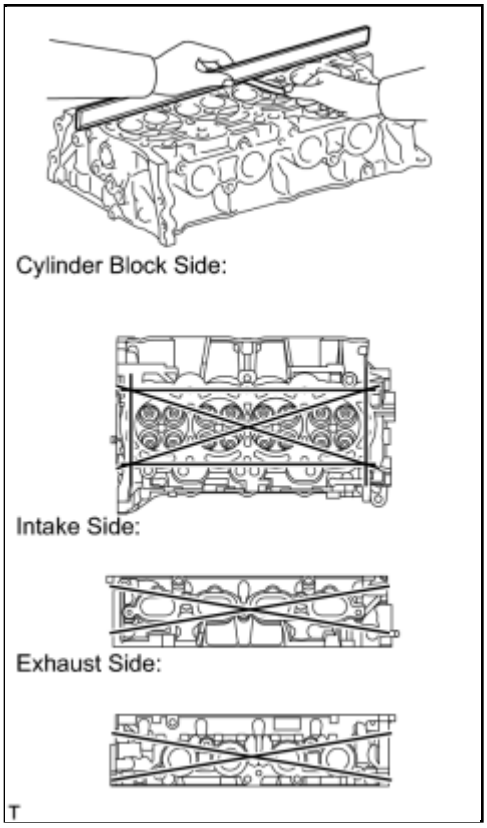

(a) Using a precision straight edge and a feeler gauge, measure the surfaces contacting the cylinder block and the manifolds for warpage.

Maximum Warpage:

ITEM	SPECIFIED CONDITION
Cylinder block side	0.05 mm (0.0020 in.)
Intake manifold side	0.10 mm (0.0039 in.)
Exhaust manifold side	0.10 mm (0.0039 in.)

If the warpage is greater than the maximum, replace the cylinder head.

2. INSPECT CYLINDER HEAD FOR CRACKS

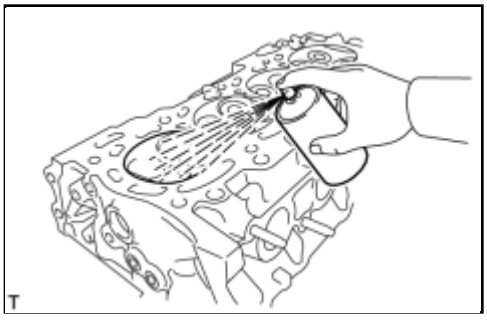

(a) Using a dye penetrant, check the intake ports, exhaust ports and cylinder surface for cracks.

If cracked, replace the cylinder head.

3. INSPECT VALVE SEATS

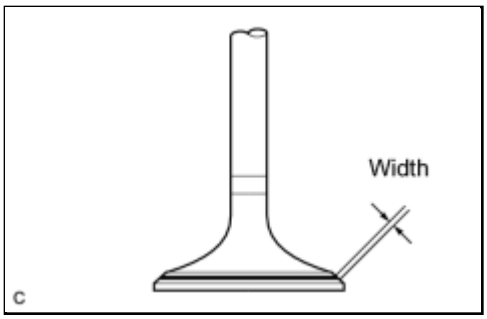

(a) Apply a light coat of Prussian blue to the valve face.

(b) Lightly press the valve face against the valve seat.

(c) Check the valve face and valve seat according to the following procedure:

(1) If Prussian blue appears 360° around the valve face, the valve face is concentric. If not, replace the valve.

(2) If Prussian blue appears 360° around the valve seat, the guide and valve face are concentric. If not, resurface the valve seat.

(3) Check that the valve seat contact is in the middle of the valve face with the valve seat width between 1.0 and 1.4 mm (Intake side (0.039 to 0.055 in.)).

(4) Check that the valve seat contact is in the middle of the valve face with the valve seat width between 1.0 and 1.4 mm (Exhaust side (0.039 to 0.055 in.)).

4. INSPECT CAMSHAFT THRUST CLEARANCE

(a) Install the camshafts INFO .

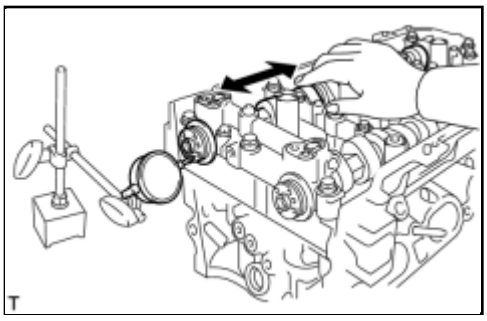

(b) Using a dial indicator, measure the thrust clearance while moving the camshaft back and forth.

Standard Thrust Clearance:

ITEM	SPECIFIED CONDITION
Intake	0.06 to 0.155 mm (0.0024 to 0.0061 in.)
Exhaust	0.06 to 0.155 mm (0.0024 to 0.0061 in.)

Maximum Thrust Clearance:

ITEM	SPECIFIED CONDITION
Intake	0.17 mm (0.0067 in.)
Exhaust	0.17 mm (0.0067 in.)

If the thrust clearance is greater than the maximum, replace the camshaft housing. If the thrust surface is damaged, replace the camshaft.

5. INSPECT CAMSHAFT OIL CLEARANCE

(a) Clean the bearing caps and camshaft journals.

(b) Place the camshafts on the camshaft housing.

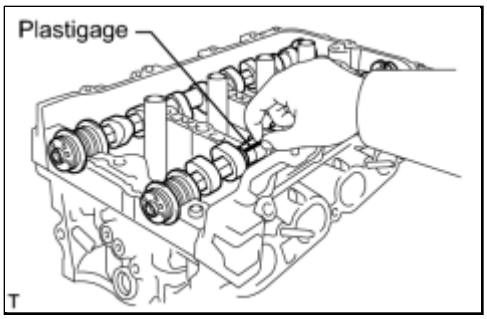

(c) Lay a strip of Plastigage across each of the camshaft journals.

(d) Install the bearing caps INFO .

NOTICE:

Do not turn the camshaft.

(e) Remove the bearing caps INFO .

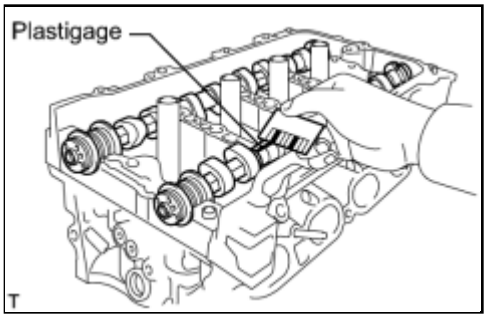

(f) Measure the Plastigage at its widest point.

Standard Oil Clearance:

ITEM	SPECIFIED CONDITION
Camshaft No. 1 journal	0.030 to 0.063 mm (0.0012 to 0.0025 in.)
Camshaft other journals	0.035 to 0.072 mm (0.0014 to 0.0028 in.)

Maximum Oil Clearance:

ITEM	SPECIFIED CONDITION
Camshaft No. 1 journal	0.085 mm (0.0033 in.)
Camshaft other journals	0.09 mm (0.0035 in.)

NOTICE:

Completely remove the Plastigage after the inspection.

If the oil clearance is greater than the maximum, replace the camshaft. If necessary, replace the cylinder head.

6. INSPECT COMPRESSION SPRING

(a) Using a vernier caliper, measure the free length of the

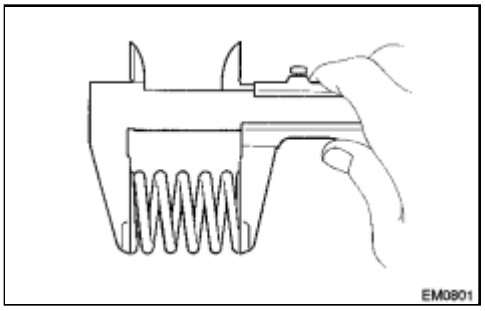

valve spring.

Free length:
53.36 mm (2.1008 in.)

If the free length is not as specified, replace the valve spring.

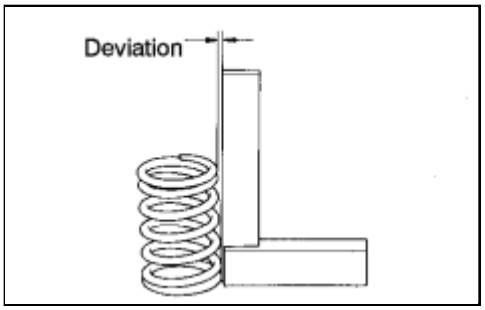

(b) Using a steel square, measure the deviation of the valve spring.

Maximum deviation:
1.0 mm (0.0394 in.)

If the deviation is greater than the maximum, replace the valve spring.

7. INSPECT INTAKE VALVE

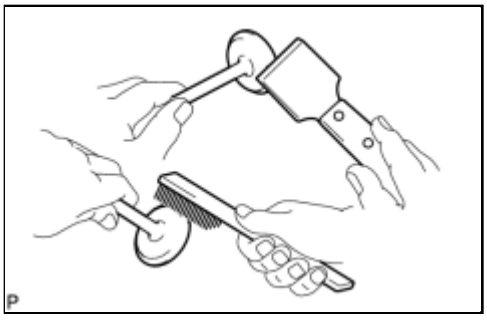

(a) Using a gasket scraper and wire brush, scrape off any carbon on the valve head.

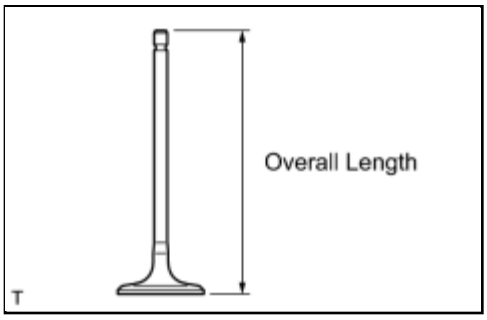

(b) Using a vernier caliper, measure the overall length of the valve.

Standard overall length:
109.34 mm (4.3047 in.)
Minimum overall length:
108.84 mm (4.2850 in.)

If the overall length is less than the minimum, replace the valve.

(c) Using a micrometer, measure the diameter of the valve

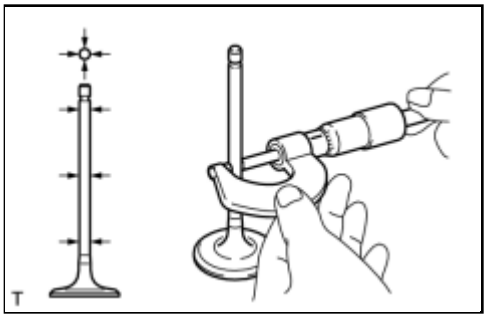

stem.

Valve stem diameter:
5.470 to 5.485 mm (0.2154 to 0.2159 in.)

If the valve stem diameter is not as specified, check the oil clearance.

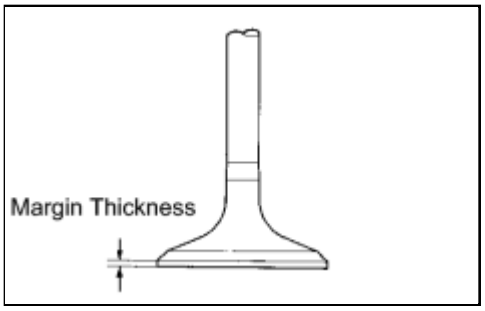

(d) Using a vernier caliper, measure the valve head margin thickness.

Standard margin thickness:
1.0 mm (0.0394 in.)
Minimum margin thickness:
0.5 mm (0.0197 in.)

If the margin thickness is less than the minimum, replace the valve.

8. INSPECT EXHAUST VALVE

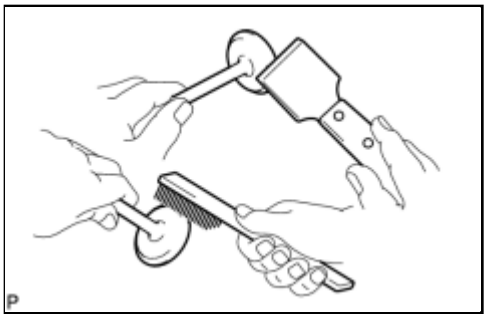

(a) Using a gasket scraper and wire brush, scrape off any carbon on the valve head.

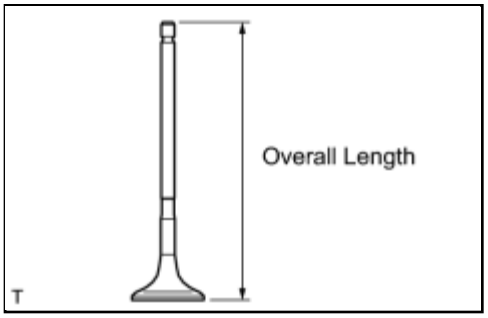

(b) Using a vernier caliper, measure the overall length of the valve.

Standard overall length:
108.25 mm (4.2618 in.)
Minimum overall length:
107.75 mm (4.2421 in.)

If the overall length is less than the minimum, replace the valve.

(c) Using a micrometer, measure the diameter of the valve

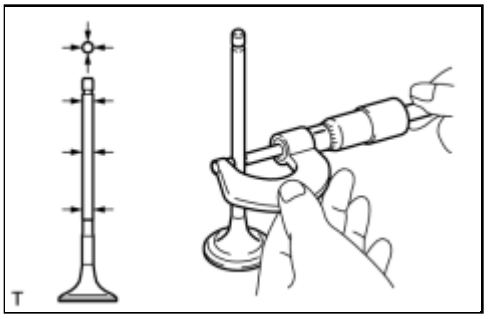

stem.

Valve stem diameter:
5.465 to 5.480 mm (0.2152 to 0.2157 in.)

If the valve stem diameter is not as specified, check the oil clearance.

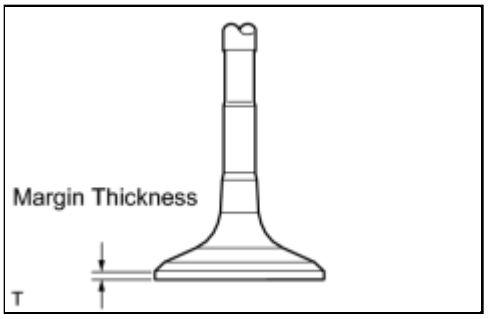

(d) Using a vernier caliper, measure the valve head margin thickness.

Standard margin thickness:
1.01 mm (0.0398 in.)
Minimum margin thickness:
0.5 mm (0.0197 in.)

If the margin thickness is less than the minimum, replace the valve.

9. INSPECT VALVE GUIDE BUSH OIL CLEARANCE

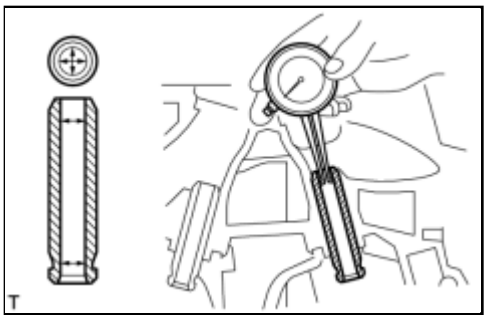

(a) Using a caliper gauge, measure the inside diameter of the guide bush.

Bushing inside diameter:
5.510 to 5.530 mm (0.2169 to 0.2177 in.)

(b) Subtract the valve stem diameter measurement from the guide bush inside diameter measurement.

Standard Oil Clearance:

ITEM	SPECIFIED CONDITION
Intake	0.025 to 0.060 mm (0.0010 to 0.0024 in.)
Exhaust	0.030 to 0.065 mm (0.0012 to 0.0026 in.)

Maximum Oil Clearance:

ITEM	SPECIFIED CONDITION

ITEM	SPECIFIED CONDITION
Intake	0.080 mm (0.0031 in.)
Exhaust	0.085 mm (0.0033 in.)

If the clearance is greater than the maximum, replace the valve and guide bush.

TOYOTA

Last Modified: 3-10-2010	6.4 A	**From:** 200901
Model Year: 2010	**Model:** Corolla	**Doc ID:** RM000002XA302OX
Title: 2ZR-FE ENGINE MECHANICAL: CYLINDER HEAD: DISASSEMBLY (2010 Corolla)		

DISASSEMBLY

1. REMOVE VALVE STEM CAP

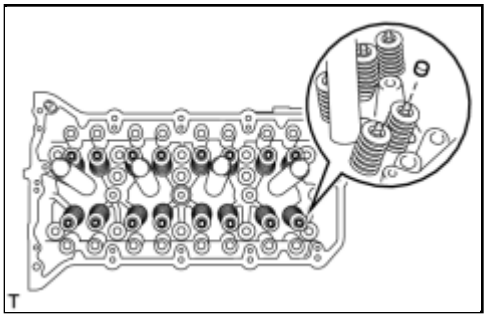

(a) Remove the valve stem caps from the cylinder head.

HINT:

Arrange the removed parts in the correct order.

2. REMOVE INTAKE VALVE

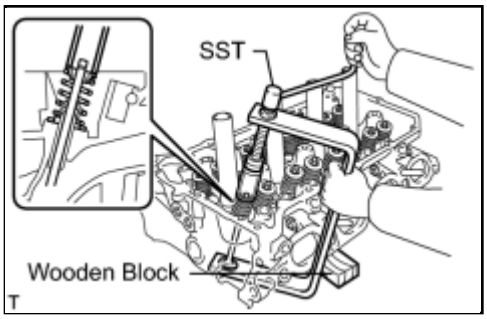

(a) Using SST and wooden blocks, compress and remove the valve retainer locks.

SST: 09202-70020

09202-00010

HINT:

Arrange the removed parts in the correct order.

(b) Remove the retainer, valve spring and valve.

HINT:

Arrange the removed parts in the correct order.

3. REMOVE EXHAUST VALVE

(a) Using SST and wooden blocks, compress and remove the valve retainer locks.

SST: 09202-70020

09202-00010

HINT:

Arrange the removed parts in the correct order.

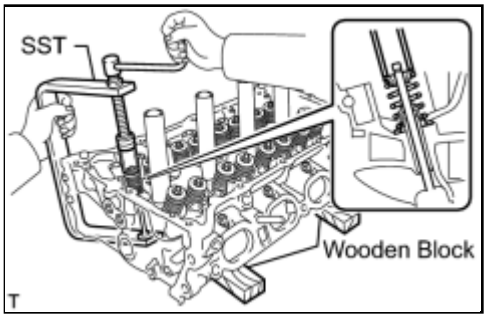

(b) Remove the retainer, valve spring and valve.

HINT:

Arrange the removed parts in the correct order.

4. REMOVE VALVE STEM OIL SEAL

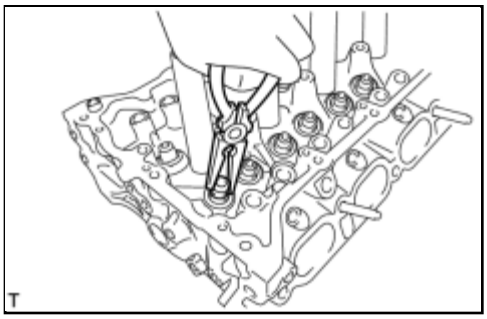

(a) Using needle-nose pliers, remove the oil seals.

5. REMOVE VALVE SPRING SEAT

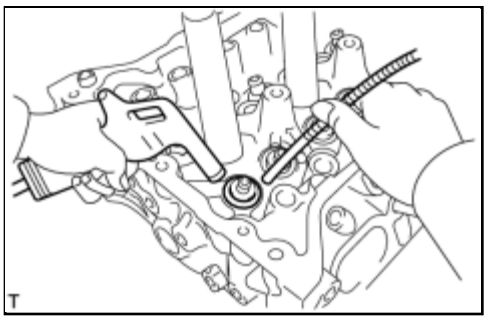

(a) Using compressed air and a magnetic pick-up tool, remove the valve spring seats by blowing air onto them.

6. REMOVE NO. 2 STRAIGHT SCREW PLUG

(a) Using a 10 mm straight hexagon wrench, remove the 3 screw plugs and 3 gaskets.

NOTICE:

If water leaks from any of the straight screw plugs or if a plug

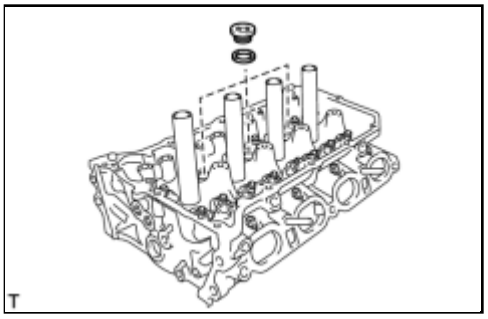

is corroded, replace it.

Last Modified: 3-10-2010	6.4 K	**From:** 200901
Model Year: 2010	**Model:** Corolla	**Doc ID:** RM000001R3P00NX
Title: 2AZ-FE ENGINE MECHANICAL: CYLINDER HEAD GASKET: COMPONENTS (2010 Corolla)		

COMPONENTS

ILLUSTRATION

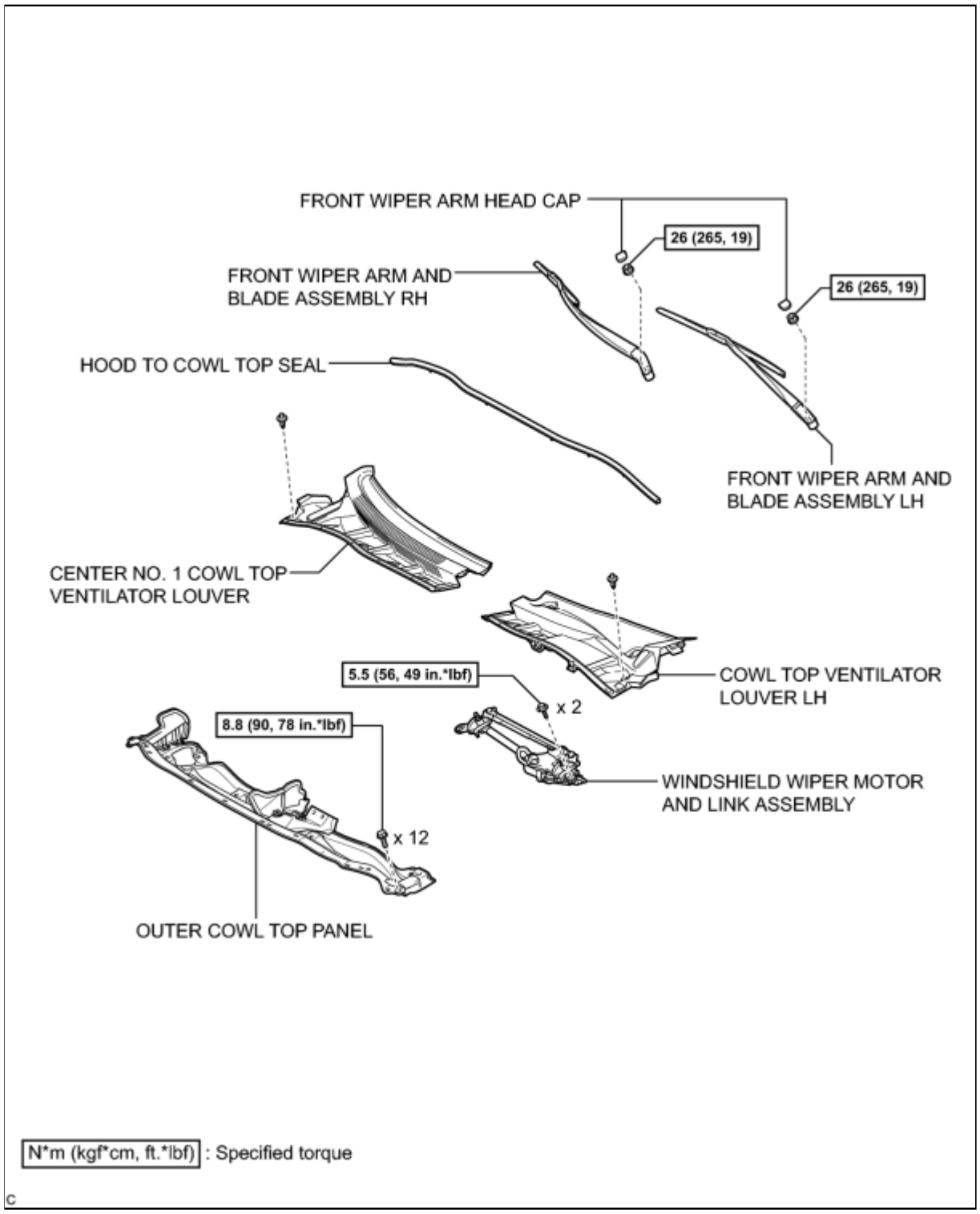

ILLUSTRATION

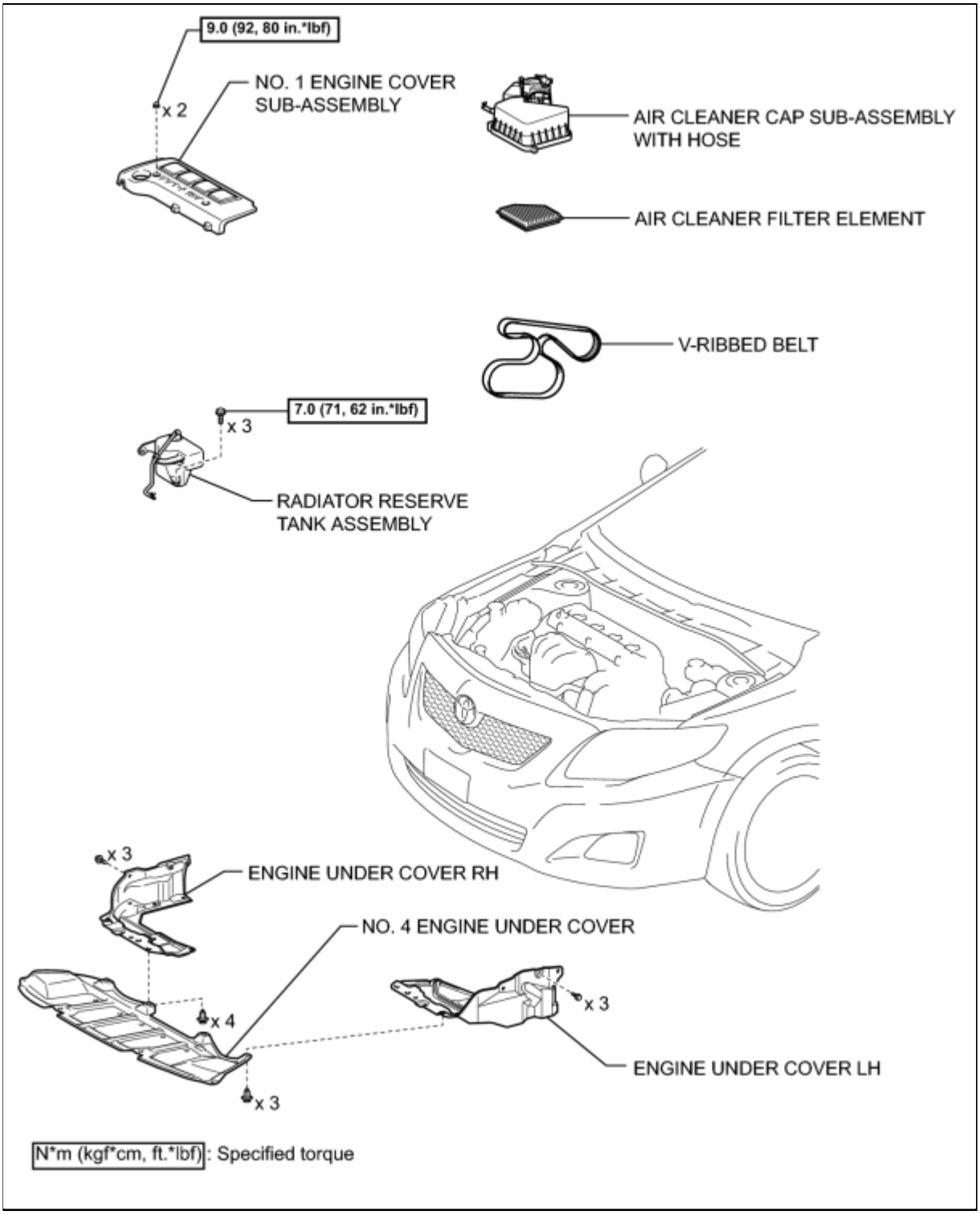

ILLUSTRATION

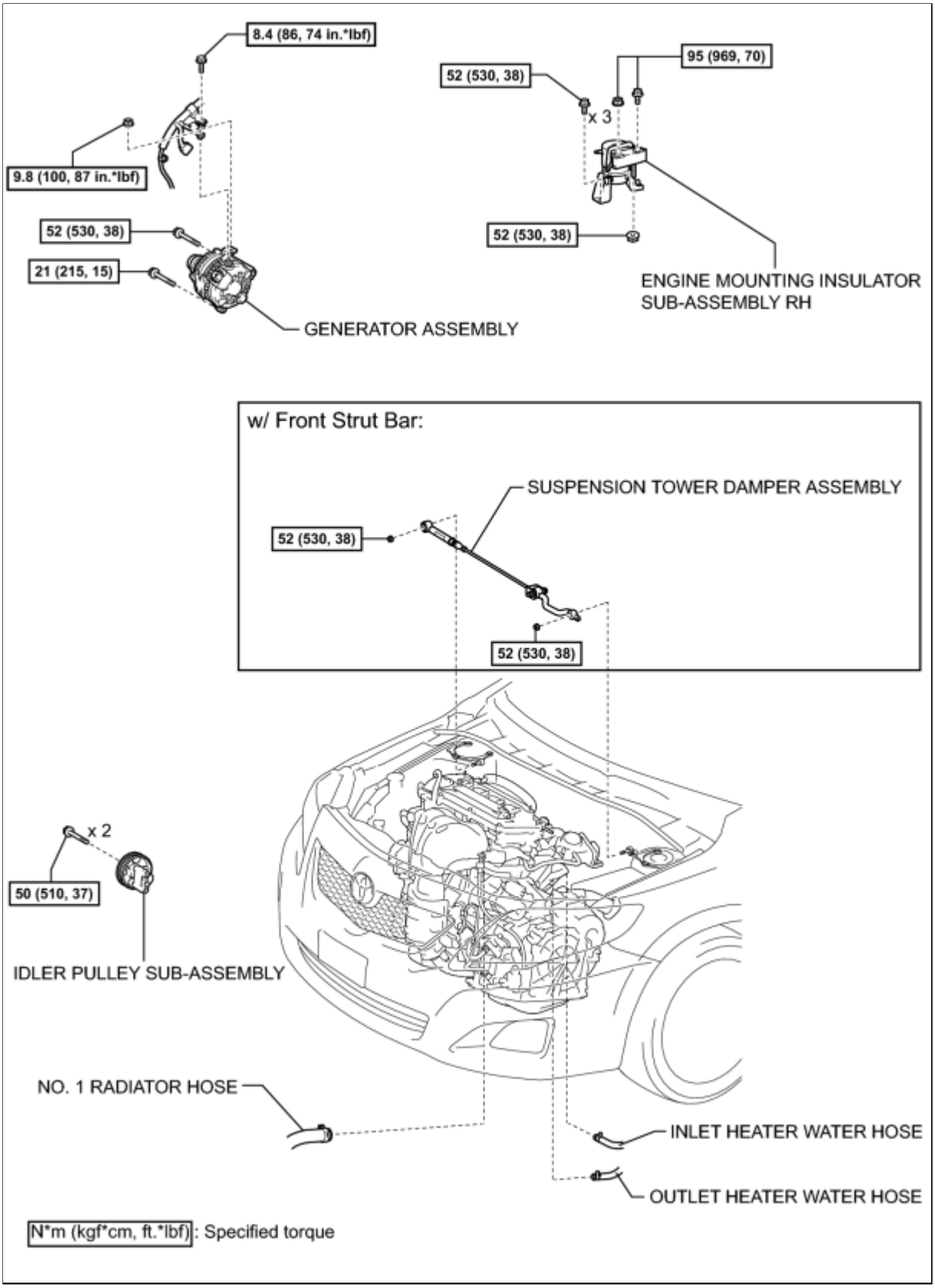

ILLUSTRATION

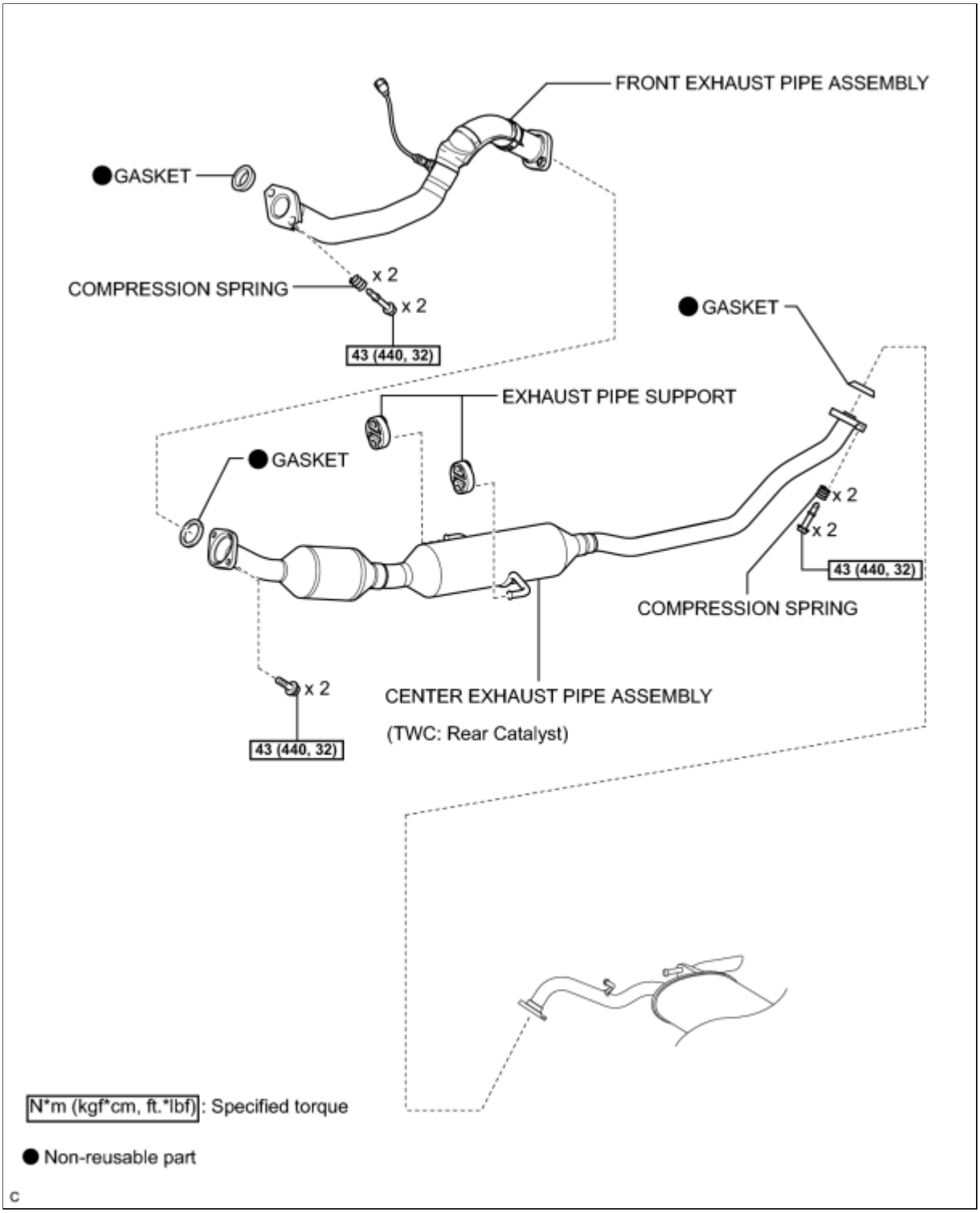

ILLUSTRATION

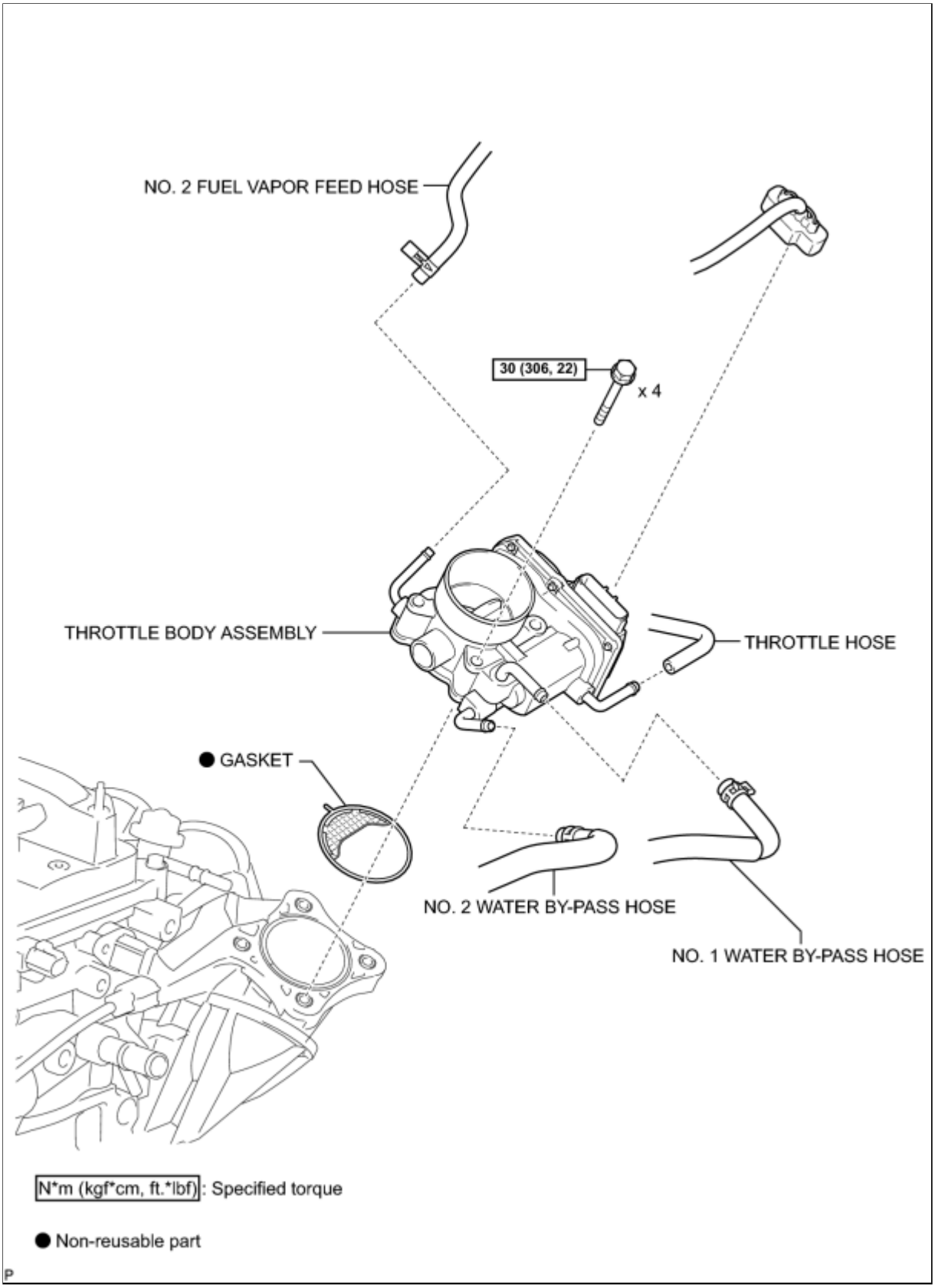

ILLUSTRATION

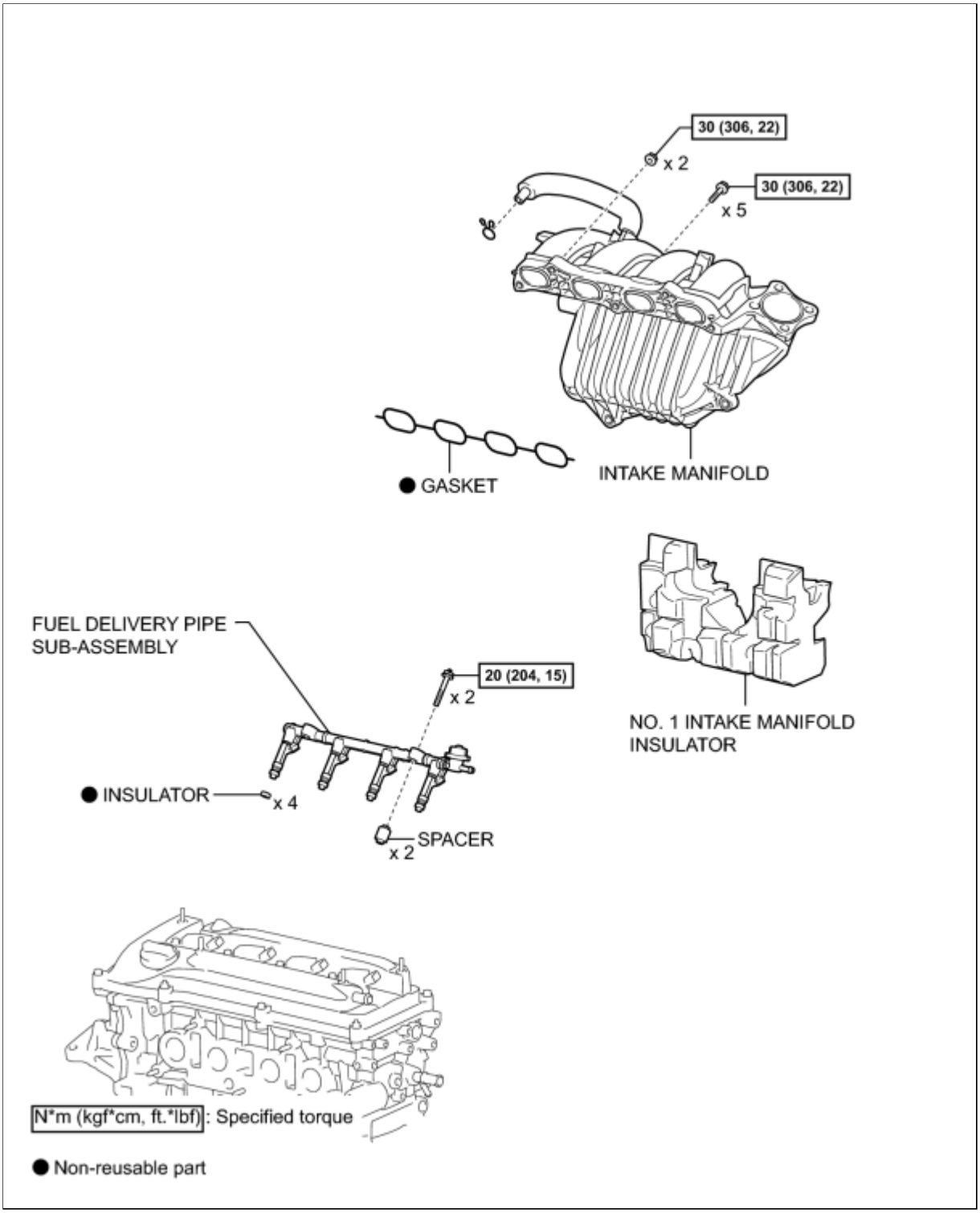

ILLUSTRATION

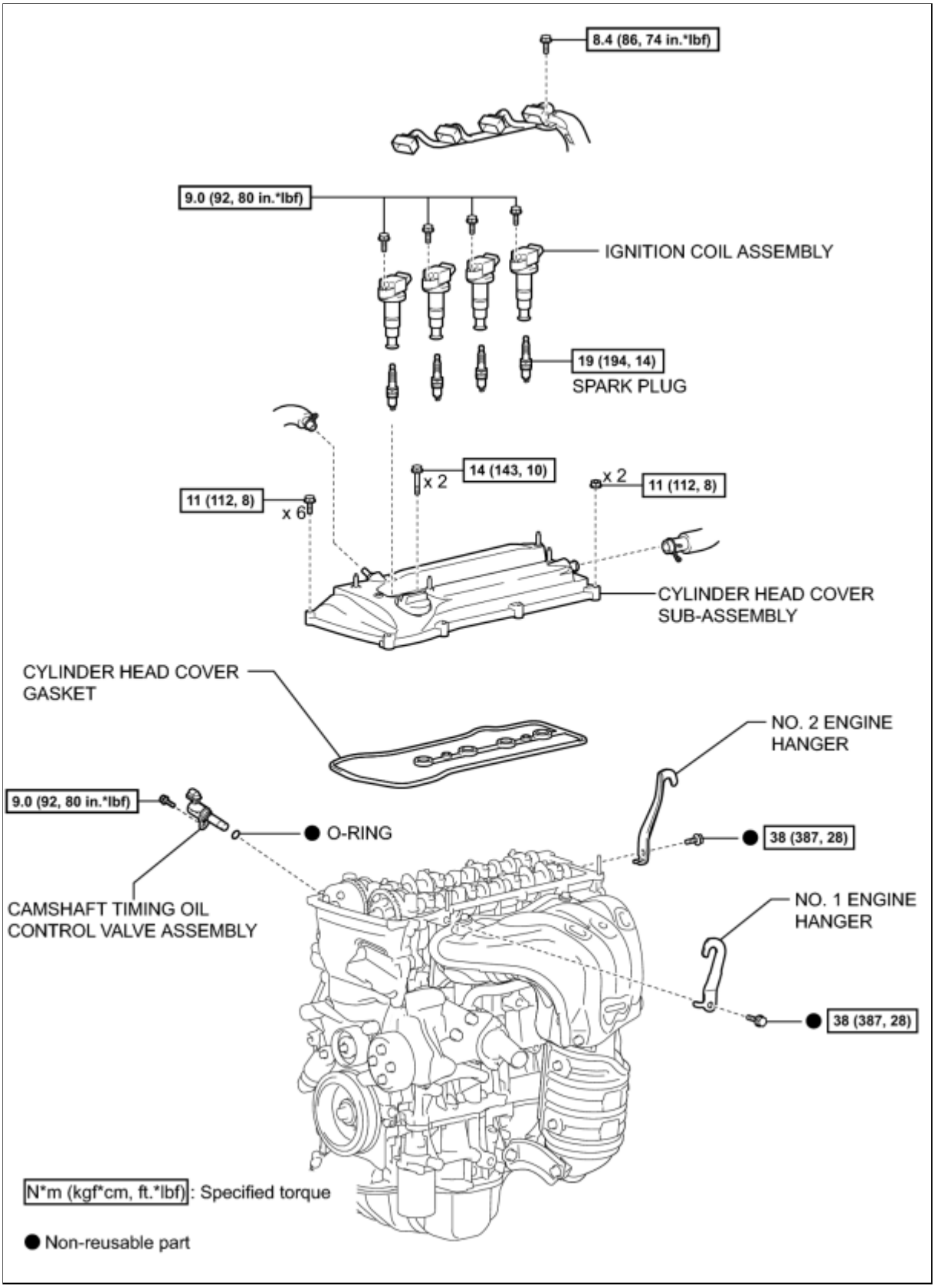

ILLUSTRATION

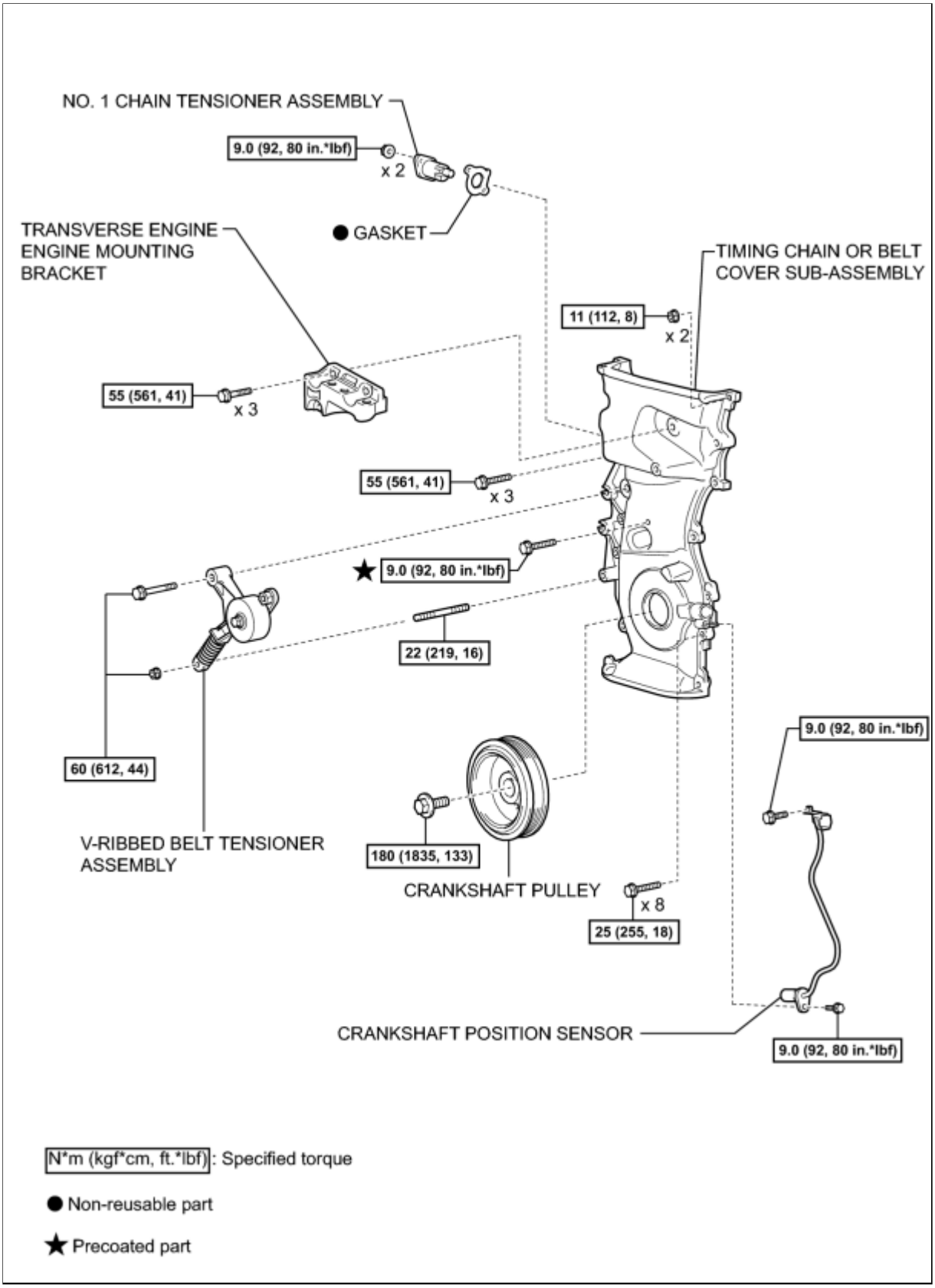

ILLUSTRATION

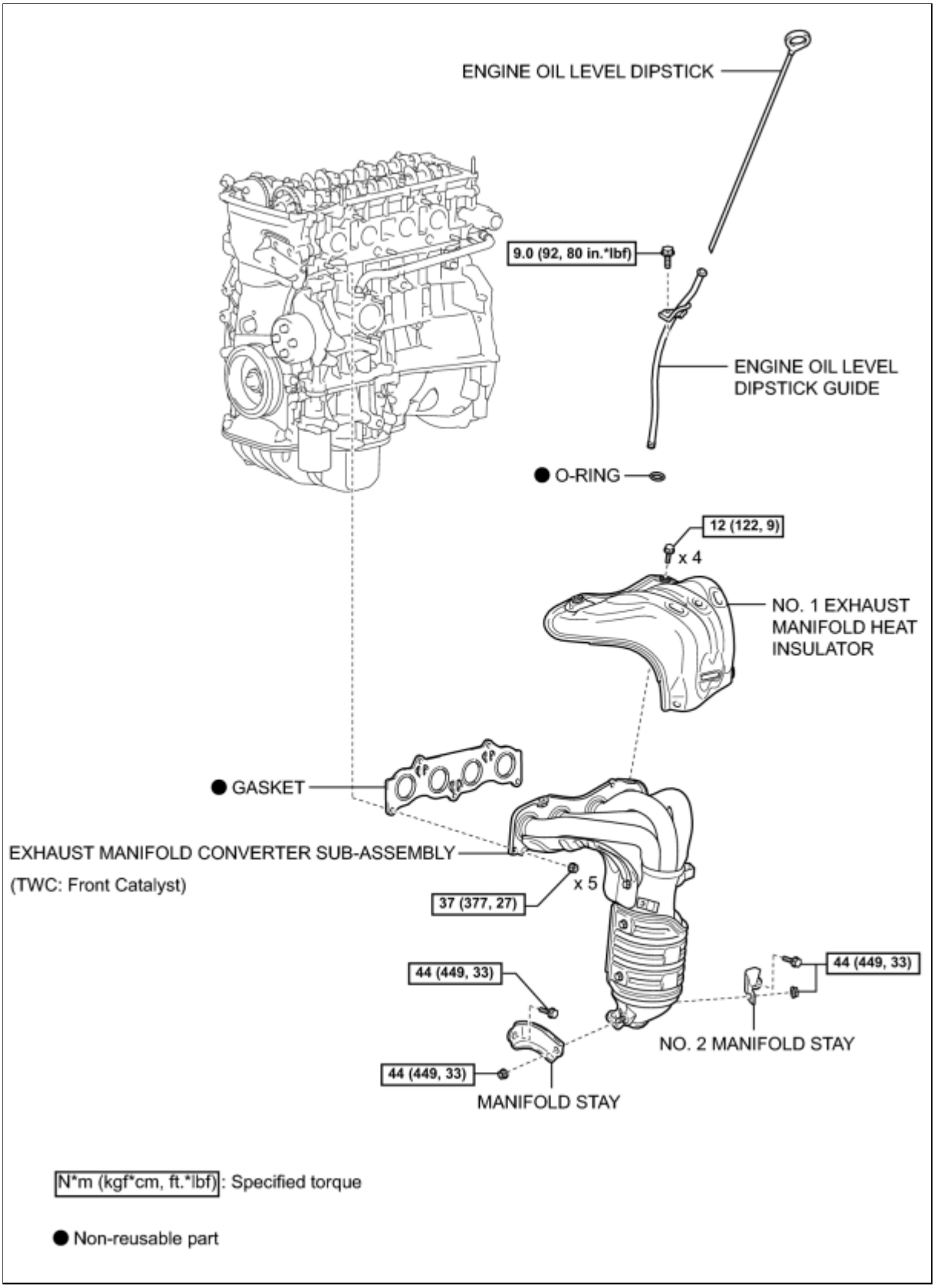

ILLUSTRATION

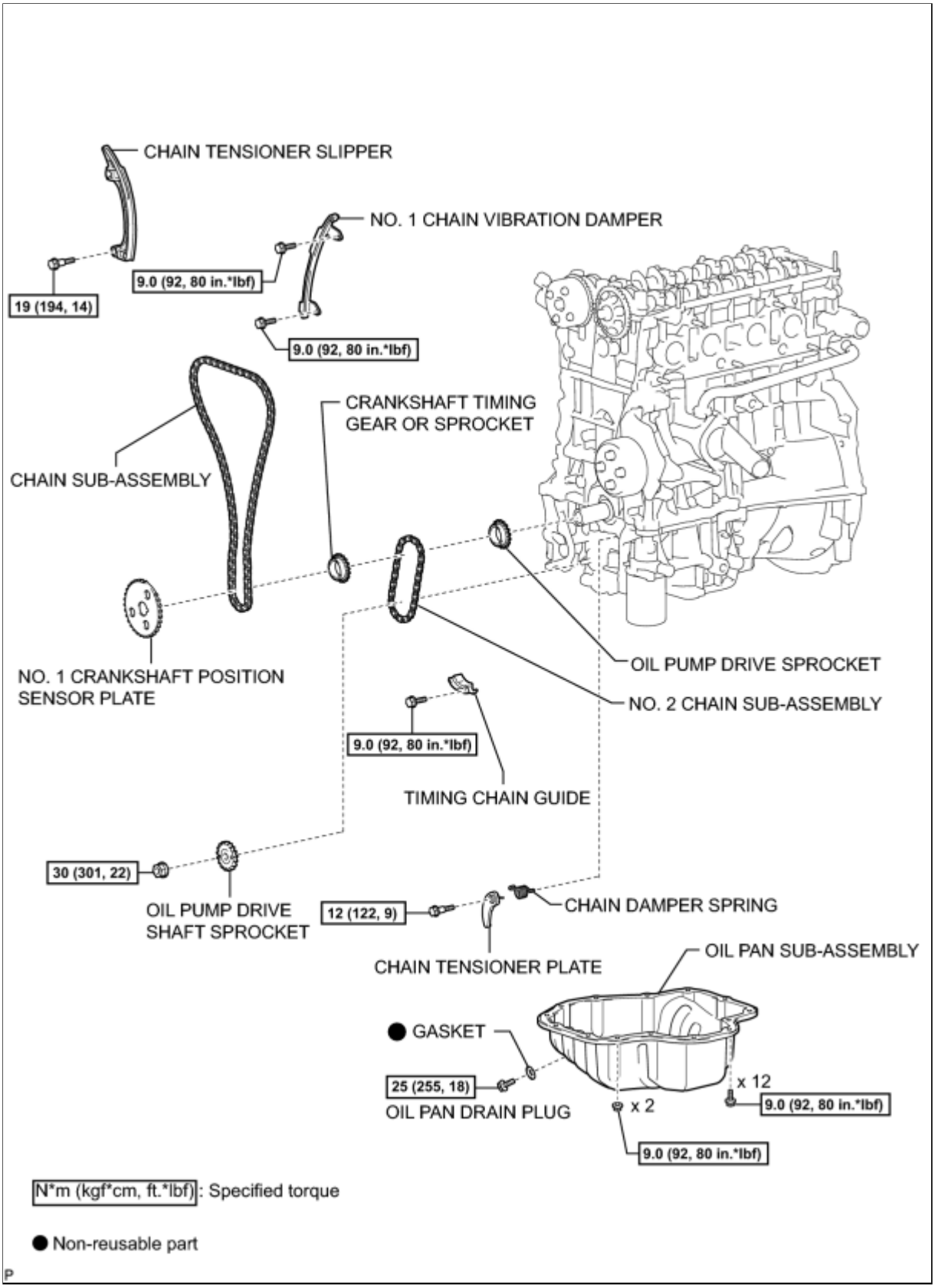

ILLUSTRATION

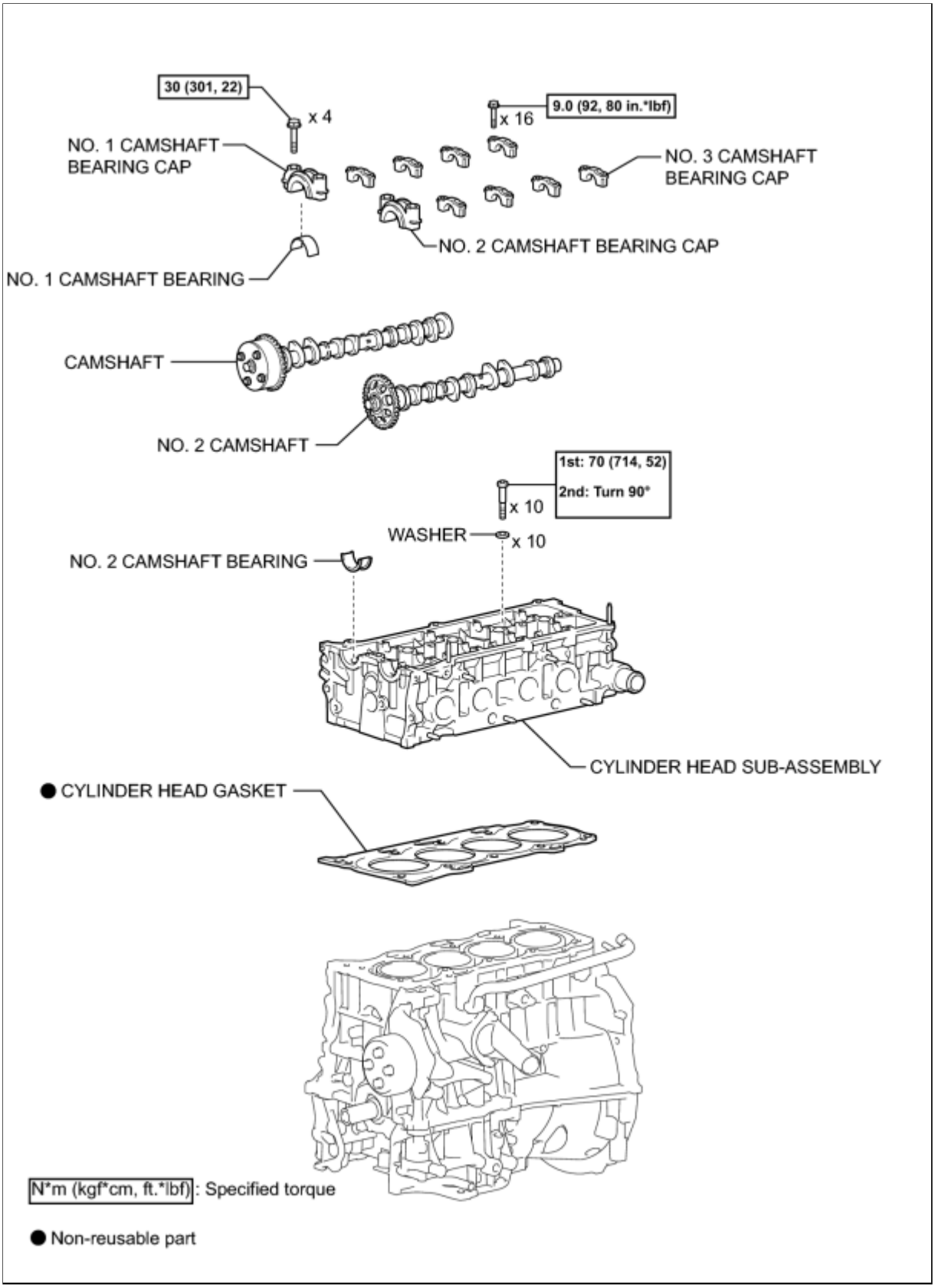
30 (301, 22)
x 4
9.0 (92, 80 in.*lbf)
x 16
NO. 1 CAMSHAFT BEARING CAP
NO. 3 CAMSHAFT BEARING CAP
NO. 2 CAMSHAFT BEARING CAP
NO. 1 CAMSHAFT BEARING
CAMSHAFT
NO. 2 CAMSHAFT
1st: 70 (714, 52)
2nd: Turn 90°
x 10
WASHER
x 10
NO. 2 CAMSHAFT BEARING
CYLINDER HEAD SUB-ASSEMBLY
● CYLINDER HEAD GASKET
N*m (kgf*cm, ft.*lbf): Specified torque
● Non-reusable part

Last Modified: 3-10-2010	6.4 A	**From:** 200901
Model Year: 2010	**Model:** Corolla	**Doc ID:** RM000002XAF00YX
Title: 2ZR-FE ENGINE MECHANICAL: CYLINDER HEAD: REPLACEMENT (2010 Corolla)		

REPLACEMENT

1. REPLACE INTAKE VALVE GUIDE BUSH

(a) Heat the cylinder head to 80 to 100°C (176 to 212°F).

(b) Place the cylinder head on wooden blocks.

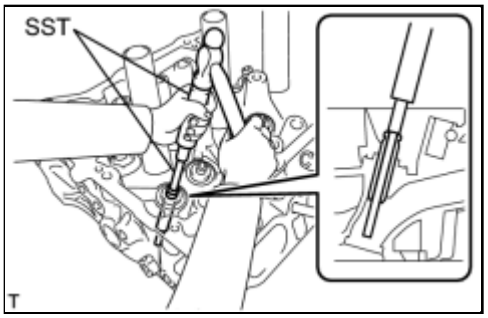

(c) Using SST and a hammer, tap out the guide bush.

SST: 09201-10000

09201-01050

SST: 09950-70010

09951-07100

(d) Using a caliper gauge, measure the bush bore diameter of the cylinder head.

Cylinder bore diameter:
10.285 to 10.306 mm (0.4049 to 0.4057 in.)

Select a New Guide Bush (STD or O/S 0.05):

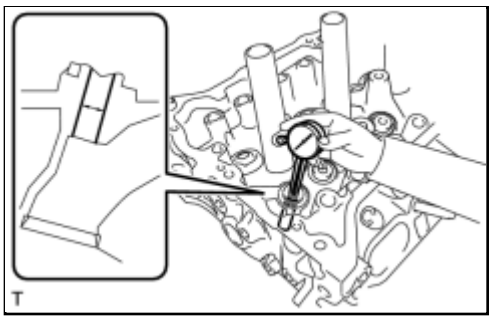

BUSH SIZE	BUSH BORE DIAMETER
STD	10.285 to 10.306 mm (0.4049 to 0.4057 in.)
O/S 0.05	10.335 to 10.356 mm (0.4069 to 0.4077 in.)

If the bush bore diameter of the cylinder head is greater than 10.306 mm (0.4057 in.), machine the bush bore to the dimension of 10.335 to 10.356 mm (0.4069 to 0.4077 in.) to install an O/S 0.05 valve guide bush. If the bush bore diameter of the cylinder head is greater than 10.356 mm (0.4077 in.), replace the cylinder head.

(e) Heat the cylinder head to 80 to 100°C (176 to 212°F).

(f) Place the cylinder head on wooden blocks.

(g) Using SST and a hammer, tap a new guide bush into the specified protrusion height.

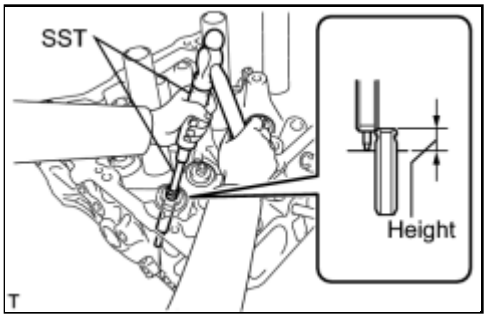

SST: 09201-10000

09201-01050

SST: 09950-70010

09951-07100

Protrusion height:

9.9 to 10.3 mm (0.3898 to 0.4055 in.)

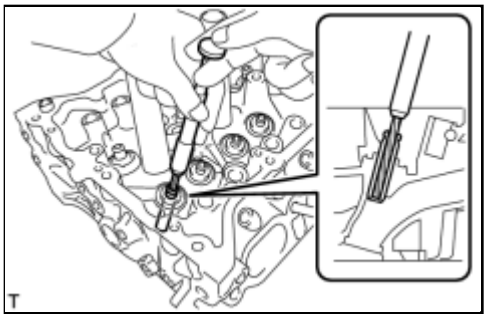

(h) Using a sharp 5.5 mm reamer, ream the guide bush to obtain the standard clearance between the guide bush and valve stem.

Standard oil clearance:

0.025 to 0.060 mm (0.0010 to 0.0024 in.)

2. REPLACE EXHAUST VALVE GUIDE BUSH

(a) Heat the cylinder head to 80 to 100°C (176 to 212°F).

(b) Place the cylinder head on wooden blocks.

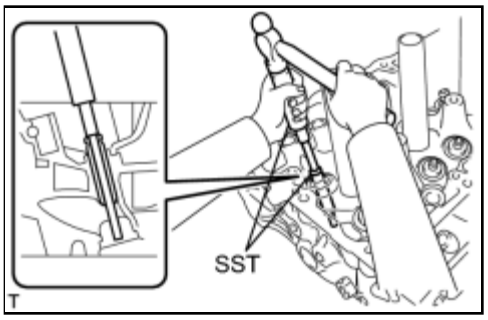

(c) Using SST and a hammer, tap out the guide bush.

SST: 09201-10000

09201-01050

SST: 09950-70010

09951-07100

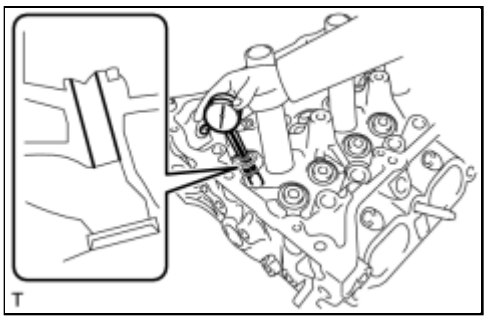

(d) Using a caliper gauge, measure the bush bore diameter of the cylinder head.

Diameter:

10.285 to 10.306 mm (0.4049 to 0.4057 in.)

Select a New Guide Bush (STD or O/S 0.05):

BUSH SIZE	BUSH BORE DIAMETER
STD	10.285 to 10.306 mm (0.4049 to 0.4057 in.)

O/S 0.05	10.335 to 10.356 mm (0.4069 to 0.4077 in.)

If the bush bore diameter of the cylinder head is greater than 10.306 mm (0.4057 in.), machine the bush bore to the dimension of 10.335 to 10.356 mm (0.4069 to 0.4077 in.) to install an O/S 0.05 valve guide bush. If the bush bore diameter of the cylinder head is greater than 10.356 mm (0.4077 in.), replace the cylinder head.

(e) Heat the cylinder head to 80 to 100°C (176 to 212°F).

(f) Place the cylinder head on wooden blocks.

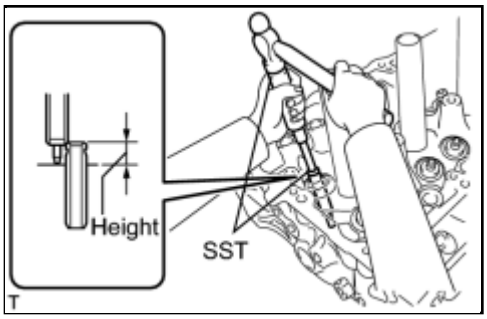

(g) Using SST and a hammer, tap a new guide bush into the specified protrusion height.

SST: 09201-10000

09201-01050

SST: 09950-70010

09951-07100

Protrusion height:
11.15 to 11.55 mm (0.4390 to 0.4547 in.)

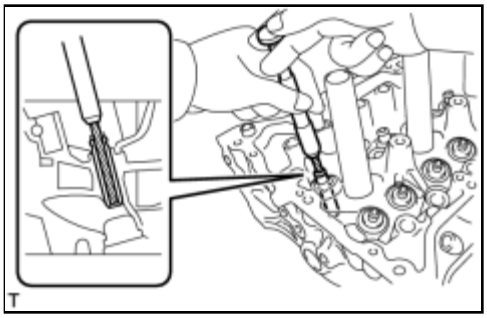

(h) Using a sharp 5.5 mm reamer, ream the guide bush to obtain the standard clearance between the guide bush and valve stem.

Standard oil clearance:
0.030 to 0.065 mm (0.0012 to 0.0026 in.)

3. REPLACE RING PIN

NOTICE:

It is not necessary to remove the ring pins unless they are being replaced.

(a) Remove the ring pins.

(b) Using a plastic-faced hammer, tap in new ring pins to the specified protrusion height.

Protrusion height:
6.5 to 7.5 mm (0.26 to 0.30 in.)

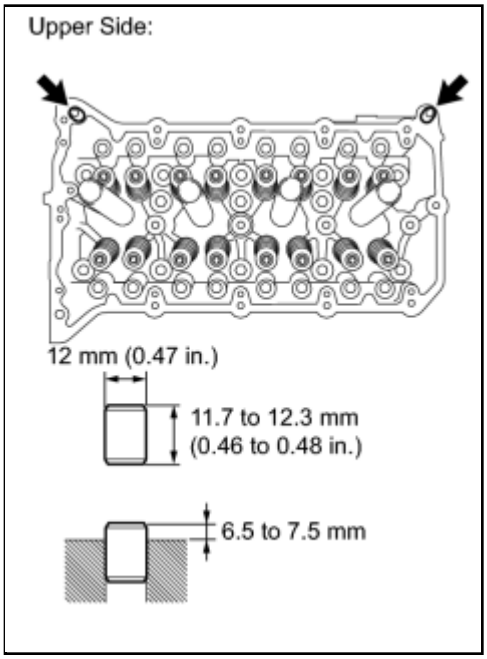

4. REPLACE STUD BOLT

NOTICE:

If any of the stud bolts is deformed or the threads are damaged, replace it.

(a) Remove the stud bolts.

(b) Using an E8 "TORX" socket, install the stud bolts.

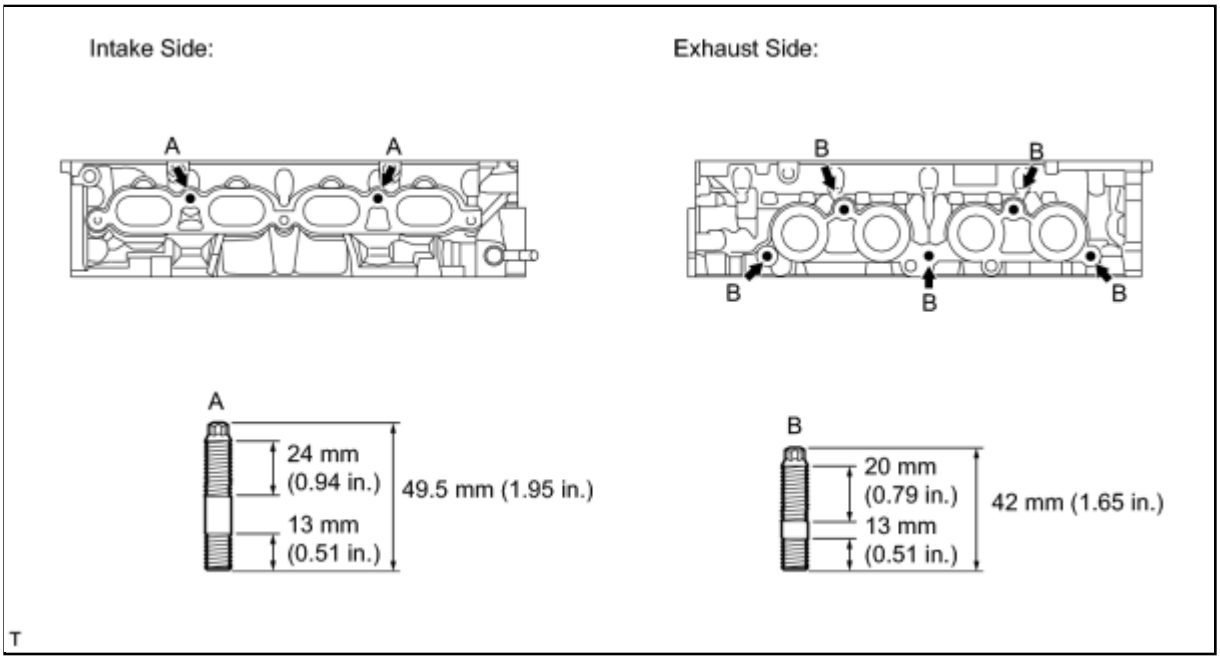

Torque: 9.5 N·m (97 kgf·cm, 84in·lbf)

Last Modified: 3-10-2010	6.4 A	**From:** 200901
Model Year: 2010	**Model:** Corolla	**Doc ID:** RM000002XA402PX
Title: 2ZR-FE ENGINE MECHANICAL: CYLINDER HEAD: REASSEMBLY (2010 Corolla)		

REASSEMBLY

1. INSTALL NO. 2 STRAIGHT SCREW PLUG

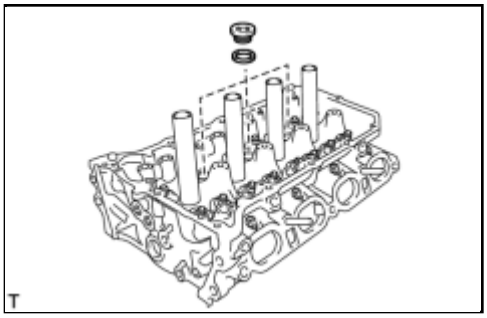

(a) Using a 10 mm straight hexagon wrench, install 3 new gaskets and the 3 straight screw plugs.

Torque: 44 N·m (449 kgf·cm, 33ft·lbf)

2. INSTALL VALVE SPRING SEAT

(a) Install the valve spring seats to the cylinder head.

3. INSTALL VALVE STEM OIL SEAL

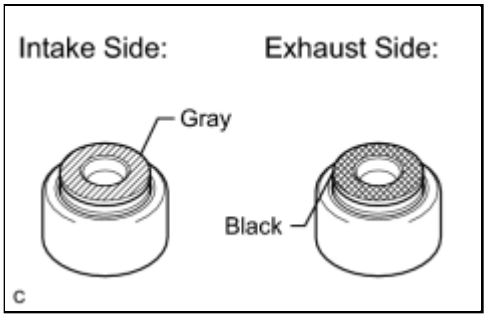

(a) Apply a light coat of engine oil to new oil seals.

NOTICE:

Pay close attention when installing the intake and exhaust oil seals. Installing the intake oil seal into the exhaust side or installing the exhaust oil seal to the intake side may cause installation problems later.

HINT:

The intake valve oil seal is gray and the exhaust valve oil seal is black.

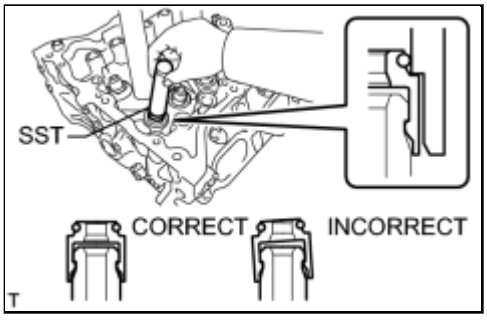

(b) Using SST, push in the oil seals.

SST: 09201-41020

NOTICE:

Failure to use SST may cause the oil seal to be damaged or improperly seated.

4. INSTALL INTAKE VALVE

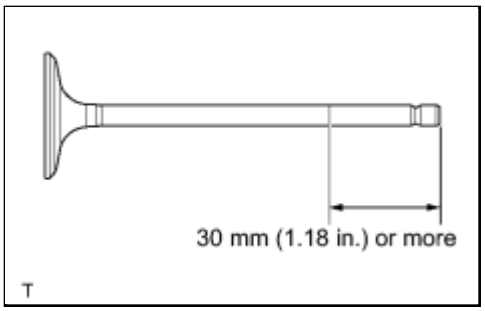

(a) Sufficiently apply engine oil to the tip area of the intake valve shown in the illustration.

(b) Install the valve, compression spring and spring retainer to the cylinder head.

NOTICE:

Install the same parts in the same combination to the original locations.

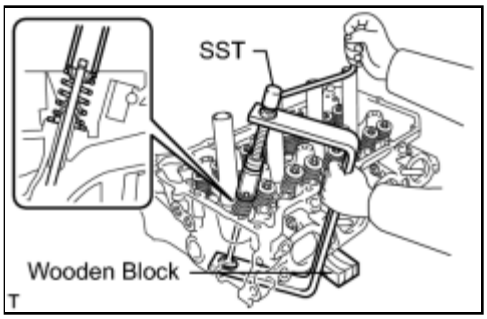

(c) Using SST and wooden blocks, compress the spring and install the 2 retainer locks.

SST: 09202-70020

09202-00010

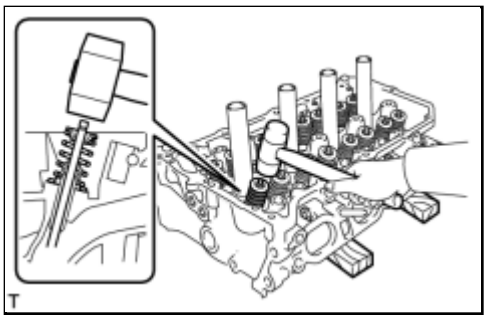

(d) Using a plastic-faced hammer, lightly tap the valve stem tip to ensure a proper fit.

NOTICE:

- Be careful not to damage the valve stem tip.
- Be careful not to damage the retainer.

5. INSTALL EXHAUST VALVE

(a) Sufficiently apply engine oil to the tip area of the exhaust valve shown in the illustration.

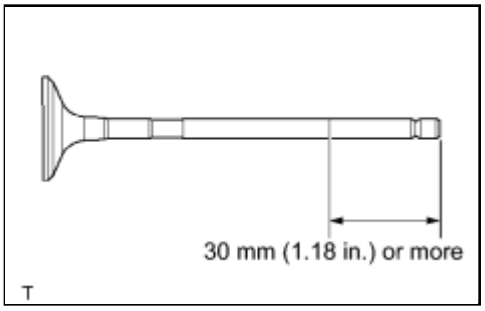

(b) Install the valve, compression spring and spring retainer to the cylinder head.

NOTICE:

Install the same parts in the same combination to the original locations.

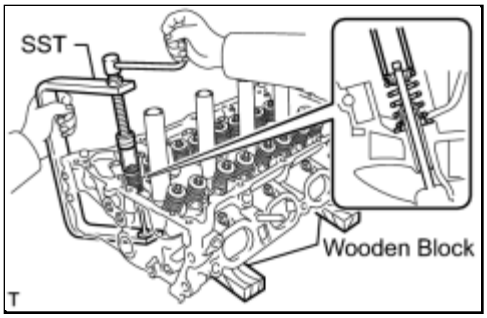

(c) Using SST and wooden blocks, compress the spring and install the 2 retainer locks.

SST: 09202-70020

09202-00010

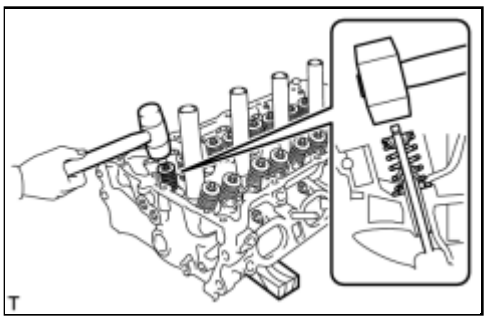

(d) Using a plastic-faced hammer, lightly tap the valve stem tip to ensure a proper fit.

NOTICE:

- Be careful not to damage the valve stem tip.
- Be careful not to damage the retainer.

6. INSTALL VALVE STEM CAP

(a) Apply a light coat of engine oil to the valve stem caps.

(b) Install the valve stem caps to the cylinder head.

Last Modified: 3-10-2010	6.4 A	**From:** 200901
Model Year: 2010	**Model:** Corolla	**Doc ID:** RM000001AN800YX
Title: 2AZ-FE ENGINE MECHANICAL: CYLINDER HEAD GASKET: REMOVAL (2010 Corolla)		

REMOVAL

1. **DISCHARGE FUEL SYSTEM PRESSURE** INFO
2. **DISCONNECT CABLE FROM NEGATIVE BATTERY TERMINAL**
3. **REMOVE FRONT WIPER ARM HEAD CAP** INFO
4. **REMOVE FRONT WIPER ARM AND BLADE ASSEMBLY LH** INFO
5. **REMOVE FRONT WIPER ARM AND BLADE ASSEMBLY RH** INFO
6. **REMOVE HOOD TO COWL TOP SEAL** INFO
7. **REMOVE CENTER NO. 1 COWL TOP VENTILATOR LOUVER** INFO
8. **REMOVE COWL TOP VENTILATOR LOUVER LH** INFO
9. **REMOVE WINDSHIELD WIPER MOTOR AND LINK ASSEMBLY** INFO
10. **REMOVE OUTER COWL TOP PANEL** INFO
11. **REMOVE SUSPENSION TOWER DAMPER ASSEMBLY (w/ Front Strut Bar)** INFO
12. **REMOVE FRONT WHEEL RH**
13. **REMOVE ENGINE UNDER COVER LH**
14. **REMOVE ENGINE UNDER COVER RH**
15. **REMOVE NO. 1 ENGINE COVER SUB-ASSEMBLY** INFO
16. **DRAIN ENGINE COOLANT** INFO
17. **DRAIN ENGINE OIL** INFO
18. **REMOVE CENTER EXHAUST PIPE ASSEMBLY** INFO
19. **REMOVE FRONT EXHAUST PIPE ASSEMBLY** INFO
20. **REMOVE V-RIBBED BELT** INFO
21. **REMOVE GENERATOR ASSEMBLY** INFO
22. **SEPARATE RADIATOR RESERVE TANK ASSEMBLY** INFO
23. **REMOVE AIR CLEANER CAP SUB-ASSEMBLY WITH HOSE** INFO
24. **REMOVE THROTTLE BODY ASSEMBLY** INFO

25. REMOVE IGNITION COIL ASSEMBLY INFO

26. REMOVE SPARK PLUG INFO

27. REMOVE CYLINDER HEAD COVER SUB-ASSEMBLY INFO

28. REMOVE ENGINE OIL LEVEL DIPSTICK

29. REMOVE ENGINE OIL LEVEL DIPSTICK GUIDE

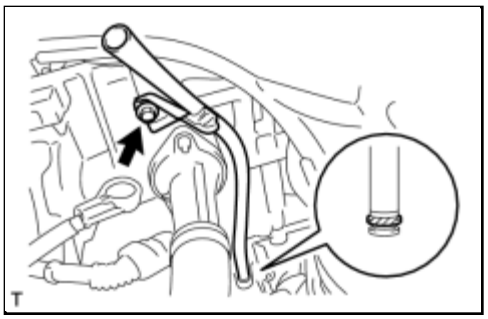

(a) Remove the bolt and engine oil level dipstick guide.

(b) Remove the O-ring from the engine oil level dipstick guide.

30. DISCONNECT FUEL MAIN TUBE INFO

31. REMOVE FUEL DELIVERY PIPE SUB-ASSEMBLY INFO

32. REMOVE CAMSHAFT TIMING OIL CONTROL VALVE ASSEMBLY INFO

33. REMOVE INTAKE MANIFOLD INFO

34. REMOVE NO. 1 INTAKE MANIFOLD INSULATOR INFO

35. REMOVE MANIFOLD STAY INFO

36. REMOVE NO. 2 MANIFOLD STAY INFO

37. REMOVE NO. 1 EXHAUST MANIFOLD HEAT INSULATOR INFO

38. REMOVE EXHAUST MANIFOLD CONVERTER SUB-ASSEMBLY

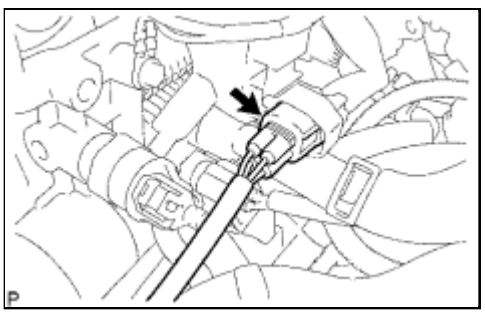

(a) Disconnect the air-fuel ratio sensor connector.

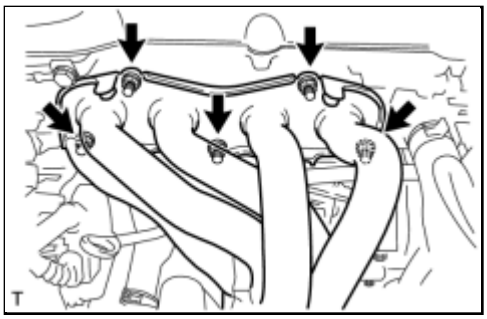

(b) Remove the 5 nuts, exhaust manifold converter sub-assembly and gasket.

39. REMOVE ENGINE MOUNTING INSULATOR SUB-ASSEMBLY RH

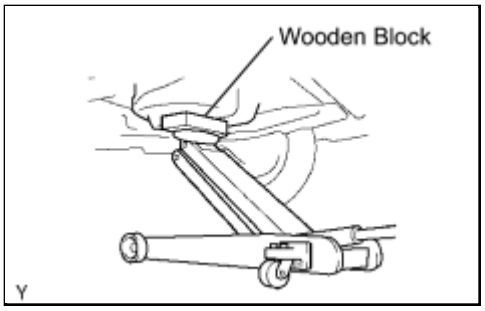

(a) Place a wooden block between a floor jack and the engine, then support the engine using the floor jack.

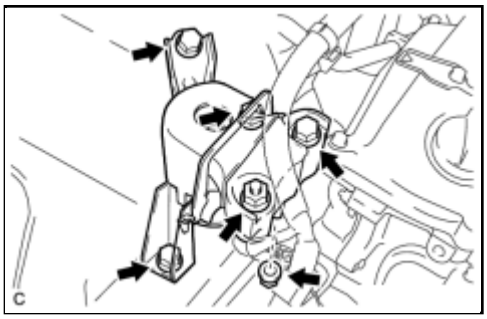

(b) Remove the 4 bolts and 2 nuts, then remove the engine mounting insulator sub-assembly RH.

NOTICE:

Do not apply excessive force to the return tube when removing the engine mounting insulator sub-assembly RH.

HINT:

Keep clearance by lowering the engine using the floor jack when removing the front engine mounting insulator.

40. REMOVE IDLER PULLEY SUB-ASSEMBLY

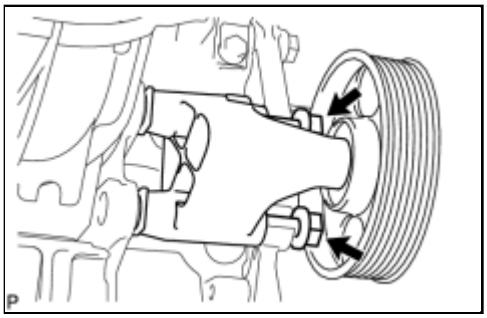

(a) Loosen the 2 bolts and remove the idler pulley sub-assembly with the 2 bolts.

41. REMOVE OIL PAN SUB-ASSEMBLY

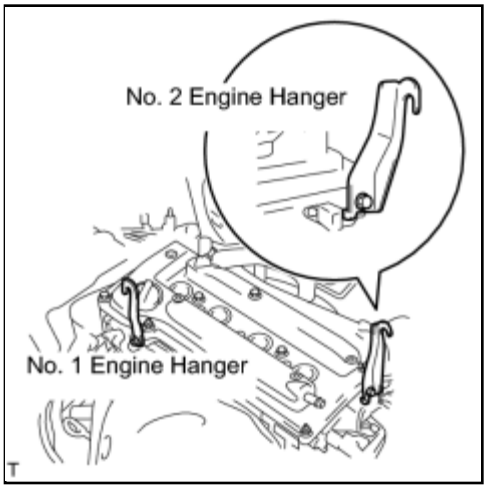

(a) Install the No. 1 and No. 2 engine hangers with new bolts.

Torque: 38 N·m (387 kgf·cm, 28ft·lbf)

Part No.

ITEM	PART NO.
No. 1 engine hanger	12281-28010
No. 2 engine hanger	12282-28010 or 12282-AB010
Bolt	90080-10177

(b) Attach the sling device to the engine hangers and chain block.

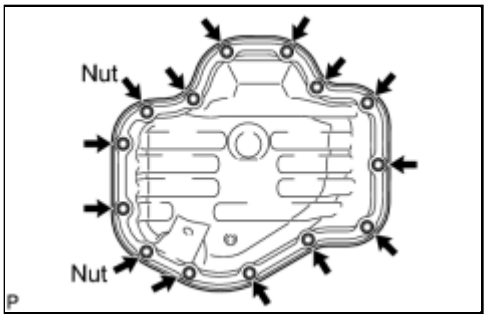

(c) Remove the 12 bolts and 2 nuts.

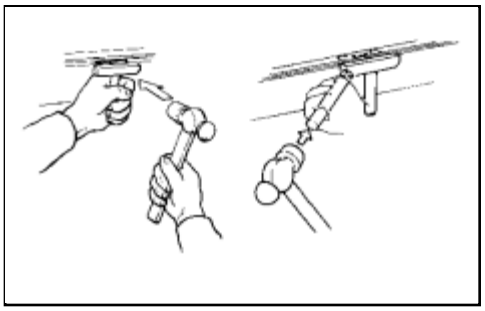

(d) Insert the blade of oil pan seal cutter between the crankcase, chain cover and oil pan, then cut through the applied sealer and remove the oil pan.

NOTICE:

Be careful not to damage the contact surface of the crankcase, chain cover or oil pan.

42. SET NO. 1 CYLINDER TO TDC/COMPRESSION

(a) Turn the crankshaft pulley until the groove and the timing mark "0" on the timing chain cover are aligned.

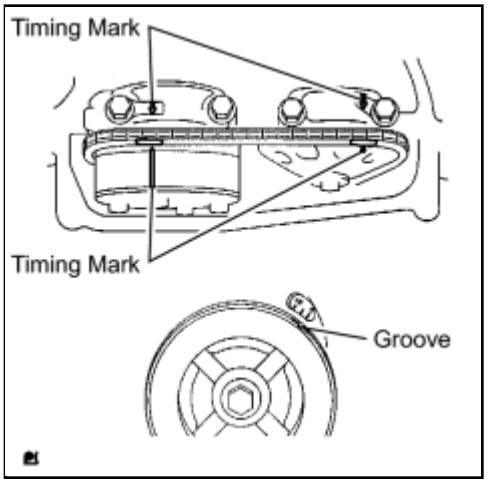

(b) Check that each timing mark on the camshaft timing gear and sprocket is aligned with the timing marks located on the No. 1 and No. 2 bearing caps as shown in the illustration.

If not, turn the crankshaft 1 revolution (360°) to align the timing marks as above.

43. REMOVE CRANKSHAFT PULLEY INFO

44. REMOVE NO. 1 CHAIN TENSIONER ASSEMBLY

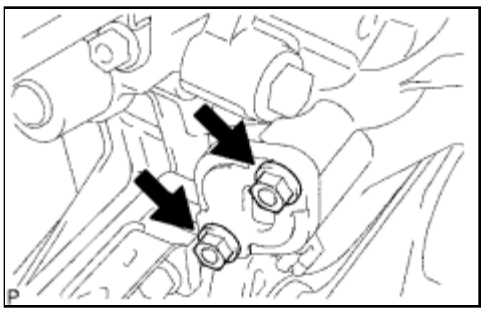

(a) Remove the 2 nuts, No. 1 chain tensioner assembly and gasket.

NOTICE:

Do not turn the crankshaft without the No. 1 chain tensioner assembly.

45. REMOVE V-RIBBED BELT TENSIONER ASSEMBLY

(a) Lift the engine upward.

NOTICE:

Do not lift the engine more than necessary.

(b) Remove the bolt, nut and V-ribbed belt tensioner assembly.

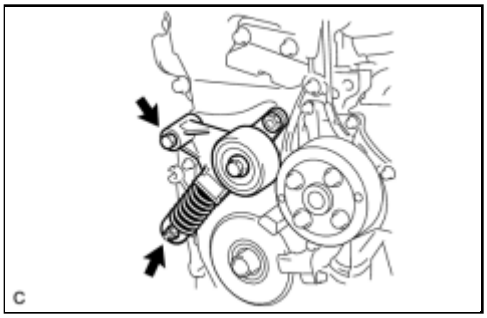

46. REMOVE CRANKSHAFT POSITION SENSOR INFO

47. REMOVE TIMING CHAIN OR BELT COVER SUB-ASSEMBLY INFO

48. REMOVE NO. 1 CRANKSHAFT POSITION SENSOR PLATE

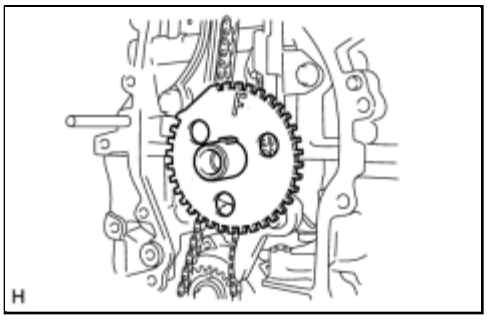

(a) Remove the No. 1 crankshaft position sensor plate.

49. REMOVE TIMING CHAIN GUIDE

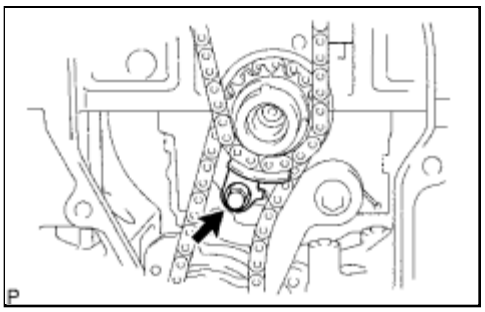

(a) Remove the bolt and timing chain guide.

50. REMOVE CHAIN TENSIONER SLIPPER

(a) Remove the bolt and chain tensioner slipper.

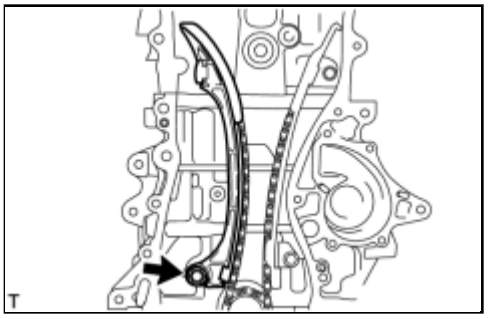

51. REMOVE NO. 1 CHAIN VIBRATION DAMPER

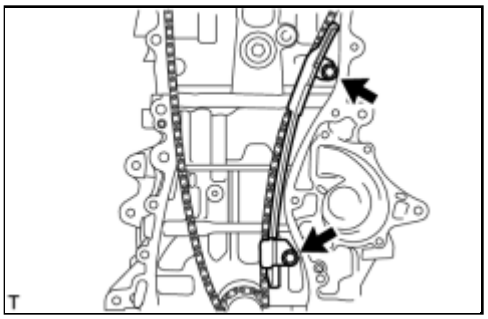

(a) Remove the 2 bolts and No. 1 chain vibration damper.

52. REMOVE CHAIN SUB-ASSEMBLY

53. REMOVE CRANKSHAFT TIMING GEAR OR SPROCKET

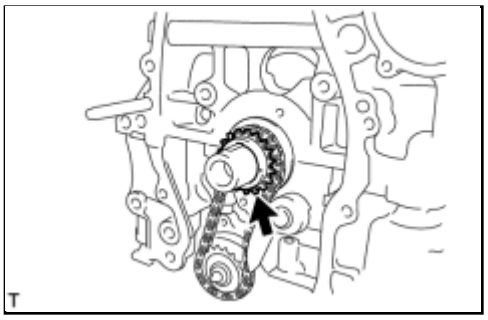

(a) Remove the crankshaft timing gear or sprocket from the crankshaft.

54. REMOVE NO. 2 CHAIN SUB-ASSEMBLY

(a) Turn the crankshaft 90° counterclockwise to align the adjusting hole on the oil pump drive shaft sprocket with the groove on the oil pump.

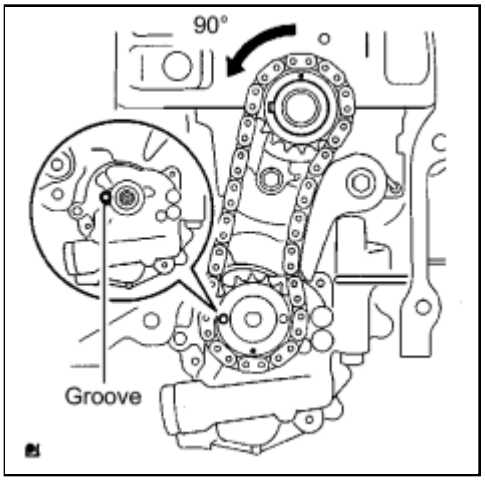

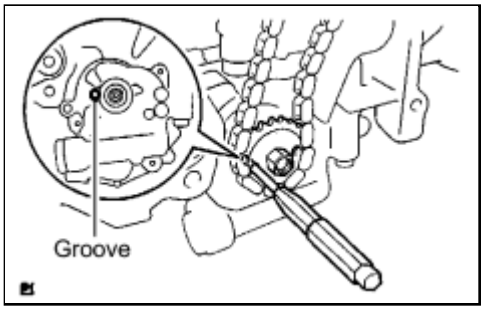

(b) Insert a 4 mm diameter bar into the adjusting hole of the oil pump drive shaft sprocket to lock the gear in position, and then remove the nut.

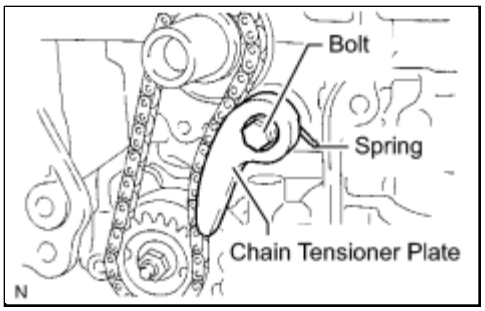

(c) Remove the bolt, chain tensioner plate and spring.

(d) Remove the oil pump drive sprocket, oil pump drive shaft sprocket and No. 2 chain.

55. DISCONNECT NO. 1 RADIATOR HOSE INFO

56. DISCONNECT OUTLET HEATER WATER HOSE INFO

57. DISCONNECT INLET HEATER WATER HOSE INFO

58. DISCONNECT ENGINE WIRE

(a) Disconnect the radio setting condenser connector.

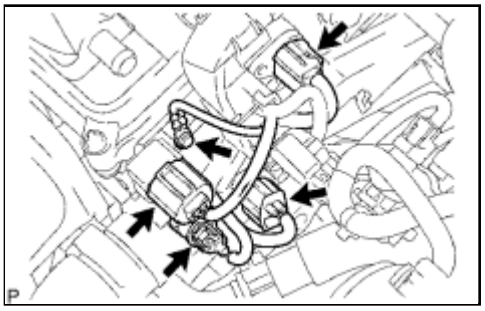

(b) Disconnect the engine oil pressure switch connector.

(c) Disconnect the engine coolant temperature sensor connector.

(d) Disconnect the camshaft position sensor connector.

(e) Remove the bolt and ground cable.

59. REMOVE NO. 2 CAMSHAFT INFO

60. REMOVE CAMSHAFT INFO

61. REMOVE NO. 1 CAMSHAFT BEARING INFO

62. REMOVE NO. 2 CAMSHAFT BEARING INFO

63. REMOVE CYLINDER HEAD SUB-ASSEMBLY

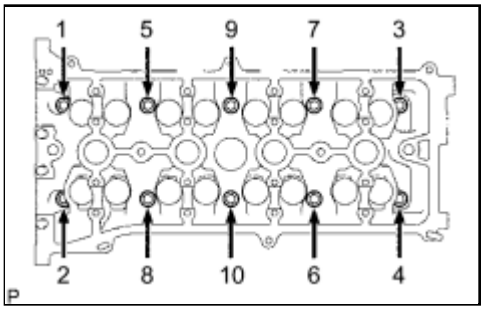

(a) In several steps, uniformly loosen and remove the 10 cylinder head bolts and 10 plate washers with a 10 mm bi-hexagon wrench in the sequence shown in the illustration.

NOTICE:

Head warpage or cracking could result from removing the bolts in the wrong order.

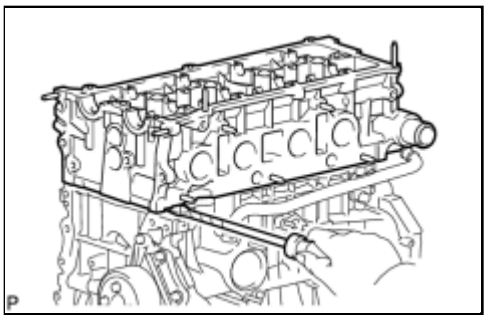

(b) Using a screwdriver with its tip wrapped with tape, pry between the cylinder head and cylinder block, and remove the cylinder head.

NOTICE:

Be careful not to damage the contact surfaces between the cylinder head and cylinder block.

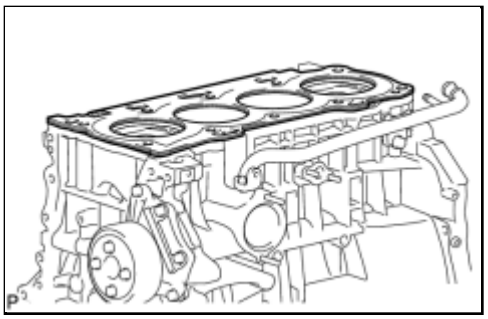

64. REMOVE CYLINDER HEAD GASKET

Last Modified: 3-10-2010	6.4 A	**From:** 200901
Model Year: 2010	**Model:** Corolla	**Doc ID:** RM000001AN500XX
Title: 2AZ-FE ENGINE MECHANICAL: CYLINDER HEAD GASKET: INSTALLATION (2010 Corolla)		

INSTALLATION

1. INSTALL CYLINDER HEAD GASKET

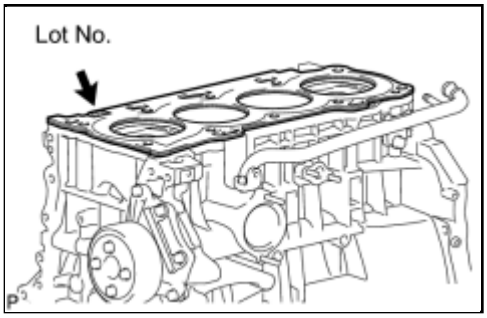

(a) Place a new cylinder head gasket on the cylinder block surface with the Lot No. stamp facing upward.

NOTICE:

- Remove any oil from the contact surface.
- Be careful of the installation direction.

2. INSTALL CYLINDER HEAD SUB-ASSEMBLY

(a) Place the cylinder head on the cylinder head gasket.

NOTICE:

Place the cylinder head gently in order to avoid damaging the cylinder head gasket.

(b) Install the cylinder head bolts.

NOTICE:

The cylinder head bolts are tightened in 2 successive steps.

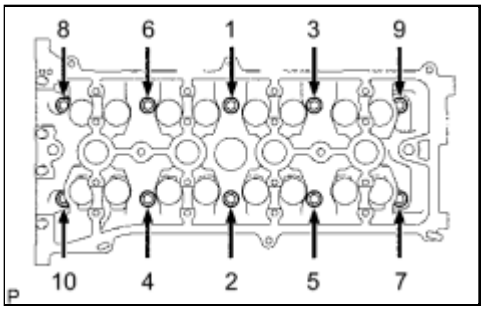

(1) Apply a light coat of engine oil to the threads and under the heads of the cylinder head set bolts.

(2) Using several steps, uniformly install and tighten the 10 cylinder head set bolts and plate washers with a 10 mm bi-hexagon wrench in the order shown in the illustration.

Torque: 70 N·m (714 kgf·cm, 52ft·lbf)

(c) Mark the front of the cylinder head bolts with paint.

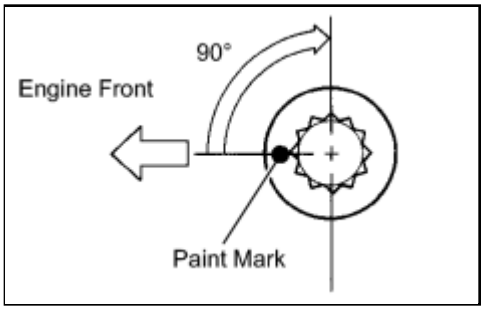

(d) Further tighten the cylinder head bolts 90° as shown in the illustration.

(e) Check that the paint mark is now at a 90° angle to the front.

3. INSTALL NO. 1 CAMSHAFT BEARING INFO

4. INSTALL NO. 2 CAMSHAFT BEARING INFO

5. INSTALL CAMSHAFT INFO

6. INSTALL NO. 2 CAMSHAFT INFO

7. CONNECT INLET HEATER WATER HOSE INFO

8. CONNECT OUTLET HEATER WATER HOSE INFO

9. CONNECT NO. 1 RADIATOR HOSE INFO

10. CONNECT ENGINE WIRE

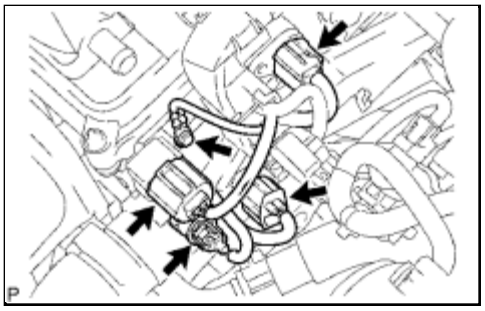

(a) Connect the ground cable with the bolt.

Torque: 8.4 N·m (86 kgf·cm, 74in·lbf)

(b) Connect the camshaft position sensor connector.

(c) Connect the engine coolant temperature sensor connector.

(d) Connect the engine oil pressure switch connector.

(e) Connect the radio setting condenser connector.

(f) Connect the heater water inlet hose.

11. INSTALL NO. 2 CHAIN SUB-ASSEMBLY

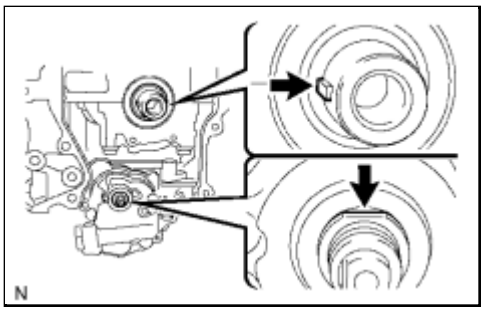

(a) Set the crankshaft key in the left horizontal position.

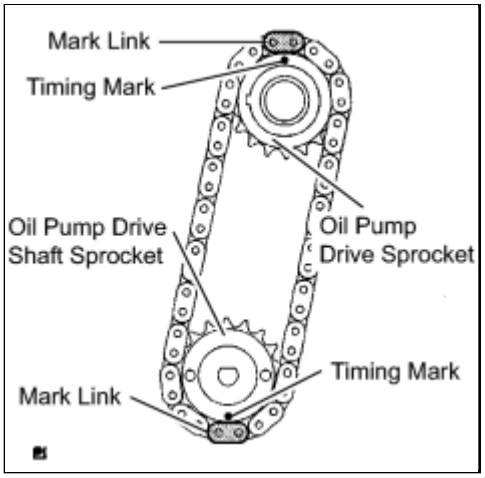

(b) Turn the cutout of the drive shaft so that it faces upward.

(c) Align the yellow mark links with the timing marks of each gear as shown in the illustration.

(d) Install the sprockets onto the crankshaft and oil pump shaft with the chain placed on the gears.

(e) Temporarily tighten the oil pump drive shaft sprocket with the nut.

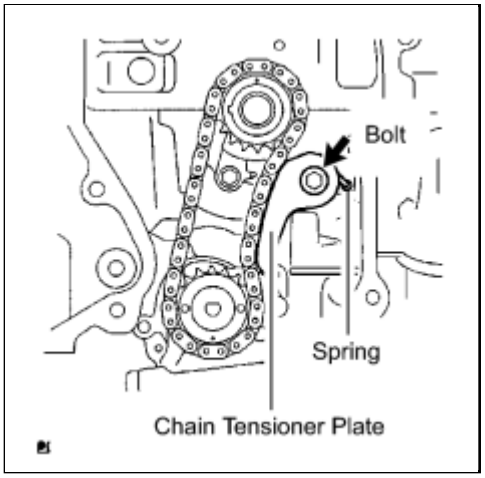

(f) Insert the damper spring into the adjusting hole, and then install the chain tensioner plate with the bolt.

Torque: 12 N·m (122 kgf·cm, 9ft·lbf)

(g) Align the adjusting hole on the oil pump drive shaft

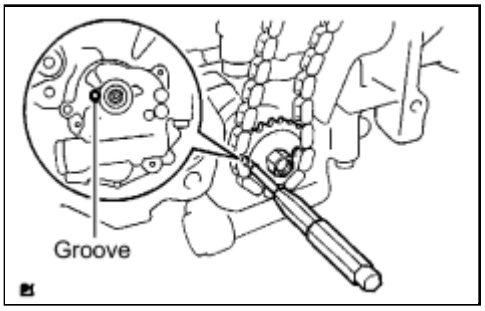

sprocket with the groove on the oil pump.

(h) Insert a 4 mm diameter bar into the adjusting hole on the oil pump drive shaft gear to lock the gear in position, and then tighten the nut.

Torque: 30 N·m (301 kgf·cm, 22ft·lbf)

12. INSTALL CRANKSHAFT TIMING GEAR OR SPROCKET

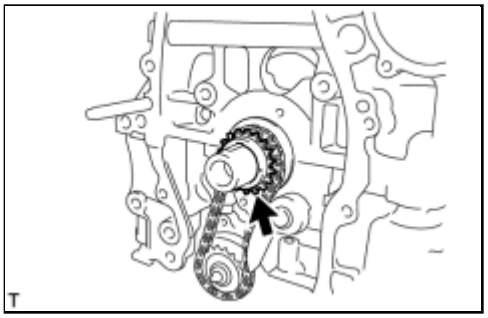

(a) Install the crankshaft timing gear or sprocket to the crankshaft.

13. INSTALL NO. 1 CHAIN VIBRATION DAMPER

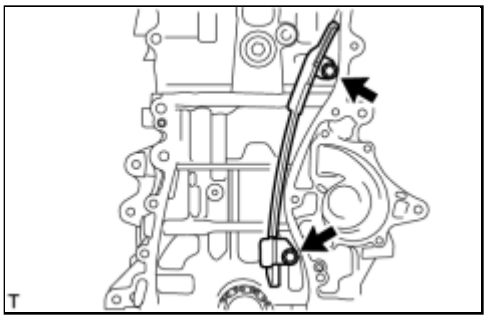

(a) Install the No. 1 chain vibration damper with the 2 bolts.

Torque: 9.0 N·m (92 kgf·cm, 80in·lbf)

14. INSTALL CHAIN SUB-ASSEMBLY

(a) Set the No. 1 cylinder to TDC/compression.

(1) Turn the camshafts with a wrench (using the hexagonal lobe) to align the timing marks on the camshaft timing gear with the timing marks located on the No. 1 and No. 2 bearing caps as shown in the illustration.

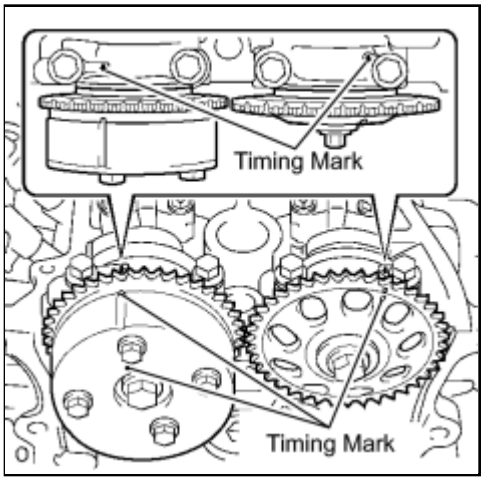

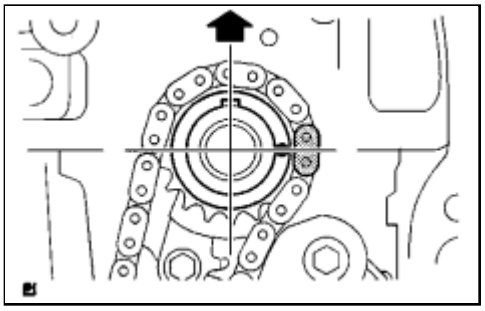

(2) Using the crankshaft pulley bolt, turn the crankshaft to position the key on the crankshaft upward.

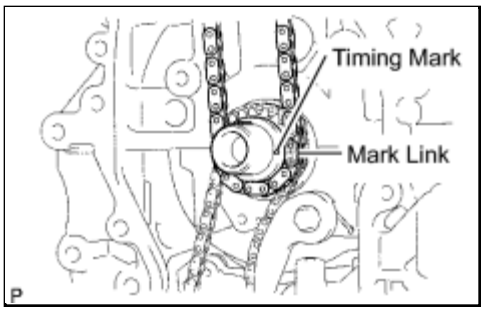

(b) Install the chain onto the crankshaft timing sprocket with the gold or orange mark link aligned with the timing mark on the crankshaft.

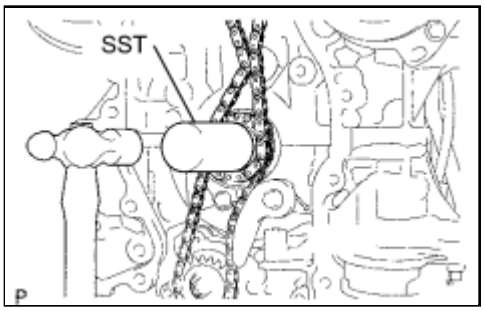

(c) Using SST and a hammer, tap in the crankshaft timing sprocket.

SST: 09309-37010

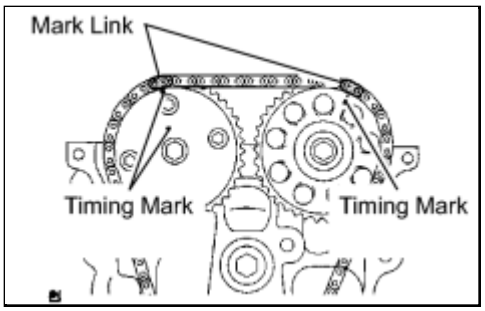

(d) Align the gold or yellow links with the timing marks located on the camshaft timing gear and sprocket, then install the chain.

15. INSTALL CHAIN TENSIONER SLIPPER

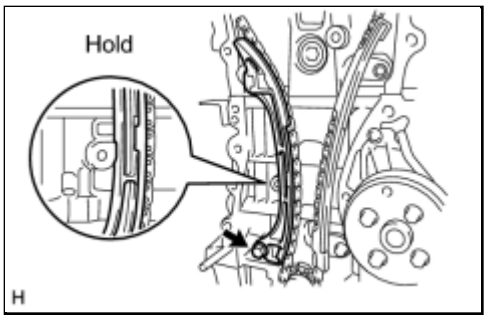

(a) Install the chain tensioner slipper with the bolt.

Torque: 19 N·m (194 kgf·cm, 14ft·lbf)

16. INSTALL TIMING CHAIN GUIDE

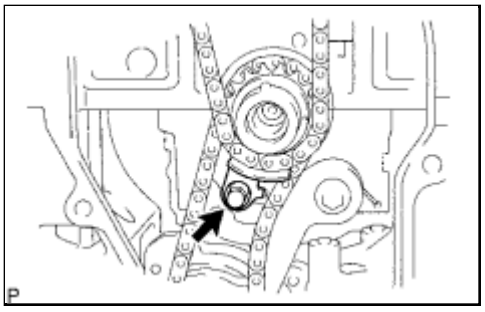

(a) Install the timing chain guide with the bolt.

Torque: 9.0 N·m (92 kgf·cm, 80in·lbf)

17. INSTALL NO. 1 CRANKSHAFT POSITION SENSOR PLATE

(a) Install the sensor plate with the "F" mark facing forward.

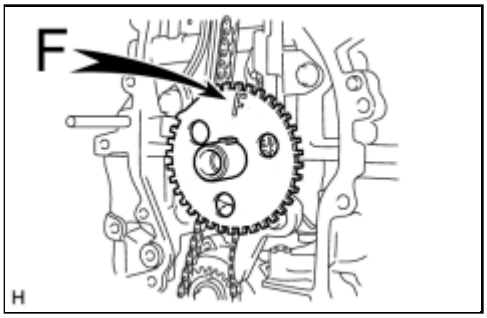

18. INSTALL TIMING CHAIN OR BELT COVER SUB-ASSEMBLY INFO

19. INSTALL NO. 1 CHAIN TENSIONER ASSEMBLY

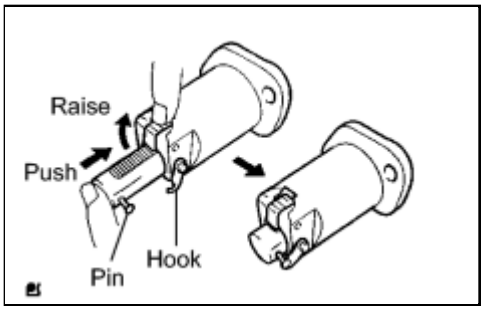

(a) Release the ratchet pawl, then fully push in the plunger and set the hook to the pin so that the plunger is in the position shown in the illustration.

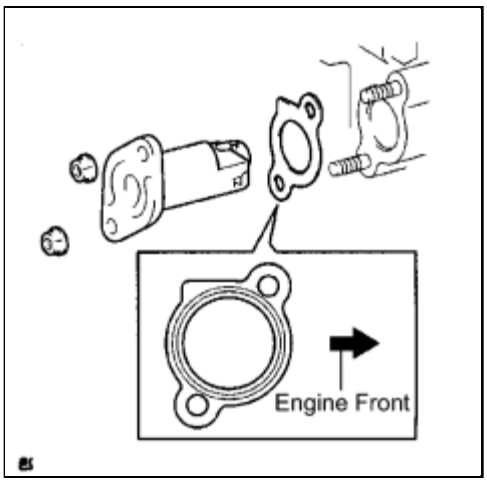

(b) Install a new gasket and the chain tensioner with the 2 nuts.

Torque: 9.0 N·m (92 kgf·cm, 80in·lbf)

NOTICE:

When installing the chain tensioner, set the hook again if the hook releases the plunger.

20. INSTALL V-RIBBED BELT TENSIONER ASSEMBLY

(a) Temporarily install the V-ribbed belt tensioner assembly with the nut.

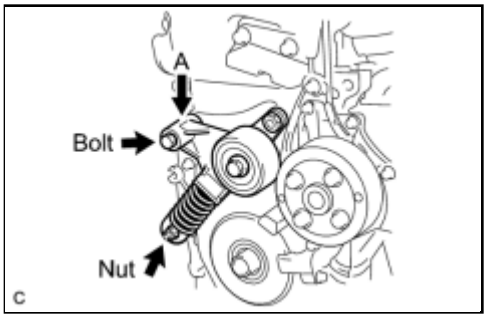

(b) Slightly push down on the V-ribbed belt tensioner assembly at part (A) to align the holes of the engine and tensioner as shown in the illustration, and temporarily install the bolt .

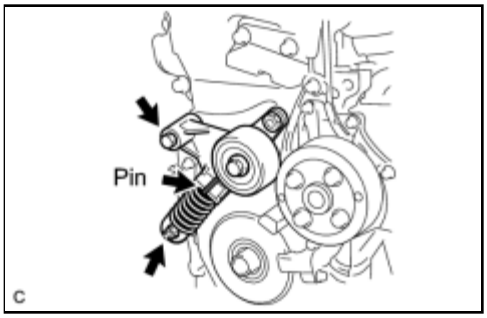

(c) Tighten the bolt and nut to install the V-ribbed belt tensioner.

Torque: 60 N·m (612 kgf·cm, 44ft·lbf)

NOTICE:

- When replacing the V-ribbed belt tensioner with a new one, do not pull out the pin.
- The pin will be removed in a later step.

21. INSTALL CRANKSHAFT PULLEY

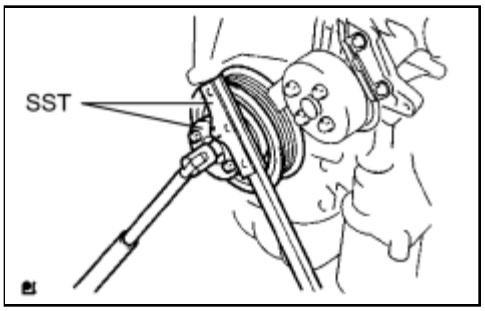

(a) Using SST, secure the pulley in place and tighten the bolt.

SST: 09213-54015

91651-60855

SST: 09330-00021

Torque: 180 N·m (1835 kgf·cm, 133ft·lbf)

(b) Turn the crankshaft counterclockwise, then disconnect the hook from the pin.

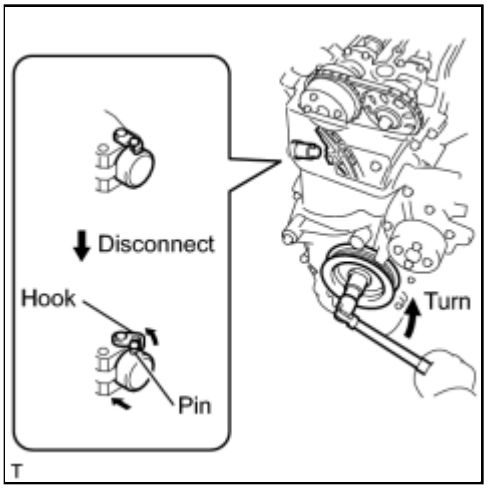

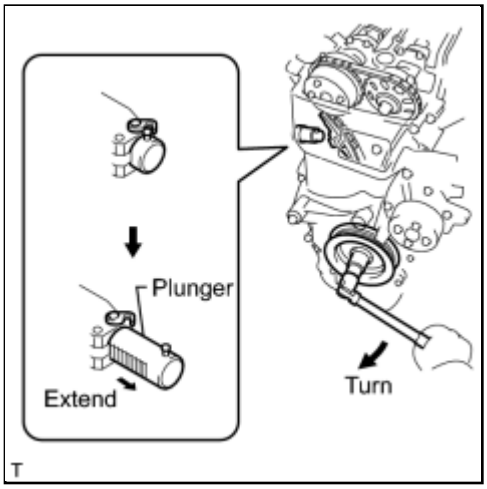

(c) Turn the crankshaft clockwise, then check that the plunger is extended.

22. INSTALL OIL PAN SUB-ASSEMBLY

(a) Remove any old packing material and be careful not to drop any oil on the contact surfaces of the cylinder block and oil pan.

(b) Apply a continuous bead of seal packing (diameter 4.0 to 4.5 mm (0.158 to 0.177 in.)) as shown in the illustration.

Seal packing:
Toyota Genuine Seal Packing Black, Three Bond 1207B or equivalent

NOTICE:

- Remove any oil from the contact surfaces.
- Install the oil pan within 3 minutes of applying seal packing.
- Do not add engine oil for at least 2 hours after installing the oil pan.

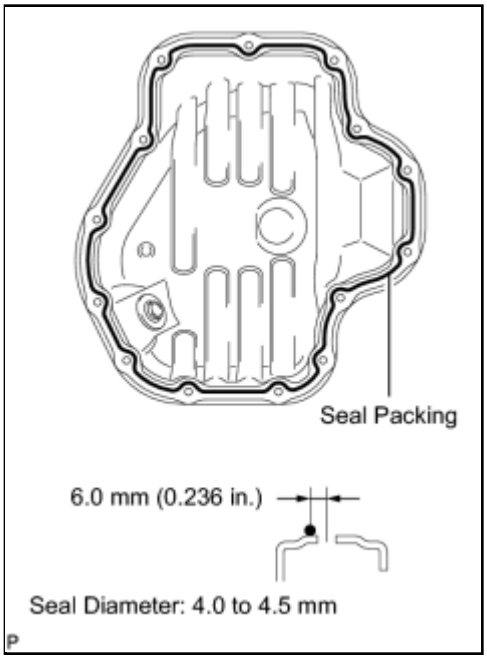

(c) Install the oil pan onto the cylinder block.

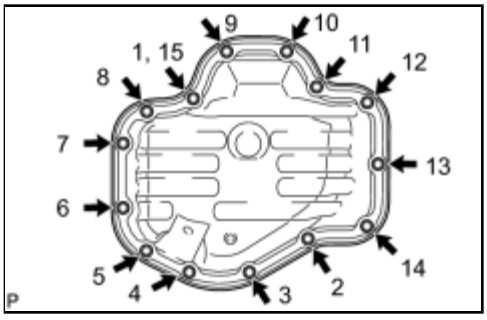

(d) Uniformly tighten the 12 bolts and 2 nuts in the sequence shown in the illustration.

Torque: 9.0 N·m (92 kgf·cm, 80in·lbf)

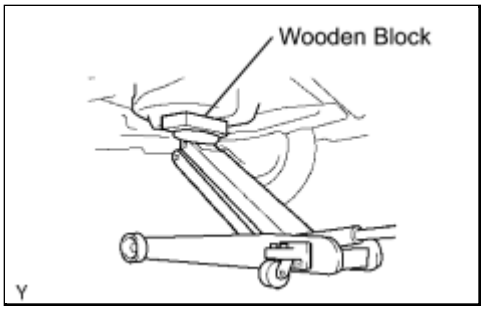

(e) Place a wooden block between a floor jack and the engine, then support the engine using the floor jack.

(f) Remove the chain block and sling device.

(g) Remove the 2 bolts and engine hangers.

23. INSTALL CRANKSHAFT POSITION SENSOR INFO

24. INSTALL IDLER PULLEY SUB-ASSEMBLY

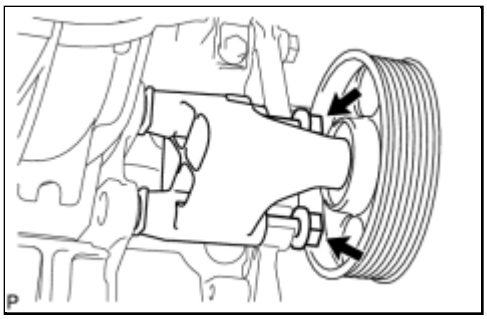

(a) Install the idler pulley sub-assembly with the 2 bolts.

Torque: 50 N·m (510 kgf·cm, 37ft·lbf)

25. INSTALL ENGINE MOUNTING INSULATOR SUB-ASSEMBLY RH

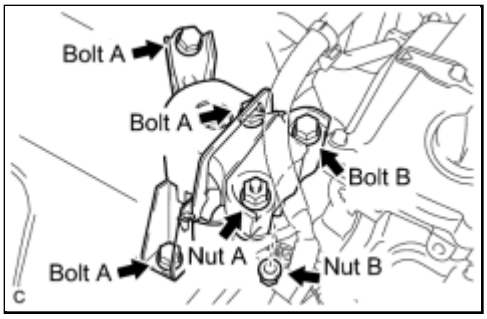

(a) Install the engine mounting insulator sub-assembly RH with the 4 bolts and 2 nuts.

Bolt A - Torque: 52 N·m (530 kgf·cm, 38ft·lbf)
Bolt B - Torque: 95 N·m (969 kgf·cm, 70ft·lbf)
Nut A - Torque: 95 N·m (969 kgf·cm, 70ft·lbf)
Nut B - Torque: 52 N·m (530 kgf·cm, 38ft·lbf)

26. INSTALL EXHAUST MANIFOLD CONVERTER SUB-ASSEMBLY

(a) Install a new gasket onto the cylinder head sub-assembly.

(b) Temporarily tighten the exhaust manifold converter sub-assembly with the 5 nuts.

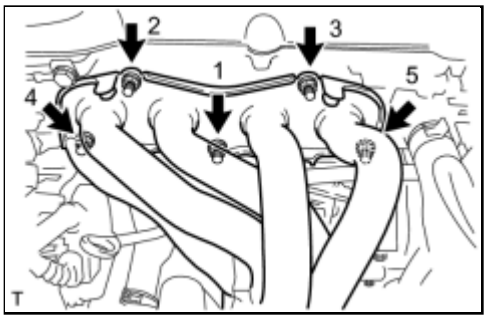

(c) Tighten the 5 nuts in the sequence shown in the illustration.

Torque: 37 N·m (377 kgf·cm, 27ft·lbf)

(d) Connect the air fuel ratio sensor connector.

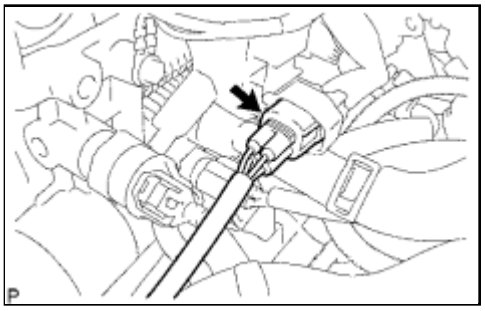

27. INSTALL NO. 1 EXHAUST MANIFOLD HEAT INSULATOR INFO

28. INSTALL NO. 2 MANIFOLD STAY INFO

29. INSTALL MANIFOLD STAY INFO

30. INSTALL NO. 1 INTAKE MANIFOLD INSULATOR INFO

31. INSTALL INTAKE MANIFOLD INFO

32. INSTALL CAMSHAFT TIMING OIL CONTROL VALVE ASSEMBLY INFO

33. INSTALL FUEL DELIVERY PIPE SUB-ASSEMBLY INFO

34. CONNECT FUEL MAIN TUBE INFO

35. INSTALL ENGINE OIL LEVEL DIPSTICK GUIDE

(a) Apply a light coat of engine oil to a new O-ring and install it onto the engine oil level dipstick guide.

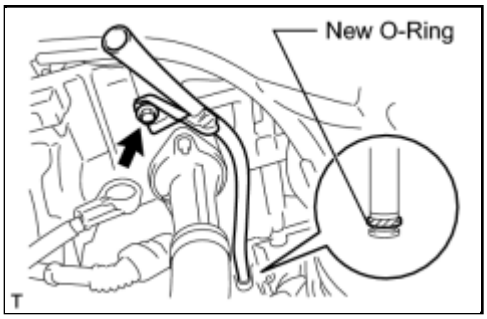

(b) Install the engine oil level dipstick guide with the bolt.

Torque: 9.0 N·m (92 kgf·cm, 80in·lbf)

36. INSTALL ENGINE OIL LEVEL DIPSTICK

37. INSTALL CYLINDER HEAD COVER SUB-ASSEMBLY INFO

38. INSTALL SPARK PLUG INFO

39. INSTALL IGNITION COIL ASSEMBLY INFO

40. INSTALL THROTTLE BODY ASSEMBLY INFO

41. INSTALL AIR CLEANER CAP SUB-ASSEMBLY WITH HOSE INFO

42. INSTALL RADIATOR RESERVE TANK ASSEMBLY INFO

43. INSTALL GENERATOR ASSEMBLY INFO

44. INSTALL V-RIBBED BELT

(a) When reusing the V-ribbed belt tensioner:

(1) Install the V-ribbed belt INFO .

(b) When replacing the V-ribbed belt tensioner with a new one:

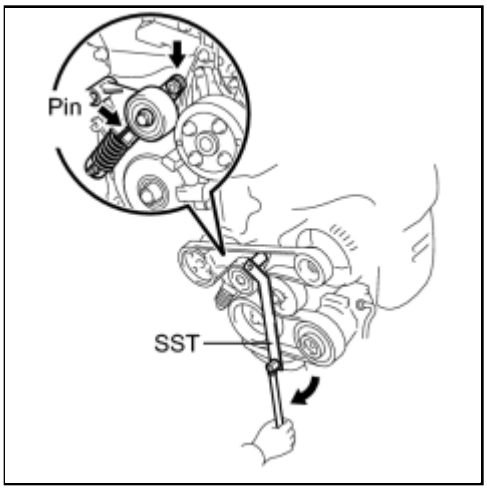

(1) Using SST, slowly turn the V-ribbed belt tensioner clockwise.

SST: 09216-42010

09216-04010

(2) Pull out the pin from the V-ribbed belt tensioner being compressed in a clockwise direction.

(3) Slowly return the V-ribbed belt tensioner.

NOTICE:

- Make sure that SST and other tools are set to the tensioner securely.
- When compressing the V-ribbed belt tensioner, slowly turn the tensioner.

(4) Install the V-ribbed belt INFO .

45. INSTALL FRONT EXHAUST PIPE ASSEMBLY INFO

46. INSTALL CENTER EXHAUST PIPE ASSEMBLY INFO

47. CONNECT CABLE TO NEGATIVE BATTERY TERMINAL

Torque: 5.4 N·m (55 kgf·cm, 48in·lbf)

48. ADD ENGINE OIL INFO

49. ADD ENGINE COOLANT INFO

50. INSPECT FOR FUEL LEAK INFO

51. INSPECT FOR COOLANT LEAK INFO

52. INSPECT FOR OIL LEAK

53. INSPECT FOR EXHAUST GAS LEAK

54. INSPECT IGNITION TIMING INFO

55. INSPECT ENGINE IDLING SPEED INFO

56. INSPECT COMPRESSION INFO

57. INSPECT CO/HC INFO

58. INSTALL SUSPENSION TOWER DAMPER ASSEMBLY (w/ Front Strut Bar) INFO

59. INSTALL OUTER COWL TOP PANEL INFO

60. INSTALL WINDSHIELD WIPER MOTOR AND LINK ASSEMBLY INFO

61. INSTALL COWL TOP VENTILATOR LOUVER LH INFO

62. INSTALL CENTER NO. 1 COWL TOP VENTILATOR LOUVER INFO

63. INSTALL HOOD TO COWL TOP SEAL INFO

64. INSTALL FRONT WIPER ARM AND BLADE ASSEMBLY LH INFO

65. INSTALL FRONT WIPER ARM AND BLADE ASSEMBLY RH INFO

66. INSTALL FRONT WIPER ARM HEAD CAP INFO

67. INSTALL NO. 1 ENGINE COVER SUB-ASSEMBLY INFO

68. INSTALL ENGINE UNDER COVER LH

69. INSTALL ENGINE UNDER COVER RH

70. INSTALL FRONT WHEEL RH

Torque: 103 N·m (1050 kgf·cm, 76ft·lbf)

Last Modified: 3-10-2010	6.4 N	**From:** 200901
Model Year: 2010	**Model:** Corolla	**Doc ID:** RM000002XA000XX
Title: 2ZR-FE ENGINE MECHANICAL: CYLINDER HEAD: REPAIR (2010 Corolla)		

REPAIR

1. REPAIR VALVE SEATS

NOTICE:

- Repair the seat while checking the seating position.
- Keep the lip free of foreign matter.

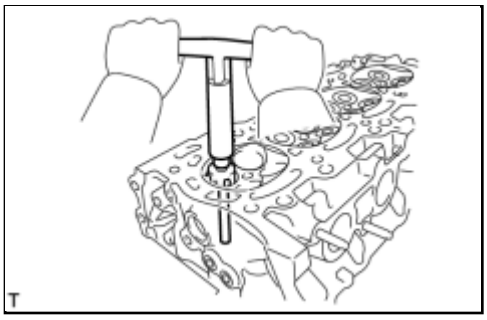

(a) Using a 45° cutter, resurface the valve seat so that the valve seat width is more than the specification.

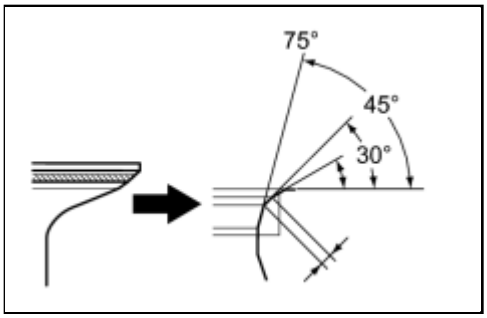

(b) Using 30° and 75° cutters, correct the valve seat so that the valve contacts the entire circumference of the seat. The contact should be in the center of the valve seat, and the valve seat width should be maintained within the specified range around the entire circumference of the seat.

Valve Seat Width:

ITEM	SPECIFIED CONDITION
Intake Side	1.0 to 1.4 mm (0.039 to 0.055 in.)
Exhaust Side	1.0 to 1.4 mm (0.039 to 0.055 in.)

(c) Handrub the valve and valve seat with an abrasive compound.

(d) Check the valve seating position.

Last Modified: 3-10-2010	6.4 K	**From:** 200901
Model Year: 2010	**Model:** Corolla	**Doc ID:** RM0000027IA018X
Title: 2ZR-FE ENGINE MECHANICAL: CYLINDER HEAD GASKET: COMPONENTS (2010 Corolla)		

COMPONENTS

ILLUSTRATION

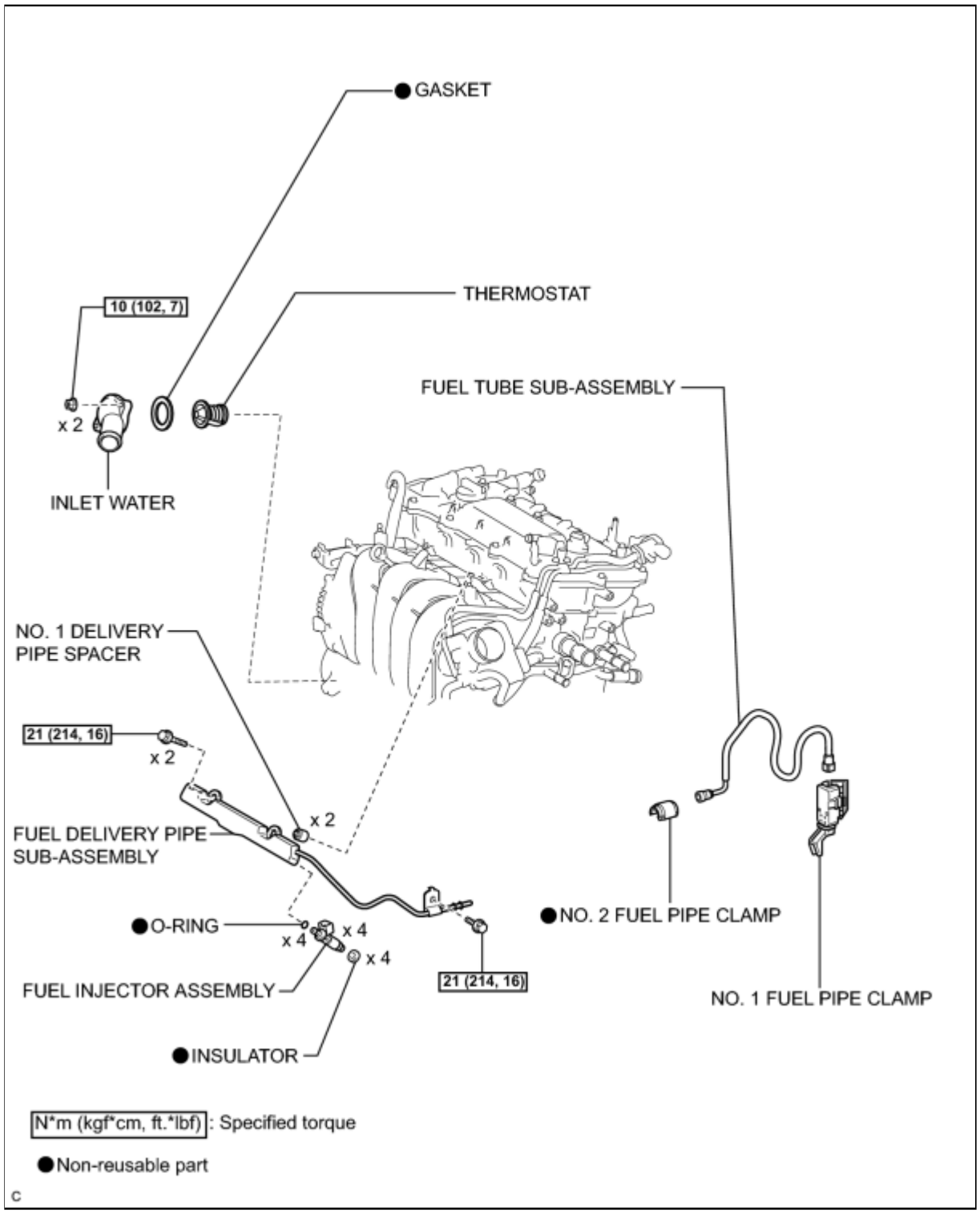

ILLUSTRATION

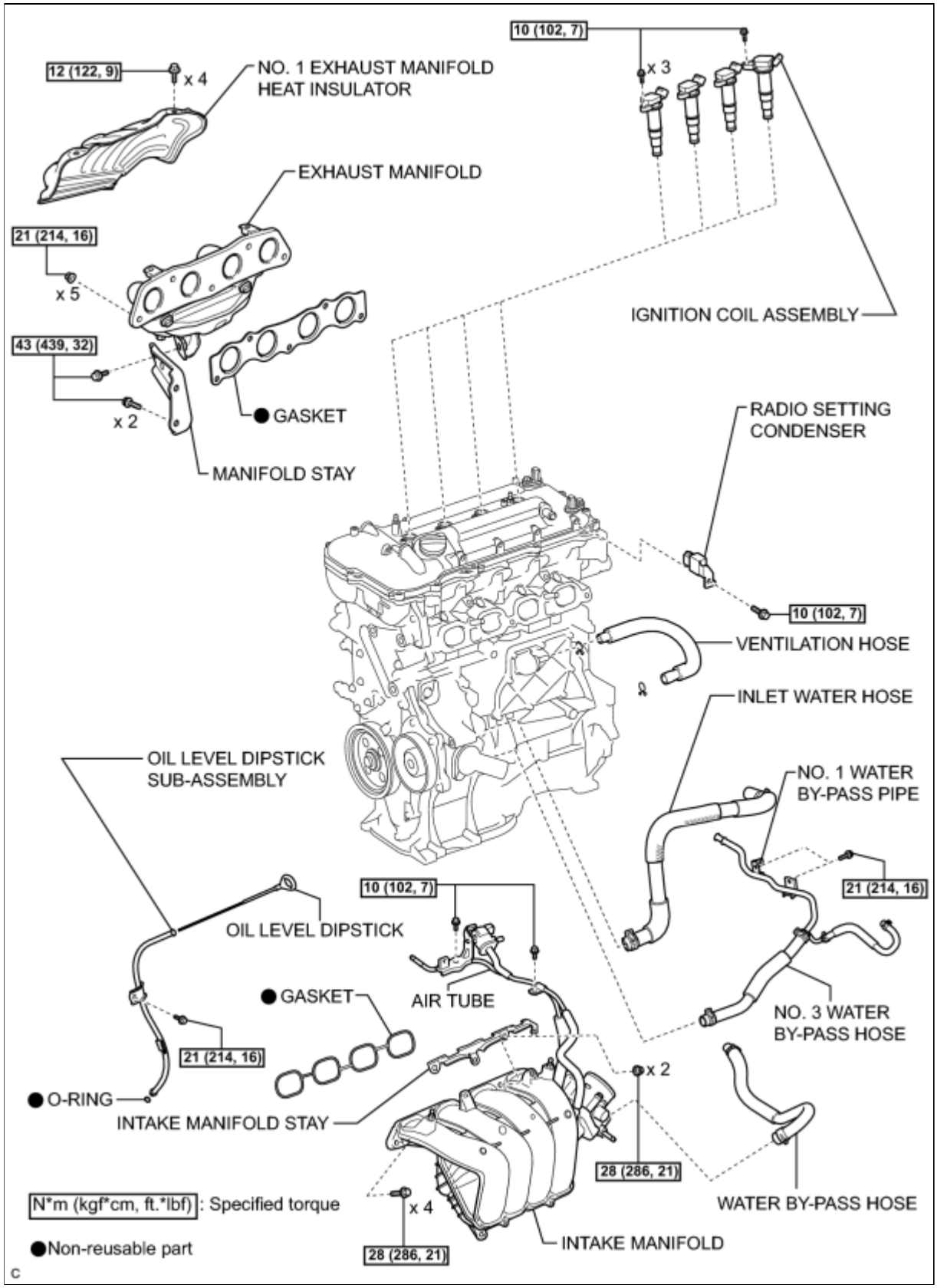

ILLUSTRATION

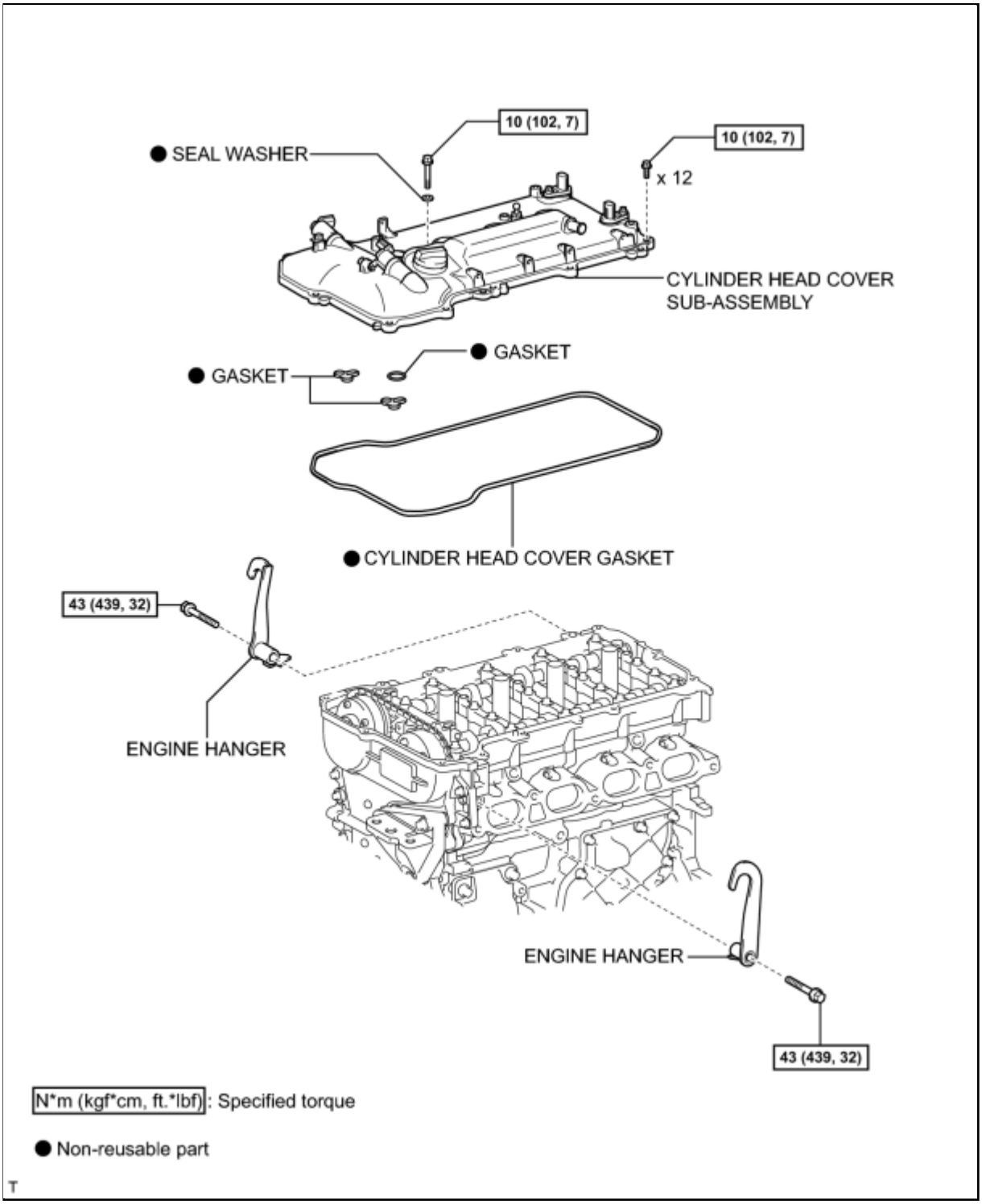

ILLUSTRATION

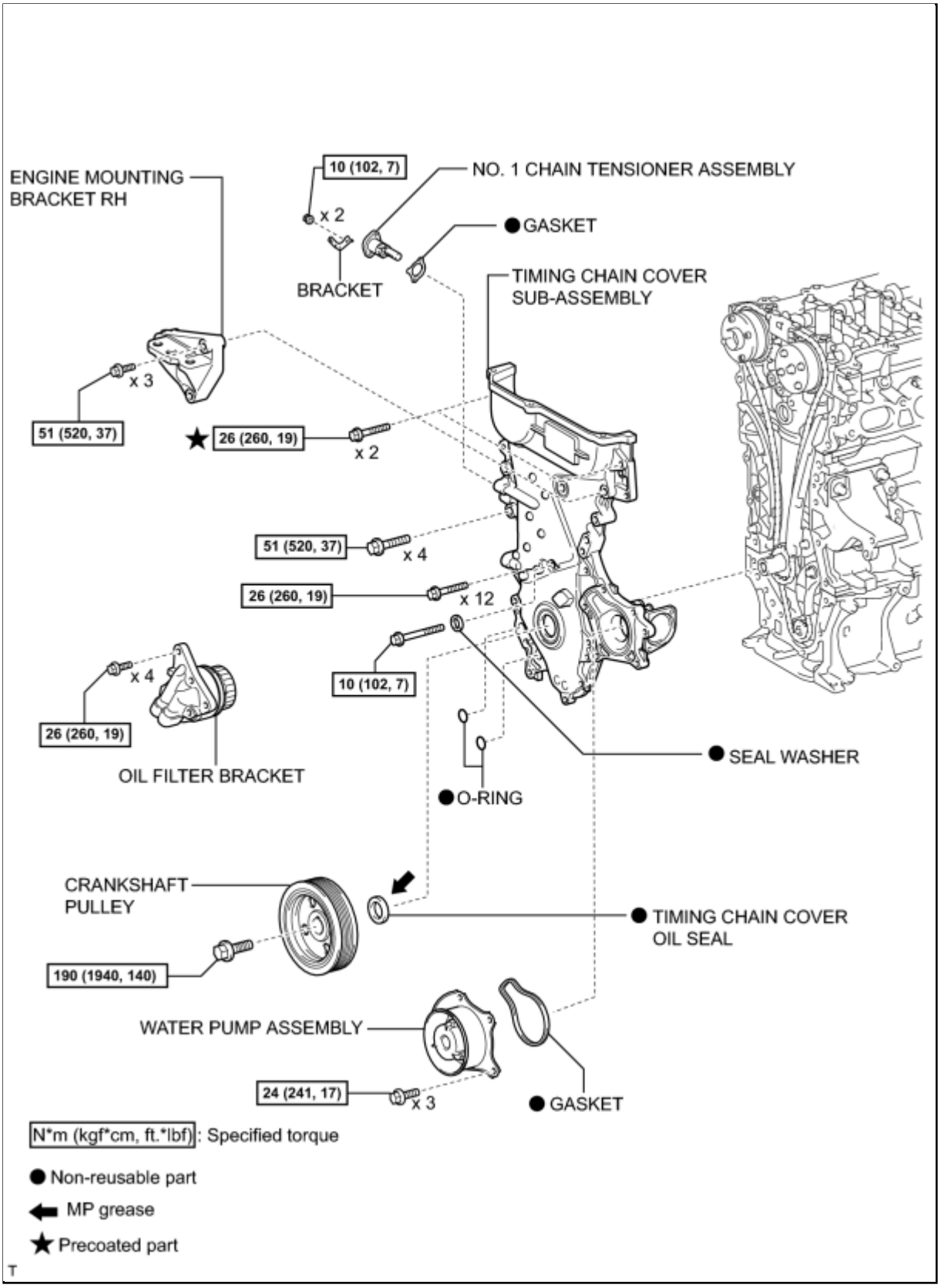

ILLUSTRATION

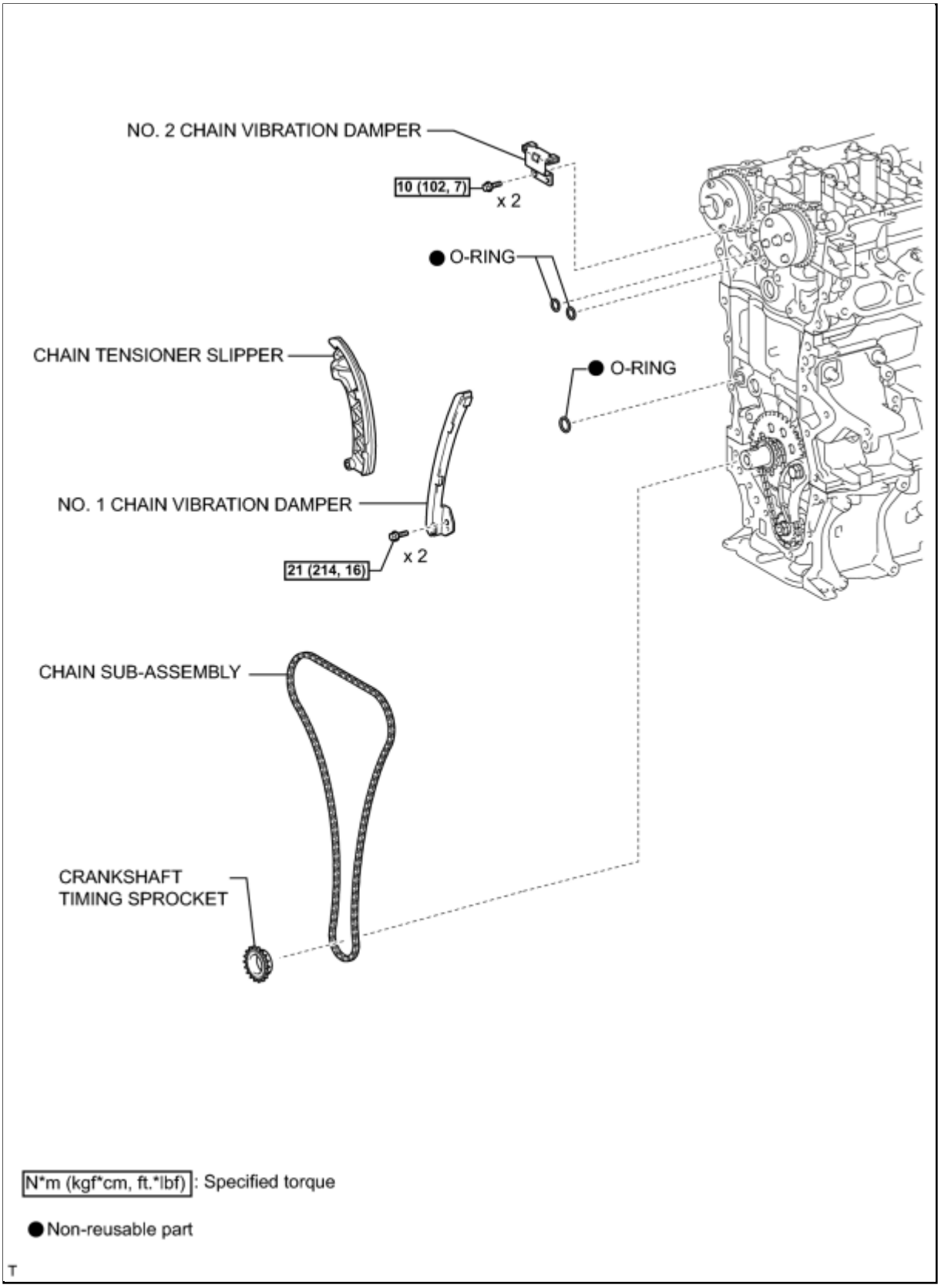

ILLUSTRATION

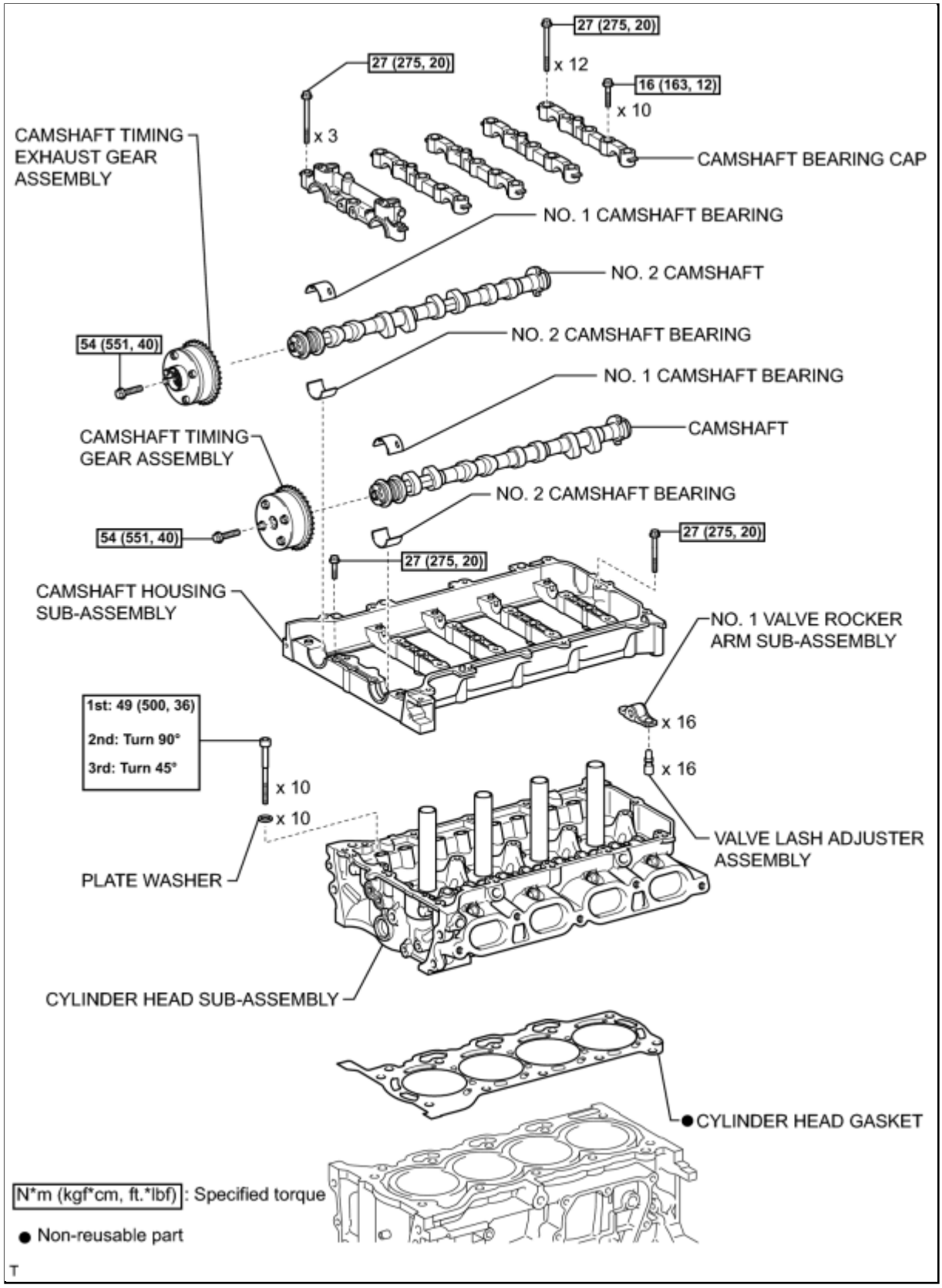
27 (275, 20)
x 12
27 (275, 20)
16 (163, 12)
x 10
x 3
CAMSHAFT TIMING EXHAUST GEAR ASSEMBLY
CAMSHAFT BEARING CAP
NO. 1 CAMSHAFT BEARING
NO. 2 CAMSHAFT
54 (551, 40)
NO. 2 CAMSHAFT BEARING
NO. 1 CAMSHAFT BEARING
CAMSHAFT
CAMSHAFT TIMING GEAR ASSEMBLY
NO. 2 CAMSHAFT BEARING
54 (551, 40)
27 (275, 20)
27 (275, 20)
CAMSHAFT HOUSING SUB-ASSEMBLY
NO. 1 VALVE ROCKER ARM SUB-ASSEMBLY
1st: 49 (500, 36)
2nd: Turn 90°
3rd: Turn 45°
x 16
x 16
x 10
x 10
VALVE LASH ADJUSTER ASSEMBLY
PLATE WASHER
CYLINDER HEAD SUB-ASSEMBLY
CYLINDER HEAD GASKET
N*m (kgf*cm, ft.*lbf): Specified torque
● Non-reusable part

T

Last Modified: 3-10-2010	6.4 A	**From:** 200901
Model Year: 2010	**Model:** Corolla	**Doc ID:** RM000002 7I901IX
Title: 2ZR-FE ENGINE MECHANICAL: CYLINDER HEAD GASKET: INSTALLATION (2010 Corolla)		

INSTALLATION

1. INSTALL CYLINDER HEAD GASKET

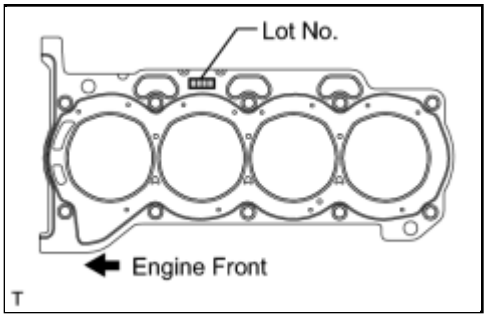

(a) Place a new gasket on the cylinder block surface with the Lot No. stamp facing upward.

NOTICE:

- Remove any oil from the contact surface.
- Make sure that the gasket is installed in the correct direction.

2. INSTALL CYLINDER HEAD SUB-ASSEMBLY

HINT:

The cylinder head bolts are tightened in 2 progressive steps.

(a) Apply a light coat of engine oil to the bolt threads and the area beneath the bolt heads that come in contact with the washers.

(b) Install the bolts and plate washers to the cylinder head.

NOTICE:

Do not drop the washers into the cylinder head.

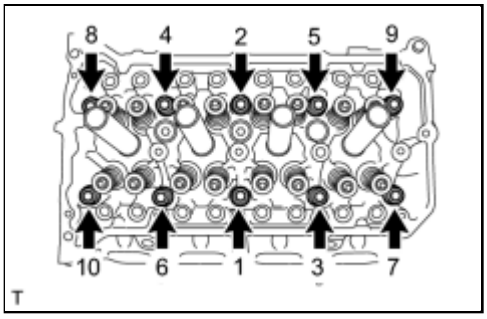

(c) Using several passes, uniformly install and tighten the 10 cylinder head set bolts and plate washers with a 10 mm bi-hexagon wrench in the order shown in the illustration.

Torque: 49 N·m (500 kgf·cm, 36ft·lbf)

(d) Mark the front side of the cylinder head bolts with paint.

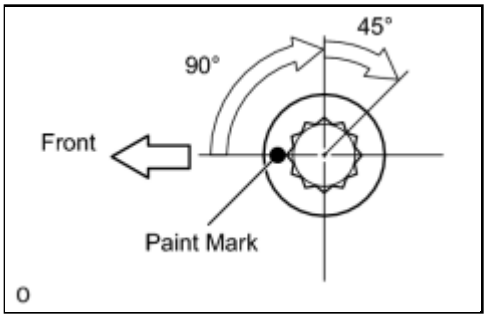

(e) Retighten the cylinder head bolts an additional 90°, then once more 45° as shown in the illustration.

(f) Check that the paint mark is now at a 135° angle to the front.

3. INSTALL VALVE LASH ADJUSTER ASSEMBLY INFO

4. INSTALL NO. 1 VALVE ROCKER ARM SUB-ASSEMBLY INFO

5. INSTALL NO. 1 CAMSHAFT BEARING INFO

6. INSTALL NO. 2 CAMSHAFT BEARING INFO

7. INSTALL NO. 2 CAMSHAFT INFO

8. INSTALL CAMSHAFT INFO

9. INSTALL CAMSHAFT BEARING CAP INFO

10. INSTALL CAMSHAFT HOUSING SUB-ASSEMBLY INFO

11. INSTALL CAMSHAFT TIMING GEAR ASSEMBLY INFO

12. INSTALL CAMSHAFT TIMING EXHAUST GEAR ASSEMBLY INFO

13. INSTALL NO. 1 CHAIN VIBRATION DAMPER

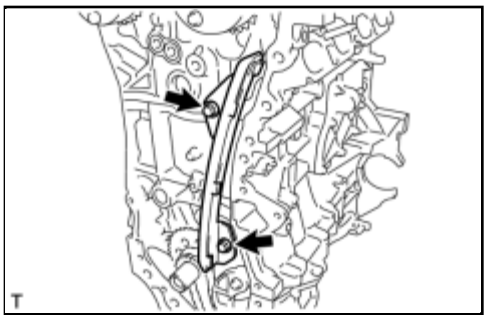

(a) Install the No. 1 chain vibration damper with the 2 bolts.

Torque: 21 N·m (214 kgf·cm, 16ft·lbf)

14. INSTALL NO. 2 CHAIN VIBRATION DAMPER INFO

15. INSTALL CHAIN SUB-ASSEMBLY

(a) Check the No. 1 cylinder TDC/compression.

(1) Temporarily tighten the crankshaft pulley bolt.

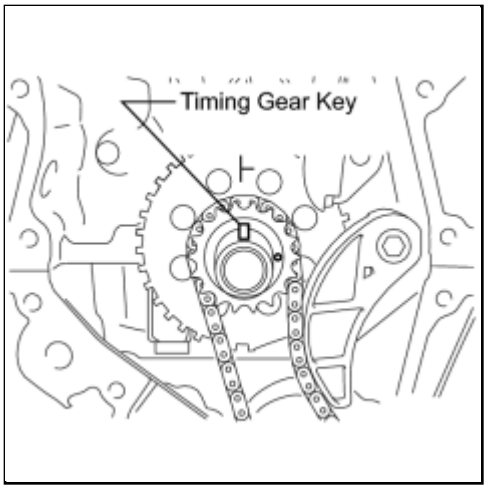

(2) Turn the crankshaft counterclockwise to position the timing gear key to the top.

(3) Remove the crankshaft pulley bolt.

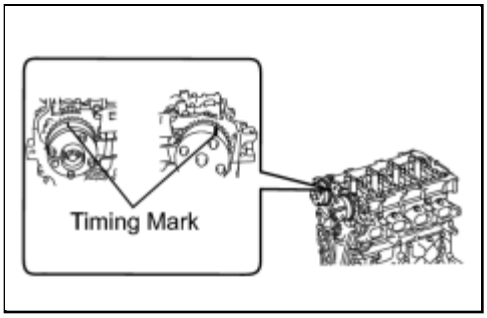

(4) Check the timing marks on each camshaft timing gear.

(b) Align the mark plate (orange) with the timing mark of the No. 2 camshaft as shown in the illustration and install the chain.

HINT:

- Be sure to position the mark plate at the front of the engine.
- The mark plate on the camshaft side is colored orange.
- Do not pass the chain around the sprocket of the camshaft timing gear assembly. Only place it on the sprocket.
- Pass the chain through the No. 1 vibration damper.

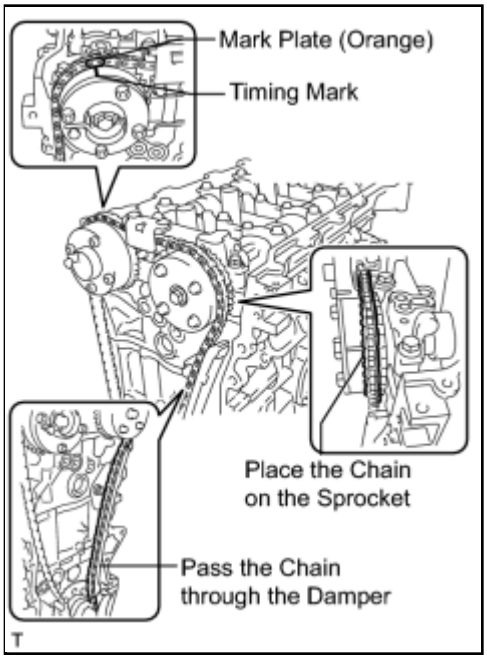

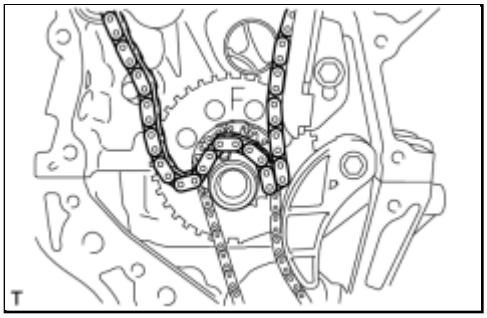

(c) Place the chain on the crankshaft without passing it around the shaft.

(d) Hold the hexagonal portion of the camshaft with a wrench and turn the camshaft timing gear assembly counterclockwise to align the mark plate (orange) and timing mark.

HINT:

- Be sure to position the mark plate at the front of the engine.
- The mark plate on the camshaft side is colored orange.

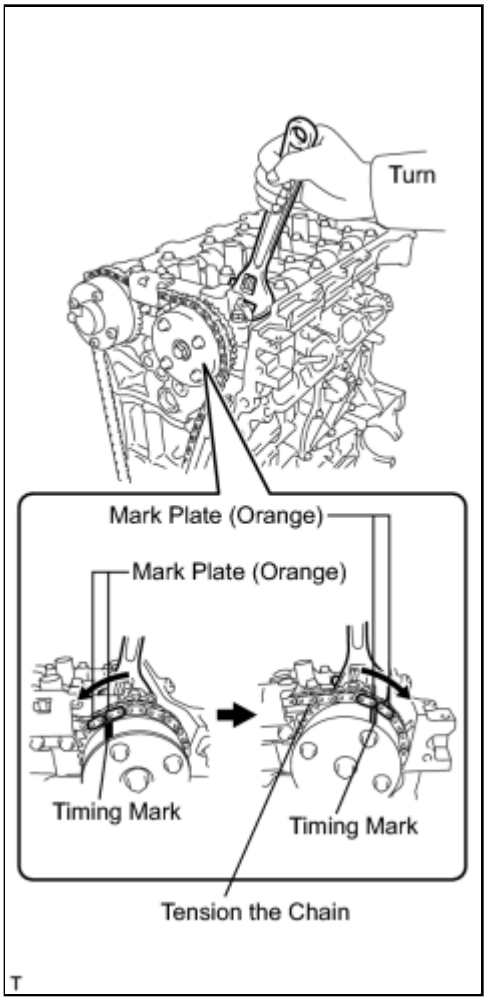

(e) Hold the hexagonal portion of the camshaft with a wrench and turn the camshaft timing gear assembly clockwise.

HINT:

To tension the chain, slowly turn the camshaft timing gear assembly clockwise to prevent the chain from being misaligned.

(f) Align the mark plate (yellow) and timing mark and install the chain to the crankshaft timing gear.

HINT:

The mark plate on the crankshaft side is colored yellow.

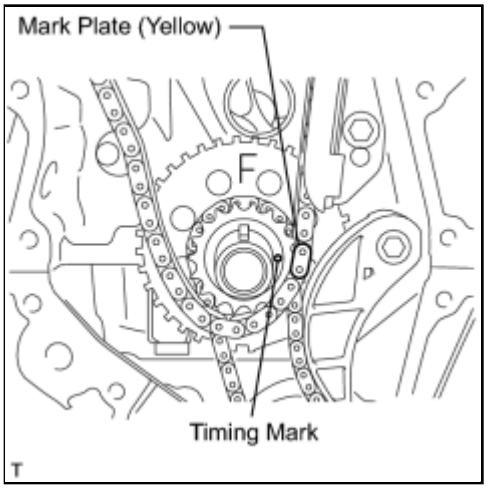

(g) Recheck each timing mark at TDC/compression.

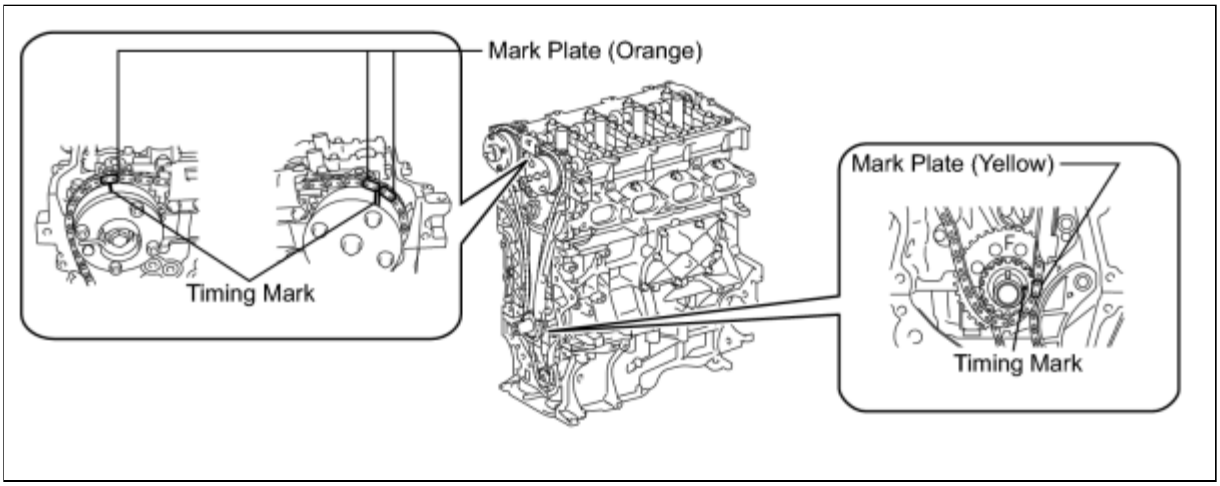

16. INSTALL CHAIN TENSIONER SLIPPER

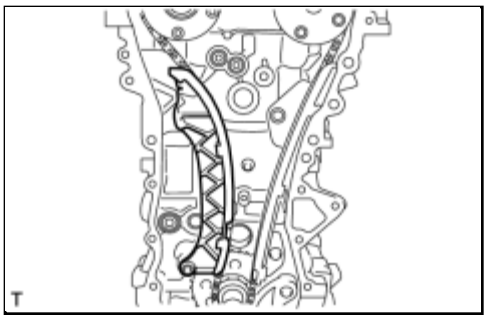

(a) Install the chain tensioner slipper.

17. INSTALL TIMING CHAIN COVER OIL SEAL INFO

18. INSTALL TIMING CHAIN COVER SUB-ASSEMBLY INFO

19. INSTALL CRANKSHAFT PULLEY INFO

20. INSTALL NO. 1 CHAIN TENSIONER ASSEMBLY INFO

21. INSTALL CYLINDER HEAD COVER SUB-ASSEMBLY INFO

22. INSTALL RADIO SETTING CONDENSER INFO

23. INSTALL THERMOSTAT INFO

24. INSTALL INLET WATER INFO

25. INSTALL INLET WATER HOSE INFO

26. INSTALL WATER BY-PASS HOSE INFO

27. INSTALL NO. 1 WATER BY-PASS PIPE INFO

28. CONNECT NO. 3 WATER BY-PASS HOSE

29. INSTALL VENTILATION HOSE INFO

30. INSPECT EXHAUST MANIFOLD INFO

31. INSTALL EXHAUST MANIFOLD INFO

32. INSTALL MANIFOLD STAY INFO

33. INSTALL NO. 1 EXHAUST MANIFOLD HEAT INSULATOR INFO

34. INSTALL OIL LEVEL DIPSTICK SUB-ASSEMBLY INFO

35. INSTALL IGNITION COIL ASSEMBLY INFO

36. INSTALL FUEL INJECTOR ASSEMBLY INFO

37. INSTALL NO. 1 DELIVERY PIPE SPACER INFO

38. INSTALL FUEL DELIVERY PIPE SUB-ASSEMBLY INFO

39. INSTALL FUEL TUBE SUB-ASSEMBLY INFO

40. INSTALL INTAKE MANIFOLD INFO

41. REMOVE ENGINE STAND INFO

42. INSTALL ENGINE ASSEMBLY WITH TRANSAXLE

HINT: INFO .

Last Modified: 3-10-2010	6.4 A	**From:** 200901
Model Year: 2010	**Model:** Corolla	**Doc ID:** RM0000027IB01IX
Title: 2ZR-FE ENGINE MECHANICAL: CYLINDER HEAD GASKET: REMOVAL (2010 Corolla)		

REMOVAL

1. REMOVE ENGINE ASSEMBLY WITH TRANSAXLE

HINT: INFO .

2. INSTALL ENGINE STAND INFO

3. REMOVE INTAKE MANIFOLD INFO

4. DISCONNECT FUEL TUBE SUB-ASSEMBLY INFO

5. REMOVE FUEL DELIVERY PIPE SUB-ASSEMBLY INFO

6. REMOVE FUEL INJECTOR ASSEMBLY INFO

7. REMOVE IGNITION COIL ASSEMBLY INFO

8. REMOVE OIL LEVEL DIPSTICK SUB-ASSEMBLY INFO

9. REMOVE NO. 1 EXHAUST MANIFOLD HEAT INSULATOR INFO

10. REMOVE MANIFOLD STAY INFO

11. REMOVE EXHAUST MANIFOLD INFO

12. REMOVE VENTILATION HOSE INFO

13. DISCONNECT NO. 3 WATER BY-PASS HOSE INFO

14. REMOVE NO. 1 WATER BY-PASS PIPE INFO

15. REMOVE WATER BY-PASS HOSE INFO

16. REMOVE INLET WATER HOSE INFO

17. REMOVE INLET WATER INFO

18. REMOVE THERMOSTAT INFO

19. REMOVE RADIO SETTING CONDENSER INFO

20. REMOVE CYLINDER HEAD COVER SUB-ASSEMBLY INFO

21. SET NO. 1 CYLINDER TO TDC/COMPRESSION

(a) Turn the crankshaft pulley until its groove and the timing mark "0" of the timing chain cover are aligned.

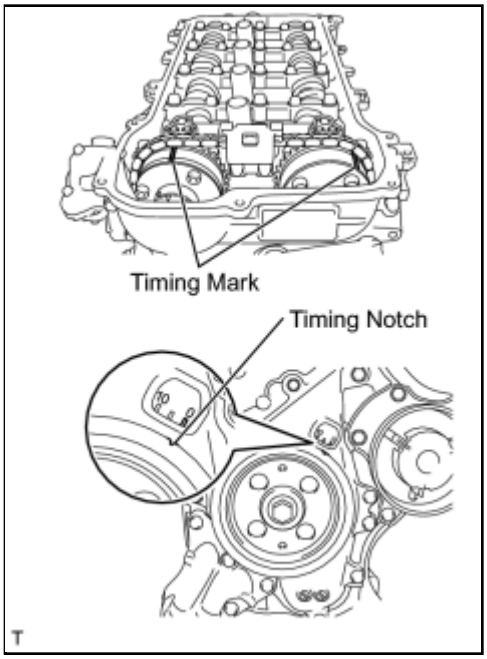

(b) Check that each timing mark of the camshaft timing gear and sprocket are aligned with each timing mark located as shown in the illustration. If not, turn the crankshaft 1 revolution (360°) to align the timing marks as shown in the illustration.

22. REMOVE CRANKSHAFT PULLEY INFO

23. REMOVE NO. 1 CHAIN TENSIONER ASSEMBLY INFO

24. REMOVE TIMING CHAIN COVER SUB-ASSEMBLY INFO

25. REMOVE TIMING CHAIN COVER OIL SEAL INFO

26. REMOVE CHAIN TENSIONER SLIPPER

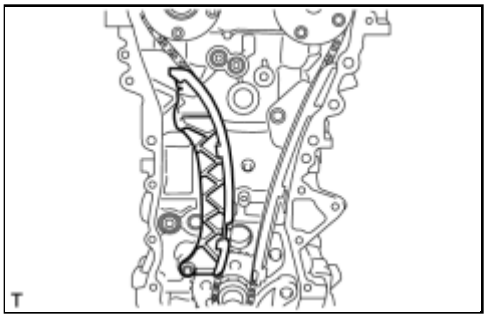

(a) Remove the chain tensioner slipper.

27. REMOVE NO. 1 CHAIN VIBRATION DAMPER

(a) Remove the 2 bolts and No. 1 chain vibration damper.

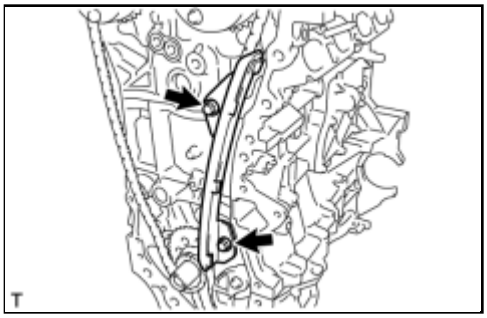

28. REMOVE CHAIN SUB-ASSEMBLY

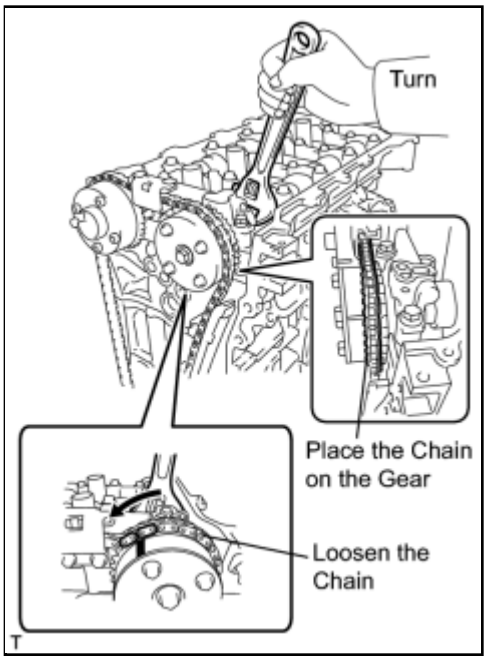

(a) Hold the hexagonal portion of the camshaft with a wrench and turn the camshaft timing gear assembly counterclockwise to loosen the chain between the camshaft timing gears.

(b) With the chain loosened, release the chain from the camshaft timing gear assembly and place it on the camshaft timing gear assembly.

HINT:

Be sure to release the chain from the sprocket completely.

(c) Turn the camshaft clockwise to return it to the original position and remove the chain.

29. REMOVE NO. 2 CHAIN VIBRATION DAMPER INFO

30. INSPECT CAMSHAFT TIMING GEAR ASSEMBLY INFO

31. INSPECT CAMSHAFT TIMING EXHAUST GEAR ASSEMBLY INFO

32. REMOVE CAMSHAFT TIMING GEAR ASSEMBLY INFO

33. REMOVE CAMSHAFT TIMING EXHAUST GEAR ASSEMBLY INFO

34. REMOVE CAMSHAFT BEARING CAP INFO

35. REMOVE CAMSHAFT INFO

36. REMOVE NO. 2 CAMSHAFT INFO

37. REMOVE NO. 1 CAMSHAFT BEARING INFO

38. REMOVE NO. 1 VALVE ROCKER ARM SUB-ASSEMBLY INFO

39. REMOVE VALVE LASH ADJUSTER ASSEMBLY INFO

40. REMOVE NO. 2 CAMSHAFT BEARING INFO

41. REMOVE CAMSHAFT HOUSING SUB-ASSEMBLY INFO

42. REMOVE CYLINDER HEAD SUB-ASSEMBLY

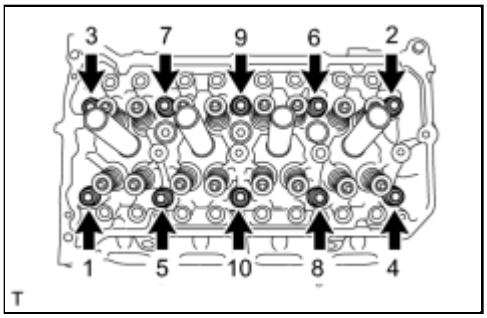

(a) Using several steps, uniformly loosen and remove the 10 cylinder head bolts and 10 plate washers with a 10 mm bi-hexagon wrench in the sequence shown in the illustration.

NOTICE:

Head warpage or cracking could result from removing the bolts in the wrong order.

(b) Using a screwdriver with its tip wrapped with tape, pry between the cylinder head and cylinder block, and remove the cylinder head.

NOTICE:

Be careful not to damage the contact surfaces of the cylinder head and cylinder block.

43. REMOVE CYLINDER HEAD GASKET

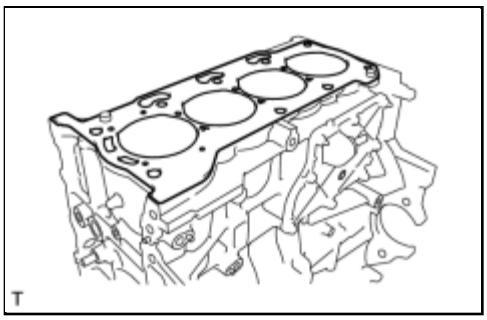

(a) Remove the cylinder head gasket.

44. INSPECT NO. 1 VALVE ROCKER ARM SUB-ASSEMBLY INFO

45. INSPECT VALVE LASH ADJUSTER ASSEMBLY INFO

46. INSPECT CYLINDER HEAD SET BOLT INFO



Last Modified: 3-10-2010	6.4 K	**From:** 200901
Model Year: 2010	**Model:** Corolla	**Doc ID:** RM000001R3E00IX
Title: 2AZ-FE ENGINE MECHANICAL: DRIVE BELT: COMPONENTS (2010 Corolla)		

COMPONENTS

ILLUSTRATION

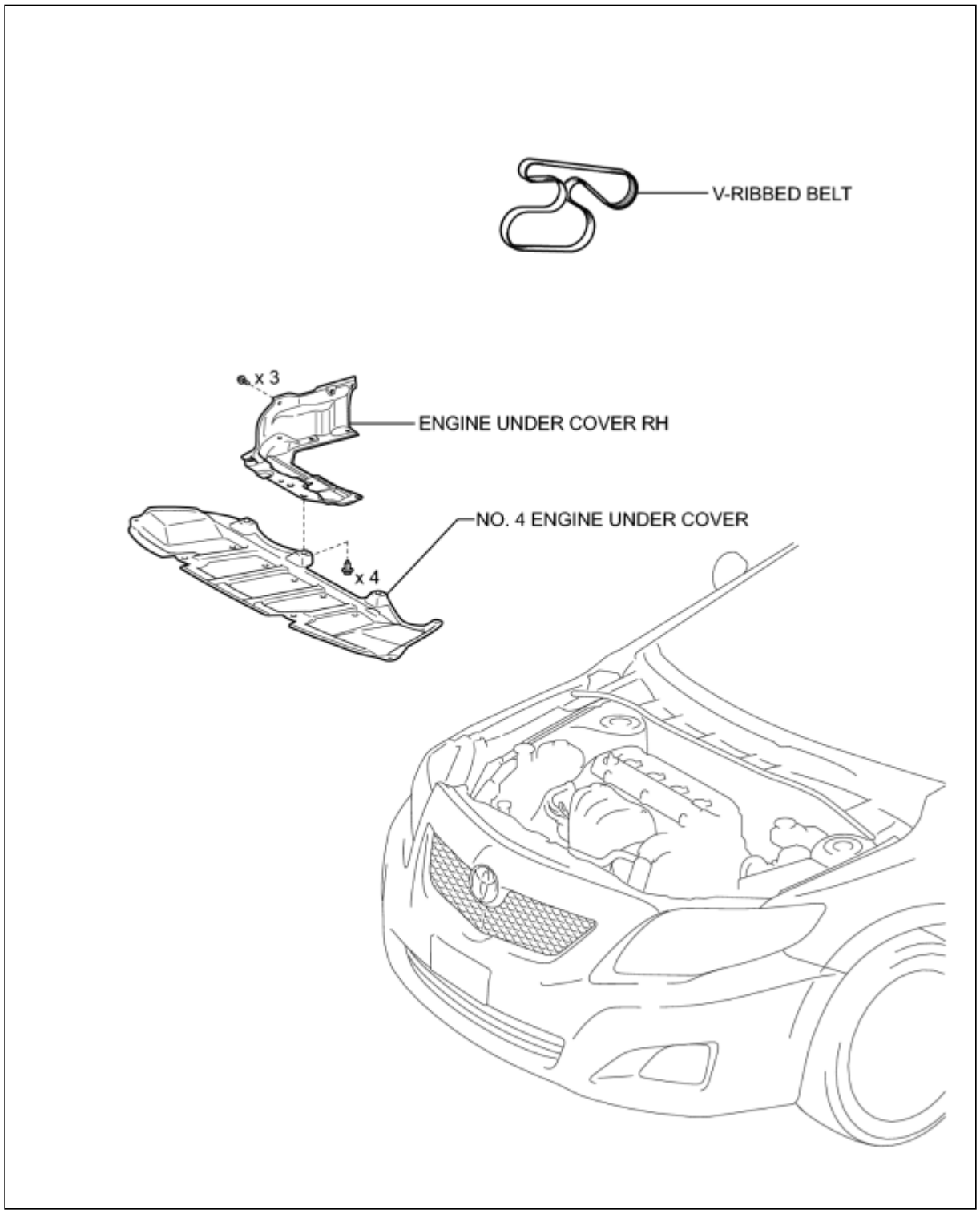

Last Modified: 3-10-2010	6.4 G	**From:** 200901
Model Year: 2010	**Model:** Corolla	**Doc ID:** RM000001ZYL00VX
Title: 2AZ-FE ENGINE MECHANICAL: DRIVE BELT: ON-VEHICLE INSPECTION (2010 Corolla)		

ON-VEHICLE INSPECTION

1. CHECK V-RIBBED BELT

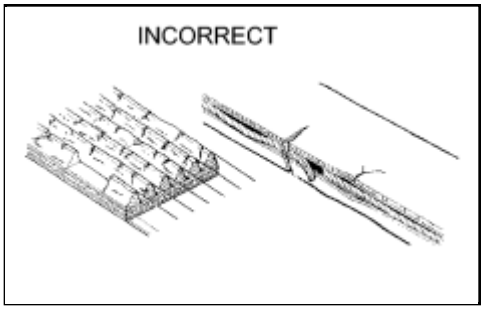

(a) Check the belt for wear, cracks or other signs of damage.

If any of the following defects is found, replace the V-ribbed belt.

- The belt is cracked.
- The belt is worn out to the extent that cords are exposed.
- The belt has chunks missing from the ribs.

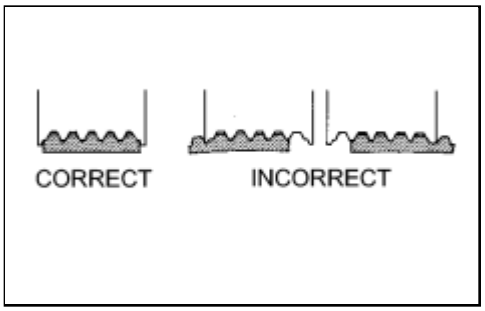

(b) Check that the belt fits properly in the ribbed grooves.

HINT:

Check by hand to confirm that the belt has not slipped out of the groove on the bottom to the pulley. If it has slipped out, replace the V-ribbed belt. Install a new V-ribbed belt correctly.

Last Modified: 3-10-2010	6.4 A	**From:** 200901
Model Year: 2010	**Model:** Corolla	**Doc ID:** RM000001R3F00IX
Title: 2AZ-FE ENGINE MECHANICAL: DRIVE BELT: REMOVAL (2010 Corolla)		

REMOVAL

1. REMOVE ENGINE UNDER COVER RH

2. REMOVE V-RIBBED BELT

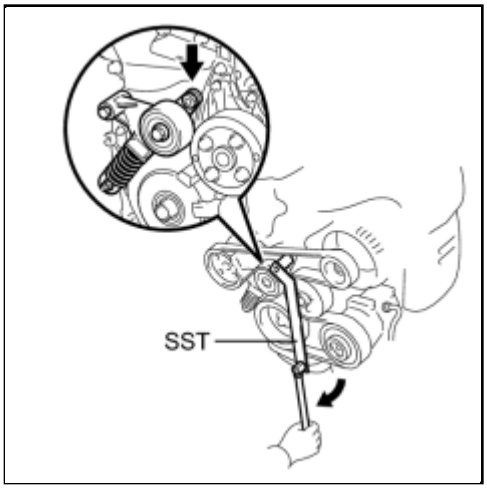

(a) Using SST, slowly turn the V-ribbed belt tensioner clockwise.

SST: 09216-42010

09216-04010

(b) Remove the V-ribbed belt from each pulley and slowly return the tensioner.

NOTICE:

- Make sure that SST and other tools are set to the tensioner securely.
- When compressing the V-ribbed belt tensioner, slowly turn the tensioner.
- Be careful not to pinch your fingers between the parts.

Last Modified: 3-10-2010	6.4 A	**From:** 200901
Model Year: 2010	**Model:** Corolla	**Doc ID:** RM000001R3D00KX
Title: 2AZ-FE ENGINE MECHANICAL: DRIVE BELT: INSTALLATION (2010 Corolla)		

INSTALLATION

1. INSTALL V-RIBBED BELT

HINT:

The illustration shows the V-ribbed belt layout.

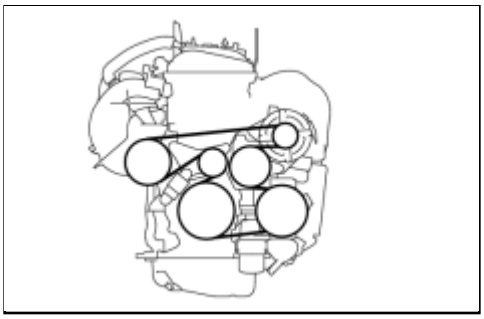

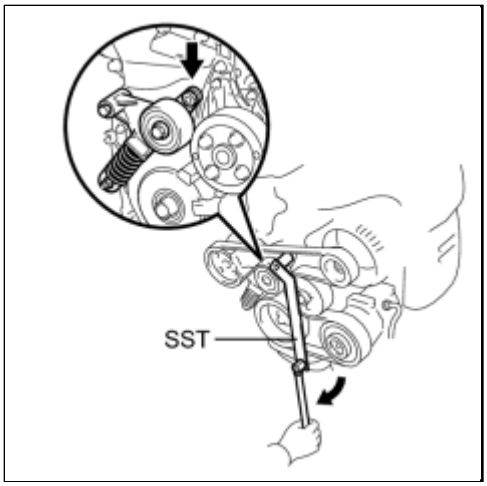

(a) Using SST, slowly turn the V-ribbed belt tensioner clockwise and install the V-ribbed belt.

SST: 09216-42010

09216-04010

NOTICE:

- Make sure that SST and other tools are set to the tensioner securely.
- When compressing the V-ribbed belt tensioner, slowly turn the tensioner.

2. INSTALL ENGINE UNDER COVER RH

Last Modified: 3-10-2010	6.4 K	**From:** 200901
Model Year: 2010	**Model:** Corolla	**Doc ID:** RM0000027IN00XX
Title: 2ZR-FE ENGINE MECHANICAL: DRIVE BELT: COMPONENTS (2010 Corolla)		

COMPONENTS

ILLUSTRATION

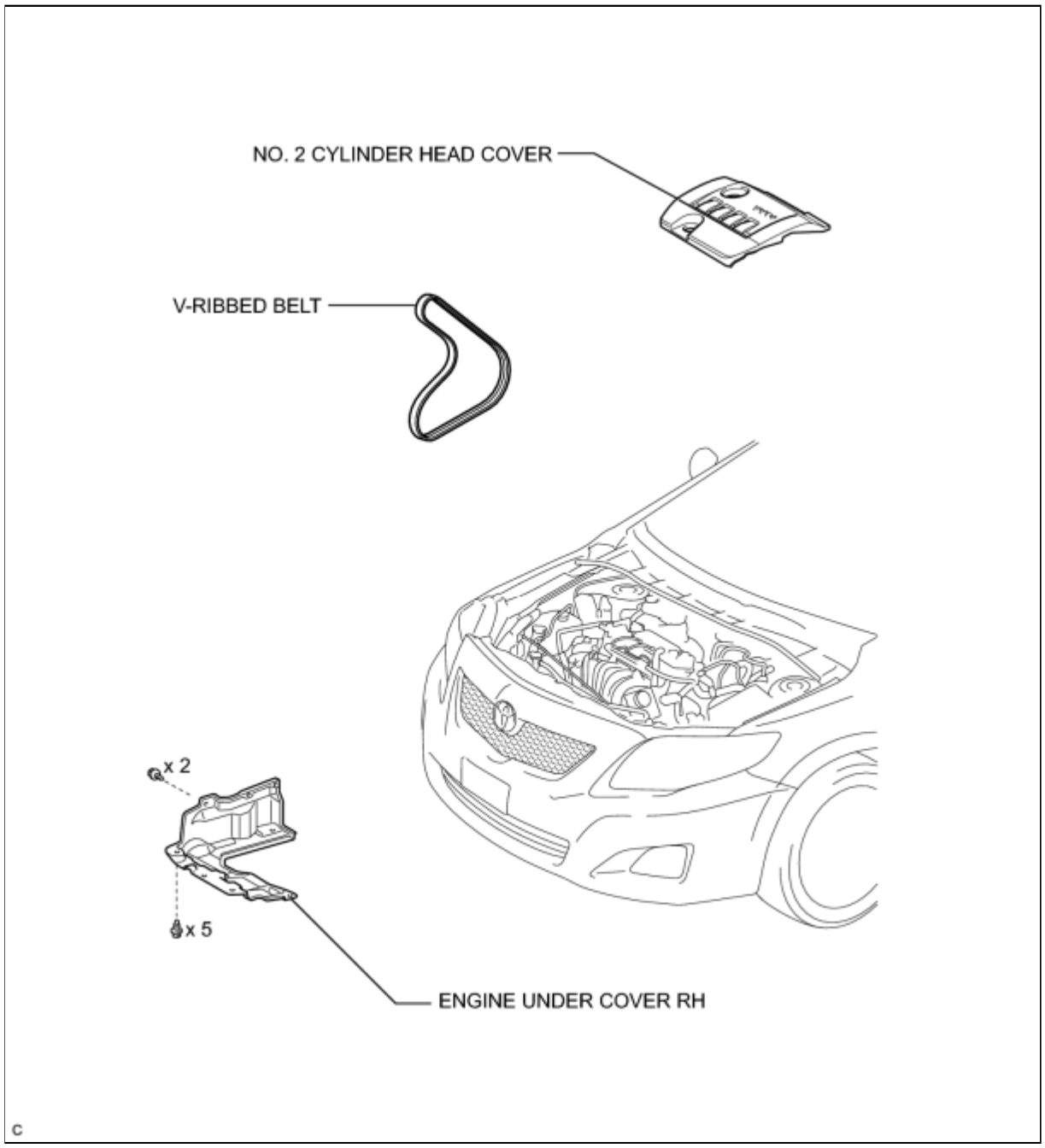

Last Modified: 3-10-2010	6.4 G	**From:** 200901
Model Year: 2010	**Model:** Corolla	**Doc ID:** RM0000034Q9007X
Title: 2ZR-FE ENGINE MECHANICAL: DRIVE BELT: ON-VEHICLE INSPECTION (2010 Corolla)		

ON-VEHICLE INSPECTION

1. INSPECT V-RIBBED BELT

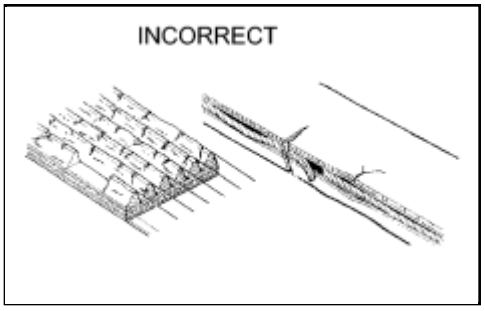

(a) Check the belt for wear, cracks or other signs of damage.

If any of the following defects is found, replace the V-ribbed belt.

- The belt is cracked.
- The belt is worn out to the extent that the cords are exposed.
- The belt has chunks missing from the ribs.

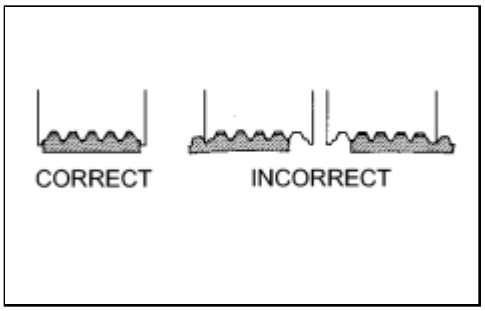

(b) Check that the belt fits properly in the ribbed grooves.

HINT:

Check with your hand to confirm that the belt has not slipped out of the groove on the bottom of the pulley. If it has slipped out, replace the V-ribbed belt. Install a new V-ribbed belt correctly.

(c) Check the V belt deflection and tension.

Deflection:

ITEM	SPECIFIED CONDITION
New belt	7.0 to 8.2 mm (0.276 to 0.323 in.)
Used belt	7.6 to 10.0 mm (0.299 to 0.394 in.)

Tension:

ITEM	SPECIFIED CONDITION
New belt	700 to 800 N (71 to 82 kg, 157 to 180 lb)
Used belt	550 to 750 N (56 to 77 kg, 124 to 169 lb)

If the belt deflection is not as specified, adjust it.

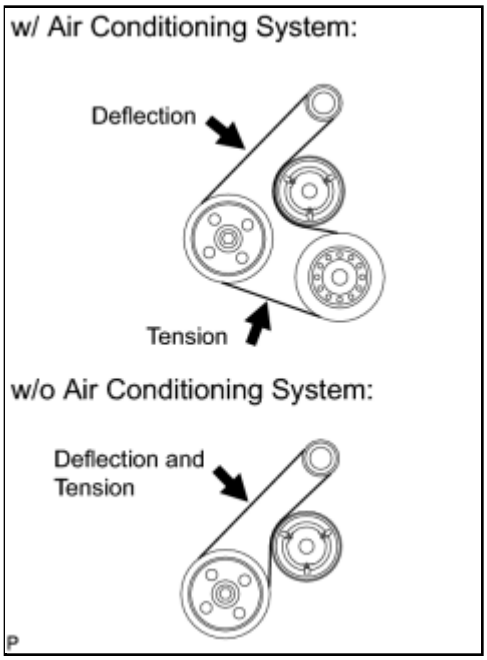

HINT:

- When inspecting the V belt deflection, apply 98 N (10 kgf) tensile force to it.
- After installing a new belt, run the engine for approximately 5 minutes and then readjust the tension to (new belt) specifications.
- Check the V-ribbed belt deflection and tension at the specified point.
- V-ribbed belt tension and deflection should be checked after 2 revolutions of the engine.
- V-ribbed belt tension and deflection should be checked at TDC crank angle and cold condition.
- When adjusting a belt, adjust its deflection and tension to the intermediate values of the specification.
- When reinstalling a belt which has been used for over 5 minutes, adjust its deflection and tension to the used belt specification.
- When using a belt tension gauge, confirm its accuracy by using a master gauge first.
- If using a sonic tension meter:

  Input data for sonic tension meter

  Weight:
  15 g/rib*m
  Width:
  6 ribs
  Span:
  188 mm (7.40 in.) (w/ air Conditioning)
  282 mm (11.1 in.) (w/o air Conditioning)

Last Modified: 3-10-2010	6.4 A	**From:** 200901
Model Year: 2010	**Model:** Corolla	**Doc ID:** RM0000027IO00ZX
Title: 2ZR-FE ENGINE MECHANICAL: DRIVE BELT: REMOVAL (2010 Corolla)		

REMOVAL

1. REMOVE NO. 2 CYLINDER HEAD COVER INFO

2. REMOVE ENGINE UNDER COVER RH

3. REMOVE V-RIBBED BELT

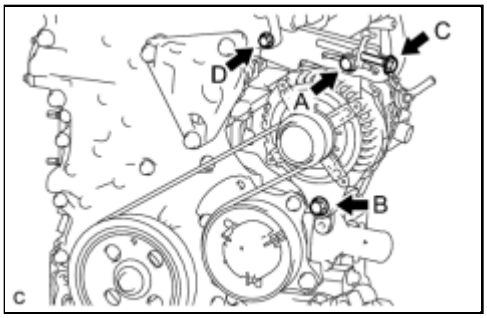

(a) Loosen bolts A and B.

(b) Loosen bolt C, then remove the V-ribbed belt.

NOTICE:

Do not loosen bolt D.

Last Modified: 3-10-2010	6.4 G	**From:** 200901
Model Year: 2010	**Model:** Corolla	**Doc ID:** RM000001R3C00NX
Title: 2AZ-FE ENGINE MECHANICAL: ENGINE: ON-VEHICLE INSPECTION (2010 Corolla)		

ON-VEHICLE INSPECTION

1. INSPECT ENGINE COOLANT

(a) Inspect the engine coolant INFO .

2. INSPECT ENGINE OIL

(a) Inspect the engine oil INFO .

3. INSPECT BATTERY

(a) Inspect the battery INFO .

4. INSPECT AIR CLEANER FILTER ELEMENT SUB-ASSEMBLY

(a) Remove the air cleaner cap sub-assembly INFO .

(b) Remove the air filter element.

(c) Visually check that the air filter is not excessively damaged or oily.

If necessary, replace the air filter.

5. INSPECT SPARK PLUG INFO

6. INSPECT V-RIBBED BELT INFO

7. INSPECT IGNITION TIMING

NOTICE:

- Turn all the electrical systems and the A/C off.
- When checking the ignition timing, move the shift lever to neutral.

(a) Warm up and stop the engine.

(b) When using the Techstream:

(1) Connect the Techstream to the DLC3.

(2) Turn the ignition switch to ON.

(3) Turn the Techstream on.

(4) Enter the following menus: Power Train / Engine and ECT / Data List / IGN Advance

(5) Start the engine.

(6) According to the display on the Techstream, read the Data List.

Standard ignition timing:
5 to 15° BTDC at idle

(7) Check that the ignition timing advances immediately when the engine speed is increased.

(8) Turn the ignition switch off.

(9) Disconnect the Techstream from the DLC3.

(c) When not using the Techstream:

(1) Remove the No. 1 engine cover sub-assembly INFO .

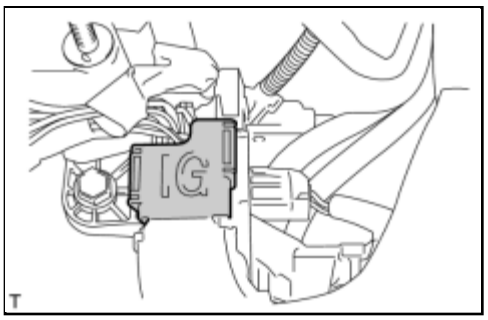

(2) Open the ignition cover located to the right of the No. 4 ignition coil.

(3) Pull the wire harness out from the IG cover.

(4) Connect the timing light to the wire harness.

NOTICE:

Use a timing light that detects the primary signal.

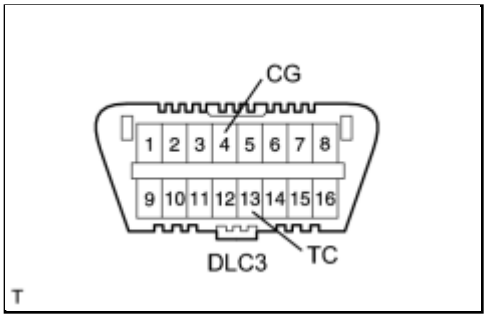

(5) Using SST, connect terminals 13 (TC) and 4 (CG) of the DLC3.

SST: 09843-18040

(6) Allow the engine to idle and check the ignition timing.

Standard ignition timing:
8 to 12° BTDC at idle

HINT:

Run the engine at 1000 to 1300 rpm for 5 seconds, then check that the engine speed returns to idle speed.

(7) Disconnect SST from terminals 13 (TC) and 4 (CG) of the DLC3.

(8) Allow the engine to idle and check the ignition timing.

Standard ignition timing:
5 to 15° BTDC at idle

(9) Check that the ignition timing advances immediately when the engine speed is increased.

(10) Turn the ignition switch off.

(11) Remove the timing light.

(12) Close the IG cover.

(13) Install the No. 1 engine cover sub-assembly INFO .

8. INSPECT ENGINE IDLE SPEED

NOTICE:

- Turn all the electrical systems and the A/C off.
- When checking the idle speed, move the shift lever to P or neutral.

(a) Warm up and stop the engine.

(b) When using the Techstream:

(1) Connect the Techstream to the DLC3.

(2) Turn the ignition switch to ON.

(3) Turn the Techstream on.

(4) Enter the following menus: Power Train / Engine and ECT / Data List / Engine Speed

(5) Start the engine.

(6) According to the display on the Techstream, read the Data List.

Standard idle speed:
600 to 700 rpm

(7) Turn the ignition switch off.

(8) Disconnect the Techstream from the DLC3.

(c) When not using the Techstream:

(1) Turn off all the accessories and air conditioning.

(2) Move the shift lever to P or neutral.

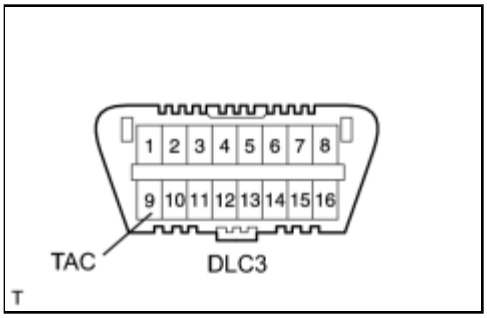

(3) Connect SST to 9 (TAC) of the DLC3 terminal, and then connect a tachometer to SST.

SST: 09843-18030

(4) Start the engine.

(5) Check the idle speed with the cooling fan off.

Standard idle speed:
600 to 700 rpm

(6) Turn the ignition switch off.

(7) Remove the tachometer and disconnect SST from the DLC3.

9. INSPECT COMPRESSION

(a) Warm up and stop the engine.

(b) Remove the 4 ignition coils and spark plugs INFO .

(c) Disconnect the 4 fuel injector connectors.

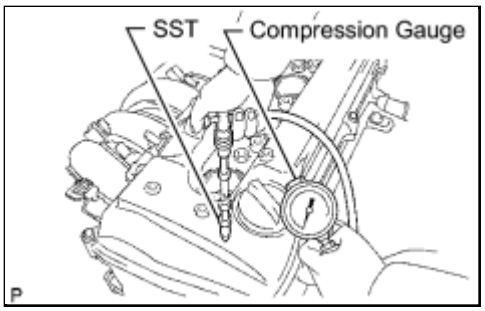

(d) Set SST and a compression gauge.

SST: 09992-00500

(e) Insert the compression gauge into the spark plug hole.

(f) Fully open the throttle.

(g) While cranking the engine, measure the compression pressure.

Standard compression pressure:
1300 kPa (13.3 kgf/cm^2, 189 psi)
Minimum compression pressure:
1000 kPa (10.0 kgf/cm^2, 145 psi)
Standard difference between each cylinder:
100 kPa (1.0 kgf/cm^2, 15 psi) or less

NOTICE:

- Always use a fully-charged battery to obtain an engine speed of 250 rpm or more.
- Check the other cylinders in the same way.
- This measurement must be done as quickly as possible.

If the cylinder compression is low, pour a small amount of engine oil into the cylinder through the spark plug hole and inspect again.

HINT:

- If adding oil increases the compression, the piston rings and/or cylinder bore may be worn or damaged.
- If pressure stays low, a valve may be stuck or seated improperly, or there may be leakage in the gasket.

(h) Connect the 4 fuel injector connectors.

(i) Install the 4 spark plugs and ignition coils INFO .

10. INSPECT CO/HC

HINT:

This check determines whether or not the idle CO/HC complies with local regulations.

(a) Start and warm up the engine.

(b) Run the engine at 2500 rpm for approximately 180 seconds.

(c) Insert the CO/HC meter testing probe at least 40 cm (1.3 ft.) into the tailpipe while idling.

(d) Inspect the CO/HC concentration during idle at 2500 rpm.

If the CO/HC concentration does not comply with local regulations, troubleshoot in the order given below.

(1) Check the A/F sensor and heated oxygen sensor operation.

(2) See the table below for possible causes, then inspect the applicable parts and repair them if necessary.

:

CO	HC	PROBLEM	POSSIBLE CAUSE
Normal	High	Rough idle	1. Faulty ignition: - Incorrect timing - Plugs are contaminated, shorted, or gaps are defective 2. Incorrect valve clearance 3. Leaks in intake and exhaust valve 4. Leaks in cylinders
Low	High	Rough idle (Fluctuating HC reading)	1. Vacuum leakage: - Ventilation hoses - Intake manifold - Throttle body - Brake booster line 2. Lean mixture causing misfire
High	High	Rough idle (Black smoke from exhaust)	1. Restricted air filter 2. Plugged PCV valve 3. Faulty EFI system: - Faulty pressure regulator - Faulty engine coolant temperature sensor - Faulty mass air flow meter - Faulty ECM - Faulty injectors - Faulty throttle body

Last Modified: 3-10-2010	6.4 A	**From:** 200901
Model Year: 2010	**Model:** Corolla	**Doc ID:** RM0000027IM00ZX
Title: 2ZR-FE ENGINE MECHANICAL: DRIVE BELT: INSTALLATION (2010 Corolla)		

INSTALLATION

1. INSTALL V-RIBBED BELT

(a) Install the belt.

2. ADJUST V-RIBBED BELT

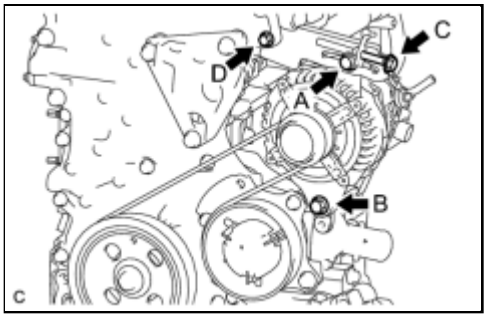

(a) Turn bolt C to adjust the tension of the V-ribbed belt.

(b) Tighten bolts A and B.

Bolt A - Torque: 19 N·m (190 kgf·cm, 14ft·lbf)

Bolt B - Torque: 43 N·m (438 kgf·cm, 32ft·lbf)

NOTICE:

Confirm that bolt D is not loosened.

3. INSPECT V-RIBBED BELT INFO

4. INSTALL ENGINE UNDER COVER RH

5. INSTALL NO. 2 CYLINDER HEAD COVER INFO

Last Modified: 3-10-2010	6.4 K	**From:** 200901
Model Year: 2010	**Model:** Corolla	**Doc ID:** RM000001R3V00NX
Title: 2AZ-FE ENGINE MECHANICAL: ENGINE ASSEMBLY: COMPONENTS (2010 Corolla)		

COMPONENTS

ILLUSTRATION

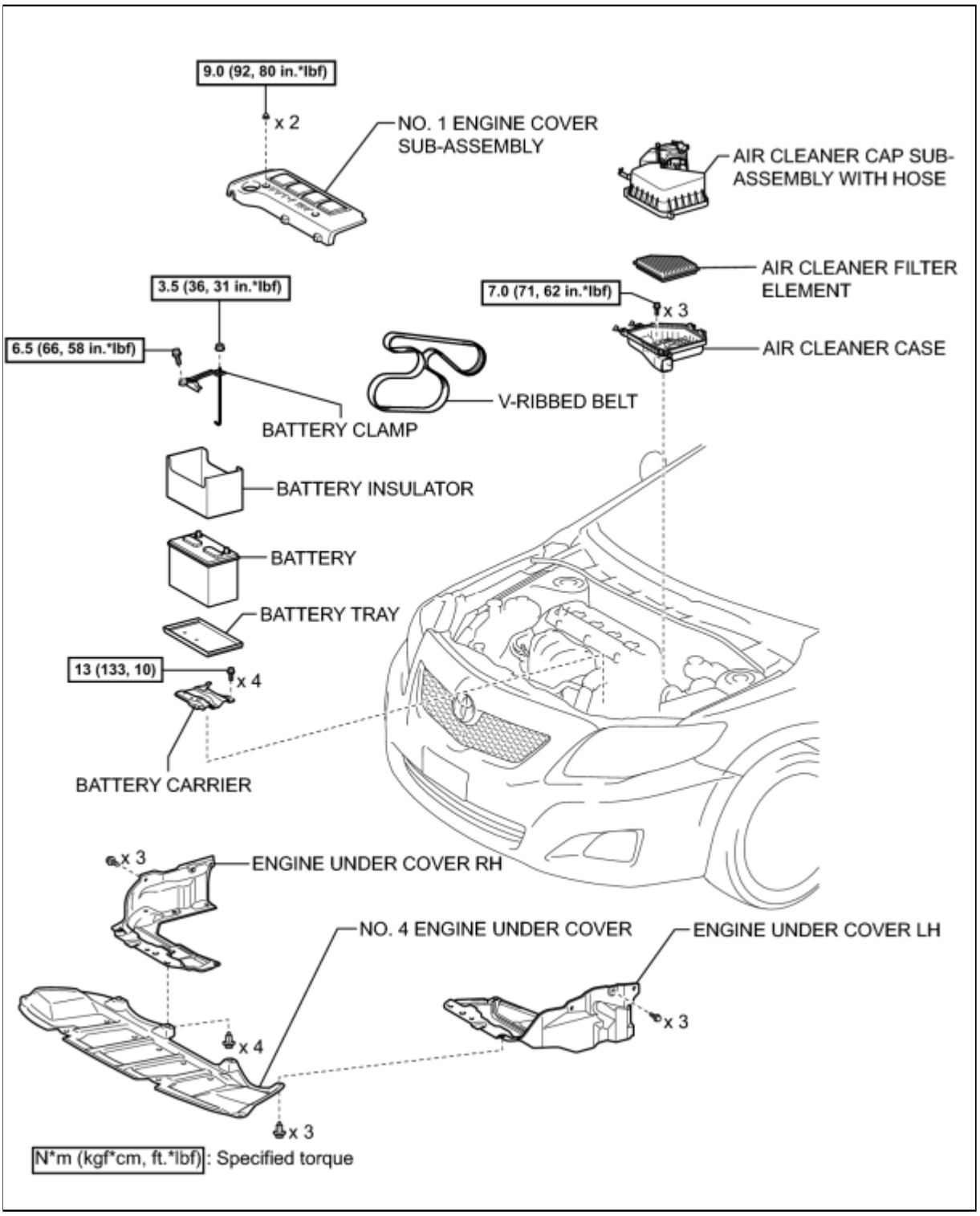

ILLUSTRATION

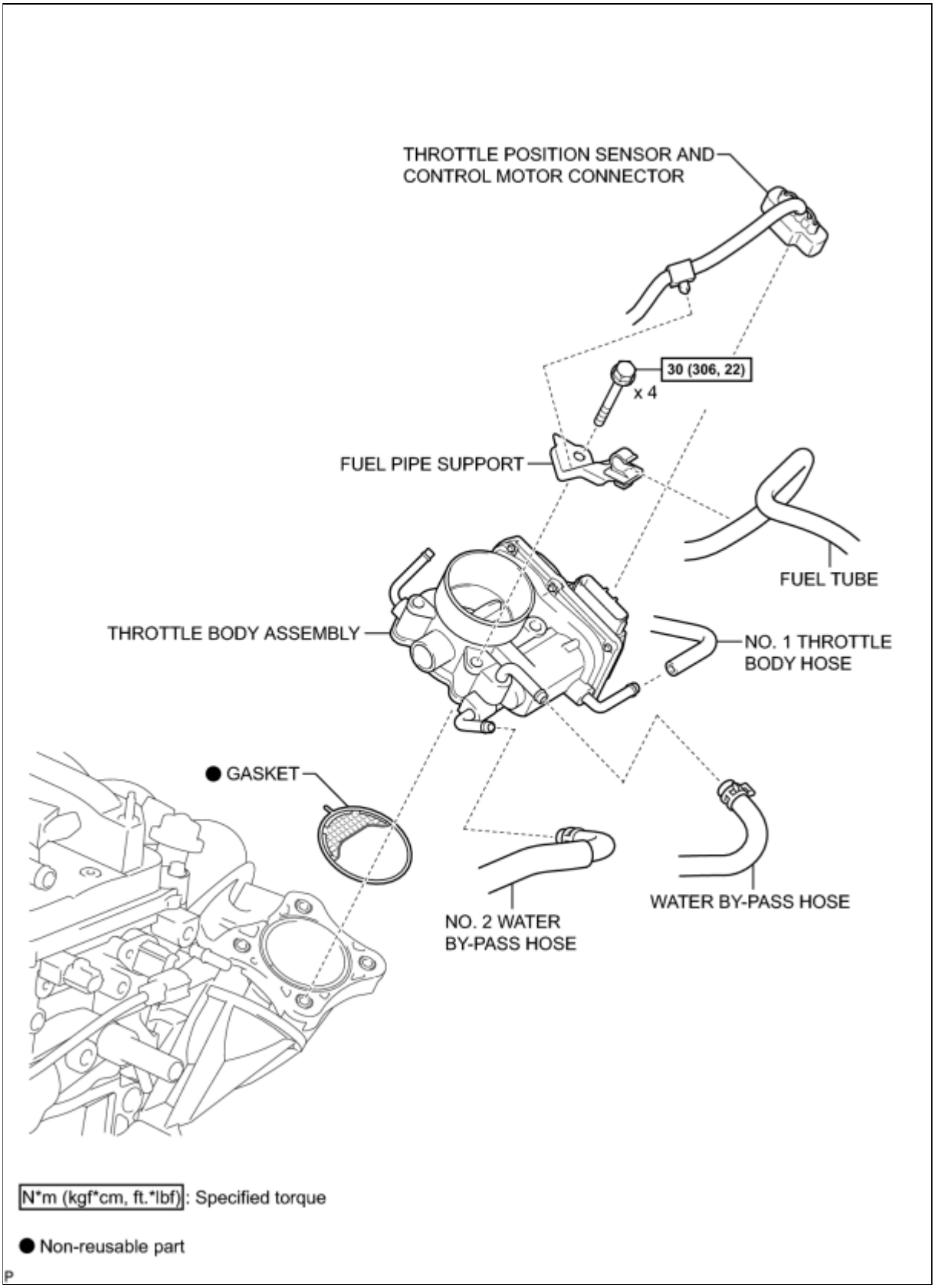

ILLUSTRATION

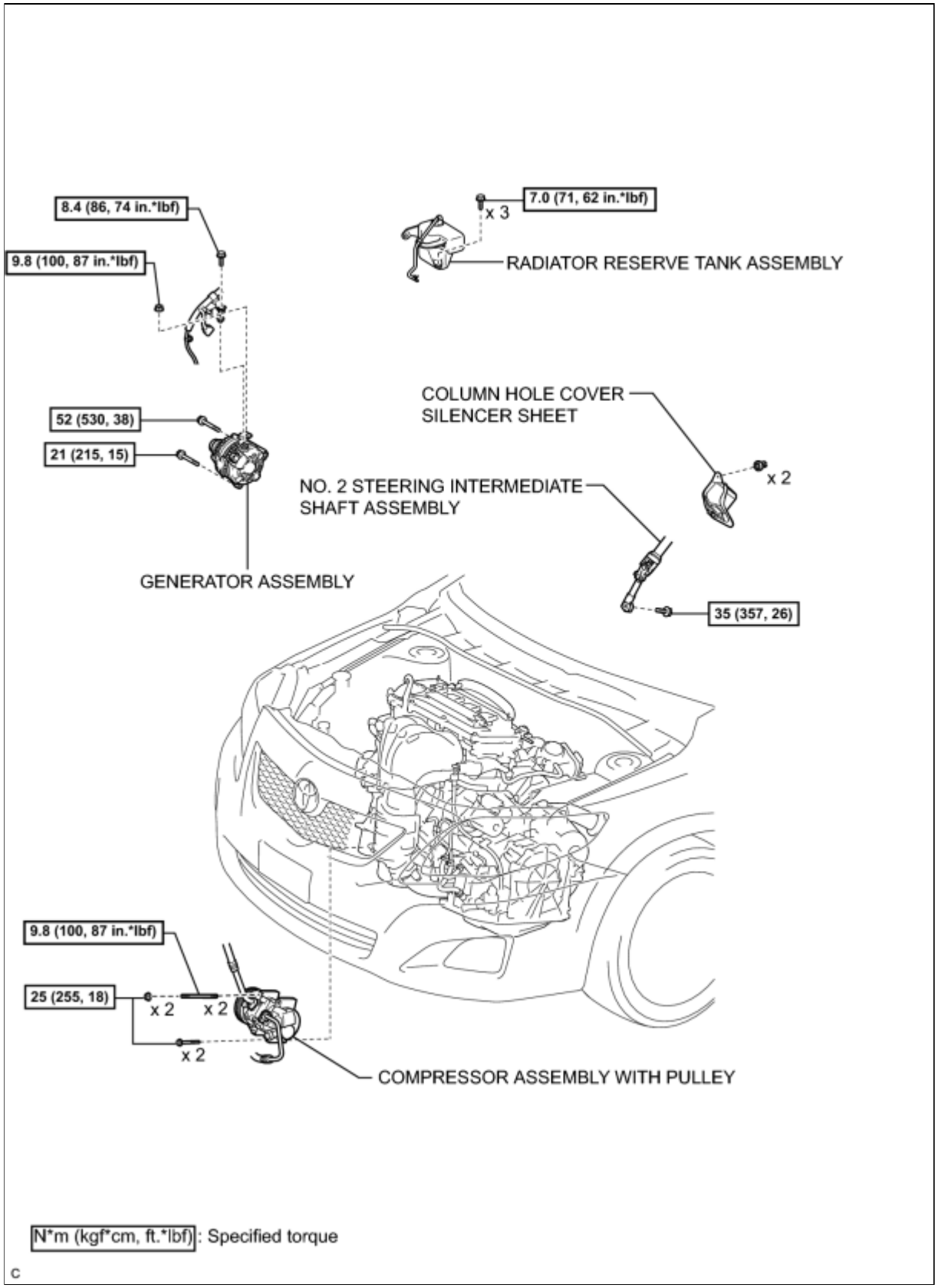

ILLUSTRATION

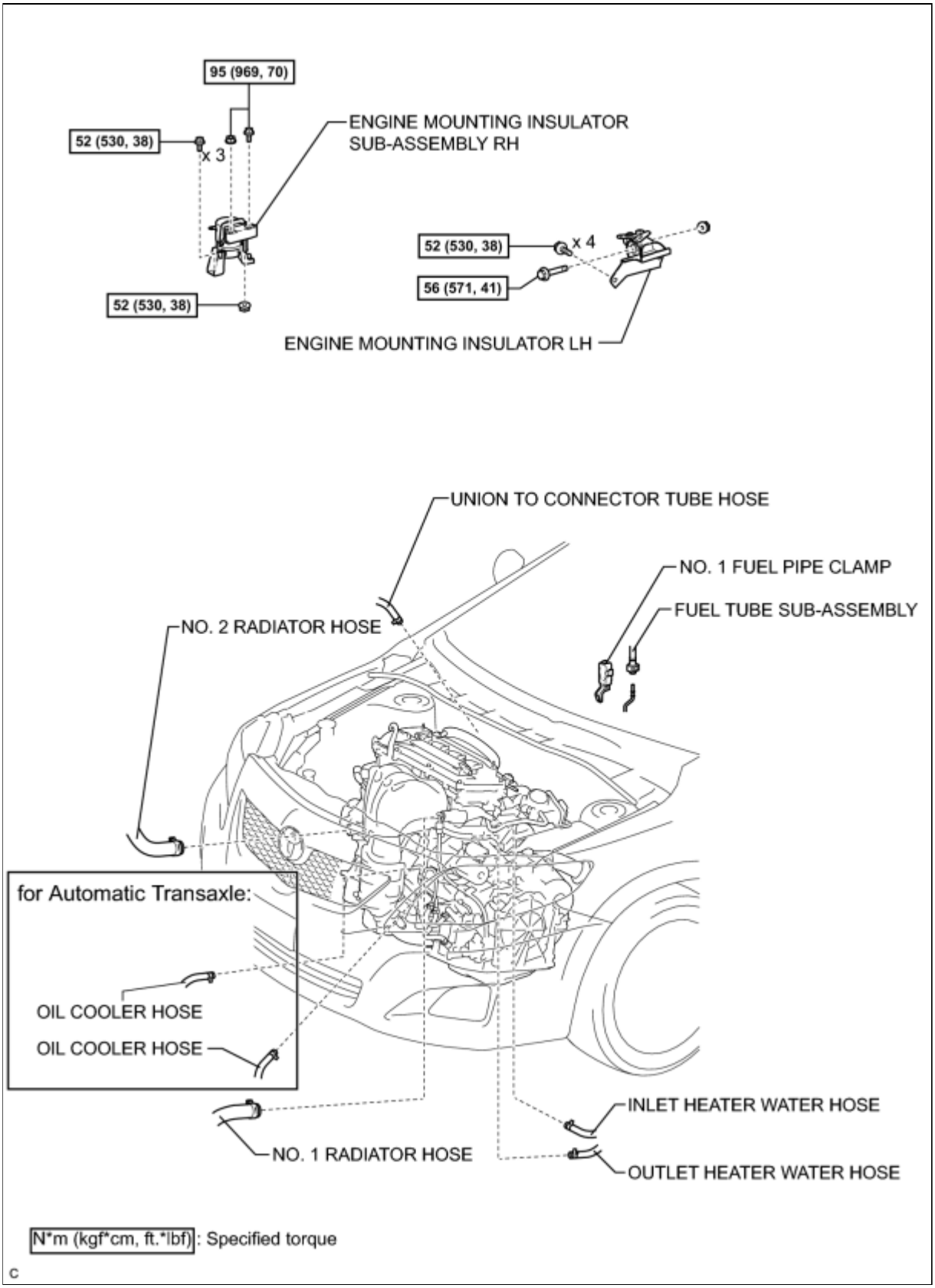

ILLUSTRATION

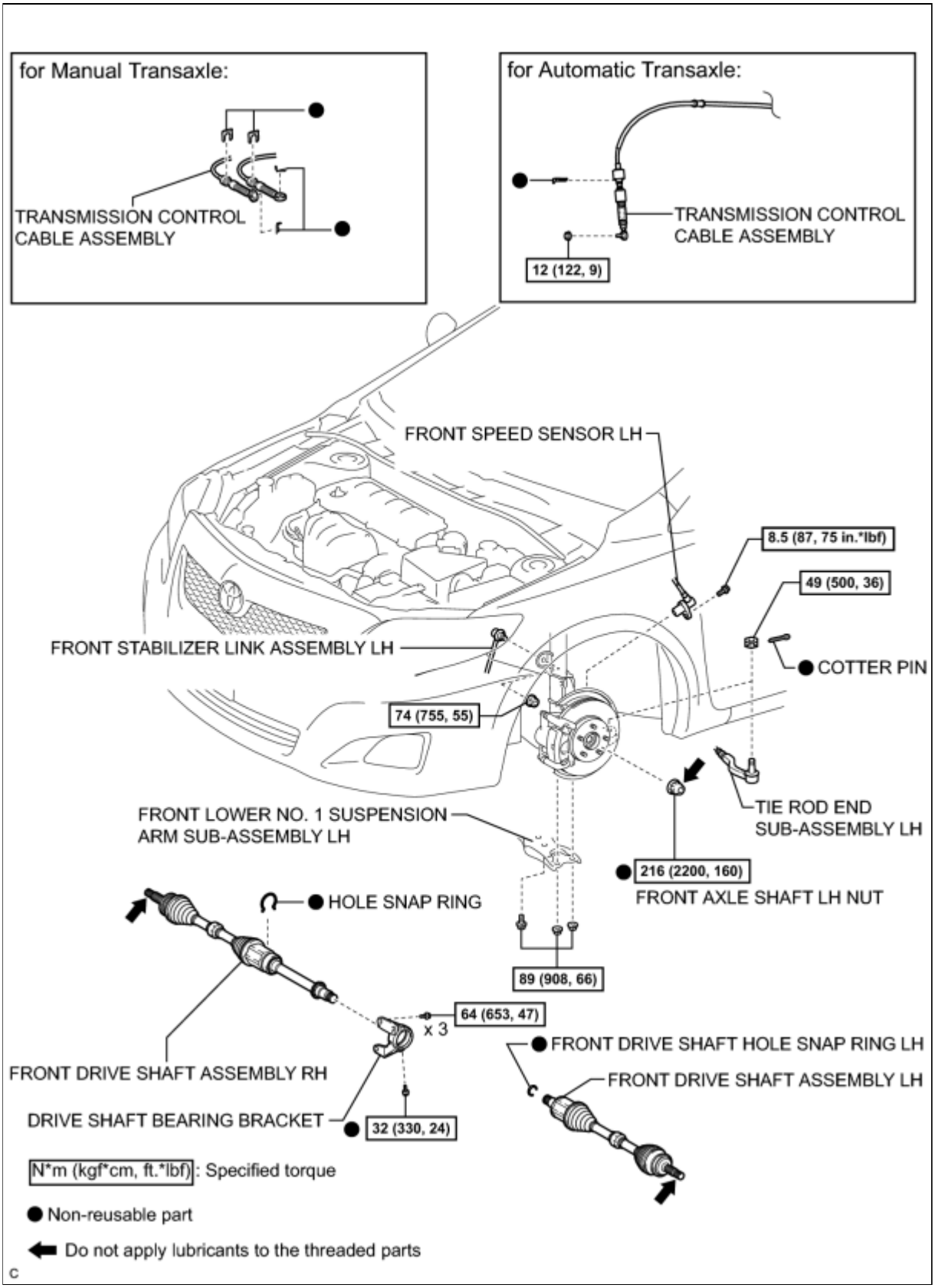

ILLUSTRATION

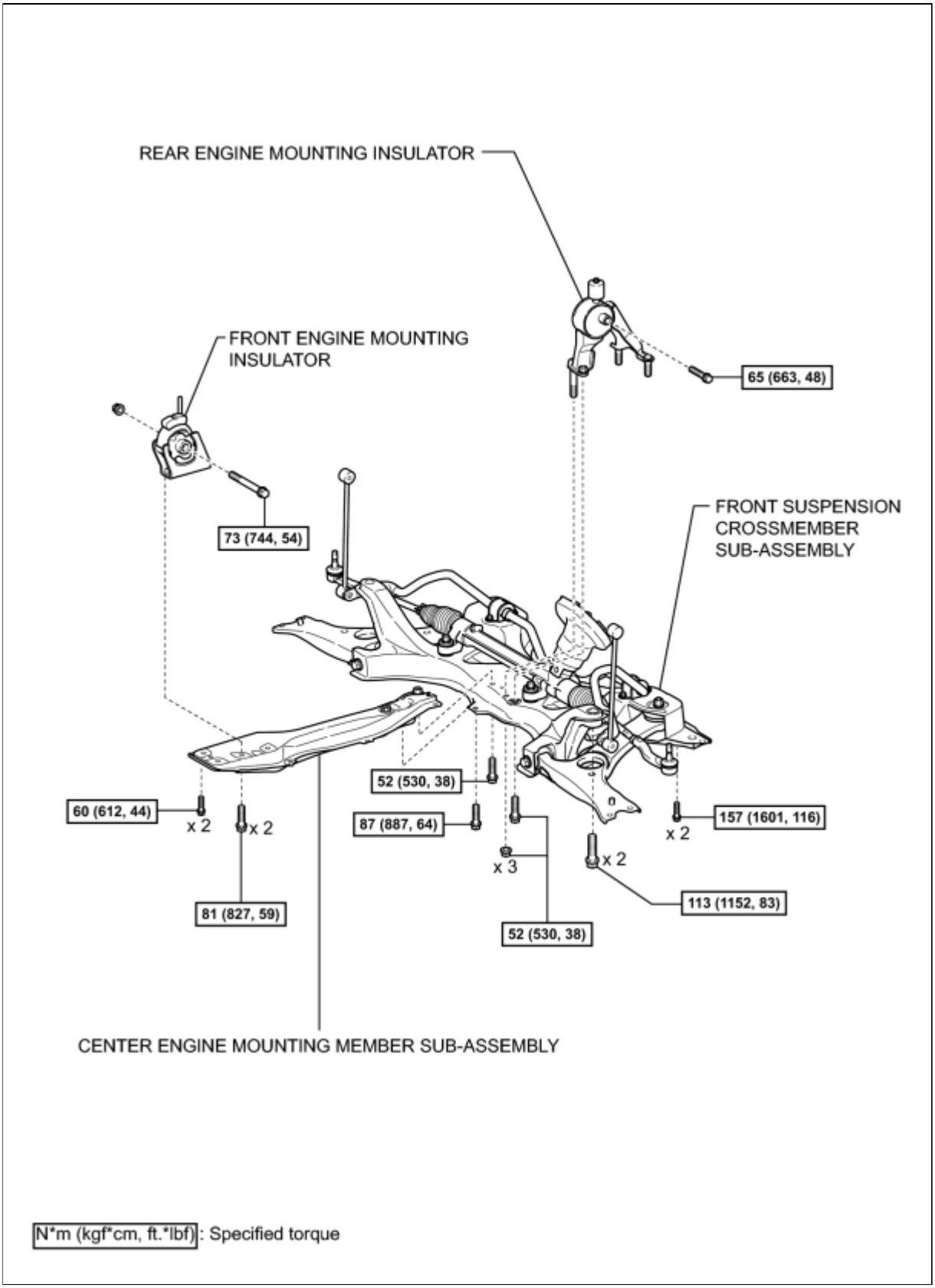

ILLUSTRATION

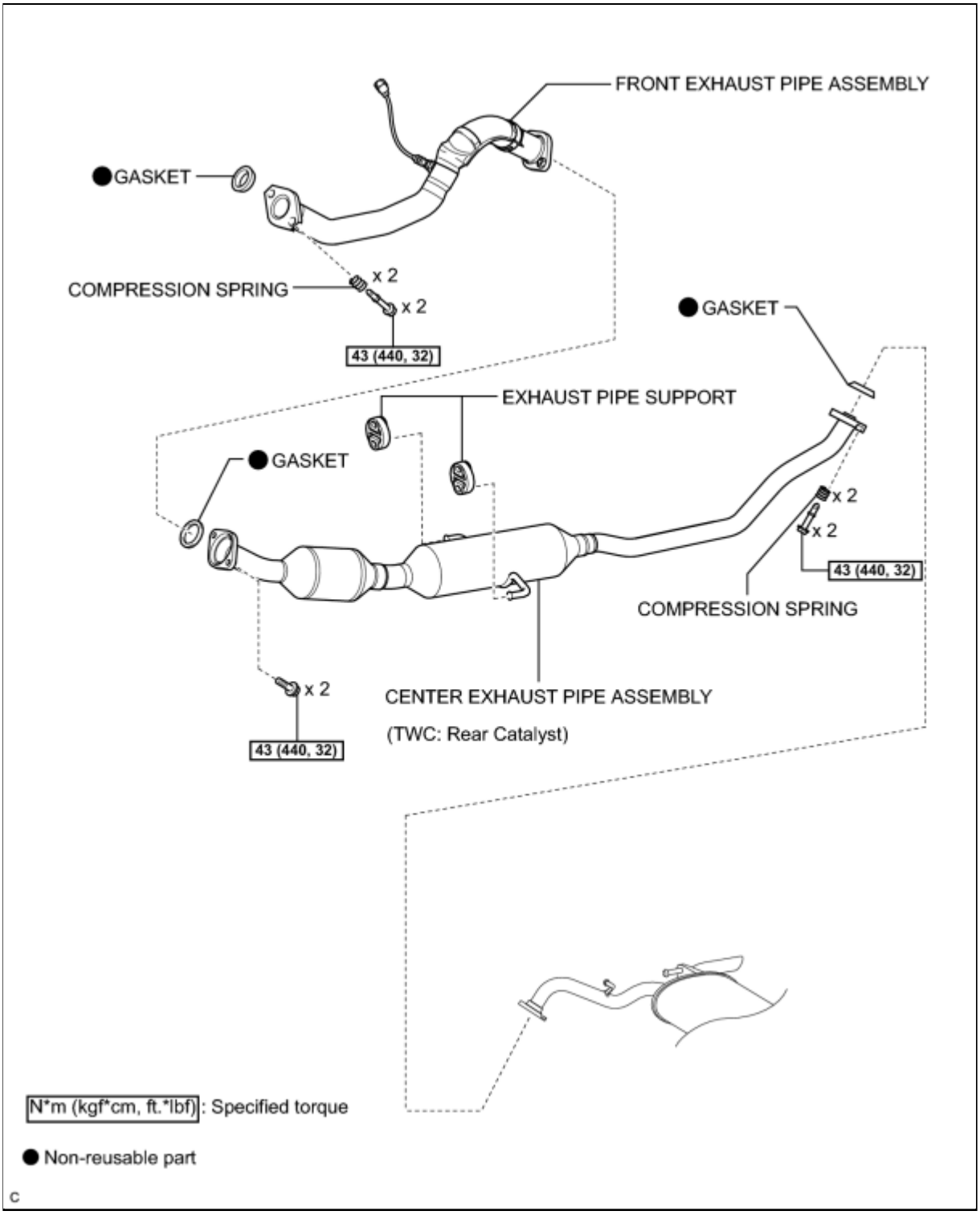

ILLUSTRATION

for E351 Manual Transaxle:

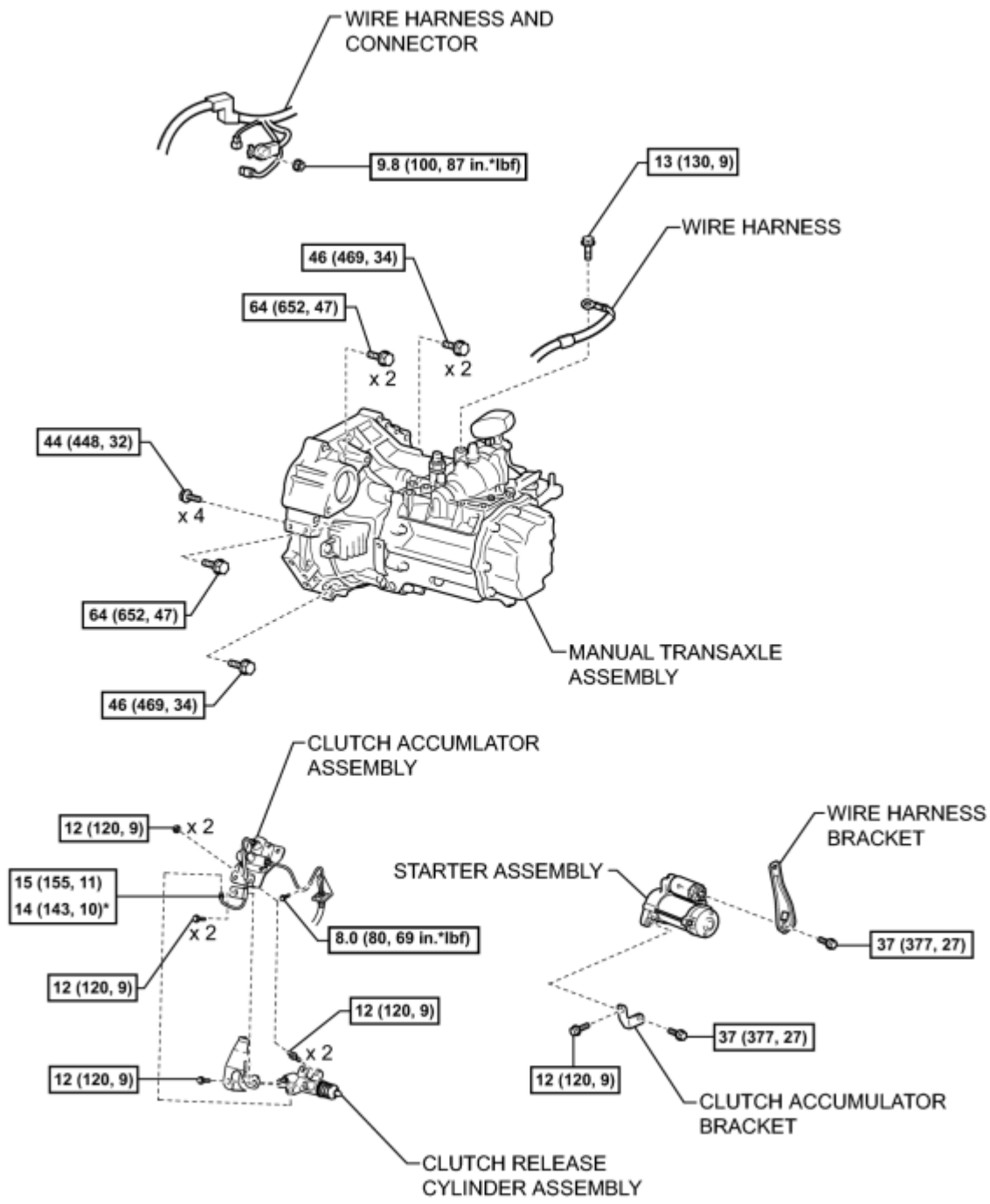

N*m (kgf*cm, ft.*lbf): Specified torque

* For use with a union nut wrench

ILLUSTRATION

for U250E Automatic Transaxle:

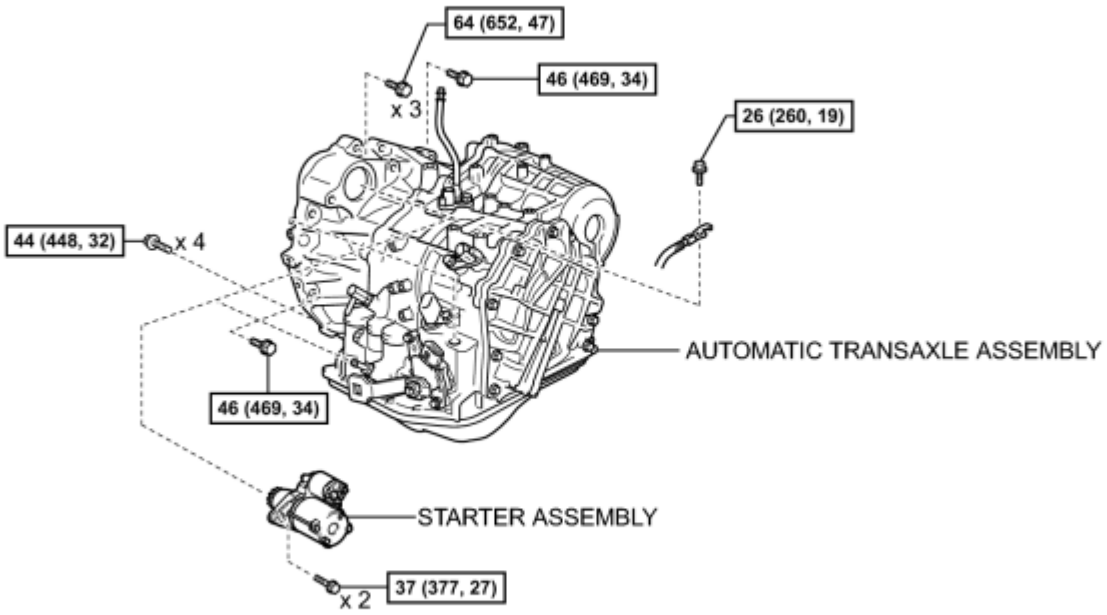

ILLUSTRATION

for Manual Transaxle:

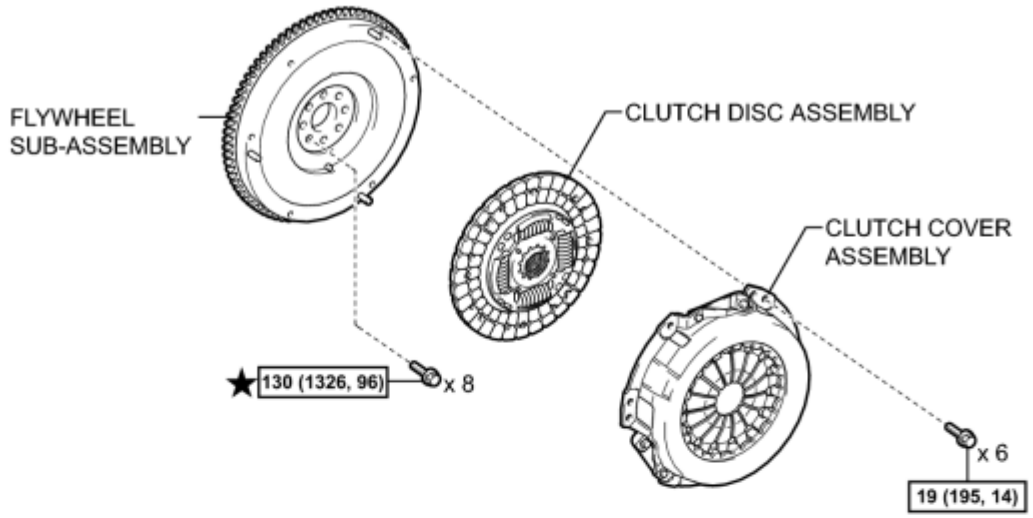

for Automatic Transaxle:

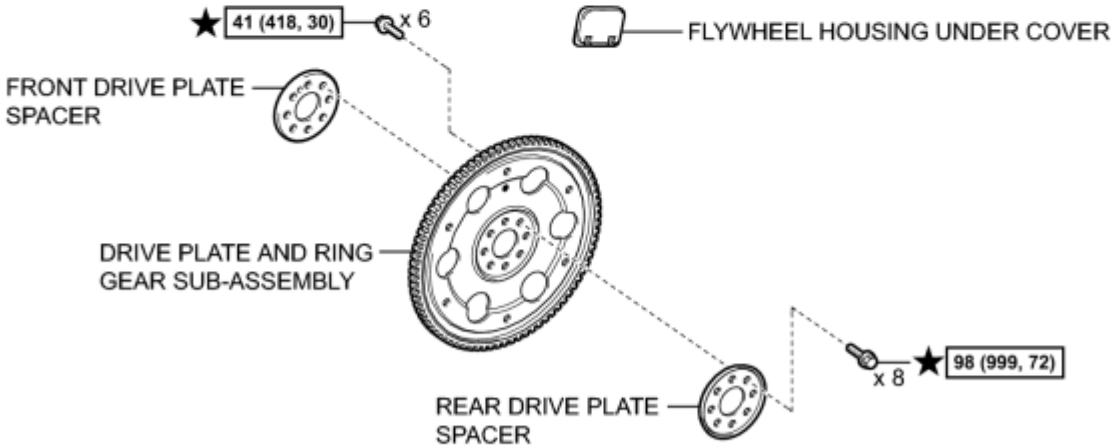

N*m (kgf*cm, ft.*lbf): Specified torque

★ Precoated part

Last Modified: 3-10-2010	6.4 A	**From:** 200901
Model Year: 2010	**Model:** Corolla	**Doc ID:** RM000001BC300RX
Title: 2AZ-FE ENGINE MECHANICAL: ENGINE ASSEMBLY: REMOVAL (2010 Corolla)		

REMOVAL

1. DISCHARGE FUEL SYSTEM PRESSURE INFO

2. ALIGN FRONT WHEELS FACING STRAIGHT AHEAD

3. DISCONNECT CABLE FROM NEGATIVE BATTERY TERMINAL

4. REMOVE FRONT WHEELS

5. REMOVE ENGINE UNDER COVER LH

6. REMOVE ENGINE UNDER COVER RH

7. DRAIN ENGINE COOLANT INFO

8. DRAIN AUTOMATIC TRANSAXLE FLUID (for Automatic Transaxle)

HINT: INFO **for U250E.**

9. DRAIN MANUAL TRANSAXLE OIL (for Manual Transaxle)

HINT: INFO **for E351.**

10. REMOVE NO. 1 ENGINE COVER SUB-ASSEMBLY

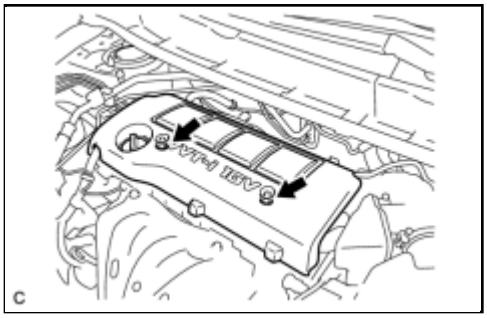

(a) Remove the 2 nuts and No. 1 engine cover sub-assembly.

11. SEPARATE RADIATOR RESERVE TANK ASSEMBLY

(a) Remove the 3 bolts and separate the radiator reserve tank assembly.

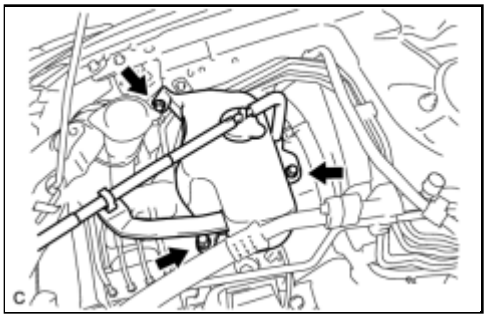

12. REMOVE AIR CLEANER CAP SUB-ASSEMBLY WITH HOSE INFO

13. REMOVE AIR CLEANER CASE

(a) Remove the air cleaner filter element.

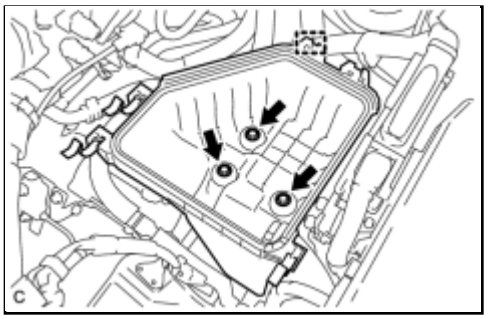

(b) Disconnect the clamp of the engine wire.

(c) Remove the 3 bolts and air cleaner case.

14. REMOVE BATTERY

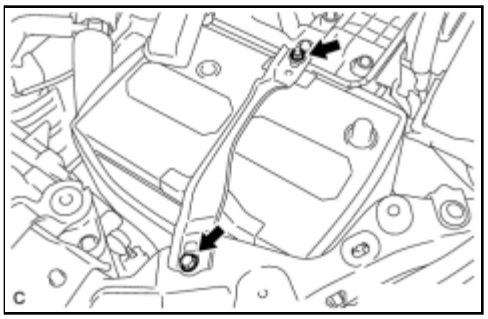

(a) Remove the bolt, nut and battery clamp.

(b) Remove the battery and battery insulator.

15. REMOVE BATTERY CARRIER

(a) Remove the battery tray.

(b) Separate the 2 wire harness clamps from the battery

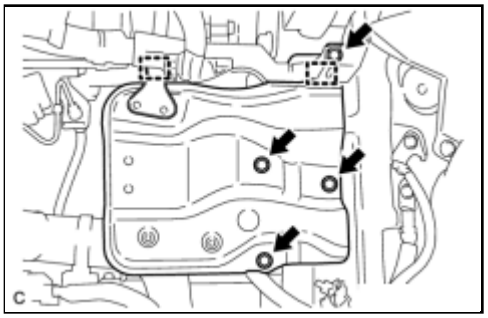

carrier.

(c) Remove the 4 bolts and battery carrier.

16. SEPARATE WIRE HARNESS

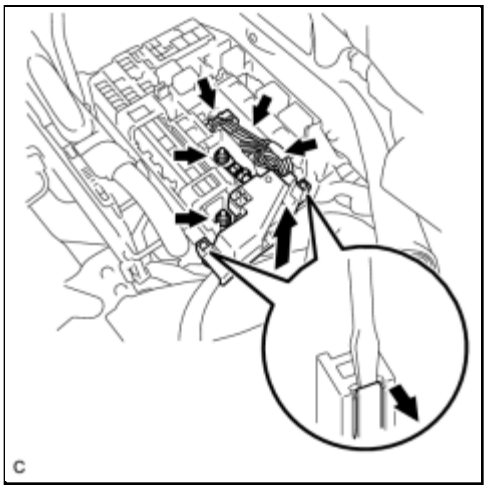

(a) Disconnect the 3 connectors from the engine room relay block.

(b) Remove the 2 nuts and disconnect the wire harnesses from the engine room relay block.

(c) Using a screwdriver, unlock the 2 claws.

(d) Pull the engine room relay block upward.

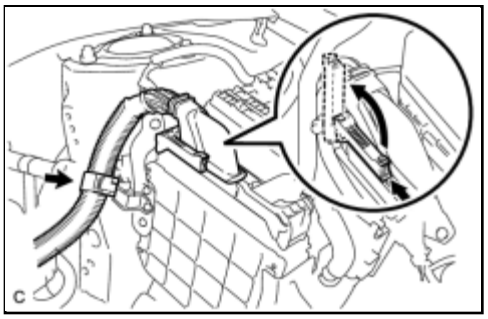

(e) Pull up the lever and disconnect the ECM connector.

(f) Disconnect the clamp.

(g) Remove the bolt and disconnect the ground cable and

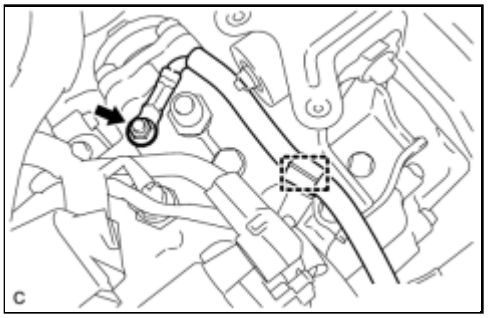

clamp (for Manual Transaxle).

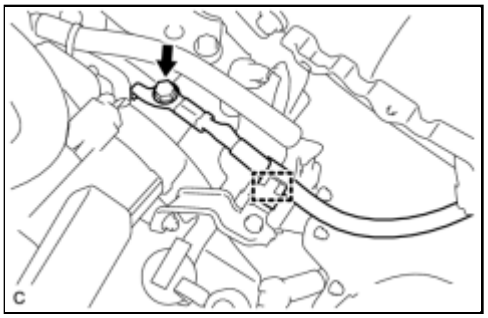

(h) Remove the bolt and disconnect the ground cable and clamp (for Automatic Transaxle).

17. REMOVE THROTTLE BODY ASSEMBLY INFO

18. REMOVE V-RIBBED BELT INFO

19. REMOVE GENERATOR ASSEMBLY INFO

20. SEPARATE COMPRESSOR ASSEMBLY WITH PULLEY

(a) Disconnect the connector.

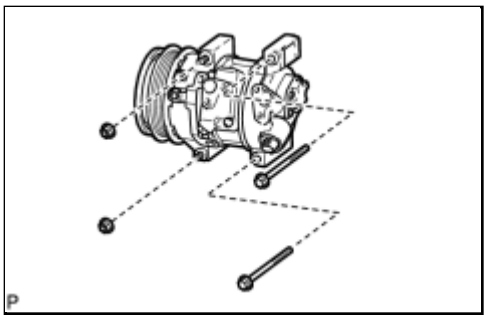

(b) Remove the 2 bolts and 2 nuts.

(c) Using a "TORX" socket wrench (E8), remove the 2 stud bolts and compressor with pulley assembly.

HINT:

Secure the compressor and hoses off to the side instead of

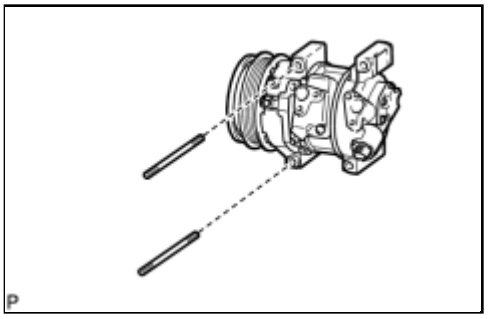

discharging the A/C system.

21. DISCONNECT NO. 2 RADIATOR HOSE

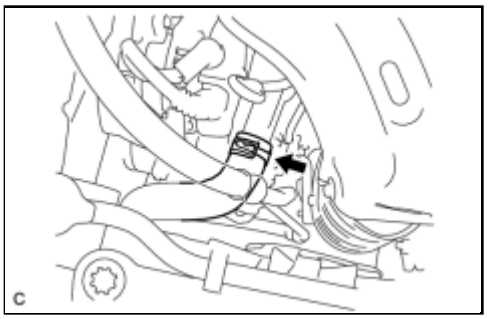

(a) Disconnect the No. 2 radiator hose from the inlet water.

22. DISCONNECT NO. 1 RADIATOR HOSE



(a) Disconnect the No. 1 radiator hose from the cylinder head.

23. DISCONNECT OIL COOLER HOSE (for Automatic Transaxle)

(a) Disconnect the 2 oil cooler hoses.

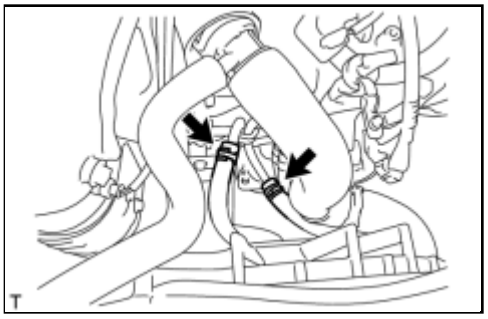

24. DISCONNECT BREATHER HOSE (for Automatic Transaxle)

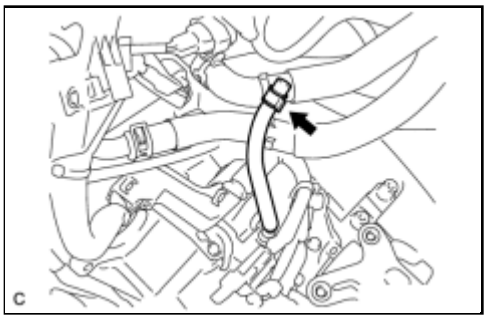

(a) Disconnect the breather hose.

25. DISCONNECT OUTLET HEATER WATER HOSE

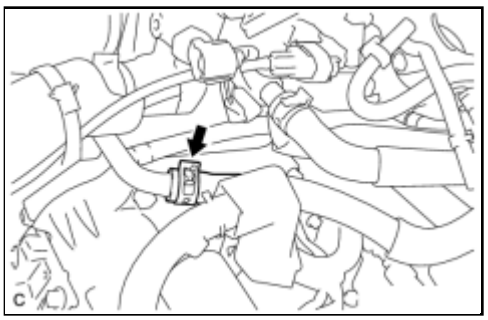

(a) Disconnect the outlet heater water hose.

26. DISCONNECT INLET HEATER WATER HOSE

(a) Disconnect the inlet heater water hose.

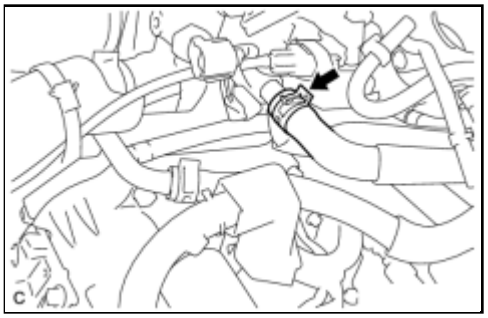

27. REMOVE FUEL TUBE SUB-ASSEMBLY



(a) Release the claw and remove the No. 1 fuel pipe clamp.

(b) Pinch the retainer as illustrated, then pull the fuel tube connector out of the pipe.

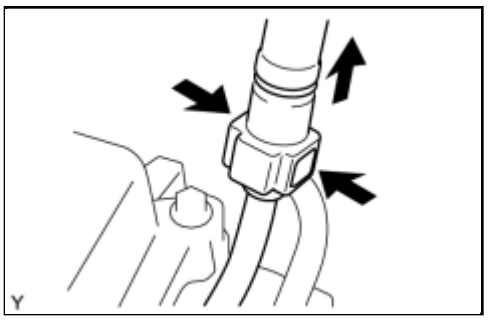

NOTICE:

- Remove any dirt or foreign matter from the fuel tube connector before performing this work.
- Do not allow any scratches or foreign matter on the parts when disconnecting, as the fuel tube connector has O-rings that seal the pipe.
- Perform this work by hand. Do not use any tools.
- Do not forcibly bend, kink or twist the nylon tube.
- Protect the disconnected parts by covering them with vinyl bags after disconnecting the fuel tube.
- If the fuel tube connector and pipe are stuck, push and pull to release them.

28. DISCONNECT UNION TO CONNECTOR TUBE HOSE

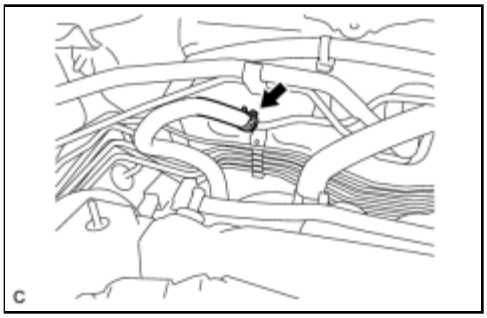

(a) Disconnect the union to connector tube hose.

29. SEPARATE CLUTCH RELEASE CYLINDER ASSEMBLY (for Manual Transaxle)

HINT: INFO **for E351.**

30. SEPARATE TRANSMISSION CONTROL CABLE ASSEMBLY (for Automatic Transaxle)

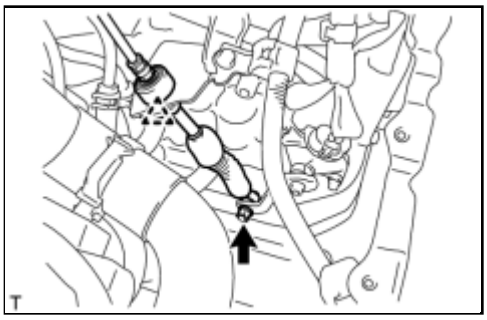

(a) Remove the nut and disconnect the control cable assembly from the control shaft lever.

(b) Remove the clip and disconnect the transmission control cable assembly from the control cable bracket.

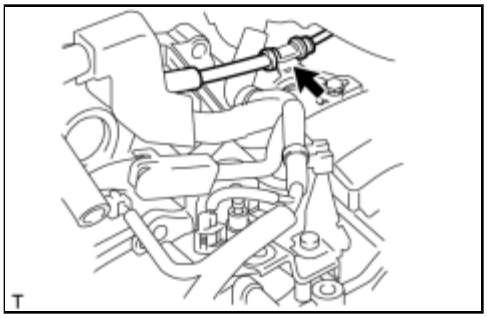

(c) Disconnect the control cable assembly from the control cable bracket.

31. SEPARATE TRANSMISSION CONTROL CABLE ASSEMBLY (for Manual Transaxle)

(a) Remove the 2 clips and disconnect the 2 transmission control cables from the control cable bracket*1.

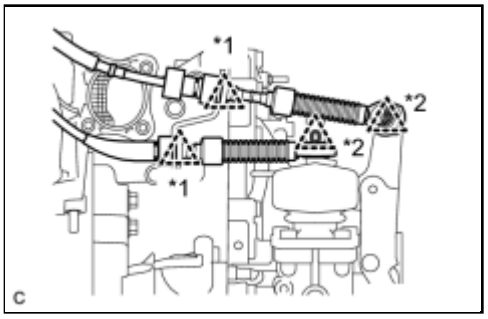

(b) Remove the 2 clips and disconnect the 2 transmission control cables from the transaxle*2.

32. SECURE STEERING WHEEL INFO

33. REMOVE COLUMN HOLE COVER SILENCER SHEET INFO

34. SEPARATE NO. 2 STEERING INTERMEDIATE SHAFT ASSEMBLY INFO

35. SEPARATE NO. 1 STEERING COLUMN HOLE COVER SUB-ASSEMBLY INFO

36. REMOVE CENTER EXHAUST PIPE ASSEMBLY INFO

37. REMOVE FRONT EXHAUST PIPE ASSEMBLY INFO

38. REMOVE FRONT AXLE SHAFT LH NUT INFO

39. REMOVE FRONT AXLE SHAFT RH NUT

HINT:

Perform the same procedure for the LH side.

40. SEPARATE FRONT SPEED SENSOR LH INFO

41. SEPARATE FRONT SPEED SENSOR RH

HINT:

Perform the same procedure for the LH side.

42. SEPARATE TIE ROD END SUB-ASSEMBLY LH INFO

43. SEPARATE TIE ROD END SUB-ASSEMBLY RH

HINT:

Perform the same procedure for the LH side.

44. SEPARATE FRONT STABILIZER LINK ASSEMBLY LH INFO

45. SEPARATE FRONT STABILIZER LINK ASSEMBLY RH

HINT:

Perform the same procedure for the LH side.

46. SEPARATE FRONT LOWER NO. 1 SUSPENSION ARM SUB-ASSEMBLY LH INFO

47. SEPARATE FRONT LOWER NO. 1 SUSPENSION ARM SUB-ASSEMBLY RH

HINT:

Perform the same procedure for the LH side.

48. SEPARATE STEERING KNUCKLE WITH AXLE HUB LH

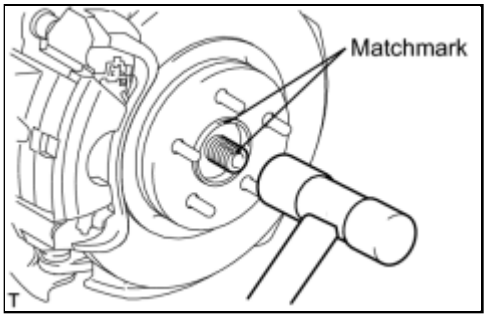

(a) Put matchmarks on the drive shaft and axle hub.

NOTICE:

Do not punch the marks.

(b) Using a plastic-faced hammer, disconnect the front axle assembly LH.

NOTICE:

- Be careful not to damage the boot or speed sensor rotor.
- Do not excessively push out the drive shaft from the axle assembly.

49. SEPARATE STEERING KNUCKLE WITH AXLE HUB RH

HINT:

Perform the same procedure for the LH side.

50. REMOVE FRONT DRIVE SHAFT ASSEMBLY LH INFO

51. REMOVE FRONT DRIVE SHAFT HOLE SNAP RING LH INFO

52. REMOVE FRONT DRIVE SHAFT ASSEMBLY RH INFO

53. SEPARATE DRIVE PLATE AND TORQUE CONVERTER CLUTCH SETTING BOLT (for Automatic Transaxle)

HINT: INFO **for U250E.**

54. REMOVE FRONT SUSPENSION CROSSMEMBER SUB-ASSEMBLY INFO

55. REMOVE CENTER ENGINE MOUNTING MEMBER SUB-ASSEMBLY INFO

56. REMOVE ENGINE ASSEMBLY WITH TRANSAXLE

(a) Set the engine assembly with transaxle on the engine lifter.



NOTICE:

Place the engine on wooden blocks or equivalent so that the engine is level.

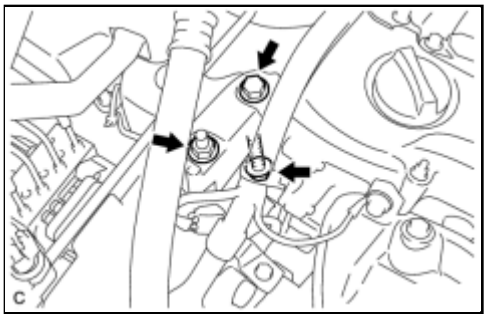

(b) Remove the bolt and 2 nuts, and separate the engine mounting insulator RH.

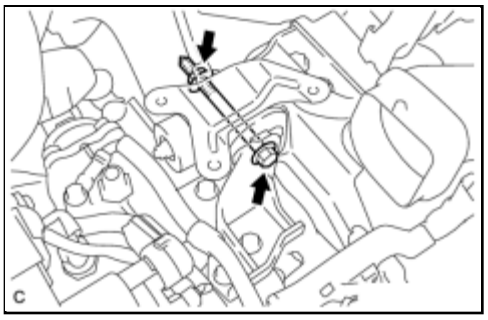

(c) Remove the through bolt and nut, and separate the engine mounting insulator LH.

(d) Carefully remove the engine with transaxle from the vehicle.

57. INSTALL ENGINE HANGERS

(a) Install the No. 1 and No. 2 engine hangers with new bolts as shown in the illustration.

Torque: 38 N·m (387 kgf·cm, 28ft·lbf)

ITEM	PART NO.
No. 1 engine hanger	12281-28010
No. 2 engine hanger	12282-28010 or 12282-AB010
Bolt	90080-10177

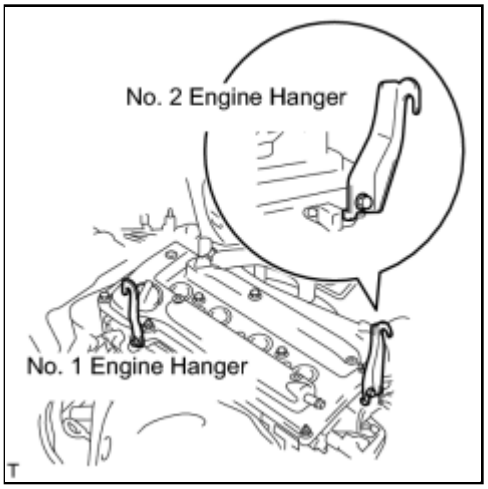

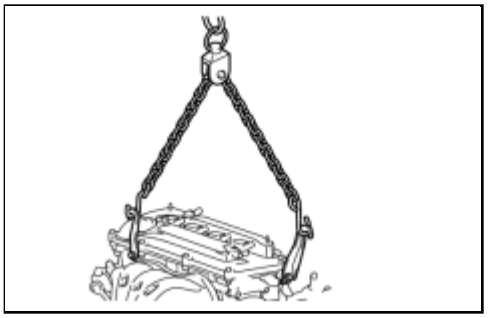

(b) Using an engine sling device and a chain block, suspend the engine assembly with transaxle.

58. REMOVE FRONT ENGINE MOUNTING INSULATOR

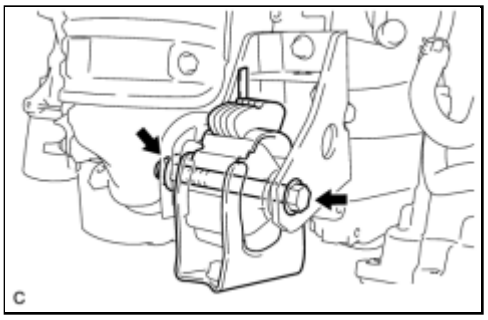

(a) Remove the through bolt and nut, and separate the front engine mounting insulator.

59. REMOVE REAR ENGINE MOUNTING INSULATOR

(a) Remove the through bolt and separate the rear engine mounting insulator.

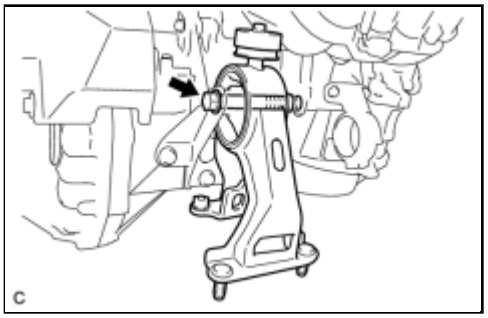

60. REMOVE ENGINE MOUNTING INSULATOR LH

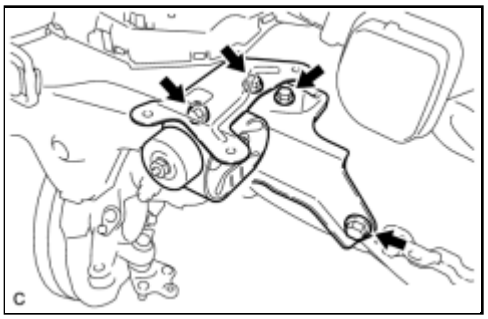

(a) Remove the 4 bolts and engine mounting insulator LH.

61. REMOVE ENGINE MOUNTING INSULATOR SUB-ASSEMBLY RH

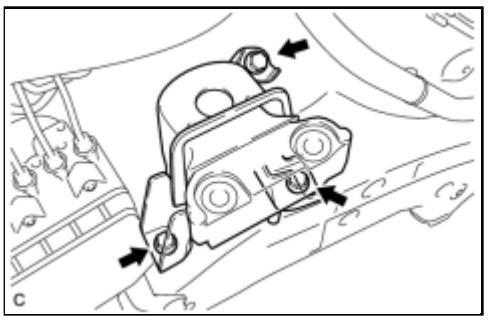

(a) Remove the 3 bolts and engine mounting insulator sub-assembly RH.

62. REMOVE DRIVE SHAFT BEARING BRACKET

(a) Remove the 3 bolts and bracket.

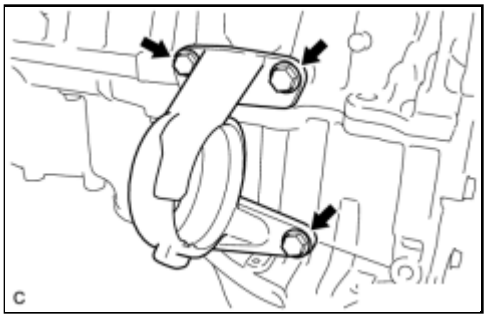

63. REMOVE STARTER ASSEMBLY (for Automatic Transaxle) INFO

64. REMOVE STARTER ASSEMBLY (for Manual Transaxle) INFO

65. REMOVE MANUAL TRANSAXLE ASSEMBLY (for Manual Transaxle)

HINT: INFO **for E351.**

66. REMOVE AUTOMATIC TRANSAXLE ASSEMBLY (for Automatic Transaxle)

HINT: INFO **for U250E.**

67. REMOVE CLUTCH COVER ASSEMBLY (for Manual Transaxle)

HINT: INFO **for E351.**

68. REMOVE CLUTCH DISC ASSEMBLY (for Manual Transaxle)

HINT: INFO **for E351.**

69. REMOVE FLYWHEEL SUB-ASSEMBLY (for Manual Transaxle) INFO

70. REMOVE DRIVE PLATE AND RING GEAR SUB-ASSEMBLY (for Automatic Transaxle) INFO

71. REMOVE ENGINE WIRE

Last Modified: 3-10-2010	6.4 A	**From:** 200901
Model Year: 2010	**Model:** Corolla	**Doc ID:** RM000001BC100RX
Title: 2AZ-FE ENGINE MECHANICAL: ENGINE ASSEMBLY: INSTALLATION (2010 Corolla)		

INSTALLATION

1. INSTALL ENGINE WIRE

2. INSTALL DRIVE PLATE AND RING GEAR SUB-ASSEMBLY (for Automatic Transaxle) INFO

3. INSTALL FLYWHEEL SUB-ASSEMBLY (for Manual Transaxle) INFO

4. INSTALL CLUTCH DISC ASSEMBLY (for Manual Transaxle)

HINT: INFO **for E351.**

5. INSTALL CLUTCH COVER ASSEMBLY (for Manual Transaxle)

HINT: INFO **for E351.**

6. INSTALL AUTOMATIC TRANSAXLE ASSEMBLY (for Automatic Transaxle)

HINT: INFO **for U250E.**

7. INSTALL MANUAL TRANSAXLE ASSEMBLY (for Manual Transaxle)

HINT: INFO **for E351.**

8. INSTALL STARTER ASSEMBLY (for Manual Transaxle) INFO

9. INSTALL STARTER ASSEMBLY (for Automatic Transaxle) INFO

10. INSTALL DRIVE SHAFT BEARING BRACKET

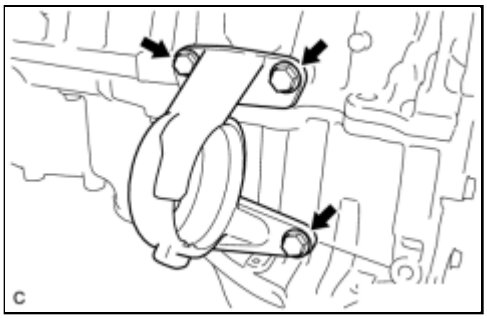

(a) Install the drive shaft bearing bracket with the 3 bolts.

Torque: 64 N·m (653 kgf·cm, 47ft·lbf)

11. TEMPORARILY TIGHTEN FRONT ENGINE MOUNTING INSULATOR

(a) Temporarily install the front engine mounting insulator with the nut and through bolt.

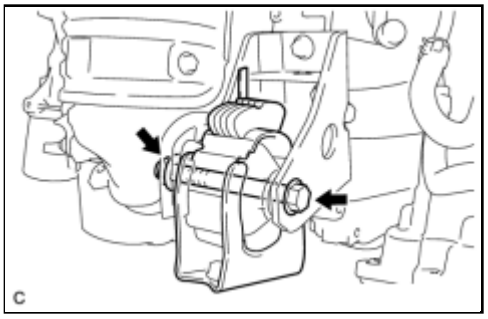

12. TEMPORARILY TIGHTEN REAR ENGINE MOUNTING INSULATOR

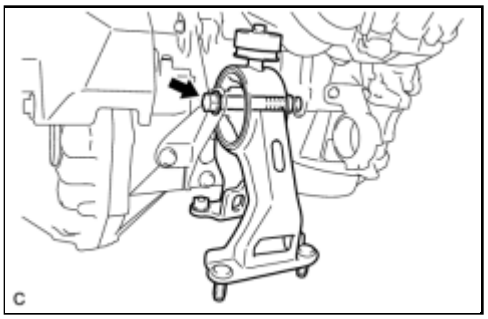

(a) Temporarily install the rear engine mounting insulator to the engine mounting bracket with the through bolt.

13. INSTALL ENGINE MOUNTING INSULATOR SUB-ASSEMBLY RH

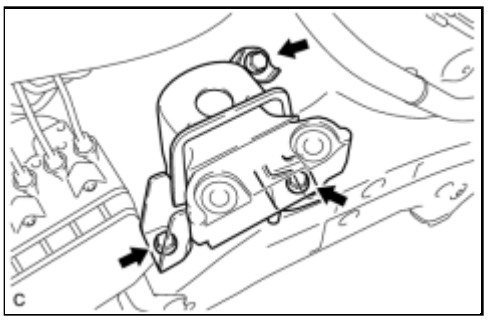

(a) Install the engine mounting insulator RH with the 3 bolts.

Torque: 52 N·m (530 kgf·cm, 38ft·lbf)

14. INSTALL ENGINE MOUNTING INSULATOR LH

(a) Temporarily install the engine mounting insulator LH with the 4 bolts.

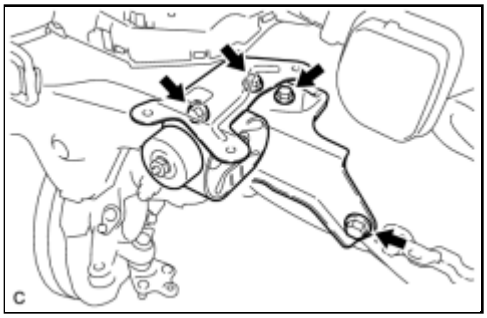

(b) Tighten the 4 bolts.

Torque: 52 N·m (530 kgf·cm, 38ft·lbf)

HINT:

Perform this procedure only when replacement of the engine mounting insulator is necessary.

15. INSTALL ENGINE ASSEMBLY WITH TRANSAXLE



(a) Set the engine assembly with transaxle on the engine lifter.

NOTICE:

Place the engine on wooden blocks or equivalent so that the engine is level.

(b) Remove the 2 bolts and 2 engine hangers.

(c) Operate the engine lifter and lift the engine assembly with transaxle to the position where the engine mounting insulators RH and LH can be installed.

CAUTION:

Do not raise the engine more than necessary. If the engine is raised excessively, the vehicle may also be lifted up.

NOTICE:

- Make sure that the engine is clear of all wiring and hoses.
- While raising the engine into the vehicle, do not allow it to contact the vehicle.

(d) Install the engine mounting insulator RH with the bolt and 2 nuts.

Nut A - Torque: 95 N·m (969 kgf·cm, 70ft·lbf)

Nut B - Torque: 52 N·m (530 kgf·cm, 38ft·lbf)

Bolt - Torque: 95 N·m (969 kgf·cm, 70ft·lbf)

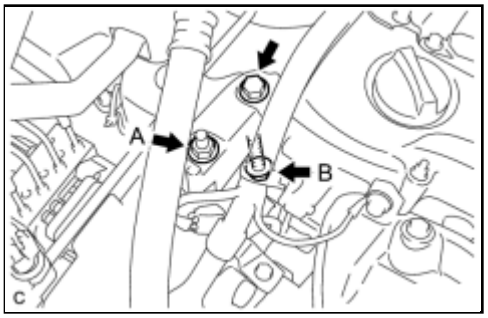

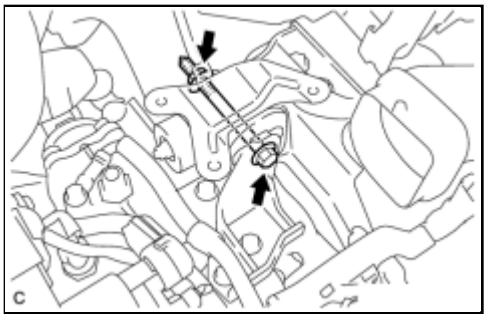

(e) Install the engine mounting insulator LH with the through bolt and nut.

Torque: 56 N·m (571 kgf·cm, 41ft·lbf)

16. TEMPORARILY TIGHTEN CENTER ENGINE MOUNTING MEMBER SUB-ASSEMBLY INFO

17. INSTALL FRONT SUSPENSION CROSSMEMBER SUB-ASSEMBLY INFO

18. FULLY TIGHTEN CENTER ENGINE MOUNTING MEMBER SUB-ASSEMBLY INFO

19. FULLY TIGHTEN FRONT ENGINE MOUNTING INSULATOR

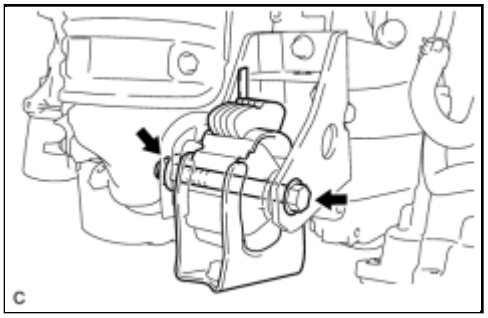

(a) Fully tighten the front engine mounting insulator with the nut and through bolt.

Torque: 73 N·m (744 kgf·cm, 54ft·lbf)

20. FULLY TIGHTEN REAR ENGINE MOUNTING INSULATOR

(a) Fully tighten the rear engine mounting insulator to the engine mounting bracket with the through bolt.

Torque: 65 N·m (663 kgf·cm, 48ft·lbf)

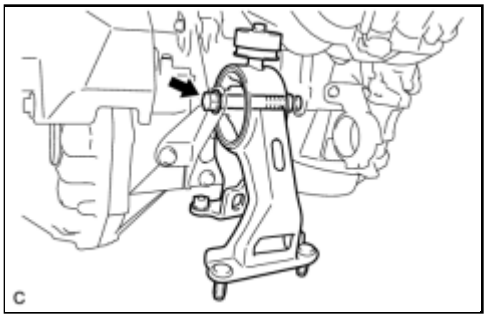

21. INSTALL DRIVE PLATE AND TORQUE CONVERTER CLUTCH SETTING BOLT (for Automatic Transaxle)

HINT: INFO **for U250E.**

22. INSTALL FRONT DRIVE SHAFT HOLE SNAP RING LH INFO

23. INSTALL FRONT DRIVE SHAFT ASSEMBLY LH INFO

24. INSTALL FRONT DRIVE SHAFT ASSEMBLY RH INFO

25. INSTALL STEERING KNUCKLE WITH AXLE HUB LH

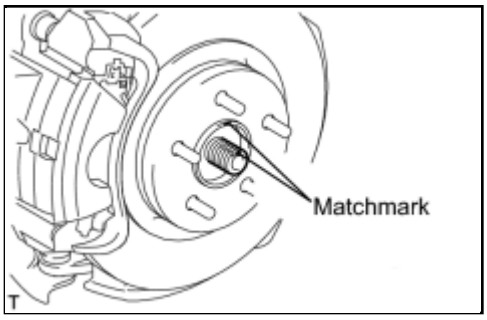

(a) Align the matchmarks and connect the front drive shaft assembly to the front axle assembly LH.

26. INSTALL STEERING KNUCKLE WITH AXLE HUB RH

HINT:

Perform the same procedure for the LH side.

27. INSTALL FRONT LOWER NO. 1 SUSPENSION ARM SUB-ASSEMBLY LH INFO

28. INSTALL FRONT LOWER NO. 1 SUSPENSION ARM SUB-ASSEMBLY RH

HINT:

Perform the same procedure for the LH side.

29. INSTALL FRONT STABILIZER LINK ASSEMBLY LH INFO

30. INSTALL FRONT STABILIZER LINK ASSEMBLY RH

HINT:

Perform the same procedure for the LH side.

31. INSTALL TIE ROD END SUB-ASSEMBLY LH INFO

32. INSTALL TIE ROD END SUB-ASSEMBLY RH

HINT:

Perform the same procedure for the LH side.

33. INSTALL FRONT SPEED SENSOR LH INFO

34. INSTALL FRONT SPEED SENSOR RH

HINT:

Perform the same procedure for the LH side.

35. INSTALL FRONT AXLE SHAFT LH NUT INFO

36. INSTALL FRONT AXLE SHAFT RH NUT

HINT:

Perform the same procedure for the LH side.

37. INSTALL FRONT EXHAUST PIPE ASSEMBLY INFO

38. INSTALL CENTER EXHAUST PIPE ASSEMBLY INFO

39. INSTALL NO. 1 STEERING COLUMN HOLE COVER SUB-ASSEMBLY INFO

40. INSTALL NO. 2 STEERING INTERMEDIATE SHAFT ASSEMBLY INFO

41. INSTALL COLUMN HOLE COVER SILENCER SHEET INFO

42. INSTALL TRANSMISSION CONTROL CABLE ASSEMBLY (for Automatic Transaxle)

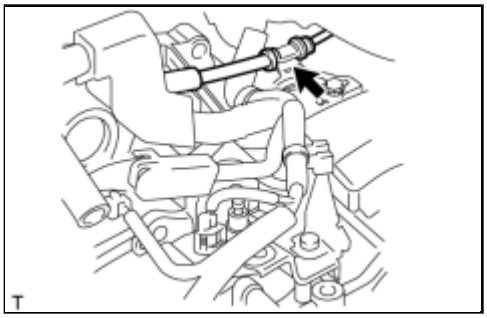

(a) Connect the transmission control cable to the control cable bracket.

(b) Connect the transmission control cable to the bracket with a new clip.

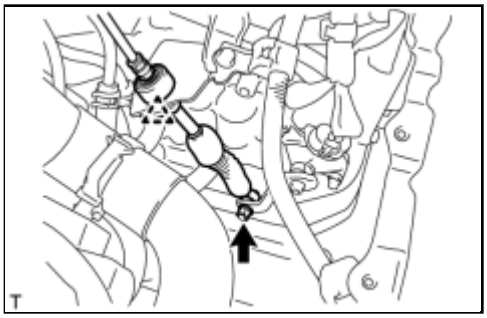

(c) Connect the transmission control cable assembly to the control shaft lever with the nut.

Torque: 12 N·m (122 kgf·cm, 9ft·lbf)

43. INSTALL TRANSMISSION CONTROL CABLE ASSEMBLY (for Manual Transaxle)

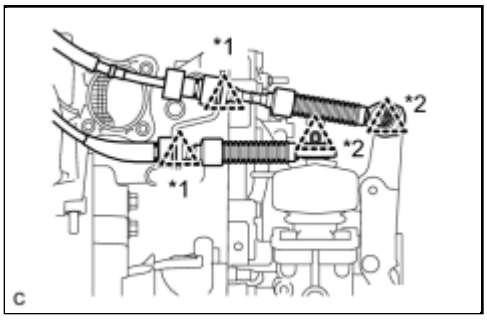

(a) Install the 2 transmission control cables to the control cable bracket with 2 new clips*1.

(b) Install the 2 transmission control cables to the transaxle with 2 new clips*2.

44. INSTALL CLUTCH RELEASE CYLINDER ASSEMBLY (for Manual Transaxle)

HINT: INFO **for E351.**

45. CONNECT UNION TO CONNECTOR TUBE HOSE

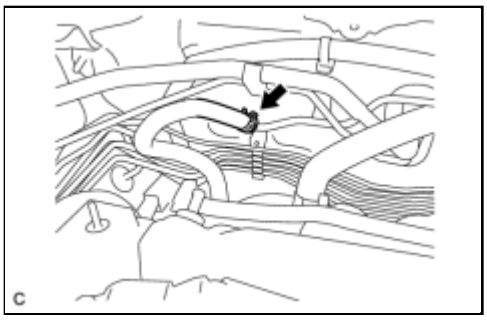

(a) Connect the union to connector tube hose.

46. INSTALL FUEL TUBE SUB-ASSEMBLY

(a) Connect the fuel tube connector and fuel pipe.

CAUTION:

Align the fuel tube connector with the pipe, then push the fuel tube connector in until the retainer

makes a "click" sound. If the connection is tight, apply a small amount of engine oil to the tip of the pipe. After connecting, pull the pipe and connector to make sure that they are securely connected.



(b) Engage the claw and install the No. 1 fuel pipe clamp.

47. CONNECT INLET HEATER WATER HOSE

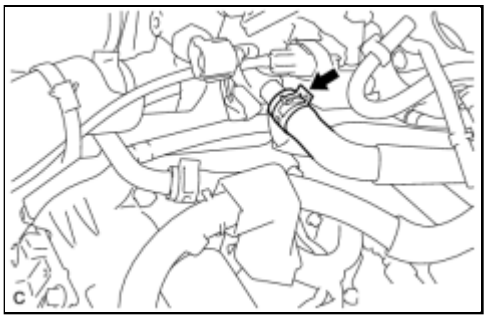

(a) Connect the inlet heater water hose with the clamp.

48. CONNECT OUTLET HEATER WATER HOSE

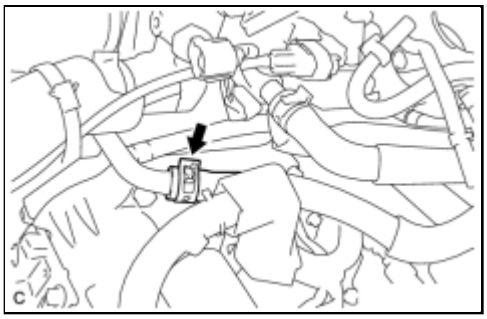

(a) Connect the outlet heater water hose with the clamp.

49. INSTALL BREATHER HOSE (for Automatic Transaxle)

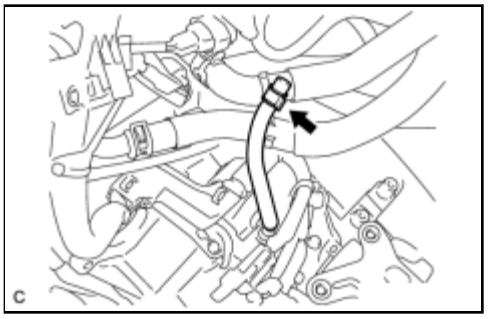

(a) Install the breather hose.

50. CONNECT OIL COOLER HOSE (for Automatic Transaxle)

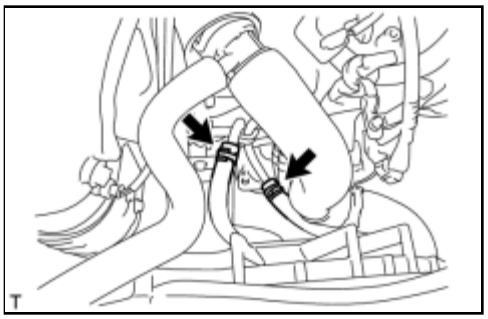

(a) Connect the 2 oil cooler hoses with the clamps.

51. INSTALL NO. 1 RADIATOR HOSE



(a) Connect the No. 1 radiator hose with the clamp.

52. INSTALL NO. 2 RADIATOR HOSE

(a) Connect the No. 2 radiator hose with the clamp.

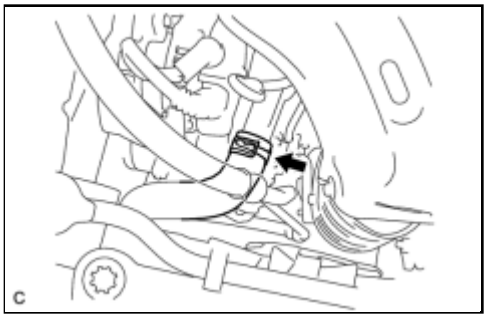

53. INSTALL COMPRESSOR ASSEMBLY WITH PULLEY INFO

54. INSTALL GENERATOR ASSEMBLY INFO

55. INSTALL V-RIBBED BELT INFO

56. INSTALL THROTTLE BODY ASSEMBLY INFO

57. INSTALL WIRE HARNESS

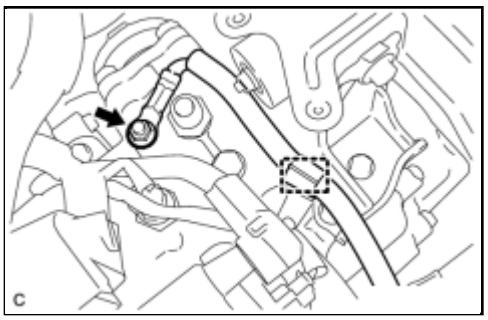

(a) Install the ground cable to the transmission with the bolt and clamp (for Manual Transaxle).

Torque: 13 N·m (130 kgf·cm, 10ft·lbf)

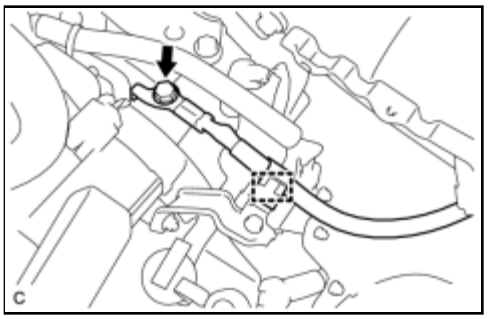

(b) Install the earth wire to the transmission with the bolt and clamp (for Automatic Transaxle).

Torque: 26 N·m (260 kgf·cm, 19ft·lbf)

(c) Install the wire harness with the 2 nuts.

Torque: 8.4 N·m (85 kgf·cm, 74in·lbf)

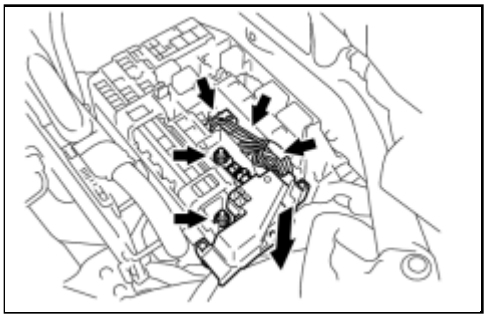

(d) Connect the 3 connectors

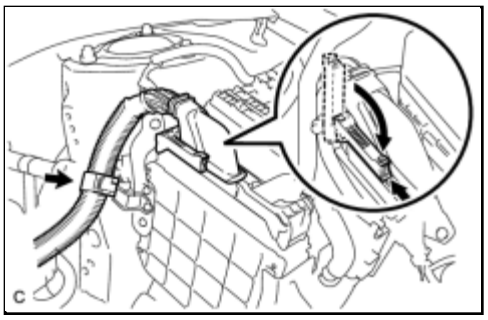

(e) Connect the connector to the ECM with the clamp and lock lever.

58. INSTALL BATTERY CARRIER

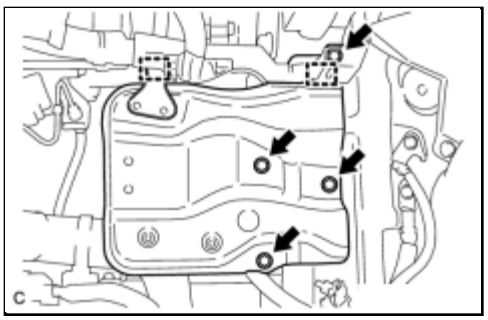

(a) Install the battery carrier with the 4 bolts.

Torque: 13 N·m (133 kgf·cm, 10ft·lbf)

(b) Connect the 2 wire harness clamps.

59. INSTALL BATTERY

(a) Install the battery tray, battery and battery insulator.

(b) Install the battery clamp with the bolt and nut.

Bolt - Torque: 6.5 N·m (66 kgf·cm, 58in·lbf)
Nut - Torque: 3.5 N·m (36 kgf·cm, 31in·lbf)

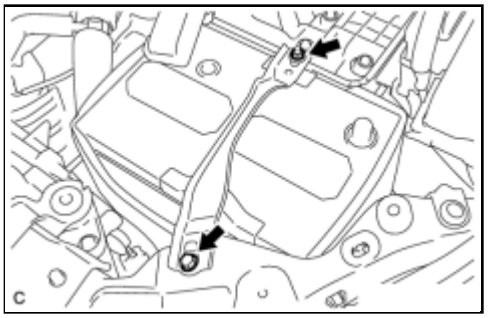

(c) Connect the battery cables.

Torque: 5.4 N·m (55 kgf·cm, 48in·lbf)

60. INSTALL AIR CLEANER CASE

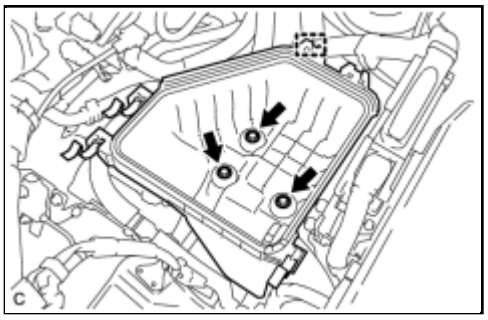

(a) Install the air cleaner case with the 3 bolts.

Torque: 7.0 N·m (71 kgf·cm, 62in·lbf)

(b) Install the engine wire clamp to the air cleaner case.

(c) Install the air cleaner filter element.

61. INSTALL AIR CLEANER CAP SUB-ASSEMBLY WITH HOSE INFO

62. INSTALL RADIATOR RESERVE TANK ASSEMBLY

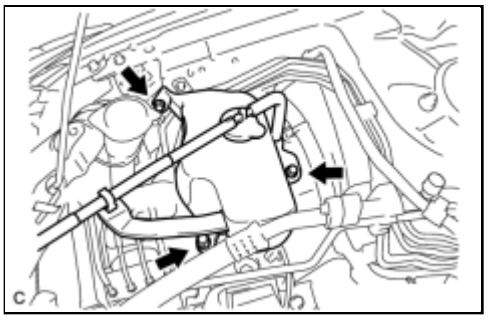

(a) Install the radiator reserve tank assembly with the 3 bolts.

Torque: 7.0 N·m (71 kgf·cm, 62in·lbf)

63. ADD MANUAL TRANSAXLE OIL (for Manual Transaxle)

HINT: INFO **for E351.**

64. INSPECT MANUAL TRANSAXLE OIL (for Manual Transaxle)

HINT: INFO for E351.

65. ADD AUTOMATIC TRANSAXLE FLUID (for Automatic Transaxle)

HINT: INFO for U250E.

66. INSPECT AUTOMATIC TRANSAXLE FLUID (for Automatic Transaxle)

HINT: INFO for U250E.

67. INSPECT SHIFT LEVER POSITION (for Automatic Transaxle)

HINT: INFO for U250E.

68. ADJUST SHIFT LEVER POSITION (for Automatic Transaxle)

HINT: INFO for U250E.

69. ADD ENGINE COOLANT INFO

70. WARM UP ENGINE

71. FILL BRAKE FLUID RESERVOIR (for Manual Transaxle)

HINT: INFO for E351.

72. BLEED CLUTCH LINE (for Manual Transaxle)

HINT: INFO for E351.

73. INSPECT FLUID LEVEL (for Manual Transaxle)

HINT: INFO for E351.

74. INSPECT FOR FUEL LEAK INFO

75. INSPECT FOR COOLANT LEAK INFO

76. INSPECT FOR OIL LEAK

77. INSPECT FOR EXHAUST GAS LEAK

78. INSTALL ENGINE UNDER COVER LH

79. INSTALL ENGINE UNDER COVER RH

80. INSTALL FRONT WHEELS

Torque: 103 N·m (1050 kgf·cm, 76ft·lbf)

81. INSPECT IGNITION TIMING INFO

82. INSPECT ENGINE IDLING SPEED INFO

83. INSPECT CO/HC INFO

84. ADJUST FRONT WHEEL ALIGNMENT

HINT: INFO .

85. INSTALL NO. 1 ENGINE COVER SUB-ASSEMBLY

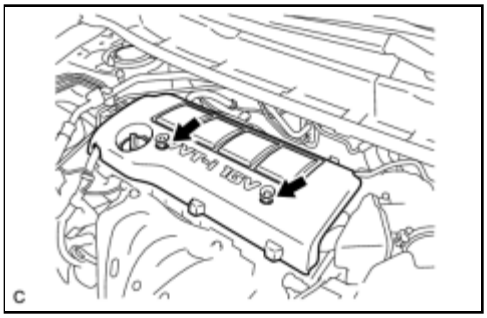

(a) Install the No. 1 engine cover sub-assembly with the 2 nuts.

86. CHECK ABS SPEED SENSOR SIGNAL

HINT:

- INFO for ABS.
- INFO for VSC.

Last Modified: 3-10-2010	6.4 G	**From:** 200901
Model Year: 2010	**Model:** Corolla	**Doc ID:** RM000002ZLZ00PX
Title: 2ZR-FE ENGINE MECHANICAL: ENGINE: ON-VEHICLE INSPECTION (2010 Corolla)		

ON-VEHICLE INSPECTION

1. INSPECT ENGINE COOLANT

HINT: INFO .

2. INSPECT ENGINE OIL

HINT: INFO .

3. INSPECT BATTERY

HINT: INFO .

4. INSPECT AIR CLEANER FILTER ELEMENT SUB-ASSEMBLY

(a) Remove the air cleaner cap.

(b) Remove the air filter element.

(c) Visually check that the air filter is not excessively damaged or oily. If necessary, replace the air filter.

5. INSPECT SPARK PLUG INFO

6. INSPECT V-RIBBED BELT INFO

7. INSPECT VALVE AND ADJUSTER NOISE

(a) Rev up the engine several times. Check that the engine does not emit unusual noises. If unusual noises occur, warm up the engine and idle it for over 30 minutes. Then perform the inspection above again. If any defects or problems are found during the inspection above, perform a lash adjuster inspection INFO .

8. INSPECT IGNITION TIMING

(a) When using the Techstream:

(1) Warm up and stop the engine.

(2) Connect the Techstream to the DLC3.

(3) Turn the ignition switch to ON.

(4) Enter Data List Mode on the Techstream.

HINT:

Refer to the Techstream operator's manual for further details.

(5) Inspect the ignition timing at idle.

Ignition timing:
8 to 12 degrees BTDC

NOTICE:

- Turn all the electrical systems and the A/C off.

- Inspect the ignition timing with the cooling fans off.
- When checking the ignition timing, shift the transmission to the neutral position.

(6) Enter the following menus : TC (TE1) / OFF.

(7) Turn the ignition switch off.

(8) Disconnect the Techstream from the DLC3.

(b) When not using the Techstream:

(1) Remove the No. 2 cylinder head cover INFO .

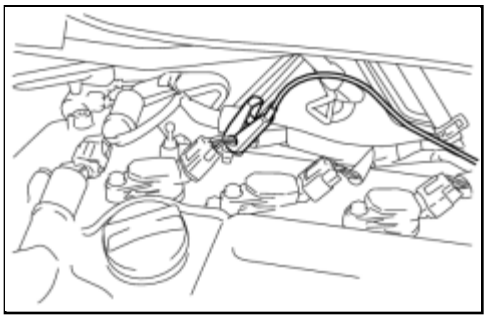

(2) Connect the tester probe of a timing light to the wire of the ignition connector for No. 1 cylinder.

NOTICE:

Use a timing light that detects the first signal.

(3) Warm up and stop the engine.

(4) Connect the clip of the timing light to the wire harness.

NOTICE:

Use a timing light that detects the primary signal.

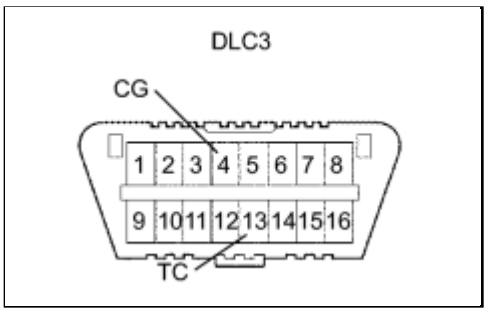

(5) Using SST, connect terminals 13 (TC) and 4 (CG) of the DLC3.

SST: 09843-18040

NOTICE:

Examine the terminal numbers before connecting them. Connecting the wrong terminals can damage the engine.

(6) Inspect the ignition timing at idle.

Ignition timing:
8 to 12 degrees BTDC

NOTICE:

- Turn all the electrical systems and the A/C off.
- Inspect the ignition timing with the cooling fans off.
- When checking the ignition timing, shift the transmission to either neutral or park.

(7) Disconnect SST from terminals 13 (TC) and 4 (CG) of the DLC3.

(8) Turn the ignition switch off.

(9) Remove the timing light.

(10) Install the No. 2 cylinder head cover INFO .

9. INSPECT ENGINE IDLE SPEED

(a) Warm up and stop the engine.

(b) Connect the Techstream to the DLC3.

(c) Turn the ignition switch to ON.

(d) Enter Data List Mode on the Techstream.

HINT:

Refer to the Techstream operator's manual for further details.

(e) Inspect the engine idle speed.

Idle speed:
600 to 700 rpm

NOTICE:

- Turn all the electrical systems and the A/C off.
- Inspect the idle speed with the cooling fans off.
- When checking the idle speed, shift the transmission to either neutral or park.

(f) Turn the ignition switch off.

(g) Disconnect the Techstream from the DLC3.

10. INSPECT COMPRESSION

(a) Warm up and stop the engine.

(b) Remove the No. 2 cylinder head cover INFO .

(c) Remove the 4 ignition coils.

(d) Remove the 4 spark plugs INFO .

(e) Disconnect the 4 fuel injector connectors.

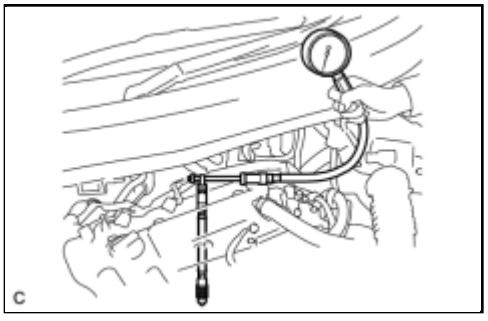

(f) Inspect the cylinder compression pressure.

(1) Insert a compression gauge into the spark plug hole.

(2) Fully open the throttle.

(3) While cranking the engine, measure the compression pressure.

Compression:
1373 kPa (14.0 kgf/cm^2, 199 psi)
Minimum pressure:
1079 kPa (11.0 kgf/cm^2, 157 psi)
Difference between each cylinder:
98 kPa (1.0 kgf/cm^2, 14.2 psi) or less

NOTICE:

- Use a fully-charged battery so the engine speed can be increased to 250 rpm or more.

- Inspect the other cylinders in the same way.
- Measure the compression in as short time as possible.

(4) If the cylinder compression is low, pour a small amount of engine oil into the cylinder through the spark plug hole, then inspect it again.

HINT:

- If adding oil increases the compression, the piston rings and/or cylinder bore may be worn or damaged.
- If the pressure stays low, the valve may be stuck or seated improperly, or there may be leakage from the gasket.

(g) Connect the 4 fuel injector connectors.

(h) Install the 4 spark plugs INFO .

(i) Install the 4 ignition coils.

Torque: 10 N·m (102 kgf·cm, 7ft·lbf)

(j) Install the No. 2 cylinder head cover INFO .

11. INSPECT CO/HC

HINT:

This check determines whether or not the idle CO/HC complies with local regulations.

(a) Start the engine.

(b) Run the engine at 2500 rpm for approximately 180 seconds.

(c) Insert the CO/HC meter testing probe at least 40 cm (1.3 ft.) into the tailpipe while idling.

(d) Check the CO/HC concentration during idle and when the engine is running at 2500 rpm.

HINT:

When doing the 2 mode (with the engine idling/ running at 2500 rpm) test, the measuring procedures are determined by applicable local regulations.

If the CO/HC concentration does not comply with local regulations, troubleshoot in the order given below.

(1) Check the A/F sensor and heated oxygen sensor operation.

(2) See the table below for possible causes, then inspect the applicable parts and repair them if necessary.

CO	HC	PROBLEM	POSSIBLE CAUSE
Normal	High	Rough idle	1. Faulty ignition: ○ Incorrect timing ○ Fouled, shorted or improperly gapped plugs

CO	HC	PROBLEM	POSSIBLE CAUSE
			2. Incorrect valve clearance 3. Leakage from intake and exhaust valves 4. Leakage from cylinders
Low	High	Rough idle (Fluctuating HC reading)	1. Vacuum leaks: • PCV hoses • Intake manifold • Throttle body • Brake booster line 2. Lean mixture causing misfire
High	High	Rough idle (Black smoke from exhaust)	1. Restricted air cleaner filter element 2. Plugged PCV valve 3. Faulty EFI system: • Faulty pressure regulator • Faulty engine coolant temperature sensor • Faulty mass air flow meter • Faulty ECM • Faulty injectors • Throttle body

Last Modified: 3-10-2010	6.4 K	**From:** 200901
Model Year: 2010	**Model:** Corolla	**Doc ID:** RM000002WH500ZX
Title: 2ZR-FE ENGINE MECHANICAL: ENGINE ASSEMBLY: COMPONENTS (2010 Corolla)		

COMPONENTS

ILLUSTRATION

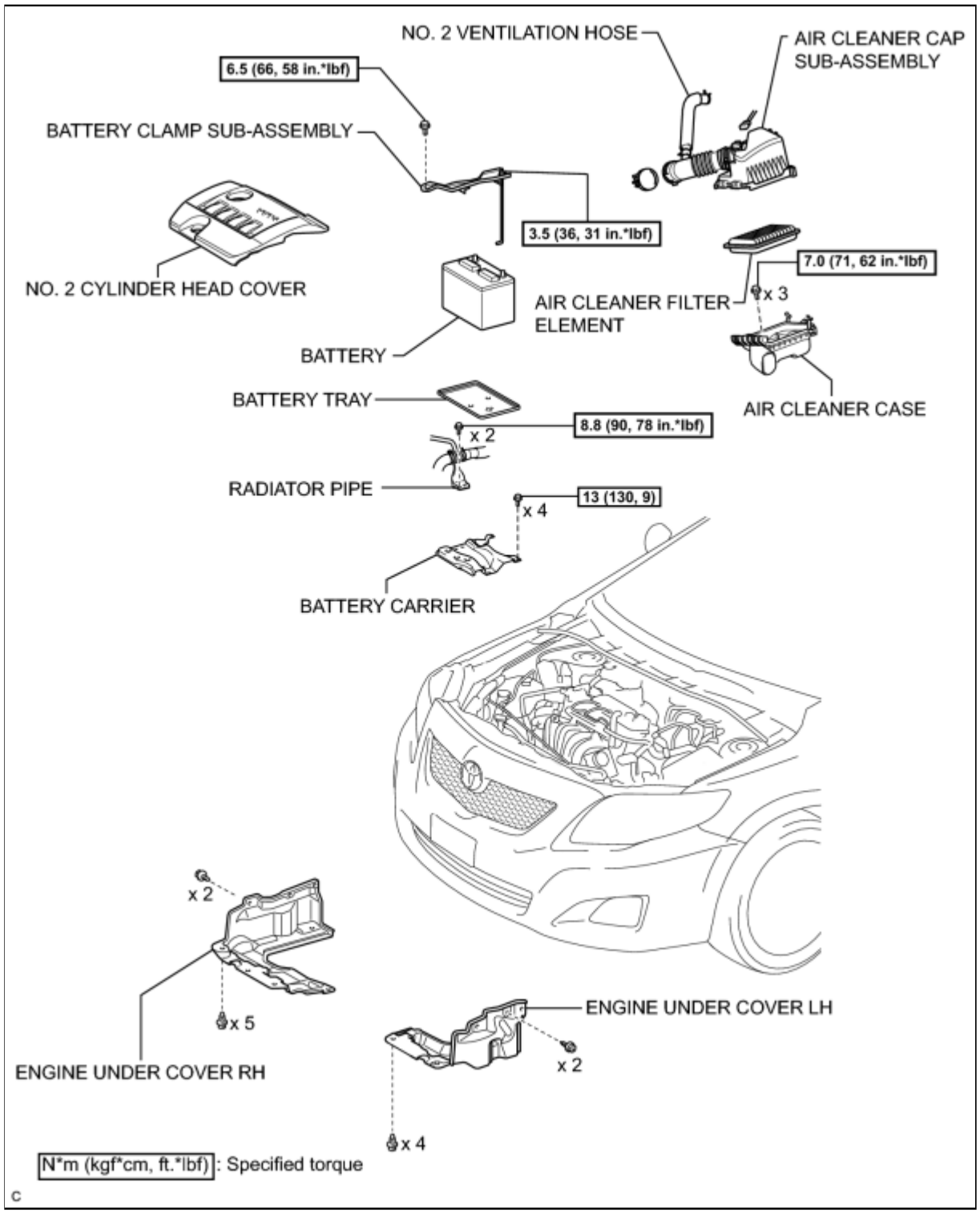

ILLUSTRATION

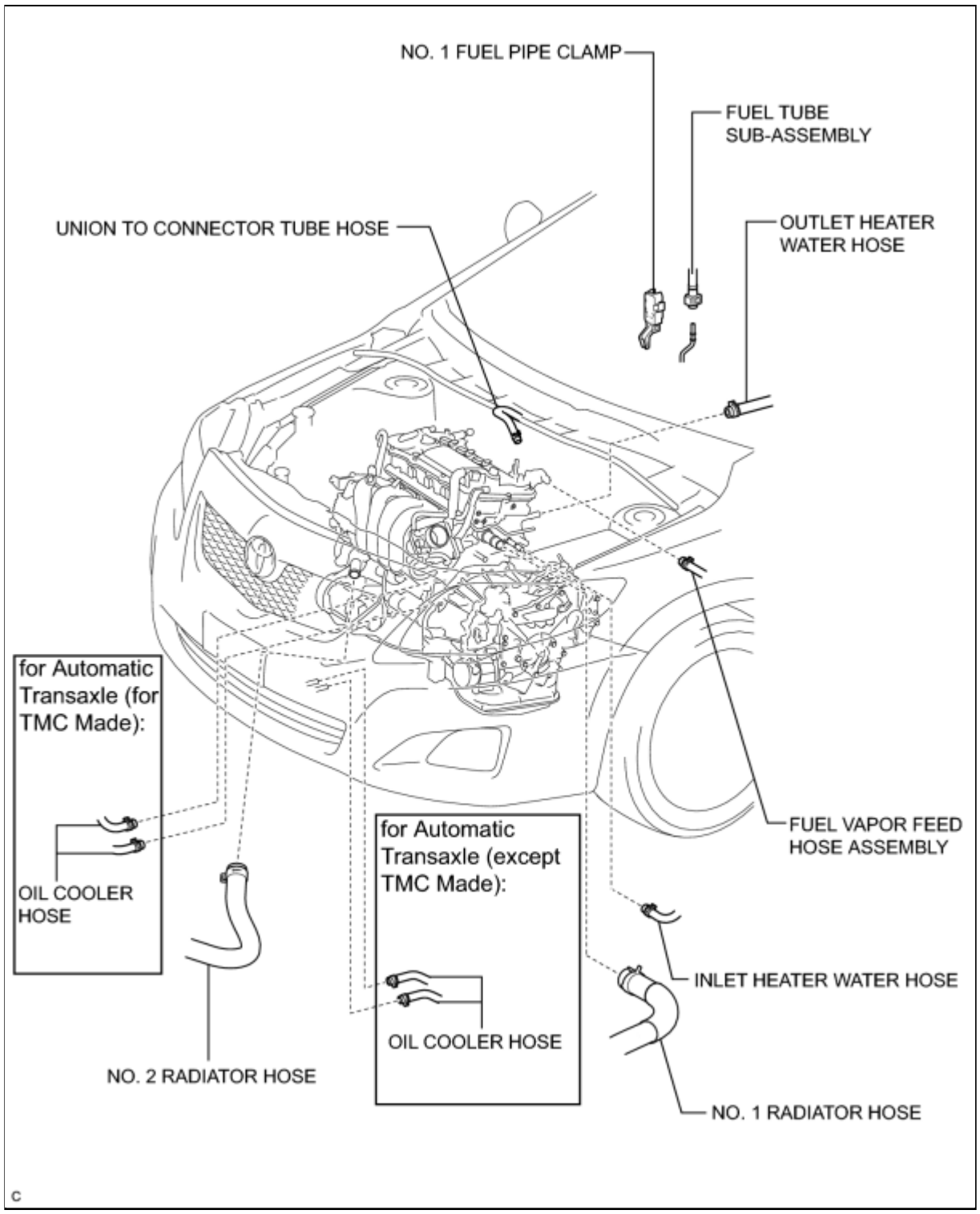

ILLUSTRATION

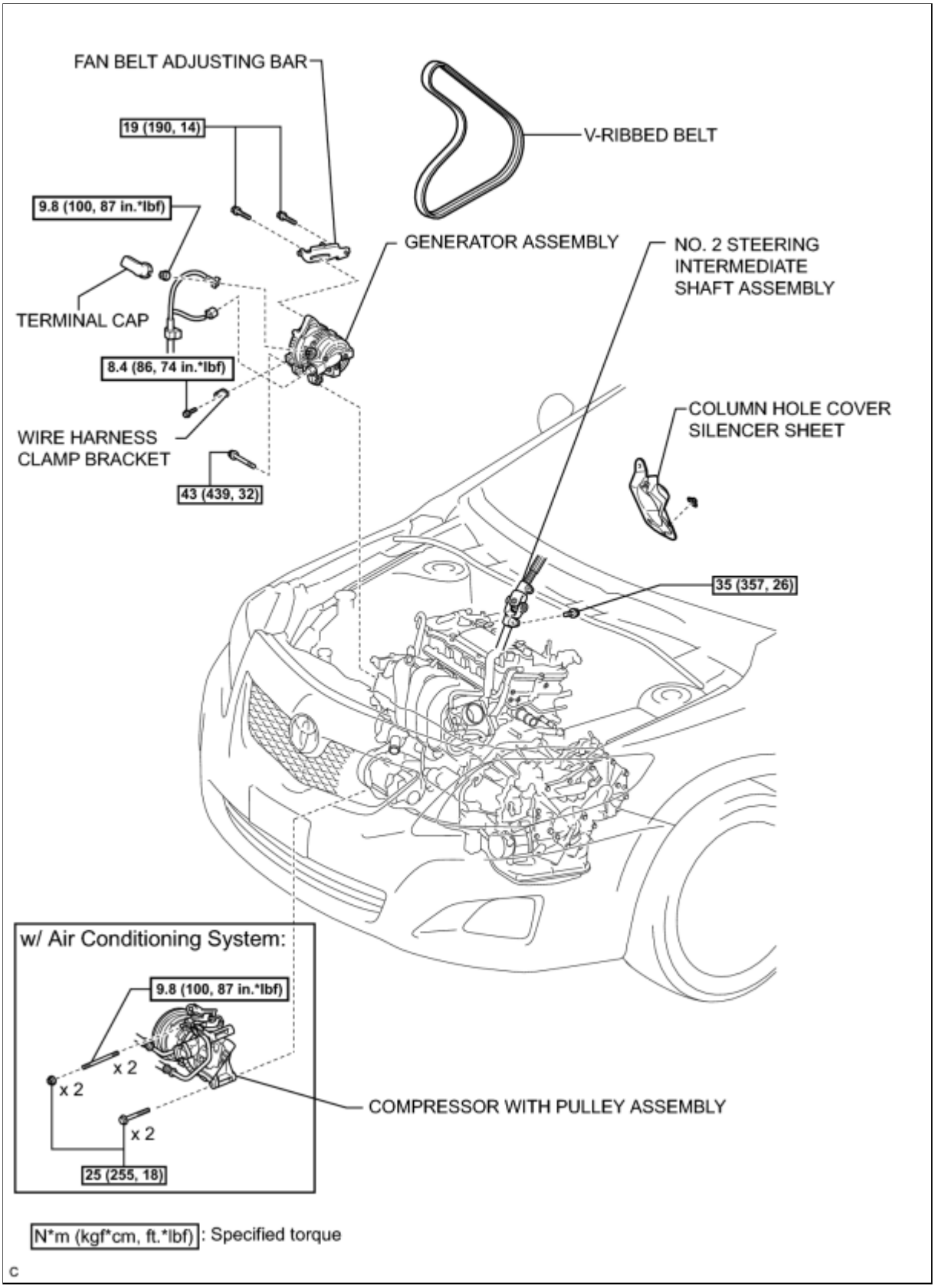

ILLUSTRATION

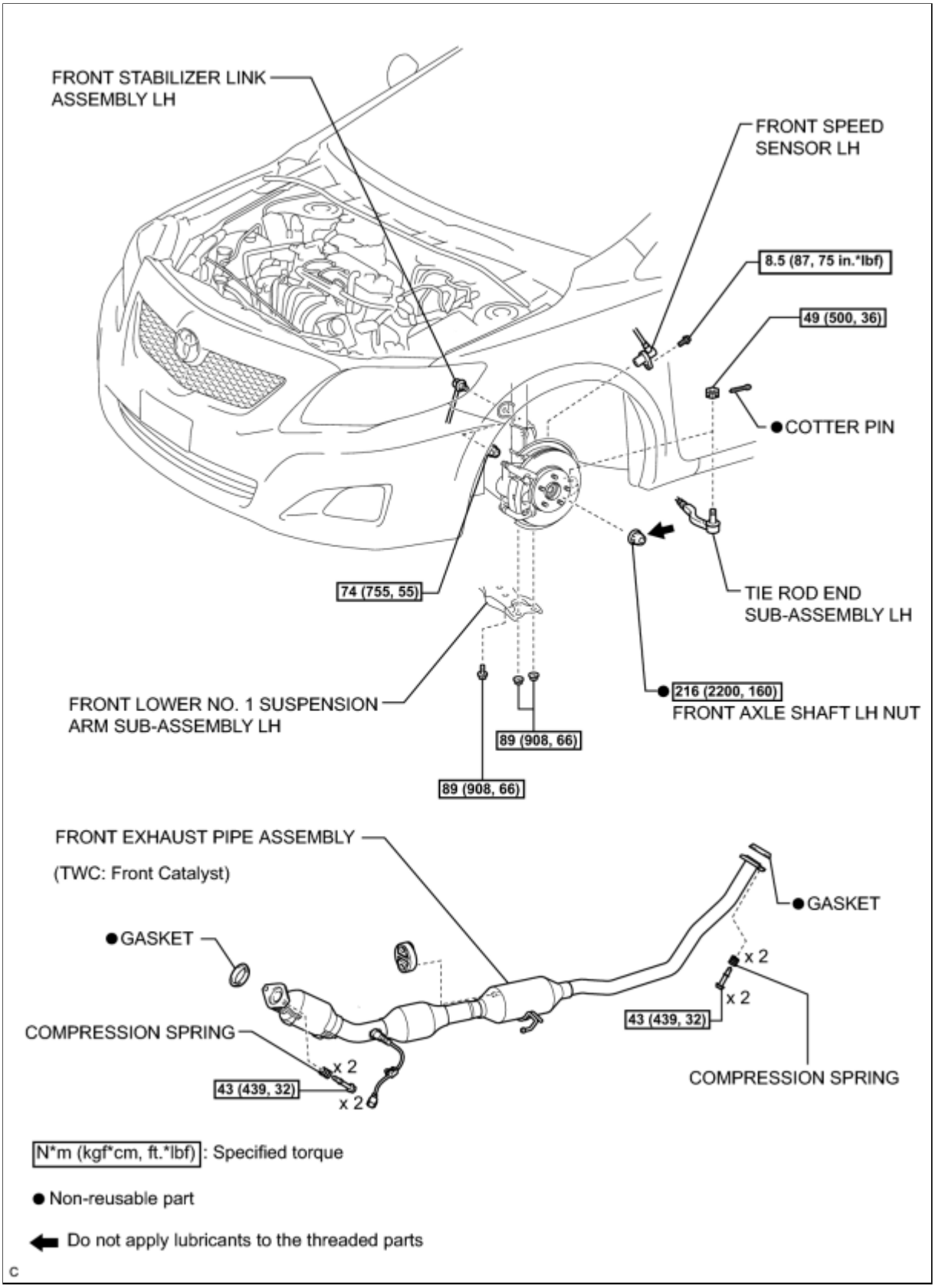

ILLUSTRATION

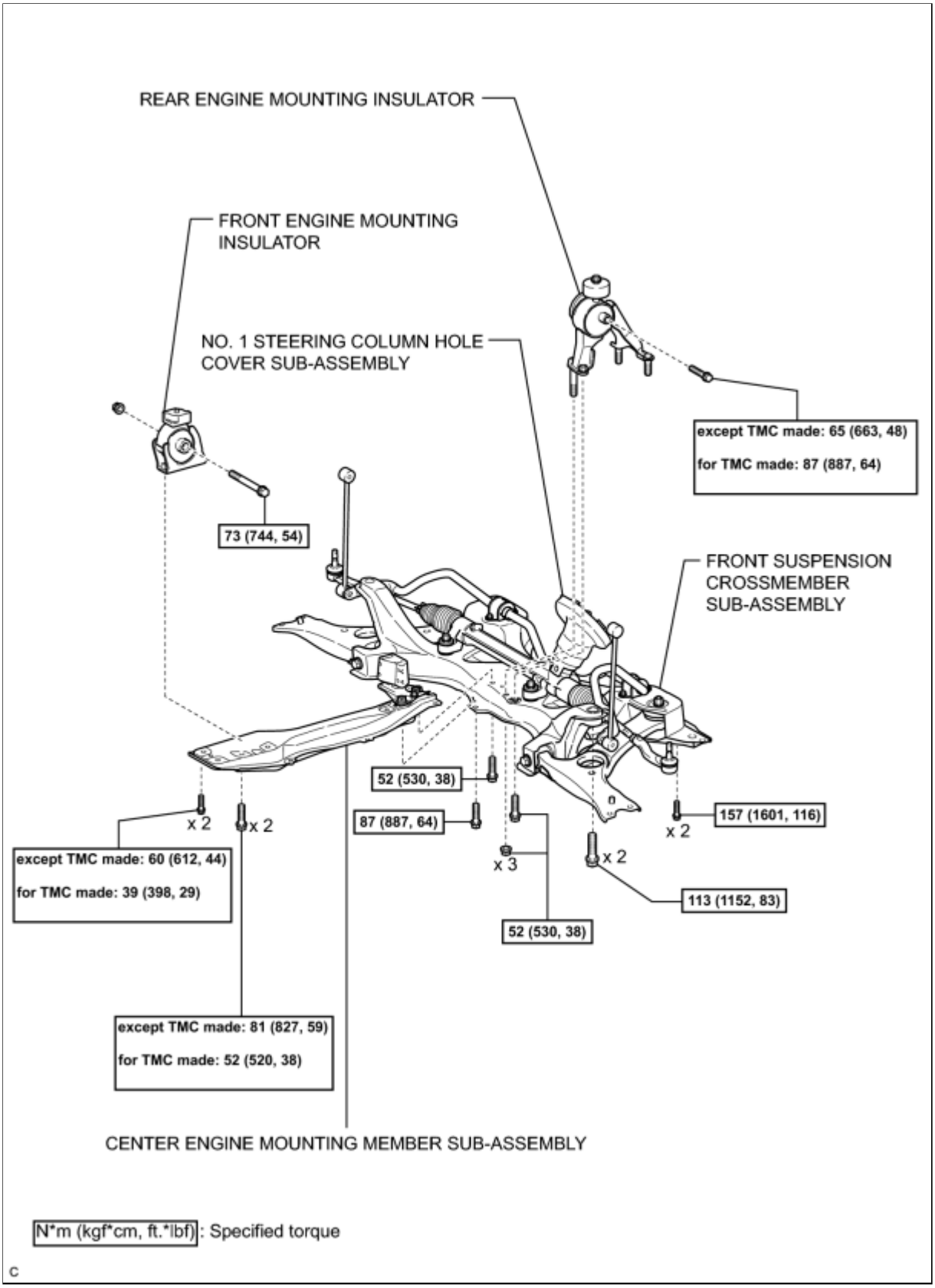

ILLUSTRATION

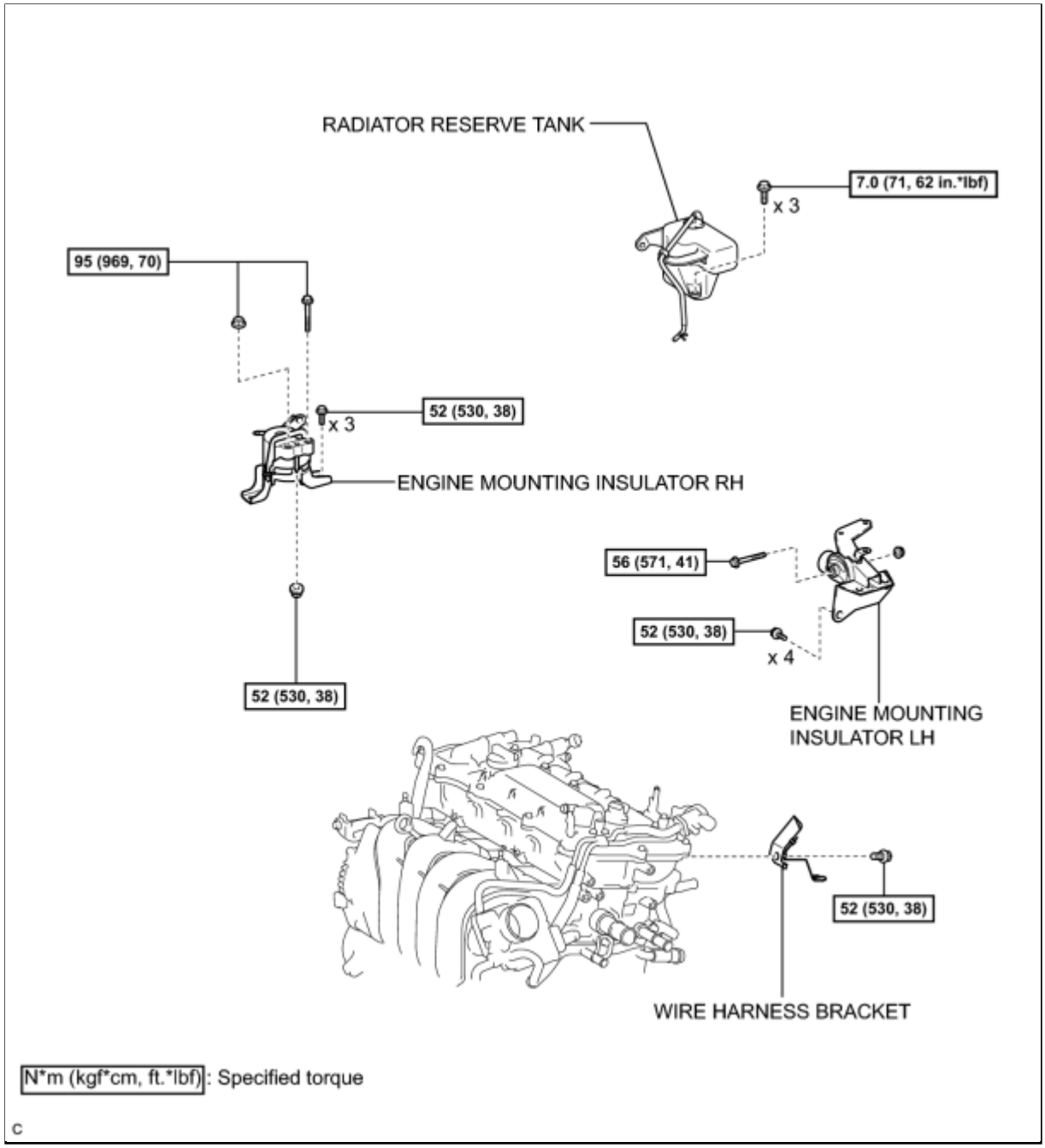

ILLUSTRATION

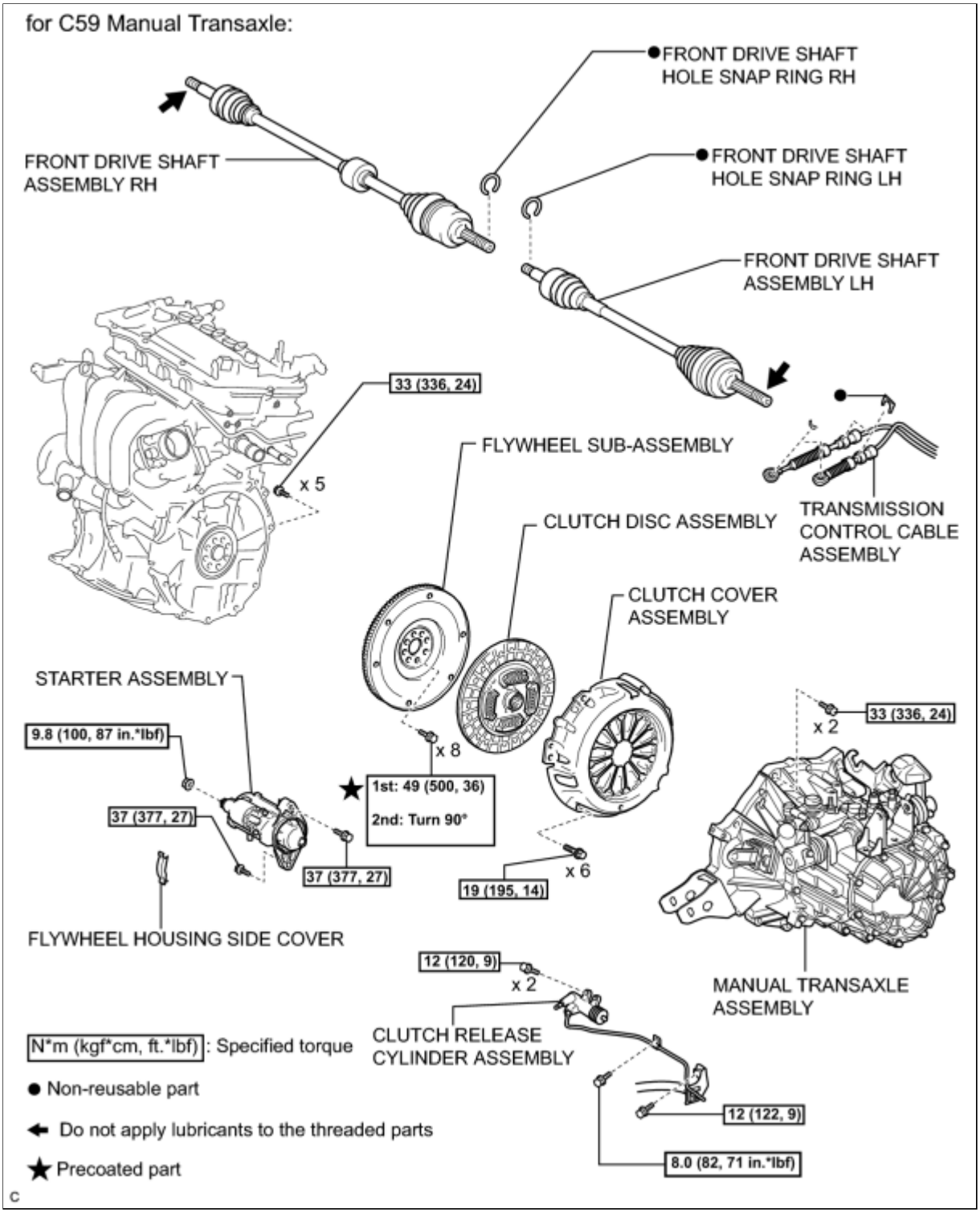

ILLUSTRATION

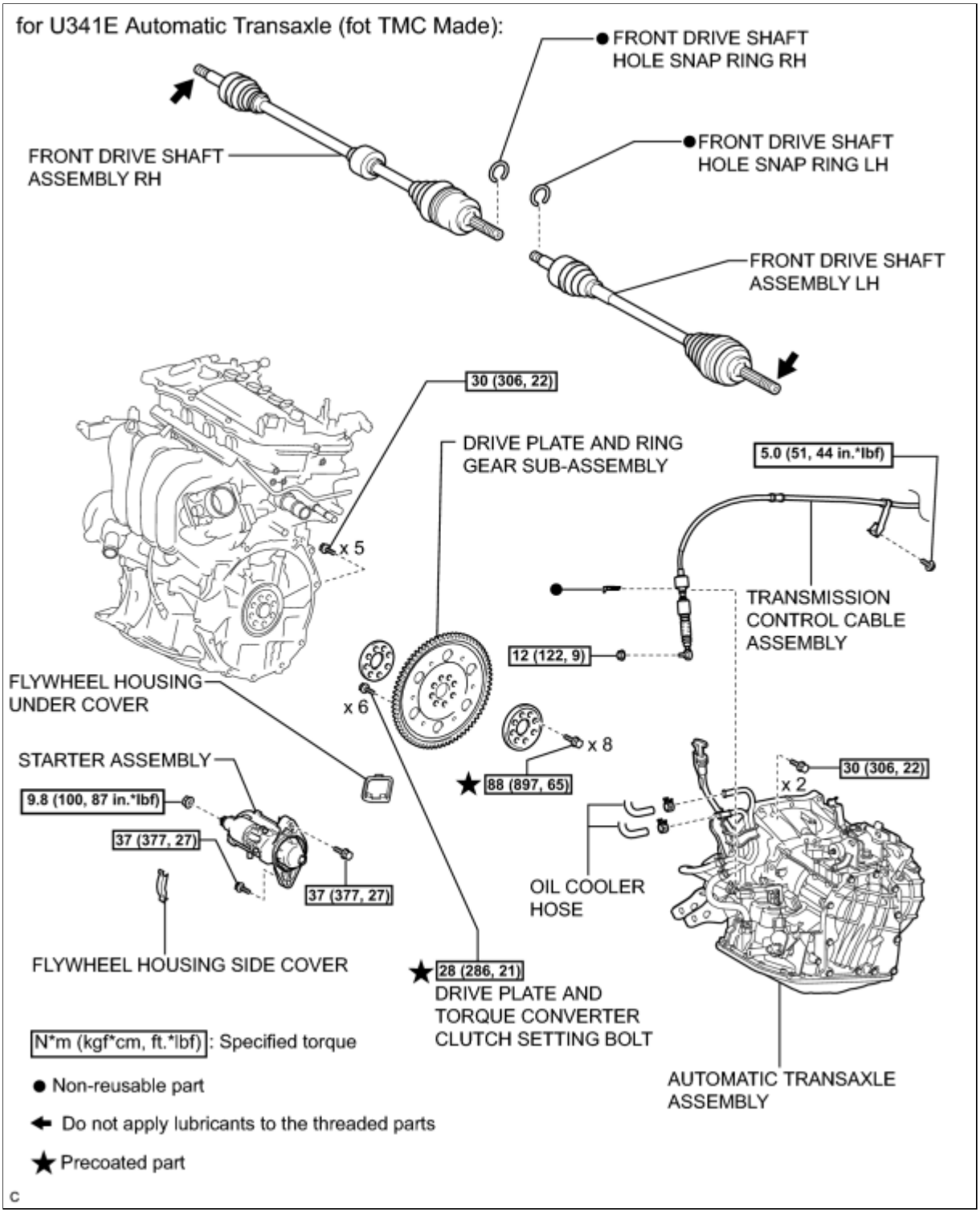

ILLUSTRATION

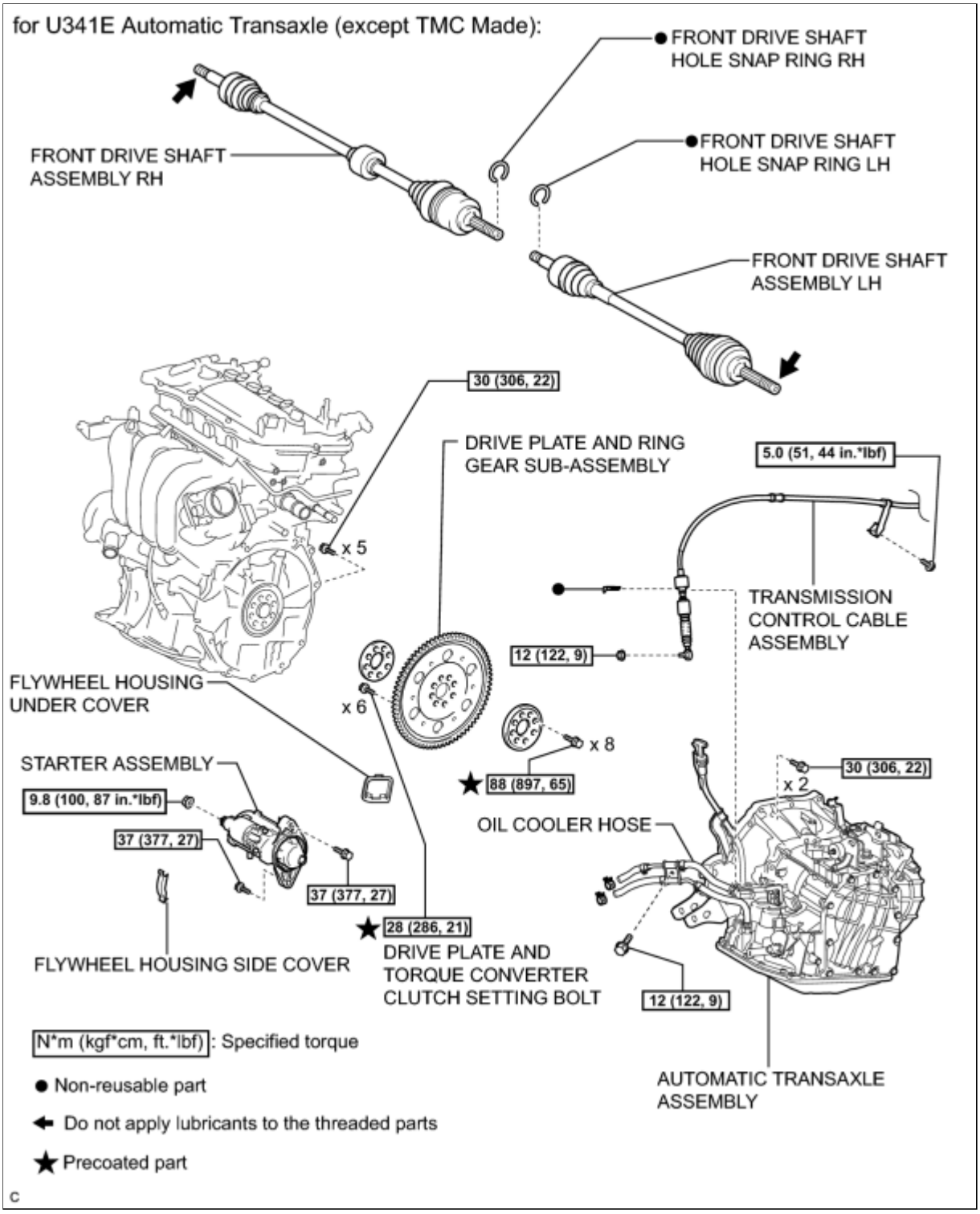
for U341E Automatic Transaxle (except TMC Made):
FRONT DRIVE SHAFT HOLE SNAP RING RH
FRONT DRIVE SHAFT ASSEMBLY RH
FRONT DRIVE SHAFT HOLE SNAP RING LH
FRONT DRIVE SHAFT ASSEMBLY LH
30 (306, 22)
x 5
DRIVE PLATE AND RING GEAR SUB-ASSEMBLY
5.0 (51, 44 in.*lbf)
TRANSMISSION CONTROL CABLE ASSEMBLY
12 (122, 9)
FLYWHEEL HOUSING UNDER COVER
x 6
x 8
88 (897, 65)
STARTER ASSEMBLY
9.8 (100, 87 in.*lbf)
37 (377, 27)
37 (377, 27)
30 (306, 22)
x 2
OIL COOLER HOSE
28 (286, 21)
FLYWHEEL HOUSING SIDE COVER
DRIVE PLATE AND TORQUE CONVERTER CLUTCH SETTING BOLT
12 (122, 9)
AUTOMATIC TRANSAXLE ASSEMBLY
N*m (kgf*cm, ft.*lbf): Specified torque
Non-reusable part
Do not apply lubricants to the threaded parts
Precoated part
C

Last Modified: 3-10-2010	6.4 A	**From:** 200901
Model Year: 2010	**Model:** Corolla	**Doc ID:** RM000002WH6019X
Title: 2ZR-FE ENGINE MECHANICAL: ENGINE ASSEMBLY: REMOVAL (2010 Corolla)		

REMOVAL

1. DISCHARGE FUEL SYSTEM PRESSURE

HINT: INFO .

2. ALIGN FRONT WHEELS FACING STRAIGHT AHEAD

3. REMOVE FRONT WHEEL

4. REMOVE ENGINE UNDER COVER LH

5. REMOVE ENGINE UNDER COVER RH

6. DRAIN ENGINE COOLANT INFO

7. DRAIN ENGINE OIL INFO

8. DRAIN MANUAL TRANSAXLE OIL (for Manual Transaxle)

HINT: INFO **for C59.**

9. DRAIN AUTOMATIC TRANSAXLE FLUID (for Automatic Transaxle)

HINT: INFO **for U341E.**

10. REMOVE NO. 2 CYLINDER HEAD COVER

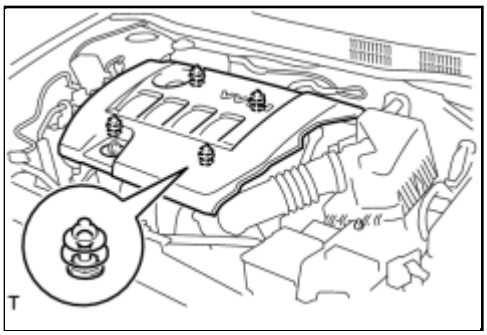

(a) Hold the rear of the cover and raise it to disengage the 2 clips on the rear of the cover. Continue to raise the cover to disengage the 2 clips on the front of the cover to remove the cover.

NOTICE:

Attempting to disengage both front and rear clips at the same time may cause the cover to break.

11. REMOVE AIR CLEANER CAP SUB-ASSEMBLY INFO

12. REMOVE AIR CLEANER CASE

(a) Separate the air cleaner filter element from the air cleaner.

(b) Disconnect the engine wire harness clamp from air cleaner case.

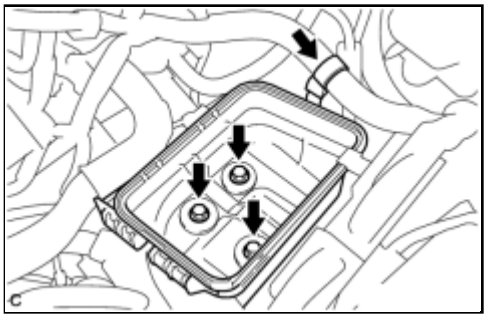

(c) Remove the 3 bolts and the air cleaner case.

13. REMOVE BATTERY

(a) Disconnect the battery cables.

(b) Remove the bolt and loosen the nut.

(c) Remove the battery.

14. REMOVE BATTERY CARRIER

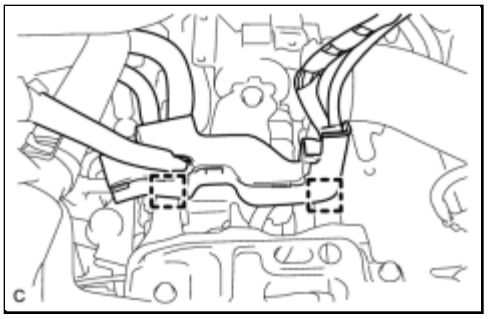

(a) Separate the 2 wire harness clamps from the battery carrier.

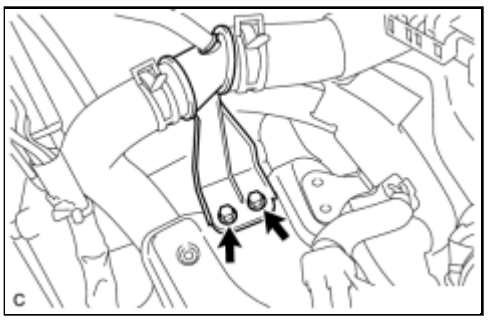

(b) Remove the 2 bolts.

(c) Separate the radiator pipe from the battery carrier.

(d) Remove the 4 bolts and battery carrier.

15. DISCONNECT NO. 1 RADIATOR HOSE

(a) Disengage the clamp*1.

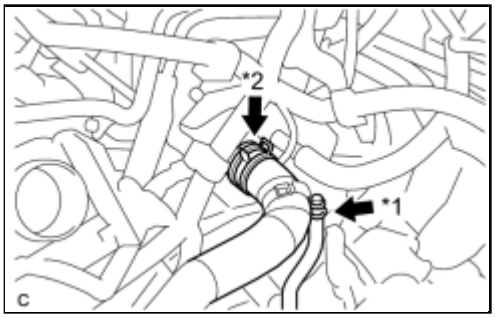

(b) Disconnect the No. 1 radiator hose from the cylinder head with the clamp*2.

16. DISCONNECT NO. 2 RADIATOR HOSE

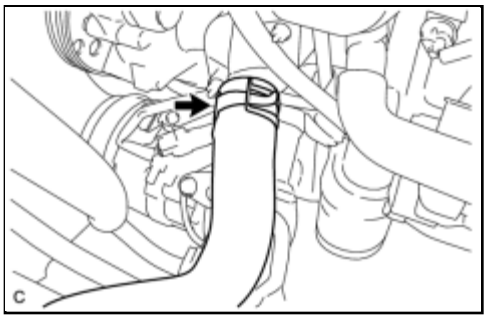

(a) Disconnect the No. 2 radiator hose from the water inlet hose.

17. DISCONNECT TRANSMISSION CONTROL CABLE ASSEMBLY (for Manual Transaxle)

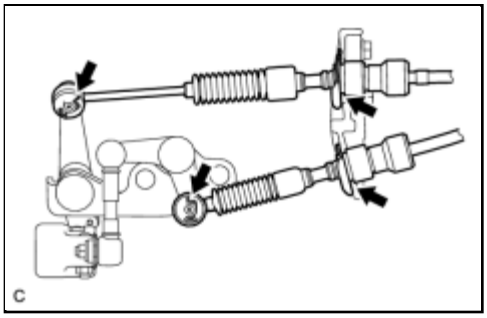

(a) Remove the 2 clips and disconnect the 2 cables from the transaxle.

(b) Remove the 2 clips and disconnect the 2 cables from the control cable bracket.

18. DISCONNECT TRANSMISSION CONTROL CABLE ASSEMBLY (for Automatic Transaxle)

(a) Disconnect the control cable from the control cable support.

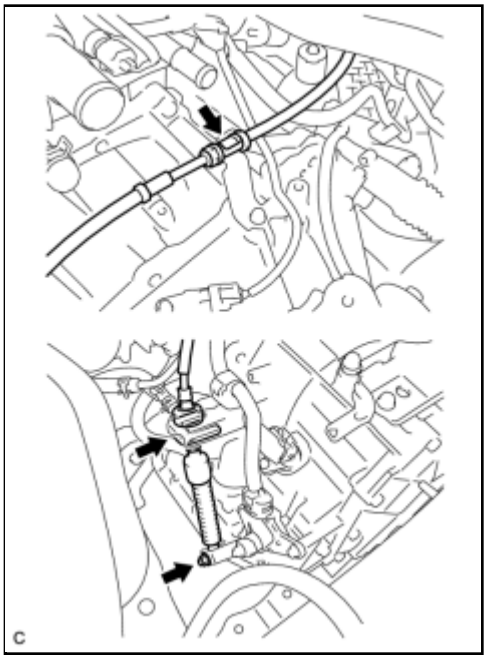

(b) Remove the nut and disconnect the control cable from the control shaft lever.

(c) Remove the clip and disconnect the control cable from the control cable bracket.

(d) Remove the bolt and disconnect the clamp of the control cable.

19. DISCONNECT FUEL VAPOR FEED HOSE ASSEMBLY

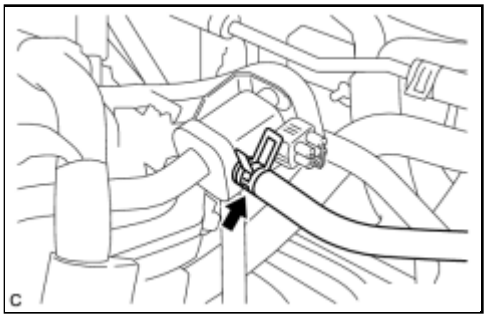

(a) Disconnect the fuel vapor feed hose.

20. DISCONNECT UNION TO CONNECTOR TUBE HOSE

(a) Disconnect the union to connector tube hose.

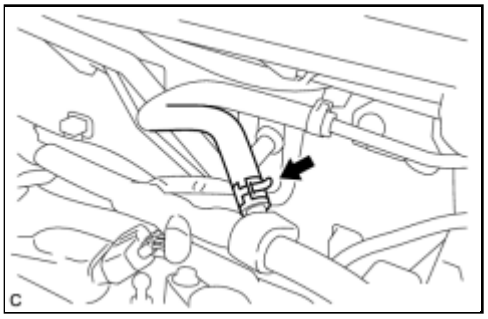

21. DISCONNECT OIL COOLER HOSE (for Automatic Transaxle)

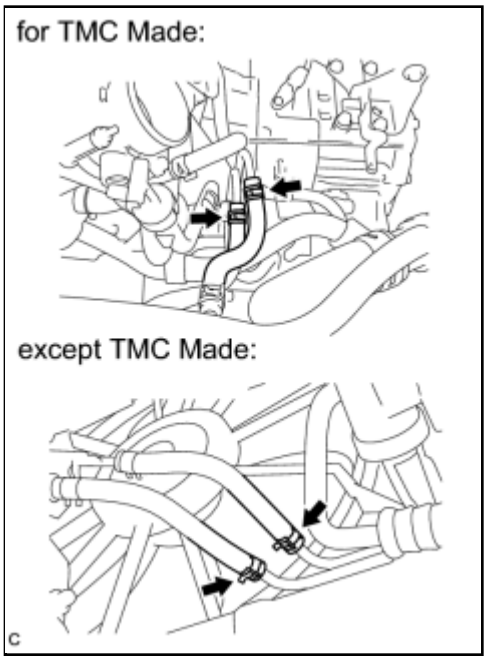

(a) Disconnect the 2 oil cooler hoses from the oil cooler tube.

22. DISCONNECT OUTLET HEATER WATER HOSE

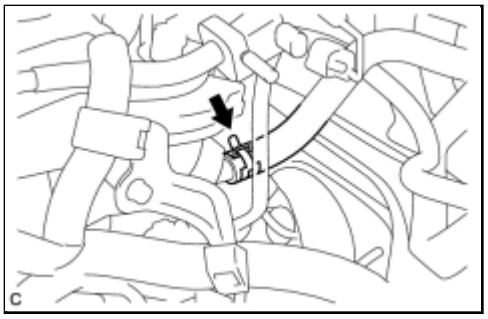

(a) Disconnect the outlet heater water hose from the engine.

23. DISCONNECT INLET HEATER WATER HOSE

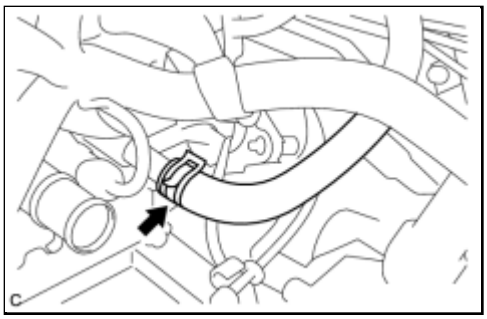

(a) Disconnect the inlet heater water hose from the engine.

24. DISCONNECT FUEL TUBE SUB-ASSEMBLY

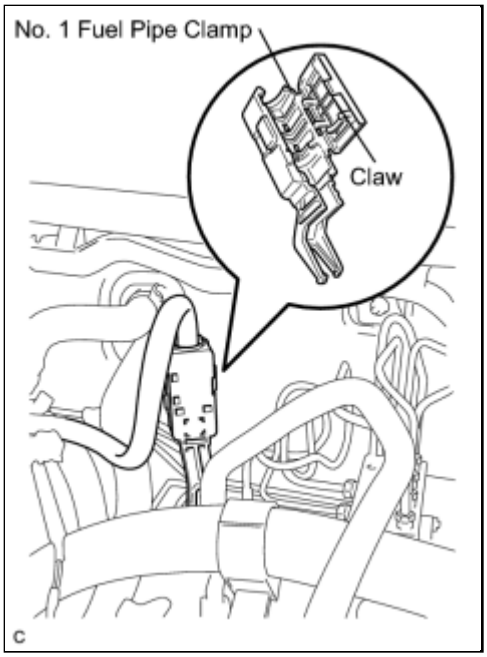

(a) Release the claw and remove the No. 1 fuel pipe clamp.

(b) Pinch the retainer as illustrated, then pull the fuel tube connector out of the pipe.

25. REMOVE V-RIBBED BELT INFO

26. REMOVE GENERATOR ASSEMBLY

27. REMOVE FAN BELT ADJUSTING BAR

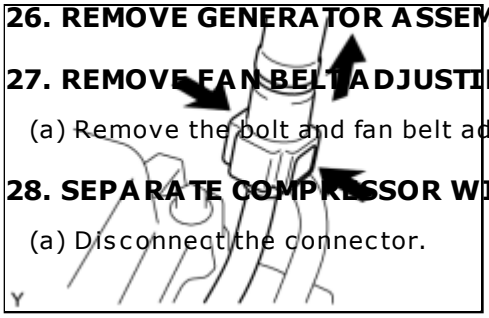

(a) Remove the bolt and fan belt adjusting bar.

28. SEPARATE COMPRESSOR WITH PULLEY ASSEMBLY (w/ Air Conditioning System)

(a) Disconnect the connector.

(b) Remove the 2 bolts and 2 nuts.

NOTICE INFO

- Remove any dirt and foreign matter from the fuel tube connector before performing this work.
- Do not allow any scratches or foreign matter on the parts when disconnecting, as the fuel tube connector has the O-rings that seal the pipe.
- Perform this work by hand. Do not use any tools.
- Do not forcibly bend, kink or twist the nylon tube.
- Protect the disconnected parts by covering them with vinyl bags after disconnecting the fuel tube.
- If the fuel tube connector and pipe are stuck, push and pull to release them.

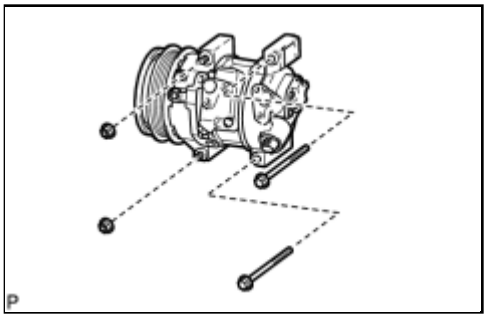

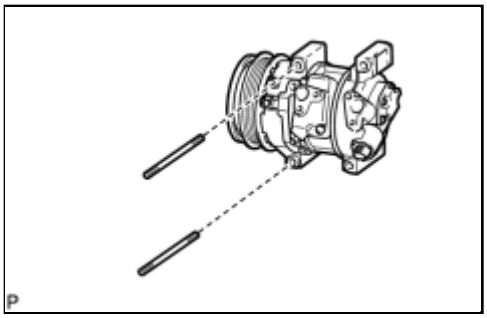

(c) Using a "TORX" socket wrench (E8), remove the 2 stud bolts and compressor with pulley assembly.

HINT:

Secure the compressor and hoses off to the side instead of discharging the A/C system.

29. SEPARATE CLUTCH RELEASE CYLINDER ASSEMBLY (for Manual Transaxle)

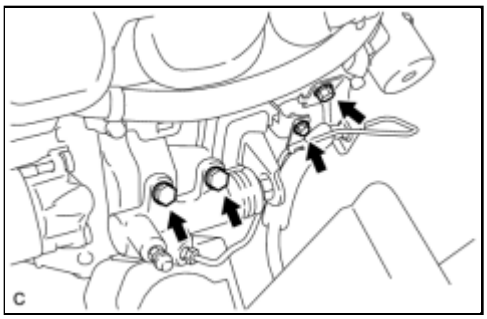

(a) Remove the 4 bolts and clutch tube bracket, and separate the clutch release cylinder assembly.

30. DISCONNECT WIRE HARNESS

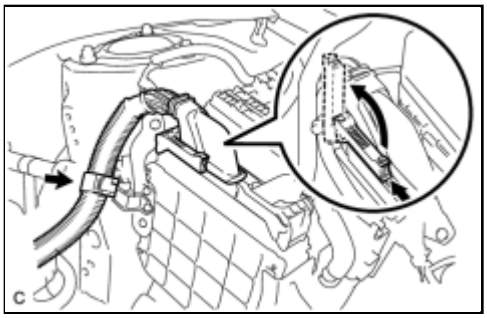

(a) Pull up the lever to disconnect the ECM connector and release the clamp.

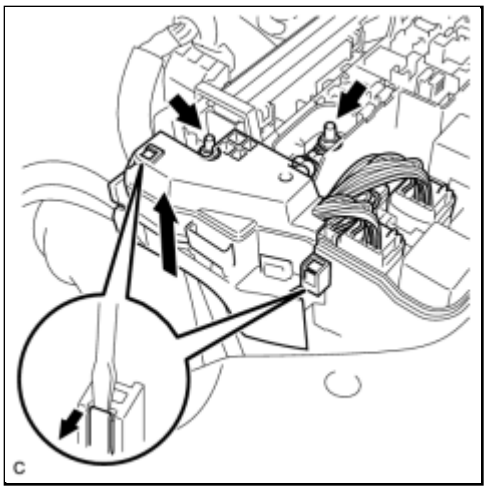

(b) Remove the 2 nuts.

(c) Remove the 3 connectors and 2 clamps from the engine room junction block and disconnect the wire harness.

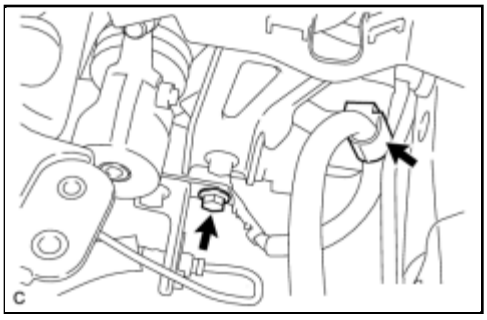

(d) Remove the bolt and clamp (for Manual Transaxle).

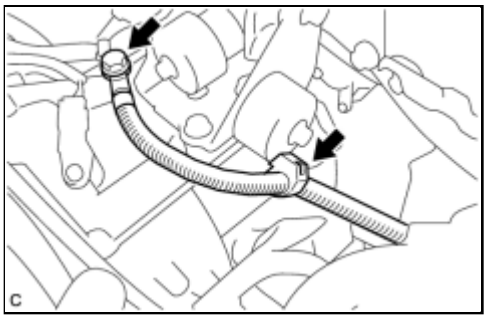

(e) Remove the bolt and clamp (for Automatic Transaxle).

(f) Disconnect all the wire harnesses and connectors.

Make sure that no wire harness is connected between the body and engine.

31. SECURE STEERING WHEEL INFO

32. REMOVE COLUMN HOLE COVER SILENCER SHEET INFO

33. SEPARATE NO. 2 STEERING INTERMEDIATE SHAFT ASSEMBLY INFO

34. DISCONNECT NO. 1 STEERING COLUMN HOLE COVER SUB-ASSEMBLY INFO

35. REMOVE FRONT EXHAUST PIPE ASSEMBLY INFO

36. REMOVE FRONT AXLE SHAFT LH NUT INFO

37. REMOVE FRONT AXLE SHAFT RH NUT

HINT:

Perform the same procedure for the LH side.

38. DISCONNECT FRONT SPEED SENSOR LH INFO

39. DISCONNECT FRONT SPEED SENSOR RH

HINT:

Perform the same procedure for the LH side.

40. SEPARATE TIE ROD END SUB-ASSEMBLY LH INFO

41. SEPARATE TIE ROD END SUB-ASSEMBLY RH

HINT:

Perform the same procedure for the LH side.

42. SEPARATE FRONT STABILIZER LINK ASSEMBLY LH INFO

43. SEPARATE FRONT STABILIZER LINK ASSEMBLY RH

HINT:

Perform the same procedure for the LH side.

44. SEPARATE FRONT LOWER NO. 1 SUSPENSION ARM SUB-ASSEMBLY LH INFO

45. SEPARATE FRONT LOWER NO. 1 SUSPENSION ARM SUB-ASSEMBLY RH

HINT:

Perform the same procedure for the LH side.

46. SEPARATE STEERING KNUCKLE WITH AXLE HUB LH

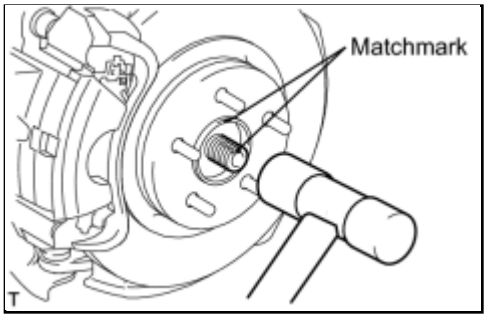

(a) Put matchmarks on the drive shaft and axle hub.

NOTICE:

Do not punch the marks.

(b) Using a plastic-faced hammer, disconnect the front axle assembly LH.

NOTICE:

- Be careful not to damage the boot and speed sensor rotor.
- Do not excessively push out the drive shaft from the axle assembly.

47. SEPARATE STEERING KNUCKLE WITH AXLE HUB RH

HINT:

Perform the same procedure for the LH side.

48. REMOVE FRONT DRIVE SHAFT ASSEMBLY LH INFO

49. REMOVE FRONT DRIVE SHAFT ASSEMBLY RH INFO

50. REMOVE FRONT DRIVE SHAFT HOLE SNAP RING LH INFO

51. REMOVE FRONT DRIVE SHAFT HOLE SNAP RING RH INFO

52. REMOVE FLYWHEEL HOUSING UNDER COVER (for Automatic Transaxle) INFO

53. REMOVE DRIVE PLATE AND TORQUE CONVERTER CLUTCH SETTING BOLT (for Automatic Transaxle) INFO

54. REMOVE FRONT SUSPENSION CROSSMEMBER SUB-ASSEMBLY INFO

55. REMOVE CENTER ENGINE MOUNTING MEMBER SUB-ASSEMBLY INFO

56. REMOVE ENGINE ASSEMBLY WITH TRANSAXLE

(a) Set the engine lifter.

NOTICE:

Place the engine on wooden blocks or equivalent so that the engine is level.

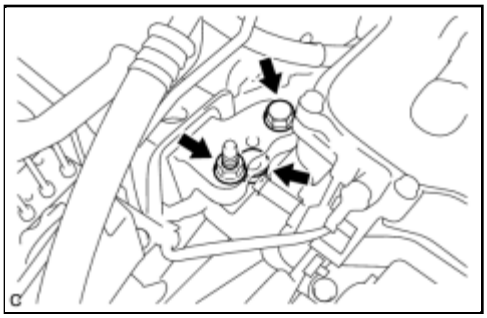

(b) Remove the bolt and 2 nuts, and separate the engine mounting insulator RH.

(c) Remove the through bolt and nut, and separate the engine mounting insulator LH.

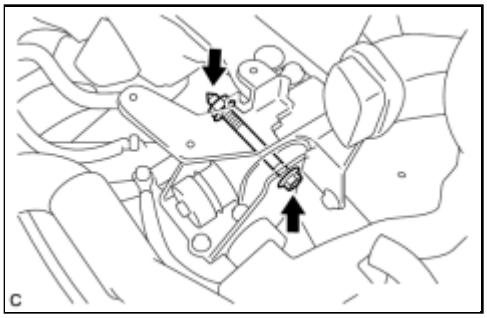

(d) Carefully remove the engine with transaxle from the vehicle.

57. REMOVE FRONT ENGINE MOUNTING INSULATOR

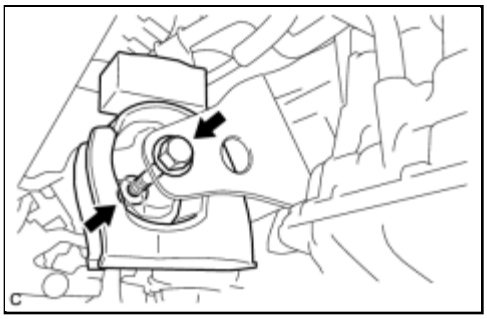

(a) Remove the bolt, nut and front engine mounting insulator.

58. REMOVE REAR ENGINE MOUNTING INSULATOR

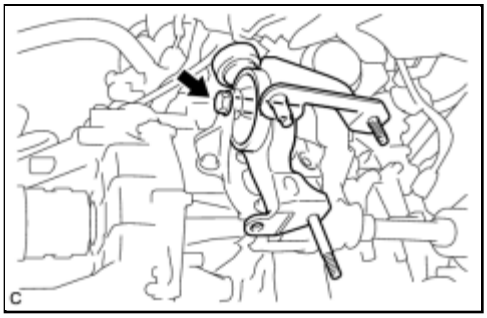

(a) Remove the through bolt and rear engine mounting insulator.

59. REMOVE ENGINE MOUNTING INSULATOR LH

(a) Remove the 4 bolts and engine mounting insulator LH.

HINT:

Perform this procedure only when replacement of the engine mounting insulator is necessary.

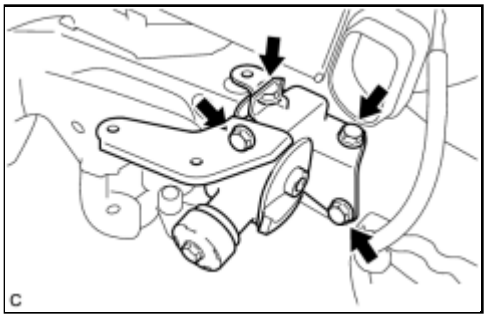

60. REMOVE ENGINE MOUNTING INSULATOR RH

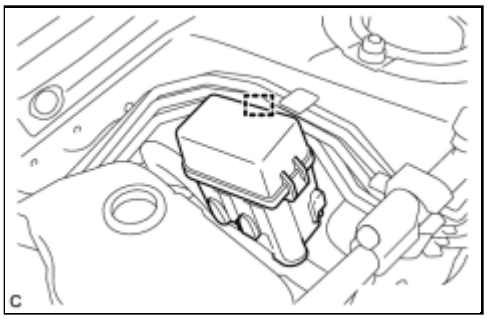

(a) Disconnect the clamp, and release the relay block assembly.

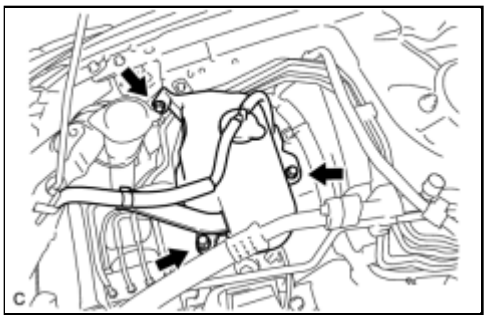

(b) Remove the 3 bolts and radiator reserve tank.

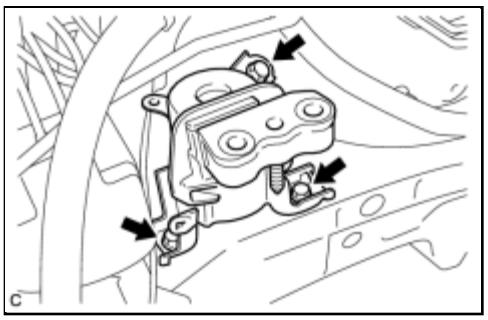

(c) Remove the 3 bolts and engine mounting insulator RH.

HINT:

Perform this procedure only when replacement of the engine mounting insulator is necessary.

61. INSTALL ENGINE HANGER

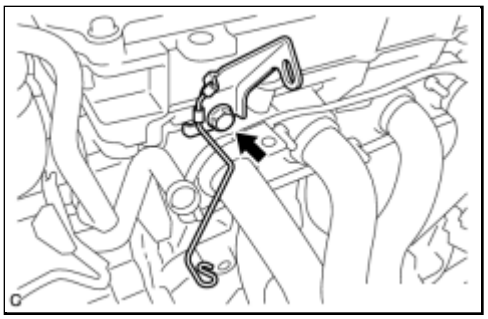

(a) Remove the bolt and wire harness bracket.

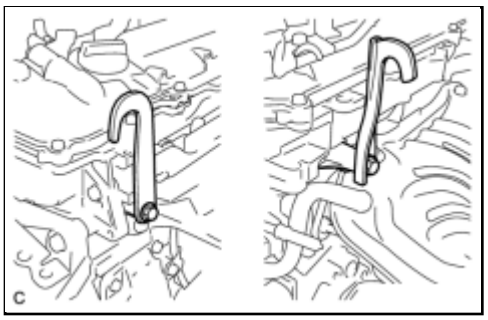

(b) Install the 2 engine hangers with the 2 bolts.

Torque: 43 N·m (439 kgf·cm, 32ft·lbf)

PART NAME	PART NO.
No. 1 engine hanger	12281-37021
No. 2 engine hanger	12282-37011
Bolt	91552-81050

62. REMOVE FLYWHEEL HOUSING SIDE COVER

63. REMOVE STARTER ASSEMBLY INFO

64. REMOVE MANUAL TRANSAXLE ASSEMBLY (for Manual Transaxle)

HINT: INFO **for C59.**

65. REMOVE AUTOMATIC TRANSAXLE ASSEMBLY (for Automatic Transaxle)

HINT: INFO **for U341E.**

66. REMOVE CLUTCH COVER ASSEMBLY (for Manual Transaxle) INFO

67. REMOVE CLUTCH DISC ASSEMBLY (for Manual Transaxle) INFO

68. REMOVE FLYWHEEL SUB-ASSEMBLY (for Manual Transaxle) INFO

69. REMOVE DRIVE PLATE AND RING GEAR SUB-ASSEMBLY (for Automatic Transaxle) INFO

70. REMOVE ENGINE WIRE

Last Modified: 3-10-2010	6.4 A	**From:** 200901
Model Year: 2010	**Model:** Corolla	**Doc ID:** RM000002WH4019X
Title: 2ZR-FE ENGINE MECHANICAL: ENGINE ASSEMBLY: INSTALLATION (2010 Corolla)		

INSTALLATION

1. INSTALL ENGINE WIRE

2. INSTALL FLYWHEEL SUB-ASSEMBLY (for Manual Transaxle) INFO

3. INSTALL DRIVE PLATE AND RING GEAR SUB-ASSEMBLY (for Automatic Transaxle) INFO

4. INSTALL CLUTCH DISC ASSEMBLY (for Manual Transaxle) INFO

5. INSTALL CLUTCH COVER ASSEMBLY (for Manual Transaxle) INFO

6. INSPECT AND ADJUST CLUTCH COVER ASSEMBLY (for Manual Transaxle) INFO

7. INSTALL MANUAL TRANSAXLE ASSEMBLY (for Manual Transaxle)

HINT: INFO **for C59.**

8. INSTALL AUTOMATIC TRANSAXLE ASSEMBLY (for Automatic Transaxle)

HINT: INFO **for U341E.**

9. INSTALL STARTER ASSEMBLY INFO

10. INSTALL FLYWHEEL HOUSING SIDE COVER

11. INSTALL FRONT ENGINE MOUNTING INSULATOR

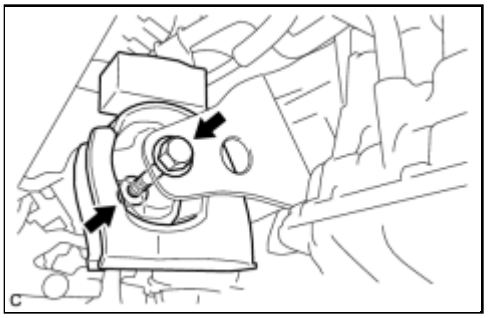

(a) Install the front engine mounting insulator with the nut and bolt.

Torque: 73 N·m (744 kgf·cm, 54ft·lbf)

12. INSTALL REAR ENGINE MOUNTING INSULATOR

(a) Install the rear engine mounting insulator to the engine mounting bracket with the through bolt.

except TMC made - Torque: 65 N·m (663 kgf·cm, 48ft·lbf)
for TMC made - Torque: 87 N·m (887 kgf·cm, 64ft·lbf)



13. INSTALL ENGINE MOUNTING INSULATOR LH

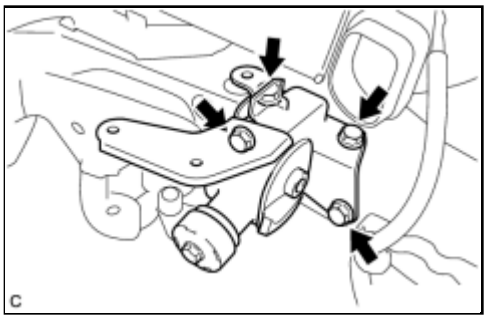

(a) Temporarily install the engine mounting insulator LH with the 4 bolts.

(b) Tighten the 4 bolts.

Torque: 52 N·m (530 kgf·cm, 38ft·lbf)

HINT:

Perform this procedure only when replacement of the engine mounting insulator is necessary.

14. INSTALL ENGINE MOUNTING INSULATOR RH

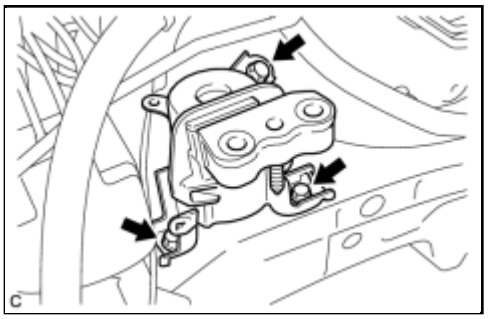

(a) Install the engine mounting insulator RH with the 3 bolts.

HINT:

Perform this procedure only when replacement of the engine mounting insulator is necessary.

Torque: 52 N·m (530 kgf·cm, 38ft·lbf)

(b) Install the radiator reserve tank with the 3 bolts.

Torque: 7.0 N·m (71 kgf·cm, 62in·lbf)

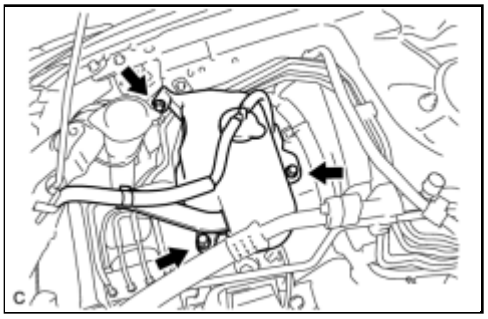

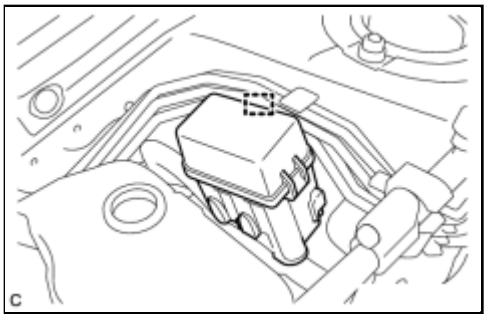

(c) Install the relay block assembly.

15. INSTALL ENGINE ASSEMBLY WITH TRANSAXLE

(a) Set the engine assembly with transaxle and front suspension crossmember on the engine lifter.

(b) Operate the engine lifter and lift the engine assembly with transaxle and front suspension crossmember to the position where the engine mounting insulators RH and LH can be installed.

CAUTION:

Do not raise the engine more than necessary. If the engine is raised excessively, the vehicle may also be lifted up.

NOTICE:

- Make sure that the engine is clear of all wiring and hoses.
- While raising the engine into the vehicle, do not allow it to contact the vehicle.

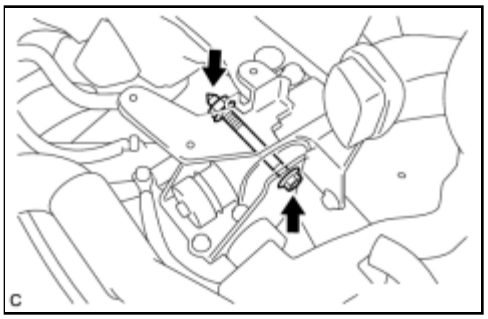

(c) Install the engine mounting insulator LH with the through bolt and nut.

Torque: 56 N·m (571 kgf·cm, 41ft·lbf)

(d) Install the engine mounting insulator RH with the bolt and 2 nuts.

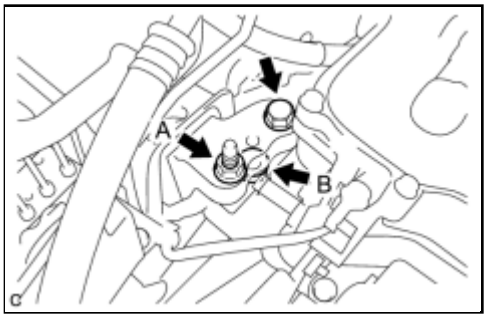

Nut A - Torque: 95 N·m (969 kgf·cm, 70ft·lbf)
Nut B - Torque: 52 N·m (530 kgf·cm, 38ft·lbf)
Bolt - Torque: 95 N·m (969 kgf·cm, 70ft·lbf)

16. TEMPORARILY INSTALL CENTER ENGINE MOUNTING MEMBER SUB-ASSEMBLY INFO

17. INSTALL FRONT SUSPENSION CROSSMEMBER SUB-ASSEMBLY INFO

18. FULLY TIGHTEN CENTER ENGINE MOUNTING MEMBER SUB-ASSEMBLY INFO

19. REMOVE ENGINE HANGER

(a) Remove the 2 bolts and 2 engine hangers.

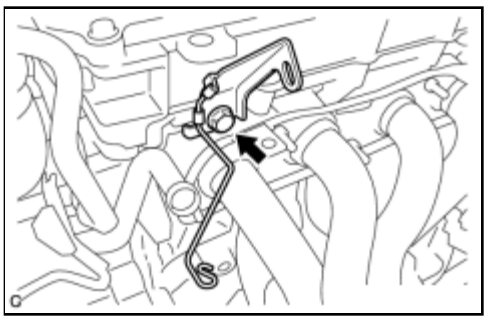

(b) Install the wire harness bracket with the bolt.

Torque: 60 N·m (612 kgf·cm, 44ft·lbf)

20. INSTALL DRIVE PLATE AND TORQUE CONVERTER CLUTCH SETTING BOLT (for Automatic Transaxle) INFO

21. INSTALL FLYWHEEL HOUSING UNDER COVER (for Automatic Transaxle) INFO

22. INSTALL FRONT DRIVE SHAFT HOLE SNAP RING LH INFO

23. INSTALL FRONT DRIVE SHAFT HOLE SNAP RING RH INFO

24. INSTALL FRONT DRIVE SHAFT ASSEMBLY LH INFO

25. INSTALL FRONT DRIVE SHAFT ASSEMBLY RH INFO

26. INSTALL STEERING KNUCKLE WITH AXLE HUB LH

(a) Align the matchmarks and connect the front drive shaft assembly to the front axle assembly LH.

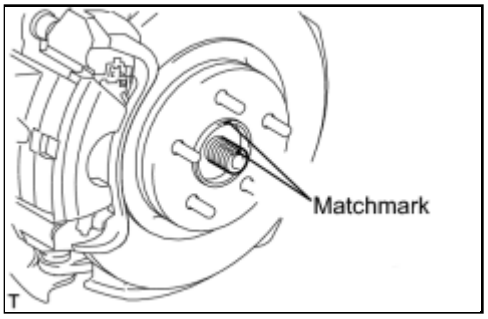

27. INSTALL STEERING KNUCKLE WITH AXLE HUB RH

HINT:

Perform the same procedure for the LH side.

28. INSTALL FRONT LOWER NO. 1 SUSPENSION ARM SUB-ASSEMBLY LH INFO

29. INSTALL FRONT LOWER NO. 1 SUSPENSION ARM SUB-ASSEMBLY RH

HINT:

Perform the same procedure for the LH side.

30. INSTALL FRONT STABILIZER LINK ASSEMBLY LH INFO

31. INSTALL FRONT STABILIZER LINK ASSEMBLY RH

HINT:

Perform the same procedure for the LH side.

32. CONNECT TIE ROD END SUB-ASSEMBLY LH INFO

33. CONNECT TIE ROD END SUB-ASSEMBLY RH

HINT:

Perform the same procedure for the LH side.

34. INSTALL FRONT SPEED SENSOR LH INFO

35. INSTALL FRONT SPEED SENSOR RH

HINT:

Perform the same procedure for the LH side.

36. INSTALL FRONT AXLE SHAFT LH NUT INFO

37. INSTALL FRONT AXLE SHAFT RH NUT

HINT:

Perform the same procedure for the LH side.

38. INSTALL FRONT EXHAUST PIPE ASSEMBLY INFO

39. INSTALL NO. 1 STEERING COLUMN HOLE COVER SUB-ASSEMBLY INFO

40. INSTALL NO. 2 STEERING INTERMEDIATE SHAFT ASSEMBLY INFO

41. INSTALL COLUMN HOLE COVER SILENCER SHEET INFO

42. INSTALL WIRE HARNESS

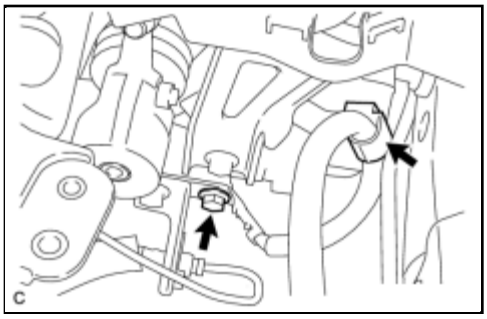

(a) Install the earth wire to the engine compartment with the bolt and clamp (for Manual Transaxle).

Torque: 13 N·m (130 kgf·cm, 10ft·lbf)

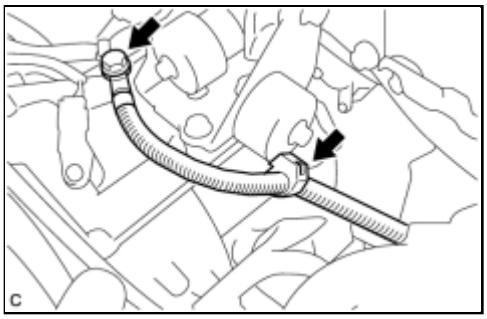

(b) Install the earth wire to the engine compartment with the bolt and clamp (for Automatic Transaxle).

Torque: 26 N·m (260 kgf·cm, 19ft·lbf)

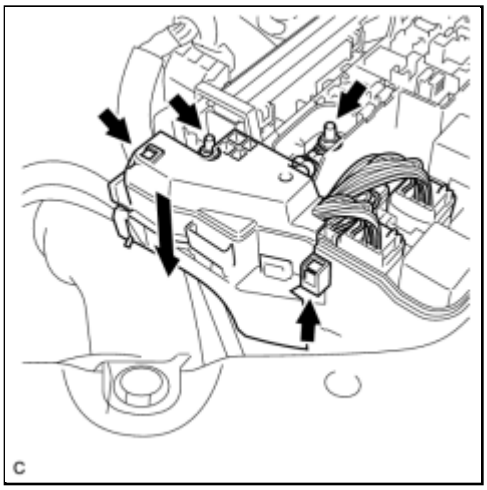

(c) Install the wire harness with the 2 nuts.

Torque: 8.4 N·m (85 kgf·cm, 74in·lbf)

(d) Connect the 3 connectors and 2 wire harness clamps to the engine room junction block.

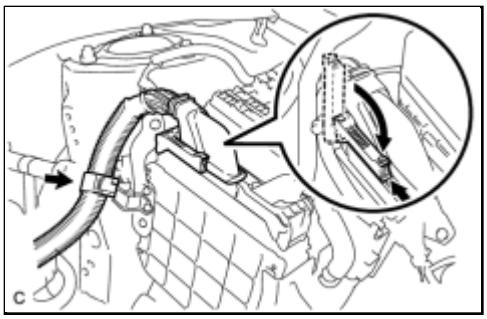

(e) Connect the connector to the ECU with the lock lever and connect the clamp.

43. INSTALL CLUTCH RELEASE CYLINDER ASSEMBLY (for Manual Transaxle)

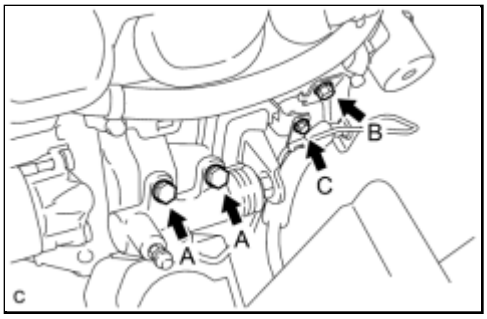

(a) Install the clutch release cylinder assembly with the 4 bolts and clutch tube bracket.

Bolt A - Torque: 12 N·m (120 kgf·cm, 9ft·lbf)
Bolt B - Torque: 12 N·m (122 kgf·cm, 9ft·lbf)
Bolt C - Torque: 8.0 N·m (82 kgf·cm, 71in·lbf)

44. INSTALL COMPRESSOR WITH PULLEY ASSEMBLY (w/ Air Conditioning System) INFO

45. INSTALL FAN BELT ADJUSTING BAR

(a) Install the bolt and fan belt adjusting bar.

Torque: 19 N·m (194 kgf·cm, 14ft·lbf)

46. INSTALL GENERATOR ASSEMBLY INFO

47. INSTALL V-RIBBED BELT INFO

48. ADJUST V-RIBBED BELT INFO

49. INSPECT V-RIBBED BELT INFO

50. CONNECT FUEL TUBE SUB-ASSEMBLY

(a) Connect the fuel tube connector and fuel pipe.

CAUTION:

Align the fuel tube connector with the pipe, then push the fuel tube connector in until the retainer makes a "click" sound. If the connection is tight, apply a small amount of engine oil to the tip of the pipe. After connecting, pull on the pipe and connector to make sure that they are securely connected.

(b) Engage the claw and install the No. 1 fuel pipe clamp.

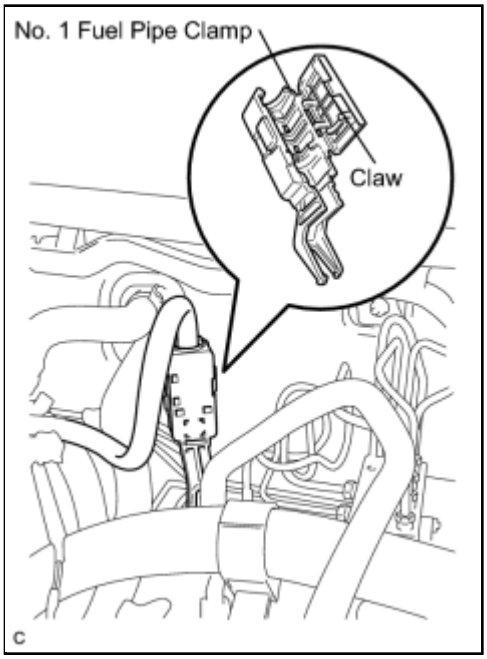

51. CONNECT INLET HEATER WATER HOSE

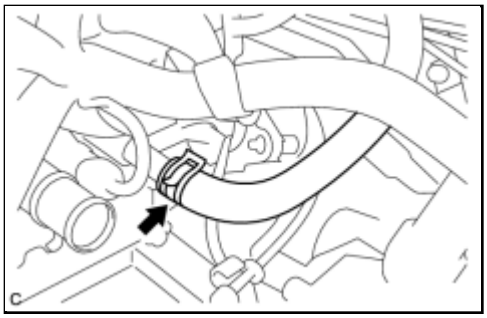

(a) Connect the inlet heater water hose with the clamp.

52. CONNECT OUTLET HEATER WATER HOSE

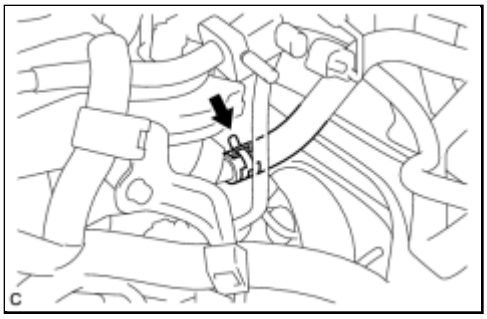

(a) Connect the outlet heater water hose with the clamp.

53. CONNECT OIL COOLER HOSE (for Automatic Transaxle)

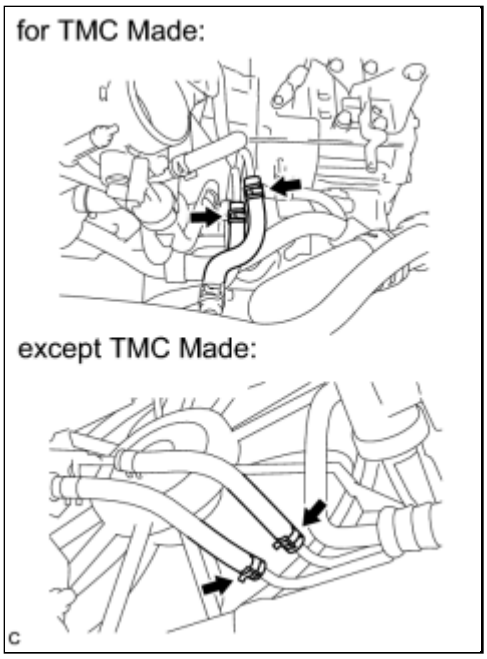

(a) Connect the 2 oil cooler hoses with the clamps.

54. CONNECT UNION TO CONNECTOR TUBE HOSE

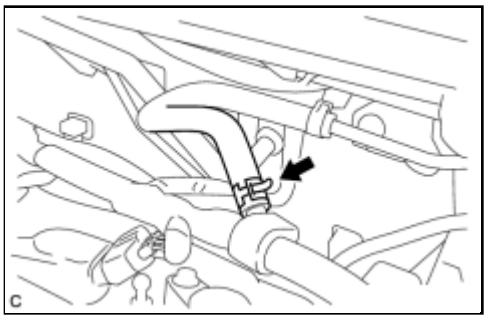

(a) Connect the union to connector tube hose.

55. CONNECT FUEL VAPOR FEED HOSE ASSEMBLY

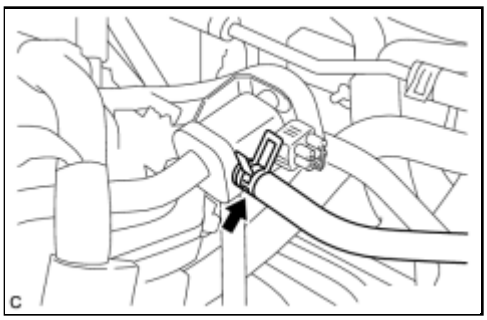

(a) Connect the fuel vapor feed hose assembly.

56. INSTALL TRANSMISSION CONTROL CABLE ASSEMBLY (for Manual Transaxle)

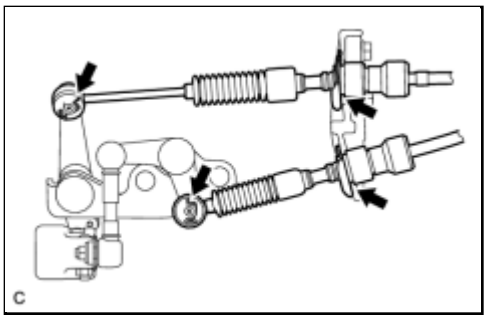

(a) Install the transmission control cable to the control cable bracket with 2 new clips.

(b) Install the transmission control cable to the transaxle with the 2 clips.

57. INSTALL TRANSMISSION CONTROL CABLE ASSEMBLY (for Automatic Transaxle)

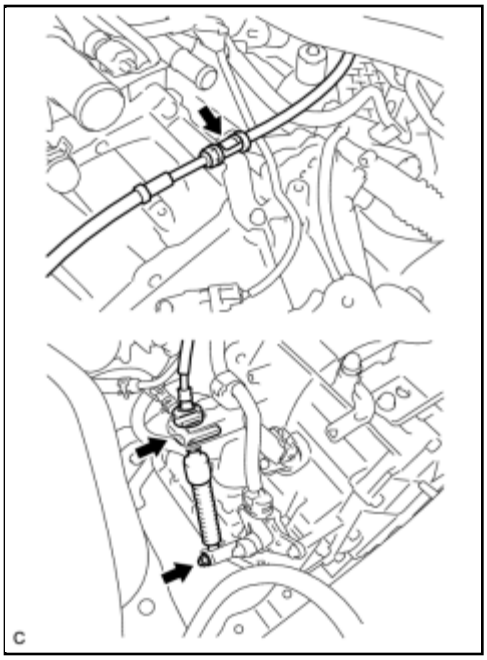

(a) Secure the control cable onto the control cable bracket with a new clip.

(b) Connect the control cable onto the control shaft lever with the nut.

Torque: 12 N·m (122 kgf·cm, 9ft·lbf)

(c) Connect the control cable to the cable support.

(d) Connect the clamp of the control cable with the bolt.

Torque: 5.0 N·m (51 kgf·cm, 44in·lbf)

58. CONNECT NO. 2 RADIATOR HOSE

(a) Connect the No. 2 radiator hose with the clamp.

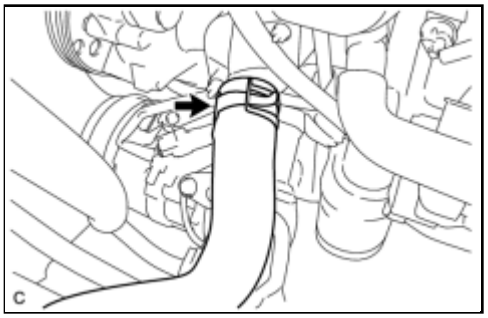

59. CONNECT NO. 1 RADIATOR HOSE

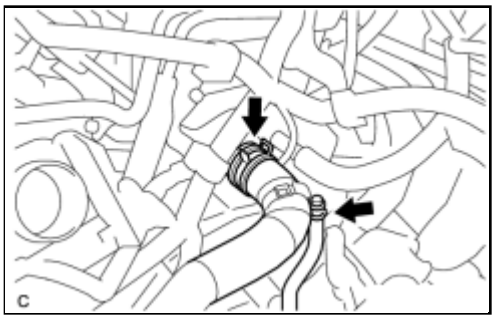

(a) Connect the No. 1 radiator hose with the clamp.

(b) Connect the clamp.

60. INSTALL BATTERY CARRIER

(a) Install the battery carrier with the 4 bolts.

Torque: 13 N·m (130 kgf·cm, 9ft·lbf)

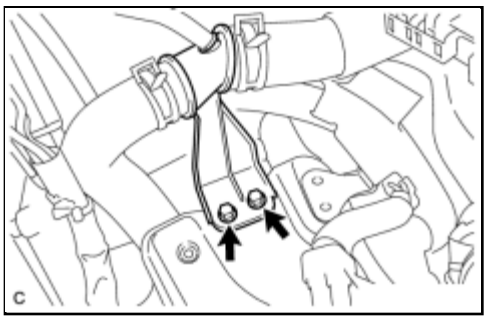

(b) Connect the radiator pipe with the 2 bolts.

Torque: 8.8 N·m (90 kgf·cm, 78in·lbf)

(c) Connect the 2 wire harness clamps.

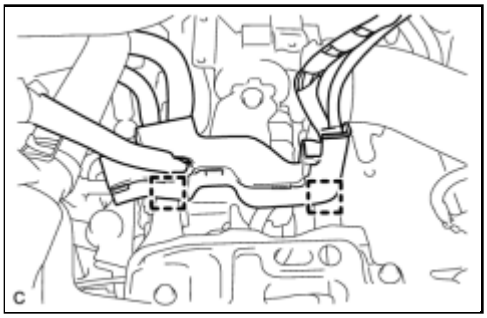

61. INSTALL BATTERY

(a) Install the battery clamp with the bolt and nut.

for bolt - Torque: 6.5 N·m (66 kgf·cm, 58in·lbf)
for nut - Torque: 3.5 N·m (36 kgf·cm, 31in·lbf)

(b) Connect the battery cables.

Torque: 5.4 N·m (55 kgf·cm, 48in·lbf)

62. INSTALL AIR CLEANER CASE

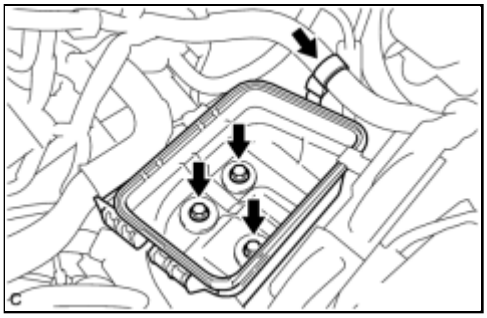

(a) Install the air cleaner case with the 3 bolts.

Torque: 7.0 N·m (71 kgf·cm, 62in·lbf)

(b) Install the wire harness clamp to the air cleaner case.

(c) Install the air cleaner filter element.

63. INSTALL AIR CLEANER CAP SUB-ASSEMBLY INFO

64. ADD TRANSAXLE OIL (for Manual Transaxle)

HINT: INFO **for C59.**

65. INSPECT AND ADJUST TRANSAXLE OIL (for Manual Transaxle)

HINT: INFO **for C59.**

66. ADD AUTOMATIC TRANSAXLE FLUID (for Automatic Transaxle)

HINT: INFO **for U341E.**

67. INSPECT TRANSAXLE FLUID LEVEL (for Automatic Transaxle)

HINT: INFO **for U341E.**

68. INSPECT FOR AUTOMATIC TRANSAXLE FLUID LEAK (for Automatic Transaxle)

69. INSPECT SHIFT LEVER POSITION (for Automatic Transaxle)

HINT: INFO **for U341E.**

70. ADJUST SHIFT LEVER POSITION (for Automatic Transaxle)

HINT: INFO **for U341E.**

71. ADD ENGINE COOLANT INFO

72. ADD ENGINE OIL INFO

73. INSPECT ENGINE OIL LEVEL INFO

74. INSPECT FOR FUEL LEAK INFO

75. INSPECT FOR ENGINE COOLANT LEAK INFO

76. INSPECT FOR OIL LEAK

77. INSPECT FOR EXHAUST GAS LEAK

78. INSTALL ENGINE UNDER COVER LH

79. INSTALL ENGINE UNDER COVER RH

80. INSTALL FRONT WHEELS

Torque: 103 N·m (1050 kgf·cm, 76ft·lbf)

81. INSPECT IGNITION TIMING INFO

82. INSPECT ENGINE IDLE SPEED INFO

83. INSPECT CO/HC INFO

84. ADJUST FRONT WHEEL ALIGNMENT

HINT: INFO .

85. INSTALL NO. 2 CYLINDER HEAD COVER

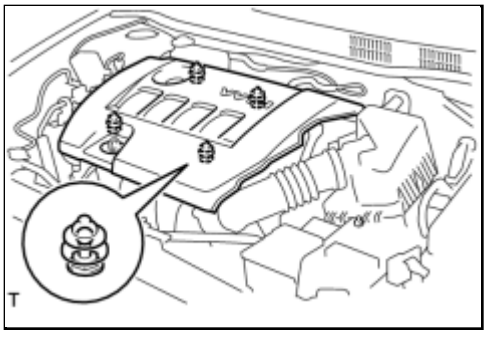

(a) Engage the 4 clips to install the No. 2 cylinder head cover.

NOTICE:

- Be sure to engage the clips securely.
- Do not apply excessive force or do not hit the cover to engage the clips. This may cause the cover to break.

86. CHECK ABS SPEED SENSOR SIGNAL

HINT: INFO **for ABS.**

INFO **for VSC.**

Last Modified: 3-10-2010	6.4 K	**From:** 200901
Model Year: 2010	**Model:** Corolla	**Doc ID:** RM00000224600CX
Title: 2AZ-FE ENGINE MECHANICAL: ENGINE UNIT: COMPONENTS (2010 Corolla)		

COMPONENTS

ILLUSTRATION

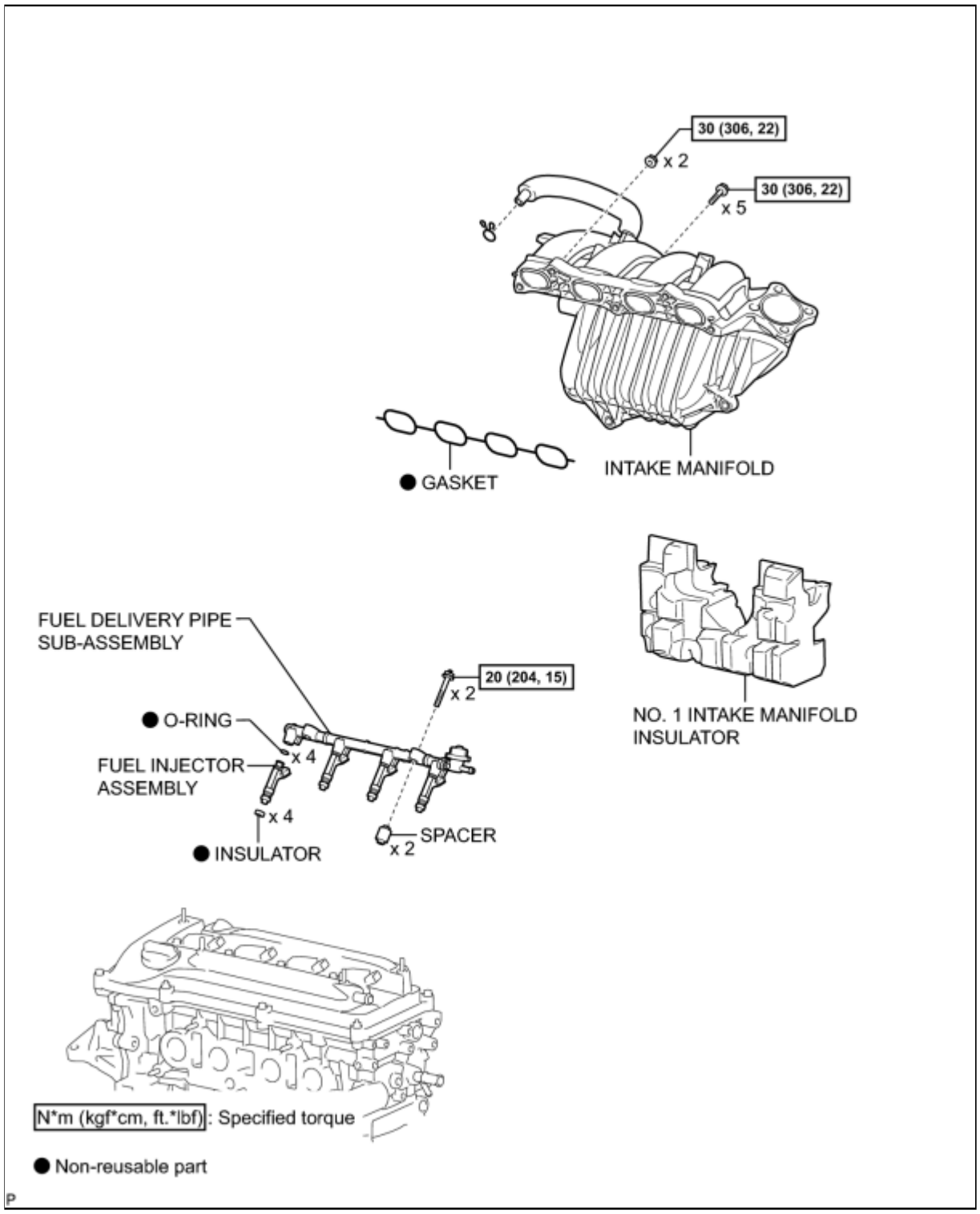

ILLUSTRATION

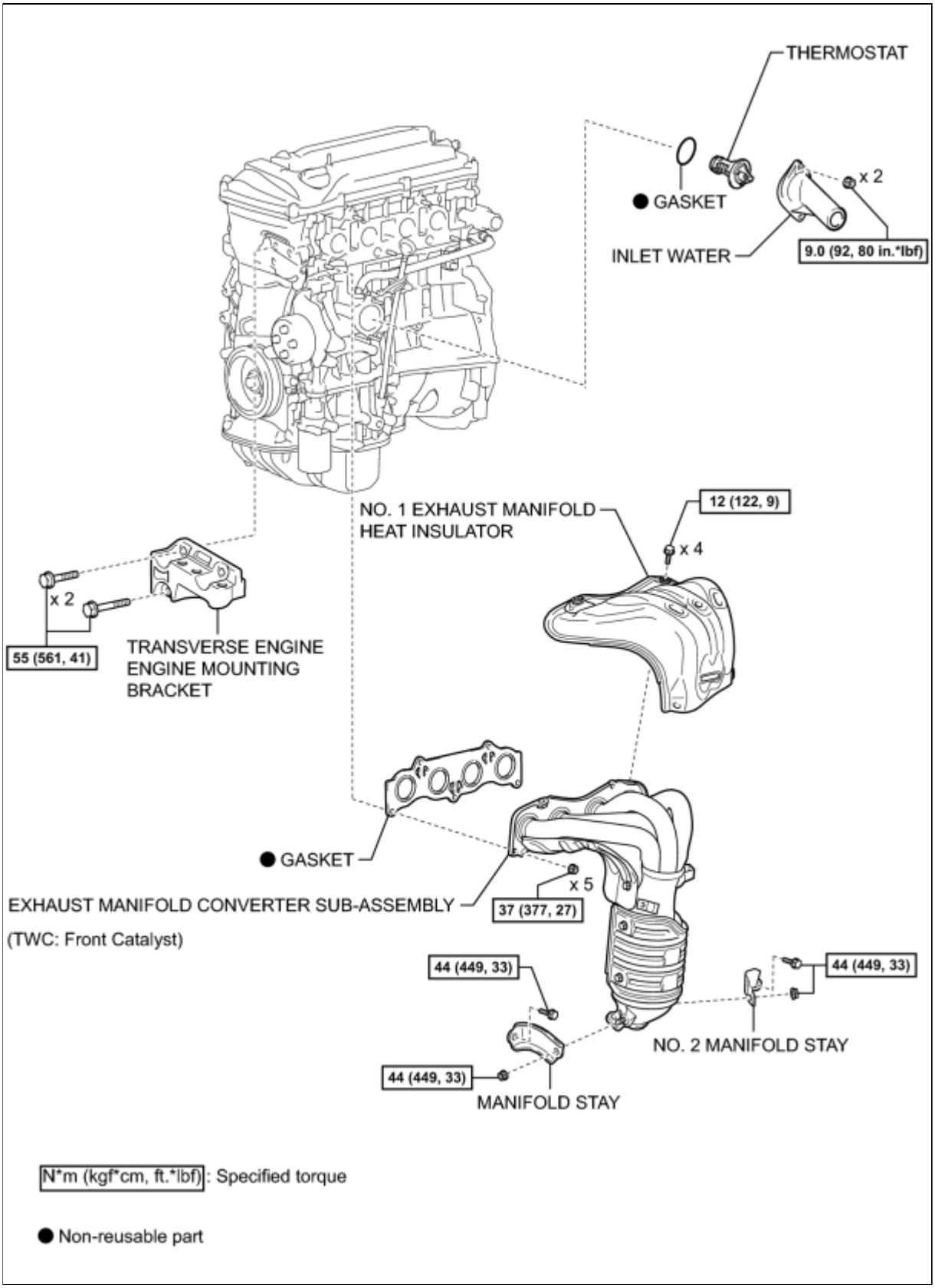

ILLUSTRATION

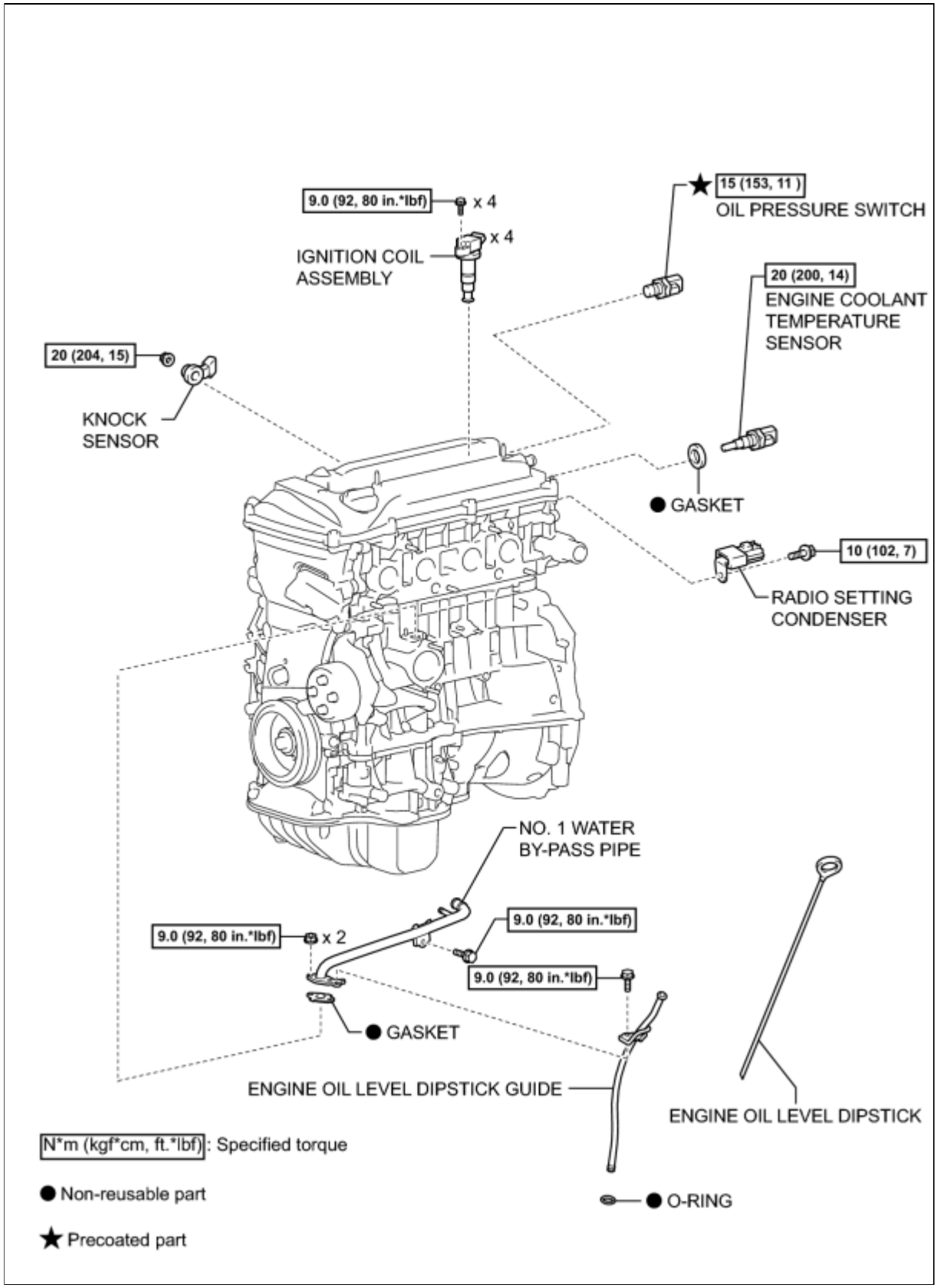

ILLUSTRATION

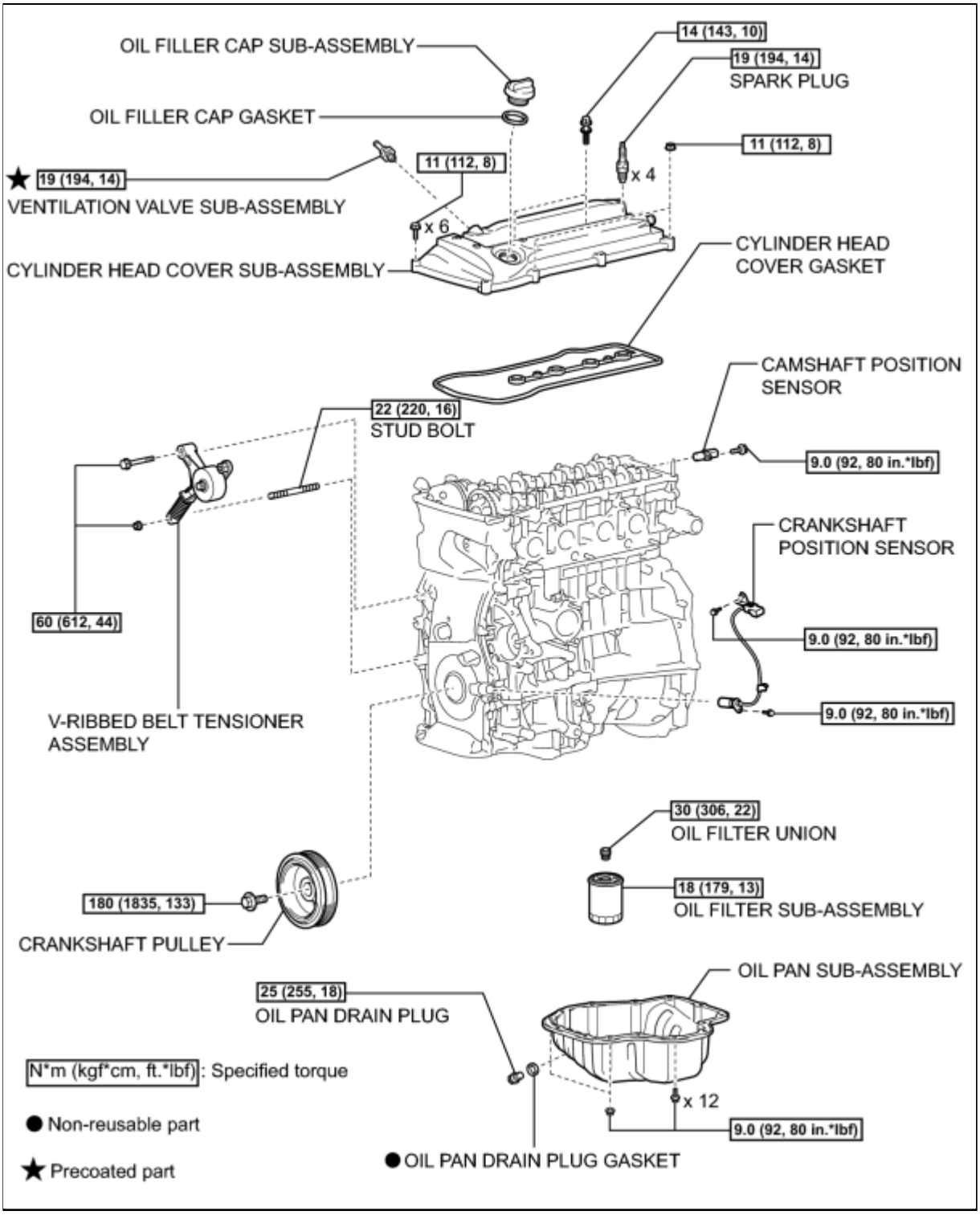

ILLUSTRATION

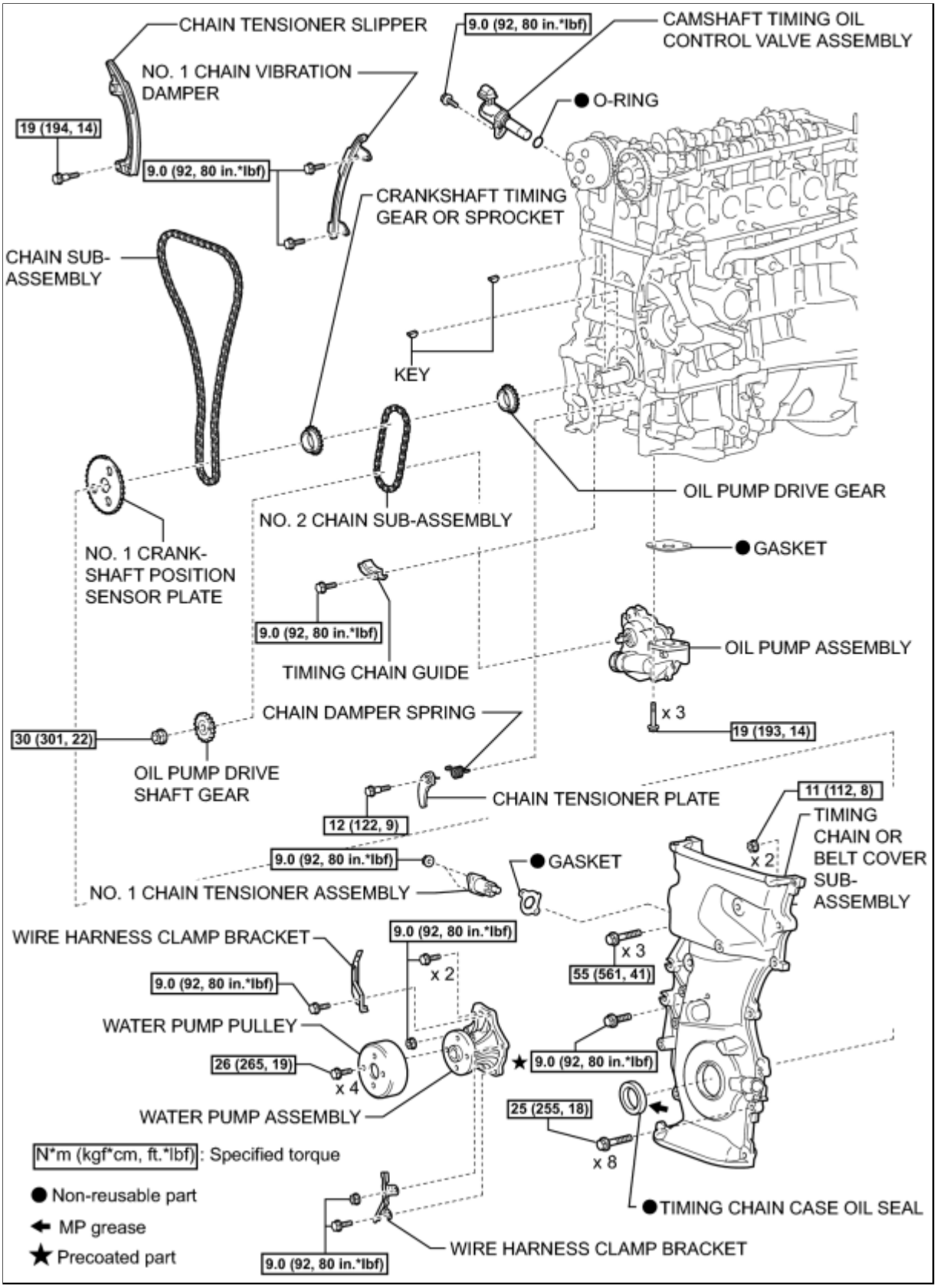

ILLUSTRATION

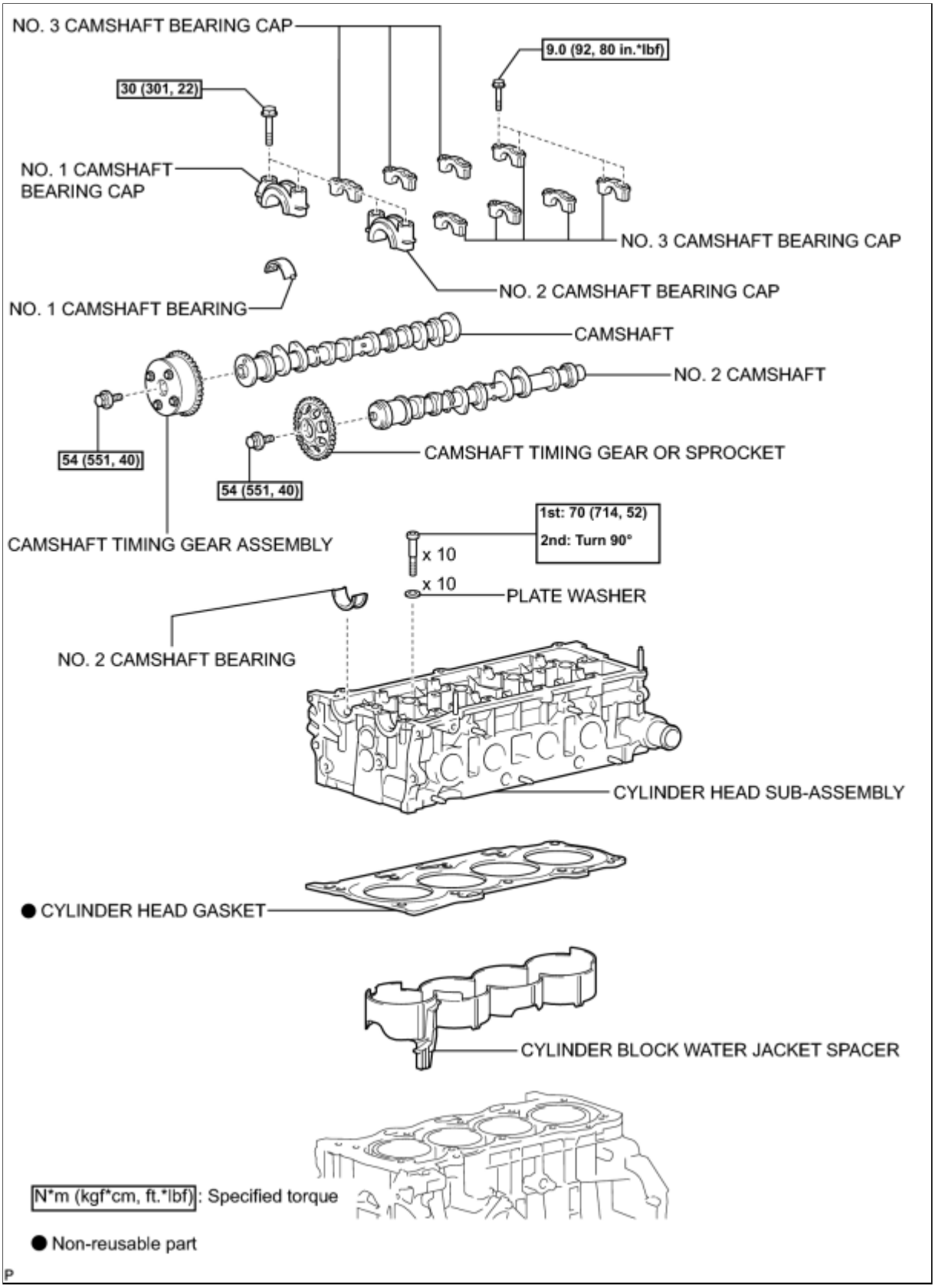

ILLUSTRATION

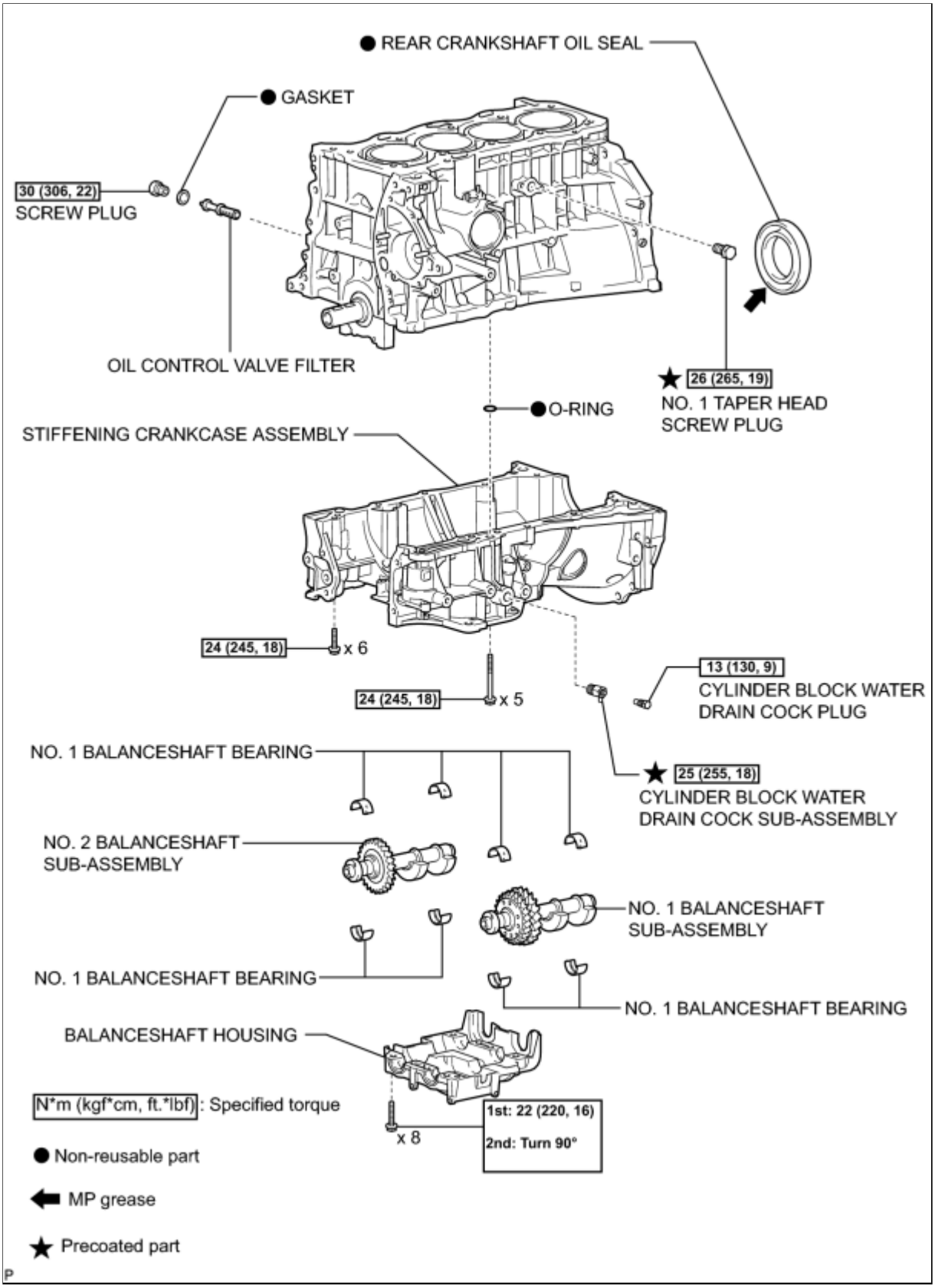
● REAR CRANKSHAFT OIL SEAL
● GASKET
30 (306, 22)
SCREW PLUG
OIL CONTROL VALVE FILTER
★ 26 (265, 19)
NO. 1 TAPER HEAD
SCREW PLUG
● O-RING
STIFFENING CRANKCASE ASSEMBLY
24 (245, 18) x 6
24 (245, 18) x 5
13 (130, 9)
CYLINDER BLOCK WATER
DRAIN COCK PLUG
★ 25 (255, 18)
CYLINDER BLOCK WATER
DRAIN COCK SUB-ASSEMBLY
NO. 1 BALANCESHAFT BEARING
NO. 2 BALANCESHAFT
SUB-ASSEMBLY
NO. 1 BALANCESHAFT
SUB-ASSEMBLY
NO. 1 BALANCESHAFT BEARING
NO. 1 BALANCESHAFT BEARING
BALANCESHAFT HOUSING
x 8
1st: 22 (220, 16)
2nd: Turn 90°
N*m (kgf*cm, ft.*lbf): Specified torque
● Non-reusable part
MP grease
★ Precoated part

Last Modified: 3-10-2010	6.4 A	**From:** 200901
Model Year: 2010	**Model:** Corolla	**Doc ID:** RM00000224700CX
Title: 2AZ-FE ENGINE MECHANICAL: ENGINE UNIT: DISASSEMBLY (2010 Corolla)		

DISASSEMBLY

1. REMOVE OIL FILLER CAP SUB-ASSEMBLY

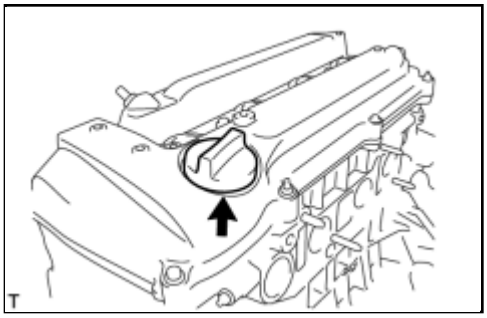

(a) Remove the oil filler cap from the cylinder head cover.

2. REMOVE OIL FILLER CAP GASKET

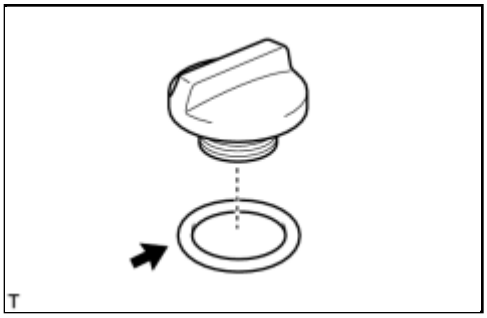

(a) Remove the oil filler cap gasket from the oil filler cap.

3. REMOVE VENTILATION VALVE SUB-ASSEMBLY

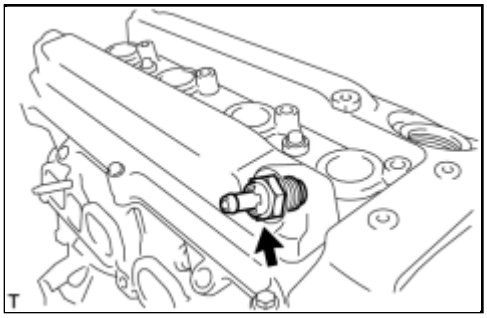

(a) Using a 22 mm deep socket wrench, remove the ventilation valve from the cylinder head cover.

4. REMOVE SPARK PLUG INFO

5. REMOVE OIL FILTER SUB-ASSEMBLY INFO

6. REMOVE OIL FILTER UNION

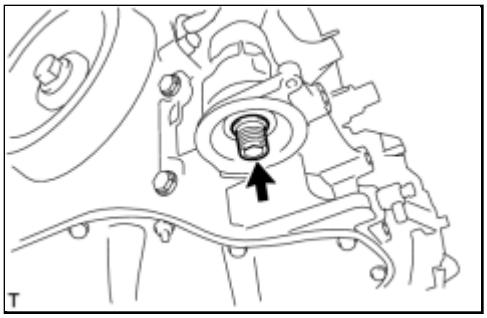

(a) Using a 12 mm socket hexagon wrench, remove the oil filter union.

7. REMOVE CYLINDER HEAD COVER SUB-ASSEMBLY

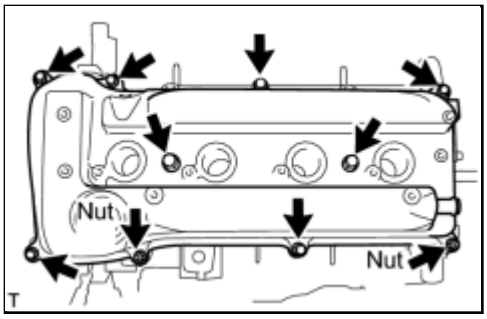

(a) Remove the 8 bolts and 2 nuts, and remove the cylinder head cover.

8. REMOVE CYLINDER HEAD COVER GASKET

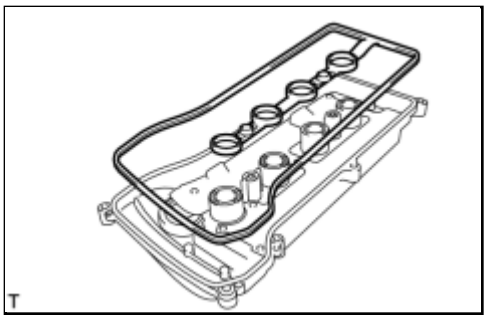

(a) Remove cylinder head cover gasket from the cylinder head cover.

9. REMOVE V-RIBBED BELT TENSIONER ASSEMBLY INFO

10. REMOVE CRANKSHAFT POSITION SENSOR

(a) Remove the wire harness clamp.

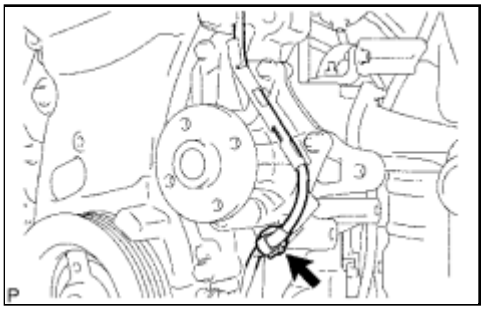

(b) Separate the wire harness from the wire harness clamp bracket.

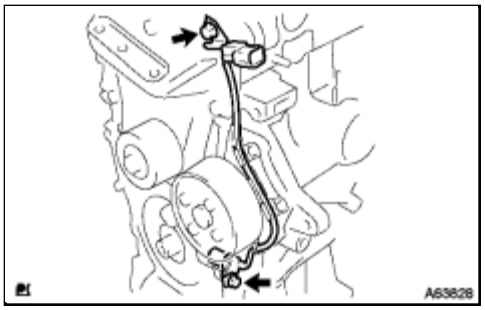

(c) Remove the 2 bolts and sensor.

11. REMOVE CAMSHAFT POSITION SENSOR

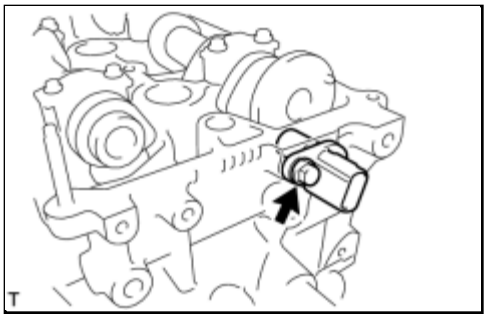

(a) Remove the bolt and camshaft position sensor.

12. SET NO. 1 CYLINDER TO TDC/COMPRESSION INFO

13. REMOVE CRANKSHAFT PULLEY INFO

14. REMOVE CAMSHAFT TIMING OIL CONTROL VALVE ASSEMBLY

(a) Remove the bolt and camshaft timing oil control valve from the cylinder head.

NOTICE:

The camshaft timing oil control valve may be damaged when loosening the cylinder head bolts if the it is not removed.

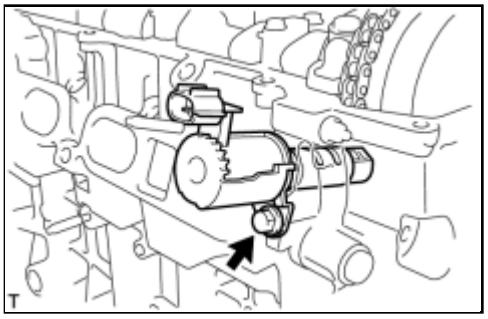

(b) Remove the O-ring from the camshaft timing oil control valve.

15. REMOVE NO. 1 CHAIN TENSIONER ASSEMBLY INFO

16. REMOVE WATER PUMP PULLEY INFO

17. REMOVE WATER PUMP ASSEMBLY INFO

18. REMOVE OIL PAN DRAIN PLUG

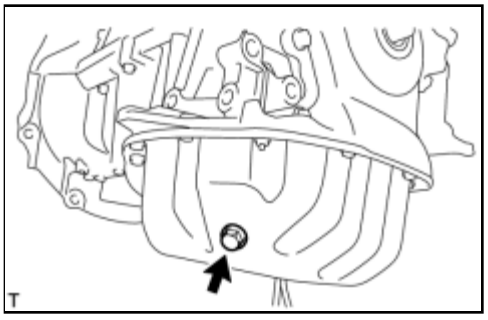

(a) Remove the oil pan drain plug from the oil pan.

19. REMOVE OIL PAN SUB-ASSEMBLY

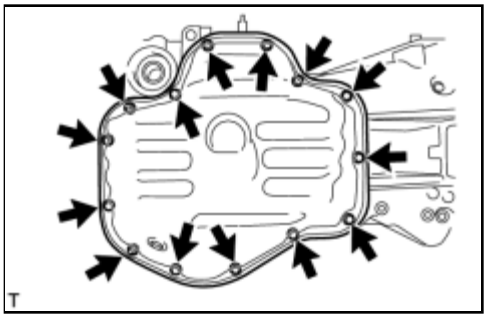

(a) Remove the 12 bolts and 2 nuts.

(b) Insert the blade of oil pan seal cutter between the crankcase, chain cover and oil pan, then cut through the applied sealer and remove the oil pan.

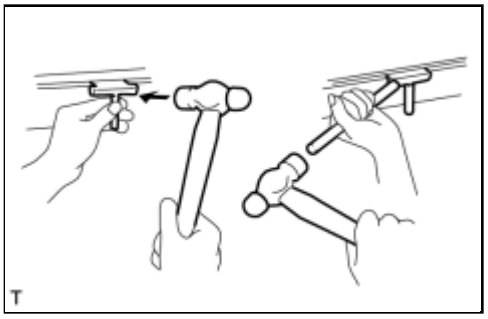

NOTICE:

Be careful not to damage the contact surfaces of the crankcase, chain cover and oil pan.

20. REMOVE TIMING CHAIN OR BELT COVER SUB-ASSEMBLY INFO

21. REMOVE FRONT CRANKSHAFT OIL SEAL INFO

22. REMOVE NO. 1 CRANKSHAFT POSITION SENSOR PLATE INFO

23. REMOVE TIMING CHAIN GUIDE INFO

24. REMOVE CHAIN TENSIONER SLIPPER INFO

25. REMOVE NO. 1 CHAIN VIBRATION DAMPER INFO

26. REMOVE CHAIN SUB-ASSEMBLY

27. REMOVE CRANKSHAFT TIMING GEAR OR SPROCKET INFO

28. REMOVE NO. 2 CHAIN SUB-ASSEMBLY INFO

29. REMOVE KEYS

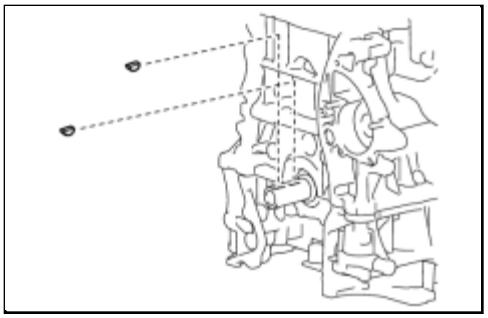

(a) Remove the 2 pulley set keys from the crankshaft.

30. REMOVE NO. 2 CAMSHAFT

(a) Using several steps, uniformly loosen and remove the 10 bearing cap bolts in the sequence shown in the illustration.

NOTICE:

Uniformly loosen the bolts while keeping the camshaft level.

HINT:

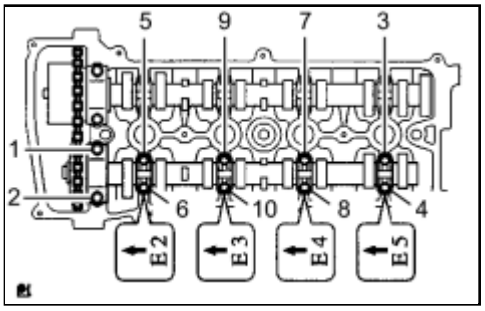

Arrange the removed parts in the correct order.

(b) Remove the 5 bearing caps.

(c) Remove the No. 2 camshaft.

31. REMOVE CAMSHAFT

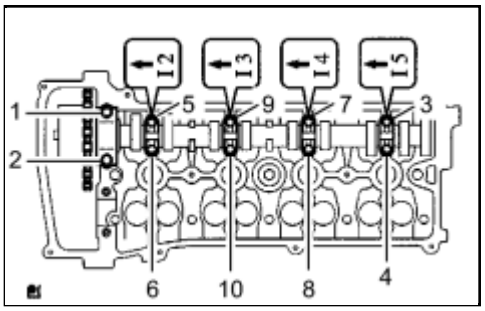

(a) Using several steps, uniformly loosen and remove the 10 bearing cap bolts in the sequence shown in the illustration.

NOTICE:

Uniformly loosen the bolts while keeping the camshaft level.

HINT:

Arrange the removed parts in the correct order.

(b) Remove the 5 bearing caps.

(c) Remove the camshaft.

32. REMOVE NO. 1 CAMSHAFT BEARING

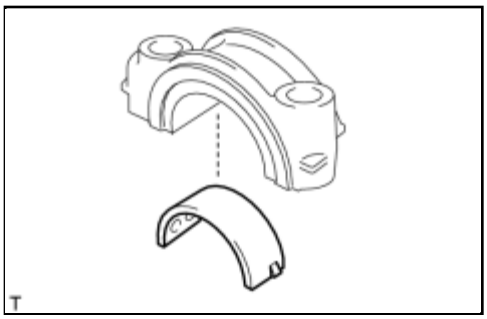

(a) Remove the camshaft bearing from the No. 1 camshaft bearing cap.

33. REMOVE NO. 2 CAMSHAFT BEARING

(a) Remove the No. 2 camshaft bearing from the cylinder head.

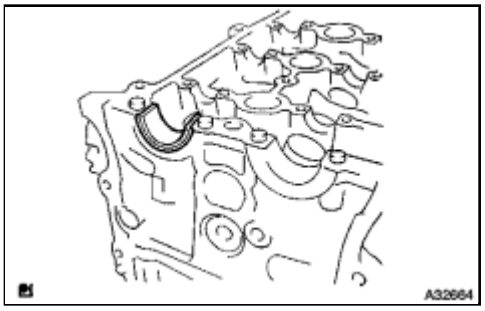

34. REMOVE CAMSHAFT TIMING GEAR OR SPROCKET

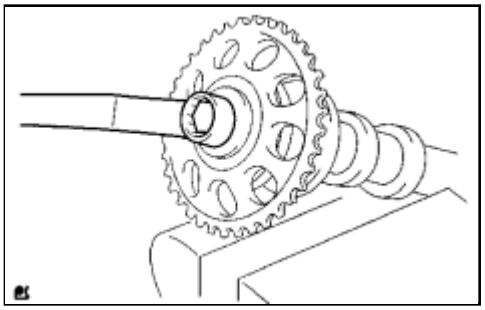

(a) Clamp the camshaft in a vise.

NOTICE:

- Do not overtighten the vise.
- Do not damage the camshaft.

(b) Remove the bolt and camshaft timing gear or sprocket.

35. REMOVE CAMSHAFT TIMING GEAR ASSEMBLY INFO

36. REMOVE CYLINDER HEAD SUB-ASSEMBLY INFO

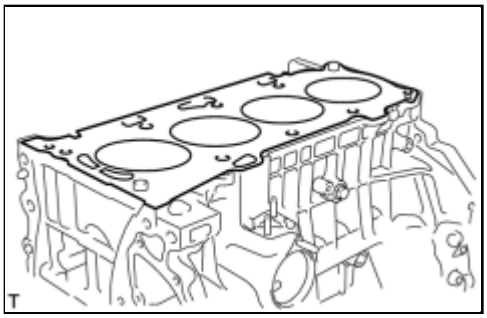

37. REMOVE CYLINDER HEAD GASKET

38. REMOVE CYLINDER BLOCK WATER JACKET SPACER

(a) Using needle nose pliers, remove the cylinder block water jacket spacer from the water jacket.

NOTICE:

Before turning the cylinder block upside down, make sure that the water jacket spacer is removed, as it will fall out.

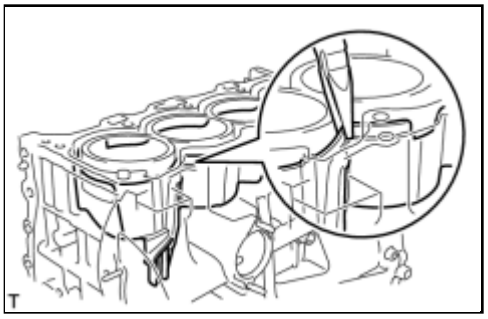

39. REMOVE CYLINDER BLOCK WATER DRAIN COCK SUB-ASSEMBLY

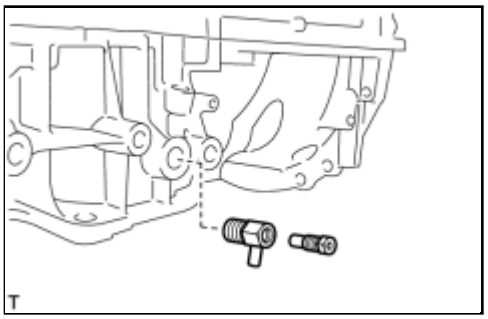

(a) Remove the water drain cock from the stiffening crankcase.

(b) Remove the water drain cock plug from the water drain cock.

40. REMOVE OIL CONTROL VALVE FILTER

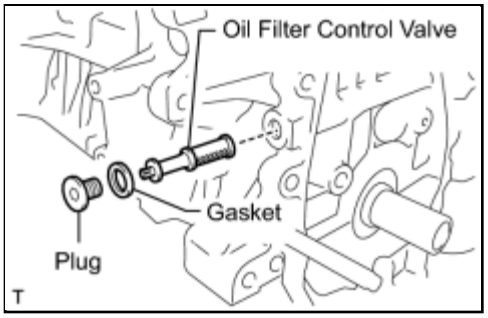

(a) Using a 8mm socket hexagon wrench, remove the plug, gasket and oil control valve filter.

41. REMOVE NO. 1 TAPER HEAD SCREW PLUG

(a) Remove the No. 1 taper head screw plug.

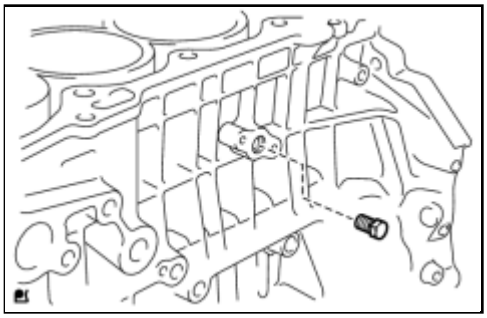

42. REMOVE OIL PUMP ASSEMBLY INFO

43. INSPECT BALANCESHAFT THRUST CLEARANCE INFO

44. INSPECT BALANCESHAFT OIL CLEARANCE INFO

45. REMOVE NO. 1 AND NO. 2 BALANCESHAFTS

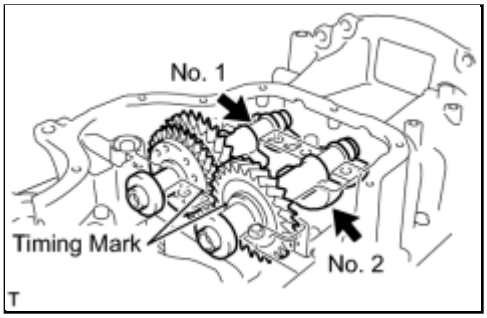

(a) Remove the No. 1 and No. 2 balanceshafts.

46. REMOVE NO. 1 BALANCESHAFT BEARING

(a) Remove the 8 No. 1 balanceshaft bearings shown in the illustration.

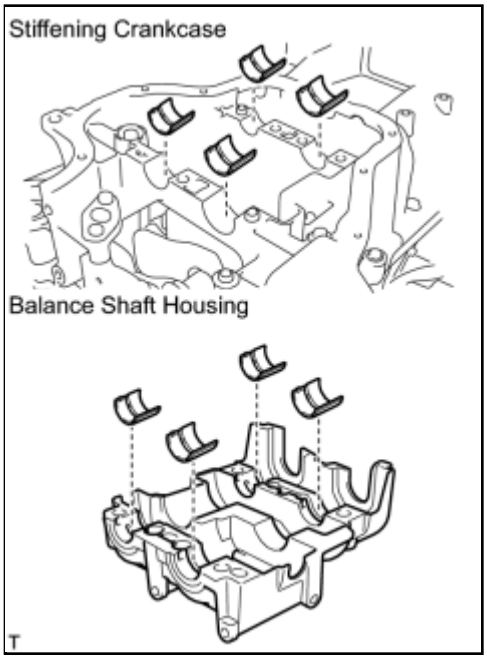

47. REMOVE REAR CRANKSHAFT OIL SEAL INFO

48. REMOVE STIFFENING CRANKCASE ASSEMBLY

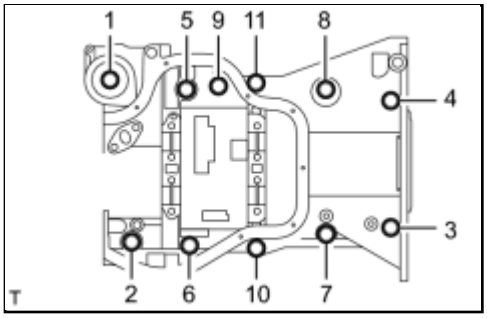

(a) Uniformly loosen and remove the 11 bolts in the sequence shown in the illustration.

(b) Using a screwdriver with its tip wrapped with protective tape, remove the crankcase by prying between the crankcase and cylinder block.

NOTICE:

Be careful not to damage the contact surfaces between the crankcase and cylinder block.

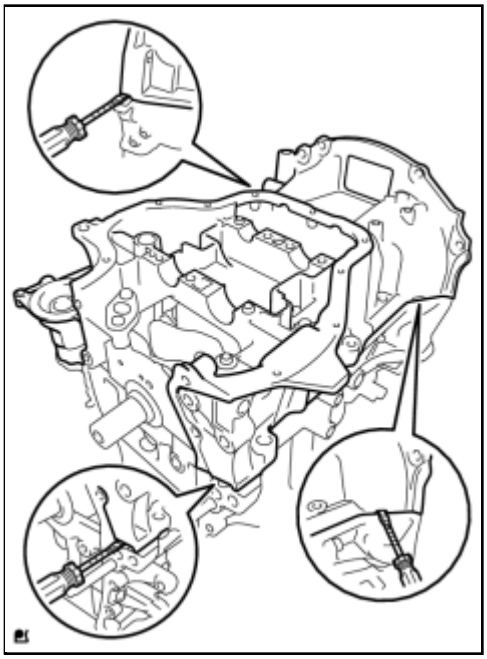

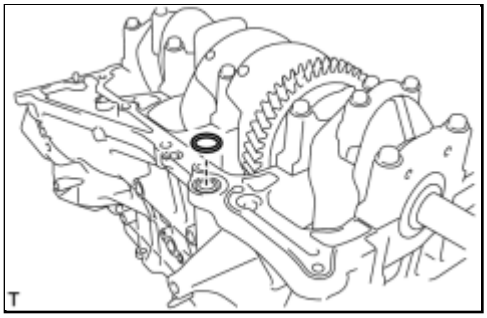

(c) Remove the O-ring from the cylinder block.

Last Modified: 3-10-2010	6.4 A	**From:** 200901
Model Year: 2010	**Model:** Corolla	**Doc ID:** RM00000224800CX
Title: 2AZ-FE ENGINE MECHANICAL: ENGINE UNIT: REASSEMBLY (2010 Corolla)		

REASSEMBLY

1. INSTALL NO. 1 BALANCESHAFT BEARING

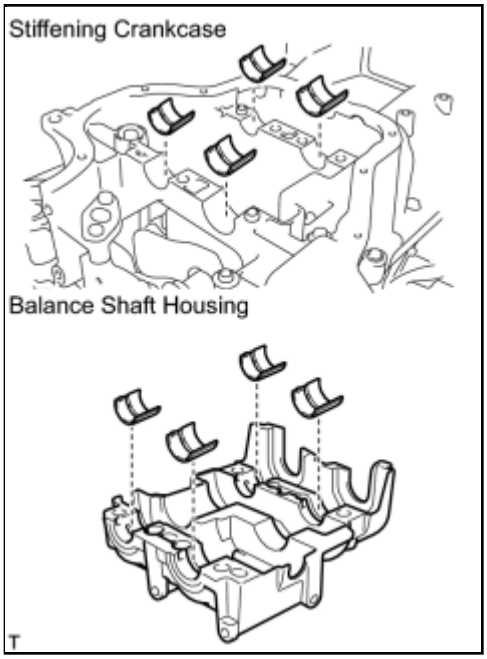

(a) Align the bearing claw with the claw groove, and push in the 8 bearings.

NOTICE:

Do not apply engine oil to the contact surfaces of the balanceshaft bearing and balanceshaft housing.

(b) Apply a light coat of the engine oil to the bearings.

2. INSTALL NO. 1 AND NO. 2 BALANCESHAFTS

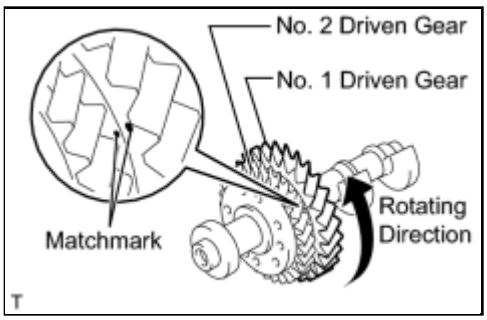

(a) Rotate the No. 1 driven gear of the No. 1 balanceshaft in the rotating direction until it hits the stopper.

NOTICE:

Confirm that the matchmarks on the No. 1 and No. 2 driven gears are matched.

(b) Confirm that the alignment marks on the No. 1 and No. 2 balanceshafts are aligned.

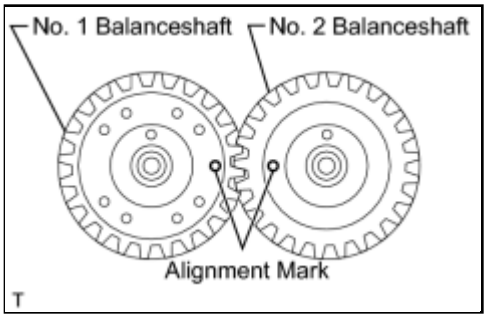

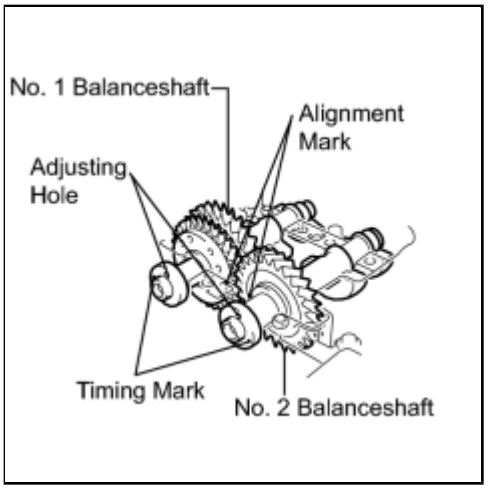

(c) Align the alignment marks on the No. 1 and No. 2 balanceshafts as shown in the illustration.

(d) Place the No. 1 and No. 2 balancshafts onto the crankcase.

(e) Apply a light coat of engine oil to the threads and under the heads of the bolts.

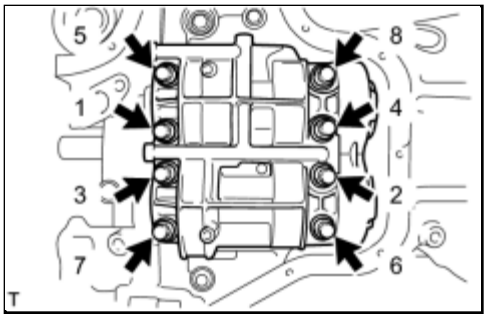

(f) Using several steps, uniformly install and tighten the 8 bolts in the sequence shown in the illustration.

Torque: 22 N·m (220 kgf·cm, 16ft·lbf)

(g) Mark the front of the bolts with paint.

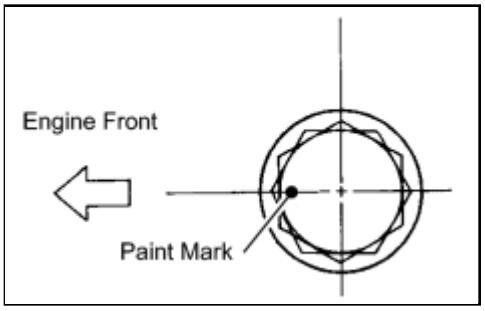

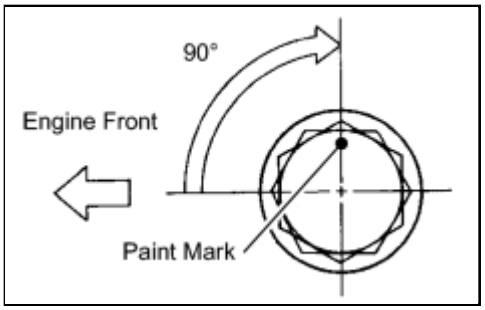

(h) Further tighten the bolts 90° as shown in the illustration.

(i) Check that the paint mark is now at a 90° angle to the front.

3. INSTALL STIFFENING CRANKCASE ASSEMBLY

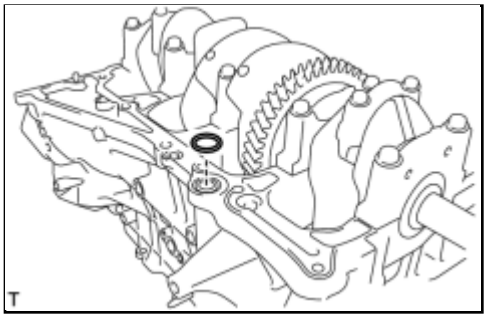

(a) Place a new O-ring on the cylinder block as shown in the illustration.

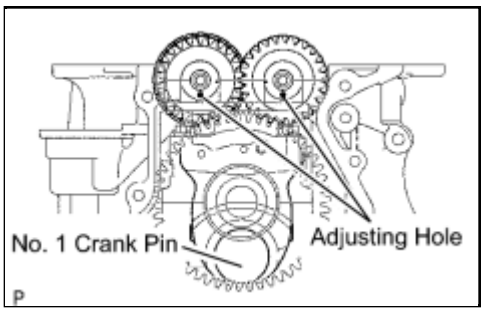

(b) With the No. 1 crank pin of the crankshaft placed at the TDC position, install the No. 1 and No. 2 balanceshafts and align the adjusting holes as shown in the illustration.

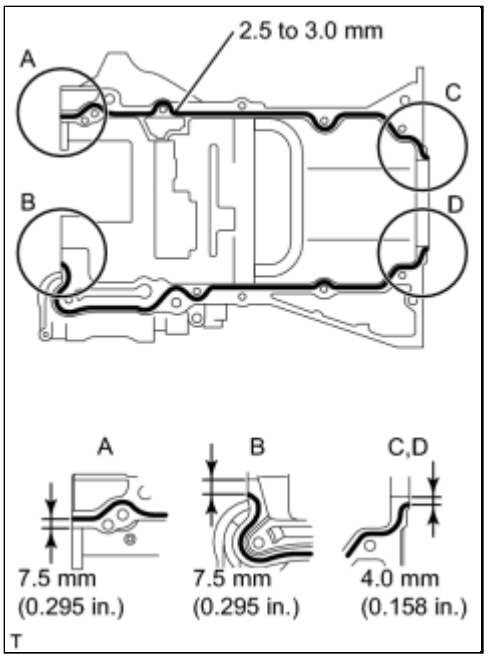

(c) Apply a continuous bead of seal packing (Diameter 2.5 to 3.0 mm (0.098 to 0.118 in.)) as shown in the illustration.

Seal Packing:

Toyota Genuine Seal Packing Black, Three Bond 1207B or equivalent

NOTICE:

- Remove any oil from the contact surfaces.
- Install the crankcase within 3 minutes of applying seal packing.
- Do not add engine oil for at least 2 hours after installing the crankcase.

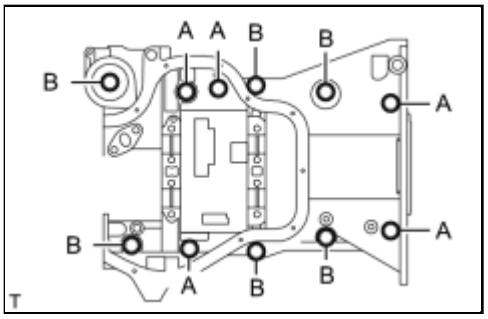

(d) Temporarily install the crankcase with the 11 bolts.

ITEM	BOLT LENGTH
A	125 mm (4.92 in.)
B	45 mm (1.77 in.)

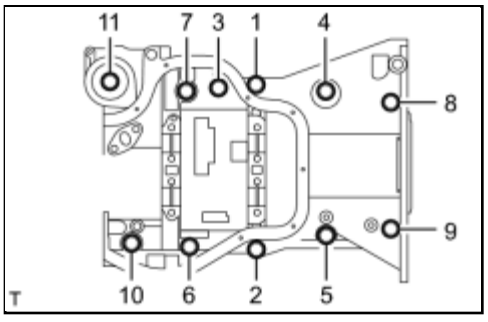

(e) Uniformly tighten the bolts.

Torque: 24 N·m (245 kgf·cm, 18ft·lbf)

(f) Confirm that the timing marks on the balanceshafts are aligned when the key groove is placed at the TDC position, as shown in the illustration.

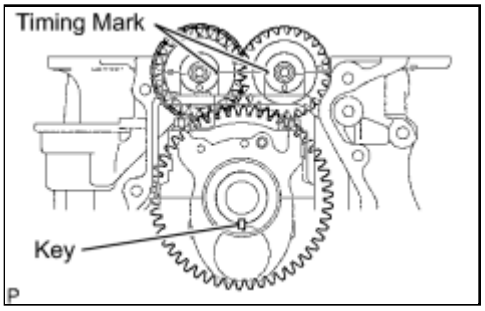

4. INSTALL OIL PUMP ASSEMBLY INFO

5. INSTALL REAR CRANKSHAFT OIL SEAL INFO

6. INSTALL NO. 1 TAPER HEAD SCREW PLUG

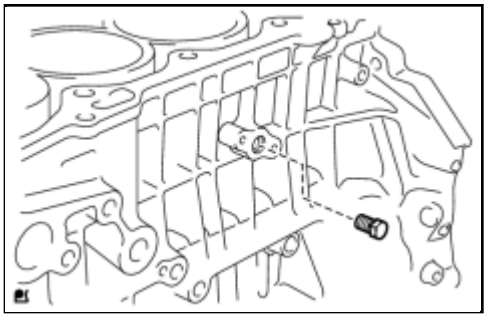

(a) Apply adhesive to 2 or 3 threads of the plug, and install it.

Torque: 26 N·m (265 kgf·cm, 19ft·lbf)

Adhesive:

Toyota Genuine Adhesive 1324, Three Bond 1324 or equivalent

NOTICE:

- Install the plug within 3 minutes of applying adhesive.
- Do not add coolant for at least an hour after installing the plug.

7. INSTALL OIL CONTROL VALVE FILTER

(a) Check that there are no foreign objects on the mesh part of the oil control valve filter.

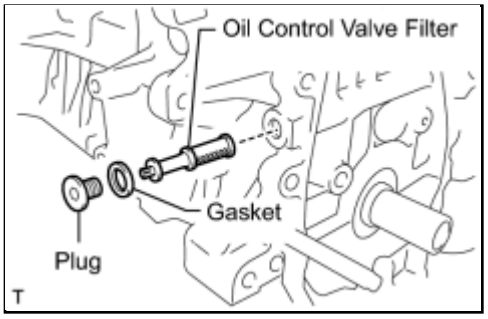

(b) Using a 8 mm socket hexagon wrench, install a new gasket and the oil control valve filter with the plug.

Torque: 30 N·m (306 kgf·cm, 22ft·lbf)

8. INSTALL CYLINDER BLOCK WATER DRAIN COCK SUB-ASSEMBLY

(a) Apply adhesive to 2 or 3 threads of the drain cock.

Adhesive:

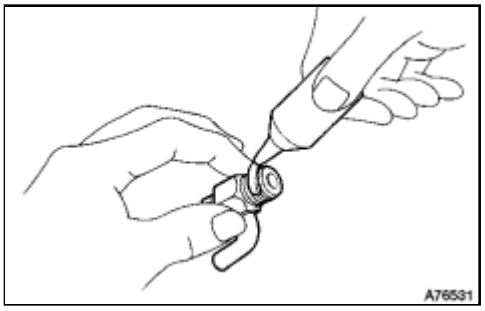

Toyota Genuine Adhesive 1344, Three Bond 1344 or equivalent

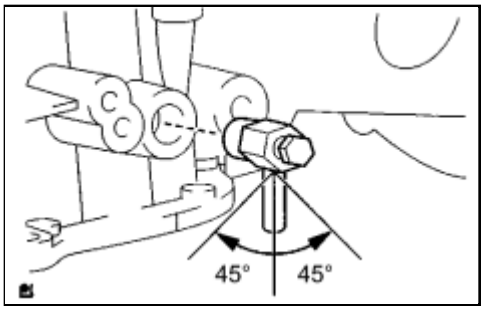

(b) Install the water drain cock within the range shown in the illustration.

Torque: 25 N·m (255 kgf·cm, 18ft·lbf)

NOTICE:

Do not rotate the drain cocks more than 1 revolution (360°) after tightening the drain cock to the specified torque.

(c) Install the water drain cock plug to the water drain cock.

Torque: 13 N·m (130 kgf·cm, 9ft·lbf)

9. INSTALL CYLINDER BLOCK WATER JACKET SPACER

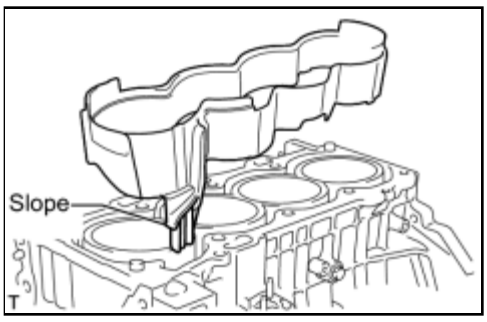

(a) Install the water jacket spacer as shown in the illustration.

HINT:

Be sure to face the slope to the front of the engine.

10. INSTALL CYLINDER HEAD GASKET INFO

11. INSTALL CYLINDER HEAD SUB-ASSEMBLY INFO

12. INSTALL CAMSHAFT TIMING OIL CONTROL VALVE ASSEMBLY

(a) Apply a light coat of engine oil onto a new O-ring.

(b) Install the O-ring to the camshaft timing oil control valve.

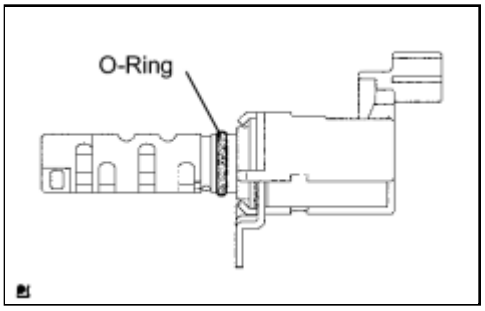

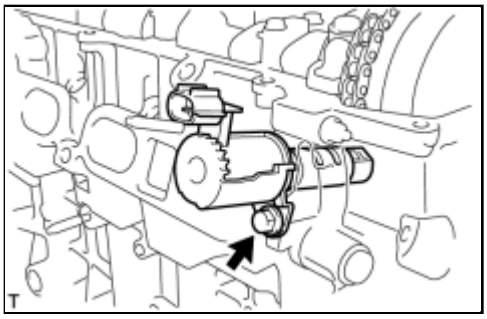

(c) Install the camshaft timing oil control valve with the bolt.

Torque: 9.0 N·m (92 kgf·cm, 80in·lbf)

13. INSTALL CAMSHAFT TIMING GEAR ASSEMBLY

INFO

14. INSTALL CAMSHAFT TIMING GEAR OR SPROCKET

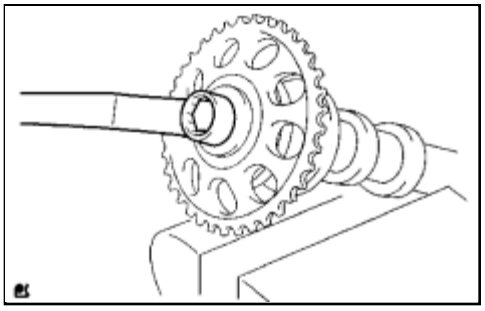

(a) Clamp the camshaft in a vise, then install the camshaft timing sprocket with the bolt.

Torque: 54 N·m (551 kgf·cm, 40ft·lbf)

15. INSTALL NO. 1 CAMSHAFT BEARING

(a) Clean the installation surfaces and the inner and outer surfaces of the bearing.

NOTICE:

Keep the installation surfaces and the back surfaces of the bearing free of engine oil.

(b) Align the claws and install No. 1 camshaft bearing onto No. 1 camshaft bearing cap.

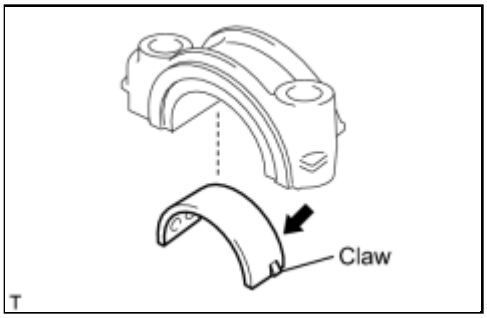

16. INSTALL NO. 2 CAMSHAFT BEARING

(a) Clean the installation surfaces and the inner and outer surfaces of the bearing.

NOTICE:

Keep the installation surfaces and the back surfaces of the bearing free of engine oil.

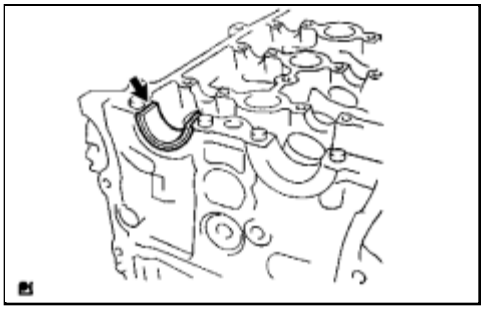

(b) Install the No. 2 camshaft bearing onto the cylinder head.

17. INSTALL CAMSHAFT

(a) Apply a light coat of engine oil to the journal portion.

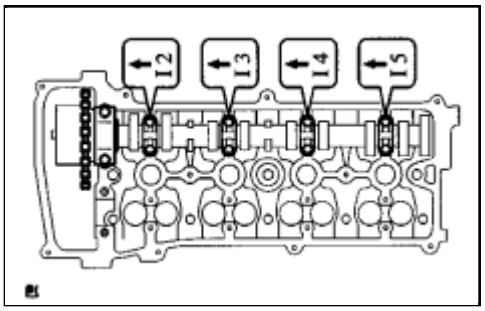

(b) Examine the front marks and numbers, and check that the order is as shown in the illustration. Then install the bearing caps into the cylinder head.

(c) Apply a light coat of engine oil to the threads and under the heads of the bearing cap bolts.

(d) Using several steps, uniformly tighten the 10 bearing cap bolts in the sequence shown in the illustration.

No. 1 Bearing cap - Torque: 30 N·m (301 kgf·cm, 22ft·lbf)

No. 3 Bearing cap - Torque: 9.0 N·m (92 kgf·cm, 80in·lbf)

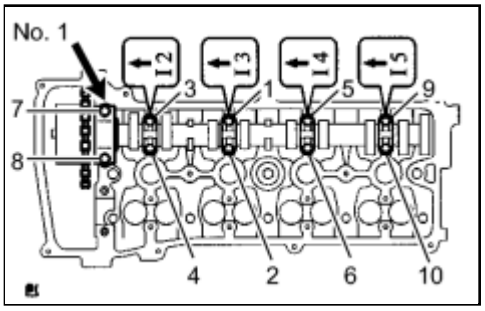

18. INSTALL NO. 2 CAMSHAFT

(a) Apply a light coat of engine oil to the journal portion of the No. 2 camshaft.

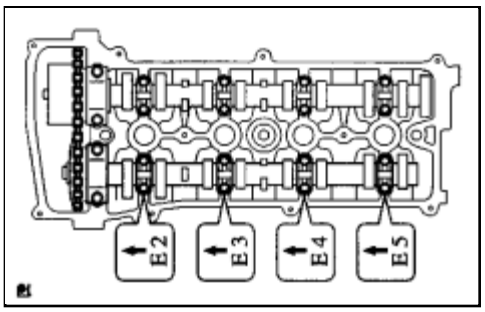

(b) Examine the front marks and numbers, and check that the order is as shown in the illustration. Then install the bearing caps onto the cylinder head.

(c) Apply a light coat of engine oil to the threads and under the heads of the bearing cap bolts.

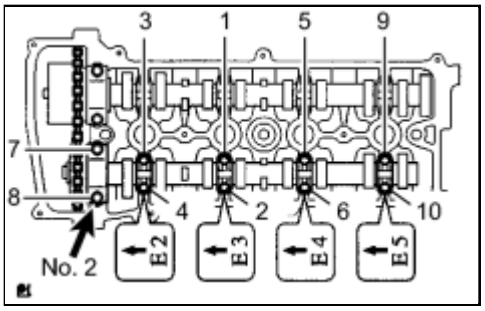

(d) Using several steps, uniformly tighten the 10 bearing cap bolts in the sequence shown in the illustration.

No. 2 Bearing cap - Torque: 30 N·m (301 kgf·cm, 22ft·lbf)
No. 3 Bearing cap - Torque: 9.0 N·m (92 kgf·cm, 80in·lbf)

19. INSTALL KEYS

(a) Install the 2 keys.

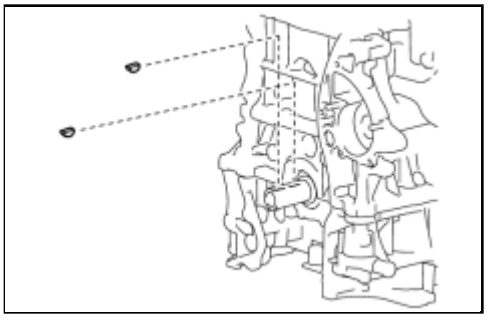

20. INSTALL NO. 2 CHAIN SUB-ASSEMBLY INFO

21. INSTALL CRANKSHAFT TIMING GEAR OR SPROCKET INFO

22. INSTALL NO. 1 CHAIN VIBRATION DAMPER INFO

23. INSTALL CHAIN SUB-ASSEMBLY INFO

24. INSTALL CHAIN TENSIONER SLIPPER INFO

25. INSTALL TIMING CHAIN GUIDE INFO

26. INSTALL NO. 1 CRANKSHAFT POSITION SENSOR PLATE INFO

27. INSTALL FRONT CRANKSHAFT OIL SEAL INFO

28. INSTALL TIMING CHAIN OR BELT COVER SUB-ASSEMBLY INFO

29. INSTALL NO. 1 CHAIN TENSIONER ASSEMBLY INFO

30. INSTALL V-RIBBED BELT TENSIONER ASSEMBLY INFO

31. INSTALL CRANKSHAFT POSITION SENSOR

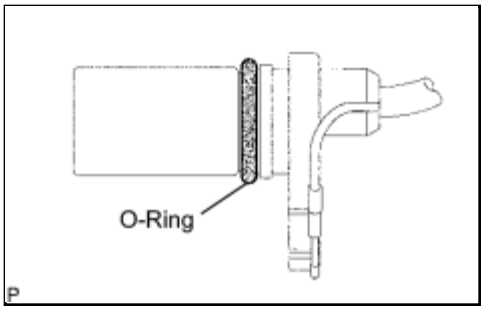

(a) Apply a light coat of engine oil to the O-ring of the sensor.

(b) Confirm that the wire harness of the sensor is placed as shown in the illustration.

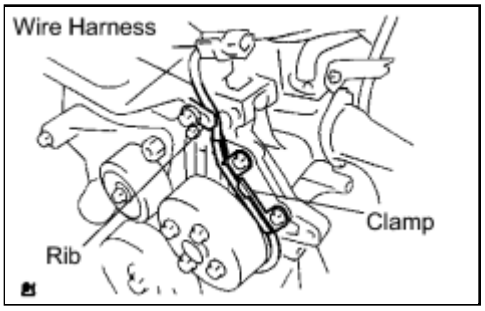

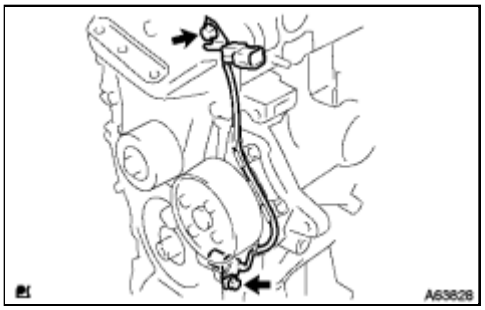

(c) Install the sensor with the 2 bolts.

Torque: 9.0 N·m (92 kgf·cm, 80in·lbf)

(d) Install the clamp of the crankshaft position sensor onto the water pump.

32. INSTALL OIL PAN SUB-ASSEMBLY INFO

33. INSTALL OIL PAN DRAIN PLUG

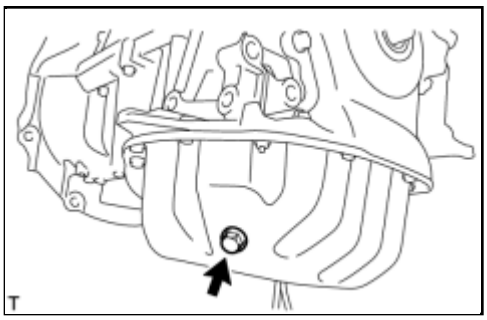

(a) Install the oil drain plug with a new gasket.

Torque: 25 N·m (255 kgf·cm, 18ft·lbf)

34. INSTALL WATER PUMP ASSEMBLY INFO

35. INSTALL WATER PUMP PULLEY INFO

36. INSTALL CRANKSHAFT PULLEY INFO

37. INSPECT VALVE CLEARANCE INFO

38. ADJUST VALVE CLEARANCE INFO

39. INSTALL CAMSHAFT POSITION SENSOR

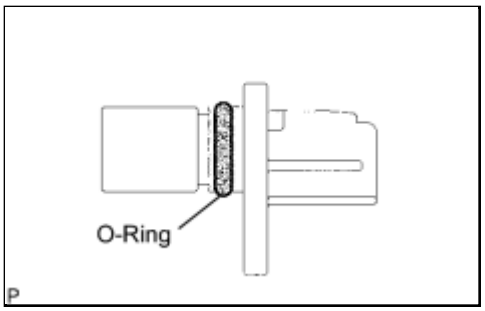

(a) Apply a light coat of engine oil onto the O-ring of the sensor.

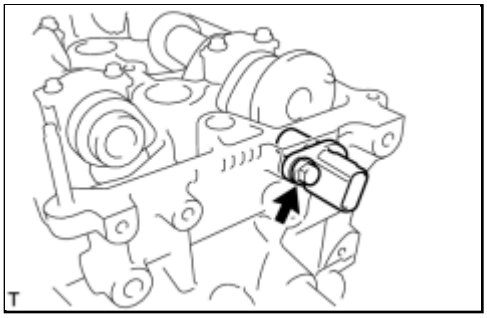

(b) Install the camshaft position sensor with the bolt.

Torque: 9.0 N·m (92 kgf·cm, 80in·lbf)

40. INSTALL CYLINDER HEAD COVER GASKET

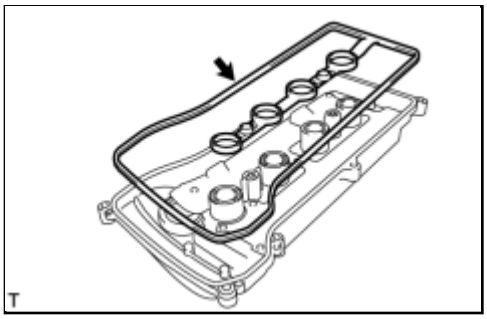

(a) Install the cylinder head cover gasket onto the cylinder head cover.

41. INSTALL CYLINDER HEAD COVER SUB-ASSEMBLY

(a) Remove any old packing material from the contact surface.

(b) Apply seal packing to the 2 locations shown in the illustration.

Seal Packing:

Toyota Genuine Seal Packing Black, Three Bond 1207B or equivalent

NOTICE:

- Remove any oil from the contact surfaces.

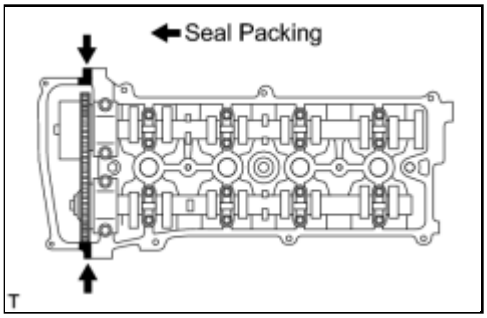

- Install the cylinder head cover within 3 minutes of applying seal packing.
- Do not start the engine for at least 2 hours after installing the cylinder head cover.

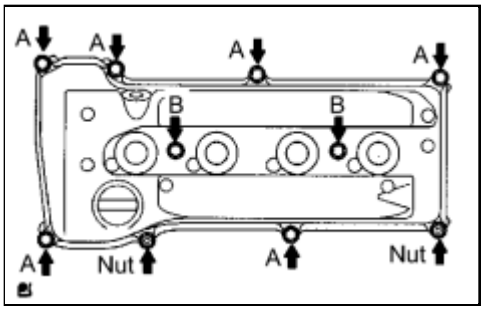

(c) Install the cylinder head cover with the 8 bolts and 2 nuts.

Bolt A - Torque: 11 N·m (112 kgf·cm, 8ft·lbf)
Bolt B - Torque: 14 N·m (143 kgf·cm, 10ft·lbf)
Nut - Torque: 11 N·m (112 kgf·cm, 8ft·lbf)

42. INSTALL OIL FILTER UNION

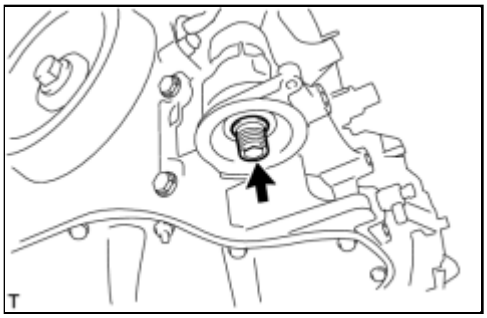

(a) Using a 12 mm socket hexagon wrench, install the oil filter union.

Torque: 30 N·m (306 kgf·cm, 22ft·lbf)

43. INSTALL OIL FILTER SUB-ASSEMBLY INFO

44. INSTALL SPARK PLUG INFO

45. INSTALL VENTILATION VALVE SUB-ASSEMBLY

(a) Apply adhesive to the threads of the ventilation valve.

Adhesive:
Toyota Genuine Adhesive 1324, Three Bond 1324 or equivalent

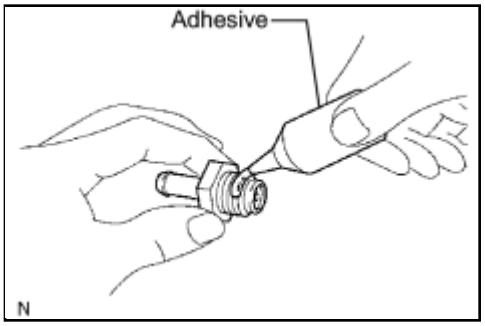

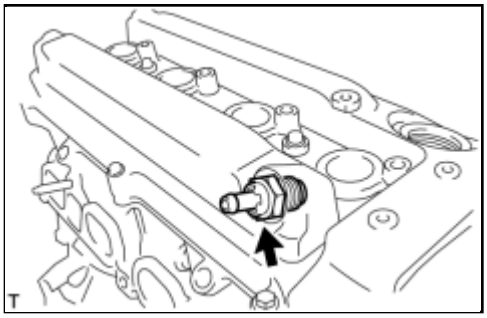

(b) Using a 22 mm deep socket wrench, install the ventilation valve onto the cylinder head cover.

Torque: 19 N·m (194 kgf·cm, 14ft·lbf)

46. INSTALL OIL FILLER CAP GASKET

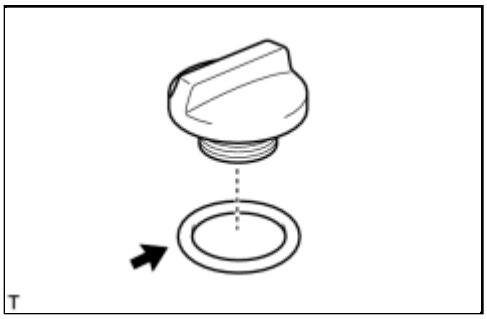

(a) Install the oil filler cap gasket onto the oil filler cap.

47. INSTALL OIL FILLER CAP SUB-ASSEMBLY

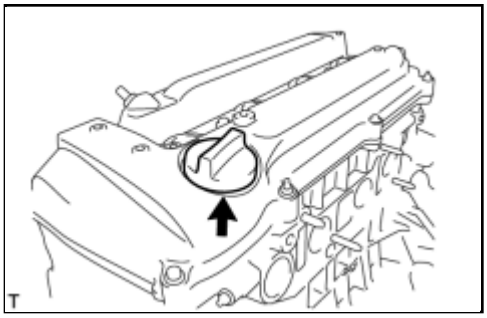

(a) Install the oil filler cap onto the cylinder head cover.

Last Modified: 3-10-2010	6.4 G	**From:** 200901
Model Year: 2010	**Model:** Corolla	**Doc ID:** RM0000026TQ018X
Title: 2AZ-FE ENGINE MECHANICAL: ENGINE UNIT: INSPECTION (2010 Corolla)		

INSPECTION

1. INSPECT BALANCESHAFT THRUST CLEARANCE

(a) Install the balanceshafts INFO .

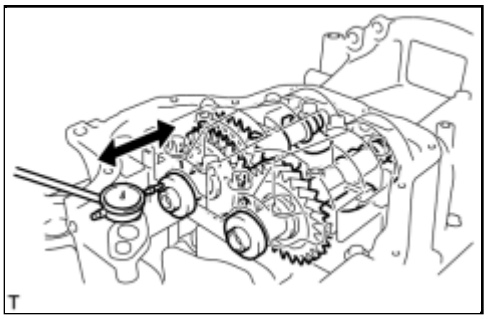

(b) Using a dial indicator, measure the thrust clearance while moving the balanceshaft back and forth.

Standard thrust clearance:
0.05 to 0.09 mm (0.0020 to 0.0035 in.)
Maximum thrust clearance:
0.09 mm (0.0035 in.)

If the thrust clearance is greater than the maximum, replace the balanceshaft housing and bearings. If necessary, replace the balanceshaft.

2. INSPECT BALANCESHAFT OIL CLEARANCE

(a) Clean each bearing and journal.

(b) Check each bearing and journal for pitting and scratches.

If a bearing or journal is damaged, replace the bearings. If necessary, replace the balanceshaft.

(c) Place the No. 1 and No. 2 balanceshafts onto the crankcase.

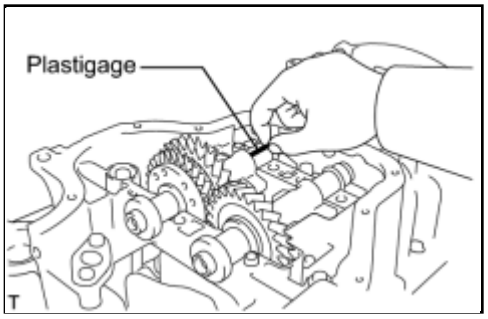

(d) Lay a strip of Plastigage across each journal.

(e) Install the balanceshaft housing INFO .

NOTICE:

Do not turn the balanceshafts.

(f) Remove the balanceshafts INFO .

(g) Measure the Plastigage at its widest point.

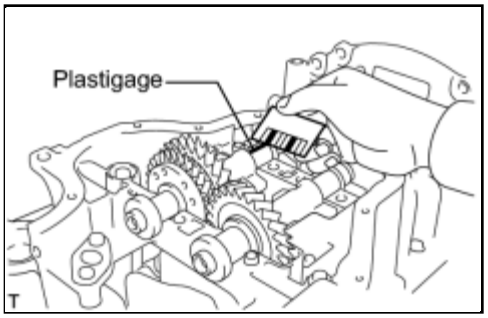

Standard oil clearance:
0.022 to 0.049 mm (0.0009 to 0.0019 in.)
Maximum oil clearance:
0.049 mm (0.0019 in.)

NOTICE:

Remove the Plastigage completely after the measurement.

If the oil clearance is greater than the maximum, replace the bearing. If necessary, replace the balanceshaft.

(h) If replacing a bearing, select a new one with the same number.

Standard Balanceshaft Housing Journal Bore Diameter:

ITEM	SPECIFIED CONDITION
Mark 1	26.000 to 26.006 mm (1.0236 to 1.0239 in.)
Mark 2	26.007 to 26.012 mm (1.0239 to 1.0241 in.)
Mark 3	26.013 to 26.018 mm (1.0241 to 1.0243 in.)

Standard Bearing Center Wall Thickness:

ITEM	SPECIFIED CONDITION
Mark 1	1.486 to 1.489 mm (0.05850 to 0.05862 in.)
Mark 2	1.490 to 1.492 mm (0.05866 to 0.05874 in.)
Mark 3	1.493 to 1.495 mm (0.0588 to 0.0589 in.)

Standard balanceshaft journal diameter:
22.985 to 23.000 mm (0.9049 to 0.9055 in.)

(i) Inspect the balanceshaft housing bolts.

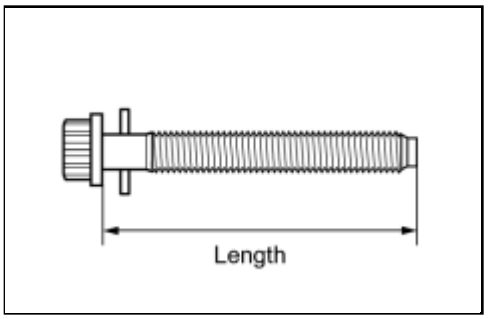

(1) Using a vernier caliper, measure the length of the bolts from the seat to the end.

Standard bolt length:
58.3 to 59.7 mm (2.295 to 2.350 in.)
Maximum bolt length:
60.3 mm (2.374 in.)

If the bolt length is greater than the maximum, replace the balanceshaft housing bolt.

3. INSPECT CHAIN SUB-ASSEMBLY

(a) Pull the chain with a force of 140 N (14.3 kgf, 31.5 lbf) as

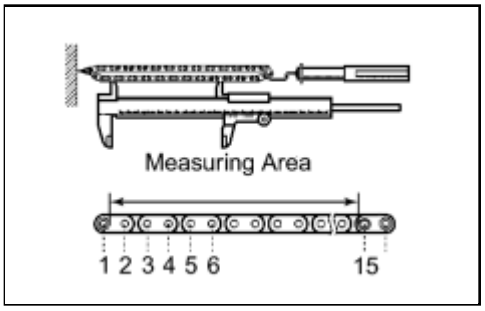

shown in the illustration.

(b) Using a vernier caliper, measure the length of 15 links.

Maximum chain elongation:
114.5 mm (4.508 in.)

NOTICE:

Perform the measurement at 3 random places. Use the average of the measurements.

If the elongation is greater than the maximum, replace the chain.

4. INSPECT NO. 2 CHAIN SUB-ASSEMBLY

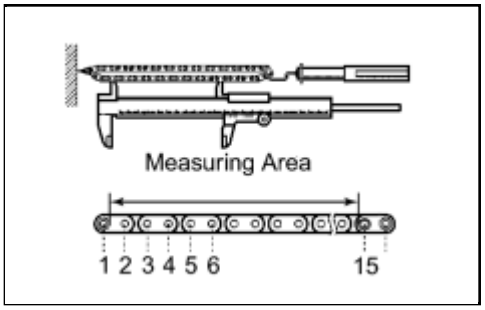

(a) Pull the chain with a force of 140 N (14.3 kgf, 31.5 lbf) as shown in the illustration.

(b) Using a vernier caliper, measure the length of 15 links.

Maximum chain elongation:
102.2 mm (4.024 in.)

NOTICE:

Perform the measurement at 3 random places. Use the average of the measurements.

If the elongation is greater than the maximum, replace the No. 2 chain.

5. INSPECT OIL PUMP DRIVE GEAR

(a) Wrap the chain around the sprocket.

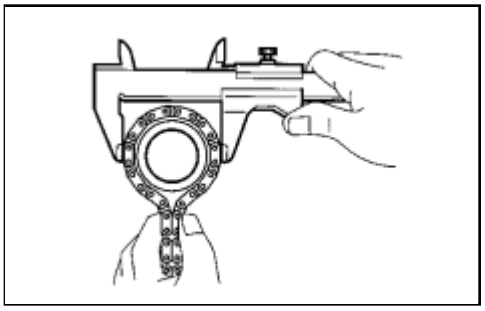

(b) Using a vernier caliper, measure the sprocket diameter with the chain wrapped around.

Minimum gear diameter (with chain):
48.2 mm (1.898 in.)

NOTICE:
The vernier caliper must be in contact with the chain rollers when measuring.

If the diameter is less than the minimum, replace the chain and sprocket.

6. INSPECT OIL PUMP DRIVE SHAFT GEAR

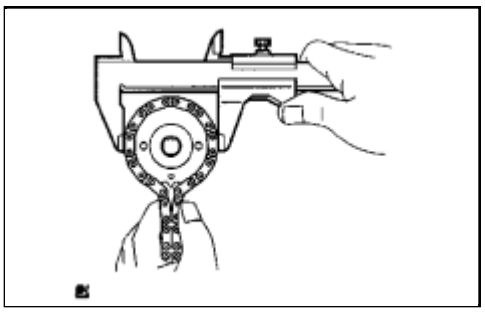

(a) Wrap the chain around the sprocket.

(b) Using a vernier caliper, measure the sprocket diameter with the chain wrapped around.

Minimum gear diameter (with chain):
48.2 mm (1.898 in.)

NOTICE:
The vernier caliper must be in contact with the chain rollers when measuring.

If the diameter is less than the minimum, replace the chain and sprocket.

7. INSPECT CAMSHAFT TIMING GEAR ASSEMBLY

(a) Wrap the chain around the sprocket.

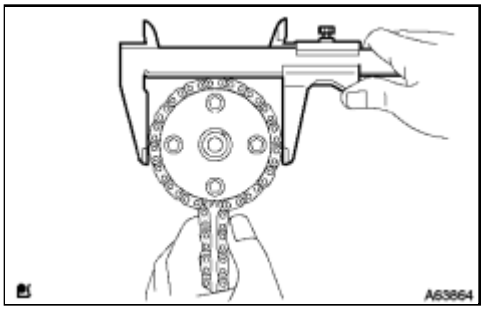

(b) Using a vernier caliper, measure the sprocket diameter with the chain wrapped around.

Minimum gear diameter (with chain):
97.3 mm (3.831 in.)

NOTICE:
The vernier caliper must be in contact with the chain rollers when measuring.

If the diameter is less than the minimum, replace the chain and sprocket.

8. INSPECT CAMSHAFT TIMING GEAR OR SPROCKET

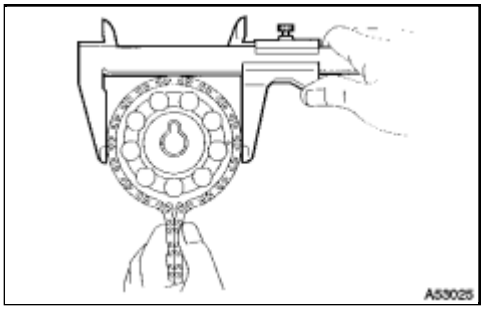

(a) Wrap the chain around the sprocket.

(b) Using a vernier caliper, measure the sprocket diameter with the chain wrapped around.

Minimum gear diameter (with chain):
97.3 mm (3.831 in.)

NOTICE:
The vernier caliper must be in contact with the chain rollers when measuring.

If the diameter is less than the minimum, replace the chain and sprocket.

9. INSPECT CRANKSHAFT TIMING GEAR OR SPROCKET

(a) Wrap the chain around the timing sprocket.

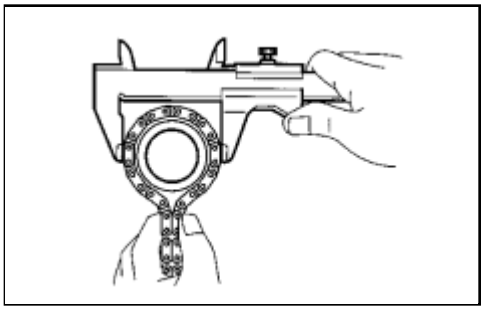

(b) Using a vernier caliper, measure the timing gear diameter with the chain wrapped around.

Minimum gear diameter (with chain):
51.6 mm (2.031 in.)

NOTICE:
The vernier caliper must be in contact with the chain rollers when measuring.

If the gear diameter is less than the minimum, replace the chain sub-assembly and crankshaft timing sprocket.

10. INSPECT CHAIN TENSIONER SLIPPER

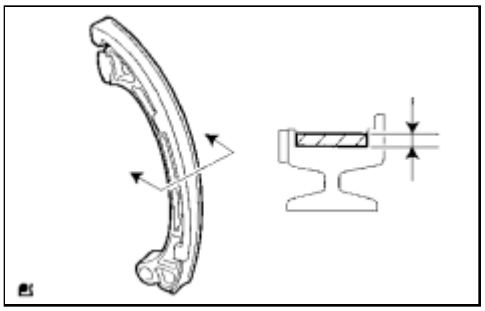

(a) Using a vernier caliper, measure the tensioner slipper wear.

Maximum wear:
1.0 mm (0.039 in.)

If the wear is greater than the maximum, replace the chain tensioner slipper.

11. INSPECT NO. 1 CHAIN VIBRATION DAMPER

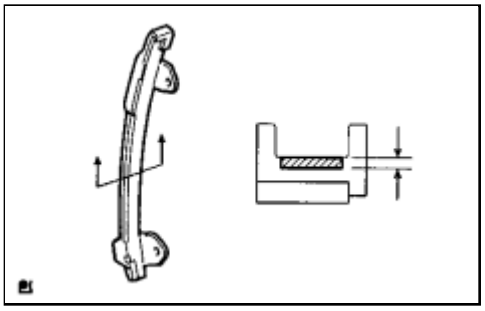

(a) Using a vernier caliper, measure the vibration damper wear.

Maximum wear:
1.0 mm (0.039 in.)

If the wear is greater than the maximum, replace the No. 1 chain vibration damper.

12. INSPECT CHAIN TENSIONER PLATE

(a) Using a vernier caliper, measure the vibration damper

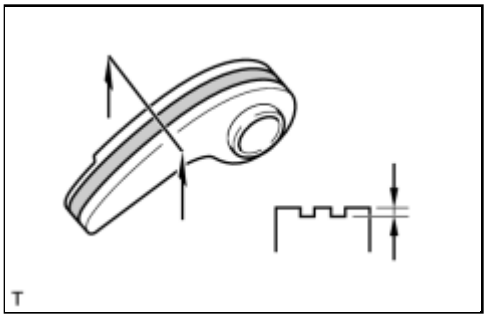

wear.

Maximum wear:
0.5 mm (0.020 in.)

If the wear is greater than the maximum, replace the chain tensioner plate.

13. INSPECT NO. 1 CHAIN TENSIONER ASSEMBLY

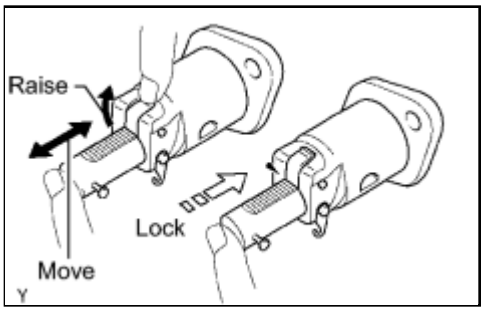

(a) Check that the plunger moves smoothly when the ratchet pawl is raised with your finger.

(b) Release the ratchet pawl, then check that the plunger is locked in place by the ratchet pawl and does not move when pushed with your finger.

14. INSPECT CAMSHAFT

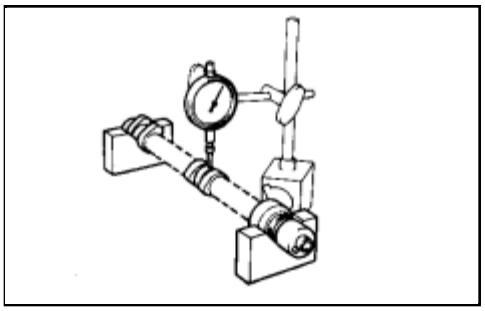

(a) Inspect the camshaft for runout.

(1) Place the camshaft on V-blocks.

(2) Using a dial indicator, measure the circle runout at the center journal.

Maximum circle runout:
0.03 mm (0.0012 in.)

If the circle runout is greater than the maximum, replace the camshaft.

(b) Inspect the cam lobes.

(1) Using a micrometer, measure the cam lobe heights.

Standard cam lobe height:
47.306 to 47.406 mm (1.8624 to 1.8664 in.)
Minimum cam lobe height:
47.196 mm (1.8581 in.)

If any of the cam lobe heights are less than the

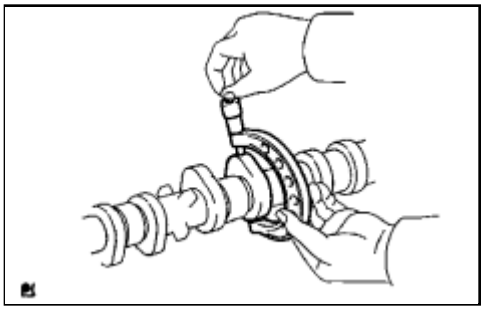

minimum, replace the camshaft.

(c) Inspect the camshaft journals.

(1) Using a micrometer, measure the journal diameter.

Standard Journal Diameter:

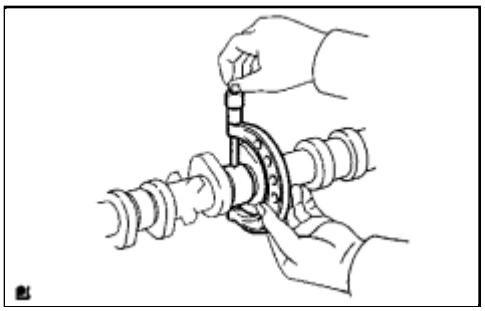

JOURNAL POSITION	SPECIFIED CONDITION
No. 1	35.971 to 35.985 mm (1.4162 to 1.4167 in.)
Others	22.959 to 22.975 mm (0.9039 to 0.9045 in.)

If the journal diameter is not as specified, check the oil clearance.

15. INSPECT NO. 2 CAMSHAFT

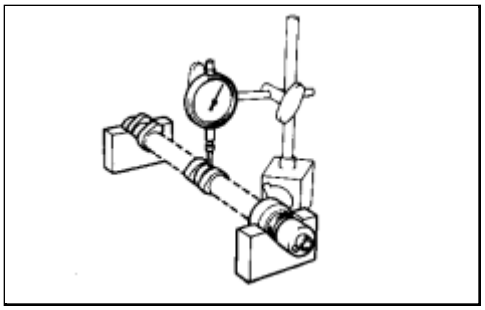

(a) Inspect the camshaft for runout.

(1) Place the camshaft on V-blocks.

(2) Using a dial indicator, measure the circle runout at the center journal.

Maximum circle runout:
0.03 mm (0.0012 in.)

If the circle runout is greater than the maximum, replace the No. 2 camshaft.

(b) Inspect the cam lobes.

(1) Using a micrometer, measure the cam lobe heights.

Standard cam lobe height:
46.063 to 46.163 mm (1.8135 to 1.8174 in.)
Minimum cam lobe height:
45.953 mm (1.8092 in.)

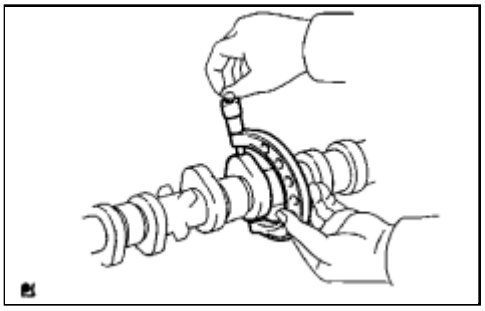

If any of the cam lobe heights are less than the minimum, replace the No. 2 camshaft.

(c) Inspect the camshaft journals.

(1) Using a micrometer, measure the journal diameter.

Standard Journal Diameter:

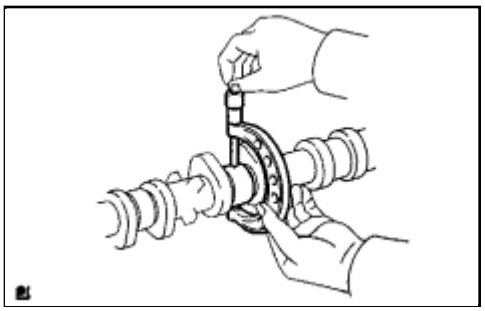

JOURNAL POSITION	SPECIFIED CONDITION
No. 1	35.971 to 35.985 mm (1.4162 to 1.4167 in.)
Others	22.959 to 22.975 mm (0.9039 to 0.9045 in.)

If the journal diameter is not as specified, check the oil clearance.

Last Modified: 3-10-2010	6.4 A	**From:** 200901
Model Year: 2010	**Model:** Corolla	**Doc ID:** RM000003 2Z9007X
Title: 2AZ-FE ENGINE MECHANICAL: ENGINE UNIT: REMOVAL (2010 Corolla)		

REMOVAL

1. REMOVE FUEL DELIVERY PIPE SUB-ASSEMBLY INFO

2. REMOVE FUEL INJECTOR ASSEMBLY INFO

3. REMOVE INTAKE MANIFOLD INFO

4. REMOVE NO. 1 INTAKE MANIFOLD INSULATOR

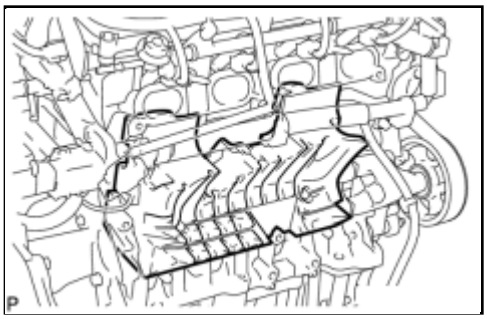

(a) Remove the No. 1 intake manifold insulator.

5. REMOVE NO. 1 EXHAUST MANIFOLD HEAT INSULATOR INFO

6. REMOVE MANIFOLD STAY INFO

7. REMOVE NO. 2 MANIFOLD STAY INFO

8. REMOVE EXHAUST MANIFOLD CONVERTER SUB-ASSEMBLY INFO

9. REMOVE INLET WATER INFO

10. REMOVE THERMOSTAT INFO

11. REMOVE ENGINE OIL LEVEL DIPSTICK

12. REMOVE ENGINE OIL LEVEL DIPSTICK GUIDE INFO

13. REMOVE NO. 1 WATER BY-PASS PIPE

(a) Remove the bolt and 2 nuts, then remove the No. 1 water by-pass pipe.

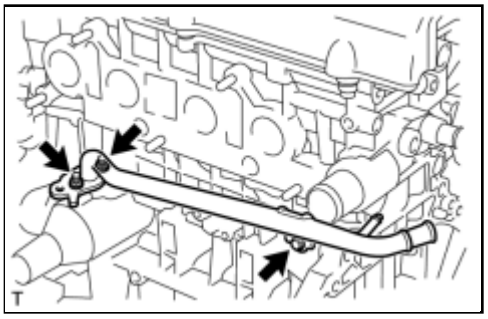

(b) Remove the gasket.

14. REMOVE IGNITION COIL ASSEMBLY INFO

15. REMOVE KNOCK SENSOR INFO

16. REMOVE OIL PRESSURE SWITCH INFO

17. REMOVE ENGINE COOLANT TEMPERATURE SENSOR INFO

18. REMOVE RADIO SETTING CONDENSER

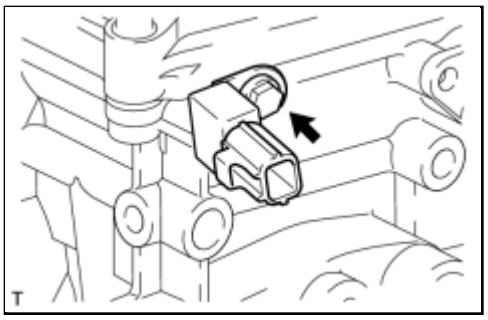

(a) Remove the bolt and radio setting condenser.

Last Modified: 3-10-2010	6.4 A	**From:** 200901
Model Year: 2010	**Model:** Corolla	**Doc ID:** RM000002XA302NX
Title: 2ZR-FE ENGINE MECHANICAL: ENGINE UNIT: DISASSEMBLY (2010 Corolla)		

DISASSEMBLY

1. REMOVE OIL FILLER CAP SUB-ASSEMBLY

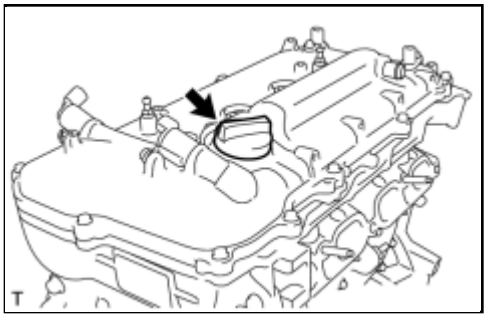

(a) Remove the oil filler cap.

2. REMOVE OIL FILLER CAP GASKET

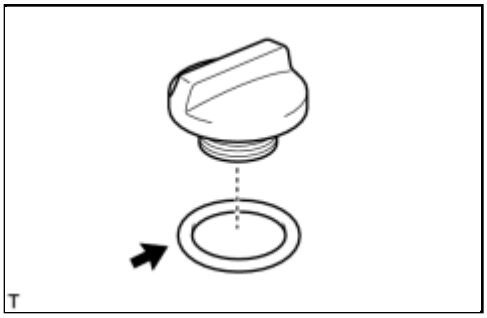

(a) Remove the gasket from the oil filler cap.

3. REMOVE ENGINE COVER JOINT

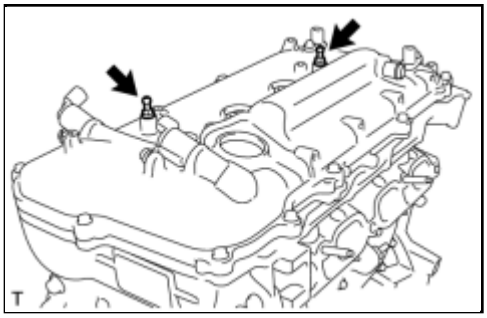

(a) Remove the 2 engine cover joints.

4. REMOVE SPARK PLUG

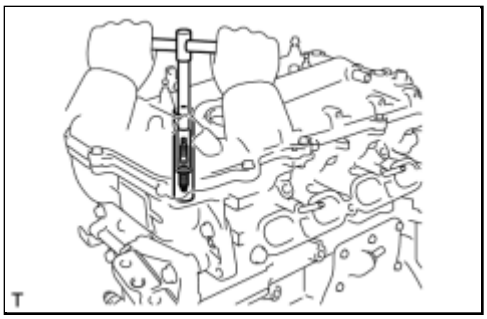

(a) Using a 14 mm spark plug wrench, remove the 4 spark plugs.

5. REMOVE CAMSHAFT POSITION SENSOR

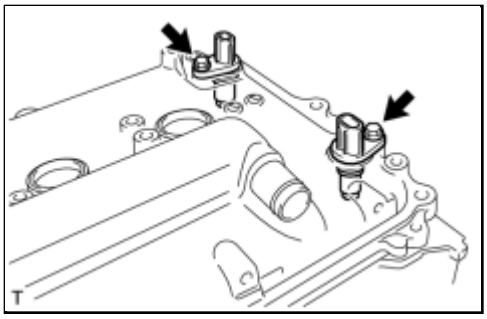

(a) Remove the 2 bolts and 2 sensors.

6. REMOVE CAMSHAFT TIMING OIL CONTROL VALVE ASSEMBLY

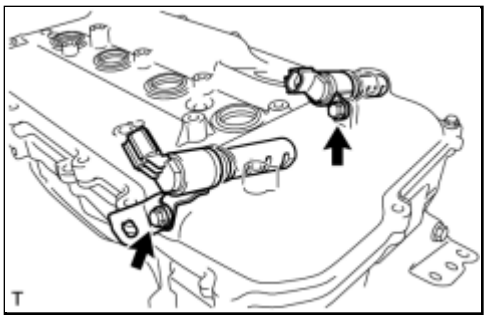

(a) Remove the 2 bolts, O-rings, bracket and 2 oil control valves.

7. REMOVE CYLINDER HEAD COVER SUB-ASSEMBLY

(a) Remove the 13 bolts, seal washer and cylinder head cover.

NOTICE:

Be careful not to drop any of the gaskets into the engine when removing the cylinder head cover because the gaskets may stick to the cylinder head cover.

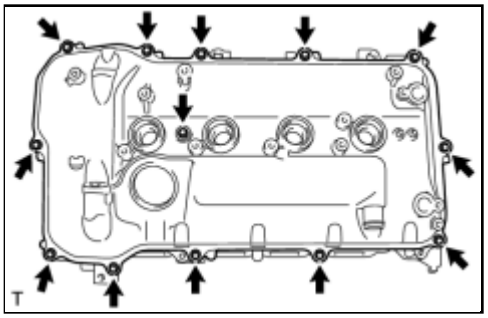

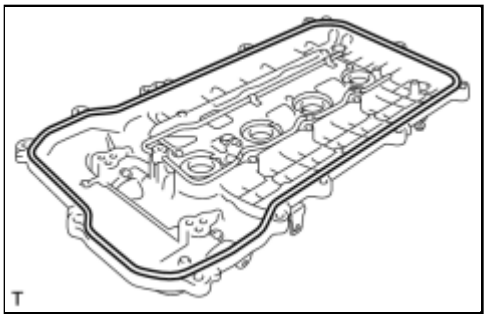

(b) Remove the cylinder head cover gasket.

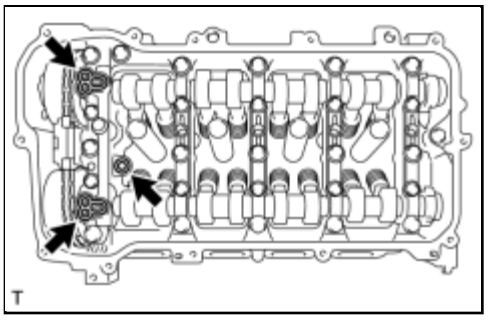

(c) Remove the 3 gaskets from the camshaft bearing cap.

8. SET NO. 1 CYLINDER TO TDC/COMPRESSION INFO

9. REMOVE CRANKSHAFT PULLEY INFO

10. REMOVE NO. 1 CHAIN TENSIONER ASSEMBLY

(a) Remove the 2 nuts, bracket, tensioner and gasket.

NOTICE:

Do not turn the crankshaft without the chain tensioner installed.

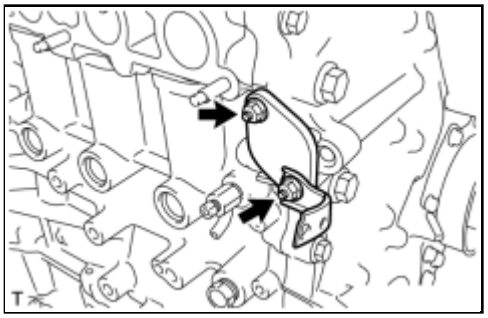

11. REMOVE CRANKSHAFT POSITION SENSOR

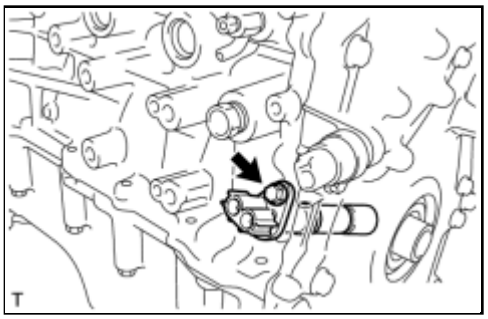

(a) Remove the bolt and sensor.

12. REMOVE ENGINE OIL PRESSURE SWITCH ASSEMBLY

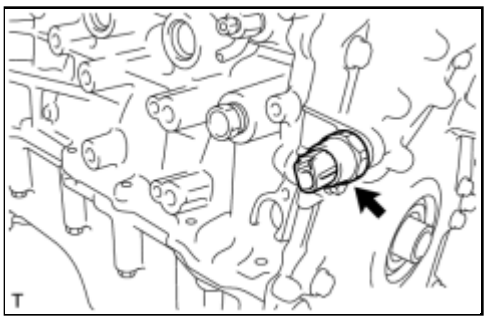

(a) Using a 24 mm deep socket wrench, remove the engine oil pressure switch assembly.

13. REMOVE NO. 1 TAPER SCREW PLUG

(a) Remove the taper screw plug.

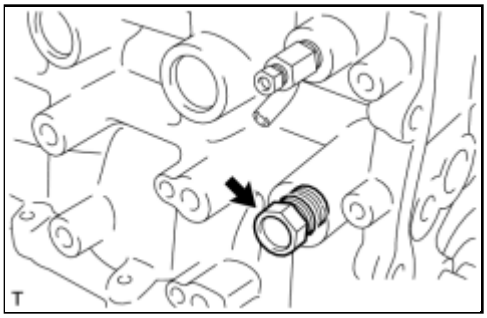

14. REMOVE KNOCK CONTROL SENSOR

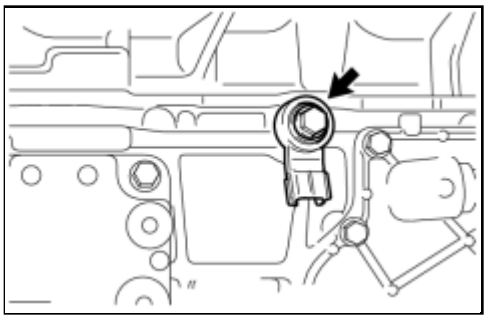

(a) Remove the bolt and sensor.

15. REMOVE ENGINE COOLANT TEMPERATURE SENSOR

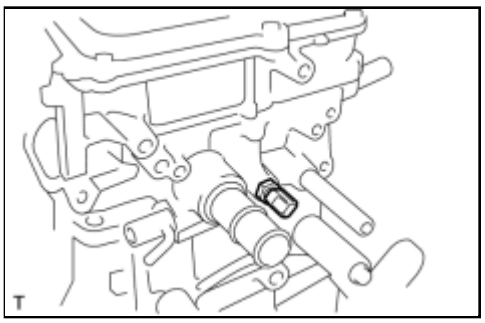

(a) Using a 19 mm deep socket wrench, remove the sensor.

(b) Remove the gasket from the engine coolant temperature sensor.

16. REMOVE OIL FILTER CAP ASSEMBLY INFO

17. REMOVE TIMING CHAIN COVER SUB-ASSEMBLY INFO

18. REMOVE TIMING CHAIN COVER OIL SEAL

(a) Using a screwdriver and hammer, remove the oil seal.

NOTICE:

Be careful not to damage the timing chain cover.

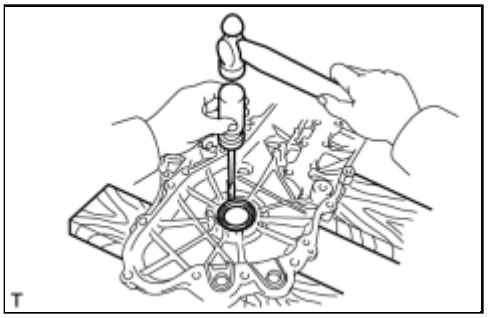

HINT:

Tape the screwdriver tip before use.

19. REMOVE INLET WATER HOUSING

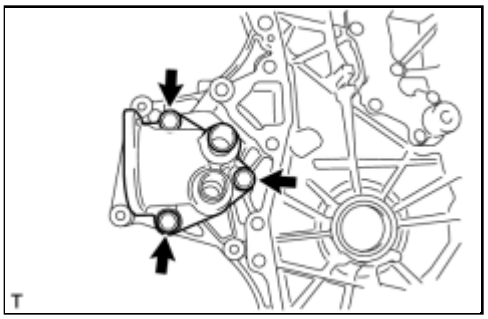

(a) Remove the 3 bolts, gasket and inlet water housing.

20. REMOVE NO. 1 GENERATOR BRACKET

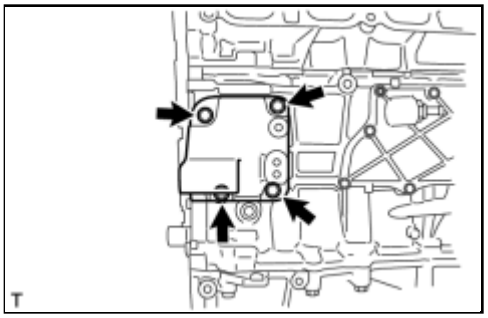

(a) Remove the 4 bolts and No. 1 generator bracket.

21. REMOVE CHAIN TENSIONER SLIPPER INFO

22. REMOVE NO. 1 CHAIN VIBRATION DAMPER INFO

23. REMOVE CHAIN SUB-ASSEMBLY INFO

24. REMOVE NO. 2 CHAIN VIBRATION DAMPER INFO

25. REMOVE CRANKSHAFT TIMING SPROCKET INFO

26. REMOVE NO. 2 CHAIN SUB-ASSEMBLY INFO

27. REMOVE NO. 1 CRANKSHAFT POSITION SENSOR PLATE

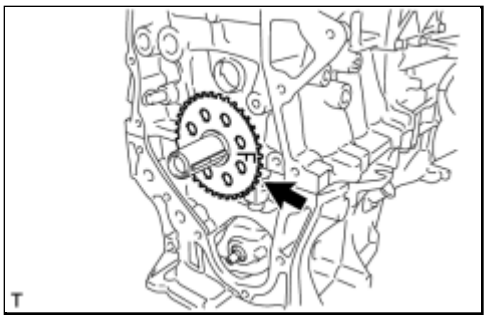

(a) Remove the No. 1 crankshaft position sensor plate.

28. REMOVE CRANKSHAFT TIMING GEAR KEY

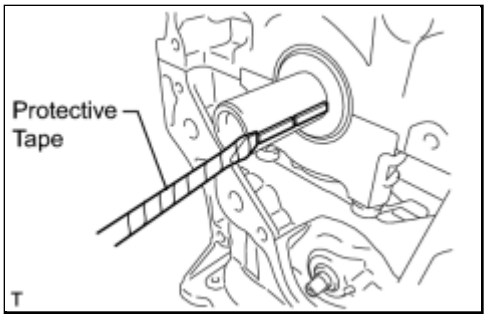

(a) Using a screwdriver, remove the 2 crankshaft timing gear keys.

HINT:

Tape the screwdriver tip before use.

29. REMOVE CAMSHAFT TIMING GEAR ASSEMBLY

(a) Check the lock of the camshaft timing gear.

(b) Release the lock pin.

NOTICE:

Before removing the camshaft timing gear assembly, make sure that the lock pin has been released.

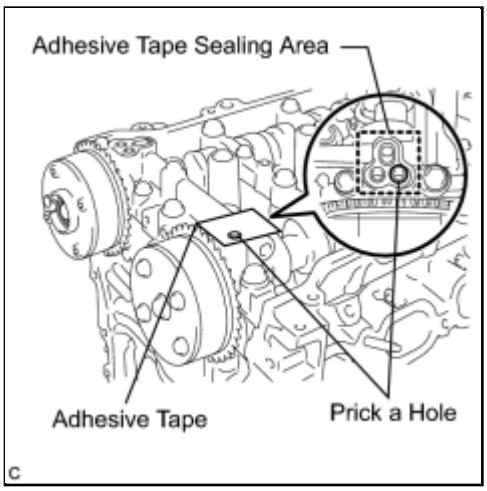

(1) After cleaning and degreasing the VVT oil hole on the intake side of the No. 1 camshaft bearing cap, completely seal the oil hole with adhesive tape or equivalent as shown in the illustration to prevent air from leaking.

NOTICE:

Be sure to cover the oil hole completely because air leaks due to insufficient sealing will prevent the lock pin from being released.

(2) Prick a hole in the tape covering the oil hole as shown in the illustration. (Procedure A)

(3) Apply approximately 150 kPa (1.5 kgf/cm2, 22 psi) of air pressure to the hole pricked in procedure A to release the lock pin.

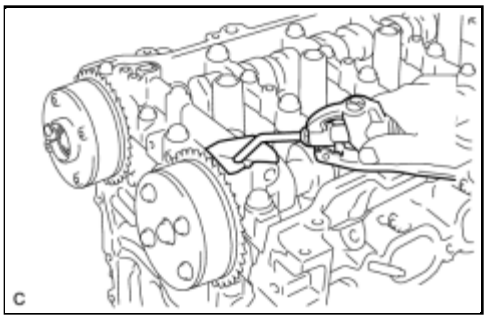

NOTICE:

- If air leaks out, reattach the adhesive tape.
- Cover the oil hole with a piece of cloth when applying air pressure to prevent oil from spraying.
- Do not lock the camshaft timing gear assembly. If it is locked, release the lock pin again.

HINT:

- The camshaft timing gear assembly may be turned in the advance direction without applying any force.
- If enough air pressure cannot be applied because of air leakage from the port, releasing the lock pin may be difficult.

(4) Remove the adhesive tape from the No. 1 camshaft bearing cap.

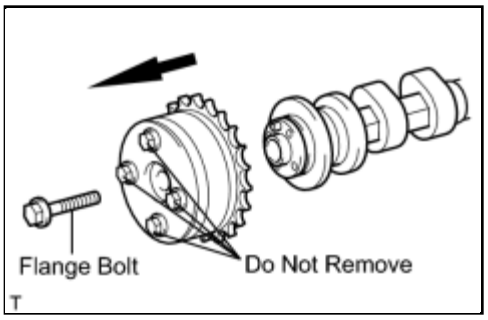

(c) Remove the flange bolt while holding the hexagonal portion of the camshaft, then remove the camshaft timing gear assembly.

NOTICE:

- Before removing the camshaft timing gear, make sure that the lock pin has been released.
- Be sure not to remove the other 4 bolts.
- Keep the camshaft timing gear assembly horizontal while removing it from the camshaft.

30. REMOVE CAMSHAFT TIMING EXHAUST GEAR ASSEMBLY

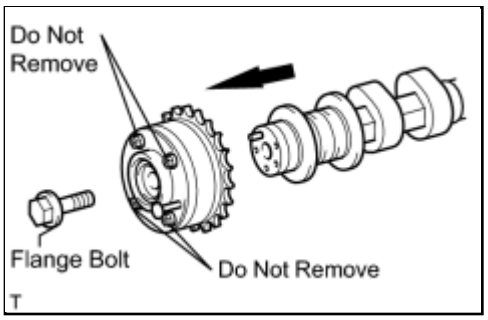

(a) Remove the flange bolt while holding the hexagonal portion of the camshaft, then remove the camshaft timing exhaust gear assembly.

NOTICE:

- Be sure not to remove the other 4 bolts.
- Keep the camshaft timing exhaust gear assembly horizontal while removing it from the camshaft.

31. REMOVE CAMSHAFT BEARING CAP

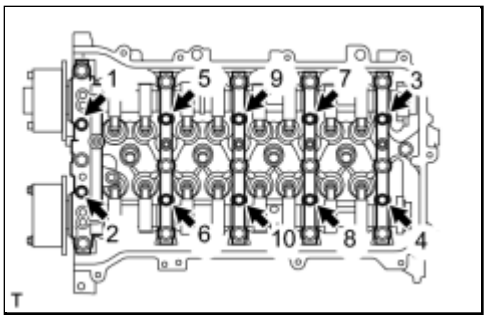

(a) Uniformly loosen and remove the 10 bearing cap bolts in the sequence shown in the illustration.

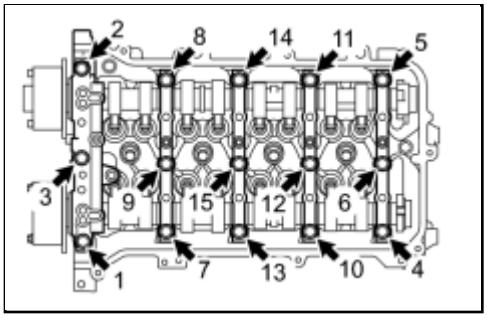

(b) Uniformly loosen and remove the 15 bearing cap bolts in the sequence shown in the illustration.

NOTICE:

Uniformly loosen the bolts while keeping the camshaft level.

(c) Remove the 5 bearing caps.

HINT:

Arrange the removed parts in the correct order.

32. REMOVE CAMSHAFT

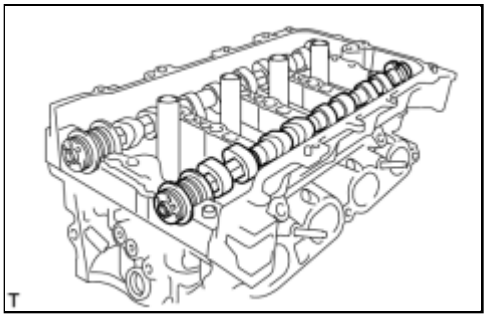

(a) Remove the camshaft.

33. REMOVE NO. 2 CAMSHAFT

(a) Remove the No. 2 camshaft.

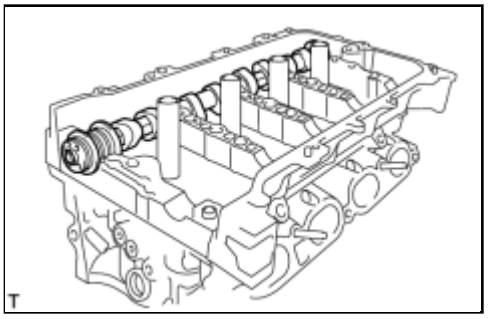

34. REMOVE NO. 1 VALVE ROCKER ARM SUB-ASSEMBLY

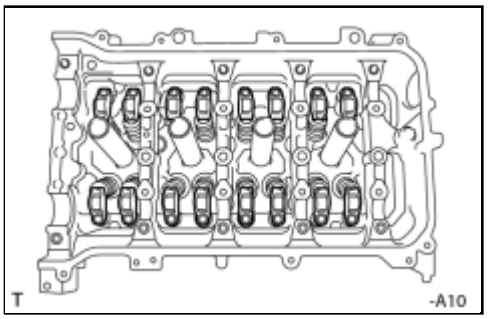

(a) Remove the 16 valve rocker arms.

HINT:

Arrange the removed parts in the correct order.

35. REMOVE VALVE LASH ADJUSTER ASSEMBLY

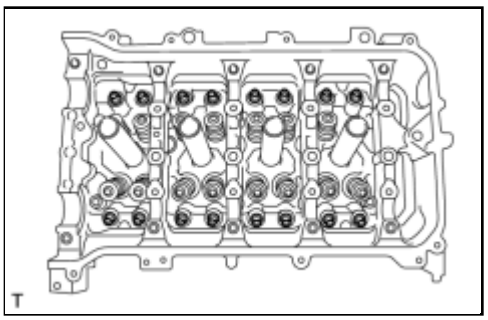

(a) Remove the 16 valve lash adjusters from the cylinder head.

HINT:

Arrange the removed parts in the correct order.

36. REMOVE OIL CONTROL VALVE FILTER

(a) Remove the oil control valve filter.

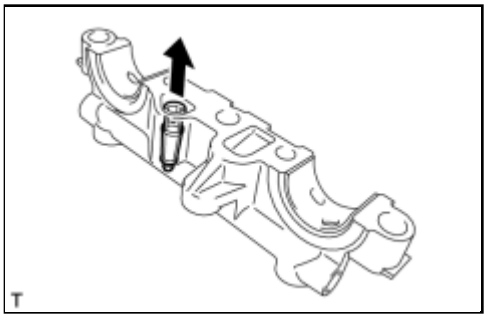

37. REMOVE NO. 1 CAMSHAFT BEARING

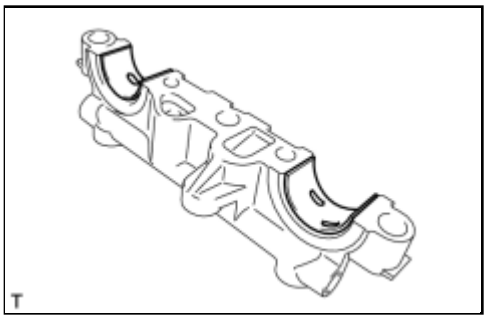

(a) Remove the 2 No. 1 camshaft bearings.

38. REMOVE NO. 2 CAMSHAFT BEARING

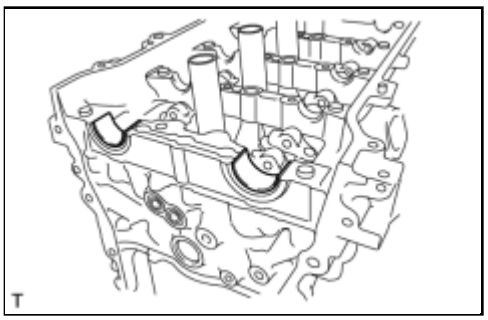

(a) Remove the 2 No. 2 camshaft bearings.

39. REMOVE CAMSHAFT HOUSING SUB-ASSEMBLY

(a) Remove the 2 bolts.

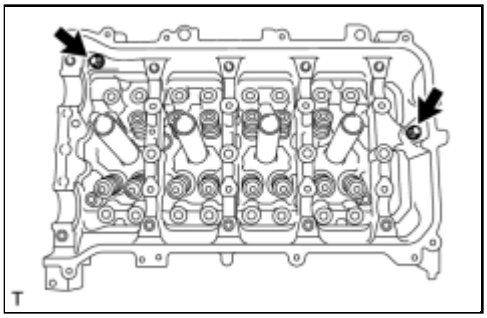

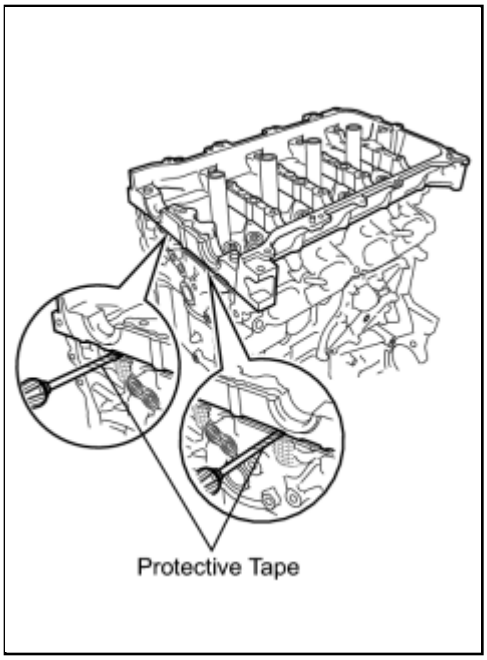

(b) Remove the camshaft housing by prying between the cylinder head and camshaft housing with a screwdriver.

NOTICE:

Be careful not to damage the contact surfaces of the cylinder head and camshaft housing.

HINT:

Tape the screwdriver tip before use.

40. REMOVE CYLINDER HEAD SUB-ASSEMBLY INFO

41. REMOVE CYLINDER HEAD GASKET INFO

42. REMOVE CYLINDER BLOCK WATER DRAIN COCK SUB-ASSEMBLY

(a) Remove the water drain cock plug from the water drain cock sub-assembly.

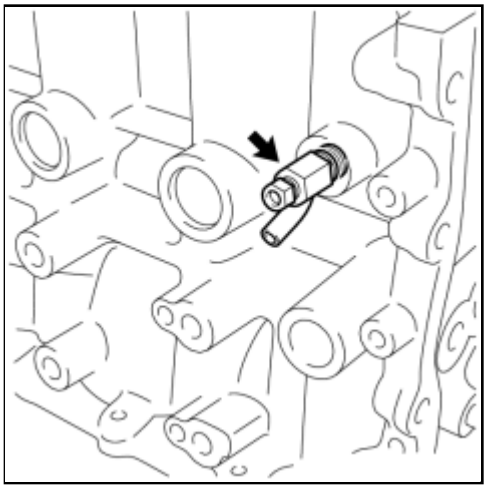

(b) Remove the cylinder block water drain cock sub-assembly from the cylinder block.

43. REMOVE VENTILATION VALVE SUB-ASSEMBLY

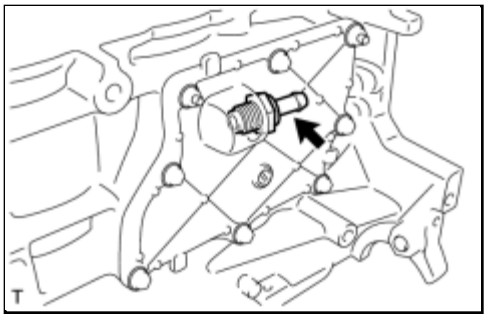

(a) Remove the ventilation valve.

44. REMOVE OIL PAN DRAIN PLUG

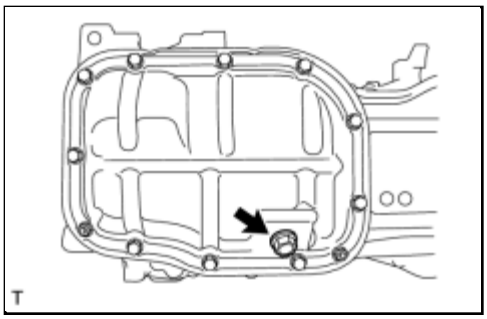

(a) Remove the oil pan drain plug and gasket.

45. REMOVE NO. 2 OIL PAN SUB-ASSEMBLY INFO

46. REMOVE OIL PUMP ASSEMBLY INFO

47. REMOVE REAR ENGINE OIL SEAL

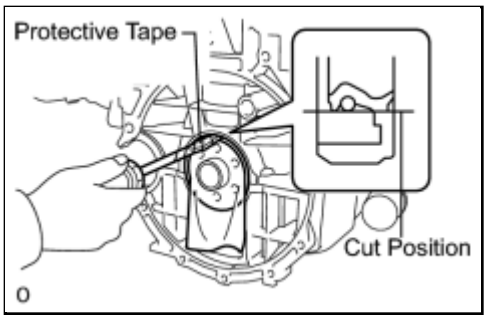

(a) Using a knife, cut off the oil seal lip.

(b) Using a screwdriver with its tip taped, pry out the oil seal.

NOTICE:

After removing the oil seal, check the crankshaft for damage. If it is damaged, smooth the surface with 400-grit sandpaper.

48. REMOVE STIFFENING CRANKCASE ASSEMBLY

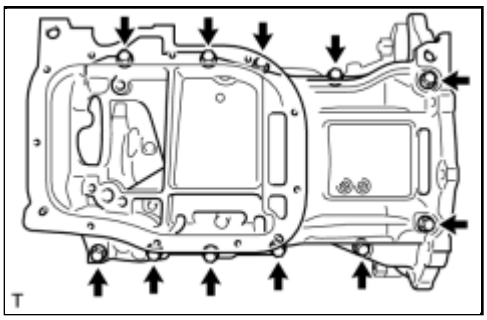

(a) Uniformly loosen and remove the 11 bolts.

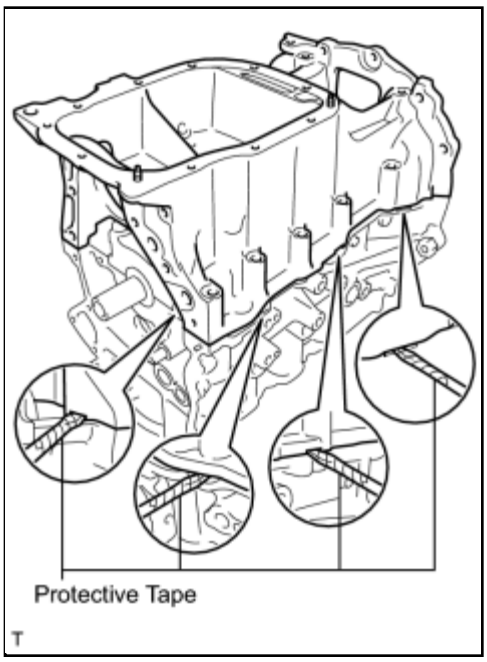

(b) Using a screwdriver, remove the crankcase by prying between the crankcase and cylinder block.

NOTICE:

Be careful not to damage the contact surfaces of the crankcase and cylinder block.

Last Modified: 3-10-2010	6.4 K	**From:** 200901
Model Year: 2010	**Model:** Corolla	**Doc ID:** RM000002XA800WX
Title: 2ZR-FE ENGINE MECHANICAL: ENGINE UNIT: COMPONENTS (2010 Corolla)		

COMPONENTS

ILLUSTRATION

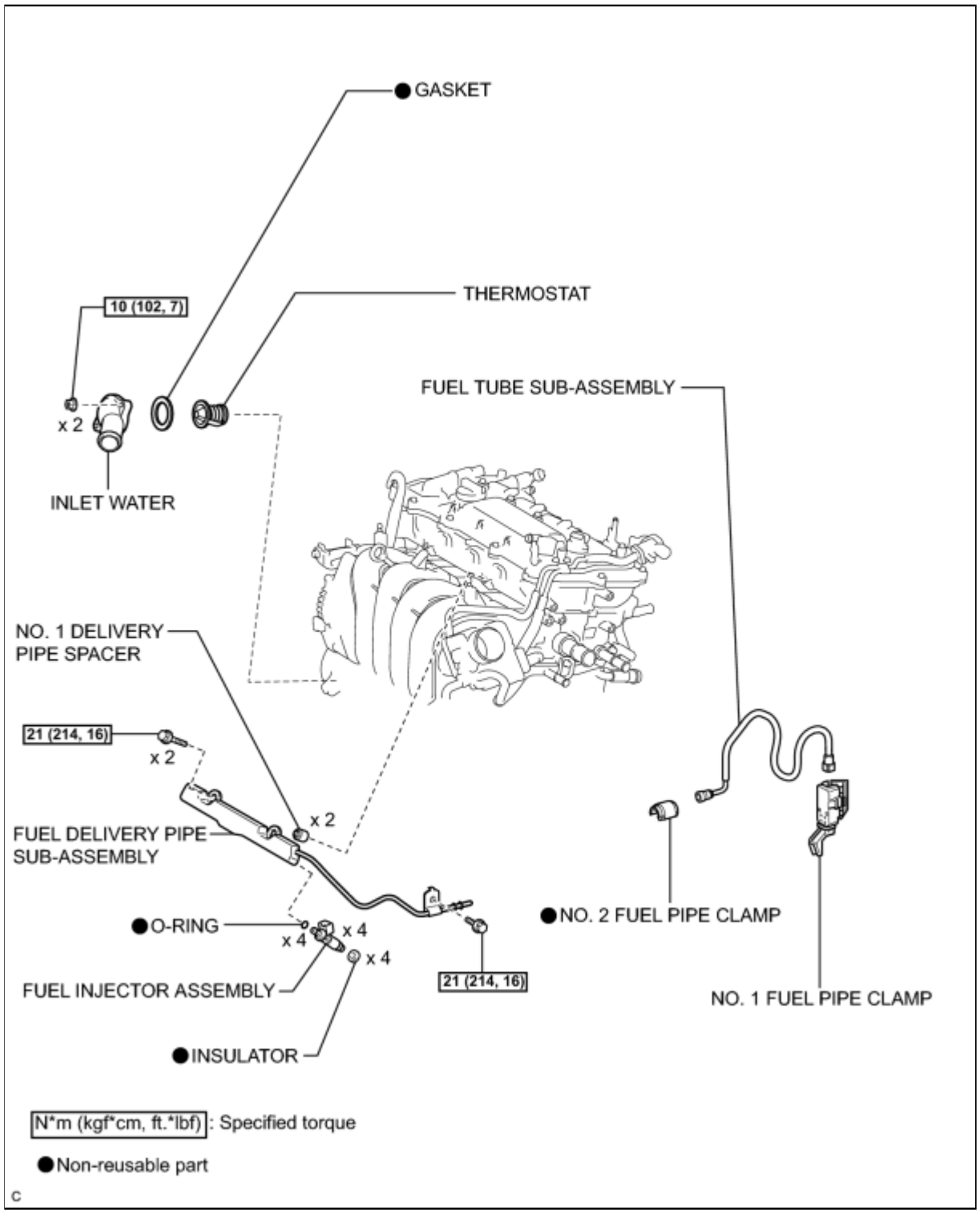

ILLUSTRATION

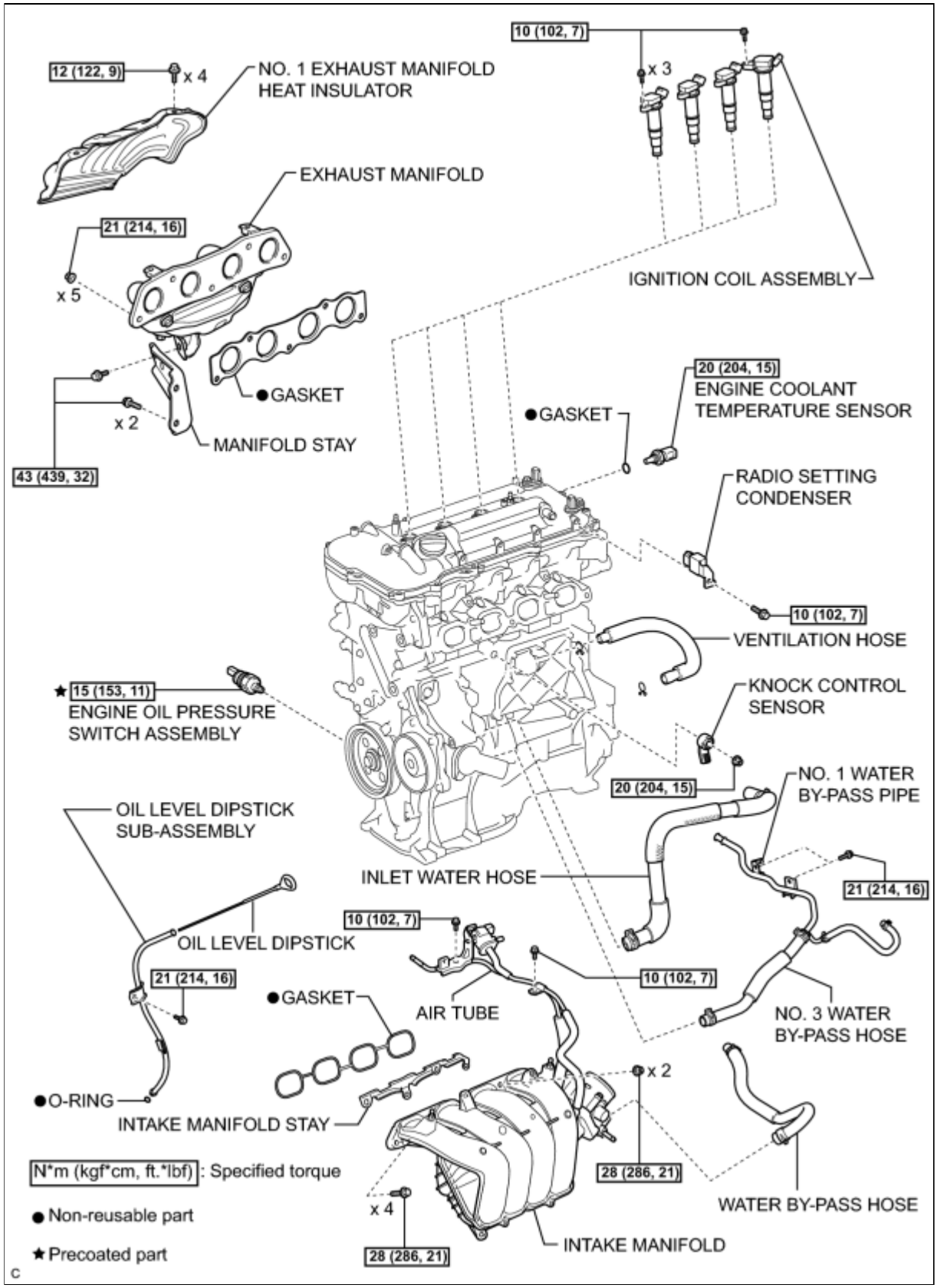

ILLUSTRATION

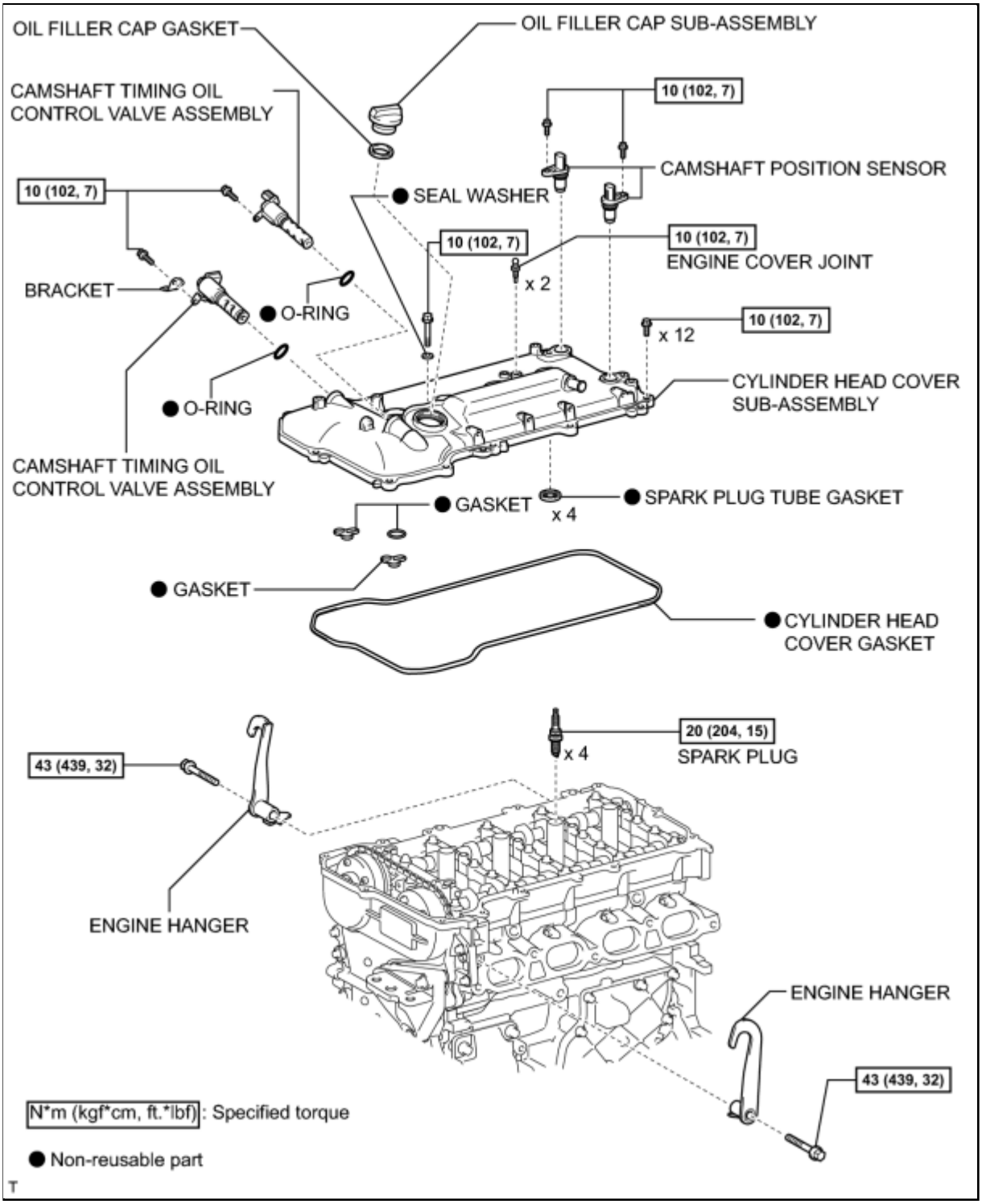

ILLUSTRATION

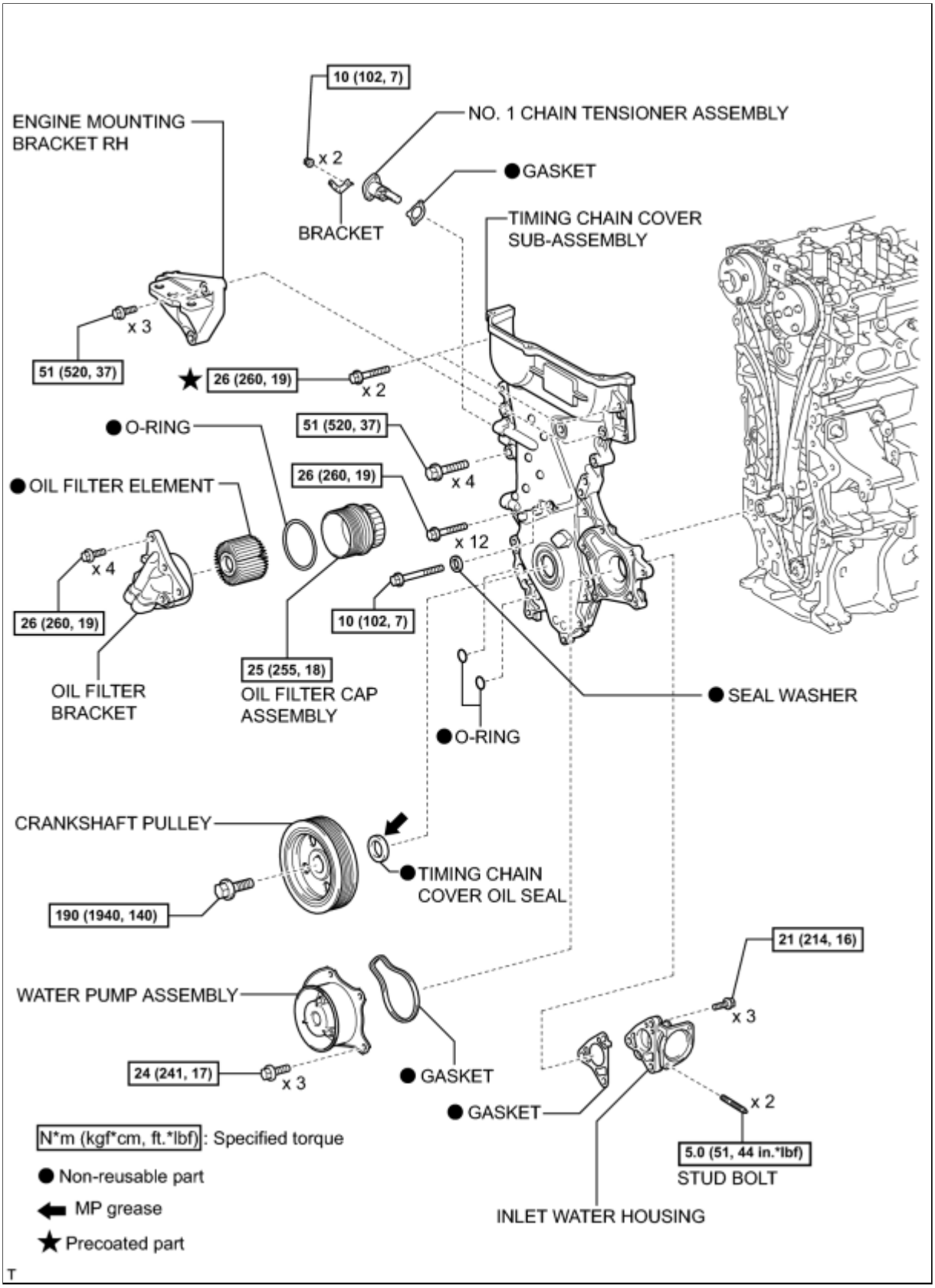

ILLUSTRATION

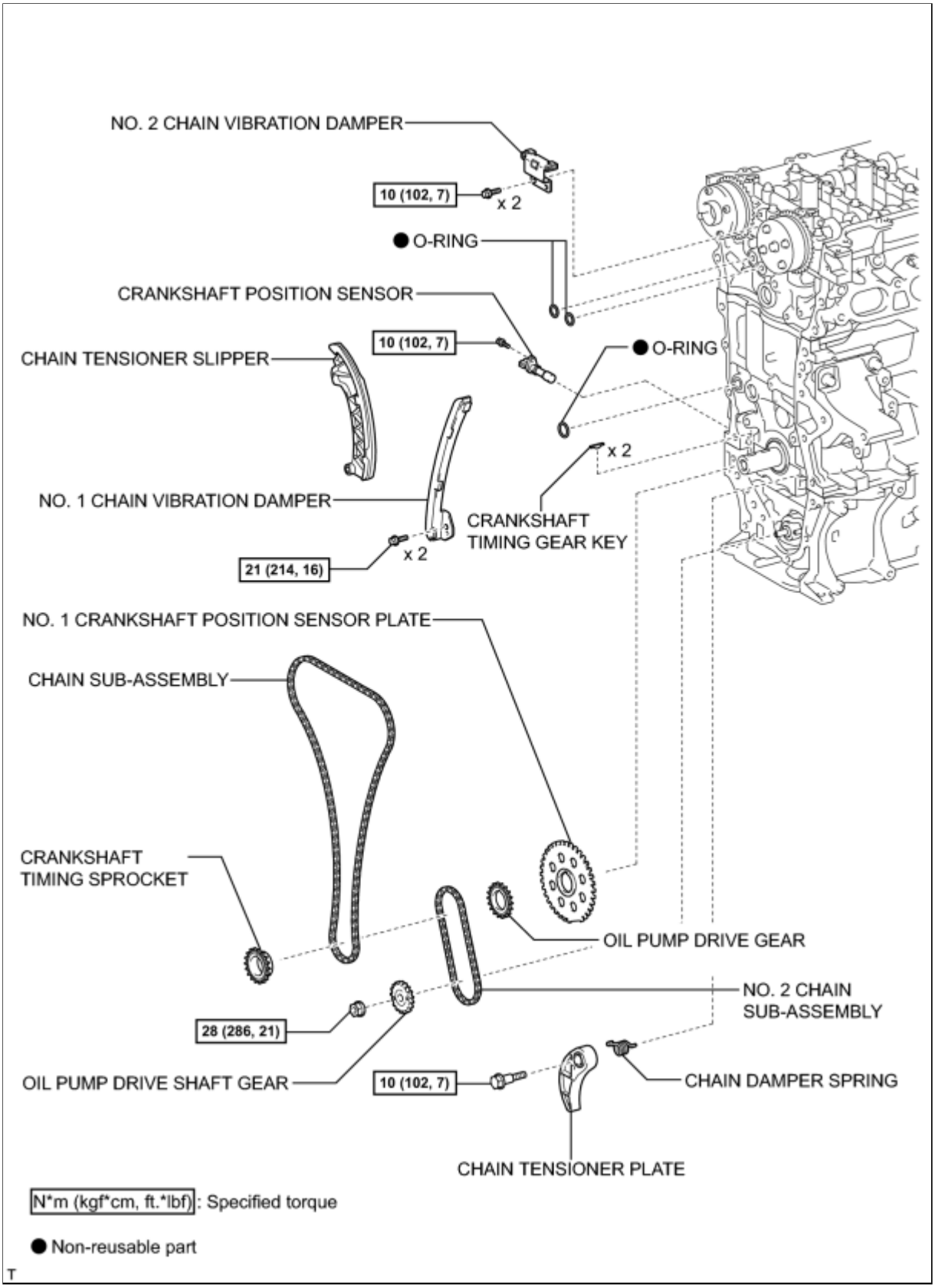

ILLUSTRATION

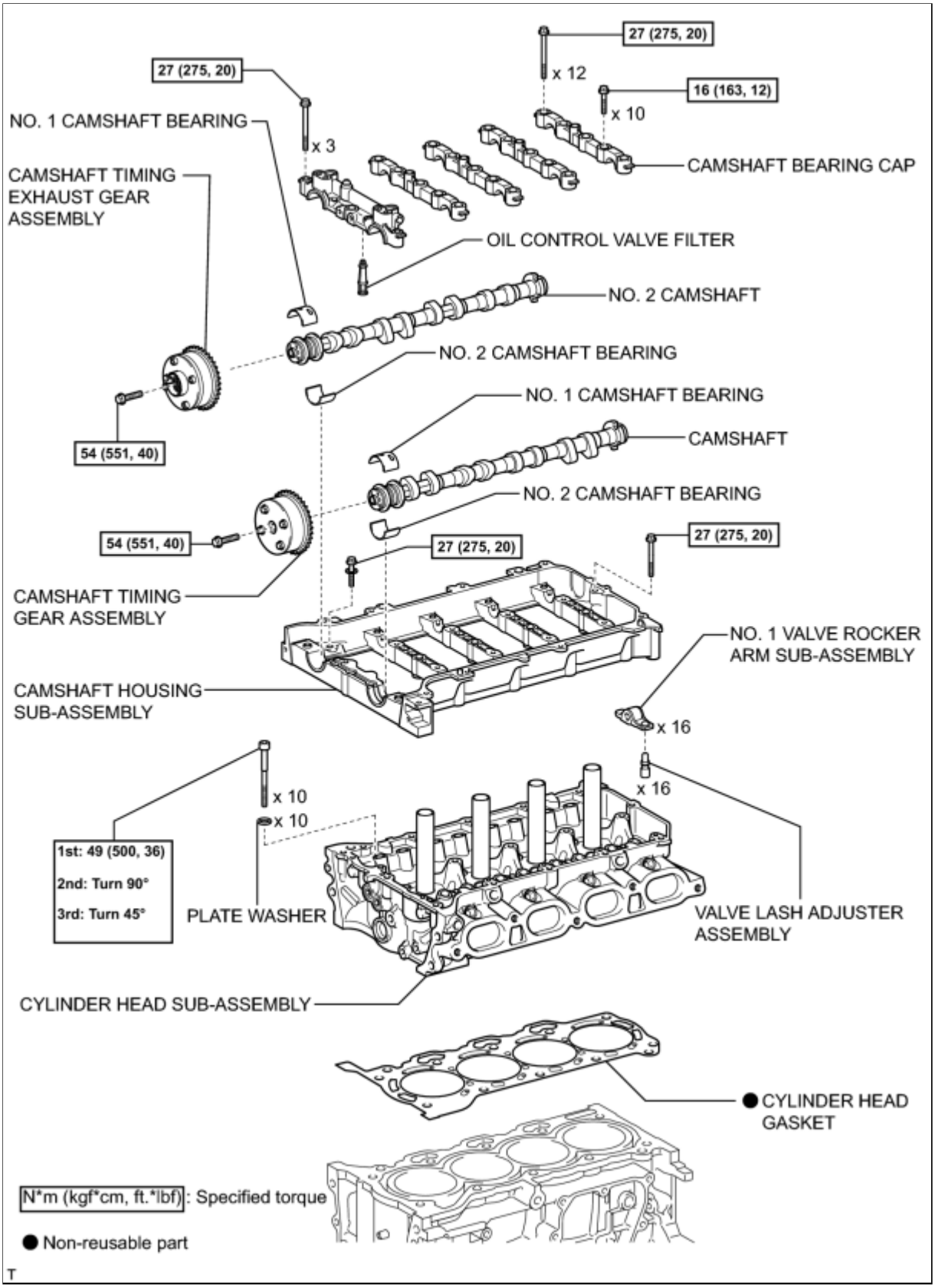

ILLUSTRATION

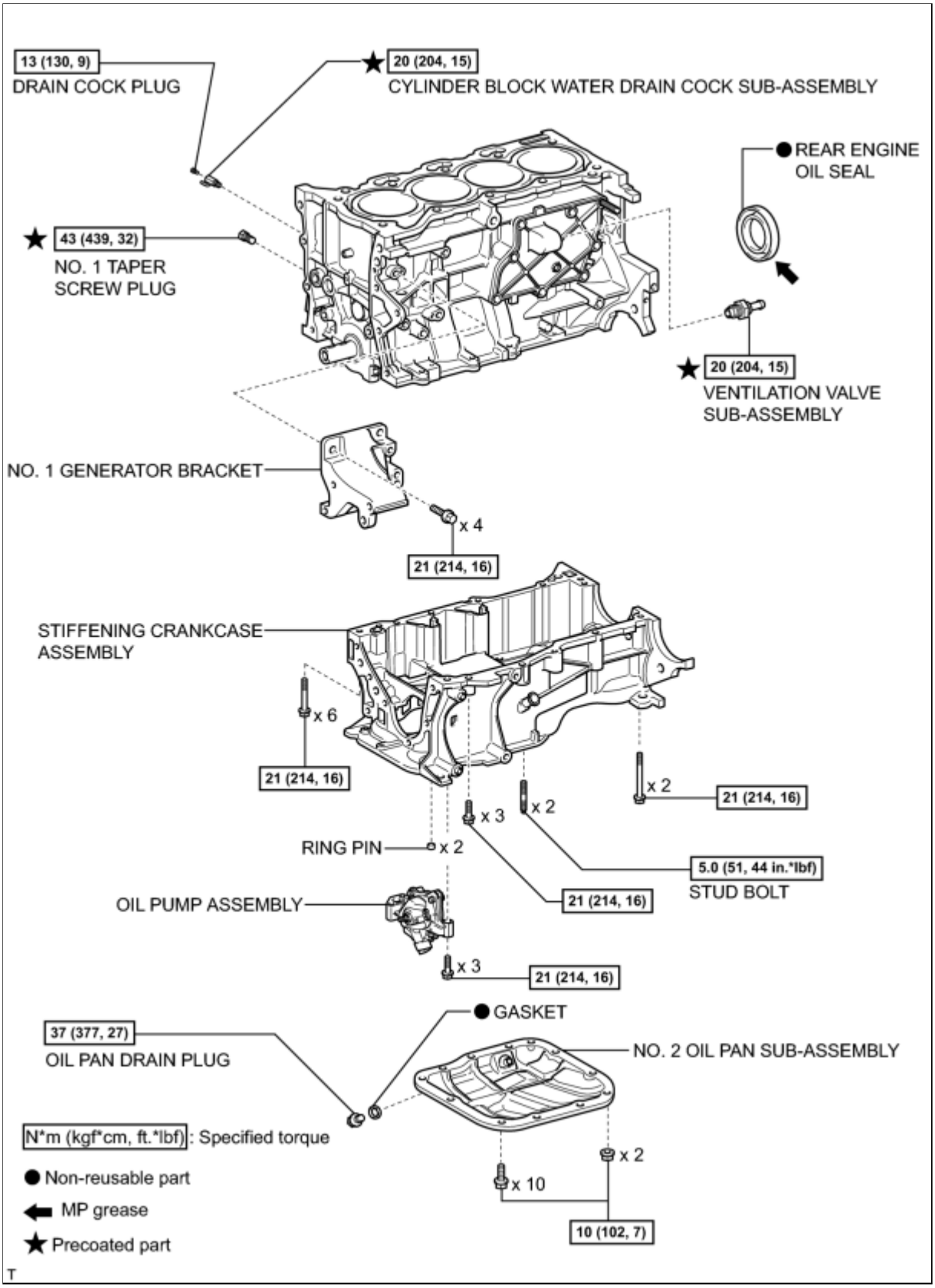
13 (130, 9)
DRAIN COCK PLUG
20 (204, 15)
CYLINDER BLOCK WATER DRAIN COCK SUB-ASSEMBLY
REAR ENGINE OIL SEAL
43 (439, 32)
NO. 1 TAPER SCREW PLUG
20 (204, 15)
VENTILATION VALVE SUB-ASSEMBLY
NO. 1 GENERATOR BRACKET
x 4
21 (214, 16)
STIFFENING CRANKCASE ASSEMBLY
x 6
21 (214, 16)
x 2
21 (214, 16)
x 3
x 2
RING PIN
x 2
5.0 (51, 44 in.*lbf)
STUD BOLT
OIL PUMP ASSEMBLY
21 (214, 16)
x 3
21 (214, 16)
GASKET
37 (377, 27)
OIL PAN DRAIN PLUG
NO. 2 OIL PAN SUB-ASSEMBLY
N*m (kgf*cm, ft.*lbf): Specified torque
x 2
x 10
10 (102, 7)
Non-reusable part
MP grease
Precoated part
T

Last Modified: 3-10-2010	6.4 A	**From:** 200901
Model Year: 2010	**Model:** Corolla	**Doc ID:** RM000003 2Z8007X
Title: 2AZ-FE ENGINE MECHANICAL: ENGINE UNIT: INSTALLATION (2010 Corolla)		

INSTALLATION

1. INSTALL RADIO SETTING CONDENSER

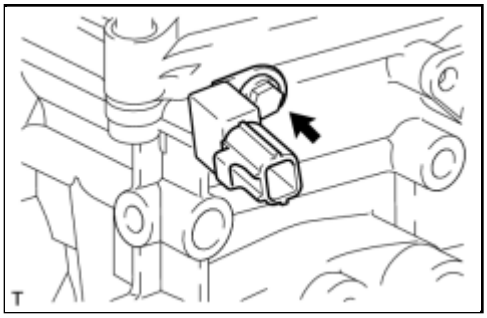

(a) Install the condenser with the bolt.

Torque: 10 N·m (102 kgf·cm, 7ft·lbf)

2. INSTALL ENGINE COOLANT TEMPERATURE SENSOR INFO

3. INSTALL OIL PRESSURE SWITCH INFO

4. INSTALL KNOCK SENSOR INFO

5. INSTALL IGNITION COIL ASSEMBLY INFO

6. INSTALL NO. 1 WATER BY-PASS PIPE

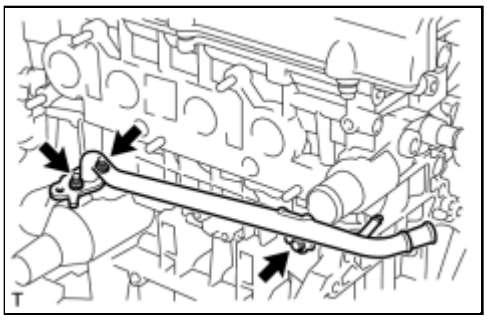

(a) Install a new gasket and the pipe with the bolt and 2 nuts.

Torque: 9.0 N·m (92 kgf·cm, 80in·lbf)

7. INSTALL ENGINE OIL LEVEL DIPSTICK GUIDE INFO

8. INSTALL ENGINE OIL LEVEL DIPSTICK

9. INSTALL THERMOSTAT INFO

10. INSTALL INLET WATER INFO

11. INSTALL EXHAUST MANIFOLD CONVERTER SUB-ASSEMBLY INFO

12. INSTALL NO. 2 MANIFOLD STAY INFO

13. INSTALL MANIFOLD STAY INFO

14. INSTALL NO. 1 EXHAUST MANIFOLD HEAT INSULATOR INFO

15. INSTALL NO. 1 INTAKE MANIFOLD INSULATOR

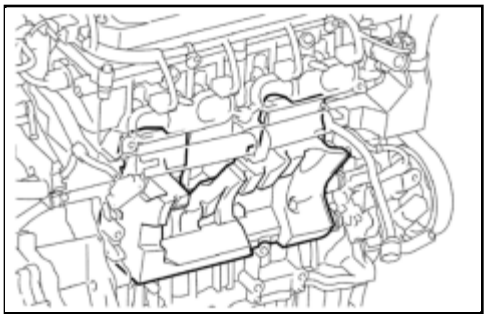

(a) Install the No. 1 intake manifold insulator onto the cylinder block.

16. INSTALL INTAKE MANIFOLD INFO

17. INSTALL FUEL INJECTOR ASSEMBLY INFO

18. INSTALL FUEL DELIVERY PIPE SUB-ASSEMBLY INFO

Last Modified: 3-10-2010	6.4 G	**From:** 200901
Model Year: 2010	**Model:** Corolla	**Doc ID:** RM000002XR2016X
Title: 2ZR-FE ENGINE MECHANICAL: ENGINE UNIT: INSPECTION (2010 Corolla)		

INSPECTION

1. INSPECT NO. 1 VALVE ROCKER ARM SUB-ASSEMBLY

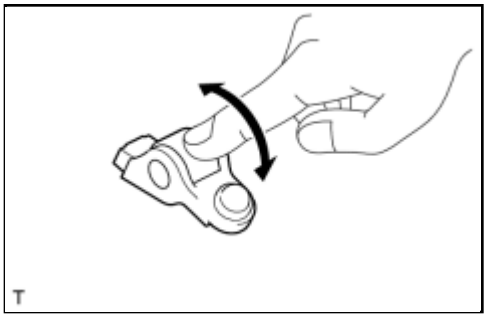

(a) Turn the roller by hand to check that it turns smoothly.

HINT:

If the roller does not turn smoothly, replace the valve rocker arm sub-assembly.

2. INSPECT VALVE LASH ADJUSTER ASSEMBLY

NOTICE:

- Keep the lash adjuster free of dirt and foreign matter.
- Only use clean engine oil.

(a) Place the lash adjuster into a container filled with engine oil.

(b) Insert the tip of SST into the lash adjuster plunger and use the tip to press down on the check ball inside the plunger.

SST: 09276-75010

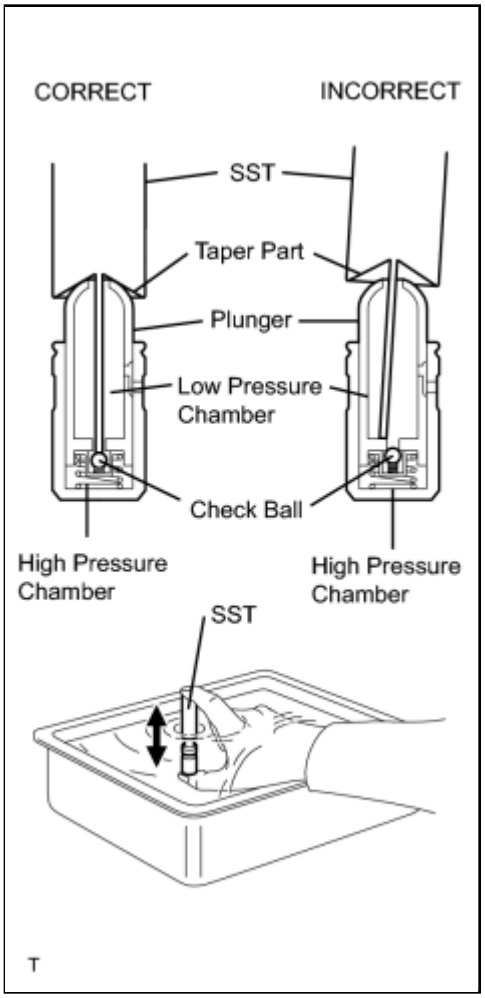

(c) Squeeze SST and the lash adjuster together to move the plunger up and down 5 to 6 times.

(d) Check the movement of the plunger and bleed it.

OK:

Plunger moves up and down.

NOTICE:

When bleeding the high-pressure chamber, make sure that the tip of SST is actually pressing the check ball as shown in the illustration. If the check ball is not pressed, the high-pressure chamber will not be bled.

(e) After bleeding, remove SST. Then try to quickly and firmly press the plunger by hand.

OK:

Plunger is very difficult to move.

If the result is not as specified, replace the lash adjuster.

3. INSPECT CAMSHAFT TIMING GEAR ASSEMBLY

(a) Install the camshaft timing gear INFO .

(b) Check the lock of the camshaft timing gear.

(1) Confirm that the camshaft timing gear is locked.

(c) Release the lock pin.

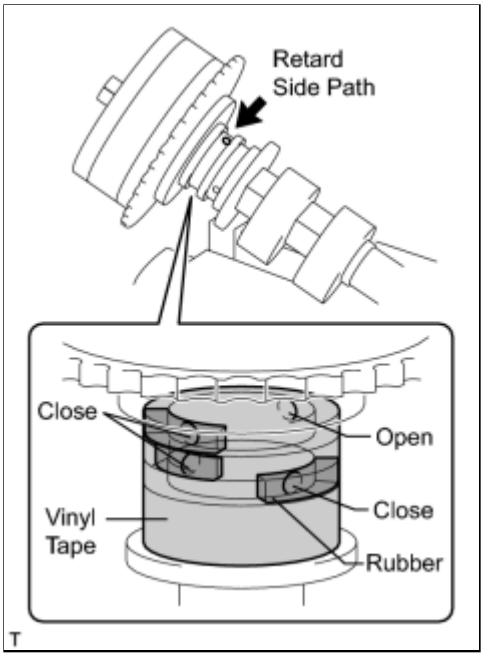

(1) Cover the 4 oil paths of the cam journal with vinyl tape as shown in the illustration.

HINT:

There are 4 oil paths in the groove of the camshaft. Plug three of the paths with pieces of rubber.

(2) Prick a hole in the tape placed on the retard side path, on the opposite side to that of the advance side path, as shown in the illustration.

(3) While applying approximately 150 kPa (1.5 kgf/cm2, 22 psi) of air pressure to the oil paths, forcibly turn the camshaft timing gear assembly in the advance direction (counterclockwise).

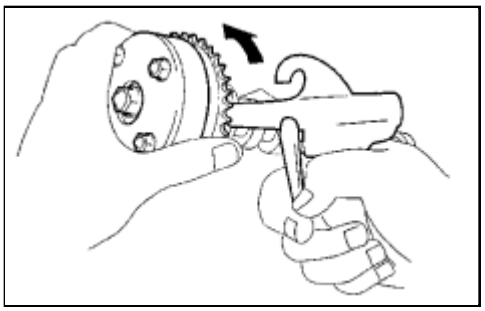

CAUTION:

Cover the paths with a piece of cloth when applying pressure to keep oil from splashing.

NOTICE:

Do not lock the camshaft timing gear assembly. If it is locked, release the lock pin again.

HINT:

- The camshaft timing gear assembly may be turned in the advance direction without applying any force.
- If enough air pressure cannot be applied because of air leakage from the port, releasing the lock pin may be difficult.

(d) Check for smooth rotation.

(1) Turn the camshaft timing gear within its movable range (26.5 to 28.5°) 2 or 3 times, but do not turn it to the most retarded position. Make sure that the gear turns smoothly.

NOTICE:

Do not lock the camshaft timing gear assembly. If it is locked, release the lock pin again.

4. INSPECT CAMSHAFT TIMING EXHAUST GEAR ASSEMBLY

(a) Install the camshaft timing exhaust gear INFO .

(b) Check the camshaft timing exhaust gear lock.

(1) Make sure that the camshaft timing exhaust gear is locked.

(c) Release the lock pin.

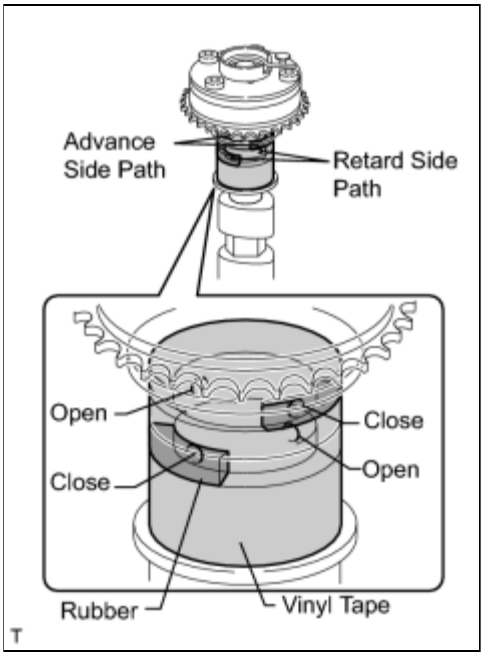

(1) Cover the 4 oil paths of the cam journal with vinyl tape as shown in the illustration.

HINT:

The 4 oil paths are provided in the grooves. Plug 2 paths with rubber pieces.

(2) Prick a hole in the tape placed on the advance side path. Prick a hole in the tape placed on the retard side path, on the opposite side to that of the advance side path, as shown in the illustration.

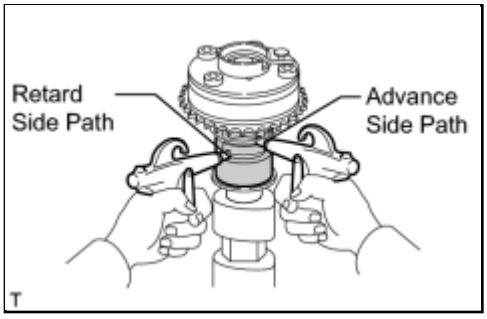

(3) Apply approximately 200 kPa (2.0 kgf/cm2, 28 psi) of air pressure to the 2 paths (the advance side path and the retard side path).

CAUTION:

Cover the paths with a piece of cloth when applying pressure to keep oil from splashing.

(4) Make sure that the camshaft timing exhaust gear turns in the retard direction when reducing the air pressure

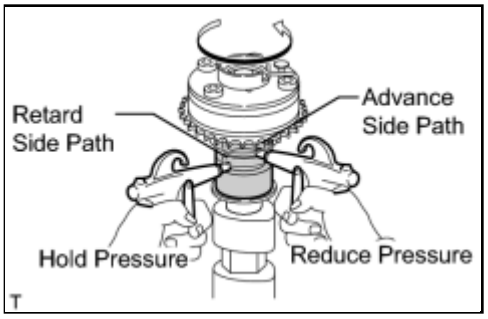

applied to the advance side path.

HINT:

The lock pin is released and the camshaft timing exhaust gear turns in the retard direction.

(5) When the camshaft timing exhaust gear moves to the most retarded position, release the air pressure from the advance side path, then release the air pressure from the retard side path.

NOTICE:

Be sure to release the air pressure from the advance side path first. If the air pressure of the retard side path is released first, the camshaft timing exhaust gear may abruptly shift in the advance direction and break the lock pin or other parts.

(d) Check for smooth rotation.

(1) Turn the camshaft timing exhaust gear within its movable range (19 to 21°) 2 or 3 times, but do not turn it to the most advanced position. Make sure that the gear turns smoothly.

NOTICE:

When the air pressure is released from the advance side path, then from the retard side path, the gear automatically returns to the most advanced position due to the advance assist spring operation and locks. Gradually release the air pressure from the retard side path before performing the smooth rotation check.

(e) Check the lock at the most advanced position.

(1) Make sure that the camshaft timing exhaust gear is locked at the most advanced position.

5. INSPECT CHAIN SUB-ASSEMBLY

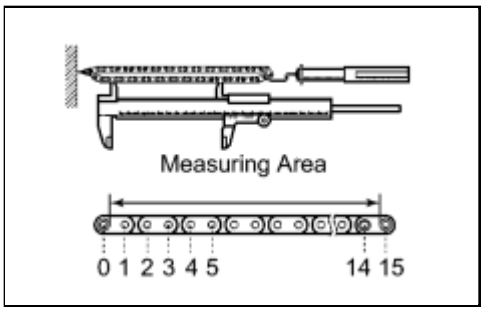

(a) Pull the chain with a force of 147 N (15 kgf, 33 lbf) as shown in the illustration.

(b) Using a vernier caliper, measure the length of 15 links.

Maximum chain elongation:
115.2 mm (4.535 in.)

NOTICE:

Perform the measurement at 3 random places. Use the average of the measurements.

If the average elongation is greater than the maximum, replace the chain.

6. INSPECT NO. 2 CHAIN SUB-ASSEMBLY

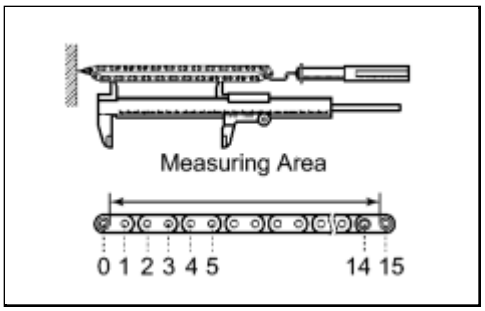

(a) Pull the chain with a force of 147 N (15 kgf, 33 lbf) as shown in the illustration.

(b) Using a vernier caliper, measure the length of 15 links.

Maximum chain elongation:
102.1 mm (4.019 in.)

NOTICE:

Perform the measurement at 3 random places. Use the average of the measurements.

If the average elongation is greater than the maximum, replace the No. 2 chain.

7. INSPECT OIL PUMP DRIVE GEAR

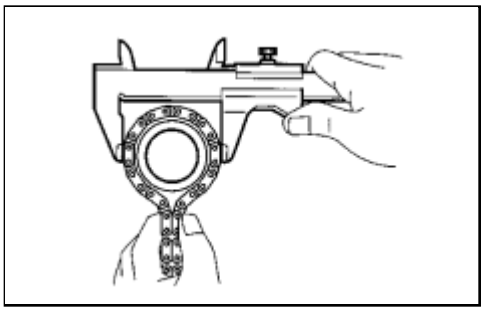

(a) Place the chain around the gear.

(b) Using a vernier caliper, measure the diameter of the gear and chain.

Minimum gear diameter (with chain):
48.2 mm (1.898 in.)

NOTICE:

The vernier caliper must be in contact with the chain rollers when measuring.

If the diameter is less than the minimum, replace the chain and gear.

8. INSPECT OIL PUMP DRIVE SHAFT GEAR

(a) Place the chain around the gear.

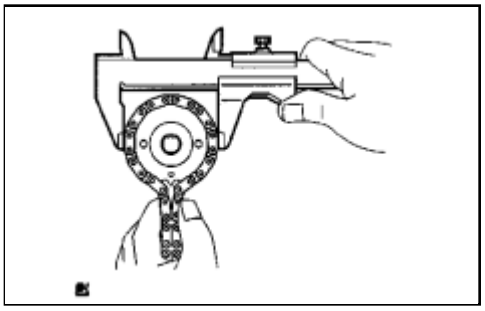

(b) Using a vernier caliper, measure the diameter of the gear and chain.

Minimum gear diameter (with chain):
48.8 mm (1.921 in.)

NOTICE:
The vernier caliper must be in contact with the chain rollers when measuring.

If the diameter is less than the minimum, replace the chain and gear.

9. INSPECT CAMSHAFT TIMING GEAR ASSEMBLY

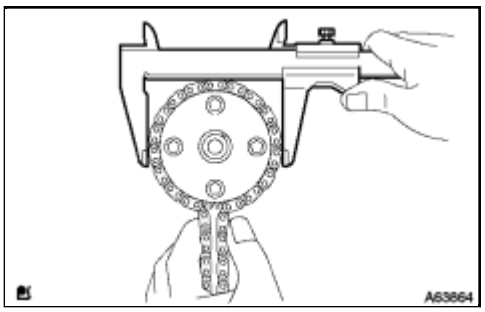

(a) Place the chain around the gear.

(b) Using a vernier caliper, measure the diameter of the gear and chain.

Minimum gear diameter (with chain):
96.8 mm (3.811 in.)

NOTICE:
The vernier caliper must be in contact with the chain rollers when measuring.

If the diameter is less than the minimum, replace the chain and gear.

10. INSPECT CAMSHAFT TIMING EXHAUST GEAR ASSEMBLY

(a) Place the chain around the sprocket.

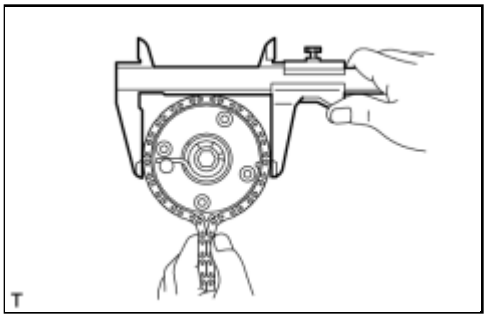

(b) Using a vernier caliper, measure the diameter of the sprocket and chain.

Minimum sprocket diameter (with chain):
96.8 mm (3.811 in.)

NOTICE:
The vernier caliper must be in contact with the chain rollers when measuring.

If the diameter is less than the minimum, replace the chain and sprocket.

11. INSPECT CRANKSHAFT TIMING GEAR

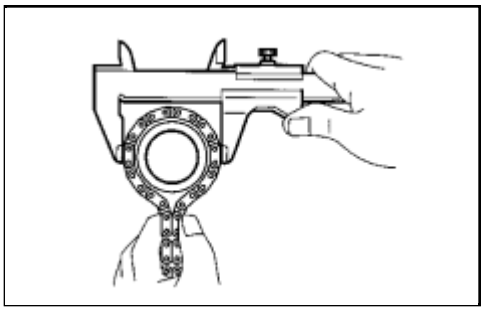

(a) Place the chain around the gear.

(b) Using a vernier caliper, measure the diameter of the gear and chain.

Minimum gear diameter (with chain):
51.1 mm (2.012 in.)

NOTICE:
The vernier caliper must be in contact with the chain rollers when measuring.

If the diameter is less than the minimum, replace the chain and gear.

12. INSPECT CHAIN TENSIONER SLIPPER

(a) Using a vernier caliper, measure the tensioner slipper wear.

Maximum wear:
1.0 mm (0.039 in.)

If the wear is greater than the maximum, replace the chain tensioner slipper.

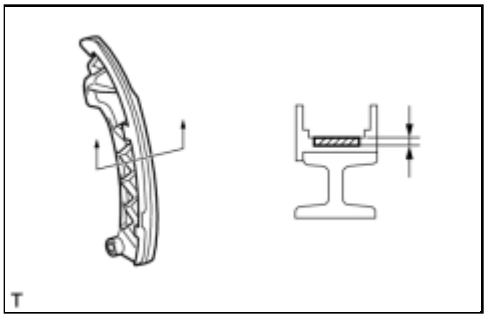

13. INSPECT NO. 1 CHAIN VIBRATION DAMPER

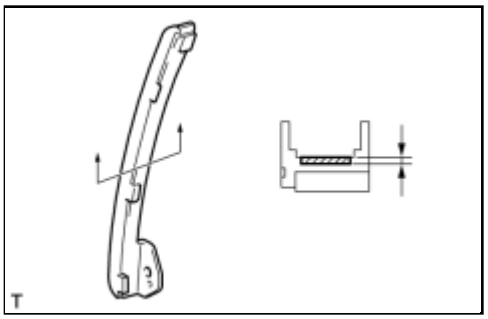

(a) Using a vernier caliper, measure the vibration damper wear.

Maximum wear:
1.0 mm (0.039 in.)

If the wear is greater than the maximum, replace the No. 1 chain vibration damper.

14. INSPECT NO. 2 CHAIN VIBRATION DAMPER

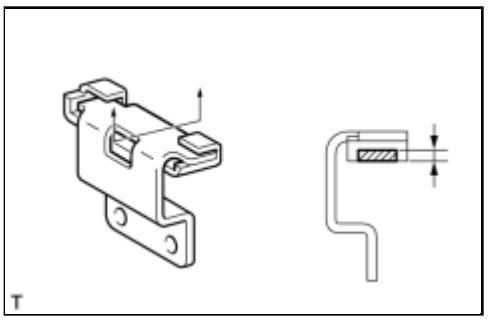

(a) Using a vernier caliper, measure the vibration damper wear.

Maximum wear:
1.0 mm (0.039 in.)

If the wear is greater than the maximum, replace the No. 2 chain vibration damper.

15. INSPECT CHAIN TENSIONER PLATE

(a) Using a vernier caliper, measure the chain tensioner plate wear.

Maximum wear:
1.0 mm (0.039 in.)

If the wear is greater than the maximum, replace the chain tensioner plate.

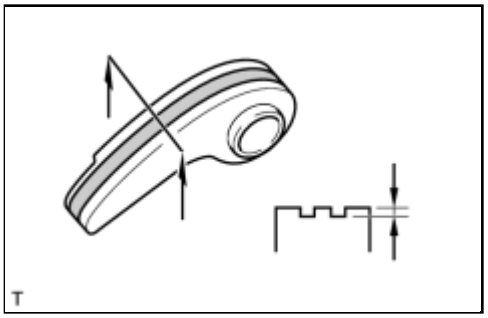

16. INSPECT NO. 1 CHAIN TENSIONER

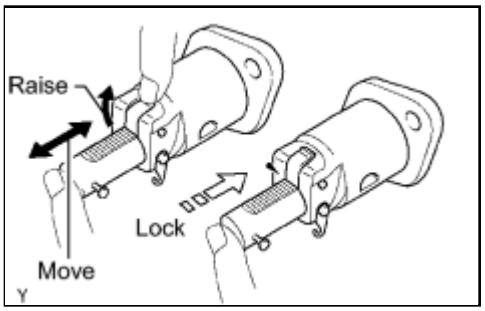

(a) Check that the plunger moves smoothly when the ratchet pawl is raised by hand.

(b) Release the ratchet pawl, then check that the plunger is locked in place by the ratchet pawl and does not move when pushed by hand.

17. INSPECT CAMSHAFT

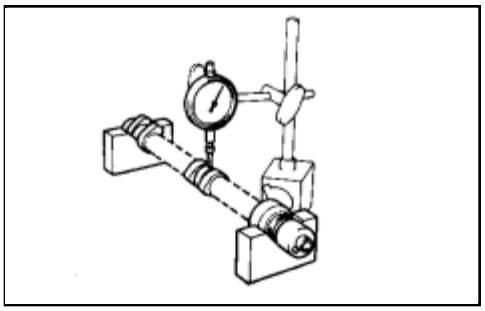

(a) Inspect the camshaft for runout.

(1) Place the camshaft on V-blocks.

(2) Using a dial indicator, measure the circle runout at the center journal.

Maximum circle runout:
0.04 mm (0.0016 in.)

If the circle runout is greater than the maximum, replace the camshaft.

(b) Inspect the cam lobes.

(1) Using a micrometer, measure the cam lobe height.

Standard cam lobe height:
42.816 to 42.916 mm (1.6857 to 1.6896 in.)
Minimum cam lobe height:
42.666 mm (1.6798 in.)

If the cam lobe height is less than the minimum,

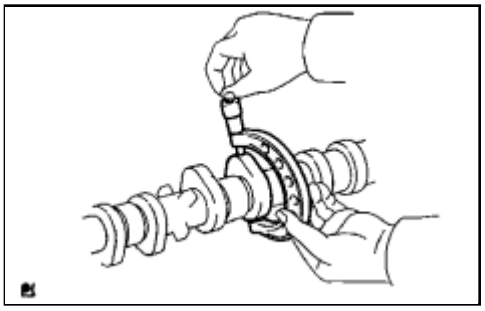

replace the camshaft.

(c) Inspect the camshaft journals.

(1) Using a micrometer, measure the journal diameter.

Standard Journal Diameter:

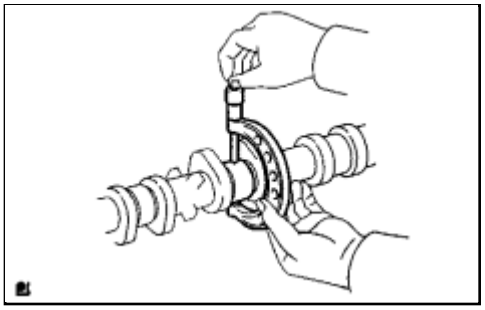

JOURNAL POSITION	SPECIFIED CONDITION
No. 1	34.449 to 34.465 mm (1.3563 to 1.3569 in.)
Other	22.949 to 22.965 mm (0.9035 to 0.9041 in.)

If the journal diameter is not as specified, check the oil clearance INFO .

18. INSPECT NO. 2 CAMSHAFT

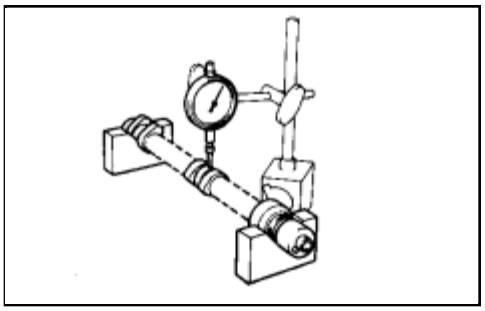

(a) Inspect the No. 2 camshaft for runout.

(1) Place the No. 2 camshaft on V-blocks.

(2) Using a dial indicator, measure the circle runout at the center journal.

Maximum circle runout:
0.04 mm (0.0016 in.)

If the circle runout is greater than the maximum, replace the No. 2 camshaft.

(b) Inspect the cam lobes.

(1) Using a micrometer, measure the cam lobe height.

Standard cam lobe height:
44.336 to 44.436 mm (1.7455 to 1.7494 in.)
Minimum cam lobe height:
44.186 mm (1.7396 in.)

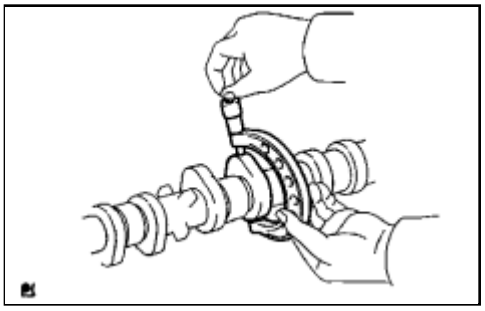

If the cam lobe height is less than the minimum, replace the No. 2 camshaft.

(c) Inspect the camshaft journals.

(1) Using a micrometer, measure the journal diameter.

Standard Journal Diameter:

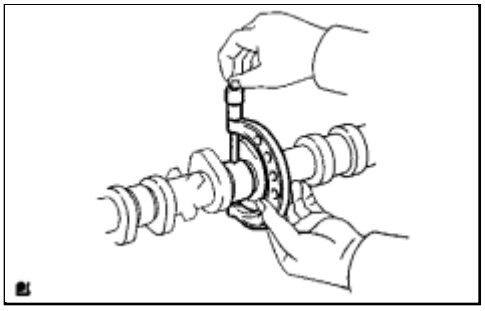

JOURNAL POSITION	SPECIFIED CONDITION
No. 1	34.449 to 34.465 mm (1.3563 to 1.3569 in.)
Other	22.949 to 22.965 mm (0.9035 to 0.9041 in.)

If the journal diameter is not as specified, check the oil clearance INFO .

19. INSPECT CYLINDER HEAD SET BOLT

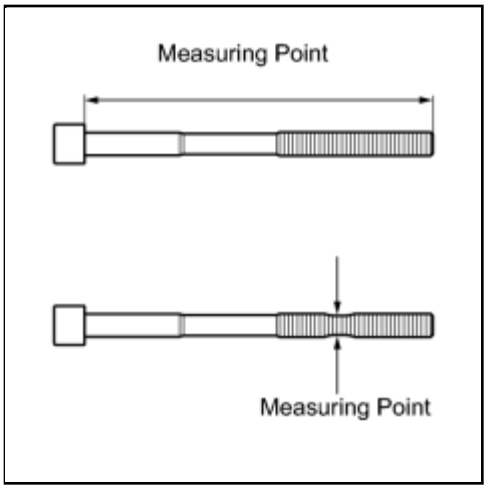

(a) Using a vernier caliper, measure the length of the cylinder head set bolt from the seat to the end.

Standard bolt length:
146.8 to 148.2 mm (5.7795 to 5.8346 in.)
Maximum bolt length:
149.2 mm (5.874 in.)

If the bolt length is greater than the maximum, replace the cylinder head set bolt.

(b) Using a vernier caliper, measure the minimum diameter of the elongated thread at the measuring point.

Standard outside diameter:
9.77 to 9.96 mm (0.3846 to 0.3921 in.)

Minimum outside diameter:
9.4 mm (0.3701 in.)

HINT:

Using a straightedge, visually check thinner areas of the threaded part of the cylinder head set bolt.

If the diameter is less than the minimum, replace the cylinder head set bolt.

20. INSPECT EXHAUST MANIFOLD

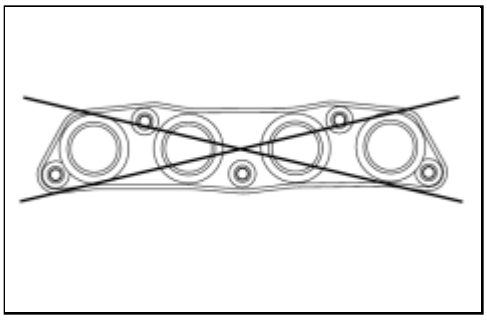

(a) Using a precision straightedge and feeler gauge, measure the warpage on the contact surface of the cylinder head.

Maximum warpage:
0.7 mm (0.028 in.)

HINT:

If the warpage is greater than the maximum, replace the manifold.

Last Modified: 3-10-2010	6.4 A	**From:** 200901
Model Year: 2010	**Model:** Corolla	**Doc ID:** RM000002XA402OX
Title: 2ZR-FE ENGINE MECHANICAL: ENGINE UNIT: REASSEMBLY (2010 Corolla)		

REASSEMBLY

1. INSTALL STIFFENING CRANKCASE ASSEMBLY

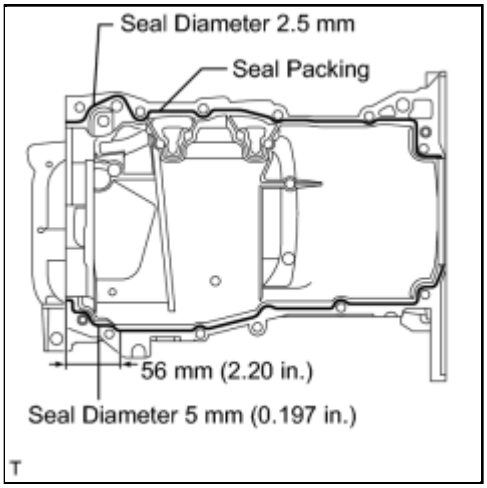

(a) Apply seal packing in a continuous bead (diameter: 2.5 mm (0.0984 in.)) to the places shown in the illustration.

Seal packing:
Toyota Genuine Seal Packing Black, Three Bond 1207B or equivalent

NOTICE:

- Remove any oil from the contact surface.
- Install the crankcase within 3 minutes after applying seal packing.
- Do not start the engine for at least 2 hours after installing the stiffening crankcase.

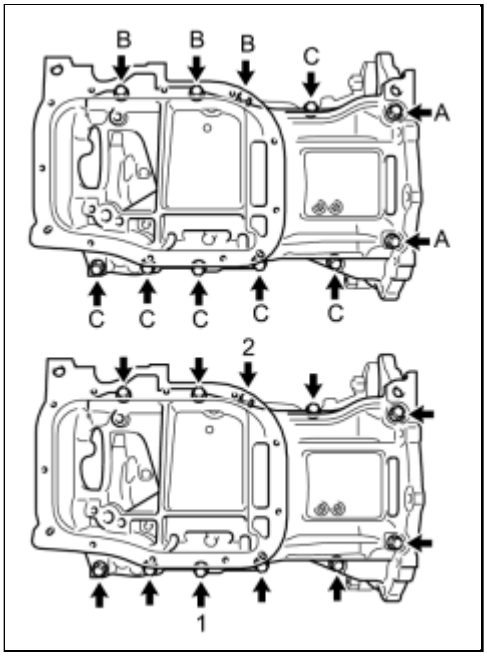

(b) Install the stiffening crankcase with the 11 bolts.

Torque: 21 N·m (214 kgf·cm, 16ft·lbf)

Bolt Length:

ITEM	LENGTH
Bolt A	138 mm (5.43 in.)
Bolt B	35 mm (1.38 in.)
Bolt C	70 mm (2.76 in.)

(c) Recheck the torque for bolts 1 and 2.

Torque: 21 N·m (214 kgf·cm, 16ft·lbf)

(d) Wipe off any excess seal packing with a clean piece of cloth.

2. INSTALL REAR ENGINE OIL SEAL

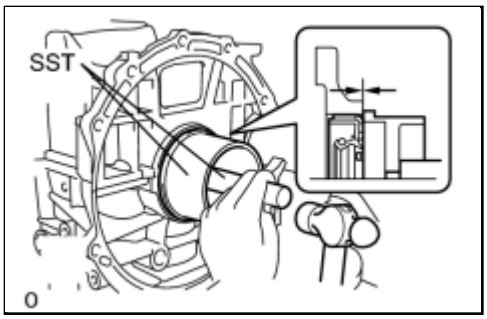

(a) Using SST and a hammer, evenly tap the oil seal until its surface is flush with the rear oil seal retainer edge.

SST: 09223-15030
SST: 09950-70010
09951-07100

NOTICE:

- Keep the lip free of foreign matter.
- Do not tap on the oil seal at an angle.

(b) Apply MP grease to a new oil seal lip.

NOTICE:
Wipe off extra grease on the crankshaft.

3. INSTALL OIL PUMP ASSEMBLY INFO

4. INSTALL NO. 2 OIL PAN SUB-ASSEMBLY INFO

5. INSTALL OIL PAN DRAIN PLUG

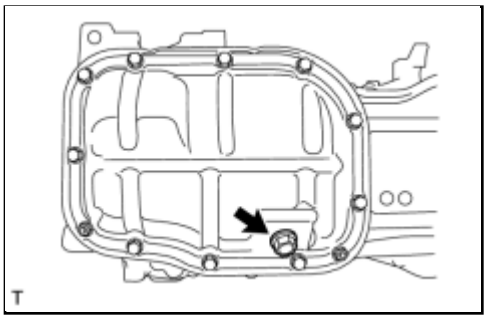

(a) Install a new gasket and the oil pan drain plug.

Torque: 37 N·m (377 kgf·cm, 27ft·lbf)

6. INSTALL CYLINDER BLOCK WATER DRAIN COCK SUB-ASSEMBLY

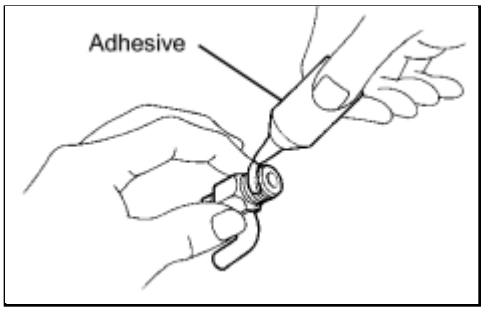

(a) Apply adhesive to the threads of the drain cock.

Adhesive:
Toyota Genuine Adhesive 1344, Three Bond 1344 or equivalent

(b) Install the water drain cock as shown in the illustration.

Torque: 20 N·m (204 kgf·cm, 15ft·lbf)

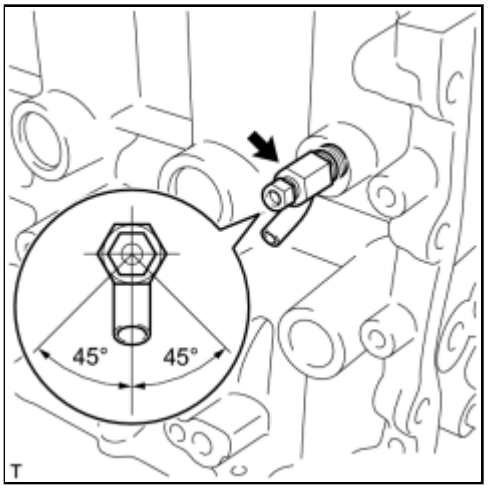

NOTICE:

- Do not rotate the drain cock more than 1 revolution (360°) after tightening it to the specified torque.
- Install the water drain cock within 3 minutes after applying seal packing.
- Do not start the engine for at least 2 hours after installing the water drain cock.

(c) Install the water drain cock plug to the water drain cock.

Torque: 13 N·m (130 kgf·cm, 9ft·lbf)

7. INSTALL VENTILATION VALVE SUB-ASSEMBLY

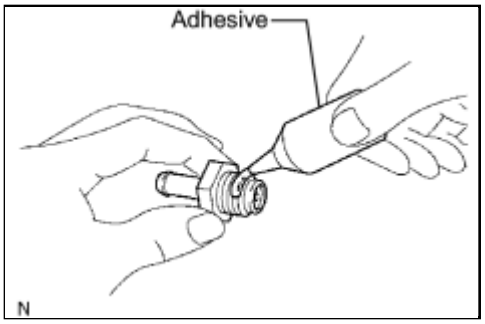

(a) Apply adhesive to the threads of the ventilation valve.

Adhesive:
Toyota Genuine Adhesive 1324, Three Bond 1324 or equivalent

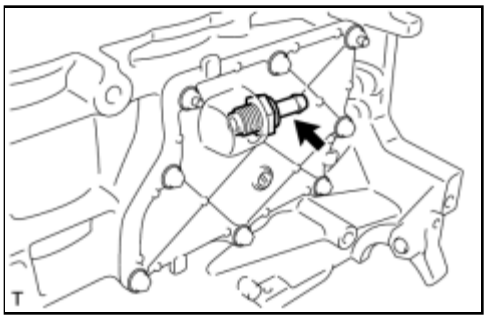

(b) Install the ventilation valve.

Torque: 20 N·m (204 kgf·cm, 15ft·lbf)

NOTICE:

- Install the crankcase within 3 minutes after applying seal packing.
- Do not start the engine for at least 2 hours after installing the ventilation valve.

8. INSTALL CYLINDER HEAD GASKET INFO

9. INSTALL CYLINDER HEAD SUB-ASSEMBLY INFO

10. INSTALL VALVE LASH ADJUSTER ASSEMBLY

NOTICE:

- Keep the lash adjuster free of dirt and foreign matter.
- Only use clean engine oil.

(a) Place the lash adjuster into a container filled with engine oil.

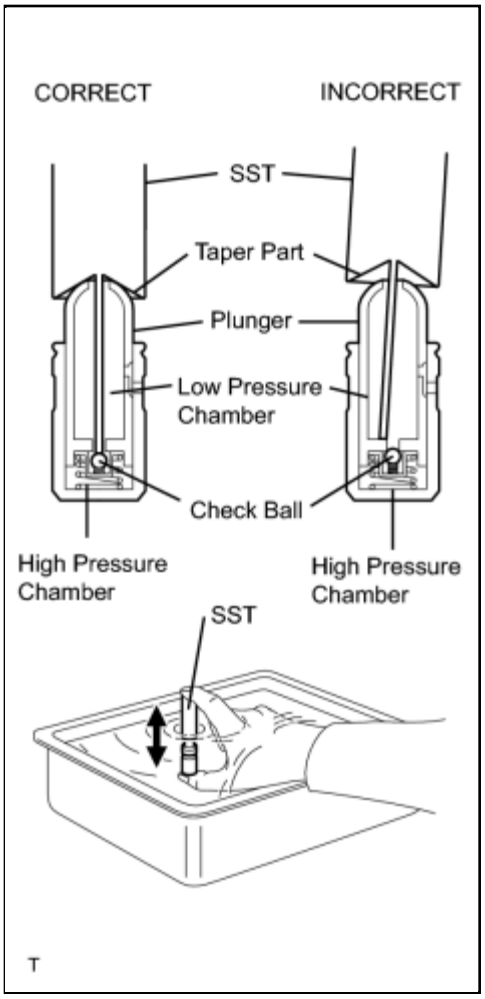

(b) Insert the tip of SST into the lash adjuster plunger and use the tip to press down on the check ball inside the plunger.

SST: 09276-75010

(c) Squeeze SST and the lash adjuster together to move the plunger up and down 5 to 6 times.

(d) Check the movement of the plunger and bleed it.

OK:

Plunger moves up and down.

NOTICE:

When bleeding air from the high-pressure chamber, make sure that the tip of SST is actually pressing the check ball as shown in the illustration. If the check ball is not pressed, the high-pressure chamber will not be bled.

(e) After bleeding, remove SST. Then, try to press the plunger quickly and firmly by hand.

OK:

Plunger is very difficult to move.

If the result is not as specified, replace the lash adjuster.

(f) Install the lash adjusters.

NOTICE:

Install the lash adjuster to the same place it was removed from.

11. INSTALL NO. 1 VALVE ROCKER ARM SUB-ASSEMBLY

(a) Apply engine oil to the lash adjuster tip and valve stem cap end.

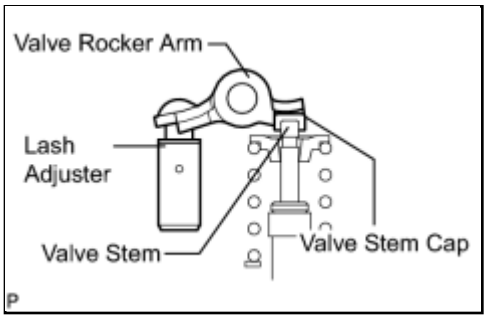

(b) Make sure that the valve rocker arms are installed as shown in the illustration.

12. INSTALL NO. 1 CAMSHAFT BEARING

(a) Clean the both surfaces of the bearings.

(b) Install the 2 No. 1 camshaft bearings.

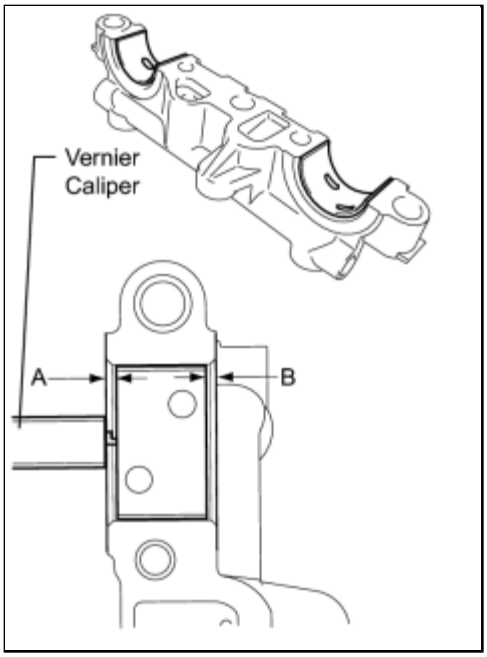

(c) Using a vernier caliper, measure the distance between the bearing cap edge and the camshaft bearing edge.

Dimension (A - B):
0.7 mm (0.0276 in.) or less

NOTICE:

Position the bearings to the center of the bearing cap by measuring dimensions A and B.

13. INSTALL OIL CONTROL VALVE FILTER

(a) Check that no foreign matter is on the mesh part of the filter.

(b) Install the oil control valve filter.

NOTICE:

Do not touch the mesh when installing the oil control valve filter.

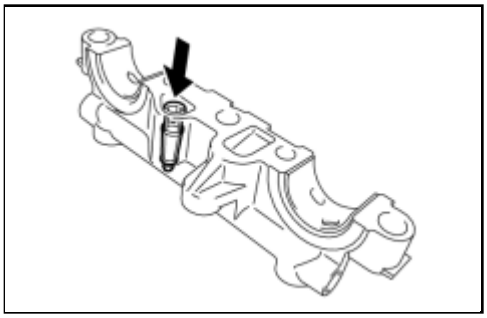

14. INSTALL NO. 2 CAMSHAFT BEARING

(a) Clean both surfaces of the bearings.

(b) Install the 2 No. 2 camshaft bearings.

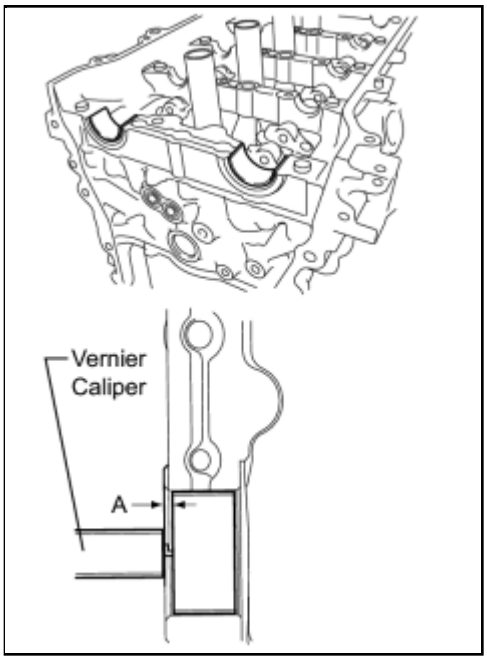

(c) Using a vernier caliper, measure the distance between the bearing cap edge and the camshaft bearing edge.

Dimension (A):

1.05 to 1.75 mm (0.041 to 0.069 in.)

NOTICE:

Position the bearings to the center of the bearing cap by measuring dimension A.

15. INSTALL NO. 2 CAMSHAFT

(a) Clean the camshaft journals.

(b) Apply a light coat of engine oil to the camshaft journals, camshaft housings and bearing caps.

(c) Install the No. 2 camshaft to the camshaft housing.

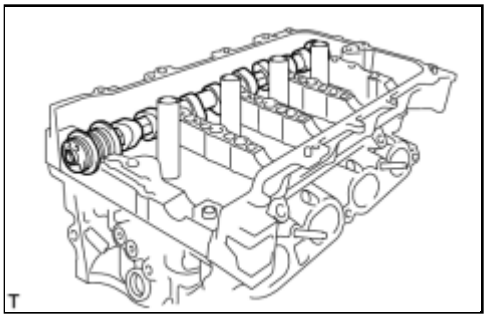

16. INSTALL CAMSHAFT

(a) Clean the camshaft journals.

(b) Apply a light coat of engine oil to the camshaft journals, camshaft housing.

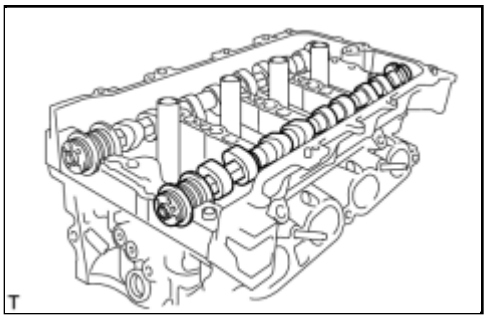

(c) Install the camshaft to the camshaft housing.

17. INSTALL CAMSHAFT BEARING CAP

(a) Apply engine oil to the bearing caps.

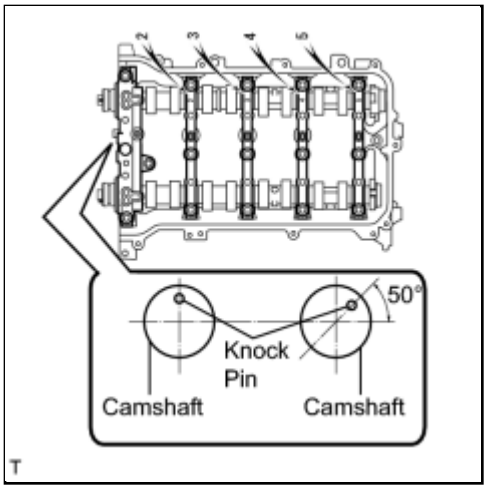

(b) Make sure of the marks and numbers on the camshaft bearing caps and place them in each proper position and direction.

HINT:

Make sure that the knock pin of the camshaft is positioned as shown in the illustration.

(c) Tighten the 10 bolts in the order shown in the illustration.

Torque: 16 N·m (163 kgf·cm, 12ft·lbf)

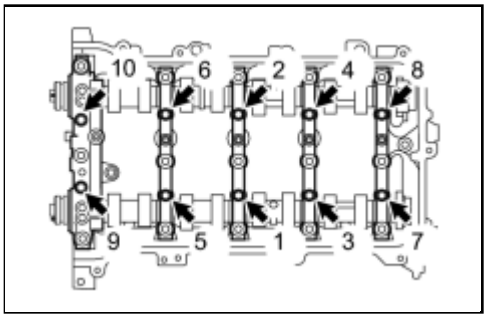

18. INSTALL CAMSHAFT HOUSING SUB-ASSEMBLY

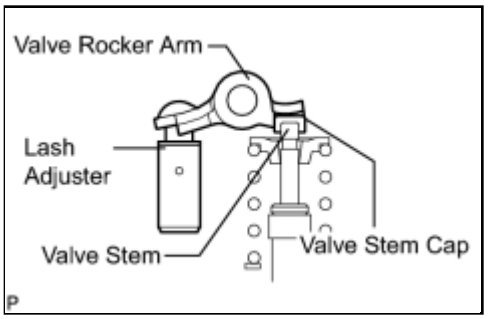

(a) Make sure that the valve rocker arms are installed as shown in the illustration.

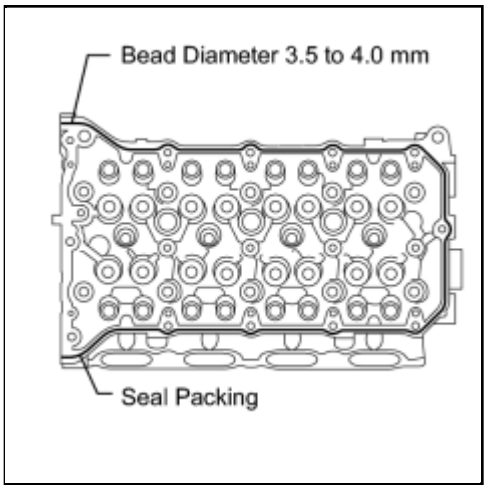

(b) Apply seal packing in a continuous bead as shown in the illustration.

Seal packing:

Toyota Genuine Seal Packing Black, Three Bond 1207B or equivalent

Bead diameter:

3.5 to 4.0 mm (0.138 to 0.158 in.)

NOTICE:

- Remove any oil from the contact surface.
- Install the camshaft housing sub-assembly within 3 minutes and tighten the bolts within 15 minutes after applying seal packing.
- Do not start the engine for at least 2 hours after installing.

(c) Set the camshaft and No. 2 camshaft as shown in the illustration.

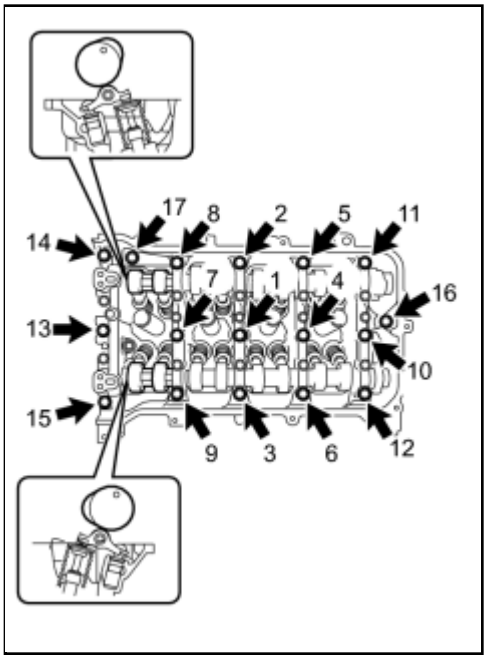

(d) Install the camshaft housing and tighten the 17 bolts in the order shown in the illustration.

Torque: 27 N·m (275 kgf·cm, 20ft·lbf)

NOTICE:

- After installing the camshaft housing, make sure that the cam lobes are positioned as shown in the illustration.
- If any of the bolts are loosened during installation, remove the camshaft housing, clean the installation surfaces, and reapply seal packing.
- If the camshaft housing is removed because any of the bolts are loosened during installation, make sure that the previously applied seal packing does not enter any oil passages.
- After installing the camshaft housing, wipe off any seal packing that seeped out from between the housing and the cylinder head.

19. INSTALL CAMSHAFT TIMING GEAR ASSEMBLY

(a) Check that the knock pin is installed on the camshaft.

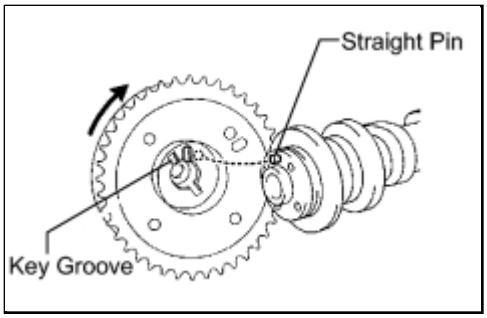

(b) Put the camshaft timing gear and camshaft together with the straight pin and key groove misaligned, as shown in the illustration.

NOTICE:

Do not forcefully push in the camshaft timing gear assembly. This may cause the camshaft knock pin tip to damage the installation surface of the camshaft timing gear assembly.

(c) Turn the camshaft timing gear as shown in the illustration while pushing it gently against the camshaft. Push further

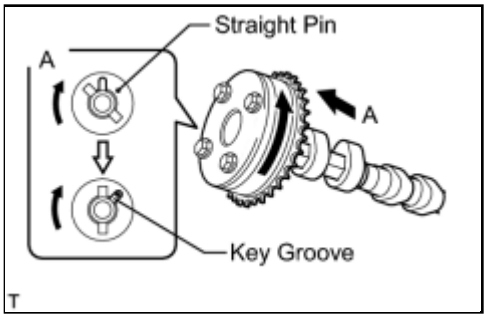

at the position where the pin fits into the groove.

NOTICE:

Do not turn the camshaft timing gear in the retard direction (clockwise).

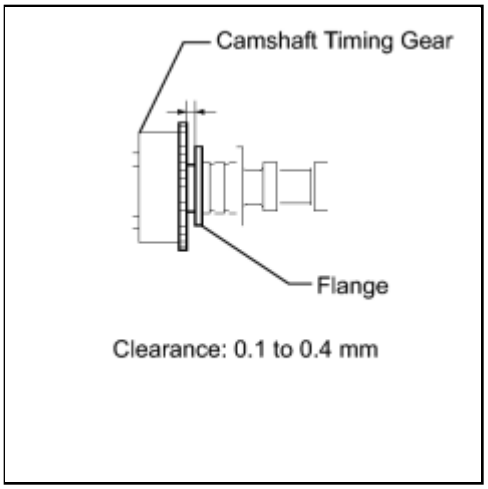

(d) Measure the clearance between the gear and the camshaft flange.

Clearance:
0.1 to 0.4 mm (0.004 to 0.016 in.)

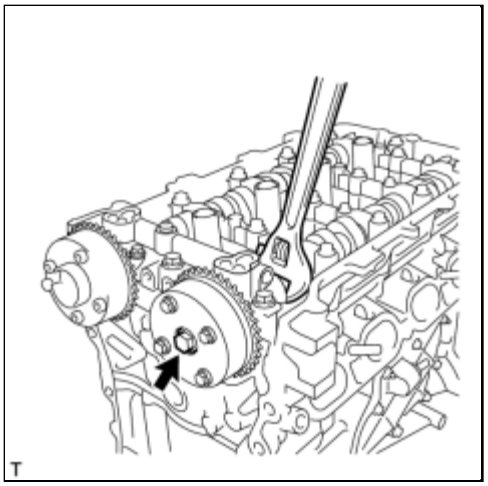

(e) Tighten the flange bolt with the camshaft timing gear secured in place.

Torque: 54 N·m (551 kgf·cm, 40ft·lbf)

(f) Check that the camshaft timing gear can move in the retard direction (clockwise) and locks in the most retarded position.

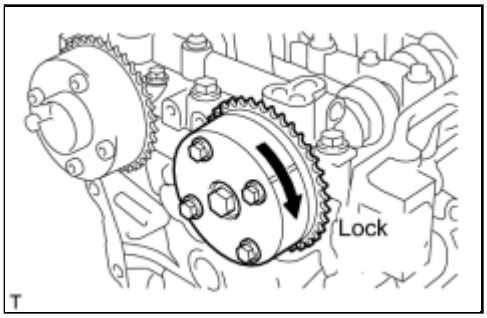

20. INSTALL CAMSHAFT TIMING EXHAUST GEAR ASSEMBLY

(a) Check that the knock pin is installed on the camshaft.

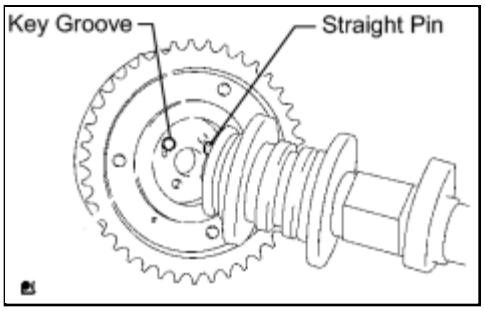

(b) Put the camshaft timing exhaust gear and camshaft together by aligning the key groove and straight pin.

(c) Lightly press the gear against the camshaft, and turn the gear. Push further at the position where the pin enters the groove.

NOTICE:

Be sure not to turn the camshaft timing exhaust gear in the retard direction (clockwise).

(d) Check that there is no clearance between the gear and the camshaft flange.

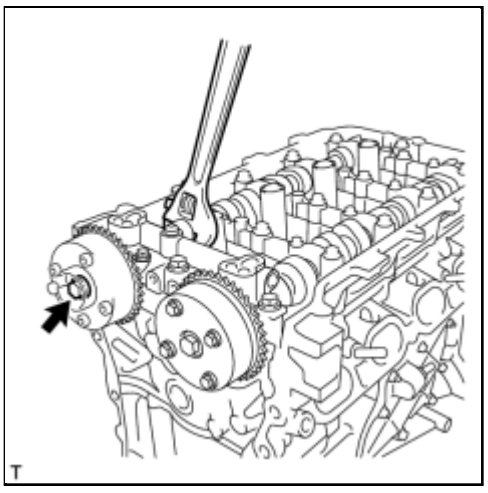

(e) Tighten the flange bolt with the camshaft timing exhaust gear fixed.

Torque: 54 N·m (551 kgf·cm, 40ft·lbf)

(f) Check the camshaft timing exhaust gear lock.

(1) Make sure that the camshaft timing exhaust gear is locked.

21. INSTALL CRANKSHAFT TIMING GEAR KEY

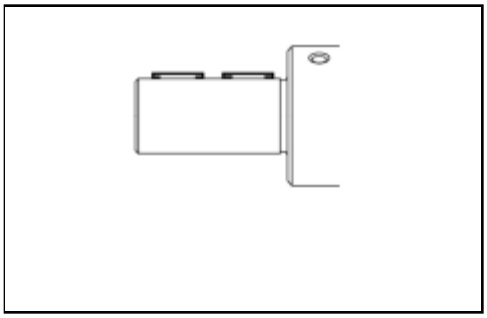

(a) Using a plastic-faced hammer, tap in the 2 crankshaft timing gear keys.

HINT:

Tap in the crankshaft timing gear keys until they contact the crankshaft as shown in the illustration.

22. INSTALL NO. 1 CRANKSHAFT POSITION SENSOR PLATE

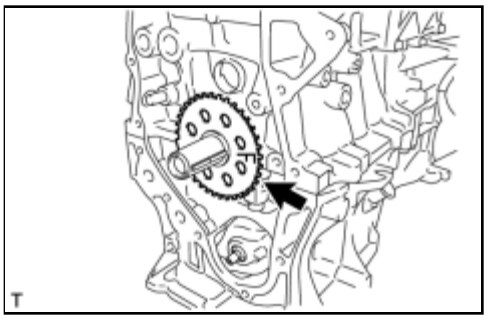

(a) Install the sensor plate with the "F" mark facing forward.

23. INSTALL NO. 2 CHAIN SUB-ASSEMBLY INFO

24. INSTALL CRANKSHAFT TIMING SPROCKET INFO

25. INSTALL NO. 1 CHAIN VIBRATION DAMPER INFO

26. INSTALL NO. 2 CHAIN VIBRATION DAMPER INFO

27. INSTALL CHAIN SUB-ASSEMBLY INFO

28. INSTALL CHAIN TENSIONER SLIPPER INFO

29. INSTALL NO. 1 GENERATOR BRACKET

(a) Install the No. 1 generator bracket with the 4 bolts.

Torque: 21 N·m (214 kgf·cm, 16ft·lbf)

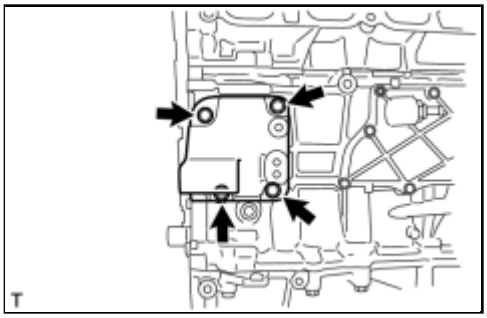

30. INSTALL INLET WATER HOUSING

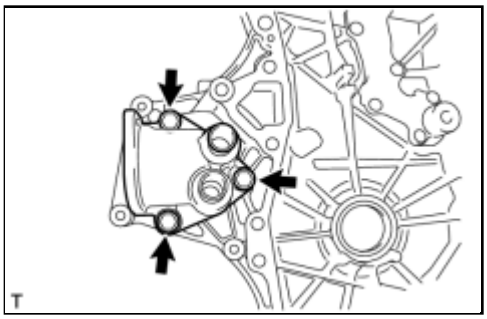

(a) Install the inlet water housing with the 3 bolts.

Torque: 21 N·m (214 kgf·cm, 16ft·lbf)

31. INSTALL TIMING CHAIN COVER OIL SEAL

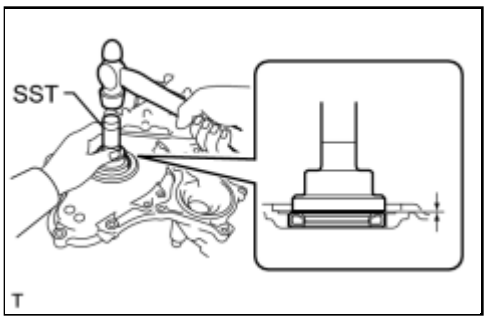

(a) Using SST, tap in a new oil seal until its surface is flush with the timing gear case edge.

SST: 09223-22010

(b) Apply a light coat of MP grease to the lip of the oil seal.

NOTICE:

- Keep the lip free of foreign matter.
- Do not tap on the oil seal at an angle.
- Make sure that the oil seal edge does not stick out of the timing chain cover.

32. INSTALL TIMING CHAIN COVER SUB-ASSEMBLY INFO

33. INSTALL CRANKSHAFT PULLEY INFO

34. INSTALL ENGINE OIL PRESSURE SWITCH ASSEMBLY

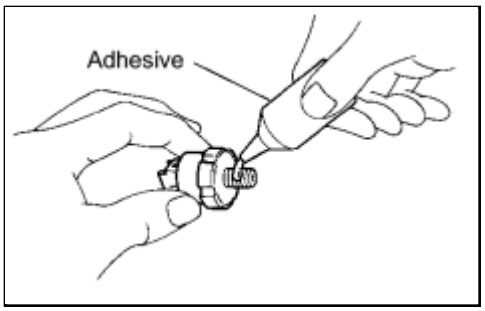

(a) Apply adhesive to 2 or 3 threads of the oil pressure switch.

Adhesive:
Toyota Genuine Adhesive 1344, Three Bond 1344 or equivalent

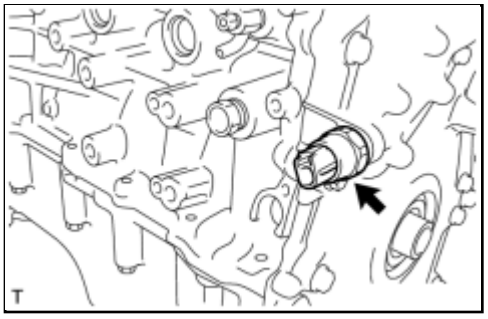

(b) Using a 24 mm deep socket wrench, install the oil pressure switch.

Torque: 15 N·m (153 kgf·cm, 11ft·lbf)

NOTICE:

- Install the oil pressure switch within 3 minutes after applying adhesive.
- Do not start the engine within 1 hour after installation.

35. INSTALL ENGINE COOLANT TEMPERATURE SENSOR

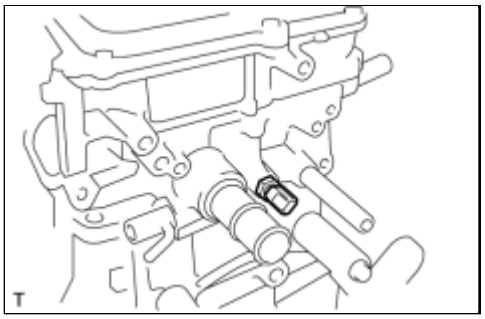

(a) Install a new gasket to the engine coolant temperature sensor.

(b) Using a 19 mm deep socket wrench, install the temperature sensor.

Torque: 20 N·m (204 kgf·cm, 15ft·lbf)

36. INSTALL KNOCK CONTROL SENSOR

(a) Install the knock control sensor with the bolt.

Torque: 21 N·m (214 kgf·cm, 16ft·lbf)

NOTICE:

Make sure that the knock control sensor is in the correct position.

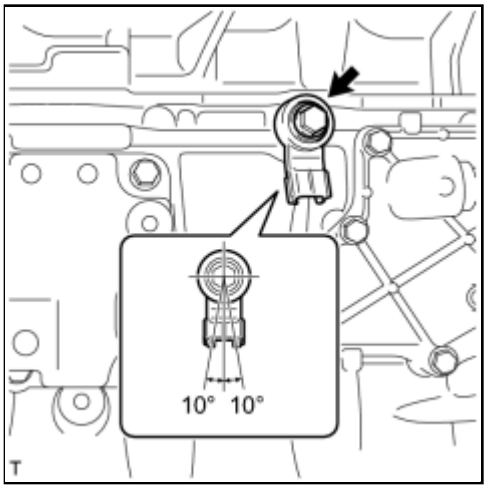

37. INSTALL NO. 1 TAPER SCREW PLUG

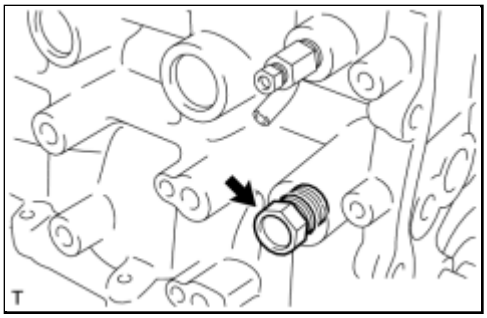

(a) Apply adhesive to 2 or 3 threads of the plug, and install the plug.

Torque: 43 N·m (439 kgf·cm, 32ft·lbf)

NOTICE:

- Install the plug within 3 minutes after applying adhesive.
- Do not start the engine within 1 hour after installation.

Adhesive:
Toyota Genuine Adhesive 1324, Three Bond 1324 or equivalent

38. INSTALL CRANKSHAFT POSITION SENSOR

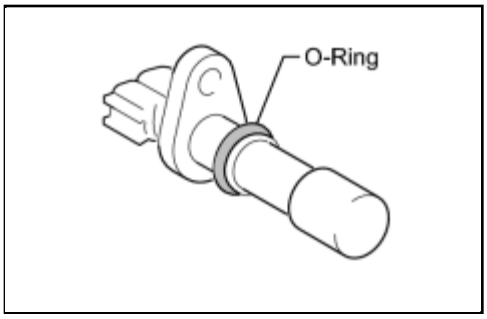

(a) Apply a light coat of engine oil to the O-ring of the sensor.

(b) Install the crankshaft position sensor with the bolt.

Torque: 10 N·m (102 kgf·cm, 7ft·lbf)

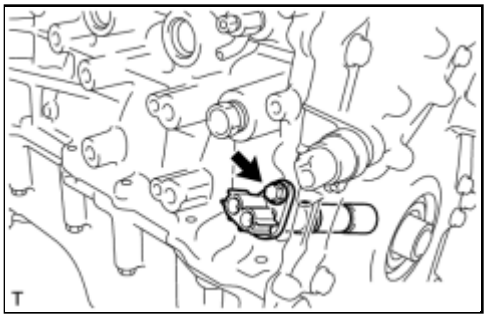

39. INSTALL NO. 1 CHAIN TENSIONER ASSEMBLY

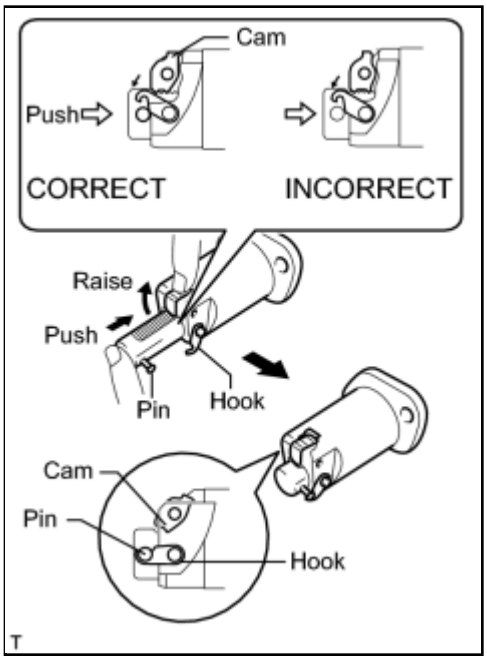

(a) Release the ratchet pawl, then fully push in the plunger and engage the hook to the pin so that the plunger is in the position shown in the illustration.

NOTICE:

Make sure that the cam engages the first tooth of the plunger to allow the hook to pass over the pin.

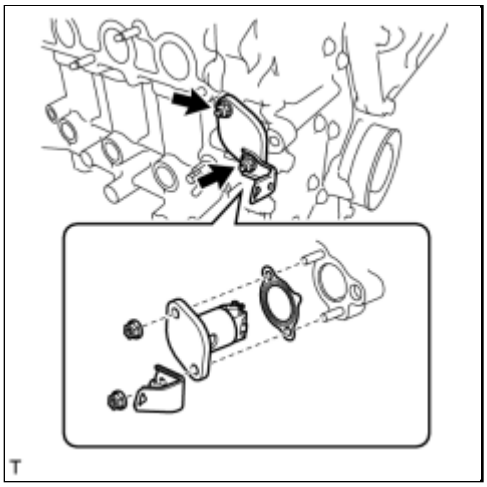

(b) Install a new gasket, bracket and No. 1 chain tensioner with the 2 nuts.

Torque: 10 N·m (102 kgf·cm, 7ft·lbf)

NOTICE:

If the hook releases the plunger while the chain tensioner is being installed, engage the hook again.

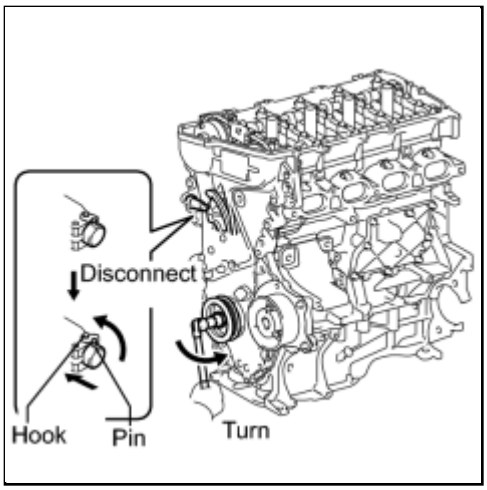

(c) Turn the crankshaft counterclockwise, then disconnect the hook from plunger knock pin.

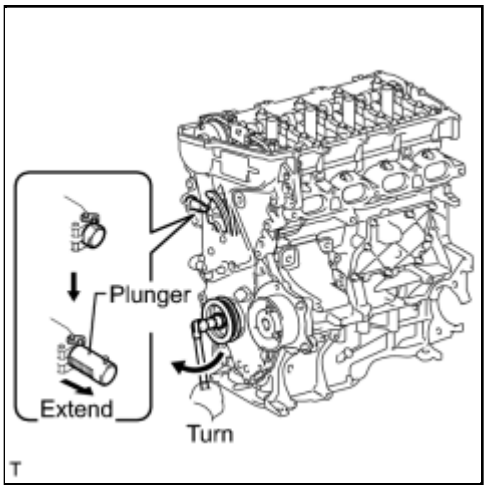

(d) Turn the crankshaft clockwise, then check that the plunger is extended.

40. INSTALL OIL FILTER CAP ASSEMBLY INFO

41. INSTALL CYLINDER HEAD COVER SUB-ASSEMBLY

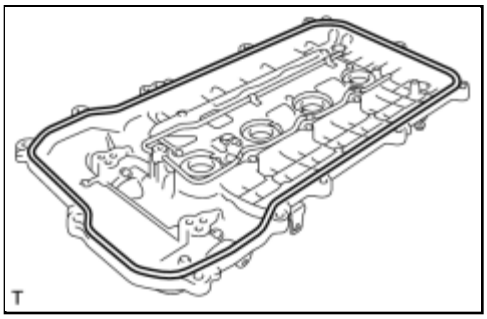

(a) Install a new gasket to the cylinder head cover.

NOTICE:

Remove any oil from the contact surfaces.

(b) Install 3 new gaskets to the No. 1 camshaft bearing cap.

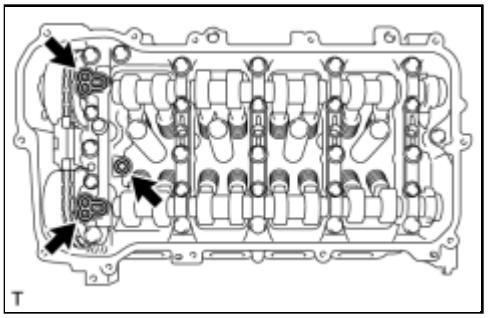

(c) Apply seal packing as shown the illustration.

Seal packing:

Toyota Genuine Seal Packing Black, Three Bond 1207B or equivalent

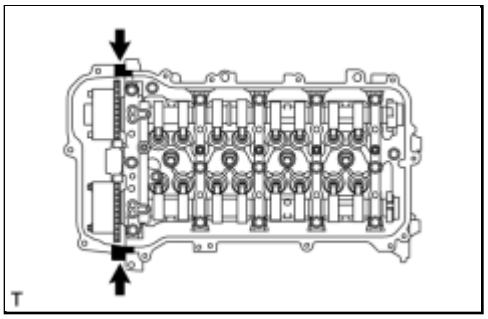

NOTICE:

- Remove any oil from the contact surfaces.
- Install the cylinder head cover within 3 minutes and tighten the bolts within 15 minutes after applying seal packing.
- Do not start the engine for at least 2 hours after the installation.

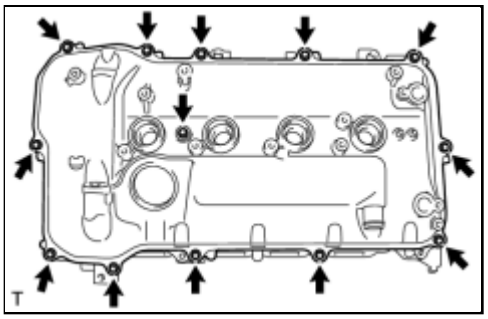

(d) Install the cylinder head cover with a new seal washer and the 13 bolts.

Torque: 10 N·m (102 kgf·cm, 7ft·lbf)

42. INSTALL CAMSHAFT TIMING OIL CONTROL VALVE ASSEMBLY

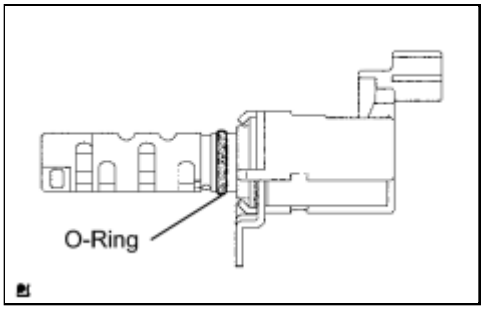

(a) Apply a light coat of engine oil to 2 new O-rings, then install them onto the camshaft timing oil control valves.

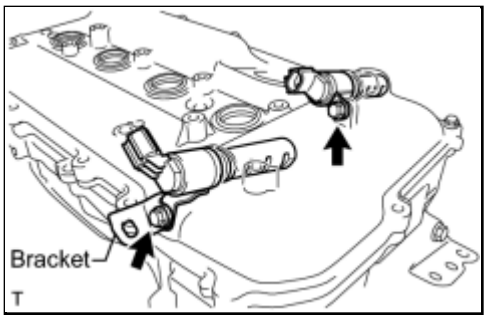

(b) Install the 2 camshaft timing oil control valves and bracket with the 2 bolts.

Torque: 10 N·m (102 kgf·cm, 7ft·lbf)

43. INSTALL CAMSHAFT POSITION SENSOR

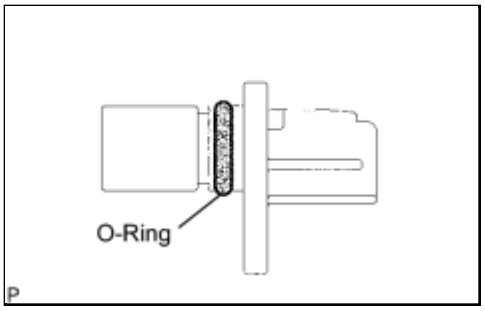

(a) Apply a light coat of engine oil to the O-rings of the sensors.

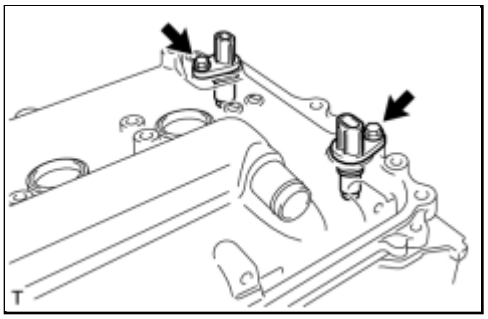

(b) Install the 2 sensors with the 2 bolts.

Torque: 10 N·m (102 kgf·cm, 7ft·lbf)

44. INSTALL SPARK PLUG

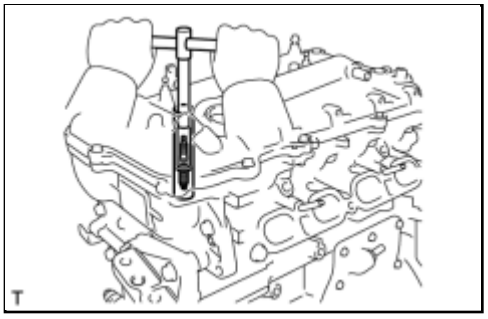

(a) Using a 14 mm spark plug wrench, install the 4 spark plugs.

Torque: 20 N·m (204 kgf·cm, 15ft·lbf)

45. INSTALL ENGINE COVER JOINT

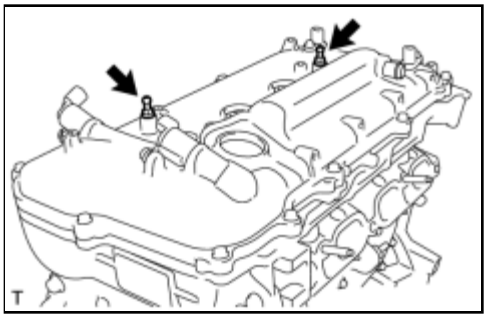

(a) Install the 2 engine cover joints.

Torque: 10 N·m (102 kgf·cm, 7ft·lbf)

46. INSTALL OIL FILLER CAP GASKET

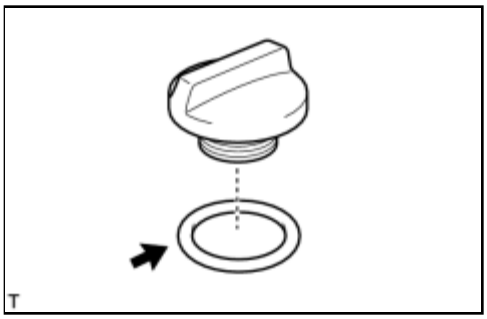

(a) Install the gasket to the cap.

47. INSTALL OIL FILLER CAP SUB-ASSEMBLY

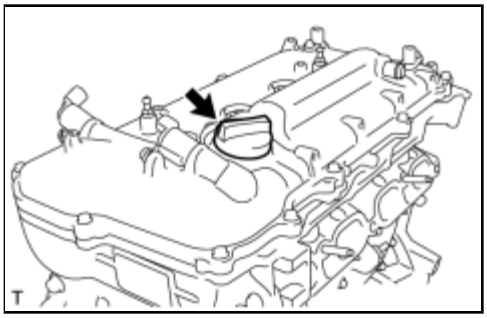

(a) Install the oil filler cap.

48. INSTALL ENGINE HANGER

(a) Install the 2 engine hangers with the 2 bolts.

Torque: 43 N·m (439 kgf·cm, 32ft·lbf)

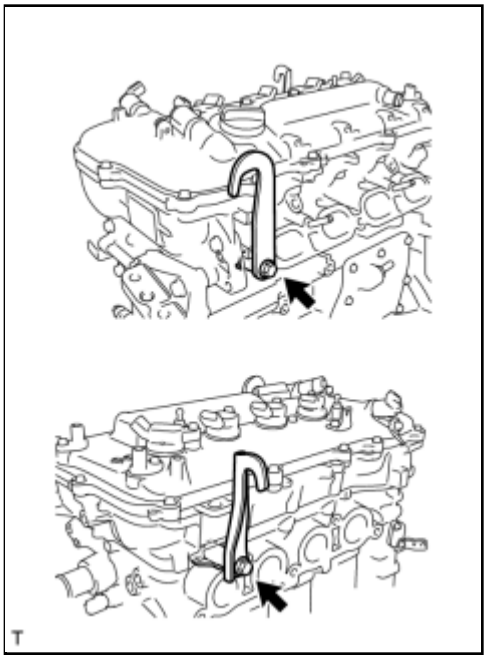
T

Last Modified: 3-10-2010	6.4 A	**From:** 200901
Model Year: 2010	**Model:** Corolla	**Doc ID:** RM000002WH601AX
Title: 2ZR-FE ENGINE MECHANICAL: ENGINE UNIT: REMOVAL (2010 Corolla)		

REMOVAL

1. INSTALL ENGINE STAND

(a) Set the engine on an engine stand.

2. REMOVE ENGINE HANGER INFO

3. REMOVE INTAKE MANIFOLD

(a) Remove the wire harness clamp bracket.

(b) Remove the 2 bolts and disconnect the air tube.

(c) Disconnect the ventilation hose from the intake manifold.

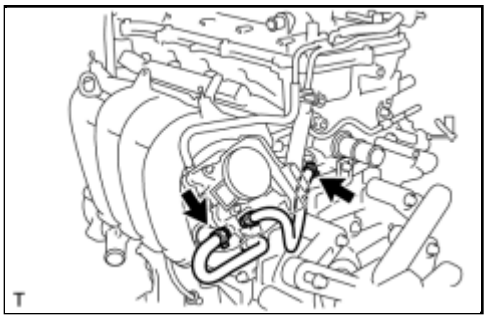

(d) Disconnect the 2 water by-pass hoses.

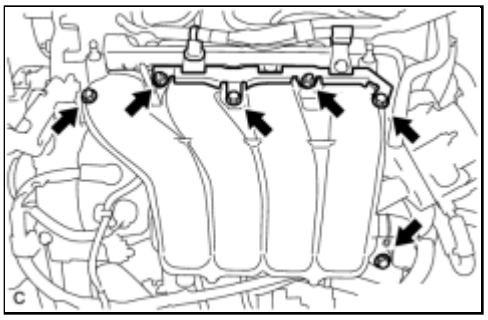

(e) Remove the 4 bolts, 2 nuts and intake manifold and intake manifold stay.

(f) Remove the gasket from the intake manifold.

4. DISCONNECT FUEL TUBE SUB-ASSEMBLY INFO

5. REMOVE FUEL DELIVERY PIPE SUB-ASSEMBLY INFO

6. REMOVE FUEL INJECTOR ASSEMBLY INFO

7. REMOVE IGNITION COIL ASSEMBLY

(a) Remove the 4 bolts and 4 ignition coils.

8. REMOVE OIL LEVEL DIPSTICK SUB-ASSEMBLY

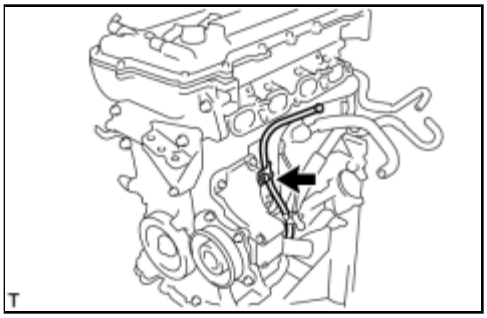

(a) Remove the bolt and oil level dipstick.

(b) Remove the O-ring from the oil level dipstick.

9. REMOVE NO. 1 EXHAUST MANIFOLD HEAT INSULATOR

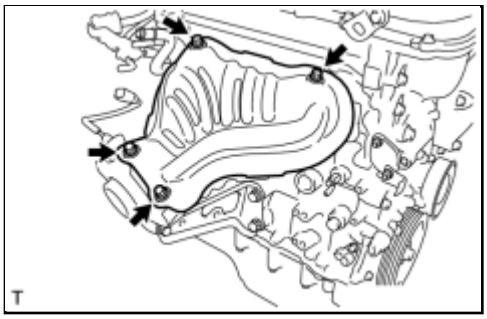

(a) Remove the 4 bolts and exhaust manifold heat insulator.

10. REMOVE MANIFOLD STAY

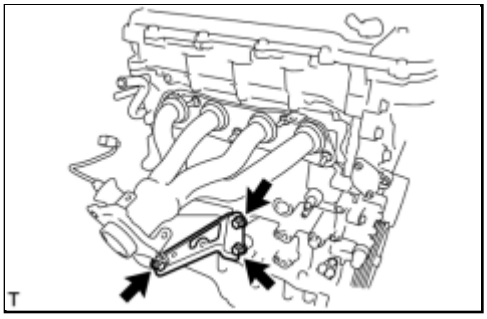

(a) Remove the 3 bolts and manifold stay.

11. REMOVE EXHAUST MANIFOLD

(a) Remove the 5 nuts and exhaust manifold.

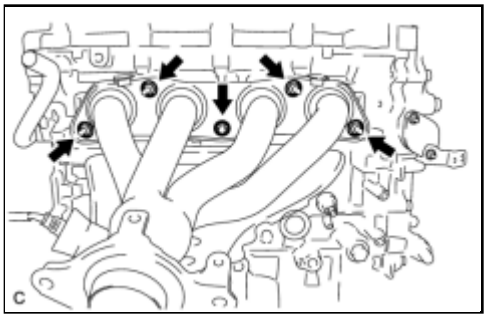

12. REMOVE VENTILATION HOSE

(a) Remove the ventilation hose.

13. DISCONNECT NO. 3 WATER BY-PASS HOSE

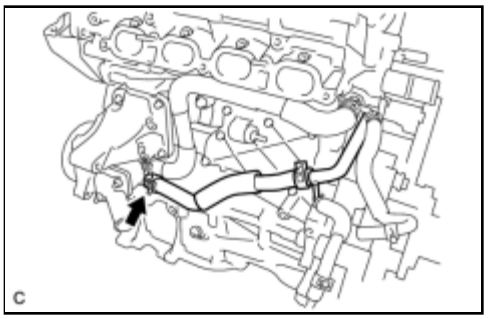

(a) Disconnect the No. 3 water by-pass hose from the water inlet housing.

14. REMOVE NO. 1 WATER BY-PASS PIPE

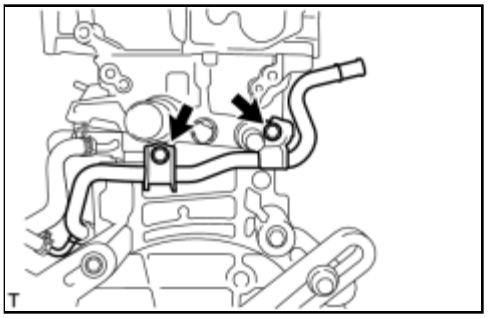

(a) Remove the 2 bolts and No. 1 water by-pass pipe.

15. REMOVE WATER BY-PASS HOSE

(a) Remove the clamp and water by-pass hose.

16. REMOVE INLET WATER HOSE

(a) Remove the 2 clamps and inlet water hose.

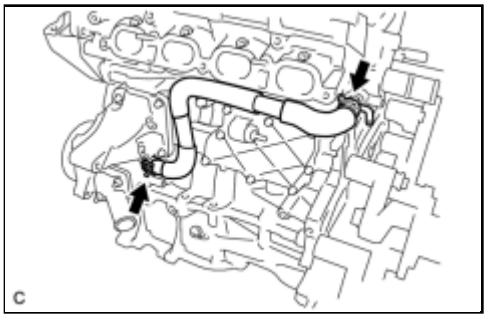

17. REMOVE INLET WATER INFO

18. REMOVE THERMOSTAT INFO

19. REMOVE RADIO SETTING CONDENSER

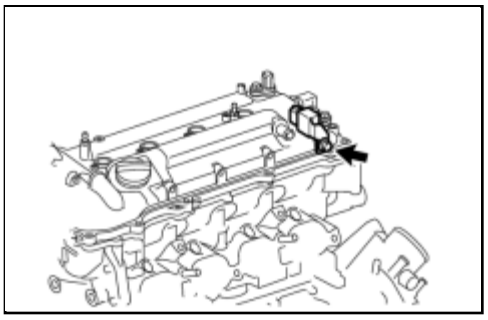

(a) Remove the bolt and radio setting condenser.

Last Modified: 3-10-2010	6.4 A	**From:** 200901
Model Year: 2010	**Model:** Corolla	**Doc ID:** RM000002XA101PX
Title: 2ZR-FE ENGINE MECHANICAL: ENGINE UNIT: REPLACEMENT (2010 Corolla)		

REPLACEMENT

1. REPLACE RING PIN

(a) Remove the 2 ring pins.

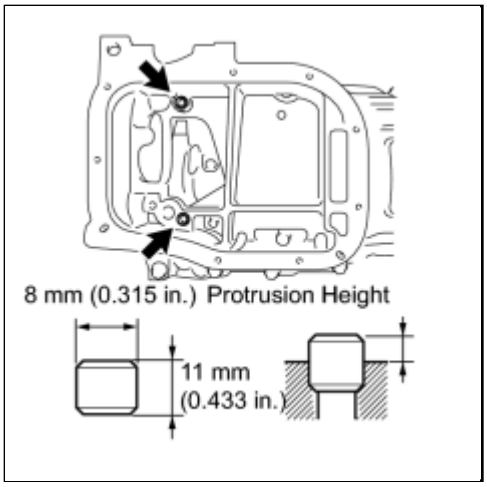

(b) Install 2 new ring pins to the crankcase.

Standard protrusion:
3 mm (0.118 in.)

2. REPLACE STUD BOLT

(a) For crankcase:

(1) Remove the 2 stud bolts.

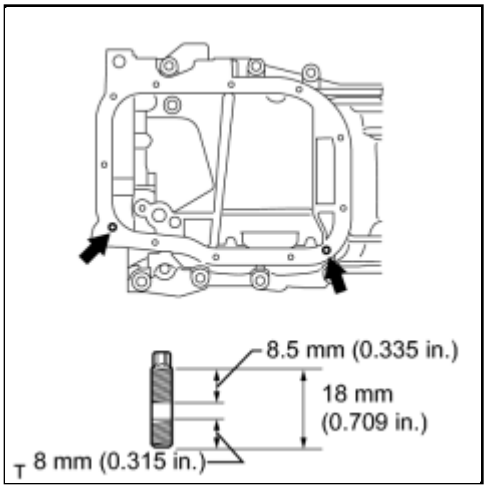

(2) Using a "TORX" socket E5, install the 2 stud bolts as shown in the illustration.

Torque: 5.0 N·m (51 kgf·cm, 44in·lbf)

(b) For water inlet housing:

(1) Remove the 2 stud bolts.

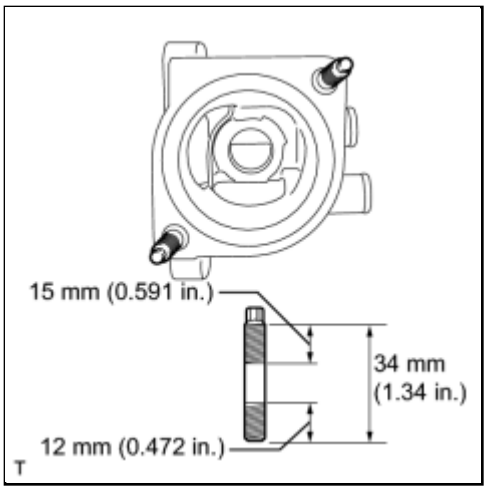

(2) Using a "TORX" socket E5, install the 2 stud bolts as shown in the illustration.

Torque: 5.0 N·m (51 kgf·cm, 44in·lbf)

3. REPLACE SPARK PLUG TUBE GASKET

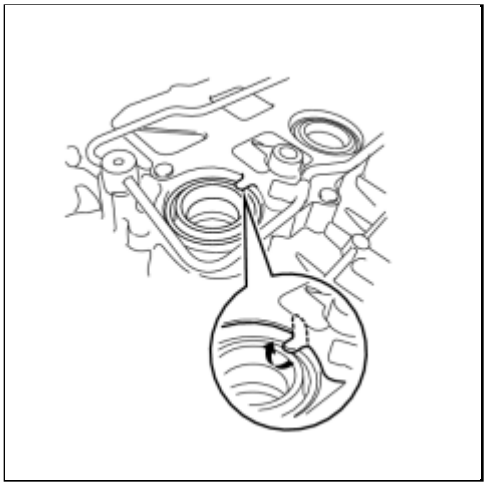

(a) Pry up the claws of the ventilation baffle plate.

NOTICE:

Do not deform the claws of the baffle plate more than necessary.

(b) Remove the 4 gaskets from the cylinder head covers.

NOTICE:

- Prevent the plug tube gaskets from being deformed as much as possible. The removed gaskets will be used when reinstalling the gaskets.
- Do not damage the connection of the cylinder head cover.

(1) Using a cutter, cut off the sealing part of the removed plug tube gasket.

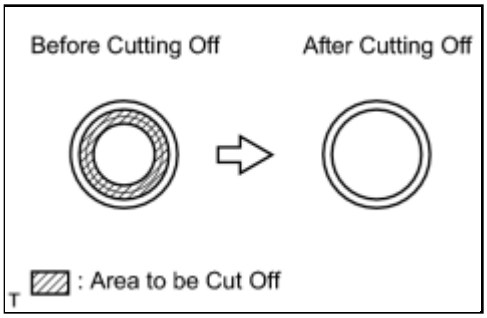

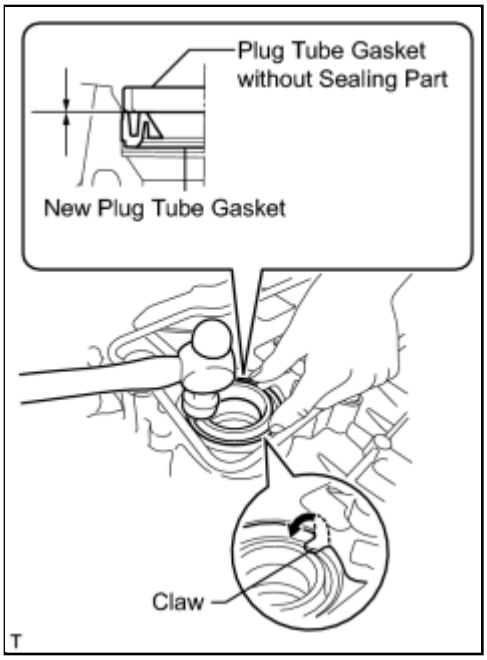

(2) Using the plug tube gasket which has had the sealing part cut off, uniformly press in a new plug tube gasket all the way.

NOTICE:

- Keep the lip free of foreign matter.
- Do not tap on the oil seal at an angle.

HINT:

If a plug tube gasket that will be used to install a new gasket is deformed, and cannot be positioned on a new gasket, correct the deformation using pliers.

(c) Return the claws of the ventilation baffle plate to their original positions.

4. REPLACE TIMING CHAIN COVER OIL SEAL

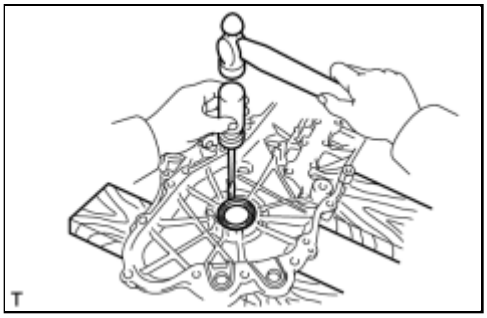

(a) Using a screwdriver and hammer, remove the oil seal.

NOTICE:

Be careful not to damage the timing chain cover oil seal.

HINT:

Tape the screwdriver tip before use.

(b) Using SST, tap in a new oil seal until its surface is flush with the timing gear case edge.

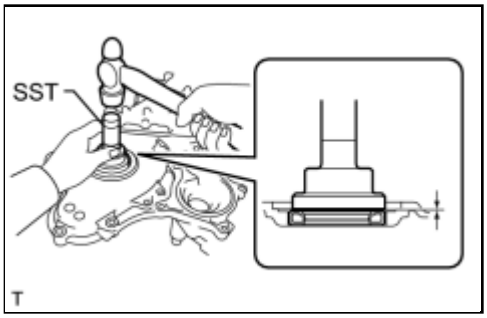

SST: 09223-22010

(c) Apply a light coat of MP grease to the lip of the oil seal.

NOTICE:

- Keep the lip free of foreign matter.
- Do not tap on the oil seal at an angle.
- Make sure that the oil seal edge does not stick out of the timing chain cover.

5. REPLACE REAR ENGINE OIL SEAL

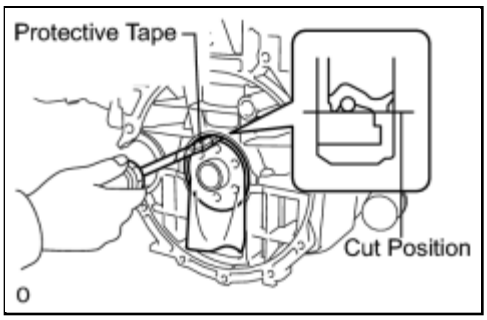

(a) Using a knife, cut off the oil seal lip.

(b) Using a screwdriver with its tip taped, pry out the oil seal.

NOTICE:

After removing the oil seal, check the crankshaft for damage. If it is damaged, smooth the surface with 400-grit sandpaper.

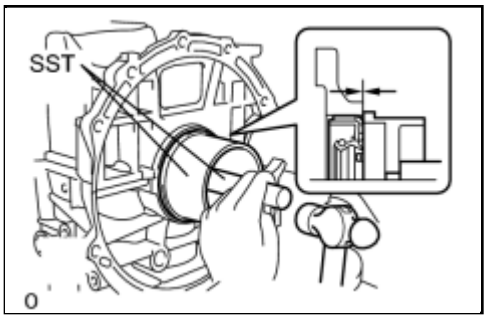

(c) Using SST and a hammer, evenly tap the oil seal until its surface is flush with the rear oil seal retainer edge.

SST: 09223-15030

SST: 09950-70010

09951-07100

NOTICE:

- Keep the lip free of foreign matter.
- Do not tap on the oil seal at an angle.

(d) Apply MP grease to a new oil seal lip.

NOTICE:

Wipe off extra grease on the crankshaft.

Last Modified: 3-10-2010	6.4 A	**From:** 200901
Model Year: 2010	**Model:** Corolla	**Doc ID:** RM000002WH401AX
Title: 2ZR-FE ENGINE MECHANICAL: ENGINE UNIT: INSTALLATION (2010 Corolla)		

INSTALLATION

1. INSTALL RADIO SETTING CONDENSER

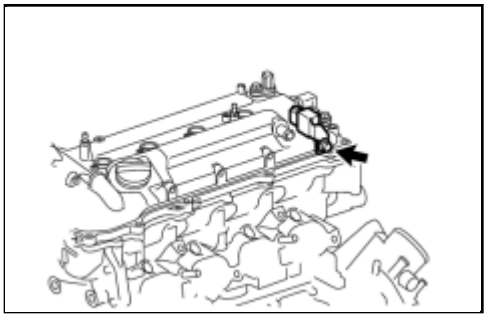

(a) Install the radio setting condenser with the bolt.

Torque: 10 N·m (102 kgf·cm, 7ft·lbf)

2. INSTALL THERMOSTAT INFO

3. INSTALL INLET WATER INFO

4. INSTALL INLET WATER HOSE

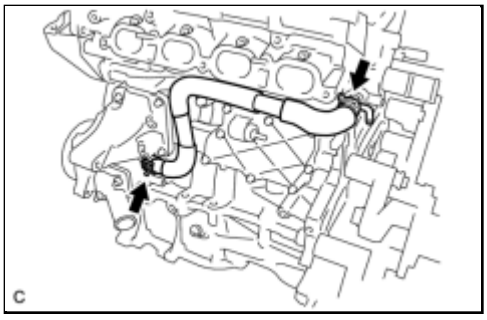

(a) Install the inlet water hose with the 2 clamps.

5. INSTALL WATER BY-PASS HOSE

(a) Install the water by-pass hose with the clamp.

6. INSTALL NO. 1 WATER BY-PASS PIPE

(a) Install the No. 1 water by-pass pipe with the 2 bolts.

Torque: 21 N·m (214 kgf·cm, 16ft·lbf)

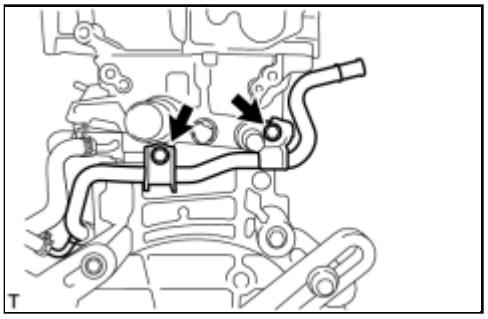

7. CONNECT NO. 3 WATER BY-PASS HOSE

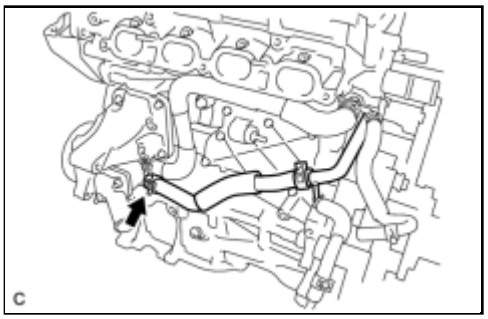

(a) Connect the No. 3 water by-pass hose to the inlet water housing.

8. INSTALL VENTILATION HOSE

(a) Install the ventilation hose.

9. INSTALL EXHAUST MANIFOLD

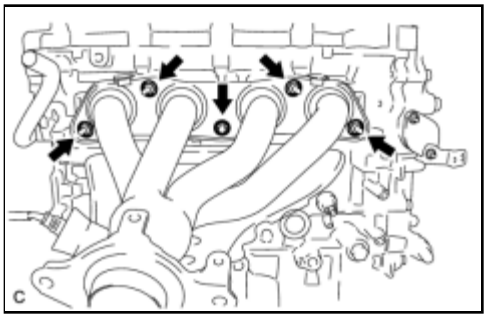

(a) Install a new gasket onto the exhaust manifold.

(b) Install the exhaust manifold with the 5 nuts.

Torque: 21 N·m (214 kgf·cm, 16ft·lbf)

10. INSTALL MANIFOLD STAY

(a) Install the manifold stay with the 3 bolts.

Torque: 43 N·m (439 kgf·cm, 32ft·lbf)

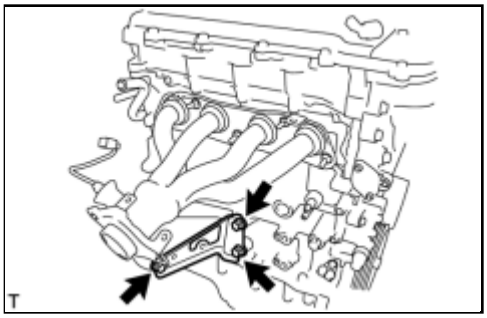

11. INSTALL NO. 1 EXHAUST MANIFOLD HEAT INSULATOR

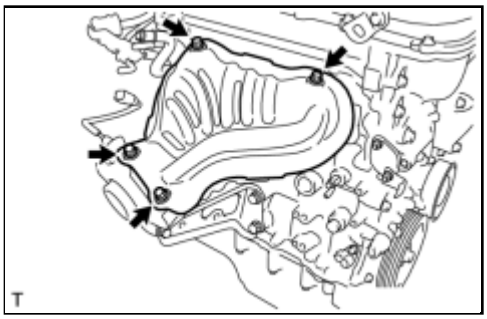

(a) Install the exhaust manifold heat insulator with the 4 bolts.

Torque: 12 N·m (122 kgf·cm, 9ft·lbf)

12. INSTALL OIL LEVEL DIPSTICK SUB-ASSEMBLY

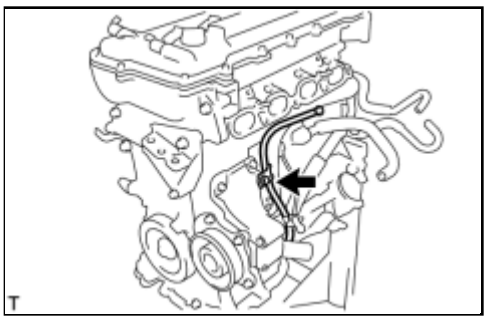

(a) Apply engine oil to a new O-ring.

(b) Install the oil level dipstick with the bolt through the new O-ring.

Torque: 21 N·m (214 kgf·cm, 16ft·lbf)

13. INSTALL IGNITION COIL ASSEMBLY

(a) Install the 4 ignition coils with the 4 bolts.

Torque: 10 N·m (102 kgf·cm, 7ft·lbf)

14. INSTALL FUEL INJECTOR ASSEMBLY INFO

15. INSTALL NO. 1 DELIVERY PIPE SPACER INFO

16. INSTALL FUEL DELIVERY PIPE SUB-ASSEMBLY INFO

17. CONNECT FUEL TUBE SUB-ASSEMBLY INFO

18. INSTALL INTAKE MANIFOLD

(a) Install a new gasket to the intake manifold.

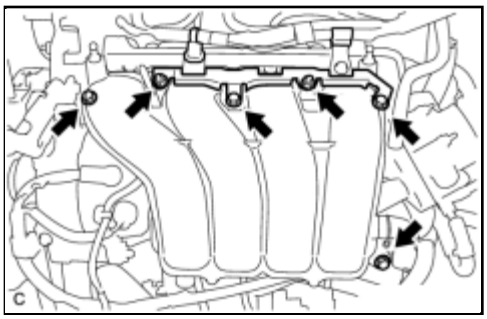

(b) Install the intake manifold and intake manifold stay with the 4 bolts and 2 nuts.

Torque: 28 N·m (286 kgf·cm, 21ft·lbf)

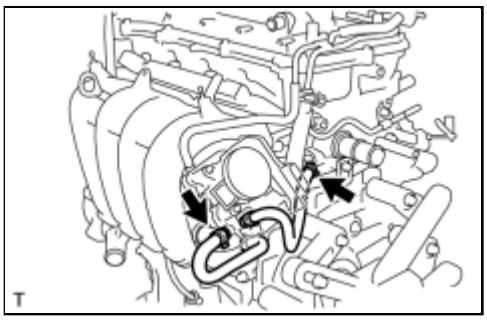

(c) Connect the 2 water by-pass hoses.

(d) Connect the ventilation hose to the intake manifold.

(e) Install the air tube with the 2 bolts.

Torque: 10 N·m (102 kgf·cm, 7ft·lbf)

(f) Install the wire harness bracket.

Torque: 10 N·m (102 kgf·cm, 7ft·lbf)

19. INSTALL FAN BELT ADJUSTING BAR

(a) Install the bolt and fan belt adjusting bar.

Torque: 19 N·m (194 kgf·cm, 14ft·lbf)

20. INSTALL ENGINE HANGER INFO

21. REMOVE ENGINE STAND

(a) Attach the engine to the sling device with the chain block.

(b) Remove the engine from the engine stand.

Last Modified: 3-10-2010	6.4 K	**From:** 200901
Model Year: 2010	**Model:** Corolla	**Doc ID:** RM0000027ID00IX
Title: 2AZ-FE ENGINE MECHANICAL: FRONT CRANKSHAFT OIL SEAL: COMPONENTS (2010 Corolla)		

COMPONENTS

ILLUSTRATION

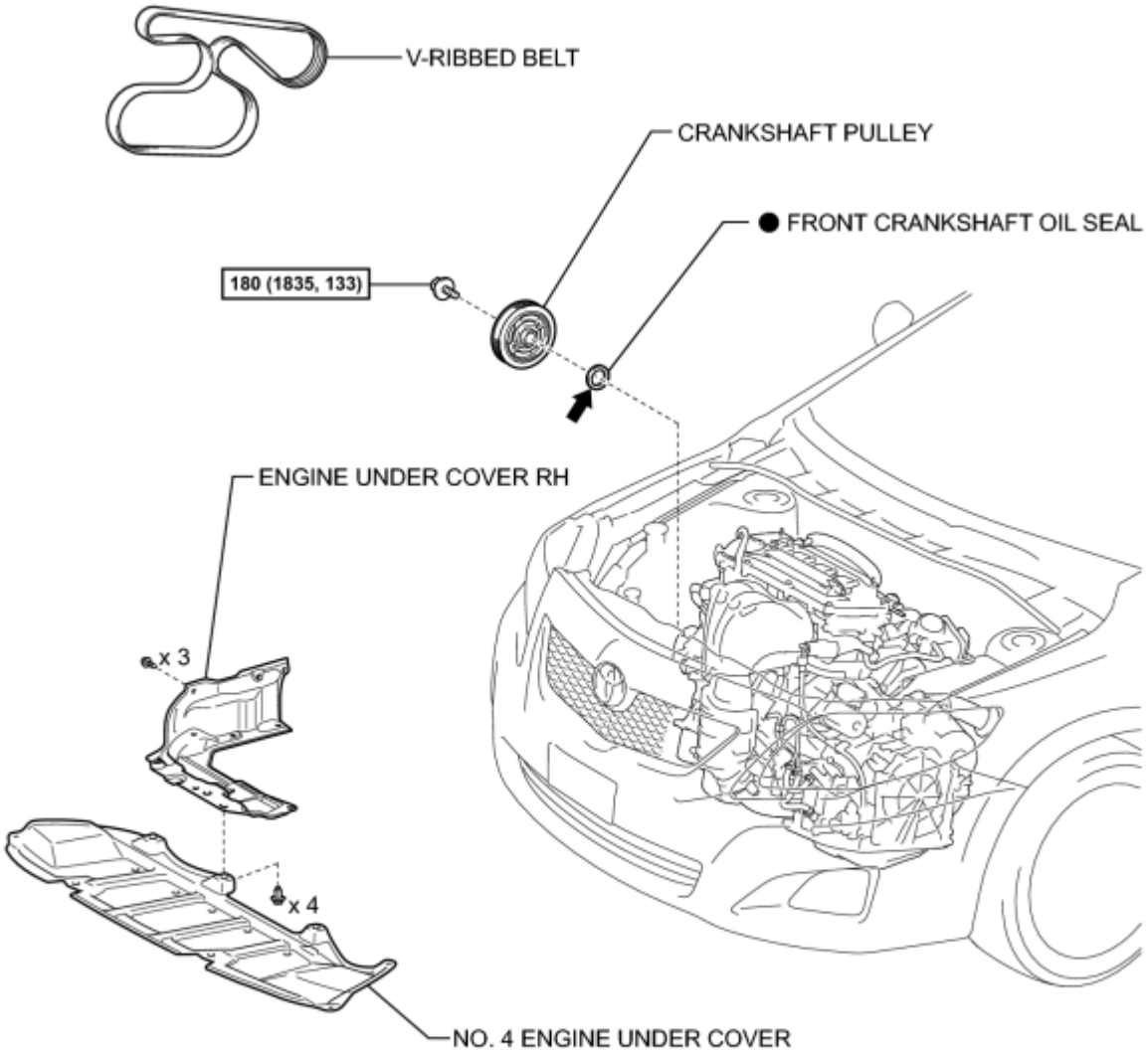

N*m (kgf*cm, ft.*lbf): Specified torque

● Non-reusable part

⬅ MP grease

Last Modified: 3-10-2010	6.4 A	**From:** 200901
Model Year: 2010	**Model:** Corolla	**Doc ID:** RM0000027IE00JX
Title: 2AZ-FE ENGINE MECHANICAL: FRONT CRANKSHAFT OIL SEAL: REMOVAL (2010 Corolla)		

REMOVAL

1. REMOVE FRONT WHEEL RH

2. REMOVE ENGINE UNDER COVER RH

3. REMOVE V-RIBBED BELT INFO

4. REMOVE CRANKSHAFT PULLEY

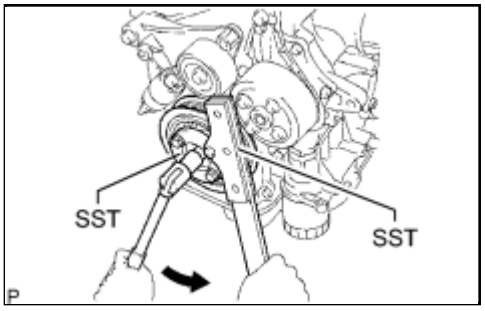

(a) Using SST, hold the crankshaft pulley in place and loosen the pulley bolt.

SST: 09213-54015

91651-60855

SST: 09330-00021

(b) Using SST, remove the crankshaft pulley.

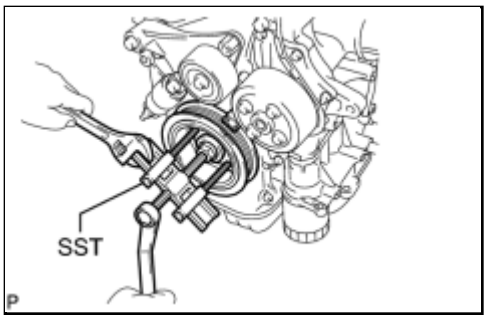

SST: 09950-50013

09951-05010

09952-05010

09953-05020

09954-05021

SST: 09950-40011

09957-04010

HINT:

If necessary, remove the pulley and pulley bolt using SST.

5. REMOVE FRONT CRANKSHAFT OIL SEAL

(a) Using a knife, cut off the lip of the oil seal.

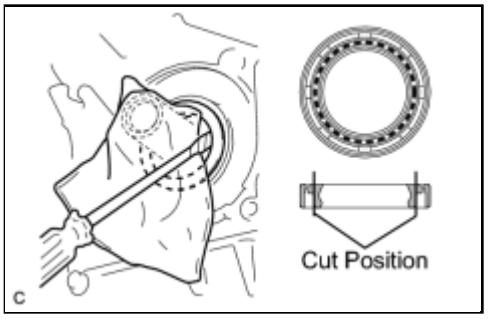

(b) Using a screwdriver, pry out the oil seal.

NOTICE:

Do not damage the surfaces of the oil seal press fit hole and crankshaft.

HINT:

Tape the screwdriver tip before use.

Last Modified: 3-10-2010	6.4 A	**From:** 200901
Model Year: 2010	**Model:** Corolla	**Doc ID:** RM0000027IC00IX
Title: 2AZ-FE ENGINE MECHANICAL: FRONT CRANKSHAFT OIL SEAL: INSTALLATION (2010 Corolla)		

INSTALLATION

1. INSTALL FRONT CRANKSHAFT OIL SEAL

(a) Apply MP grease to the lip of a new front crankshaft oil seal.

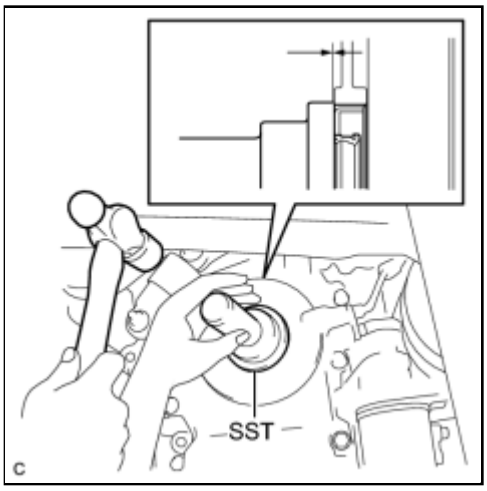

(b) Using SST and a hammer, tap in the front crankshaft oil seal until its surface is flush with the front oil seal retainer edge.

SST: 09223-22010

NOTICE:

- Keep the lip free from foreign matter.
- Do not tap on the oil seal at an angle.

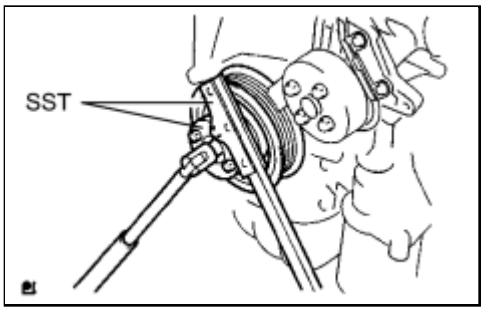

2. INSTALL CRANKSHAFT PULLEY

(a) Using SST, fix the crankshaft pulley in place and tighten the bolt.

SST: 09213-54015

91651-60855

SST: 09330-00021

Torque: 180 N·m (1835 kgf·cm, 133ft·lbf)

3. INSTALL V-RIBBED BELT INFO

4. INSPECT FOR OIL LEAK

5. INSTALL ENGINE UNDER COVER RH

6. INSTALL FRONT WHEEL RH

Torque: 103 N·m (1050 kgf·cm, 76ft·lbf)

Last Modified: 3-10-2010	6.4 K	**From:** 200901
Model Year: 2010	**Model:** Corolla	**Doc ID:** RM0000008ZM01AX
Title: 2ZR-FE ENGINE MECHANICAL: FRONT CRANKSHAFT OIL SEAL: COMPONENTS (2010 Corolla)		

COMPONENTS

ILLUSTRATION

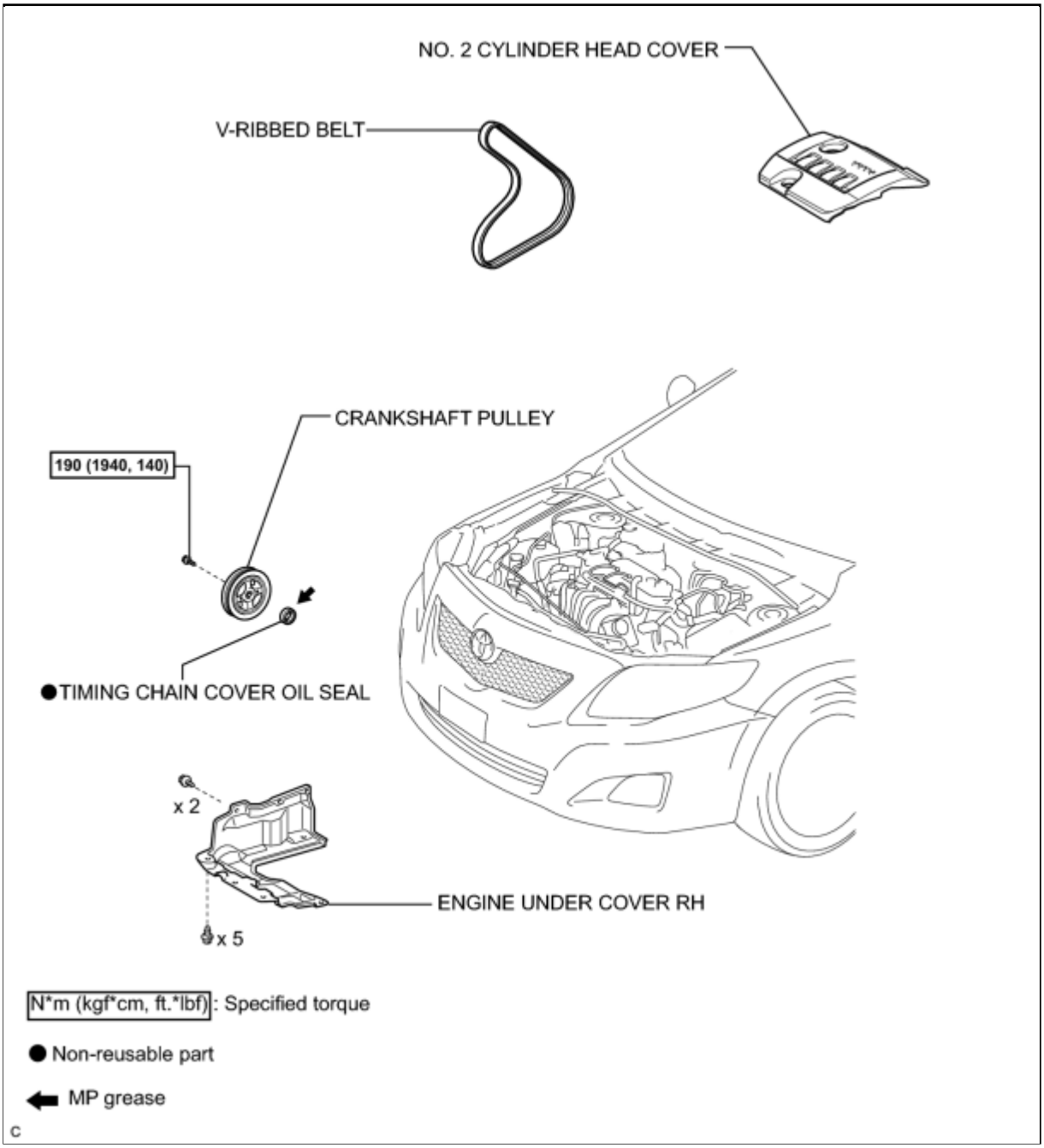

Last Modified: 3-10-2010	6.4 A	**From:** 200901
Model Year: 2010	**Model:** Corolla	**Doc ID:** RM0000008ZN01AX
Title: 2ZR-FE ENGINE MECHANICAL: FRONT CRANKSHAFT OIL SEAL: REMOVAL (2010 Corolla)		

REMOVAL

1. REMOVE FRONT WHEEL RH

2. REMOVE ENGINE UNDER COVER RH

3. REMOVE NO. 2 CYLINDER HEAD COVER INFO

4. REMOVE V-RIBBED BELT INFO

5. REMOVE CRANKSHAFT PULLEY

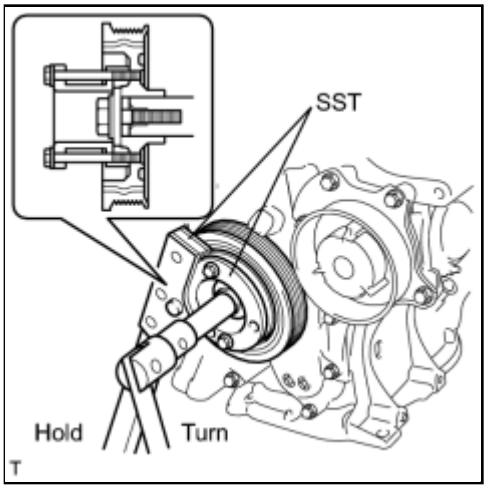

(a) Using SST, hold the pulley in place and loosen the pulley bolt.

SST: 09213-58014

91551-80840

SST: 09330-00021

NOTICE:

Check the SST installation positions when installing them to prevent the SST fixing bolts from coming into contact with the timing chain cover sub-assembly.

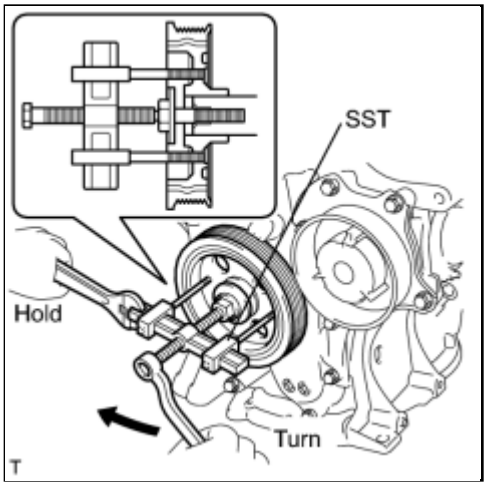

(b) Using SST, remove the crankshaft pulley and pulley bolt.

SST: 09950-50013

09951-05010

09952-05010

09953-05020

09954-05021

6. REMOVE TIMING CHAIN COVER OIL SEAL

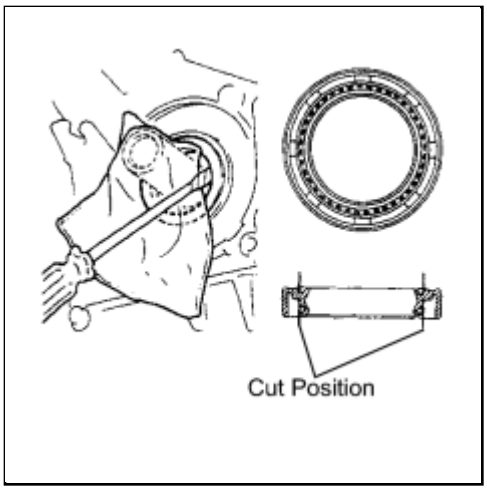

(a) Using a knife, cut off the lip of the oil seal.

(b) Using a screwdriver with its tip wrapped with tape, pry out the oil seal.

NOTICE:

After removing, check the crankshaft for damage. If damaged, smooth the surface with 400-grit sandpaper.

Last Modified: 3-10-2010	6.4 A	**From:** 200901
Model Year: 2010	**Model:** Corolla	**Doc ID:** RM0000008ZL01AX
Title: 2ZR-FE ENGINE MECHANICAL: FRONT CRANKSHAFT OIL SEAL: INSTALLATION (2010 Corolla)		

INSTALLATION

1. INSTALL TIMING CHAIN COVER OIL SEAL

(a) Apply MP grease to the lip of a new oil seal.

NOTICE:

Keep the lip free of foreign matter.

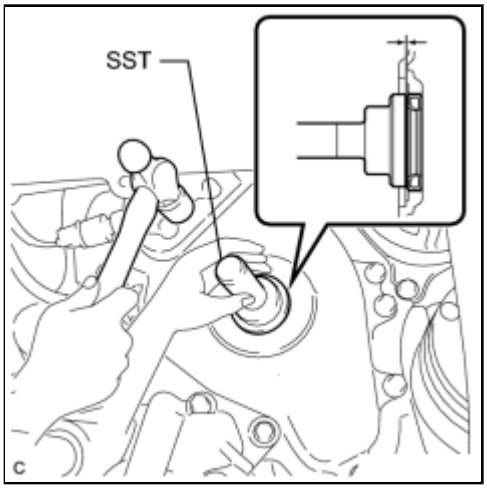

(b) Using SST and a hammer, tap in the oil seal until its surface is flush with the rear oil seal retainer edge.

SST: 09223-22010

NOTICE:

Wipe off extra grease from the crankshaft.

2. INSTALL CRANKSHAFT PULLEY

(a) Align the pulley set key with the key groove of the pulley.

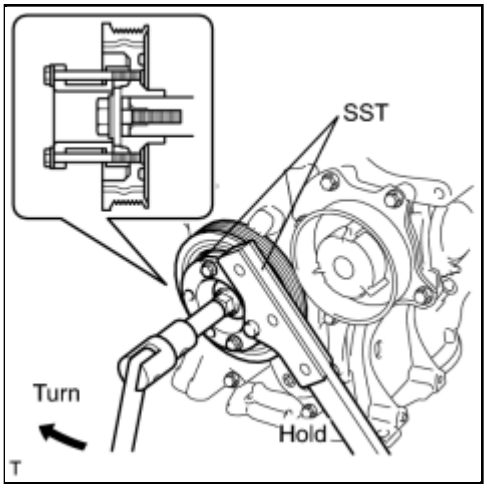

(b) Using SST, hold the pulley in place and tighten the bolt.

SST: 09213-58014

91551-80840

SST: 09330-00021

Torque: 190 N·m (1940 kgf·cm, 140ft·lbf)

NOTICE:

Check the SST installation positions when installing them to prevent the SST fixing bolts from coming into contact with the timing chain cover sub-assembly.

3. INSTALL V-RIBBED BELT INFO

4. ADJUST V-RIBBED BELT INFO

5. INSPECT V-RIBBED BELT INFO

6. ADD ENGINE OIL INFO

7. INSPECT FOR ENGINE OIL LEAK

8. INSTALL NO. 2 CYLINDER HEAD COVER INFO

9. INSTALL ENGINE UNDER COVER RH

10. INSTALL FRONT WHEEL RH

Last Modified: 3-10-2010	6.4 K	**From:** 200901
Model Year: 2010	**Model:** Corolla	**Doc ID:** RM0000027IG014X
Title: 2AZ-FE ENGINE MECHANICAL: REAR CRANKSHAFT OIL SEAL: COMPONENTS (2010 Corolla)		

COMPONENTS

ILLUSTRATION

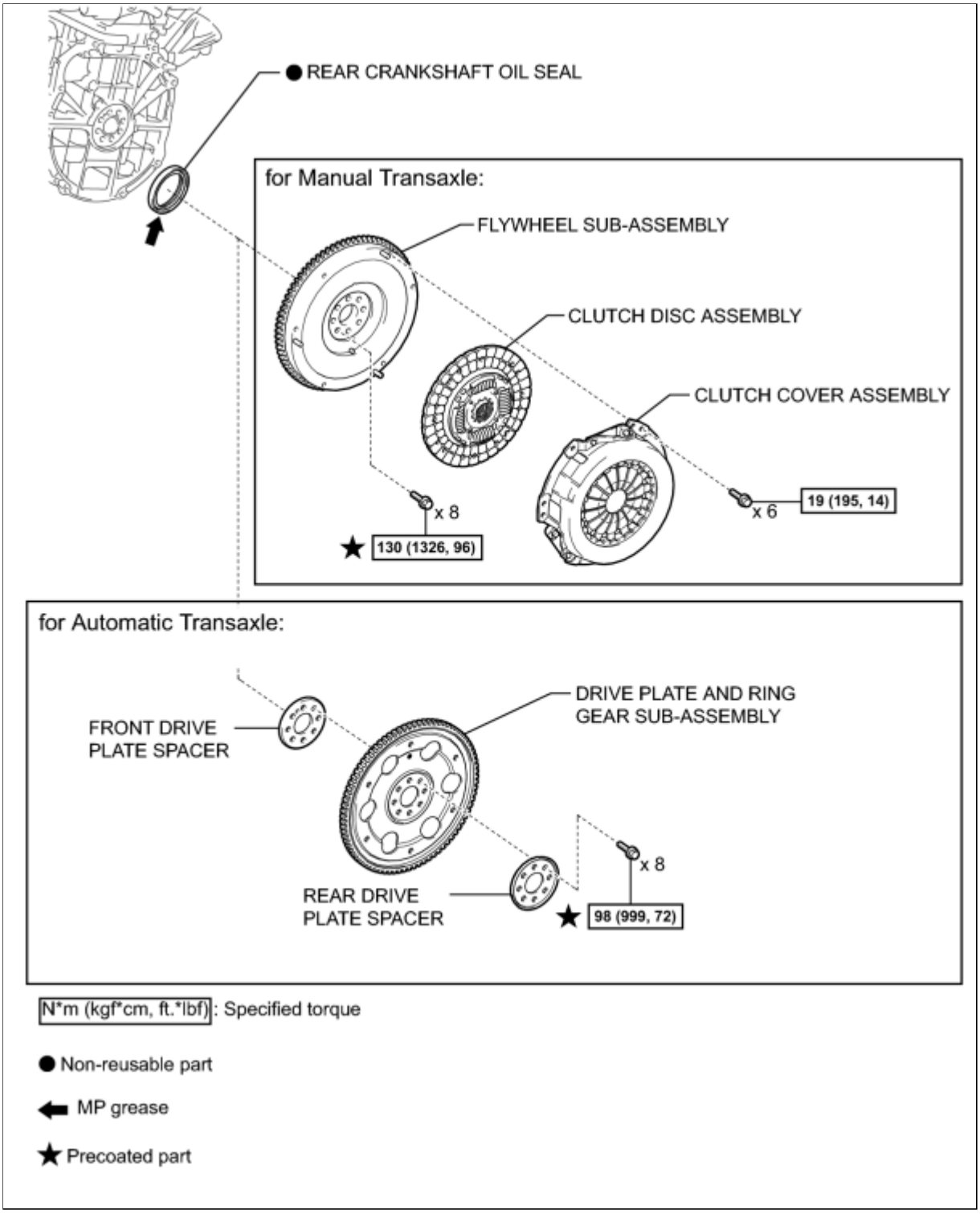
● REAR CRANKSHAFT OIL SEAL
for Manual Transaxle:
FLYWHEEL SUB-ASSEMBLY
CLUTCH DISC ASSEMBLY
CLUTCH COVER ASSEMBLY
x 8
★ 130 (1326, 96)
x 6
19 (195, 14)
for Automatic Transaxle:
FRONT DRIVE PLATE SPACER
DRIVE PLATE AND RING GEAR SUB-ASSEMBLY
REAR DRIVE PLATE SPACER
x 8
★ 98 (999, 72)
N*m (kgf*cm, ft.*lbf): Specified torque
● Non-reusable part
MP grease
★ Precoated part

Last Modified: 3-10-2010	6.4 A	**From:** 200901
Model Year: 2010	**Model:** Corolla	**Doc ID:** RM0000027IH017X
Title: 2AZ-FE ENGINE MECHANICAL: REAR CRANKSHAFT OIL SEAL: REMOVAL (2010 Corolla)		

REMOVAL

1. REMOVE AUTOMATIC TRANSAXLE ASSEMBLY (for Automatic Transaxle)

HINT: INFO **for U250E.**

2. REMOVE MANUAL TRANSAXLE ASSEMBLY (for Manual Transaxle)

HINT: INFO **for E351.**

3. REMOVE CLUTCH COVER ASSEMBLY (for Manual Transaxle)

HINT: INFO **for E351.**

4. REMOVE CLUTCH DISC ASSEMBLY (for Manual Transaxle)

HINT: INFO **for E351.**

5. REMOVE DRIVE PLATE AND RING GEAR SUB-ASSEMBLY (for Automatic Transaxle)

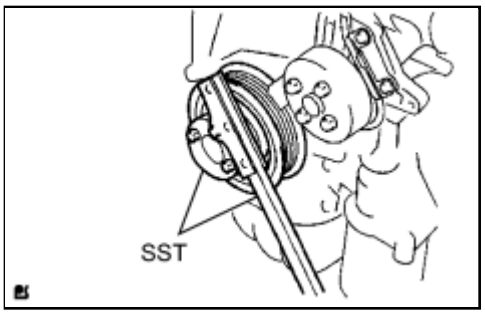

(a) Using SST, hold the crankshaft.

SST: 09213-54015

91651-60855

SST: 09330-00021

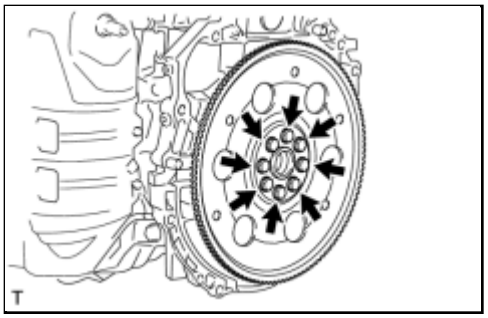

(b) Remove the 8 bolts, rear drive plate spacer, drive plate and front drive plate spacer.

6. REMOVE FLYWHEEL SUB-ASSEMBLY (for Manual Transaxle)

(a) Using SST, hold the crankshaft.

SST: 09213-54015

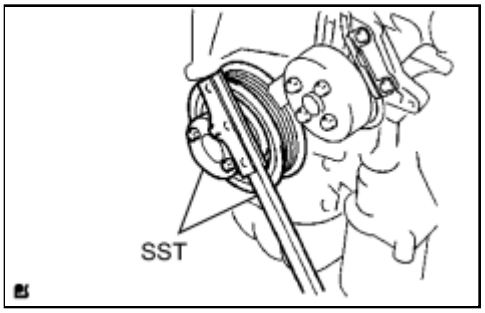

91651-60855

SST: 09330-00021

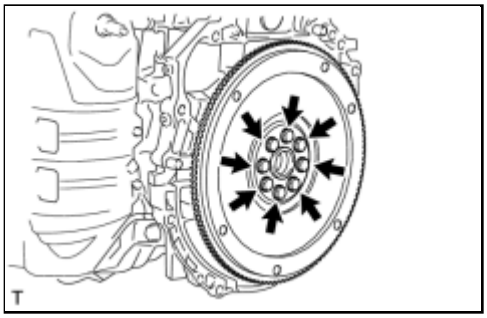

(b) Remove the 8 bolts and flywheel.

7. REMOVE REAR CRANKSHAFT OIL SEAL

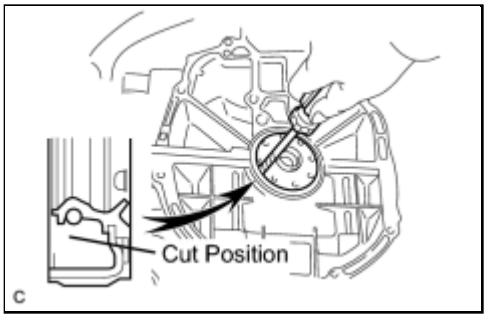

(a) Using a knife, cut off the lip of the oil seal.

(b) Using a screwdriver, pry out the oil seal.

NOTICE:

After removing, check the crankshaft for damage. If damaged, smooth the surface with 400-grit sandpaper.

HINT:

Tape the screwdriver tip before use.

Last Modified: 3-10-2010	6.4 A	**From:** 200901
Model Year: 2010	**Model:** Corolla	**Doc ID:** RM0000027IF017X
Title: 2AZ-FE ENGINE MECHANICAL: REAR CRANKSHAFT OIL SEAL: INSTALLATION (2010 Corolla)		

INSTALLATION

1. INSTALL REAR CRANKSHAFT OIL SEAL

(a) Apply MP grease to the lip of a new rear crankshaft oil seal.

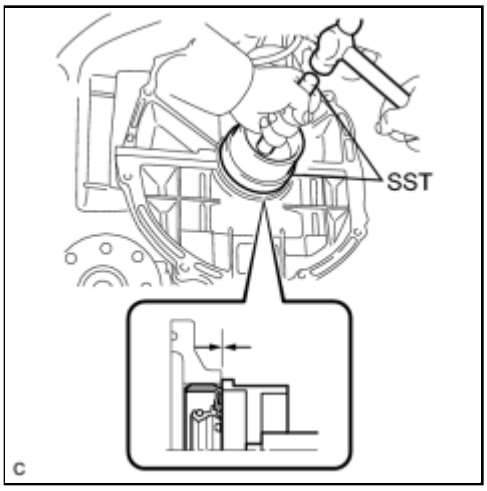

(b) Using SST and a hammer, tap in the rear crankshaft oil seal until its surface is flush with the rear oil seal retainer edge.

SST: 09223-15030

SST: 09950-70010

09951-07100

NOTICE:

- Keep the lip free from foreign matter.
- Do not tap on the oil seal at an angle.

2. INSTALL DRIVE PLATE AND RING GEAR SUB-ASSEMBLY (for Automatic Transaxle)

(a) Clean the 8 bolts and 8 bolt holes.

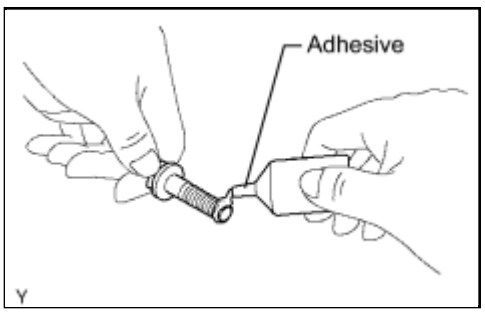

(b) Apply adhesive to 2 or 3 threads of the 8 bolts.

Adhesive:
Toyota Genuine Adhesive 1344, Three Bond 1344 or equivalent

(c) Using SST, hold the crankshaft.

SST: 09213-54015

91651-60855

SST: 09330-00021

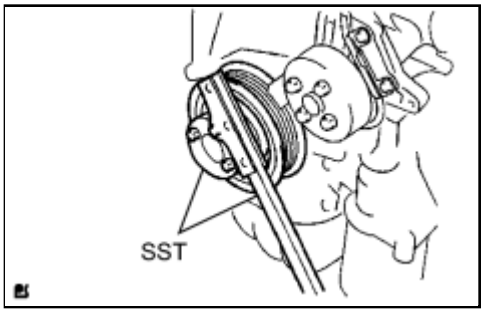

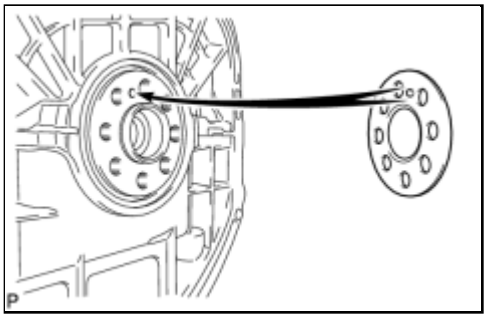

(d) Install the front drive plate spacer.

HINT:

Align the pin of the front spacer with the pin hole of the crankshaft.

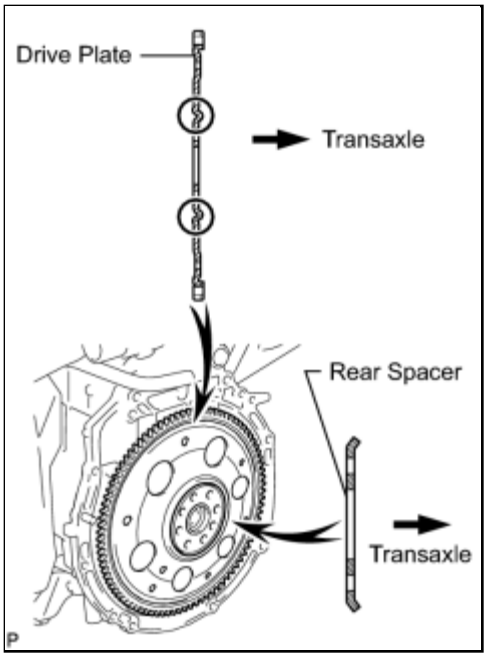

(e) Install the drive plate and rear drive plate spacer onto the crankshaft.

(f) In several steps, uniformly install and tighten the 8 bolts in the sequence shown in the illustration.

Torque: 98 N·m (999 kgf·cm, 72ft·lbf)

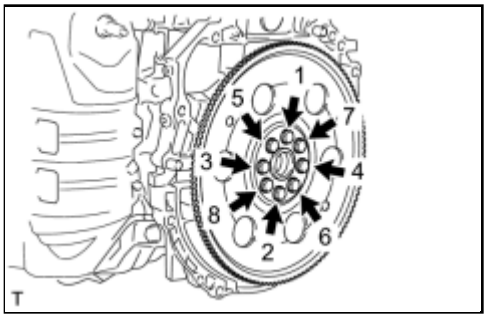

3. INSTALL FLYWHEEL SUB-ASSEMBLY (for Manual Transaxle)

(a) Clean the 8 bolts and 8 bolt holes.

(b) Apply adhesive to the end 2 or 3 threads of the 8 bolts.

Adhesive:
Toyota Genuine Adhesive 1344, Three Bond 1344 or equivalent

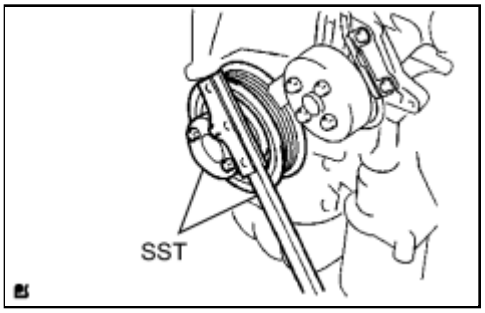

(c) Using SST, hold the crankshaft.

SST: 09213-54015

91651-60855

SST: 09330-00021

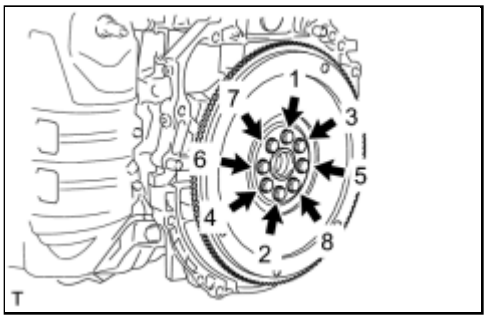

(d) In several steps, uniformly install and tighten the 8 bolts in the sequence shown in the illustration.

Torque: 130 N·m (1326 kgf·cm, 96ft·lbf)

4. INSTALL CLUTCH DISC ASSEMBLY (for Manual Transaxle)

HINT: INFO **for E351.**

5. INSTALL CLUTCH COVER ASSEMBLY (for Manual Transaxle)

HINT: INFO **for E351.**

6. INSTALL AUTOMATIC TRANSAXLE ASSEMBLY (for Automatic Transaxle)

HINT: INFO **for U250E.**

7. INSTALL MANUAL TRANSAXLE ASSEMBLY (for Manual Transaxle)

HINT: INFO **for E351.**

Last Modified: 3-10-2010	6.4 K	**From:** 200901
Model Year: 2010	**Model:** Corolla	**Doc ID:** RM0000027IG013X
Title: 2ZR-FE ENGINE MECHANICAL: REAR CRANKSHAFT OIL SEAL: COMPONENTS (2010 Corolla)		

COMPONENTS

ILLUSTRATION

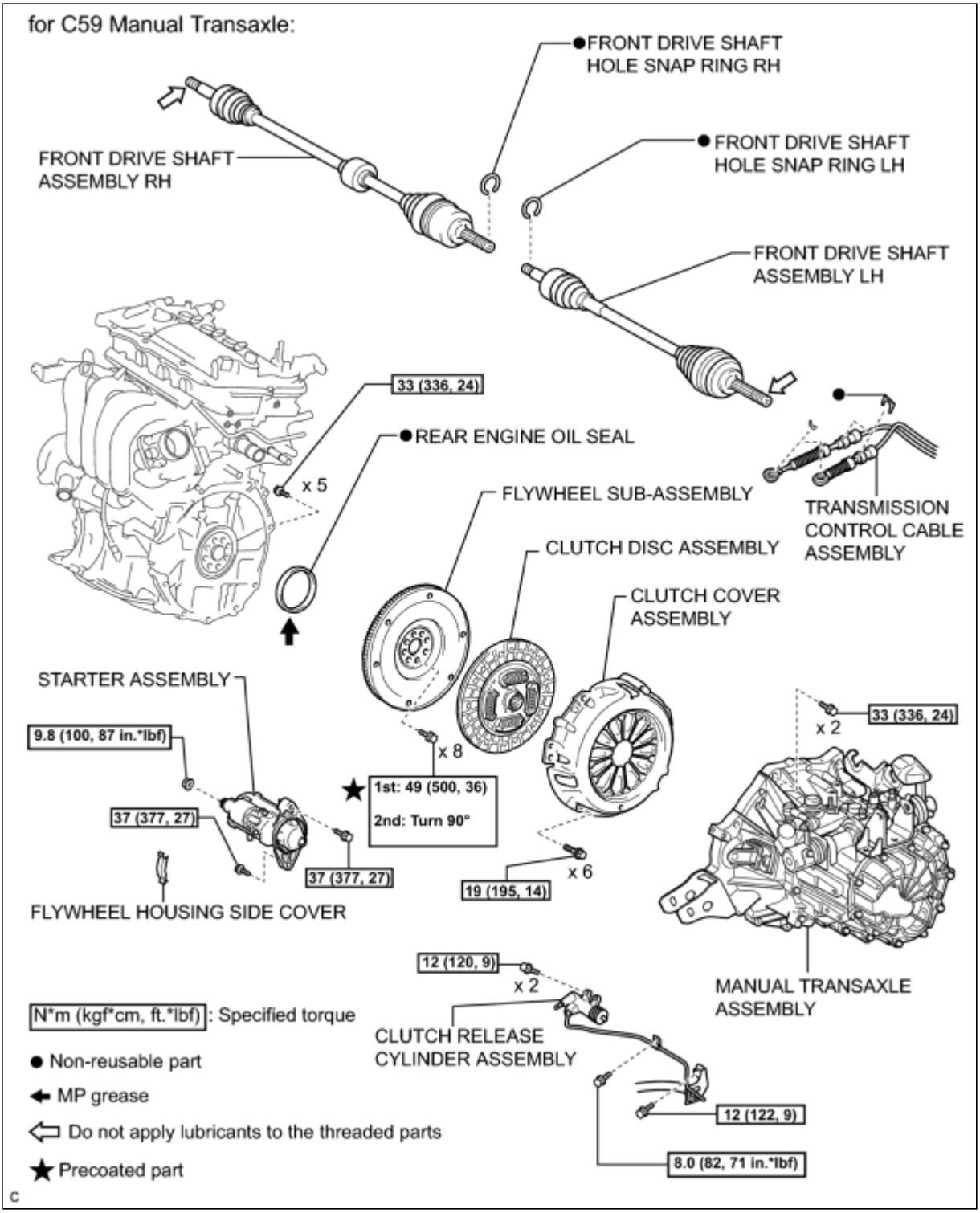

ILLUSTRATION

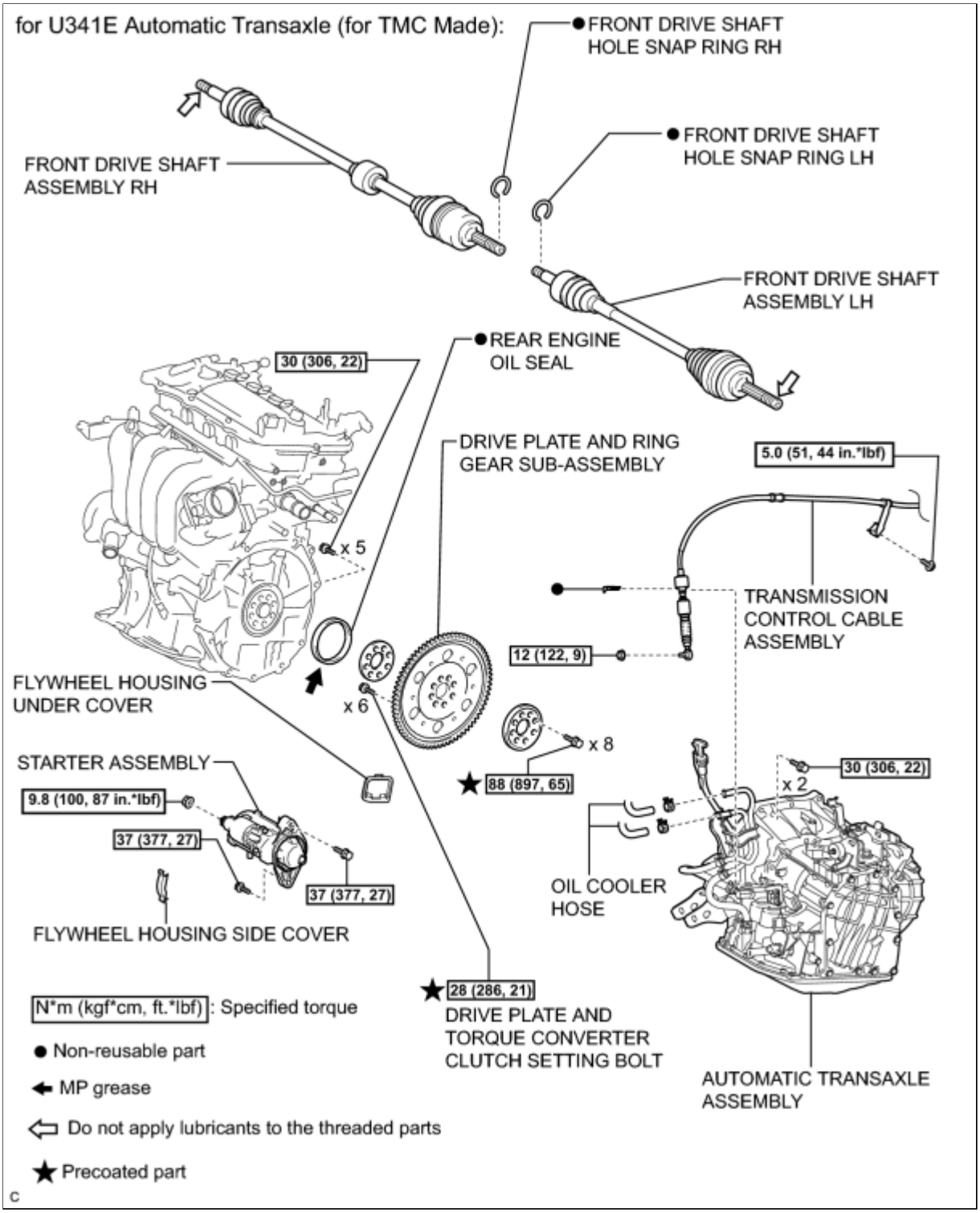

ILLUSTRATION

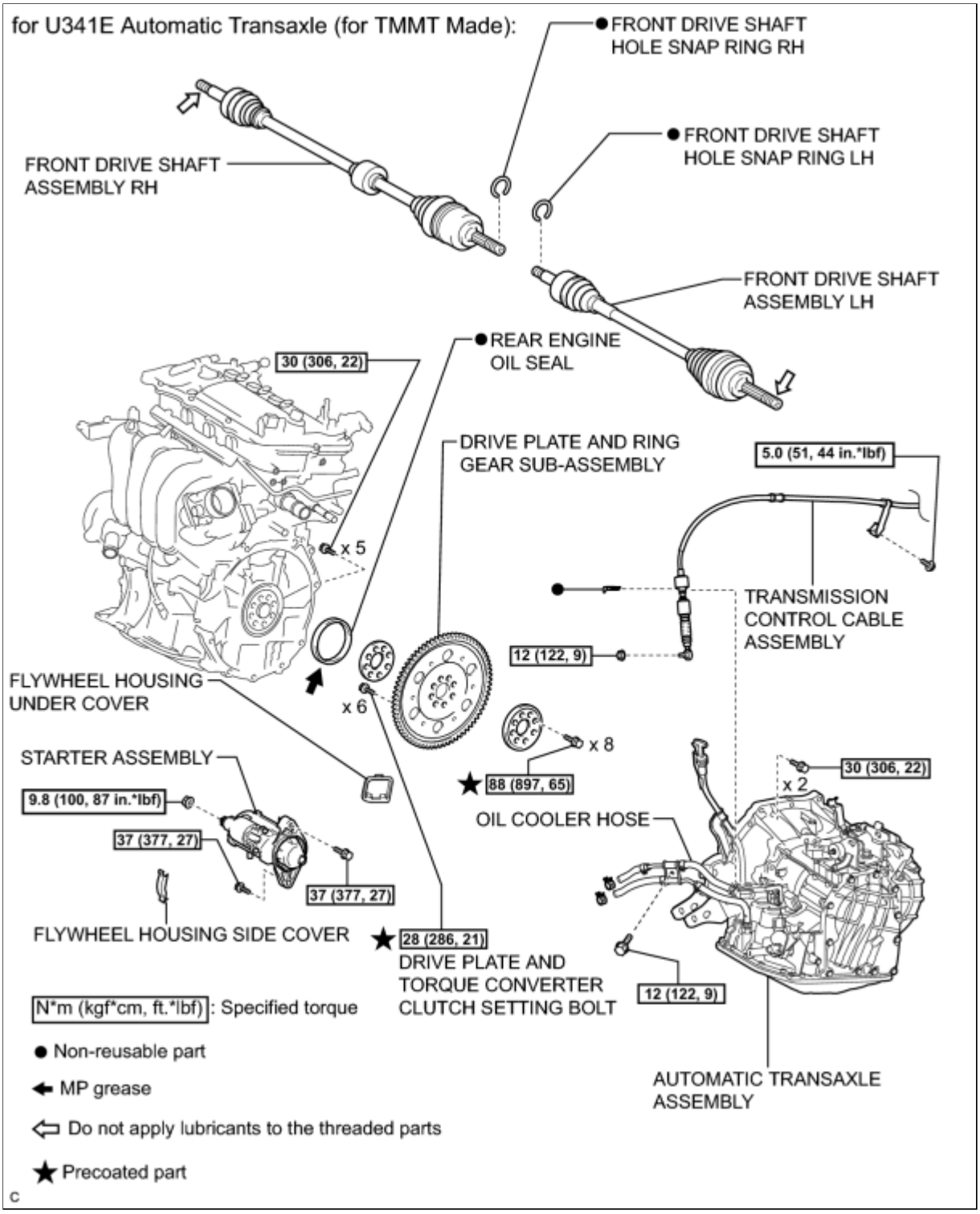
for U341E Automatic Transaxle (for TMMT Made):
● FRONT DRIVE SHAFT HOLE SNAP RING RH
● FRONT DRIVE SHAFT HOLE SNAP RING LH
FRONT DRIVE SHAFT ASSEMBLY RH
FRONT DRIVE SHAFT ASSEMBLY LH
30 (306, 22)
● REAR ENGINE OIL SEAL
DRIVE PLATE AND RING GEAR SUB-ASSEMBLY
5.0 (51, 44 in.*lbf)
x 5
TRANSMISSION CONTROL CABLE ASSEMBLY
12 (122, 9)
FLYWHEEL HOUSING UNDER COVER
x 6
x 8
★ 88 (897, 65)
STARTER ASSEMBLY
30 (306, 22)
x 2
9.8 (100, 87 in.*lbf)
OIL COOLER HOSE
37 (377, 27)
37 (377, 27)
FLYWHEEL HOUSING SIDE COVER
★ 28 (286, 21)
DRIVE PLATE AND TORQUE CONVERTER CLUTCH SETTING BOLT
12 (122, 9)
N*m (kgf*cm, ft.*lbf): Specified torque
● Non-reusable part
MP grease
Do not apply lubricants to the threaded parts
★ Precoated part
AUTOMATIC TRANSAXLE ASSEMBLY
C

Last Modified: 3-10-2010	6.4 A	**From:** 200901
Model Year: 2010	**Model:** Corolla	**Doc ID:** RM0000027IF016X
Title: 2ZR-FE ENGINE MECHANICAL: REAR CRANKSHAFT OIL SEAL: INSTALLATION (2010 Corolla)		

INSTALLATION

1. INSTALL REAR ENGINE OIL SEAL

(a) Apply MP grease to the lip of a new oil seal.

NOTICE:

Keep the lip free from foreign matter.

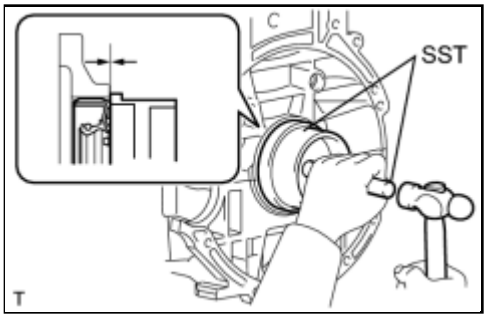

(b) Using SST and a hammer, tap in the oil seal until its surface is flush with the rear oil seal retainer edge.

SST: 09223-15030

SST: 09950-70010

09951-07100

NOTICE:

- Wipe any extra grease off the crankshaft.
- Do not tap the oil seal at an angle.

2. INSTALL FLYWHEEL SUB-ASSEMBLY (for Manual Transaxle)

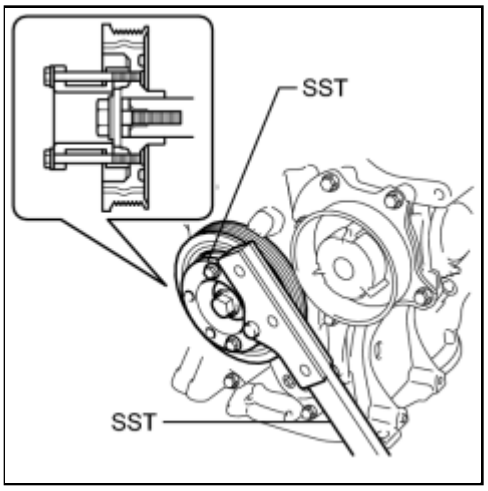

(a) Using SST, hold the crankshaft.

SST: 09213-58014

91551-80840

SST: 09330-00021

NOTICE:

Check the SST installation positions when installing them to prevent the SST fixing bolts from coming into contact with the timing chain cover sub-assembly.

(b) Apply adhesive to 2 or 3 threads of the bolt ends.

Adhesive:

Toyota Genuine Adhesive 1324, Three Bond 1324 or equivalent

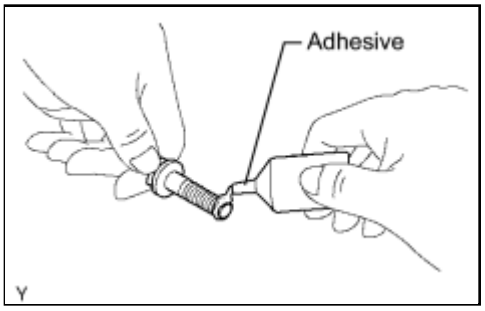

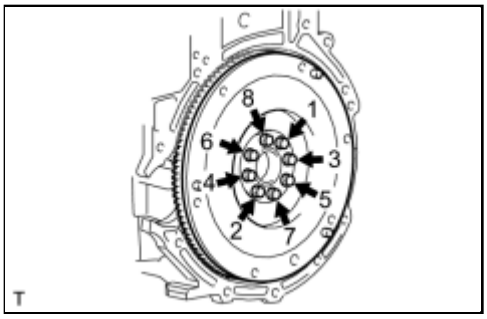

(c) Using several steps, uniformly install and tighten the 8 bolts in the sequence shown in the illustration.

Torque: 49 N·m (500 kgf·cm, 36ft·lbf)

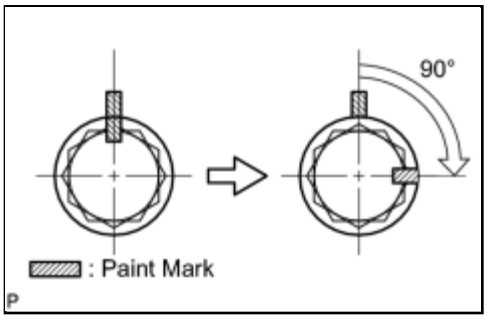

(d) Mark the top of the bolts with paint.

(e) Retighten the 8 bolts an additional 90° in the same sequence.

(f) Check that the paint marks are now at a 90° angle to the top.

(g) Check that the crankshaft turns smoothly.

3. INSTALL DRIVE PLATE AND RING GEAR SUB-ASSEMBLY (for Automatic Transaxle)

(a) Using SST, hold the crankshaft.

SST: 09213-58014

91551-80840

SST: 09330-00021

NOTICE:

Check the SST installation positions when installing them to prevent the SST fixing bolts from coming into contact with the timing chain cover sub-assembly.

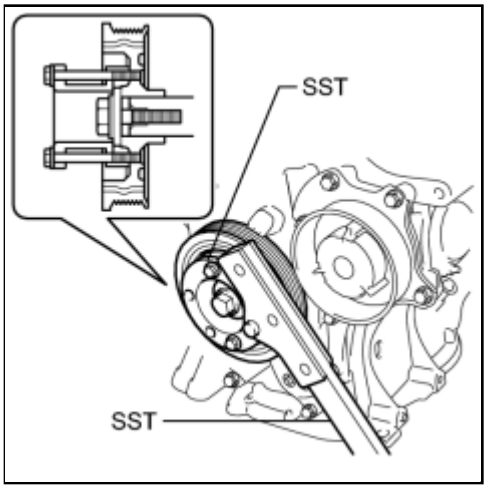

(b) Clean the bolts and the bolt holes.

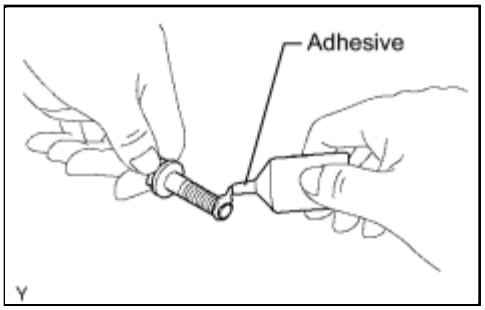

(c) Apply a few drops of adhesive to 2 or 3 threads of the 8 bolts tip.

Adhesive:
Toyota Genuine Adhesive 1324, Three Bond 1324 or equivalent

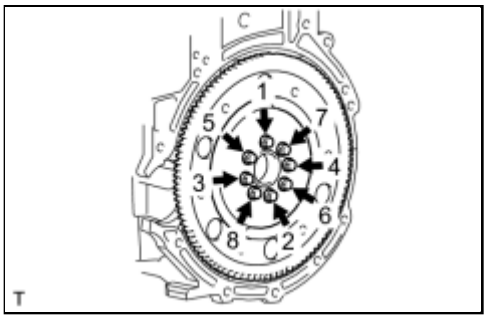

(d) Install the front spacer, drive plate and rear spacer with the 8 bolts. uniformly tighten the 8 bolts in the sequence shown in the illustration.

Torque: 88 N·m (897 kgf·cm, 65ft·lbf)

4. INSTALL CLUTCH DISC ASSEMBLY (for Manual Transaxle) INFO

5. INSTALL CLUTCH COVER ASSEMBLY (for Manual Transaxle) INFO

6. INSPECT AND ADJUST CLUTCH COVER ASSEMBLY (for Manual Transaxle) INFO

7. INSTALL MANUAL TRANSAXLE ASSEMBLY (for Manual Transaxle)

HINT: INFO **for C59.**

8. INSTALL AUTOMATIC TRANSAXLE ASSEMBLY (for Automatic Transaxle)

HINT: INFO **for U341E.**

9. INSTALL ENGINE ASSEMBLY WITH TRANSAXLE

HINT: INFO .

Last Modified: 3-10-2010	6.4 A	**From:** 200901
Model Year: 2010	**Model:** Corolla	**Doc ID:** RM0000027IH016X
Title: 2ZR-FE ENGINE MECHANICAL: REAR CRANKSHAFT OIL SEAL: REMOVAL (2010 Corolla)		

REMOVAL

1. REMOVE ENGINE ASSEMBLY WITH TRANSAXLE

HINT: INFO .

2. REMOVE MANUAL TRANSAXLE ASSEMBLY (for Manual Transaxle)

HINT: INFO **for C59.**

3. REMOVE AUTOMATIC TRANSAXLE ASSEMBLY (for Automatic Transaxle)

HINT: INFO **for U341E.**

4. REMOVE CLUTCH COVER ASSEMBLY (for Manual Transaxle) INFO

5. REMOVE CLUTCH DISC ASSEMBLY (for Manual Transaxle) INFO

6. REMOVE FLYWHEEL SUB-ASSEMBLY (for Manual Transaxle)

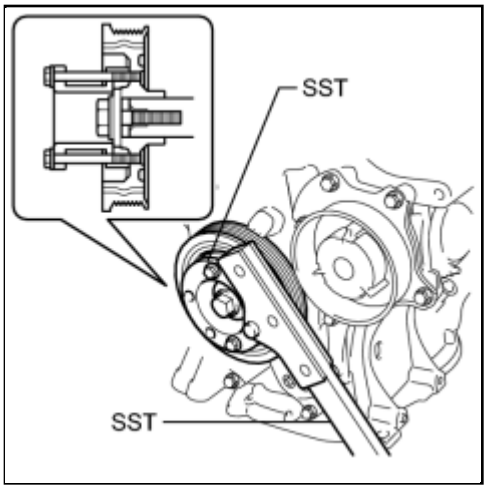

(a) Using SST, hold the crankshaft.

SST: 09213-58014

91551-80840

SST: 09330-00021

NOTICE:

Check the SST installation positions when installing them to prevent the SST fixing bolts from coming into contact with the timing chain cover sub-assembly.

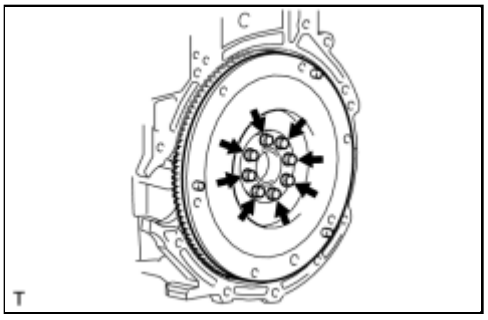

(b) Remove the 8 bolts and flywheel.

7. REMOVE DRIVE PLATE AND RING GEAR SUB-ASSEMBLY (for Automatic Transaxle)

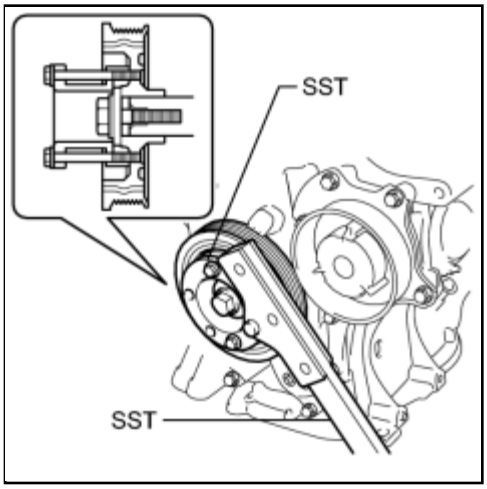

(a) Using SST, hold the crankshaft.

SST: 09213-58014

91551-80840

SST: 09330-00021

NOTICE:

Check the SST installation positions when installing them to prevent the SST fixing bolts from coming into contact with the timing chain cover sub-assembly.

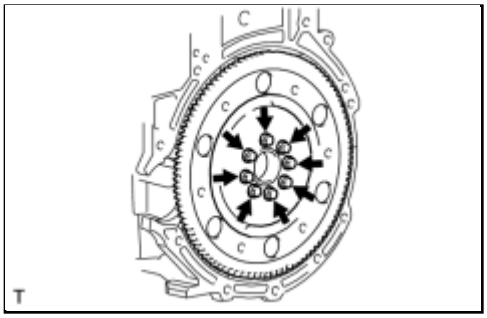

(b) Remove the 8 bolts, rear spacer, drive plate and front spacer.

8. REMOVE REAR ENGINE OIL SEAL

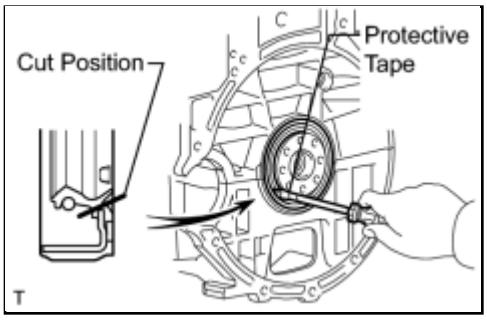

(a) Using a knife, cut off the lip of the oil seal.

(b) Using a screwdriver with its tip wrapped with tape, pry out the oil seal.

NOTICE:

After removing, check the crankshaft for damage. If damaged, smooth the surface with 400-grit sandpaper.

Last Modified: 3-10-2010	6.4 K	**From:** 200901
Model Year: 2010	**Model:** Corolla	**Doc ID:** RM00000381H009X
Title: 2ZR-FE ENGINE MECHANICAL: TIMING GEAR: COMPONENTS (2010 Corolla)		

COMPONENTS

ILLUSTRATION

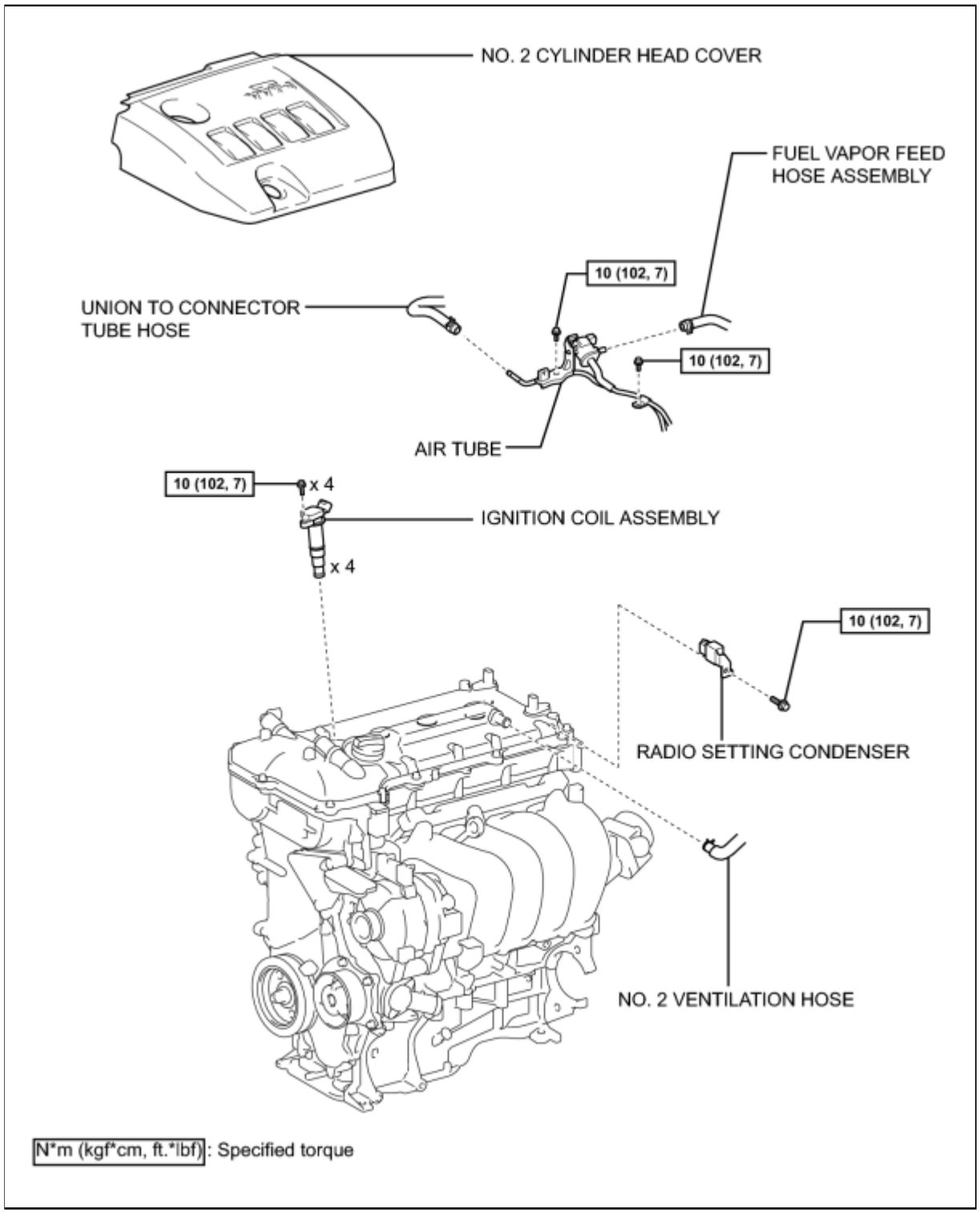

ILLUSTRATION

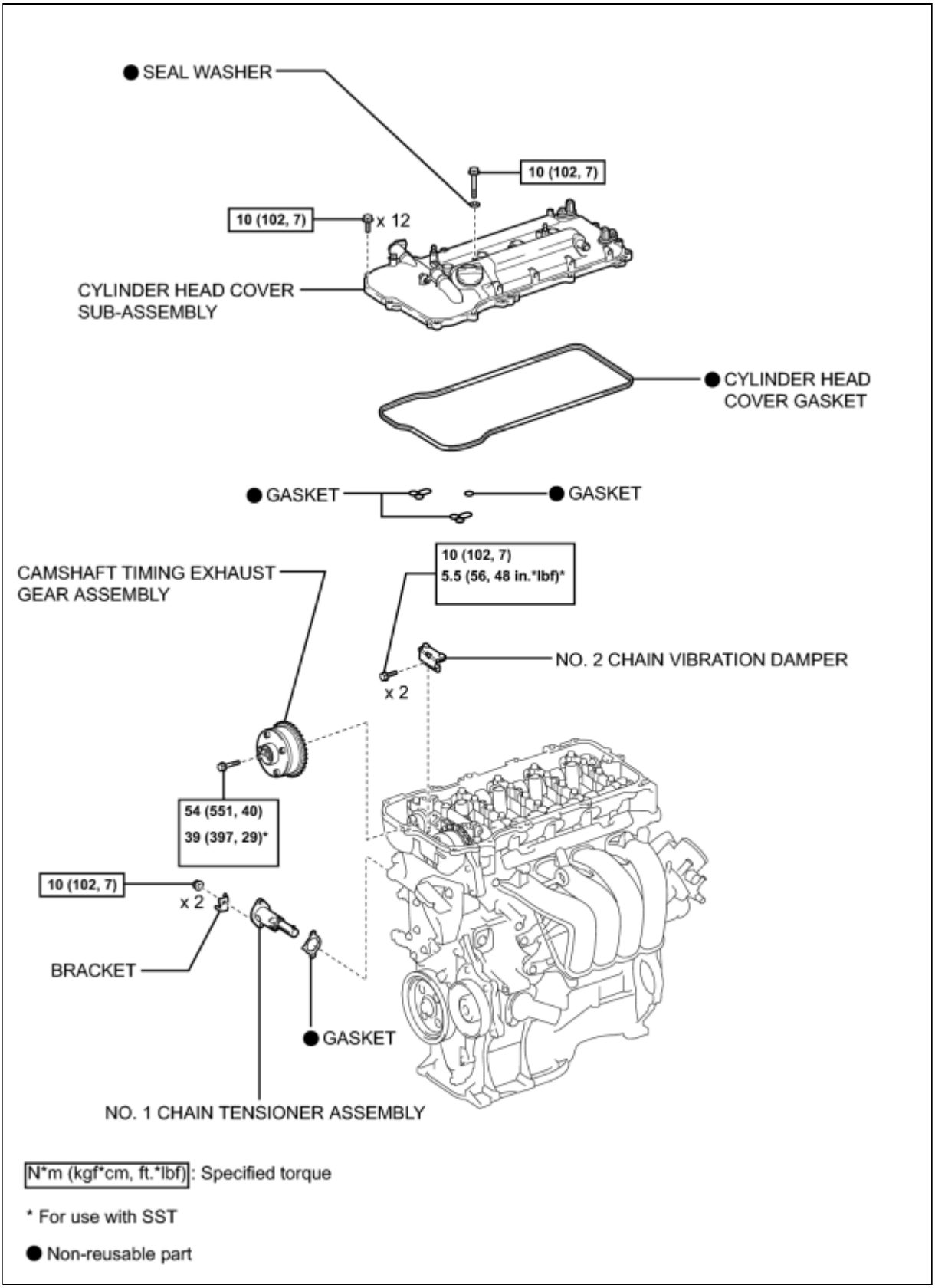

Last Modified: 3-10-2010	6.4 A	**From:** 200901
Model Year: 2010	**Model:** Corolla	**Doc ID:** RM00000381F00AX
Title: 2ZR-FE ENGINE MECHANICAL: TIMING GEAR: REMOVAL (2010 Corolla)		

REMOVAL

1. REMOVE NO. 2 CYLINDER HEAD COVER INFO

2. DISCONNECT FUEL VAPOR FEED HOSE ASSEMBLY INFO

3. DISCONNECT UNION TO CONNECTOR TUBE HOSE INFO

4. DISCONNECT NO. 2 VENTILATION HOSE

5. SEPARATE WIRE HARNESS

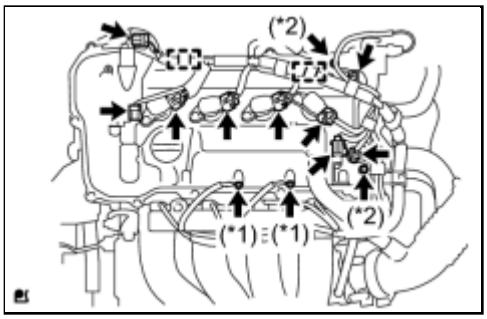

(a) Remove the 2 bolts (*1) and disconnect the 9 connectors and 2 clamps. Then disconnect the wire harness.

(b) Remove the 2 bolts (*2) and disconnect the air tube.

6. REMOVE RADIO SETTING CONDENSER INFO

7. REMOVE IGNITION COIL ASSEMBLY INFO

8. REMOVE CYLINDER HEAD COVER SUB-ASSEMBLY INFO

9. SET NO. 1 CYLINDER TO TDC/COMPRESSION

(a) Turn the crankshaft pulley until its groove and the timing mark "0" of the timing chain cover are aligned.

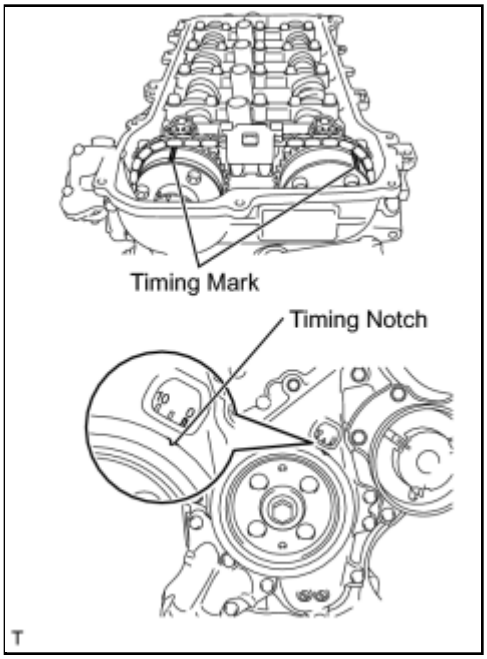

(b) Check that each timing mark of the camshaft timing gear and sprocket are aligned with each timing mark located as shown in the illustration. If not, turn the crankshaft 1 revolution (360°) to align the timing marks as shown in the illustration.

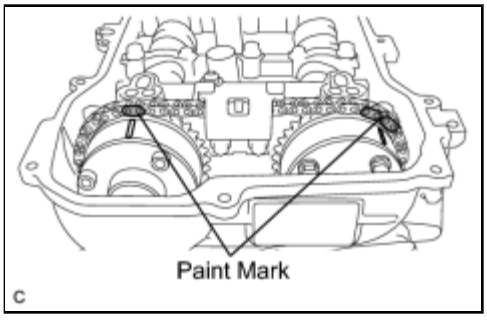

(c) Place paint marks on the chain in alignment with the timing marks on the camshaft timing gear and camshaft timing exhaust gear.

10. REMOVE NO. 2 CHAIN VIBRATION DAMPER

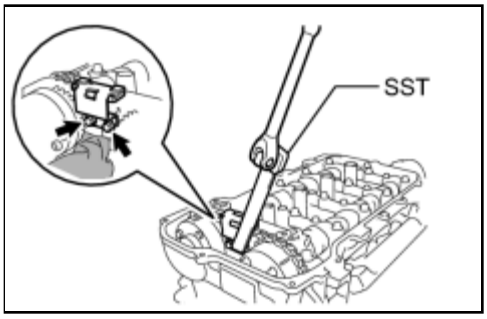

(a) Using SST, remove the 2 bolts and No. 2 chain vibration damper from the cam cap.

SST: 09961-00950

11. REMOVE NO. 1 CHAIN TENSIONER ASSEMBLY INFO

12. REMOVE CAMSHAFT TIMING EXHAUST GEAR ASSEMBLY

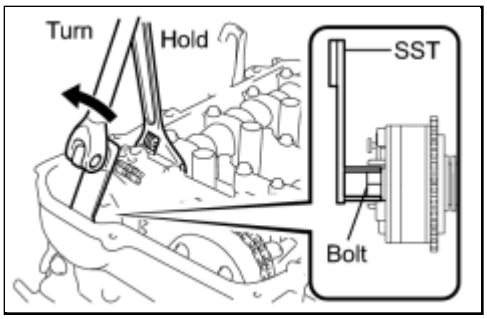

(a) While holding the hexagonal portion of the No. 2 camshaft with a wrench, loosen the camshaft timing exhaust gear bolt with SST.

SST: 09249-37010

NOTICE:

Do not remove the other 4 bolts ("TORX" bolt). If any of them is removed, replace the camshaft timing exhaust gear assembly.

HINT:

The bolt cannot be removed separately from the camshaft timing exhaust gear assembly due to lack of space.

(b) Hold the hexagonal portion of the intake camshaft with a wrench and turn it slightly counterclockwise to release the chain.

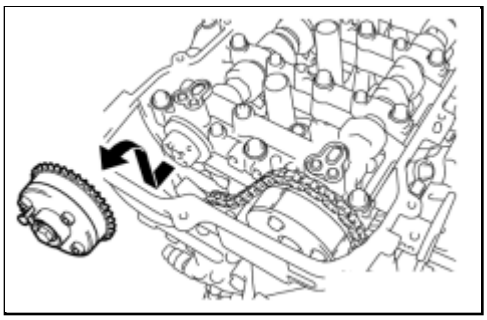

(c) While removing the chain, pull out the camshaft timing exhaust gear assembly horizontally and then upward with the bolts installed.

NOTICE:

Do not turn the intake camshaft more than necessary.

HINT:

Be sure to loosen the chain because the camshaft timing exhaust gear assembly cannot be removed with the chain tensioned.

13. INSPECT CAMSHAFT TIMING GEAR ASSEMBLY

(a) Inspect the camshaft timing gear lock.

(1) Check that the camshaft timing gear is locked.

(b) Inspect camshaft timing gear operation.

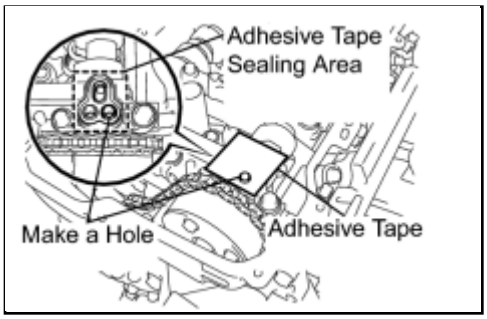

(1) After cleaning and degreasing the intake side VVT oil hole on the No. 1 camshaft bearing cap, completely seal the oil hole with adhesive tape or equivalent as shown in the illustration to prevent air from leaking.

NOTICE:

Be sure to seal the oil hole completely because air leaks due to insufficient sealing will prevent the lock pin from being released.

(2) Make a hole in the adhesive tape covering the oil hole as shown in the illustration. (Procedure A)

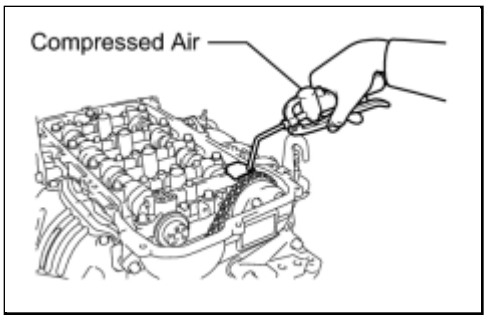

(3) Apply approximately 100 kPa (1.0 kgf/cm2, 14.5 psi.) of air pressure to the hole made in procedure A to release the lock pin.

NOTICE:

- If air leaks out, reattach the adhesive tape.
- Cover the oil hole with a piece of cloth when applying air pressure to prevent oil from spraying.

(4) Forcibly turn the camshaft timing gear in the advance direction (counterclockwise).

HINT:

Depending on the air pressure applied, the camshaft timing gear may turn in the advance direction without assistance by hand.

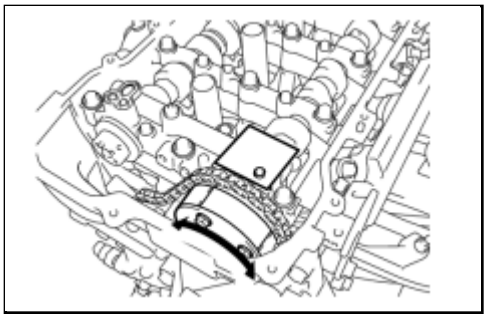

(5) Turn the camshaft timing gear within its movable range (27.5°) 2 or 3 times without turning it to the most retarded position. Check that the camshaft timing gear turns smoothly.

(6) Lock the camshaft timing gear.

NOTICE:

Be sure to turn the camshaft timing gear to the locked position and then confirm that it is securely locked again to prevent the valve timing from being affected.

(7) Remove the adhesive tape from the No. 1 camshaft bearing cap.

14. INSPECT CAMSHAFT TIMING EXHAUST GEAR ASSEMBLY

(a) Temporarily install the camshaft timing exhaust gear assembly.

(1) Install the bolt to the camshaft timing exhaust gear assembly.

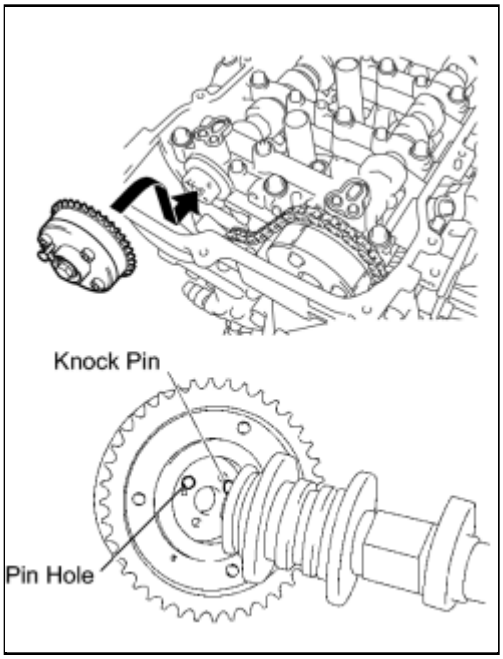

(2) Align the knock pin on the No. 2 camshaft with the pin hole in the camshaft timing exhaust gear assembly and temporarily install the camshaft timing exhaust gear assembly to the No. 2 camshaft with the bolt.

NOTICE:

- Do not install the chain onto the gear at this step.
- Do not allow the chain to interfere with the gear when installing the gear assembly.

(b) Inspect the camshaft timing exhaust gear lock.

(1) Check that the camshaft timing exhaust gear is locked.

(c) Inspect camshaft timing exhaust gear operation.

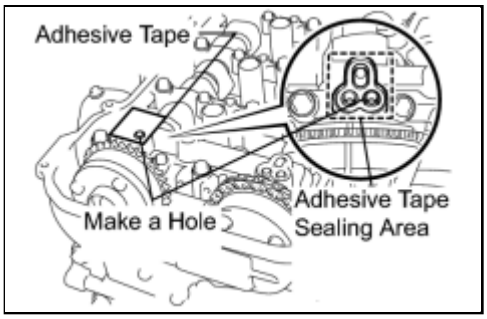

(1) After cleaning and degreasing the exhaust side VVT oil hole on the No. 1 camshaft bearing cap, completely seal the oil hole with adhesive tape or equivalent as shown in the illustration to prevent air from leaking.

NOTICE:

Be sure to seal the oil hole completely because air leaks due to insufficient sealing will prevent the lock pin from being released.

(2) Make a hole in the adhesive tape covering the oil hole as shown in the illustration. (Procedure B)

(3) Apply approximately 100 kPa (1.0 kgf/cm2, 14.5 psi.) of air pressure to the hole made in procedure B to release the lock pin.

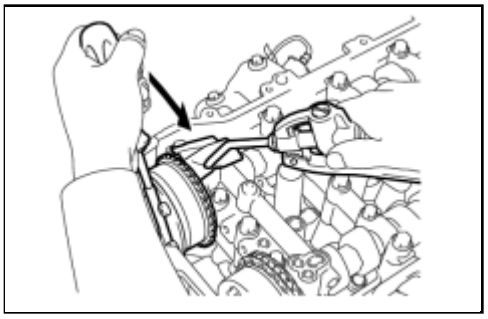

NOTICE:

- If air leaks out, reattach the adhesive tape.
- Cover the oil hole with a piece of cloth when applying air pressure to prevent oil from spraying.

(4) Using a screwdriver with its tip taped, forcibly turn the camshaft timing exhaust gear in the retard direction (clockwise).

NOTICE:

- Be sure to keep the camshaft timing exhaust gear in the retard direction. If the gear is released, it will return to the advanced position automatically due to the force from the spring.
- Do not damage the camshaft timing exhaust gear.

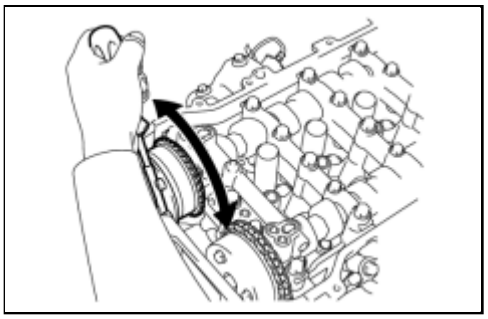

(5) Using a screwdriver with its tip taped, turn the camshaft timing exhaust gear within its movable range (20°) 2 or 3 times without turning it to the most advanced position. Check that the camshaft timing gear turns smoothly.

(6) Lock the camshaft timing exhaust gear.

(7) Remove the adhesive tape from the No. 1 camshaft bearing cap.

(d) Remove the camshaft timing exhaust gear assembly.

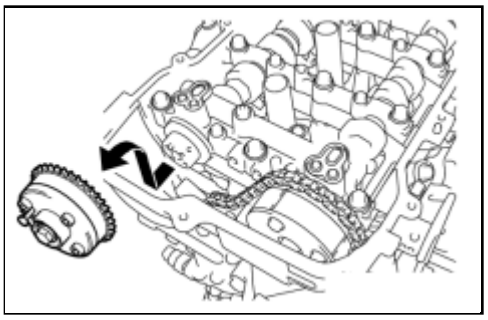

(1) Remove the temporarily installed camshaft timing exhaust gear assembly.

Last Modified: 3-10-2010	6.4 A	**From:** 200901
Model Year: 2010	**Model:** Corolla	**Doc ID:** RM00000381G009X
Title: 2ZR-FE ENGINE MECHANICAL: TIMING GEAR: INSTALLATION (2010 Corolla)		

INSTALLATION

1. INSTALL CAMSHAFT TIMING EXHAUST GEAR ASSEMBLY

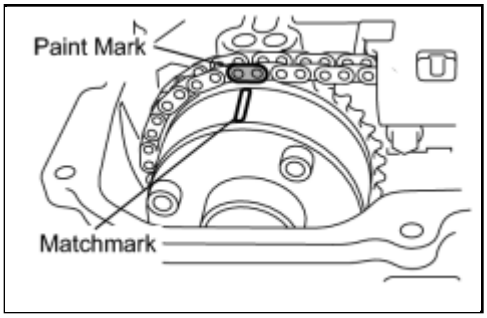

(a) Raise the chain.

(b) Hold the hexagonal portion of the intake camshaft with a wrench and turn it slightly counterclockwise to release the chain.

(c) Align the paint mark with the matchmark to install the chain.

NOTICE:

Do not turn the intake camshaft more than necessary.

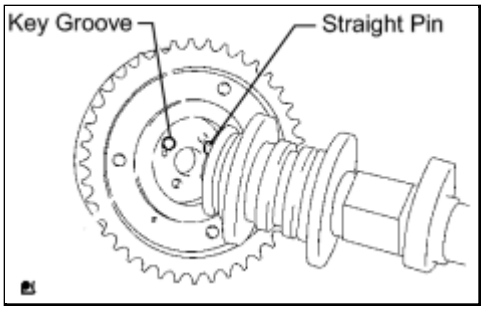

(d) Align the straight pin on the No. 2 camshaft with the pin hole in the camshaft timing exhaust gear assembly and install the camshaft timing exhaust gear assembly to the No. 2 camshaft.

NOTICE:

- If the straight pin cannot be aligned with the pin hole, hold the hexagonal portion of the No. 2 camshaft with a wrench and turn it slightly to install the gear.
- Do not turn the No. 2 camshaft more than necessary.
- Do not forcibly push on the tip of the straight pin with the camshaft timing exhaust gear assembly.

(e) Using SST and a wrench, hold the hexagonal portion of the No. 2 camshaft and install the camshaft timing exhaust gear assembly to the No. 2 camshaft.

SST: 09249-37010

without SST - Torque: 54 N·m (551 kgf·cm, 40ft·lbf)

with SST - Torque: 39 N·m (397 kgf·cm, 29ft·lbf)

NOTICE:

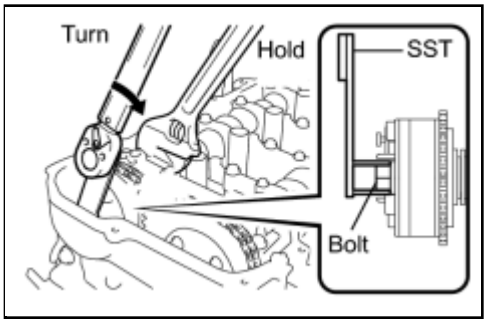

- This torque value can be obtained by using a torque wrench with a fulcrum length of 260 mm (10.24 in.) and SST of 100 mm (3.94 in.) INFO .
- This torque value is effective when SST is parallel to the torque wrench.

2. INSTALL NO. 2 CHAIN VIBRATION DAMPER

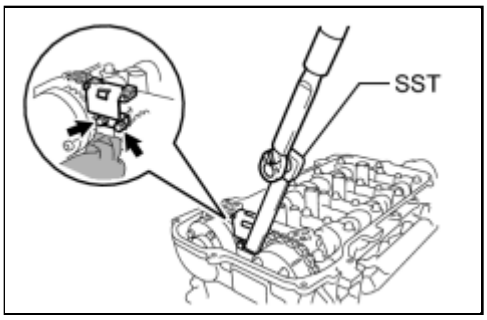

(a) Using SST, install the No. 2 chain vibration damper with the 2 bolts.

SST: 09961-00950
without SST - Torque: 10 N·m (102 kgf·cm, 7ft·lbf)
with SST - Torque: 5.5 N·m (56 kgf·cm, 48in·lbf)

NOTICE:

- This torque value can be obtained by using a torque wrench with a fulcrum length of 180 mm (7.09 in.) and SST of 150 mm (5.91 in.) INFO .
- This torque value is effective when SST is parallel to the torque wrench.

3. INSTALL NO. 1 CHAIN TENSIONER ASSEMBLY INFO

4. SET NO. 1 CYLINDER TO TDC/COMPRESSION

(a) Turn the crankshaft clockwise 360° to set the No. 1 cylinder to TDC/compression and align the matchmark (cutout) with the "0" mark on the timing chain (belt) cover.

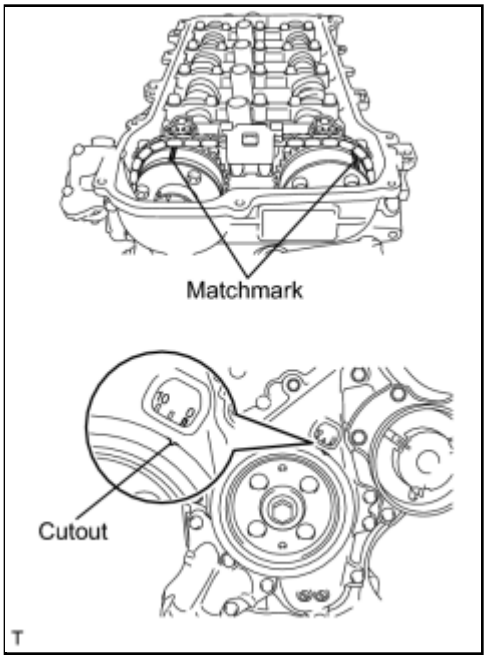

(b) Check that the matchmark on each camshaft timing gear is positioned as shown in the illustration.

5. INSTALL CYLINDER HEAD COVER SUB-ASSEMBLY INFO

6. INSTALL IGNITION COIL ASSEMBLY INFO

7. INSTALL RADIO SETTING CONDENSER INFO

8. INSTALL WIRE HARNESS

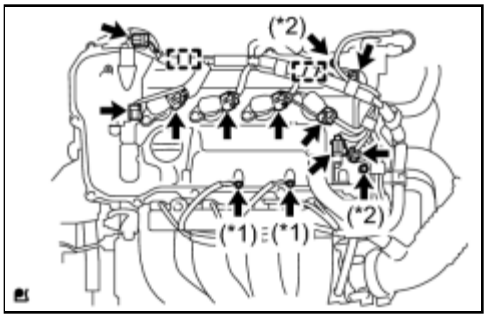

(a) Install the air tube with the 2 bolts (*2).

Torque: 10 N·m (102 kgf·cm, 7ft·lbf)

(b) Connect the 9 connectors and install the wire harness with the 2 bolts (*1) and 2 clamps.

Torque: 8.4 N·m (86 kgf·cm, 74in·lbf)

9. INSTALL NO. 2 VENTILATION HOSE

10. CONNECT FUEL VAPOR FEED HOSE ASSEMBLY INFO

11. CONNECT UNION TO CONNECTOR TUBE HOSE INFO

12. INSTALL NO. 2 CYLINDER HEAD COVER INFO

Last Modified: 3-10-2010	6.4 N	**From:** 200901
Model Year: 2010	**Model:** Corolla	**Doc ID:** RM000001A8Z01OX
Title: 2AZ-FE ENGINE MECHANICAL: VALVE CLEARANCE: ADJUSTMENT (2010 Corolla)		

ADJUSTMENT

1. REMOVE ENGINE UNDER COVER RH

2. REMOVE NO. 1 ENGINE COVER SUB-ASSEMBLY INFO

3. REMOVE IGNITION COIL ASSEMBLY INFO

4. REMOVE SPARK PLUG INFO

5. REMOVE CYLINDER HEAD COVER SUB-ASSEMBLY INFO

6. SET NO. 1 CYLINDER TO TDC/COMPRESSION INFO

7. CHECK VALVE CLEARANCE

(a) Check only the valves indicated in the illustration.

(1) Using a feeler gauge, measure the clearance between the valve lifter and camshaft.

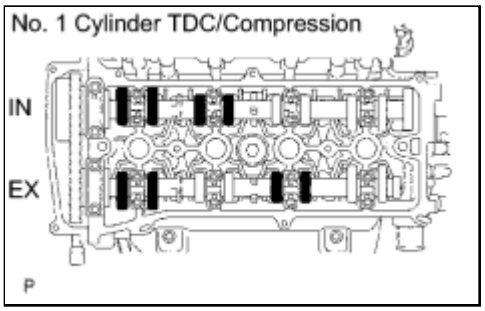

Standard Valve Clearance (Cold):

ITEM	SPECIFIED CONDITION
Intake	0.19 to 0.29 mm (0.00748 to 0.0114 in.)
Exhaust	0.38 to 0.48 mm (0.0150 to 0.0189 in.)

(2) Record any out-of-specification valve clearance measurements. They will be used later to determine the required replacement valve clearance lifters.

(b) Turn the crankshaft 1 revolution (360°) and set the No. 4 cylinder to TDC/compression.

(c) Check only the valves indicated in the illustration.

(1) Using a feeler gauge, measure the clearance between the valve lifter and camshaft.

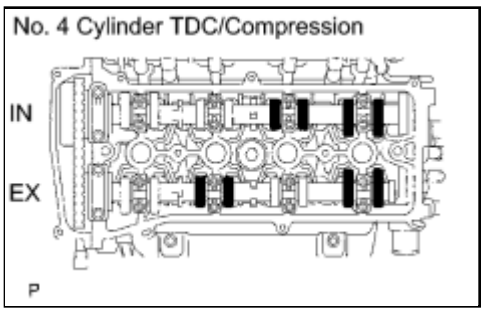

Standard Valve Clearance (Cold):

ITEM	SPECIFIED CONDITION
Intake	0.19 to 0.29 mm (0.00748 to 0.0114 in.)
Exhaust	0.38 to 0.48 mm (0.0150 to 0.0189 in.)

(2) Record any out-of-specification valve clearance measurements. They will be used later to determine the required replacement valve lifters.

8. ADJUST VALVE CLEARANCE

(a) Set No. 1 cylinder to TDC/compression INFO .

(b) Remove the No. 1 chain tensioner INFO .

(c) Loosen the camshaft timing sprocket INFO .

(d) Remove the No. 2 camshaft INFO .

(e) Remove the camshaft INFO .

(f) Remove the valve lifters.

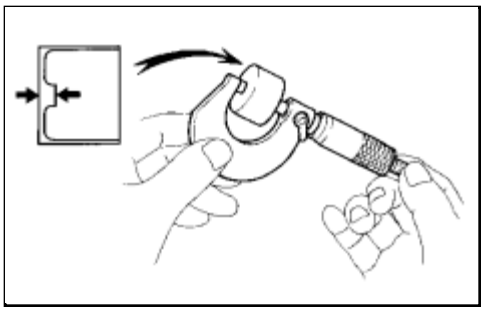

(g) Using a micrometer, measure the thickness of the removed valve lifters.

(h) Calculate the thickness of a new lifter so that the valve clearance comes within the specified values.

New Lifter Thickness:

ITEM	SPECIFICATION
Intake	A = B + (C - 0.24 mm (0.00945 in.))
Exhaust	A = B + (C - 0.43 mm (0.0169 in.))

A	New lifter thickness
B	Used lifter thickness
C	Measured valve clearance

CALCULATION EXAMPLE (Intake):

1. Measured intake valve clearance = 0.40 mm (0.0157 in.)

(Measured - Specification = Excess clearance)

a. 0.40 mm (0.0157 in.) - 0.24 mm (0.00945 in.) = 0.16 mm (0.00630 in.)

2. Measured used lifter thickness = 5.250 mm (0.2067 in.)

3. New lifter thickness = 5.410 mm (0.2130 in.)

(Excess clearance + Used lifter thickness = Ideal new lifter)

a. 0.16 mm (0.00630 in.) + 5.250 mm (0.2067 in.) = 5.410 mm (0.2130 in.)

4. Closest new lifter = 5.420 mm (0.2134 in.)

- Select No. 42 lifter

(i) Select a new lifter with a thickness as close as possible to the calculated values.

HINT:

- Lifters are available in 35 sizes in increments of 0.020 mm (0.000787 in.), from 5.060 to 5.740 mm (0.1992 to 0.2260 in.).
- The identification number inside the valve lifters shows the value to 2 decimal places. (The illustration shows 5.420 mm (0.2134 in.)

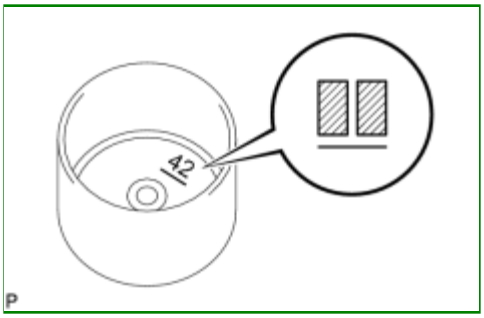

(j) Valve lifter selection chart (intake).

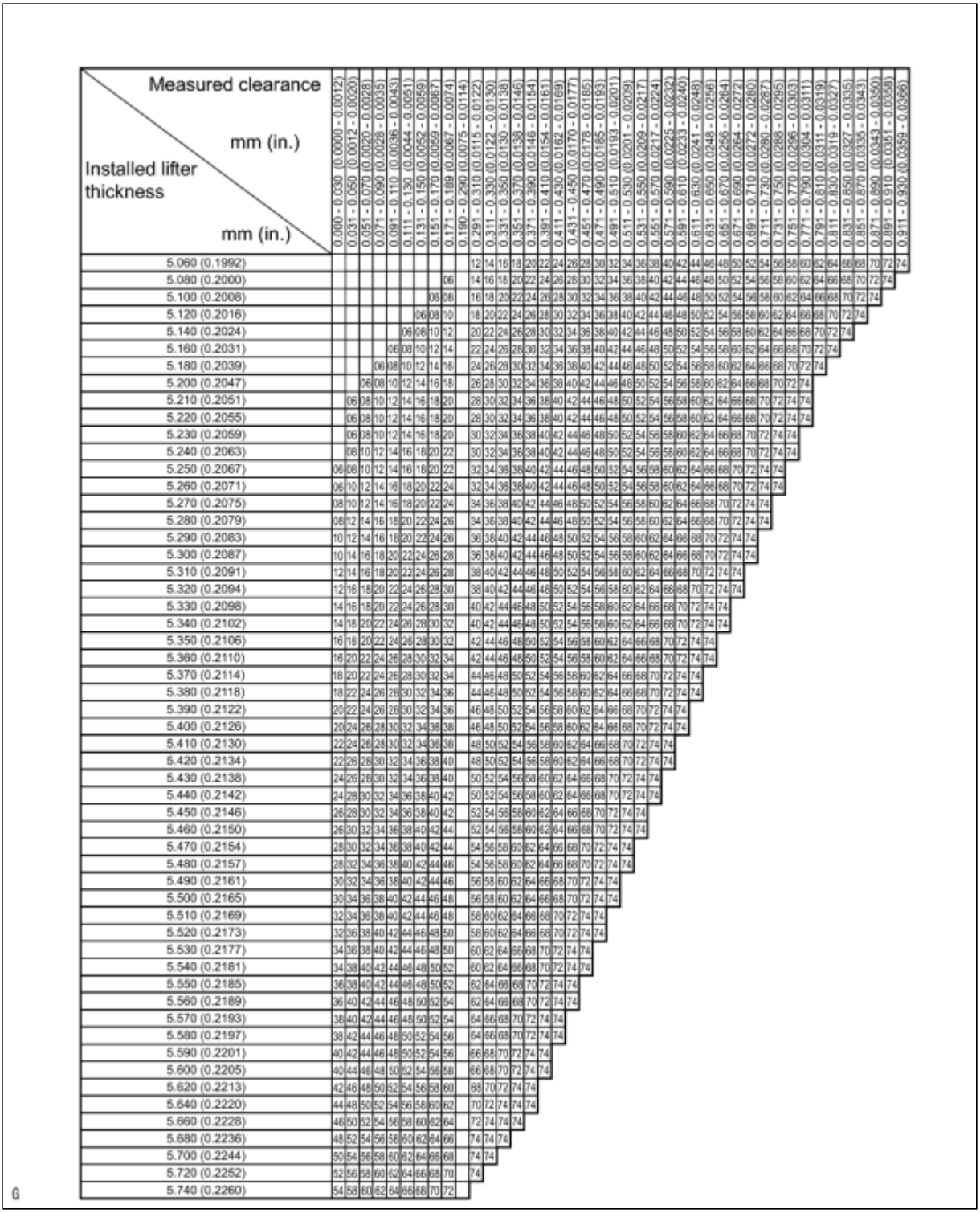

New Lifter Thickness

LIFTER NO.	THICKNESS MM (IN.)	LIFTER NO.	THICKNESS MM (IN.)	LIFTER NO.	THICKNESS MM (IN.)
06	5.060 (0.1992)	30	5.300 (0.2087)	54	5.540 (0.2181)
08	5.080 (0.2000)	32	5.320 (0.2094)	56	5.560 (0.2189)
10	5.100 (0.2008)	34	5.340 (0.2102)	58	5.580 (0.2197)

LIFTER NO.	THICKNESS MM (IN.)	LIFTER NO.	THICKNESS MM (IN.)	LIFTER NO.	THICKNESS MM (IN.)
12	5.120 (0.2016)	36	5.360 (0.2110)	60	5.600 (0.2205)
14	5.140 (0.2024)	38	5.380 (0.2118)	62	5.620 (0.2213)
16	5.160 (0.2031)	40	5.400 (0.2126)	64	5.640 (0.2220)
18	5.180 (0.2039)	42	5.420 (0.2134)	66	5.660 (0.2228)
20	5.200 (0.2047)	44	5.440 (0.2142)	68	5.680 (0.2236)
22	5.220 (0.2055)	46	5.460 (0.2150)	70	5.700 (0.2244)
24	5.240 (0.2063)	48	5.480 (0.2157)	72	5.720 (0.2252)
26	5.260 (0.2071)	50	5.500 (0.2165)	74	5.740 (0.2260)
28	5.280 (0.2079)	52	5.520 (0.2173)	-	-

Standard intake valve clearance (cold):
0.19 to 0.29 mm (0.00748 to 0.0114 in.)

EXAMPLE:

The 5.250 mm (0.2067 in.) lifter is installed, and the measured clearance is 0.400 mm (0.0157 in.). Replace the 5.250 mm (0.2067 in.) lifter with a new No. 42 lifter.

(k) Valve lifter selection chart (exhaust).

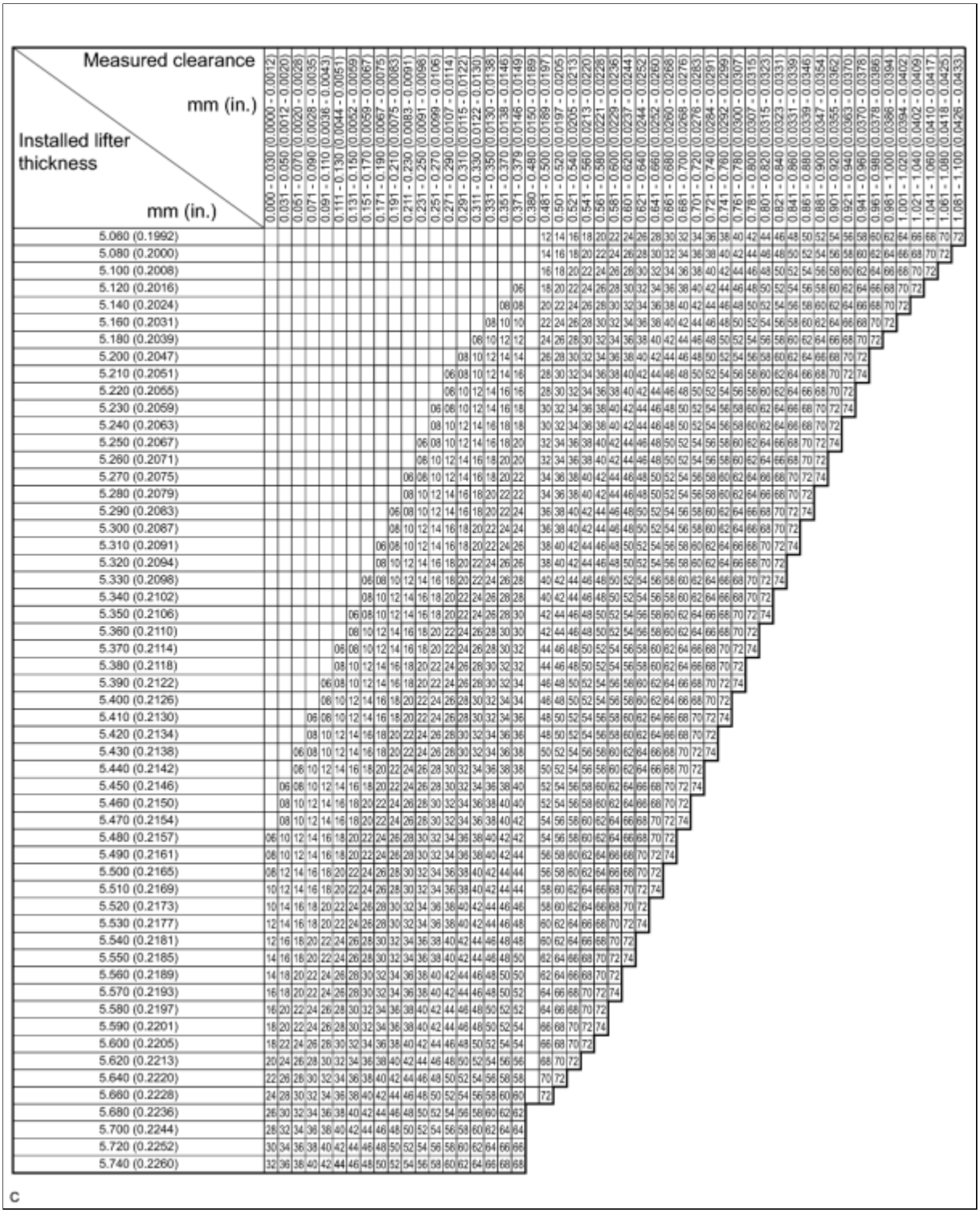

New Lifter Thickness

LIFTER NO.	THICKNESS MM (IN.)	LIFTER NO.	THICKNESS MM (IN.)	LIFTER NO.	THICKNESS MM (IN.)
06	5.060 (0.1992)	30	5.300 (0.2087)	54	5.540 (0.2181)
08	5.080 (0.2000)	32	5.320 (0.2094)	56	5.560 (0.2189)
10	5.100 (0.2008)	34	5.340 (0.2102)	58	5.580 (0.2197)

LIFTER NO.	THICKNESS MM (IN.)	LIFTER NO.	THICKNESS MM (IN.)	LIFTER NO.	THICKNESS MM (IN.)
12	5.120 (0.2016)	36	5.360 (0.2110)	60	5.600 (0.2205)
14	5.140 (0.2024)	38	5.380 (0.2118)	62	5.620 (0.2213)
16	5.160 (0.2031)	40	5.400 (0.2126)	64	5.640 (0.2220)
18	5.180 (0.2039)	42	5.420 (0.2134)	66	5.660 (0.2228)
20	5.200 (0.2047)	44	5.440 (0.2142)	68	5.680 (0.2236)
22	5.220 (0.2055)	46	5.460 (0.2150)	70	5.700 (0.2244)
24	5.240 (0.2063)	48	5.480 (0.2157)	72	5.720 (0.2252)
26	5.260 (0.2071)	50	5.500 (0.2165)	74	5.740 (0.2260)
28	5.280 (0.2079)	52	5.520 (0.2173)	-	-

Standard exhaust valve clearance (cold):
0.38 to 0.48 mm (0.0150 to 0.0189 in.)

EXAMPLE:

The 5.340 mm (0.2102 in.) lifter is installed, and the measured clearance is 0.510 mm (0.0201 in.). Replace the 5.340 mm (0.2102 in.) lifter with a new No. 42 lifter.

(l) Install the selected valve lifter.

(m) Install the camshaft INFO .

(n) Install the No. 2 camshaft INFO .

(o) Install the No. 1 chain tensioner INFO .

9. INSTALL CYLINDER HEAD COVER SUB-ASSEMBLY INFO

10. INSTALL SPARK PLUG INFO

11. INSTALL IGNITION COIL ASSEMBLY INFO

12. INSPECT FOR OIL LEAK

13. INSPECT IGNITION TIMING INFO

14. INSTALL NO. 1 ENGINE COVER SUB-ASSEMBLY INFO

15. INSTALL ENGINE UNDER COVER RH

Last Modified: 3-10-2010	6.4 G	**From:** 200901
Model Year: 2010	**Model:** Corolla	**Doc ID:** RM000004094000X
Title: 2AZ-FE ENGINE MECHANICAL: VALVE CLEARANCE: ON-VEHICLE INSPECTION (2010 Corolla)		

ON-VEHICLE INSPECTION

1. INSPECT VALVE CLEARANCE



(a) Check for noise and vibration

(1) Check for valve noise or a rough idle.

(2) Judge whether the valve clearance needs to be adjusted.

HINT:

If the valve noise is too loud or the idle is rough, inspect the valve clearance INFO **.**

Last Modified: 3-10-2010	6.4 A	**From:** 200901
Model Year: 2010	**Model:** Corolla	**Doc ID:** RM0000017R800UX
Title: 2AZ-FE FUEL: FUEL INJECTOR: REMOVAL (2010 Corolla)		

REMOVAL

1. DISCHARGE FUEL SYSTEM PRESSURE

HINT: INFO

2. DISCONNECT CABLE FROM NEGATIVE BATTERY TERMINAL

3. REMOVE NO. 1 ENGINE COVER SUB-ASSEMBLY INFO

4. REMOVE AIR CLEANER CAP SUB-ASSEMBLY WITH HOSE INFO

5. DISCONNECT FUEL MAIN TUBE

NOTICE:

Do not forcibly bend, kink or twist the fuel main tube.

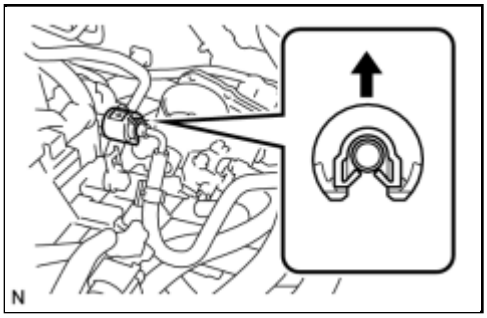

(a) Remove the fuel tube from the fuel hose clamp.

(b) Remove the fuel pipe clamp.

(c) Wipe off any dirt on the fuel tube connector.

(d) Hold the fuel tube connector, and then install SST.

SST: 09268-21010



(e) Turn SST to align the retainer inside the fuel tube connector with the chamfered part of SST.

(f) Insert SST into the fuel tube and hold it. Then push the fuel tube connector toward SST.

(g) Mount the retainer of the fuel tube connector onto the chamfered part of SST.

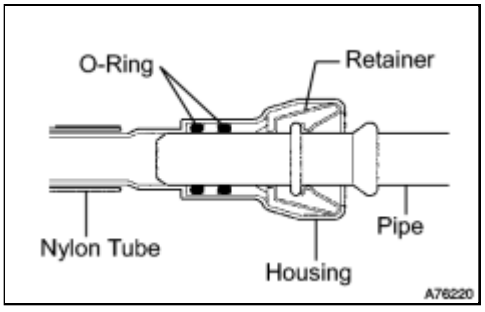

(h) Slide SST and fuel tube connector together towards the fuel tube until they make a "click" sound, and then disconnect the fuel tube.

(i) Drain the fuel remaining inside the fuel tube.

(j) Cover the fuel tube and fuel pipe with a plastic bag to protect the disconnected part.

6. DISCONNECT NO. 2 VENTILATION HOSE

(a) Disconnect the No. 2 ventilation hose from the ventilation valve.

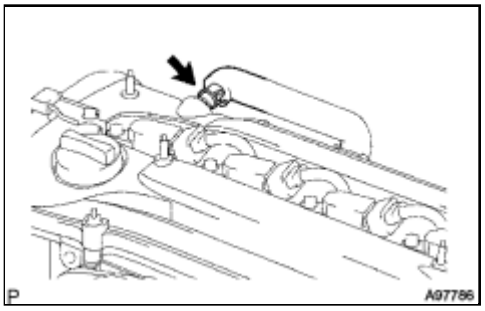

7. REMOVE FUEL DELIVERY PIPE SUB-ASSEMBLY

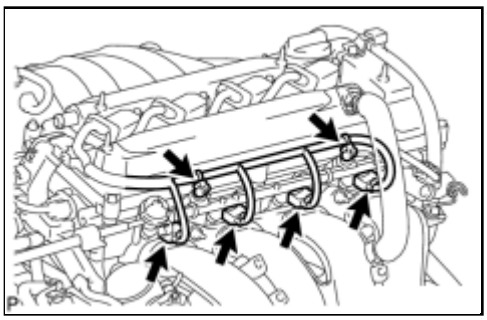

(a) Remove the 2 wire harness clamps.

(b) Disconnect the 4 fuel injector connectors.

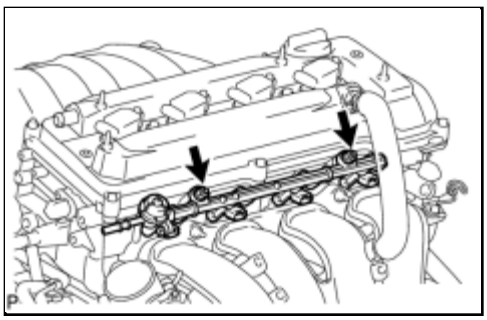

(c) Remove the 2 bolts, then remove the fuel delivery pipe together with the 4 fuel injectors.

NOTICE:

Be careful not to drop the fuel injectors when removing the fuel delivery pipe.

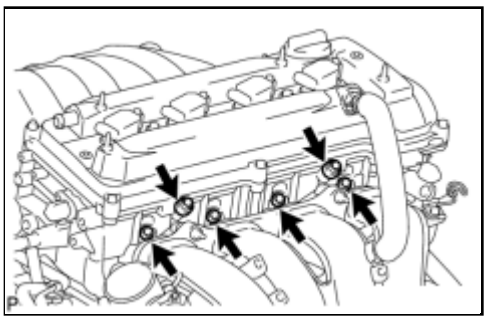

(d) Remove the 2 delivery pipe spacers from the cylinder head.

(e) Remove the 4 insulators from the cylinder head.

8. REMOVE FUEL INJECTOR ASSEMBLY

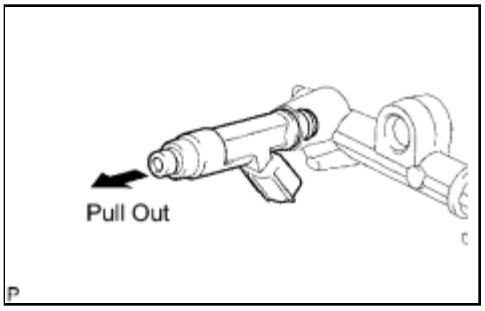

(a) Pull the 4 fuel injectors out of the fuel delivery pipe.

(b) Remove the 4 O-rings from the 4 fuel injectors.

Last Modified: 3-10-2010	6.4 K	**From:** 200901
Model Year: 2010	**Model:** Corolla	**Doc ID:** RM0000017R700QX
Title: 2AZ-FE FUEL: FUEL INJECTOR: COMPONENTS (2010 Corolla)		

COMPONENTS

ILLUSTRATION

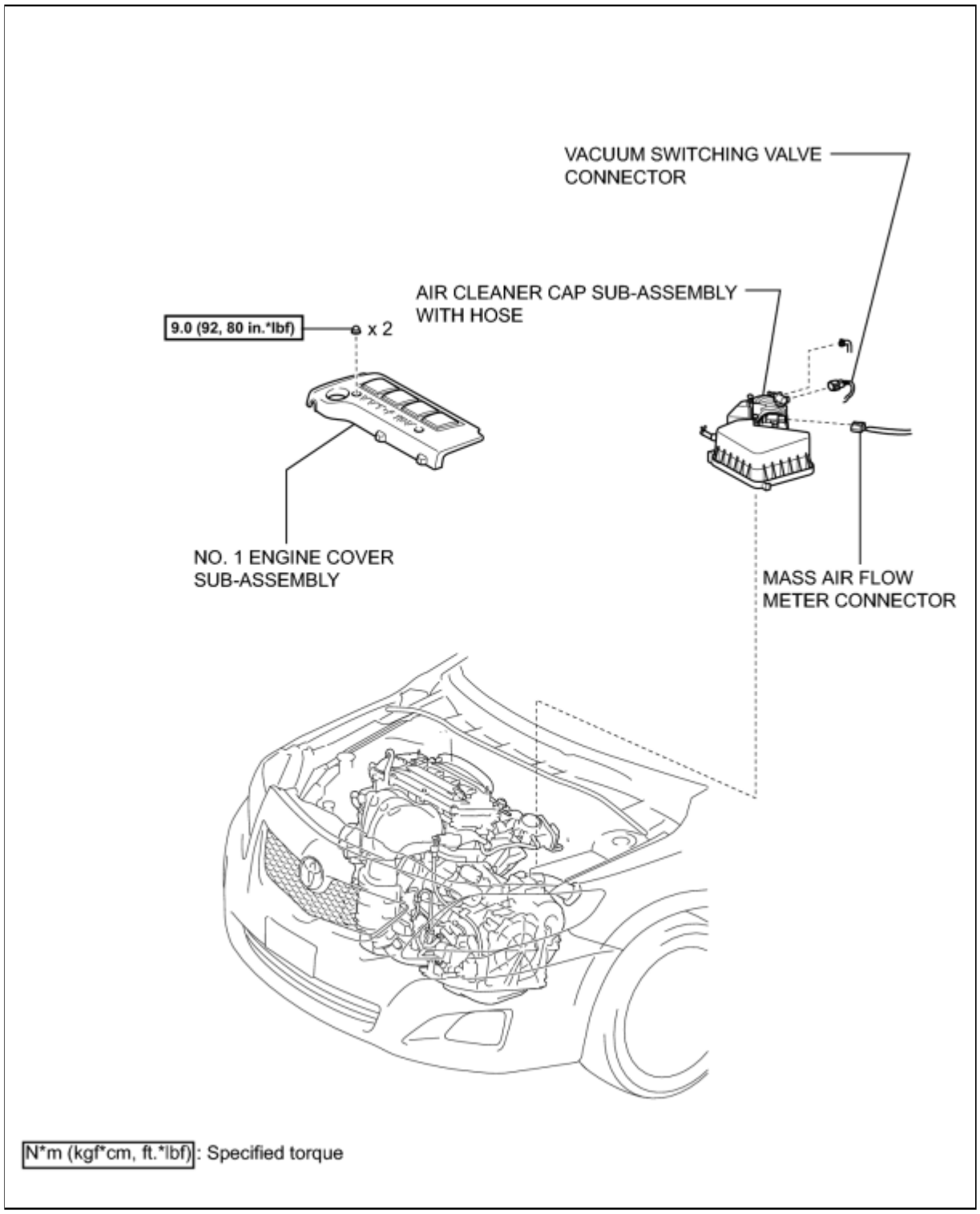

ILLUSTRATION

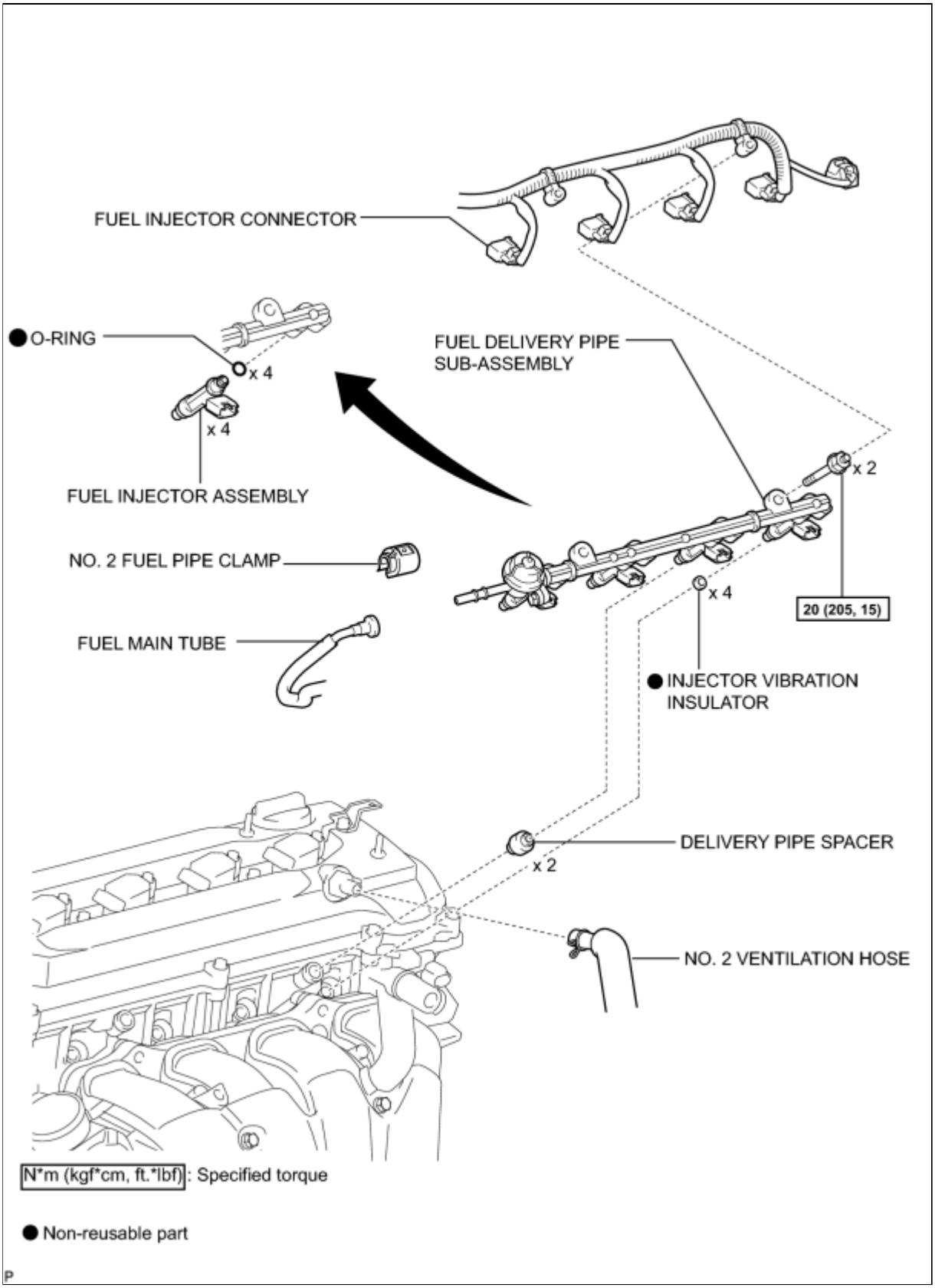

Last Modified: 3-10-2010	6.4 G	**From:** 200901
Model Year: 2010	**Model:** Corolla	**Doc ID:** RM000000VZW015X
Title: 2AZ-FE FUEL: FUEL INJECTOR: INSPECTION (2010 Corolla)		

INSPECTION

1. INSPECT FUEL INJECTOR ASSEMBLY

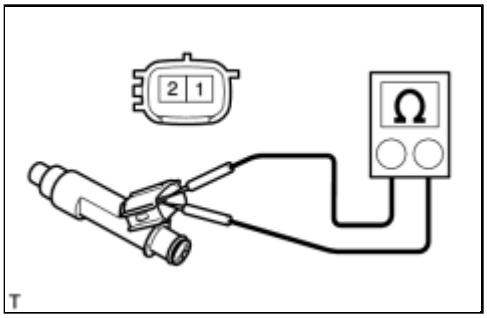

(a) Using an ohmmeter, measure the resistance between the injector terminals.

Standard Resistance:

TESTER CONNECTION	CONDITION	SPECIFIED CONDITION
1 - 2	20°C (68°F)	11.6 to 12.4 Ω

If the result is not as specified, replace the injector.

(b) Inspect the injector injection.

CAUTION:

Keep the injector away from sparks during the test.

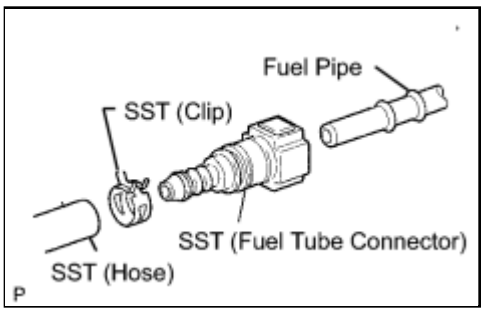

(1) Connect SST (fuel tube connector) to SST (hose), then connect them to the fuel pipe (vehicle side).

SST: 09268-31012

09268-41500
90467-13001
95336-08070

(2) Install the O-ring to the fuel injector.

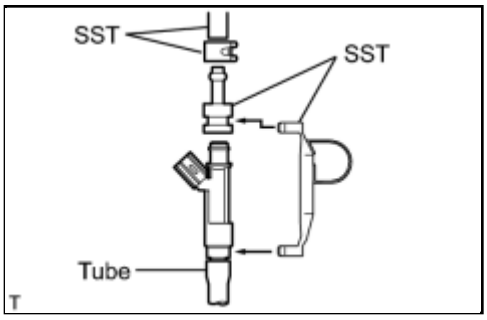

(3) Connect SST (adapter and hose) to the injector, and hold the injector and union with SST (clamp).

SST: 09268-31012

95336-08070
09268-41110
09268-41130
09268-41400

(4) Put the injector into the graduated cylinder.

CAUTION:

Install a suitable vinyl tube onto the injector that will contain gasoline spray.

(5) Operate the fuel pump.

(6) Connect SST (wire) to the injector and the battery for 15 seconds, and measure the injection volume with the graduated cylinder. Test each injector 2 or 3 times.

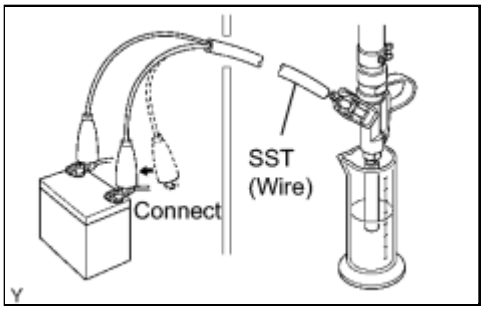

SST: 09842-30080

Injection Volume:

TESTER CONNECTION	CONDITION	SPECIFIED CONDITION
Positive terminal - Ground terminal	per 15 seconds	76 to 92 cc (4.6 to 5.6 cu in.)

Standard difference between each injector:
16 cc (1.0 cu in.) or less

(c) Inspect the fuel leakage.

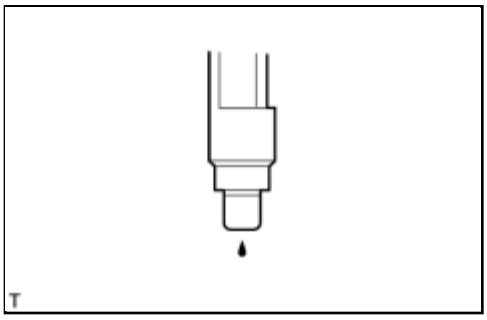

(1) Disconnect the SST (wire) tester probes from the battery and check the fuel leakage from the injector.

Standard fuel drop:
1 drop or less per 12 minutes

(2) Turn the ignition switch off.

(3) Disconnect the cable from the negative (-) battery terminal.

(4) Remove SST.

(5) Disconnect the Techstream from the DLC3.

(6) Reconnect the fuel inlet hose (rear fuel pipe) to the fuel main tube.

Last Modified: 3-10-2010	6.4 A	**From:** 200901
Model Year: 2010	**Model:** Corolla	**Doc ID:** RM0000017R500RX
Title: 2AZ-FE FUEL: FUEL INJECTOR: INSTALLATION (2010 Corolla)		

INSTALLATION

1. INSTALL FUEL INJECTOR ASSEMBLY

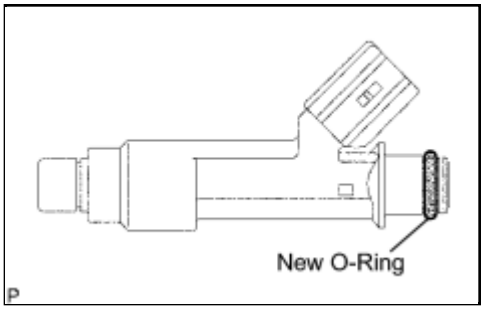

(a) Apply a light coat of gasoline or spindle oil to new O-rings, then install them to the fuel injectors.

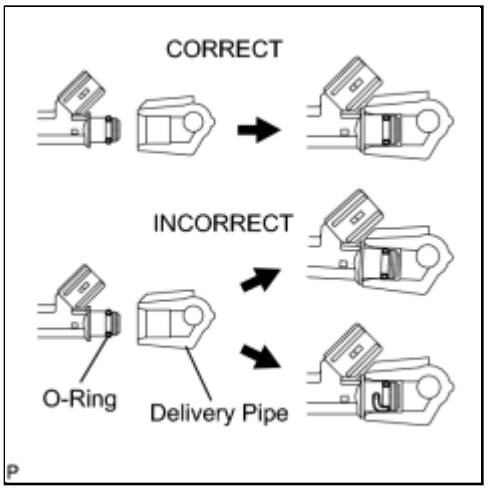

(b) Apply a light coat of gasoline or spindle oil to the part of the fuel delivery pipe which comes into contact with the O-ring of the fuel injector.

(c) Apply a light coat of gasoline or spindle oil to the O-ring again, then install the right and left fuel injectors onto the fuel delivery pipe.

NOTICE:

Make sure that the O-rings are not cracked or does not jump out of position during installation.

(d) Check that the fuel injectors rotate smoothly. If the fuel injector does not rotate, replace the O-ring.

2. INSTALL FUEL DELIVERY PIPE SUB-ASSEMBLY

(a) Install 4 new insulators to the cylinder head.

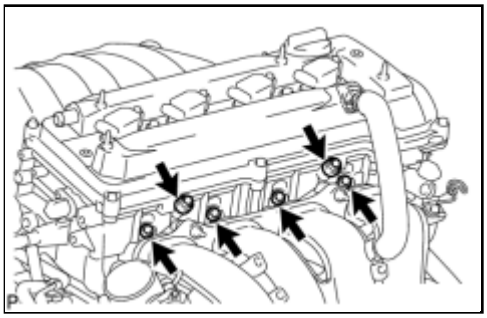

(b) Install the 2 delivery pipe spacers onto the cylinder head.

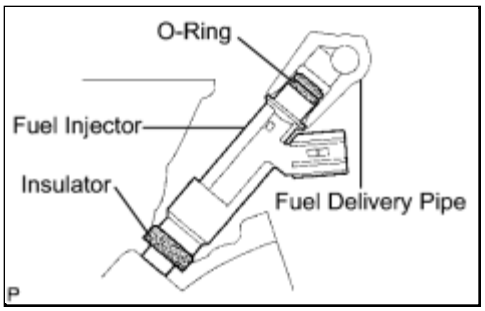

(c) Install the fuel delivery pipe together with the 4 fuel injectors, then temporarily tighten the 2 bolts.

NOTICE:

Be careful not to drop the fuel injectors when installing the fuel delivery pipe.

(d) Check that the fuel injector rotates smoothly.

If the fuel injector does not rotate smoothly, replace the O-ring.

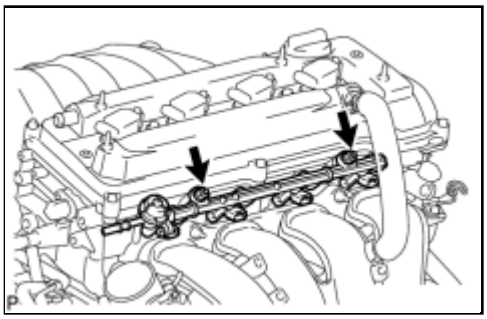

(e) Tighten the 2 bolts to the specified torque.

Torque: 20 N·m (205 kgf·cm, 15ft·lbf)

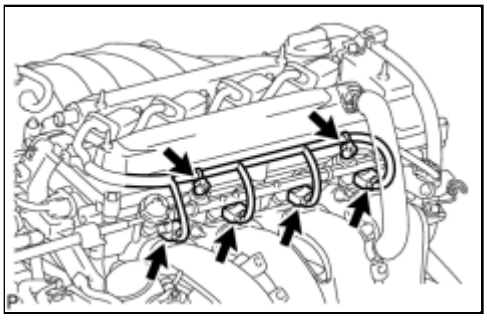

(f) Connect the 4 fuel injector connectors.

(g) Install the 2 wire harness clamps.

3. CONNECT NO. 2 VENTILATION HOSE

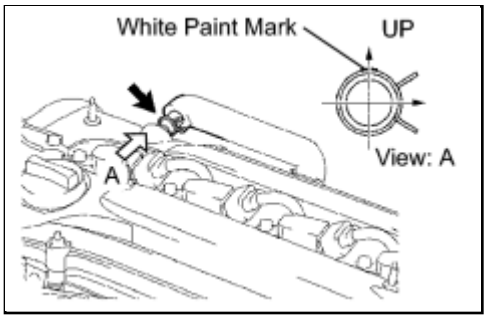

(a) Connect the ventilation hose to the ventilation valve.

NOTICE:

Make sure that the paint mark and hose clamp are at the correct angle when installing the hose.

4. CONNECT FUEL MAIN TUBE

(a) Connect the fuel main tube.

(b) Push the fuel tube connector until it makes a "click" sound.

(c) Install the fuel pipe clamp.

(d) Install the fuel tube to the fuel hose clamp.

5. INSTALL AIR CLEANER CAP SUB-ASSEMBLY WITH HOSE INFO

6. INSTALL NO. 1 ENGINE COVER SUB-ASSEMBLY INFO

7. CONNECT CABLE TO NEGATIVE BATTERY TERMINAL

(a) Connect the cable to the negative battery terminal.

Torque: 5.4 N·m (55 kgf·cm, 48in·lbf)

8. INSPECT FOR FUEL LEAK INFO

Last Modified: 3-10-2010	6.4 K	**From:** 200901
Model Year: 2010	**Model:** Corolla	**Doc ID:** RM000001EDR01DX
Title: 2ZR-FE FUEL: FUEL INJECTOR: COMPONENTS (2010 Corolla)		

COMPONENTS

ILLUSTRATION

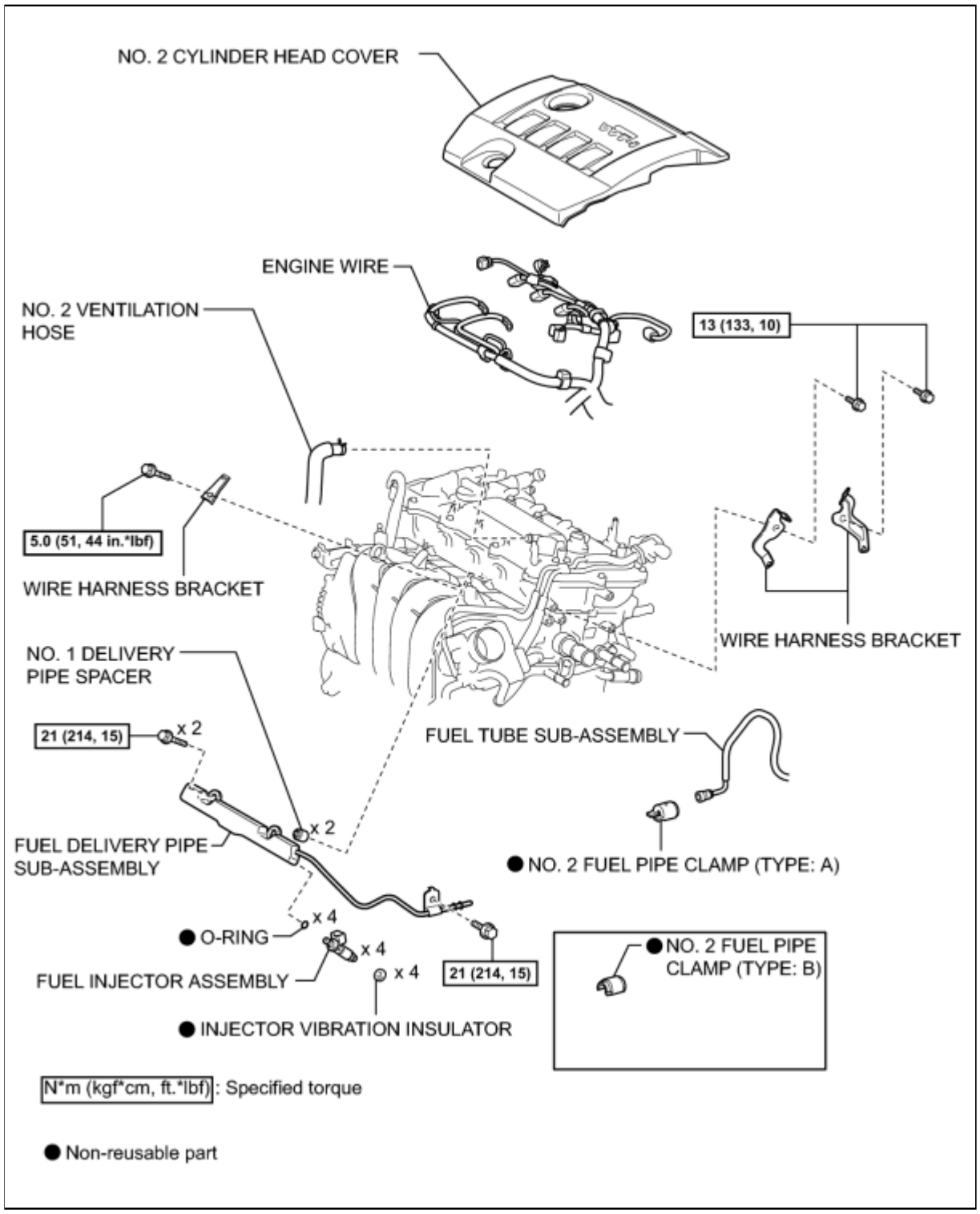

Last Modified: 3-10-2010	6.4 A	**From:** 200901
Model Year: 2010	**Model:** Corolla	**Doc ID:** RM000001EDS01EX
Title: 2ZR-FE FUEL: FUEL INJECTOR: REMOVAL (2010 Corolla)		

REMOVAL

1. DISCHARGE FUEL SYSTEM PRESSURE

HINT: INFO .

2. DISCONNECT CABLE FROM NEGATIVE BATTERY TERMINAL

3. REMOVE NO. 2 CYLINDER HEAD COVER INFO

4. DISCONNECT NO. 2 VENTILATION HOSE

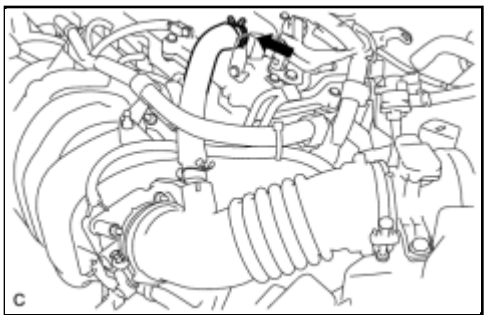

(a) Disconnect the No. 2 ventilation hose.

5. REMOVE ENGINE WIRE

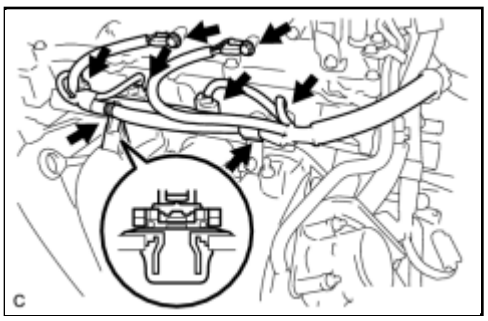

(a) Remove the 2 bolts and disconnect the ground wires.

(b) Disconnect the 4 fuel injector assembly connectors.

(c) Disconnect the 2 wire harness clamps.

(d) Disconnect the 4 wire harness clamps.

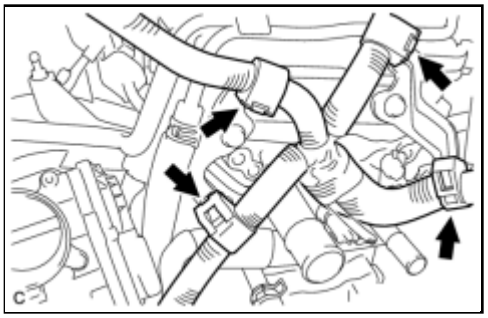

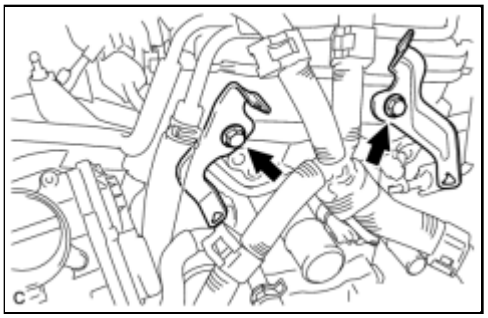

(e) Remove the 2 bolts and 2 wire harness brackets.

6. DISCONNECT FUEL TUBE SUB-ASSEMBLY

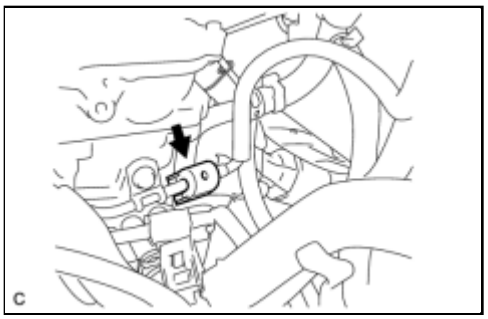

(a) Remove the No. 2 fuel pipe clamp (Type A).

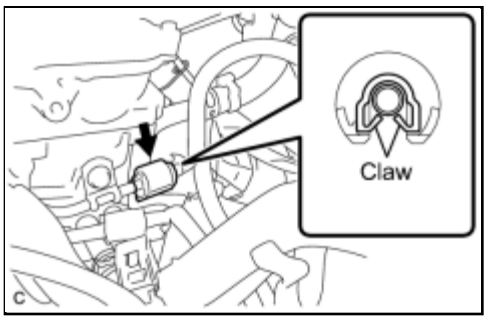

(b) Remove the No. 2 fuel pipe clamp (Type B).

(c) Using SST, disconnect the fuel tube sub-assembly.

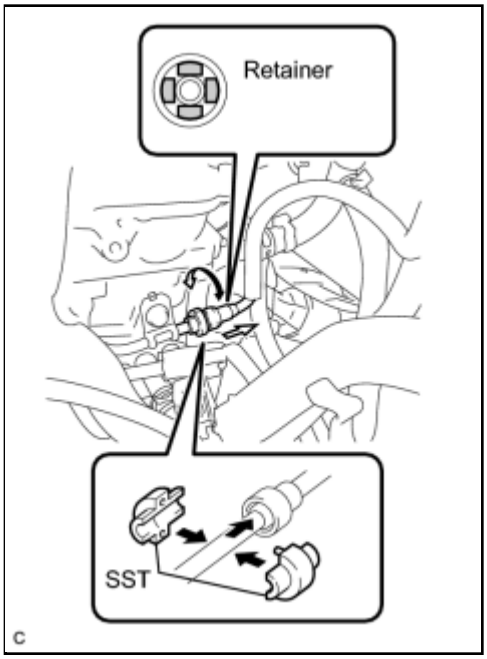

SST: 09268-21010

7. REMOVE FUEL DELIVERY PIPE SUB-ASSEMBLY

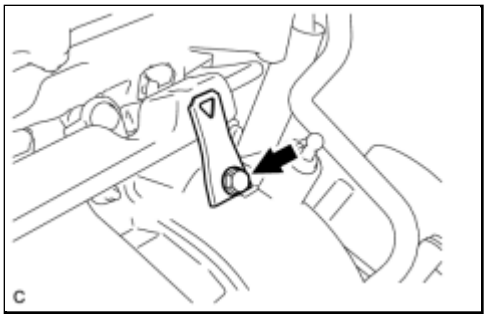

(a) Remove the bolt and wire harness bracket.

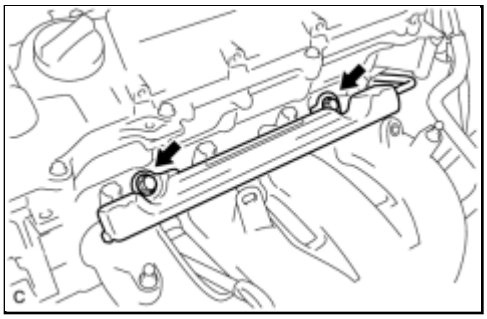

(b) Remove the 2 bolts.

(c) Remove the bolt and the fuel delivery pipe sub-assembly.

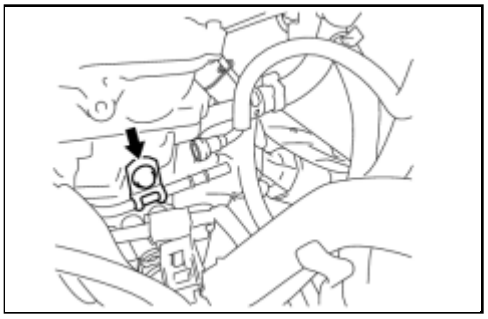

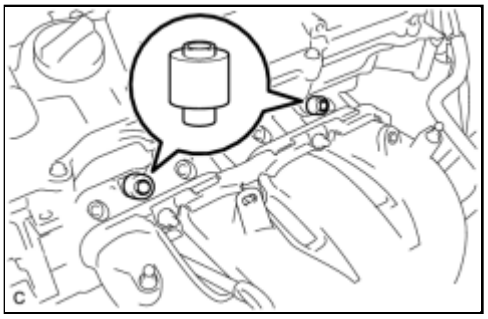

(d) Remove the 2 No. 1 delivery pipe spacers.

8. REMOVE FUEL INJECTOR ASSEMBLY

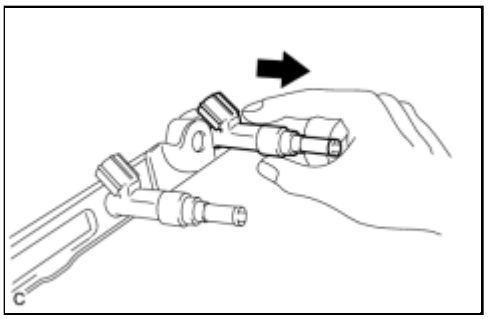

(a) Pull the 4 fuel injector assemblies out of the fuel delivery pipe sub-assembly.

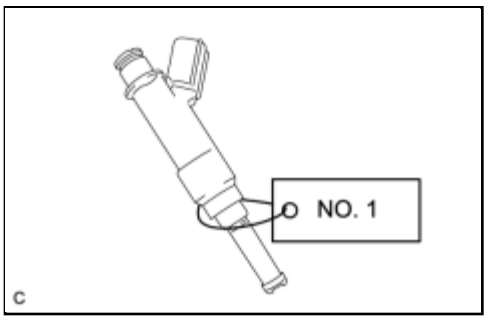

(b) For reinstallation, attach a tag or label to the injector shaft.

NOTICE:

Prevent entry of foreign objects by covering the fuel injector with a plastic bag.

(c) Remove the O-rings from the fuel injector assemblies.

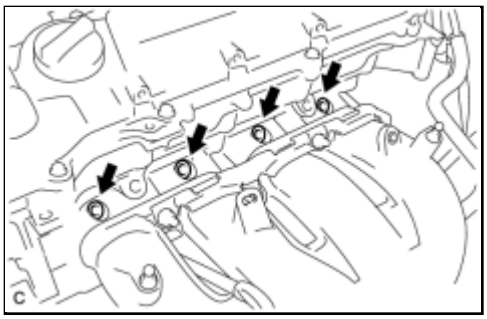

(d) Remove the 4 injector vibration insulators.

Last Modified: 3-10-2010	6.4 A	**From:** 200901
Model Year: 2010	**Model:** Corolla	**Doc ID:** RM000001EDP01FX
Title: 2ZR-FE FUEL: FUEL INJECTOR: INSTALLATION (2010 Corolla)		

INSTALLATION

1. INSTALL FUEL INJECTOR ASSEMBLY

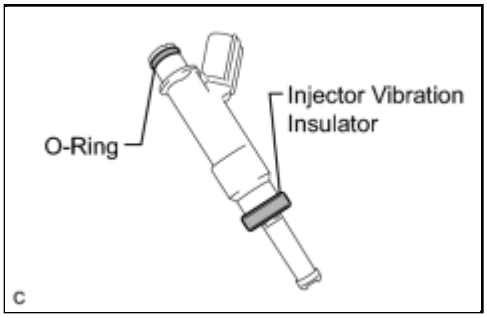

(a) Install 4 new injector vibration insulators to the 4 fuel injector assemblies.

(b) Install 4 new injector vibration insulators to the 4 fuel injector assemblies.

(c) Apply a light coat of gasoline or spindle oil to the contact surfaces of the the O-rings of the fuel injector assemblies.

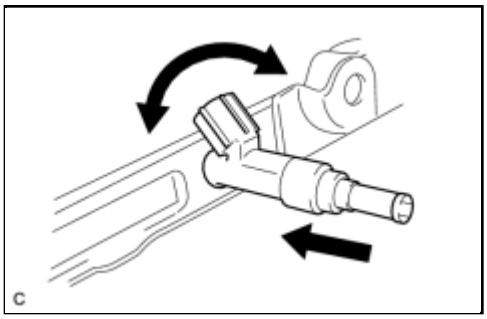

(d) While turning the fuel injector assembly left and right, install it onto the fuel delivery pipe sub-assembly.

NOTICE:

- Do not twist the O-ring.
- After installing the fuel injectors, check that they turn smoothly.

2. INSTALL NO. 1 DELIVERY PIPE SPACER

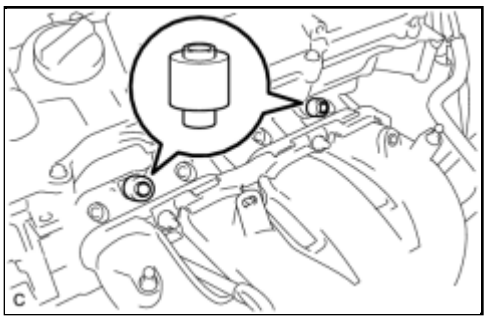

(a) Install the 2 No. 1 delivery pipe spacers onto the cylinder head.

NOTICE:

Install the No. 1 delivery pipe spacers in the correct direction.

3. INSTALL FUEL DELIVERY PIPE SUB-ASSEMBLY

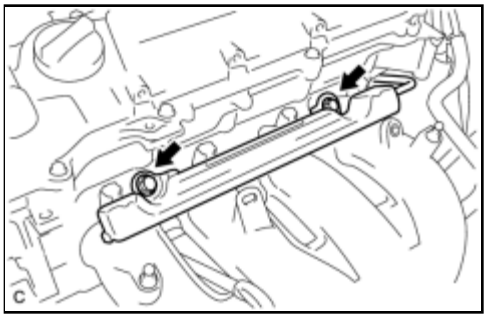

(a) Install the fuel delivery pipe sub-assembly with the 4 fuel injector assemblies, then temporarily install the 2 bolts.

NOTICE:

- Do not drop the fuel injectors when installing the fuel delivery pipe sub-assembly.
- Check that the fuel injector assemblies rotate smoothly after installing the fuel delivery pipe sub-assembly.

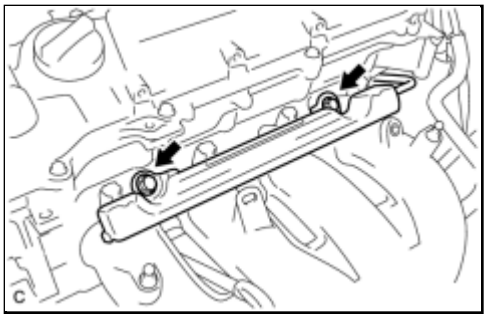

(b) Tighten the 2 bolts to the specified torque.

Torque: 21 N·m (214 kgf·cm, 15ft·lbf)

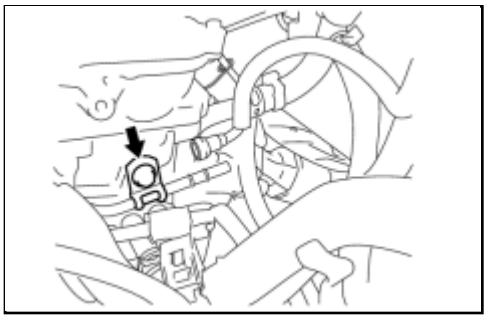

(c) Install the bolt to secure the fuel delivery pipe sub-assembly.

Torque: 21 N·m (214 kgf·cm, 15ft·lbf)

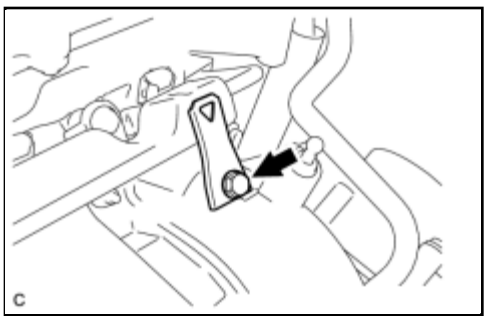

(d) Install the wire harness bracket with the bolt.

Torque: 5.0 N·m (51 kgf·cm, 44in·lbf)

4. CONNECT FUEL TUBE SUB-ASSEMBLY

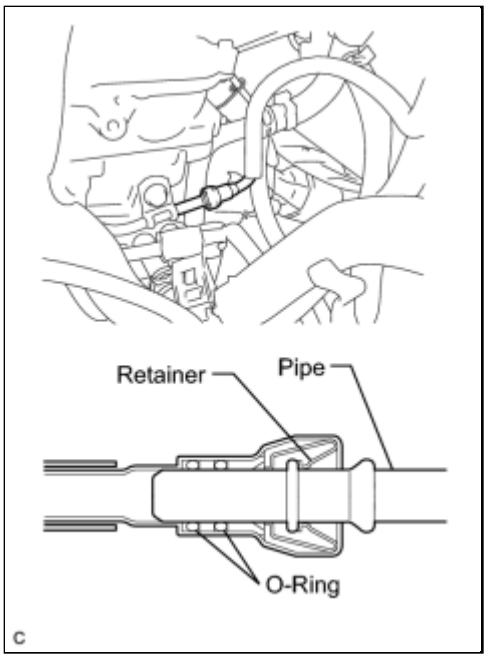

(a) Insert the fuel tube sub-assembly connector into the fuel delivery pipe until a "click" sound can be heard.

NOTICE:

- Check that there are no scratches or foreign matter around the contact surfaces of the fuel tube connector and pipe before performing this work.
- After connecting the fuel tube, check that the fuel tube connector and pipe are securely connected by pulling on them.

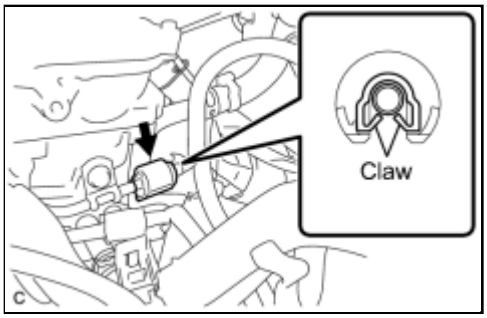

(b) Install a new No. 2 fuel pipe clamp (Type B).

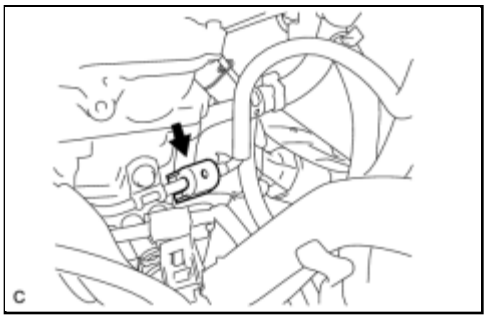

(c) Install a new No. 2 fuel pump clamp (Type A).

5. CONNECT ENGINE WIRE

(a) Install the 2 wire harness brackets with the 2 bolts.

Torque: 13 N·m (133 kgf·cm, 10ft·lbf)

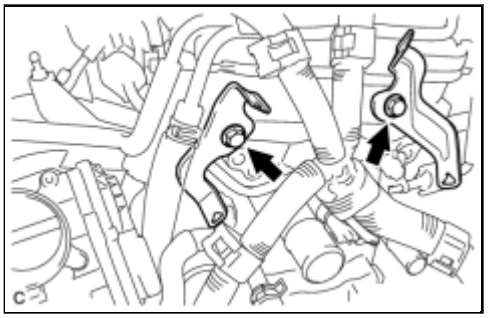

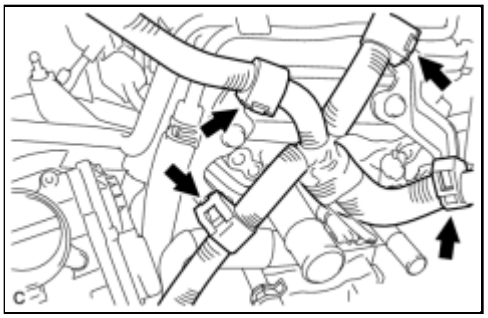

(b) Connect the 4 wire harness clamps.

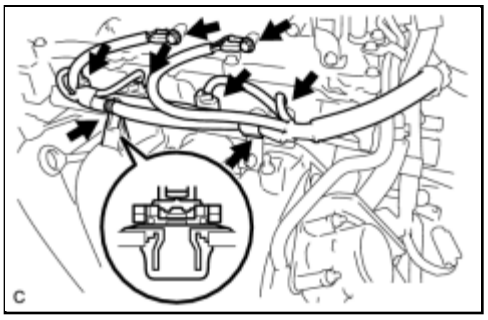

(c) Connect the 4 fuel injector assembly connectors.

(d) Connect the 2 wire harness clamps.

(e) Connect the ground wires with the 2 bolts.

6. INSTALL AIR CLEANER CAP SUB-ASSEMBLY INFO

7. CONNECT NO. 2 VENTILATION HOSE

(a) Connect the No. 2 ventilation hose.

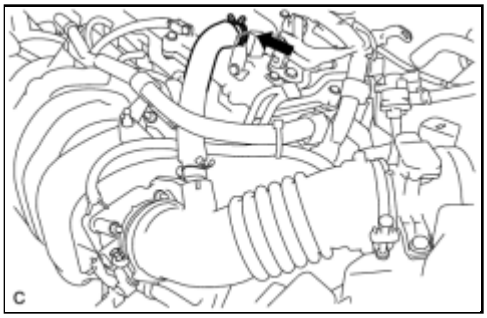

8. CONNECT CABLE TO NEGATIVE BATTERY TERMINAL

(a) Connect the cable to the negative battery terminal.

Torque: 5.4 N·m (55 kgf·cm, 48in·lbf)

9. INSPECT FOR FUEL LEAK INFO

10. INSTALL NO. 2 CYLINDER HEAD COVER INFO

Last Modified: 3-10-2010	6.4 G	**From:** 200901
Model Year: 2010	**Model:** Corolla	**Doc ID:** RM000001EDQ01OX
Title: 2ZR-FE FUEL: FUEL INJECTOR: INSPECTION (2010 Corolla)		

INSPECTION

1. INSPECT FUEL INJECTOR ASSEMBLY

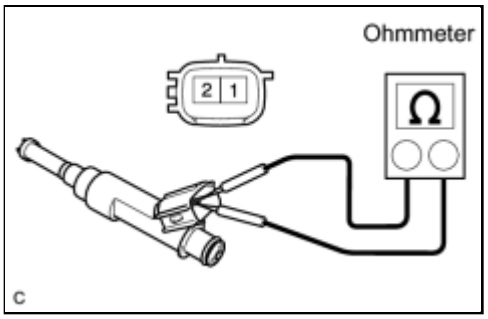

(a) Check the resistance.

(1) Using an ohmmeter, measure the resistance according to the value(s) in the table below.

Standard Resistance:

TESTER CONNECTION	CONDITION	SPECIFIED CONDITION
1 - 2	20°C (68°F)	11.6 to 12.4 Ω

If the result is not as specified, replace the injector assembly.

(b) Check the operation.

CAUTION:

Perform the inspection in a well-ventilated area.

Do not perform the inspection near a naked flame.

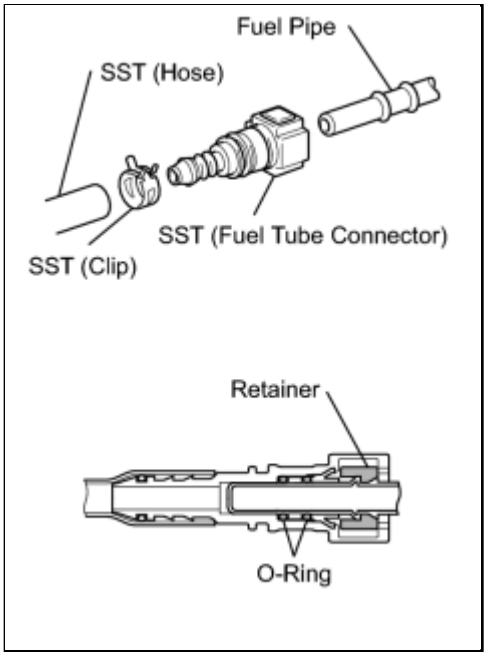

(1) Connect SST (fuel tube connector) to SST (hose), then connect them to the fuel pipe (vehicle side).

SST: 09268-31012

90467-13001

95336-08070

09268-41500

(2) Install the O-ring onto the fuel injector assembly.

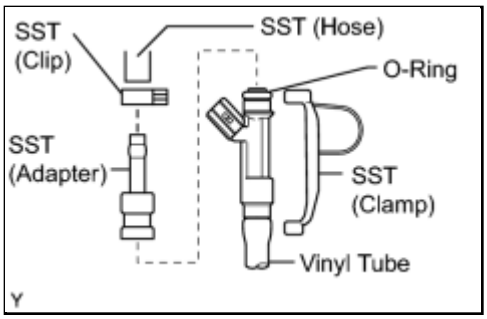

(3) Connect SST (adapter and hose) to the injector assembly, and hold the injector assembly and union with SST (clamp).

SST: 09268-31012

90467-13001
95336-08070
09268-41400
09268-41110

(4) Set the injector assembly in a graduated cylinder.

CAUTION:

Install a suitable vinyl tube onto the injector assembly to prevent gasoline from spraying.

(5) Operate the fuel pump.

(6) Connect SST (wire) to the injector assembly and the battery for 15 seconds, and measure the injection volume with the graduated cylinder. Test each injector 2 or 3 times.

SST: 09842-30080

Injection Volume:

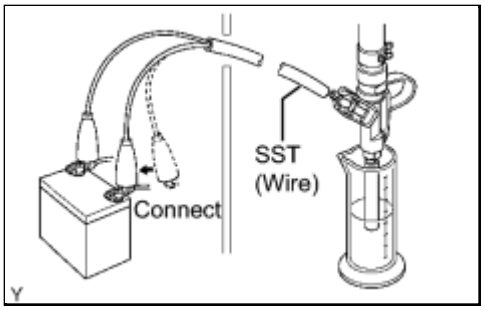

TESTER CONNECTION	CONDITION	SPECIFIED CONDITION
Positive terminal - Ground terminal	Per 15 seconds	60 to 73 cc (3.7 to 4.5 cu in.)

Difference between each injector:
13 cc (0.8 cu in.) or less

NOTICE:

Always do the switching at the battery side.

If the injection volume is not as specified, replace the injector assembly.

(c) Check for leaks.

(1) Disconnect the test probes of SST (wire) from the battery and check the fuel leaks from the injector.

Fuel drop:
1 drop or less every 12 minutes

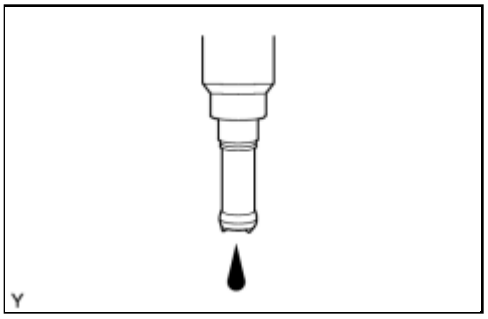
Y

Last Modified: 3-10-2010	6.4 K	**From:** 200901
Model Year: 2010	**Model:** Corolla	**Doc ID:** RM0000017RQ01BX
Title: 2AZ-FE FUEL: FUEL PRESSURE PULSATION DAMPER: COMPONENTS (2010 Corolla)		

COMPONENTS

ILLUSTRATION

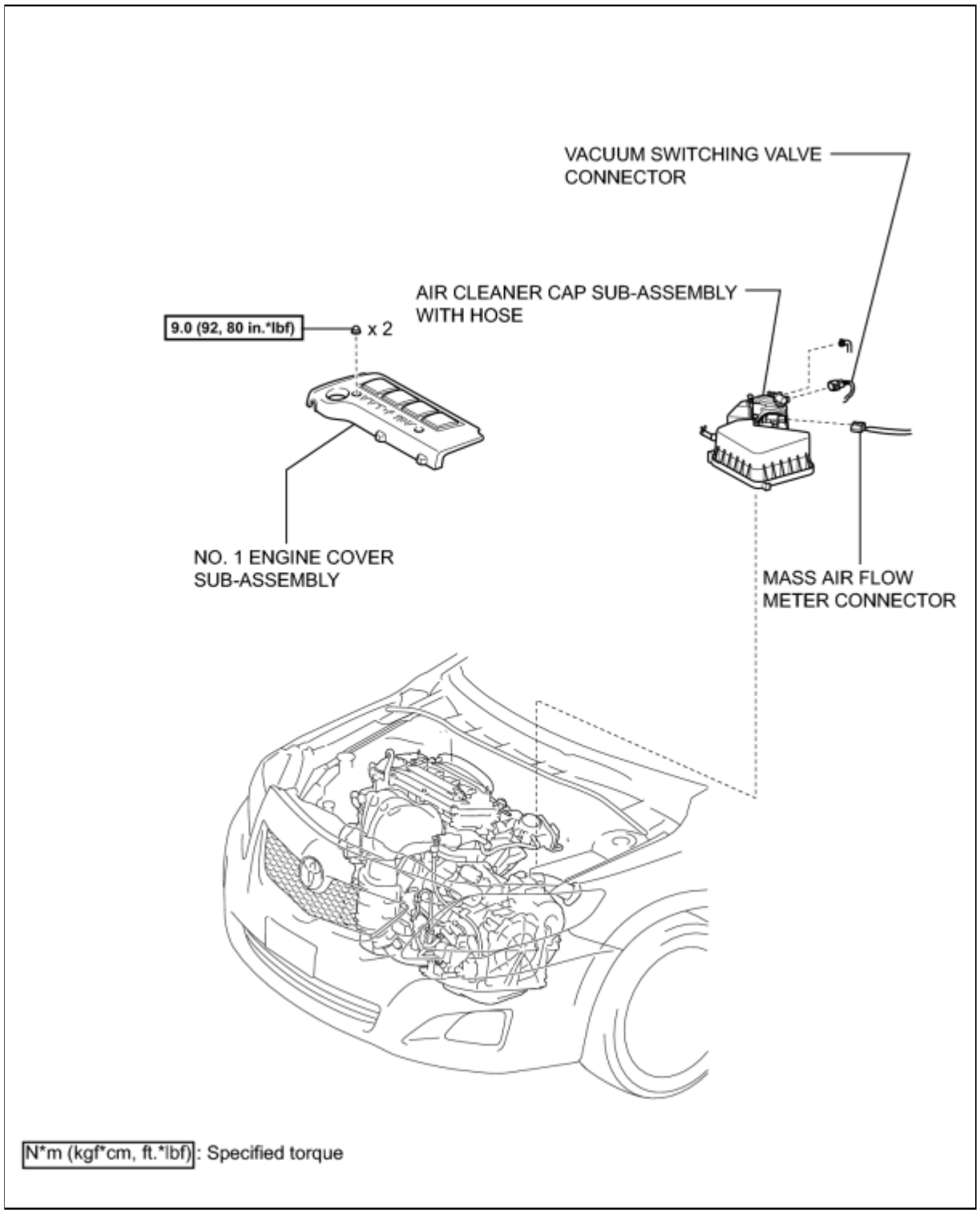

ILLUSTRATION

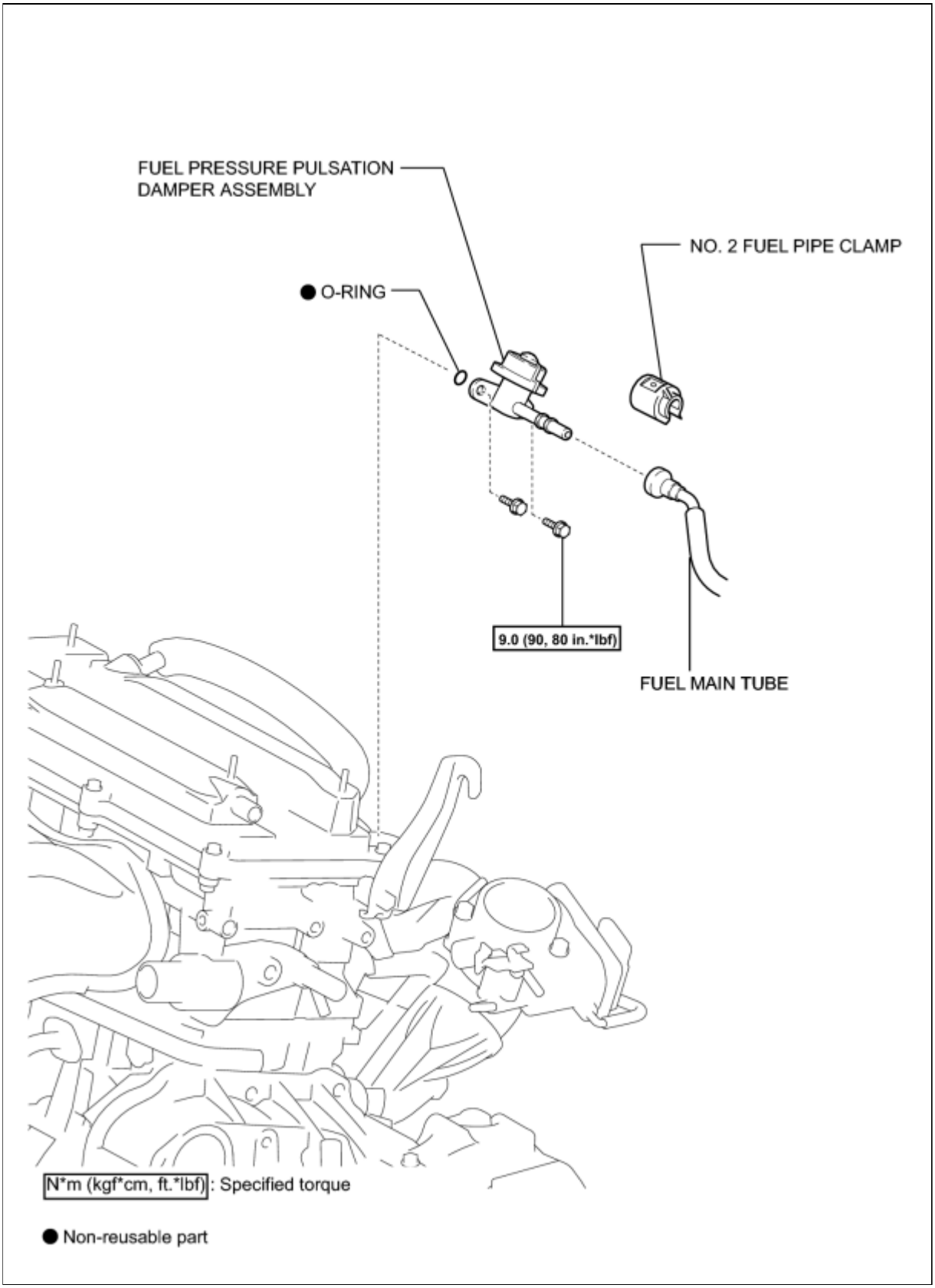

Last Modified: 3-10-2010	6.4 A	**From:** 200901
Model Year: 2010	**Model:** Corolla	**Doc ID:** RM0000017RR01QX
Title: 2AZ-FE FUEL: FUEL PRESSURE PULSATION DAMPER: REMOVAL (2010 Corolla)		

REMOVAL

1. DISCHARGE FUEL SYSTEM PRESSURE INFO

2. DISCONNECT CABLE FROM NEGATIVE BATTERY TERMINAL

3. REMOVE NO. 1 ENGINE COVER SUB-ASSEMBLY INFO

4. REMOVE AIR CLEANER CAP SUB-ASSEMBLY WITH HOSE INFO

5. DISCONNECT FUEL MAIN TUBE INFO

6. REMOVE FUEL PRESSURE PULSATION DAMPER ASSEMBLY

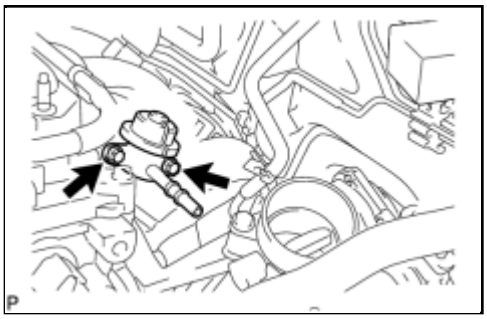

(a) Remove the 2 bolts and fuel pressure pulsation damper.

(b) Remove the O-ring from the fuel pressure pulsation damper.

Last Modified: 3-10-2010	6.4 A	**From:** 200901
Model Year: 2010	**Model:** Corolla	**Doc ID:** RM0000017RP01NX
Title: 2AZ-FE FUEL: FUEL PRESSURE PULSATION DAMPER: INSTALLATION (2010 Corolla)		

INSTALLATION

1. INSTALL FUEL PRESSURE PULSATION DAMPER ASSEMBLY

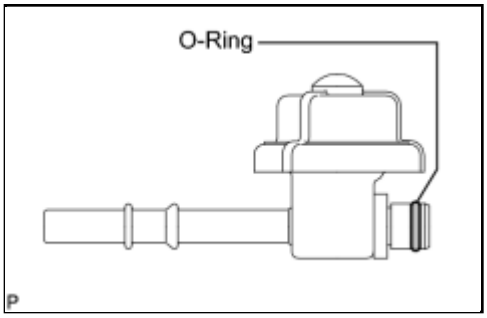

(a) Apply a light coat of gasoline or spindle oil to a new O-ring and install it to the fuel pressure pulsation damper.

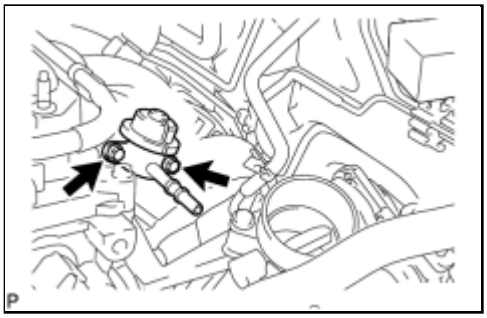

(b) Install the fuel pressure pulsation damper with the 2 bolts.

Torque: 9.0 N·m (90 kgf·cm, 80in·lbf)

NOTICE:

Make sure that the O-ring is not cracked or does not jump out of position during installation.

2. INSTALL FUEL MAIN TUBE INFO

3. INSTALL AIR CLEANER CAP SUB-ASSEMBLY WITH HOSE INFO

4. INSTALL NO. 1 ENGINE COVER SUB-ASSEMBLY INFO

5. CONNECT CABLE TO NEGATIVE BATTERY TERMINAL INFO

6. INSPECT FOR FUEL LEAK INFO

Last Modified: 3-10-2010	6.4 A	**From:** 200901
Model Year: 2010	**Model:** Corolla	**Doc ID:** RM000002YQ401JX
Title: 2AZ-FE FUEL: FUEL PRESSURE REGULATOR: REMOVAL (2010 Corolla)		

REMOVAL

1. DISCHARGE FUEL SYSTEM PRESSURE

HINT: INFO .

2. DISCONNECT CABLE FROM NEGATIVE BATTERY TERMINAL

3. REMOVE FUEL SUCTION TUBE ASSEMBLY WITH PUMP AND GAUGE

(a) Remove the fuel suction tube assembly with pump and gauge INFO .

4. REMOVE FUEL SENDER GAUGE ASSEMBLY INFO

5. REMOVE FUEL PUMP

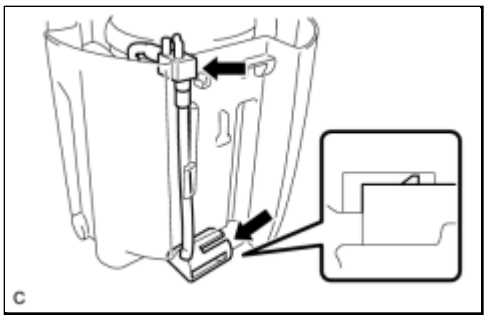

(a) Release the claw and disconnect the fuel pump filter hose.

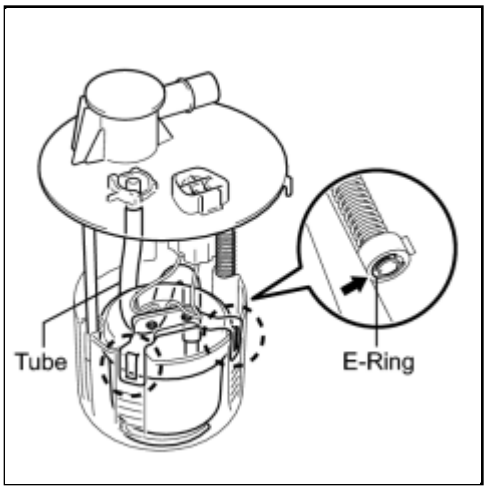

(b) Remove the E-ring and separate the 2 claws, then remove the fuel pump sub-tank.

NOTICE:

Do not separate the tube indicated in the illustration INFO .

(c) Disconnect the fuel pump harness connector.

NOTICE:

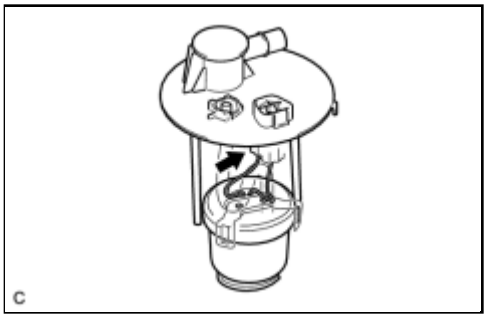

Do not damage the wire harness.

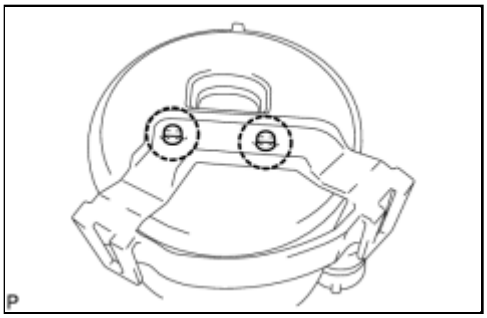

(d) Using a screwdriver with its tip wrapped in protective tape, disengage the 2 claws and remove the No. 1 fuel suction support.

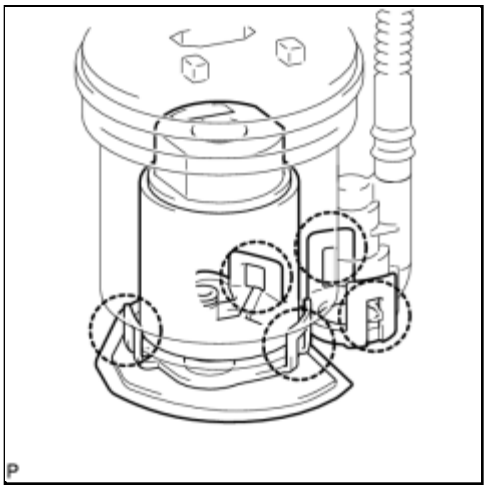

(e) Using a screwdriver with its tip wrapped in protective tape, disengage the 5 claws, and remove the suction filter and fuel pump from the fuel filter.

NOTICE:

- Do not damage the fuel pump filter or fuel filter.
- Do not remove the suction filter.
- Do not use either the fuel pump or the suction filter if the suction filter is removed from the fuel pump.

(f) Disconnect the fuel pump connector.

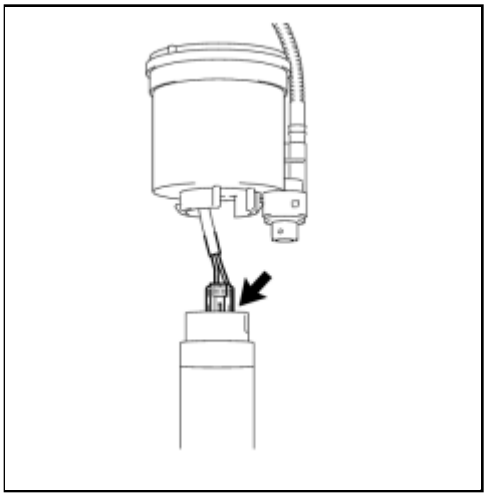

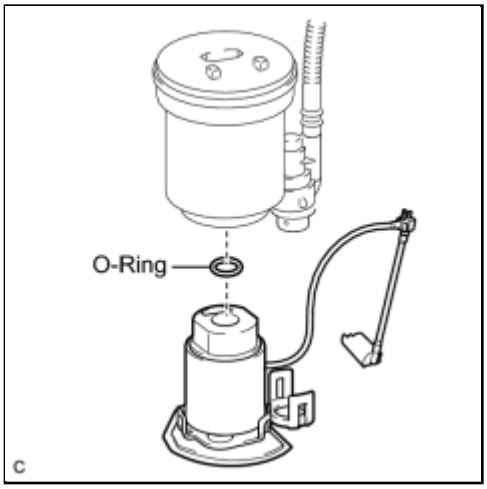

(g) Remove the O-ring from the fuel pump.

6. REMOVE FUEL PRESSURE REGULATOR ASSEMBLY

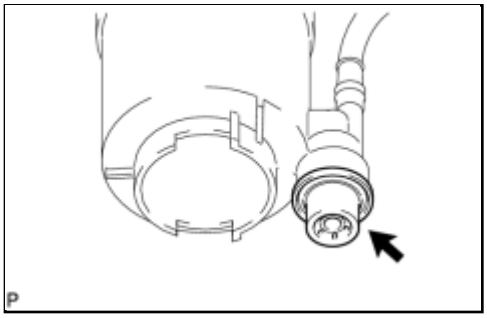

(a) Using a screwdriver with its tip wrapped in protective tape, remove the fuel pressure regulator assembly.

NOTICE:

Slowly pull out the fuel pressure regulator assembly because the O-ring is firmly installed between the regulator and the fuel filter.

(b) Remove the 2 O-rings from the fuel pressure regulator assembly.

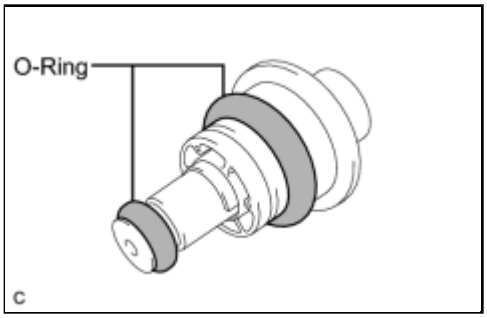
O-Ring
C

Last Modified: 3-10-2010	6.4 K	**From:** 200901
Model Year: 2010	**Model:** Corolla	**Doc ID:** RM000002YQ301EX
Title: 2AZ-FE FUEL: FUEL PRESSURE REGULATOR: COMPONENTS (2010 Corolla)		

COMPONENTS

ILLUSTRATION

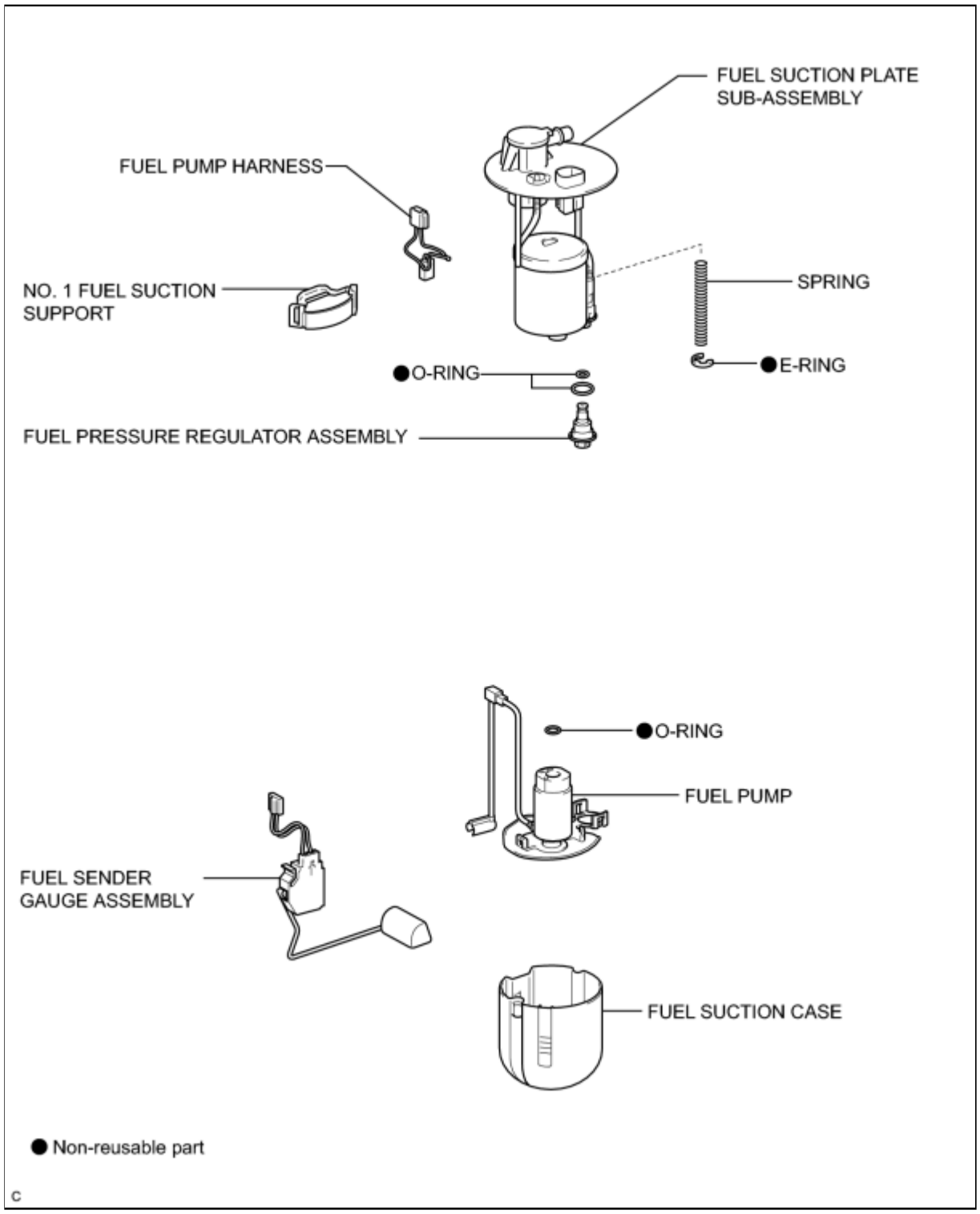

Last Modified: 3-10-2010	6.4 A	**From:** 200901
Model Year: 2010	**Model:** Corolla	**Doc ID:** RM000002YQ201JX
Title: 2AZ-FE FUEL: FUEL PRESSURE REGULATOR: INSTALLATION (2010 Corolla)		

INSTALLATION

1. INSTALL FUEL PRESSURE REGULATOR ASSEMBLY

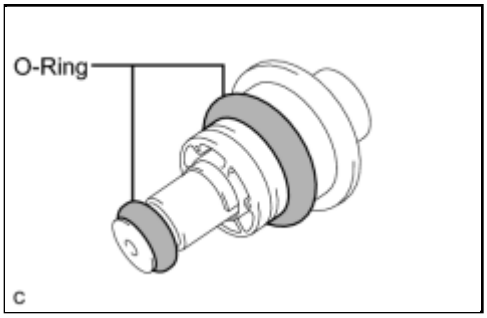

(a) Apply gasoline to 2 new O-rings and then install them to the fuel pressure regulator assembly.

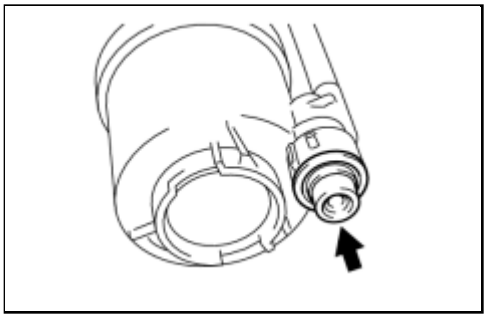

(b) Install the fuel pressure regulator assembly.

2. INSTALL FUEL PUMP INFO

3. INSTALL FUEL SENDER GAUGE ASSEMBLY INFO

4. INSTALL FUEL SUCTION TUBE ASSEMBLY WITH PUMP AND GAUGE

(a) Install the fuel suction tube assembly with pump and gauge INFO .

5. CONNECT CABLE TO NEGATIVE BATTERY TERMINAL INFO

6. INSPECT FOR FUEL LEAK INFO

Last Modified: 3-10-2010	6.4 K	**From:** 200901
Model Year: 2010	**Model:** Corolla	**Doc ID:** RM000002YQ301DX
Title: 2ZR-FE FUEL: FUEL PRESSURE REGULATOR: COMPONENTS (2010 Corolla)		

COMPONENTS

ILLUSTRATION

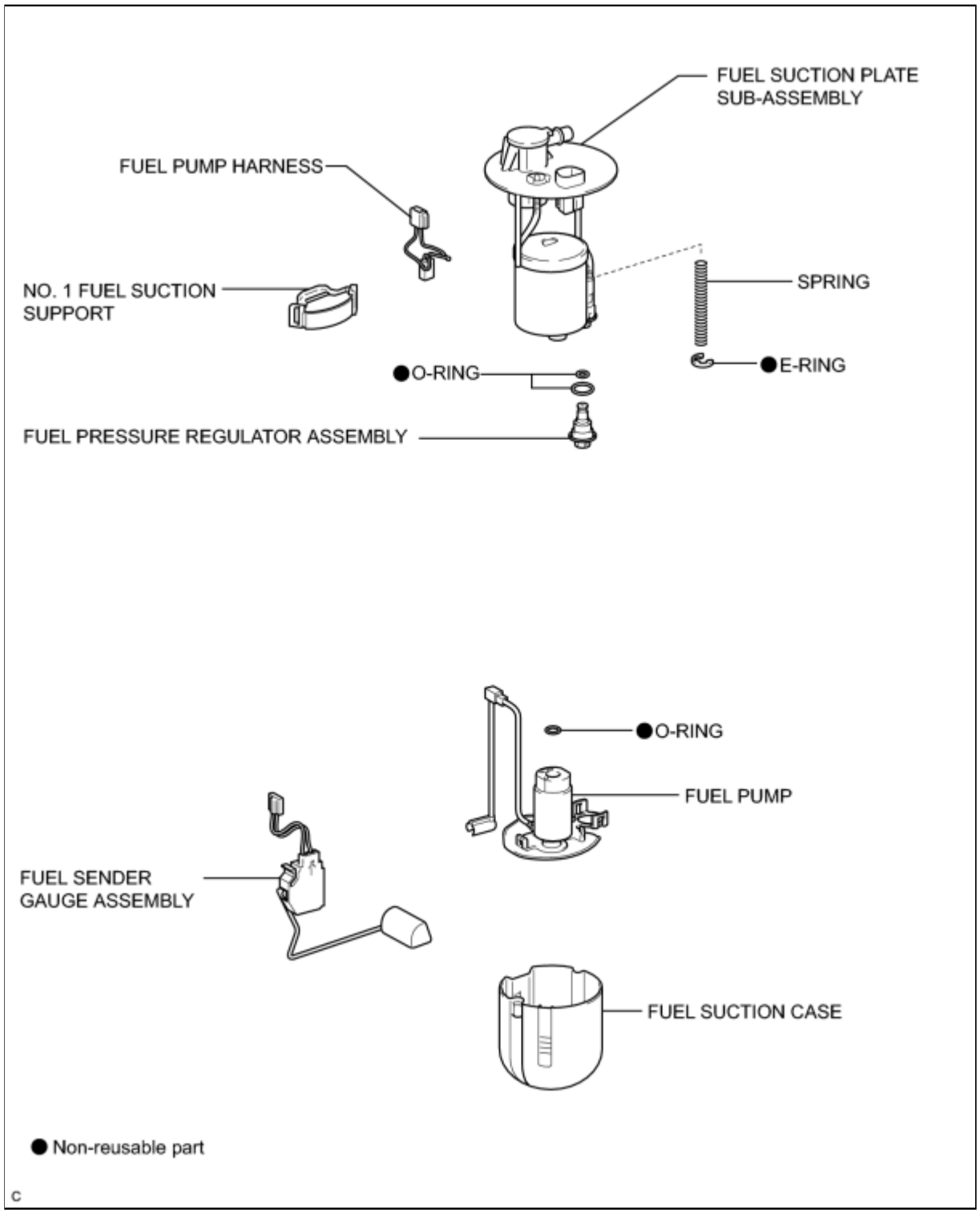

Last Modified: 3-10-2010	6.4 A	**From:** 200901
Model Year: 2010	**Model:** Corolla	**Doc ID:** RM000002YQ401IX
Title: 2ZR-FE FUEL: FUEL PRESSURE REGULATOR: REMOVAL (2010 Corolla)		

REMOVAL

1. DISCHARGE FUEL SYSTEM PRESSURE

HINT: INFO .

2. DISCONNECT CABLE FROM NEGATIVE BATTERY TERMINAL

3. REMOVE FUEL SUCTION TUBE ASSEMBLY WITH PUMP AND GAUGE

(a) Remove the fuel suction tube assembly with pump and gauge from the fuel tank INFO .

4. DRAIN FUEL

5. REMOVE FUEL SENDER GAUGE ASSEMBLY INFO

6. REMOVE FUEL PUMP

(a) Disconnect the wire harness connector.

NOTICE:

Do not damage the wire harness.

(b) Disconnect the connector of the fuel pump harness.

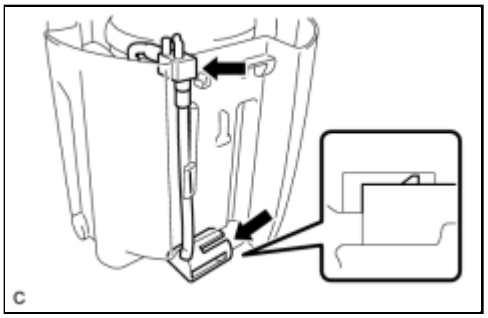

(c) Disconnect the fuel pump filter hose.

(d) Remove the E-ring and separate the 2 claws, then remove the fuel pump sub-tank.

NOTICE:

Do not separate the tube indicated in the illustration INFO .

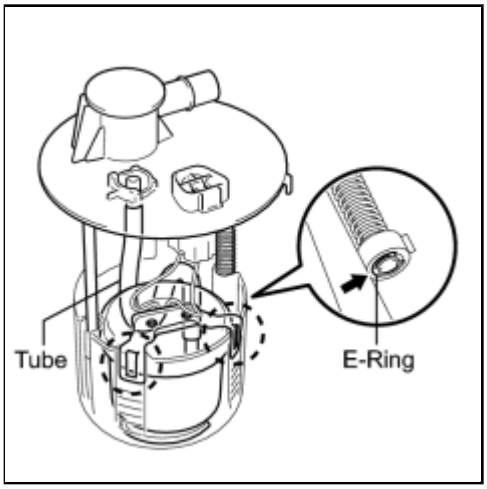

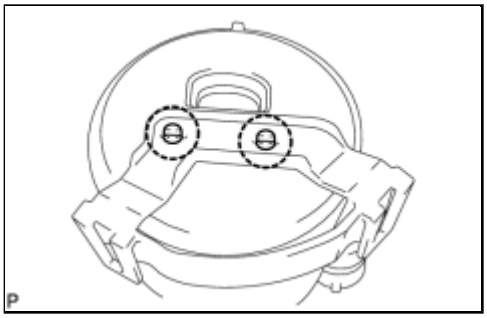

(e) Using a screwdriver with its tip wrapped in protective tape, disengage the 2 claws and remove the No. 1 fuel suction support.

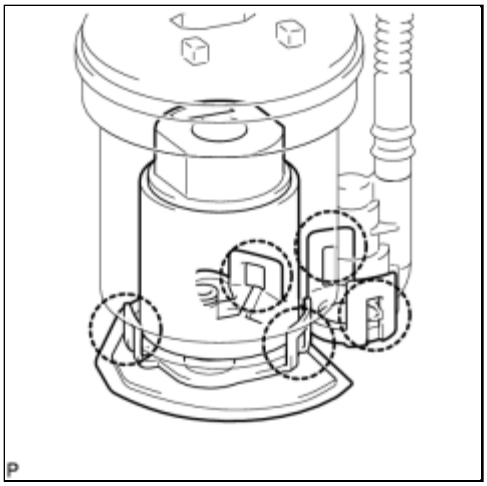

(f) Using a screwdriver with its tip wrapped in protective tape, disengage the 5 claws, and remove the fuel pump filter and fuel pump from the fuel filter.

NOTICE:

- Do not damage the fuel pump filter.
- Do not remove the suction filter.
- Do not use either the fuel pump or the suction filter if the suction filter is removed from the fuel pump.

(g) Disconnect the fuel pump harness connector.

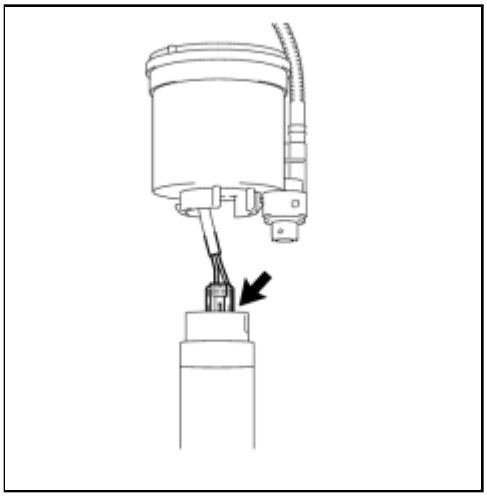

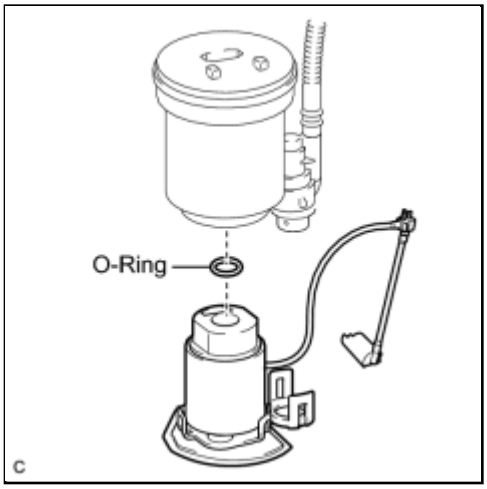

(h) Remove the O-ring.

7. REMOVE FUEL PRESSURE REGULATOR ASSEMBLY

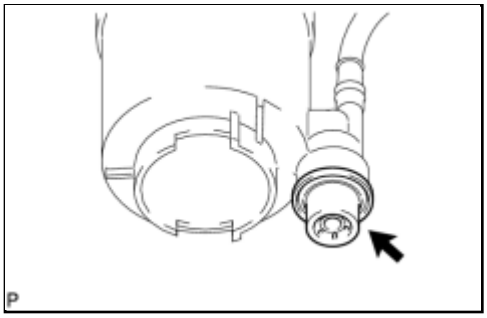

(a) Using a screwdriver with its tip wrapped in protective tape, remove the fuel pressure regulator assembly.

NOTICE:

Slowly pull out the fuel pressure regulator assembly because the O-ring is firmly installed between the regulator and the fuel filter.

(b) Remove the 2 O-rings from the fuel pressure regulator assembly.

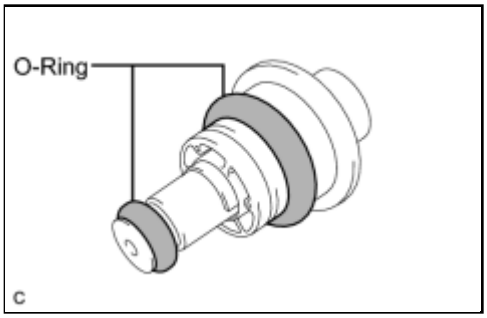
O-Ring
C

Last Modified: 3-10-2010	6.4 A	**From:** 200901
Model Year: 2010	**Model:** Corolla	**Doc ID:** RM000002YQ201IX
Title: 2ZR-FE FUEL: FUEL PRESSURE REGULATOR: INSTALLATION (2010 Corolla)		

INSTALLATION

1. INSTALL FUEL PRESSURE REGULATOR ASSEMBLY

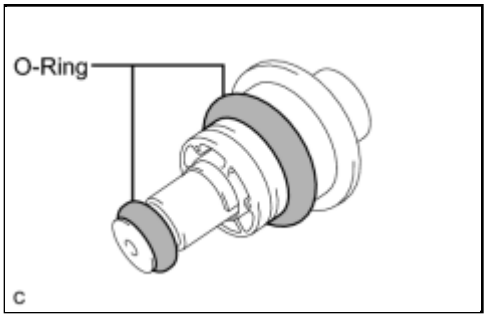

(a) Apply gasoline to 2 new O-rings and then install them to the fuel pressure regulator assembly.

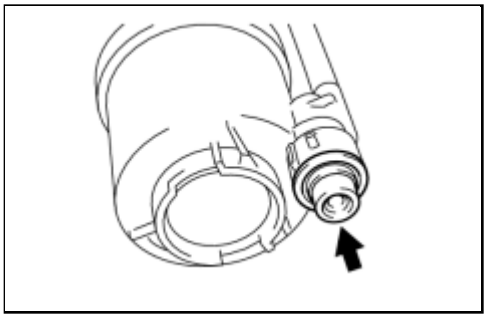

(b) Install the fuel pressure regulator assembly.

2. INSTALL FUEL PUMP INFO

3. INSTALL FUEL SENDER GAUGE ASSEMBLY INFO

4. INSTALL FUEL SUCTION WITH PUMP AND GAUGE TUBE ASSEMBLY

(a) Install the fuel suction tube assembly with pump and gauge to the fuel tank INFO .

5. CONNECT CABLE TO NEGATIVE BATTERY TERMINAL INFO

6. INSPECT FOR FUEL LEAK INFO

Last Modified: 3-10-2010	6.4 K	**From:** 200901
Model Year: 2010	**Model:** Corolla	**Doc ID:** RM0000022XW010X
Title: 2AZ-FE FUEL: FUEL PUMP: COMPONENTS (2010 Corolla)		

COMPONENTS

ILLUSTRATION

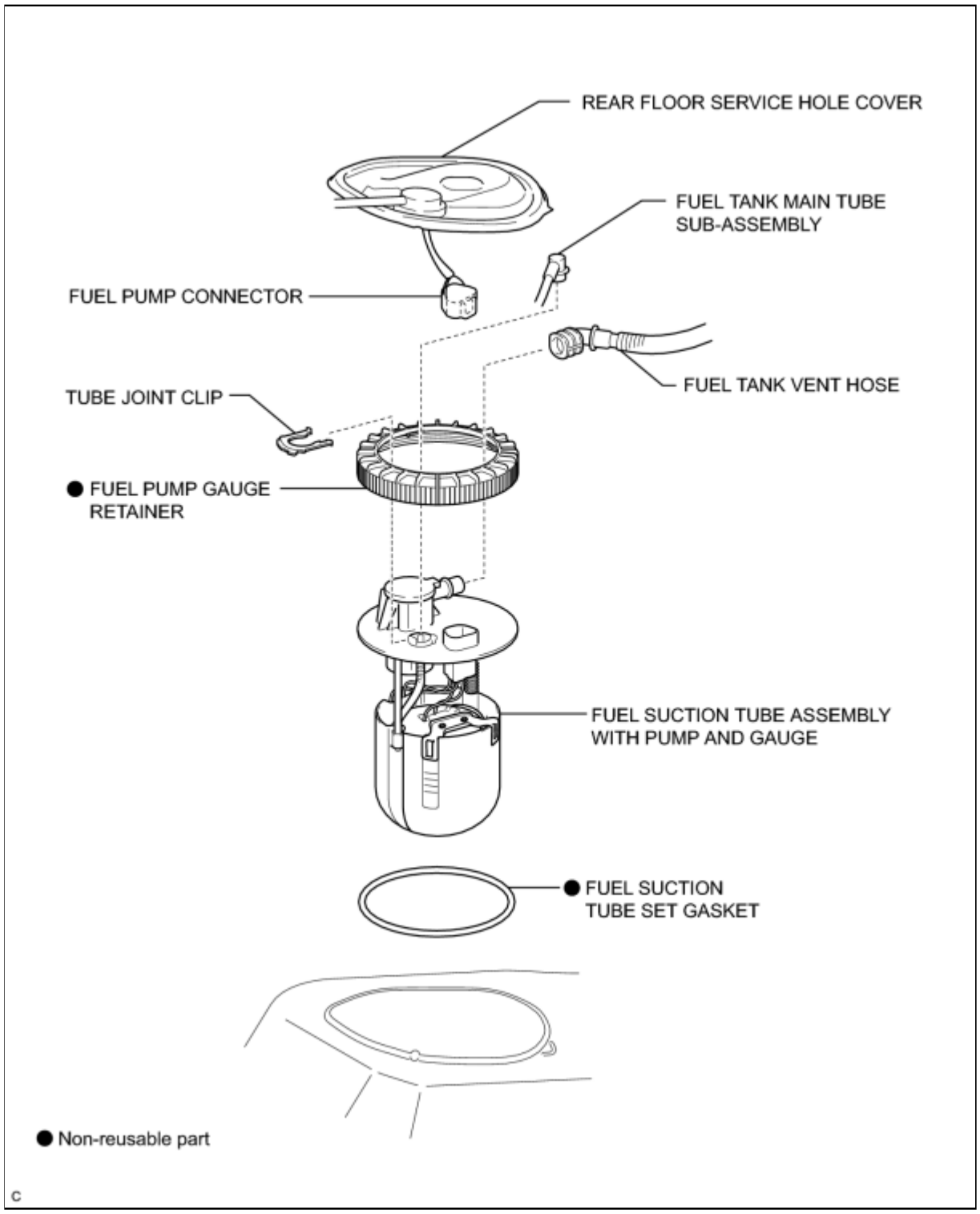

ILLUSTRATION

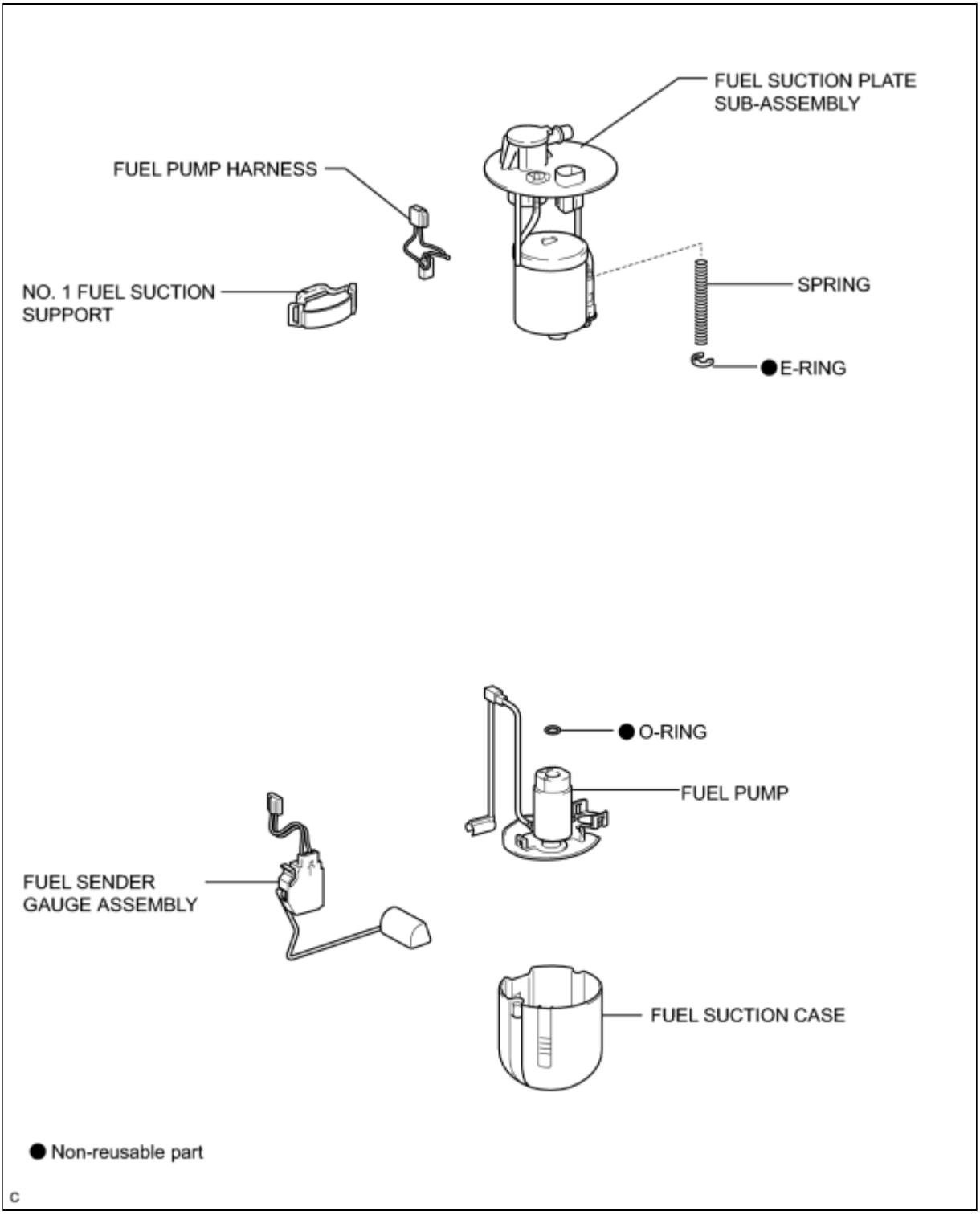

Last Modified: 3-10-2010	6.4 A	**From:** 200901
Model Year: 2010	**Model:** Corolla	**Doc ID:** RM0000022XX01UX
Title: 2AZ-FE FUEL: FUEL PUMP: REMOVAL (2010 Corolla)		

REMOVAL

1. REMOVE REAR SEAT CUSHION ASSEMBLY INFO

2. REMOVE REAR FLOOR SERVICE HOLE COVER

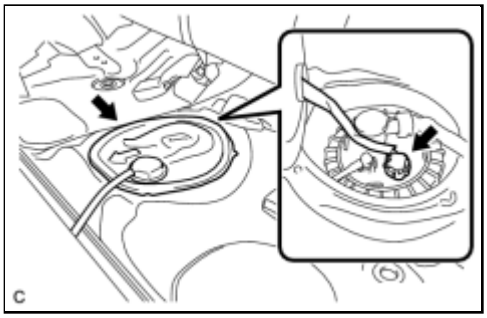

(a) Remove the rear floor service hole cover.

(b) Disconnect the connector from the fuel suction tube assembly.

3. DISCHARGE FUEL SYSTEM PRESSURE

HINT: INFO .

4. DISCONNECT CABLE FROM NEGATIVE BATTERY TERMINAL

5. DISCONNECT FUEL TANK MAIN TUBE SUB-ASSEMBLY

(a) Disconnect the fuel tank main tube.

(1) Remove the tube joint clip, and pull the fuel tube joint out of the plug of the fuel suction plate.

NOTICE:

- Check that there is no dirt or other foreign objects around the fuel tube joint before disconnecting it. Clean the joint if necessary.
- It is necessary to prevent mud or dirt from entering the joint. If mud or dirt gets in the joint, the O-rings may not seal properly.
- Only disconnect the joint by hand.
- Do not bend, kink or twist the nylon tubes.
- Protect the joint by covering it with a plastic bag.

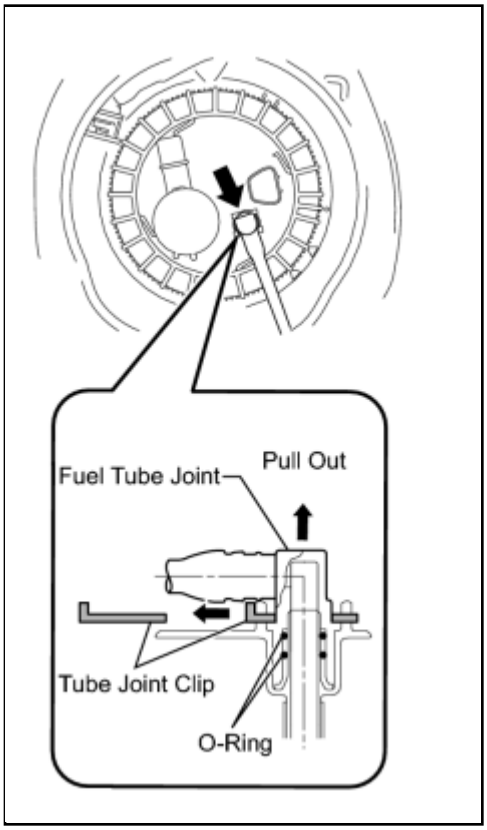

6. DISCONNECT FUEL TANK VENT HOSE

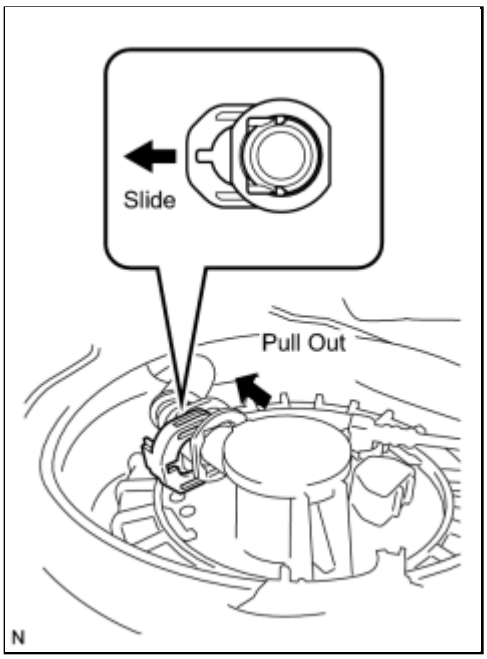

(a) Disconnect the fuel tank vent hose.

(1) Pinch the retainer and pull the fuel tank vent connector out of the fuel tank to disconnect the fuel tank vent hose from the fuel suction plate.

NOTICE:

- Check that there is no dirt or other foreign objects around the connector before disconnecting it. Clean the connector if necessary.
- It is necessary to prevent mud or dirt from entering the connector. If mud or dirt gets in the connector, the O-rings may not seal properly.
- Only disconnect the quick connector by hand.
- Do not bend, kink or twist the nylon tubes.
- Protect the connector by covering it with a plastic bag.
- If the pipe and connector are stuck, carefully try wiggling or pushing and pulling on the connector to release it. Pull the connector off the pipe carefully.

7. REMOVE FUEL PUMP GAUGE RETAINER

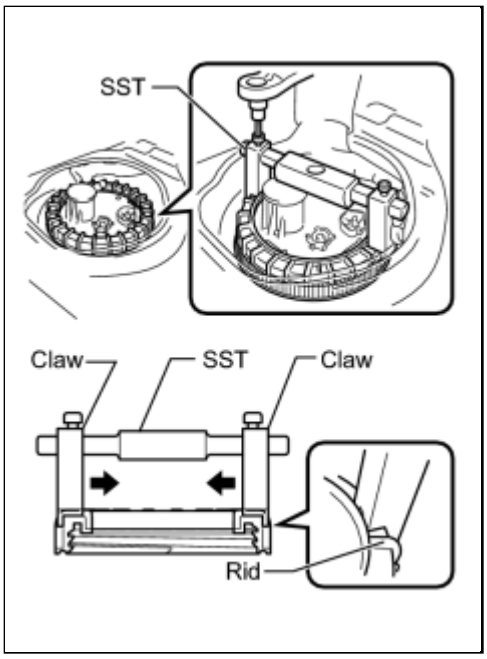

(a) Using a 6 mm socket hexagon wrench, set SST to the fuel pump gauge retainer.

SST: 09808-14020

09808-01410
09808-01420
09808-01430

HINT:

- Engage the SST claws securely with the fuel pump gauge retainer ribs to secure SST.
- Install SST while pressing the SST claws toward the fuel pump gauge retainer (towards the center of SST).

(b) Using SST, loosen the fuel pump gauge retainer.

SST: 09808-14020

09808-01410
09808-01420
09808-01430

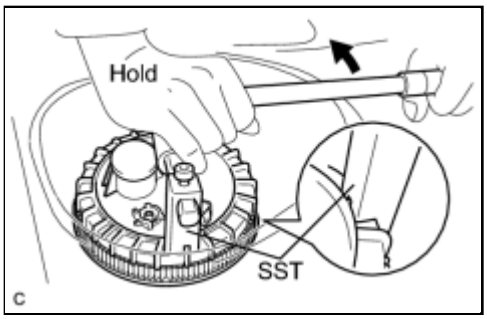

NOTICE:

- Do not use any tools other than specified in this operation. Damage to the fuel pump gauge retainer or the fuel tank.
- Loosen the retainer by turning it counterclockwise while holding SST down. Do not allow the claw of the tank suction tube support to slip out of its groove on the fuel tank.

HINT:

The ribs on the fuel pump gauge retainer can be fitted into the tips of SST.

(c) Remove the fuel pump gauge retainer while holding the fuel suction tube assembly by hand.

8. REMOVE FUEL SUCTION TUBE ASSEMBLY WITH PUMP AND GAUGE

(a) Remove the fuel suction tube assembly from the fuel tank.

NOTICE:

Make sure that the fuel sender gauge arm does not bend.

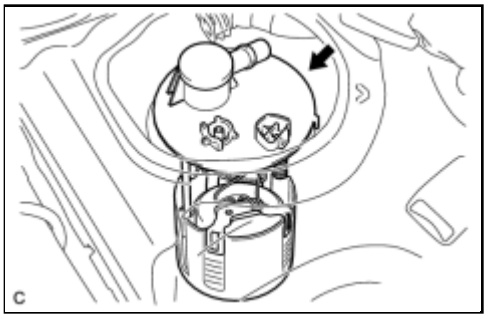

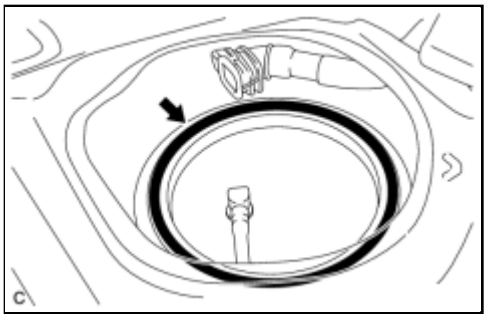

(b) Remove the gasket from the fuel tank.

Last Modified: 3-10-2010	6.4 A	**From:** 200901
Model Year: 2010	**Model:** Corolla	**Doc ID:** RM000003D8C004X
Title: 2AZ-FE FUEL: FUEL PUMP: DISASSEMBLY (2010 Corolla)		

DISASSEMBLY

1. REMOVE FUEL SENDER GAUGE ASSEMBLY INFO

2. REMOVE FUEL PUMP

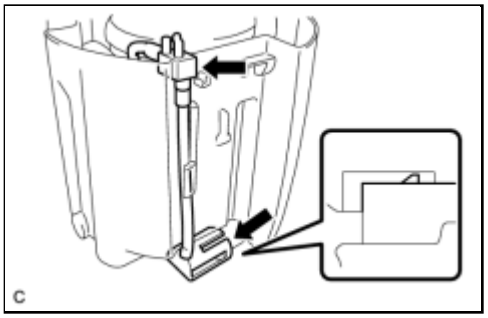

(a) Release the claw and disconnect the fuel pump filter hose.

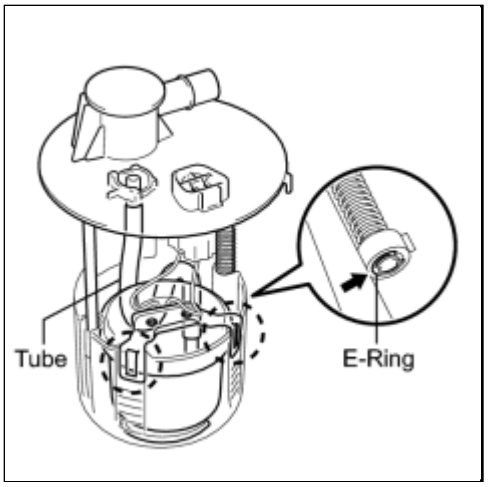

(b) Remove the E-ring and separate the 2 claws, then remove the fuel pump sub-tank.

NOTICE:

Do not separate the tube indicated in the illustration INFO **.**

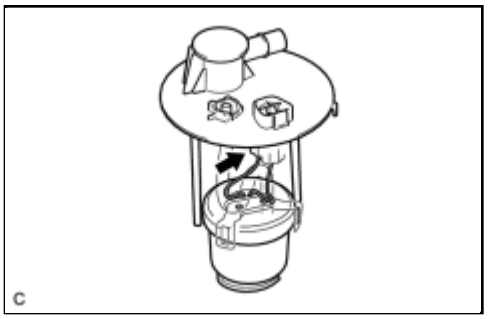

(c) Disconnect the fuel pump harness connector.

NOTICE:

Do not damage the wire harness.

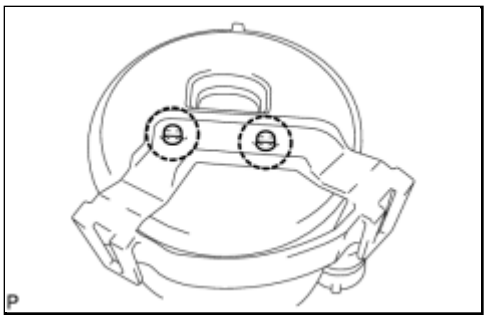

(d) Using a screwdriver with its tip wrapped in protective tape, disengage the 2 claws and remove the No. 1 fuel suction support.

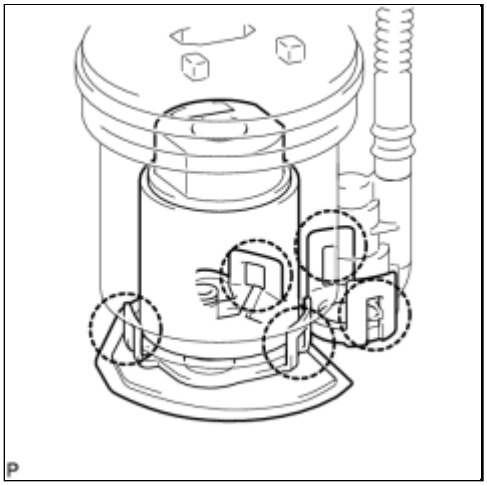

(e) Using a screwdriver with its tip wrapped in protective tape, disengage the 5 claws, and remove the suction filter and fuel pump from the fuel filter.

NOTICE:

- Do not damage the fuel pump filter or fuel filter.
- Do not remove the suction filter.
- Do not use either the fuel pump or the suction filter if the suction filter is removed from the fuel pump.

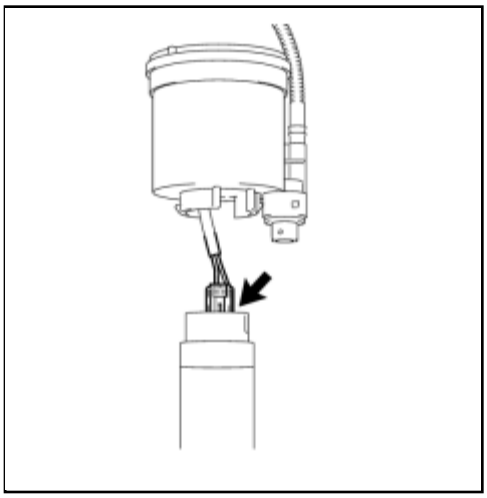

(f) Disconnect the fuel pump connector.

(g) Remove the O-ring from the fuel pump.

NOTICE:

Do not disassemble the fuel pump and the suction filter because they are non-reusable parts.

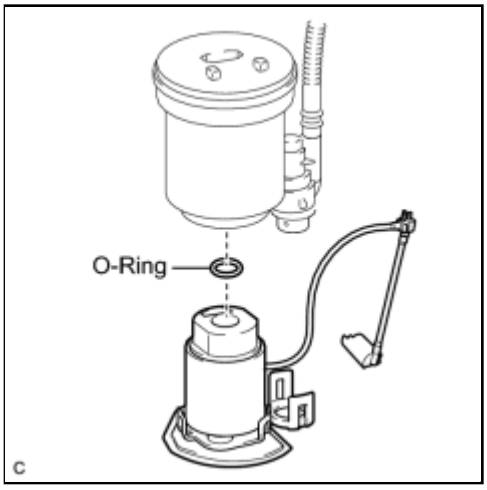
O-Ring
C

Last Modified: 3-10-2010	6.4 G	**From:** 200901
Model Year: 2010	**Model:** Corolla	**Doc ID:** RM0000022XV011X
Title: 2AZ-FE FUEL: FUEL PUMP: INSPECTION (2010 Corolla)		

INSPECTION

1. INSPECT FUEL PUMP

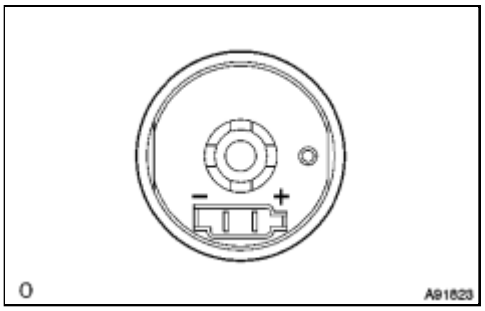

(a) Check the resistance.

(1) Using an ohmmeter, measure the resistance between the terminals.

Standard Resistance:

TESTER CONNECTION	SPECIFIED CONDITION
1 - 2	0.2 to 3.0 Ω at 20°C (68°F)

If the result is not as specified, replace the fuel pump.

(b) Check the operation.

(1) Apply battery voltage to both terminals. Check that the pump operates.

NOTICE:

- These tests must be done quickly (for less than 10 seconds) to prevent the coil from burning out.
- Keep the fuel pump as far away from the battery as possible.
- Always do the switching at the battery side.

If the motor does not operate, replace the fuel pump.

Last Modified: 3-10-2010	6.4 A	**From:** 200901
Model Year: 2010	**Model:** Corolla	**Doc ID:** RM000003D8D004X
Title: 2AZ-FE FUEL: FUEL PUMP: REASSEMBLY (2010 Corolla)		

REASSEMBLY

1. INSTALL FUEL PUMP

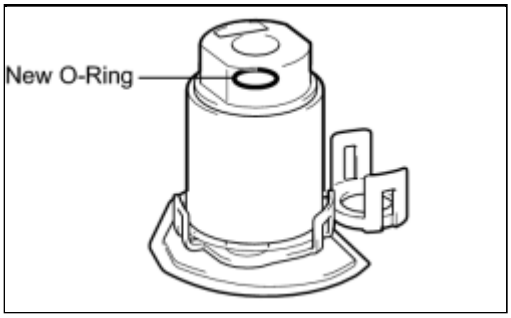

(a) Apply a light coat of gasoline or spindle oil to a new O-ring, then install it into the fuel pump.

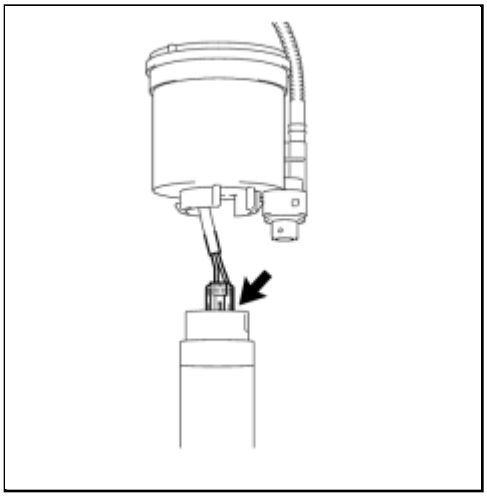

(b) Connect the fuel pump harness connector.

(c) Apply a light coat of gasoline or spindle oil to the O-ring of the fuel pump again.

(d) Engage the 5 claws, and install the fuel pump filter onto the fuel pump with fuel filter.

NOTICE:

Make sure that the O-ring is not cracked or does not jump out of position during installation.

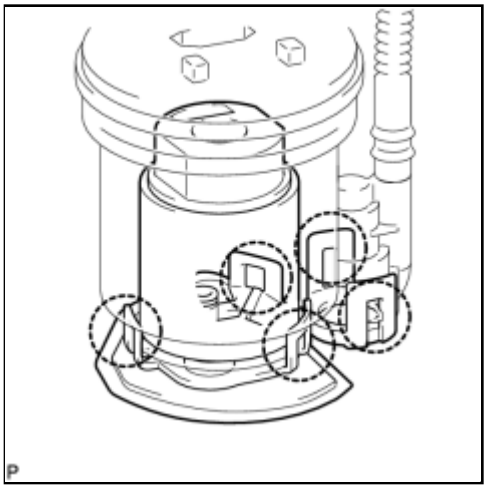

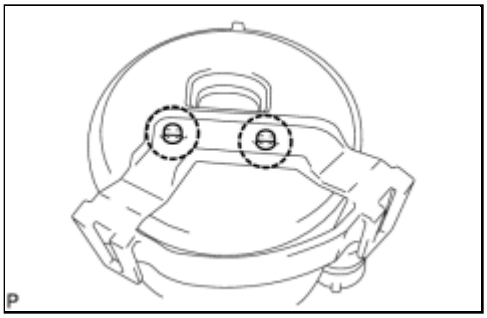

(e) Engage the 2 claws of the No. 1 fuel suction support.

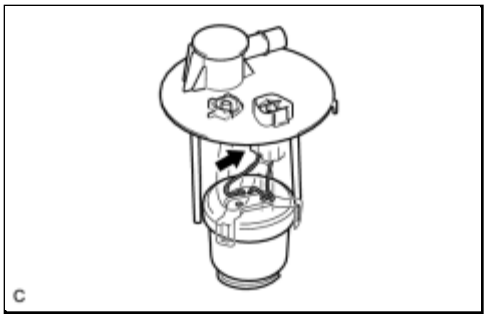

(f) Connect the fuel pump harness connector.

(g) Engage the 2 claws and install a new E-ring and fuel pump sub-tank.

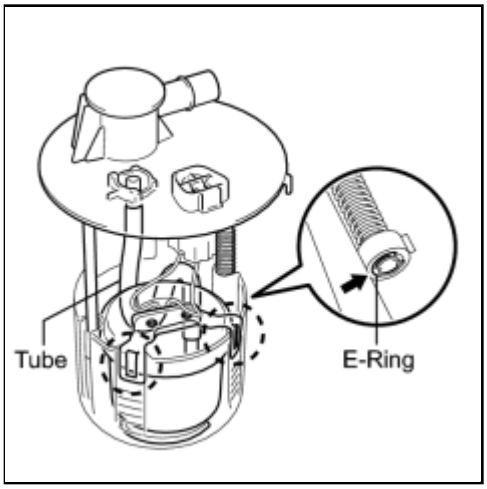

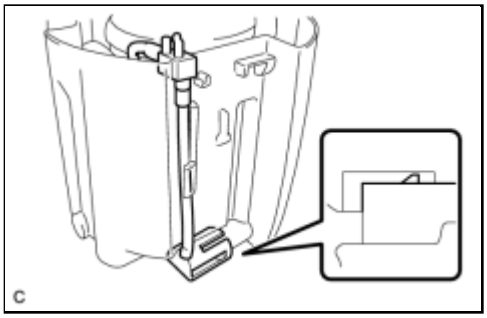

(h) Align the groove of the fuel pump filter hose with the cutout of the fuel sub-tank and install the hose.

2. INSTALL FUEL SENDER GAUGE ASSEMBLY INFO

Last Modified: 3-10-2010	6.4 A	**From:** 200901
Model Year: 2010	**Model:** Corolla	**Doc ID:** RM0000022XU01UX
Title: 2AZ-FE FUEL: FUEL PUMP: INSTALLATION (2010 Corolla)		

INSTALLATION

1. INSTALL FUEL SUCTION TUBE ASSEMBLY WITH PUMP AND GAUGE

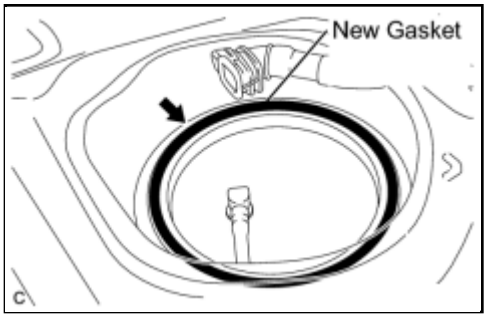

(a) Install a new gasket onto the fuel tank.

(b) Set the fuel suction tube assembly to the fuel tank.

NOTICE:

Make sure that the fuel sender gauge arm does not bend.

2. INSTALL FUEL PUMP GAUGE RETAINER

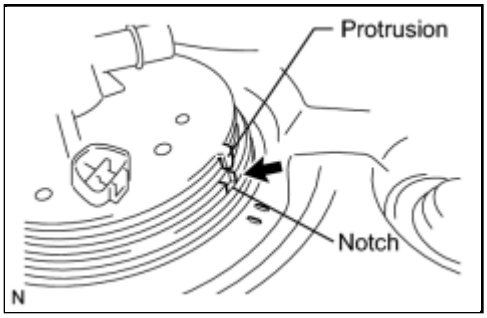

(a) Align the protrusion of the fuel suction tube assembly with the notch of the fuel tank.

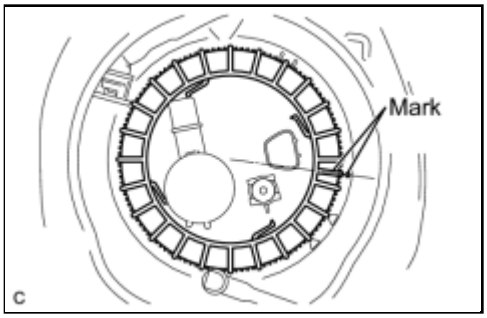

(b) While holding the fuel suction tube assembly by hand, align the marks of a new fuel pump gauge retainer and fuel tank as shown in the illustration, then install the fuel pump gauge retainer.

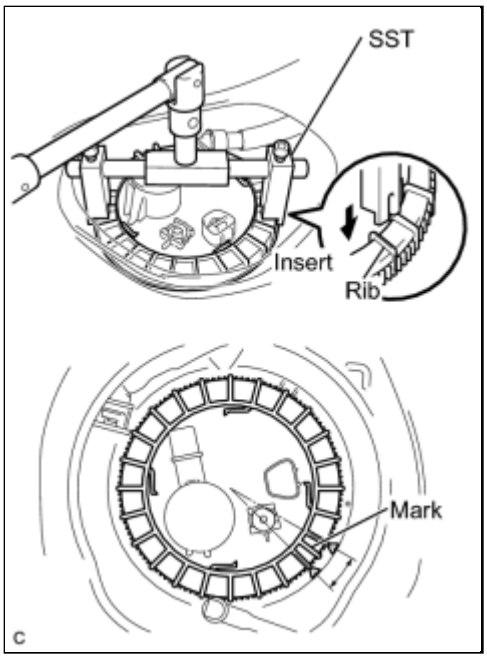

(c) Using SST and your hand, tighten the fuel pump gauge retainer 2 revolutions so that the mark of the retainer comes within the range shown in the illustration.

SST: 09808-14020

09808-01410

09808-01420

09808-01430

NOTICE:

Use SST. Do not use any other tools such as a screwdriver.

HINT:

Insert the notch of SST into the rib of the fuel pump gauge retainer.

3. INSTALL FUEL TANK VENT HOSE

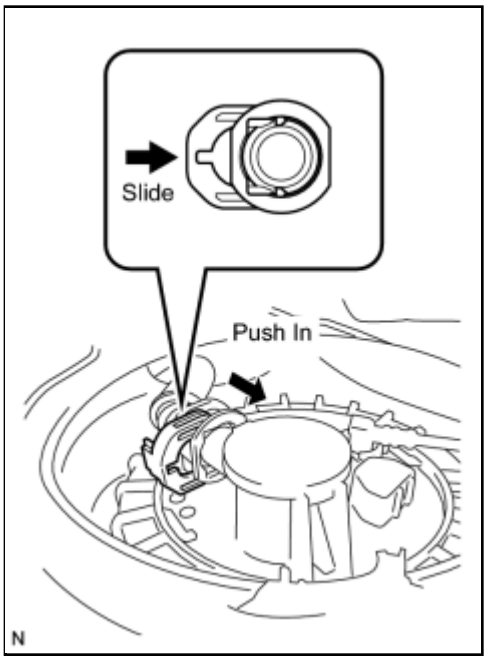

(a) Connect the fuel tank vent hose.

(1) Align the fuel tank vent connector with the pipe, then push in the fuel tank vent connector until the retainer makes a "click" sound to connect the fuel tank vent hose to the fuel suction plate.

NOTICE:

- Check that there are no scratches or foreign objects around the connecting surfaces of the fuel tank vent connector and pipe before performing this work.
- After connecting the fuel tank vent hose, check that the fuel tank vent hose is securely connected by pulling on the quick connector.

4. INSTALL FUEL TANK MAIN TUBE SUB-ASSEMBLY

(a) Connect the fuel tank main tube.

(1) Push the fuel tube joint in the plug of the fuel suction plate, then install the tube joint clip.

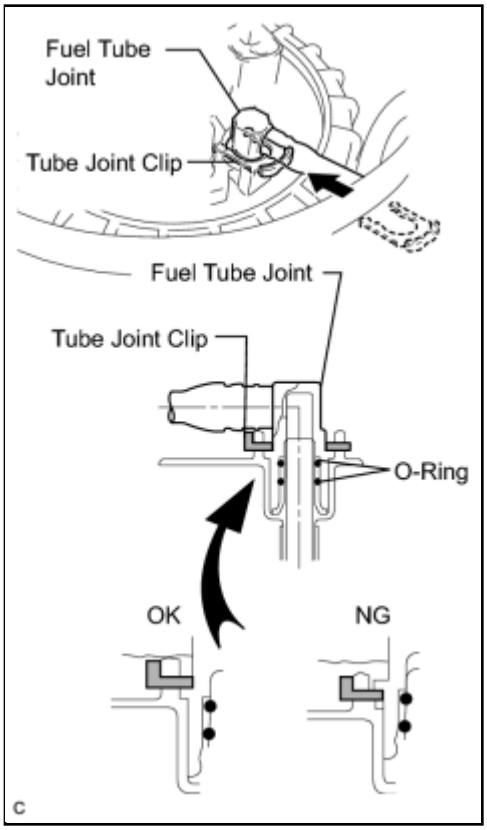

NOTICE:

- Check that there are no scratches or foreign objects around the connecting surfaces of the fuel tube joint and plug before performing this work.
- Check that the fuel tube joint is securely inserted to the end.
- Check that the tube joint clip is on the collar of the fuel tube joint.
- After installing the tube joint clip, check that the fuel tank main tube cannot be pulled out.

5. CONNECT CABLE TO NEGATIVE BATTERY TERMINAL INFO

6. INSPECT FOR FUEL LEAK INFO

7. INSTALL REAR FLOOR SERVICE HOLE COVER

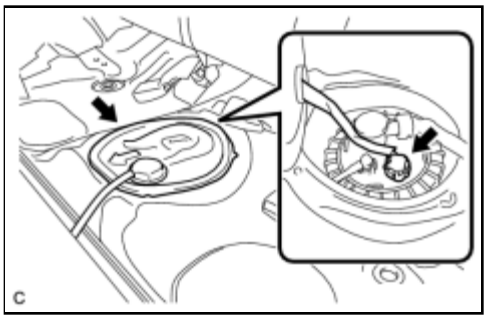

(a) Connect the fuel pump connector.

(b) Install the rear floor service hole cover.

8. INSTALL REAR SEAT CUSHION ASSEMBLY INFO

Last Modified: 3-10-2010	6.4 K	**From:** 200901
Model Year: 2010	**Model:** Corolla	**Doc ID:** RM0000022XW00ZX
Title: 2ZR-FE FUEL: FUEL PUMP: COMPONENTS (2010 Corolla)		

COMPONENTS

ILLUSTRATION

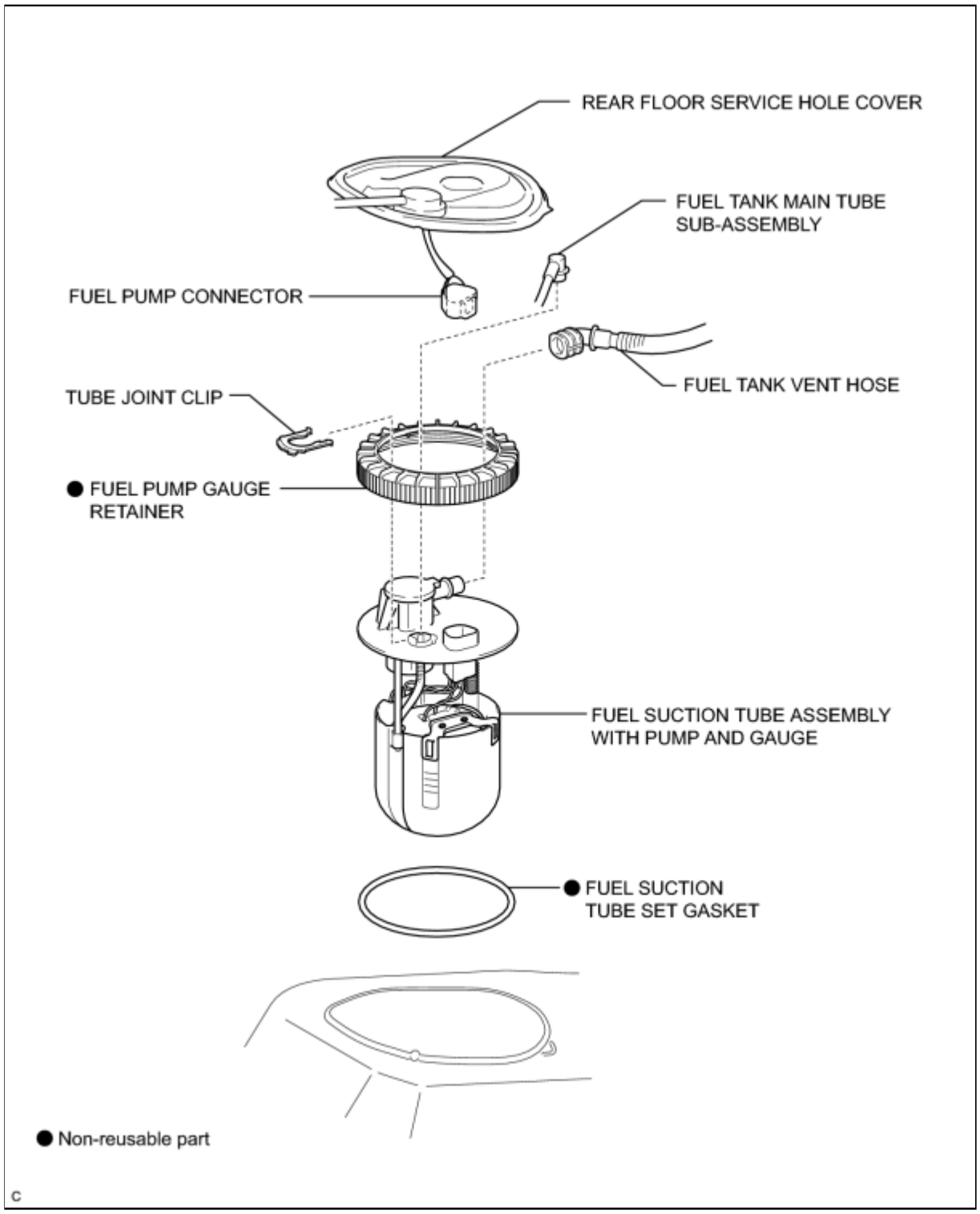

ILLUSTRATION

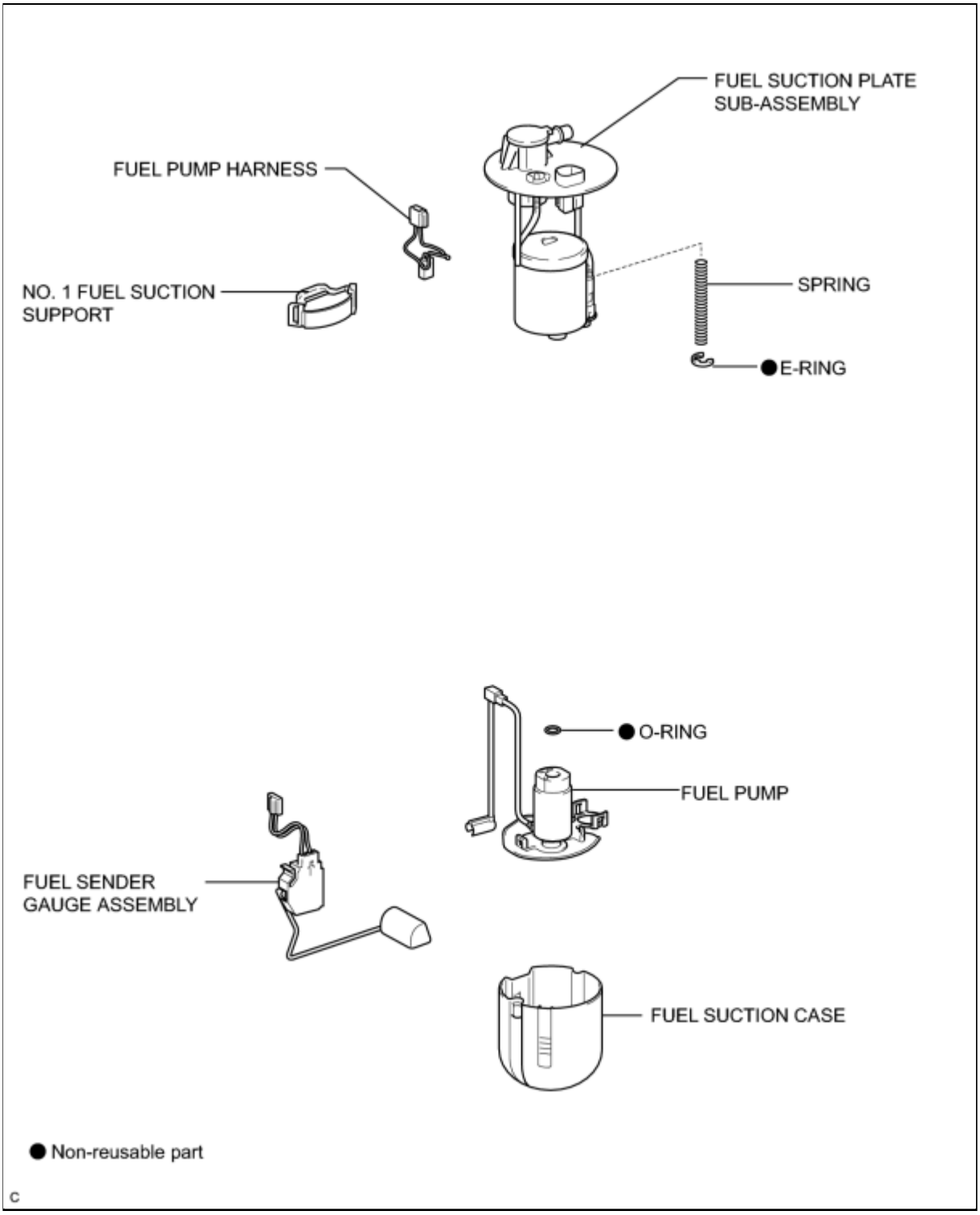

Last Modified: 3-10-2010	6.4 A	**From:** 200901
Model Year: 2010	**Model:** Corolla	**Doc ID:** RM0000022XX01TX
Title: 2ZR-FE FUEL: FUEL PUMP: REMOVAL (2010 Corolla)		

REMOVAL

1. REMOVE REAR SEAT CUSHION ASSEMBLY INFO

2. REMOVE REAR FLOOR SERVICE HOLE COVER

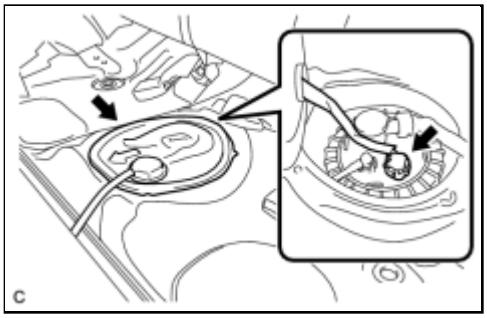

(a) Remove the rear floor service hole cover.

(b) Disconnect the connector from the fuel suction tube assembly.

3. DISCHARGE FUEL SYSTEM PRESSURE

(a) Start the engine. After the engine stops naturally, turn the ignition switch off.

HINT:

DTC P0171/25 (system too lean) may be set.

(b) Crank the engine again and make sure that the engine does not start.

(c) Remove the fuel tank cap and discharge the pressure from the fuel tank.

4. DISCONNECT CABLE FROM NEGATIVE BATTERY TERMINAL

5. DISCONNECT FUEL TANK MAIN TUBE SUB-ASSEMBLY

(a) Remove the tube joint clip, then pull the fuel tube joint out of the plug of the fuel suction tube assembly.

NOTICE:

- Check that there is no dirt or other foreign objects around the fuel tube joint before disconnecting it. Clean the joint if necessary.
- It is necessary to prevent mud or dirt from entering the joint. If mud or dirt gets in the joint, the O-rings may not seal properly.
- Only disconnect the joint by hand.
- Do not bend, kink or twist the nylon tubes.
- Protect the contact surfaces by covering it with a plastic

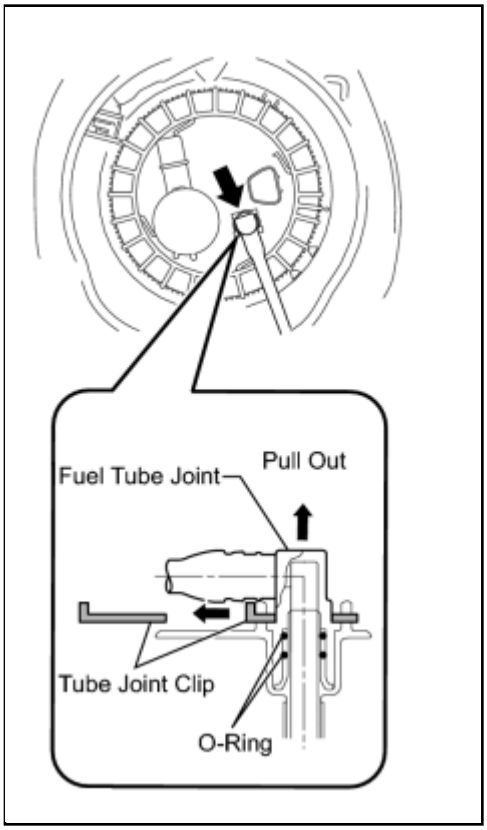

bag.

6. DISCONNECT FUEL TANK VENT HOSE

(a) Disconnect the fuel tank vent hose.

(1) Pinch the retainer and pull the fuel tank vent connector out of the fuel tank to disconnect the fuel tank vent hose from the fuel suction plate.

NOTICE:

- Check that there is no dirt or other foreign objects around the connector before disconnecting it. Clean the connector if necessary.
- It is necessary to prevent mud or dirt from entering the connector. If mud or dirt gets in the connector, the O-rings may not seal properly.
- Only disconnect the quick connector by hand.
- Do not bend, kink or twist the nylon tubes.
- Protect the connector by covering it with a plastic bag.
- If the pipe and connector are stuck, carefully try wiggling or pushing and pulling on the connector to release it. Pull the connector off the pipe carefully.

7. REMOVE FUEL PUMP GAUGE RETAINER

(a) Using a 6 mm socket hexagon wrench, set SST to the fuel pump gauge retainer.

SST: 09808-14020

09808-01410
09808-01420
09808-01430

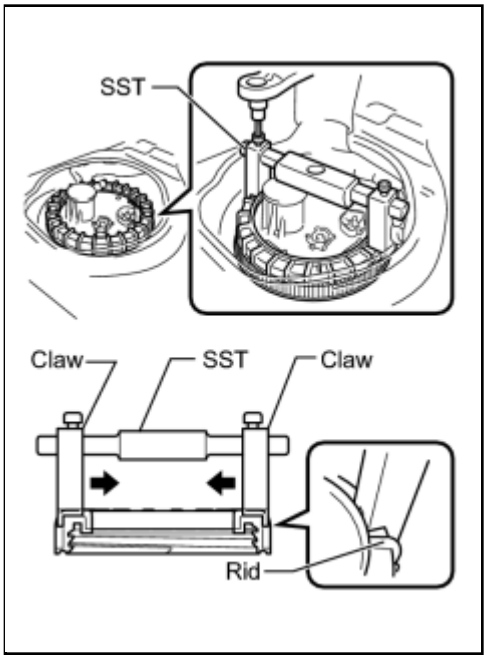

HINT:

- Engage the SST claws securely with the fuel pump gauge retainer ribs to secure SST.
- Install SST while pressing the SST claws toward the fuel pump gauge retainer (towards the center of SST).

(b) Using SST, loosen the fuel pump gauge retainer.

SST: 09808-14020

09808-01410
09808-01420
09808-01430

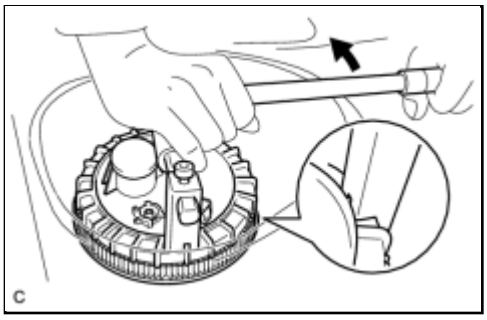

NOTICE:

- Do not use any tools other than specified in this operation. Damage to the fuel pump gauge retainer or the fuel tank.
- Loosen the retainer by turning it counterclockwise while holding SST down. Do not allow the claw of the tank suction tube support to slip out of its groove on the fuel tank.

HINT:

The ribs on the fuel pump gauge retainer can be fitted into the tips of SST.

(c) Remove the fuel pump gauge retainer while holding the fuel suction tube assembly by hand.

8. REMOVE FUEL SUCTION TUBE ASSEMBLY WITH PUMP AND GAUGE

(a) Remove the fuel suction tube assembly with pump and gauge from the fuel tank.

NOTICE:

Make sure that the fuel sender gauge arm does not bend.

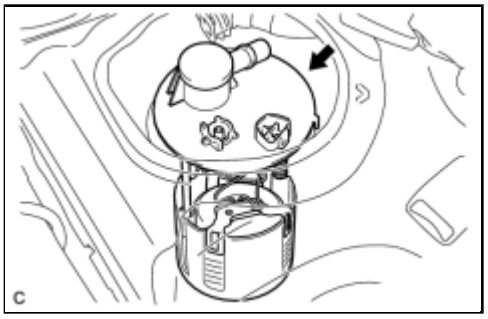

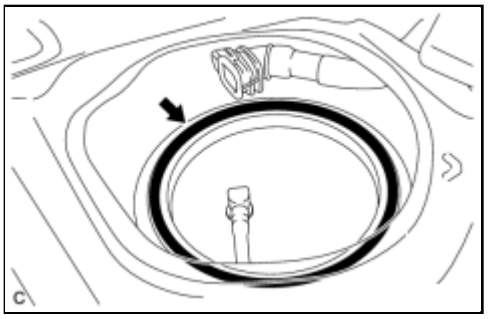

(b) Remove the gasket from the fuel tank.

Last Modified: 3-10-2010	6.4 A	**From:** 200901
Model Year: 2010	**Model:** Corolla	**Doc ID:** RM000000SL902XX
Title: 2ZR-FE FUEL: FUEL PUMP: DISASSEMBLY (2010 Corolla)		

DISASSEMBLY

1. REMOVE FUEL SENDER GAUGE ASSEMBLY INFO

2. REMOVE FUEL PUMP

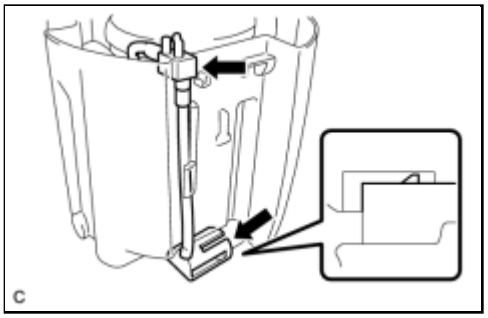

(a) Release the claw and disconnect the fuel pump filter hose.

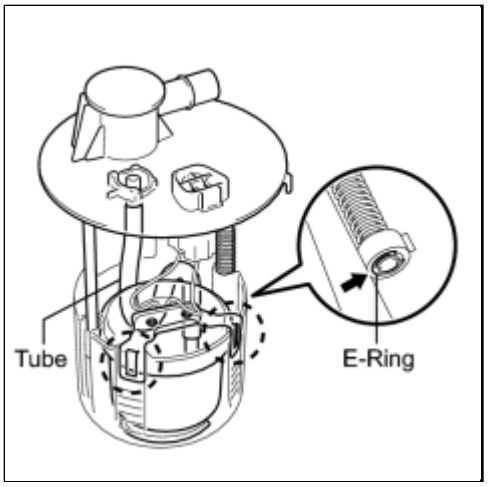

(b) Remove the E-ring and separate the 2 claws, then remove the fuel pump sub-tank.

NOTICE:

Do not separate the tube indicated in the illustration INFO **.**

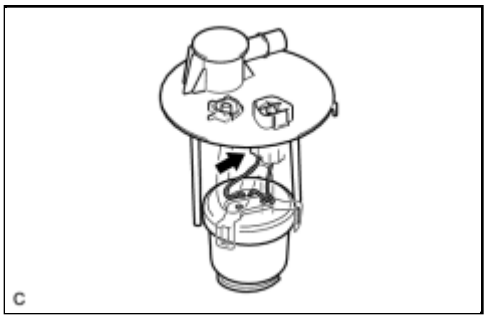

(c) Disconnect the fuel pump harness connector.

NOTICE:

Do not damage the wire harness.

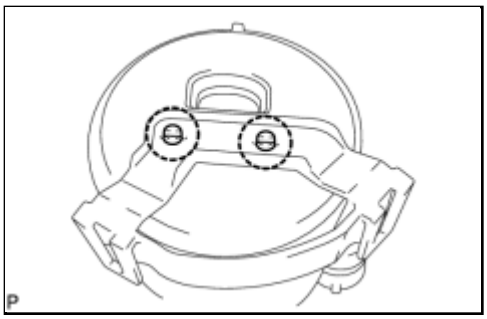

(d) Using a screwdriver with its tip wrapped in protective tape, disengage the 2 claws and remove the No. 1 fuel suction support.

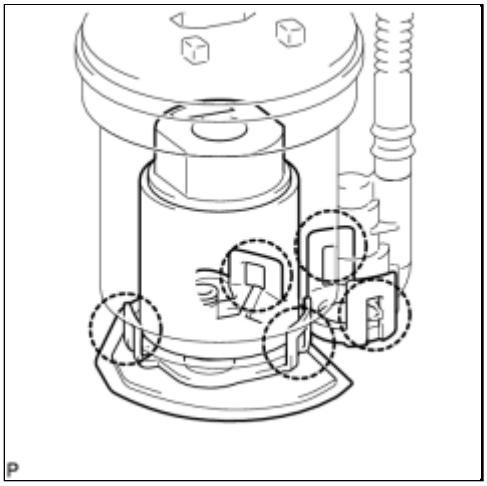

(e) Using a screwdriver with its tip wrapped in protective tape, disengage the 5 claws, and remove the fuel pump filter and fuel pump from the fuel filter.

NOTICE:

- Do not damage the fuel pump filter.
- Do not remove the suction filter.
- Do not use either the fuel pump or the suction filter if the suction filter is removed from the fuel pump.

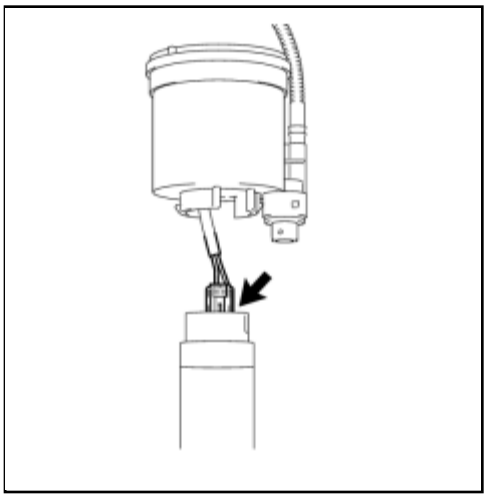

(f) Disconnect the fuel pump harness connector.

(g) Remove the O-ring from the fuel pump.

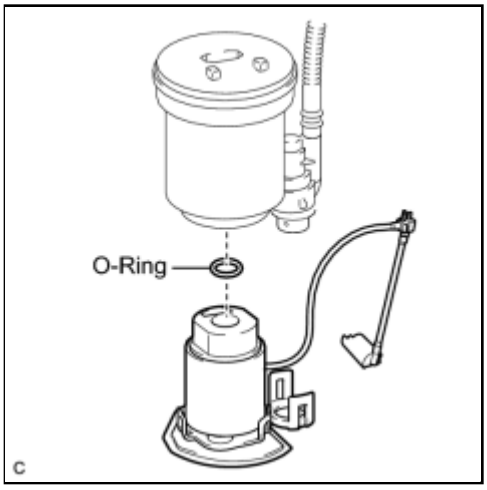
O-Ring
C

Last Modified: 3-10-2010	6.4 G	**From:** 200901
Model Year: 2010	**Model:** Corolla	**Doc ID:** RM0000022XV010X
Title: 2ZR-FE FUEL: FUEL PUMP: INSPECTION (2010 Corolla)		

INSPECTION

1. INSPECT FUEL PUMP

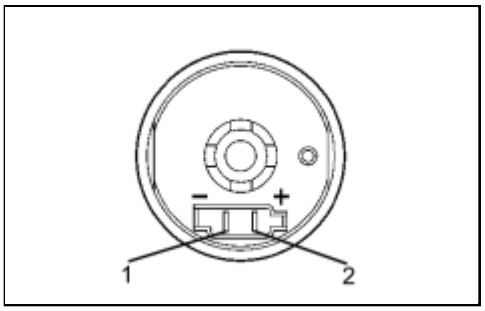

(a) Check the resistance.

(1) Using an ohmmeter, measure the resistance between the terminals.

Standard Resistance:

TESTER CONNECTION	SPECIFIED CONDITION
1 - 2	0.2 to 3.0 Ω at 20°C (68°F)

If the result is not as specified, replace the fuel pump.

(b) Check the operation.

(1) Apply battery voltage to both terminals. Check that the pump operates.

NOTICE:

- These tests must be done quickly (within 10 seconds) to prevent the coil from burning out.
- Keep the fuel pump as far away from the battery as possible.
- Always do the switching at the battery side.

If the motor does not operate, replace the fuel pump.

Last Modified: 3-10-2010	6.4 A	**From:** 200901
Model Year: 2010	**Model:** Corolla	**Doc ID:** RM000000SLA02VX
Title: 2ZR-FE FUEL: FUEL PUMP: REASSEMBLY (2010 Corolla)		

REASSEMBLY

1. INSTALL FUEL PUMP

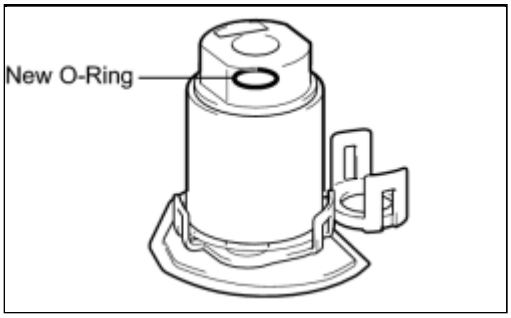

(a) Apply a light coat of gasoline or spindle oil to a new O-ring, then install it into the fuel pump.

NOTICE:

Do not disassemble the fuel pump and the suction filter. Doing so will cause the fuel pump to be non-reusable.

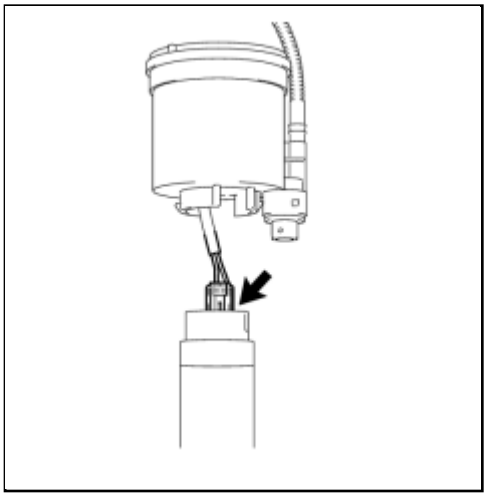

(b) Connect the fuel pump harness connector.

(c) Apply a light coat of gasoline or spindle oil to the O-ring of the fuel pump again.

(d) Engage the 5 claws, and install the fuel pump filter onto the fuel filter.

NOTICE:

Make sure that the O-ring is not cracked or does not jump out of position during installation.

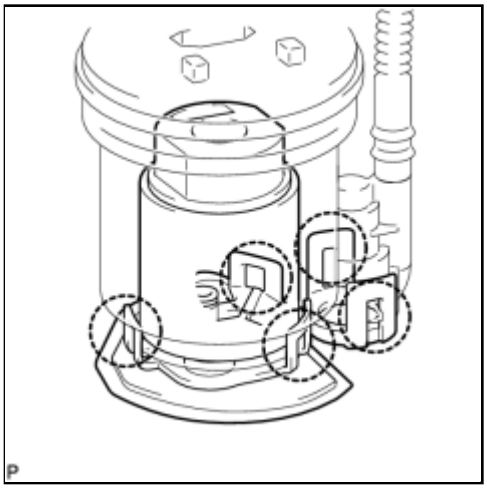

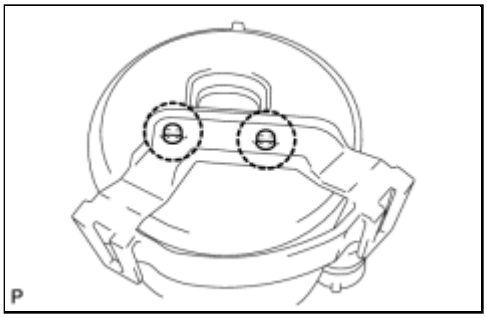

(e) Engage the 2 claws of the No. 1 fuel suction support.

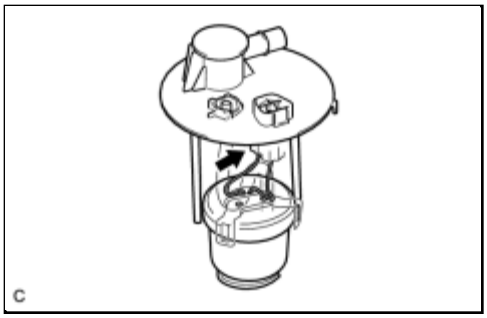

(f) Connect the fuel pump harness connector.

(g) Engage the 2 claws and install a new E-ring and fuel pump sub-tank.

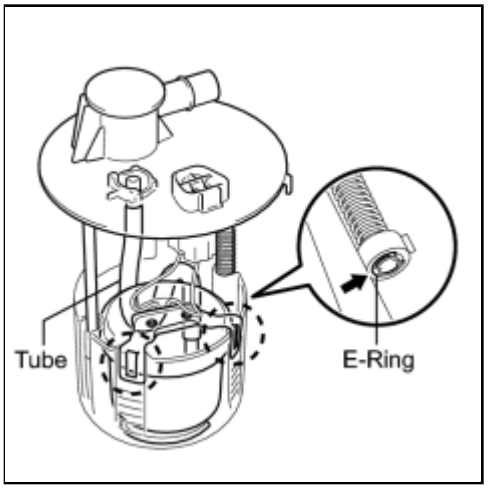

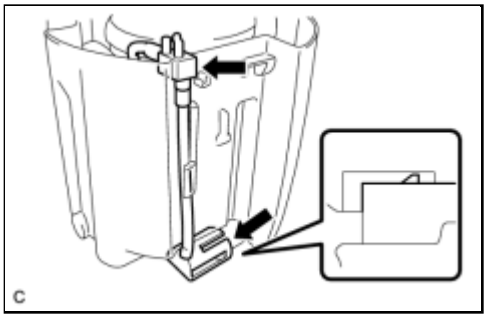

(h) Align the groove of the fuel pump filter hose with the cutout of the fuel sub-tank and install the hose.

NOTICE:

Do not apply excessive force to the fuel tube or the suction support.

(i) Connect the connector of the fuel pump harness.

2. INSTALL FUEL SENDER GAUGE ASSEMBLY INFO

Last Modified: 3-10-2010	6.4 A	**From:** 200901
Model Year: 2010	**Model:** Corolla	**Doc ID:** RM0000022XU01TX
Title: 2ZR-FE FUEL: FUEL PUMP: INSTALLATION (2010 Corolla)		

INSTALLATION

1. INSTALL FUEL SUCTION TUBE ASSEMBLY WITH PUMP AND GAUGE

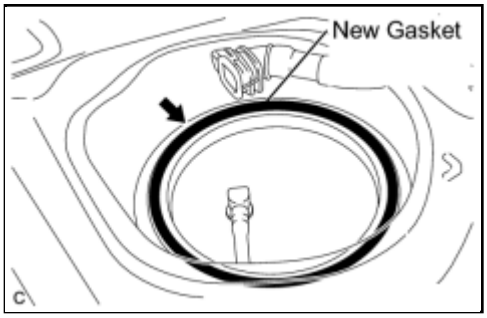

(a) Install a new gasket onto the fuel tank.

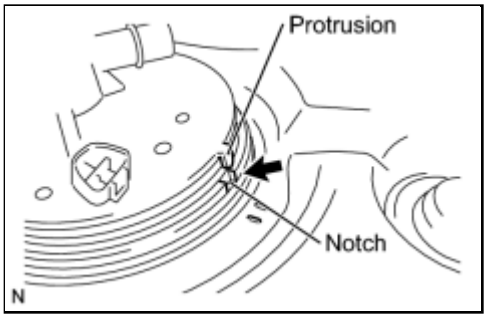

(b) Set the fuel suction tube assembly with pump and gauge to the fuel tank.

NOTICE:

Make sure that the fuel sender gauge arm does not bend.

2. INSTALL FUEL PUMP GAUGE RETAINER

(a) Align the protrusion of the fuel suction tube with the notch of the fuel tank.

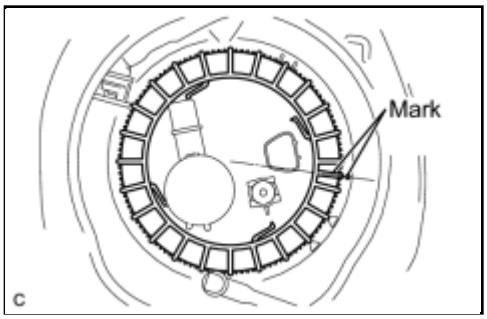

(b) While holding the fuel suction tube assembly by hand to prevent it from tilting, align the starting marks on the fuel pump gauge retainer and fuel tank and tighten the fuel pump gauge retainer.

(c) Using SST and your hand, tighten the fuel pump gauge retainer 2 revolutions so that the mark of the retainer

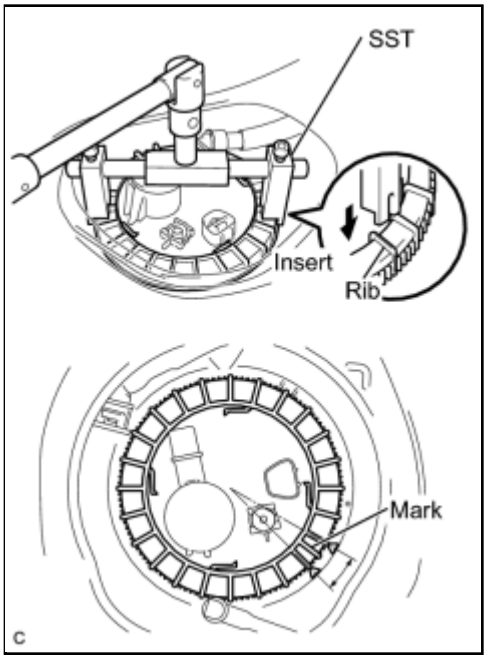

comes within the range shown in the illustration.

SST: 09808-14020

09808-01410
09808-01420
09808-01430

NOTICE:

Use SST. Do not use any other tools such as a screwdriver.

HINT:

Insert the notch of SST into the rib of the fuel pump gauge retainer.

3. CONNECT FUEL TANK VENT HOSE

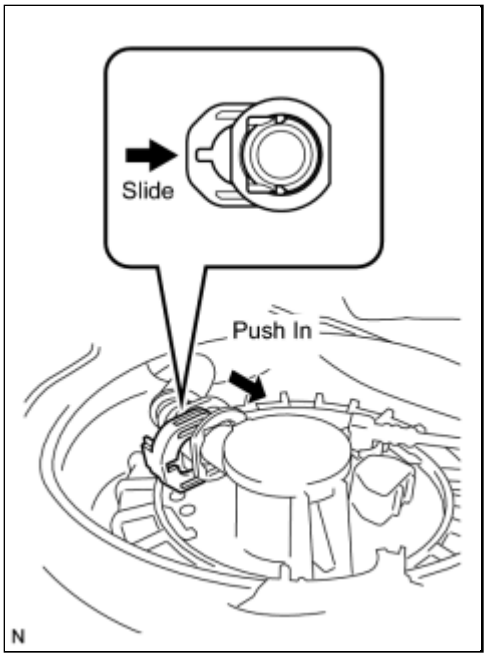

(a) Connect the fuel tank vent hose.

(1) Align the fuel tank vent connector with the pipe, then push in the fuel tank vent connector until the retainer makes a "click" sound to connect the fuel tank vent hose to the fuel suction plate.

NOTICE:

- Check that there are no scratches or foreign objects around the connecting surfaces of the fuel tank vent connector and pipe before performing this work.
- After connecting the fuel tank vent hose, check that the fuel tank vent hose is securely connected by pulling on the quick connector.

4. CONNECT FUEL TANK MAIN TUBE SUB-ASSEMBLY

(a) Connect the fuel tank main tube.

(1) Push the fuel tube joint in the plug of the fuel suction plate, then install the tube joint clip.

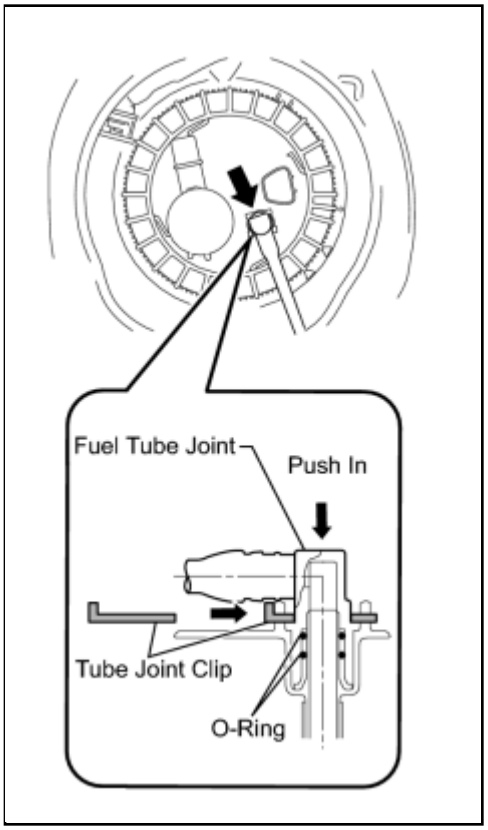

NOTICE:

- Check that there are no scratches or foreign objects around the connecting surfaces of the fuel tube joint and plug before performing this work.
- Check that the fuel tube joint is securely inserted to the end.
- Check that the tube joint clip is on the collar of the fuel tube joint.
- After installing the tube joint clip, check that the fuel tank main tube cannot be pulled out.

5. CONNECT CABLE TO NEGATIVE BATTERY TERMINAL INFO

6. INSPECT FOR FUEL LEAK INFO

7. INSTALL REAR FLOOR SERVICE HOLE COVER

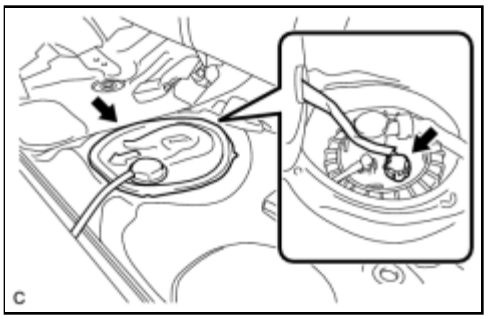

(a) Connect the fuel pump connector.

(b) Install the rear floor service hole cover.

8. INSTALL REAR SEAT CUSHION ASSEMBLY INFO

Last Modified: 3-10-2010	6.4 K	**From:** 200901
Model Year: 2010	**Model:** Corolla	**Doc ID:** RM0000030P400VX
Title: 2AZ-FE FUEL: FUEL SENDER GAUGE ASSEMBLY: COMPONENTS (2010 Corolla)		

COMPONENTS

ILLUSTRATION

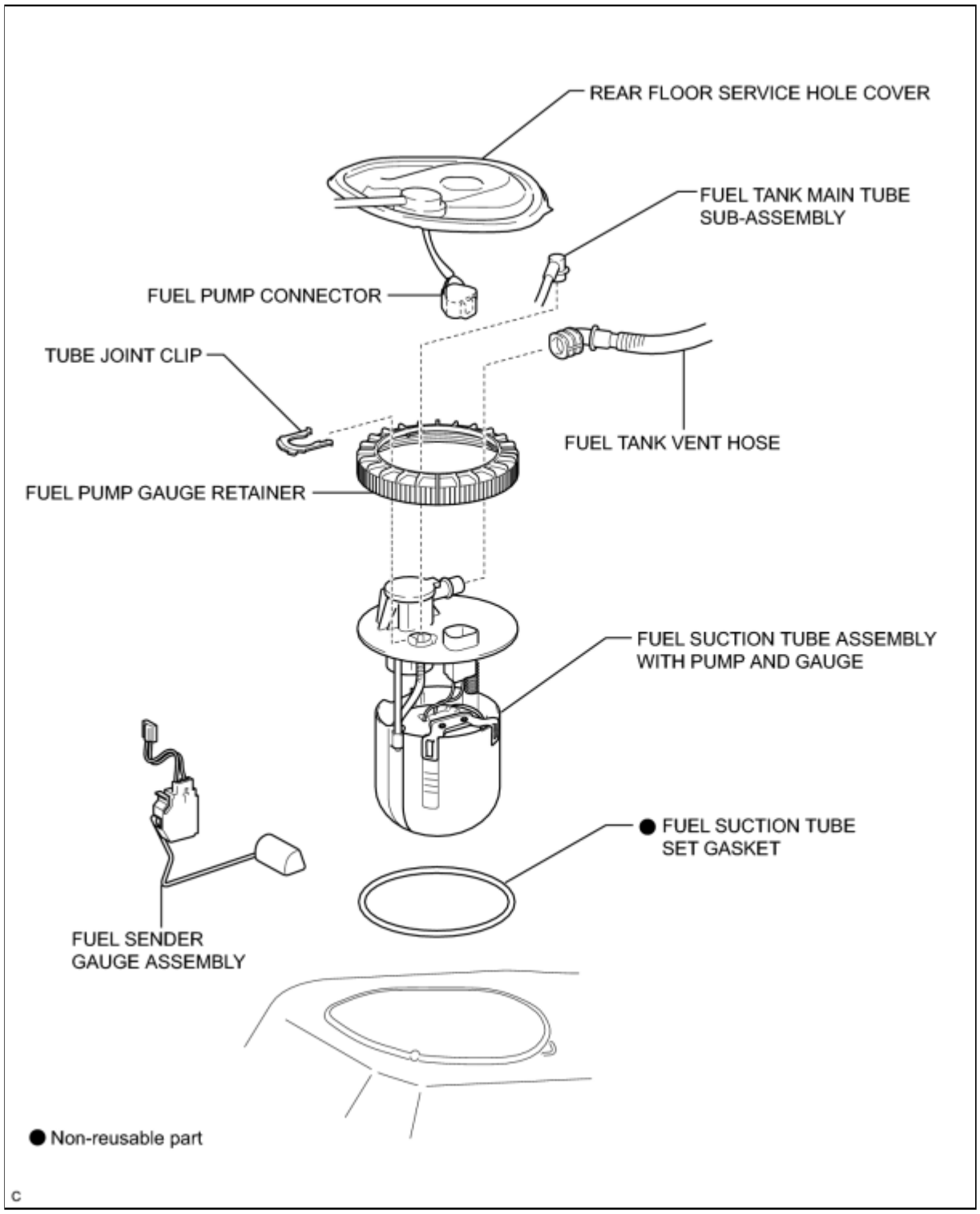

Last Modified: 3-10-2010	6.4 A	**From:** 200901
Model Year: 2010	**Model:** Corolla	**Doc ID:** RM0000030P500YX
Title: 2AZ-FE FUEL: FUEL SENDER GAUGE ASSEMBLY: REMOVAL (2010 Corolla)		

REMOVAL

1. DISCHARGE FUEL SYSTEM PRESSURE INFO

2. DISCONNECT CABLE FROM NEGATIVE BATTERY TERMINAL

3. REMOVE FUEL SUCTION TUBE ASSEMBLY WITH PUMP AND GAUGE

(a) Remove the fuel suction tube assembly with pump and gauge from the fuel tank INFO .

4. REMOVE FUEL SENDER GAUGE ASSEMBLY

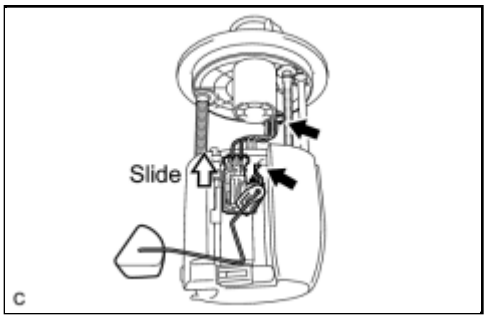

(a) Disconnect the fuel sender gauge connector.

NOTICE:

Do not damage the wire harness.

(b) Release the lock and slide the fuel sender gauge assembly to remove it.

NOTICE:

Make sure that the fuel sender gauge arm does not bend.

Last Modified: 3-10-2010	6.4 G	**From:** 200901
Model Year: 2010	**Model:** Corolla	**Doc ID:** RM0000030P300YX
Title: 2AZ-FE FUEL: FUEL SENDER GAUGE ASSEMBLY: INSPECTION (2010 Corolla)		

INSPECTION

1. INSPECT FUEL SENDER GAUGE ASSEMBLY

(a) Check that the float moves smoothly between F and E.

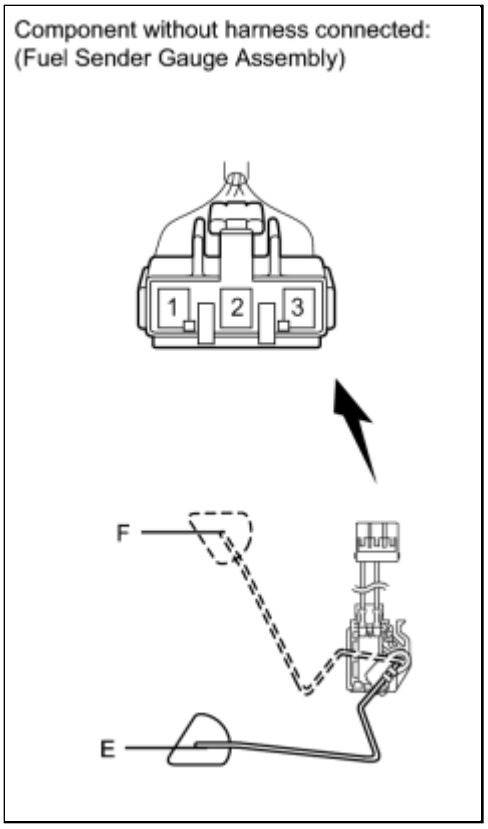

(b) Measure the resistance between terminals 1 and 2 of the connector according to the value(s) in the table below.

Standard Resistance:

FLOAT LEVEL	RESISTANCE (Ω)
F	13.5 to 16.5
Between E and F	13.5 to 414.5 (Gradually changes)
E	405.5 to 414.5

If the value is not as specified, replace the fuel sender gauge assembly.

Last Modified: 3-10-2010	6.4 A	**From:** 200901
Model Year: 2010	**Model:** Corolla	**Doc ID:** RM0000030P200YX
Title: 2AZ-FE FUEL: FUEL SENDER GAUGE ASSEMBLY: INSTALLATION (2010 Corolla)		

INSTALLATION

1. INSTALL FUEL SENDER GAUGE ASSEMBLY

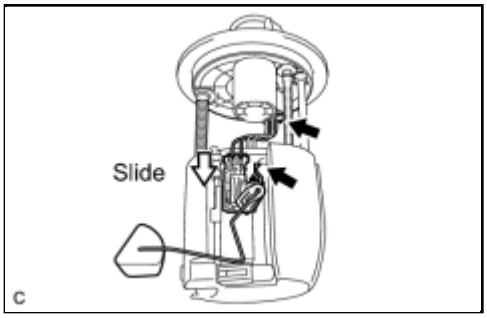

(a) Install the fuel sender gauge assembly by sliding it downward.

NOTICE:

Make sure that the fuel sender gauge arm does not bend.

(b) Connect the connector of the fuel sender gauge assembly.

NOTICE:

Do not damage the wire harness.

2. INSTALL FUEL SUCTION TUBE ASSEMBLY WITH PUMP AND GAUGE

(a) Install the fuel suction tube assembly with pump and gauge to the fuel tank INFO .

3. CONNECT CABLE TO NEGATIVE BATTERY TERMINAL INFO

4. INSPECT FOR FUEL LEAK INFO

Last Modified: 3-10-2010	6.4 K	**From:** 200901
Model Year: 2010	**Model:** Corolla	**Doc ID:** RM0000030P400UX
Title: 2ZR-FE FUEL: FUEL SENDER GAUGE ASSEMBLY: COMPONENTS (2010 Corolla)		

COMPONENTS

ILLUSTRATION

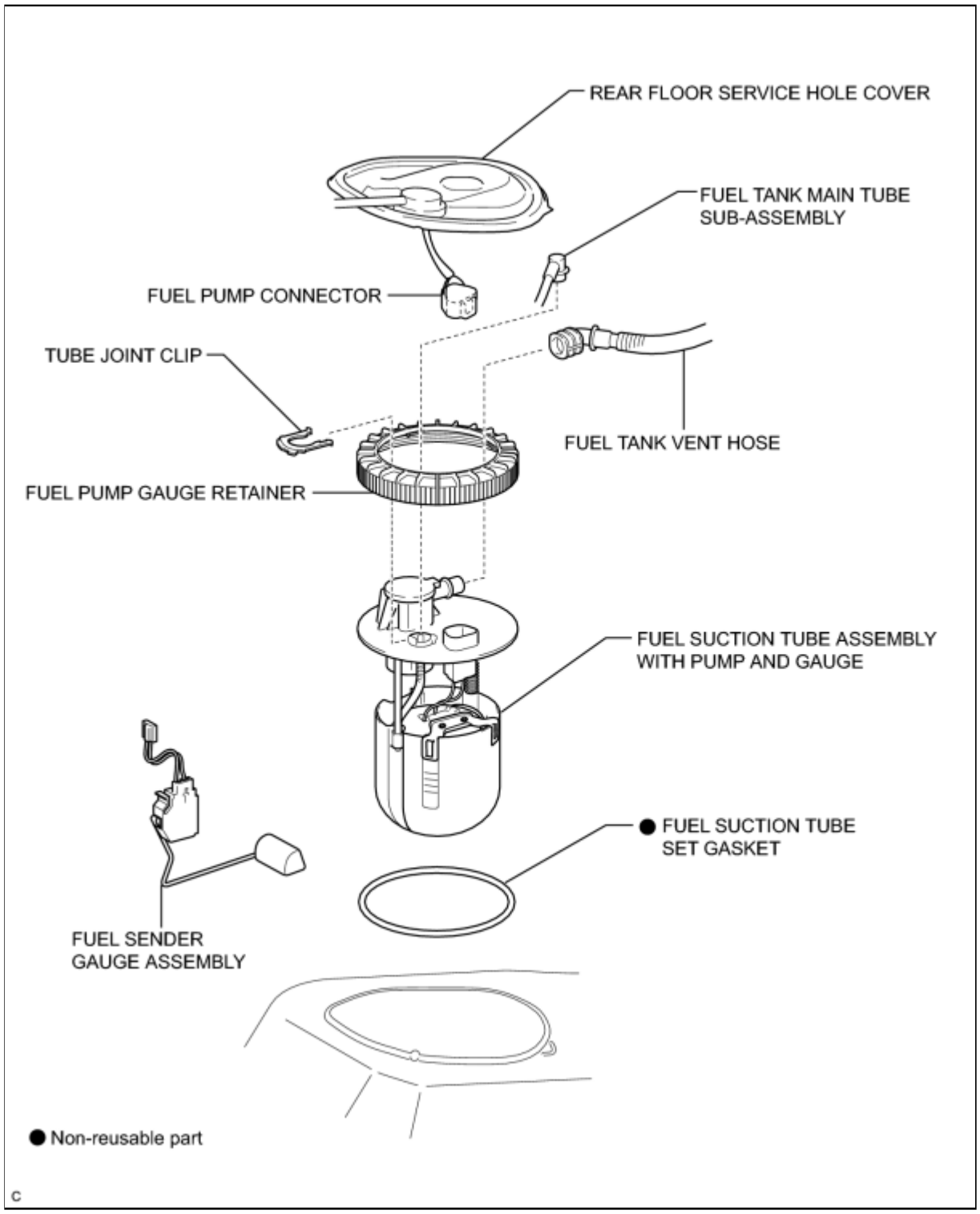

Last Modified: 3-10-2010	6.4 A	**From:** 200901
Model Year: 2010	**Model:** Corolla	**Doc ID:** RM0000030P500XX
Title: 2ZR-FE FUEL: FUEL SENDER GAUGE ASSEMBLY: REMOVAL (2010 Corolla)		

REMOVAL

1. DISCHARGE FUEL SYSTEM PRESSURE INFO

2. DISCONNECT CABLE FROM NEGATIVE BATTERY TERMINAL

3. REMOVE FUEL SUCTION TUBE ASSEMBLY WITH PUMP AND GAUGE

(a) Remove the fuel suction tube assembly with pump and gauge INFO .

4. REMOVE FUEL SENDER GAUGE ASSEMBLY

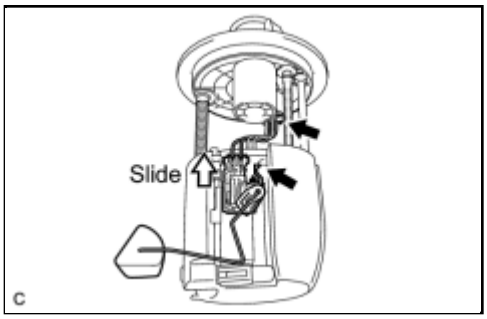

(a) Disconnect the fuel sender gauge connector.

NOTICE:

Do not damage the wire harness.

(b) Release the lock and slide the fuel sender gauge assembly to remove it.

NOTICE:

Make sure that the fuel sender gauge arm does not bend.

Last Modified: 3-10-2010	6.4 L	**From:** 200901
Model Year: 2010	**Model:** Corolla	**Doc ID:** RM000001EEY01QX
Title: 2AZ-FE FUEL: FUEL SYSTEM: PRECAUTION (2010 Corolla)		

PRECAUTION

1. PRECAUTIONS

(a) Before inspecting and repairing the fuel system, disconnect the cable from the negative (-) battery terminal.

(b) Do not smoke or work near open flame when handling the fuel system.

(c) Keep gasoline away from rubber or leather parts.

2. DISCHARGE FUEL SYSTEM PRESSURE

CAUTION:

- Perform the following procedure to prevent fuel from spilling out before removing any fuel system parts.
- Pressure will still remain in the fuel lines even after performing the following procedure. When disconnecting a fuel line, cover it with a piece of cloth to prevent fuel from spraying or coming out.

(a) Remove the rear seat cushion assembly INFO .

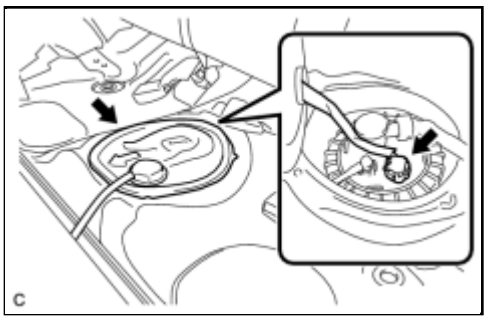

(b) Remove the rear floor service hole cover.

(c) Disconnect the connector from the fuel pump assembly.

(d) Start the engine. After the engine stops naturally, turn the ignition switch off.

NOTICE:

Do not increase engine speed or drive the vehicle while waiting for the engine to stop naturally.

HINT:

DTC P0171/25 (system too lean) may be set.

(e) Crank the engine again and make sure that the engine does not start.

(f) Remove the fuel tank cap and discharge the pressure from the fuel tank.

(g) Disconnect the cable from the negative (-) battery terminal.

(h) Connect the connector of the fuel pump assembly.

(i) Install the rear floor service hole cover.

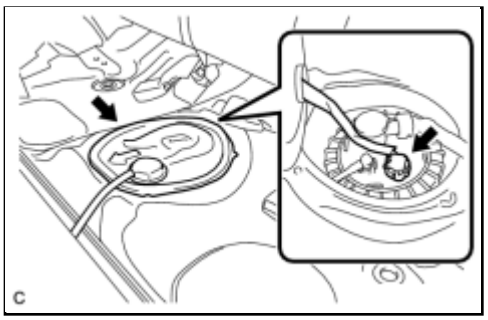

(j) Install the rear seat cushion assembly INFO .

3. FUEL LINE

(a) When disconnecting a high-pressure fuel line, a large amount of gasoline will spray out. Perform the following procedure:

(1) Discharge fuel system pressure.

(2) Disconnect the fuel tube.

(3) Drain the fuel remaining inside the fuel pump tube into a container.

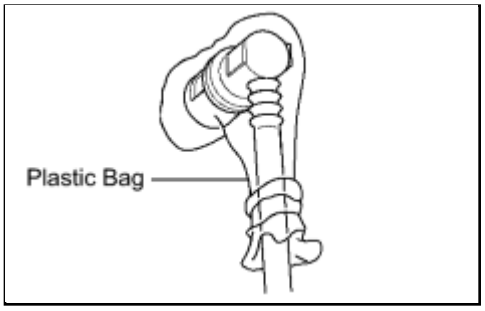

(4) Cover the disconnected pipe and connector with a plastic bag to prevent to damage and contamination.

(b) Perform the following procedure when disconnecting a fuel delivery pipe (metallic type):

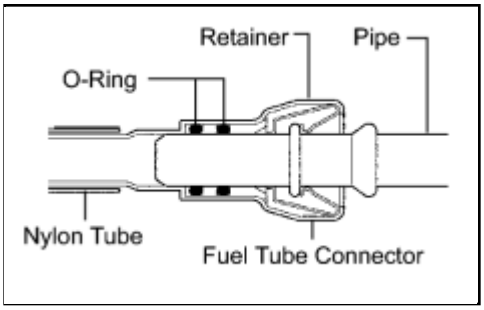

HINT:

The structure of a fuel tube connector is as shown in the illustration.

(1) Check if there is any damage or foreign objects on the pipe connections.

(2) Remove the No. 2 fuel pipe clamp.

NOTICE:

Do not reuse the fuel pipe clamp.

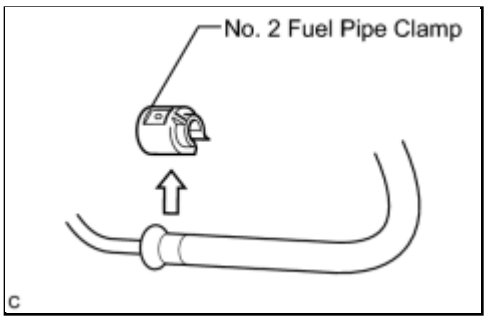

(3) Find the metallic connector of the fuel tube assembly.

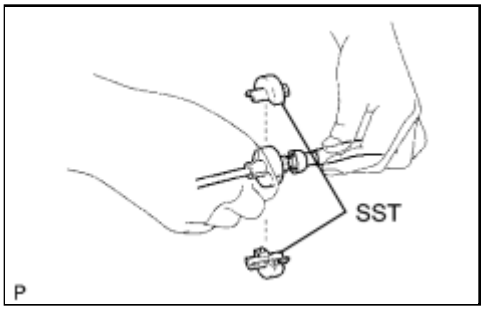

(4) Assemble SST to the connector as shown in the illustration.

SST: 09268-21010

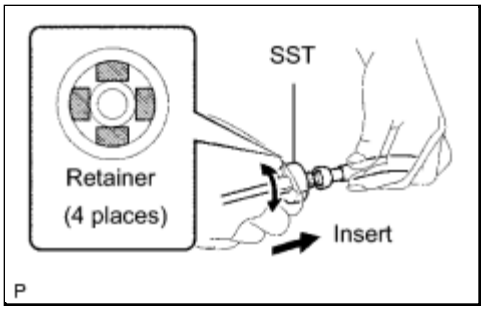

(5) Turn SST, align the retainers inside the connector with the SST chamfers and insert SST into the connector.

(6) Slide SST and the connector together towards the fuel tube assembly.

(c) Perform the following procedure when connecting a fuel tube connector (metallic type):

(1) Check if there is any damage or foreign objects on the pipe connections.

(2) Match the axis of the connector with the axis of the pipe, and push the pipe into the connector until the connector makes a "click" sound. If the pipe is difficult to push into the connector, apply a small amount of clean engine oil to the tip of the pipe.

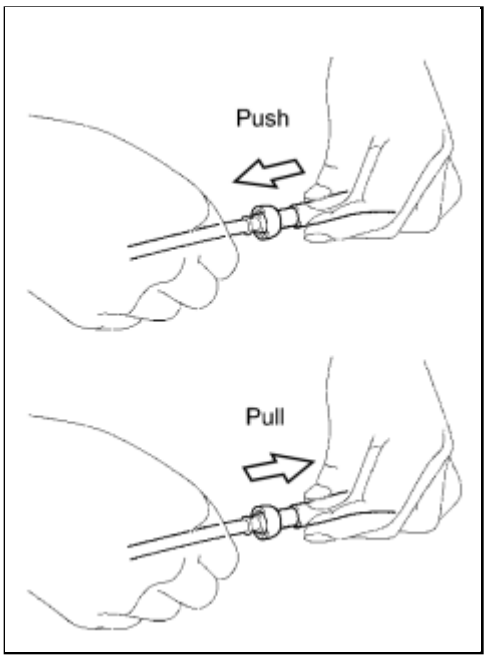

(3) After connecting, check if the pipe and the connector are securely connected by pulling on them.

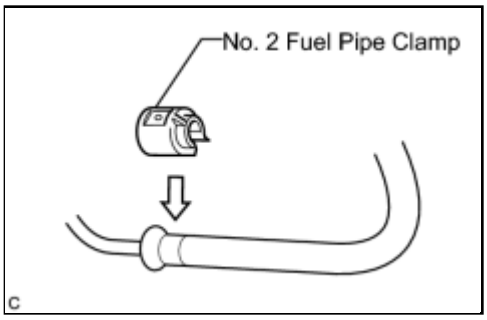

(4) Install a new No. 2 fuel pipe clamp.

(5) Check for fuel leaks.

(d) Perfrm the following procedure when disconnecting a fuel tube connector (quick type A):

(1) Release the claw and remove the No. 1 fuel pipe clamp.

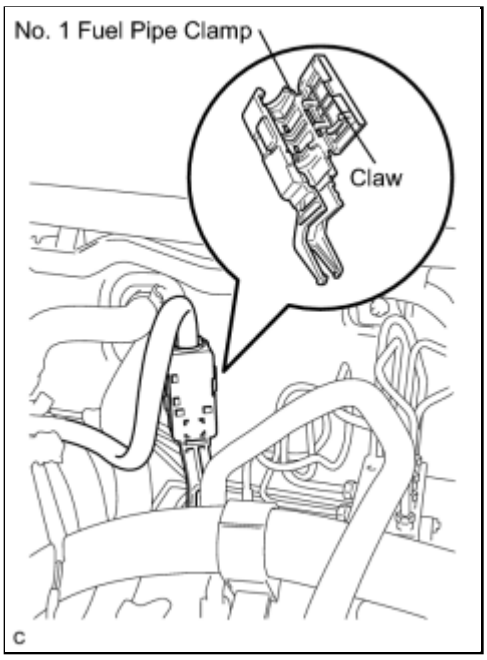

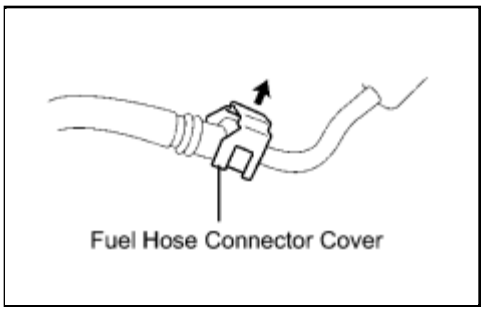

(2) Disengage the lock claws by raising the fuel hose connector cover as shown in the illustration.

(3) Check that there is no dirt or other foreign objects on the pipe and contact surface before disconnecting them. Clean them if necessary.

(4) Disconnect the connector from the pipe by hand.

(5) If the connector and the pipe are stuck, push in and pull on the connector to release them. Pull the connector out of the pipe carefully.

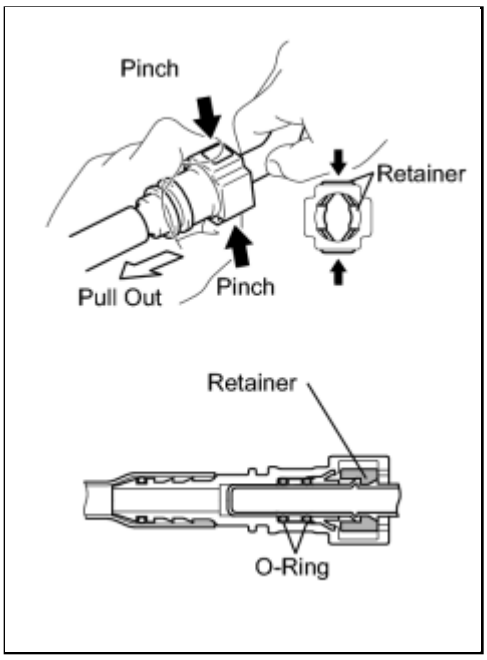

(6) Check that there is no dirt or other foreign objects on the contact surfaces of the disconnected pipe. Clean them away if necessary.

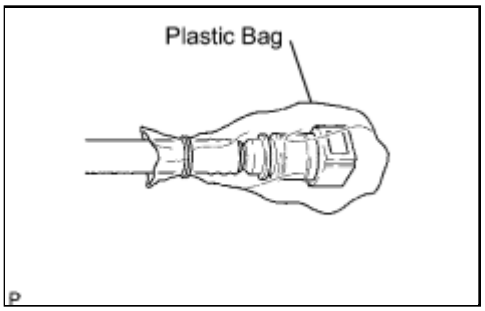

(7) Cover the disconnected pipe and connector with a plastic bag to prevent to damage and contamination.

(e) Perform the following procedure when connecting a fuel tube connector (quick type A):

(1) Check if there is any damage or foreign objects on the pipe connections.

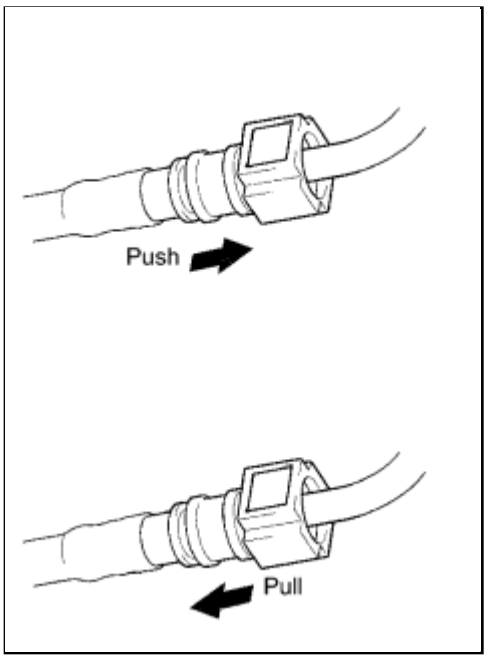

(2) Line up the two parts of the pipes to be connected, and push them together until the connector makes a "click" sound. If the pipe is difficult to push into the connector, apply a small amount of clean engine oil to the tip of the pipe and reinsert it.

(3) After connecting the pipes, check that the pipe and connector are securely connected by pulling on them.

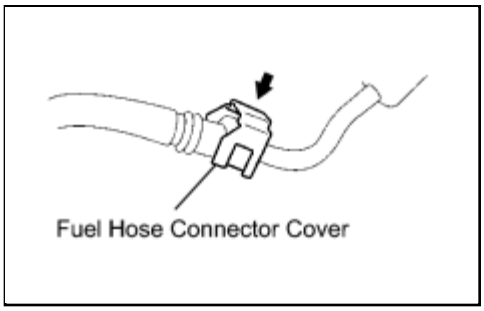

(4) Engage the lock claws to the connector by pushing down on the fuel hose connector cover.

(5) Engage the lock claw and install the No. 1 fuel pipe clamp.

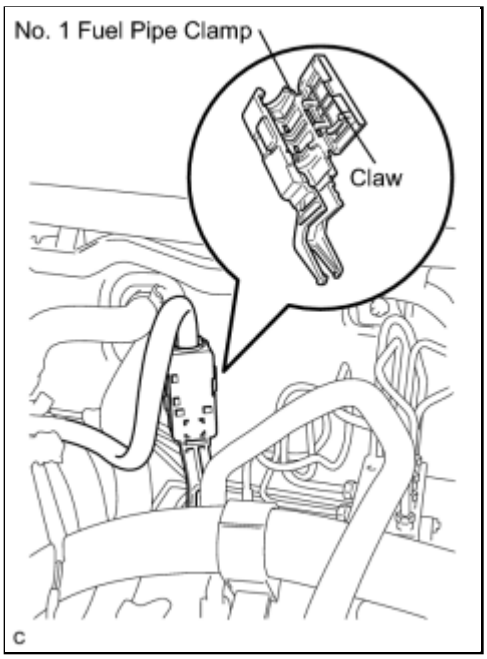

(6) Check for fuel leaks.

(f) Perform the following procedure when disconnecting a fuel tube connector (quick type B):

(1) Before disconnecting the connector, clean off any dirt that may be present.

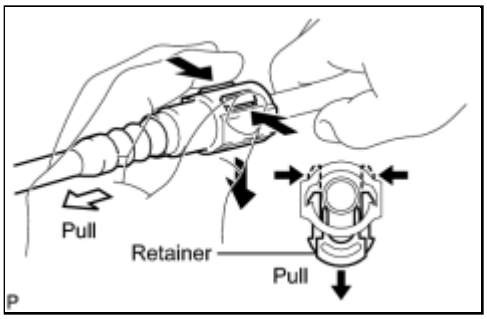

(2) Pull the tabs of the fuel tube retainer to disengage the 2 claws. Push the retainer down as shown in the illustration.

HINT:

Be sure to disconnect the connector by hand.

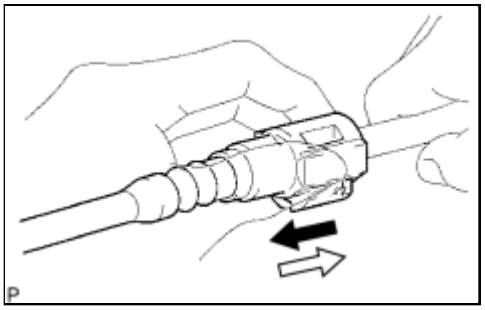

(3) If the connector and pipe are stuck, hold the fuel pipe by hand and push and pull on the connector. Pull the two pipes apart to separate the connector.

(4) If there are any dirt or any other foreign objects on the sealing surfaces of the disconnected pipes, clean them if necessary.

(5) Cover the disconnected pipe and connector with a plastic bag to prevent to damage and contamination.

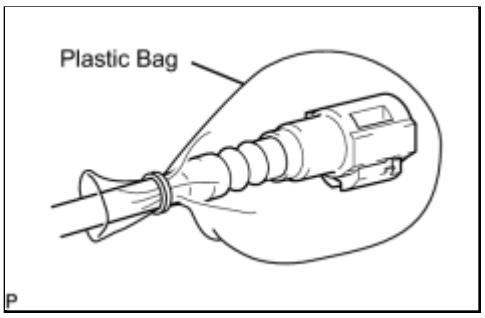

(g) Perform the following procedure when connecting a fuel tube connector (quick type B):

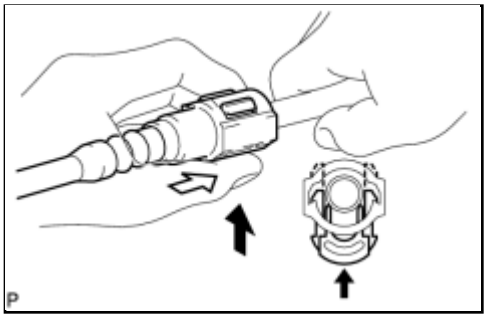

(1) Align the fuel tube connector with the pipe, then push the fuel tube connector in until it comes into contact with the seat, then push the retainer in until the claws lock.

(2) After connecting the fuel tube connector, check that the fuel tube connector and pipe are securely connected by pulling on them.

(3) Check for fuel leaks.

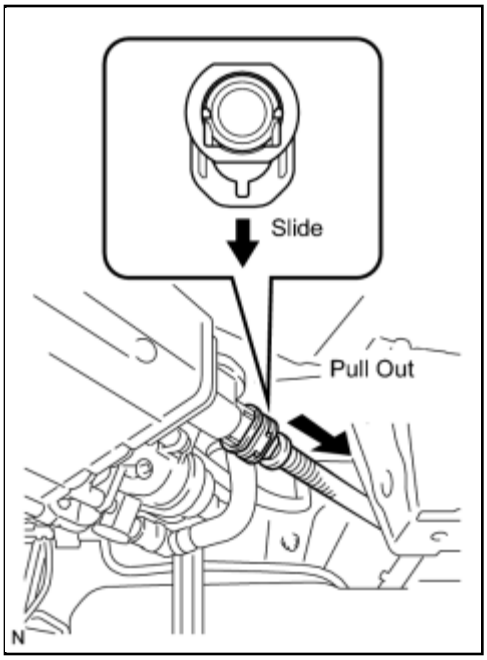

(h) Perform the following procedure when disconnecting a fuel tube connector (quick type C):

(1) Check the pipe and around the connector for dirt and mud before disconnecting them. Clean them if necessary.

(2) Remove the checker of the fuel tube connector from the pipe.

(3) Pinch the tab of the retainer of the fuel tube connector to disengage the lock claws and slide it as shown in the illustration.

(4) Check the sealing surface of the disconnected pipe for dirt and mud. Clean them away if necessary.

(5) Cover the disconnected fuel tube connector and pipe with a plastic bag to prevent damage and contamination.

(i) Observe the following procedure when connecting a fuel tube connector (quick type C):

(1) Check the connected part of the pipe for any damage

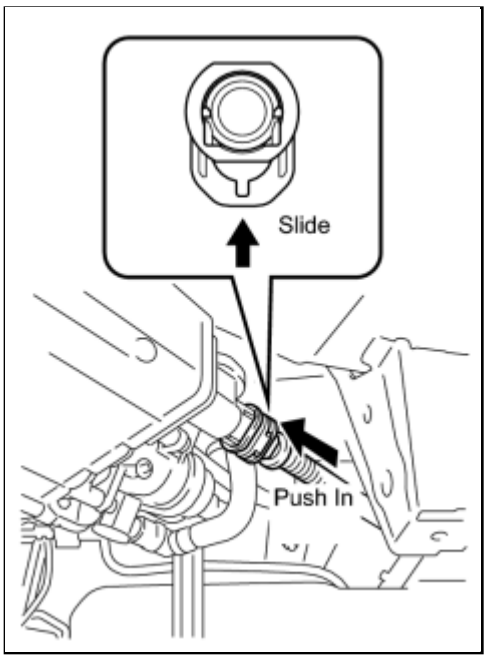

and foreign objects.

(2) Align the fuel tube connector with the pipe, then push the fuel tube connector in until the retainer makes a "click" sound. If the connection is tight, apply a small amount of clean engine oil to the tip of the pipe.

(3) Install the checker onto the pipe.

(4) Check for fuel leaks.

(j) Observe the following precautions when handling a nylon tube:

- Do not twist the connection part of the nylon tube and the quick connector when connecting them.
- Do not bend, kink, or twist the nylon tube.
- Do not remove the EPDM protector on the outside of the nylon tube.
- Do not close the piping by kinking the nylon tube.

4. INJECTOR

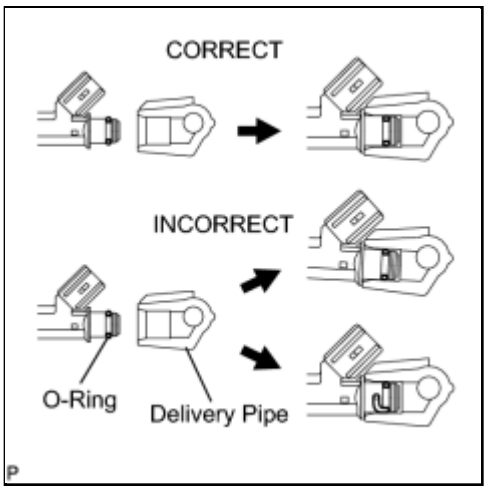

(a) Observe the following precautions when removing and installing a fuel injector:

(1) Do not reuse a O-ring and insulator.

(2) When placing a new O-ring onto the injector, do not damage the O-ring.

(3) Coat a new O-ring with grease or gasoline before installing it. Do not use engine oil, gear oil or brake fluid.

(b) Install the injector into the delivery pipe and cylinder head as shown in the illustration. Apply grease or gasoline to the contact surfaces of the injector before installing the injector.

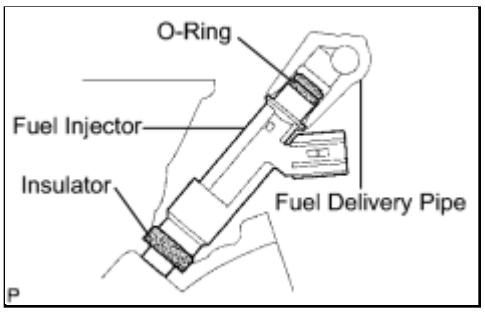

5. FUEL SUCTION TUBE ASSEMBLY WITH PUMP AND GAUGE

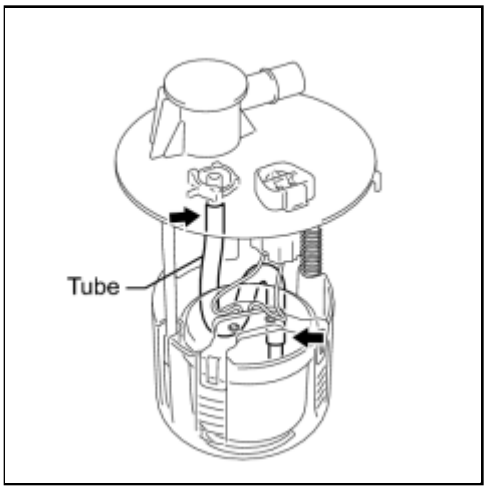

(a) Do not disconnect the tube shown in the illustration when disassembling the fuel suction tube assembly with pump and gauge. Doing so will cause reassembly of the fuel suction tube assembly with pump and gauge to be impossible as the tube is welded to the plate.

6. INSPECT FOR FUEL LEAK

(a) Check that there is no fuel leakage after performing maintenance anywhere on the fuel system INFO .

Last Modified: 3-10-2010	6.4 G	**From:** 200901
Model Year: 2010	**Model:** Corolla	**Doc ID:** RM0000030P300XX
Title: 2ZR-FE FUEL: FUEL SENDER GAUGE ASSEMBLY: INSPECTION (2010 Corolla)		

INSPECTION

1. INSPECT FUEL SENDER GAUGE ASSEMBLY

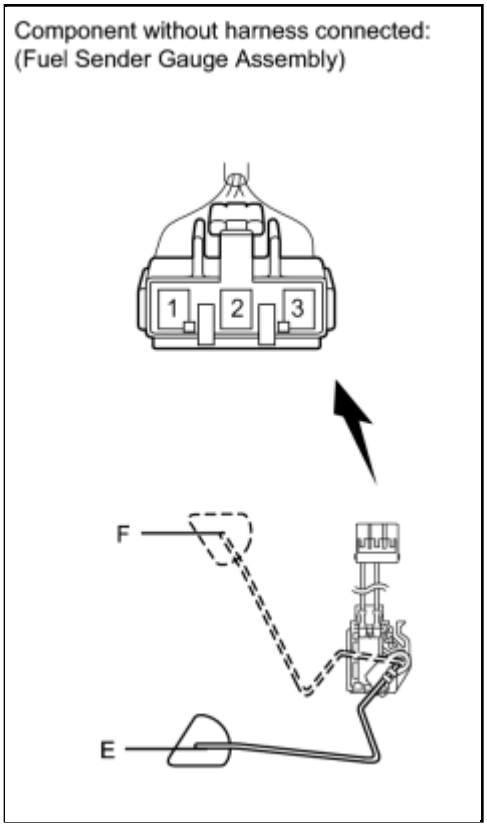

(a) Remove the fuel sender gauge assembly.

(b) Check that the float moves smoothly between F and E.

(c) Measure the resistance between terminals 1 and 2 of the connector according to the value(s) in the table below.

Standard Resistance:

FLOAT LEVEL	RESISTANCE (Ω)
F	13.5 to 16.5
Between E and F	13.5 to 414.5 (Gradually changes)
E	405.5 to 414.5

If the value is not as specified, replace the fuel sender gauge assembly.

Last Modified: 3-10-2010	6.4 A	**From:** 200901
Model Year: 2010	**Model:** Corolla	**Doc ID:** RM0000030P200XX
Title: 2ZR-FE FUEL: FUEL SENDER GAUGE ASSEMBLY: INSTALLATION (2010 Corolla)		

INSTALLATION

1. INSTALL FUEL SENDER GAUGE ASSEMBLY

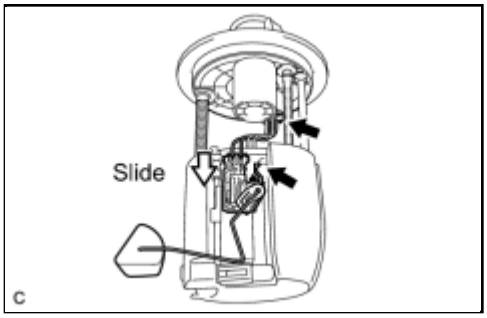

(a) Install the fuel sender gauge assembly by sliding it downward.

NOTICE:

Do not damage the wire harness.

(b) Connect the connector of the fuel sender gauge assembly.

NOTICE:

Make sure that the fuel sender gauge arm does not bend.

2. INSTALL FUEL SUCTION TUBE ASSEMBLY WITH PUMP AND GAUGE

(a) Install the fuel suction tube assembly with pump and gauge INFO .

3. CONNECT CABLE TO NEGATIVE BATTERY TERMINAL

4. INSPECT FOR FUEL LEAK INFO

Last Modified: 3-10-2010	6.4 L	**From:** 200901
Model Year: 2010	**Model:** Corolla	**Doc ID:** RM000001EEY01PX
Title: 2ZR-FE FUEL: FUEL SYSTEM: PRECAUTION (2010 Corolla)		

PRECAUTION

1. PRECAUTIONS

(a) Before inspecting and repairing the fuel system, disconnect the cable from the negative (-) battery terminal.

(b) Do not smoke or work near an open flame when handling the fuel system.

(c) Keep gasoline away from rubber or leather parts.

2. DISCHARGE FUEL SYSTEM PRESSURE

CAUTION:

- Perform the following procedure to prevent fuel from spilling out before removing any fuel system parts.
- Pressure will still remain in the fuel lines even after performing the following procedure. When disconnecting a fuel line, cover it with a piece of cloth to prevent fuel from spraying or coming out.

(a) Remove the rear seat cushion assembly INFO .

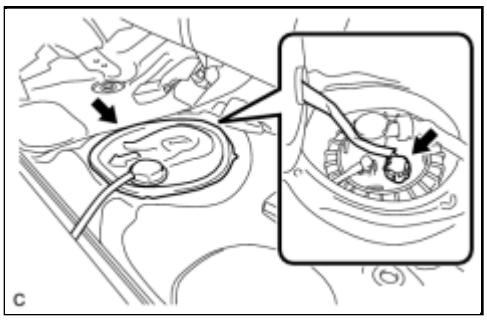

(b) Remove the rear floor service hole cover.

(c) Disconnect the connector from the fuel pump assembly.

(d) Start the engine. After the engine stops naturally, turn the ignition switch off.

NOTICE:

Do not increase engine speed or drive the vehicle while waiting for the engine to stop naturally.

HINT:

DTC P0171/25 (system too lean) may be set.

(e) Crank the engine again and make sure that the engine does not start.

(f) Remove the fuel tank cap and discharge the pressure from the fuel tank.

(g) Disconnect the cable from the negative (-) battery terminal.

(h) Connect the connector of the fuel pump assembly.

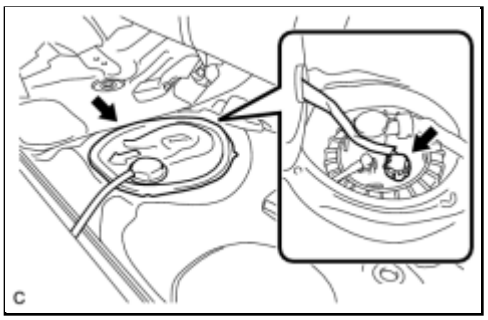

(i) Install the rear floor service hole cover.

(j) Install the rear seat cushion assembly (INFO).

3. FUEL LINE

(a) When disconnecting a high-pressure fuel line, a large amount of gasoline will spray out. Perform the following procedure:

(1) Discharge fuel system pressure.

(2) Disconnect the fuel tube.

(3) Drain the fuel remaining inside the fuel pump tube into a container.

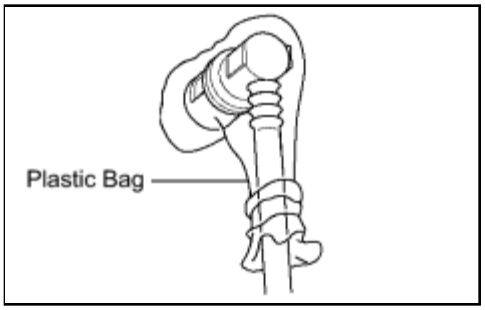

(4) Cover the disconnected pipe and connector with a plastic bag to prevent to damage and contamination.

(b) Perform the following procedure when disconnecting a fuel delivery pipe (metallic type):

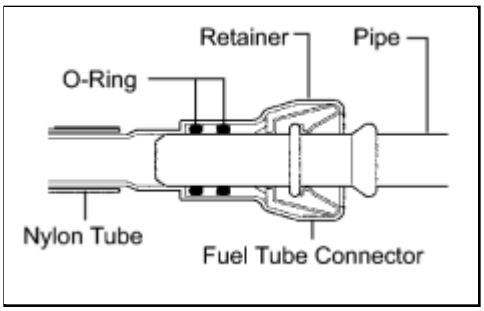

HINT:

The structure of a fuel tube connector is as shown in the illustration.

(1) Check if there is any damage or foreign objects on the pipe connections.

(2) Remove the No. 2 fuel pipe clamp.

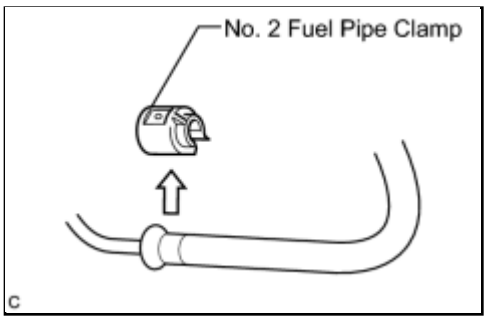

NOTICE:

Do not reuse the fuel pipe clamp.

(3) Find the metallic connector of the fuel tube assembly.

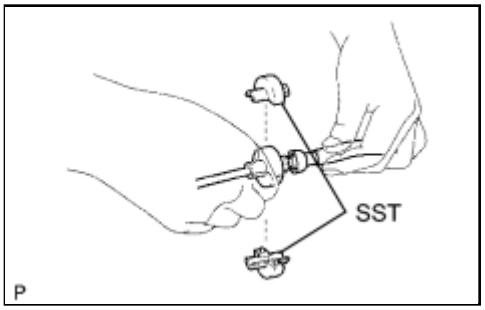

(4) Assemble SST to the connector as shown in the illustration.

SST: 09268-21010

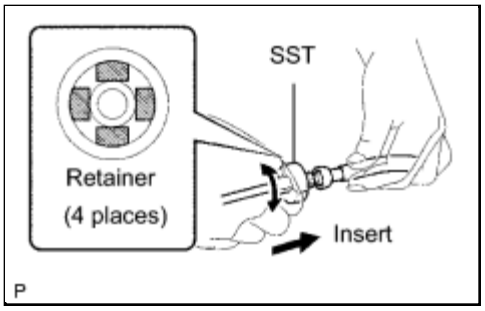

(5) Turn SST, align the retainers inside the connector with the SST chamfers and insert SST into the connector.

(6) Slide SST and the connector together towards the fuel tube assembly.

(c) Perform the following procedure when connecting a fuel tube connector (metallic type):

(1) Check if there is any damage or foreign objects on the pipe connections.

(2) Match the axis of the connector with the axis of the pipe, and push the pipe into the connector until the connector makes a "click" sound. If the pipe is difficult to push into the connector, apply a small amount of clean engine oil to the tip of the pipe.

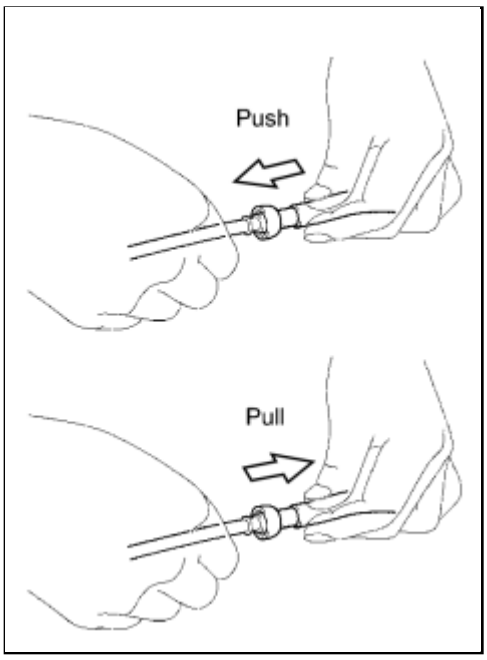

(3) After connecting, check if the pipe and the connector are securely connected by pulling on them.

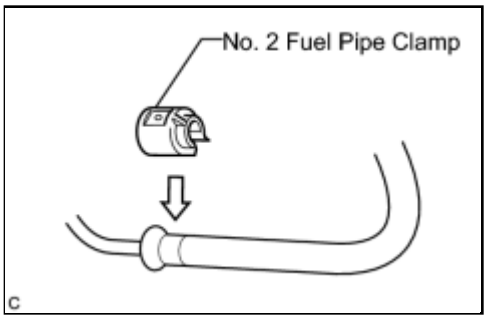

(4) Install a new No. 2 fuel pipe clamp.

(5) Check for fuel leaks.

(d) Perform the following procedure when disconnecting a fuel tube connector (quick type A):

(1) Release the claw and remove the No. 1 fuel pipe clamp.

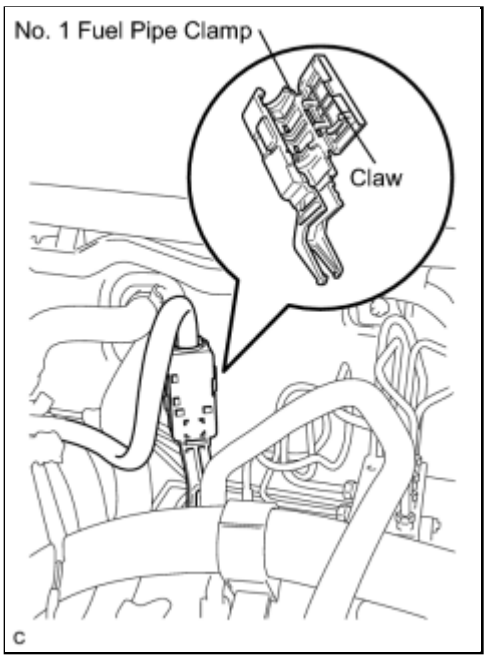

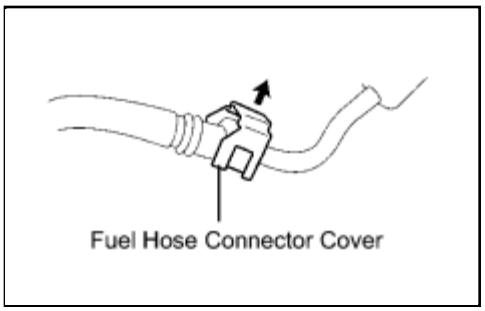

(2) Disengage the lock claws by raising the fuel hose connector cover as shown in the illustration.

(3) Check that there is no dirt or other foreign objects on the pipe and contact surface before disconnecting them. Clean them if necessary.

(4) Disconnect the connector from the pipe by hand.

(5) If the connector and the pipe are stuck, push in and pull on the connector to release them. Pull the connector out of the pipe carefully.

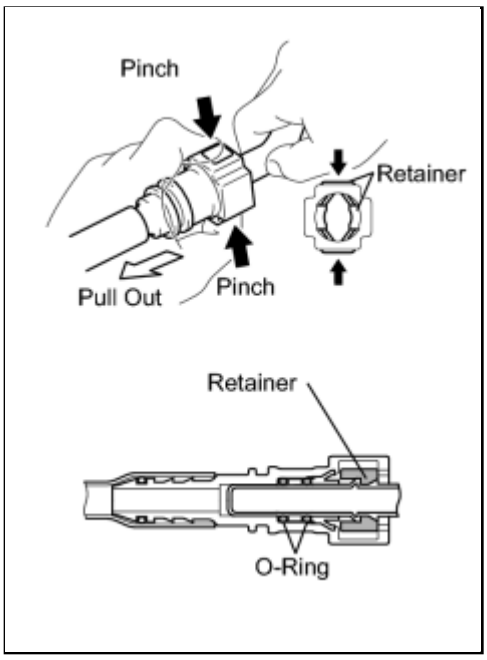

(6) Check that there is no dirt or other foreign objects on the contact surface of the disconnected pipe. Clean them away if necessary.

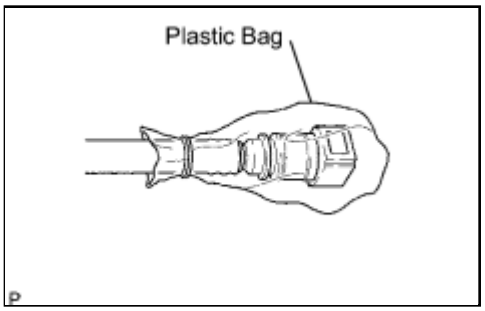

(7) Cover the disconnected pipe and connector with a plastic bag to prevent to damage and contamination.

(e) Perform the following procedure when connecting a fuel tube connectors (quick type A):

(1) Check if there is any damage or foreign objects on the pipe connections.

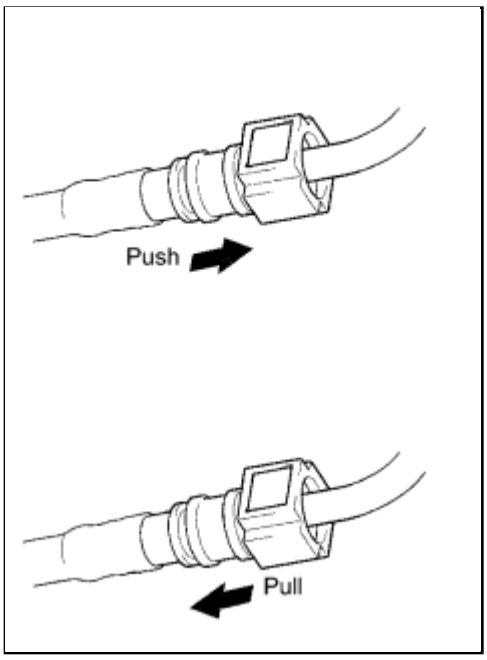

(2) Line up the two parts of the pipes to be connected, and push them together until the connector makes a "click" sound. If the pipe is difficult to push into the connector, apply a small amount of clean engine oil to the tip of the pipe and reinsert it.

(3) After connecting the pipes, check that the pipe and connector are securely connected by pulling on them.

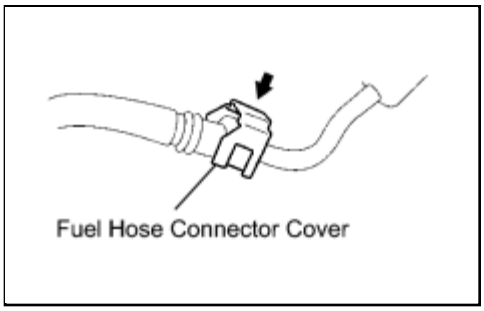

(4) Engage the lock claws to the connector by pushing down on the fuel hose connector cover.

(5) Engage the lock claws and install the No. 1 fuel pipe clamp.

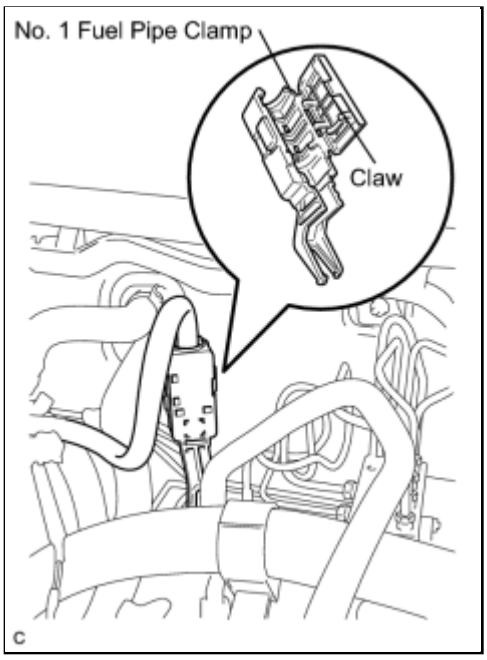

(6) Check for fuel leaks.

(f) Perform the following procedure when disconnecting a fuel tube connector (Quick Type B):

(1) Before disconnecting the connector, clean off any dirt that may be present.

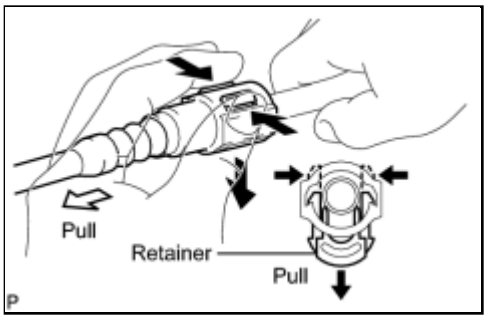

(2) Pinch the tabs of the fuel tube retainer to disengage the 2 claws. Push the retainer down as shown in the illustration

HINT:

Be sure to disconnect the connector by hand.

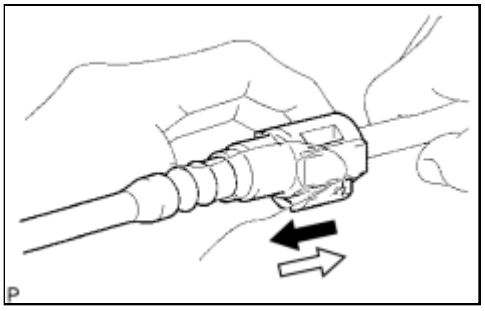

(3) If the connector and pipe are stuck, hold the fuel pipe by hand and push and pull on the connector. Pull the two pipes apart to separate the connector.

(4) If there are any dirt or any other foreign objects on the sealing surfaces of the disconnected pipes, clean them if necessary.

(5) Cover the disconnected pipe and connector with a plastic bag to prevent to damage and contamination.

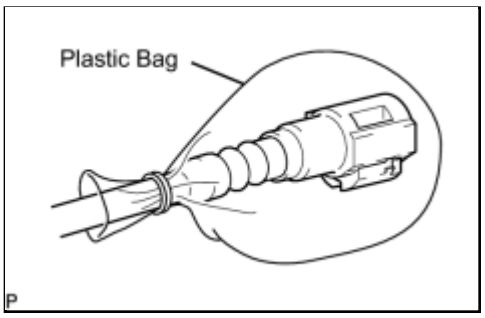

(g) Perform the following procedure when connecting a fuel tube connector (quick type B):

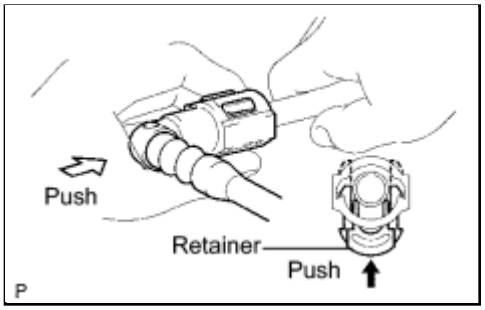

(1) Align the fuel tube connector with the pipe, then push the fuel tube connector in until it comes into contact with the seat, then push the retainer in until the claws lock.

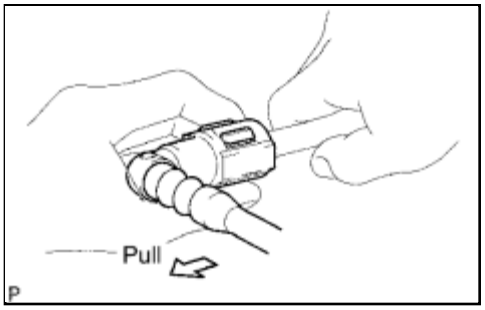

(2) After connecting the fuel tube connector, check that the fuel tube connector and pipe are securely connected by pulling on them.

(3) Check for fuel leaks.

(h) Perform the following procedure when disconnecting a fuel tube connector (quick type C):

(1) Check the pipe and around the connector for dirt and mud before disconnecting them. Clean them if necessary.

(2) Remove the checker of the fuel tube connector from the pipe.

(3) Pinch the tabs of the retainer of the fuel tube connector to disengage the lock claws and slide it as shown in the illustration.

(4) Check the sealing surface of the disconnected pipe for dirt and mud. Clean them away if necessary.

(5) Cover the disconnected fuel tube connector and pipe with a plastic bag to prevent damage and

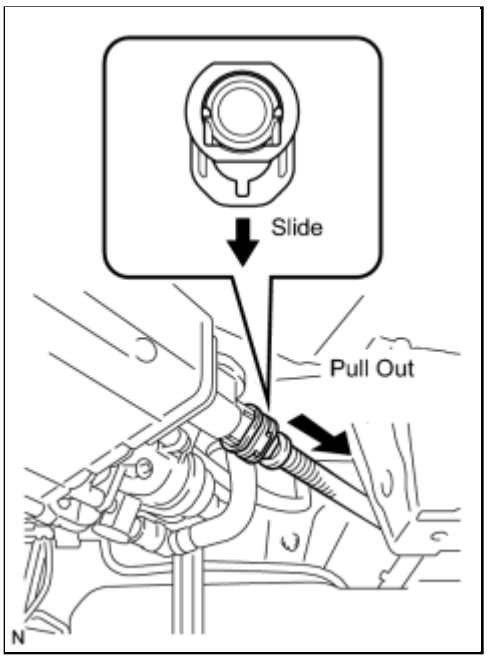

contamination.

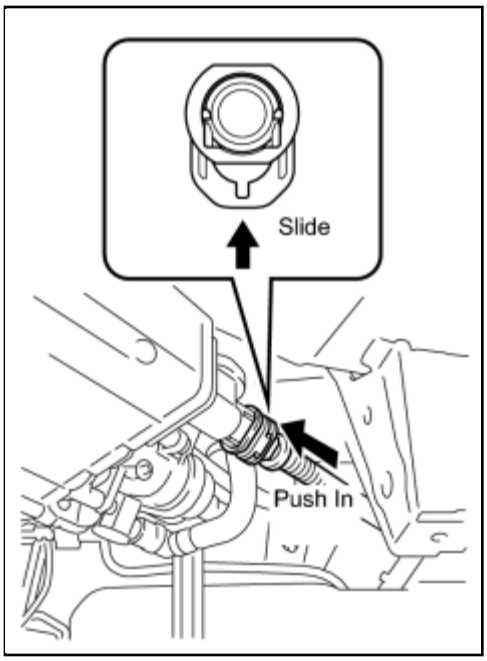

(i) Perform the following procedure when connecting a fuel tube connector (quick type C):

(1) Check the connected part of the pipe for any damage and foreign objects.

(2) Align the fuel tube connector with the pipe, then push the fuel tube connector in until the retainer makes a "click" sound. If the connection is tight, apply a small amount of clean engine oil to the tip of the pipe.

(3) Install a checker onto the pipe.

(4) Check for fuel leaks.

(j) Observe the following precautions when handling a nylon tube:

- Do not twist the connection part of the nylon tube and the quick connector when connecting them.
- Do not bend, kink, or twist the nylon tube.
- Do not remove the EPDM protector on the outside of the nylon tube.
- Do not close the piping by kinking the nylon tube.

4. INJECTOR

(a) Observe the following precautions when removing and installing a fuel injector:

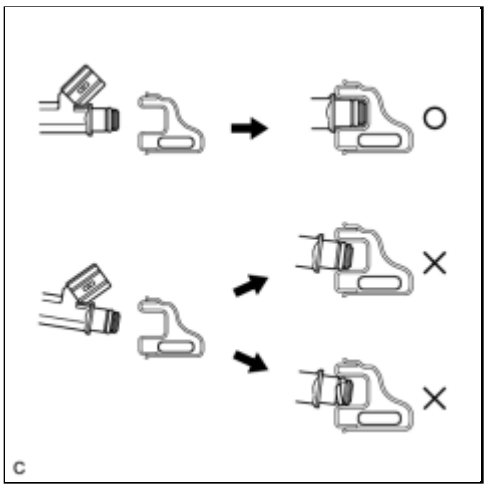

(1) Do not reuse a O-ring and insulator.

(2) When placing a new O-ring onto the injector, do not damage the O-ring.

(3) Coat a new O-ring with grease or gasoline before installing it. Do not use engine oil, gear oil or brake fluid.

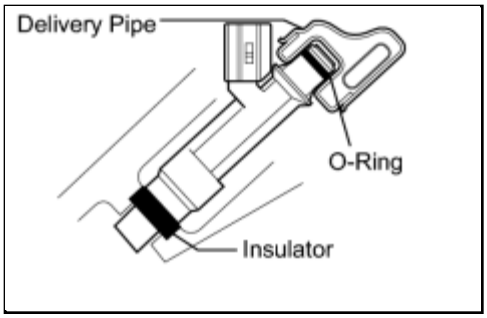

(b) Install the injector into the delivery pipe and cylinder head as shown in the illustration. Apply grease or gasoline to the contact surfaces of the injector before installing the injector.

5. FUEL SUCTION TUBE ASSEMBLY WITH PUMP AND GAUGE

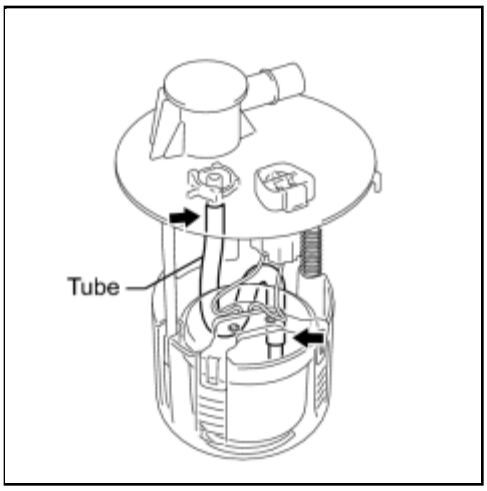

(a) Do not disconnect the tube shown in the illustration when disassembling the fuel suction tube assembly with pump and gauge. Doing so will cause reassembly of the fuel suction tube assembly with pump and gauge to be impossible as the tube is welded to the plate.

6. INSPECT FOR FUEL LEAK

(a) Check that there are no fuel leakage after performing maintenance anywhere on the fuel system INFO .

Last Modified: 3-10-2010	6.4 R	**From:** 200901
Model Year: 2010	**Model:** Corolla	**Doc ID:** RM000001EEZ00ZX
Title: 2AZ-FE FUEL: FUEL SYSTEM: PARTS LOCATION (2010 Corolla)		

PARTS LOCATION

ILLUSTRATION

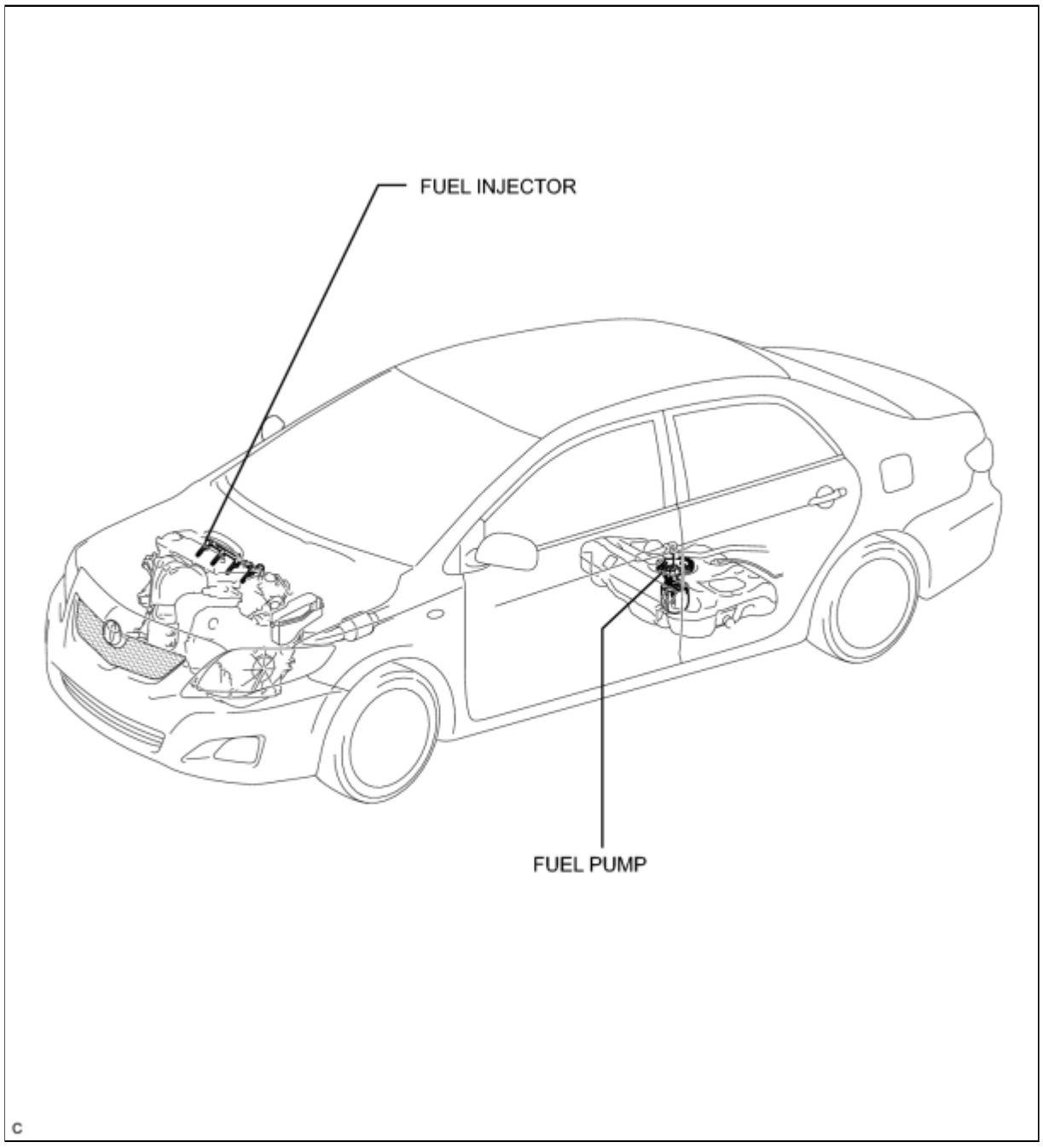

Last Modified: 3-10-2010	6.4 U	**From:** 200901
Model Year: 2010	**Model:** Corolla	**Doc ID:** RM000001EF000YX
Title: 2AZ-FE FUEL: FUEL SYSTEM: SYSTEM DIAGRAM (2010 Corolla)		

SYSTEM DIAGRAM

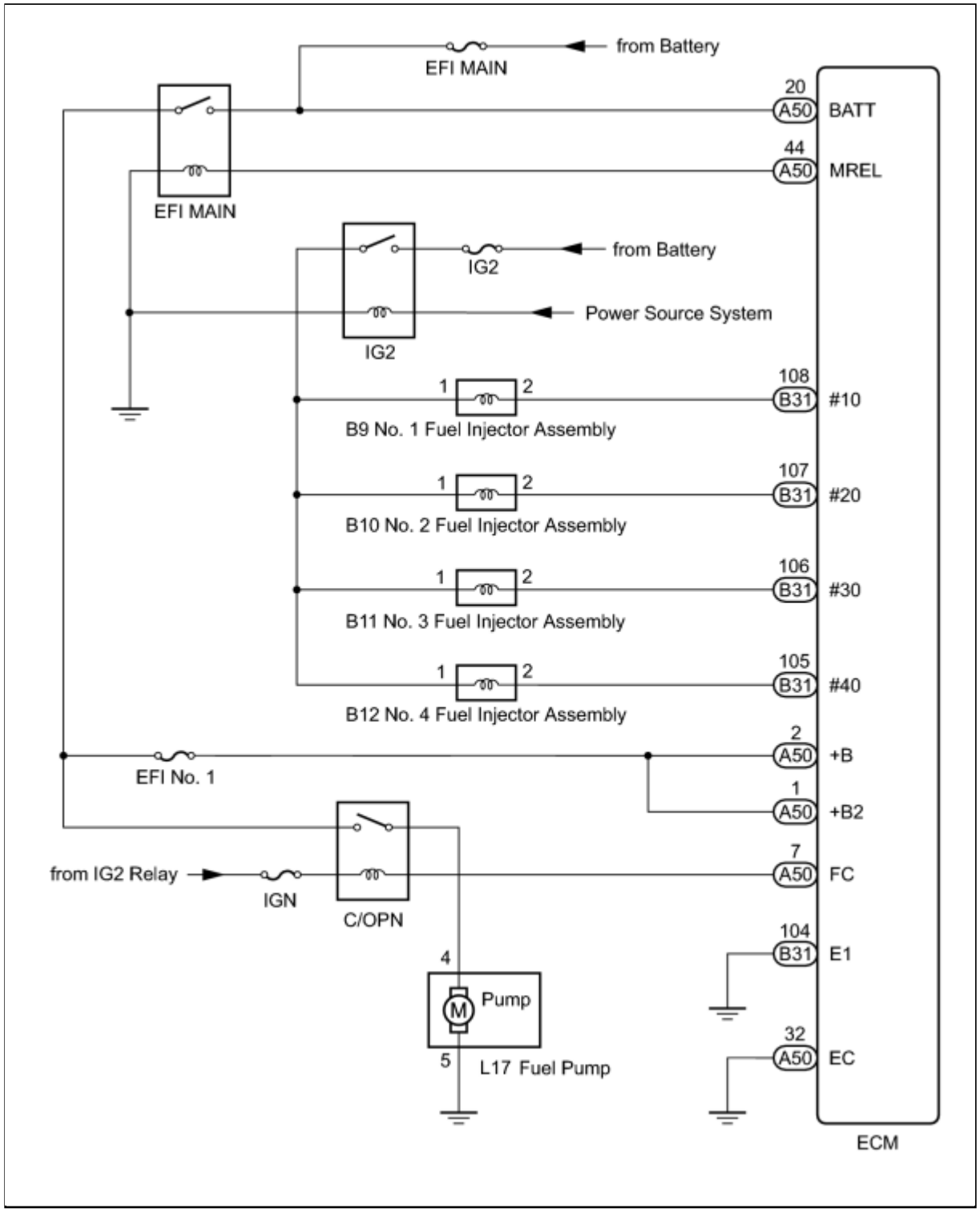

Last Modified: 3-10-2010	6.4 G	**From:** 200901
Model Year: 2010	**Model:** Corolla	**Doc ID:** RM000001IQZ02UX
Title: 2AZ-FE FUEL: FUEL SYSTEM: ON-VEHICLE INSPECTION (2010 Corolla)		

ON-VEHICLE INSPECTION

1. CHECK FOR FUEL PUMP OPERATION AND INSPECT FOR FUEL LEAK

(a) Check fuel pump operation.

(1) Connect the Techstream to the DLC3.

(2) Turn the ignition switch to ON and turn the Techstream on.

NOTICE:

Do not start the engine.

(3) Enter the following menus: Powertrain / Engine / Active Test / Control the Fuel Pump /Speed.

(4) Check for pressure in the fuel inlet tube from the fuel line. Check that sounds of fuel flowing from the fuel tank can be heard. If no sounds can be heard, check the integration relay, fuel pump, ECM and wiring connectors.

(b) Check for fuel leaks.

(1) There is no fuel leakage after performing maintenance anywhere on the fuel system. If there is a fuel leak, repair or replace parts as necessary.

(c) Turn the ignition switch off.

(d) Disconnect the Techstream from the DLC3.

2. CHECK FUEL PRESSURE

(a) Discharge fuel system pressure INFO .

(b) Using a voltmeter, measure the battery voltage according to the value(s) in the table below.

Standard Voltage:

TESTER CONNECTION	SWITCH CONDITION	SPECIFIED CONDITION
Positive terminal - Negative terminal	Ignition switch off	11 to 14 V

(c) Disconnect the cable from the negative (-) battery terminal.

(d) Disconnect the fuel hose from the fuel main tube INFO .

(e) Install SST (pressure gauge) using other SST as shown in the illustration.

SST: 09268-31012

09268-41500

90467-13001

95336-08070

SST: 09268-45014

09268-41200

09268-41220

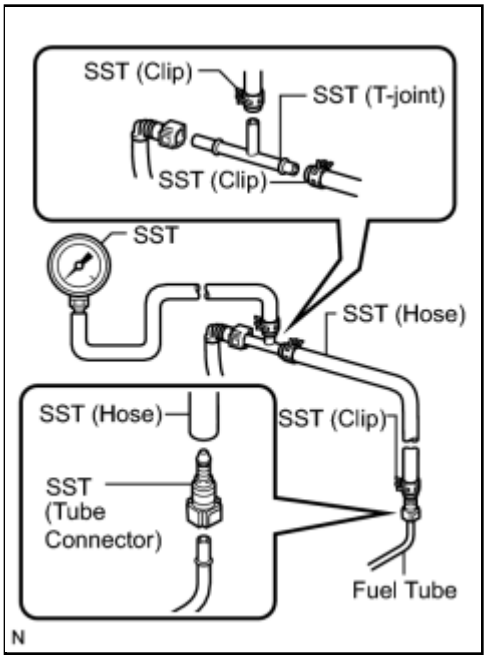

09268-41250

(f) Clean up any spilled gasoline.

(g) Connect the cable to the negative (-) battery terminal.

(h) Connect the Techstream to the DLC3.

(i) Enter the following menus: Powertrain / Engine / Active Test / Control the Fuel Pump / Speed.

(j) Measure the fuel pressure.

Fuel pressure:
304 to 343 kPa (3.1 to 3.5 kgf*cm^2, 44.1 to 49.7 psi)

- If the fuel pressure is greater than the standard value, replace the fuel pressure regulator.
- If the fuel pressure is less than the standard value, check the fuel hoses and connections, fuel pump, fuel filter and fuel pressure regulator.

(k) Disconnect the Techstream from the DLC3.

(l) Start the engine.

(m) Measure the fuel pressure at idle.

Fuel pressure:
304 to 343 kPa (3.1 to 3.5 kgf*cm^2, 44.1 to 49.7 psi)

(n) Stop the engine.

(o) Check that the fuel pressure remains as specified for 5 minutes after the engine stops.

Fuel pressure:
147 kPa (1.5 kgf*cm^2, 21 psi) or more

If the fuel pressure is not as specified, check the fuel pump or fuel injector.

(p) After checking the fuel pressure, disconnect the cable from the negative (-) battery terminal and carefully remove SST to prevent gasoline from spraying.

(q) Reconnect the fuel tube to the main fuel tube (fuel tube connector).

(r) Install the No. 1 fuel pipe clamp to the fuel tube connector.

(s) Check for fuel leaks (Step 1).

Last Modified: 3-10-2010	6.4 R	**From:** 200901
Model Year: 2010	**Model:** Corolla	**Doc ID:** RM000001EEZ00YX
Title: 2ZR-FE FUEL: FUEL SYSTEM: PARTS LOCATION (2010 Corolla)		

PARTS LOCATION

ILLUSTRATION

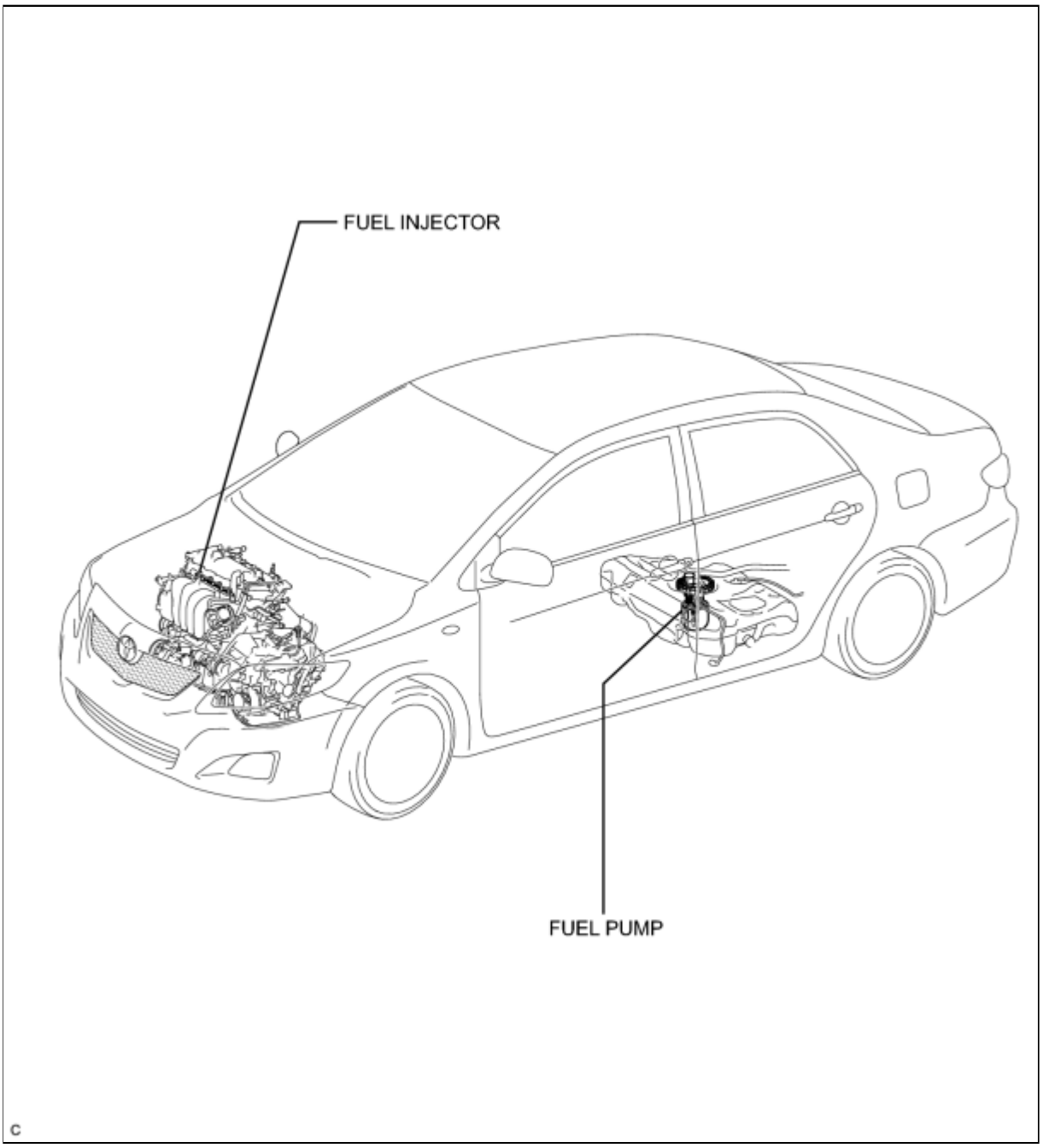

Last Modified: 3-10-2010	6.4 G	**From:** 200901
Model Year: 2010	**Model:** Corolla	**Doc ID:** RM000001IQZ02TX
Title: 2ZR-FE FUEL: FUEL SYSTEM: ON-VEHICLE INSPECTION (2010 Corolla)		

ON-VEHICLE INSPECTION

1. CHECK FOR FUEL PUMP OPERATION AND INSPECT FOR FUEL LEAK

(a) Check fuel pump operation.

(1) Connect the Techstream to the DLC3.

(2) Turn the ignition switch ON and turn the Techstream on.

NOTICE:

Do not start the engine.

(3) Enter the following menus: Powertrain / Engine / Active Test / Control the Fuel Pump /Speed.

(4) Check for pressure in the fuel inlet tube from the fuel line. Check that sounds of fuel flowing from the fuel tank can be heard. If no sounds can be heard, check the integration relay, fuel pump, ECM and wiring connectors.

(b) Inspect for fuel leaks.

(1) Check that there are no fuel leakage after performing maintenance anywhere on the fuel system. If there is a fuel leak, repair or replace parts as necessary.

(c) Turn the ignition switch off.

(d) Disconnect the Techstream from the DLC3.

2. CHECK FUEL PRESSURE

(a) Discharge fuel system pressure INFO .

(b) Using a voltmeter, measure the battery voltage according to the value(s) in the table below.

Standard Voltage:

TESTER CONNECTION	SWITCH CONDITION	SPECIFIED CONDITION
Positive terminal - Negative terminal	Ignition switch off	11 to 14 V

(c) Disconnect the cable from the negative (-) battery terminal.

(d) Disconnect the fuel hose from the fuel main tube INFO .

(e) Install SST (pressure gauge) using other SST as shown in the illustration.

SST: 09268-31012

09268-41500

90467-13001

95336-08070

SST: 09268-45014

09268-41200

09268-41220

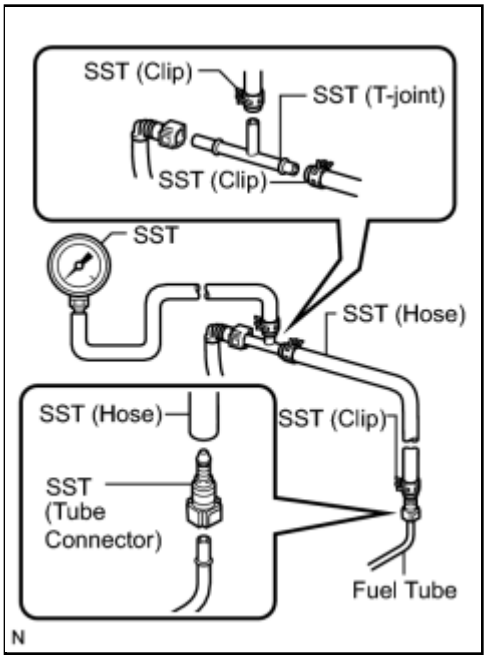

09268-41250

(f) Clean up any spilled gasoline.

(g) Connect the cable to the negative (-) battery terminal.

(h) Connect the Techstream to the DLC3.

(i) Enter the following menus: Powertrain / Engine / Active Test / Control the Fuel Pump / Speed.

(j) Measure the fuel pressure.

Fuel pressure:
304 to 343 kPa (3.1 to 3.5 kgf*cm^2, 44.1 to 49.7 psi)

- If the fuel pressure is greater than the standard value, replace the fuel pressure regulator.
- If the fuel pressure is less than the standard value, check the fuel hoses and connections, fuel pump, fuel filter and fuel pressure regulator.

(k) Disconnect the Techstream from the DLC3.

(l) Start the engine.

(m) Measure the fuel pressure at idle.

Fuel pressure:
304 to 343 kPa (3.1 to 3.5 kgf*cm^2, 44.1 to 49.7 psi)

(n) Stop the engine.

(o) Check that the fuel pressure remains as specified for 5 minutes after the engine stops.

Fuel pressure:
147 kPa (1.5 kgf*cm^2, 21 psi) or more

If the fuel pressure is not as specified, check the fuel pump or fuel injector.

(p) After checking the fuel pressure, disconnect the cable from the negative (-) battery terminal and carefully remove SST to prevent gasoline from spraying.

(q) Reconnect the fuel tube to the main fuel tube (fuel tube connector).

(r) Install the No. 1 fuel pipe clamp to the fuel tube connector.

(s) Check for fuel leaks (Step 1).

Last Modified: 3-10-2010	6.4 U	**From:** 200901
Model Year: 2010	**Model:** Corolla	**Doc ID:** RM000001EF000XX
Title: 2ZR-FE FUEL: FUEL SYSTEM: SYSTEM DIAGRAM (2010 Corolla)		

SYSTEM DIAGRAM

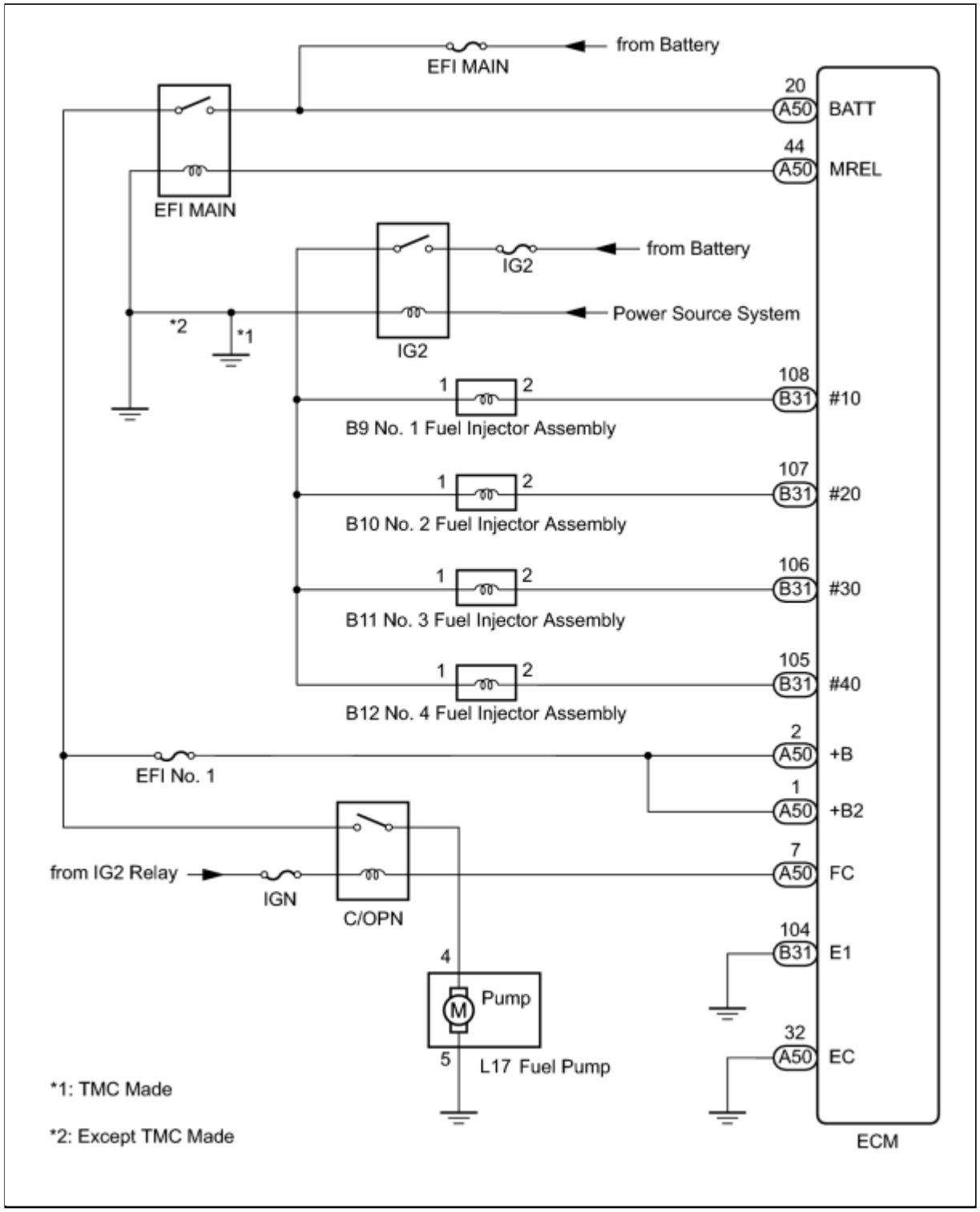

Last Modified: 3-10-2010	6.4 K	**From:** 200901
Model Year: 2010	**Model:** Corolla	**Doc ID:** RM0000022Y300AX
Title: 2AZ-FE FUEL: FUEL TANK: COMPONENTS (2010 Corolla)		

COMPONENTS

ILLUSTRATION

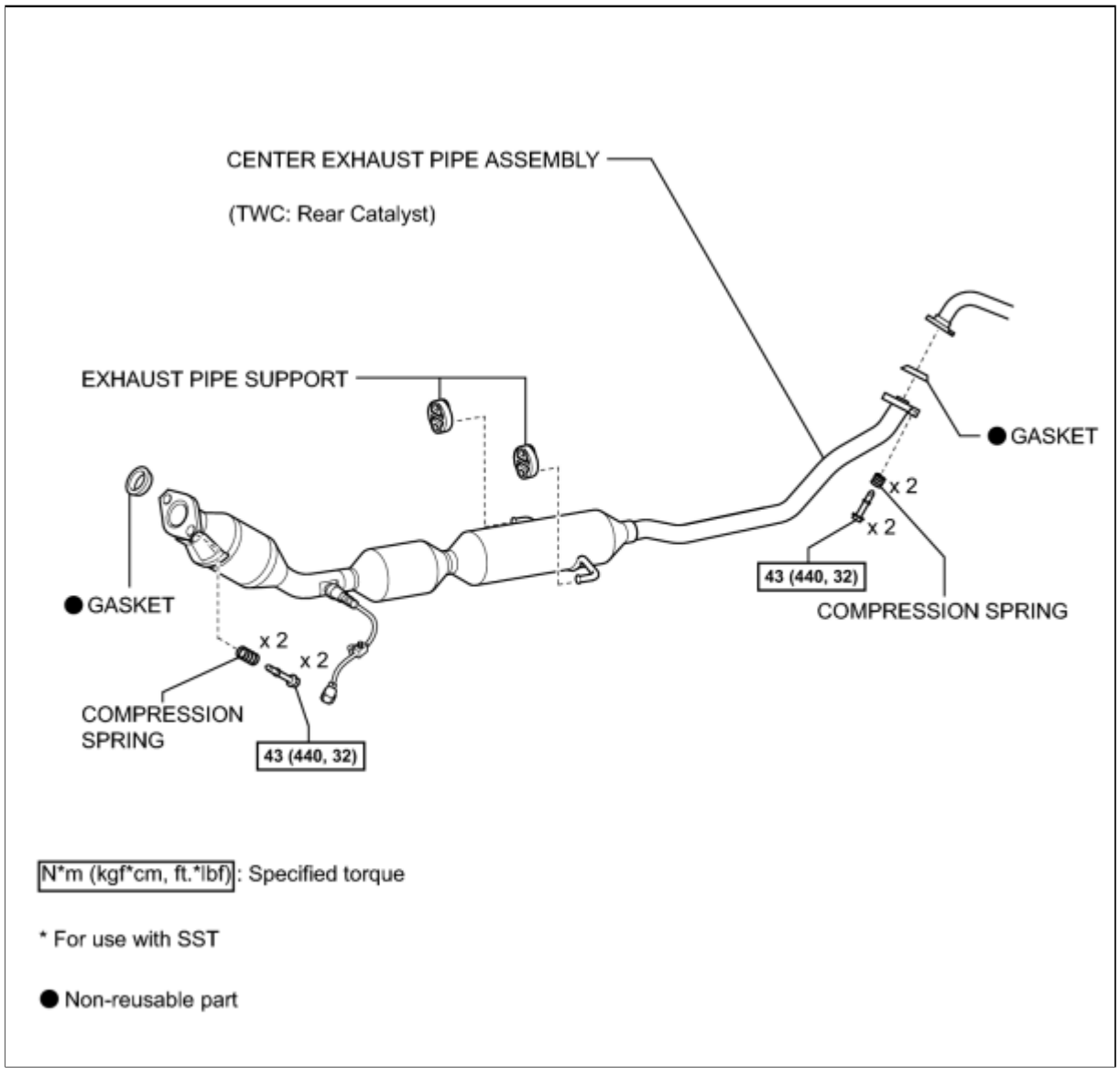

ILLUSTRATION

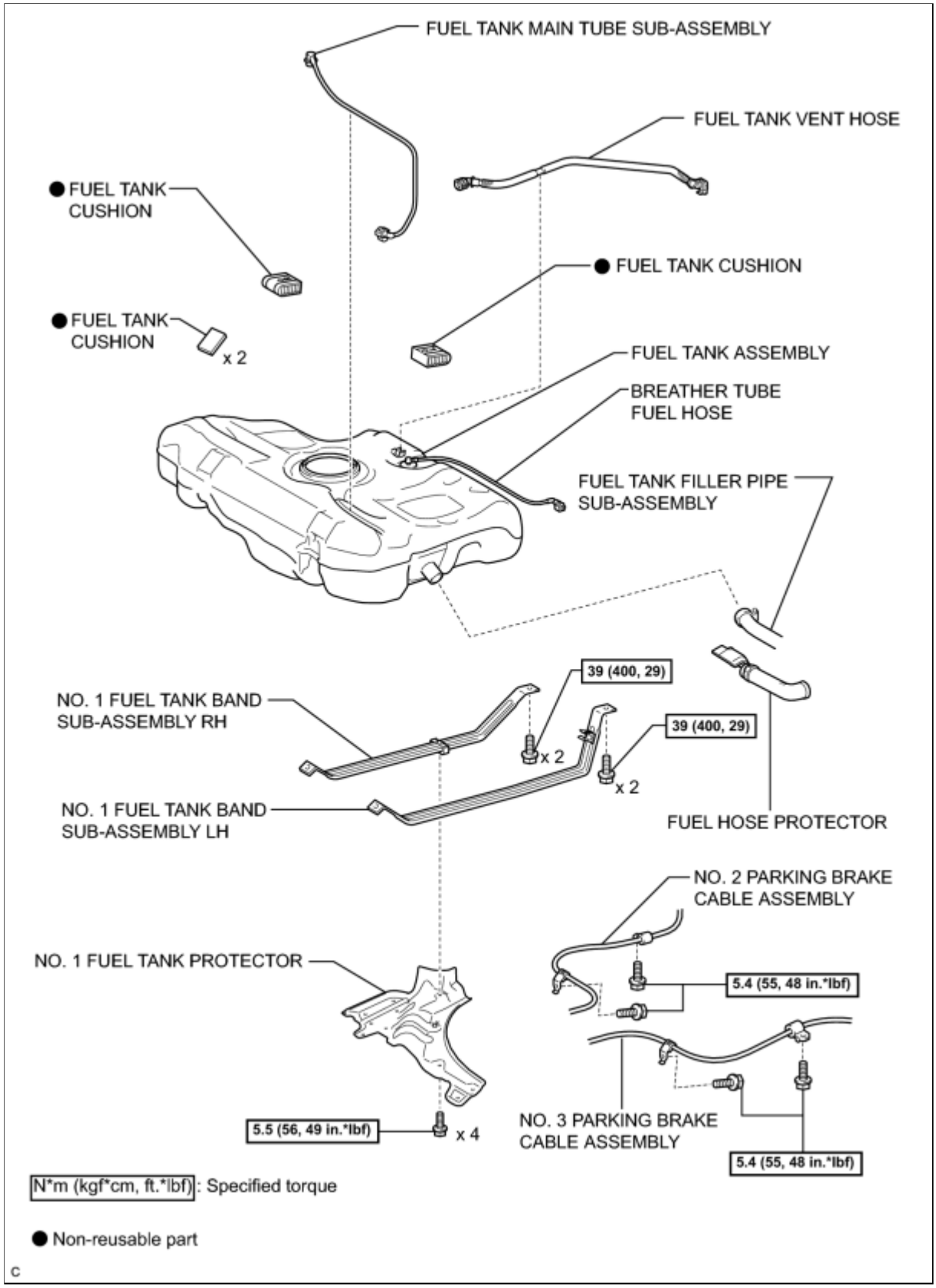
FUEL TANK MAIN TUBE SUB-ASSEMBLY
FUEL TANK VENT HOSE
● FUEL TANK CUSHION
● FUEL TANK CUSHION
● FUEL TANK CUSHION
x 2
FUEL TANK ASSEMBLY
BREATHER TUBE
FUEL HOSE
FUEL TANK FILLER PIPE SUB-ASSEMBLY
39 (400, 29)
NO. 1 FUEL TANK BAND SUB-ASSEMBLY RH
x 2
39 (400, 29)
x 2
NO. 1 FUEL TANK BAND SUB-ASSEMBLY LH
FUEL HOSE PROTECTOR
NO. 2 PARKING BRAKE CABLE ASSEMBLY
NO. 1 FUEL TANK PROTECTOR
5.4 (55, 48 in.*lbf)
5.5 (56, 49 in.*lbf)
x 4
NO. 3 PARKING BRAKE CABLE ASSEMBLY
5.4 (55, 48 in.*lbf)
N*m (kgf*cm, ft.*lbf): Specified torque
● Non-reusable part

c

Last Modified: 3-10-2010	6.4 A	**From:** 200901
Model Year: 2010	**Model:** Corolla	**Doc ID:** RM0000022Y400AX
Title: 2AZ-FE FUEL: FUEL TANK: REMOVAL (2010 Corolla)		

REMOVAL

1. DISCHARGE FUEL SYSTEM PRESSURE

HINT: INFO .

2. DISCONNECT CABLE FROM NEGATIVE BATTERY TERMINAL

3. REMOVE FUEL SUCTION TUBE ASSEMBLY WITH PUMP AND GAUGE

(a) Remove the fuel suction tube assembly with pump and gauge from the fuel tank INFO .

4. DRAIN FUEL

5. REMOVE CENTER EXHAUST PIPE ASSEMBLY

HINT: INFO .

6. SEPARATE PARKING BRAKE CABLE

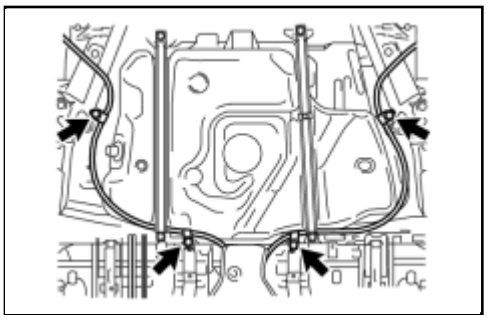

(a) Remove the 4 bolts, and separate the parking brake cables.

7. REMOVE NO. 1 FUEL TANK PROTECTOR

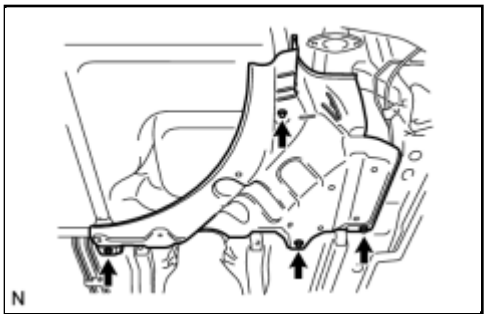

(a) Remove the 4 bolts and the No. 1 fuel tank protector.

8. DISCONNECT FUEL TANK VENT HOSE

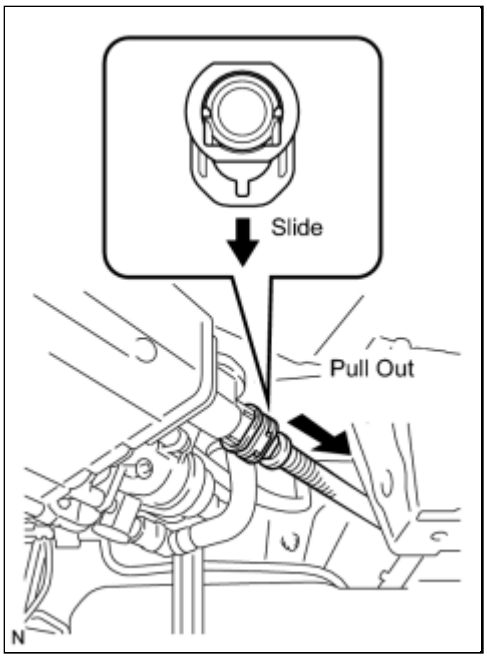

(a) Disconnect the fuel tank vent hose.

(1) Pinch the tabs of the retainer of the fuel tube connector to disengage the lock claws and slide it as shown in the illustration.

(2) Pull the fuel tank vent hose out of the pipe.

NOTICE:

- Check that there is no dirt or other foreign objects around the connector before disconnecting it. Clean the connector if necessary.
- It is necessary to prevent mud or dirt from entering the connector. If mud or dirt gets in the connector, the O-rings may not seal properly.
- Only disconnect the quick connector by hand.
- Do not bend, kink or twist the nylon tubes.
- Protect the connector by covering it with a plastic bag.

9. DISCONNECT BREATHER TUBE FUEL HOSE

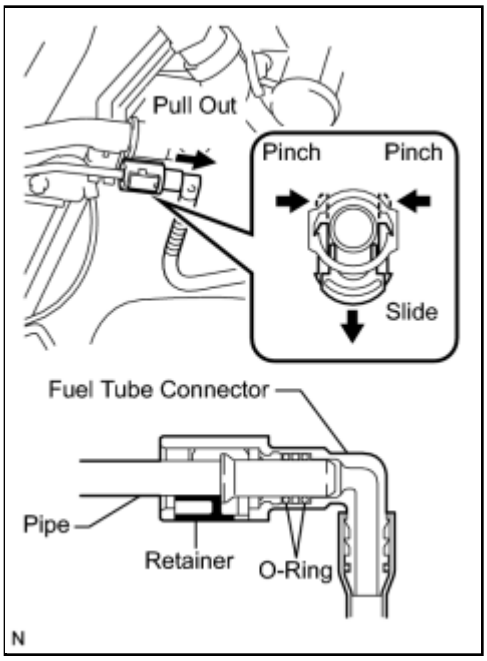

(a) Disconnect the breather tube fuel hose.

(1) Pinch the retainer of the fuel tube connector, then pull the fuel tube connector out of the pipe.

NOTICE:

- Check that there is no dirt or other foreign objects around the connector before disconnecting it. Clean the connector if necessary.
- It is necessary to prevent mud or dirt from entering the connector. If mud or dirt gets in the connector, the O-rings may not seal properly.
- Only disconnect the quick connector by hand.
- Do not bend, kink or twist the nylon tubes.
- Protect the connector by covering it with a plastic bag.
- If the pipe and connector are stuck, carefully try wiggling or pushing and pulling on the connector to release it. Pull the connector off the pipe carefully.

(b) Separate the breather tube fuel hose.

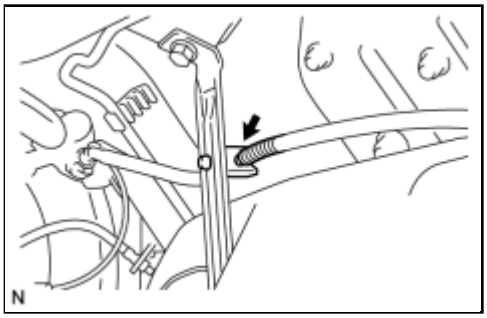

10. DISCONNECT FUEL TANK MAIN TUBE SUB-ASSEMBLY

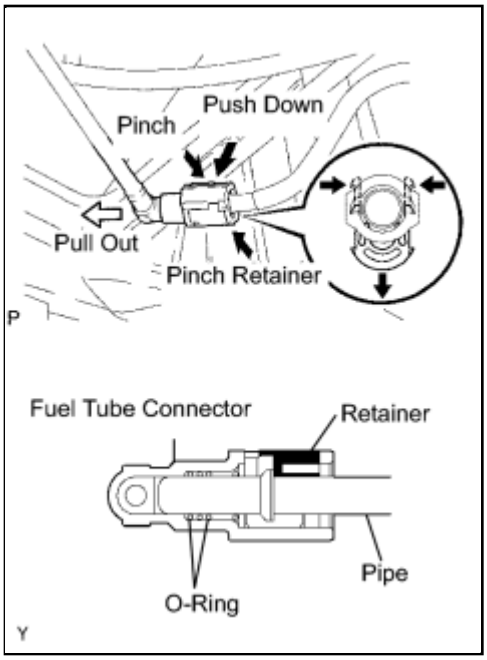

(a) Disconnect the fuel tank main tube.

(1) Pinch the tabs of the retainer of the fuel tube connector to disengage the lock claws and push it down as shown in the illustration.

(2) Pull the fuel tank main tube out of the pipe.

NOTICE:

- Check that there is no dirt or other foreign objects around the connector before disconnecting it. Clean the connector if necessary.
- It is necessary to prevent mud or dirt from entering the connector. If mud or dirt gets in the connector, the O-rings may not seal properly.
- Only disconnect the quick connector by hand.
- Do not bend, kink or twist the nylon tubes.
- Protect the connector by covering it with a plastic bag.
- If the pipe and connector are stuck, carefully try wiggling or pushing and pulling on the connector to release it. Pull the connector off the pipe carefully.

11. DISCONNECT FUEL TANK FILLER PIPE SUB-ASSEMBLY

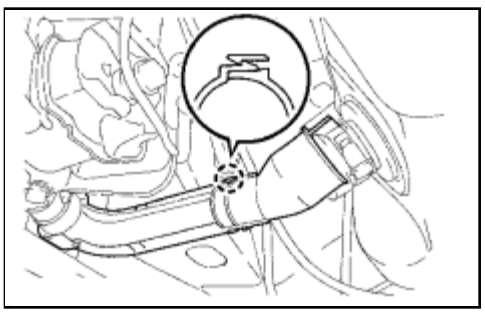

(a) Using a screwdriver, unfasten the claw. Then remove the fuel tank filler pipe cover from the fuel tank filler pipe.

(b) Loosen the hose clamp bolt, then disconnect the fuel tank

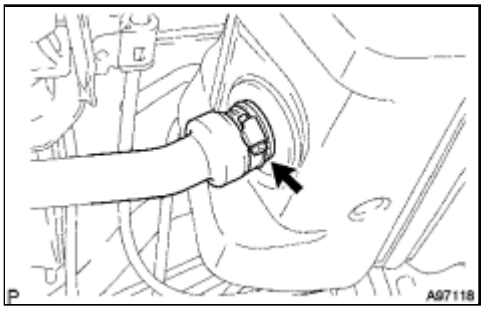

filler pipe hose from the fuel tank.

12. REMOVE FUEL TANK ASSEMBLY

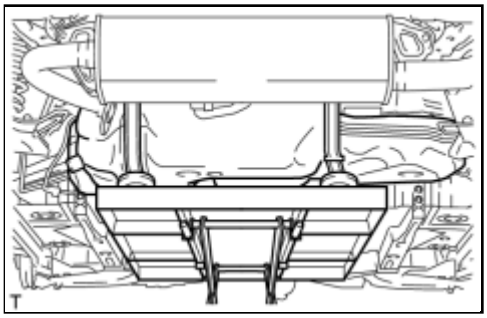

(a) Hold the fuel tank using a transmission jack.

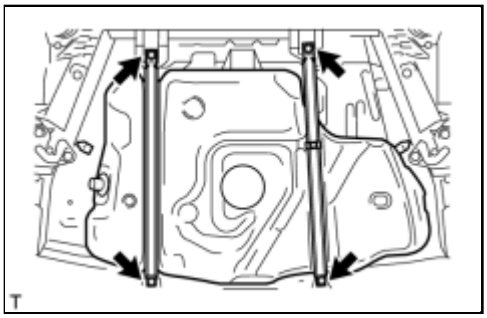

(b) Remove the 4 bolts, then remove the 2 No. 1 fuel tank bands.

(c) Operate the transmission jack, then remove the fuel tank.

13. REMOVE FUEL TANK MAIN TUBE SUB-ASSEMBLY

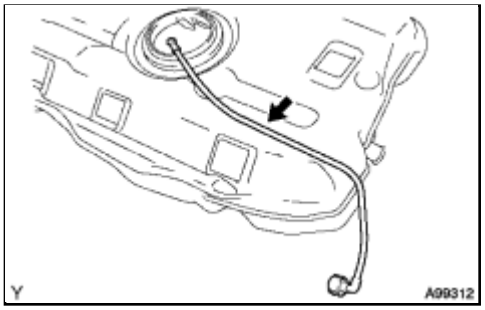

(a) Remove the fuel tank main tube from the fuel tank.

14. REMOVE FUEL TANK VENT HOSE

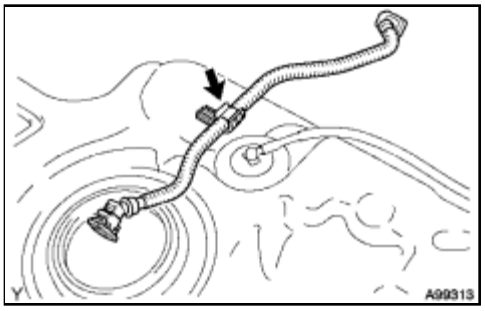

(a) Remove the fuel tank vent hose from the fuel tank clamp.

15. REMOVE FUEL TANK CUSHION

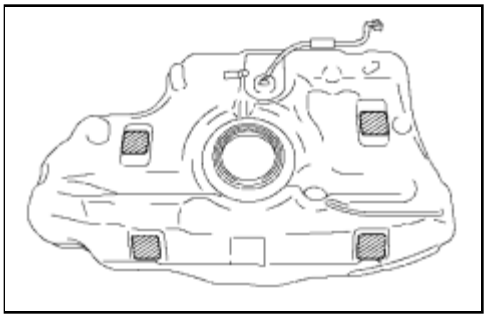

(a) Remove the fuel tank cushions from the fuel tank.

Last Modified: 3-10-2010	6.4 A	**From:** 200901
Model Year: 2010	**Model:** Corolla	**Doc ID:** RM0000022Y200AX
Title: 2AZ-FE FUEL: FUEL TANK: INSTALLATION (2010 Corolla)		

INSTALLATION

1. INSTALL FUEL TANK CUSHION

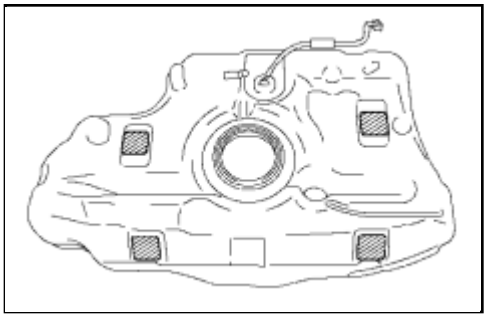

(a) Install new fuel tank cushions onto the fuel tank.

2. INSTALL FUEL TANK VENT HOSE

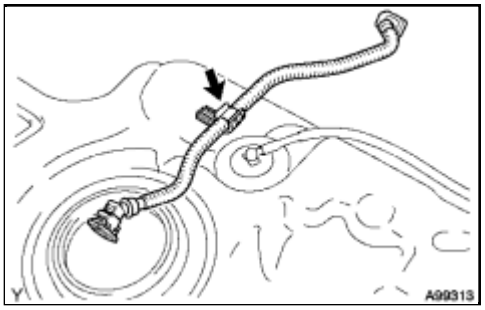

(a) Install the fuel tank vent hose onto the fuel hose clamp.

3. INSTALL FUEL TANK MAIN TUBE SUB-ASSEMBLY

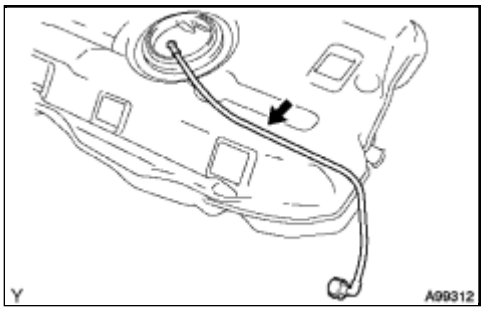

(a) Install the fuel tank main tube onto the fuel tank.

4. INSTALL FUEL TANK ASSEMBLY

(a) Set the fuel tank on a transmission jack.

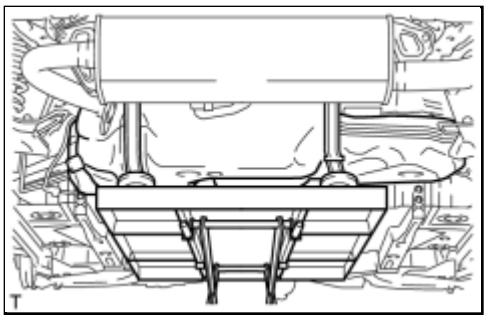

(b) Operate the transmission jack, then install the fuel tank into the vehicle.

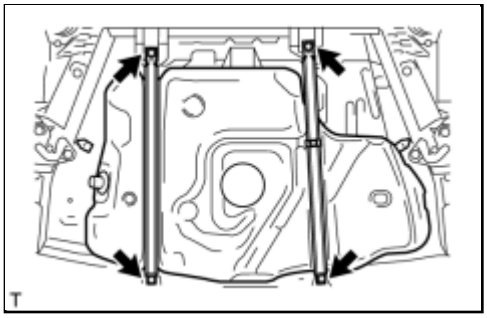

(c) Install the 2 No. 1 fuel tank bands with the 4 bolts.

Torque: 39 N·m (400 kgf·cm, 29ft·lbf)

5. INSTALL FUEL TANK FILLER PIPE SUB-ASSEMBLY

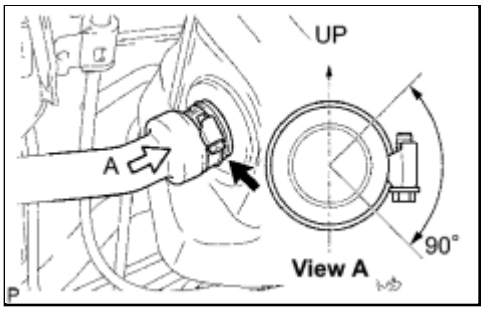

(a) Connect the fuel tank filler pipe hose to the fuel tank.

NOTICE:

Make sure that the hose clamp is facing in the correct direction when installing.

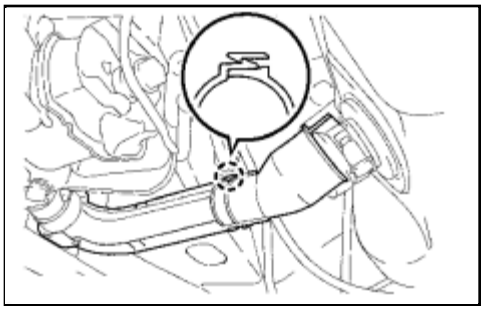

(b) Engage the claw, then install the fuel tank filler pipe cover onto the fuel tank filler pipe.

6. CONNECT FUEL TANK MAIN TUBE SUB-ASSEMBLY

(a) Connect the fuel tank main tube.

(1) Align the fuel tube connector with the pipe, then push the fuel tube connector in until it comes into contact with the seat to connect the fuel tank main tube to the pipe, then push the retainer up until the claws lock.

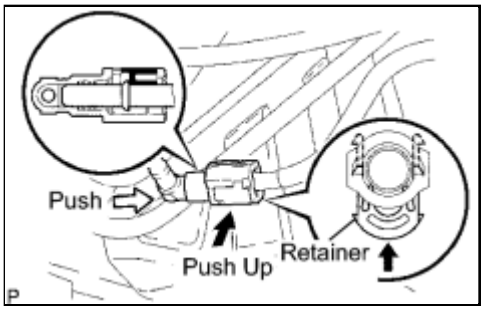

NOTICE:

- Check that there are no scratches or foreign objects around the connecting surfaces of the fuel tube connector and pipe before performing this work.
- After connecting the fuel tank main tube, check that the fuel tank main tube is securely connected by pulling on the fuel tube connector and pipe.

7. CONNECT BREATHER TUBE FUEL HOSE

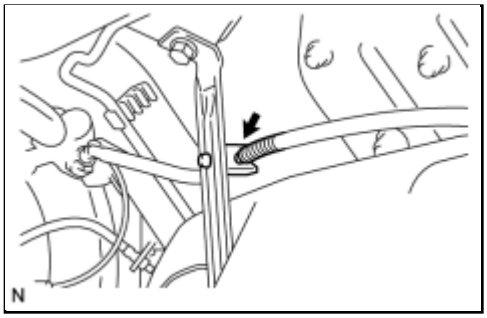

(a) Connect the breather tube fuel hose to the hose clamp.

(b) Connect the breather tube fuel hose.

(1) Align the fuel hose connector with the pipe, then push the fuel hose connector in until the retainer makes a "click" sound to connect the breather tube fuel hose to the pipe.

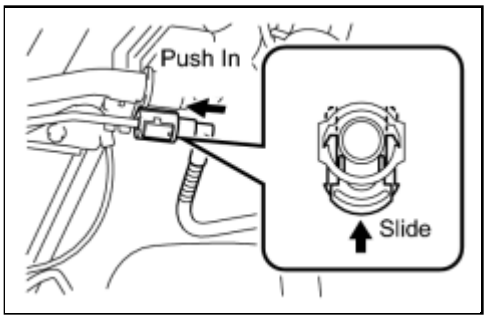

NOTICE:

- Check that there are no scratches or foreign objects around the connecting surfaces of the fuel tube connector and pipe before performing this work.
- After connecting the breather tube fuel hose, check that the fuel pump tube is securely connected by pulling on the fuel tube connector and pipe.

8. CONNECT FUEL TANK VENT HOSE

(a) Connect the fuel tank vent hose.

(1) Align the fuel tube connector with the pipe, then push

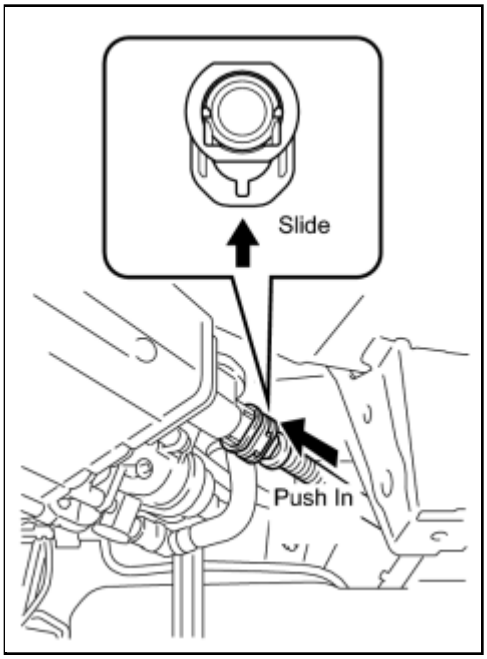

the fuel tube connector in until it comes into contact with the seat to connect the fuel tank vent hose to the pipe.

(2) Slide the retainer of the fuel tube connector to lock the claws as shown in the illustration.

NOTICE:

- Check that there are no scratches or foreign objects around the connecting surfaces of the fuel tube connector and pipe before performing this work.
- After connecting the fuel tank vent hose, check that the fuel tank vent hose is securely connected by pulling on the fuel tube connector.

9. INSTALL NO. 1 FUEL TANK PROTECTOR

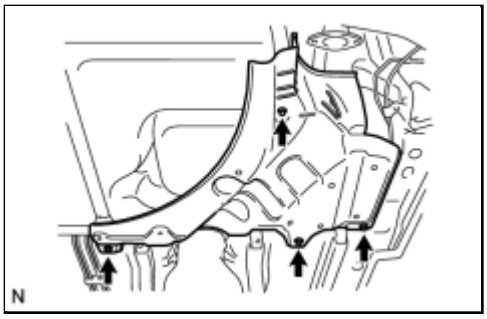

(a) Install the No.1 fuel tank protector with the 4 bolts.

Torque: 5.5 N·m (56 kgf·cm, 49in·lbf)

10. CONNECT PARKING BRAKE CABLE

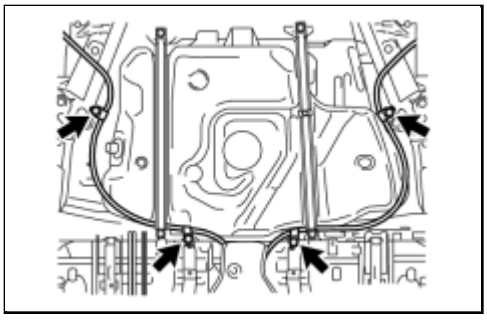

(a) Install the parking cables with the 4 bolts.

Torque: 5.4 N·m (55 kgf·cm, 48in·lbf)

11. INSTALL CENTER EXHAUST PIPE ASSEMBLY

HINT: INFO .

12. ADD FUEL

13. INSTALL FUEL SUCTION TUBE ASSEMBLY WITH PUMP AND GAUGE

(a) Install the fuel suction with pump and gauge tube assembly to the fuel tank INFO .

14. CONNECT CABLE TO NEGATIVE BATTERY TERMINAL INFO

15. INSPECT FOR FUEL LEAK INFO

16. INSPECT FOR EXHAUST GAS LEAK

Last Modified: 3-10-2010	6.4 A	**From:** 200901
Model Year: 2010	**Model:** Corolla	**Doc ID:** RM000002PZU00TX
Title: 2ZR-FE FUEL: FUEL TANK: REMOVAL (2010 Corolla)		

REMOVAL

1. DISCHARGE FUEL SYSTEM PRESSURE INFO

2. DISCONNECT CABLE FROM NEGATIVE BATTERY TERMINAL

3. REMOVE FUEL SUCTION TUBE ASSEMBLY WITH PUMP AND GAUGE

(a) Remove the fuel suction tube assembly with pump and gauge from the fuel tank INFO .

4. DRAIN FUEL

5. REMOVE FRONT EXHAUST PIPE ASSEMBLY

HINT: INFO .

6. REMOVE NO. 1 FUEL TANK PROTECTOR

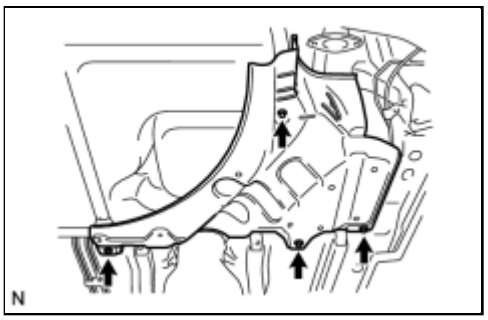

(a) Remove the 4 bolts and the No. 1 fuel tank protector.

7. SEPARATE PARKING BRAKE CABLE

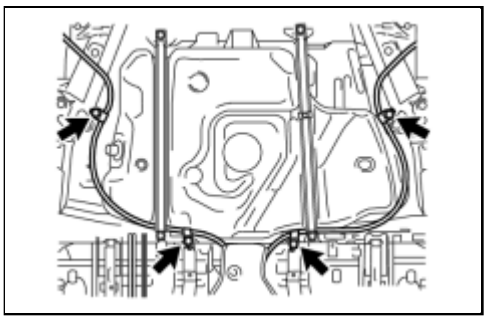

(a) Remove the 4 bolts, and separate the parking brake cables.

8. DISCONNECT FUEL TANK VENT HOSE

(a) Disconnect the fuel tank vent hose.

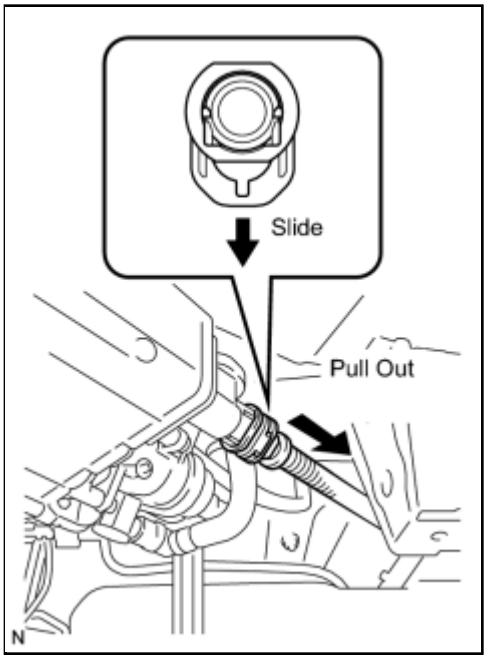

(b) Pull the fuel tank vent hose out of the pipe.

NOTICE:

- Check that there is no dirt or other foreign objects around the connector before disconnecting it. Clean the connector if necessary.
- It is necessary to prevent mud or dirt from entering the connector. If mud or dirt gets in the connector, the O-rings may not seal properly.
- Only disconnect the quick connector by hand.
- Do not bend, kink or twist the nylon tubes.
- Protect the connector by covering it with a plastic bag.

9. DISCONNECT BREATHER TUBE FUEL HOSE

(a) Disconnect the breather tube fuel hose.

(1) Pinch the retainer of the fuel tube connector, then pull the fuel tube connector out of the pipe.

NOTICE:

- Check that there is no dirt or other foreign objects around the connector before disconnecting it. Clean the connector if necessary.
- It is necessary to prevent mud or dirt from entering the connector. If mud or dirt gets in the connector, the O-rings may not seal properly.
- Only disconnect the quick connector by hand.
- Do not bend, kink or twist the nylon tubes.
- Protect the connector by covering it with a plastic bag.
- If the pipe and connector are stuck, carefully try wiggling or pushing and pulling on the connector to release it. Pull the connector off the pipe carefully.

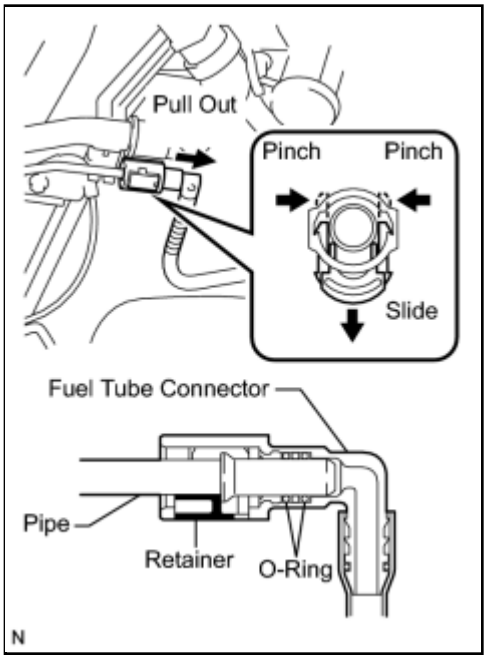

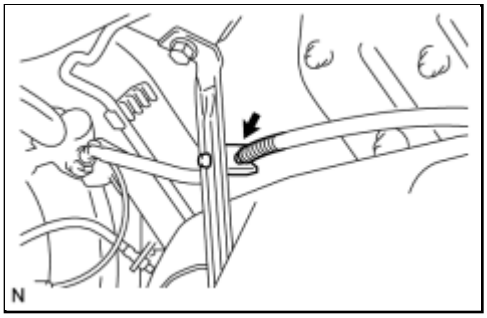

(b) Separate the fuel breather tube fuel hose.

10. DISCONNECT FUEL TANK MAIN TUBE SUB-ASSEMBLY

(a) Disconnect the fuel tank main tube.

(1) Pinch the tabs of the retainer of the fuel tube connector to disengage the lock claws and push it down as shown in the illustration.

(2) Pull the fuel tank main tube out of the pipe.

NOTICE:

- Check that there is no dirt or other foreign objects around the connector before disconnecting it. Clean the connector if necessary.
- It is necessary to prevent mud or dirt from entering the connector. If mud or dirt gets in the connector, the O-rings may not seal properly.
- Only disconnect the quick connector by hand.
- Do not bend, kink or twist the nylon tubes.

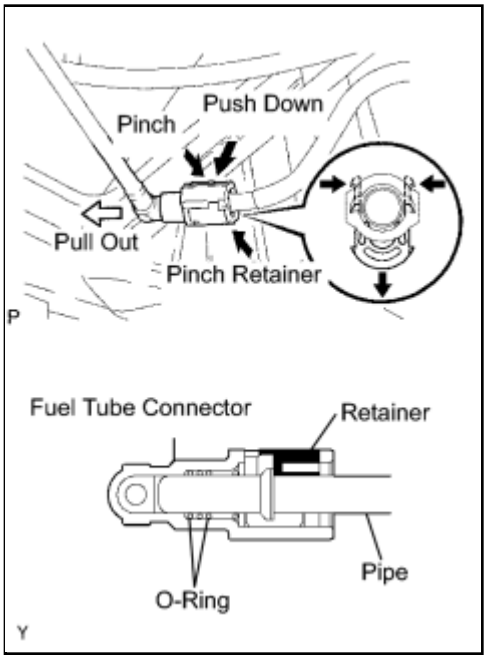

- Protect the connector by covering it with a plastic bag.
- If the pipe and connector are stuck, carefully try wiggling or pushing and pulling on the connector to release it. Pull the connector off the pipe carefully.

11. DISCONNECT FUEL TANK FILLER PIPE SUB-ASSEMBLY

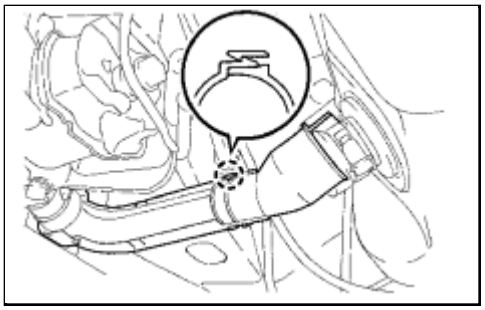

(a) Using a screwdriver, unfasten the claw. Then remove the fuel tank filler pipe cover from the fuel tank filler pipe.

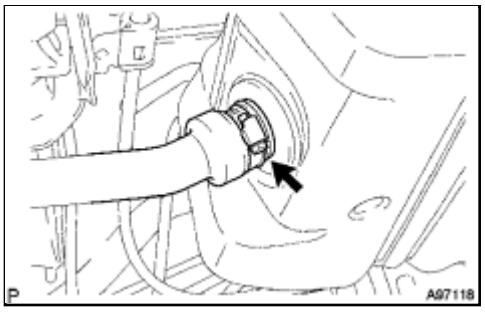

(b) Loosen the hose clamp bolt, then disconnect the fuel tank filler pipe hose from the fuel tank.

12. REMOVE FUEL TANK ASSEMBLY

(a) Hold the fuel tank using a transmission jack.

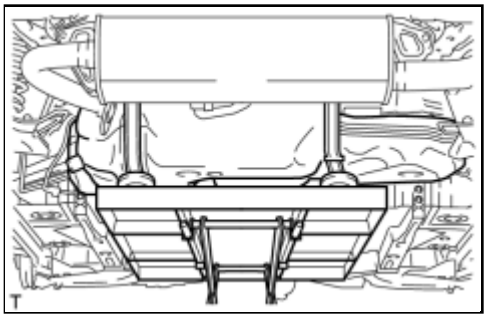

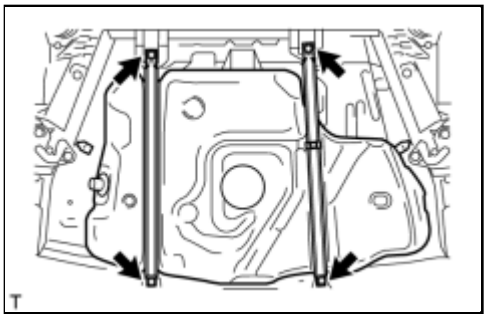

(b) Remove the 4 bolts, then remove the 2 No. 1 fuel tank bands.

(c) Operate the transmission jack, then remove the fuel tank.

13. REMOVE FUEL TANK MAIN TUBE SUB-ASSEMBLY

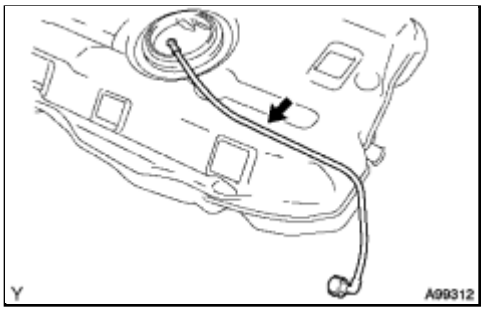

(a) Remove the fuel tank main tube from the fuel tank.

14. REMOVE FUEL TANK VENT HOSE

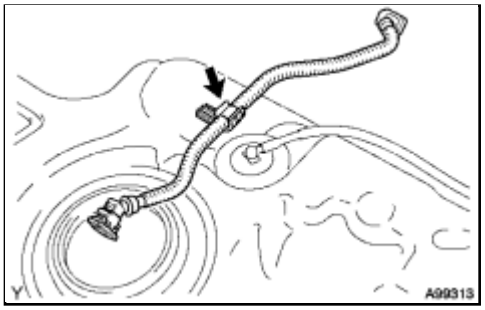

(a) Remove the fuel tank vent hose from the fuel tank clamp.

15. REMOVE FUEL TANK CUSHION

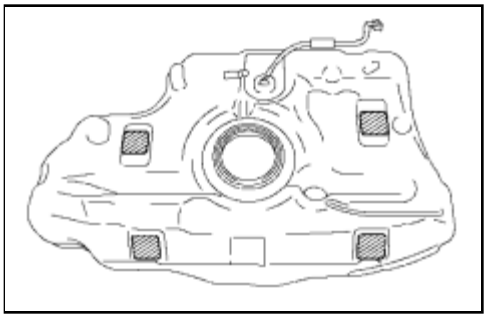

(a) Remove the fuel tank cushions from the fuel tank.

Last Modified: 3-10-2010	6.4 K	**From:** 200901
Model Year: 2010	**Model:** Corolla	**Doc ID:** RM000002PZT00UX
Title: 2ZR-FE FUEL: FUEL TANK: COMPONENTS (2010 Corolla)		

COMPONENTS

ILLUSTRATION

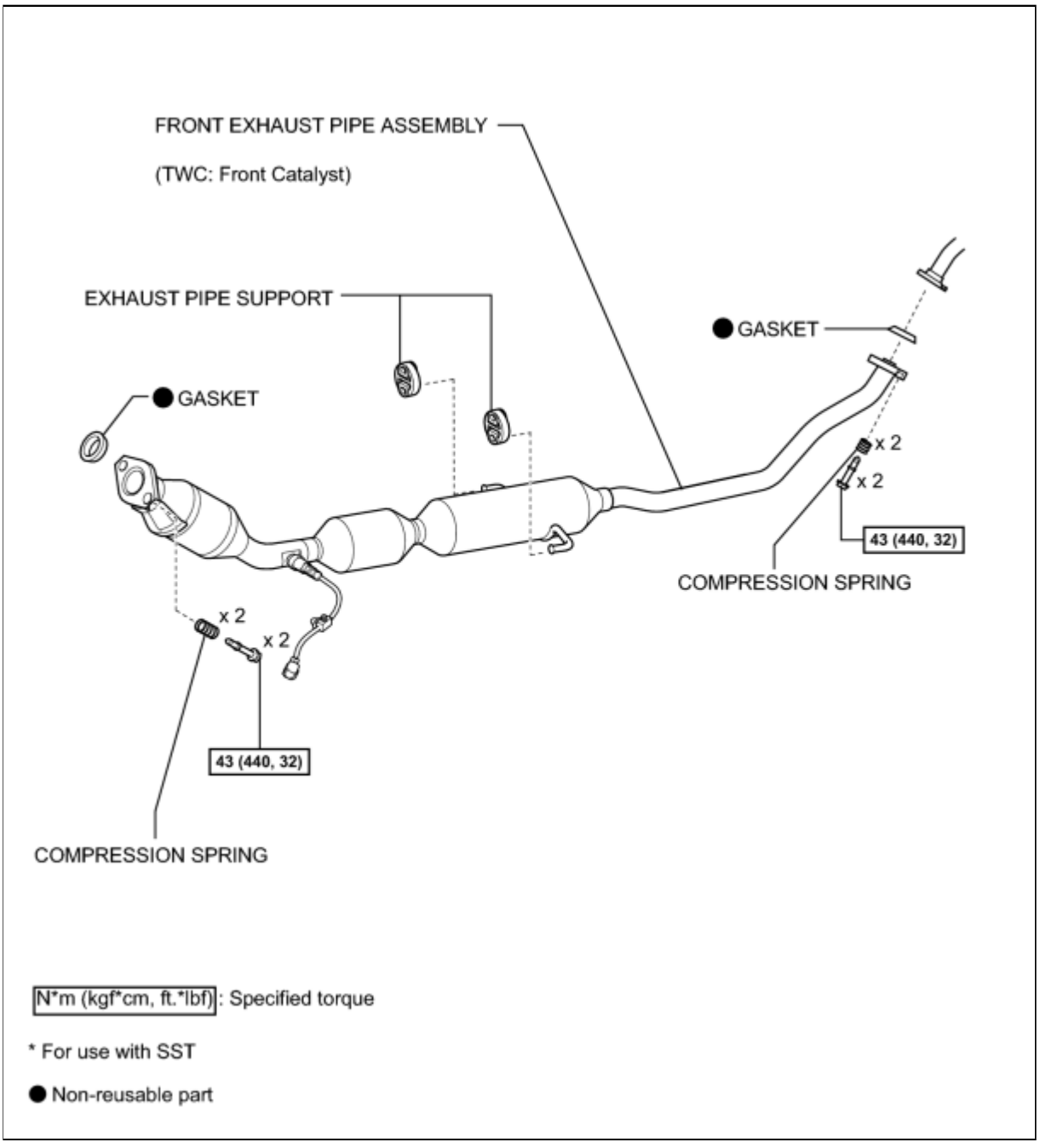

ILLUSTRATION

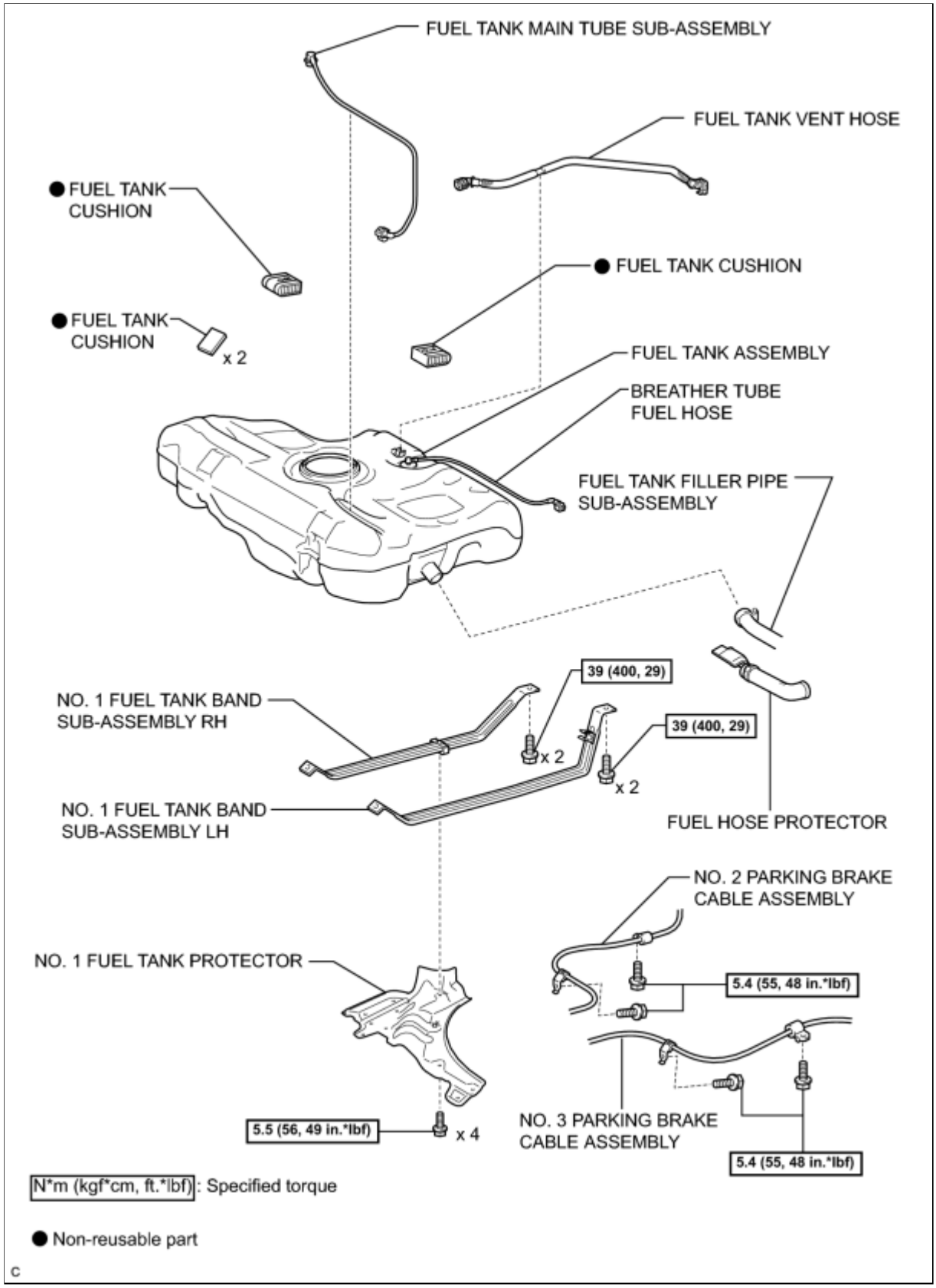
FUEL TANK MAIN TUBE SUB-ASSEMBLY
FUEL TANK VENT HOSE
● FUEL TANK CUSHION
● FUEL TANK CUSHION
● FUEL TANK CUSHION
x 2
FUEL TANK ASSEMBLY
BREATHER TUBE
FUEL HOSE
FUEL TANK FILLER PIPE SUB-ASSEMBLY
39 (400, 29)
NO. 1 FUEL TANK BAND SUB-ASSEMBLY RH
x 2
39 (400, 29)
x 2
NO. 1 FUEL TANK BAND SUB-ASSEMBLY LH
FUEL HOSE PROTECTOR
NO. 2 PARKING BRAKE CABLE ASSEMBLY
NO. 1 FUEL TANK PROTECTOR
5.4 (55, 48 in.*lbf)
5.5 (56, 49 in.*lbf)
x 4
NO. 3 PARKING BRAKE CABLE ASSEMBLY
5.4 (55, 48 in.*lbf)
N*m (kgf*cm, ft.*lbf): Specified torque
● Non-reusable part

c

Last Modified: 3-10-2010	6.4 A	**From:** 200901
Model Year: 2010	**Model:** Corolla	**Doc ID:** RM000002PZS00TX
Title: 2ZR-FE FUEL: FUEL TANK: INSTALLATION (2010 Corolla)		

INSTALLATION

1. INSTALL FUEL TANK CUSHION

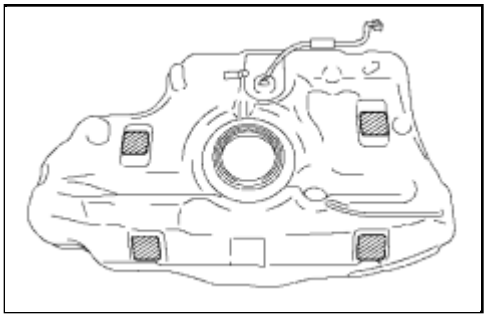

(a) Install new fuel tank cushions onto the fuel tank.

2. INSTALL FUEL TANK VENT HOSE

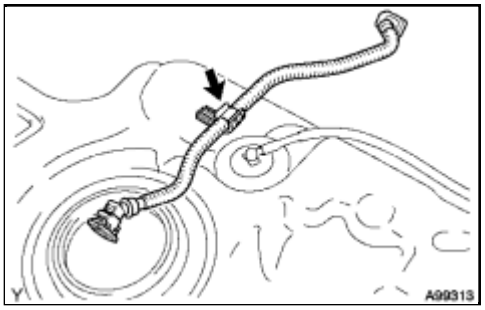

(a) Install the fuel tank vent hose onto the fuel tank clamp.

3. INSTALL FUEL TANK MAIN TUBE SUB-ASSEMBLY

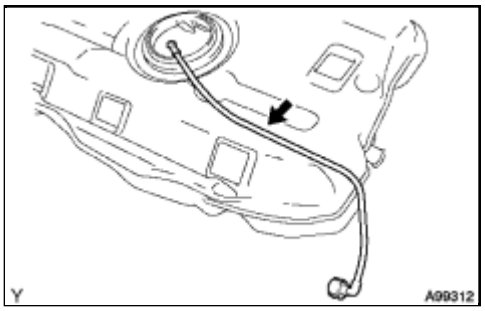

(a) Install the fuel tank main tube onto the fuel tank.

4. INSTALL FUEL TANK ASSEMBLY

(a) Set the fuel tank on a transmission jack.

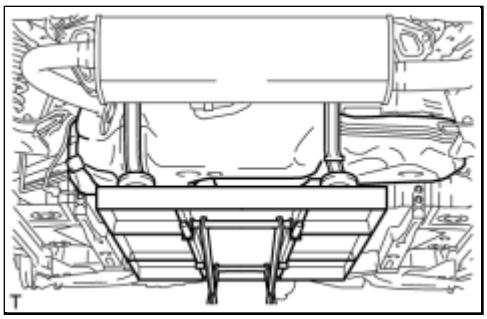

(b) Operate the transmission jack, then install the fuel tank into the vehicle.

(c) Install the 2 No. 1 fuel tank bands with the 4 bolts.

Torque: 39 N·m (400 kgf·cm, 29ft·lbf)

5. INSTALL FUEL TANK FILLER PIPE SUB-ASSEMBLY

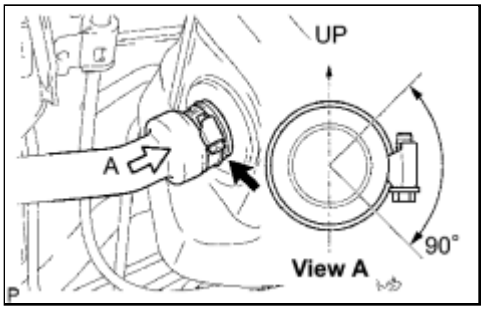

(a) Connect the fuel tank filler pipe to the fuel tank.

NOTICE:

Make sure that the hose clamp is facing in the correct direction when installing.

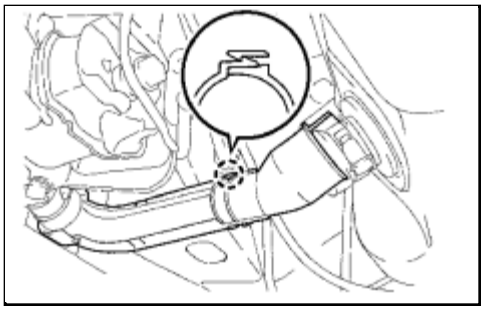

(b) Engage the claw, then install the fuel tank filler pipe cover onto the fuel tank filler pipe.

6. CONNECT FUEL TANK MAIN TUBE SUB-ASSEMBLY

(a) Connect the fuel tank main tube.

(1) Align the fuel tube connector with the pipe, then push the fuel tube connector in until it comes into contact with the seat to connect the fuel tank main tube to the pipe, then push the retainer up until the claws lock.

NOTICE:

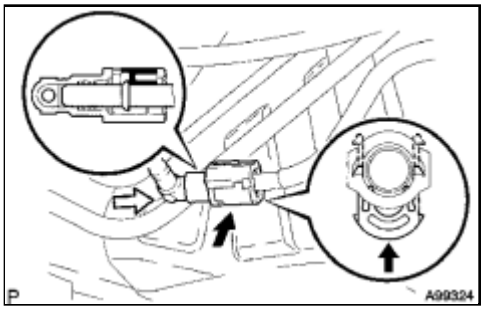

- Check that there are no scratches or foreign objects around the connecting surfaces of the fuel tube connector and pipe before performing this work.
- After connecting the fuel tank main tube, check that the fuel tank main tube is securely connected by pulling on the fuel tube connector and pipe.

7. CONNECT BREATHER TUBE FUEL HOSE

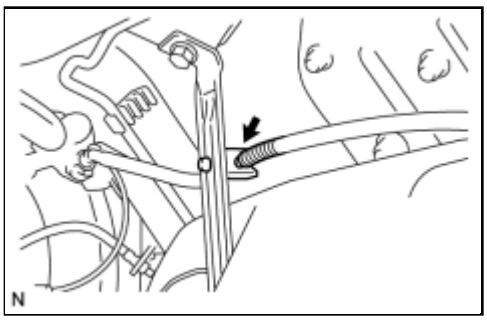

(a) Connect the breather tube fuel hose to the clamp.

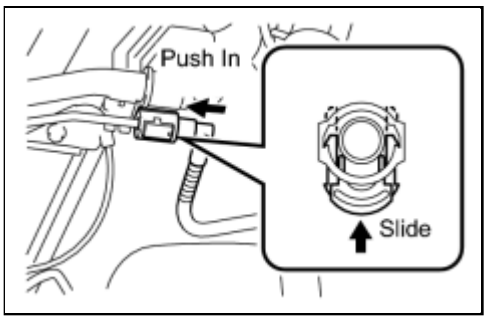

(b) Connect the breather tube fuel hose to the pipe.

(1) Align the fuel hose connector with the pipe, then push the fuel hose connector in until the retainer makes a "click" sound to connect the fuel tank breather tube fuel hose to the pipe.

NOTICE:

- Check that there are no scratches or foreign objects around the connecting surfaces of the fuel tube connector and pipe before performing this work.
- After connecting the fuel tank breather tube, check that the fuel pump tube is securely connected by pulling on the fuel tube connector and pipe.

8. CONNECT FUEL TANK VENT HOSE

(a) Connect the fuel tank vent hose.

(1) Align the fuel tube connector with the pipe, then push the fuel tube connector in until it comes into contact with the seat to connect the fuel tank vent hose to the pipe.

(2) Slide the retainer of the fuel tube connector to lock the

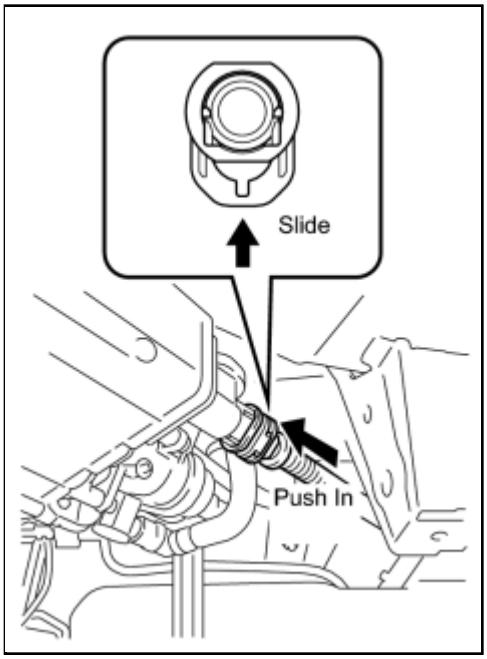

claws as shown in the illustration.

NOTICE:

- Check that there are no scratches or foreign objects around the connecting surfaces of the fuel tube connector and pipe before performing this work.
- After connecting the fuel tank vent hose, check that the fuel tank vent hose is securely connected by pulling on the fuel tube connector.

9. INSTALL NO. 1 FUEL TANK PROTECTOR

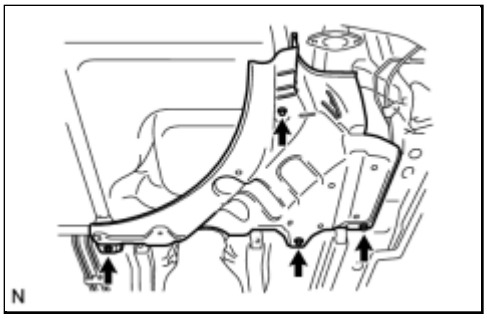

(a) Install the fuel tank protector sub-assembly with the 4 bolts.

Torque: 5.5 N·m (56 kgf·cm, 49in·lbf)

10. CONNECT PARKING BRAKE CABLE

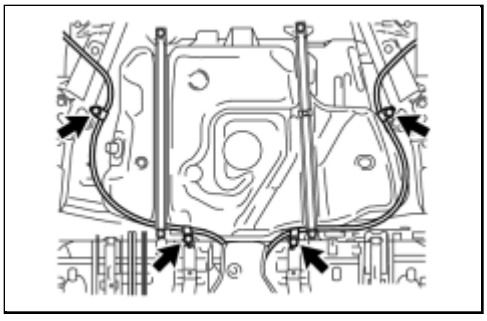

(a) Install the parking cables with the 4 bolts.

Torque: 5.4 N·m (55 kgf·cm, 48in·lbf)

11. INSTALL FRONT EXHAUST PIPE ASSEMBLY

INFO

12. ADD FUEL

13. INSTALL FUEL SUCTION TUBE ASSEMBLY WITH PUMP AND GAUGE

(a) Install the fuel suction tube assembly with pump and gauge INFO .

14. CONNECT CABLE TO NEGATIVE BATTERY TERMINAL INFO

15. INSPECT FOR FUEL LEAK INFO

16. INSPECT FOR EXHAUST GAS LEAK

Last Modified: 3-10-2010	6.4 K	**From:** 200901
Model Year: 2010	**Model:** Corolla	**Doc ID:** RM000002CR3005X
Title: 2AZ-FE INTAKE / EXHAUST: EXHAUST MANIFOLD: COMPONENTS (2010 Corolla)		

COMPONENTS

ILLUSTRATION

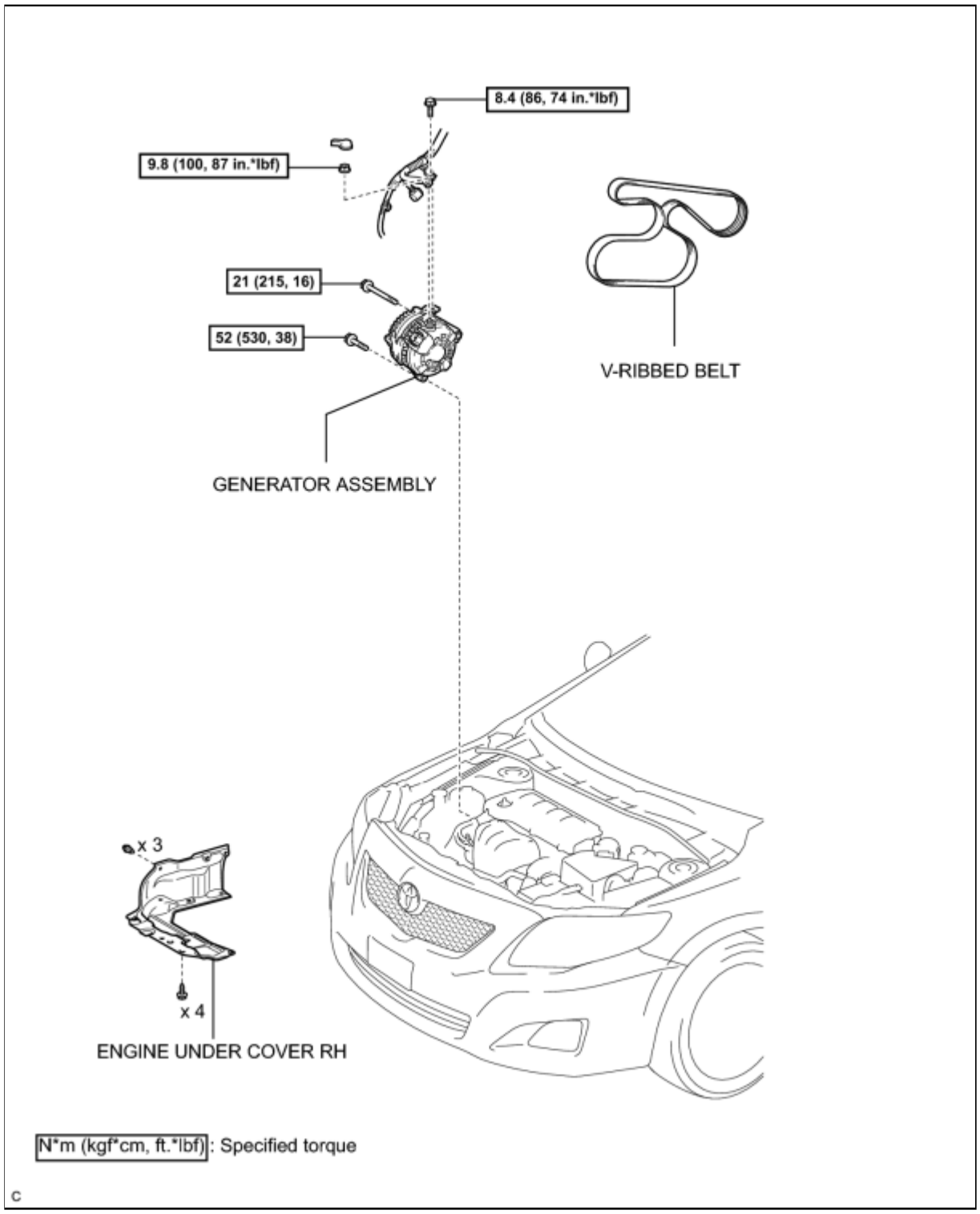

ILLUSTRATION

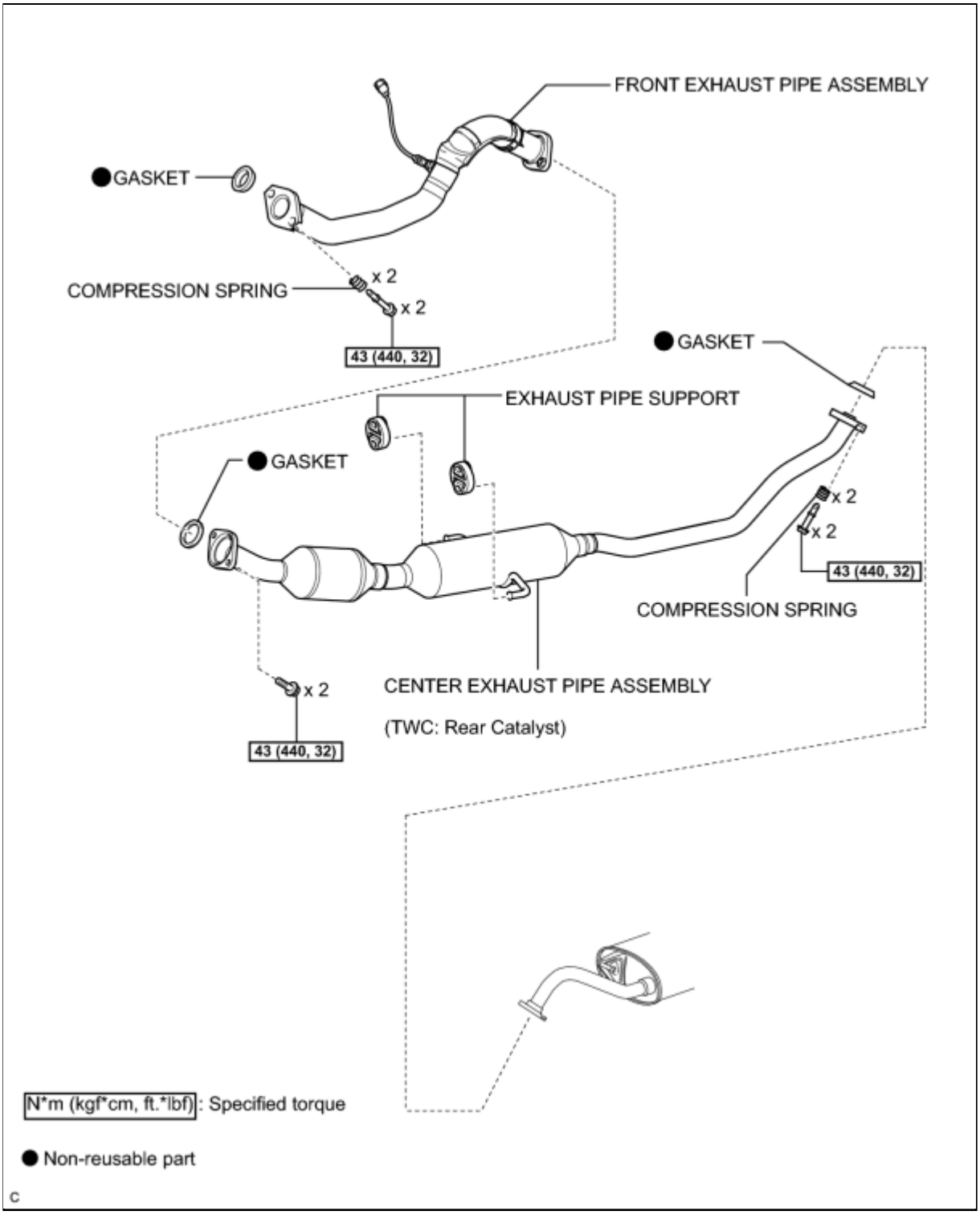

ILLUSTRATION

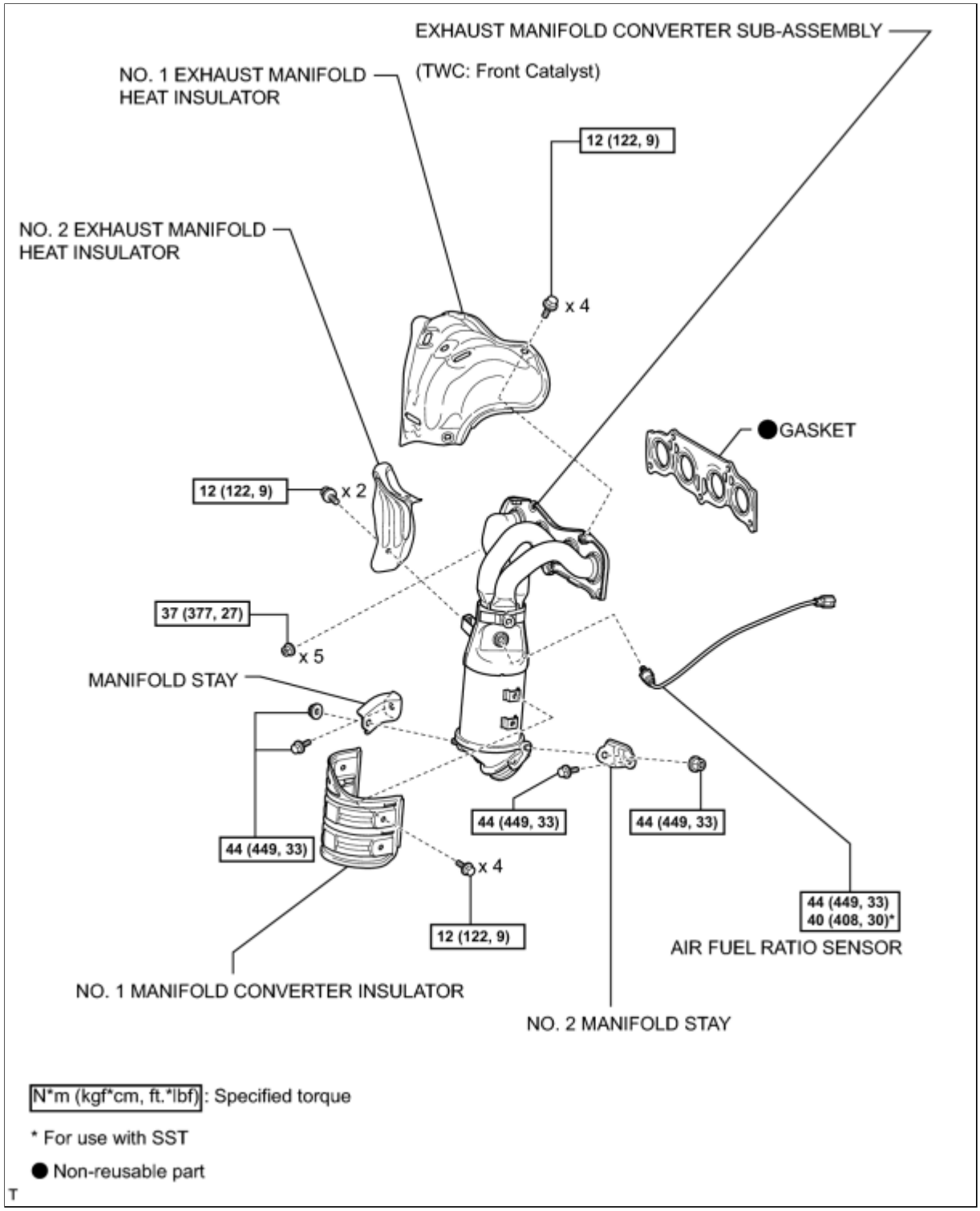
EXHAUST MANIFOLD CONVERTER SUB-ASSEMBLY
(TWC: Front Catalyst)
NO. 1 EXHAUST MANIFOLD HEAT INSULATOR
12 (122, 9)
NO. 2 EXHAUST MANIFOLD HEAT INSULATOR
x 4
GASKET
12 (122, 9)
x 2
37 (377, 27)
x 5
MANIFOLD STAY
44 (449, 33)
44 (449, 33)
44 (449, 33)
x 4
12 (122, 9)
44 (449, 33)
40 (408, 30)*
AIR FUEL RATIO SENSOR
NO. 1 MANIFOLD CONVERTER INSULATOR
NO. 2 MANIFOLD STAY
N*m (kgf*cm, ft.*lbf): Specified torque
* For use with SST
● Non-reusable part

T

Last Modified: 3-10-2010	6.4 A	**From:** 200901
Model Year: 2010	**Model:** Corolla	**Doc ID:** RM000002CR4005X
Title: 2AZ-FE INTAKE / EXHAUST: EXHAUST MANIFOLD: REMOVAL (2010 Corolla)		

REMOVAL

1. DISCONNECT CABLE FROM NEGATIVE BATTERY TERMINAL

2. REMOVE V-RIBBED BELT INFO

3. REMOVE GENERATOR ASSEMBLY

INFO

4. REMOVE CENTER EXHAUST PIPE ASSEMBLY

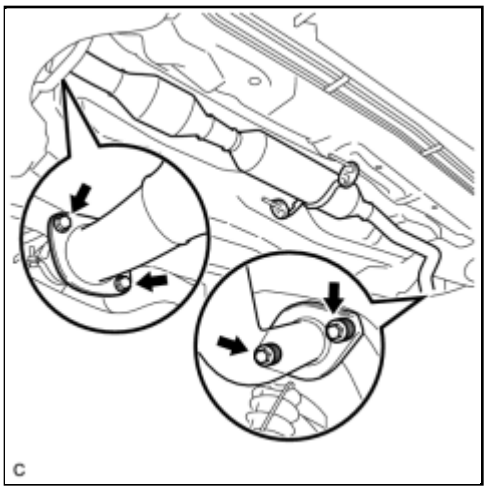

(a) Remove the 4 bolts and 2 compression springs.

(b) Remove the center exhaust pipe assembly from the 2 exhaust pipe supports.

(c) Remove the 2 gaskets.

5. REMOVE FRONT EXHAUST PIPE ASSEMBLY

(a) Disconnect the heated oxygen sensor connector.

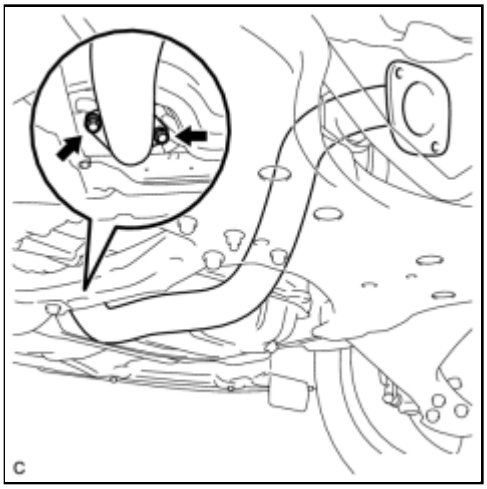

(b) Remove the 2 bolts, 2 compression springs and front exhaust pipe assembly.

(c) Remove the gasket from the exhaust manifold.

6. REMOVE MANIFOLD STAY

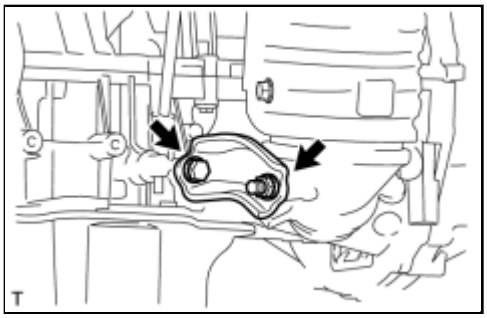

(a) Remove the bolt, nut and manifold stay.

7. REMOVE NO. 2 MANIFOLD STAY

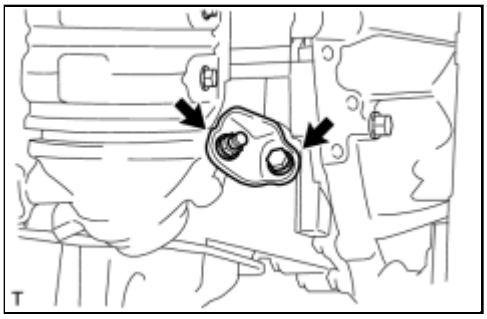

(a) Remove the bolt, nut and No. 2 manifold stay.

8. REMOVE NO. 1 EXHAUST MANIFOLD HEAT INSULATOR

(a) Remove the 4 bolts and No. 1 exhaust manifold heat

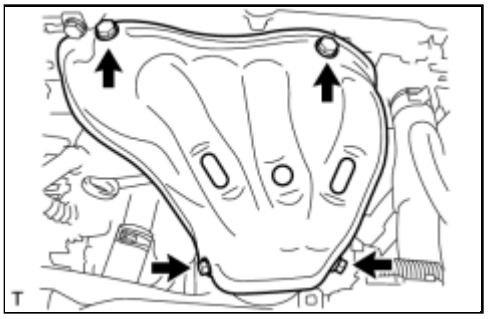

insulator.

9. REMOVE AIR FUEL RATIO SENSOR INFO

10. REMOVE EXHAUST MANIFOLD CONVERTER SUB-ASSEMBLY

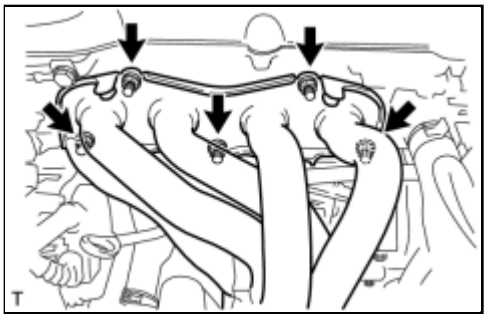

(a) Remove the 5 nuts and exhaust manifold converter sub-assembly.

(b) Remove the gasket.

11. REMOVE NO. 2 EXHAUST MANIFOLD HEAT INSULATOR

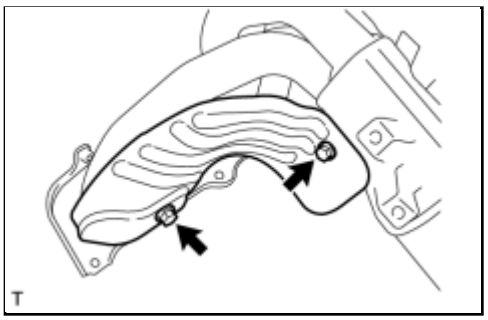

(a) Remove the 2 bolts and No. 2 exhaust manifold heat insulator.

12. REMOVE NO. 1 MANIFOLD CONVERTER INSULATOR

(a) Remove the 4 bolts and No. 1 manifold converter insulator.

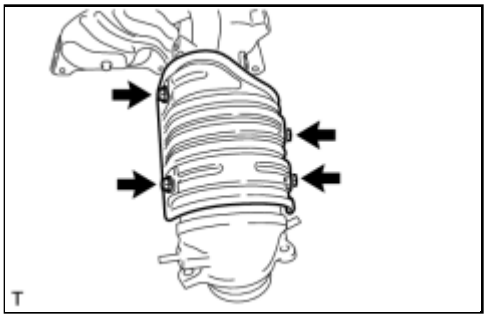
T

Last Modified: 3-10-2010	6.4 A	**From:** 200901
Model Year: 2010	**Model:** Corolla	**Doc ID:** RM000002CR1005X
Title: 2AZ-FE INTAKE / EXHAUST: EXHAUST MANIFOLD: INSTALLATION (2010 Corolla)		

INSTALLATION

1. INSTALL NO. 1 MANIFOLD CONVERTER INSULATOR

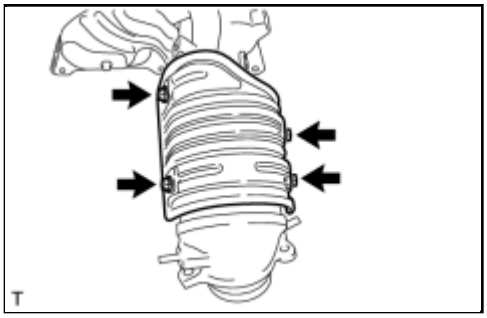

(a) Install the No. 1 manifold converter insulator with the 4 bolts.

Torque: 12 N·m (122 kgf·cm, 9ft·lbf)

2. INSTALL NO. 2 EXHAUST MANIFOLD HEAT INSULATOR

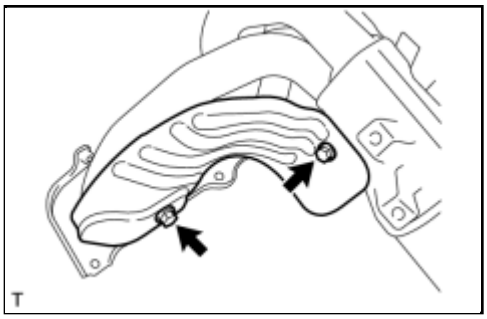

(a) Install the No. 2 exhaust manifold heat insulator with the 2 bolts.

Torque: 12 N·m (122 kgf·cm, 9ft·lbf)

3. INSTALL EXHAUST MANIFOLD CONVERTER SUB-ASSEMBLY

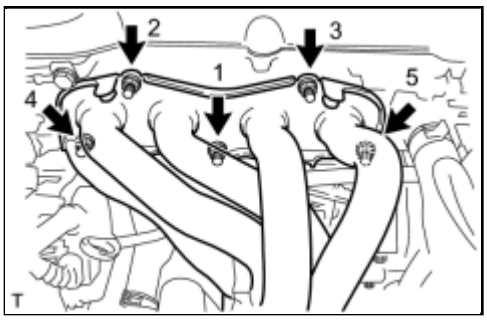

(a) Install a new gasket.

(b) Install the exhaust manifold converter sub-assembly with the 5 nuts in the order shown in the illustration.

Torque: 37 N·m (377 kgf·cm, 27ft·lbf)

4. INSTALL NO. 2 MANIFOLD STAY

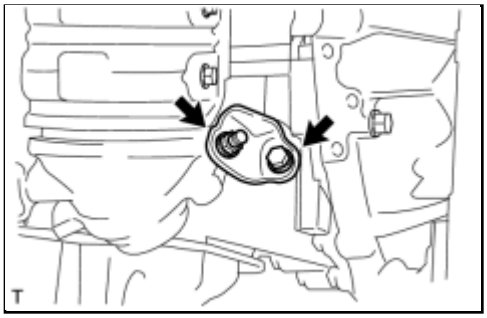

(a) Install the No. 2 manifold stay with the bolt and nut.

Torque: 44 N·m (449 kgf·cm, 33ft·lbf)

5. INSTALL MANIFOLD STAY

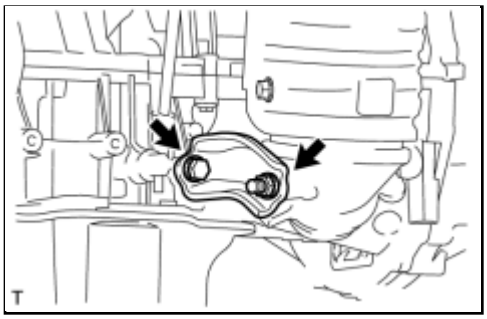

(a) Install the manifold stay with the bolt and nut.

Torque: 44 N·m (449 kgf·cm, 33ft·lbf)

6. INSTALL AIR FUEL RATIO SENSOR INFO

7. INSTALL NO. 1 EXHAUST MANIFOLD HEAT INSULATOR

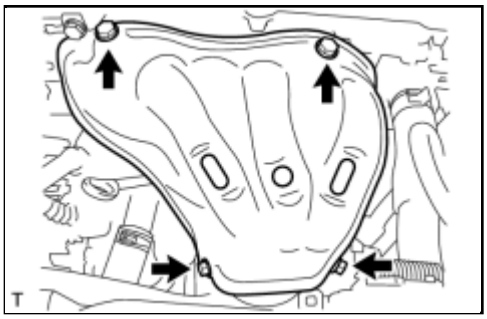

(a) Install the No. 1 exhaust manifold heat insulator with the 4 bolts.

Torque: 12 N·m (122 kgf·cm, 9ft·lbf)

8. INSTALL FRONT EXHAUST PIPE ASSEMBLY

(a) Using a vernier caliper, measure the free length of the compression springs.

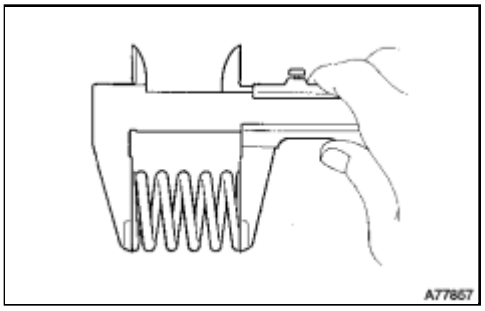

Minimum	41.5 mm (1.63 in.)

HINT:

If the free length is less than the minimum, replace the compression spring.

(b) Remove the remains of exhaust manifold converter with wire brash.

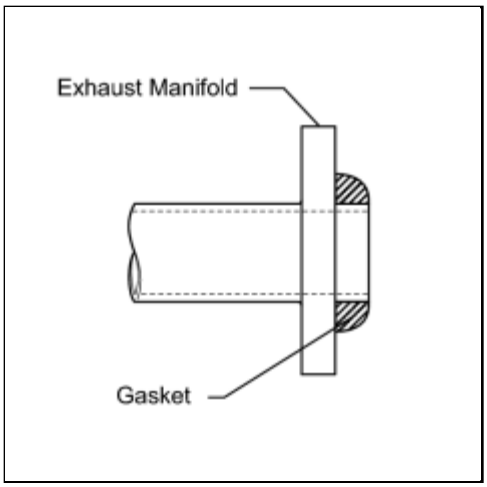

(c) Fully insert a new gasket to the exhaust manifold.

NOTICE:

- Be sure to install the gasket in the correct direction.
- Do not reuse the gasket.
- Do not damage the gasket.

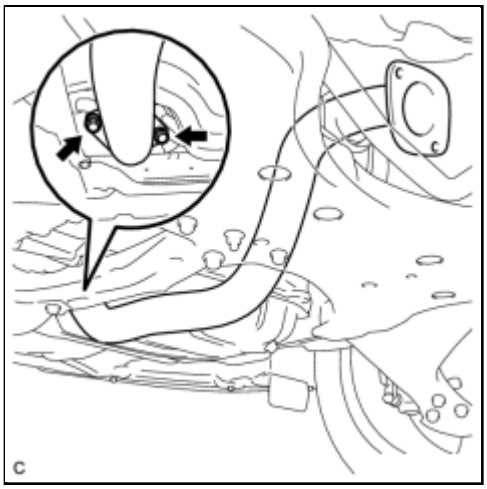

(d) Install the front exhaust pipe assembly with the 2 bolts and 2 compression springs.

Torque: 43 N·m (440 kgf·cm, 32ft·lbf)

(e) Connect the heated oxygen sensor connector.

9. INSTALL CENTER EXHAUST PIPE ASSEMBLY

(a) Using a vernier caliper, measure the free length of the

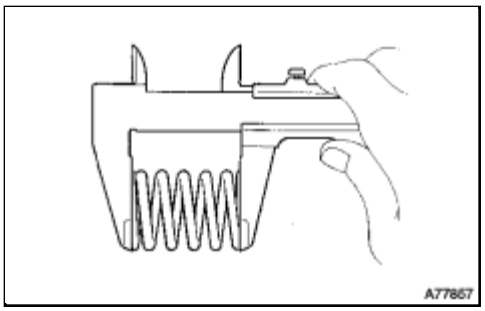

compression springs.

Minimum	38.5 mm (1.52 in.)

HINT:

If the free length is less than the minimum, replace the compression spring.

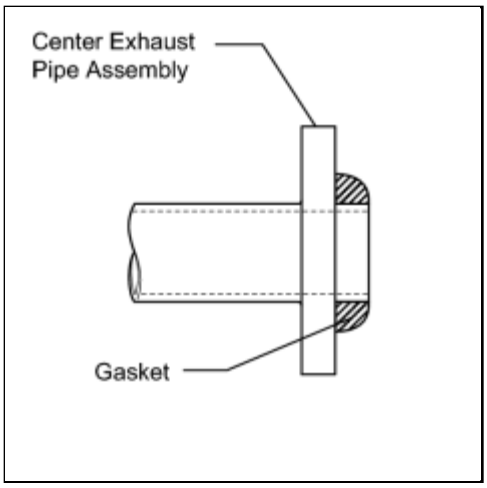

(b) Fully insert a new gasket to the center exhaust pipe assembly.

NOTICE:

- Be sure to install the gasket in the correct direction.
- Do not reuse the gasket.
- Do not damage the gasket.

(c) Install a new gasket to the front exhaust pipe assembly.

(d) Connect the center exhaust pipe assembly to the 2 exhaust pipe supports.

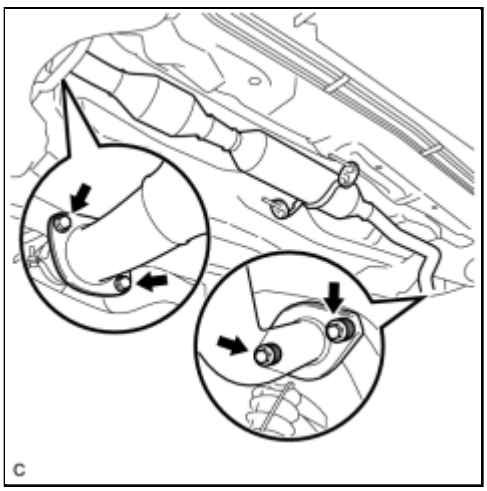

(e) Install the center exhaust pipe assembly with the 4 bolts and 2 compression springs.

Torque: 43 N·m (440 kgf·cm, 32ft·lbf)

10. INSTALL GENERATOR ASSEMBLY

INFO

11. INSTALL V-RIBBED BELT INFO

12. CONNECT CABLE TO NEGATIVE BATTERY TERMINAL

13. INSPECT FOR EXHAUST GAS LEAK

Last Modified: 3-10-2010	6.4 K	**From:** 200901
Model Year: 2010	**Model:** Corolla	**Doc ID:** RM000002WV5021X
Title: 2ZR-FE INTAKE / EXHAUST: EXHAUST MANIFOLD: COMPONENTS (2010 Corolla)		

COMPONENTS

ILLUSTRATION

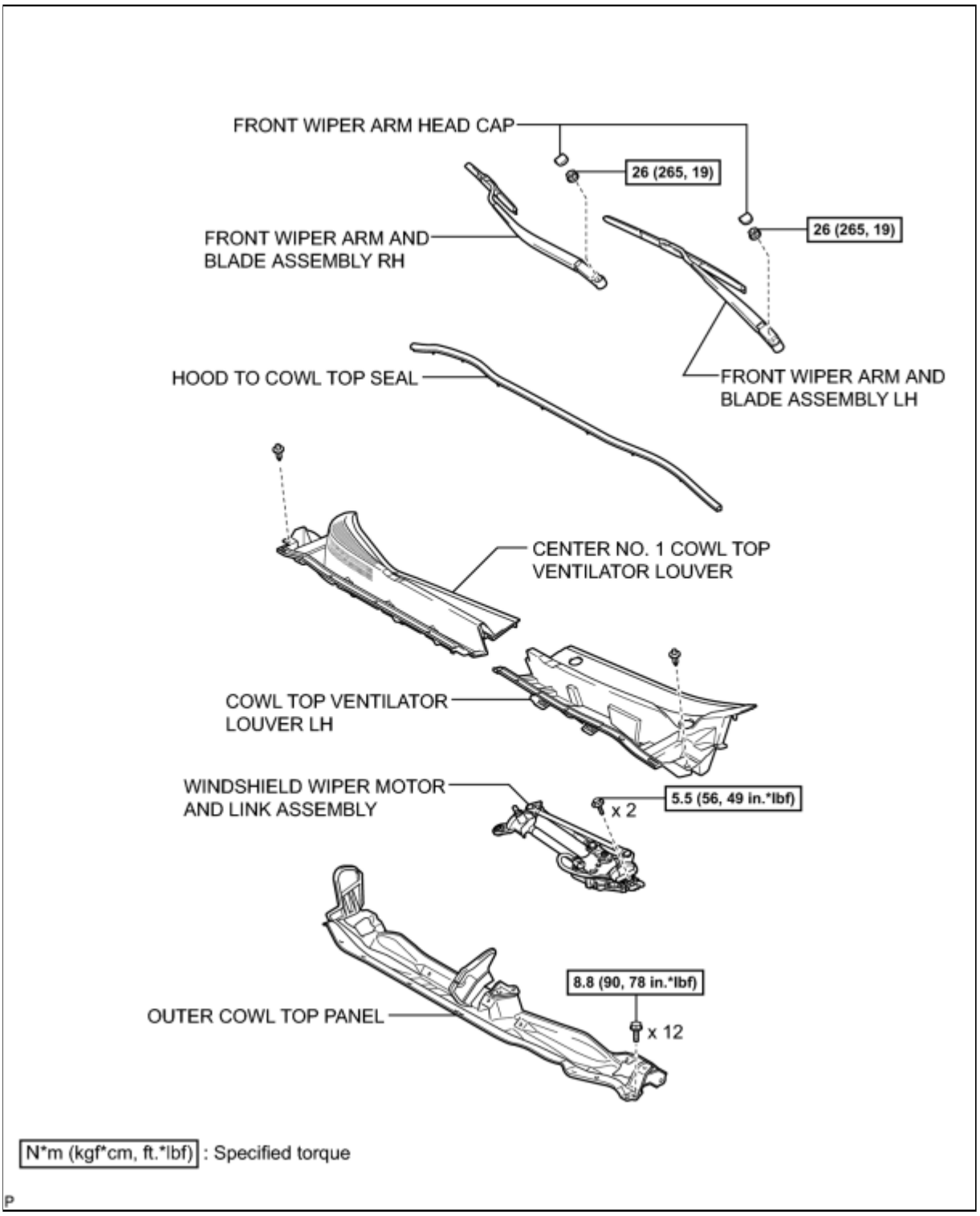

ILLUSTRATION

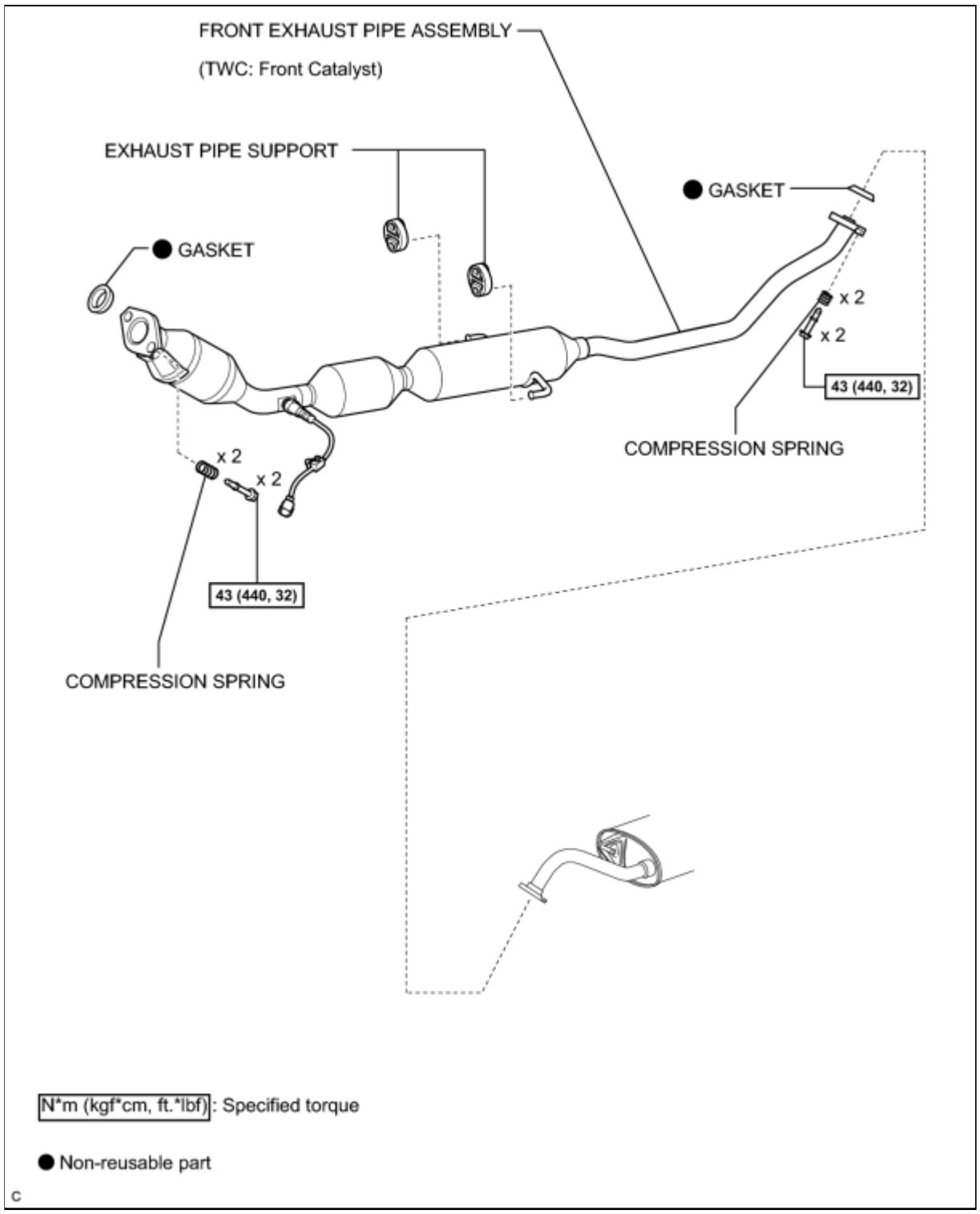

ILLUSTRATION

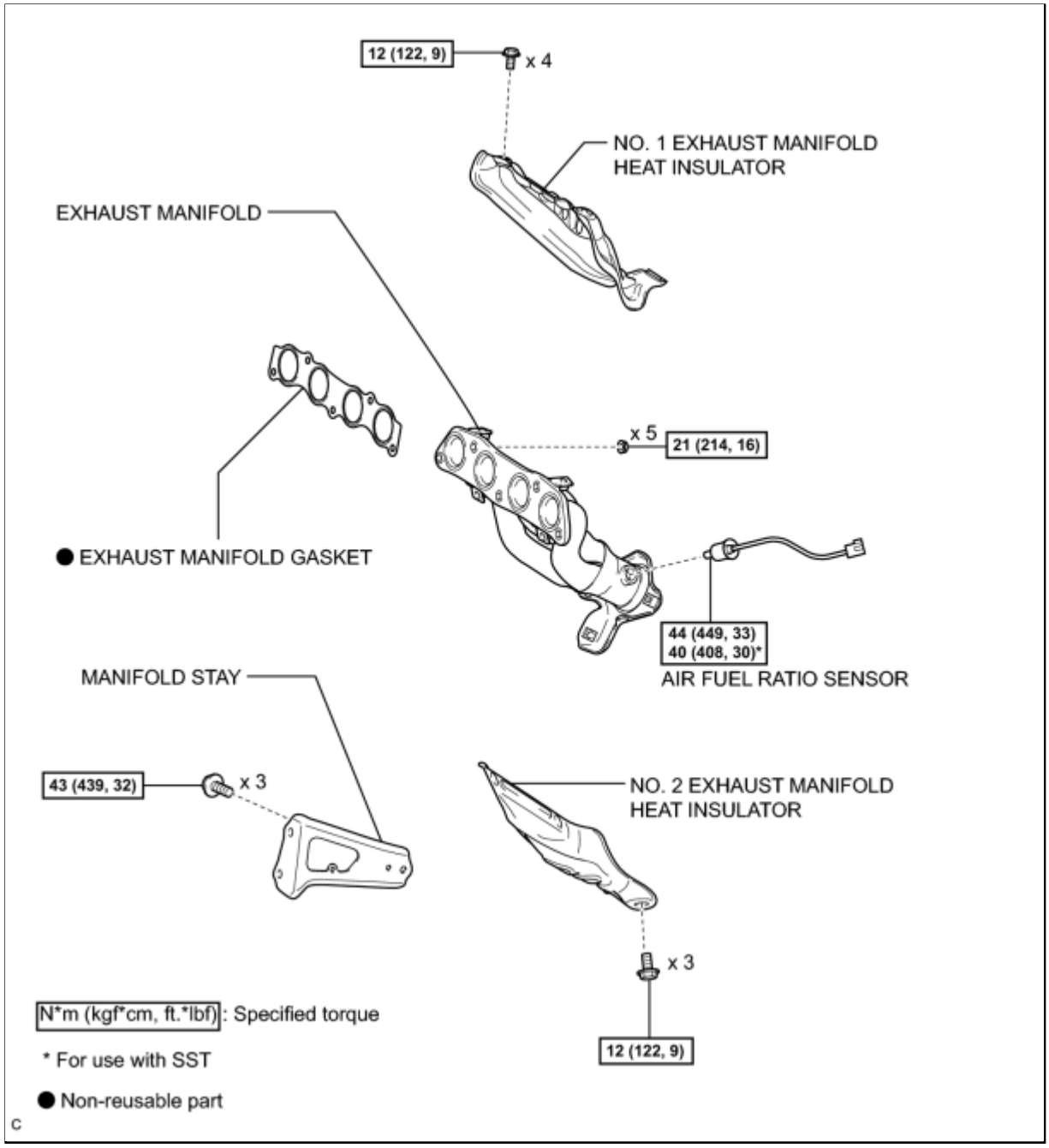
12 (122, 9)
x 4
NO. 1 EXHAUST MANIFOLD HEAT INSULATOR
EXHAUST MANIFOLD
x 5
21 (214, 16)
● EXHAUST MANIFOLD GASKET
44 (449, 33)
40 (408, 30)*
AIR FUEL RATIO SENSOR
MANIFOLD STAY
43 (439, 32)
x 3
NO. 2 EXHAUST MANIFOLD HEAT INSULATOR
x 3
12 (122, 9)
N*m (kgf*cm, ft.*lbf): Specified torque
* For use with SST
● Non-reusable part

c

Last Modified: 3-10-2010	6.4 A	**From:** 200901
Model Year: 2010	**Model:** Corolla	**Doc ID:** RM000002Y7I023X
Title: 2ZR-FE INTAKE / EXHAUST: EXHAUST MANIFOLD: INSTALLATION (2010 Corolla)		

INSTALLATION

1. INSTALL NO. 2 EXHAUST MANIFOLD HEAT INSULATOR

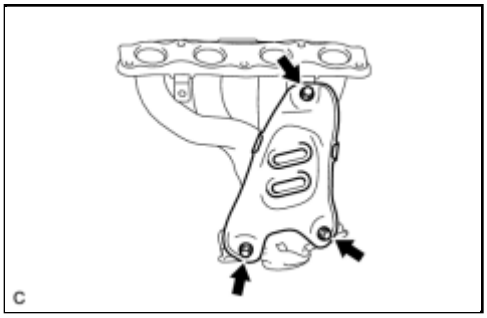

(a) Install the No. 2 exhaust manifold heat insulator with the 3 bolts.

Torque: 12 N·m (122 kgf·cm, 9ft·lbf)

2. INSTALL EXHAUST MANIFOLD

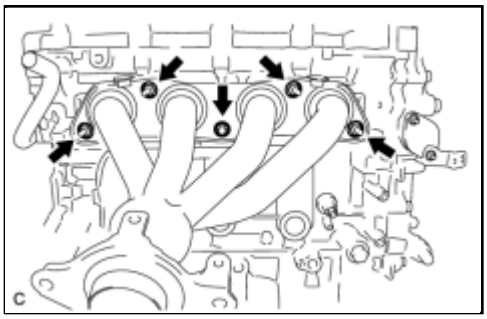

(a) Install a new exhaust manifold gasket.

(b) Install the exhaust manifold with the 5 nuts.

Torque: 21 N·m (214 kgf·cm, 16ft·lbf)

3. INSTALL MANIFOLD STAY

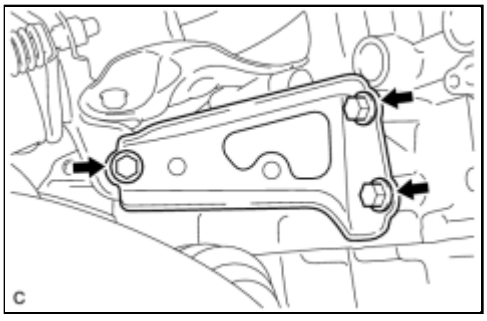

(a) Install the manifold stay with the 3 bolts.

Torque: 43 N·m (439 kgf·cm, 32ft·lbf)

4. INSTALL FRONT EXHAUST PIPE ASSEMBLY

(a) Using a vernier caliper, measure the free length of the compression springs.

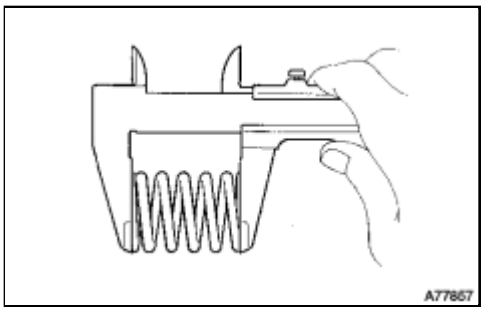

Minimum (front)	41.5 mm (1.63 in.)
Minimum (rear)	38.5 mm (1.52 in.)

HINT:

If the free length is less than the minimum, replace the compression spring.

(b) Fully insert new gaskets to the exhaust manifold and front exhaust pipe assembly.

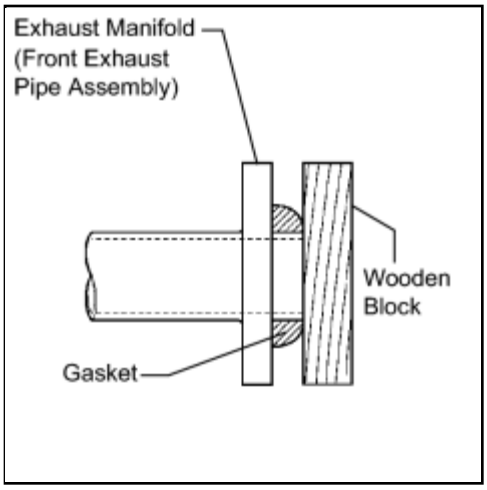

(c) Using a plastic hammer and wooden block, tap in the 2 new gaskets until their surface are flush with the exhaust manifold and front exhaust pipe assembly.

NOTICE:

- Be sure to install the gaskets in the correct direction.
- Do not reuse the gaskets.
- Do not damage the gaskets.
- Do not push in the gaskets by using the exhaust pipe when connecting it.

(d) Connect the front exhaust pipe assembly to the 2 exhaust pipe supports.

(e) Install the front exhaust pipe assembly with the 4 bolts and 4 compression springs.

Torque: 43 N·m (440 kgf·cm, 32ft·lbf)

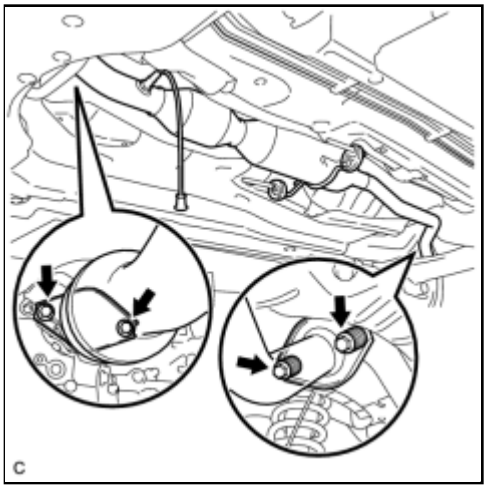

(f) Connect the heated oxygen sensor connector.

5. INSTALL NO. 1 EXHAUST MANIFOLD HEAT INSULATOR

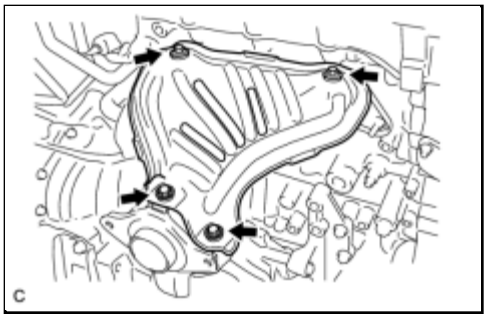

(a) Install the No. 1 exhaust manifold heat insulator with the 4 bolts.

Torque: 12 N·m (122 kgf·cm, 9ft·lbf)

6. INSTALL AIR FUEL RATIO SENSOR INFO

7. INSTALL NO. 2 CYLINDER HEAD COVER INFO

8. INSTALL OUTER COWL TOP PANEL (except TMC Made) INFO

9. INSTALL OUTER COWL TOP PANEL (for TMC Made) INFO

10. INSTALL WINDSHIELD WIPER MOTOR AND LINK ASSEMBLY INFO

11. INSTALL COWL TOP VENTILATOR LOUVER LH INFO

12. INSTALL CENTER NO. 1 COWL TOP VENTILATOR LOUVER INFO

13. INSTALL HOOD TO COWL TOP SEAL INFO

14. INSTALL FRONT WIPER ARM AND BLADE ASSEMBLY RH INFO

15. INSTALL FRONT WIPER ARM AND BLADE ASSEMBLY LH INFO

16. INSTALL FRONT WIPER ARM HEAD CAP INFO

17. INSPECT FOR EXHAUST GAS LEAK

Last Modified: 3-10-2010	6.4 A	**From:** 200901
Model Year: 2010	**Model:** Corolla	**Doc ID:** RM000002Y70023X
Title: 2ZR-FE INTAKE / EXHAUST: EXHAUST MANIFOLD: REMOVAL (2010 Corolla)		

REMOVAL

1. REMOVE FRONT WIPER ARM HEAD CAP INFO

2. REMOVE FRONT WIPER ARM AND BLADE ASSEMBLY LH INFO

3. REMOVE FRONT WIPER ARM AND BLADE ASSEMBLY RH INFO

4. REMOVE HOOD TO COWL TOP SEAL INFO

5. REMOVE CENTER NO. 1 COWL TOP VENTILATOR LOUVER INFO

6. REMOVE COWL TOP VENTILATOR LOUVER LH INFO

7. REMOVE WINDSHIELD WIPER MOTOR AND LINK ASSEMBLY INFO

8. REMOVE OUTER COWL TOP PANEL (for TMC Made) INFO

9. REMOVE OUTER COWL TOP PANEL (except TMC Made) INFO

10. REMOVE NO. 2 CYLINDER HEAD COVER INFO

11. REMOVE AIR FUEL RATIO SENSOR INFO

12. REMOVE NO. 1 EXHAUST MANIFOLD HEAT INSULATOR

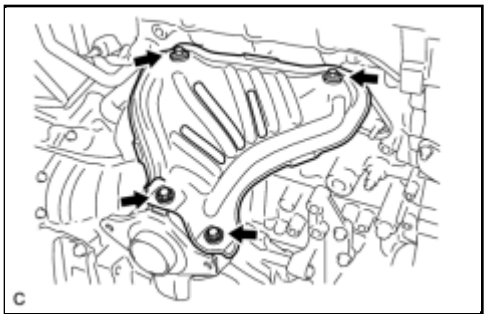

(a) Remove the 4 bolts and No. 1 exhaust manifold heat insulator.

13. REMOVE FRONT EXHAUST PIPE ASSEMBLY

(a) Disconnect the heated oxygen sensor connector.

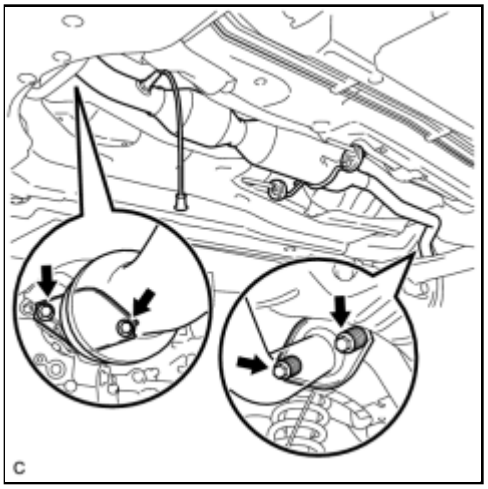

(b) Remove the 4 bolts and 4 compression springs.

(c) Remove the front exhaust pipe assembly from the 2 exhaust pipe supports.

14. REMOVE MANIFOLD STAY

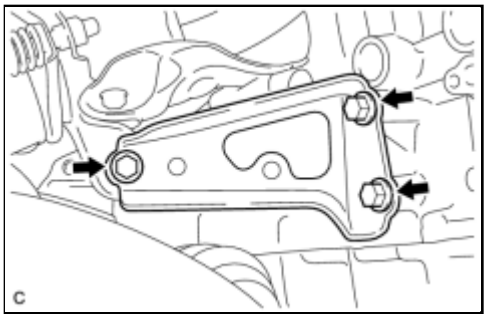

(a) Remove the 3 bolts and manifold stay.

15. REMOVE EXHAUST MANIFOLD

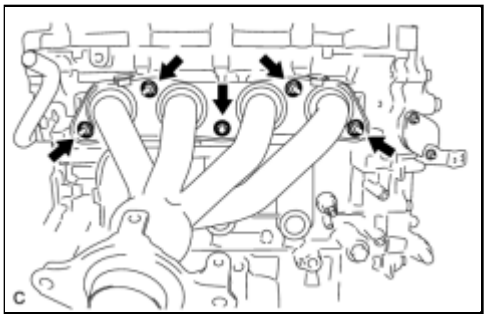

(a) Remove the 5 nuts and exhaust manifold.

(b) Remove the exhaust manifold gasket.

16. REMOVE NO. 2 EXHAUST MANIFOLD HEAT INSULATOR

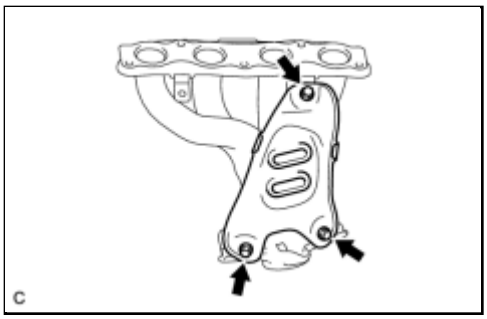

(a) Remove the 3 bolts and No. 2 exhaust manifold heat insulator.

Last Modified: 3-10-2010	6.4 K	**From:** 200901
Model Year: 2010	**Model:** Corolla	**Doc ID:** RM000002WV001NX
Title: 2AZ-FE INTAKE / EXHAUST: EXHAUST PIPE: COMPONENTS (2010 Corolla)		

COMPONENTS

ILLUSTRATION

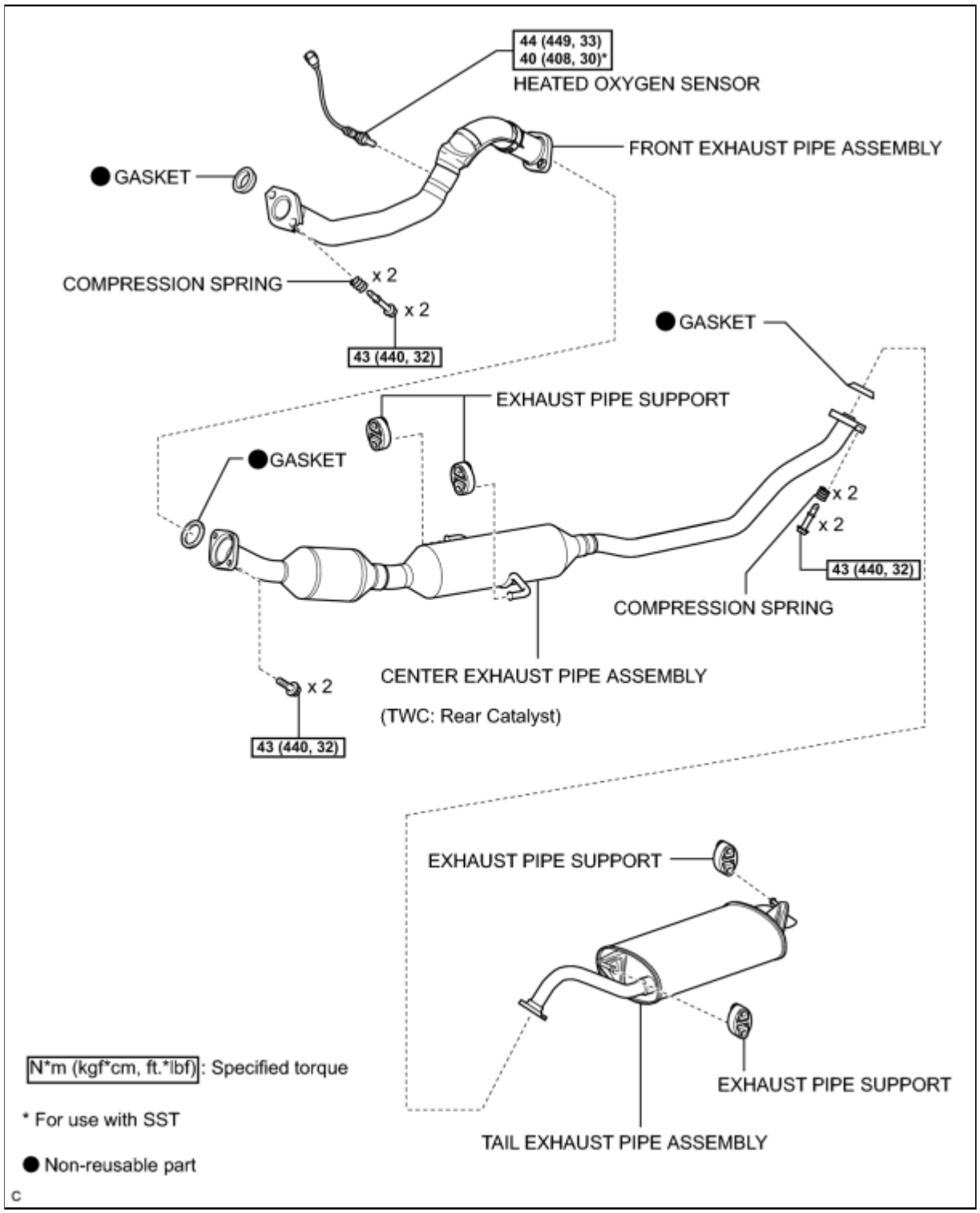

Last Modified: 3-10-2010	6.4 A	**From:** 200901
Model Year: 2010	**Model:** Corolla	**Doc ID:** RM00000090J038X
Title: 2AZ-FE INTAKE / EXHAUST: EXHAUST PIPE: REMOVAL (2010 Corolla)		

REMOVAL

1. REMOVE TAIL EXHAUST PIPE ASSEMBLY

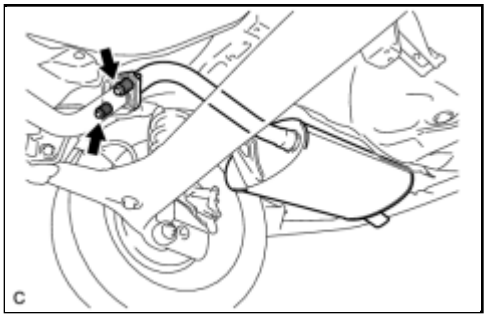

(a) Remove the 2 bolts and 2 compression springs.

(b) Remove the tail exhaust pipe assembly from the 2 exhaust pipe supports.

(c) Remove the gasket from the center exhaust pipe assembly.

2. REMOVE HEATED OXYGEN SENSOR INFO

3. REMOVE CENTER EXHAUST PIPE ASSEMBLY

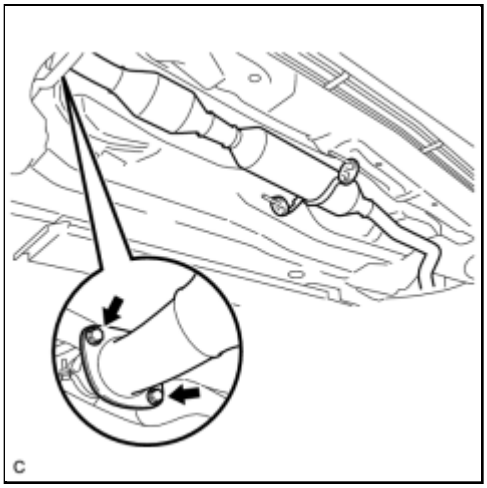

(a) Remove the 2 bolts.

(b) Remove the center exhaust pipe assembly from the 2 exhaust pipe supports.

(c) Remove the gasket from the front exhaust pipe assembly.

4. REMOVE FRONT EXHAUST PIPE ASSEMBLY

(a) Remove the 2 bolts, 2 compression springs and front

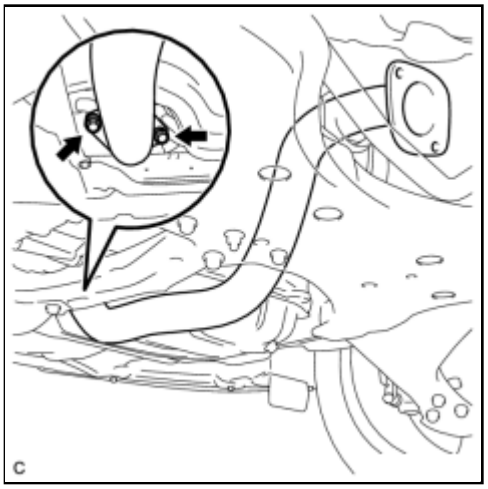

exhaust pipe assembly.

(b) Remove the gasket from the exhaust manifold.

Last Modified: 3-10-2010	6.4 A	**From:** 200901
Model Year: 2010	**Model:** Corolla	**Doc ID:** RM00000090H038X
Title: 2AZ-FE INTAKE / EXHAUST: EXHAUST PIPE: INSTALLATION (2010 Corolla)		

INSTALLATION

1. INSTALL FRONT EXHAUST PIPE ASSEMBLY

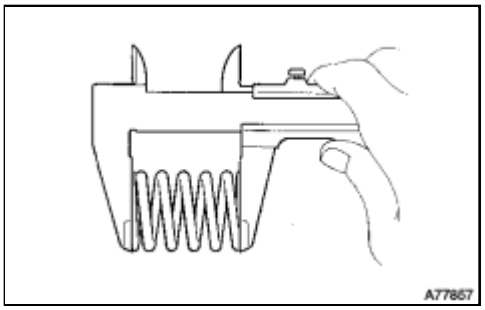

(a) Using a vernier caliper, measure the free length of the compression springs.

Minimum	41.5 mm (1.63 in.)

HINT:

If the free length is less than the minimum, replace the compression spring.

(b) Remove the remains of exhaust manifold converter with wire brash.

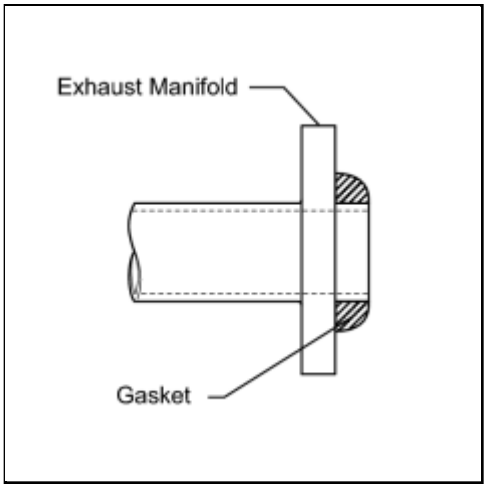

(c) Fully insert a new gasket to the exhaust manifold.

NOTICE:

- Be sure to install the gasket in the correct direction.
- Do not reuse the gasket.
- Do not damage the gasket.

(d) Install the front exhaust pipe assembly with the 2 bolts and 2 compression springs.

Torque: 43 N·m (440 kgf·cm, 32ft·lbf)

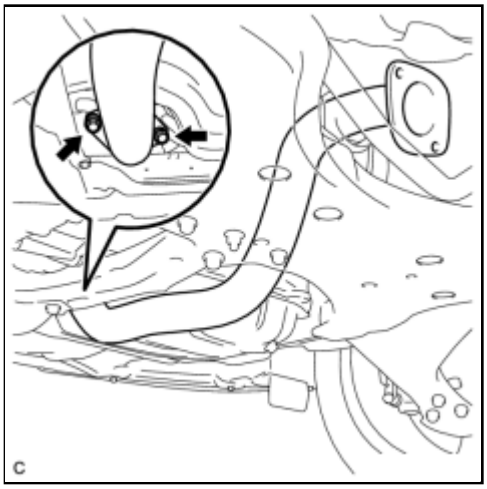

2. INSTALL HEATED OXYGEN SENSOR INFO

3. INSTALL CENTER EXHAUST PIPE ASSEMBLY

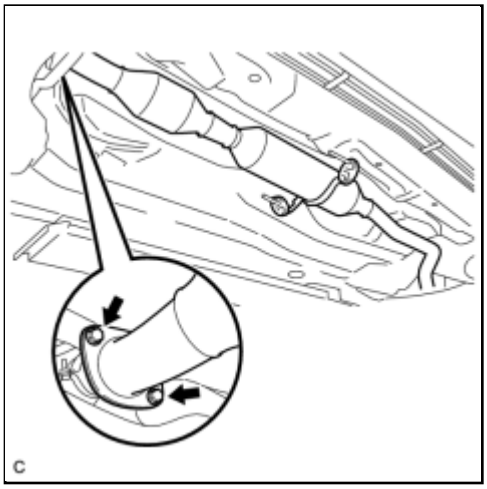

(a) Install a new gasket to the front exhaust pipe assembly

(b) Connect the center exhaust pipe assembly to the 2 exhaust pipe supports.

(c) Install the center exhaust pipe assembly with the 2 bolts.

Torque: 43 N·m (440 kgf·cm, 32ft·lbf)

4. INSTALL TAIL EXHAUST PIPE ASSEMBLY

(a) Using a vernier caliper, measure the free length of the compression springs.

Minimum	38.5 mm (1.52 in.)

HINT:

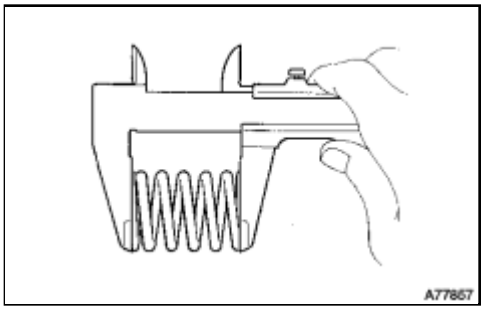

If the free length is less than the minimum, replace the compression spring.

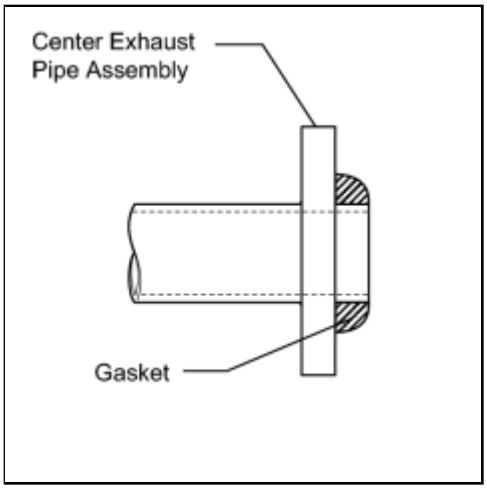

(b) Fully insert a new gasket to the center exhaust pipe assembly.

NOTICE:

- Be sure to install the gasket in the correct direction.
- Do not reuse the gasket.
- Do not damage the gasket.

(c) Connect the tail exhaust pipe assembly to the 2 exhaust pipe supports.

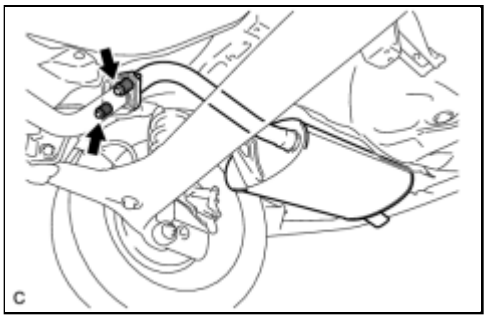

(d) Install the tail exhaust pipe assembly with the 2 bolts and 2 compression springs.

Torque: 43 N·m (440 kgf·cm, 32ft·lbf)

5. INSPECT FOR EXHAUST GAS LEAK

Last Modified: 3-10-2010	6.4 K	**From:** 200901
Model Year: 2010	**Model:** Corolla	**Doc ID:** RM000002WV001MX
Title: 2ZR-FE INTAKE / EXHAUST: EXHAUST PIPE: COMPONENTS (2010 Corolla)		

COMPONENTS

ILLUSTRATION

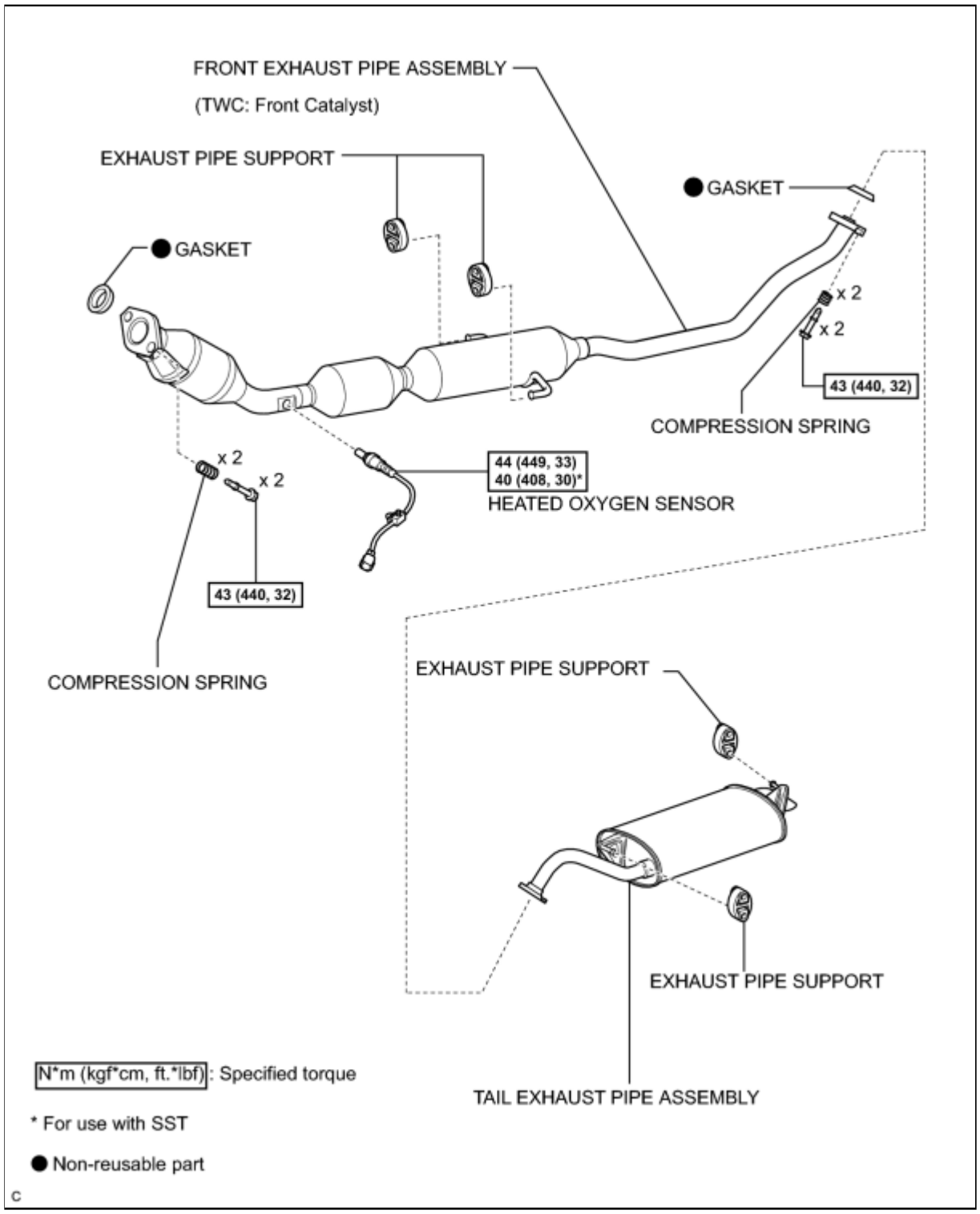

Last Modified: 3-10-2010	6.4 A	**From:** 200901
Model Year: 2010	**Model:** Corolla	**Doc ID:** RM000000090J037X
Title: 2ZR-FE INTAKE / EXHAUST: EXHAUST PIPE: REMOVAL (2010 Corolla)		

REMOVAL

1. REMOVE TAIL EXHAUST PIPE ASSEMBLY

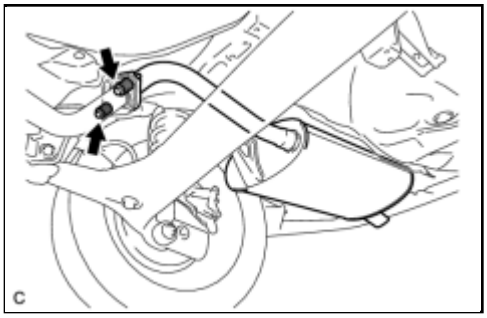

(a) Remove the 2 bolts and 2 compression springs.

(b) Remove the tail exhaust pipe assembly from the 2 exhaust pipe supports.

(c) Remove the gasket from the front exhaust pipe assembly.

2. REMOVE HEATED OXYGEN SENSOR INFO

3. REMOVE FRONT EXHAUST PIPE ASSEMBLY

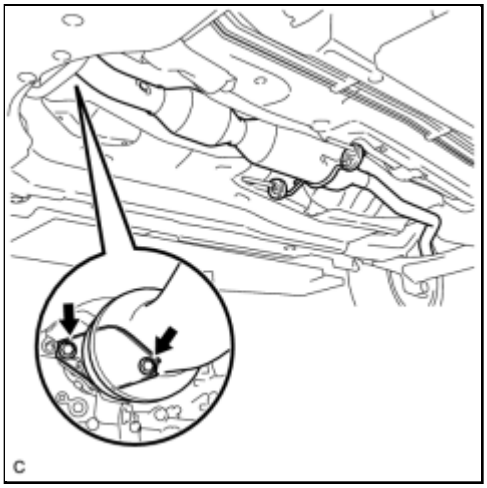

(a) Remove the 2 bolts and 2 compression springs.

(b) Remove the front exhaust pipe assembly from the 2 exhaust pipe supports.

(c) Remove the gasket from the exhaust manifold.

Last Modified: 3-10-2010	6.4 K	**From:** 200901
Model Year: 2010	**Model:** Corolla	**Doc ID:** RM000000X9Z01RX
Title: 2AZ-FE INTAKE / EXHAUST: INTAKE MANIFOLD: COMPONENTS (2010 Corolla)		

COMPONENTS

ILLUSTRATION

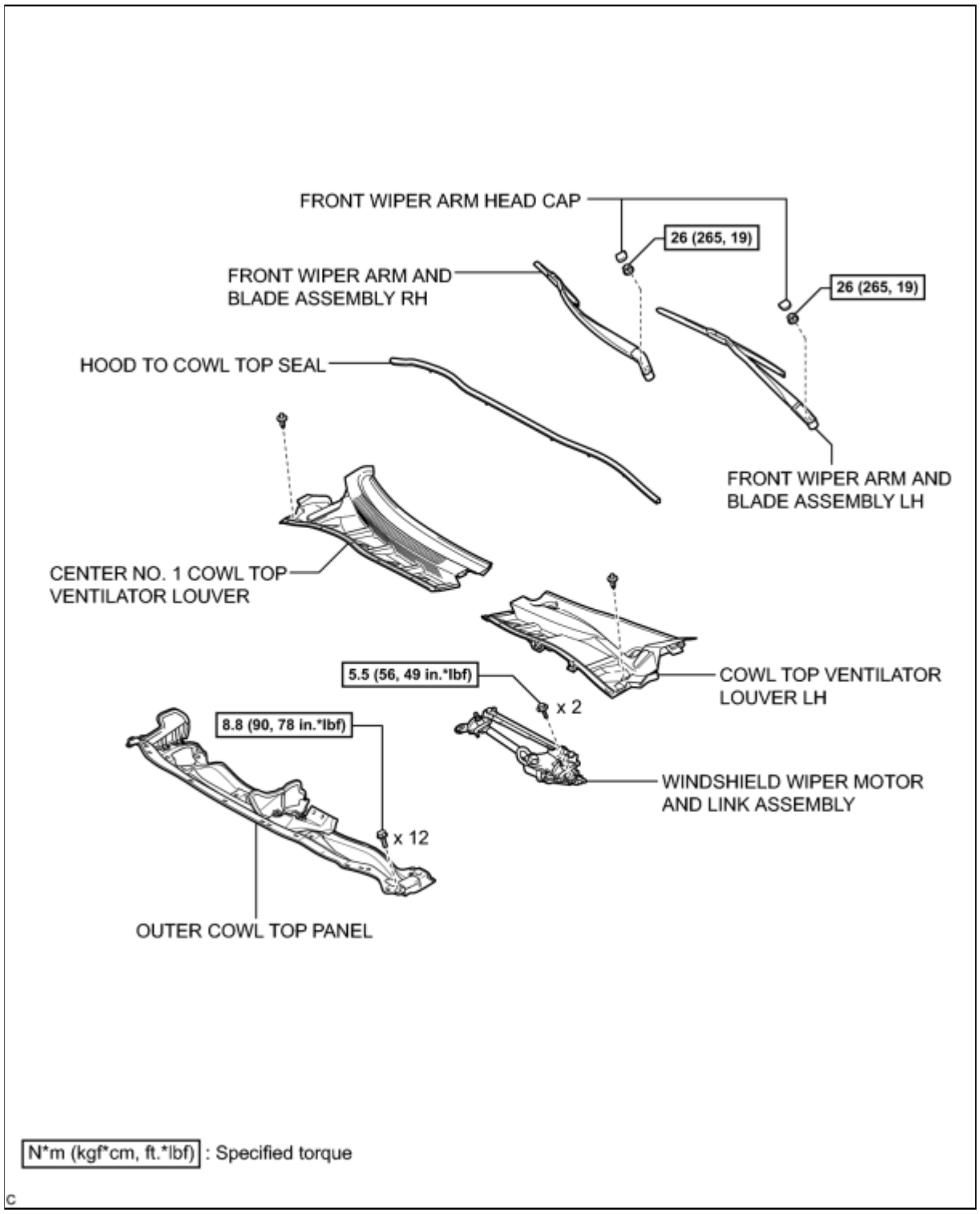

ILLUSTRATION

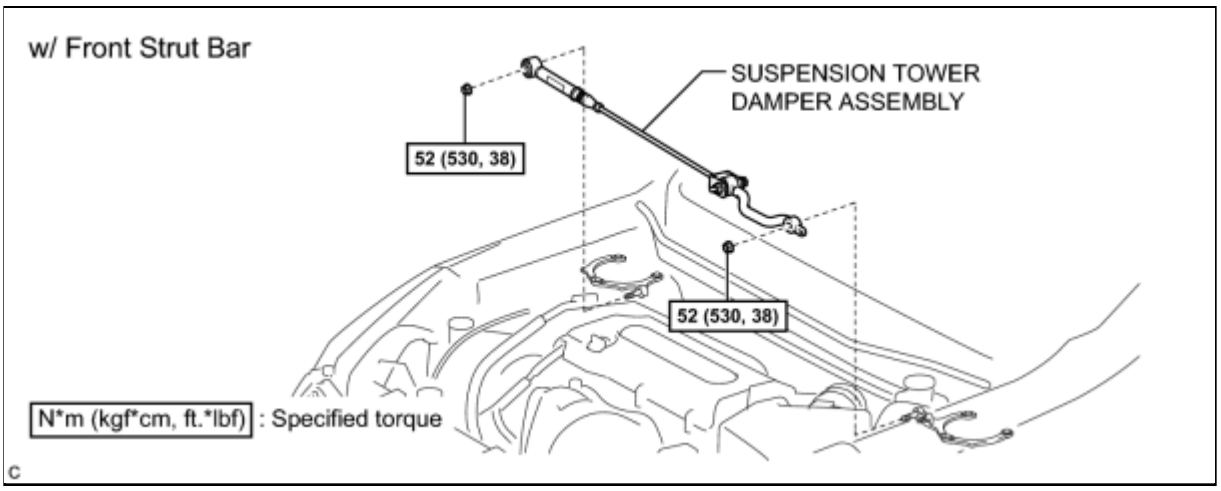

ILLUSTRATION

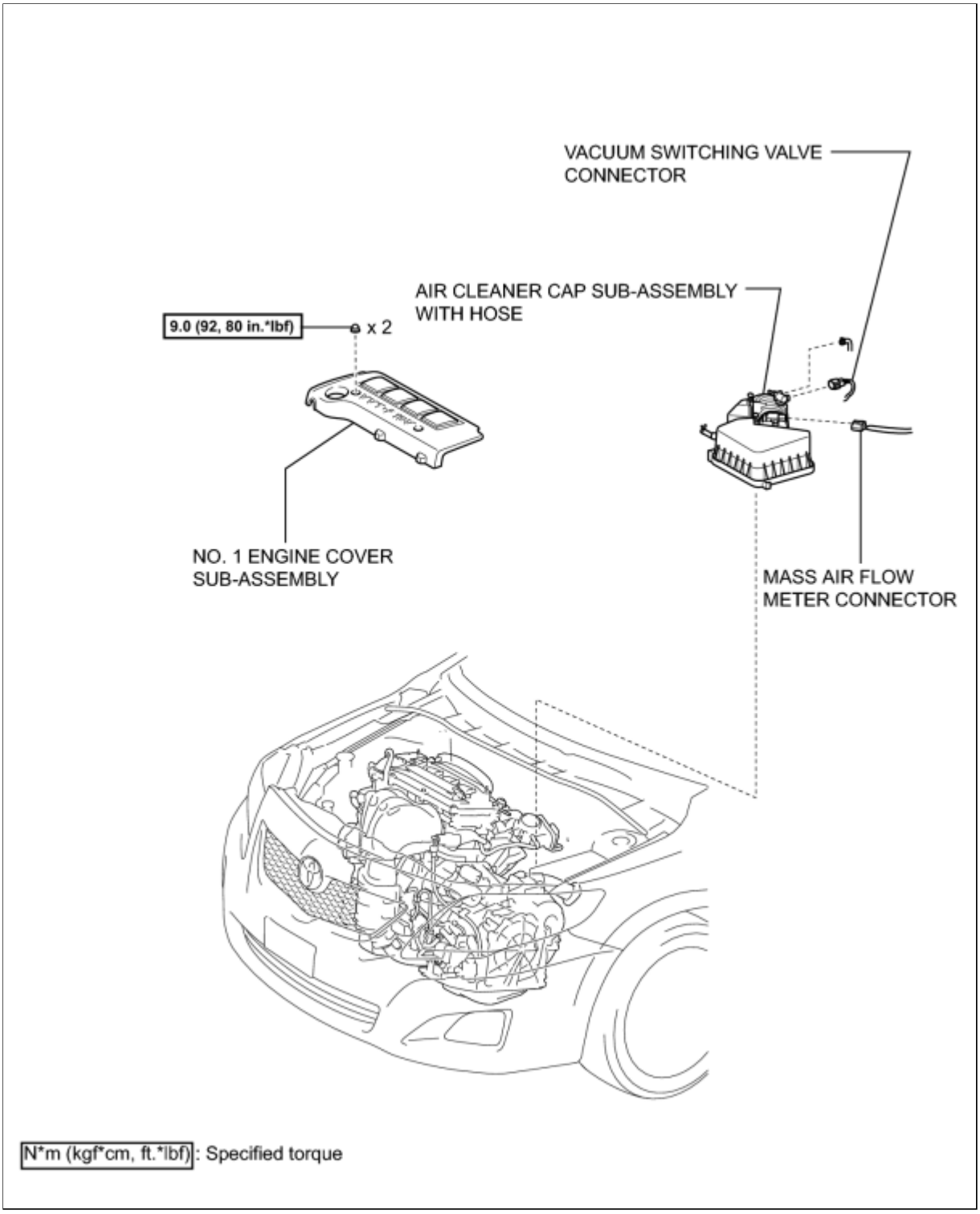

ILLUSTRATION

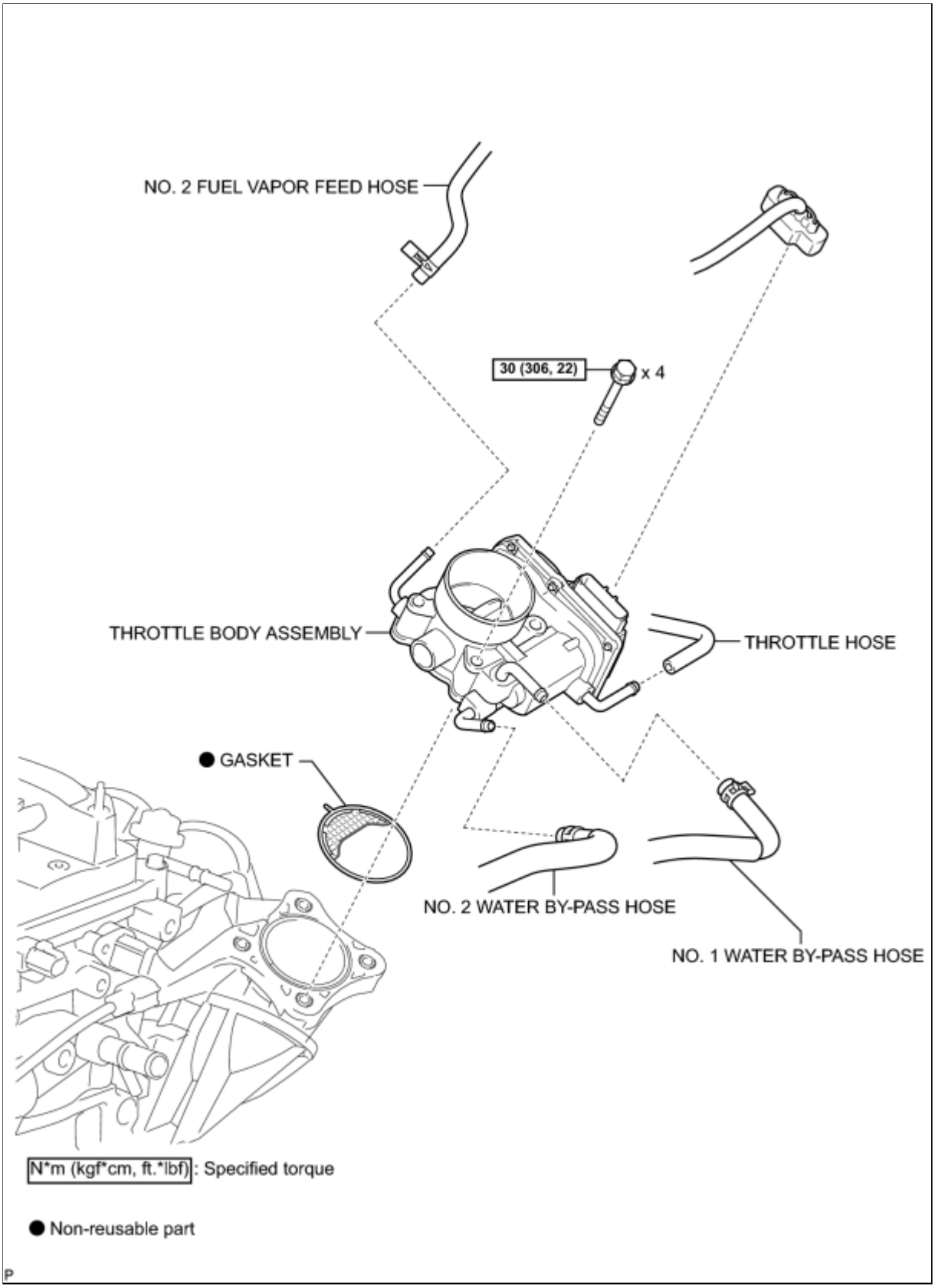

ILLUSTRATION

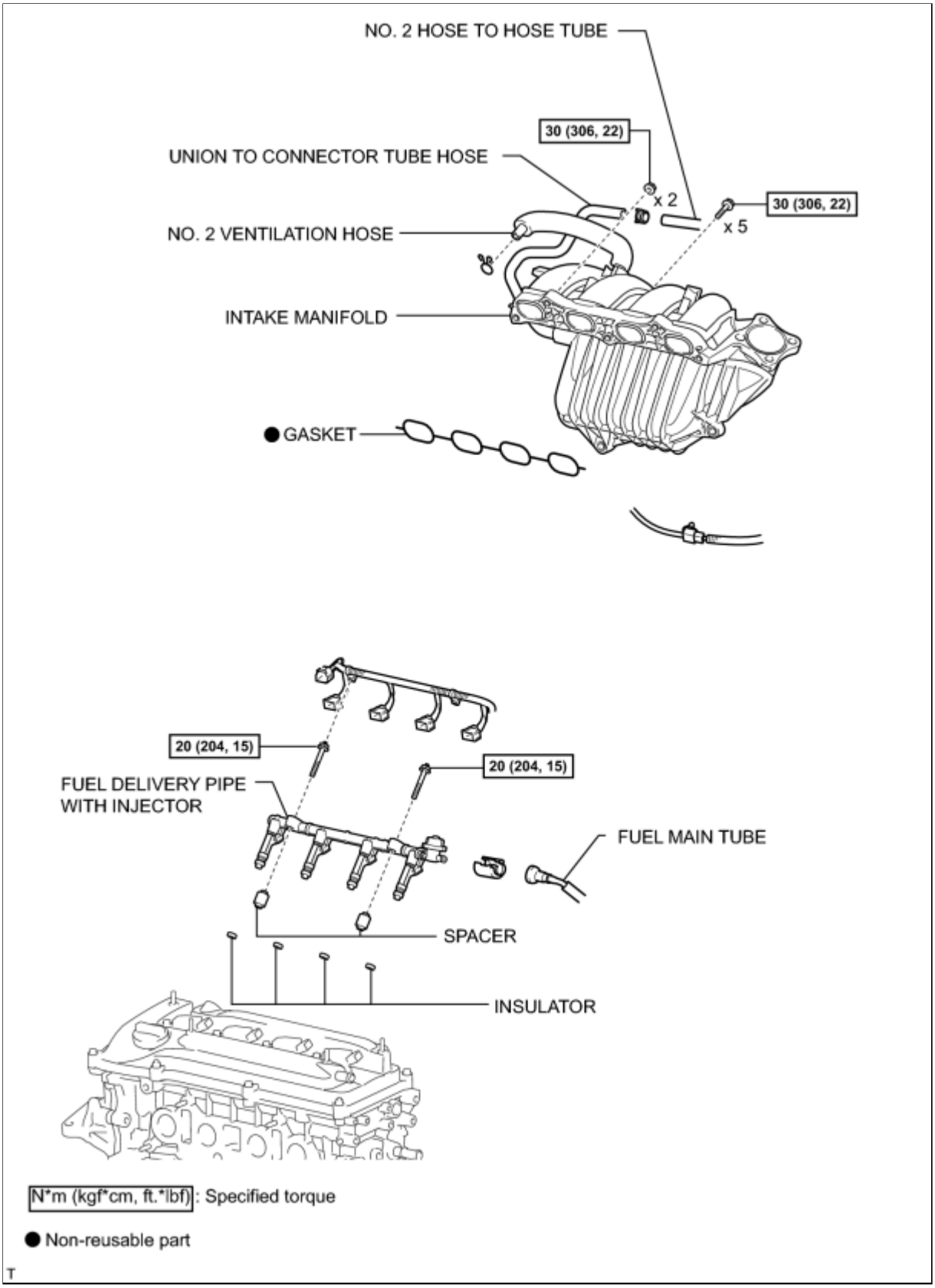

N*m (kgf*cm, ft.*lbf): Specified torque

● Non-reusable part

T

Last Modified: 3-10-2010	6.4 A	**From:** 200901
Model Year: 2010	**Model:** Corolla	**Doc ID:** RM00000090H037X
Title: 2ZR-FE INTAKE / EXHAUST: EXHAUST PIPE: INSTALLATION (2010 Corolla)		

INSTALLATION

1. INSTALL FRONT EXHAUST PIPE ASSEMBLY

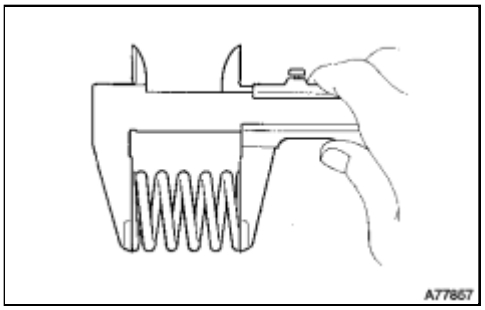

(a) Using a vernier caliper, measure the free length of the compression springs.

Minimum	41.5 mm (1.63 in.)

HINT:

If the free length is less than the minimum, replace the compression spring.

(b) Fully insert a new gasket to the exhaust manifold.

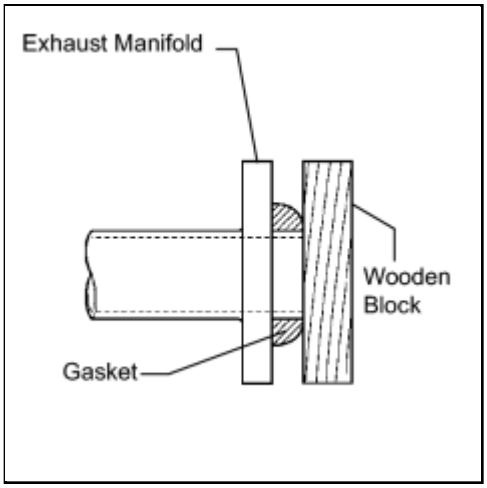

(c) Using a plastic hammer and wooden block, tap in the new gasket until its surface is flush with the exhaust manifold.

NOTICE:

- Be sure to install the gasket in the correct direction.
- Do not reuse the gasket.
- Do not damage the gasket.
- Do not push in the gasket by using the exhaust pipe when connecting it.

(d) Connect the front exhaust pipe assembly to the 2 exhaust pipe supports.

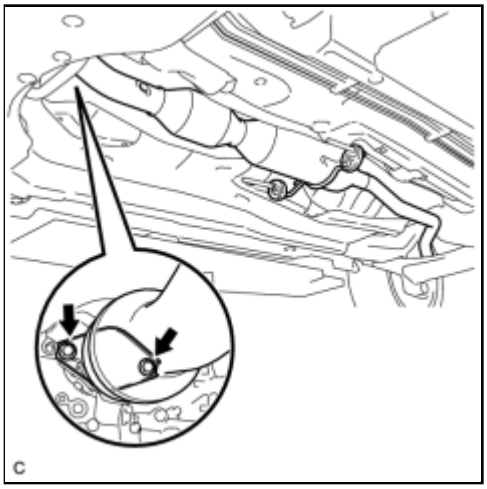

(e) Install the front exhaust pipe assembly with the 2 bolts and 2 compression springs.

Torque: 43 N·m (440 kgf·cm, 32ft·lbf)

2. INSTALL HEATED OXYGEN SENSOR INFO

3. INSTALL TAIL EXHAUST PIPE ASSEMBLY

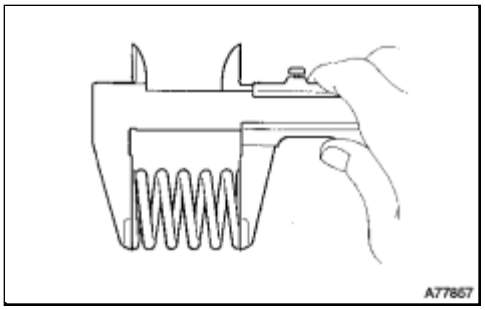

(a) Using a vernier caliper, measure the free length of the compression springs.

Minimum	38.5 mm (1.52 in.)

HINT:

If the free length is less than the minimum, replace the compression spring.

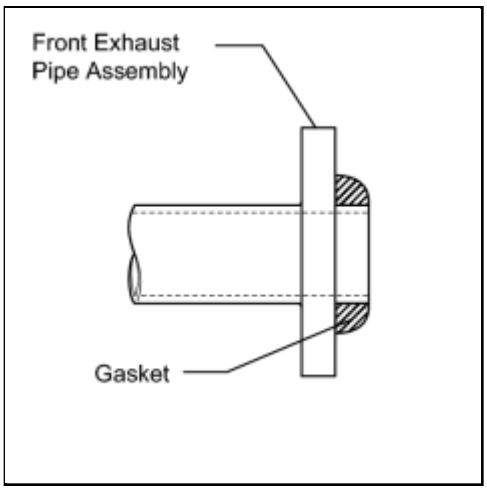

(b) Fully insert a new gasket to the front exhaust pipe assembly.

NOTICE:

- Be sure to install the gasket in the correct direction.
- Do not reuse the gasket.
- Do not damage the gasket.

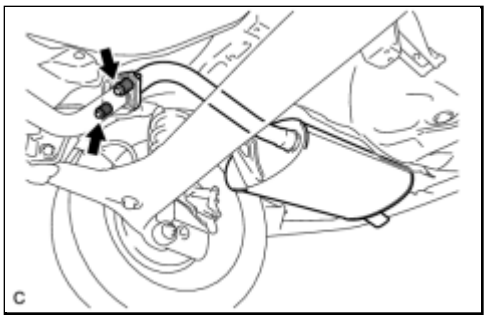

(c) Connect the tail exhaust pipe assembly to the 2 exhaust pipe supports.

(d) Install the tail exhaust pipe assembly with the 2 bolts and 2 compression springs.

Torque: 43 N·m (440 kgf·cm, 32ft·lbf)

4. INSPECT FOR EXHAUST GAS LEAK

TOYOTA

Last Modified: 3-10-2010	6.4 A	**From:** 200901
Model Year: 2010	**Model:** Corolla	**Doc ID:** RM0000017UI02VX
Title: 2AZ-FE INTAKE / EXHAUST: INTAKE MANIFOLD: REMOVAL (2010 Corolla)		

REMOVAL

1. DISCHARGE FUEL SYSTEM PRESSURE

INFO

2. DISCONNECT CABLE FROM NEGATIVE BATTERY TERMINAL

3. REMOVE NO. 1 ENGINE COVER SUB-ASSEMBLY INFO

4. DRAIN ENGINE COOLANT INFO

5. REMOVE FRONT WIPER ARM HEAD CAP INFO

6. REMOVE FRONT WIPER ARM AND BLADE ASSEMBLY LH INFO

7. REMOVE FRONT WIPER ARM AND BLADE ASSEMBLY RH INFO

8. REMOVE HOOD TO COWL TOP SEAL INFO

9. REMOVE CENTER NO. 1 COWL TOP VENTILATOR LOUVER INFO

10. REMOVE COWL TOP VENTILATOR LOUVER LH INFO

11. REMOVE WINDSHIELD WIPER MOTOR AND LINK ASSEMBLY INFO

12. REMOVE OUTER COWL TOP PANEL INFO

13. REMOVE SUSPENSION TOWER DAMPER ASSEMBLY (w/ Front Strut Bar) INFO

14. REMOVE AIR CLEANER CAP SUB-ASSEMBLY WITH HOSE INFO

15. REMOVE AIR CLEANER CASE SUB-ASSEMBLY INFO

16. REMOVE THROTTLE BODY ASSEMBLY INFO

17. DISCONNECT FUEL MAIN TUBE INFO

18. DISCONNECT NO. 2 VENTILATION HOSE INFO

19. REMOVE FUEL DELIVERY PIPE WITH INJECTOR INFO

20. REMOVE INTAKE MANIFOLD

(a) Disconnect the union to connector tube hose from the No. 2 hose to hose tube.

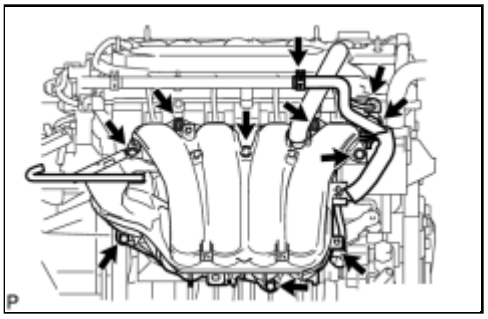

(b) Disconnect the camshaft timing oil control valve connector.

(c) Remove the wire harness clamp.

(d) Remove the union to connector tube hose from the vacuum hose clamp.

(e) Remove the 5 bolts, 2 nuts and intake manifold.

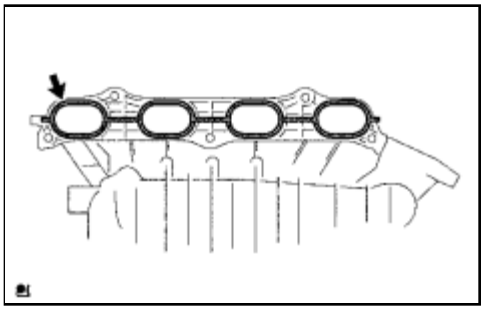

(f) Remove the gasket from the intake manifold.

Last Modified: 3-10-2010	6.4 A	**From:** 200901
Model Year: 2010	**Model:** Corolla	**Doc ID:** RM0000017UF02TX
Title: 2AZ-FE INTAKE / EXHAUST: INTAKE MANIFOLD: INSTALLATION (2010 Corolla)		

INSTALLATION

1. INSTALL INTAKE MANIFOLD

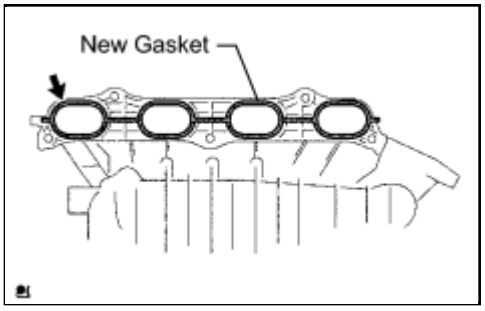

(a) Install a new gasket into the intake manifold.

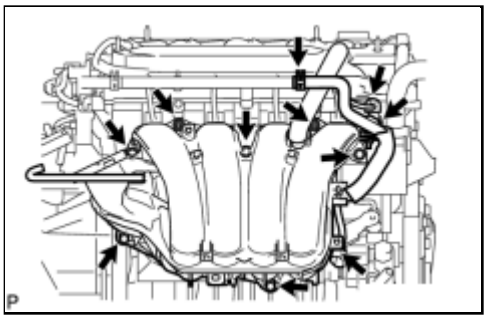

(b) Install the intake manifold with the 5 bolts and 2 nuts.

Torque: 30 N·m (306 kgf·cm, 22ft·lbf)

(c) Fit the union to connector tube hose into the vacuum hose clamp.

(d) Install the wire harness clamp.

(e) Connect the camshaft timing oil control valve connector.

(f) Connect the union to connector tube hose to the No. 2 hose to hose tube.

2. INSTALL FUEL DELIVERY PIPE WITH INJECTOR INFO

3. CONNECT NO. 2 VENTILATION HOSE INFO

4. CONNECT FUEL MAIN TUBE INFO

5. INSTALL THROTTLE BODY ASSEMBLY INFO

6. INSTALL AIR CLEANER CAP SUB-ASSEMBLY WITH HOSE INFO

7. CONNECT CABLE TO NEGATIVE BATTERY TERMINAL

8. ADD ENGINE COOLANT INFO

9. INSPECT FOR COOLANT LEAK INFO

10. INSPECT FOR FUEL LEAK INFO

11. INSTALL NO. 1 ENGINE COVER SUB-ASSEMBLY INFO

12. INSTALL SUSPENSION TOWER DAMPER ASSEMBLY (w/ Front Strut Bar) INFO

13. INSTALL OUTER COWL TOP PANEL INFO

14. INSTALL WINDSHIELD WIPER MOTOR AND LINK ASSEMBLY INFO

15. REMOVE COWL TOP VENTILATOR LOUVER LH INFO

16. INSTALL CENTER NO. 1 COWL TOP VENTILATOR LOUVER INFO

17. INSTALL HOOD TO COWL TOP SEAL INFO

18. INSTALL FRONT WIPER ARM AND BLADE ASSEMBLY RH INFO

19. INSTALL FRONT WIPER ARM AND BLADE ASSEMBLY LH INFO

20. REMOVE FRONT WIPER ARM HEAD CAP INFO

Last Modified: 3-10-2010	6.4 K	**From:** 200901
Model Year: 2010	**Model:** Corolla	**Doc ID:** RM000002WSQ00WX
Title: 2ZR-FE INTAKE / EXHAUST: INTAKE MANIFOLD: COMPONENTS (2010 Corolla)		

COMPONENTS

ILLUSTRATION

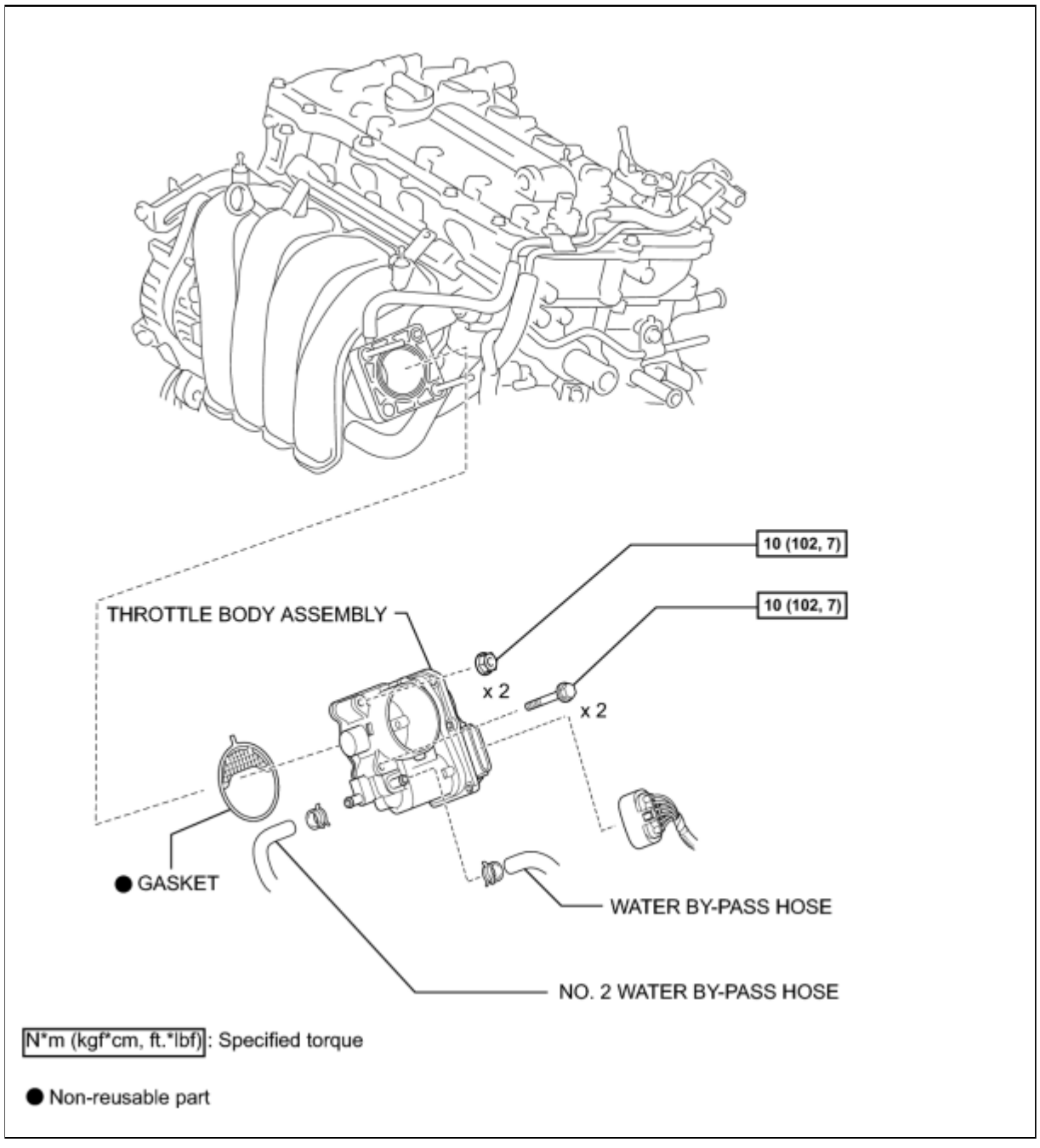

ILLUSTRATION

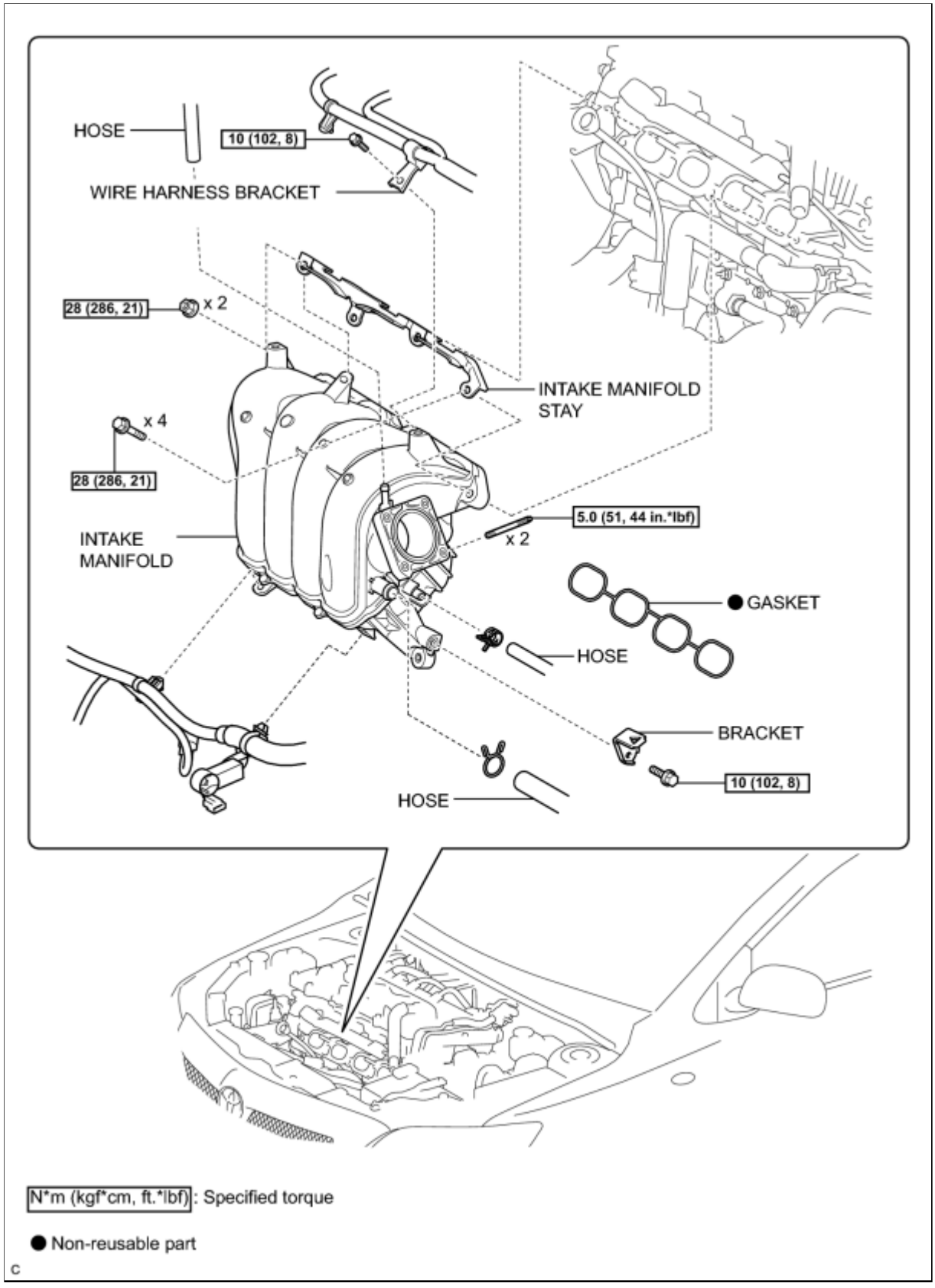

N*m (kgf*cm, ft.*lbf): Specified torque

● Non-reusable part

c

Last Modified: 3-10-2010	6.4 A	**From:** 200901
Model Year: 2010	**Model:** Corolla	**Doc ID:** RM000002WTS01TX
Title: 2ZR-FE INTAKE / EXHAUST: INTAKE MANIFOLD: REMOVAL (2010 Corolla)		

REMOVAL

1. DRAIN ENGINE COOLANT INFO

2. REMOVE NO. 2 CYLINDER HEAD COVER INFO

3. REMOVE AIR CLEANER CAP SUB-ASSEMBLY INFO

4. REMOVE THROTTLE BODY ASSEMBLY INFO

5. REMOVE INTAKE MANIFOLD

(a) Remove the bolt and disconnect the wire harness bracket.

(b) Disconnect the 3 hoses.

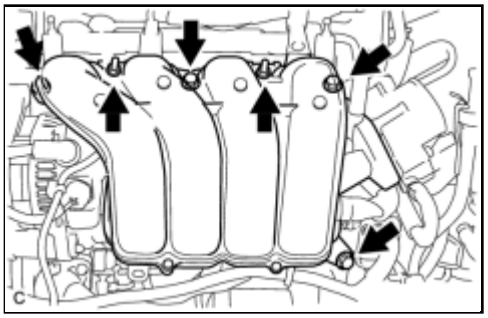

(c) Remove the 4 bolts, 2 nuts, intake manifold stay and intake manifold.

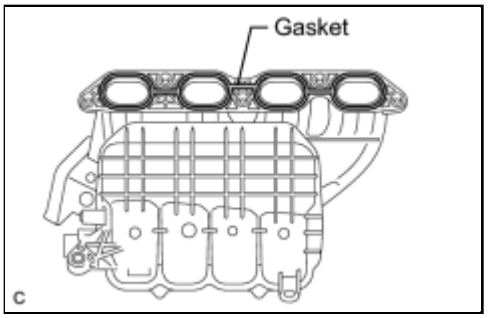

(d) Remove the gasket from the intake manifold.

(e) Remove the bolt and bracket.

(f) Using a "TORX" socket E6, remove the 2 stud bolts from the intake manifold.

Last Modified: 3-10-2010	6.4 A	**From:** 200901
Model Year: 2010	**Model:** Corolla	**Doc ID:** RM000002WTQ01TX
Title: 2ZR-FE INTAKE / EXHAUST: INTAKE MANIFOLD: INSTALLATION (2010 Corolla)		

INSTALLATION

1. INSTALL INTAKE MANIFOLD

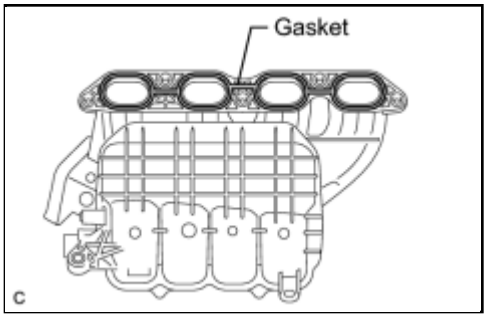

(a) Using a "TORX" socket E6, install the 2 stud bolts to the intake manifold.

Torque: 5.0 N·m (51 kgf·cm, 44in·lbf)

(b) Install the bracket with the bolt.

Torque: 10 N·m (102 kgf·cm, 8ft·lbf)

(c) Install a new gasket into the intake manifold.

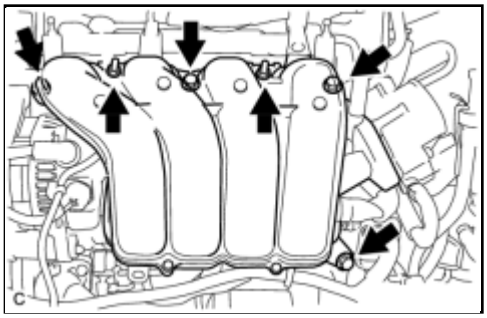

(d) Install the intake manifold and intake manifold stay with the 4 bolts and 2 nuts.

Torque: 28 N·m (286 kgf·cm, 21ft·lbf)

(e) Connect the 3 hoses.

(f) Connect the wire harness bracket with the bolt.

Torque: 10 N·m (102 kgf·cm, 8ft·lbf)

2. INSTALL THROTTLE BODY ASSEMBLY INFO

3. INSTALL AIR CLEANER CAP SUB-ASSEMBLY INFO

4. INSTALL NO. 2 CYLINDER HEAD COVER INFO

5. ADD ENGINE COOLANT INFO

6. INSPECT FOR COOLANT LEAK INFO

Last Modified: 3-10-2010	6.4 G	**From:** 200901
Model Year: 2010	**Model:** Corolla	**Doc ID:** RM00000341100CX
Title: 2AZ-FE INTAKE / EXHAUST: INTAKE SYSTEM: ON-VEHICLE INSPECTION (2010 Corolla)		

ON-VEHICLE INSPECTION

1. INSPECT INTAKE SYSTEM

(a) Check that there are no vacuum leaks at the points shown in the illustration.

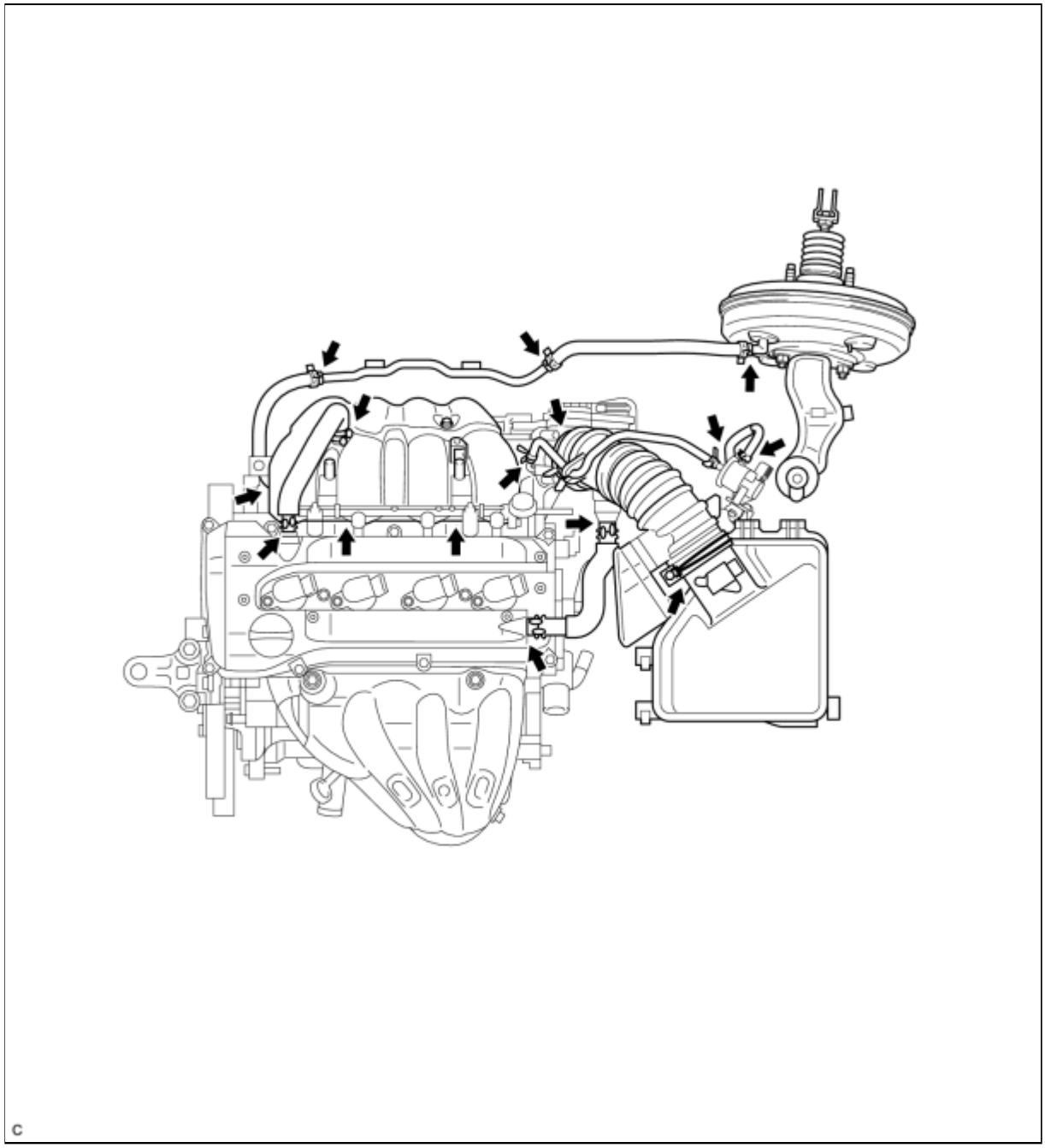

Last Modified: 3-10-2010	6.4 G	**From:** 200901
Model Year: 2010	**Model:** Corolla	**Doc ID:** RM00000341000FX
Title: 2ZR-FE INTAKE / EXHAUST: INTAKE SYSTEM: ON-VEHICLE INSPECTION (2010 Corolla)		

ON-VEHICLE INSPECTION

1. INSPECT INTAKE SYSTEM

(a) Check that there is no air suction at the points shown in the illustration.

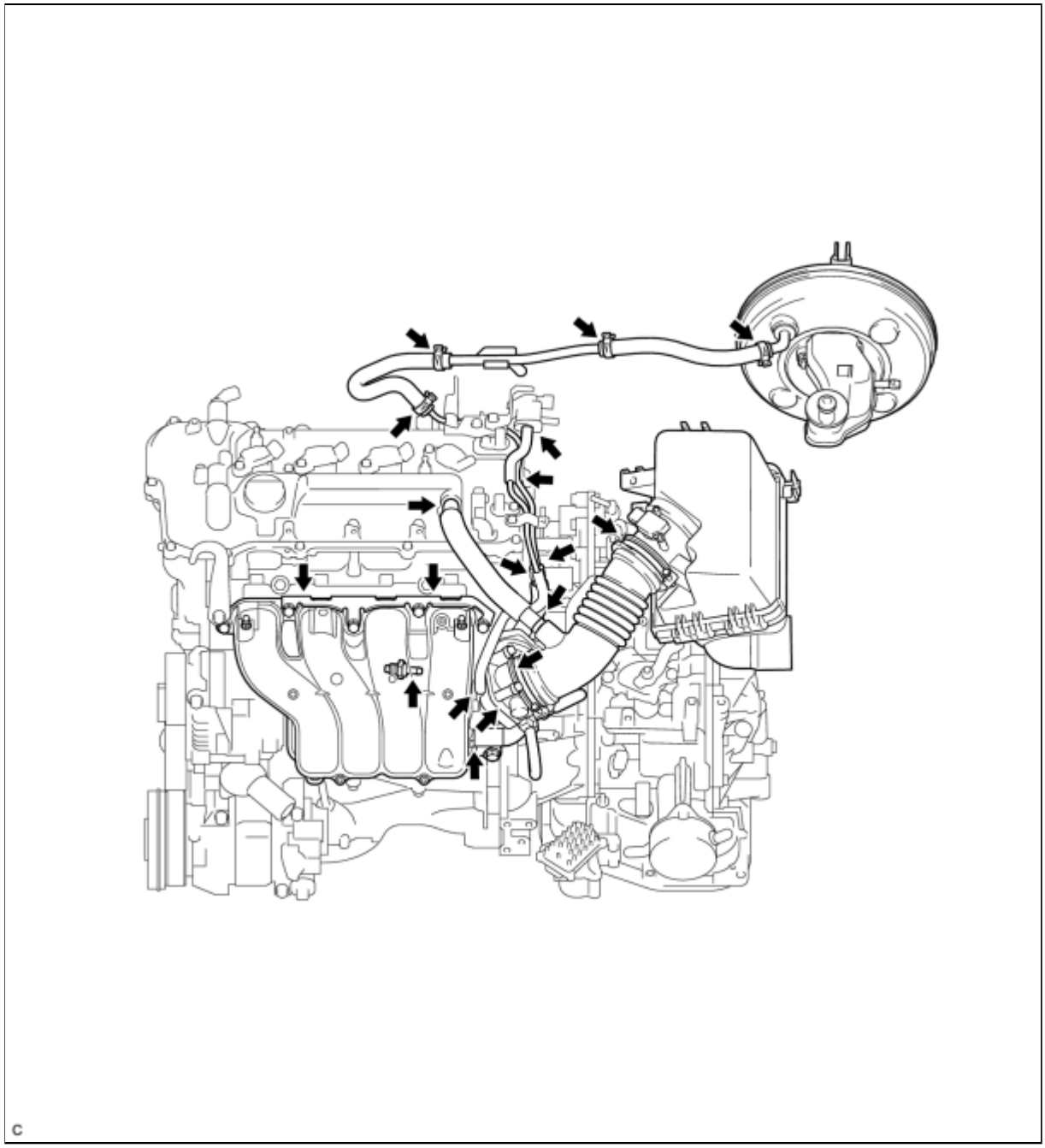

Last Modified: 3-10-2010	6.4 G	**From:** 200901
Model Year: 2010	**Model:** Corolla	**Doc ID:** RM000001R0T019X
Title: 2AZ-FE LUBRICATION: LUBRICATION SYSTEM: ON-VEHICLE INSPECTION (2010 Corolla)		

ON-VEHICLE INSPECTION

1. CHECK ENGINE OIL LEVEL

(a) Warm up and stop the engine, then wait for 5 minutes.

(b) Check that the engine oil level is between the low level and full level marks on the level gauge.

If low, check for leakage and add oil up to the full level mark.

NOTICE:

Do not fill with engine oil to above the full level mark.

2. CHECK ENGINE OIL QUALITY

(a) Check the oil for deterioration, water, discoloring or thinning.

If the quality is visibly poor, replace the oil.

3. INSPECT OIL PRESSURE

(a) Remove the oil pressure switch INFO .

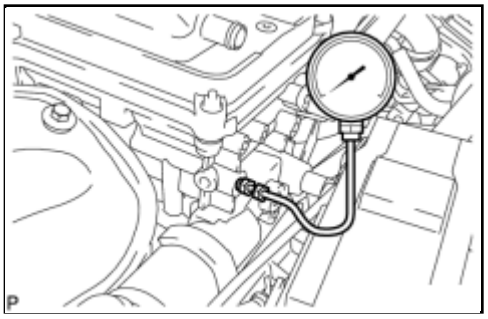

(b) Install the oil pressure gauge.

(c) Warm up the engine.

(d) Check the oil pressure.

Oil Pressure:

AT IDLE	AT 3000 RPM
29 kPa (0.3 kgf/cm^2, 4.3 psi) or more	170 to 300 kPa (1.7 to 3.1 kgf/cm^2, 24 to 44 psi)

(e) If the oil pressure is not as specified, check the oil pump INFO .

(f) Remove the oil pressure gauge.

(g) Install the oil pressure switch INFO .

Last Modified: 3-10-2010	6.4 G	**From:** 200901
Model Year: 2010	**Model:** Corolla	**Doc ID:** RM00000259G01IX
Title: 2ZR-FE LUBRICATION: LUBRICATION SYSTEM: ON-VEHICLE INSPECTION (2010 Corolla)		

ON-VEHICLE INSPECTION

1. CHECK ENGINE OIL LEVEL

(a) Warm up and stop the engine, then wait for 5 minutes.

(b) Check that the engine oil level is between the low level and full level marks on the level gauge.

If low, check for engine oil leaks and add oil up to the full level mark.

NOTICE:

Do not fill with engine oil to above the full level mark.

2. CHECK ENGINE OIL QUALITY

(a) Check the oil for deterioration, water, discoloring or thinning.

If the quality is visibly poor, replace the oil.

3. INSPECT OIL PRESSURE

(a) Disconnect the oil pressure switch connector.

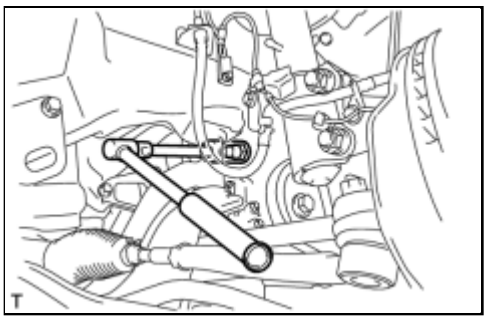

(b) Using a 24 mm deep socket wrench, remove the oil pressure switch.

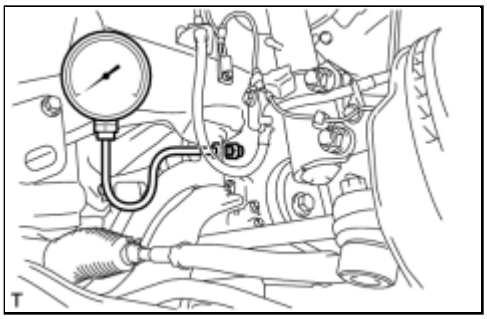

(c) Install the oil pressure gauge.

(d) Warm up the engine.

(e) Check the oil pressure.

Oil Pressure:

AT IDLE	AT 3000 RPM
25 kPa (0.3 kgf/cm^2, 3.6 psi) or more	150 to 400 kPa (1.5 to 4.1 kgf/cm^2, 22 to 58 psi)

(f) If the oil pressure is not as specified, check the oil pump INFO .

(g) Remove the oil pressure gauge.

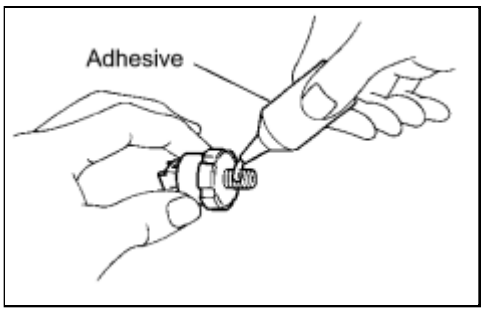

(h) Apply adhesive to the end 2 or 3 threads on the oil pressure switch.

Adhesive:
Toyota Genuine Adhesive 1344, Three Bond 1344 or equivalent

(i) Using a 24 mm deep socket wrench, install the oil pressure switch.

Torque: 15 N·m (153 kgf·cm, 11ft·lbf)

NOTICE:

Do not start the engine for at least 1 hour after installation.

(j) Connect the oil pressure switch connector.

(k) Check for engine oil leaks.

Last Modified: 3-10-2010	6.4 K	**From:** 200901
Model Year: 2010	**Model:** Corolla	**Doc ID:** RM000001R0I013X
Title: 2AZ-FE LUBRICATION: OIL AND OIL FILTER: COMPONENTS (2010 Corolla)		

COMPONENTS

ILLUSTRATION

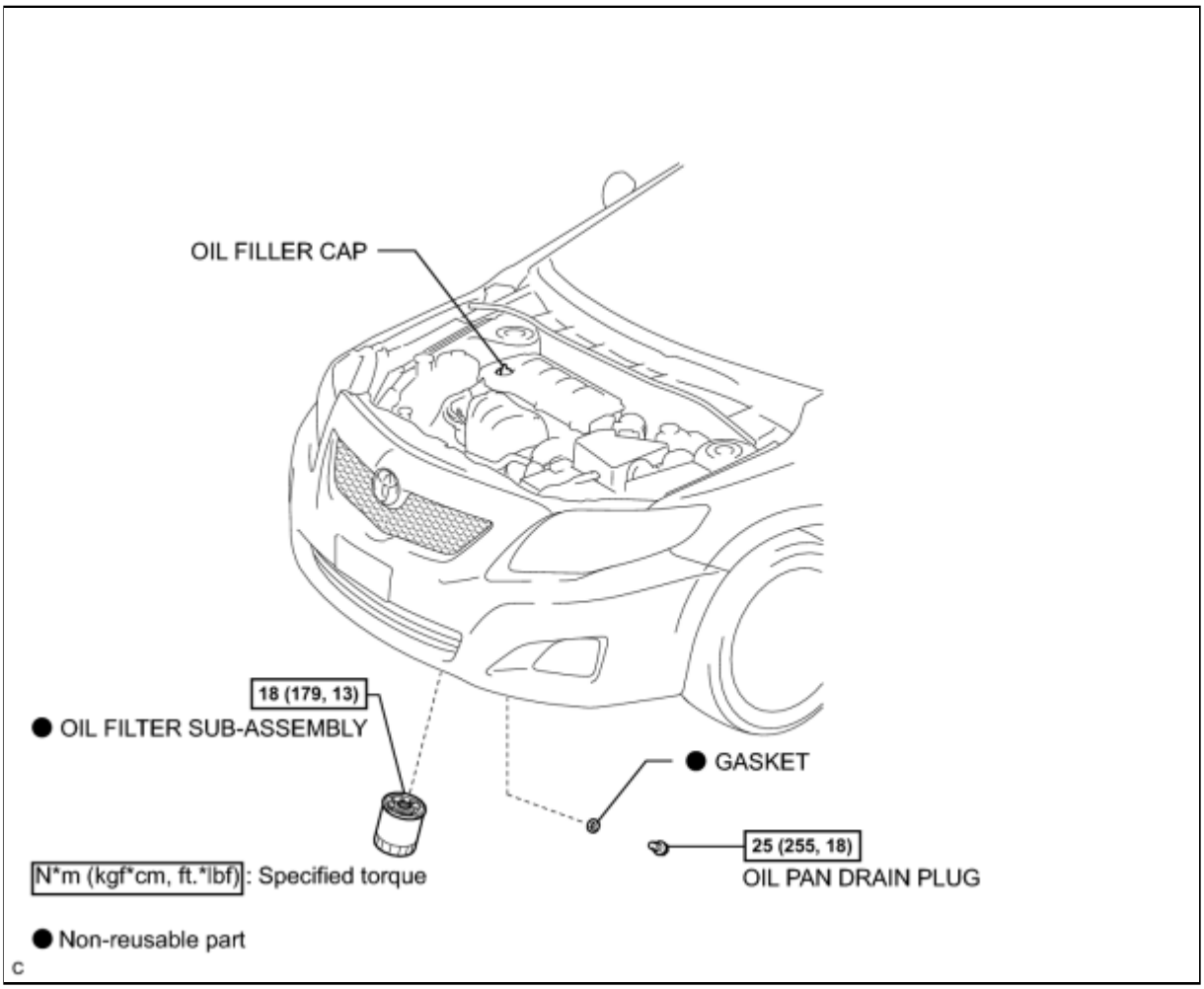

Last Modified: 3-10-2010	6.4 A	**From:** 200901
Model Year: 2010	**Model:** Corolla	**Doc ID:** RM000001R0H014X
Title: 2AZ-FE LUBRICATION: OIL AND OIL FILTER: REPLACEMENT (2010 Corolla)		

REPLACEMENT

CAUTION:

- Prolonged and repeated contact with engine oil will cause remove of natural oils from the skin, leading to dryness, irritation and dermatitis. In addition, used engine oil contains potentially harmful contaminants which may cause skin cancer.
- Precautions should be taken when replacing engine oil to minimize the risk of your skin making contact with used engine oil. Wear protective clothing and gloves. Wash your skin thoroughly with soap and water, or use a waterless hand cleaner to remove any used engine oil. Do not use gasoline, thinners or solvents.
- For environmental protection, used oil and used oil filters must be disposed of at designated disposal sites.

1. DRAIN ENGINE OIL

(a) Remove the oil filler cap.

(b) Remove the oil drain plug and drain the oil into a container.

(c) Clean and install the oil drain plug with a new gasket.

Torque: 25 N·m (255 kgf·cm, 18ft·lbf)

2. REMOVE OIL FILTER SUB-ASSEMBLY

(a) Using SST, remove the oil filter.

SST: 09228-06501

3. INSTALL OIL FILTER SUB-ASSEMBLY

(a) Clean the oil filter installation surface.

(b) Apply engine oil to a new oil filter gasket.

(c) Lightly screw the oil filter into the engine until the oil filter does not turn.

(d) Using SST, tighten the oil filter.

SST: 09228-06501

(1) Depending on the work space available, choose from the following:

1. If enough space is available, use a torque wrench to tighten the oil filter.

Torque: 18 N·m (179 kgf·cm, 13ft·lbf)

2. If enough space is not available to use a torque wrench, tighten the oil filter a 3/4 turn by hand or use a common wrench.

4. ADD ENGINE OIL

(a) Add fresh engine oil and install the oil filler cap.

Engine Oil

OIL GRADE	OIL VISCOSITY (SAE)

OIL GRADE	OIL VISCOSITY (SAE)
• ILSAC multigrade engine oil	• 0W-20 • 5W-20

Capacity

ITEM	STANDARD CONDITION
Drain and refill with oil filter change	3.8 liters (4.0 US qts, 3.3 Imp. qts)
Drain and refill without oil filter change	3.6 liters (3.8 US qts, 3.2 Imp. qts)
Dry fill	4.5 liters (4.8 US qts, 4.0 Imp. qts)

5. INSPECT FOR OIL LEAK



Last Modified: 3-10-2010	6.4 K	**From:** 200901
Model Year: 2010	**Model:** Corolla	**Doc ID:** RM0000025 9O01GX
Title: 2ZR-FE LUBRICATION: OIL AND OIL FILTER: COMPONENTS (2010 Corolla)		

COMPONENTS

ILLUSTRATION

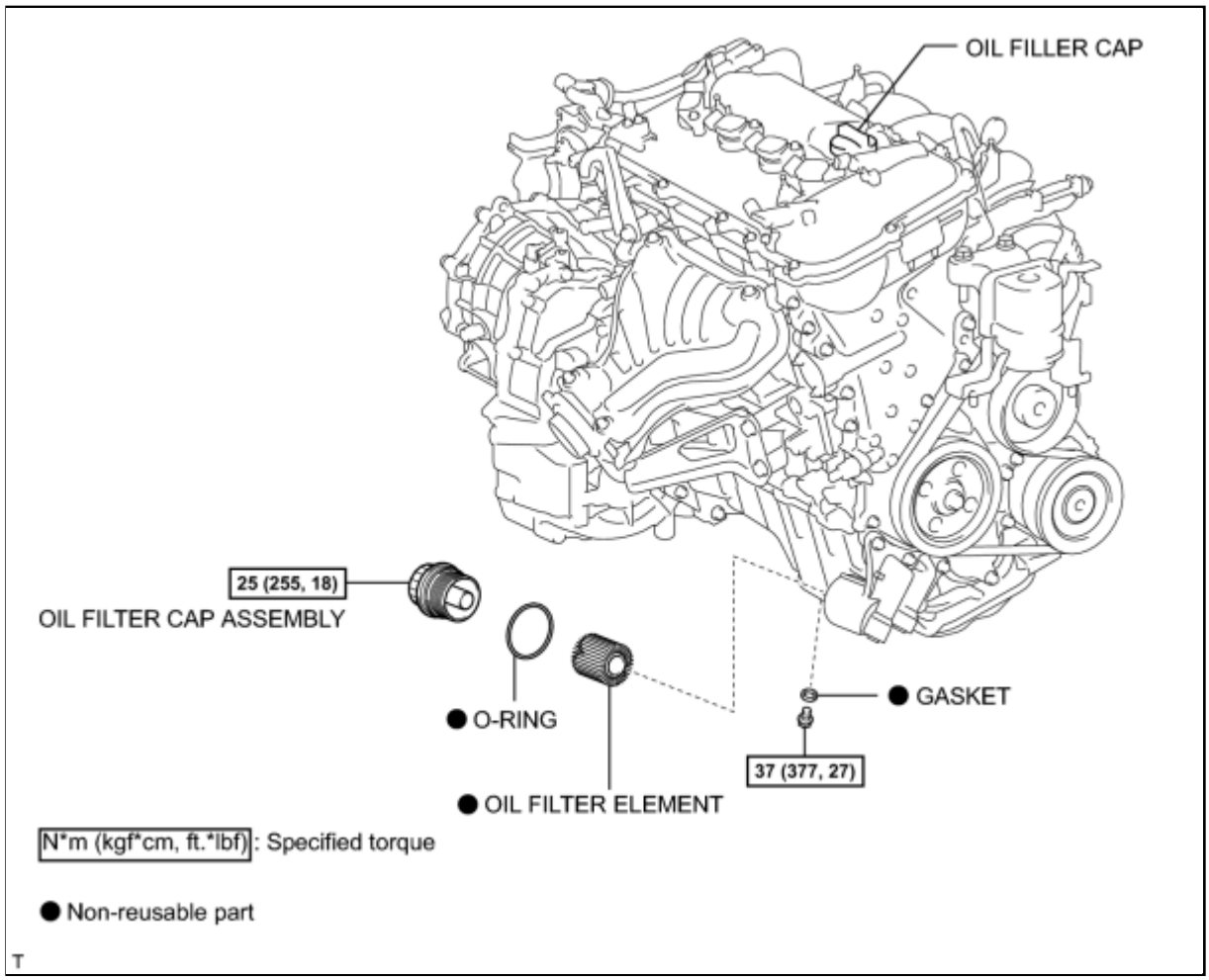

Last Modified: 3-10-2010	6.4 A	**From:** 200901
Model Year: 2010	**Model:** Corolla	**Doc ID:** RM000002UQM01FX
Title: 2ZR-FE LUBRICATION: OIL AND OIL FILTER: REPLACEMENT (2010 Corolla)		

REPLACEMENT

CAUTION:

- Prolonged and repeated contact with engine oil will cause removal of natural oils from the skin, leading to dryness, irritation and dermatitis. In addition, used engine oil contains potentially harmful contaminants which may cause skin cancer.
- Precautions should be taken when replacing engine oil to minimize the risk of your skin making contact with used engine oil. Wear protective clothing and gloves. Wash your skin thoroughly with soap and water, or use a waterless hand cleaner to remove any used engine oil. Do not use gasoline, thinners or solvents.
- For environmental protection, used oil and used oil filters must be disposed of at designated disposal sites.

1. DRAIN ENGINE OIL

(a) Remove the oil filler cap.

(b) Remove the oil drain plug and drain the oil into a container.

(c) Clean and install the oil drain plug with a new gasket.

Torque: 37 N·m (377 kgf·cm, 27ft·lbf)

2. REMOVE OIL FILTER CAP ASSEMBLY

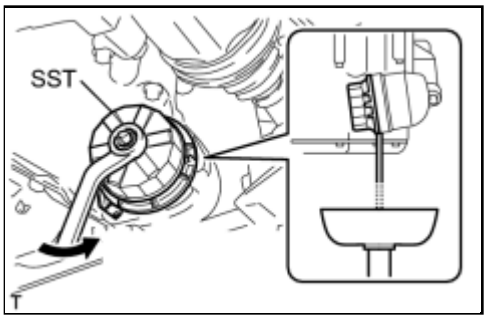

(a) Using SST, loosen the oil filter cap 4 revolutions, align the cap ribs vertically, and drain the remaining engine oil in the oil filter cap.

SST: 09228-06501

HINT:

Set a container below the oil filter cap assembly before loosening the oil filter cap.

(b) Remove the oil filter cap assembly.

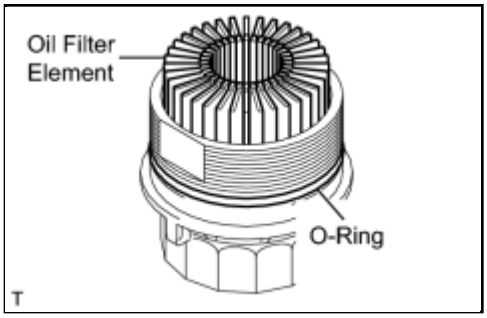

(c) Remove oil filter element and O-ring from the oil filter cap.

NOTICE:

Be sure to remove the O-ring (for the cap) by hand, without using any tools, to prevent damage to the groove for the O-ring on the cap.

3. INSTALL OIL FILTER CAP ASSEMBLY

(a) Clean the oil filter cap threads and O-ring groove.

(b) Apply a small amount of engine oil to a new O-ring and install it to the oil filter cap.

(c) Set a new oil filter element in the oil filter cap.

(d) Remove any dirt or foreign matter from the installation surface and inside of the engine.

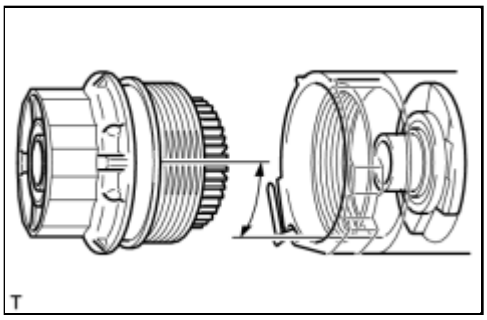

(e) Reapply a small amount of engine oil to the O-ring of the oil filter cap assembly. Align the cutout in the oil filter cap threads 90° to the grooves in the oil filter bracket and temporarily tighten the cap.

NOTICE:

Make sure that the O-ring does not get caught between the parts.

(f) Using SST, tighten the oil filter cap assembly.

Torque: 25 N·m (255 kgf·cm, 18ft·lbf)
SST: 09228-06501

NOTICE:

- After tightening the oil filter cap assembly, check for gaps between the installation surfaces.
- Do not remove the oil filter bracket clip when installing the oil filter cap assembly.
- Do not cross thread the oil filter cap assembly.

4. ADD ENGINE OIL

(a) Add fresh engine oil and install the oil filler cap.

Engine Oil

OIL GRADE	OIL VISCOSITY (SAE)
• ILSAC multigrade engine oil	• 0W-20 • 5W-20

Capacity

ITEM	STANDARD CONDITION
Drain and refill with oil filter change	4.2 liters (4.4 US qts, 3.7 lmp. qts)
Drain and refill without oil filter change	3.9 liters (4.1 US qts, 3.4 lmp. qts)
Dry fill	4.7 liters (5.0 US qts, 4.1 lmp. qts)

5. INSPECT FOR OIL LEAK

Last Modified: 3-10-2010	6.4 K	**From:** 200901
Model Year: 2010	**Model:** Corolla	**Doc ID:** RM000003D7H003X
Title: 2AZ-FE LUBRICATION: OIL PRESSURE SWITCH: COMPONENTS (2010 Corolla)		

COMPONENTS

ILLUSTRATION

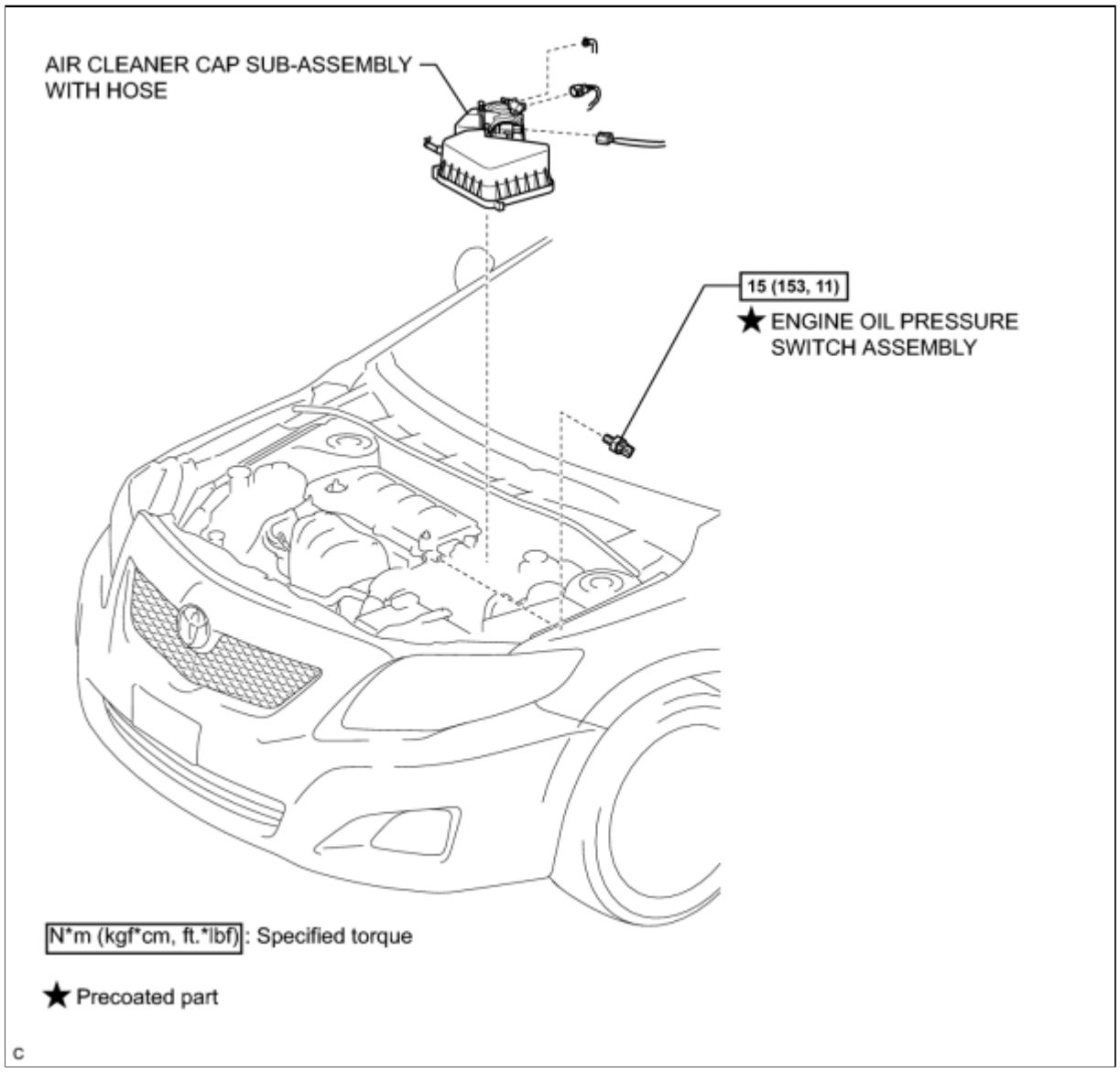

Last Modified: 3-10-2010	6.4 A	**From:** 200901
Model Year: 2010	**Model:** Corolla	**Doc ID:** RM000003D7I003X
Title: 2AZ-FE LUBRICATION: OIL PRESSURE SWITCH: REMOVAL (2010 Corolla)		

REMOVAL

1. REMOVE AIR CLEANER CAP SUB-ASSEMBLY WITH HOSE INFO

2. REMOVE ENGINE OIL PRESSURE SWITCH ASSEMBLY

(a) Disconnect the oil pressure switch connector.

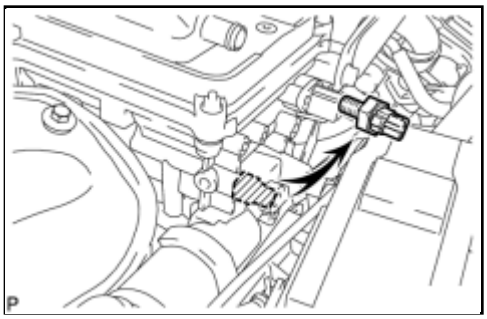

(b) Using a 24 mm deep socket wrench, remove the oil pressure switch.

Last Modified: 3-10-2010	6.4 G	**From:** 200901
Model Year: 2010	**Model:** Corolla	**Doc ID:** RM000003D7G003X
Title: 2AZ-FE LUBRICATION: OIL PRESSURE SWITCH: INSPECTION (2010 Corolla)		

INSPECTION

1. INSPECT ENGINE OIL PRESSURE SWITCH ASSEMBLY

(a) Disconnect the oil pressure switch connector.

(b) Start the engine.

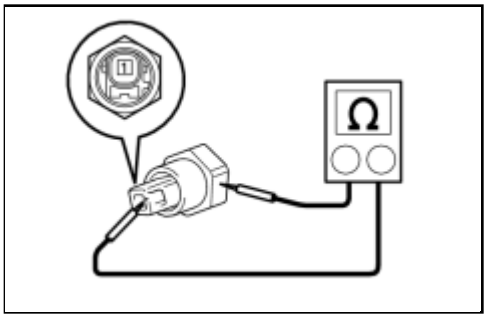

(c) Measure the resistance according to the value(s) in the table below.

Standard Resistance:

TESTER CONNECTION	CONDITION	SPECIFIED CONDITION
1 - Switch body	Idling	10 kΩ or higher
1 - Switch body	Engine stopped	Below 1 Ω

(d) Reconnect the oil pressure switch connector. If the result is not as specified, replace the oil pressure switch assembly.

Last Modified: 3-10-2010	6.4 A	**From:** 200901
Model Year: 2010	**Model:** Corolla	**Doc ID:** RM000003D7F003X
Title: 2AZ-FE LUBRICATION: OIL PRESSURE SWITCH: INSTALLATION (2010 Corolla)		

INSTALLATION

1. INSTALL ENGINE OIL PRESSURE SWITCH ASSEMBLY

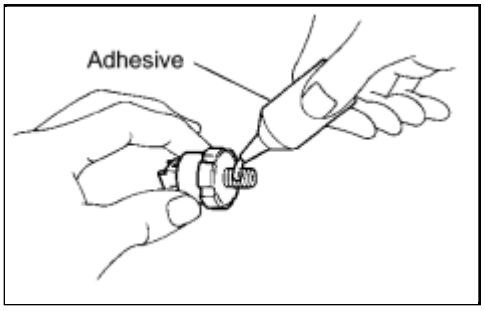

(a) Apply adhesive to 2 or 3 threads of the oil pressure switch.

Adhesive:

Toyota Genuine Adhesive 1344, Three Bond 1344 or equivalent

(b) Using a 24 mm deep socket wrench, install the oil pressure switch.

Torque: 15 N·m (153 kgf·cm, 11ft·lbf)

NOTICE:

Do not start the engine for at least 1 hour after installation.

(c) Connect the oil pressure switch connector.

2. INSTALL AIR CLEANER CAP SUB-ASSEMBLY WITH HOSE INFO

3. INSPECT FOR OIL LEAK

Last Modified: 3-10-2010	6.4 K	**From:** 200901
Model Year: 2010	**Model:** Corolla	**Doc ID:** RM000001R0L016X
Title: 2AZ-FE LUBRICATION: OIL PUMP: COMPONENTS (2010 Corolla)		

COMPONENTS

ILLUSTRATION

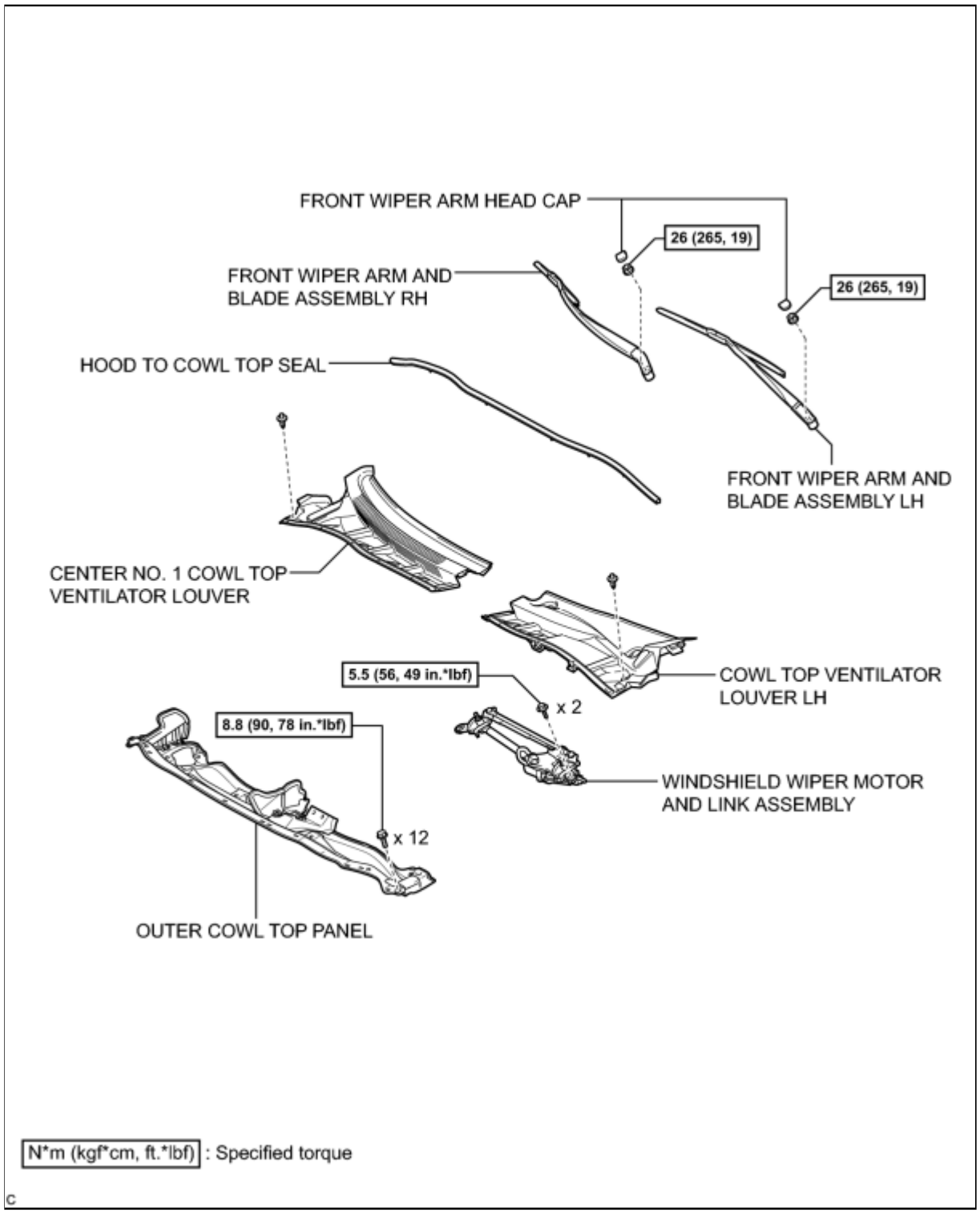

ILLUSTRATION

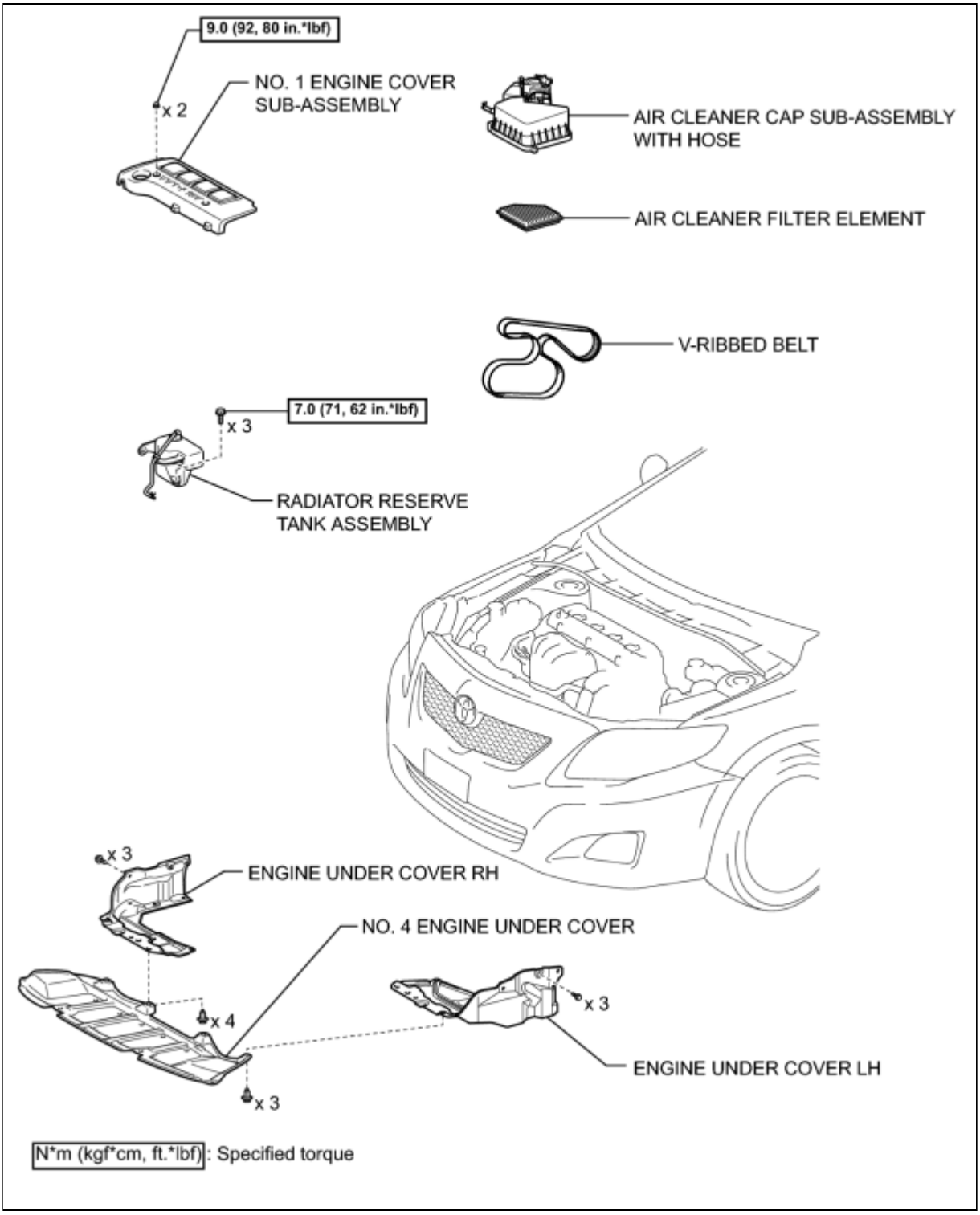

ILLUSTRATION

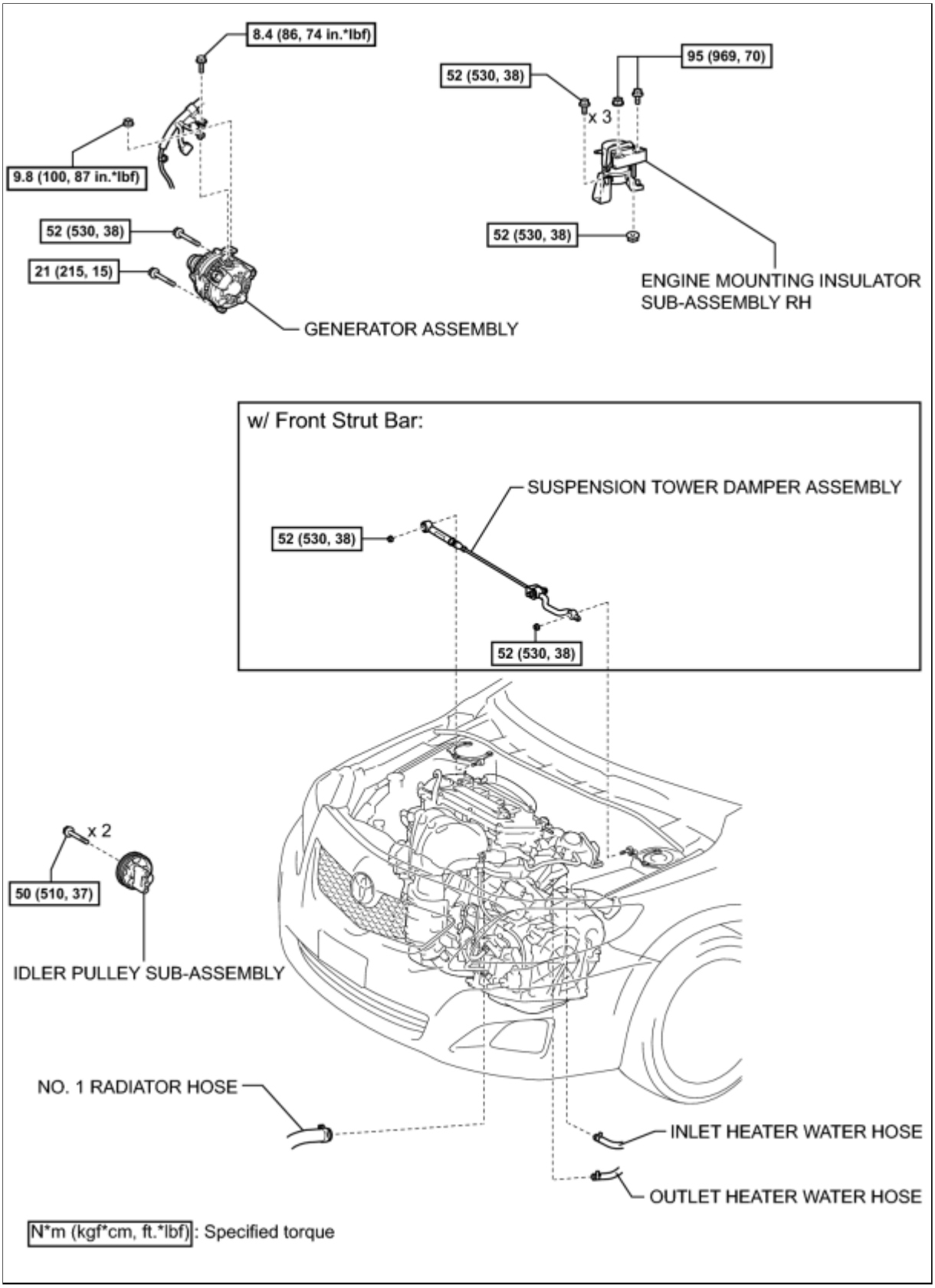

ILLUSTRATION

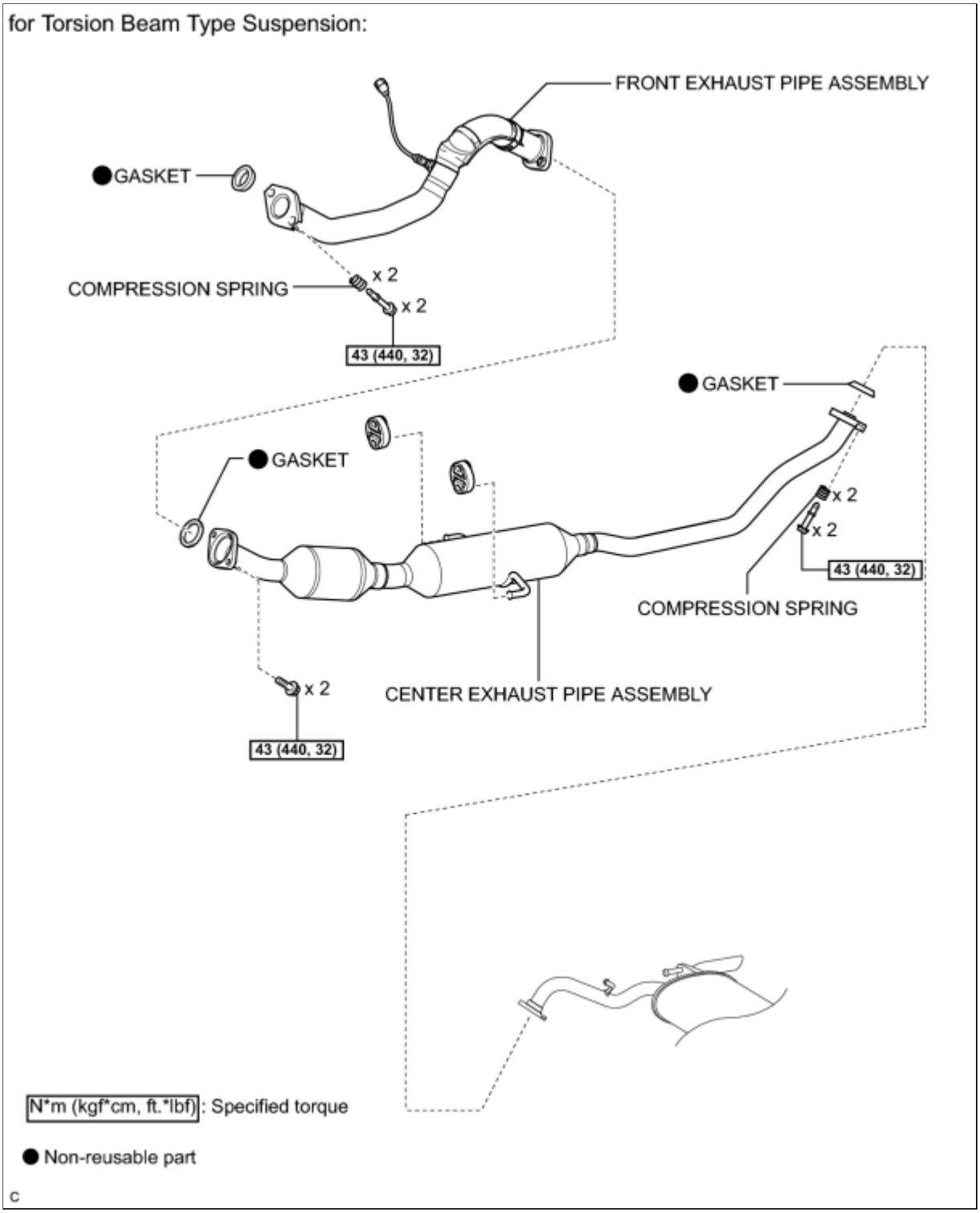

ILLUSTRATION

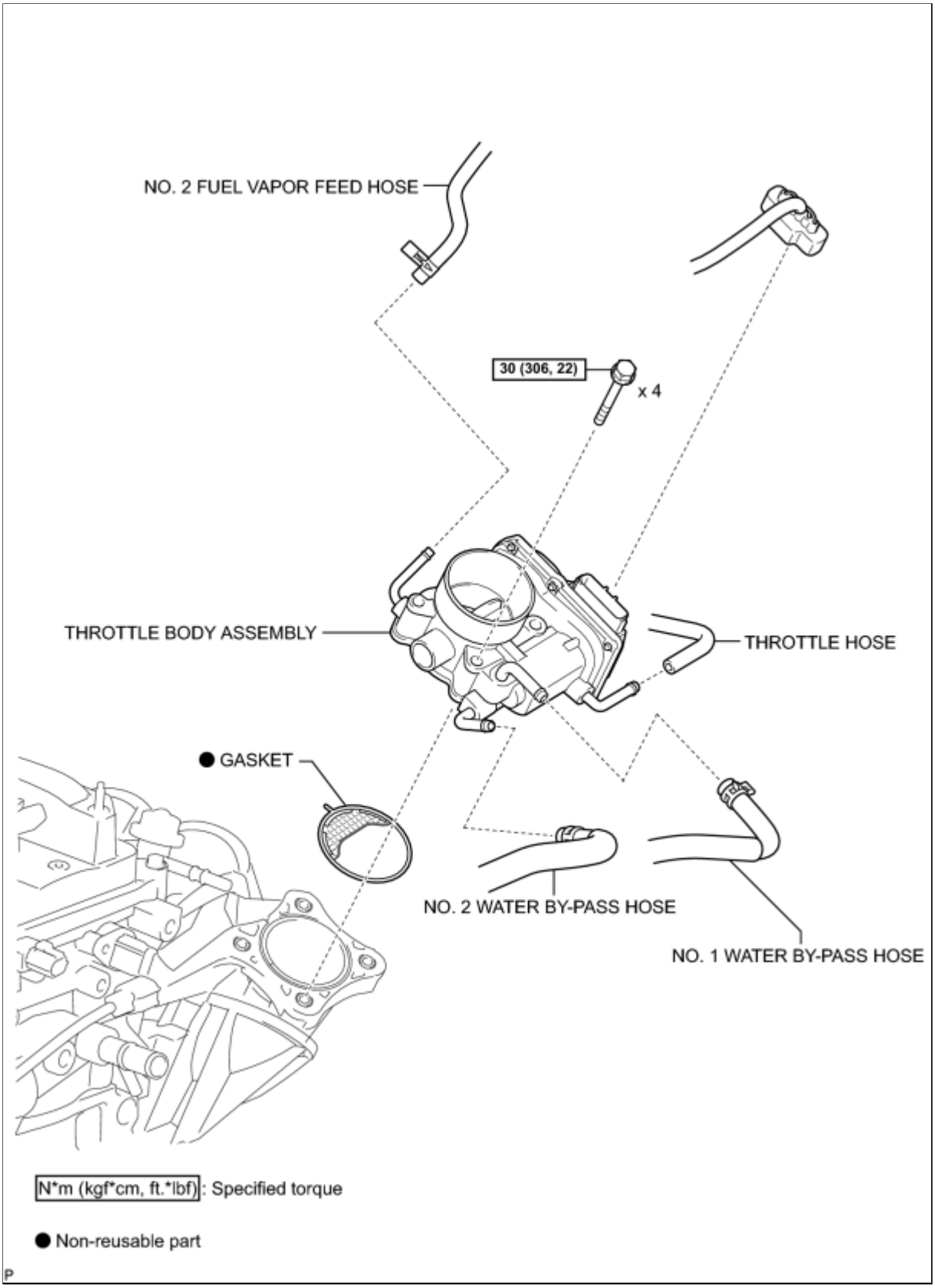

ILLUSTRATION

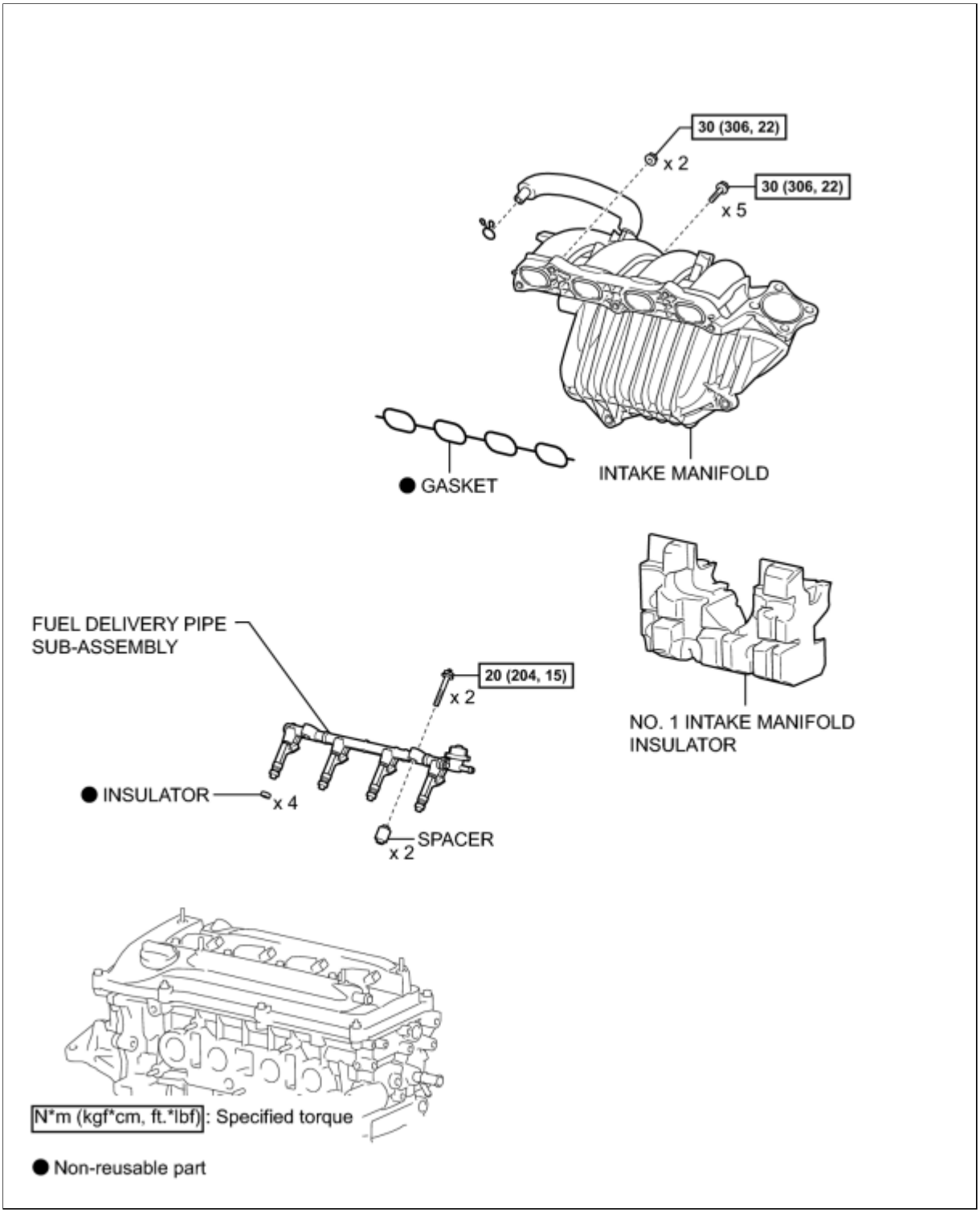

ILLUSTRATION

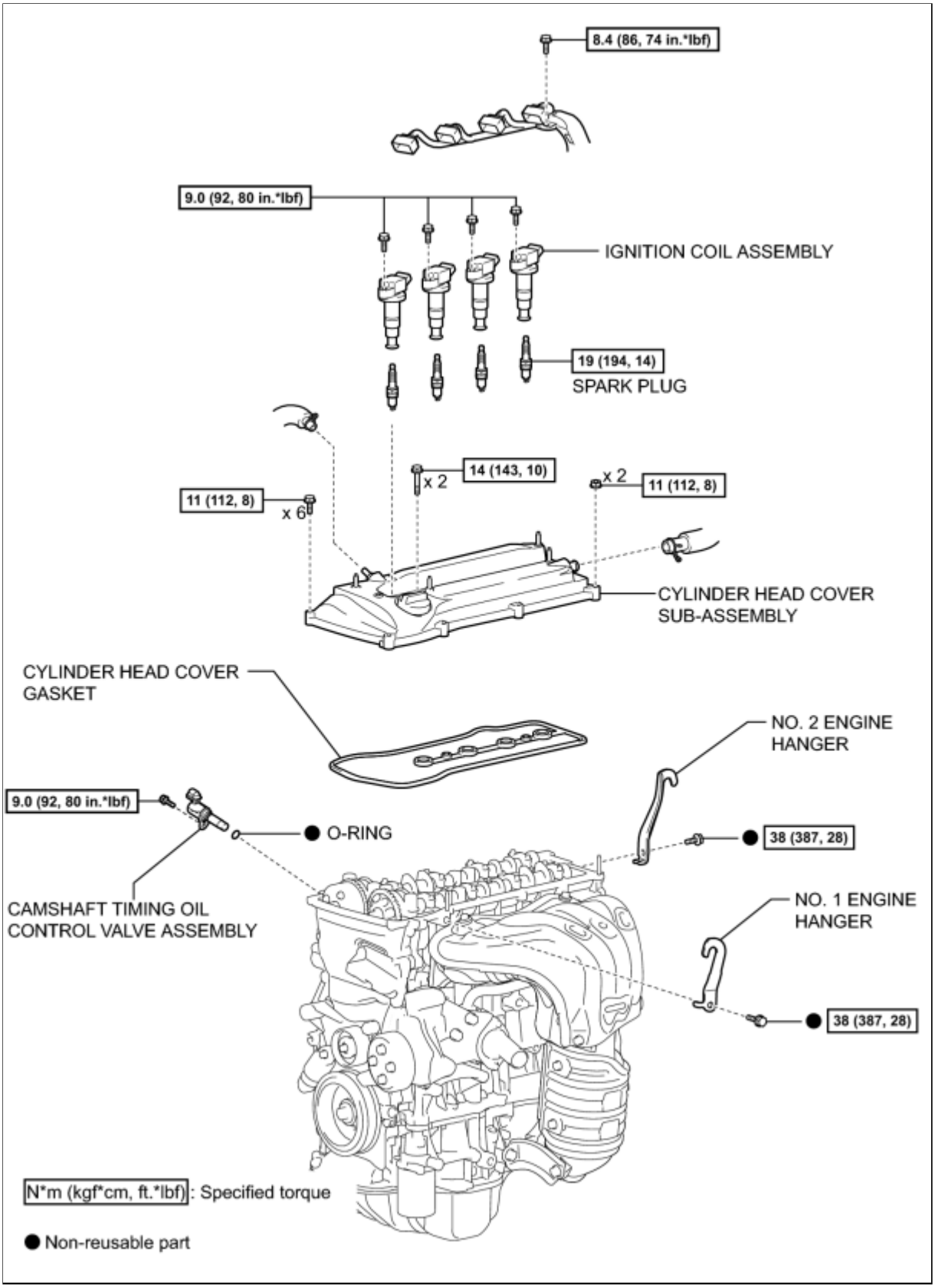

ILLUSTRATION

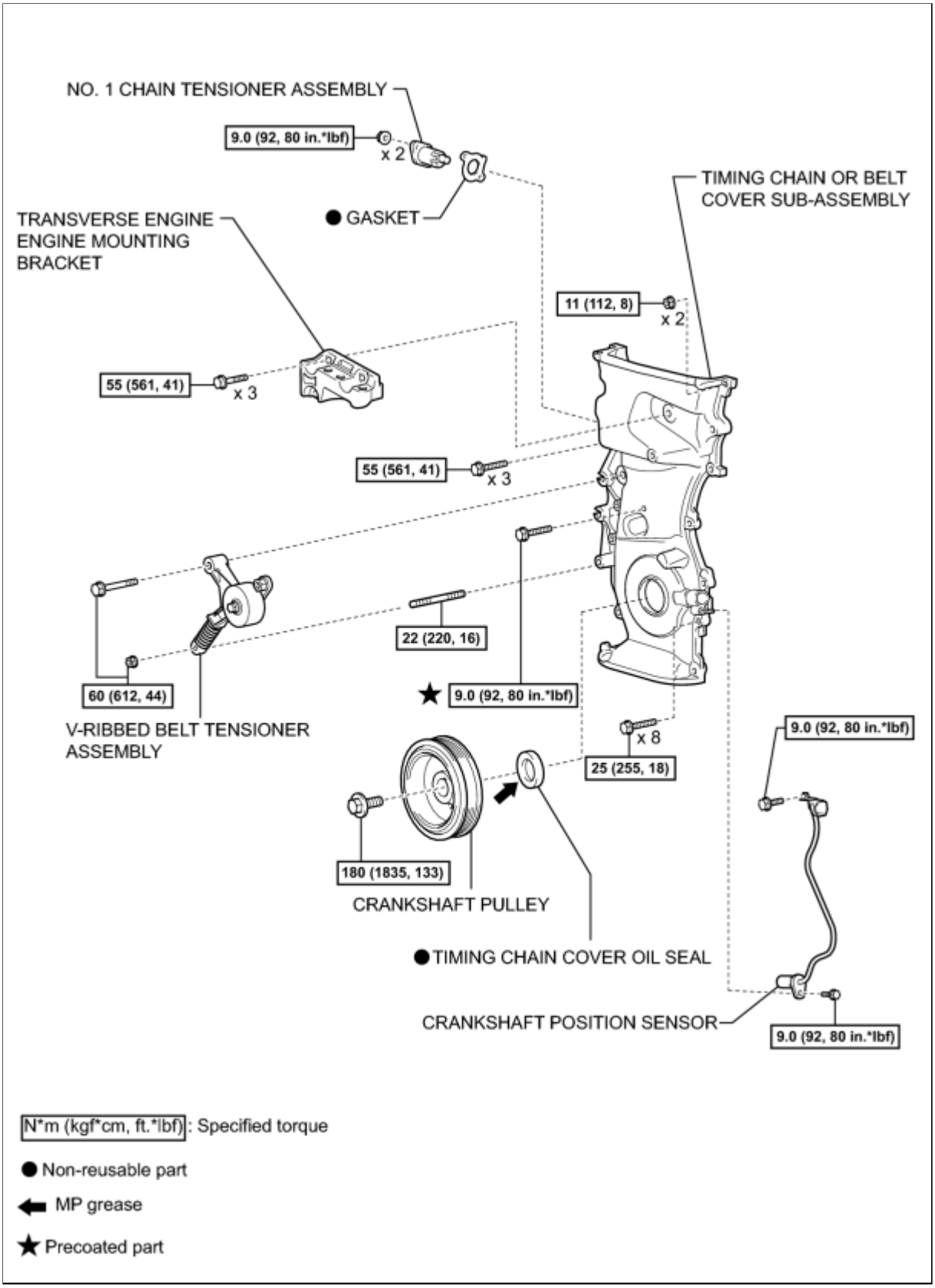

ILLUSTRATION

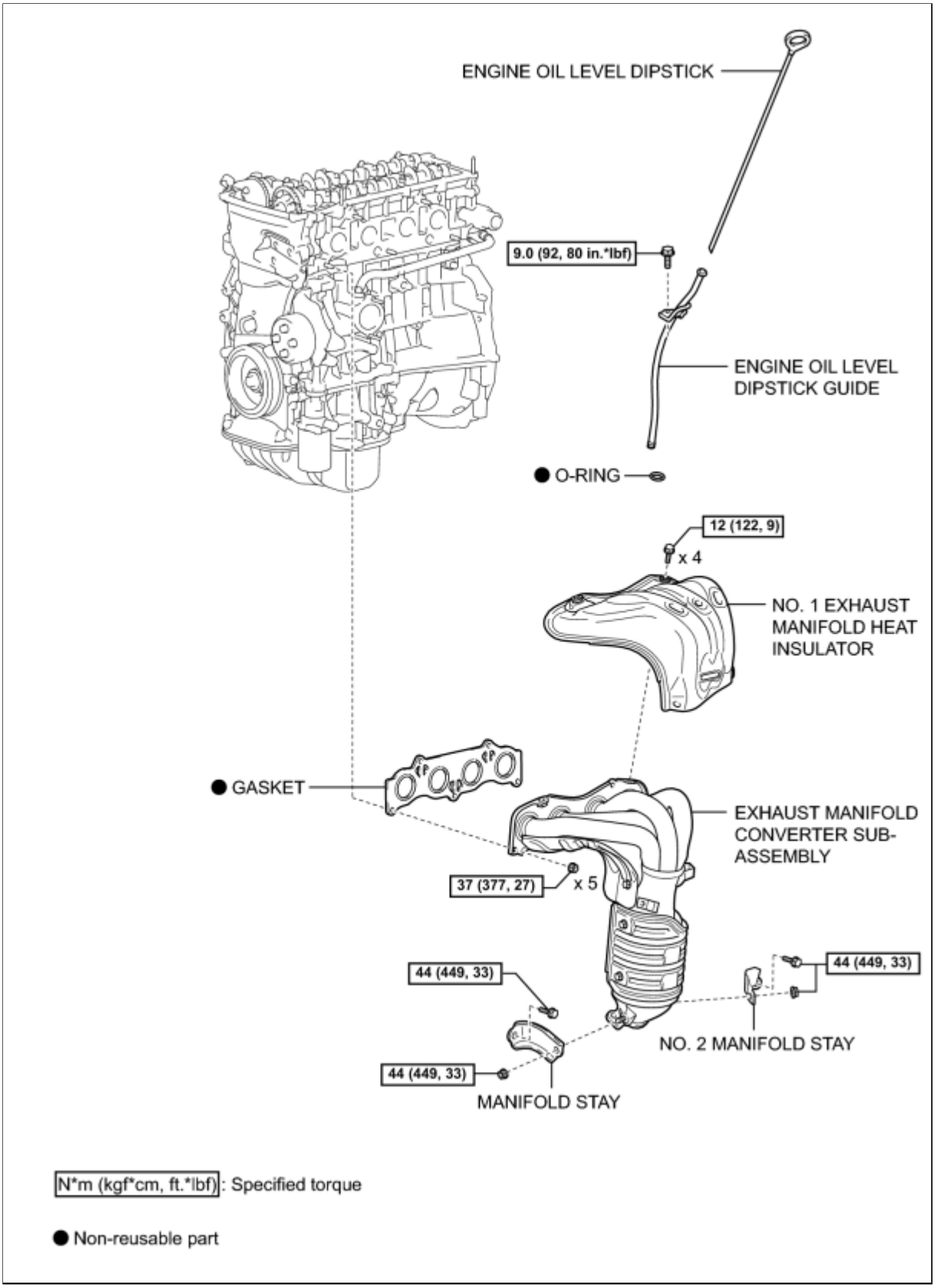

ILLUSTRATION

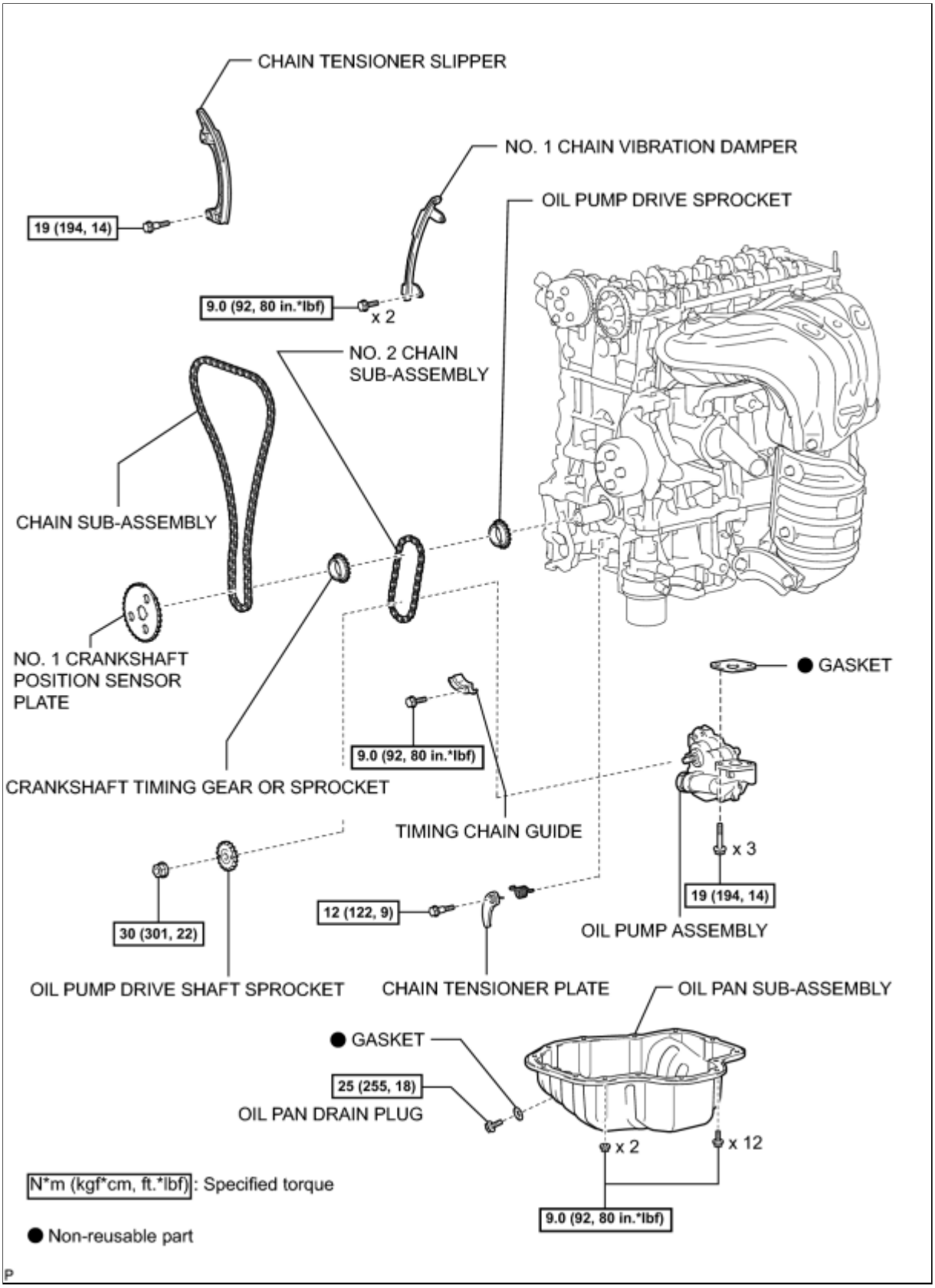

ILLUSTRATION

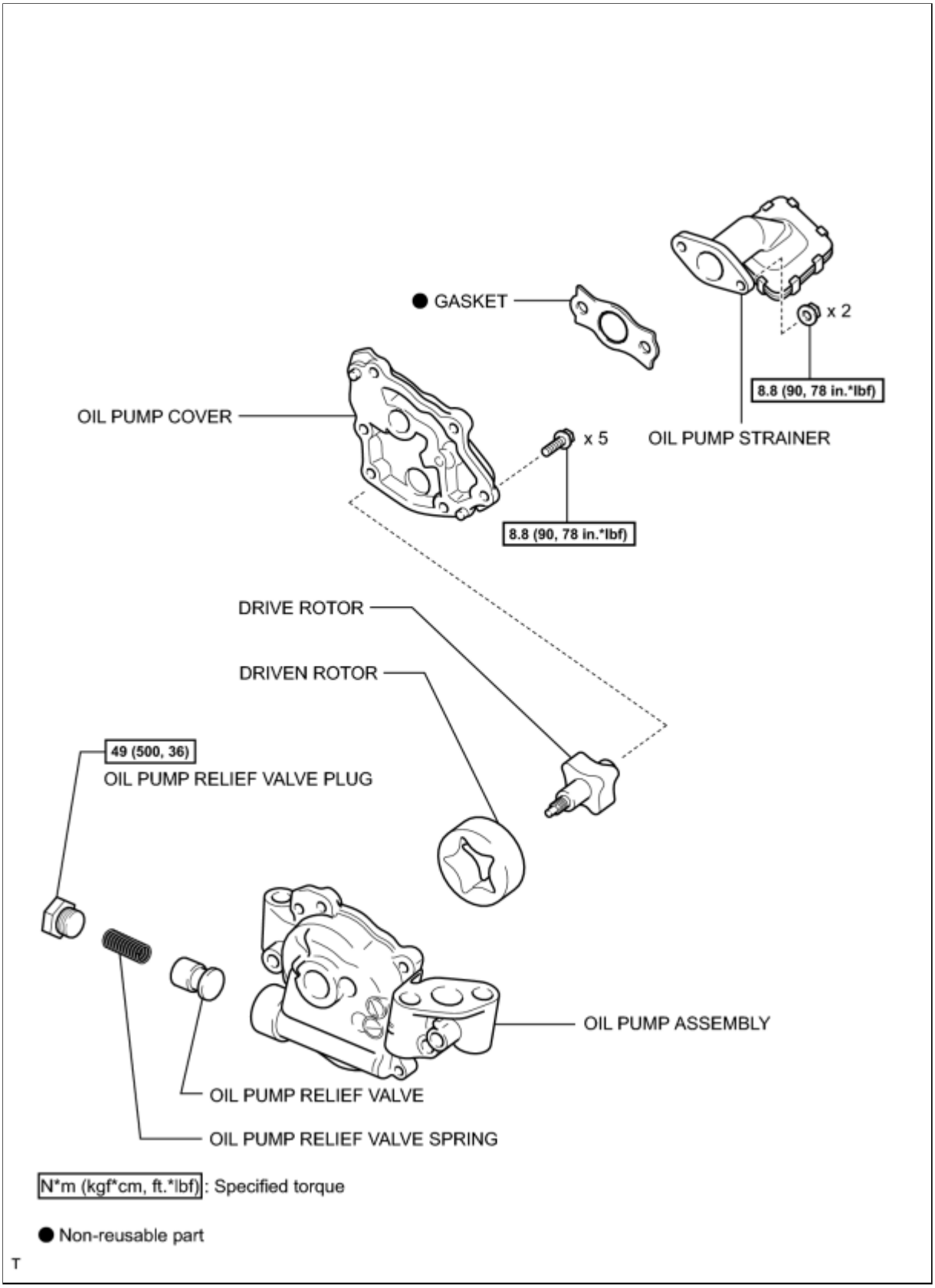

N*m (kgf*cm, ft.*lbf): Specified torque

● Non-reusable part

T

Last Modified: 3-10-2010	6.4 K	**From:** 200901
Model Year: 2010	**Model:** Corolla	**Doc ID:** RM000002ZA701PX
Title: 2ZR-FE LUBRICATION: OIL PRESSURE SWITCH: COMPONENTS (2010 Corolla)		

COMPONENTS

ILLUSTRATION

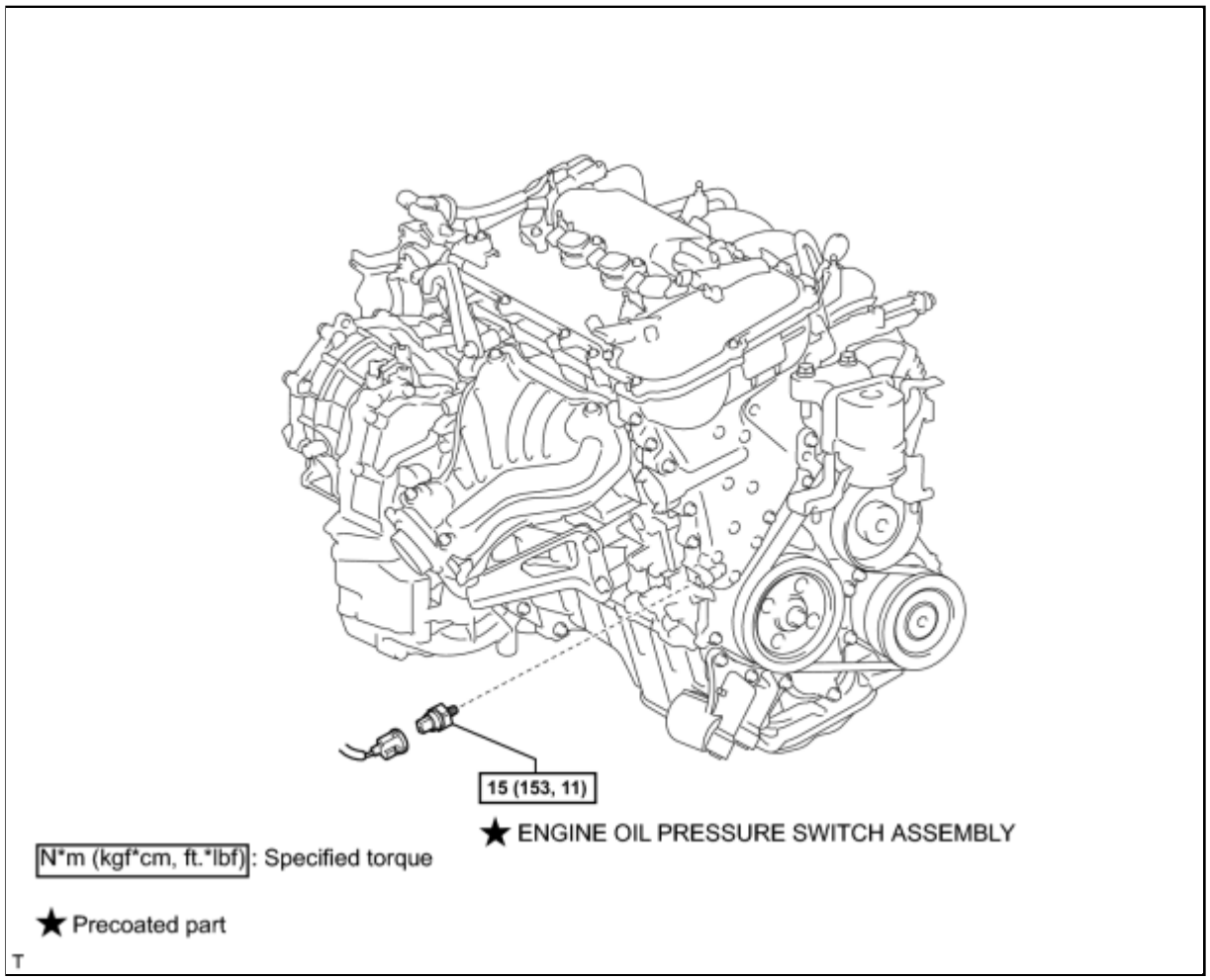

Last Modified: 3-10-2010	6.4 A	**From:** 200901
Model Year: 2010	**Model:** Corolla	**Doc ID:** RM000002ZA801YX
Title: 2ZR-FE LUBRICATION: OIL PRESSURE SWITCH: REMOVAL (2010 Corolla)		

REMOVAL

1. REMOVE FRONT WHEEL RH

2. REMOVE ENGINE OIL PRESSURE SWITCH ASSEMBLY

(a) Disconnect the oil pressure switch connector.

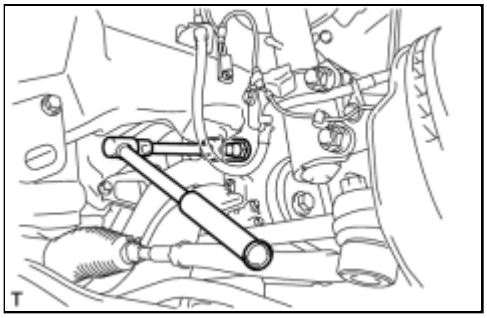

(b) Using a 24 mm deep socket wrench, remove the oil pressure switch.

Last Modified: 3-10-2010	6.4 G	**From:** 200901
Model Year: 2010	**Model:** Corolla	**Doc ID:** RM000002ZA601WX
Title: 2ZR-FE LUBRICATION: OIL PRESSURE SWITCH: INSPECTION (2010 Corolla)		

INSPECTION

1. INSPECT ENGINE OIL PRESSURE SWITCH ASSEMBLY

(a) Disconnect the oil pressure switch connector.

(b) Start the engine.

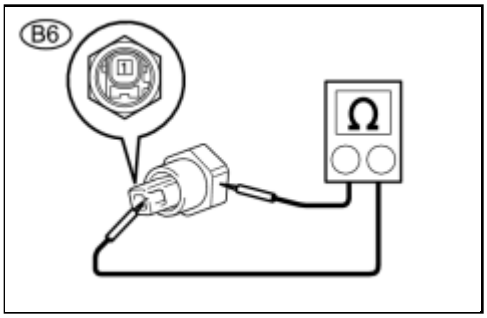

(c) Measure the resistance according to the value(s) in the table below.

Standard Resistance:

TESTER CONNECTION	CONDITION	SPECIFIED CONDITION
B6-1 - Switch body	Idling	10 kΩ or higher
B6-1 - Switch body	Engine stopped	Below 1 Ω

(d) Reconnect the oil pressure switch connector.

If the result is not as specified, replace the oil pressure switch assembly.

Last Modified: 3-10-2010	6.4 A	**From:** 200901
Model Year: 2010	**Model:** Corolla	**Doc ID:** RM000001R0M01IX
Title: 2AZ-FE LUBRICATION: OIL PUMP: REMOVAL (2010 Corolla)		

REMOVAL

1. DISCHARGE FUEL SYSTEM PRESSURE INFO

2. DISCONNECT CABLE FROM NEGATIVE BATTERY TERMINAL

3. REMOVE FRONT WIPER ARM HEAD CAP INFO

4. REMOVE FRONT WIPER ARM AND BLADE ASSEMBLY LH INFO

5. REMOVE FRONT WIPER ARM AND BLADE ASSEMBLY RH INFO

6. REMOVE HOOD TO COWL TOP SEAL INFO

7. REMOVE CENTER NO. 1 COWL TOP VENTILATOR LOUVER INFO

8. REMOVE COWL TOP VENTILATOR LOUVER LH INFO

9. REMOVE WINDSHIELD WIPER MOTOR AND LINK ASSEMBLY INFO

10. REMOVE OUTER COWL TOP PANEL INFO

11. REMOVE SUSPENSION TOWER DAMPER ASSEMBLY (w/ Front Strut Bar) INFO

12. REMOVE FRONT WHEEL RH

13. REMOVE ENGINE UNDER COVER LH

14. REMOVE ENGINE UNDER COVER RH

15. REMOVE NO. 1 ENGINE COVER SUB-ASSEMBLY INFO

16. DRAIN ENGINE COOLANT INFO

17. DRAIN ENGINE OIL INFO

18. REMOVE CENTER EXHAUST PIPE ASSEMBLY INFO

19. REMOVE FRONT EXHAUST PIPE ASSEMBLY INFO

20. REMOVE V-RIBBED BELT INFO

21. REMOVE GENERATOR ASSEMBLY INFO

22. DISCONNECT NO. 1 RADIATOR HOSE INFO

23. DISCONNECT OUTLET HEATER WATER HOSE INFO

24. DISCONNECT INLET HEATER WATER HOSE INFO

25. SEPARATE RADIATOR RESERVE TANK ASSEMBLY INFO

26. REMOVE AIR CLEANER CAP SUB-ASSEMBLY WITH HOSE INFO

27. REMOVE THROTTLE BODY ASSEMBLY INFO

28. REMOVE IGNITION COIL ASSEMBLY INFO

29. REMOVE SPARK PLUG INFO

30. REMOVE CYLINDER HEAD COVER SUB-ASSEMBLY INFO

31. REMOVE ENGINE OIL LEVEL DIPSTICK

32. REMOVE ENGINE OIL LEVEL DIPSTICK GUIDE INFO

33. REMOVE FUEL MAIN TUBE INFO

34. REMOVE FUEL DELIVERY PIPE SUB-ASSEMBLY INFO

35. REMOVE CAMSHAFT TIMING OIL CONTROL VALVE ASSEMBLY INFO

36. REMOVE INTAKE MANIFOLD INFO

37. REMOVE NO. 1 INTAKE MANIFOLD INSULATOR INFO

38. REMOVE MANIFOLD STAY INFO

39. REMOVE NO. 2 MANIFOLD STAY INFO

40. REMOVE NO. 1 EXHAUST MANIFOLD HEAT INSULATOR INFO

41. REMOVE EXHAUST MANIFOLD CONVERTER SUB-ASSEMBLY INFO

42. REMOVE ENGINE MOUNTING INSULATOR SUB-ASSEMBLY RH INFO

43. REMOVE IDLER PULLEY SUB-ASSEMBLY INFO

44. REMOVE OIL PAN SUB-ASSEMBLY INFO

45. SET NO. 1 CYLINDER TO TDC / COMPRESSION INFO

46. REMOVE CRANKSHAFT PULLEY INFO

47. REMOVE NO. 1 CHAIN TENSIONER ASSEMBLY INFO

48. REMOVE V-RIBBED BELT TENSIONER ASSEMBLY INFO

49. REMOVE CRANKSHAFT POSITION SENSOR INFO

50. REMOVE TIMING CHAIN OR BELT COVER SUB-ASSEMBLY

(a) Remove the 3 bolts and transverse engine engine

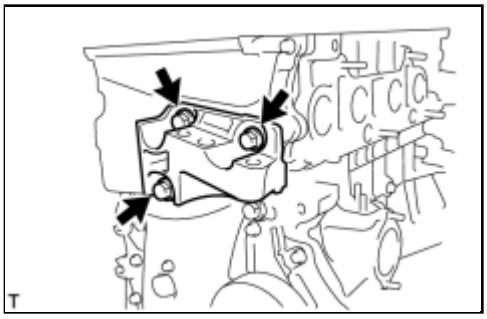

mounting bracket.

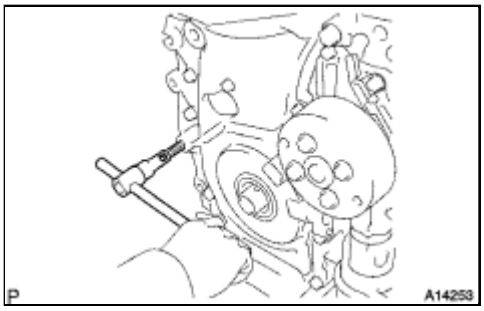

(b) Using an E10 "TORX" socket, remove the stud bolt for the V-ribbed belt tensioner.

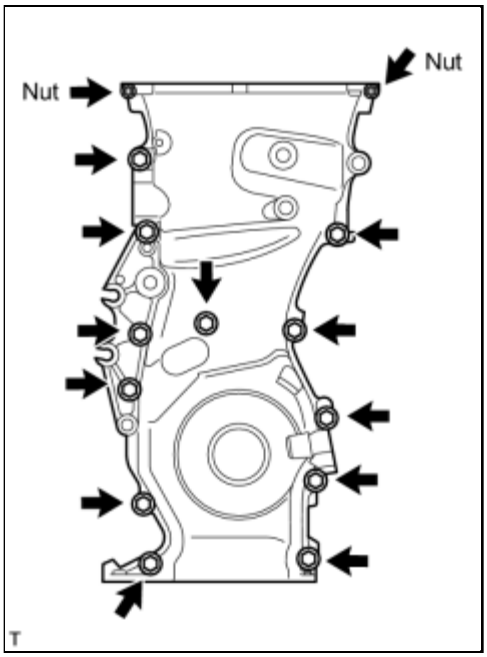

(c) Remove the 12 bolts and 2 nuts.

(d) Remove the timing chain cover by prying the portions between the timing chain cover, cylinder head and cylinder block with a screwdriver.

NOTICE:

Be careful not to damage the contact surfaces of the timing chain cover, cylinder head and cylinder block.

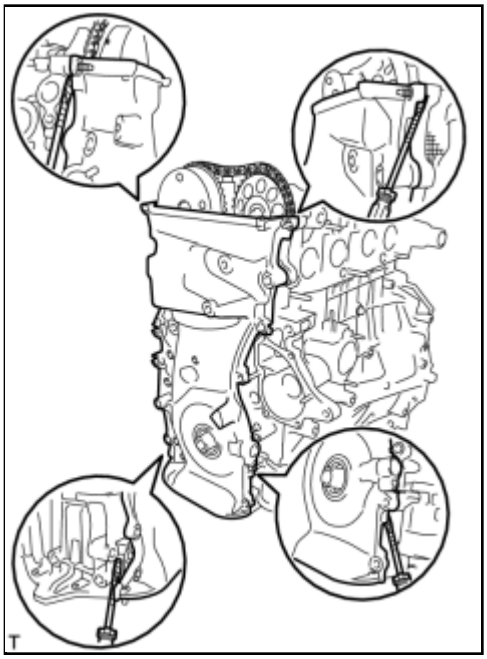

HINT:

Tape the screwdriver tip before use.

51. REMOVE TIMING CHAIN COVER OIL SEAL

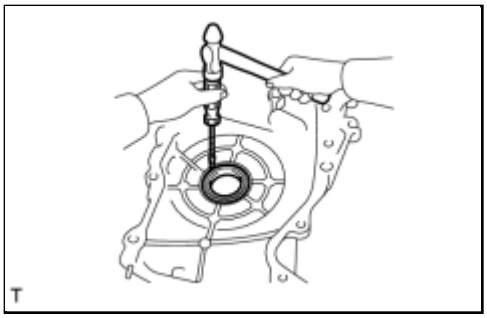

(a) Place the timing chain cover on wooden blocks.

(b) Using a screwdriver, pry out the oil seal.

NOTICE:

Do not damage the surface of the oil seal press fit hole.

HINT:

Tape the screwdriver tip before use.

52. REMOVE NO. 1 CRANKSHAFT POSITION SENSOR PLATE INFO

53. REMOVE TIMING CHAIN GUIDE INFO

54. REMOVE CHAIN TENSIONER SLIPPER INFO

55. REMOVE NO. 1 CHAIN VIBRATION DAMPER INFO

56. REMOVE CHAIN SUB-ASSEMBLY

57. REMOVE CRANKSHAFT TIMING GEAR OR SPROCKET INFO

58. REMOVE NO. 2 CHAIN SUB-ASSEMBLY INFO

59. REMOVE OIL PUMP ASSEMBLY

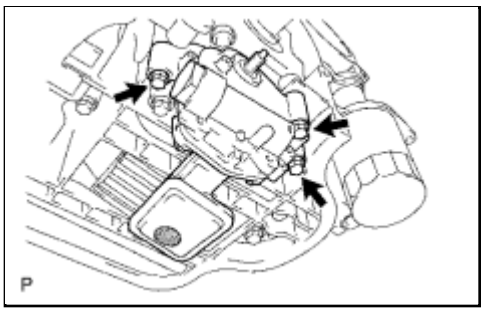

(a) Remove the 3 bolts, oil pump and gasket.

Last Modified: 3-10-2010	6.4 A	**From:** 200901
Model Year: 2010	**Model:** Corolla	**Doc ID:** RM000002ZA501YX
Title: 2ZR-FE LUBRICATION: OIL PRESSURE SWITCH: INSTALLATION (2010 Corolla)		

INSTALLATION

1. INSTALL ENGINE OIL PRESSURE SWITCH ASSEMBLY

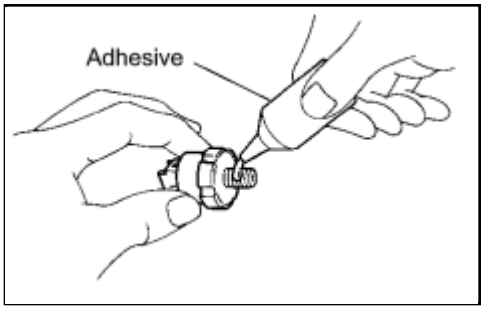

(a) Apply adhesive to the end 2 or 3 threads on the oil pressure switch.

Adhesive:

Toyota Genuine Adhesive 1344, Three Bond 1344 or equivalent

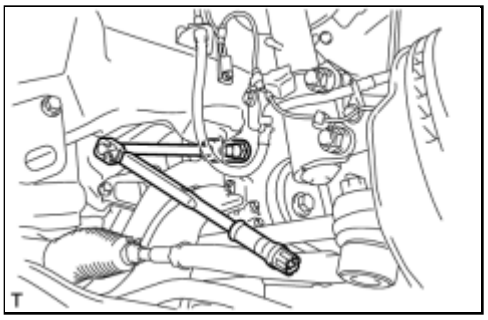

(b) Using a 24 mm deep socket wrench, install the oil pressure switch.

Torque: 15 N·m (153 kgf·cm, 11ft·lbf)

NOTICE:

Do not start the engine for at least 1 hour after installation.

(c) Connect the oil pressure switch connector.

2. INSPECT FOR OIL LEAK

3. INSTALL FRONT WHEEL RH INFO

Last Modified: 3-10-2010	6.4 A	**From:** 200901
Model Year: 2010	**Model:** Corolla	**Doc ID:** RM000001R0N014X
Title: 2AZ-FE LUBRICATION: OIL PUMP: DISASSEMBLY (2010 Corolla)		

DISASSEMBLY

1. REMOVE OIL PUMP STRAINER

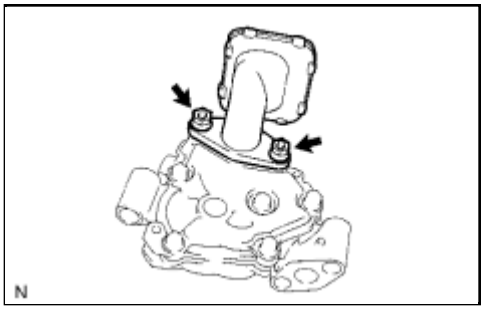

(a) Remove the 2 nuts, oil pump strainer and gasket.

2. REMOVE OIL PUMP RELIEF VALVE

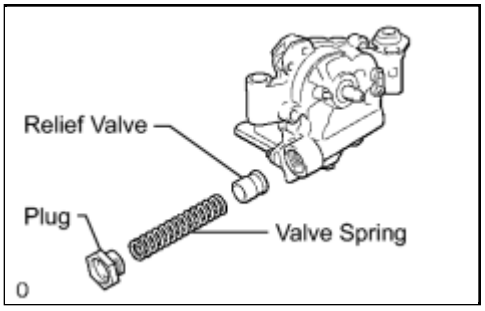

(a) Using a 27 mm socket wrench, remove the plug.

(b) Remove the valve spring and relief valve.

3. REMOVE OIL PUMP COVER

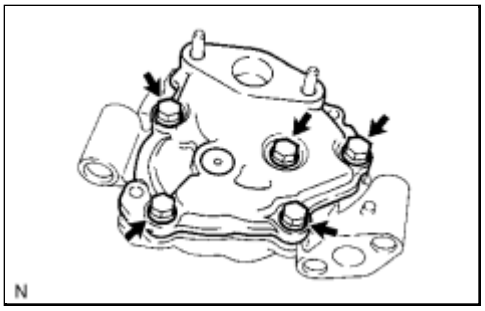

(a) Remove the 5 bolts and oil pump cover.

(b) Remove the oil pump drive and driven rotors from the oil pump.

Last Modified: 3-10-2010	6.4 G	**From:** 200901
Model Year: 2010	**Model:** Corolla	**Doc ID:** RM000001R0K01EX
Title: 2AZ-FE LUBRICATION: OIL PUMP: INSPECTION (2010 Corolla)		

INSPECTION

1. INSPECT OIL JET

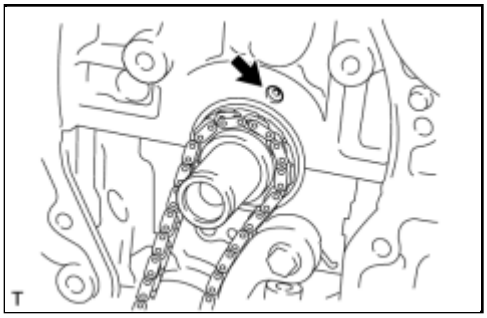

(a) Check the oil jet for damage or clogging.

If necessary, repair the cylinder block.

2. INSPECT OIL PUMP RELIEF VALVE

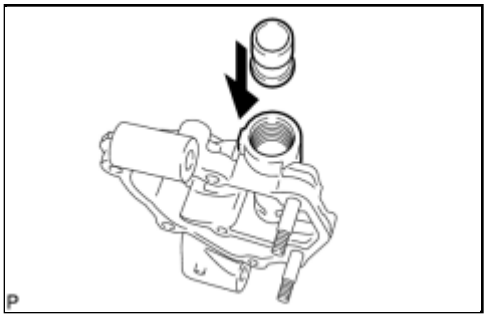

(a) Check the relief valve.

(1) Coat the valve with engine oil, and then check that the valve falls smoothly into the valve hole by its own weight.

If it does not, replace the relief valve.

If necessary, replace the oil pump assembly.

3. INSPECT OIL PUMP ROTOR

(a) Check the side clearance.

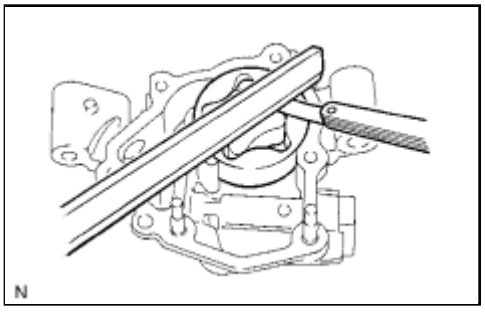

(1) Using a feeler gauge and precision straightedge, measure the clearance between the rotors and precision straightedge.

Standard clearance:
0.030 to 0.085 mm (0.00118 to 0.00335 in.)
Maximum clearance:
0.160 mm (0.00630 in.)

If the side clearance is greater than the maximum, replace the oil pump assembly.

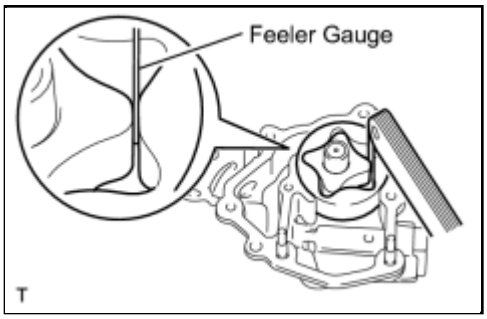

(b) Check the tip clearance.

(1) Using a feeler gauge, measure the clearance between the drive and driven rotor tips.

Standard clearance:
0.080 to 0.160 mm (0.00315 to 0.00630 in.)
Maximum clearance:
0.35 mm (0.0138 in.)

If the tip clearance is greater than the maximum, replace the oil pump assembly.

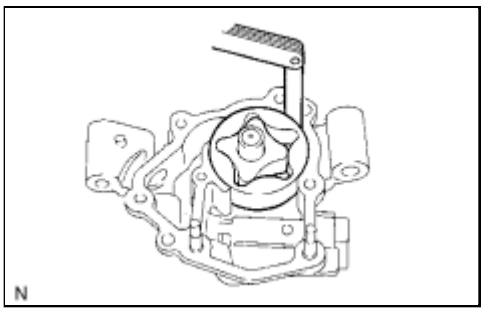

(c) Check the body clearance.

(1) Using a feeler gauge, measure the clearance between the driven rotor and pump body.

Standard clearance:
0.100 to 0.170 mm (0.00394 to 0.00669 in.)
Maximum clearance:
0.325 mm (0.0128 in.)

If the body clearance is greater than the maximum, replace the oil pump assembly.

4. INSPECT NO. 2 CHAIN SUB-ASSEMBLY INFO

5. INSPECT CHAIN TENSIONER PLATE

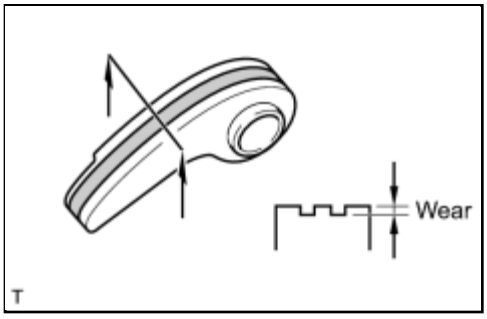

(a) Measure the chain tensioner plate wear.

Maximum wear:
0.5 mm (0.0197 in.)
If the wear is greater than the maximum, replace the chain tensioner plate.

Last Modified: 3-10-2010	6.4 A	**From:** 200901
Model Year: 2010	**Model:** Corolla	**Doc ID:** RM000001R0J01IX
Title: 2AZ-FE LUBRICATION: OIL PUMP: INSTALLATION (2010 Corolla)		

INSTALLATION

1. INSTALL OIL PUMP ASSEMBLY

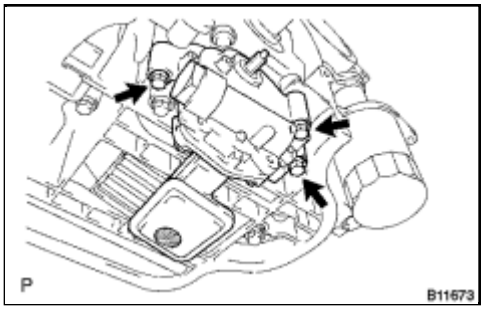

(a) Install a new gasket and the oil pump with the 3 bolts.

Torque: 19 N·m (194 kgf·cm, 14ft·lbf)

2. INSTALL NO. 2 CHAIN SUB-ASSEMBLY INFO

3. INSTALL CRANKSHAFT TIMING GEAR OR SPROCKET INFO

4. INSTALL NO. 1 CHAIN VIBRATION DAMPER INFO

5. INSTALL CHAIN SUB-ASSEMBLY INFO

6. INSTALL CHAIN TENSIONER SLIPPER INFO

7. INSTALL TIMING CHAIN GUIDE INFO

8. INSTALL NO. 1 CRANKSHAFT POSITION SENSOR PLATE INFO

9. INSTALL TIMING CHAIN COVER OIL SEAL

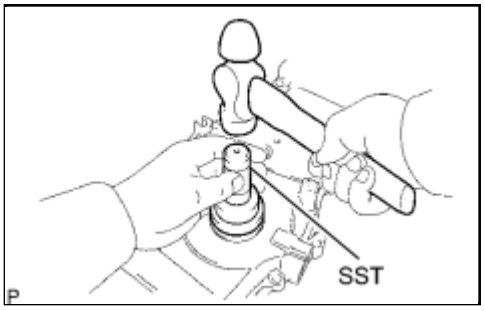

(a) Using SST, tap in a new oil seal until its surface is flush with the timing chain cover edge.

SST: 09223-22010

NOTICE:

- Keep the lip free from foreign matter.
- Do not tap the oil seal at an angle.

(b) Apply MP grease to the lip of the oil seal.

10. INSTALL TIMING CHAIN OR BELT COVER SUB-ASSEMBLY

(a) Remove any old packing material and be careful not to drop any oil on the contact surfaces of the

timing chain cover, cylinder head and cylinder block.

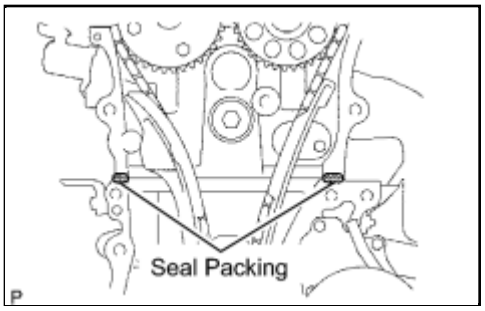

(b) Apply seal packing (Diameter 4.0 to 4.5 mm (0.157 to 0.177 in.)) as shown in the illustration.

Seal packing:
Toyota Genuine Seal Packing Black, Three Bond 1207B or equivalent

NOTICE:

- Remove any oil from the contact surfaces.
- Install the chain cover within 3 minutes of applying seal packing.
- Do not add engine oil for at least 2 hours after installing the chain cover.

(c) Apply a continuous bead of seal packing as shown in the illustration.

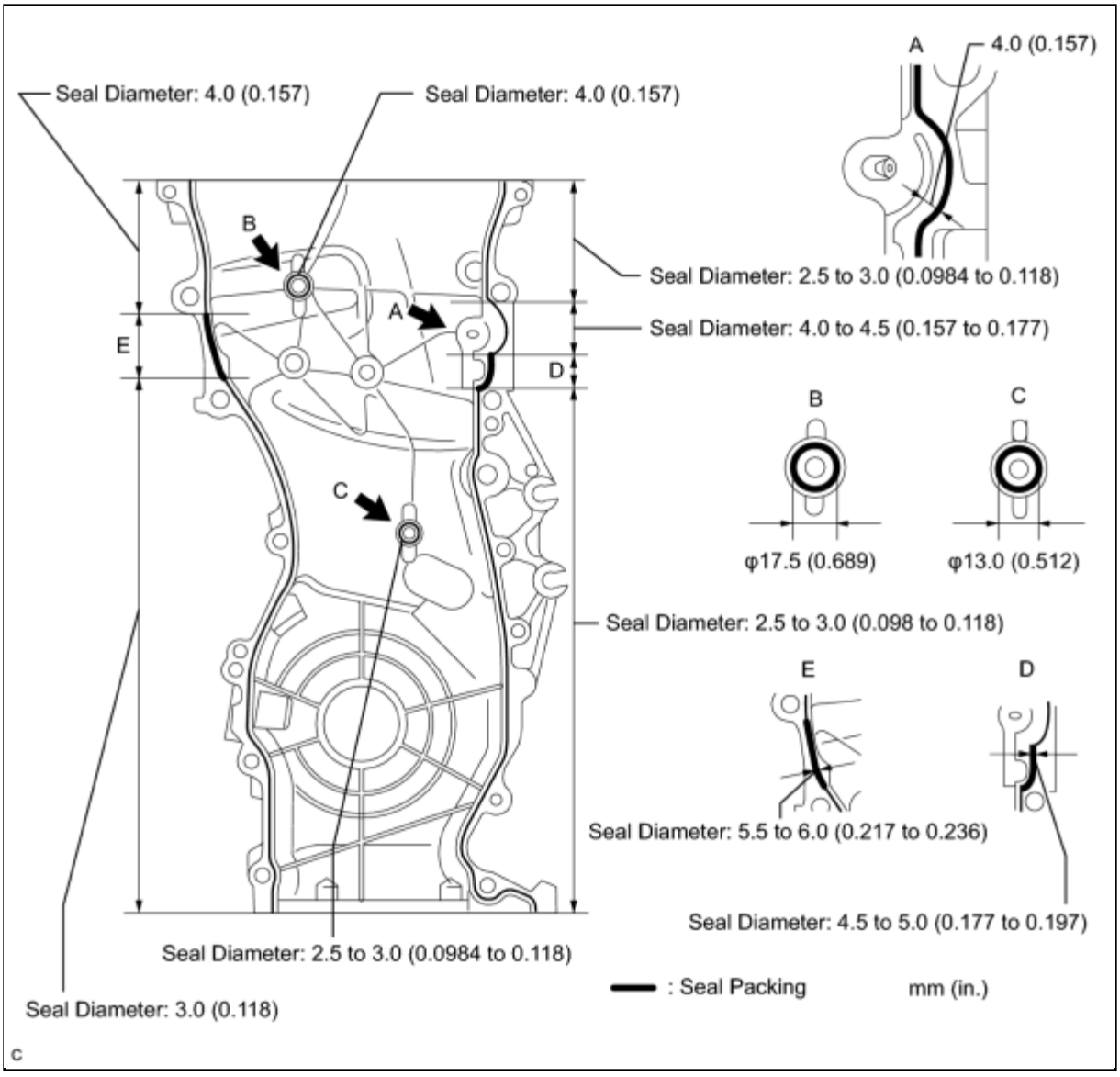

Seal packing:

Toyota Genuine Seal Packing Black, Three Bond 1207B or equivalent

NOTICE:

- Remove any oil from the contact surface.
- Install the chain cover within 3 minutes of applying seal packing.
- Do not add engine oil for at least 2 hours after installing the chain cover.

(d) Apply adhesive to the threads of the bolt A.

Seal packing:

Toyota Genuine Adhesive 1324, Three Bond 1324 or equivalent

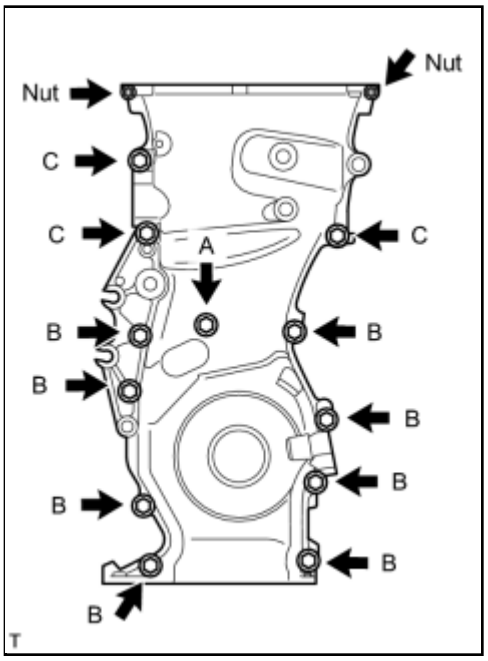

(e) Temporarily install the timing chain cover with the 12 bolts and 2 nuts.

Bolt length:

ITEM	LENGTH
Bolt A	30 mm (1.18 in.) length for 10 mm head
Bolt B	30 mm (1.18 in.) length for 12 mm head
Bolt C	40 mm (1.57 in.) length for 14 mm head

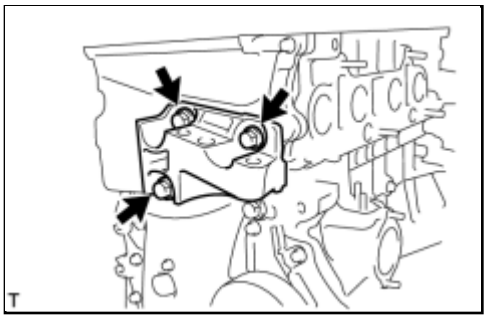

(f) Temporarily install the engine transverse engine engine mounting bracket with the 3 bolts.

(g) Fully tighten the timing chain cover with the 15 bolts and 2 nuts as shown in the illustration.

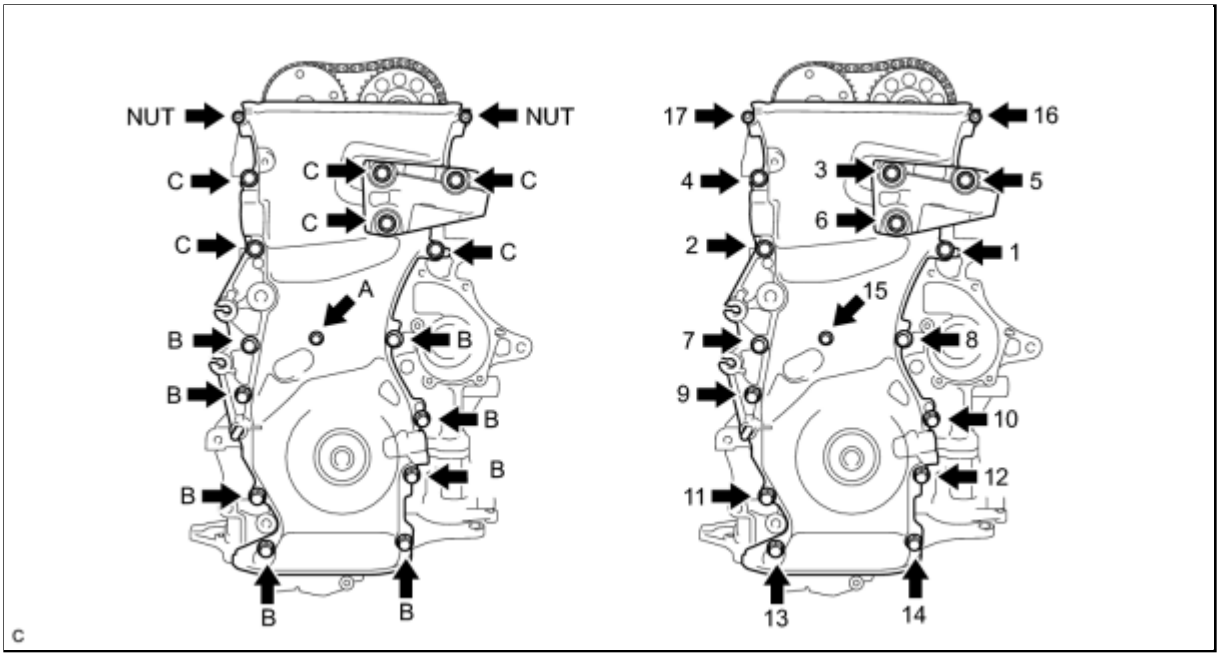

Bolt A - Torque: 9.0 N·m (92 kgf·cm, 80in·lbf)
Bolt B - Torque: 25 N·m (255 kgf·cm, 18ft·lbf)
Bolt C - Torque: 55 N·m (561 kgf·cm, 41ft·lbf)
Nut - Torque: 11 N·m (112 kgf·cm, 8ft·lbf)

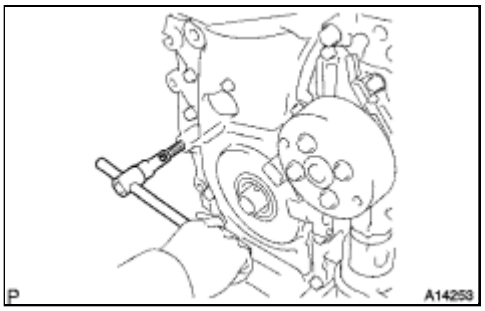

(h) Using an E10 "TORX" socket, install the stud bolt for the V-ribbed belt tensioner.

Torque: 22 N·m (220 kgf·cm, 16ft·lbf)

11. INSTALL NO. 1 CHAIN TENSIONER ASSEMBLY INFO

12. INSTALL V-RIBBED BELT TENSIONER ASSEMBLY INFO

13. INSTALL CRANKSHAFT PULLEY INFO

14. INSTALL OIL PAN SUB-ASSEMBLY INFO

15. INSTALL CRANKSHAFT POSITION SENSOR INFO

16. INSTALL IDLER PULLEY SUB-ASSEMBLY INFO

17. INSTALL ENGINE MOUNTING INSULATOR SUB-ASSEMBLY RH INFO

18. INSTALL EXHAUST MANIFOLD CONVERTER SUB-ASSEMBLY INFO

19. INSTALL NO. 1 EXHAUST MANIFOLD HEAT INSULATOR INFO

20. INSTALL NO. 2 MANIFOLD STAY INFO

21. INSTALL MANIFOLD STAY INFO

22. INSTALL NO. 1 INTAKE MANIFOLD INSULATOR INFO

23. INSTALL INTAKE MANIFOLD INFO

24. INSTALL CAMSHAFT TIMING OIL CONTROL VALVE ASSEMBLY INFO

25. INSTALL FUEL DELIVERY PIPE SUB-ASSEMBLY INFO

26. CONNECT FUEL MAIN TUBE INFO

27. INSTALL ENGINE OIL LEVEL DIPSTICK GUIDE INFO

28. INSTALL ENGINE OIL LEVEL DIPSTICK

29. INSTALL CYLINDER HEAD COVER SUB-ASSEMBLY INFO

30. INSTALL SPARK PLUG INFO

31. INSTALL IGNITION COIL ASSEMBLY INFO

32. INSTALL THROTTLE BODY ASSEMBLY INFO

33. INSTALL AIR CLEANER CAP SUB-ASSEMBLY WITH HOSE INFO

34. INSTALL RADIATOR RESERVE TANK ASSEMBLY INFO

35. CONNECT INLET HEATER WATER HOSE INFO

36. CONNECT OUTLET HEATER WATER HOSE INFO

37. INSTALL NO. 1 RADIATOR HOSE INFO

38. INSTALL GENERATOR ASSEMBLY INFO

39. INSTALL V-RIBBED BELT INFO

40. INSTALL FRONT EXHAUST PIPE ASSEMBLY INFO

41. INSTALL CENTER EXHAUST PIPE ASSEMBLY INFO

42. CONNECT CABLE TO NEGATIVE BATTERY TERMINAL

Torque: 5.4 N·m (55 kgf·cm, 48in·lbf)

43. ADD ENGINE OIL INFO

44. ADD ENGINE COOLANT INFO

45. INSPECT FUEL LEAK INFO

46. INSPECT COOLANT LEAK INFO

47. INSPECT OIL LEAK

48. INSPECT EXHAUST GAS LEAK

49. INSPECT IGNITION TIMING INFO

50. INSPECT ENGINE IDLE SPEED INFO

51. INSPECT COMPRESSION INFO

52. INSPECT CO/HC INFO

53. INSTALL SUSPENSION TOWER DAMPER ASSEMBLY (w/ Front Strut Bar) INFO

54. INSTALL OUTER COWL TOP PANEL INFO

55. INSTALL WINDSHIELD WIPER MOTOR AND LINK ASSEMBLY INFO

56. INSTALL COWL TOP VENTILATOR LOUVER LH INFO

57. INSTALL CENTER NO. 1 COWL TOP VENTILATOR LOUVER INFO

58. INSTALL HOOD TO COWL TOP SEAL INFO

59. INSTALL FRONT WIPER ARM AND BLADE ASSEMBLY LH INFO

60. INSTALL FRONT WIPER ARM AND BLADE ASSEMBLY RH INFO

61. INSTALL FRONT WIPER ARM HEAD CAP INFO

62. INSTALL NO. 1 ENGINE COVER SUB-ASSEMBLY INFO

63. INSTALL ENGINE UNDER COVER LH

64. INSTALL ENGINE UNDER COVER RH

65. INSTALL FRONT WHEEL RH

Torque: 103 N·m (1050 kgf·cm, 76ft·lbf)

Last Modified: 3-10-2010	6.4 A	**From:** 200901
Model Year: 2010	**Model:** Corolla	**Doc ID:** RM000001R0O014X
Title: 2AZ-FE LUBRICATION: OIL PUMP: REASSEMBLY (2010 Corolla)		

REASSEMBLY

1. INSTALL OIL PUMP COVER

(a) Coat the drive rotor and driven rotor with engine oil.

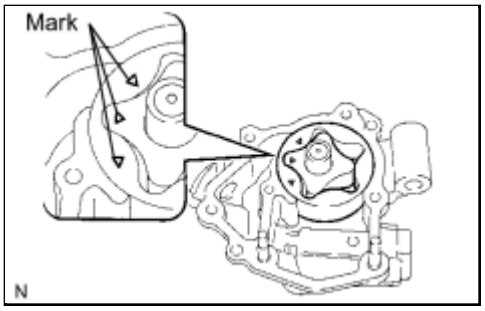

(b) Place the drive and driven rotors into the oil pump with the marks facing the pump cover side.

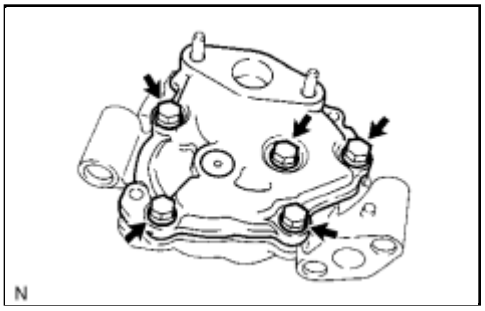

(c) Install the oil pump cover with the 5 bolts.

Torque: 8.8 N·m (90 kgf·cm, 78in·lbf)

2. INSTALL OIL PUMP RELIEF VALVE

(a) Coat the relief valve with engine oil.

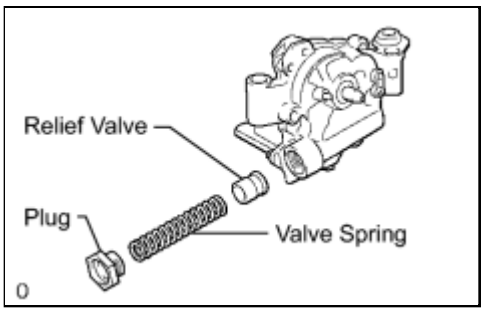

(b) Insert the relief valve and spring into the pump body hole.

(c) Using a 27 mm socket wrench, install the plug.

Torque: 49 N·m (500 kgf·cm, 36ft·lbf)

3. INSTALL OIL PUMP STRAINER

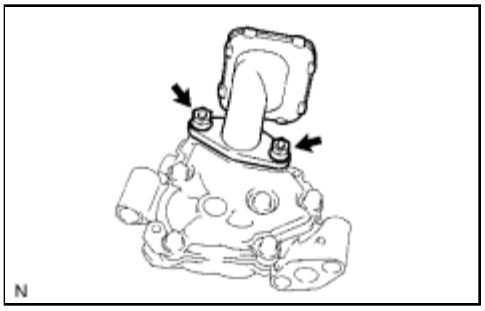

(a) Install a new gasket and the oil strainer with the 2 nuts.

Torque: 8.8 N·m (90 kgf·cm, 78in·lbf)

Last Modified: 3-10-2010	6.4 K	**From:** 200901
Model Year: 2010	**Model:** Corolla	**Doc ID:** RM000002TNV00UX
Title: 2ZR-FE LUBRICATION: OIL PUMP: COMPONENTS (2010 Corolla)		

COMPONENTS

ILLUSTRATION

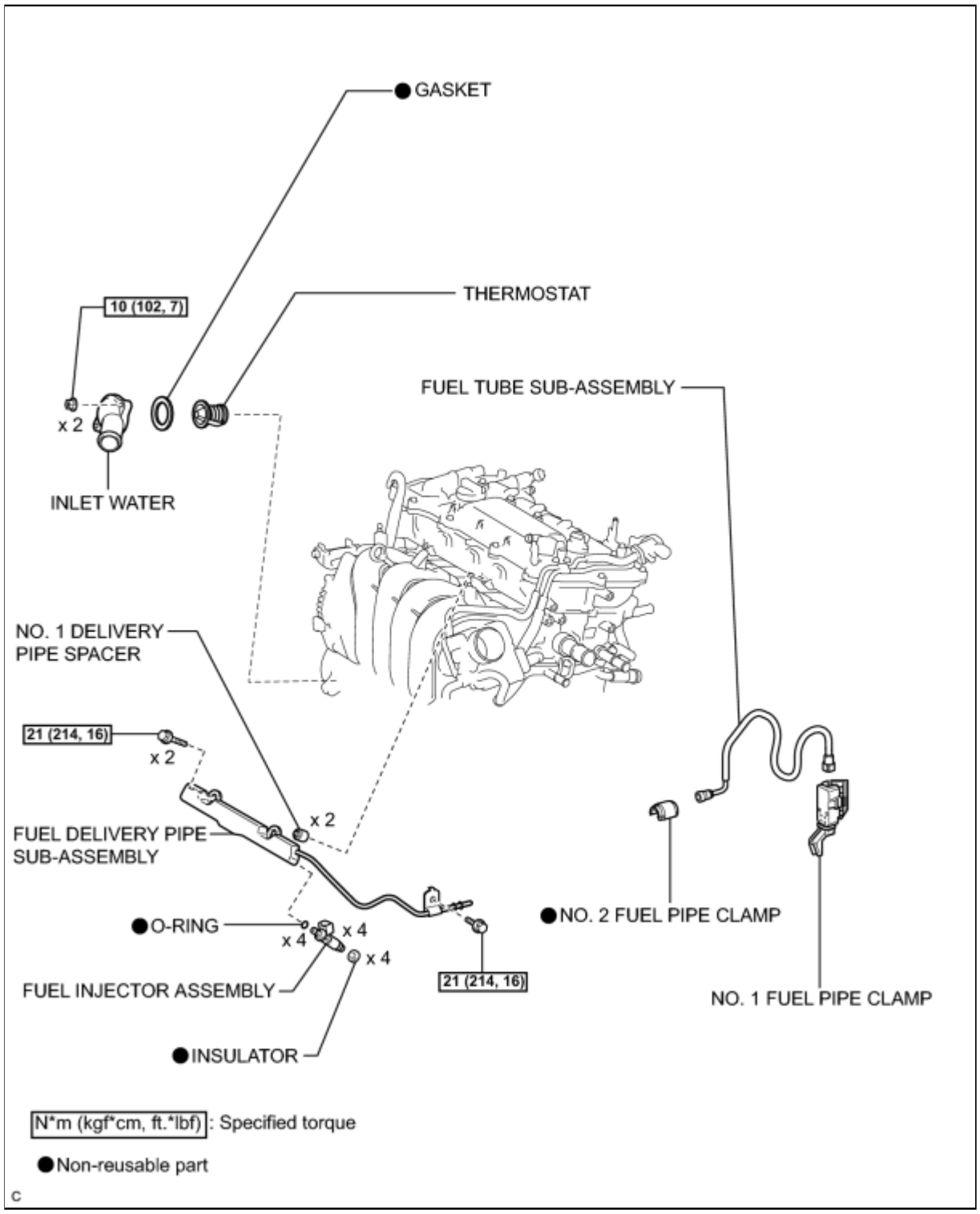

ILLUSTRATION

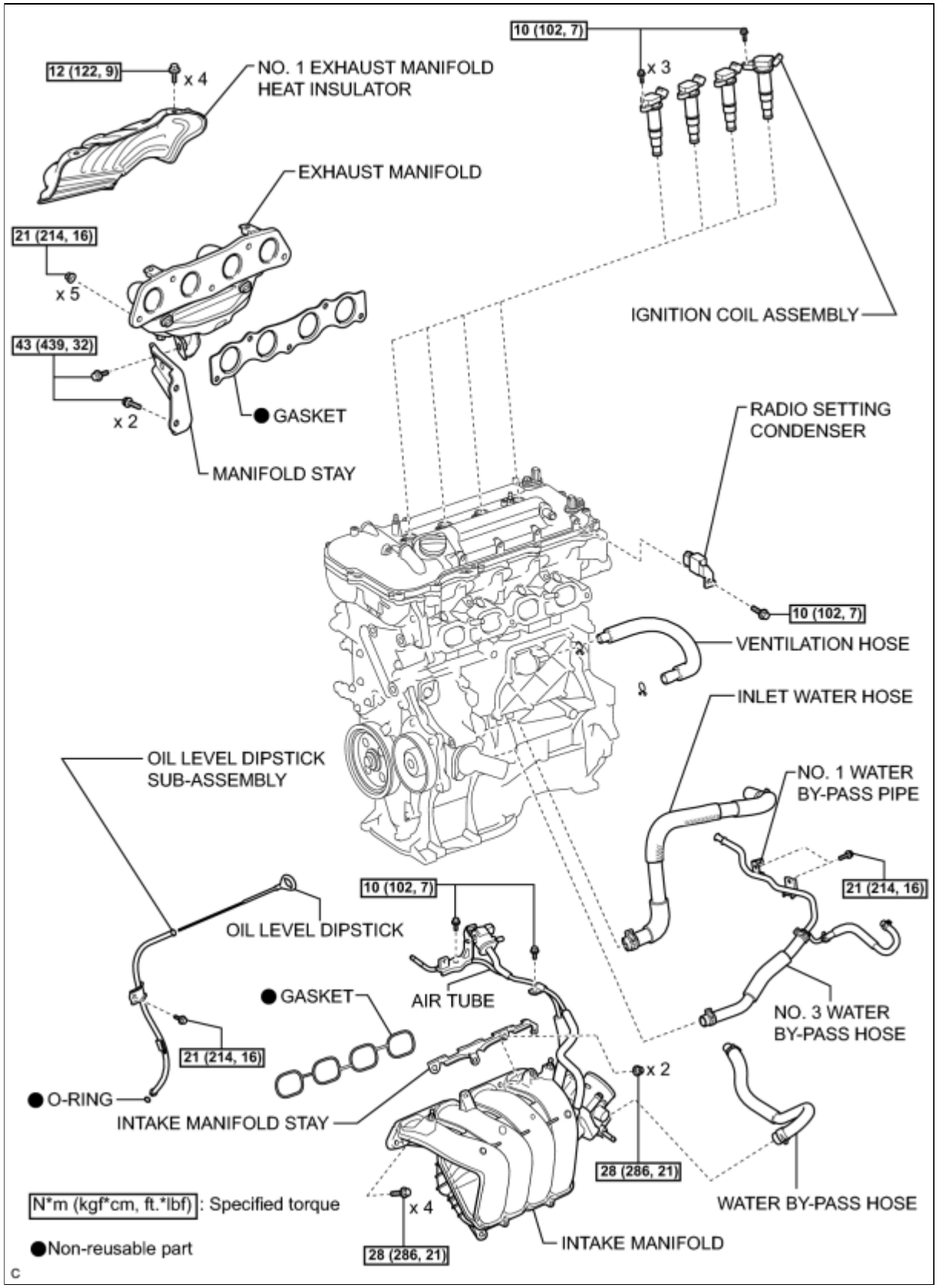

ILLUSTRATION

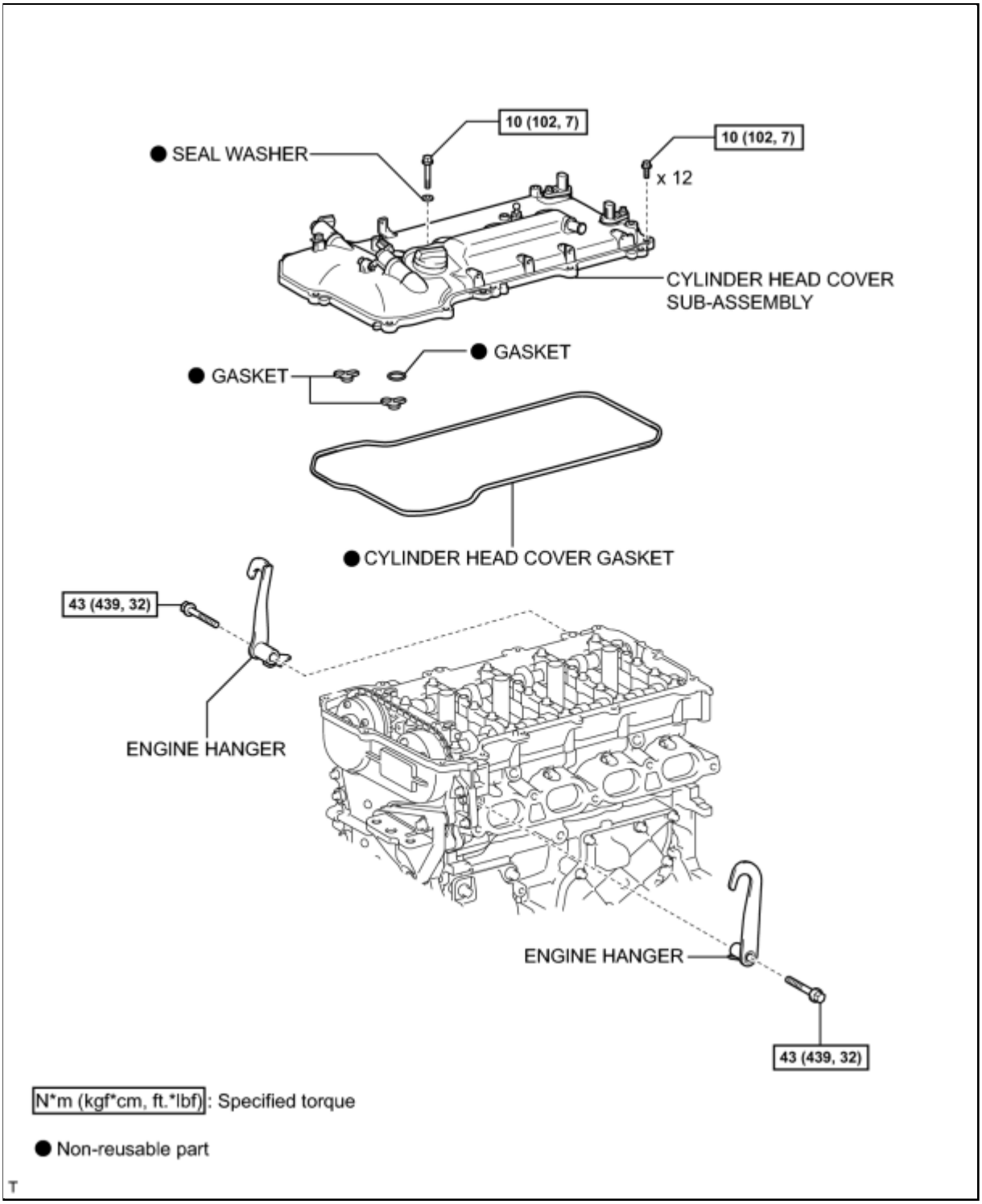

ILLUSTRATION

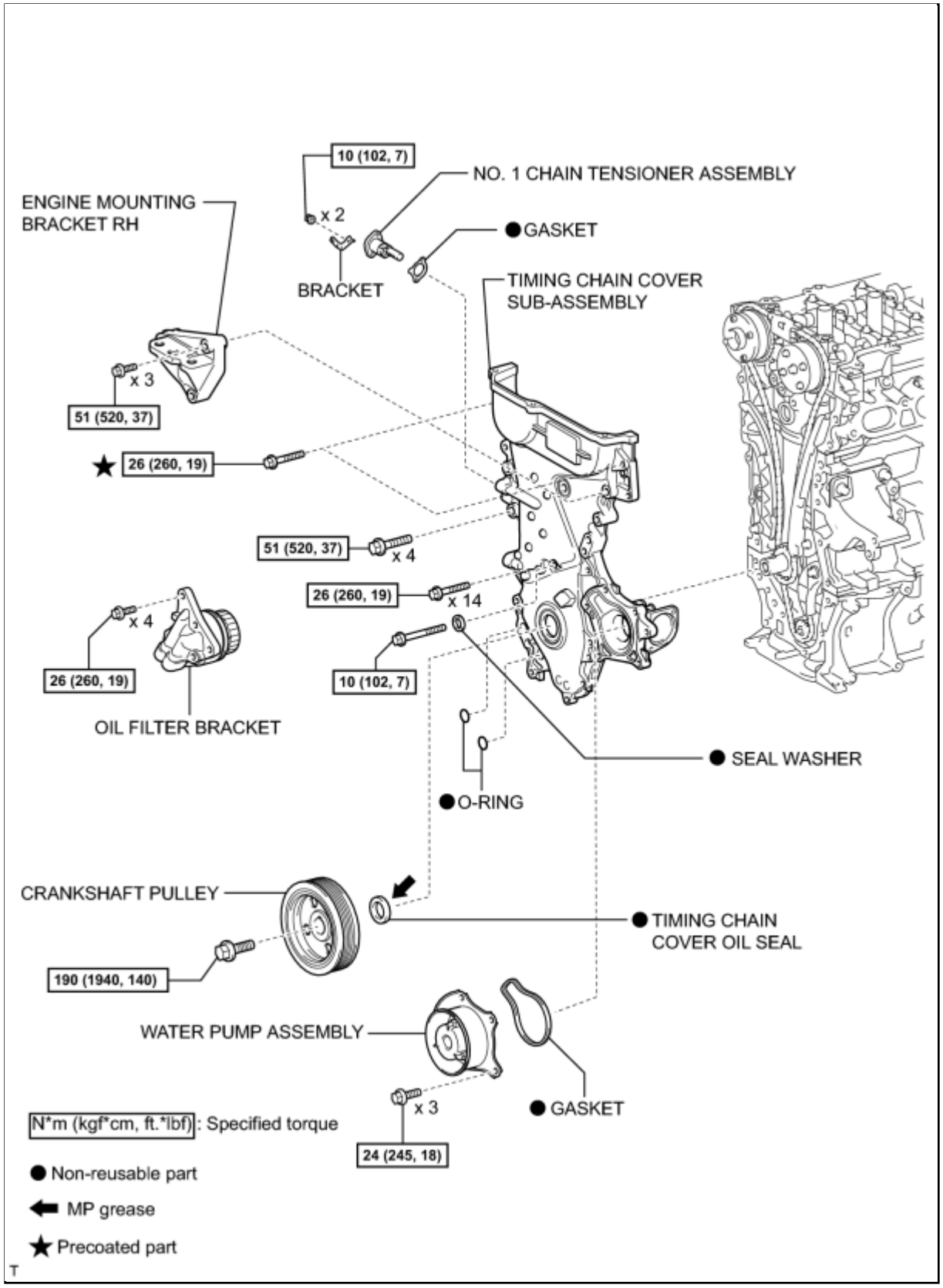

ILLUSTRATION

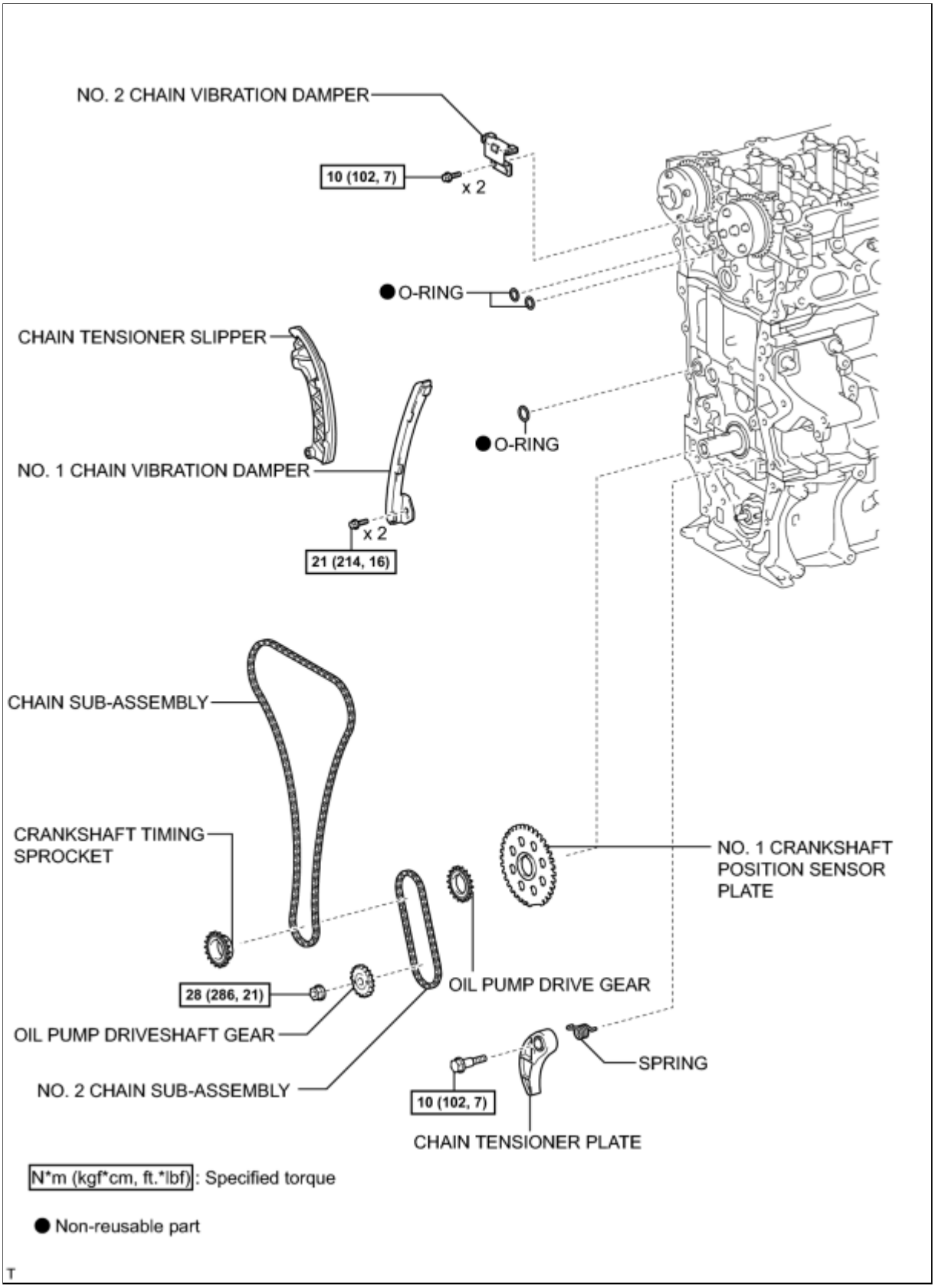

ILLUSTRATION

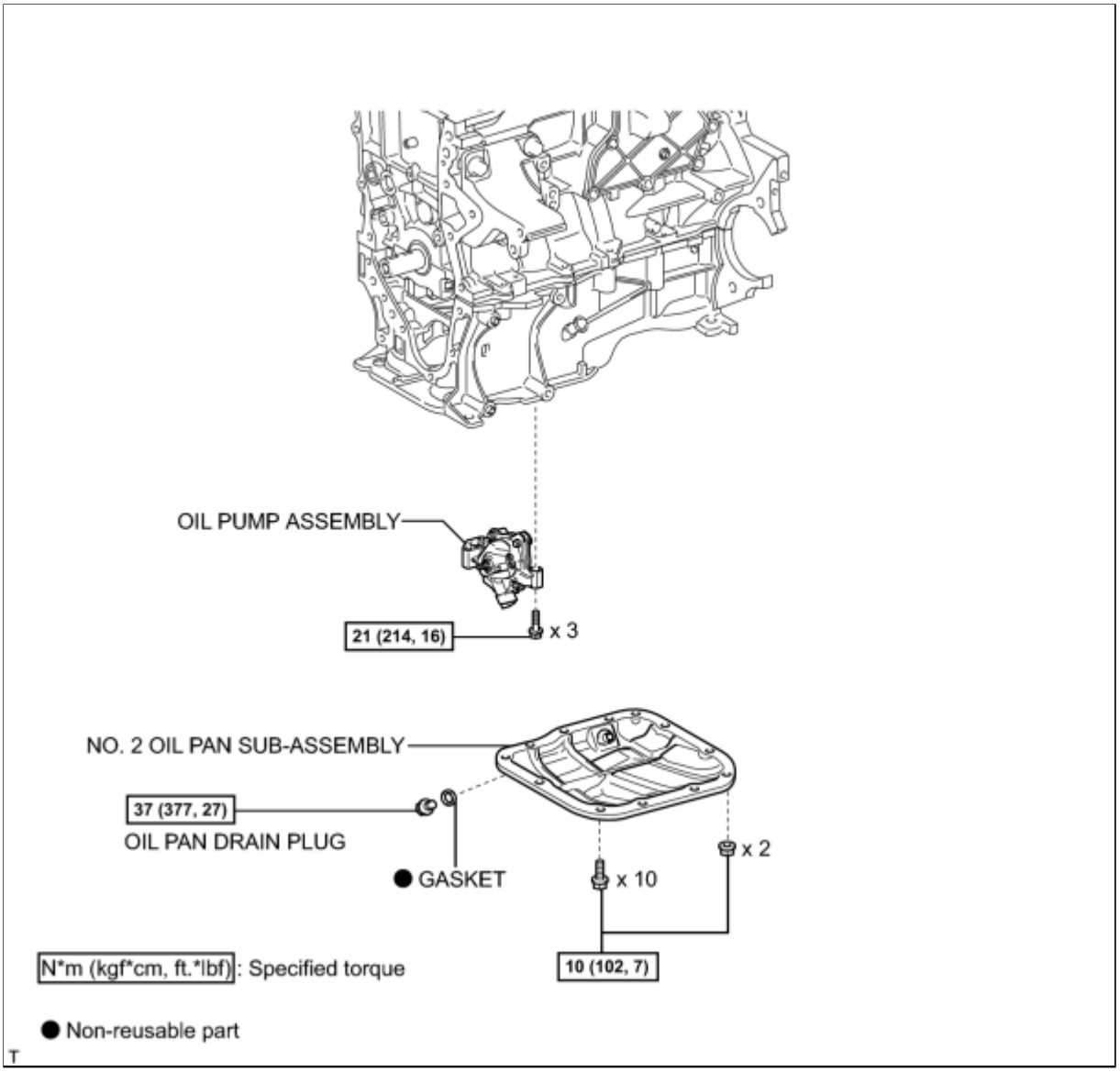

ILLUSTRATION

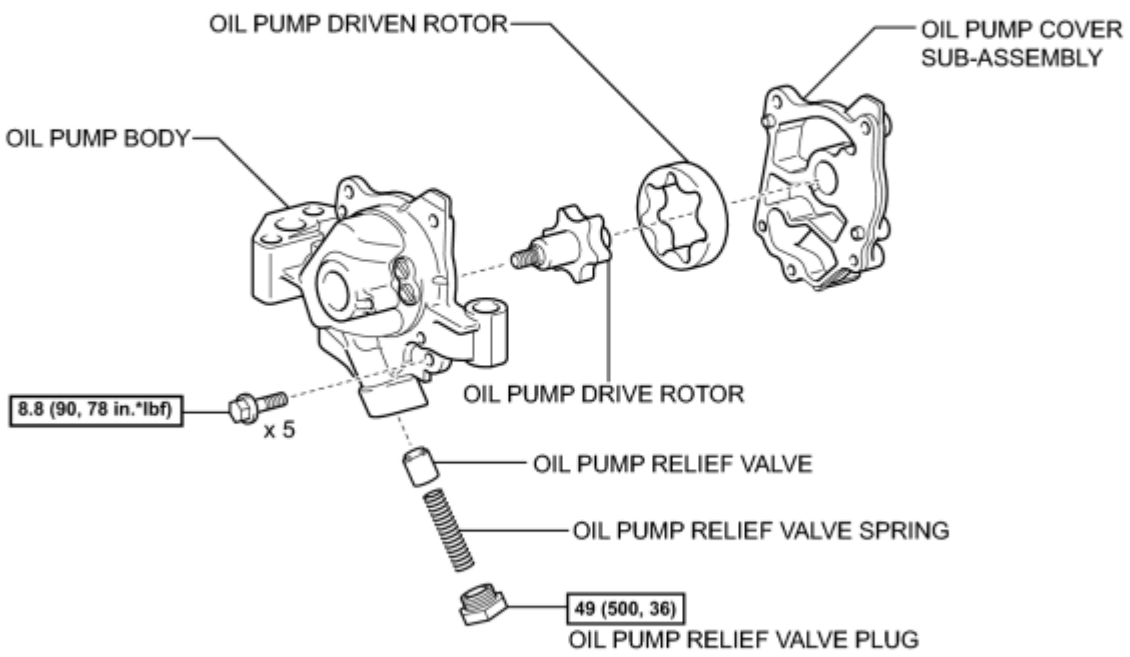

N*m (kgf*cm, ft.*lbf): Specified torque

T

Last Modified: 3-10-2010	6.4 A	**From:** 200901
Model Year: 2010	**Model:** Corolla	**Doc ID:** RM000002TNW010X
Title: 2ZR-FE LUBRICATION: OIL PUMP: REMOVAL (2010 Corolla)		

REMOVAL

1. REMOVE ENGINE ASSEMBLY WITH TRANSAXLE

HINT: INFO .

2. REMOVE ENGINE STAND INFO

3. REMOVE INTAKE MANIFOLD INFO

4. REMOVE FUEL TUBE SUB-ASSEMBLY INFO

5. REMOVE FUEL DELIVERY PIPE SUB-ASSEMBLY INFO

6. REMOVE FUEL INJECTOR ASSEMBLY INFO

7. REMOVE IGNITION COIL ASSEMBLY INFO

8. REMOVE OIL LEVEL DIPSTICK SUB-ASSEMBLY INFO

9. REMOVE NO. 1 EXHAUST MANIFOLD HEAT INSULATOR INFO

10. REMOVE MANIFOLD STAY INFO

11. REMOVE EXHAUST MANIFOLD INFO

12. REMOVE VENTILATION HOSE INFO

13. DISCONNECT NO. 3 WATER BY-PASS HOSE INFO

14. REMOVE NO. 1 WATER BY-PASS PIPE INFO

15. REMOVE WATER BY-PASS HOSE INFO

16. REMOVE INLET WATER HOSE INFO

17. REMOVE INLET WATER INFO

18. REMOVE THERMOSTAT INFO

19. REMOVE RADIO SETTING CONDENSER INFO

20. REMOVE CYLINDER HEAD COVER SUB-ASSEMBLY INFO

21. REMOVE NO. 1 CYLINDER TO TDC/COMPRESSION INFO

22. REMOVE CRANKSHAFT PULLEY INFO

23. REMOVE NO. 1 CHAIN TENSIONER ASSEMBLY INFO

24. REMOVE TIMING CHAIN COVER SUB-ASSEMBLY

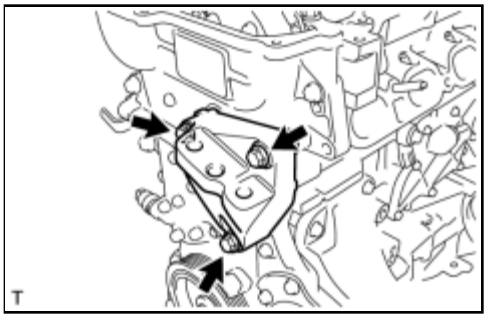

(a) Remove the 3 bolts and engine mounting bracket.

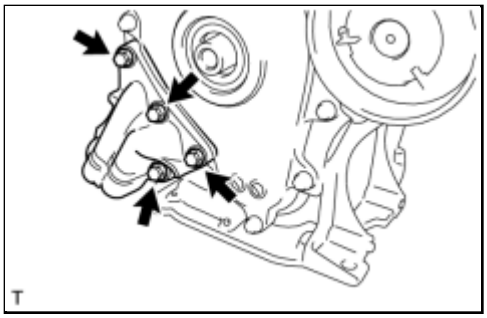

(b) Remove the 4 bolts and oil filter bracket.

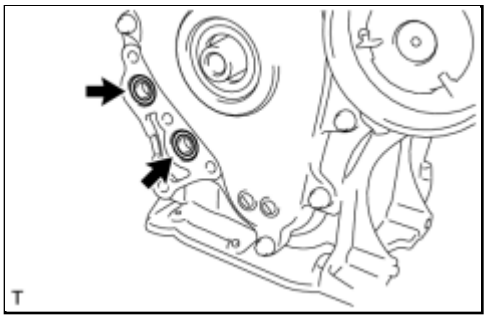

(c) Remove the 2 O-rings.

(d) Remove the 19 bolts.

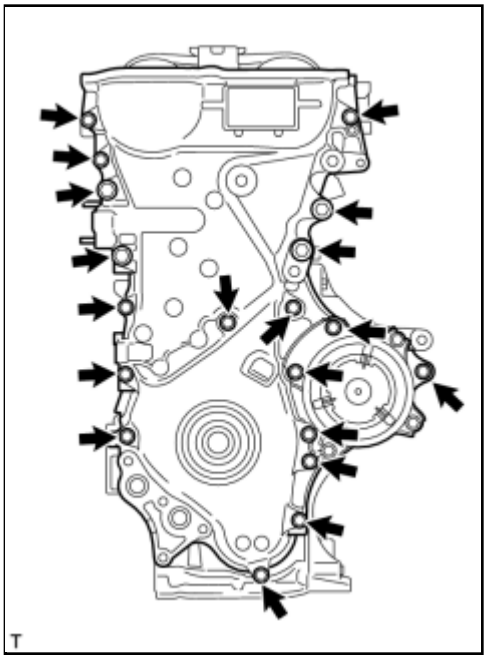

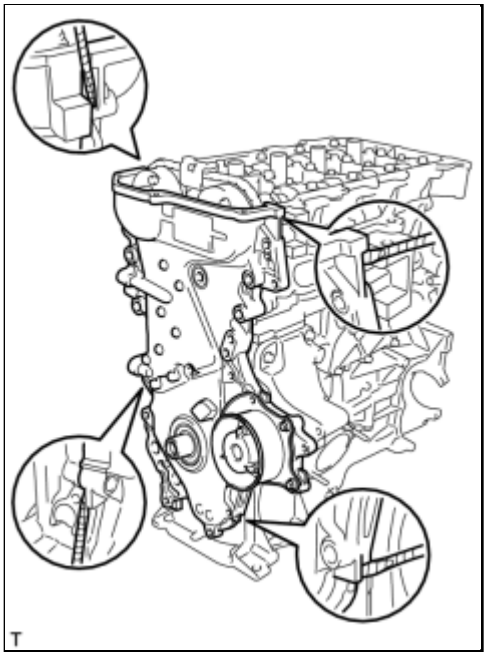

(e) Remove the timing chain cover by prying between the timing chain cover and cylinder head or cylinder block with a screwdriver.

NOTICE:

Be careful not to damage the contact surfaces of the timing chain cover, cylinder block, and cylinder head.

HINT:

Tape the screwdriver tip before use.

(f) Remove the 3 O-rings.

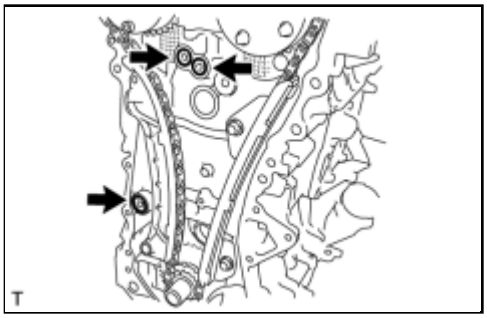

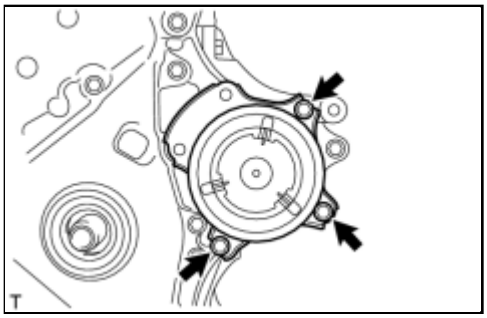

(g) Remove the 3 bolts and water pump.

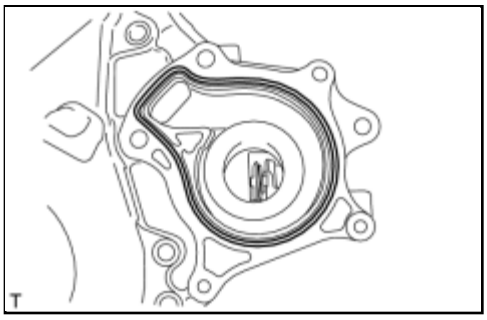

(h) Remove the gasket.

25. REMOVE TIMING CHAIN COVER OIL SEAL

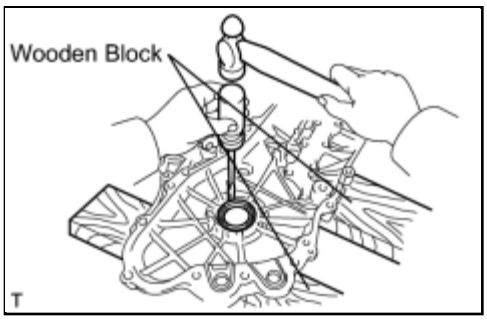

(a) Place the timing chain cover on wooden blocks.

(b) Using a screwdriver and a hammer, pry out the oil seal.

NOTICE:

Do not damage the surface of the oil seal press fit hole.

HINT:

Tape the screwdriver tip before use.

26. REMOVE CHAIN TENSIONER SLIPPER INFO

27. REMOVE NO. 1 CHAIN VIBRATION DAMPER INFO

28. REMOVE CHAIN SUB-ASSEMBLY INFO

29. REMOVE NO. 2 CHAIN VIBRATION DAMPER

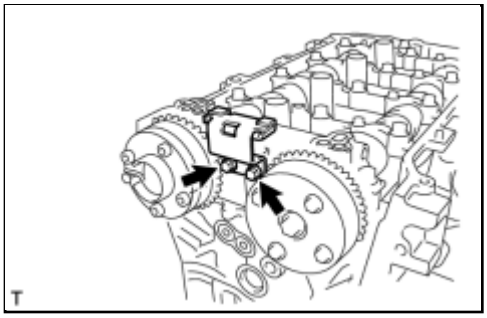

(a) Remove the 2 bolts and No. 2 chain vibration damper.

30. REMOVE CRANKSHAFT TIMING SPROCKET

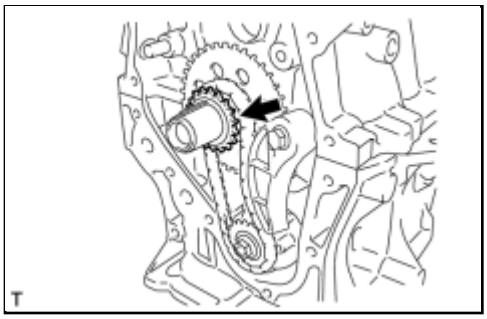

(a) Remove the crankshaft timing sprocket.

31. REMOVE NO. 2 CHAIN SUB-ASSEMBLY

(a) Temporarily tighten the crank pulley bolt.

(b) Turn the crankshaft 90° clockwise to align the adjusting hole of the oil pump drive shaft sprocket with the groove of the oil pump.

NOTICE:

Do not rotate the crankshaft more than 90°. If the crankshaft is rotated too much without the timing chain installed, the valves may hit the pistons and cause damage.

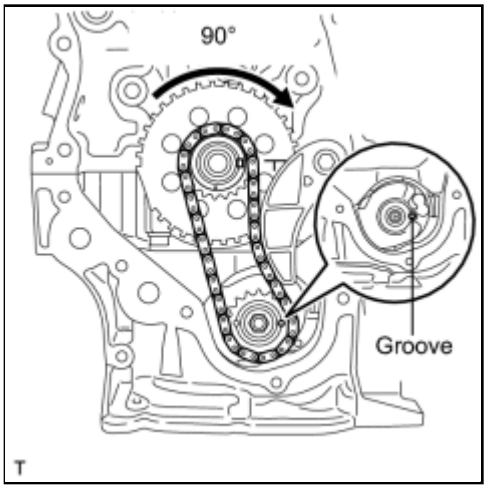

(c) Remove the crank pulley bolt.

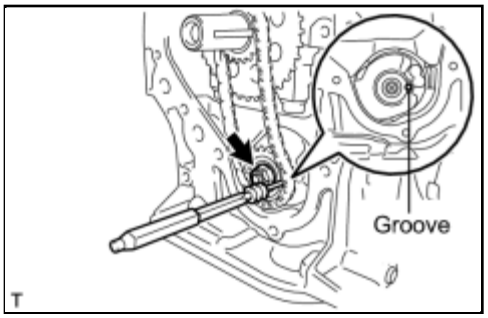

(d) Insert a 3 mm diameter bar into the adjusting hole of the oil pump drive shaft sprocket to lock the gear in position, and then remove the nut.

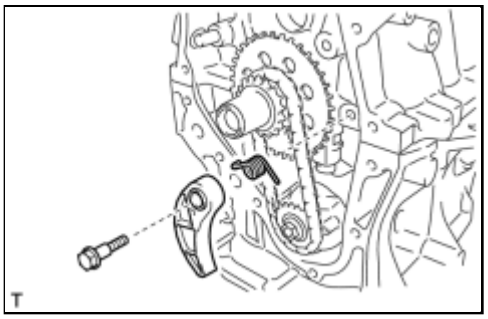

(e) Remove the bolt, chain tensioner plate, and spring.

(f) Remove the crankshaft timing sprocket, oil pump drive shaft gear, and No. 2 chain sub-assembly.

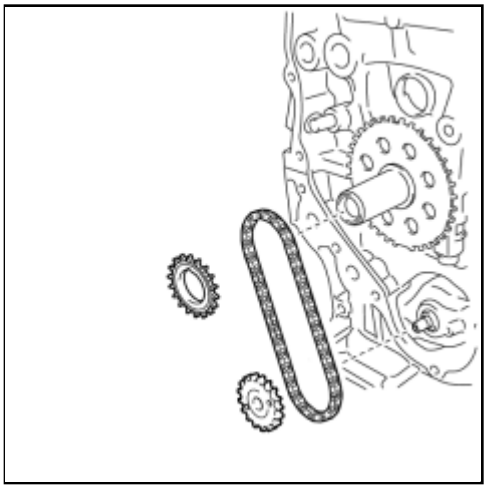

32. REMOVE NO. 1 CRANKSHAFT POSITION SENSOR PLATE INFO

33. REMOVE NO. 2 OIL PAN SUB-ASSEMBLY

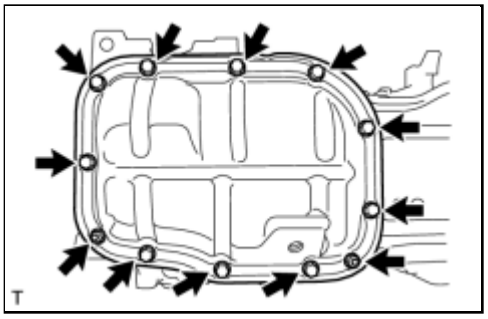

(a) Remove the 10 bolts and 2 nuts.

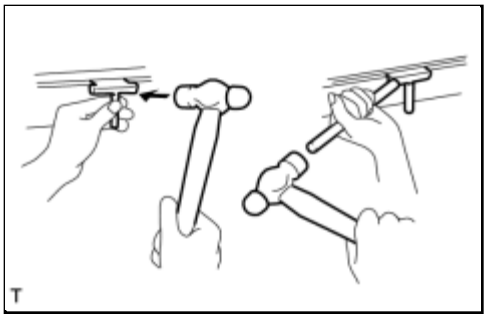

(b) Insert the blade of oil pan seal cutter between the crankcase and oil pan. Cut through the sealer and remove the oil pan.

NOTICE:

Be careful not to damage the contact surfaces of the crankcase and oil pan.

34. REMOVE OIL PUMP ASSEMBLY

(a) Remove the 3 bolts and oil pump.

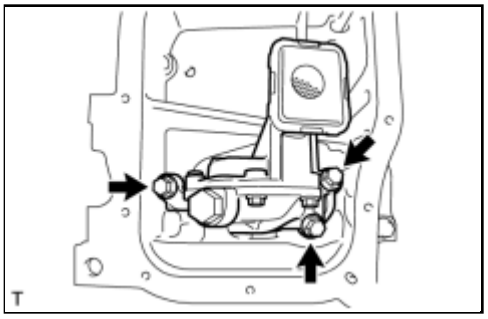
T

Last Modified: 3-10-2010	6.4 A	**From:** 200901
Model Year: 2010	**Model:** Corolla	**Doc ID:** RM00000259L01KX
Title: 2ZR-FE LUBRICATION: OIL PUMP: DISASSEMBLY (2010 Corolla)		

DISASSEMBLY

1. REMOVE OIL PUMP RELIEF VALVE

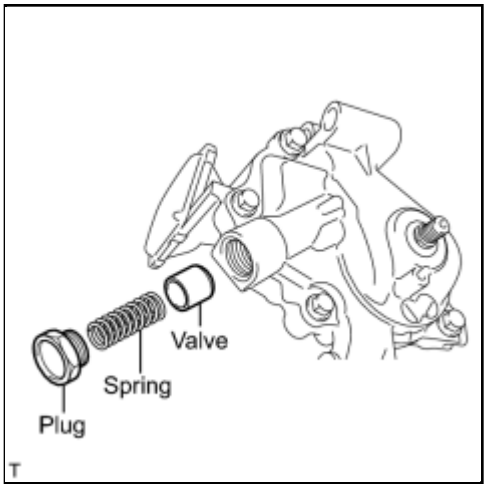

(a) Using a 27 mm socket wrench, remove the plug.

(b) Remove the valve spring and relief valve.

2. REMOVE OIL PUMP COVER SUB-ASSEMBLY

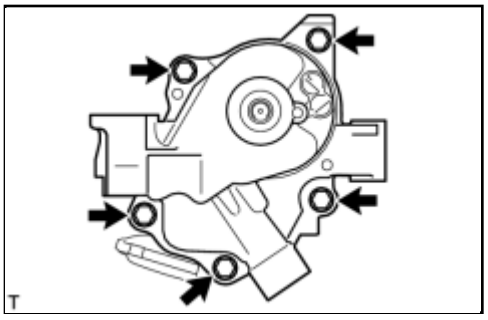

(a) Remove the 5 bolts and oil pump cover.

(b) Remove the oil pump drive and driven rotors from the oil pump.

Last Modified: 3-10-2010	6.4 G	**From:** 200901
Model Year: 2010	**Model:** Corolla	**Doc ID:** RM0000025 9I01KX
Title: 2ZR-FE LUBRICATION: OIL PUMP: INSPECTION (2010 Corolla)		

INSPECTION

1. INSPECT OIL PUMP RELIEF VALVE

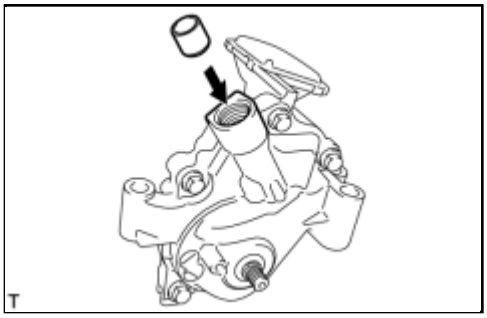

(a) Coat the oil pump relief valve with engine oil, then check that it falls smoothly into the valve hole by its own weight.

If this does not occur, replace the oil pump.

2. INSPECT OIL PUMP ROTOR

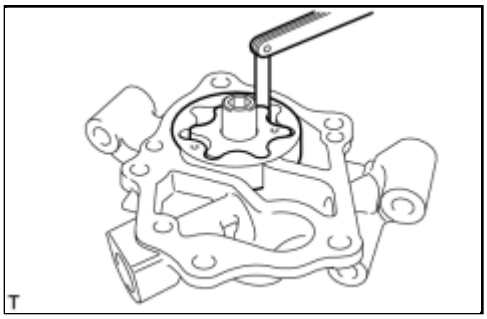

(a) Using a feeler gauge, measure the clearance between the drive and driven rotor tips.

Standard tip clearance:
0.08 to 0.160 mm (0.00315 to 0.00630 in.)
Maximum tip clearance:
0.35 mm (0.0138 in.)

If the tip clearance is greater than the maximum, replace the oil pump.

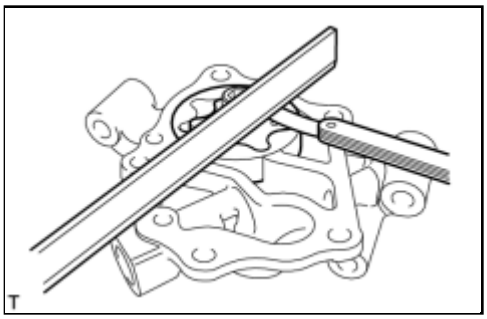

(b) Using a feeler gauge and precision straightedge, measure the clearance between the 2 rotors and precision straightedge.

Standard side clearance:
0.03 to 0.08 mm (0.00118 to 0.00315 in.)
Maximum side clearance:
0.16 mm (0.00630 in.)

If the side clearance is greater than the maximum, replace the oil pump.

(c) Using a feeler gauge, measure the clearance between the driven rotor and oil pump body.

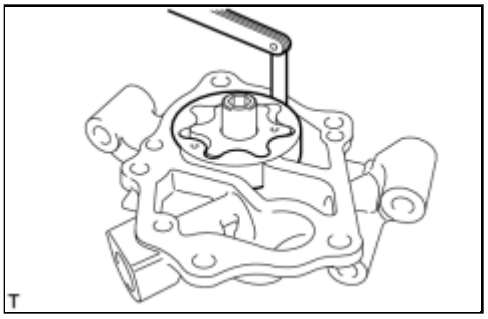

Standard body clearance:
0.12 to 0.19 mm (0.0047 to 0.0075 in.)
Maximum body clearance:
0.325 mm (0.0128 in.)

If the body clearance is greater than the maximum, replace the oil pump.

Last Modified: 3-10-2010	6.4 A	**From:** 200901
Model Year: 2010	**Model:** Corolla	**Doc ID:** RM00000259M01KX
Title: 2ZR-FE LUBRICATION: OIL PUMP: REASSEMBLY (2010 Corolla)		

REASSEMBLY

1. INSTALL OIL PUMP COVER SUB-ASSEMBLY

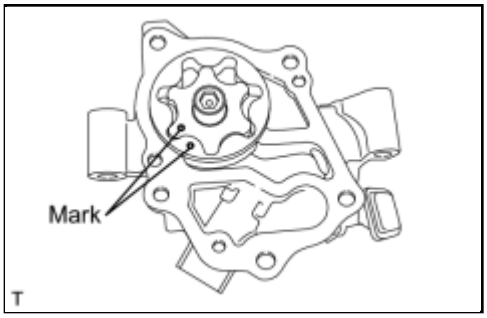

(a) Coat the oil pump drive and driven rotors with engine oil, and place them into the oil pump with the marks facing the oil pump cover side.

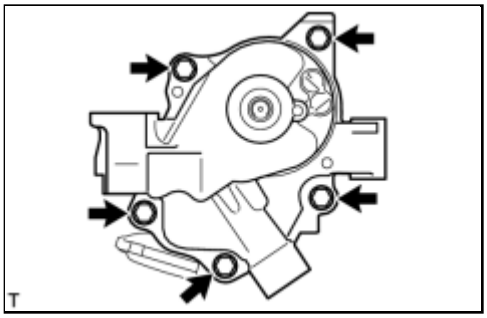

(b) Install the oil pump cover with the 5 bolts.

Torque: 8.8 N·m (90 kgf·cm, 78in·lbf)

2. INSTALL OIL PUMP RELIEF VALVE

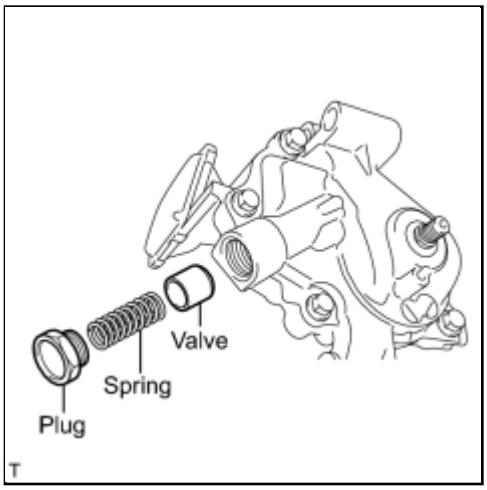

(a) Coat the relief valve with engine oil.

(b) Insert the relief valve and spring into the pump body hole.

(c) Using a 27 mm socket wrench, install the plug.

Torque: 49 N·m (500 kgf·cm, 36ft·lbf)

Last Modified: 3-10-2010	6.4 A	**From:** 200901
Model Year: 2010	**Model:** Corolla	**Doc ID:** RM000002TNU010X
Title: 2ZR-FE LUBRICATION: OIL PUMP: INSTALLATION (2010 Corolla)		

INSTALLATION

1. INSTALL OIL PUMP ASSEMBLY

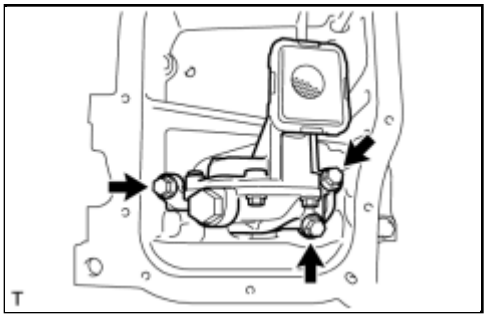

(a) Install the oil pump with the 3 bolts.

Torque: 21 N·m (214 kgf·cm, 16ft·lbf)

2. INSTALL NO. 2 OIL PAN SUB-ASSEMBLY

(a) Remove any old packing material and be careful not to drop any oil on the contact surfaces of the cylinder block and oil pan.

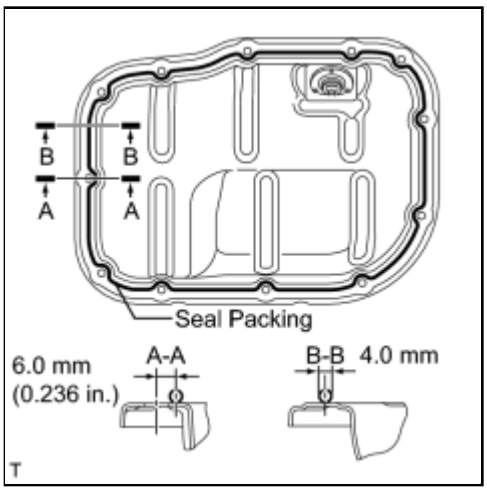

(b) Apply a continuous bead of seal packing (Diameter 4.0 mm (0.157 in.)) as shown in the illustration.

Seal packing:

Toyota Genuine Seal Packing Black, Three Bond 1207B or equivalent

NOTICE:

- Remove any oil from the contact surfaces.
- Install the oil pan within 3 minutes after applying seal packing.
- Do not start the engine for at least 2 hours after installing the oil pan.

(c) Install the No. 2 oil pan with the 10 bolts and 2 nuts.

Torque: 10 N·m (102 kgf·cm, 7ft·lbf)

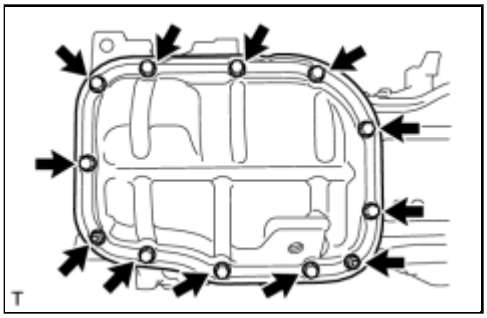

3. INSTALL NO. 1 CRANKSHAFT POSITION SENSOR PLATE INFO

4. INSTALL NO. 2 CHAIN SUB-ASSEMBLY

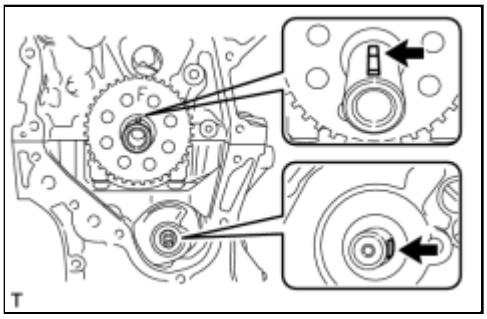

(a) Set the crankshaft key as shown in the illustration.

(b) Turn the drive shaft so that the cutout faces the right horizontal position.

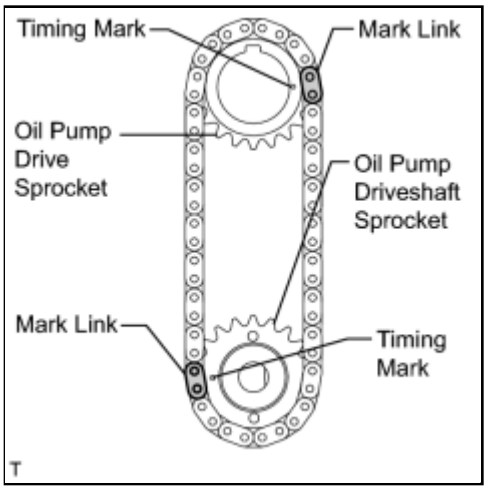

(c) Align the yellow mark links with the timing marks of each gear as shown in the illustration.

(d) Install the sprockets onto the crankshaft and oil pump shaft with the chain on the gears.

(e) Temporarily tighten the oil pump drive shaft sprocket with the nut.

(f) Insert the damper spring into the adjusting hole, and then

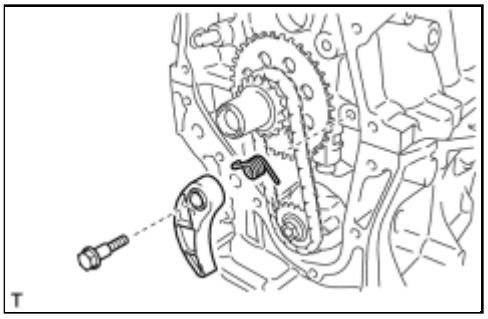

install the chain tensioner plate with the bolt.

Torque: 10 N·m (102 kgf·cm, 7ft·lbf)

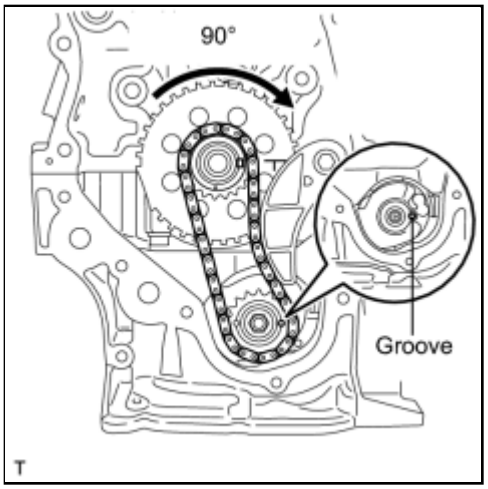

(g) Align the adjusting hole of the oil pump drive shaft sprocket with the groove of the oil pump.

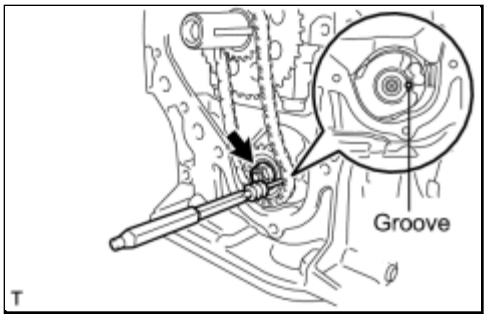

(h) Insert a 3 mm diameter bar into the adjusting hole of the oil pump drive shaft gear to lock the gear in position, and then tighten the nut.

Torque: 28 N·m (286 kgf·cm, 21ft·lbf)

5. INSTALL CRANKSHAFT TIMING SPROCKET

(a) Install the crankshaft timing sprocket.

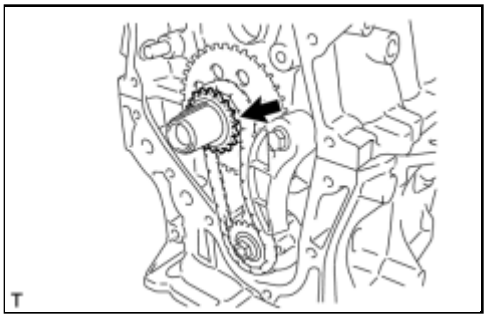

6. INSTALL NO. 1 CHAIN VIBRATION DAMPER INFO

7. INSTALL NO. 2 CHAIN VIBRATION DAMPER

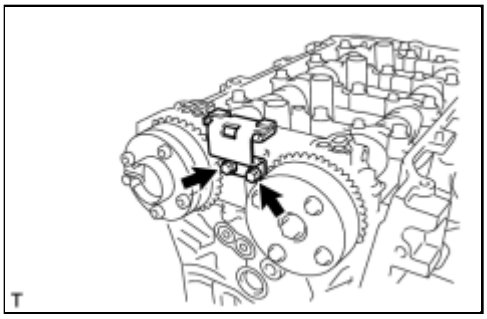

(a) Install the No. 2 chain vibration damper with the 2 bolts.

Torque: 10 N·m (102 kgf·cm, 7ft·lbf)

8. INSTALL CHAIN SUB-ASSEMBLY INFO

9. INSTALL CHAIN TENSIONER SLIPPER INFO

10. INSTALL TIMING CHAIN COVER OIL SEAL

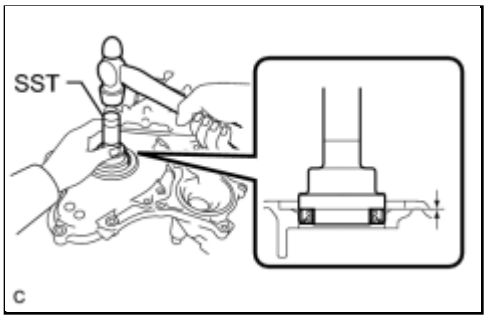

(a) Using SST and a hammer, tap in a new oil seal until its surface is flush with the timing chain cover sub-assembly edge.

SST: 09223-22010

NOTICE:

- Keep the lip free from foreign matter.
- Do not tap the oil seal at an angle.

(b) Apply MP grease to the lip of the oil seal.

11. INSTALL TIMING CHAIN COVER SUB-ASSEMBLY

(a) Remove any old packing (FIPG) material and be careful not to drop any oil on the contact surfaces of the timing chain cover sub-assembly, cylinder head, and cylinder block.

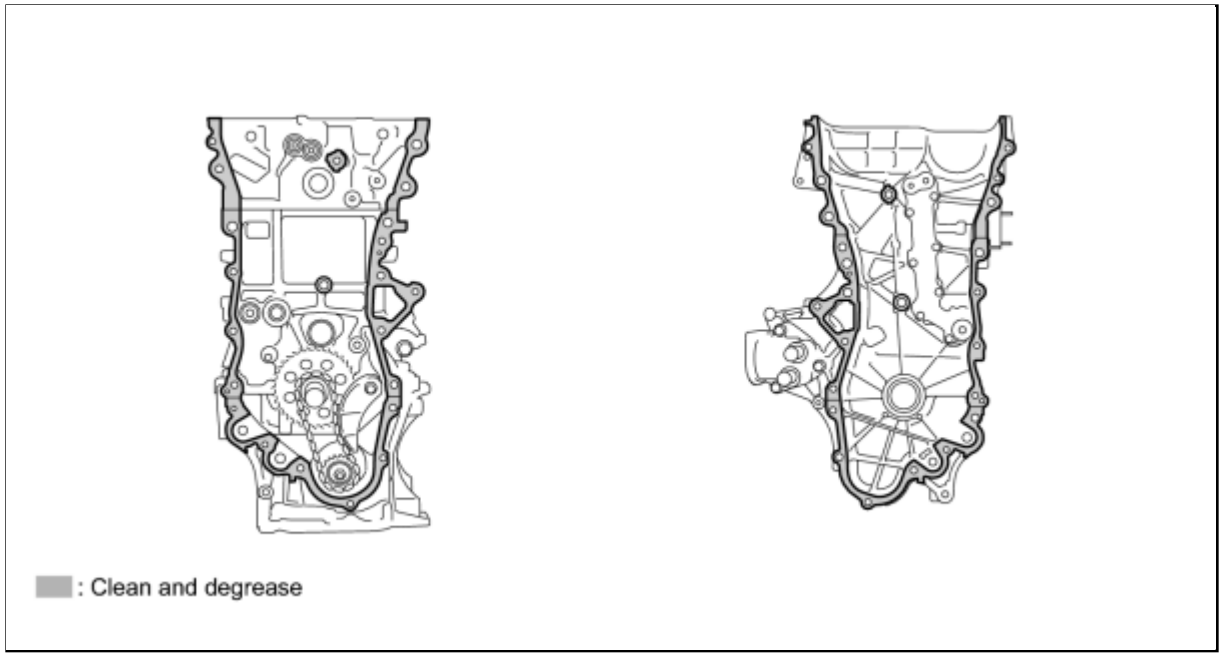

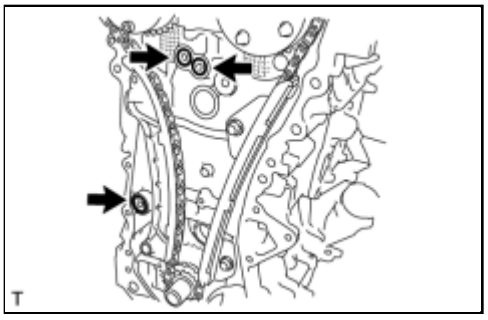

(b) Install 3 new O-rings.

(c) Apply seal packing as shown in the illustration.

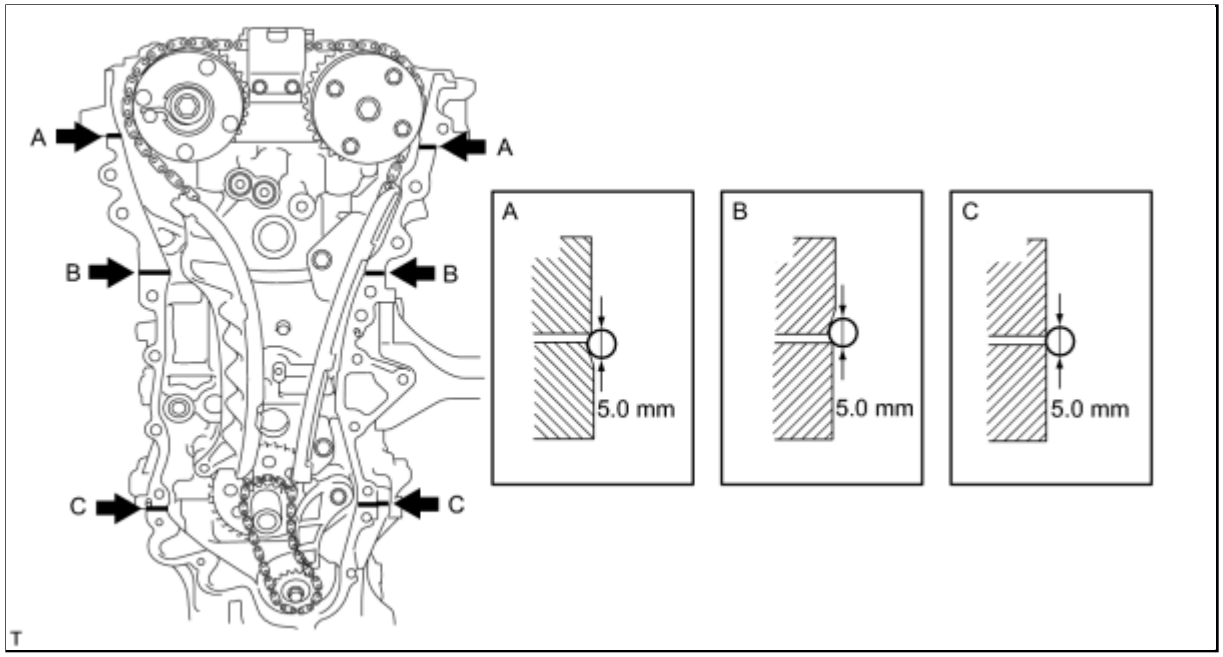

Seal packing:

Toyota Genuine Seal Packing Black, Three Bond 1207B or equivalent

Seal diameter:

5.0 mm (0.196 in.)

NOTICE:

- Remove any oil from the contact surfaces.
- Install the chain cover within 3 minutes after applying seal packing.
- Do not start the engine for at least 2 hours after installing the timing chain cover sub-assembly.

(d) Apply seal packing to the timing chain cover sub-assembly in a continuous line as shown in the following illustration.

NOTICE:

- When the contact surfaces are wet, wipe them with oil-free cloth before applying seal packing.
- Install the timing chain cover sub-assembly within 3 minutes and tighten the bolts within 15 minutes after applying seal packing.
- Do not start the engine for at least 2 hours after installing.

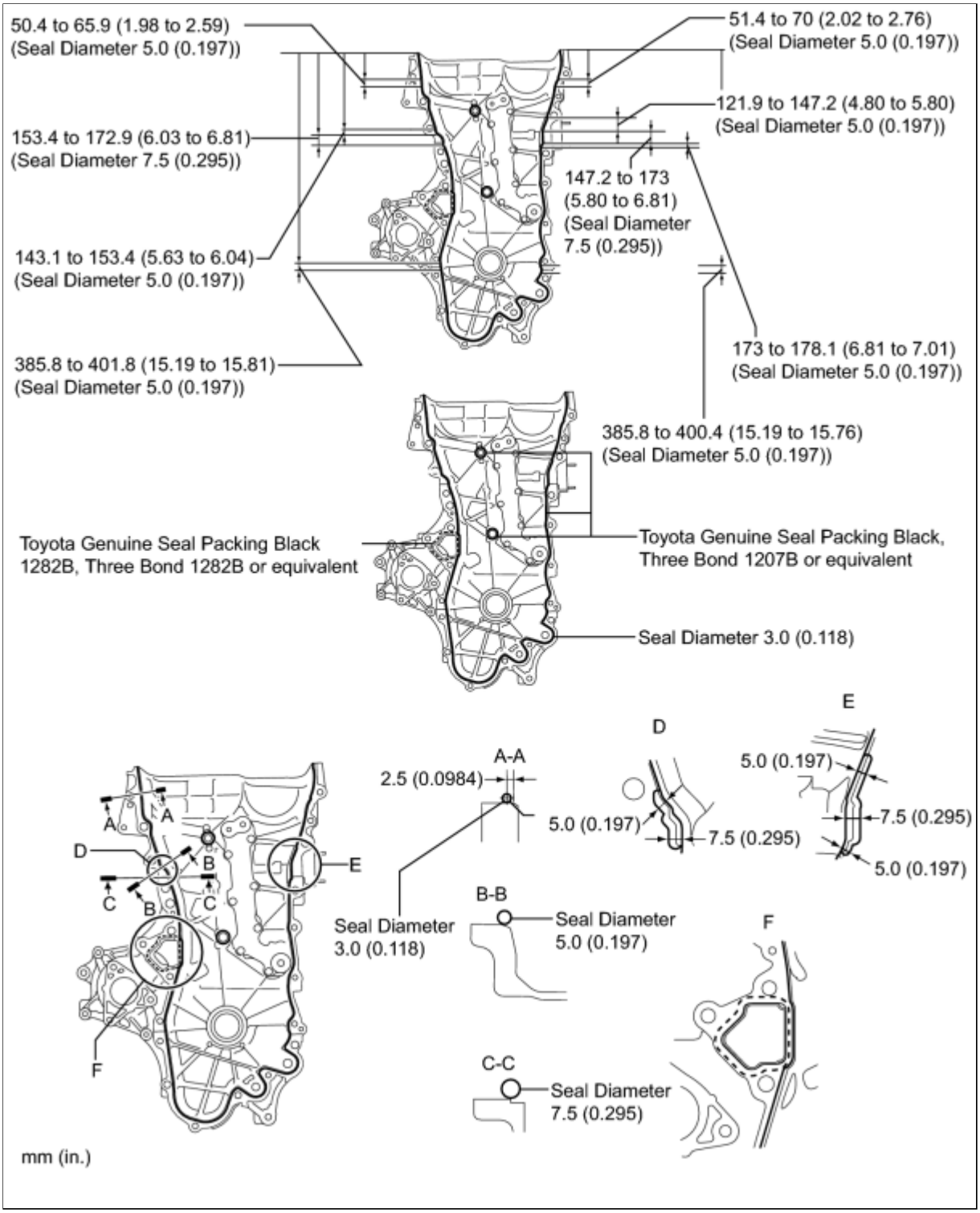

Apply Seal Packing as Follows:

AREA	SEAL PACKING DIAMETER	APPLICATION POSITION FROM INSIDE SEAL LINE	SEAL PACKING
Continuous Line Area	3.0 mm (0.118 in.)	2.5 mm (0.098 in.)	Toyota Genuine Seal Packing Black, Three Bond 1207B or equivalent

AREA	SEAL PACKING DIAMETER	APPLICATION POSITION FROM INSIDE SEAL LINE	SEAL PACKING
Dashed Line Area	4.0 mm (0.156 in.)	3.0 mm (0.118 in.)	Toyota Genuine Seal Packing 1282B, Three Bond 1282B or equivalent

(e) Apply adhesive to the threads of the bolt E.

Adhesive:
Toyota Genuine Adhesive 1324, Three Bond 1324 or equivalent

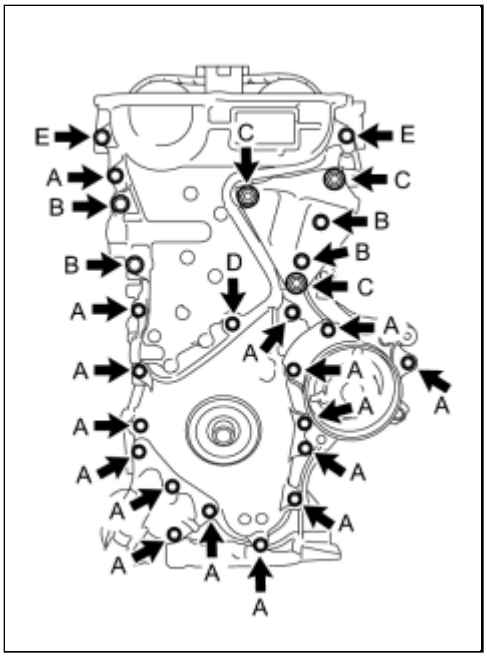

(f) Temporarily install the timing chain cover sub-assembly with 19 bolts.

NOTICE:

- Remove any oil from the contact surfaces.
- Install the chain cover within 3 minutes after applying seal packing.
- Do not start the engine for at least 2 hours after installing the timing chain cover subassembly.

Bolt Length:

ITEM	LENGTH
Bolt A, E	35 mm (1.38 in.)
Bolt B	55 mm (2.16 in.)
Bolt C	80 mm (3.15 in.)
Bolt D	40 mm (1.57 in.)

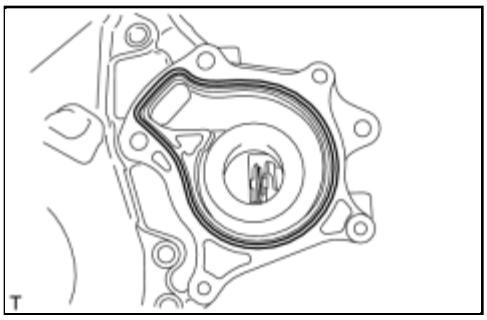

(g) Install a new gasket.

NOTICE:

Remove any oil from the contact surfaces.

(h) Install the water pump with the 3 bolts.

Torque: 24 N·m (245 kgf·cm, 18ft·lbf)

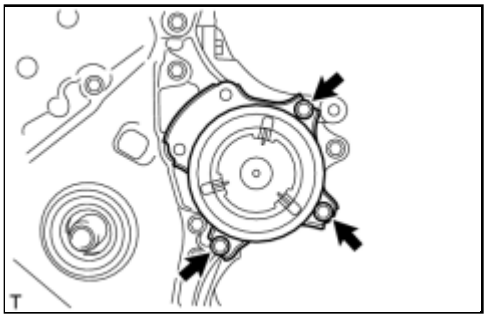

(i) Temporarily install the engine mounting bracket with the 3 bolts.

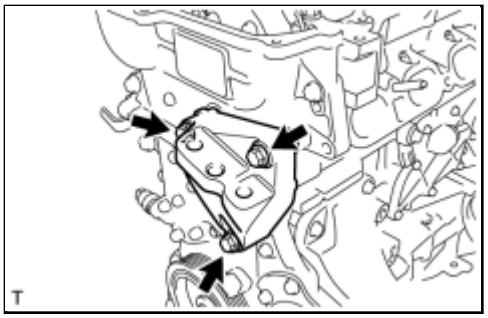

NOTICE:

- Install the mounting bracket within 10 minutes after installing the timing chain cover sub-assembly.
- Do not start the engine for at least 2 hours after installation.

Bolt Length:

ITEM	LENGTH
Bolt	80 mm (3.15 in.)

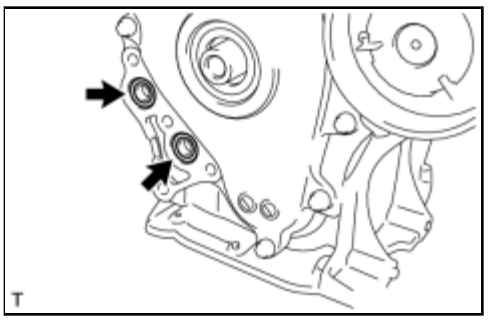

(j) Install 2 new O-rings.

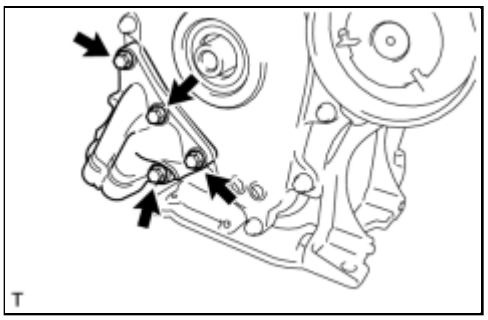

(k) Temporarily install the oil filter bracket with the 4 bolts.

NOTICE:

- Install the oil filter bracket within 10 minutes after installing the chain cover.
- Do not start the engine for at least 2 hours after installation.

Bolt Length:

ITEM	LENGTH
Bolt	35 mm (1.38 in.)

(l) Fully tighten the timing chain cover sub-assembly with the 26 bolts as shown in the illustration.

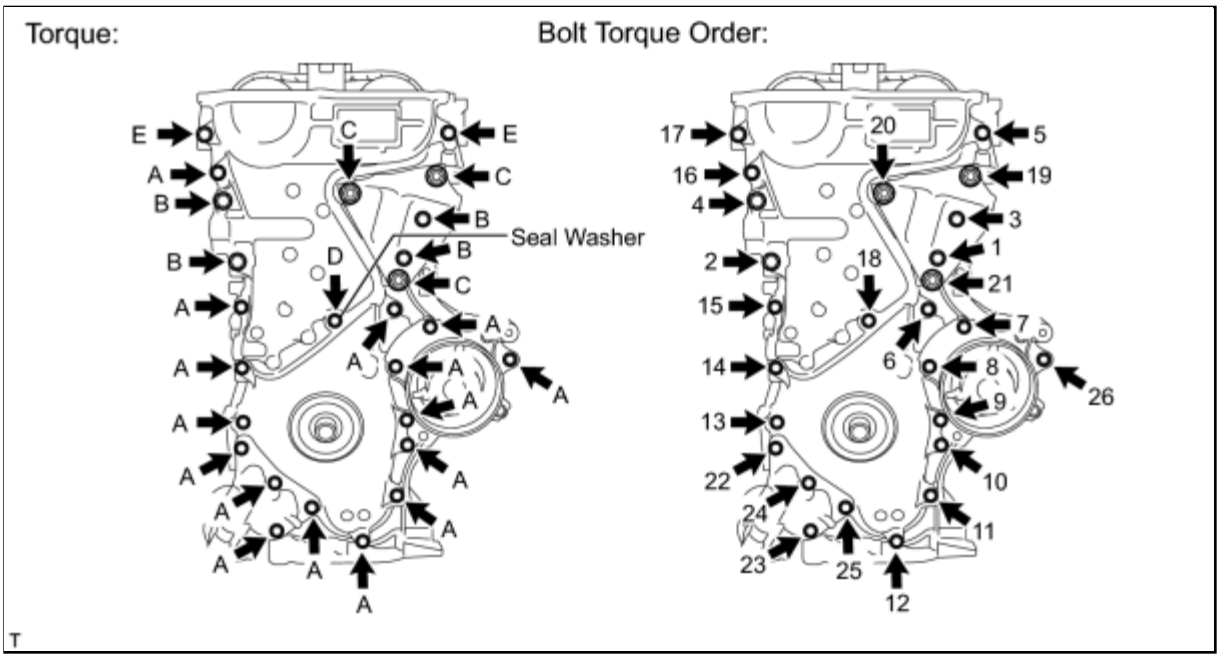

Bolt A, E - Torque: 26 N·m (260 kgf·cm, 19ft·lbf)
Bolt B, C - Torque: 51 N·m (520 kgf·cm, 37ft·lbf)
Bolt D - Torque: 10 N·m (102 kgf·cm, 7ft·lbf)

NOTICE:

- When the contact surfaces are wet, wipe them with oil-free cloth before applying seal packing.
- Install the chain cover within 3 minutes and tighten the bolts within 15 minutes after applying the seal packing.
- Do not start the engine for at least 2 hours after installing.

12. INSTALL CRANKSHAFT PULLEY INFO

13. INSTALL NO. 1 CHAIN TENSIONER ASSEMBLY INFO

14. INSTALL CYLINDER HEAD COVER SUB-ASSEMBLY INFO

15. INSTALL RADIO SETTING CONDENSER INFO

16. INSTALL THERMOSTAT INFO

17. INSTALL INLET WATER INFO

18. INSTALL INLET WATER HOSE INFO

19. INSTALL WATER BY-PASS HOSE INFO

20. INSTALL NO. 1 WATER BY-PASS PIPE INFO

21. CONNECT NO. 3 WATER BY-PASS HOSE INFO

22. INSTALL VENTILATION HOSE INFO

23. INSPECT EXHAUST MANIFOLD INFO

24. INSTALL EXHAUST MANIFOLD INFO

25. INSTALL MANIFOLD STAY INFO

26. INSTALL NO. 1 EXHAUST MANIFOLD HEAT INSULATOR INFO

27. INSTALL OIL LEVEL DIPSTICK SUB-ASSEMBLY INFO

28. INSTALL IGNITION COIL ASSEMBLY INFO

29. INSTALL FUEL INJECTOR ASSEMBLY INFO

30. INSTALL NO. 1 DELIVERY PIPE SPACER INFO

31. INSTALL FUEL DELIVERY PIPE SUB-ASSEMBLY INFO

32. INSTALL FUEL TUBE SUB-ASSEMBLY INFO

33. INSTALL INTAKE MANIFOLD INFO

34. REMOVE ENGINE STAND INFO

35. INSTALL ENGINE ASSEMBLY WITH TRANSAXLE

HINT: INFO .

Last Modified: 3-10-2010	6.4 K	**From:** 200901
Model Year: 2010	**Model:** Corolla	**Doc ID:** RM000002YWB00HX
Title: 2ZR-FE STARTING: ENGINE SWITCH: COMPONENTS (2010 Corolla)		

COMPONENTS

ILLUSTRATION

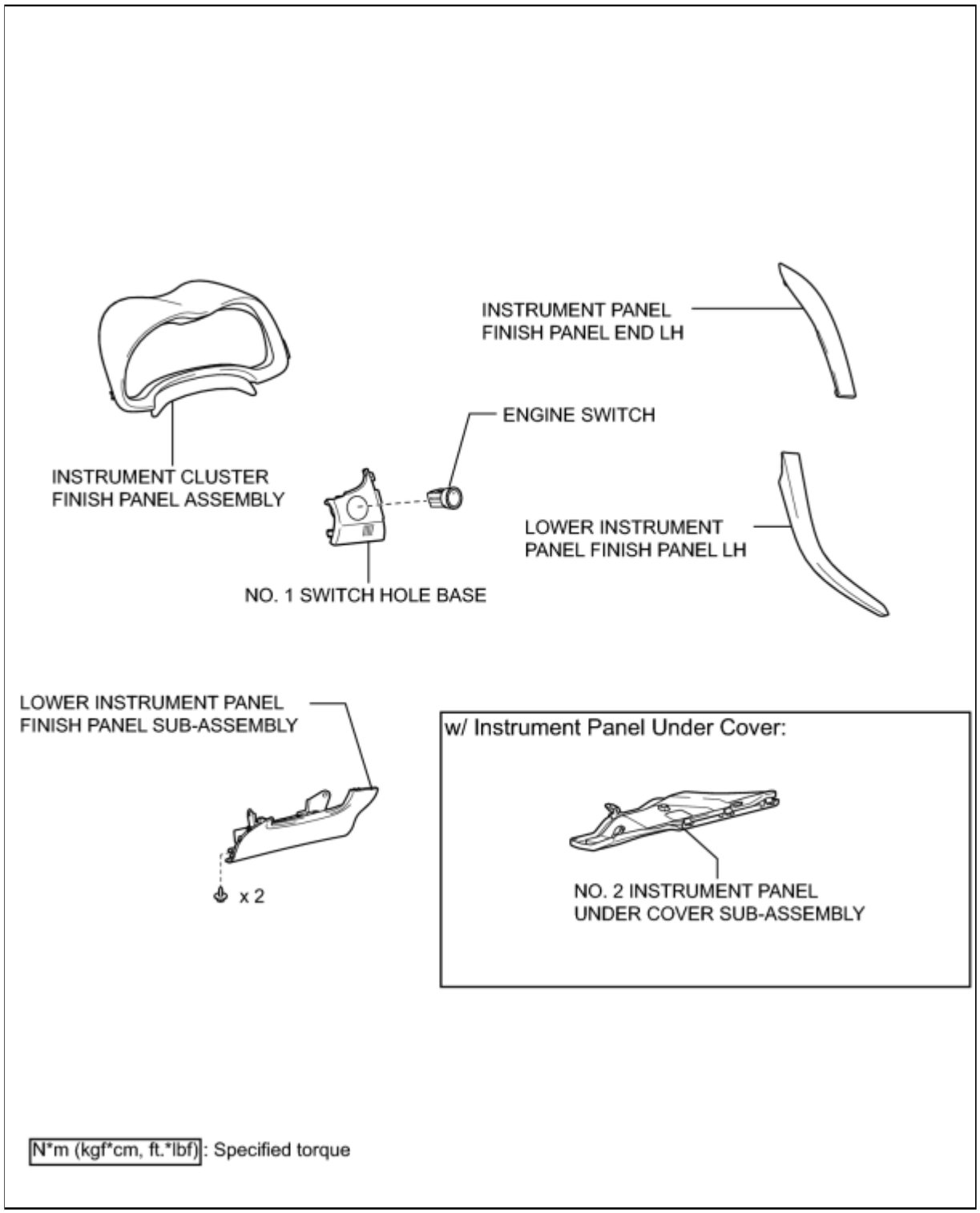

Last Modified: 3-10-2010	6.4 A	**From:** 200901
Model Year: 2010	**Model:** Corolla	**Doc ID:** RM000002YWC00TX
Title: 2ZR-FE STARTING: ENGINE SWITCH: REMOVAL (2010 Corolla)		

REMOVAL

1. DISCONNECT CABLE FROM NEGATIVE BATTERY TERMINAL

CAUTION:

Wait at least 90 seconds after disconnecting the cable from the negative (-) battery terminal to disable the SRS system.

2. REMOVE LOWER INSTRUMENT PANEL FINISH PANEL LH INFO

3. REMOVE INSTRUMENT PANEL FINISH PANEL END LH INFO

4. REMOVE INSTRUMENT CLUSTER FINISH PANEL ASSEMBLY INFO

5. REMOVE NO. 2 INSTRUMENT PANEL UNDER COVER SUB-ASSEMBLY (w/ Instrument Panel Under Cover) INFO

6. REMOVE LOWER INSTRUMENT PANEL FINISH PANEL SUB-ASSEMBLY INFO

7. REMOVE NO. 1 SWITCH HOLE BASE INFO

8. REMOVE ENGINE SWITCH

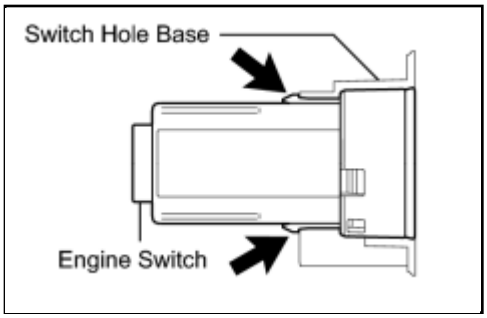

(a) Disengage the 2 claws and remove the engine switch from the No. 1 switch hole base.

Last Modified: 3-10-2010	6.4 G	**From:** 200901
Model Year: 2010	**Model:** Corolla	**Doc ID:** RM000002YWA011X
Title: 2ZR-FE STARTING: ENGINE SWITCH: INSPECTION (2010 Corolla)		

INSPECTION

1. INSPECT ENGINE SWITCH

(a) Measure the resistance according to the value(s) in the table below.

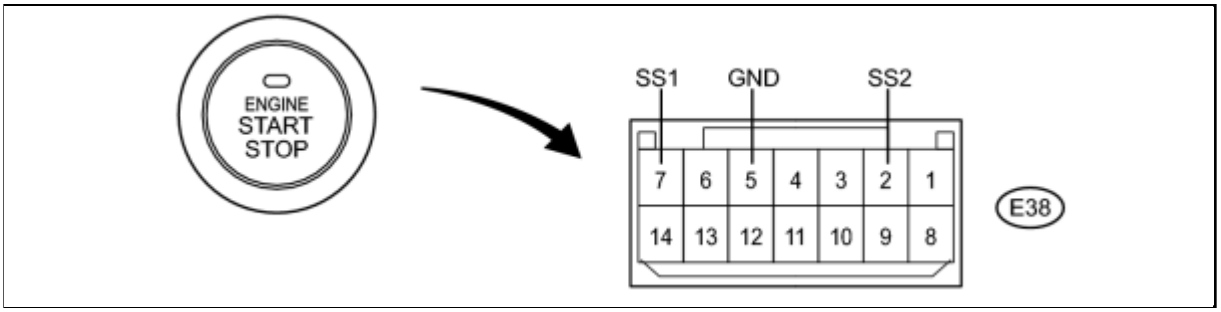

Standard Resistance:

TESTER CONNECTION	SWITCH CONDITION	SPECIFIED CONDITION
SS1 (E38-7) - GND (E38-5)	Pushed	Below 1 Ω
SS2 (E38-2) - GND (E38-5)	Pushed	Below 1 Ω
SS1 (E38-7) - GND (E38-5)	Not pushed	10 kΩ or higher
SS2 (E38-2) - GND (E38-5)	Not pushed	10 kΩ or higher

If the result is not as specified, replace the engine switch.

(b) Apply battery voltage between the terminals of the switch and check the illumination condition of the switch.

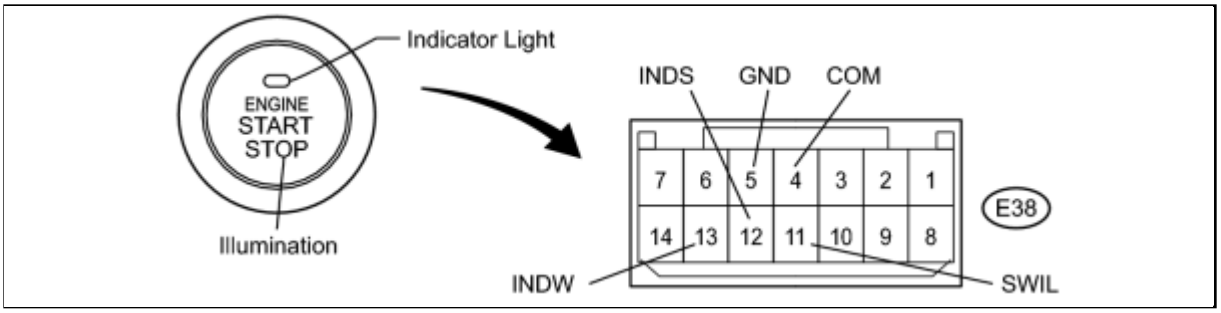

OK:

MEASUREMENT CONDITION	SPECIFIED CONDITION
Battery positive (+) → SWIL (E38-11) Battery negative (-) → COM (E38-4) or GND (E38-5)	Illuminates

MEASUREMENT CONDITION	SPECIFIED CONDITION
Battery positive (+) → INDS (E38-12) Battery negative (-) → COM (E38-4) or GND (E38-5)	Illuminates
Battery positive (+) → INDW (E38-13) Battery negative (-) → COM (E38-4) or GND (E38-5)	Illuminates

NOTICE:

- If the positive (+) lead and the negative (-) lead are incorrectly connected, the engine switch indicator light will not illuminate.
- If the voltage is too low, the indicator light will not illuminate.

If the result is not as specified, replace the engine switch.

Last Modified: 3-10-2010	6.4 A	**From:** 200901
Model Year: 2010	**Model:** Corolla	**Doc ID:** RM000002YW900TX
Title: 2ZR-FE STARTING: ENGINE SWITCH: INSTALLATION (2010 Corolla)		

INSTALLATION

1. INSTALL ENGINE SWITCH

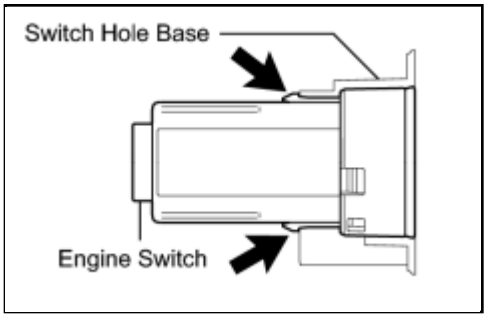

(a) Engage the 2 claws to install the engine switch.

2. INSTALL NO. 1 SWITCH HOLE BASE INFO

3. INSTALL LOWER INSTRUMENT PANEL FINISH PANEL SUB-ASSEMBLY INFO

4. INSTALL NO. 2 INSTRUMENT PANEL UNDER COVER SUB-ASSEMBLY (w/ Instrument Panel Under Cover) INFO

5. INSTALL INSTRUMENT CLUSTER FINISH PANEL ASSEMBLY INFO

6. INSTALL INSTRUMENT PANEL FINISH PANEL END LH INFO

7. INSTALL LOWER INSTRUMENT PANEL FINISH PANEL LH INFO

8. CONNECT CABLE TO NEGATIVE BATTERY TERMINAL

HINT: INFO .

9. INSPECT SRS WARNING LIGHT

INFO

Last Modified: 3-10-2010	6.4 K	**From:** 200901
Model Year: 2010	**Model:** Corolla	**Doc ID:** RM0000034SW00DX
Title: 2AZ-FE STARTING: IGNITION SWITCH: COMPONENTS (2010 Corolla)		

COMPONENTS

ILLUSTRATION

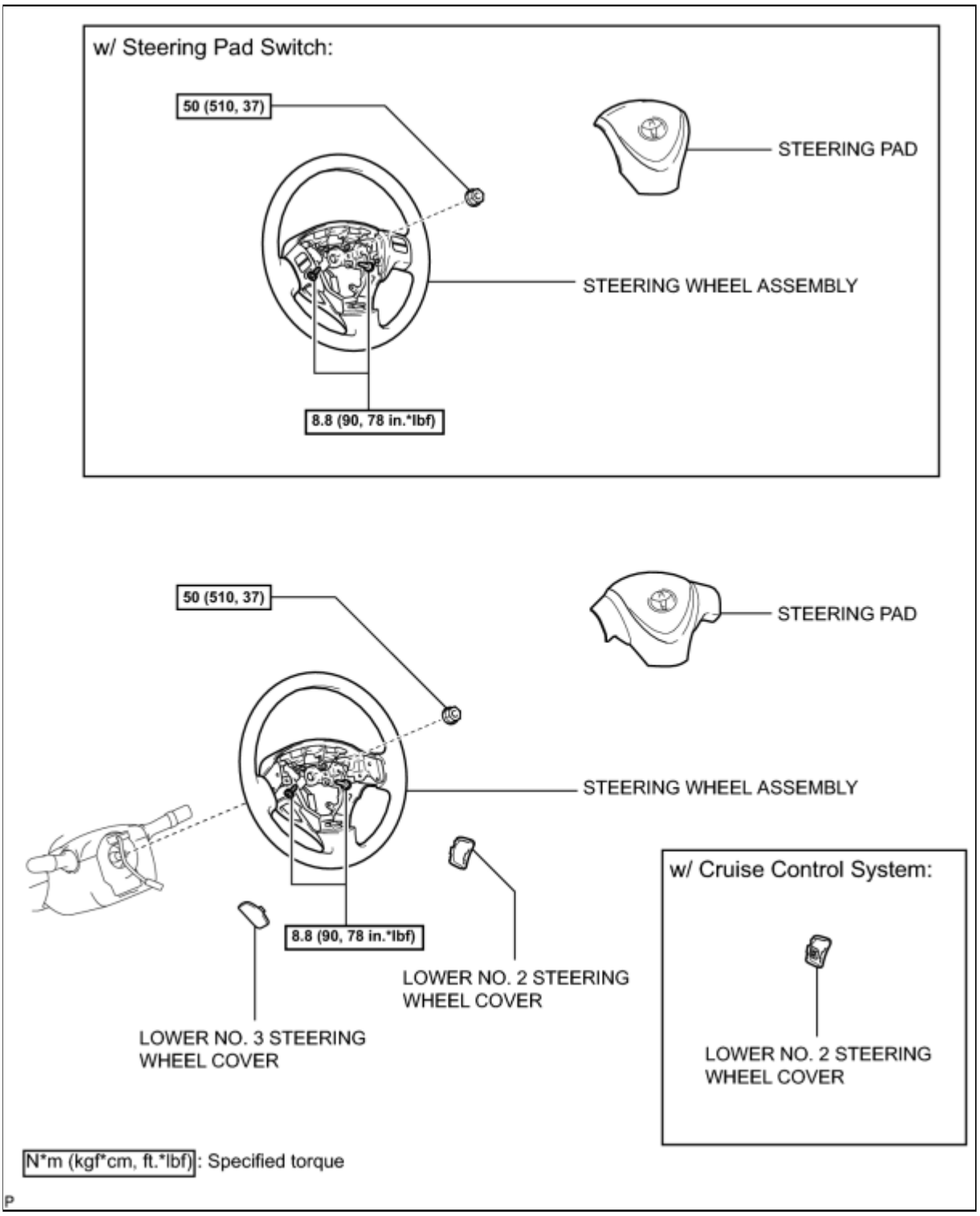

ILLUSTRATION

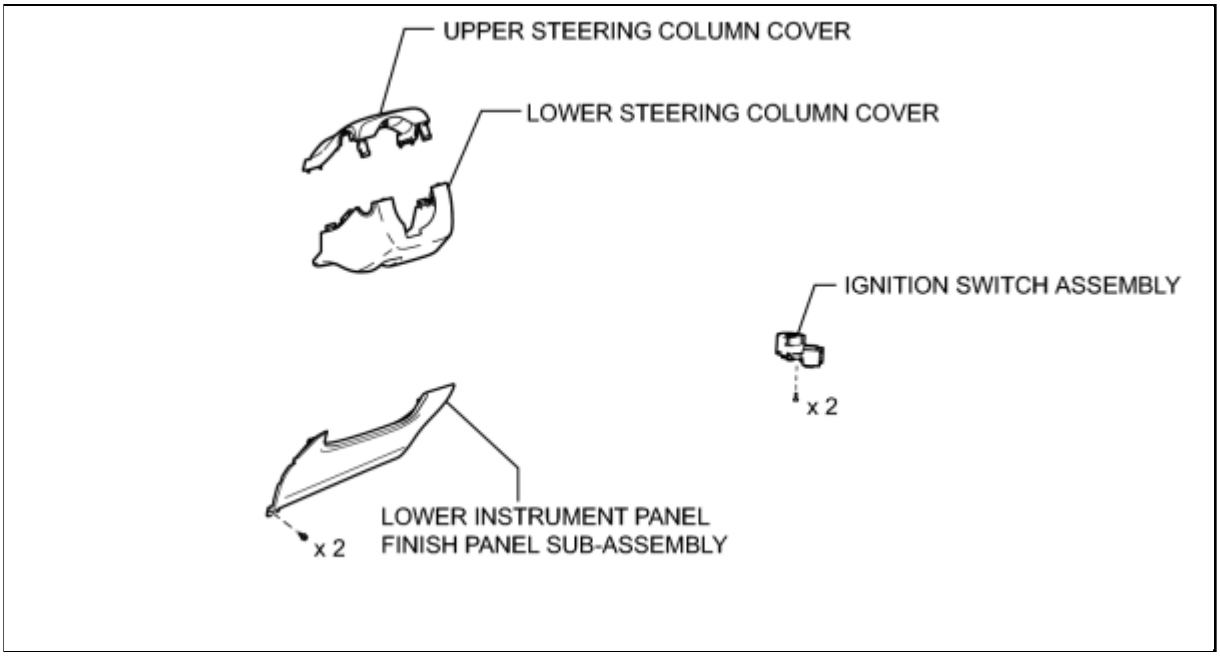

Last Modified: 3-10-2010	6.4 A	**From:** 200901
Model Year: 2010	**Model:** Corolla	**Doc ID:** RM0000034SX00DX
Title: 2AZ-FE STARTING: IGNITION SWITCH: REMOVAL (2010 Corolla)		

REMOVAL

CAUTION:

Some of these service operations affect the SRS airbag system. Read the precautionary notices concerning the SRS airbag system before servicing INFO .

1. ALIGN FRONT WHEELS STRAIGHT AHEAD

2. DISCONNECT CABLE FROM NEGATIVE BATTERY TERMINAL

CAUTION:

Wait at least 90 seconds after disconnecting the cable from the negative (-) battery terminal to disable the SRS system.

3. REMOVE LOWER NO. 3 STEERING WHEEL COVER INFO

4. REMOVE LOWER NO. 2 STEERING WHEEL COVER INFO

5. REMOVE STEERING PAD INFO

6. REMOVE STEERING WHEEL ASSEMBLY INFO

7. REMOVE LOWER INSTRUMENT PANEL FINISH PANEL SUB-ASSEMBLY INFO

8. REMOVE LOWER STEERING COLUMN COVER INFO

9. REMOVE UPPER STEERING COLUMN COVER INFO

10. REMOVE IGNITION SWITCH ASSEMBLY

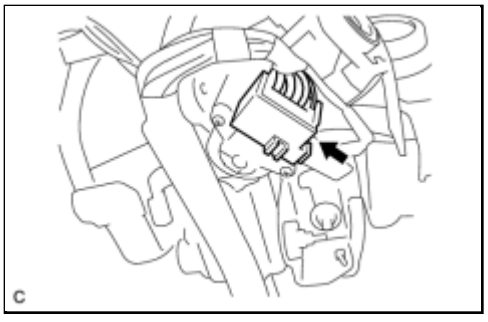

(a) Disconnect the connector from the ignition switch.

(b) Remove the 2 screws and ignition switch.

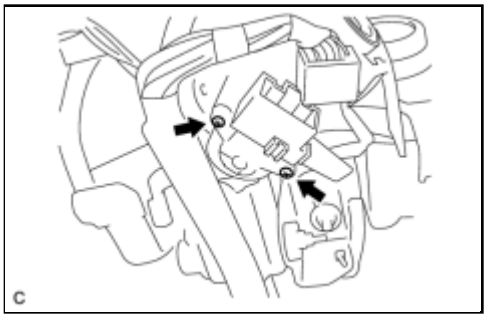
C

Last Modified: 3-10-2010	6.4 G	**From:** 200901
Model Year: 2010	**Model:** Corolla	**Doc ID:** RM0000026VF00XX
Title: 2AZ-FE STARTING: IGNITION SWITCH: INSPECTION (2010 Corolla)		

INSPECTION

1. INSPECT IGNITION SWITCH

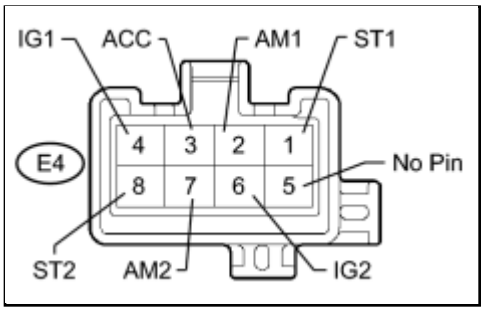

(a) Measure the resistance of the switch.

Standard Resistance:

TESTER CONNECTION	SWITCH CONDITION	SPECIFIED CONDITION
Between all terminals	LOCK	10 kΩ or higher
AM1 (E4-2) - ACC (E4-3)	ACC	Below 1 Ω
AM1 (E4-2) - ACC (E4-3) AM1 (E4-2) - IG1 (E4-4) IG2 (E4-6) - AM2 (E4-7)	ON	Below 1 Ω
ST1 (E4-1) - AM1 (E4-2) ST1 (E4-1) - IG1 (E4-4) IG2 (E4-6) - AM2 (E4-7) IG2 (E4-6) - ST2 (E4-8)	START	Below 1 Ω

If the result is not as specified, replace the switch assembly.

Last Modified: 3-10-2010	6.4 A	**From:** 200901
Model Year: 2010	**Model:** Corolla	**Doc ID:** RM0000034SV00DX
Title: 2AZ-FE STARTING: IGNITION SWITCH: INSTALLATION (2010 Corolla)		

INSTALLATION

1. INSTALL IGNITION SWITCH ASSEMBLY

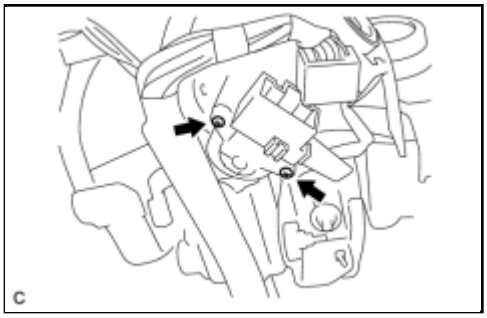

(a) Install the ignition switch with the 2 screws.

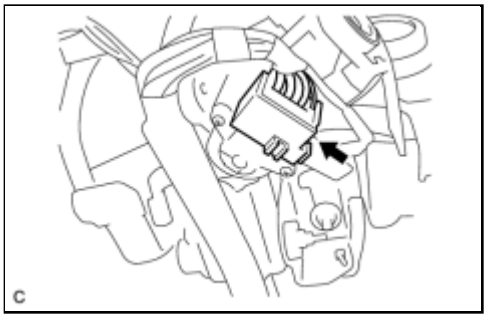

(b) Connect the connector.

2. INSTALL UPPER STEERING COLUMN COVER INFO

3. INSTALL LOWER STEERING COLUMN COVER INFO

4. INSTALL LOWER INSTRUMENT PANEL FINISH PANEL SUB-ASSEMBLY INFO

5. ADJUST SPIRAL CABLE INFO

6. INSTALL STEERING WHEEL ASSEMBLY INFO

7. INSTALL STEERING PAD INFO

8. INSTALL LOWER NO. 3 STEERING WHEEL COVER INFO

9. INSTALL LOWER NO. 2 STEERING WHEEL COVER INFO

10. INSPECT STEERING WHEEL CENTER POINT

11. CONNECT CABLE TO NEGATIVE BATTERY TERMINAL

HINT: INFO .

12. INSPECT STEERING PAD INFO

13. INSPECT SRS WARNING LIGHT

HINT: INFO .

Last Modified: 3-10-2010	6.4 K	**From:** 200901
Model Year: 2010	**Model:** Corolla	**Doc ID:** RM0000034SW00CX
Title: 2ZR-FE STARTING: IGNITION SWITCH: COMPONENTS (2010 Corolla)		

COMPONENTS

ILLUSTRATION

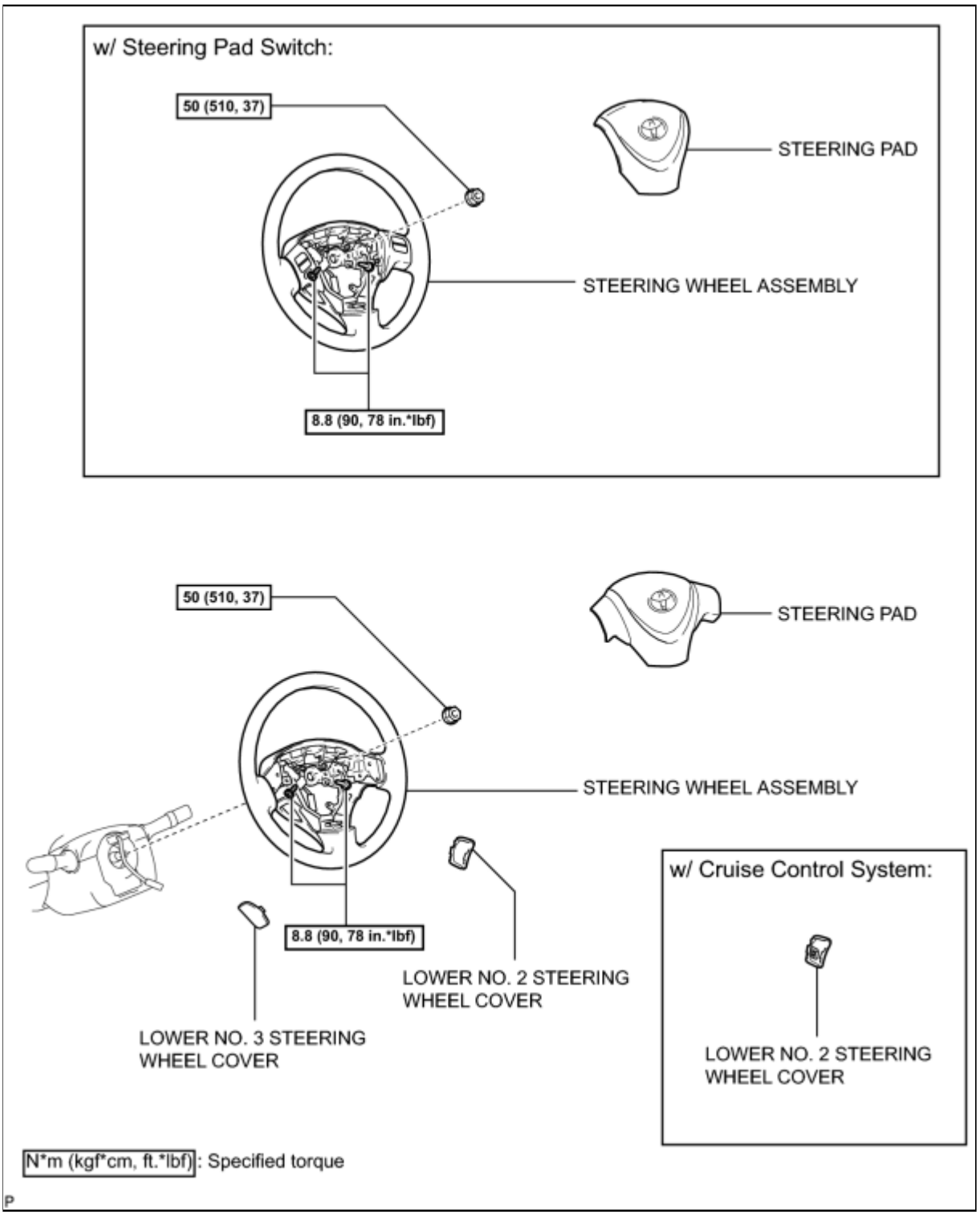

ILLUSTRATION

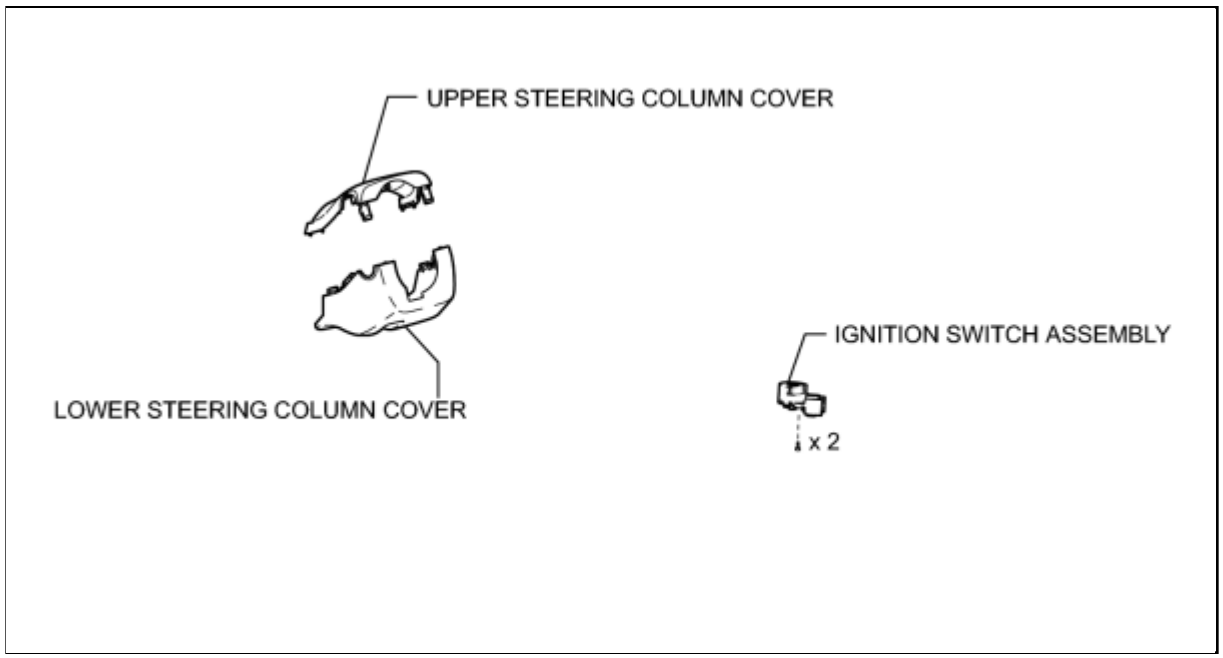

Last Modified: 3-10-2010	6.4 A	**From:** 200901
Model Year: 2010	**Model:** Corolla	**Doc ID:** RM0000034SX00CX
Title: 2ZR-FE STARTING: IGNITION SWITCH: REMOVAL (2010 Corolla)		

REMOVAL

CAUTION:

Some of these service operations affect the SRS airbag system. Read the precautionary notices concerning the SRS airbag system before servicing INFO .

1. ALIGN FRONT WHEELS STRAIGHT AHEAD

2. DISCONNECT CABLE FROM NEGATIVE BATTERY TERMINAL

CAUTION:

Wait at least 90 seconds after disconnecting the cable from the negative (-) battery terminal to disable the SRS system.

3. REMOVE LOWER NO. 3 STEERING WHEEL COVER INFO

4. REMOVE LOWER NO. 2 STEERING WHEEL COVER INFO

5. REMOVE STEERING PAD INFO

6. REMOVE STEERING WHEEL ASSEMBLY INFO

7. REMOVE LOWER STEERING COLUMN COVER INFO

8. REMOVE UPPER STEERING COLUMN COVER INFO

9. REMOVE IGNITION SWITCH ASSEMBLY

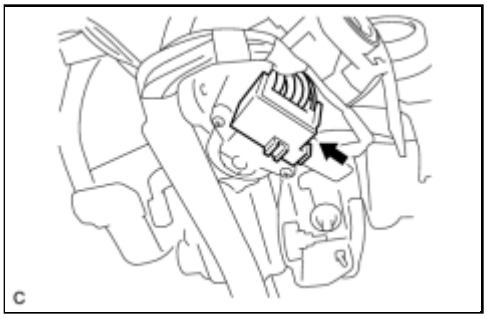

(a) Disconnect the connector from the ignition switch.

(b) Remove the 2 screws and ignition switch.

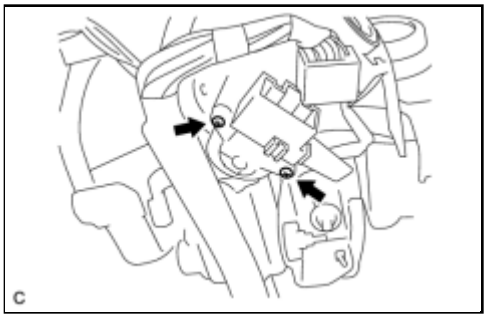
C

Last Modified: 3-10-2010	6.4 G	**From:** 200901
Model Year: 2010	**Model:** Corolla	**Doc ID:** RM0000026VF00WX
Title: 2ZR-FE STARTING: IGNITION SWITCH: INSPECTION (2010 Corolla)		

INSPECTION

1. INSPECT IGNITION SWITCH

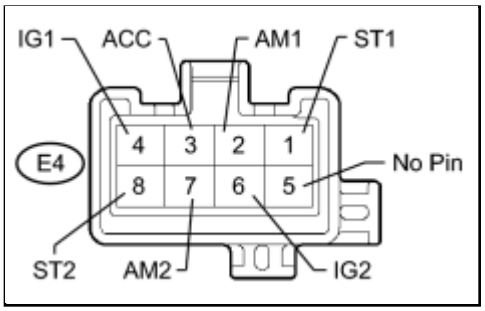

(a) Measure the resistance of the switch.

Standard Resistance:

TESTER CONNECTION	SWITCH CONDITION	SPECIFIED CONDITION
Between all terminals	LOCK	10 kΩ or higher
AM1 (E4-2) - ACC (E4-3)	ACC	Below 1 Ω
AM1 (E4-2) - ACC (E4-3) AM1 (E4-2) - IG1 (E4-4) IG2 (E4-6) - AM2 (E4-7)	ON	Below 1 Ω
ST1 (E4-1) - AM1 (E4-2) ST1 (E4-1) - IG1 (E4-4) IG2 (E4-6) - AM2 (E4-7) IG2 (E4-6) - ST2 (E4-8)	START	Below 1 Ω

If the result is not as specified, replace the switch assembly.

Last Modified: 3-10-2010	6.4 A	**From:** 200901
Model Year: 2010	**Model:** Corolla	**Doc ID:** RM0000034SV00CX
Title: 2ZR-FE STARTING: IGNITION SWITCH: INSTALLATION (2010 Corolla)		

INSTALLATION

1. INSTALL IGNITION SWITCH ASSEMBLY

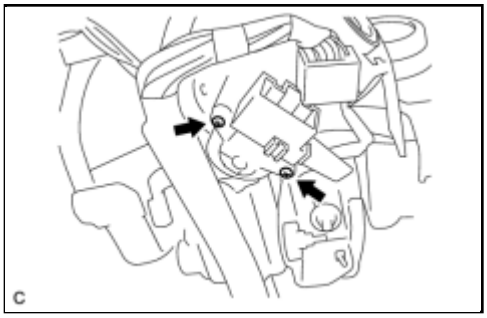

(a) Install the ignition switch with the 2 screws.

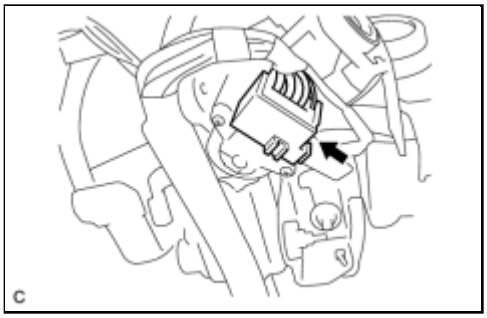

(b) Connect the connector.

2. INSTALL UPPER STEERING COLUMN COVER INFO

3. INSTALL LOWER STEERING COLUMN COVER INFO

4. ADJUST SPIRAL CABLE INFO

5. INSTALL STEERING WHEEL ASSEMBLY INFO

6. INSTALL STEERING PAD INFO

7. INSTALL LOWER NO. 3 STEERING WHEEL COVER INFO

8. INSTALL LOWER NO. 2 STEERING WHEEL COVER INFO

9. INSPECT STEERING WHEEL CENTER POINT

10. CONNECT CABLE TO NEGATIVE BATTERY TERMINAL

HINT: INFO .

11. INSPECT STEERING PAD INFO

12. INSPECT SRS WARNING LIGHT

HINT: INFO .

Last Modified: 3-10-2010	6.4 G	**From:** 200901
Model Year: 2010	**Model:** Corolla	**Doc ID:** RM000003D39003X
Title: 2AZ-FE STARTING: RELAY: ON-VEHICLE INSPECTION (2010 Corolla)		

ON-VEHICLE INSPECTION

1. INSPECT STARTER RELAY

(a) Check the resistance.

(1) Using an ohmmeter, measure the resistance between the terminals.

Standard Resistance:

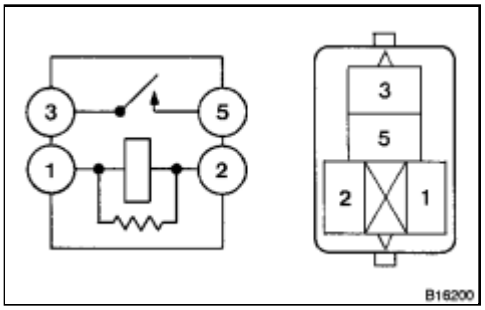

TESTER CONNECTION	CONDITION	SPECIFIED CONDITION
3 - 5	Battery voltage is not applied to terminals 1 and 2	10 kΩ or higher
3 - 5	Battery voltage is applied to terminals 1 and 2	Below 1 Ω

If the result is not as specified, replace the relay.

2. INSPECT ACC RELAY

(a) Check the resistance.

(1) Using an ohmmeter, measure the resistance between the terminals.

Standard Resistance:

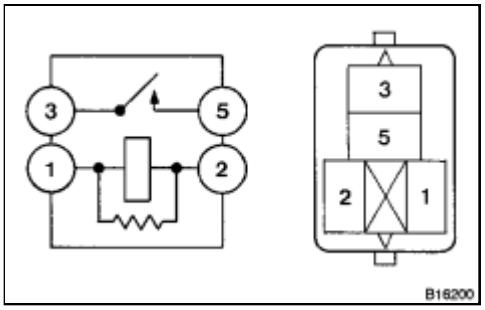

TESTER CONNECTION	CONDITION	SPECIFIED CONDITION
3 - 5	Battery voltage is not applied to terminals 1 and 2	10 kΩ or higher
3 - 5	Battery voltage is applied to terminals 1 and 2	Below 1 Ω

If the result is not as specified, replace the relay.

Last Modified: 3-10-2010	6.4 K	**From:** 200901
Model Year: 2010	**Model:** Corolla	**Doc ID:** RM0000025TZ00EX
Title: 2AZ-FE STARTING: STARTER: COMPONENTS (2010 Corolla)		

COMPONENTS

ILLUSTRATION

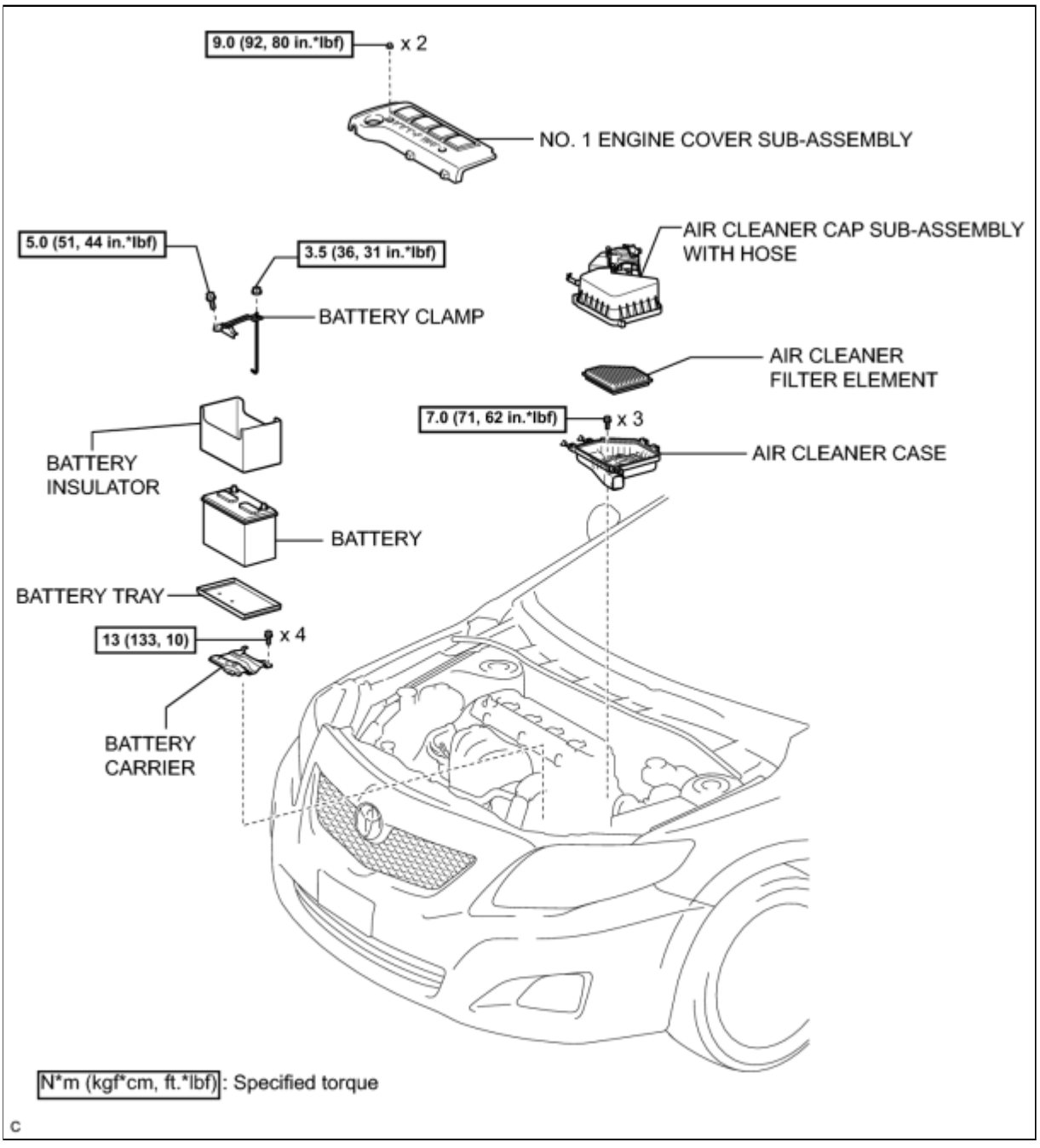

ILLUSTRATION

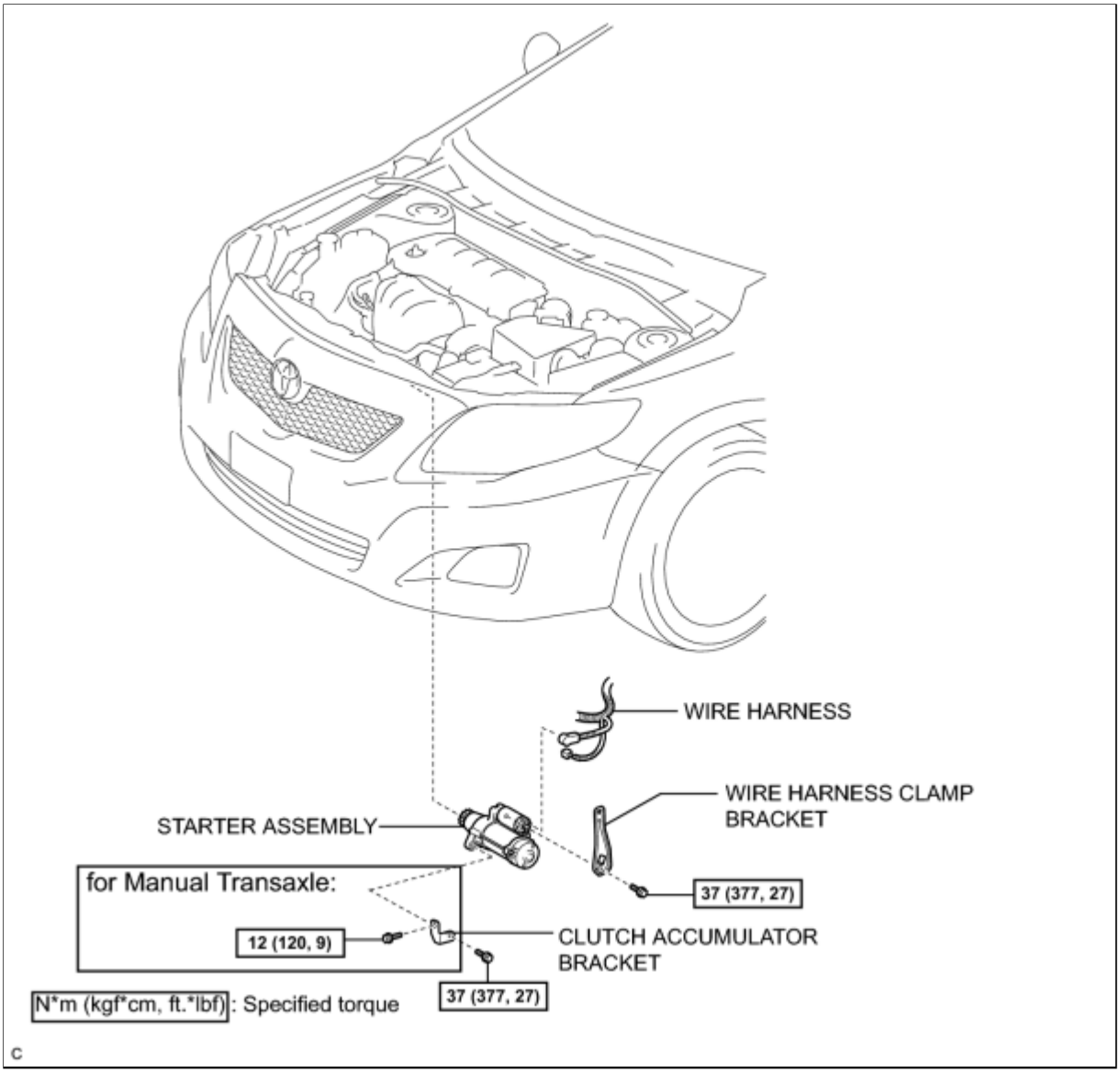

ILLUSTRATION

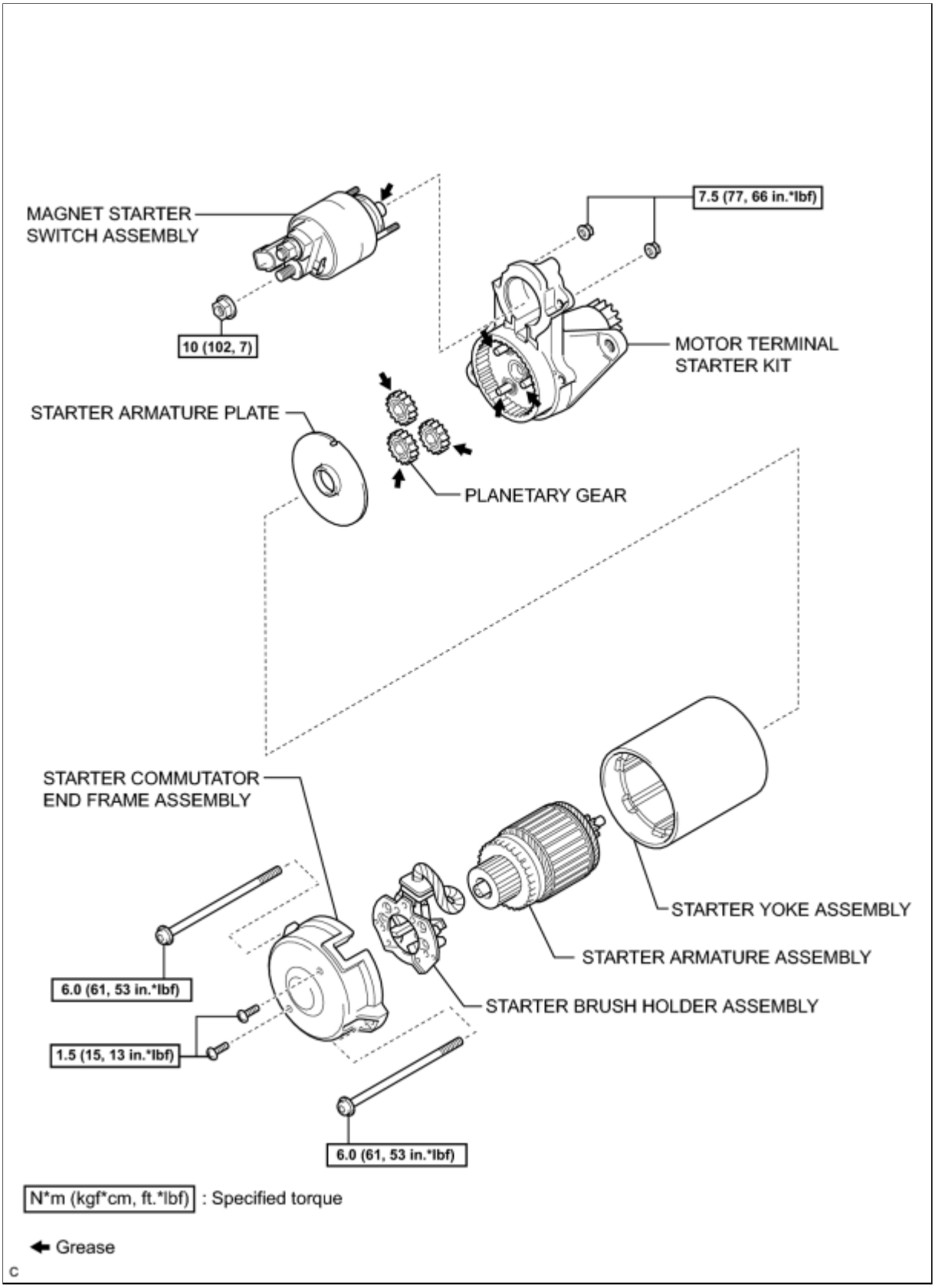
MAGNET STARTER SWITCH ASSEMBLY
10 (102, 7)
7.5 (77, 66 in.*lbf)
MOTOR TERMINAL STARTER KIT
STARTER ARMATURE PLATE
PLANETARY GEAR
STARTER COMMUTATOR END FRAME ASSEMBLY
STARTER YOKE ASSEMBLY
STARTER ARMATURE ASSEMBLY
STARTER BRUSH HOLDER ASSEMBLY
6.0 (61, 53 in.*lbf)
1.5 (15, 13 in.*lbf)
6.0 (61, 53 in.*lbf)
N*m (kgf*cm, ft.*lbf) : Specified torque
Grease
C

Last Modified: 3-10-2010	6.4 G	**From:** 200901
Model Year: 2010	**Model:** Corolla	**Doc ID:** RM000003D3A003X
Title: 2ZR-FE STARTING: RELAY: ON-VEHICLE INSPECTION (2010 Corolla)		

ON-VEHICLE INSPECTION

1. INSPECT STARTER RELAY

(a) Check the resistance.

(1) Using an ohmmeter, measure the resistance between the terminals.

Standard Resistance:

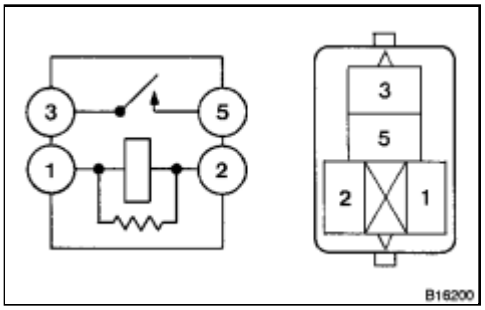

TESTER CONNECTION	CONDITION	SPECIFIED CONDITION
3 - 5	Battery voltage is not applied to terminals 1 and 2	10 kΩ or higher
3 - 5	Battery voltage is applied to terminals 1 and 2	Below 1 Ω

If the result is not as specified, replace the relay.

2. INSPECT ACC RELAY

(a) Check the resistance.

(1) Using an ohmmeter, measure the resistance between the terminals.

Standard Resistance:

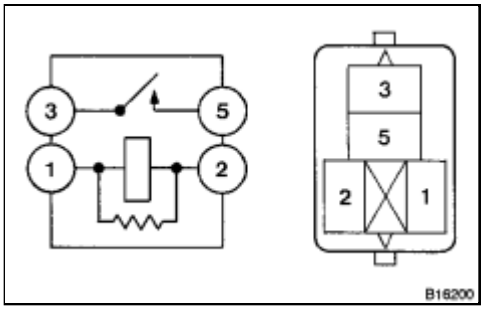

TESTER CONNECTION	CONDITION	SPECIFIED CONDITION
3 - 5	Battery voltage is not applied to terminals 1 and 2	10 kΩ or higher
3 - 5	Battery voltage is applied to terminals 1 and 2	Below 1 Ω

If the result is not as specified, replace the relay.

3. INSPECT ACC CUT RELAY

(a) Check the resistance.

(1) Using an ohmmeter, measure the resistance between the terminals.

Standard Resistance:

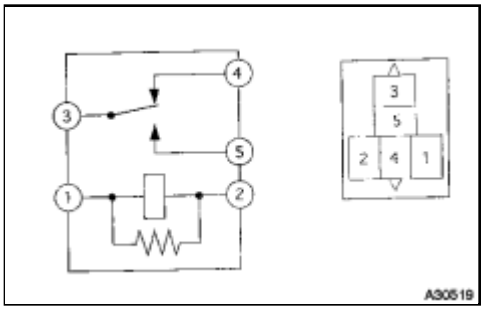

TESTER CONNECTION	CONDITION	SPECIFIED CONDITION
3 - 4	Battery voltage is not applied to terminals 1 and 2	Below 1 Ω
3 - 4	Battery voltage is applied to terminals 1 and 2	10 kΩ or higher
3 - 5	Battery voltage is not applied to terminals 1 and 2	10 kΩ or higher
3 - 5	Battery voltage is applied to terminals 1 and 2	Below 1 Ω

If the result is not as specified, replace the relay.

Last Modified: 3-10-2010	6.4 A	**From:** 200901
Model Year: 2010	**Model:** Corolla	**Doc ID:** RM0000025U000TX
Title: 2AZ-FE STARTING: STARTER: REMOVAL (2010 Corolla)		

REMOVAL

1. DISCONNECT CABLE FROM NEGATIVE BATTERY TERMINAL

2. REMOVE NO. 1 ENGINE COVER SUB-ASSEMBLY INFO

3. REMOVE AIR CLEANER CAP SUB-ASSEMBLY WITH HOSE INFO

4. REMOVE AIR CLEANER CASE INFO

5. REMOVE BATTERY INFO

6. REMOVE BATTERY CARRIER INFO

7. DISCONNECT WIRE HARNESS

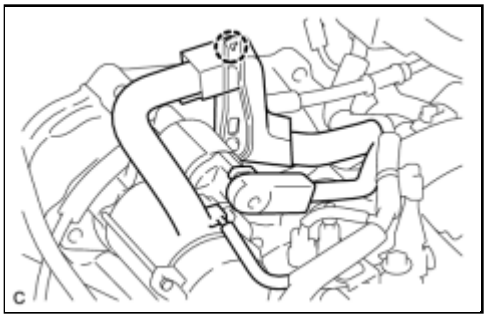

(a) Release the claw, and disconnect the wire harness.

8. REMOVE STARTER ASSEMBLY (for Manual Transaxle)

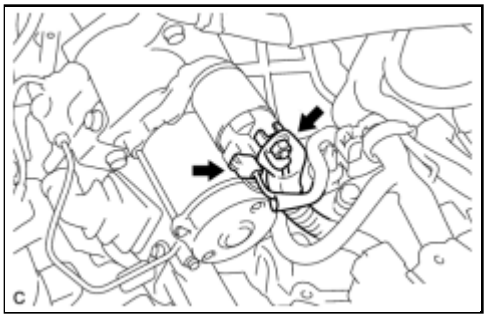

(a) Disconnect the terminal 50 connector from the starter assembly.

(b) Remove the nut and disconnect the wire harness from terminal 30.

(c) Remove the 3 bolts, clutch accumulator bracket, wire harness clamp bracket and starter assembly.

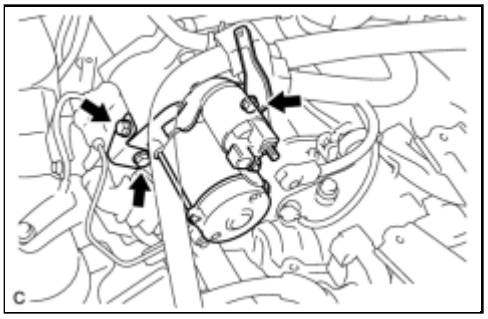

9. REMOVE STARTER ASSEMBLY (for Automatic Transaxle)

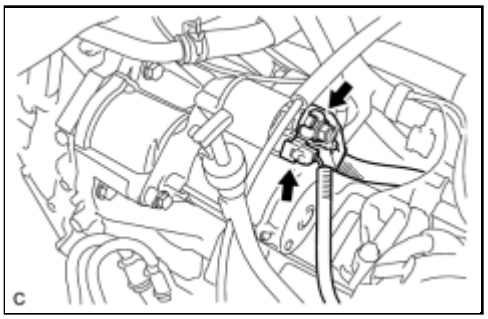

(a) Disconnect the terminal 50 connector from the starter assembly.

(b) Remove the nut and disconnect the wire harness from terminal 30.

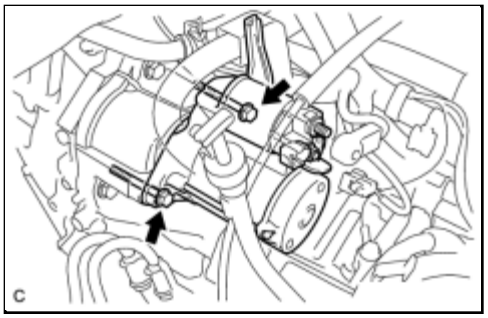

(c) Remove the 2 bolts, wire harness clamp bracket and starter assembly.

Last Modified: 3-10-2010	6.4 A	**From:** 200901
Model Year: 2010	**Model:** Corolla	**Doc ID:** RM000001ETK019X
Title: 2AZ-FE STARTING: STARTER: DISASSEMBLY (2010 Corolla)		

DISASSEMBLY

1. REMOVE MAGNET STARTER SWITCH ASSEMBLY

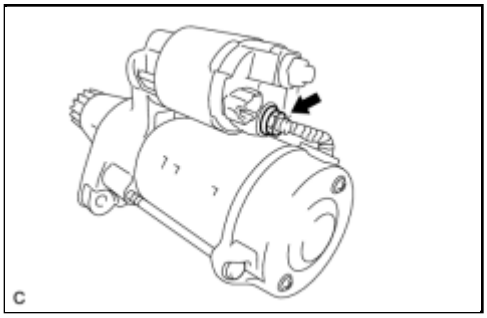

(a) Remove the nut, then disconnect the lead wire from the magnet starter switch assembly.

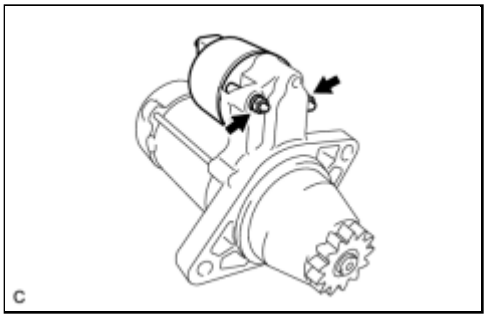

(b) Remove the 2 nuts from the starter drive housing assembly while holding the magnet starter switch assembly.

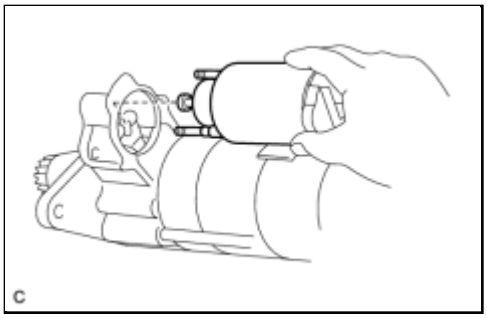

(c) Pull the magnet starter switch assembly, and while lifting the front part of the magnet starter switch assembly, release the plunger hook from the drive lever and magnet starter switch assembly.

2. REMOVE STARTER COMMUTATOR END FRAME ASSEMBLY

(a) Using a T25 "TORX" socket wrench, remove the 2 bolts.

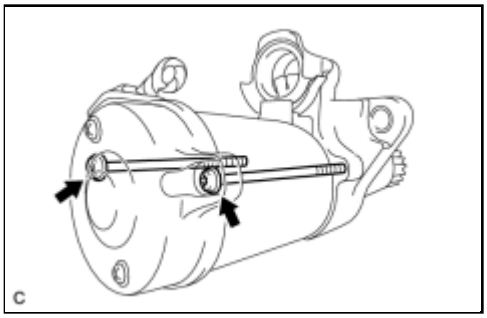

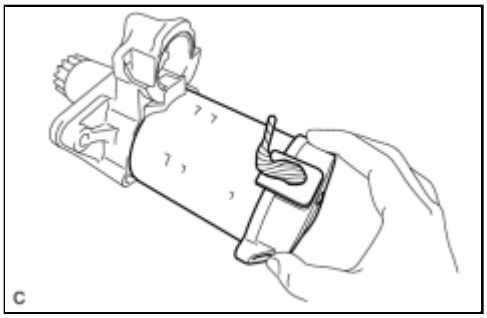

(b) Pull out the starter yoke together with the starter commutator end frame assembly.

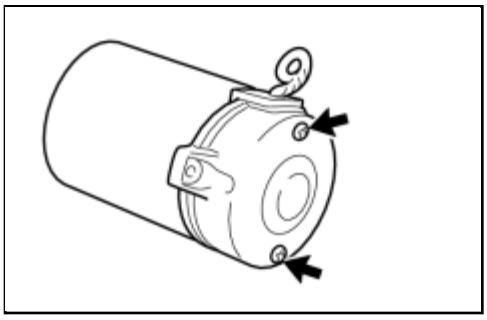

(c) Remove the 2 screws from the starter commutator end frame assembly.

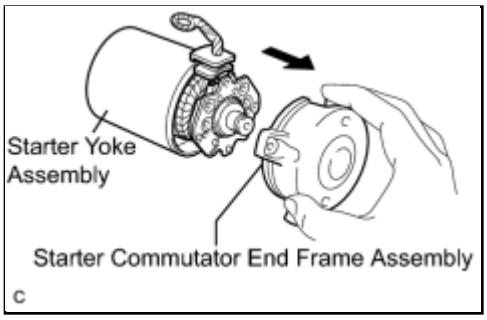

(d) Pull the starter yoke assembly out of the starter commutator end frame assembly.

NOTICE:

While holding down the lead wire, remove the starter commutator end frame.

3. REMOVE STARTER ARMATURE ASSEMBLY

(a) Using a screwdriver, hold the spring back and disconnect

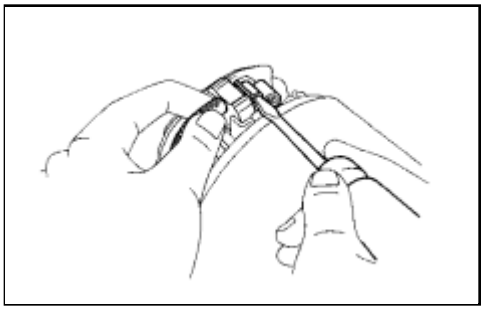

the brush from the brush holder.

(b) Disconnect the 4 brushes, and remove the brush holder.

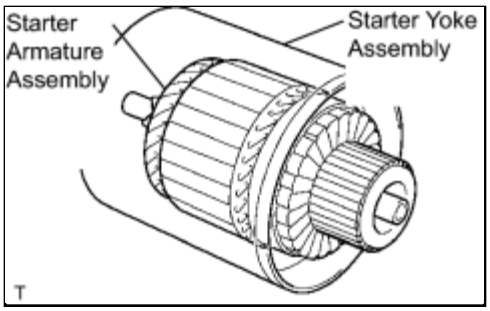

(c) Remove the starter armature assembly from the starter yoke assembly.

4. REMOVE STARTER ARMATURE PLATE

(a) Remove the armature plate from the motor terminal starter kit or the starter yoke assembly.

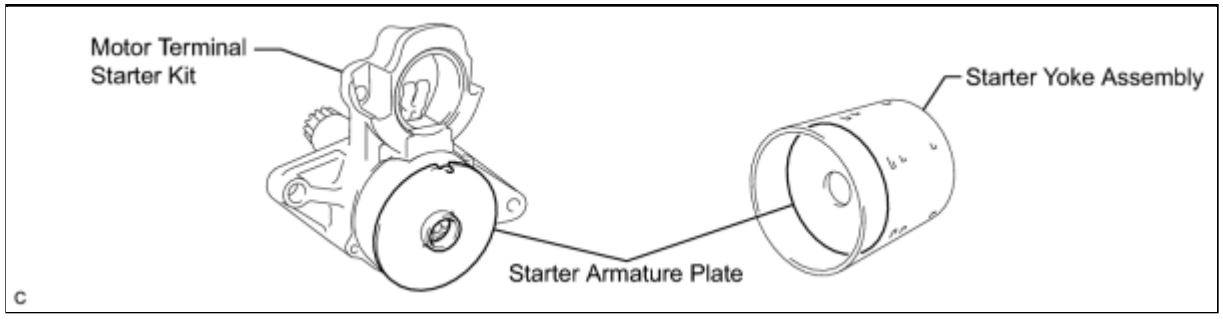

5. REMOVE PLANETARY GEAR

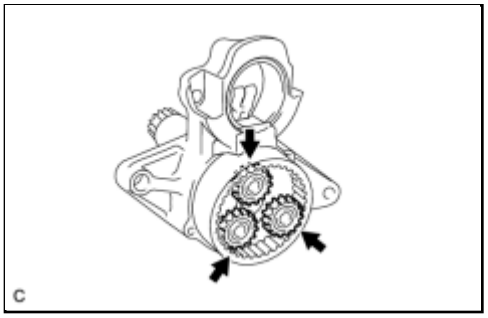

(a) Remove the 3 planetary gears from the starter center bearing clutch sub-assembly.

Last Modified: 3-10-2010	6.4 G	**From:** 200901
Model Year: 2010	**Model:** Corolla	**Doc ID:** RM000001ETI01GX
Title: 2AZ-FE STARTING: STARTER: INSPECTION (2010 Corolla)		

INSPECTION

1. INSPECT STARTER ASSEMBLY

NOTICE:

Perform each of the following tests within 3 to 5 seconds.

(a) Perform a pull-in test.

(1) Disconnect the field coil lead wire from terminal C.

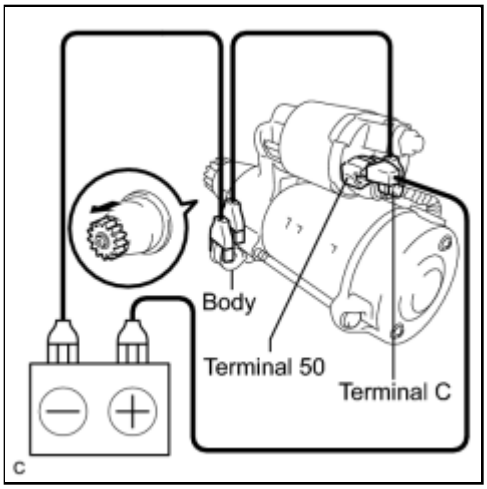

(2) Connect the battery to the magnet starter switch as shown in the illustration and check that the pinion gear moves outward.

If the clutch pinion gear does not move, replace the magnet starter switch assembly.

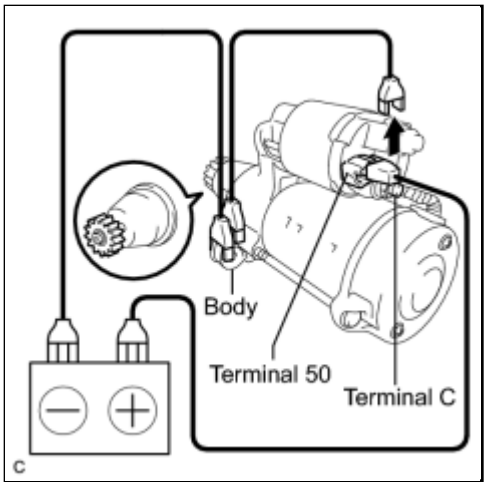

(b) Perform a hold-in test.

(1) Check that the pinion gear does not return inward after the cable is disconnected from terminal C.

If the clutch pinion gear returns inward, replace the magnet starter switch assembly.

(c) Inspect the clutch pinion gear return.

(1) Disconnect the negative (-) lead from the switch body.

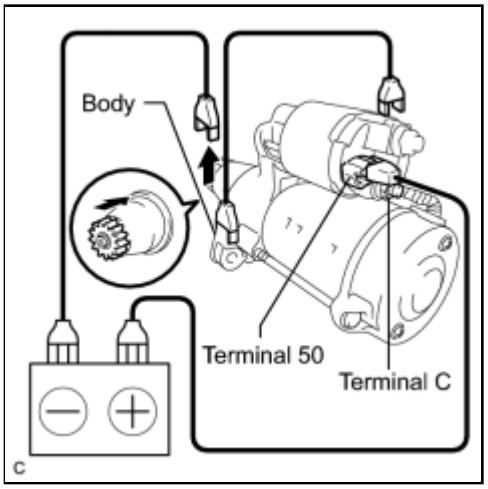

Check that the pinion gear moves inward.

If the clutch pinion gear does not return inward, replace the magnet starter switch assembly.

(d) Perform an operation test without load.

(1) Connect the field coil lead wire to terminal C.

Torque: 10 N·m (102 kgf·cm, 7.4ft·lbf)

(2) Clamp the starter in a vise.

(3) Connect the battery and ammeter to the starter as shown in the illustration.

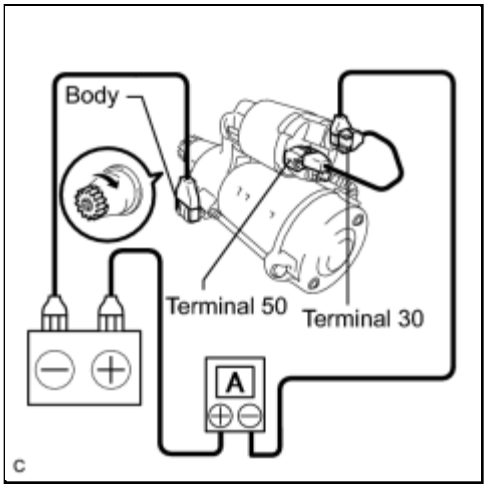

(4) Check that the starter rotates smoothly and steadily with the clutch pinion gear extended.

Check that the ammeter indicates the specified current.

Standard Current:

TESTER CONNECTION	CONDITION	SPECIFIED CONDITION
Battery positive terminal - Terminal 30 - Terminal 50	11.5 V	Below 90 A

If the result is not as specified, replace the starter assembly.

2. INSPECT MAGNET STARTER SWITCH ASSEMBLY

(a) Check the plunger.

(1) Push in the plunger, then check that it returns quickly to its original position.

If necessary, replace the magnet starter switch assembly.

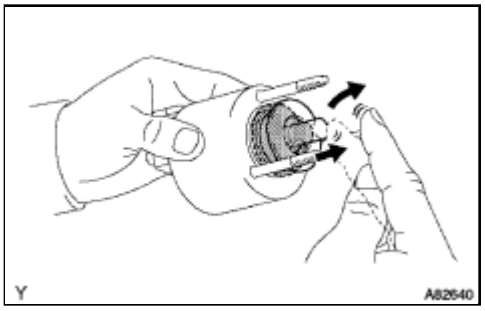

(b) Inspect the resistance of the pull-in coil.

(1) Using an ohmmeter, measure the resistance between terminals 50 and C.

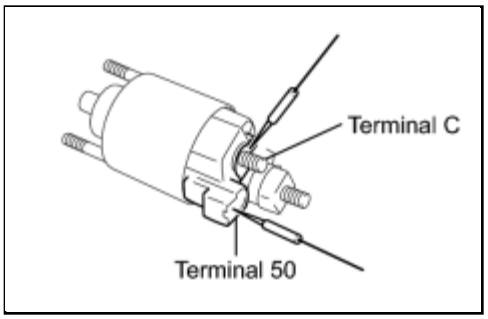

Standard Resistance:

TESTER CONNECTION	CONDITION	SPECIFIED CONDITION
Terminal 50 - Terminal C	-	Below 1 Ω

If the result is not as specified, replace the magnet starter switch assembly.

(c) Inspect the resistance of the hold-in coil.

(1) Using an ohmmeter, measure the resistance between terminal 50 and switch body.

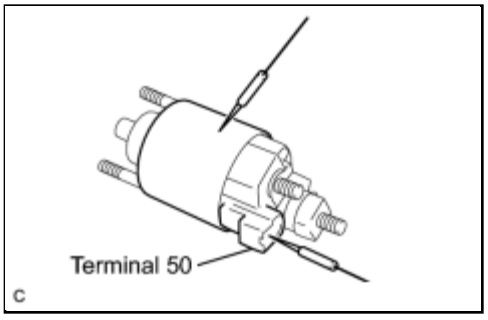

Standard Resistance:

TESTER CONNECTION	CONDITION	SPECIFIED CONDITION
Terminal 50 - Body ground	-	Below 2 Ω

If the result is not as specified, replace the magnet starter switch assembly.

3. INSPECT STARTER ARMATURE ASSEMBLY

(a) Inspect the resistance of the commutator.

(1) Using an ohmmeter, measure the resistance between any 2 segments of the commutator.

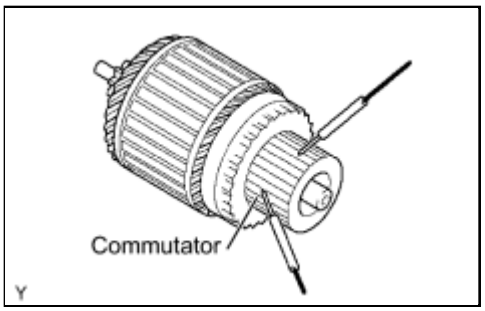

Standard Resistance:

TESTER CONNECTION	CONDITION	SPECIFIED CONDITION
Segment - Segment	-	Below 1 Ω

If the result is not as specified, replace the starter armature assembly.

(b) Check the commutator for a short to ground.

(1) Using an ohmmeter, measure the resistance between the commutator and the armature coil core.

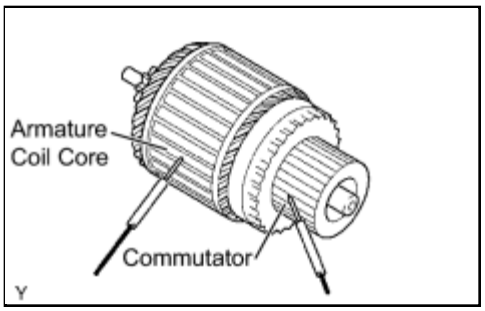

Standard Resistance:

TESTER CONNECTION	CONDITION	SPECIFIED CONDITION
Commutator - Armature	-	10 kΩ or higher

If the result is not as specified, replace the starter armature assembly.

(c) Check the appearance.

If the surface is dirty or burnt, restore the surface with sandpaper (No. 400) or on a lathe.

(d) Check the commutator circle for runout.

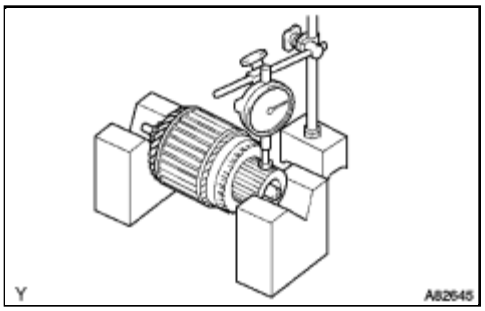

(1) Place the commutator on V-blocks.

(2) Using a dial indicator, measure the circle runout.

Standard runout:
0.02 mm (0.000787 in.)
Maximum runout:
0.05 mm (0.00197 in.)

If the runout is greater than the maximum, replace the armature assembly.

(e) Using vernier calipers, measure the commutator diameter.

Standard diameter:
29.0 mm (1.14 in.)
Minimum diameter:
28.0 mm (1.10 in.)

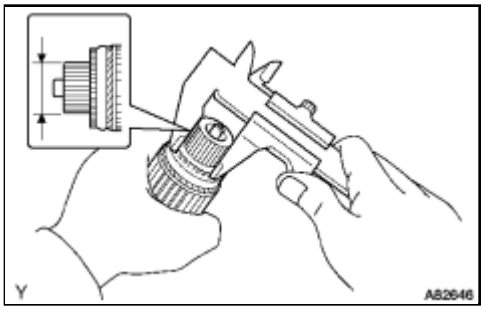

If the diameter is less than the minimum, replace the armature assembly.

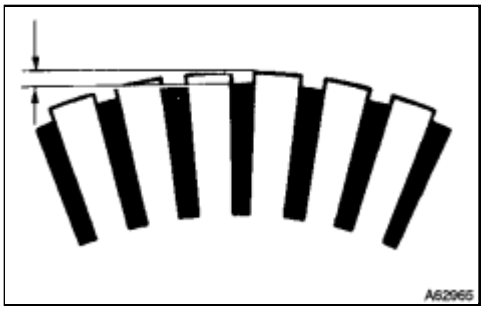

(f) Check that the undercut portion is clean and free of foreign matter. Smooth out the edge.

Standard undercut depth:
0.7 mm (0.0276 in.)
Minimum undercut depth:
0.2 mm (0.00787 in.)

If the undercut depth is less than the minimum, increase the depth using a hacksaw blade.

4. INSPECT STARTER BRUSH HOLDER ASSEMBLY

(a) Remove the claws of the springs, then remove the 4 brushes.

(b) Using a vernier caliper, measure the brush length.

Standard length:
14.4 mm (0.567 in.)
Minimum length:
9.0 mm (0.354 in.)

If the length is less than the minimum, replace the starter brush holder assembly.

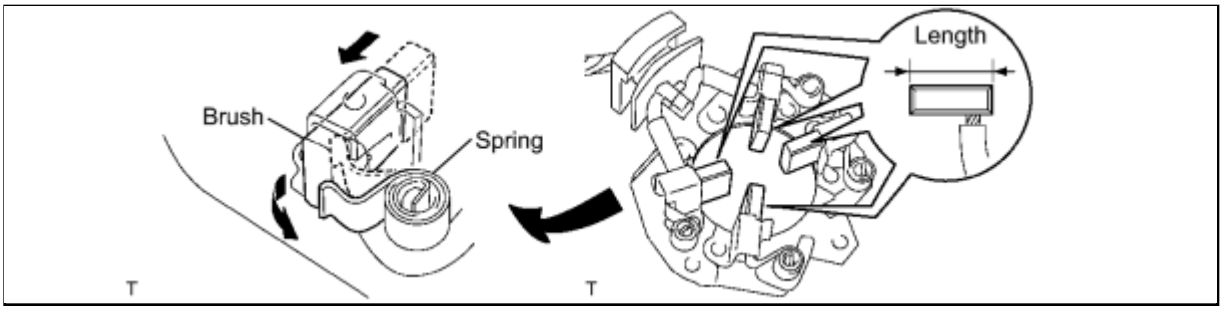

(c) Check the brush holder.

(1) Using an ohmmeter, measure the resistance between the brushes.

Standard Resistance:

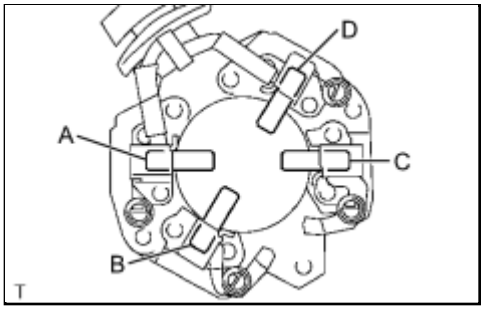

TESTER CONNECTION	CONDITION	SPECIFIED CONDITION
A - B	-	10 kΩ or higher
A - C	-	10 kΩ or higher
A - D	-	Below 1 Ω
B - C	-	Below 1 Ω
B - D	-	10 kΩ or higher
C - D	-	10 kΩ or higher

If the result is not as specified, replace the starter brush holder assembly.

5. INSPECT STARTER CENTER BEARING CLUTCH SUB-ASSEMBLY

(a) Inspect the gear teeth on the planetary gear, internal gear and starter clutch for wear or damage.

If damaged, replace the gear or clutch assembly. Also check the planetary gears for wear or damage.

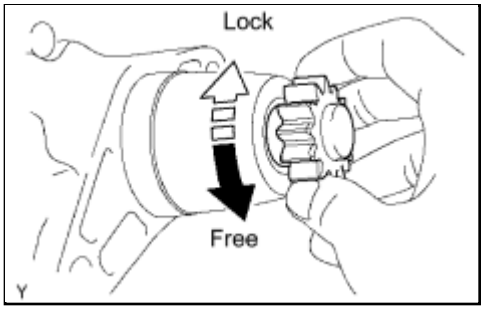

(b) Inspect the starter clutch.

(1) Rotate the clutch pinion gear clockwise and check that it turns freely. Try to rotate the clutch pinion gear counterclockwise and check that it locks.

If necessary, replace the starter center bearing clutch sub-assembly.

Last Modified: 3-10-2010	6.4 A	**From:** 200901
Model Year: 2010	**Model:** Corolla	**Doc ID:** RM000001ETL019X
Title: 2AZ-FE STARTING: STARTER: REASSEMBLY (2010 Corolla)		

REASSEMBLY

1. INSTALL PLANETARY GEAR

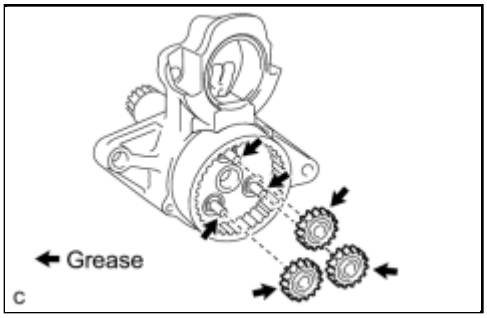

(a) Apply high-temperature grease to the planetary gears and pin parts of the planetary shaft.

(b) Install the 3 planetary gears.

2. INSTALL STARTER BRUSH HOLDER ASSEMBLY

(a) Install the brush holder.

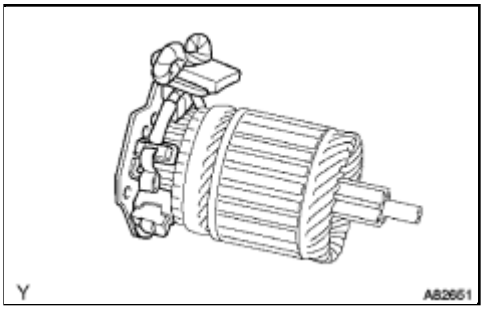

(1) Using a screwdriver, hold the brush springs back, and install the 4 brushes into the brush holder.

(2) Install the brush holder to the starter armature.

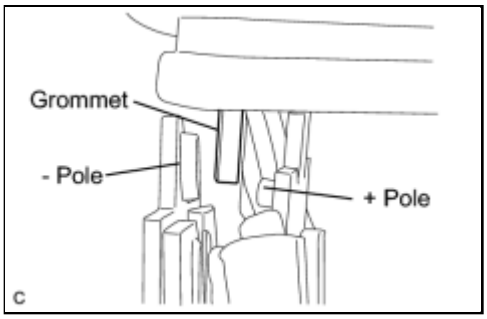

(3) Insert the grommet between the positive (+) pole and negative (-) pole.

3. INSTALL STARTER COMMUTATOR END FRAME ASSEMBLY

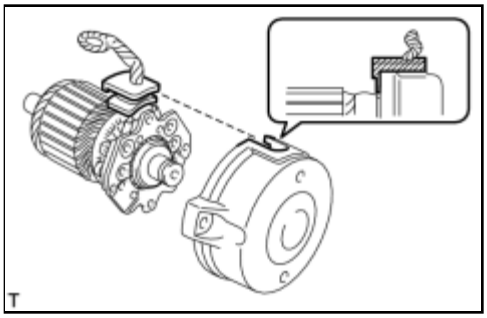

(a) Fit the clamp of the brush holder into the starter commutator end frame assembly.

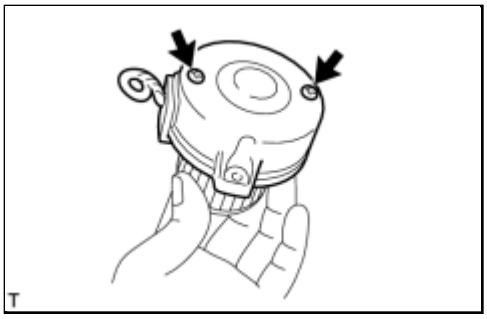

(b) Install the commutator end frame with the 2 screws.

Torque: 1.5 N·m (15 kgf·cm, 13in·lbf)

4. INSTALL STARTER ARMATURE ASSEMBLY

(a) Align the rubber with the groove of the starter yoke assembly.

(b) Install the starter armature with the brush holder onto the starter yoke assembly.

NOTICE:

The magnet of the starter yoke assembly may attract the starter armature assembly when the starter commutator end frame assembly is installed, causing the magnet to break.

HINT:

Support the starter armature so that it may not be pulled out from the starter brush holder by magnetic force of the starter yoke assembly.

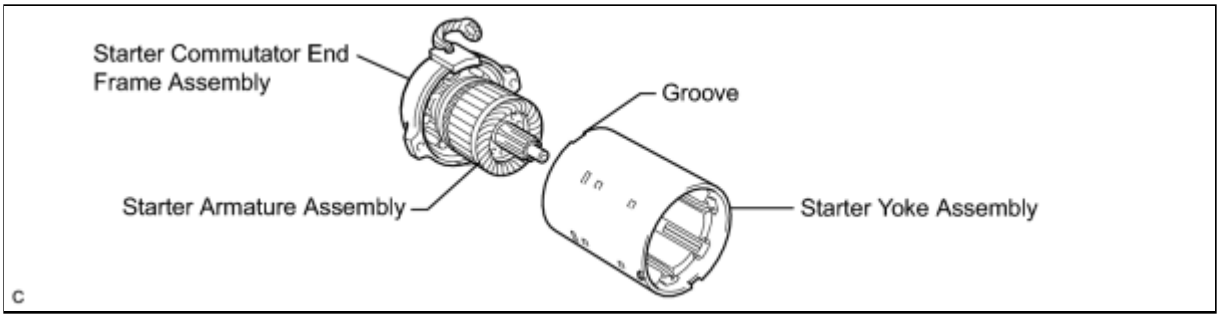

5. INSTALL STARTER ARMATURE PLATE

(a) Install the starter armature plate onto the starter yoke assembly.

(b) Install the starter plate so that the keyway is positioned between the keys.

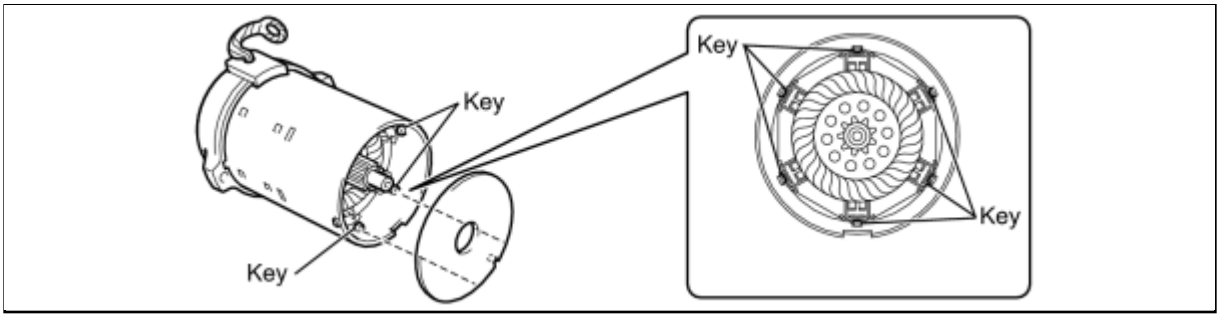

6. INSTALL STARTER COMMUTATOR END FRAME ASSEMBLY

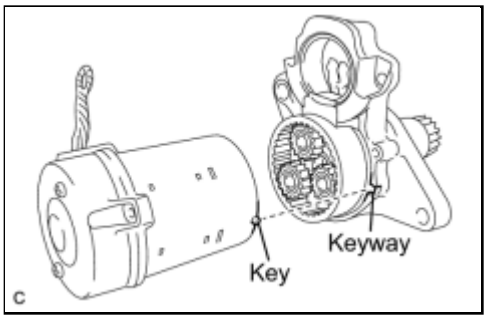

(a) Align the key of the starter yoke with the keyway located on the starter drive housing assembly.

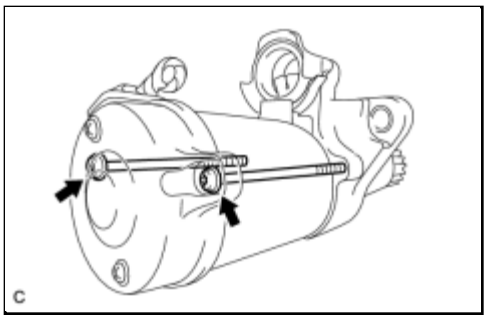

(b) Using a T25 "TORX" socket wrench, install the drive housing with the 2 bolts.

Torque: 6.0 N·m (61 kgf·cm, 53in·lbf)

7. INSTALL MAGNET STARTER SWITCH ASSEMBLY

(a) Apply high-temperature grease to the plunger hook.

(b) Hang the plunger of the magnet starter switch assembly into the drive lever from the upper side.

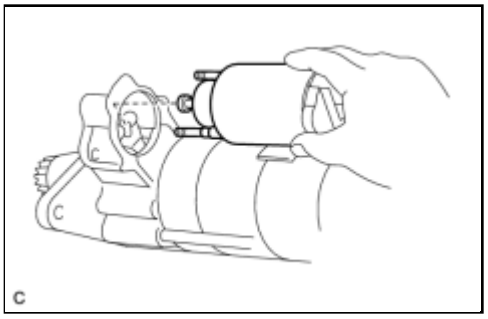

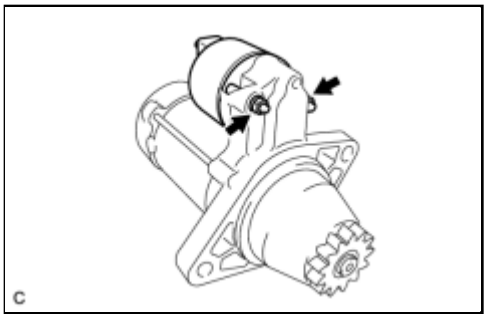

(c) Install the magnet starter switch assembly with the 2 nuts.

Torque: 7.5 N·m (77 kgf·cm, 66in·lbf)

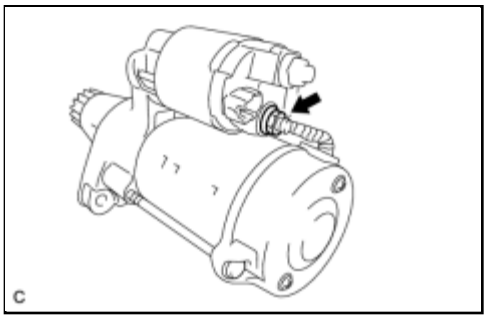

(d) Connect the lead wire to the magnet starter switch, then fasten it with the nut.

Torque: 10 N·m (102 kgf·cm, 7.4ft·lbf)

Last Modified: 3-10-2010	6.4 A	**From:** 200901
Model Year: 2010	**Model:** Corolla	**Doc ID:** RM0000025TY00TX
Title: 2AZ-FE STARTING: STARTER: INSTALLATION (2010 Corolla)		

INSTALLATION

1. INSTALL STARTER ASSEMBLY (for Manual Transaxle)

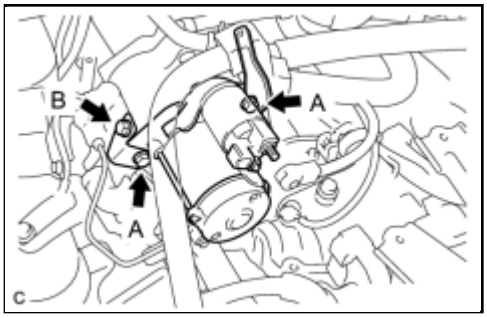

(a) Install the starter assembly, clutch accumulator bracket and wire harness clamp bracket with the 3 bolts.

Bolt A - Torque: 37 N·m (377 kgf·cm, 27ft·lbf)
Bolt B - Torque: 12 N·m (120 kgf·cm, 9ft·lbf)

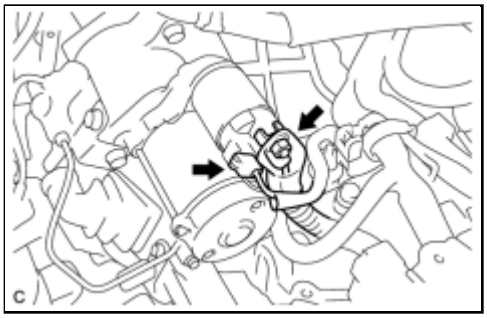

(b) Connect the wire harness to terminal 30 and install the nut. Then, attach the terminal cap.

Torque: 9.8 N·m (100 kgf·cm, 87in·lbf)

(c) Connect the terminal 50 connector to the starter assembly.

2. INSTALL STARTER ASSEMBLY (for Automatic Transaxle)

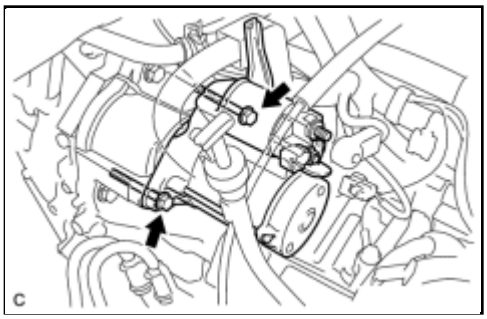

(a) Install the starter assembly and wire harness clamp bracket with the 2 bolts.

Torque: 37 N·m (377 kgf·cm, 27ft·lbf)

(b) Connect the wire harness to terminal 30 and install the nut. Then, attach the terminal cap.

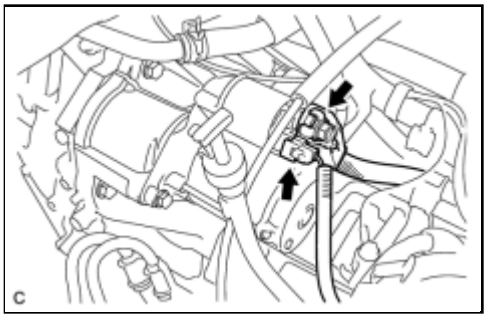

Torque: 9.8 N·m (100 kgf·cm, 87in·lbf)

(c) Connect the terminal 50 connector to the starter assembly.

3. INSTALL BATTERY CARRIER INFO

4. INSTALL BATTERY INFO

5. INSTALL WIRE HARNESS



(a) Install the claw and wire harness.

6. INSTALL AIR CLEANER CASE INFO

7. INSTALL AIR CLEANER CAP SUB-ASSEMBLY WITH HOSE INFO

8. INSTALL NO. 1 ENGINE COVER SUB-ASSEMBLY INFO

9. CONNECT CABLE TO NEGATIVE BATTERY TERMINAL

HINT: INFO .

Last Modified: 3-10-2010	6.4 K	**From:** 200901
Model Year: 2010	**Model:** Corolla	**Doc ID:** RM0000034TB007X
Title: 2ZR-FE STARTING: STARTER: COMPONENTS (2010 Corolla)		

COMPONENTS

ILLUSTRATION

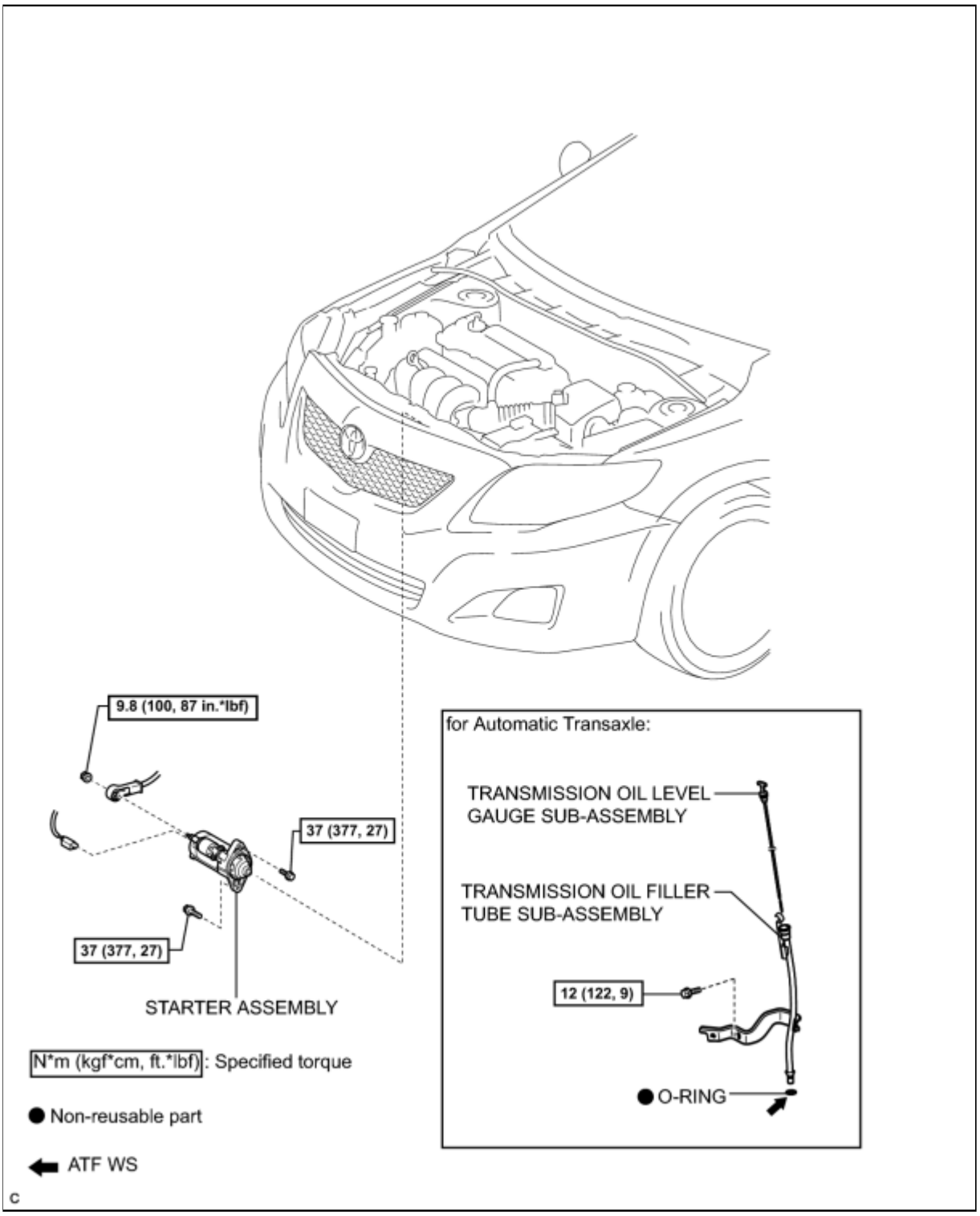

ILLUSTRATION

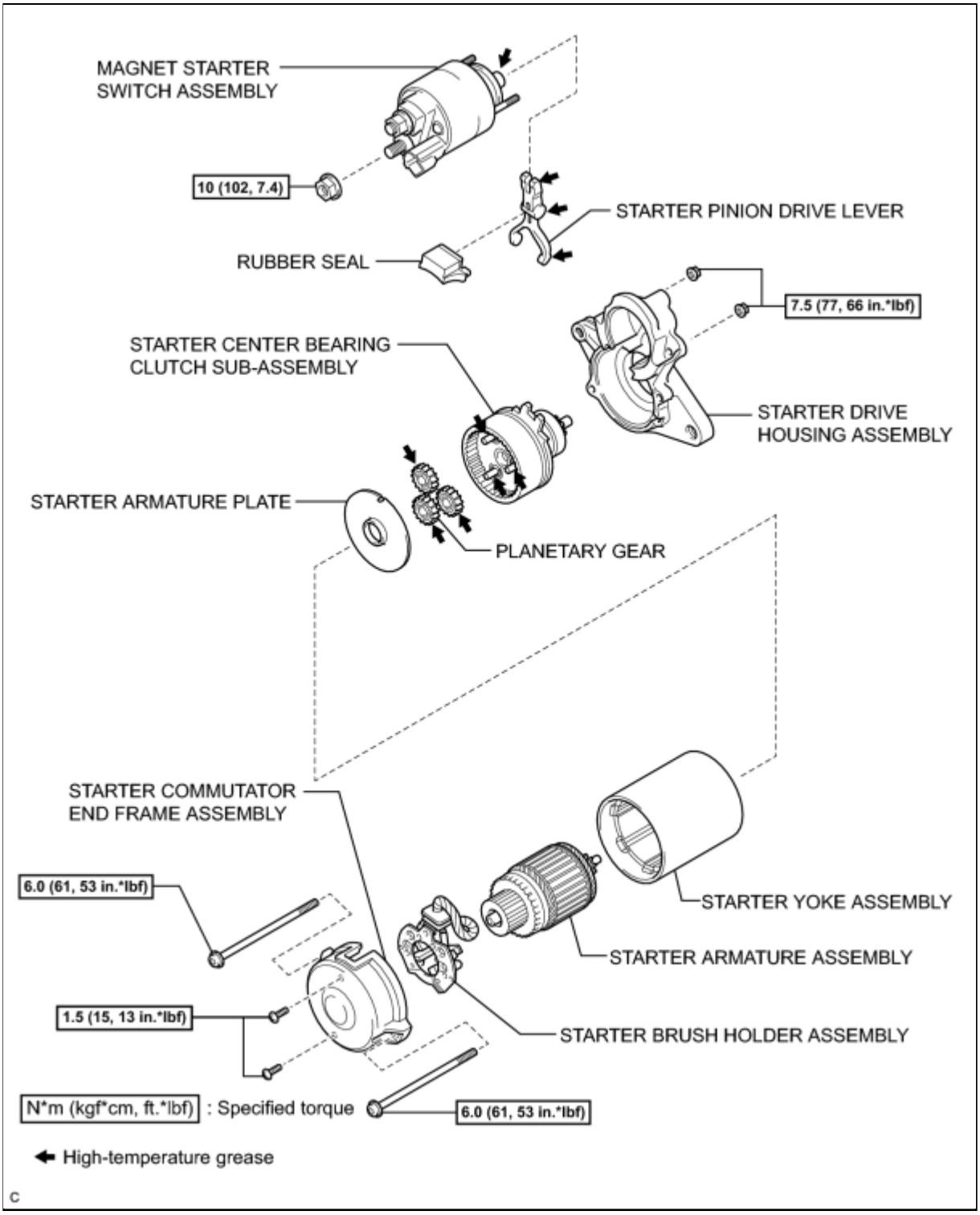

Last Modified: 3-10-2010	6.4 A	**From:** 200901
Model Year: 2010	**Model:** Corolla	**Doc ID:** RM0000034TD00BX
Title: 2ZR-FE STARTING: STARTER: DISASSEMBLY (2010 Corolla)		

DISASSEMBLY

1. REMOVE MAGNET STARTER SWITCH ASSEMBLY

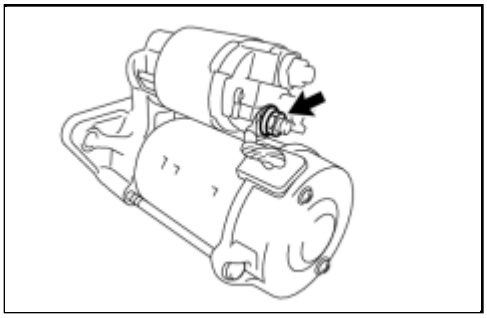

(a) Remove the nut, then disconnect the lead wire from the magnet starter switch assembly.

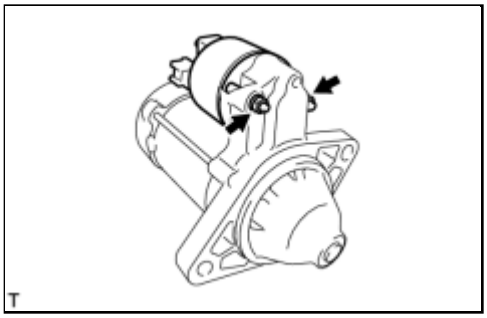

(b) Remove the 2 nuts from the starter drive housing assembly while holding the magnet starter switch assembly.

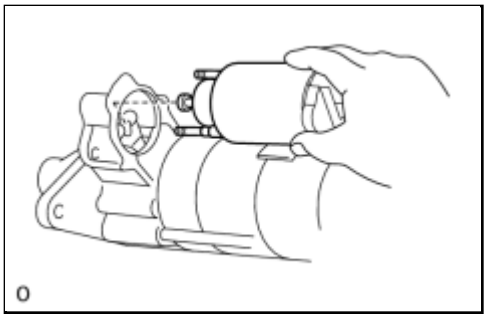

(c) Pull the magnet starter switch assembly, and while lifting the front part of the magnet starter switch assembly, release the plunger hook from the drive lever and magnet starter switch assembly.

2. REMOVE STARTER COMMUTATOR END FRAME ASSEMBLY

(a) Using a T25 "TORX" socket wrench, remove the 2 bolts.

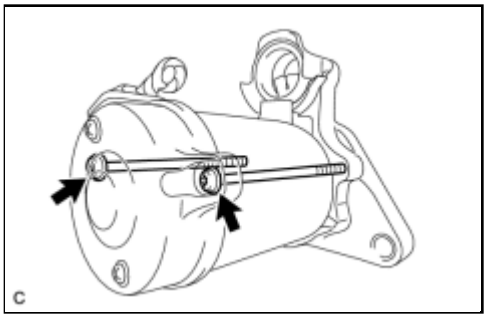

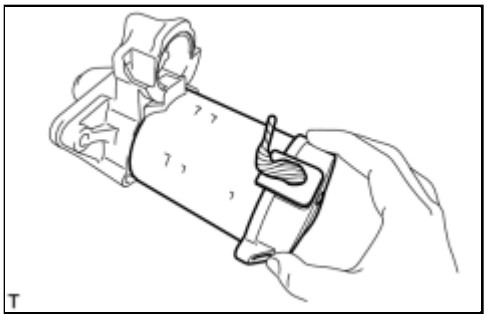

(b) Pull out the starter yoke together with the starter commutator end frame assembly.

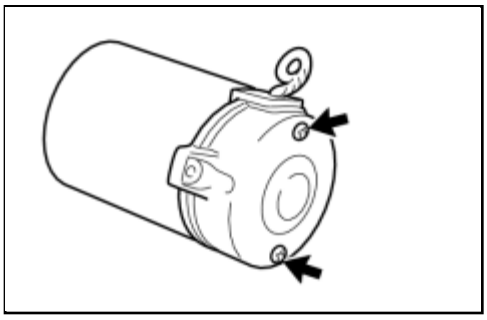

(c) Remove the 2 screws from the starter commutator end frame assembly.

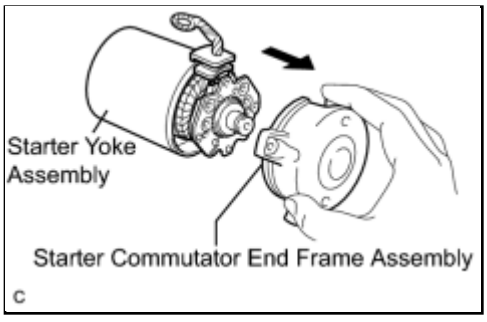

(d) Pull the starter yoke assembly out of the starter commutator end frame assembly.

NOTICE:

While holding down the lead wire, remove the starter commutator end frame.

3. REMOVE STARTER ARMATURE ASSEMBLY

(a) Using a screwdriver, hold the spring back and disconnect

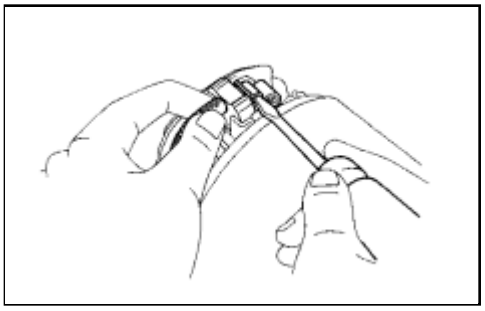

the brush from the brush holder.

(b) Disconnect the 4 brushes, and remove the brush holder.

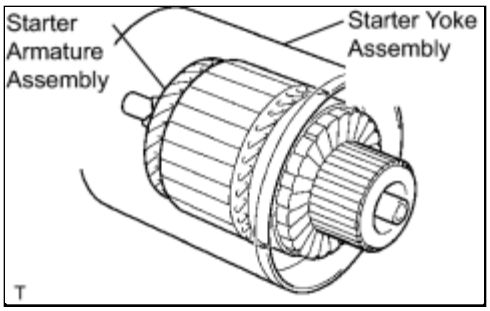

(c) Remove the starter armature assembly from the starter yoke assembly.

4. REMOVE STARTER ARMATURE PLATE

(a) Remove the armature plate from the starter drive housing assembly or the starter yoke assembly.

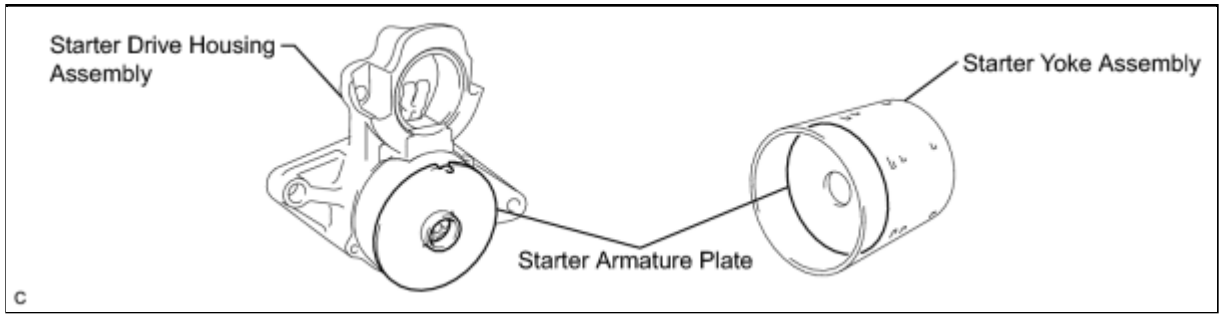

5. REMOVE PLANETARY GEAR

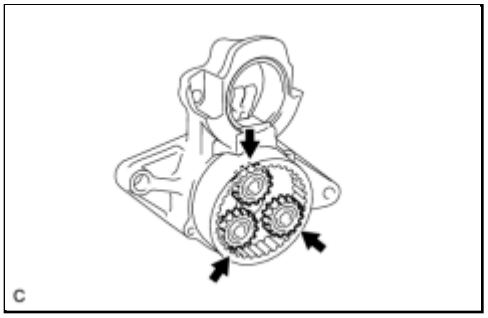

(a) Remove the 3 planetary gears from the starter center bearing clutch sub-assembly.

6. REMOVE STARTER CENTER BEARING CLUTCH SUB-ASSEMBLY

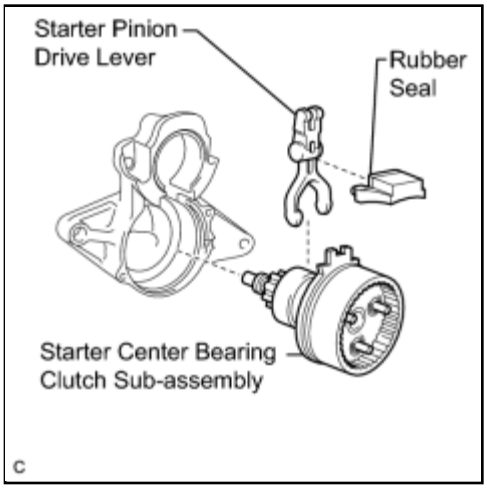

(a) Remove the starter center bearing clutch sub-assembly with starter pinion drive lever from the starter drive housing assembly.

(b) Remove the starter center bearing clutch sub-assembly, rubber seal, and the starter pinion drive lever.

Last Modified: 3-10-2010	6.4 A	**From:** 200901
Model Year: 2010	**Model:** Corolla	**Doc ID:** RM0000034TC007X
Title: 2ZR-FE STARTING: STARTER: REMOVAL (2010 Corolla)		

REMOVAL

1. DISCONNECT CABLE FROM NEGATIVE BATTERY TERMINAL

2. REMOVE TRANSMISSION OIL FILLER TUBE SUB-ASSEMBLY (for Automatic Transaxle)

HINT: INFO .

3. REMOVE STARTER ASSEMBLY

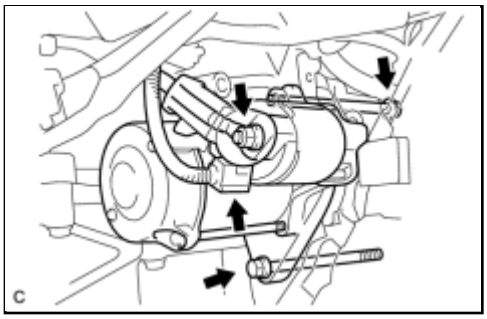

(a) Remove the terminal cap.

(b) Remove the nut and disconnect terminal 30.

(c) Disconnect the connector.

(d) Remove the 2 bolts and starter assembly.

Last Modified: 3-10-2010	6.4 G	**From:** 200901
Model Year: 2010	**Model:** Corolla	**Doc ID:** RM0000034TA007X
Title: 2ZR-FE STARTING: STARTER: INSPECTION (2010 Corolla)		

INSPECTION

1. INSPECT STARTER ASSEMBLY

NOTICE:

Perform each of the following tests within 3 to 5 seconds.

(a) Perform a pull-in test.

(1) Disconnect the field coil lead wire from terminal C.

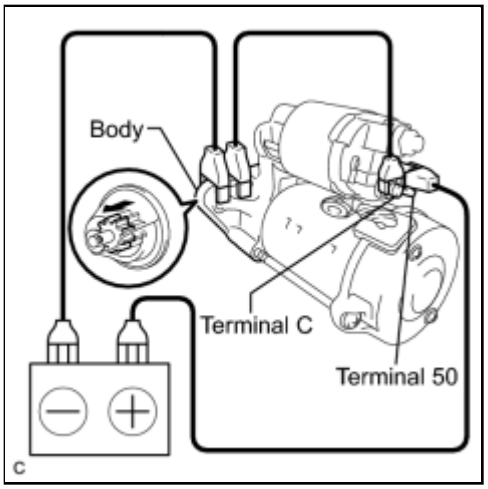

(2) Connect the battery to the magnet starter switch as shown in the illustration and check that the pinion gear moves outward.

If the clutch pinion gear does not move, replace the magnet switch assembly.

(b) Perform a hold-in test.

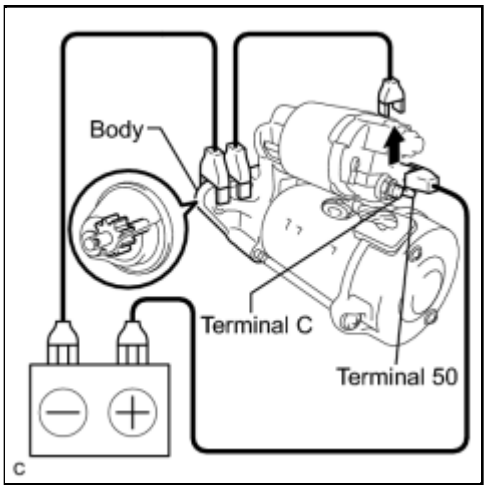

(1) Check that the pinion gear does not return inward after the cable is disconnected from terminal C.

If the clutch pinion gear returns inward, replace the magnet starter switch assembly.

(c) Inspect the clutch pinion gear return.

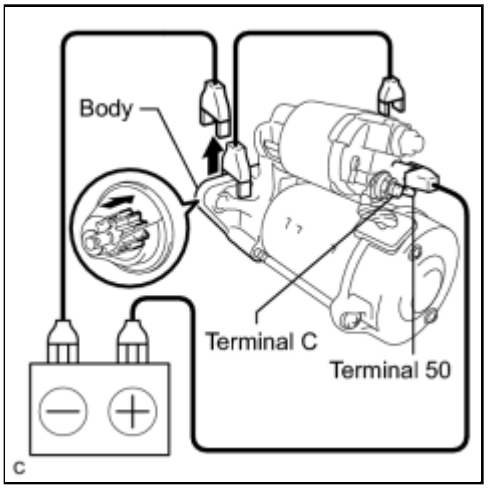

(1) Disconnect the negative (-) lead from the switch body.

Check that the pinion gear moves inward.

If the clutch pinion gear does not return inward, replace the magnet starter switch assembly.

(d) Perform an operation test without load.

(1) Connect the lead wire to terminal C.

Torque: 10 N·m (102 kgf·cm, 7.4ft·lbf)

(2) Clamp the starter in a vise.

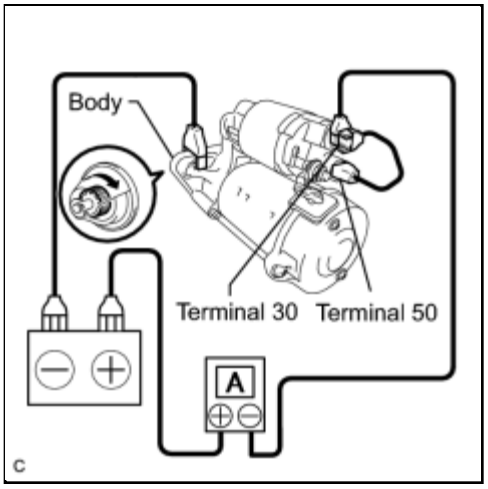

(3) Connect the battery and ammeter to the starter as shown in the illustration.

(4) Check that the starter rotates smoothly and steadily with the clutch pinion gear extended.

Check that the ammeter indicates the specified current.

Standard Current:

TESTER CONNECTION	CONDITION	SPECIFIED CONDITION
Battery positive terminal - Terminal 30 - Terminal 50	11.5 V	Below 90 A

2. INSPECT MAGNET STARTER SWITCH ASSEMBLY

(a) Check the plunger.

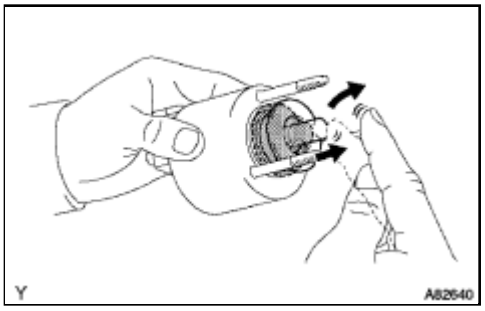

(1) Push in the plunger, then check that it returns quickly to its original position.

If necessary, replace the magnet starter switch assembly.

(b) Inspect the resistance of the pull-in coil.

(1) Using an ohmmeter, measure the resistance between terminals 50 and C.

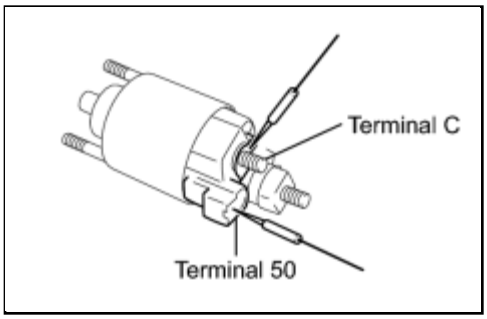

Standard Resistance:

TESTER CONNECTION	CONDITION	SPECIFIED CONDITION
Terminal 50 - Terminal C	-	Below 1 Ω

If the result is not as specified, replace the magnet starter switch assembly.

(c) Inspect the resistance of the hold-in coil.

(1) Using an ohmmeter, measure the resistance between terminal 50 and switch body.

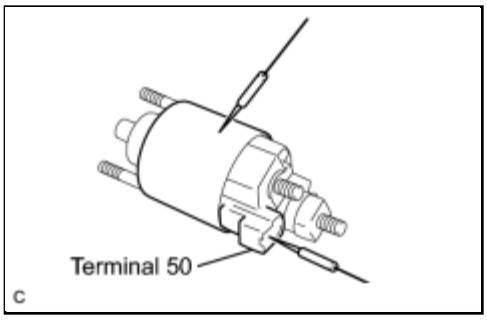

Standard Resistance:

TESTER CONNECTION	CONDITION	SPECIFIED CONDITION
Terminal 50 - Body ground	-	Below 2 Ω

If the result is not as specified, replace the magnet starter switch assembly.

3. INSPECT STARTER ARMATURE ASSEMBLY

(a) Inspect the resistance of the commutator.

(1) Using an ohmmeter, measure the resistance between any 2 segments of the commutator.

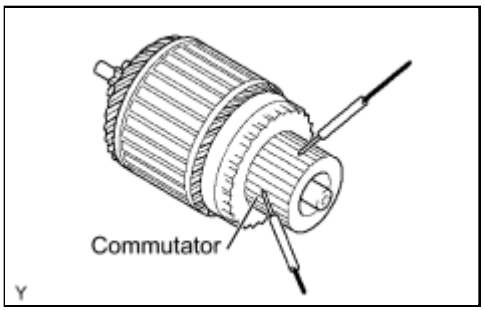

Standard Resistance:

TESTER CONNECTION	CONDITION	SPECIFIED CONDITION
Segment - Segment	-	Below 1 Ω

If the result is not as specified, replace the starter armature assembly.

(b) Check the commutator for a short to ground.

(1) Using an ohmmeter, measure the resistance between the commutator and the armature coil core.

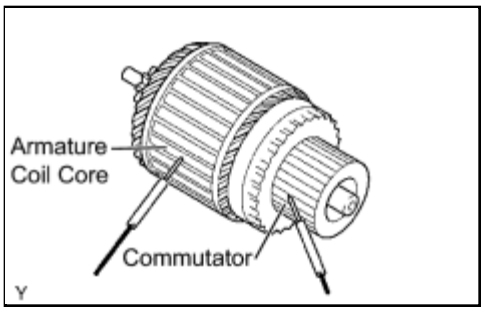

Standard Resistance:

TESTER CONNECTION	CONDITION	SPECIFIED CONDITION
Commutator - Armature	-	10 kΩ or higher

If the result is not as specified, replace the starter armature assembly.

(c) Check the appearance.

(1) If the surface is dirty or burnt, restore the surface with sandpaper (No. 400) or on a lathe.

(d) Check the commutator circuit for runout.

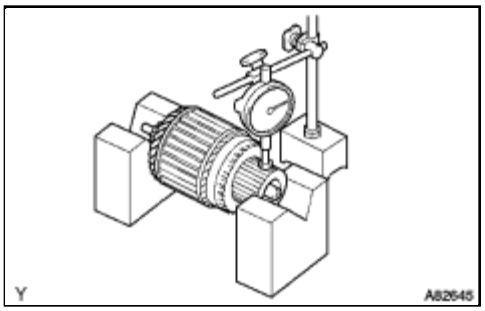

(1) Place the commutator on V-blocks.

(2) Using a dial indicator, measure the circle runout.

Standard runout:
0.02 mm (0.000787 in.)
Maximum runout:
0.05 mm (0.00197 in.)

If the runout is greater than the maximum, replace the armature assembly.

(e) Using a vernier caliper, measure the commutator diameter.

Standard diameter:
29 mm (1.14 in.)
Minimum diameter:
28 mm (1.10 in.)

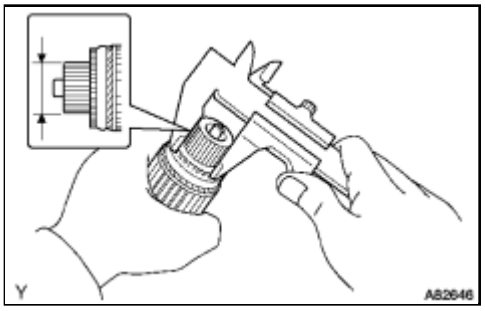

If the diameter is less than the minimum, replace the armature.

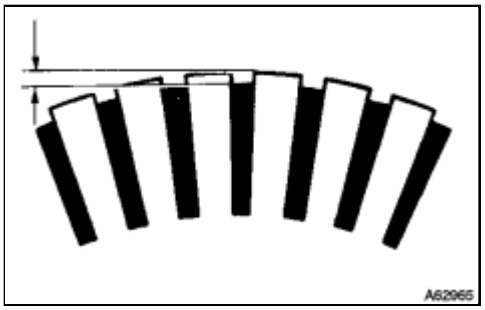

(f) Check that the undercut portion is clean and free of foreign matter. Smooth out the edges.

Standard undercut depth:
0.7 mm (0.0276 in.)
Minimum undercut depth:
0.2 mm (0.00787 in.)

If the undercut depth is less than the minimum, increase the depth using a hacksaw blade.

4. INSPECT STARTER BRUSH HOLDER ASSEMBLY

(a) Remove the claw of the spring, then remove the 4 brushes.

(b) Using a vernier caliper, measure the brush length.

Standard length:
14.4 mm (0.567 in.)
Minimum length:
9.0 mm (0.354 in.)

If the length is less than the minimum, replace the starter brush holder assembly.

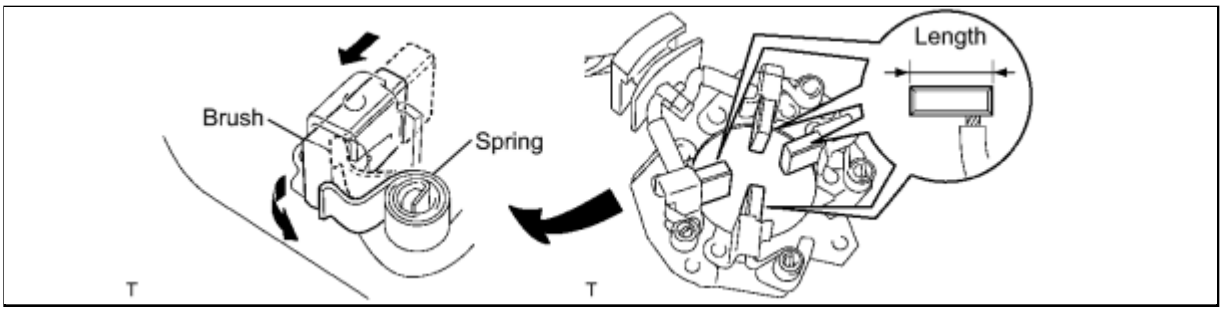

(c) Check the brush holder.

(1) Using an ohmmeter, measure the resistance between the brushes.

Standard Resistance:

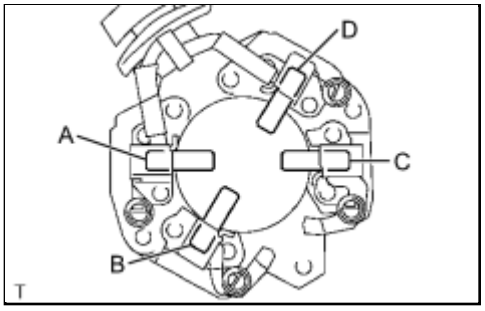

TESTER CONNECTION	CONDITION	SPECIFIED CONDITION
A - B	-	10 kΩ or higher
A - C	-	10 kΩ or higher
A - D	-	Below 1 Ω
B - C	-	Below 1 Ω
B - D	-	10 kΩ or higher
C - D	-	10 kΩ or higher

If the result is not as specified, replace the starter brush holder assembly.

5. INSPECT STARTER CENTER BEARING CLUTCH SUB-ASSEMBLY

(a) Inspect the gear teeth on the planetary gear, internal gear and starter clutch for wear or damage.

If damaged, replace the gear or clutch assembly. Also check the planetary gears for wear or damage.

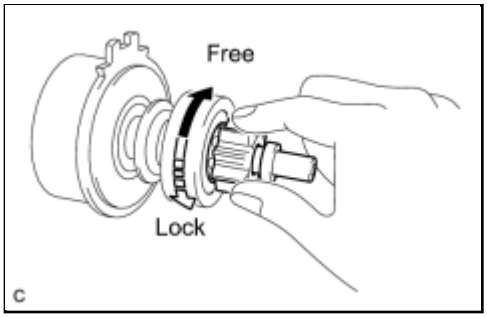

(b) Inspect the starter clutch.

(1) Rotate the clutch pinion gear clockwise and check that it turns freely. Try to rotate the clutch pinion gear counterclockwise and check that it locks.

If necessary, replace the starter center bearing clutch sub-assembly.

Last Modified: 3-10-2010	6.4 A	**From:** 200901
Model Year: 2010	**Model:** Corolla	**Doc ID:** RM0000034TE00BX
Title: 2ZR-FE STARTING: STARTER: REASSEMBLY (2010 Corolla)		

REASSEMBLY

1. INSTALL STARTER CENTER BEARING CLUTCH SUB-ASSEMBLY

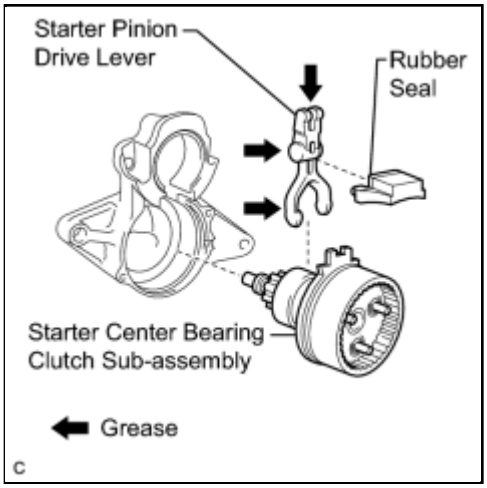

(a) Apply high-temperature grease to the parts of the starter pinion drive lever that contact the starter pivot part of the starter pinion drive lever.

(b) Install the starter pinion drive lever and rubber seal into the starter center bearing clutch sub-assembly.

(c) Install the starter center bearing clutch together with the starter pinion drive lever into the starter drive housing assembly.

2. INSTALL PLANETARY GEAR

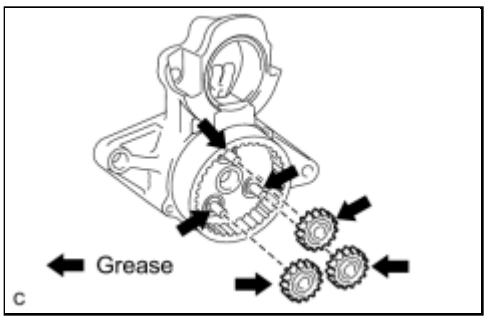

(a) Apply high-temperature grease to the planetary gears and pin parts of the planetary shaft.

(b) Install the 3 planetary gears.

3. INSTALL STARTER BRUSH HOLDER ASSEMBLY

(a) Install the brush holder.

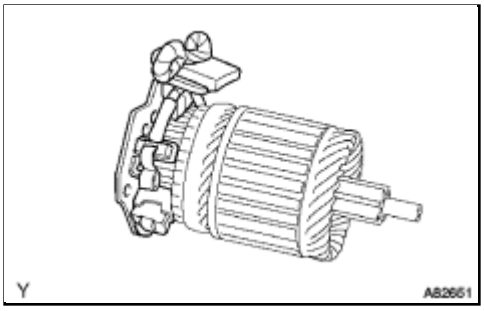

(1) Using a screwdriver, hold the brush springs back, and install the 4 brushes into the brush holder.

(2) Install the brush holder to the starter armature.

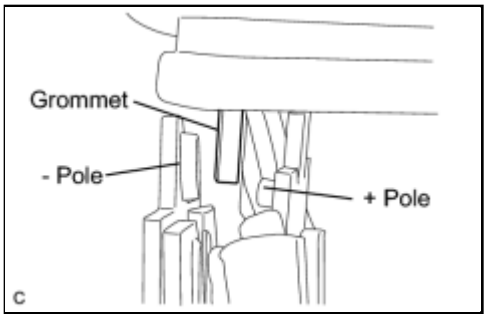

(3) Insert the grommet between the positive (+) pole and negative (-) pole.

4. INSTALL STARTER COMMUTATOR END FRAME ASSEMBLY

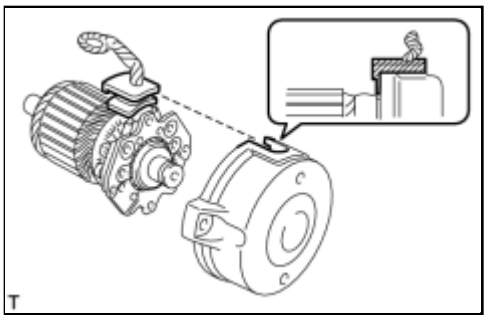

(a) Fit the clamp of the brush holder into the starter commutator end frame assembly.

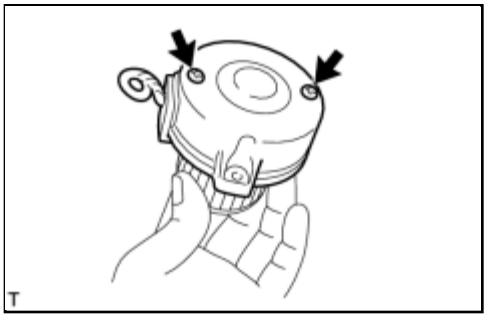

(b) Install the commutator end frame with the 2 screws.

Torque: 1.5 N·m (15 kgf·cm, 13in·lbf)

5. INSTALL STARTER ARMATURE ASSEMBLY

(a) Align the rubber with the groove of the starter yoke assembly.

(b) Install the starter armature with the brush holder onto the starter yoke assembly.

NOTICE:

The magnet of the starter yoke assembly may attract the starter armature assembly when the starter commutator end frame assembly is installed, causing the magnet to break.

HINT:

Support the starter armature so that it may not be pulled out from the starter brush holder by magnetic force of the starter yoke assembly.

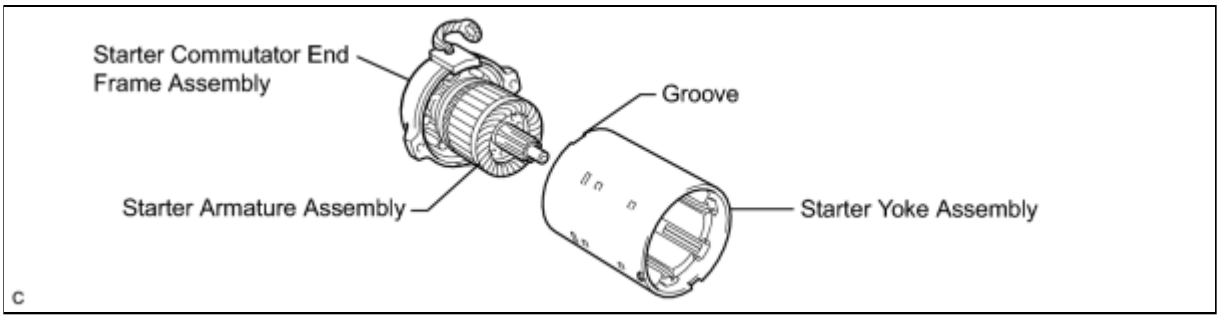

6. INSTALL STARTER ARMATURE PLATE

(a) Install the starter armature plate onto the starter yoke assembly.

(b) Install the starter plate so that the keyway is positioned between the keys.

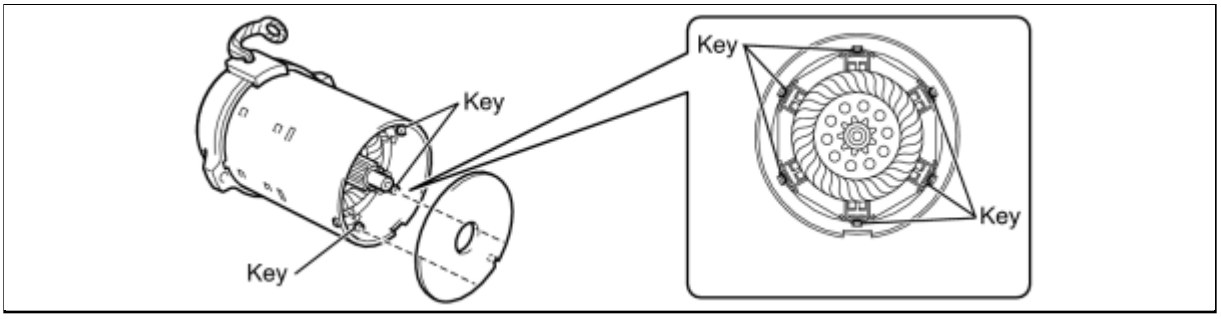

7. INSTALL STARTER COMMUTATOR END FRAME ASSEMBLY

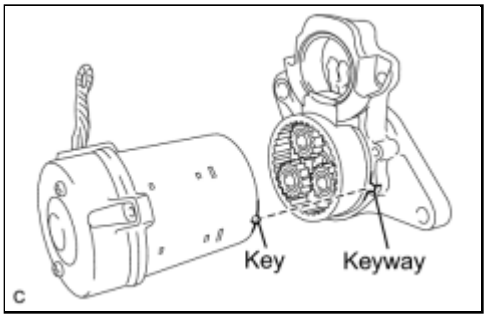

(a) Align the key of the starter yoke with the keyway located on the starter drive housing assembly.

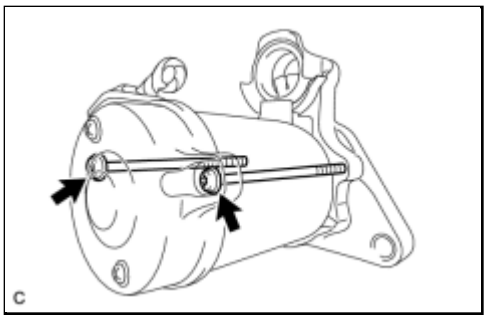

(b) Using a T25 "TORX" socket wrench, install the drive housing with the 2 bolts.

Torque: 6.0 N·m (61 kgf·cm, 53in·lbf)

8. INSTALL MAGNET STARTER SWITCH ASSEMBLY

(a) Apply high-temperature grease to the plunger hook.

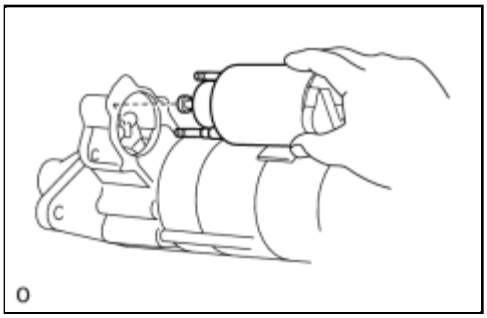

(b) Hang the plunger of the magnet starter switch assembly into the drive lever from the upper side.

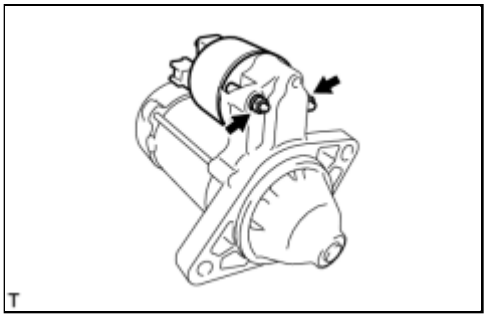

(c) Install the magnet starter switch assembly with the 2 nuts.

Torque: 7.5 N·m (77 kgf·cm, 66in·lbf)

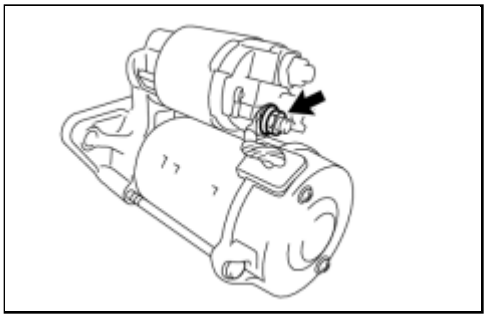

(d) Connect the lead wire to the magnet starter switch, then fasten it with the nut.

Torque: 10 N·m (102 kgf·cm, 7.4ft·lbf)

Last Modified: 3-10-2010	6.4 A	**From:** 200901
Model Year: 2010	**Model:** Corolla	**Doc ID:** RM0000034T9007X
Title: 2ZR-FE STARTING: STARTER: INSTALLATION (2010 Corolla)		

INSTALLATION

1. INSTALL STARTER ASSEMBLY

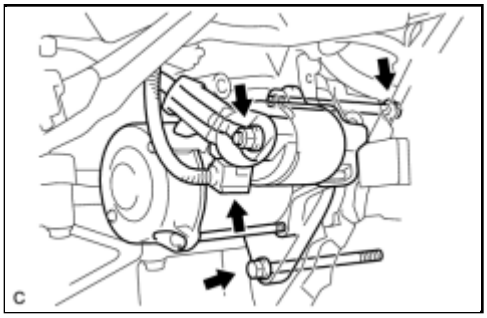

(a) Install the starter assembly with the 2 bolts.

Torque: 37 N·m (377 kgf·cm, 27ft·lbf)

(b) Connect the connector.

(c) Connect terminal 30 with the nut.

Torque: 9.8 N·m (100 kgf·cm, 87in·lbf)

(d) Close the terminal cap.

2. INSTALL TRANSMISSION OIL FILLER TUBE SUB-ASSEMBLY (for Automatic Transaxle)

HINT: INFO .

3. CONNECT CABLE TO NEGATIVE BATTERY TERMINAL

HINT: INFO .

Last Modified: 3-10-2010	6.4 R	**From:** 200901
Model Year: 2010	**Model:** Corolla	**Doc ID:** RM000002DR2008X
Title: 2AZ-FE STARTING: STARTING SYSTEM: PARTS LOCATION (2010 Corolla)		

PARTS LOCATION

ILLUSTRATION

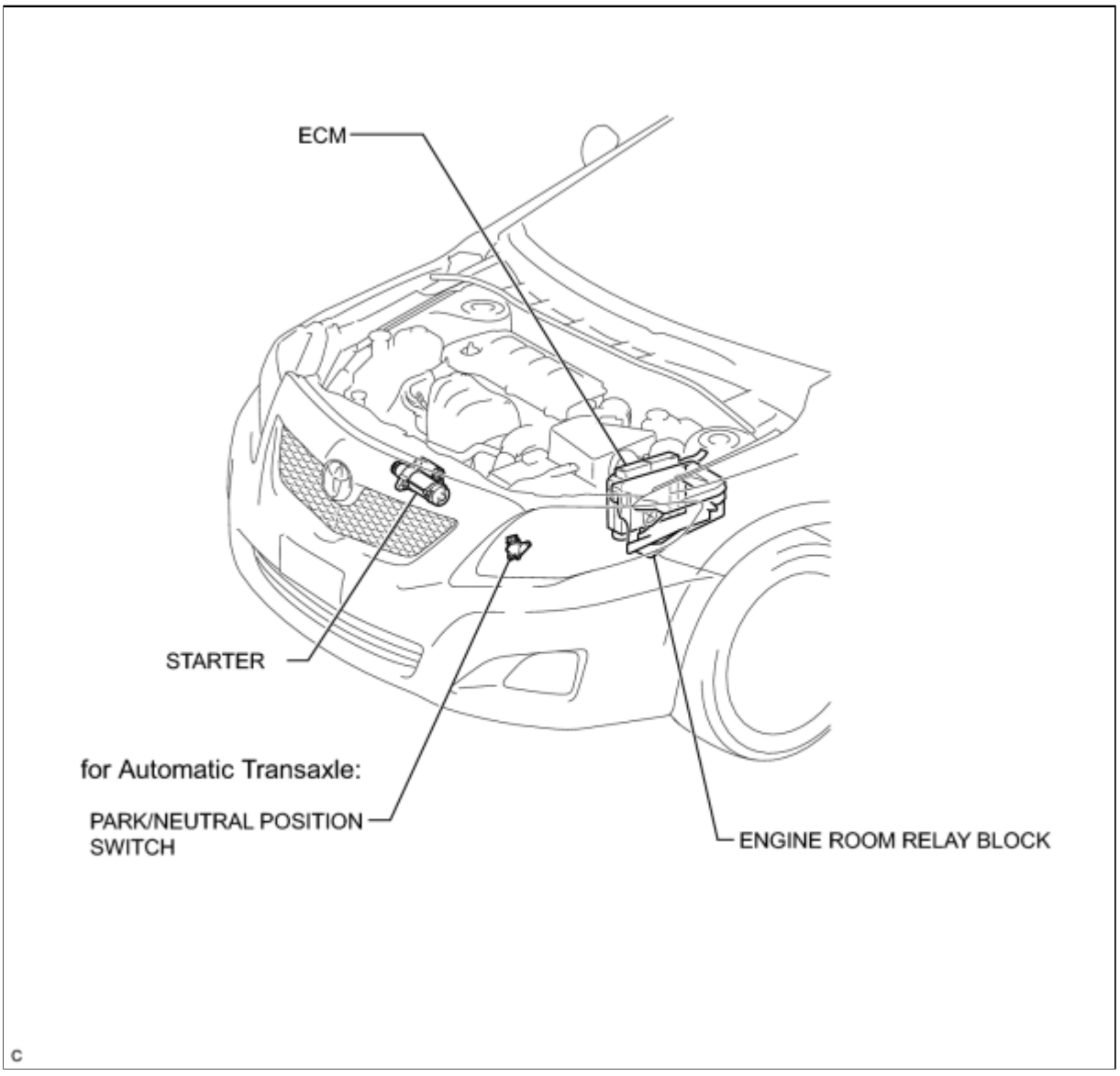

ILLUSTRATION

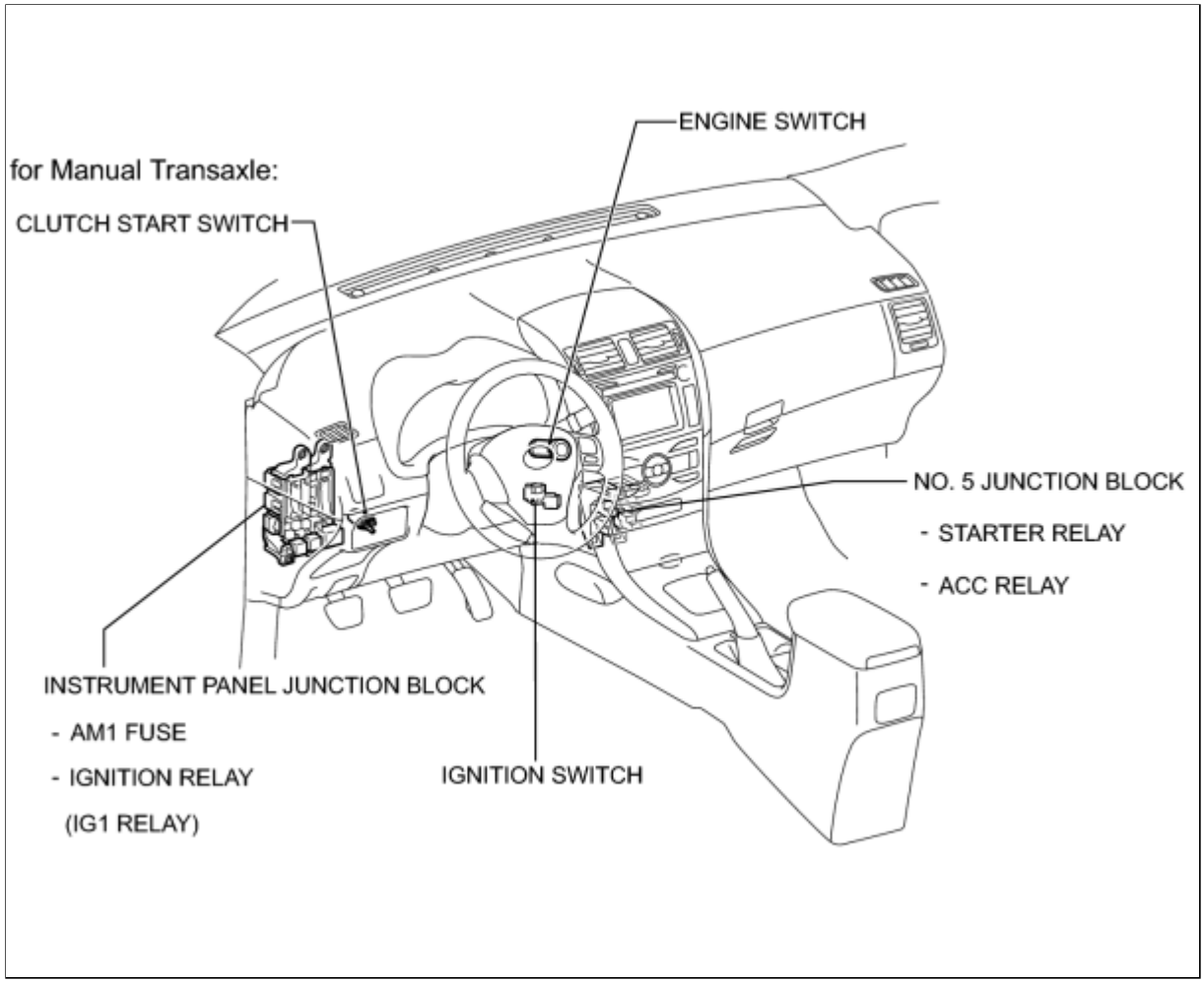
for Manual Transaxle:
CLUTCH START SWITCH
ENGINE SWITCH
NO. 5 JUNCTION BLOCK
- STARTER RELAY
- ACC RELAY
INSTRUMENT PANEL JUNCTION BLOCK
- AM1 FUSE
- IGNITION RELAY
(IG1 RELAY)
IGNITION SWITCH

Last Modified: 3-10-2010	6.4 U	**From:** 200901
Model Year: 2010	**Model:** Corolla	**Doc ID:** RM000003GH6006X
Title: 2AZ-FE STARTING: STARTING SYSTEM: SYSTEM DIAGRAM (2010 Corolla)		

SYSTEM DIAGRAM

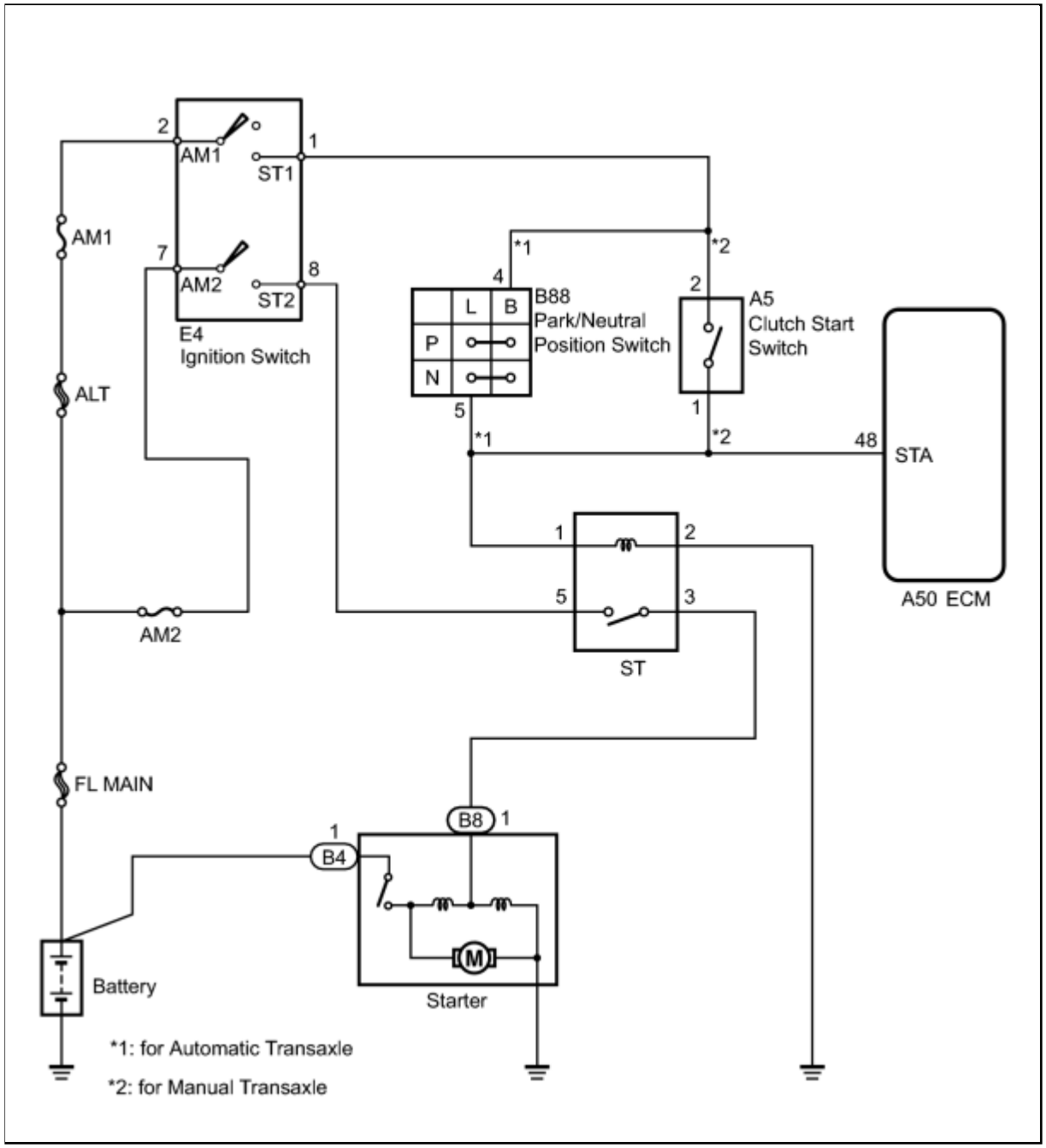

Last Modified: 3-10-2010	6.4 R	**From:** 200901
Model Year: 2010	**Model:** Corolla	**Doc ID:** RM0000034T7007X
Title: 2ZR-FE STARTING: STARTING SYSTEM: PARTS LOCATION (2010 Corolla)		

PARTS LOCATION

ILLUSTRATION

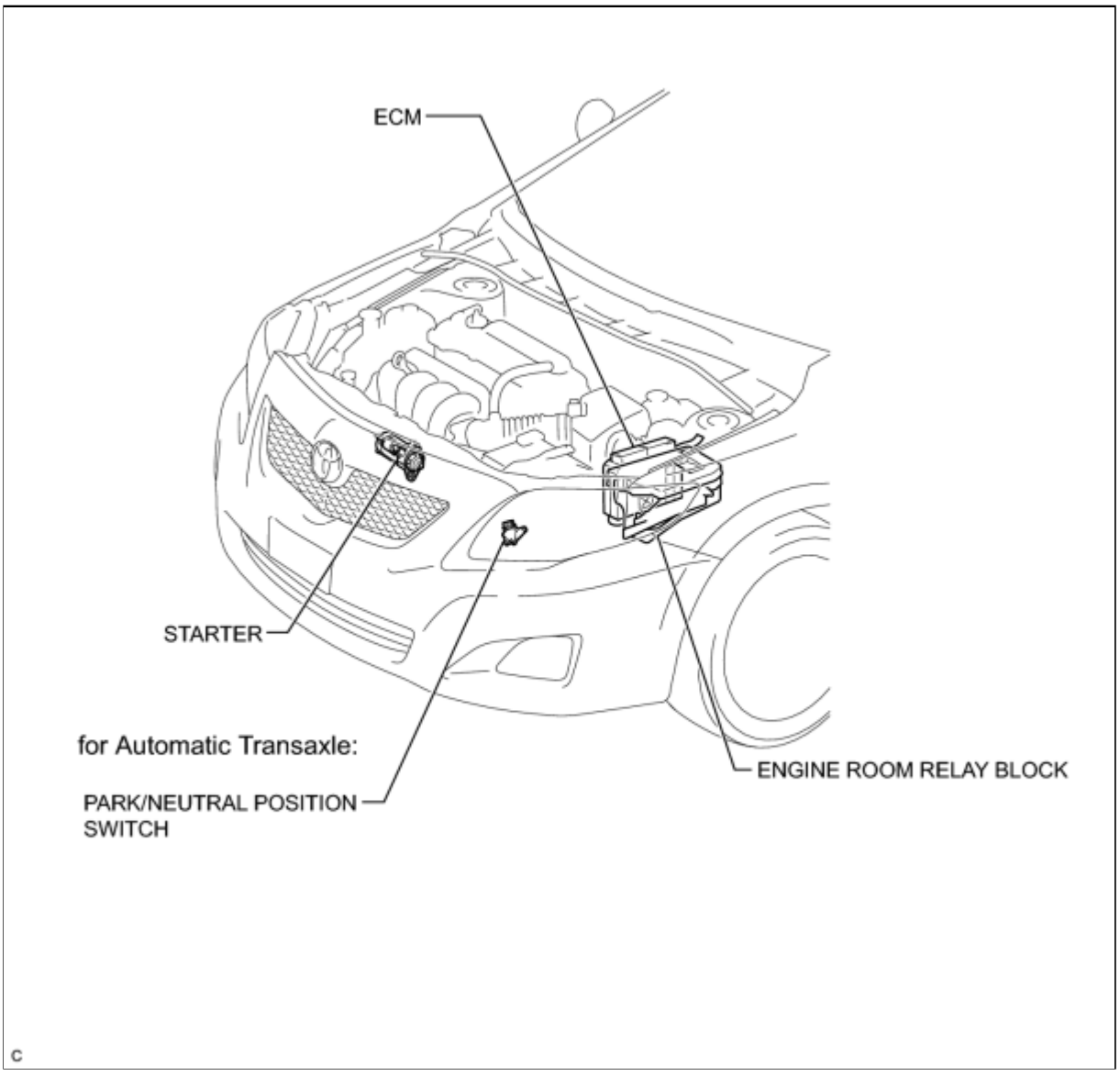

ILLUSTRATION

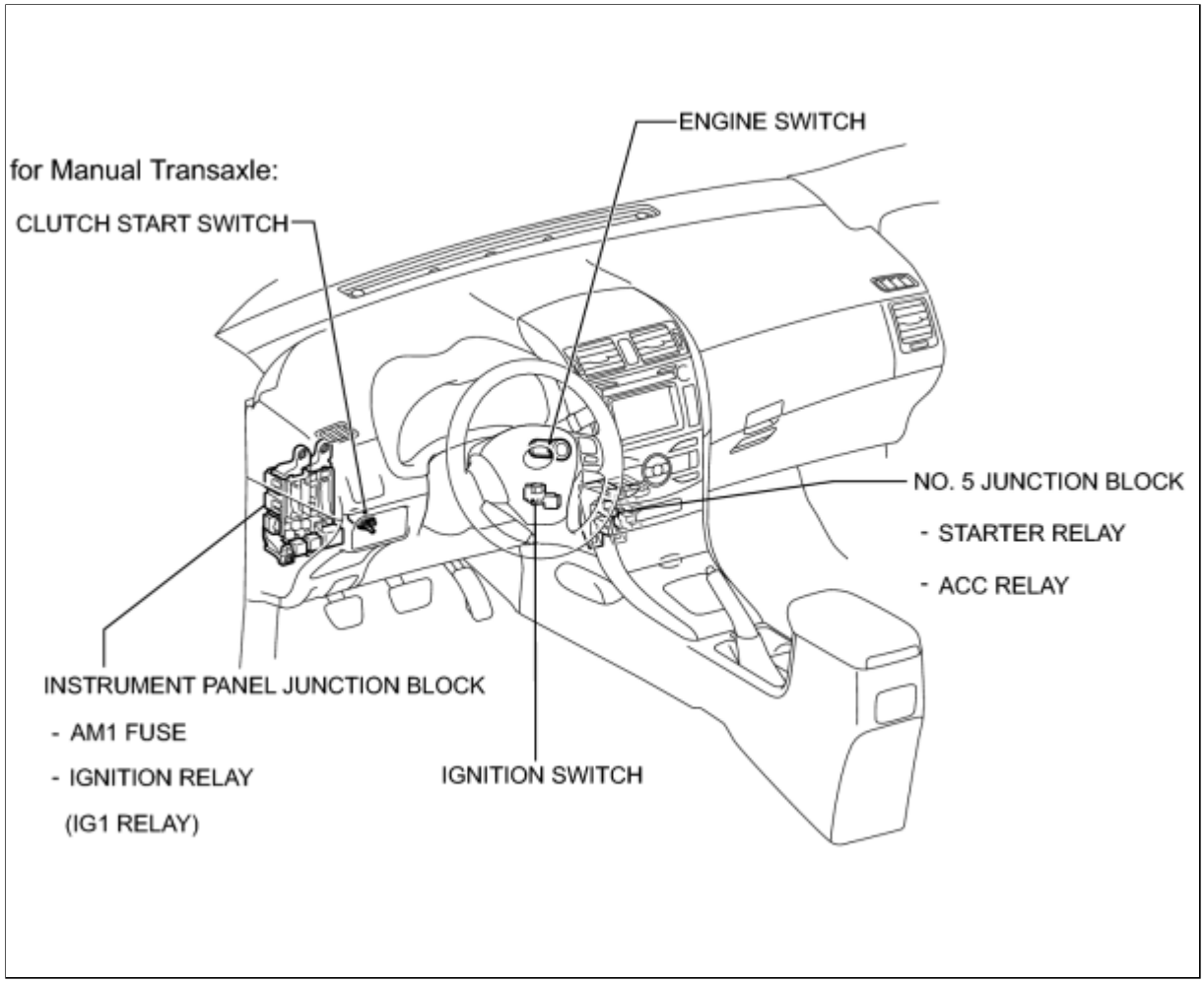
for Manual Transaxle:
CLUTCH START SWITCH
ENGINE SWITCH
NO. 5 JUNCTION BLOCK
- STARTER RELAY
- ACC RELAY
INSTRUMENT PANEL JUNCTION BLOCK
- AM1 FUSE
- IGNITION RELAY
(IG1 RELAY)
IGNITION SWITCH

Last Modified: 3-10-2010	6.4 U	**From:** 200901
Model Year: 2010	**Model:** Corolla	**Doc ID:** RM000003GH6005X
Title: 2ZR-FE STARTING: STARTING SYSTEM: SYSTEM DIAGRAM (2010 Corolla)		

SYSTEM DIAGRAM

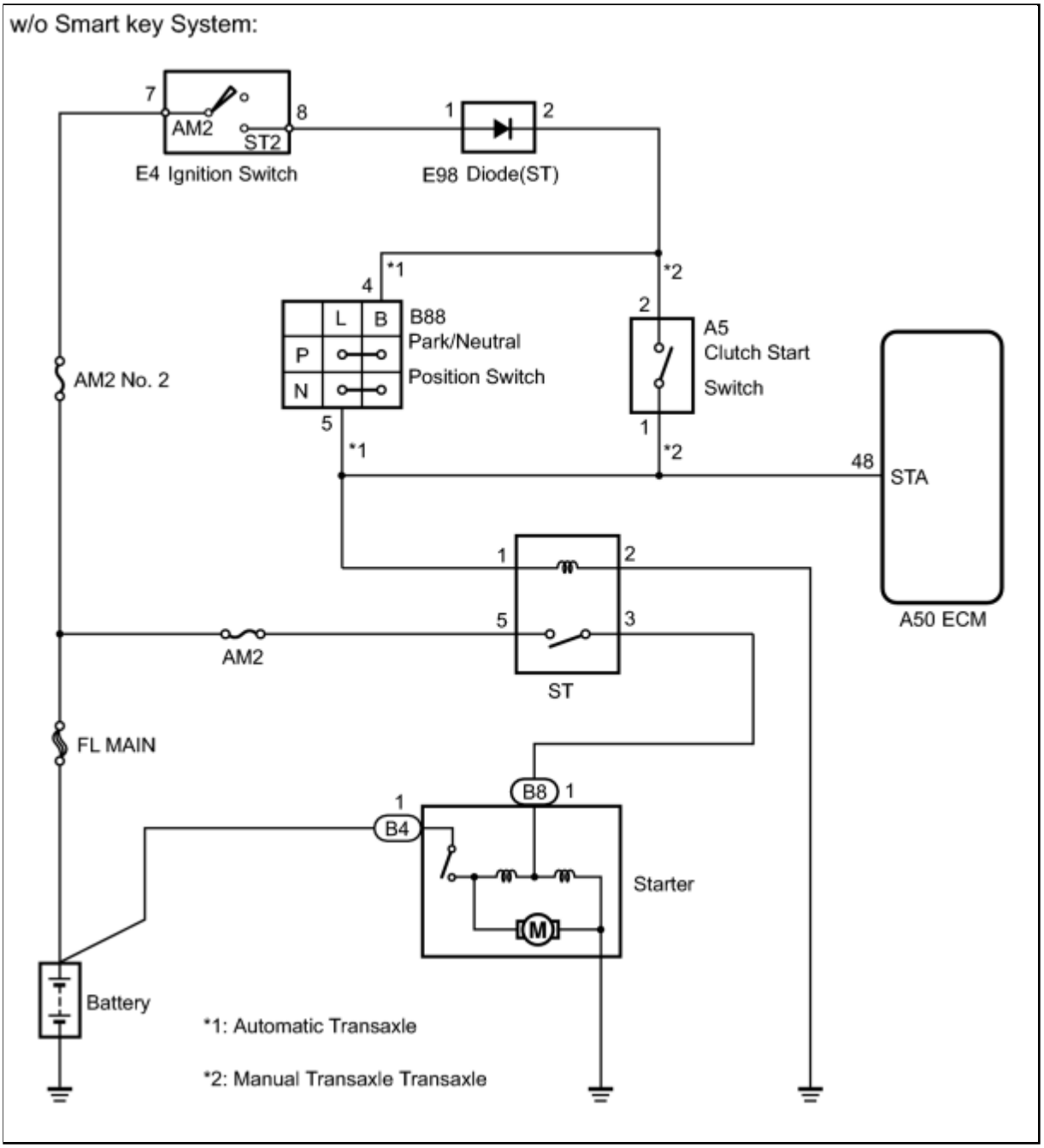

w/ Smart key System:

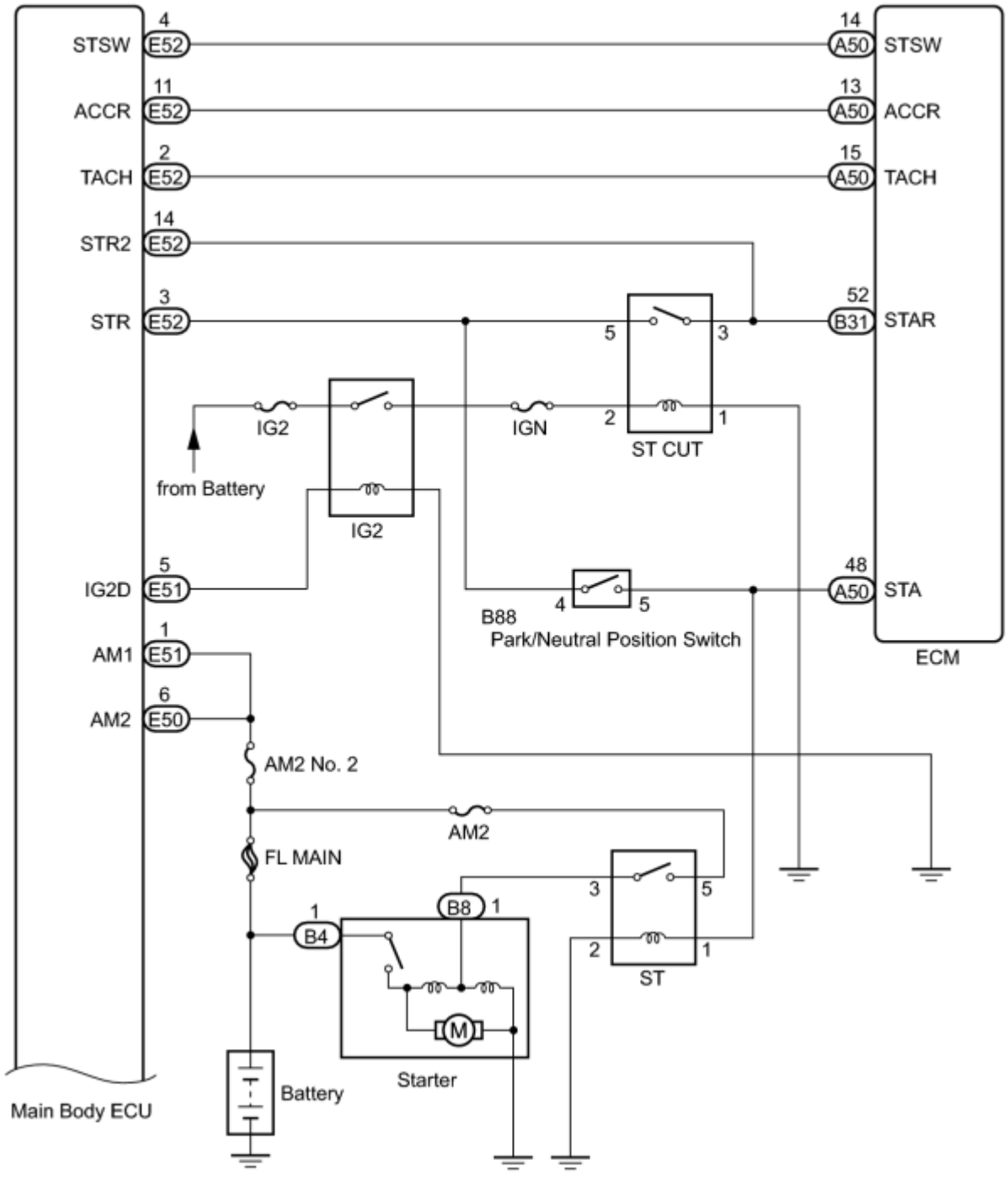

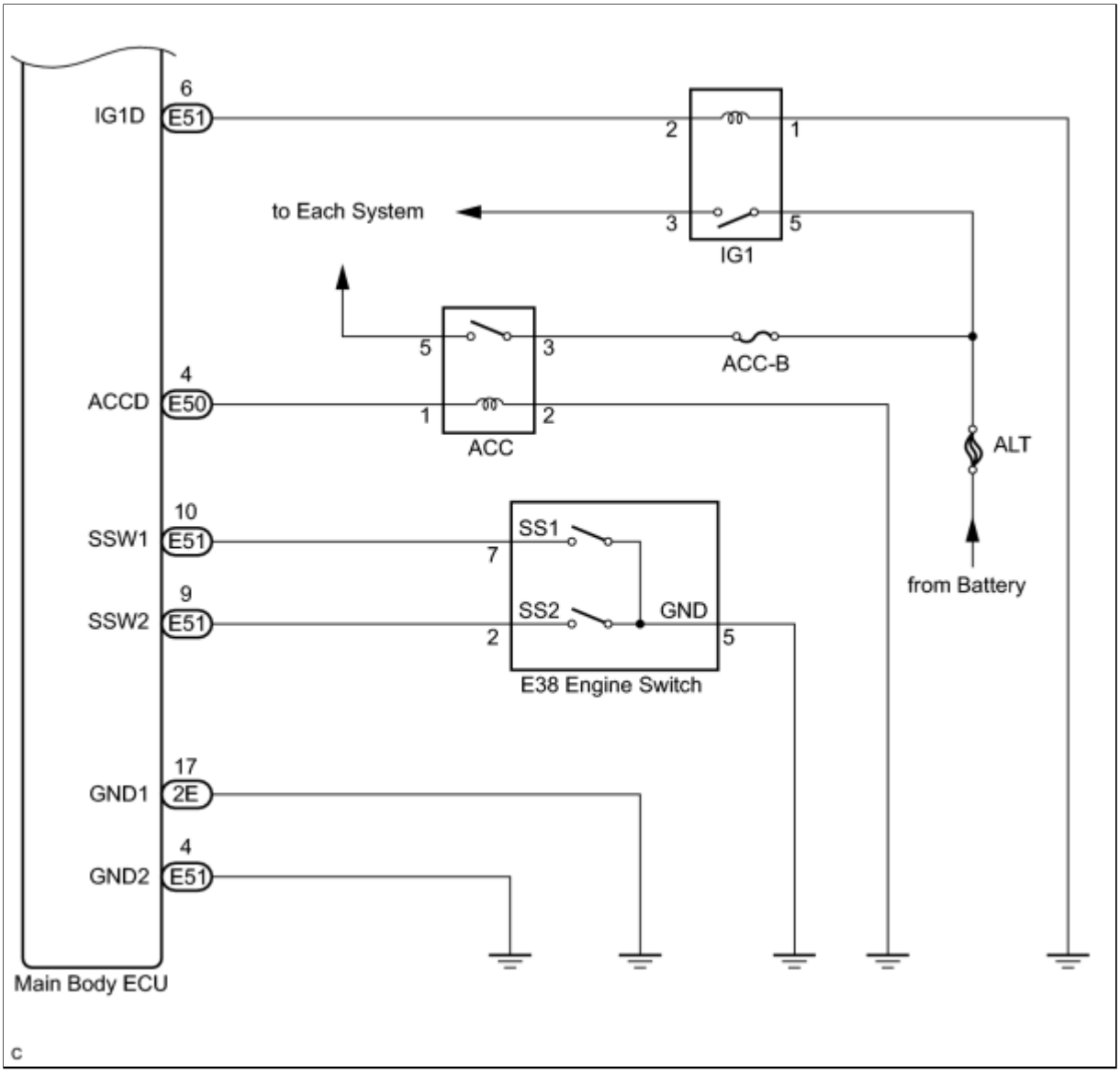
IG1D
6
E51
2
1
to Each System
3
5
IG1
5
3
ACC-B
ACCD
4
E50
1
2
ACC
ALT
SSW1
10
E51
SS1
7
from Battery
SSW2
9
E51
SS2
GND
2
5
E38 Engine Switch
GND1
17
2E
GND2
4
E51
Main Body ECU
c

TOYOTA

Last Modified: 3-10-2010	6.4 L	**From:** 200901
Model Year: 2010	**Model:** Corolla	**Doc ID:** RM000001R5U027X
Title: 2AZ-FE BATTERY / CHARGING: CHARGING SYSTEM: PRECAUTION (2010 Corolla)		

PRECAUTION

1. **Check that the battery cables are connected to the correct terminals.**
2. **Disconnect the battery cables when the battery is given a quick charge.**
3. **Do not perform tests with a high voltage insulation resistance tester, such as a megohmmeter.**
4. **Never disconnect the battery while the engine is running.**
5. **Check that the charging cable nuts are tightened on terminal B of the generator and the engine room relay block.**

Last Modified: 3-10-2010	6.4 R	**From:** 200901
Model Year: 2010	**Model:** Corolla	**Doc ID:** RM000001QPX00QX
Title: 2AZ-FE BATTERY / CHARGING: CHARGING SYSTEM: PARTS LOCATION (2010 Corolla)		

PARTS LOCATION

ILLUSTRATION

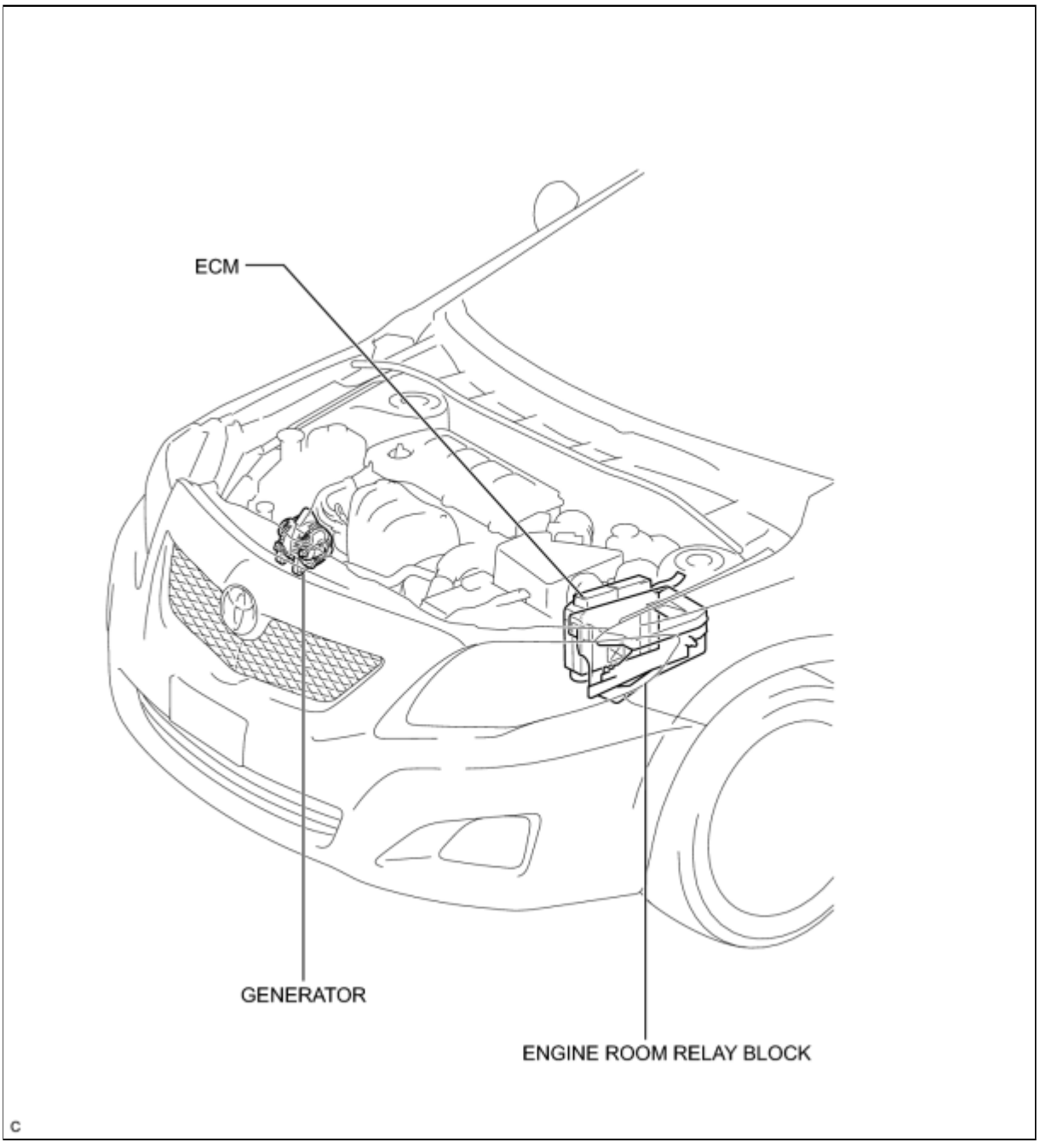

ILLUSTRATION

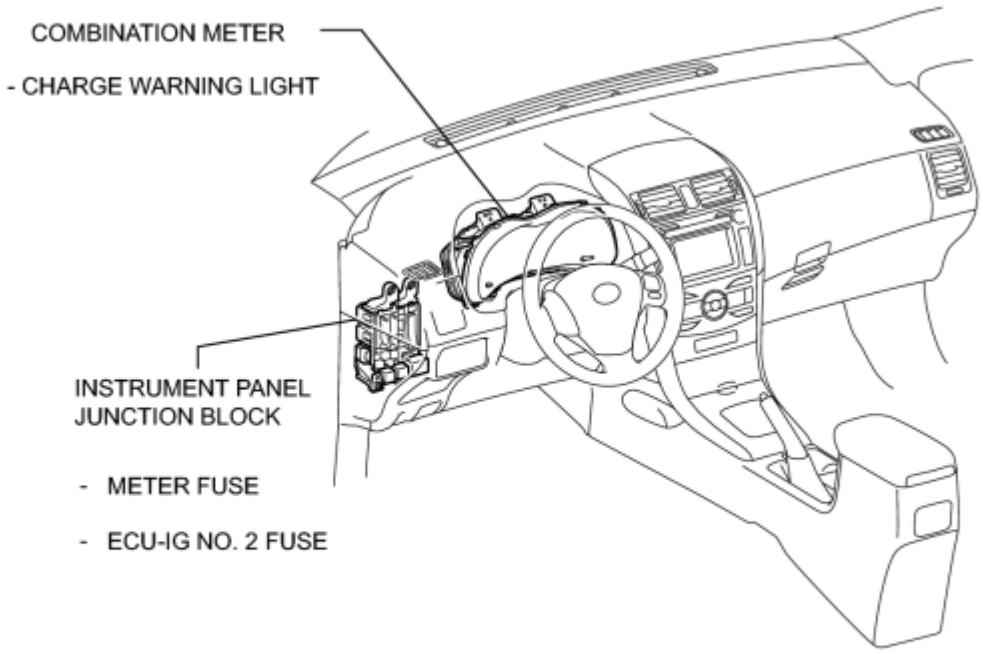
COMBINATION METER
- CHARGE WARNING LIGHT
INSTRUMENT PANEL
JUNCTION BLOCK
- METER FUSE
- ECU-IG NO. 2 FUSE

Last Modified: 3-10-2010	6.4 U	**From:** 200901
Model Year: 2010	**Model:** Corolla	**Doc ID:** RM000001XMI00KX
Title: 2AZ-FE BATTERY / CHARGING: CHARGING SYSTEM: SYSTEM DIAGRAM (2010 Corolla)		

SYSTEM DIAGRAM

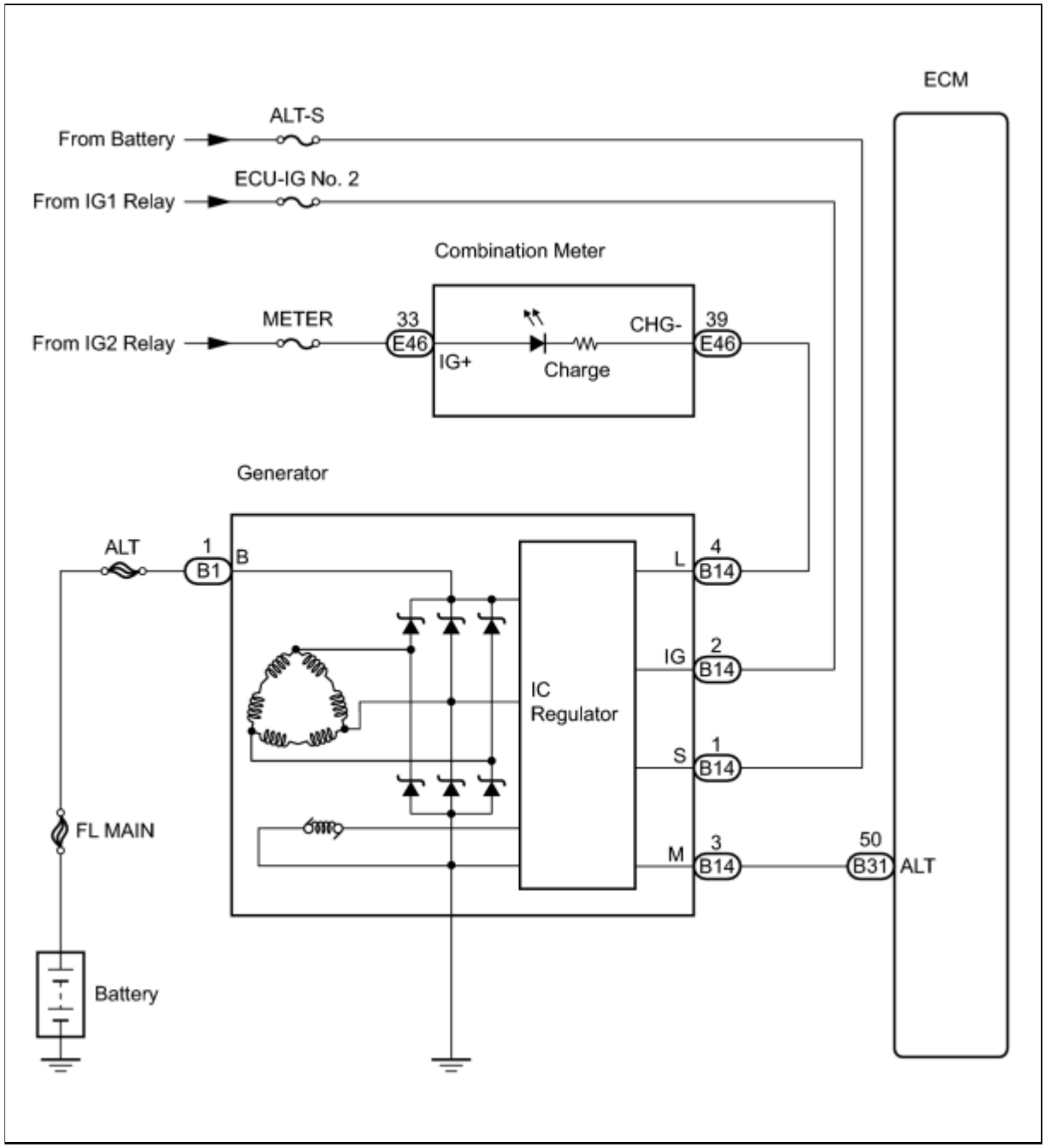

Last Modified: 3-10-2010	6.4 G	**From:** 200901
Model Year: 2010	**Model:** Corolla	**Doc ID:** RM000001AR903XX
Title: 2AZ-FE BATTERY / CHARGING: CHARGING SYSTEM: ON-VEHICLE INSPECTION (2010 Corolla)		

ON-VEHICLE INSPECTION

1. CHECK BATTERY ELECTROLYTE LEVEL

(a) Check the electrolyte level.

(1) If the electrolyte level is low, replace the battery (or add distilled water) and check the charging system.

2. CHECK BATTERY SPECIFIC GRAVITY

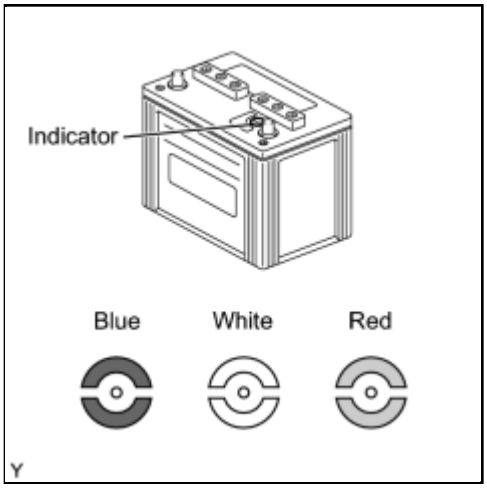

(a) Check the color of the indicator.

Result:

INDICATOR COLOR	CONDITION
Blue	Good
White	Charging necessary
Red	Replacement necessary

3. CHECK BATTERY VOLTAGE

(a) Turn the ignition switch off and turn on the headlights for 20 to 30 seconds. This will remove the surface charge from the battery.

(b) Measure the battery voltage according to the value(s) in the table below.

Standard Voltage:

TESTER CONNECTION	CONDITION	SPECIFIED CONDITION
Battery positive terminal - Battery negative terminal	20°C (68°F)	12.5 to 12.9 V

HINT:

If the voltage is below the specification, charge the battery.

4. CHECK BATTERY TERMINAL

(a) Check that the battery terminals are not loose or corroded.

If the terminals are corroded, clean them.

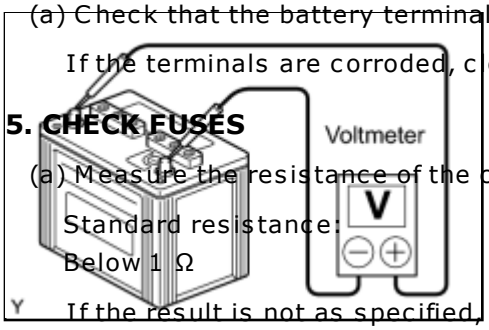

5. CHECK FUSES

(a) Measure the resistance of the charging system fuses.

Standard resistance:

Below 1 Ω

If the result is not as specified, replace the fuses as necessary.

6. CHECK V-RIBBED BELT

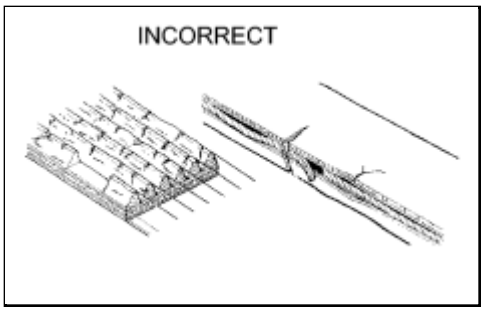

(a) Check the belt for wear, cracks and other signs of damage.

If any of the following defects is found, replace the V-ribbed belt.

- The belt is cracked.
- The belt is worn out to the extent that the cords are exposed.
- The belt has chunks missing from the ribs.

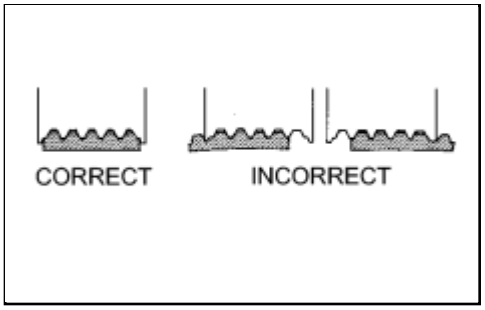

(b) Check that the belt fits properly in the ribbed grooves.

HINT:

Check with your hand to confirm that the belt has not slipped out of the groove on the bottom to the pulley. If it has slipped out, replace the V-ribbed belt. Install a new V-ribbed belt correctly.

7. VISUALLY CHECK GENERATOR WIRING

(a) Check that the generator wiring is in good condition.

If the condition is not good, repair or replace the generator wire.

8. LISTEN FOR ABNORMAL NOISES FROM GENERATOR

(a) Check that there is no abnormal noise from the generator while the engine is running.

If there is abnormal noise, replace the pulley or generator.

9. CHECK CHARGE WARNING LIGHT CIRCUIT

(a) Turn the ignition switch to ON. Check that the charge warning light comes on.

(b) Start the engine and check that the light goes off.

If the light does not operate as specified, troubleshoot the charge warning light circuit.

10. CHECK CHARGING CIRCUIT WITHOUT LOAD

(a) According to the following procedure, connect an ammeter and voltmeter as shown in the illustration.

(1) Disconnect the wire from terminal B of the generator and connect it to the negative (-) lead of the ammeter.

(2) Connect the positive (+) lead of the ammeter to terminal B of the generator.

(3) Connect the positive (+) lead of the voltmeter to the positive (+) terminal of the battery.

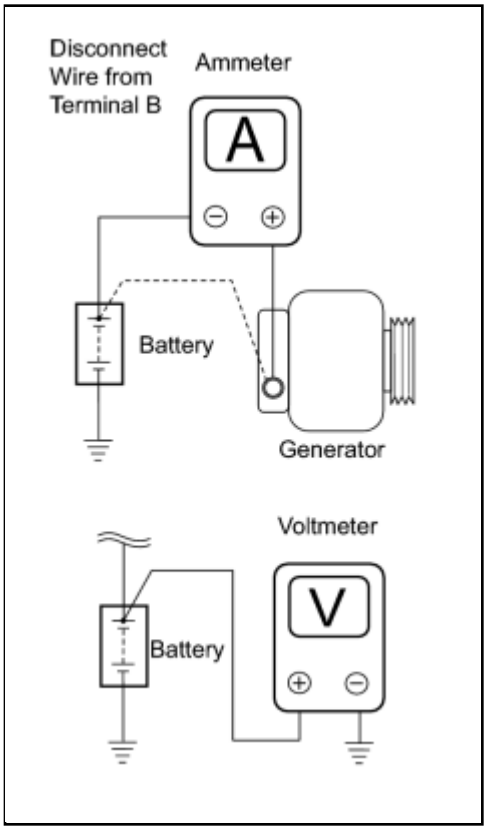

(4) Ground the negative (-) lead of the voltmeter.

(b) Check the charging circuit.

(1) While keeping the engine speed at 2000 rpm, check the readings on the ammeter and voltmeter.

Standard current:
10 A or less
Standard voltage:
13.2 to 14.8 V

If the results are not as specified, replace the generator assembly.

HINT:

If the battery is not fully charged, the ammeter reading may be more than the standard current.

11. CHECK CHARGING CIRCUIT WITH LOAD

(a) Keep the engine speed at 2000 rpm, turn on the high beam headlights, and turn the heater blower switch to the "HI" position.

(b) Check the reading on the ammeter.

Standard current:
30 A or more

If the ammeter reading is less than the standard current, replace the generator assembly.

HINT:

If the battery is fully charged, the ammeter reading may be less than the standard current. In this case, increase electrical load by operating devices such as the wiper motor and rear window defogger. Then, recheck the reading on the ammeter.

Last Modified: 3-10-2010	6.4 T	**From:** 200901
Model Year: 2010	**Model:** Corolla	**Doc ID:** RM000001J3Y02MX
Title: 2AZ-FE BATTERY / CHARGING: CHARGING SYSTEM: PROBLEM SYMPTOMS TABLE (2010 Corolla)		

PROBLEM SYMPTOMS TABLE

Use the table below to help determine the cause of problem symptoms. If multiple suspected areas are listed, the potential causes of the symptoms are listed in order of probability in the "Suspected Area" column of the table. Check each symptom by checking the suspected areas in the order they are listed. Replace parts as necessary.

Charging System

SYMPTOM	SUSPECTED AREA	SEE PAGE
Charge Warning Light Comes ON while Driving	1. Clutch pulley	INFO
	2. Generator assembly	-
Noise Occurs from Generator while Engine is Running	1. V-ribbed belt	INFO
	2. Clutch pulley	-
	3. Generator assembly	-

Last Modified: 3-10-2010	6.4 J	**From:** 200901
Model Year: 2010	**Model:** Corolla	**Doc ID:** RM000001J2J037X
Title: 2AZ-FE BATTERY / CHARGING: CHARGING SYSTEM: Charge Warning Light Comes ON while Driving (2010 Corolla)		

Charge Warning Light Comes ON while Driving

INSPECTION PROCEDURE

PROCEDURE

1.	**CHECK LOCK FUNCTION OF CLUTCH PULLEY**

(a) Check the lock function with the pulley installed in the vehicle.

(1) Visually check that the rotor in the generator operates with the engine running.

(b) Check the lock function with the pulley removed from the vehicle.

(1) Remove the generator pulley cap. Using SST, hold the generator rotor.

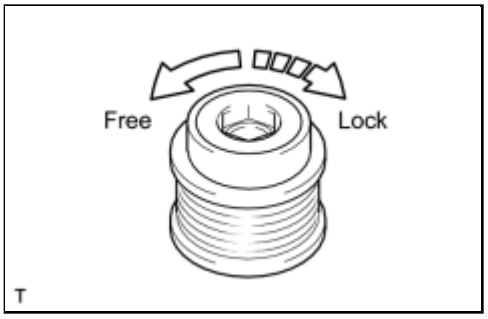

SST: 09820-63021

(2) Turn the clutch pulley clockwise and check that the outer ring locks.

OK:

The outer ring locks.

NG ▶ **REPLACE GENERATOR CLUTCH PULLEY**

OK ▼

2.	**CHECK LOCK OF CLUTCH PULLEY**

(a) Start the engine and visually check for looseness of the clutch pulley.

OK:

The clutch pulley is not loose.

NG ▶ **TIGHTEN CLUTCH PULLEY TO THE SPECIFIED TORQUE**

OK ▶ **REPLACE GENERATOR ASSEMBLY**

Last Modified: 3-10-2010	6.4 J	**From:** 200901
Model Year: 2010	**Model:** Corolla	**Doc ID:** RM000001J2K037X
Title: 2AZ-FE BATTERY / CHARGING: CHARGING SYSTEM: Noise Occurs from Generator while Engine is Running (2010 Corolla)		

Noise Occurs from Generator while Engine is Running

INSPECTION PROCEDURE

PROCEDURE

1.	**CHECK LOOSENESS OF V-RIBBED BELT**

(a) Check the tension of the belt by pushing it down with a finger.

OK:

The tension of the belt is enough.

NG ▶ **REPLACE V-RIBBED BELT TENSIONER ASSEMBLY**

OK ▼

2.	**CHECK V-RIBBED BELT FOR WEAR**

(a) Check the V-ribbed belt for wear.

OK:

The V-ribbed belt is not worn.

NG ▶ **REPLACE V-RIBBED BELT**

OK ▼

3.	CHECK CLUTCH PULLEY FOR WEAR

(a) Check the clutch pulley groove for wear or other defects.

OK:

The clutch pulley groove is not damaged.

NG ▶ **REPLACE CLUTCH PULLEY**

OK ▼

4.	CHECK FOR NOISE WHILE CLUTCH PULLEY IS OPERATING

(a) Perform a driving test and check if noise occurs when decelerating.

OK:

Noise does not occur.

NG ▶ **REPLACE CLUTCH PULLEY**

OK ▶ **REPLACE GENERATOR ASSEMBLY**

Last Modified: 3-10-2010	6.4 L	**From:** 200901
Model Year: 2010	**Model:** Corolla	**Doc ID:** RM000001AR601OX
Title: 2ZR-FE BATTERY / CHARGING: CHARGING SYSTEM: PRECAUTION (2010 Corolla)		

PRECAUTION

1. **Check that the battery cables are connected to the correct terminals.**
2. **Disconnect the battery cables when the battery is given a quick charge.**
3. **Do not perform tests with a high voltage insulation resistance tester, such as a megohmmeter.**
4. **Never disconnect the battery while the engine is running.**
5. **Check that the charging cable nuts are tightened on terminal B of the generator and the engine room relay block.**

Last Modified: 3-10-2010	6.4 R	**From:** 200901
Model Year: 2010	**Model:** Corolla	**Doc ID:** RM00000275X013X
Title: 2ZR-FE BATTERY / CHARGING: CHARGING SYSTEM: PARTS LOCATION (2010 Corolla)		

PARTS LOCATION

ILLUSTRATION

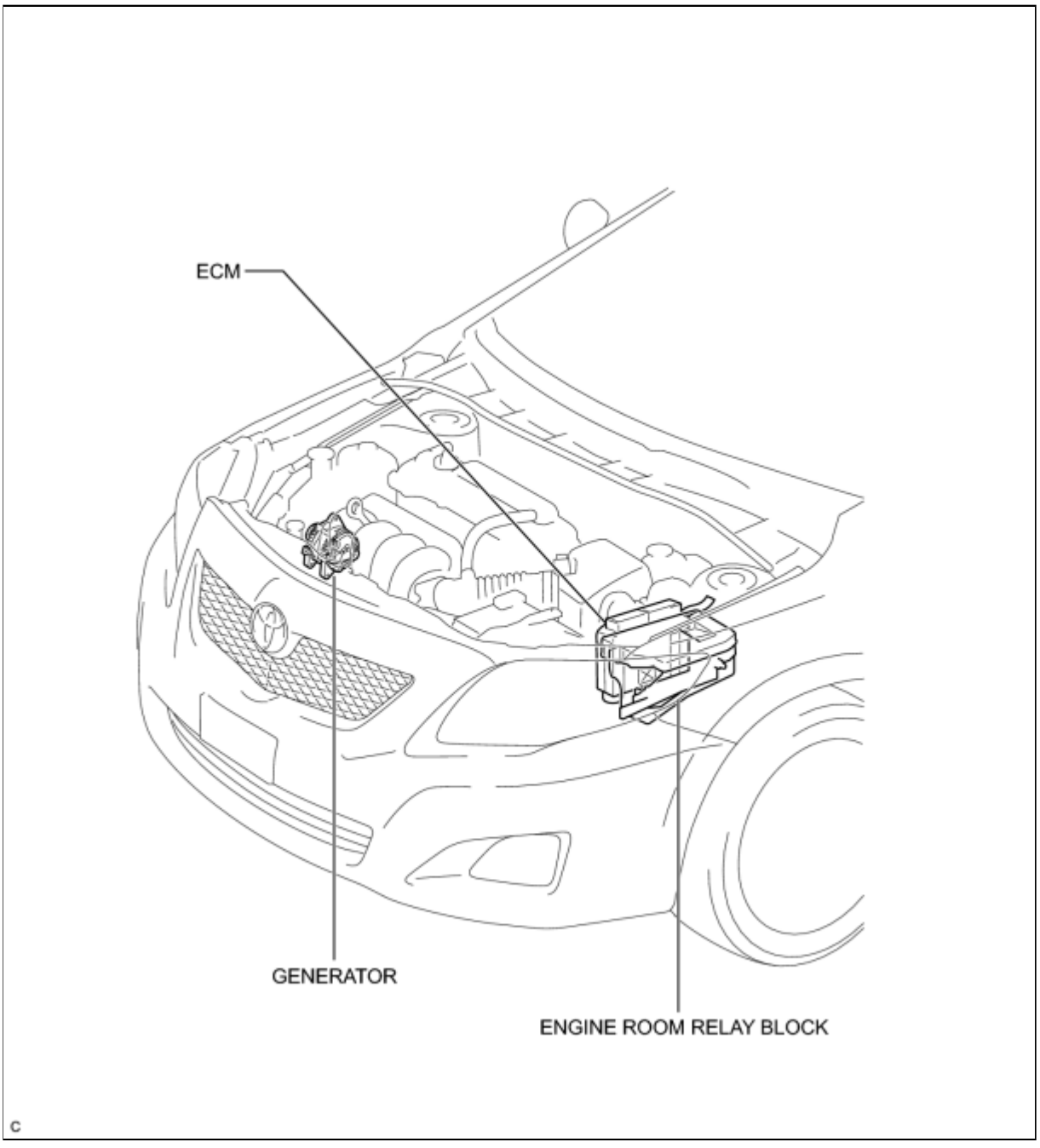

ILLUSTRATION

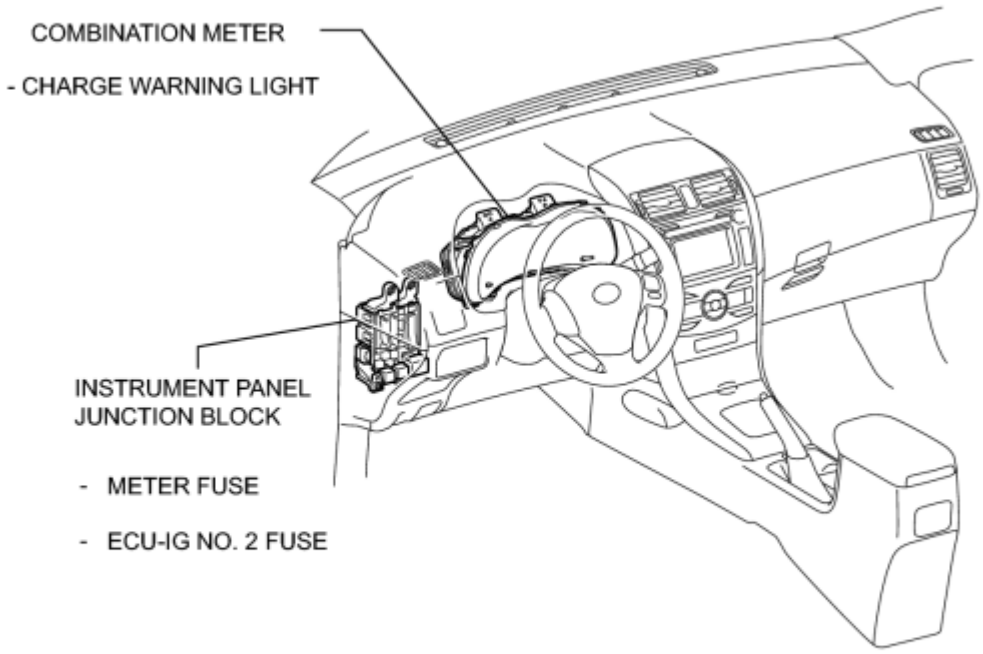
COMBINATION METER
- CHARGE WARNING LIGHT
INSTRUMENT PANEL
JUNCTION BLOCK
- METER FUSE
- ECU-IG NO. 2 FUSE

Last Modified: 3-10-2010	6.4 U	**From:** 200901
Model Year: 2010	**Model:** Corolla	**Doc ID:** RM00000275Y013X
Title: 2ZR-FE BATTERY / CHARGING: CHARGING SYSTEM: SYSTEM DIAGRAM (2010 Corolla)		

SYSTEM DIAGRAM

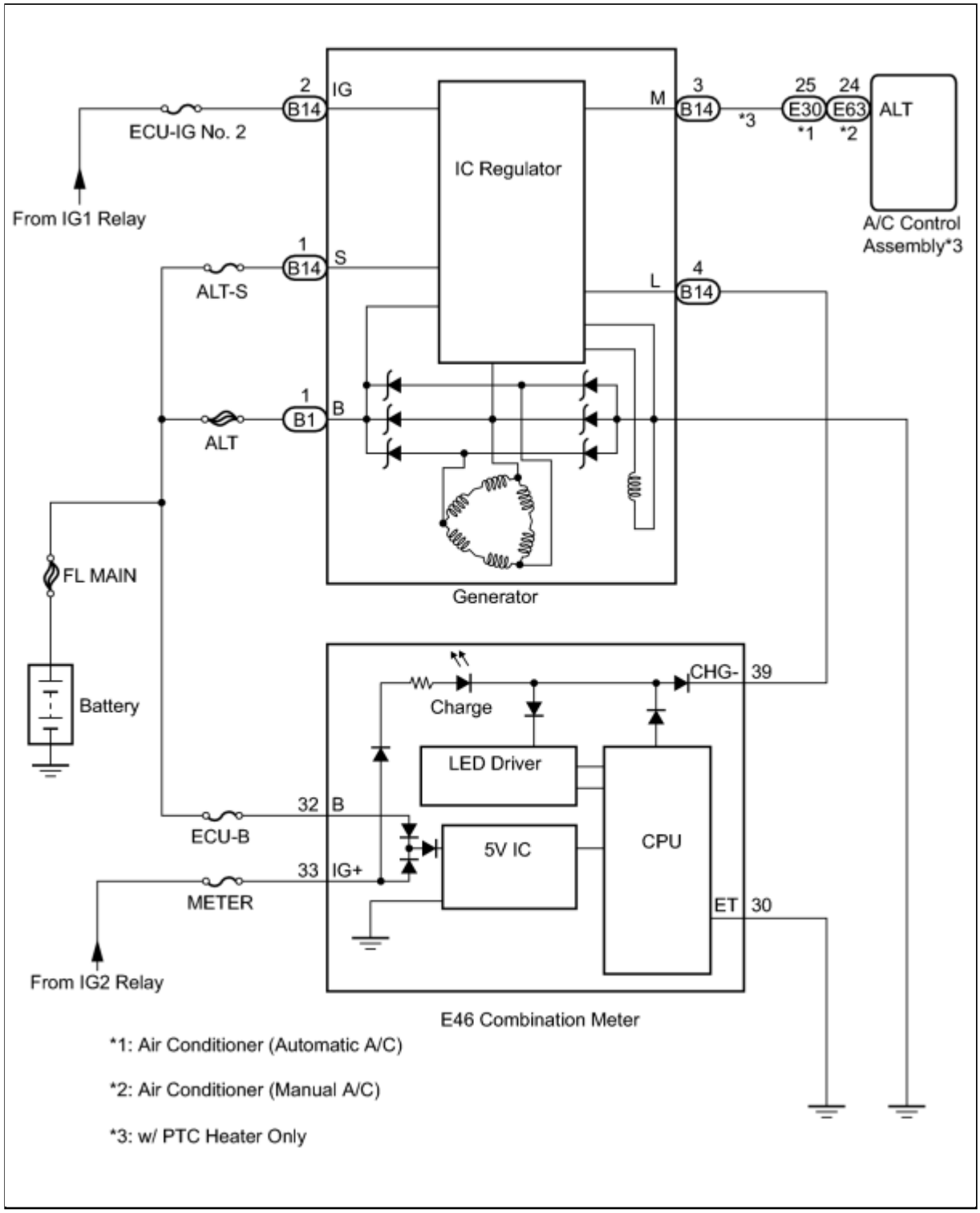

Last Modified: 3-10-2010	6.4 G	**From:** 200901
Model Year: 2010	**Model:** Corolla	**Doc ID:** RM000001AR903WX
Title: 2ZR-FE BATTERY / CHARGING: CHARGING SYSTEM: ON-VEHICLE INSPECTION (2010 Corolla)		

ON-VEHICLE INSPECTION

1. CHECK BATTERY ELECTROLYTE LEVEL

(a) Check the electrolyte level.

(1) If the electrolyte level is low, replace the battery (or add distilled water) and check the charging system.

2. CHECK BATTERY SPECIFIC GRAVITY

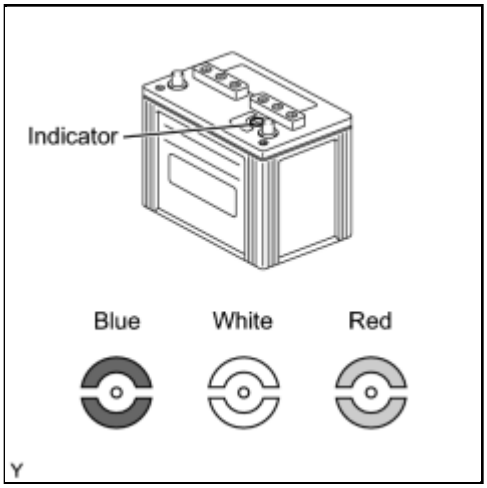

(a) Check the color of the indicator.

Result:

INDICATOR COLOR	CONDITION
Blue	Good
White	Charging necessary
Red	Replacement necessary

3. CHECK BATTERY VOLTAGE

(a) Turn the ignition switch off and turn on the headlights for 20 to 30 seconds. This will remove the surface charge from the battery.

(b) Measure the battery voltage according to the value(s) in the table below.

Standard Voltage:

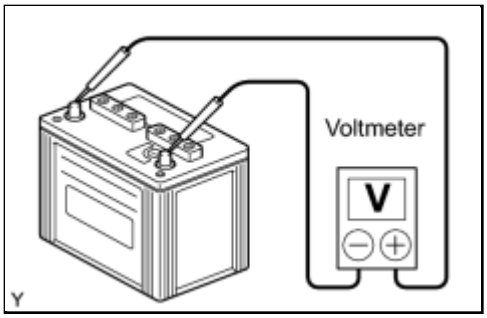

TESTER CONNECTION	CONDITION	SPECIFIED CONDITION
Battery positive terminal - Battery negative terminal	20°C (68°F)	12.5 to 12.9 V

If the voltage is below the specification, charge the battery.

4. CHECK BATTERY TERMINAL

(a) Check that the battery terminals are not loose or corroded.

If the terminals are corroded, clean them.

5. CHECK FUSES

(a) Measure the resistance of the charging system fuses.

Standard resistance:
Below 1 Ω

If the result is not as specified, replace the fuses as necessary.

6. CHECK V-RIBBED BELT

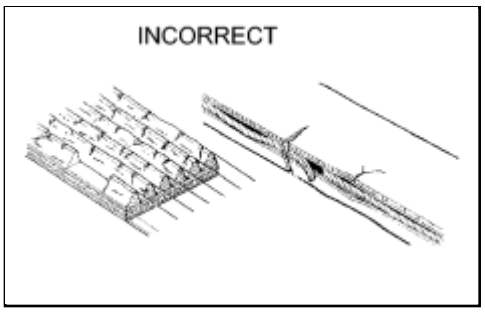

(a) Check the belt for wear, cracks and other signs of damage.

If any of the following defects is found, replace the V-ribbed belt.

- The belt is cracked.
- The belt is worn out to the extent that the cords are exposed.
- The belt has chunks missing from the ribs.

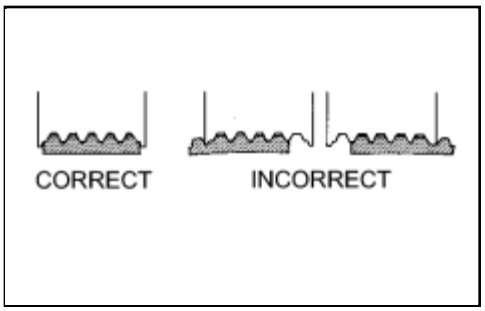

(b) Check that the belt fits properly in the ribbed grooves.

HINT:

Check with your hand to confirm that the belt has not slipped out of the groove on the bottom to the pulley. If it has slipped out, replace the V-ribbed belt. Install a new V-ribbed belt correctly.

7. VISUALLY CHECK GENERATOR WIRING

(a) Check that the generator wiring is in good condition.

If the condition is not good, repair or replace the generator wire.

8. LISTEN FOR ABNORMAL NOISES FROM GENERATOR

(a) Check that there is no abnormal noise from the generator while the engine is running.

If there is abnormal noise, replace the pulley or generator.

9. CHECK CHARGE WARNING LIGHT CIRCUIT

(a) Turn the ignition switch to ON. Check that the charge warning light comes on.

(b) Start the engine and check that the light goes off.

If the light does not operate as specified, troubleshoot the charge warning light circuit.

10. CHECK CHARGING CIRCUIT WITHOUT LOAD

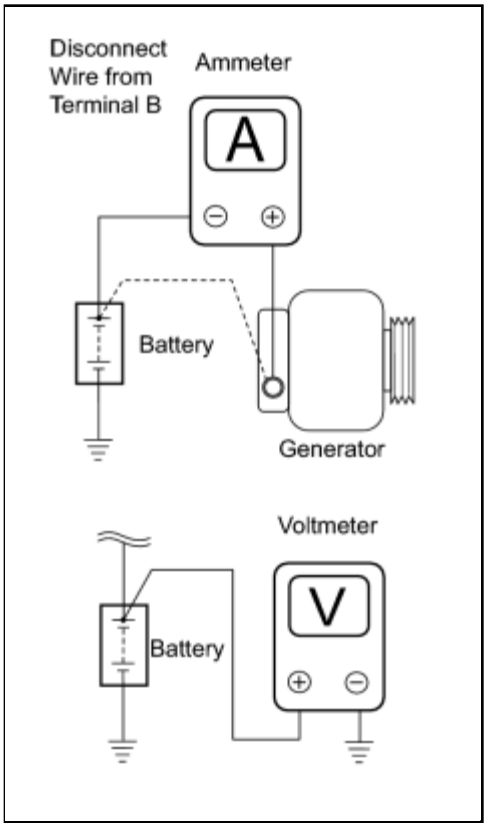

(a) According to the following procedure, connect an ammeter and voltmeter as shown in the illustration.

(1) Disconnect the wire from terminal B of the generator and connect it to the negative (-) lead of the ammeter.

(2) Connect the positive (+) lead of the ammeter to terminal B of the generator.

(3) Connect the positive (+) lead of the voltmeter to the positive (+) terminal of the battery.

(4) Ground the negative (-) lead of the voltmeter.

(b) Check the charging circuit.

(1) While keeping the engine speed at 2000 rpm, check the readings on the ammeter and voltmeter.

Standard current:
10 A or less
Standard voltage:
13.2 to 14.8 V

If the results are not as specified, replace the generator assembly.

HINT:

If the battery is not fully charged, the ammeter reading may be more than the standard current.

11. CHECK CHARGING CIRCUIT WITH LOAD

(a) Keep the engine speed at 2000 rpm, turn on the high beam headlights, and turn the heater blower switch to the "HI" position.

(b) Check the reading on the ammeter.

Standard current:
30 A or more

If the ammeter reading is less than the standard current, replace the generator assembly.

HINT:

If the battery is fully charged, the ammeter reading may be less than the standard current. In this case, increase electrical load by operating devices such as the wiper motor and rear window defogger. Then, recheck the reading on the ammeter.



Last Modified: 3-10-2010	6.4 T	**From:** 200901
Model Year: 2010	**Model:** Corolla	**Doc ID:** RM000001J3Y02LX
Title: 2ZR-FE BATTERY / CHARGING: CHARGING SYSTEM: PROBLEM SYMPTOMS TABLE (2010 Corolla)		

PROBLEM SYMPTOMS TABLE

Use the table below to help determine the cause of problem symptoms. If multiple suspected areas are listed, the potential causes of the symptoms are listed in order of probability in the "Suspected Area" column of the table. Check each symptom by checking the suspected areas in the order they are listed. Replace parts as necessary.

Charging System

SYMPTOM	SUSPECTED AREA	SEE PAGE
Charge Warning Light Comes ON while Driving	Clutch pulley	INFO
	Generator assembly	INFO
Noise Occurs from Generator while Engine is Running	V-ribbed belt	INFO
	Clutch pulley	INFO
	Generator assembly	INFO

Last Modified: 3-10-2010	6.4 J	**From:** 200901
Model Year: 2010	**Model:** Corolla	**Doc ID:** RM000001J2J036X
Title: 2ZR-FE BATTERY / CHARGING: CHARGING SYSTEM: Charge Warning Light Comes ON while Driving (2010 Corolla)		

Charge Warning Light Comes ON while Driving

INSPECTION PROCEDURE

PROCEDURE

1.	**CHECK LOCK FUNCTION OF GENERATOR CLUTCH PULLEY**

(a) Check the lock function with the pulley installed in the vehicle.

(1) Visually check that the rotor in the generator operates with the engine running.

(b) Check the lock function with the pulley removed from the vehicle.

(1) Remove the generator pulley cap. Using SST, hold the generator rotor.

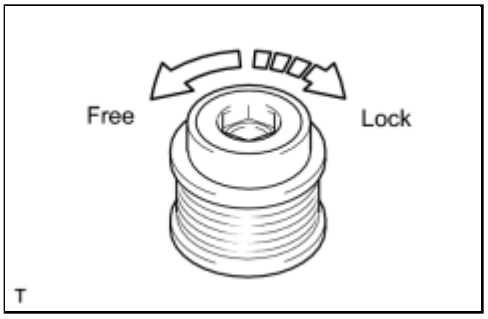

SST: 09820-63021

(2) Turn the clutch pulley clockwise and check that the outer ring locks.

OK:

The outer ring locks.

NG ▶ **REPLACE GENERATOR CLUTCH PULLEY**

OK ▼

2.	**CHECK LOCK OF GENERATOR CLUTCH PULLEY**

(a) Start the engine and visually check the clutch pulley for looseness.

OK:

The clutch pulley is not loose.

NG ▶ **TIGHTEN GENERATOR CLUTCH PULLEY TO THE SPECIFIED TORQUE**

OK ▶ **REPLACE GENERATOR ASSEMBLY**

Last Modified: 3-10-2010	6.4 J	**From:** 200901
Model Year: 2010	**Model:** Corolla	**Doc ID:** RM000001J2K036X
Title: 2ZR-FE BATTERY / CHARGING: CHARGING SYSTEM: Noise Occurs from Generator while Engine is Running (2010 Corolla)		

Noise Occurs from Generator while Engine is Running

INSPECTION PROCEDURE

PROCEDURE

1.	**CHECK LOOSENESS OF V-RIBBED BELT**

(a) Check the tension of the belt by pushing it down with a finger.

OK:

The tension of the belt is enough.

NG ▶ **ADJUST V-RIBBED BELT**

OK ▼

2.	**CHECK V-RIBBED BELT FOR WEAR**

(a) Check the V-ribbed belt for wear.

OK:

The V-ribbed belt is not worn.

NG ▶ **REPLACE V-RIBBED BELT**

OK ▼

3.	CHECK GENERATOR CLUTCH PULLEY FOR WEAR

(a) Check the clutch pulley grooves for wear or other defects.

OK:

The clutch pulley grooves are not damaged.

NG ▶ REPLACE GENERATOR CLUTCH PULLEY

OK ▼

4.	CHECK FOR NOISE WHILE GENERATOR CLUTCH PULLEY IS OPERATING

(a) Perform a driving test and check if noise occurs when decelerating.

OK:

Noise does not occur.

NG ▶ REPLACE GENERATOR CLUTCH PULLEY

OK ▶ REPLACE GENERATOR ASSEMBLY

Last Modified: 3-10-2010	6.4 K	**From:** 200901
Model Year: 2010	**Model:** Corolla	**Doc ID:** RM0000026ZC00HX
Title: 2AZ-FE BATTERY / CHARGING: GENERATOR: COMPONENTS (2010 Corolla)		

COMPONENTS

ILLUSTRATION

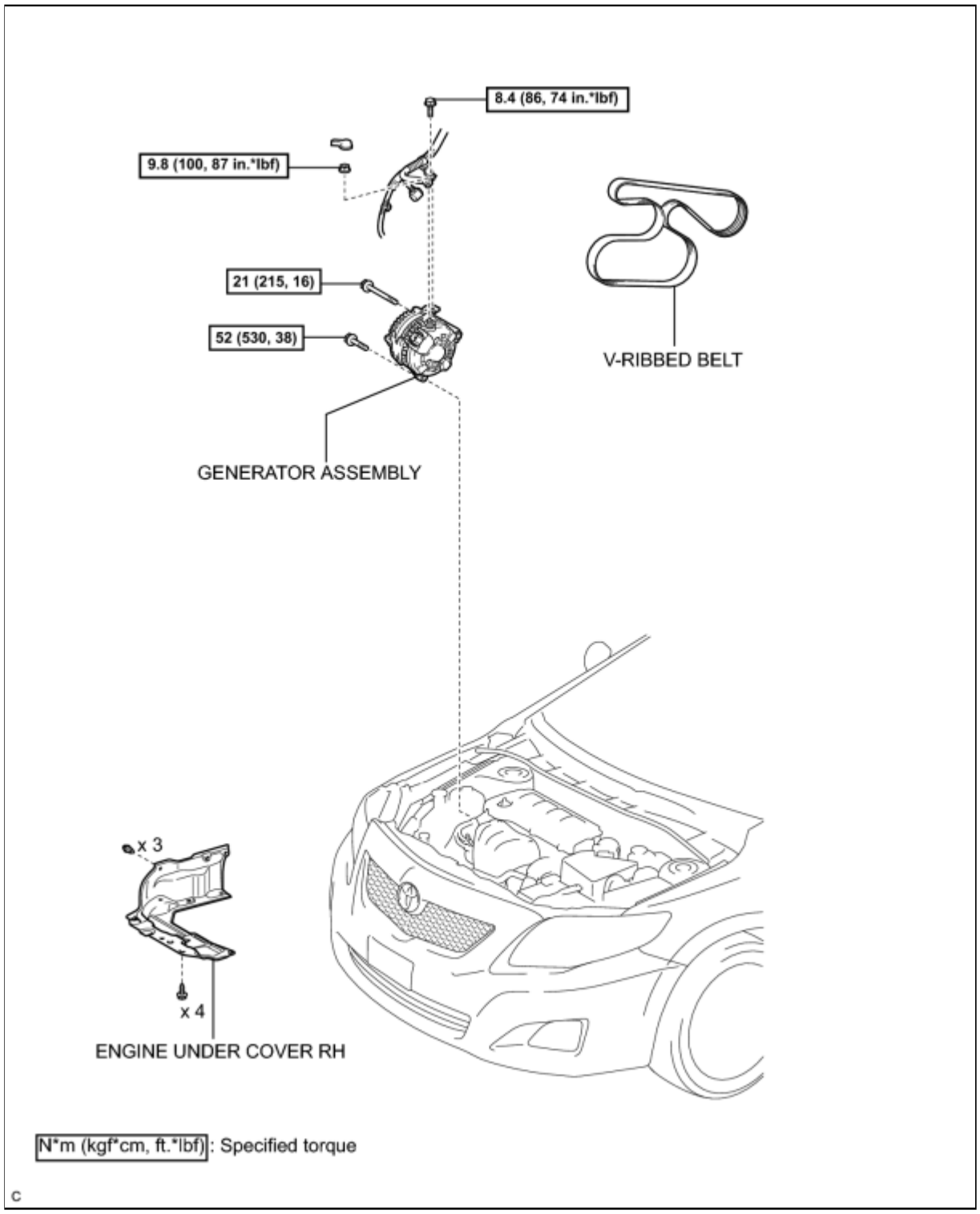

ILLUSTRATION

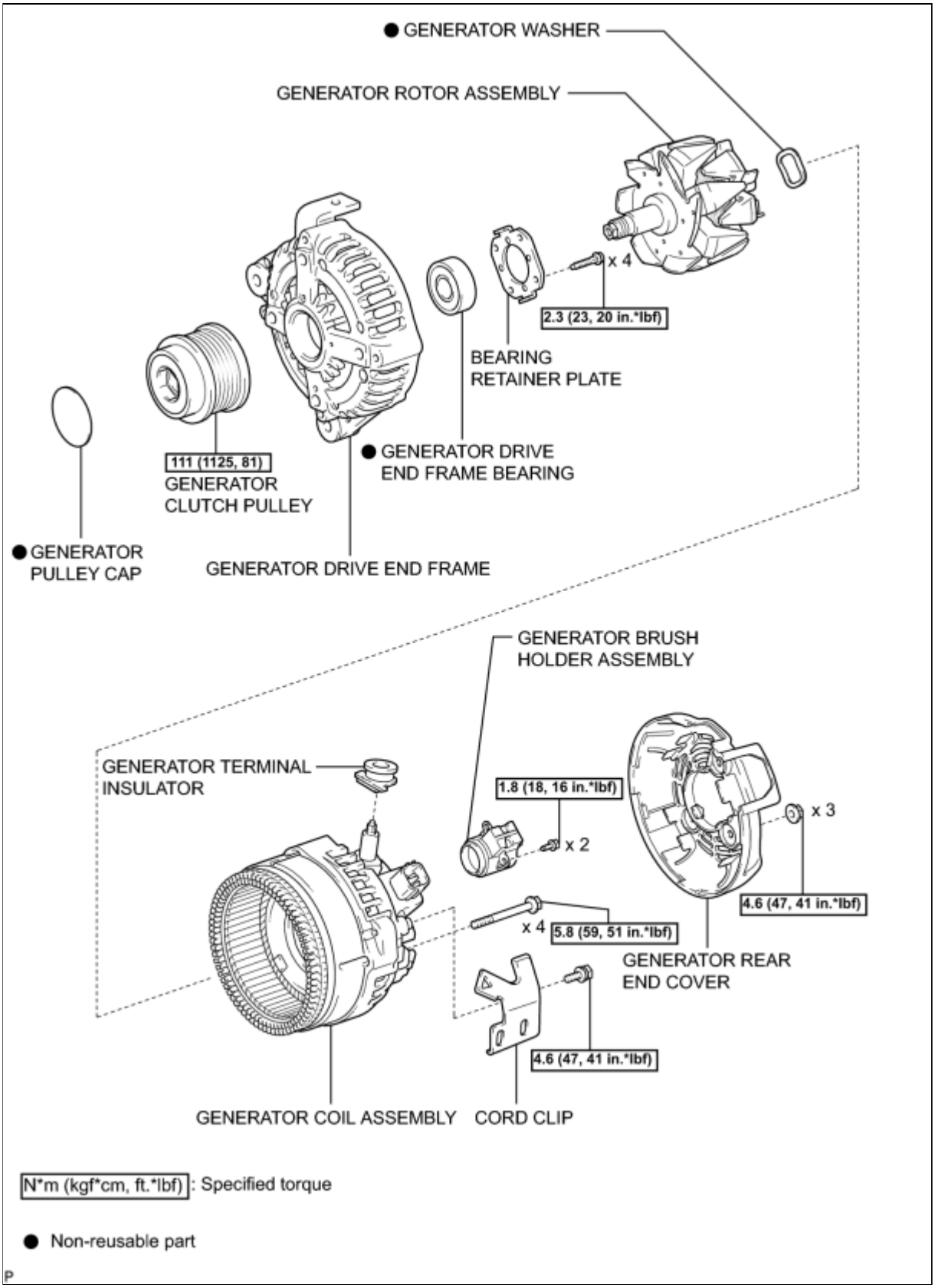

Last Modified: 3-10-2010	6.4 A	**From:** 200901
Model Year: 2010	**Model:** Corolla	**Doc ID:** RM0000017VK01CX
Title: 2AZ-FE BATTERY / CHARGING: GENERATOR: DISASSEMBLY (2010 Corolla)		

DISASSEMBLY

1. REMOVE GENERATOR CLUTCH PULLEY

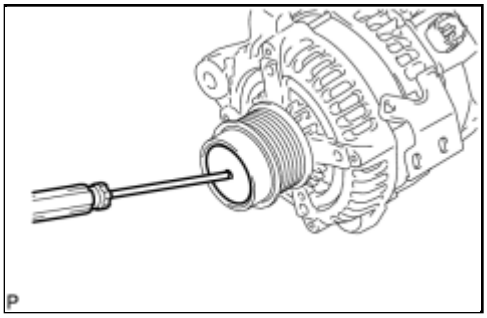

(a) Using a screwdriver, puncture the center of the generator pulley cap and pry it off.

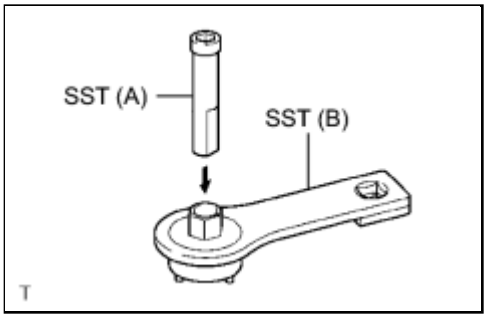

(b) Set SST (A) and (B).

SST: 09820-63021

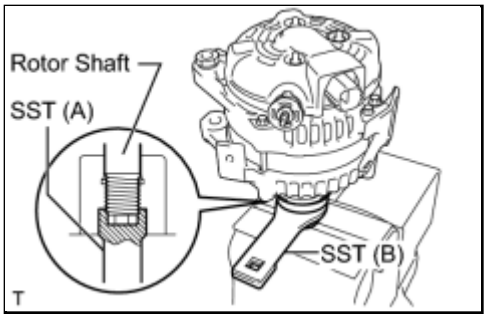

(c) Clamp SST (A) in a vise.

(d) Place the rotor shaft end into SST (A).

(e) Fit SST (B) to the clutch pulley.

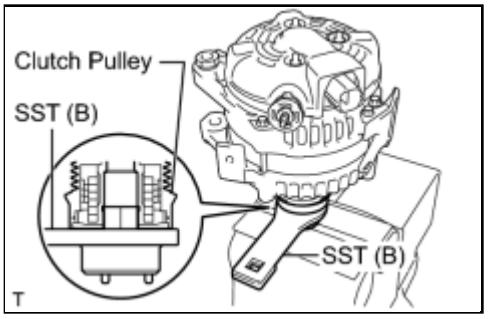

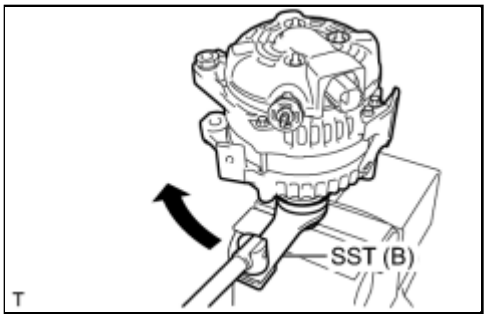

(f) Loosen the pulley by turning SST (B) in the direction shown in the illustration.

(g) Remove the generator assembly from SST.

(h) Remove the clutch pulley from the rotor shaft.

2. REMOVE GENERATOR BRUSH HOLDER ASSEMBLY

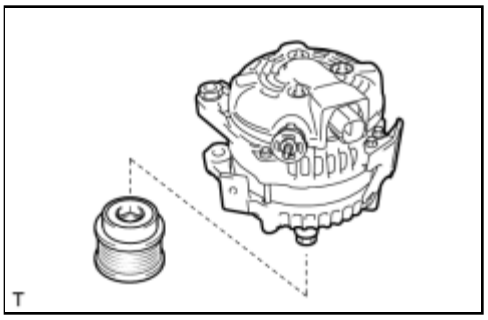

(a) Place the generator assembly on the clutch pulley.

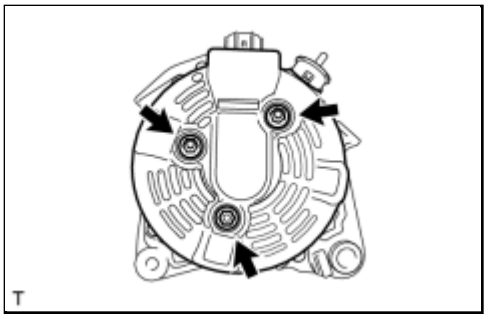

(b) Remove the 3 nuts and generator rear end cover.

3. REMOVE GENERATOR TERMINAL INSULATOR

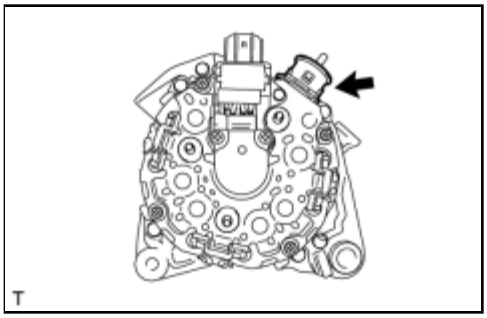

(a) Remove the terminal insulator.

4. REMOVE GENERATOR BRUSH HOLDER ASSEMBLY

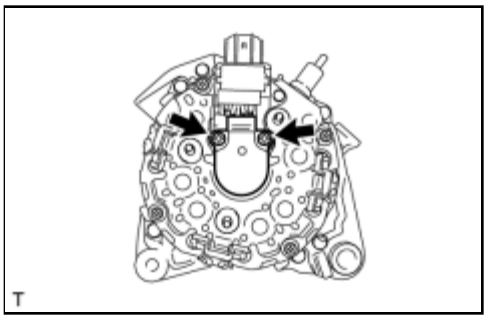

(a) Remove the 2 screws and generator brush holder.

5. REMOVE GENERATOR ROTOR ASSEMBLY

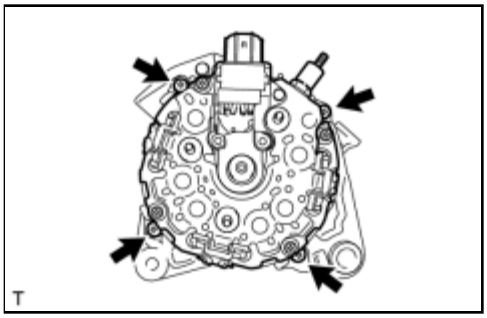

(a) Remove the 4 bolts.

(b) Remove the bolt and cord clip.

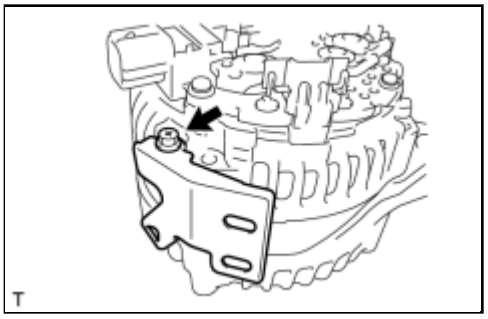

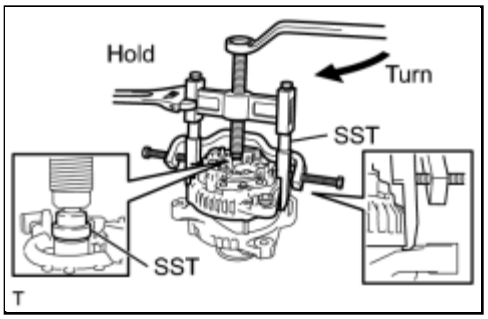

(c) Using SST, remove the coil.

SST: 09950-40011

09951-04020
09952-04010
09953-04020
09954-04010
09955-04071
09957-04010
09958-04011

6. REMOVE GENERATOR ROTOR ASSEMBLY

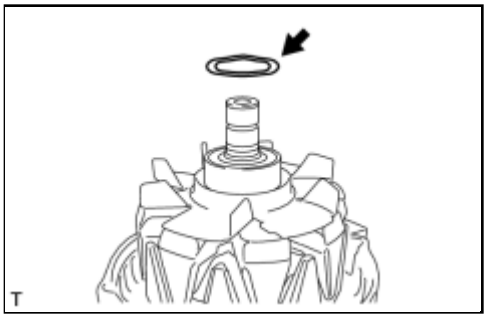

(a) Remove the washer.

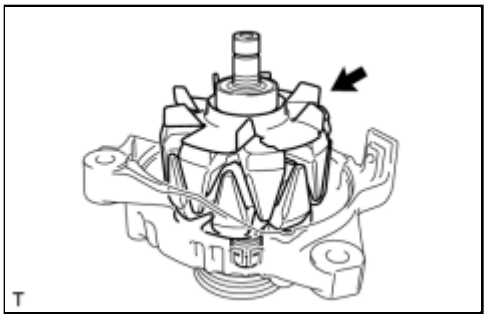

(b) Remove the generator rotor.

7. REMOVE GENERATOR DRIVE END FRAME BEARING

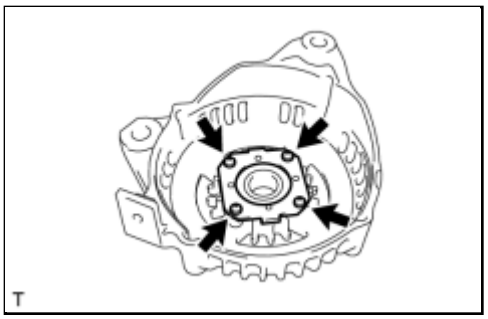

(a) Remove the 4 screws and bearing retainer.

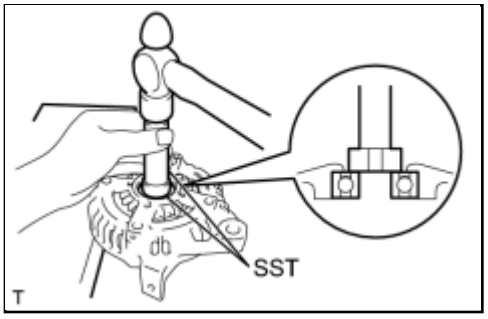

(b) Using SST and a hammer, tap out the bearing.

SST: 09950-60010

09951-00250

SST: 09950-70010

09951-07100

Last Modified: 3-10-2010	6.4 A	**From:** 200901
Model Year: 2010	**Model:** Corolla	**Doc ID:** RM0000026ZD00MX
Title: 2AZ-FE BATTERY / CHARGING: GENERATOR: REMOVAL (2010 Corolla)		

REMOVAL

1. DISCONNECT CABLE FROM NEGATIVE BATTERY TERMINAL

2. REMOVE ENGINE UNDER COVER RH

3. REMOVE V-RIBBED BELT INFO

4. REMOVE GENERATOR ASSEMBLY

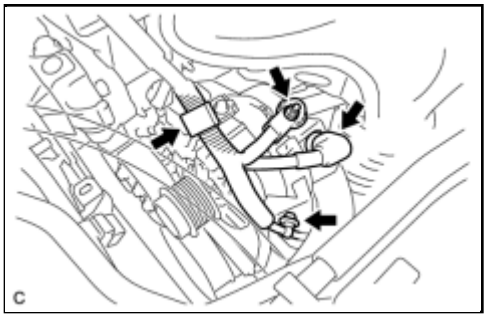

(a) Disconnect the generator connector.

(b) Remove the nut and disconnect the wire harness from terminal B.

(c) Separate the 2 wire harness clamps.

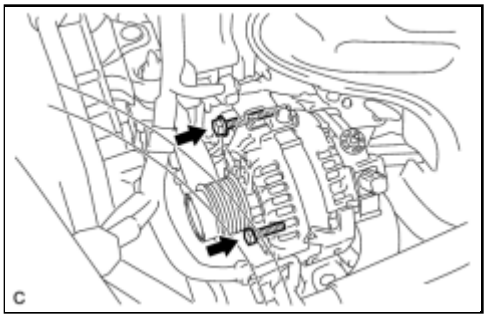

(d) Remove the 2 bolts and generator assembly.

(e) Remove the bolt and wire harness clamp bracket.

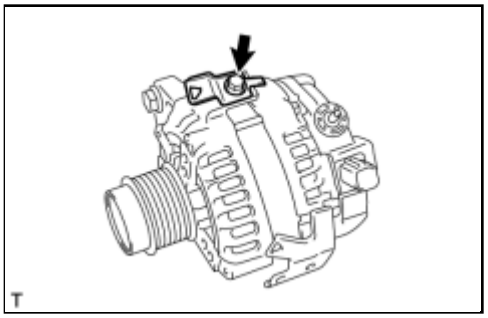
T

Last Modified: 3-10-2010	6.4 G	**From:** 200901
Model Year: 2010	**Model:** Corolla	**Doc ID:** RM0000017VH019X
Title: 2AZ-FE BATTERY / CHARGING: GENERATOR: INSPECTION (2010 Corolla)		

INSPECTION

1. INSPECT GENERATOR CLUTCH PULLEY

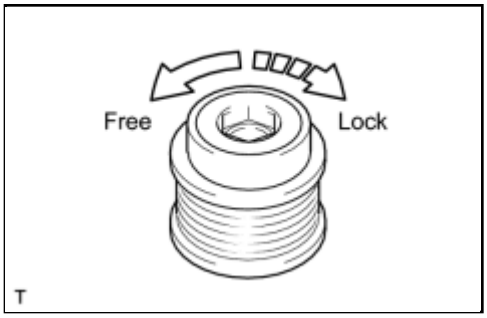

(a) Hold the center of the pulley, and confirm that the outer ring turns counterclockwise and does not turn clockwise.

If the result is not as specified, replace the generator clutch pulley.

2. INSPECT GENERATOR BRUSH HOLDER ASSEMBLY

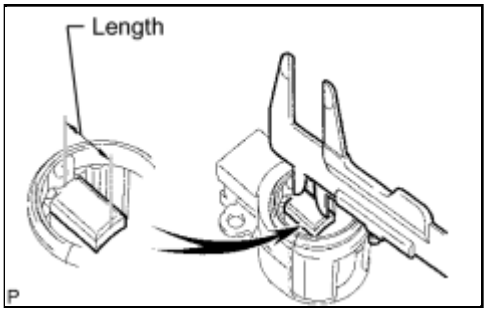

(a) Using a vernier caliper, measure the brush length.

Standard length:
9.5 to 11.5 mm (0.374 to 0.453 in.)
Minimum length:
4.5 mm (0.177 in.)

If the brush length is less than the minimum, replace the generator brush holder assembly.

3. INSPECT GENERATOR ROTOR ASSEMBLY

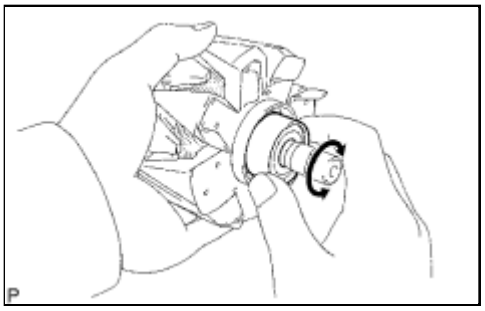

(a) Check the appearance.

(1) Check that the bearing is not rough or worn.

OK:
The bearing rotates smoothly.

If the result is not as specified, replace the generator rotor assembly.

(b) Check the resistance.

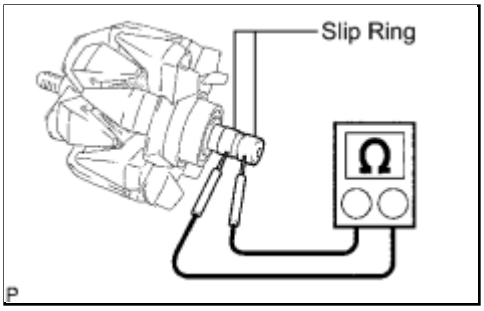

(1) Measure the resistance between the slip rings.

Standard Resistance:

CONDITION	SPECIFIED CONDITION
Approx. 20°C (68°F)	2.3 to 2.7 Ω

If the result is not as specified, replace the generator rotor assembly.

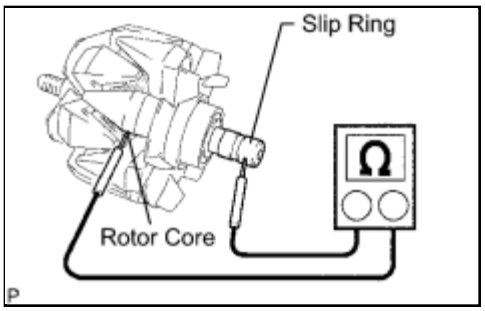

(2) Measure the resistance between the slip ring and rotor core.

Standard Resistance:

TESTER CONNECTION	SPECIFIED CONDITION
Slip ring - Rotor core	1 MΩ or higher

If the result is not as specified, replace the generator rotor assembly.

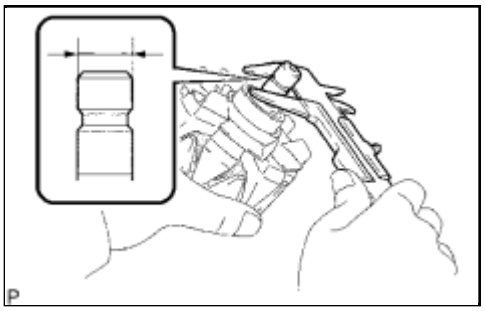

(c) Check the slip ring diameter.

(1) Using a vernier caliper, measure the slip ring diameter.

Standard diameter:
14.2 to 14.4 mm (0.559 to 0.567 in.)
Minimum diameter:
14 mm (0.551 in.)

If the diameter is less than the minimum, replace the generator rotor assembly.

4. INSPECT GENERATOR DRIVE END FRAME BEARING

(a) Check that the bearing is not rough or worn.

OK:
The bearing rotates smoothly.

If the bearing does not rotate smoothly, replace the

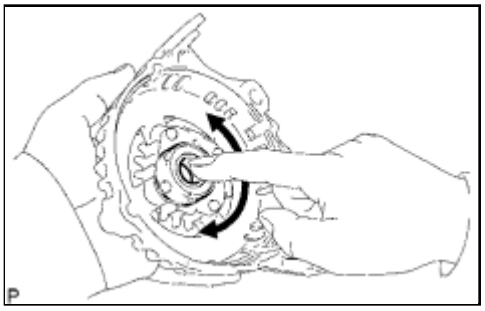

bearing.

Last Modified: 3-10-2010	6.4 A	**From:** 200901
Model Year: 2010	**Model:** Corolla	**Doc ID:** RM0000017VL01DX
Title: 2AZ-FE BATTERY / CHARGING: GENERATOR: REASSEMBLY (2010 Corolla)		

REASSEMBLY

1. INSTALL GENERATOR DRIVE END FRAME BEARING

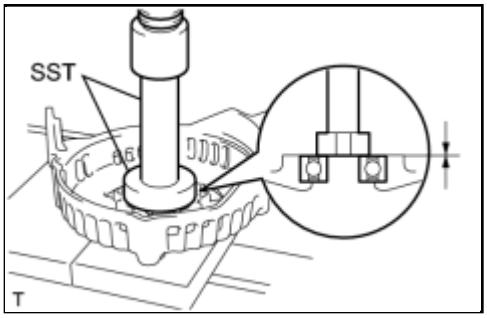

(a) Using SST and a press, press in a new generator drive end frame bearing.

SST: 09950-60010

09951-00250

SST: 09950-70010

09951-07100

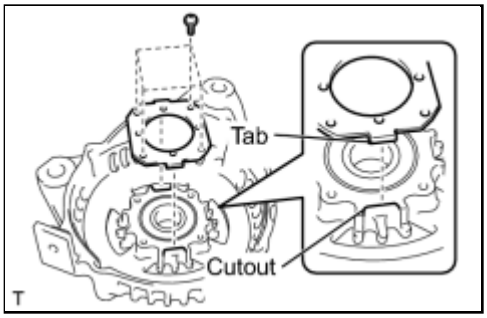

(b) Fit the tabs on the retainer plate into the cutouts on the drive end frame to install the retainer plate.

(c) Install the 4 screws.

Torque: 2.3 N·m (23 kgf·cm, 20in·lbf)

2. INSTALL GENERATOR ROTOR ASSEMBLY

(a) Place the drive end frame on the clutch pulley.

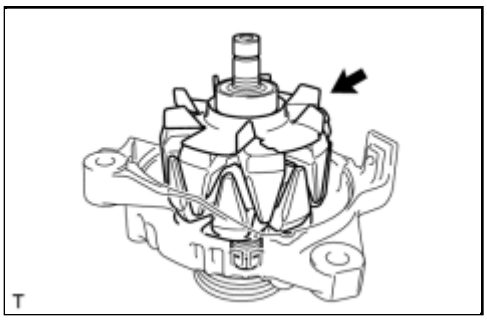

(b) Install the generator rotor onto the generator rectifier end frame.

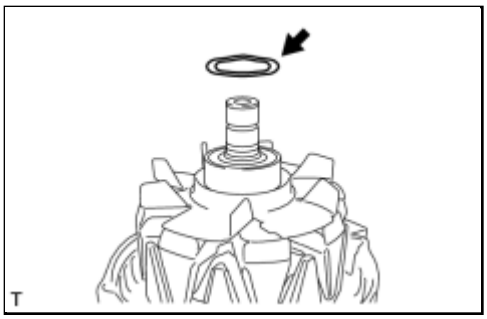

(c) Place a new generator washer on the generator rotor.

3. INSTALL GENERATOR COIL ASSEMBLY

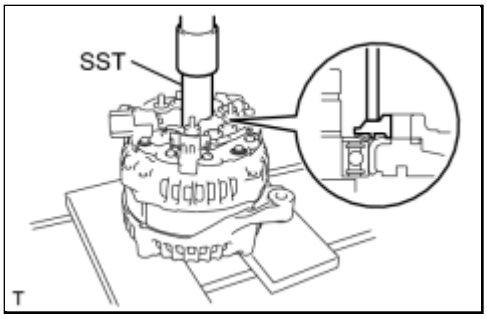

(a) Using SST and a press, press in the generator coil assembly to the drive end frame.

SST: 09612-70100

09612-07240

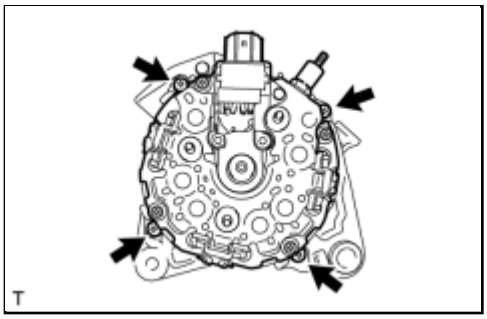

(b) Tighten the 4 bolts.

Torque: 5.8 N·m (59 kgf·cm, 51in·lbf)

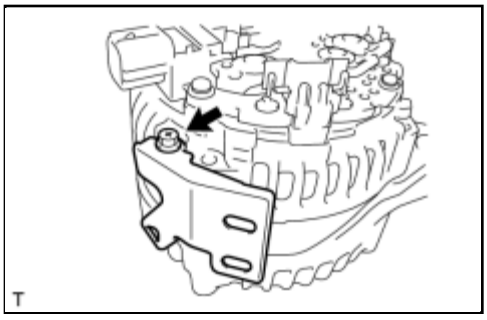

(c) Install the cord clip with the bolt.

Torque: 4.6 N·m (47 kgf·cm, 41in·lbf)

4. INSTALL GENERATOR BRUSH HOLDER ASSEMBLY

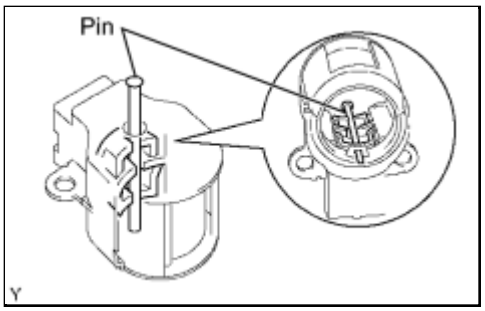

(a) While pushing the 2 brushes into the generator brush holder, insert a φ1.0 mm (0.0394 in.) pin into the generator brush holder.

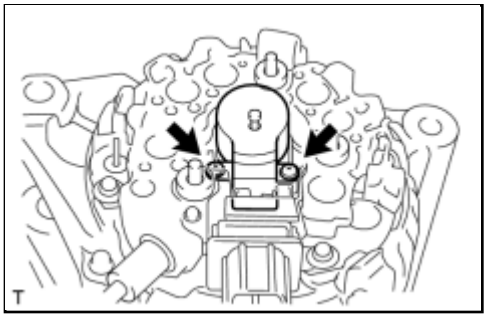

(b) Install the generator brush holder with the 2 screws.

Torque: 1.8 N·m (18 kgf·cm, 16in·lbf)

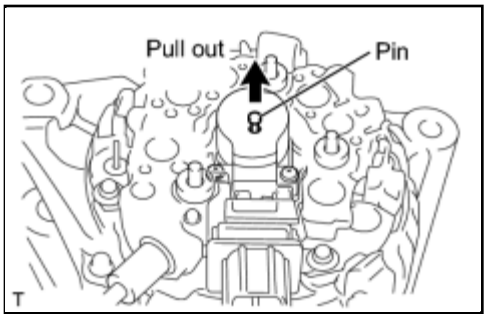

(c) Pull the pin out of the generator brush holder.

5. INSTALL GENERATOR TERMINAL INSULATOR

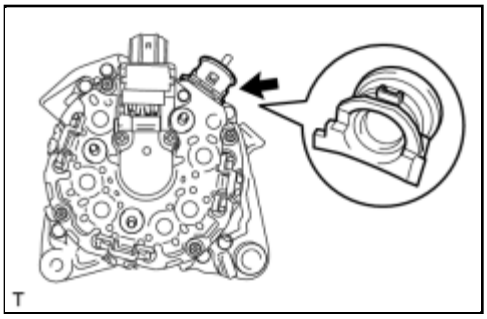

(a) Install the terminal insulator onto the generator rectifier end frame.

6. INSTALL GENERATOR REAR END COVER

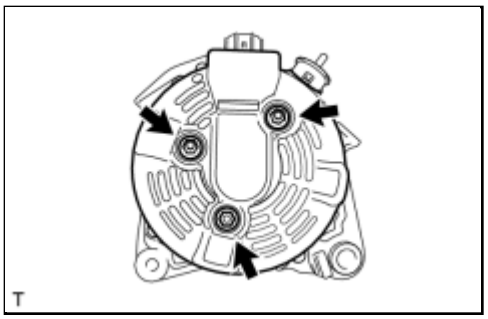

(a) Install the generator rear end cover with the 3 nuts.

Torque: 4.6 N·m (47 kgf·cm, 41in·lbf)

7. INSTALL GENERATOR CLUTCH PULLEY

(a) Temporarily install the clutch pulley onto the rotor shaft.

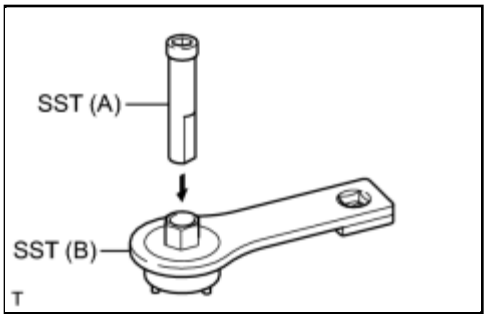

(b) Set SST (A) and (B).

SST: 09820-63021

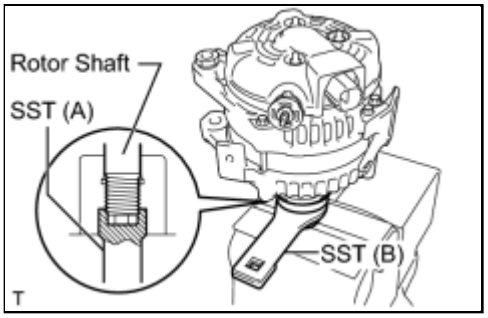

(c) Clamp SST (A) in a vise.

(d) Place the rotor shaft end into SST (A).

(e) Fit SST (B) to the clutch pulley.

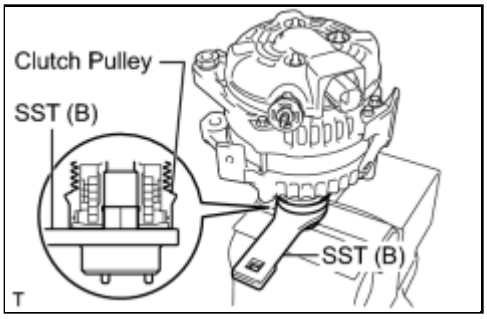

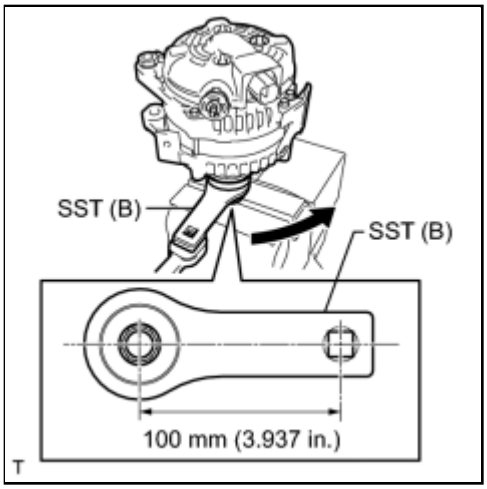

(f) Tighten the pulley by turning SST (B) in the direction indicated by the arrow shown in the illustration.

Without SST - Torque: 111 N·m (1127 kgf·cm, 82ft·lbf)
With SST - Torque: 84 N·m (857 kgf·cm, 62ft·lbf)

NOTICE:

- Use a torque wrench with a fulcrum length of 318 mm (12.52 in.).
- This torque value is effective when SST is parallel to the torque wrench.

(g) Remove the generator assembly from SST.

(h) Check that the clutch pulley rotates smoothly.

(i) Install a new clutch pulley cap to the clutch pulley.

Last Modified: 3-10-2010	6.4 A	**From:** 200901
Model Year: 2010	**Model:** Corolla	**Doc ID:** RM0000026ZB00VX
Title: 2AZ-FE BATTERY / CHARGING: GENERATOR: INSTALLATION (2010 Corolla)		

INSTALLATION

1. INSTALL GENERATOR ASSEMBLY

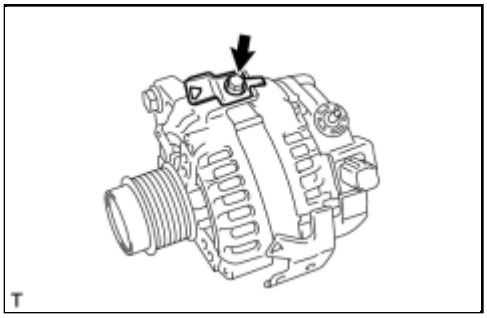

(a) Install the wire harness clamp bracket with the bolt.

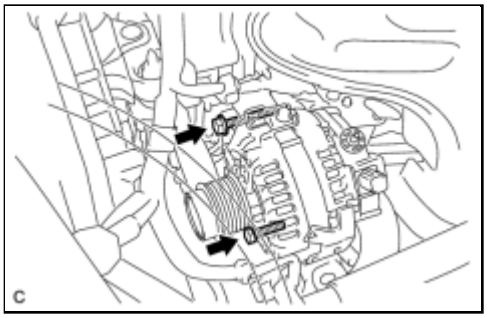

(b) Install the generator assembly with the 2 bolts.

Bolt A - Torque: 21 N·m (215 kgf·cm, 16ft·lbf)
Bolt B - Torque: 52 N·m (530 kgf·cm, 38ft·lbf)

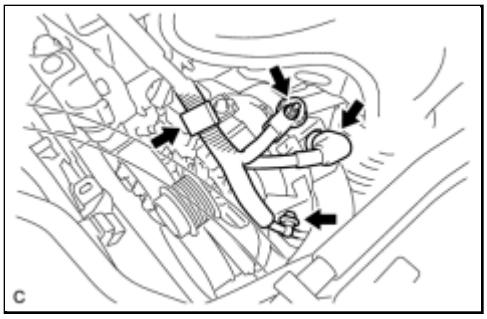

(c) Install the generator wire to terminal B with the nut.

Torque: 9.8 N·m (100 kgf·cm, 87in·lbf)

(d) Attach the clamp and connect the generator connector to the generator.

(e) Install the 2 wire harness clamps.

2. INSTALL V-RIBBED BELT INFO

3. INSTALL ENGINE UNDER COVER RH

4. CONNECT CABLE TO NEGATIVE BATTERY TERMINAL

HINT: INFO .

Last Modified: 3-10-2010	6.4 K	**From:** 200901
Model Year: 2010	**Model:** Corolla	**Doc ID:** RM000002196006X
Title: 2ZR-FE BATTERY / CHARGING: GENERATOR: COMPONENTS (2010 Corolla)		

COMPONENTS

ILLUSTRATION

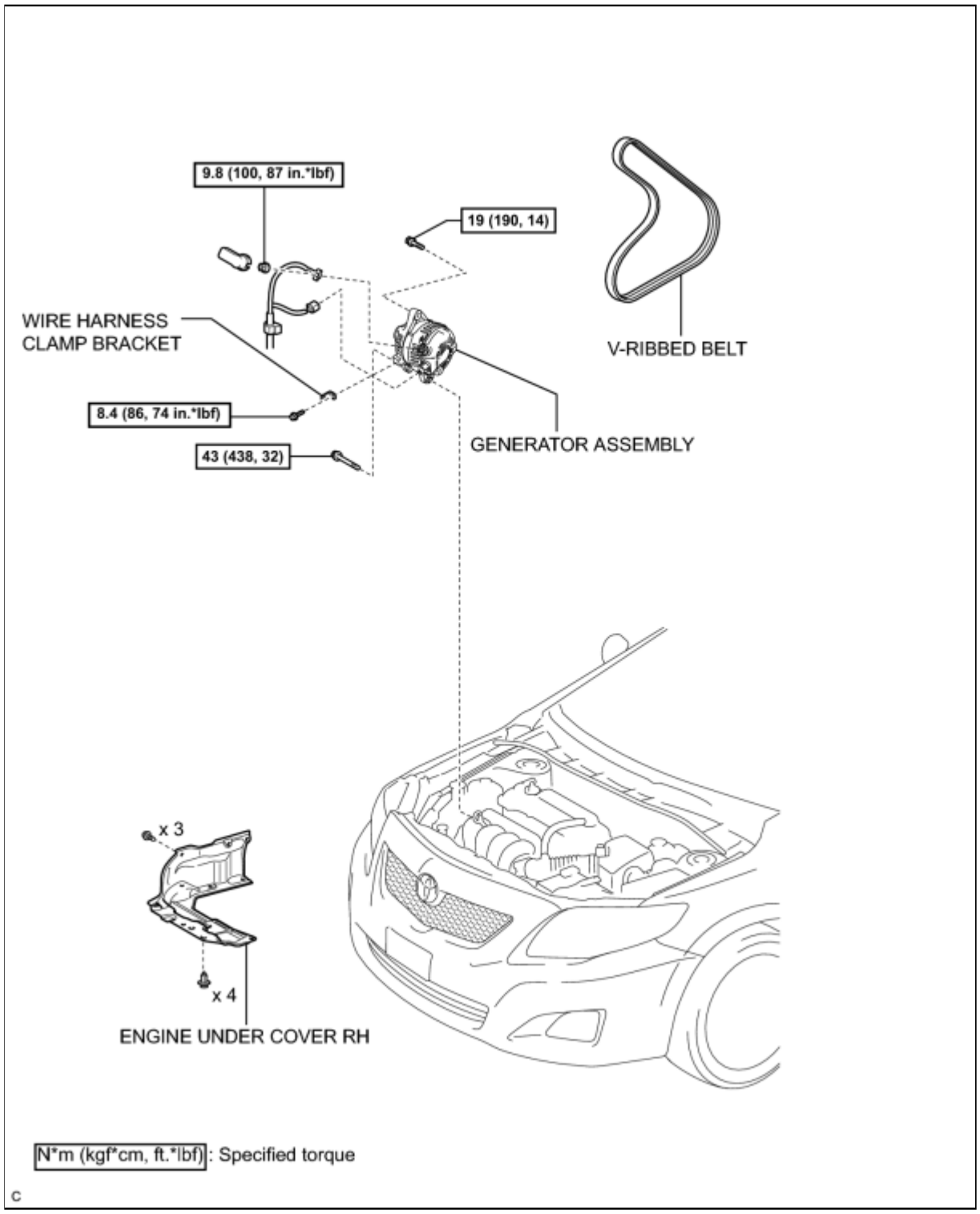

ILLUSTRATION

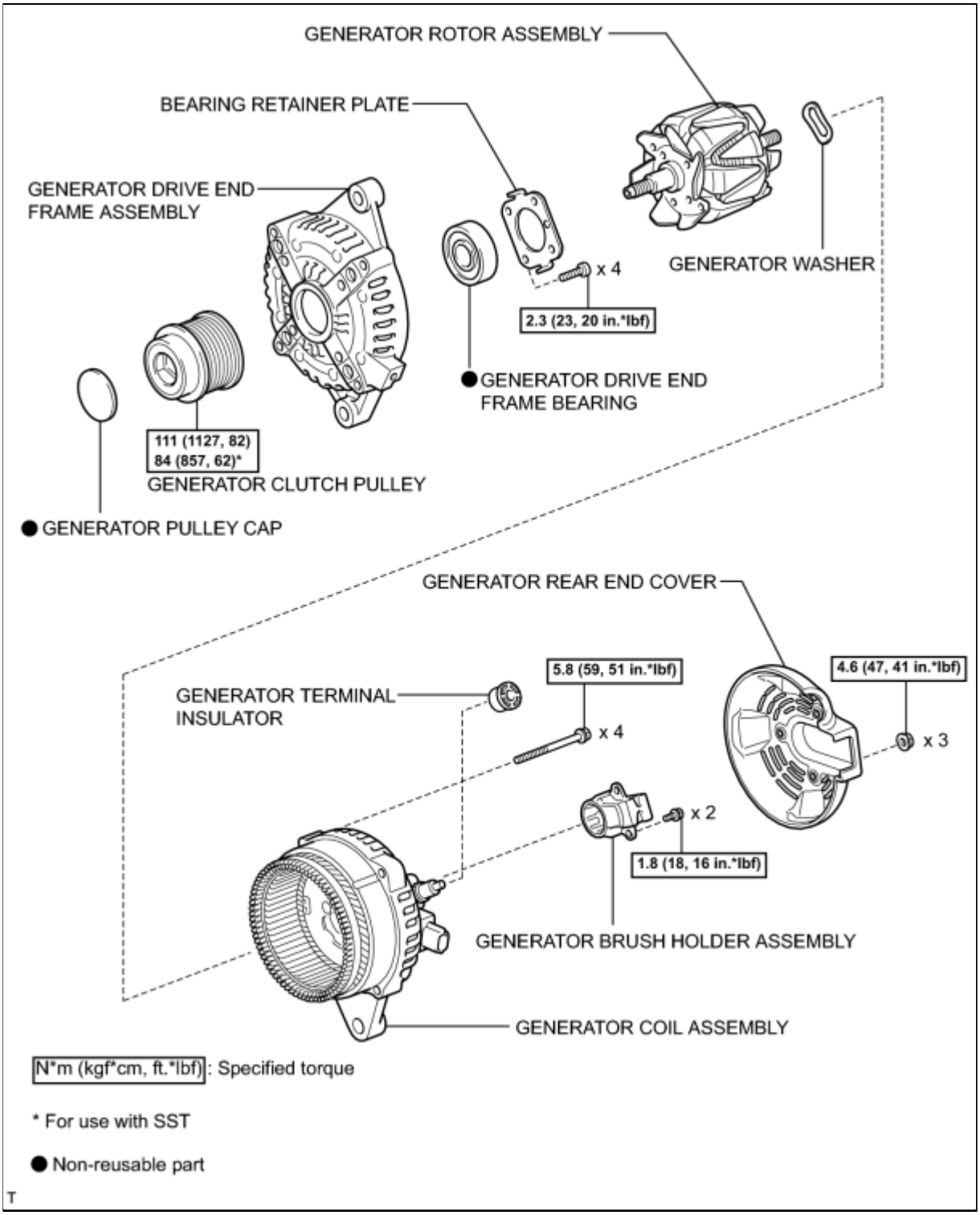

Last Modified: 3-10-2010	6.4 A	**From:** 200901
Model Year: 2010	**Model:** Corolla	**Doc ID:** RM000001ONQ023X
Title: 2ZR-FE BATTERY / CHARGING: GENERATOR: DISASSEMBLY (2010 Corolla)		

DISASSEMBLY

1. REMOVE GENERATOR CLUTCH PULLEY

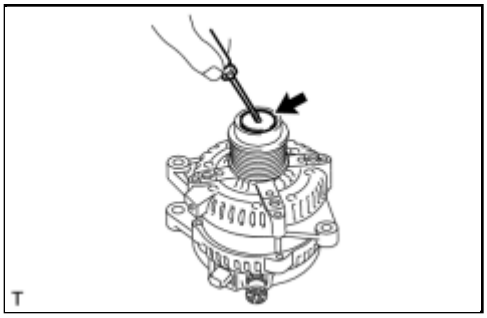

(a) Using a screwdriver, remove the generator pulley cap.

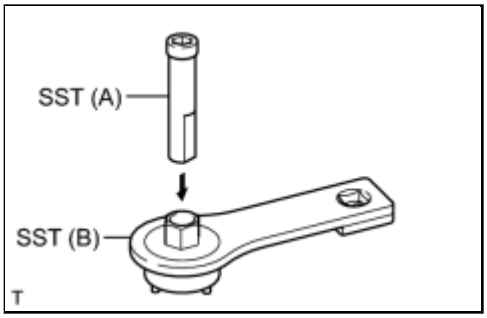

(b) Set SST (A) and (B).

SST: 09820-63021

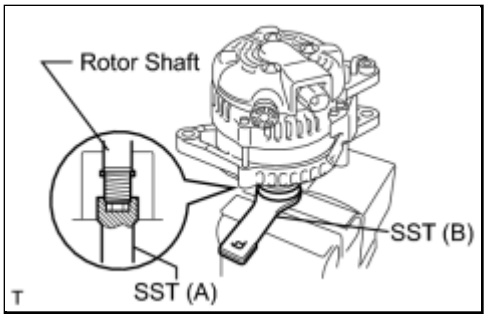

(c) Clamp SST (A) in a vise.

(d) Place the rotor shaft end into SST (A).

(e) Fit SST (B) to the clutch pulley.

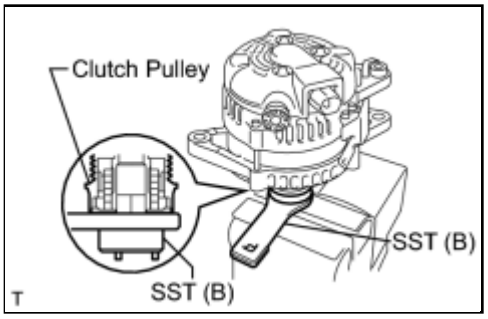

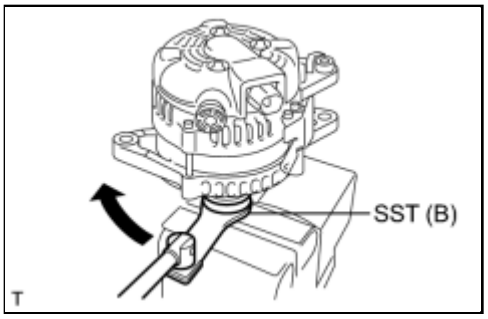

(f) Loosen the pulley by turning SST (B) in the direction shown in the illustration.

(g) Remove the generator assembly from SST.

(h) Remove the clutch pulley from the rotor shaft.

2. REMOVE GENERATOR REAR END COVER

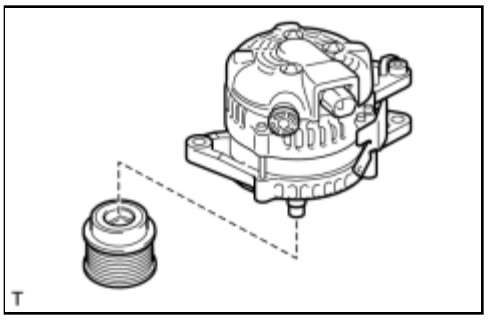

(a) Place the generator assembly on the clutch pulley.

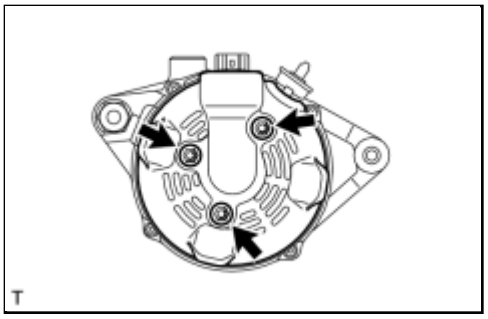

(b) Remove the 3 nuts and generator rear end cover.

3. REMOVE GENERATOR TERMINAL INSULATOR

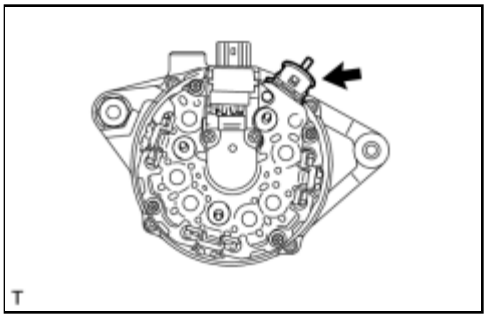

(a) Remove the terminal insulator from the generator coil.

4. REMOVE GENERATOR BRUSH HOLDER ASSEMBLY

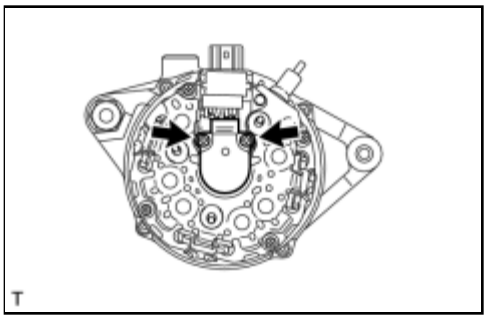

(a) Remove the 2 screws and brush holder from the generator coil.

5. REMOVE GENERATOR COIL ASSEMBLY

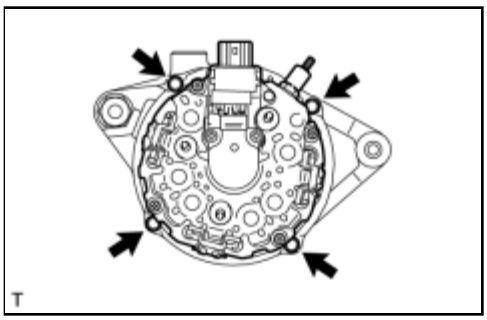

(a) Remove the 4 bolts.

(b) Using SST, remove the generator coil assembly.

SST: 09950-40011

09951-04020
09952-04010
09953-04020
09954-04010
09955-04071

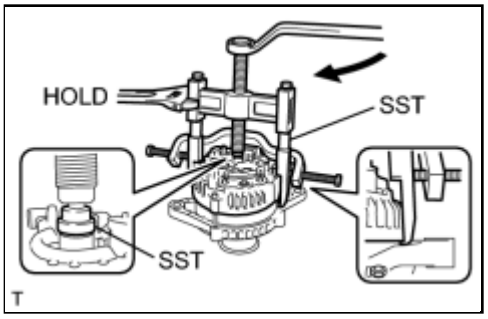

09957-04010
09958-04011

6. REMOVE GENERATOR ROTOR ASSEMBLY

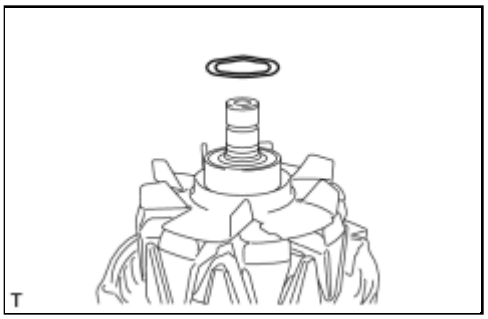

(a) Remove the generator washer.

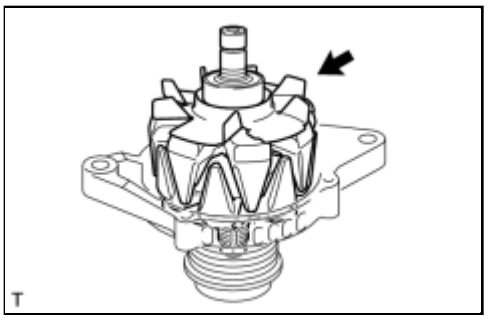

(b) Remove the generator rotor assembly.

7. REMOVE GENERATOR DRIVE END FRAME BEARING

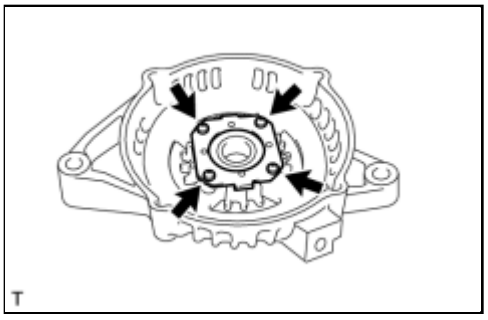

(a) Remove the 4 screws and retainer plate from the drive end frame.

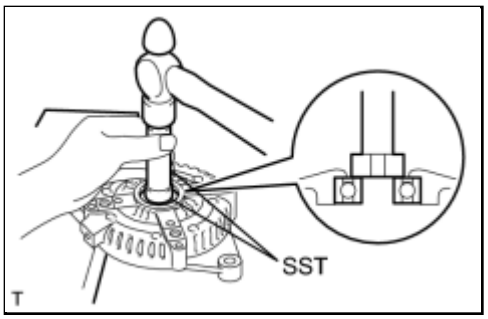

(b) Using SST and a hammer, tap out the drive end frame bearing from the drive end frame.

SST: 09950-60010

09951-00250

SST: 09950-70010

09951-07100

Last Modified: 3-10-2010	6.4 A	**From:** 200901
Model Year: 2010	**Model:** Corolla	**Doc ID:** RM000002197006X
Title: 2ZR-FE BATTERY / CHARGING: GENERATOR: REMOVAL (2010 Corolla)		

REMOVAL

1. DISCONNECT CABLE FROM NEGATIVE BATTERY TERMINAL

2. REMOVE ENGINE UNDER COVER RH

3. REMOVE V-RIBBED BELT INFO

4. REMOVE GENERATOR ASSEMBLY

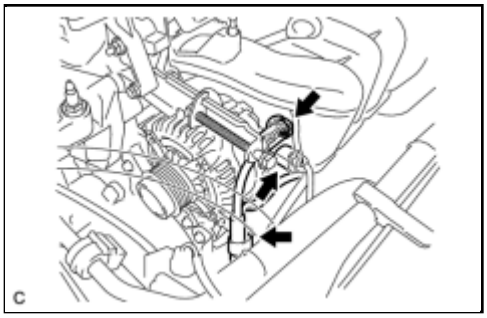

(a) Remove the terminal cap.

(b) Remove the nut and disconnect the wire harness from terminal B.

(c) Disconnect the connector and harness clamp.

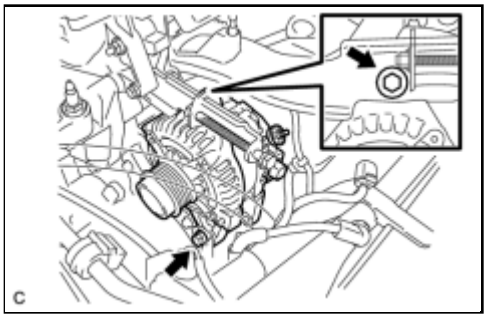

(d) Remove the 2 bolts and generator assembly.

(e) Remove the bolt and wire harness clamp bracket.

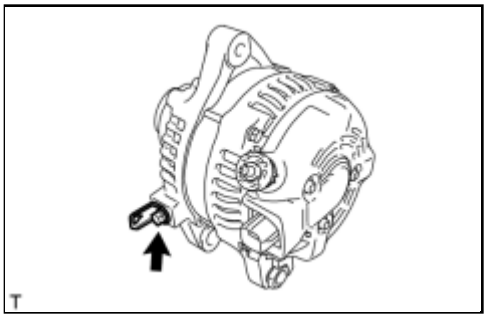

T

Last Modified: 3-10-2010	6.4 G	**From:** 200901
Model Year: 2010	**Model:** Corolla	**Doc ID:** RM000001ONN022X
Title: 2ZR-FE BATTERY / CHARGING: GENERATOR: INSPECTION (2010 Corolla)		

INSPECTION

1. INSPECT GENERATOR CLUTCH PULLEY

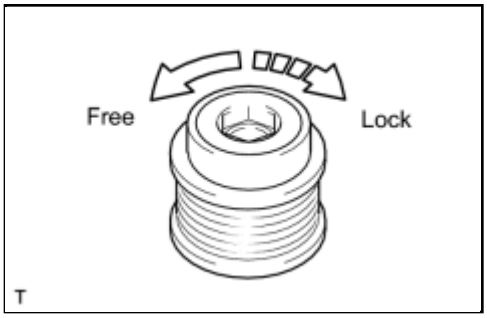

(a) Hold the center of the pulley, and confirm that the outer ring turns counterclockwise and does not turn clockwise.

If the result is not as specified, replace the clutch pulley.

2. INSPECT GENERATOR BRUSH HOLDER ASSEMBLY

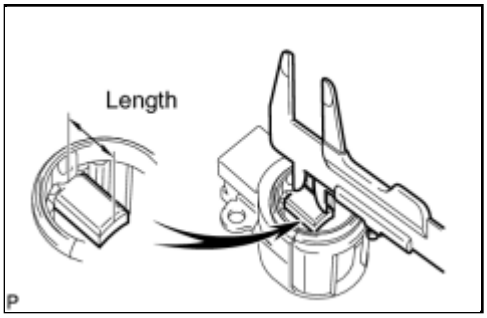

(a) Using a vernier caliper, measure the length of the exposed brushes.

Standard exposed length:
9.5 to 11.5 mm (0.374 to 0.453 in.)
Minimum exposed length:
4.5 mm (0.177 in.)

If the exposed length is less than the minimum, replace the brush holder assembly.

3. INSPECT GENERATOR ROTOR ASSEMBLY

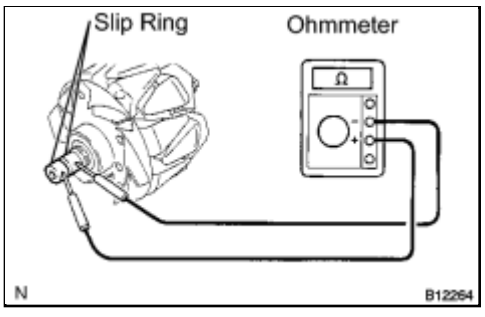

(a) Check the generator rotor for an open circuit.

(1) Using an ohmmeter, measure the resistance between the slip rings.

Standard Resistance:

TESTER CONNECTION	CONDITION	SPECIFIED CONDITION
Slip ring - Slip ring	Approx. 20°C (68°F)	2.3 to 2.7 Ω

If the result is not as specified, replace the generator

rotor assembly.

(b) Check the rotor for a short to ground.

(1) Using an ohmmeter, measure the resistance between one of the slip rings and the rotor.

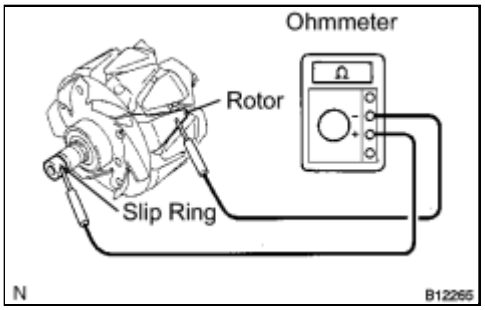

Standard Resistance:

TESTER CONNECTION	CONDITION	SPECIFIED CONDITION
Slip ring - Rotor	-	1 MΩ or higher

If the result is not as specified, replace the generator rotor assembly.

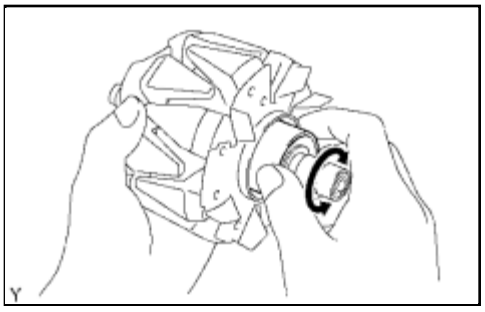

(c) Check that the generator rotor bearing is not rough or worn.

If necessary, replace the generator rotor assembly.

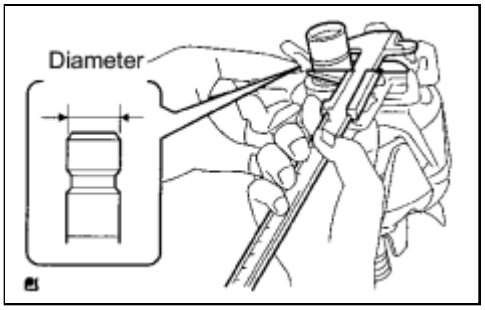

(d) Using a vernier caliper, measure the slip ring diameter.

Standard diameter:
14.2 to 14.4 mm (0.559 to 0.567 in.)
Minimum diameter:
14.0 mm (0.551 in.)

If the diameter is less than the minimum, replace the generator rotor assembly.

4. INSPECT GENERATOR DRIVE END FRAME BEARING

(a) Check that the bearing is not rough or worn.

If necessary, replace the generator drive end frame bearing.

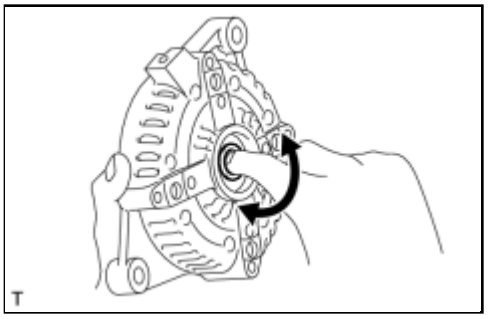
T

Last Modified: 3-10-2010	6.4 A	**From:** 200901
Model Year: 2010	**Model:** Corolla	**Doc ID:** RM000001ONR026X
Title: 2ZR-FE BATTERY / CHARGING: GENERATOR: REASSEMBLY (2010 Corolla)		

REASSEMBLY

1. INSTALL GENERATOR DRIVE END FRAME BEARING

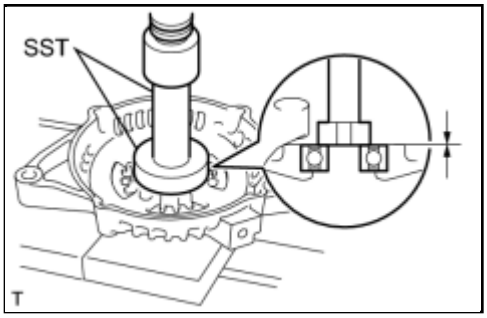

(a) Using SST and a press, press in a new generator drive end frame bearing.

SST: 09950-60010

09951-00470

SST: 09950-70010

09951-07100

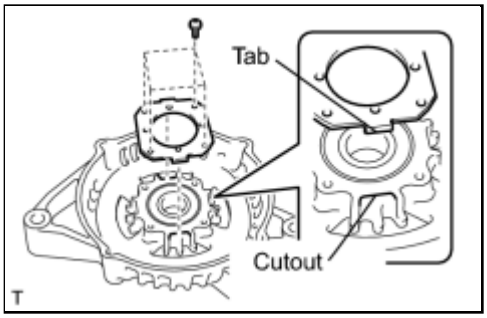

(b) Fit the tabs of the retainer plate into the cutouts on the drive end frame to install the retainer plate.

(c) Install the 4 screws.

Torque: 2.3 N·m (23 kgf·cm, 20in·lbf)

2. INSTALL GENERATOR ROTOR ASSEMBLY

(a) Place the drive end frame on the clutch pulley.

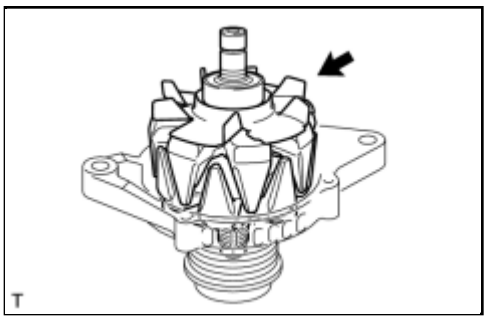

(b) Install the generator rotor assembly to the drive end frame.

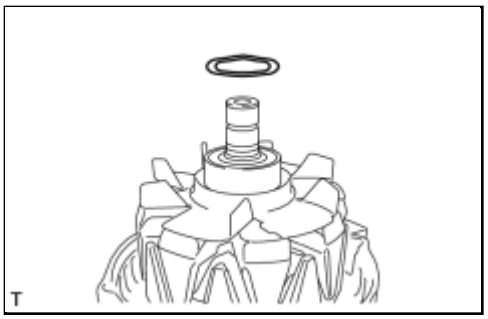

(c) Place the generator washer on the generator rotor.

3. INSTALL GENERATOR COIL ASSEMBLY

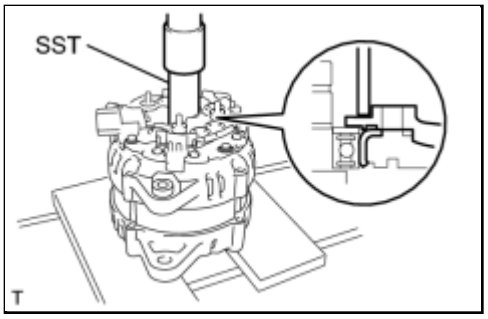

(a) Using SST and a press, slowly press in the generator coil assembly.

SST: 09612-70100

09612-07240

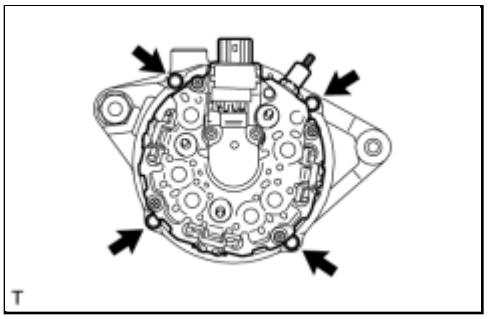

(b) Install the 4 bolts.

Torque: 5.8 N·m (59 kgf·cm, 51in·lbf)

4. INSTALL GENERATOR BRUSH HOLDER ASSEMBLY

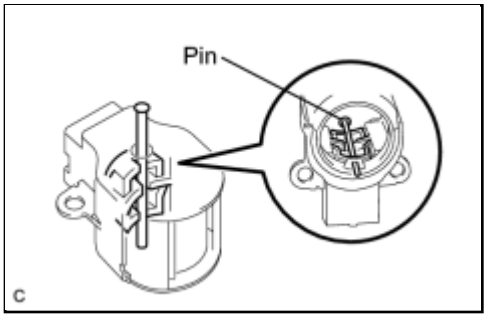

(a) While pushing the 2 brushes into the generator brush holder assembly, insert a φ1.0 mm (0.0394 in.) pin into the brush holder hole.

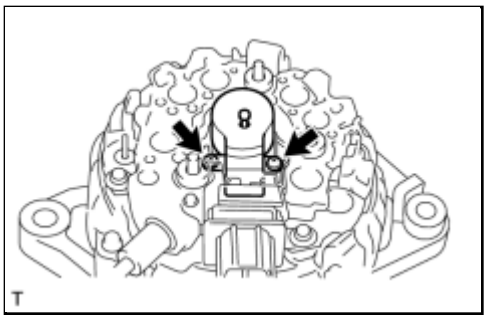

(b) Install the brush holder assembly to the generator coil with the 2 screws.

Torque: 1.8 N·m (18 kgf·cm, 16in·lbf)

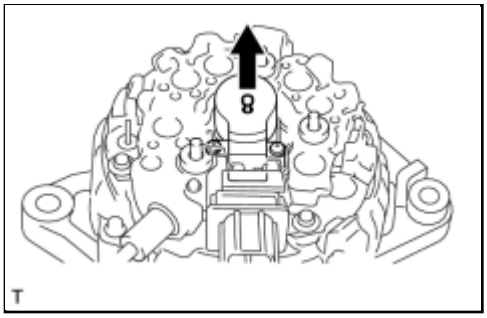

(c) Pull out the pin from the generator brush holder.

5. INSTALL GENERATOR TERMINAL INSULATOR

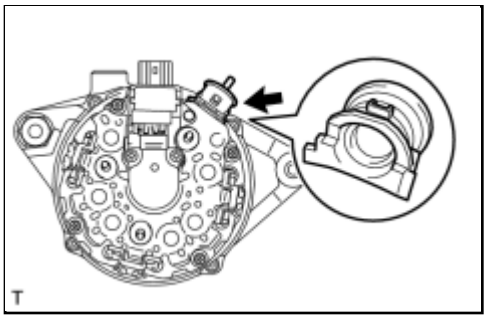

(a) Install the terminal insulator to the generator coil.

NOTICE:

Pay attention to the installation direction of the terminal insulator as shown in the illustration.

6. INSTALL GENERATOR REAR END COVER

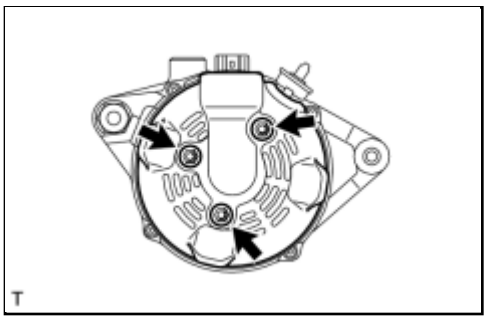

(a) Install the generator rear end cover to the generator coil with the 3 nuts.

Torque: 4.6 N·m (47 kgf·cm, 41in·lbf)

7. INSTALL GENERATOR CLUTCH PULLEY

(a) Temporarily install the clutch pulley onto the rotor shaft.

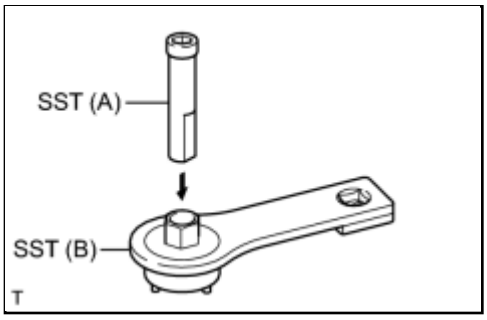

(b) Set SST (A) and (B).

SST: 09820-63021

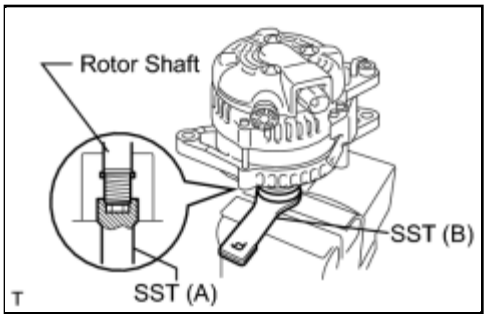

(c) Clamp SST (A) in a vise.

(d) Place the rotor shaft end into SST (A).

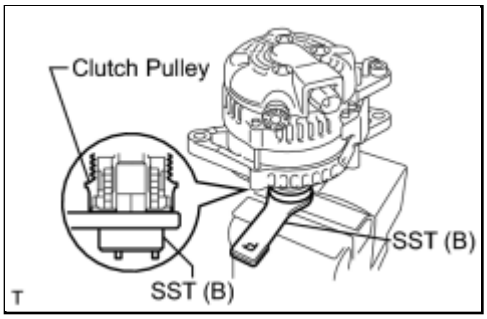

(e) Fit SST (B) to the clutch pulley.

(f) Tighten the pulley by turning SST (B) in the direction shown in the illustration.

without SST - Torque: 111 N·m (1127 kgf·cm, 82ft·lbf)
with SST - Torque: 84 N·m (857 kgf·cm, 62ft·lbf)

NOTICE:

- Use a torque wrench with a fulcrum length of 318 mm (12.52 in.).

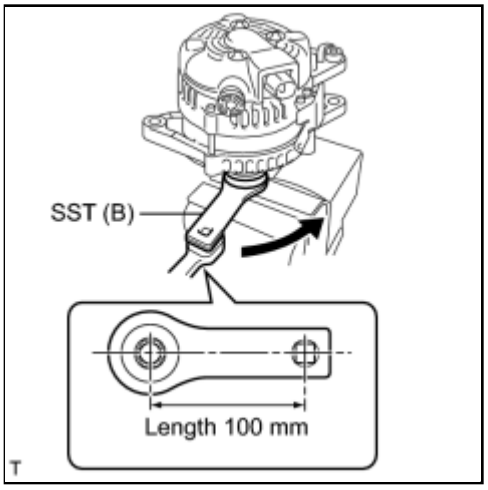

- This torque value is effective when SST is parallel to the torque wrench.

(g) Remove the generator assembly from SST.

(h) Check that the clutch pulley rotates smoothly.

(i) Install a new clutch pulley cap to the clutch pulley.

Last Modified: 3-10-2010	6.4 A	**From:** 200901
Model Year: 2010	**Model:** Corolla	**Doc ID:** RM000002194006X
Title: 2ZR-FE BATTERY / CHARGING: GENERATOR: INSTALLATION (2010 Corolla)		

INSTALLATION

1. INSTALL GENERATOR ASSEMBLY

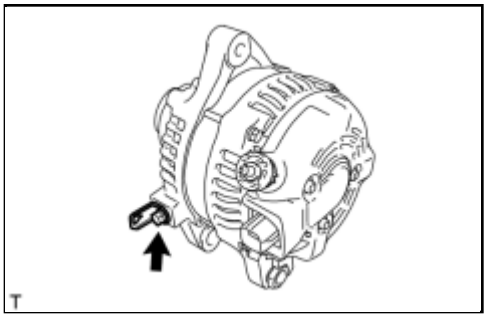

(a) Install the wire harness clamp bracket with the bolt.

Torque: 8.4 N·m (86 kgf·cm, 74in·lbf)

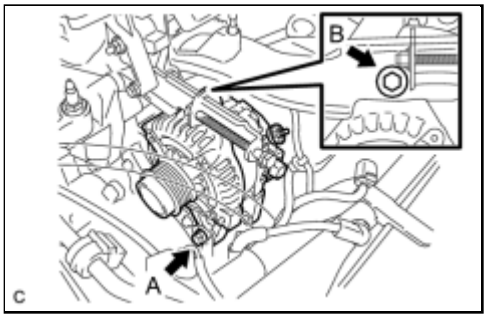

(b) Temporarily install the generator assembly with the 2 bolts.

Bolt A - Torque: 43 N·m (438 kgf·cm, 32ft·lbf)

Bolt B - Torque: 19 N·m (190 kgf·cm, 14ft·lbf)

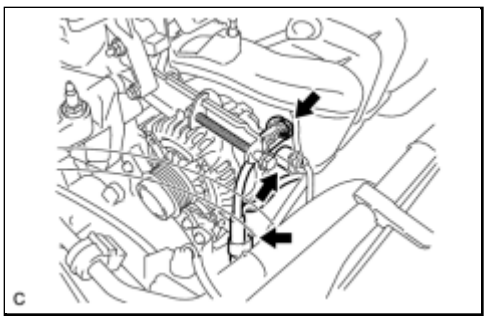

(c) Install the connector and wire harness clamp.

(d) Install the wire harness to terminal B with the nut and install the terminal cap.

Torque: 9.8 N·m (100 kgf·cm, 87in·lbf)

2. INSTALL V-RIBBED BELT INFO

3. ADJUST V-RIBBED BELT INFO

4. INSPECT V-RIBBED BELT INFO

5. INSTALL ENGINE UNDER COVER RH

Torque: 5.0 N·m (51 kgf·cm, 44in·lbf)

6. CONNECT CABLE TO NEGATIVE BATTERY TERMINAL

HINT: INFO .

Last Modified: 3-10-2010	6.4 K	**From:** 200901
Model Year: 2010	**Model:** Corolla	**Doc ID:** RM000003FWA003X
Title: POWER OUTLETS (INT): CENTER POWER OUTLET SOCKET: COMPONENTS (2010 Corolla)		

COMPONENTS

ILLUSTRATION

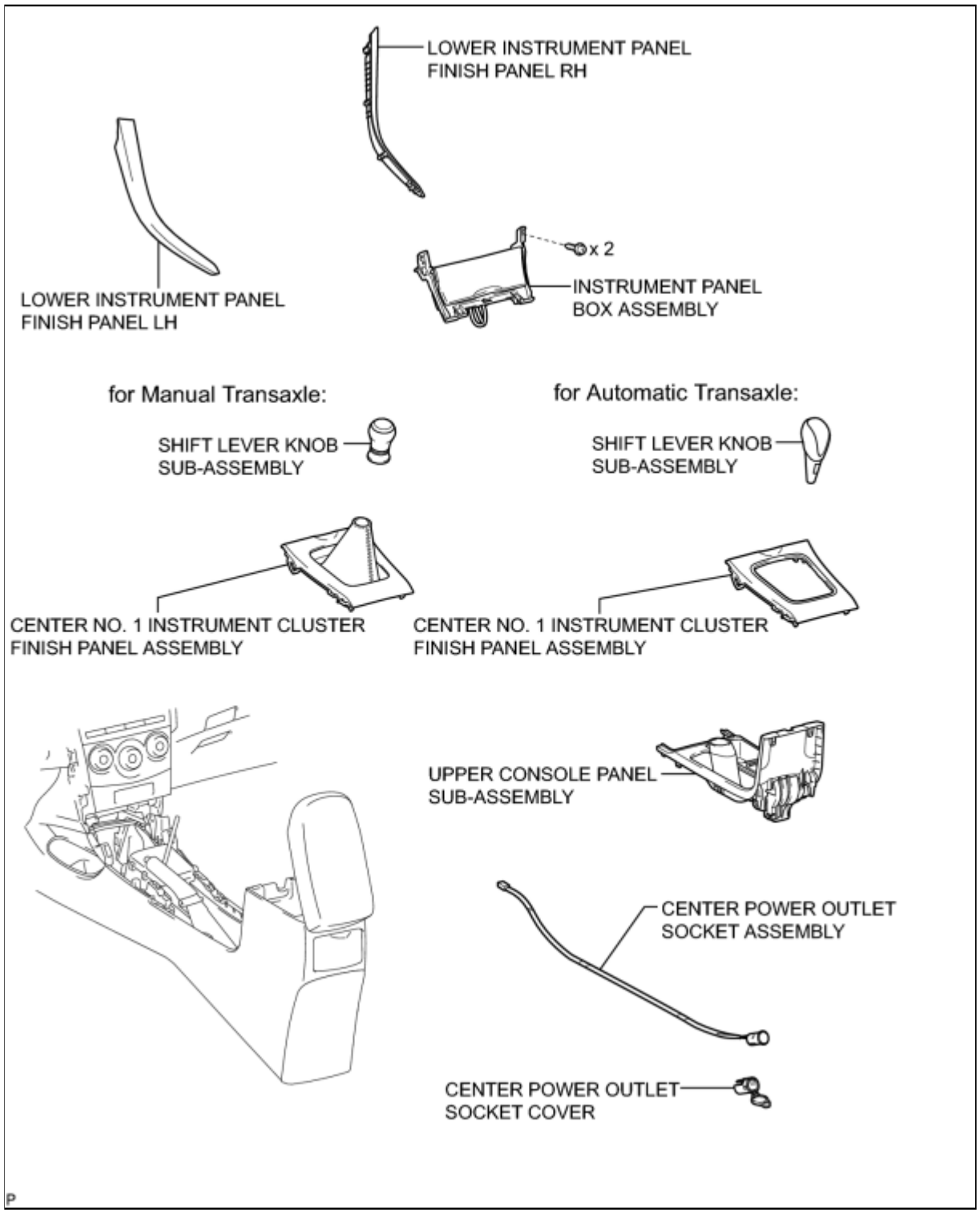

Last Modified: 3-10-2010	6.4 A	**From:** 200901
Model Year: 2010	**Model:** Corolla	**Doc ID:** RM000003FWB003X
Title: POWER OUTLETS (INT): CENTER POWER OUTLET SOCKET: REMOVAL (2010 Corolla)		

REMOVAL

1. **REMOVE LOWER INSTRUMENT PANEL FINISH PANEL LH** INFO
2. **REMOVE LOWER INSTRUMENT PANEL FINISH PANEL RH** INFO
3. **REMOVE SHIFT LEVER KNOB SUB-ASSEMBLY (for Manual Transaxle)** INFO
4. **REMOVE CENTER NO. 1 INSTRUMENT CLUSTER FINISH PANEL ASSEMBLY (for Manual Transaxle)** INFO
5. **REMOVE SHIFT LEVER KNOB SUB-ASSEMBLY (for Automatic Transaxle)** INFO
6. **REMOVE CENTER NO. 1 INSTRUMENT CLUSTER FINISH PANEL ASSEMBLY (for Automatic Transaxle)** INFO
7. **REMOVE INSTRUMENT PANEL BOX ASSEMBLY** INFO
8. **REMOVE UPPER CONSOLE PANEL SUB-ASSEMBLY** INFO
9. **REMOVE CENTER POWER OUTLET SOCKET ASSEMBLY**

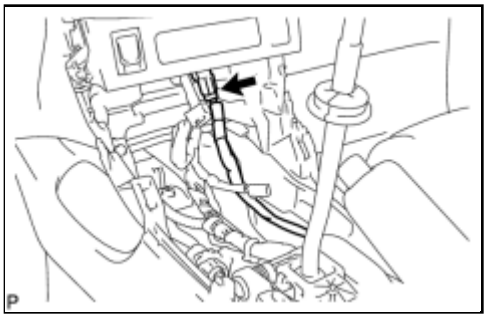

(a) Disconnect the connector.

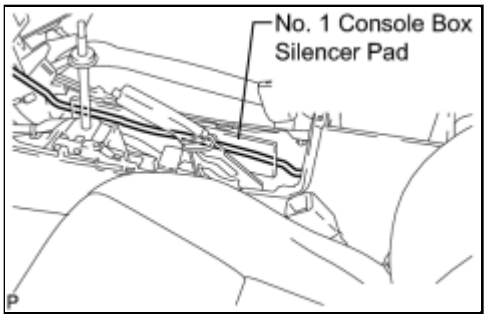

(b) Separate part of the No. 1 console box silencer pad to allow the wire harness to be removed.

HINT:

The separated part of the No. 1 console box silencer pad will be reattached during installation.

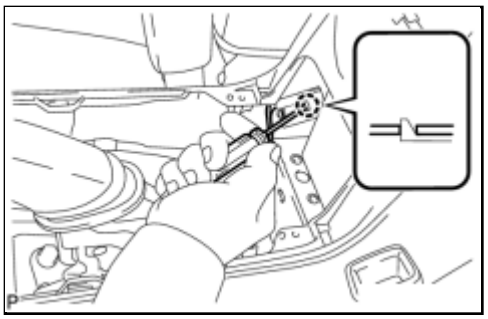

(c) Using a screwdriver, disengage the claw and remove the center power outlet socket assembly.

10. REMOVE CENTER POWER OUTLET SOCKET COVER

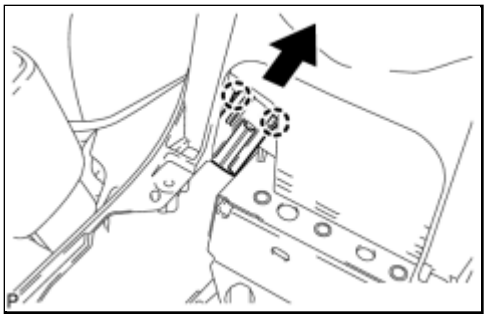

(a) Disengage the 2 claws and remove the center power outlet socket cover.

Last Modified: 3-10-2010	6.4 A	**From:** 200901
Model Year: 2010	**Model:** Corolla	**Doc ID:** RM000003FW9003X
Title: POWER OUTLETS (INT): CENTER POWER OUTLET SOCKET: INSTALLATION (2010 Corolla)		

INSTALLATION

1. INSTALL CENTER POWER OUTLET SOCKET COVER

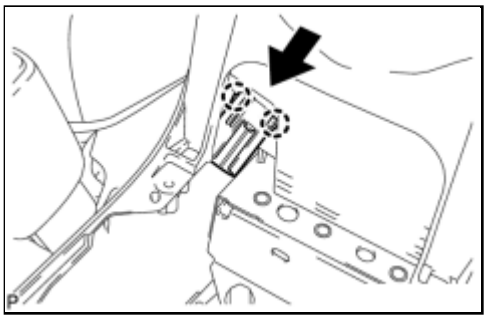

(a) Engage the 2 claws and install the center power outlet socket cover.

2. INSTALL CENTER POWER OUTLET SOCKET ASSEMBLY

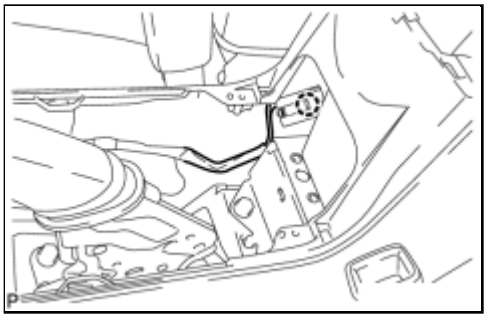

(a) Engage the claw and install the center power outlet socket assembly.

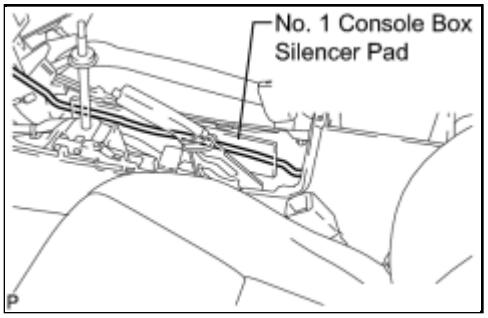

(b) Attach the No. 1 console box silencer pad to secure the wire harness.

(c) Connect the connector.

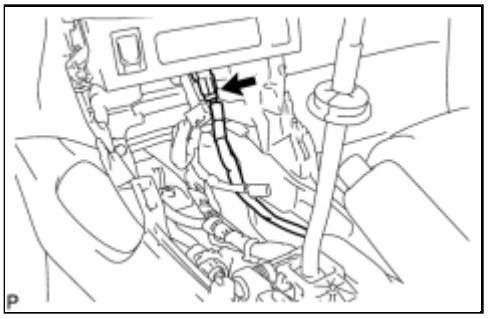

3. INSTALL UPPER CONSOLE PANEL SUB-ASSEMBLY INFO

4. INSTALL INSTRUMENT PANEL BOX ASSEMBLY INFO

5. INSTALL CENTER NO. 1 INSTRUMENT CLUSTER FINISH PANEL ASSEMBLY (for Manual Transaxle) INFO

6. INSTALL SHIFT LEVER KNOB SUB-ASSEMBLY (for Manual Transaxle) INFO

7. INSTALL CENTER NO. 1 INSTRUMENT CLUSTER FINISH PANEL ASSEMBLY (for Automatic Transaxle) INFO

8. INSTALL SHIFT LEVER KNOB SUB-ASSEMBLY (for Automatic Transaxle) INFO

9. INSTALL LOWER INSTRUMENT PANEL FINISH PANEL LH INFO

10. INSTALL LOWER INSTRUMENT PANEL FINISH PANEL RH INFO

Last Modified: 3-10-2010	6.4 K	**From:** 200901
Model Year: 2010	**Model:** Corolla	**Doc ID:** RM000003FW4001X
Title: POWER OUTLETS (INT): CIGARETTE LIGHTER: COMPONENTS (2010 Corolla)		

COMPONENTS

ILLUSTRATION

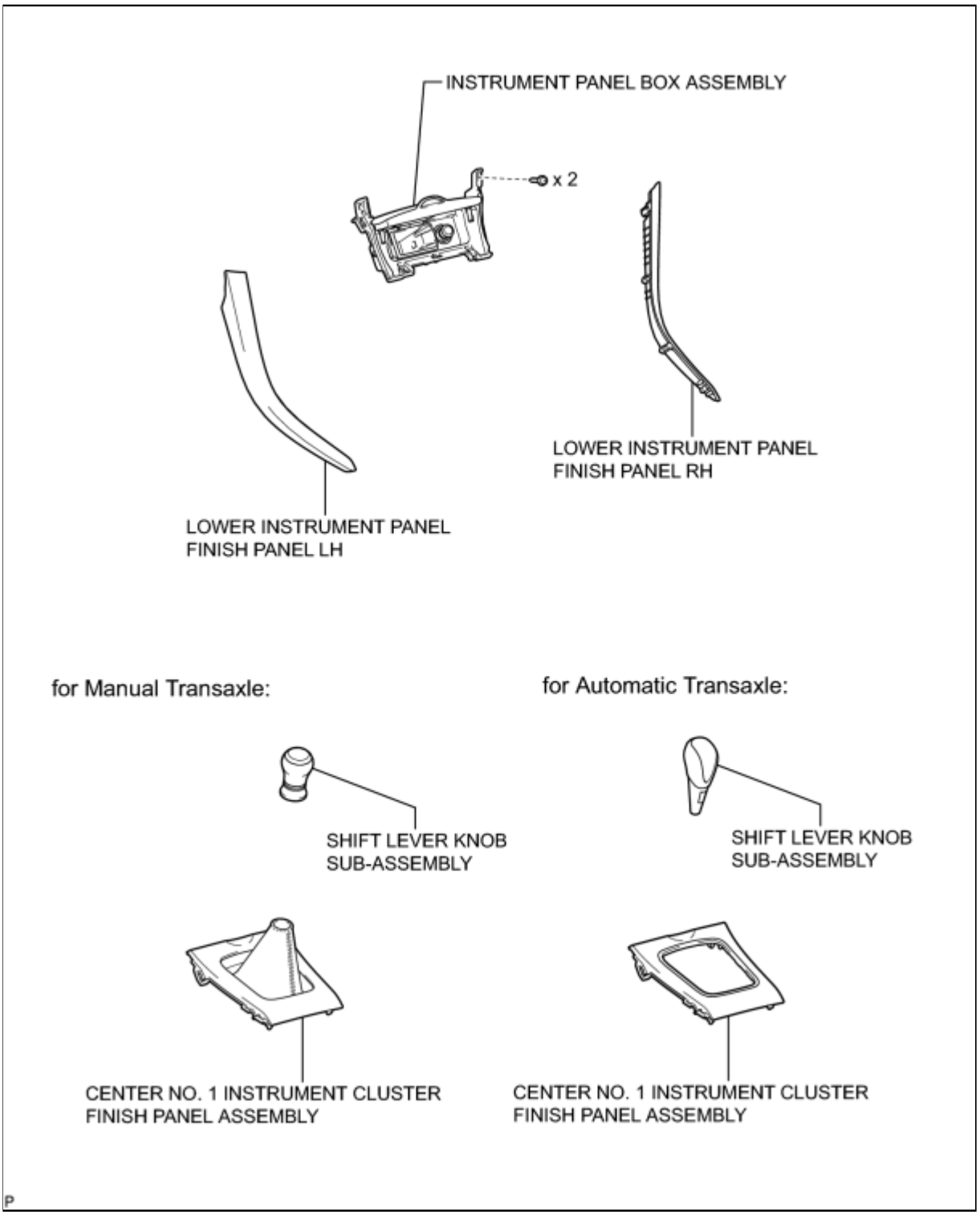

ILLUSTRATION

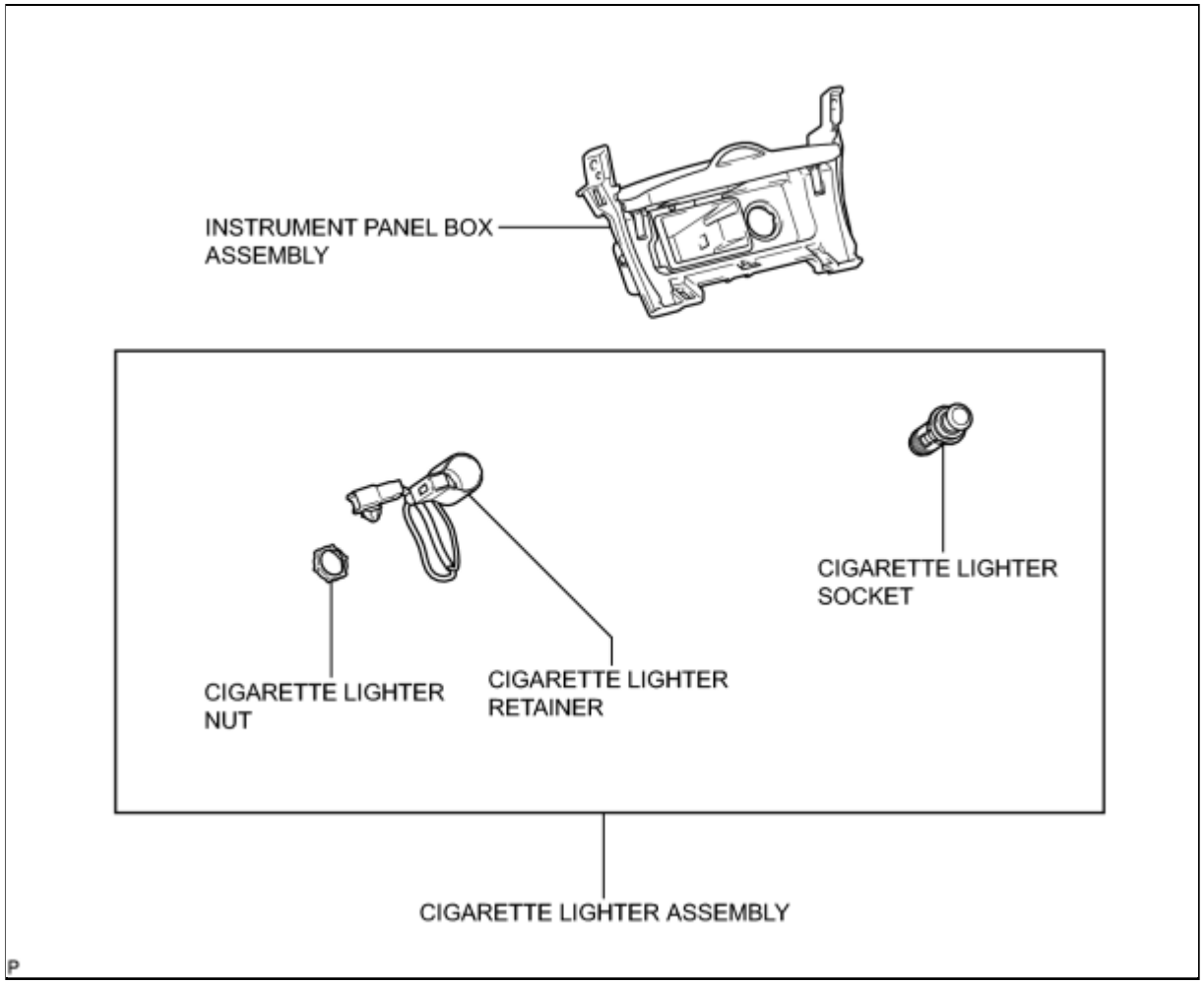

Last Modified: 3-10-2010	6.4 A	**From:** 200901
Model Year: 2010	**Model:** Corolla	**Doc ID:** RM000003AVG00CX
Title: POWER OUTLETS (INT): CIGARETTE LIGHTER: REMOVAL (2010 Corolla)		

REMOVAL

1. **REMOVE LOWER INSTRUMENT PANEL FINISH PANEL LH** INFO
2. **REMOVE LOWER INSTRUMENT PANEL FINISH PANEL RH** INFO
3. **REMOVE SHIFT LEVER KNOB SUB-ASSEMBLY (for Manual Transaxle)** INFO
4. **REMOVE CENTER NO. 1 INSTRUMENT CLUSTER FINISH PANEL ASSEMBLY (for Manual Transaxle)** INFO
5. **REMOVE SHIFT LEVER KNOB SUB-ASSEMBLY (for Automatic Transaxle)** INFO
6. **REMOVE CENTER NO. 1 INSTRUMENT CLUSTER FINISH PANEL ASSEMBLY (for Automatic Transaxle)** INFO
7. **REMOVE INSTRUMENT PANEL BOX ASSEMBLY** INFO
8. **REMOVE CIGARETTE LIGHTER ASSEMBLY**

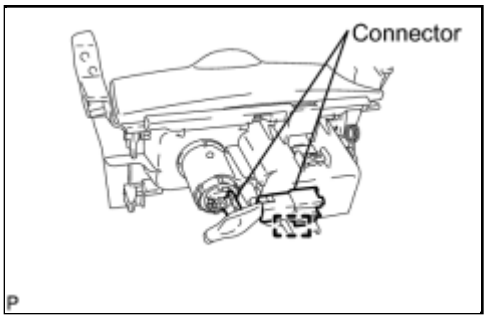

(a) Disconnect the connector.

(b) Disengage the clamp and disconnect the connector.

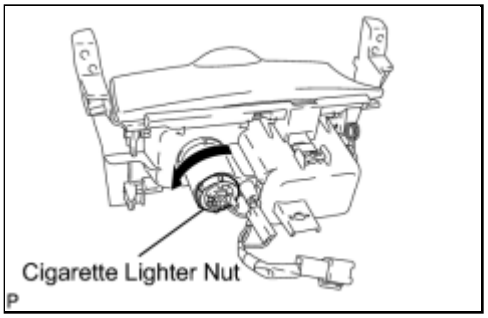

(c) Turn the cigarette lighter nut to remove it.

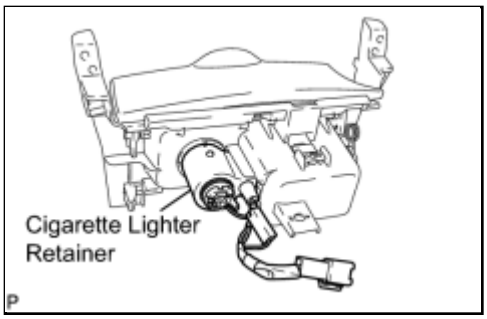

(d) Remove the cigarette lighter retainer.

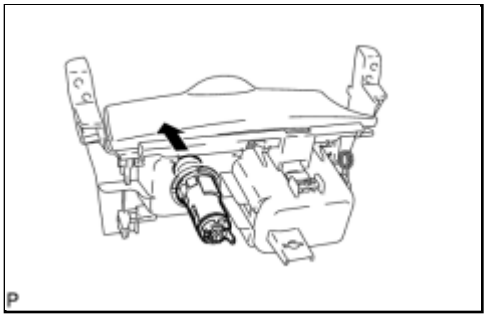

(e) Remove the cigarette lighter socket.

Last Modified: 3-10-2010	6.4 A	**From:** 200901
Model Year: 2010	**Model:** Corolla	**Doc ID:** RM000003AVE00CX
Title: POWER OUTLETS (INT): CIGARETTE LIGHTER: INSTALLATION (2010 Corolla)		

INSTALLATION

1. INSTALL CIGARETTE LIGHTER ASSEMBLY

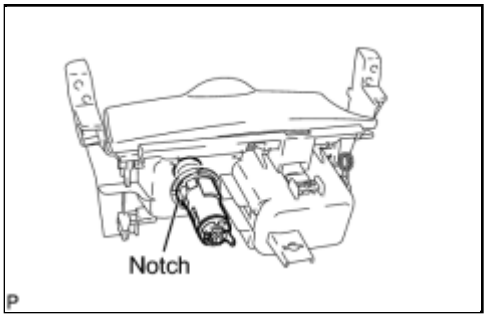

(a) Align the cigarette lighter socket with the notch on the instrument panel box assembly, then install it.

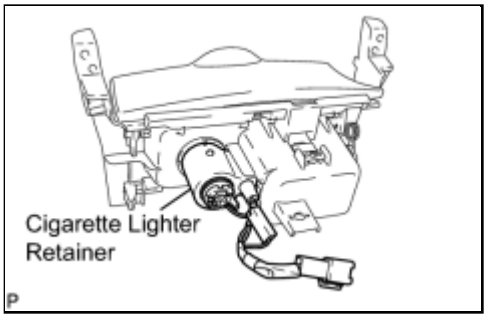

(b) Install the cigarette lighter retainer.

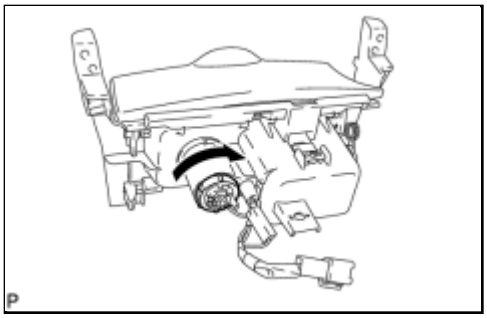

(c) Turn the cigarette lighter nut to install it.

(d) Engage the clamp and connect the connector.

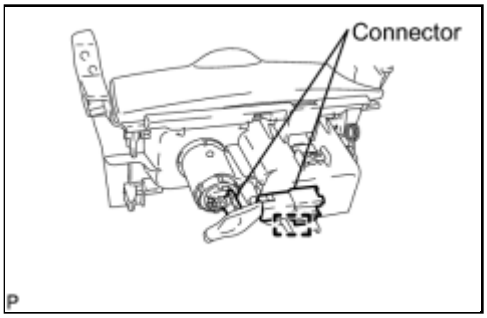

(e) Connect the connector.

2. **INSTALL INSTRUMENT PANEL BOX ASSEMBLY** INFO

3. **INSTALL CENTER NO. 1 INSTRUMENT CLUSTER FINISH PANEL ASSEMBLY (for Manual Transaxle)** INFO

4. **INSTALL SHIFT LEVER KNOB SUB-ASSEMBLY (for Manual Transaxle)** INFO

5. **INSTALL CENTER NO. 1 INSTRUMENT CLUSTER FINISH PANEL ASSEMBLY (for Automatic Transaxle)** INFO

6. **INSTALL SHIFT LEVER KNOB SUB-ASSEMBLY (for Automatic Transaxle)** INFO

7. **INSTALL LOWER INSTRUMENT PANEL FINISH PANEL LH** INFO

8. **INSTALL LOWER INSTRUMENT PANEL FINISH PANEL RH** INFO

Last Modified: 3-10-2010	6.4 K	**From:** 200901
Model Year: 2010	**Model:** Corolla	**Doc ID:** RM000003FW7002X
Title: POWER OUTLETS (INT): POWER OUTLET SOCKET: COMPONENTS (2010 Corolla)		

COMPONENTS

ILLUSTRATION

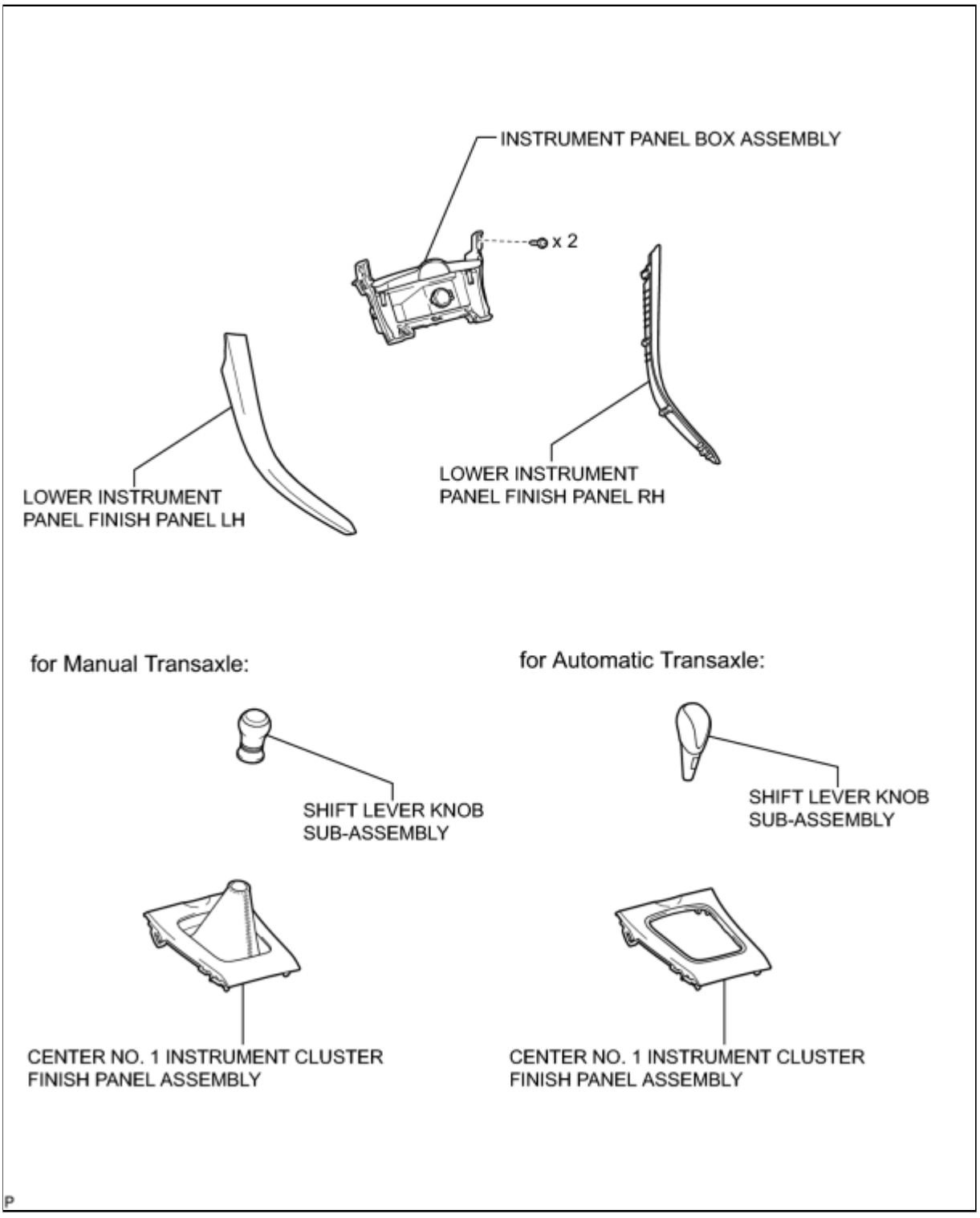

ILLUSTRATION

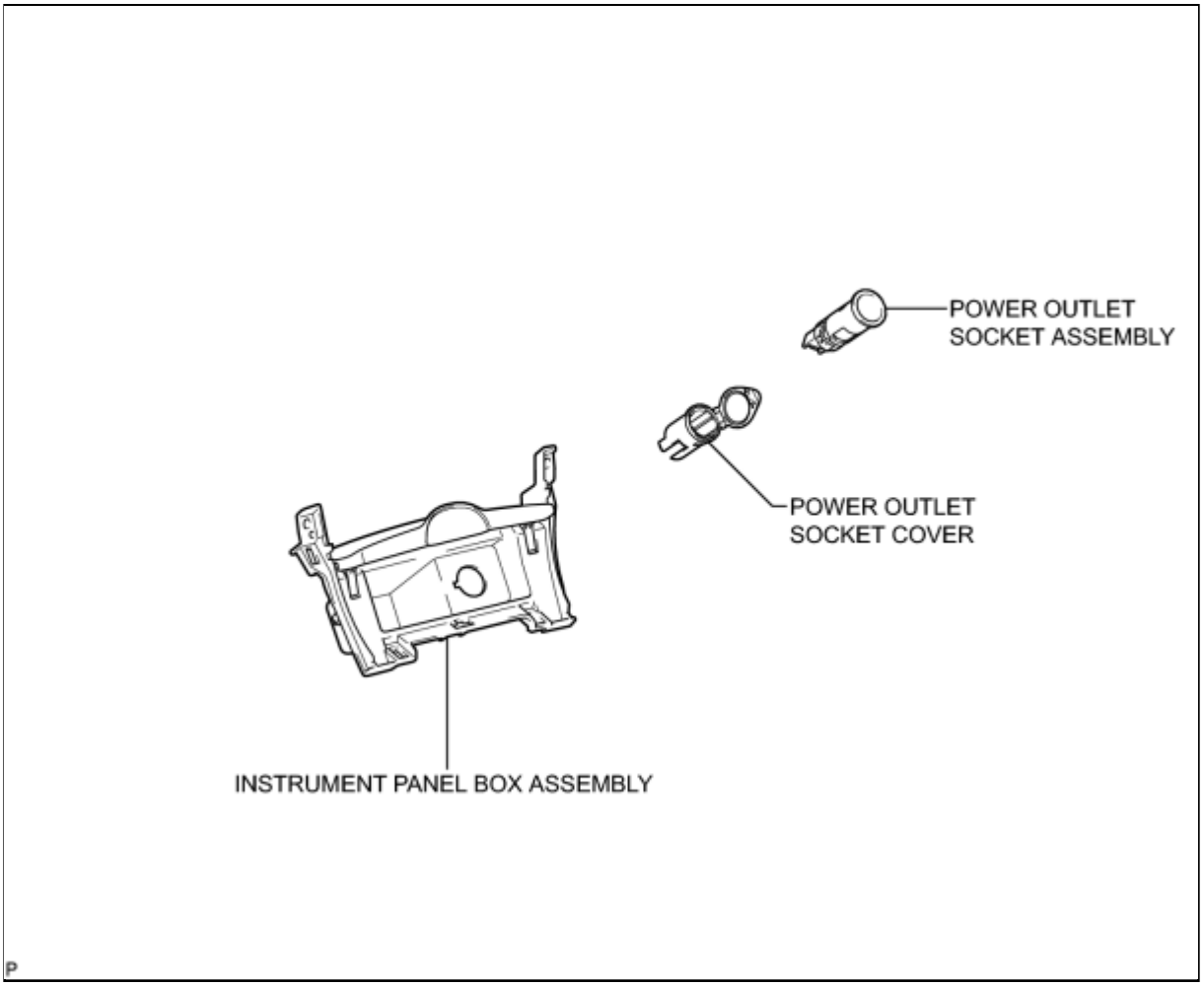

Last Modified: 3-10-2010	6.4 A	**From:** 200901
Model Year: 2010	**Model:** Corolla	**Doc ID:** RM000003FW8002X
Title: POWER OUTLETS (INT): POWER OUTLET SOCKET: REMOVAL (2010 Corolla)		

REMOVAL

1. **REMOVE LOWER INSTRUMENT PANEL FINISH PANEL LH** INFO
2. **REMOVE LOWER INSTRUMENT PANEL FINISH PANEL RH** INFO
3. **REMOVE SHIFT LEVER KNOB SUB-ASSEMBLY (for Manual Transaxle)** INFO
4. **REMOVE CENTER NO. 1 INSTRUMENT CLUSTER FINISH PANEL ASSEMBLY (for Manual Transaxle)** INFO
5. **REMOVE SHIFT LEVER KNOB SUB-ASSEMBLY (for Automatic Transaxle)** INFO
6. **REMOVE CENTER NO. 1 INSTRUMENT CLUSTER FINISH PANEL ASSEMBLY (for Automatic Transaxle)** INFO
7. **REMOVE INSTRUMENT PANEL BOX ASSEMBLY** INFO
8. **REMOVE POWER OUTLET SOCKET ASSEMBLY**

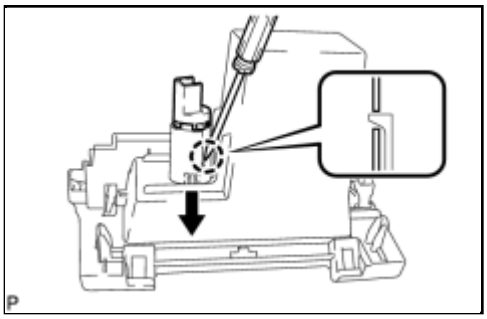

(a) Using a screwdriver, disengage the claw and remove the power outlet socket assembly.

9. **REMOVE POWER OUTLET SOCKET COVER**

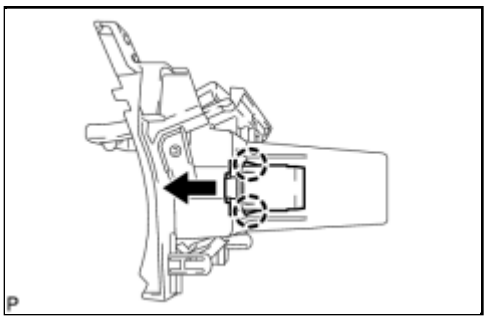

(a) Disengage the 2 claws and remove the power outlet socket cover.

Last Modified: 3-10-2010	6.4 A	**From:** 200901
Model Year: 2010	**Model:** Corolla	**Doc ID:** RM000003FW6002X
Title: POWER OUTLETS (INT): POWER OUTLET SOCKET: INSTALLATION (2010 Corolla)		

INSTALLATION

1. INSTALL POWER OUTLET SOCKET COVER

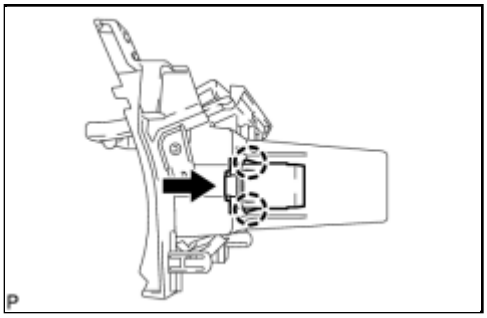

(a) Engage the 2 claws and install the power outlet socket cover.

2. INSTALL POWER OUTLET SOCKET ASSEMBLY

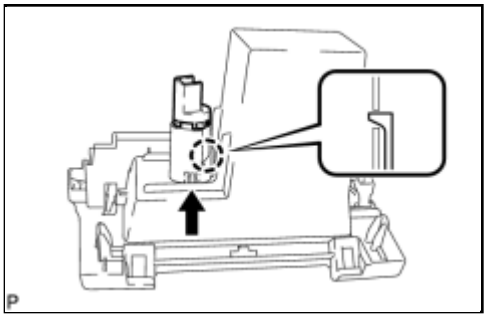

(a) Engage the claw and install the power outlet socket assembly.

3. INSTALL INSTRUMENT PANEL BOX ASSEMBLY INFO

4. INSTALL CENTER NO. 1 INSTRUMENT CLUSTER FINISH PANEL ASSEMBLY (for Manual Transaxle) INFO

5. INSTALL SHIFT LEVER KNOB SUB-ASSEMBLY (for Manual Transaxle) INFO

6. INSTALL CENTER NO. 1 INSTRUMENT CLUSTER FINISH PANEL ASSEMBLY (for Automatic Transaxle) INFO

7. INSTALL SHIFT LEVER KNOB SUB-ASSEMBLY (for Automatic Transaxle) INFO

8. INSTALL LOWER INSTRUMENT PANEL FINISH PANEL LH INFO

9. INSTALL LOWER INSTRUMENT PANEL FINISH PANEL RH INFO

Last Modified: 3-10-2010	6.4 L	**From:** 200901
Model Year: 2010	**Model:** Corolla	**Doc ID:** RM000000WI506RX
Title: NETWORKING: CAN COMMUNICATION SYSTEM: PRECAUTION (2010 Corolla)		

PRECAUTION

1. IGNITION SWITCH EXPRESSIONS

HINT:

The type of ignition switch used on this model differs according to the specifications of the vehicle. The expressions listed in the table below are used in this section.

EXPRESSION	IGNITION SWITCH (POSITION)	ENGINE SWITCH (CONDITION)
Ignition Switch off	LOCK	Off
Ignition Switch ON	ON	On (IG)
Ignition Switch ACC	ACC	On (ACC)
Engine Start	START	Start

2. DISCONNECT CABLE FROM NEGATIVE BATTERY TERMINAL

CAUTION:

Wait at least 90 seconds after disconnecting the cable from the negative (-) battery terminal to disable after the SRS system.

(a) Be careful when replacing parts. Incorrect replacement could affect the performance of the steering system and result in hazardous driving.

3. STEERING SYSTEM HANDLING PRECAUTIONS

(a) Be careful when replacing parts. Incorrect replacement could affect the performance of the steering system and result in hazardous driving.

4. SRS AIRBAG SYSTEM HANDLING PRECAUTIONS

(a) This vehicle is equipped with an SRS (Supplemental Restraint System) which includes parts such as the driver airbag and front passenger airbag. Failure to carry out service operations in the correct sequence could cause unexpected SRS deployment during servicing and may lead to a serious accident. Before servicing (including removal or installation of parts, inspection or replacement), be sure to read the precautionary notice for the SRS INFO .

5. BUS WIRE REPAIR

(a) After repairing a bus wire with solder, wrap the repaired part with electrical tape.

NOTICE:

- The CANL bus wire and CANH bus wire must be installed together at all times.
- When installing, make sure that the wires are twisted.
- CAN bus wires are likely to be influenced by electrical

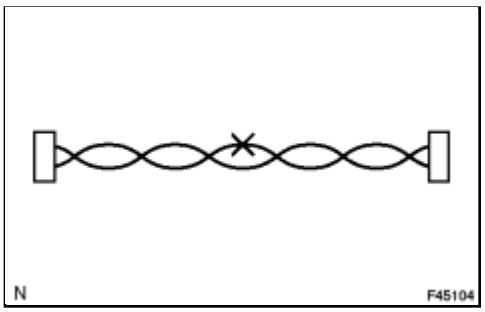

noise if the bus wires are not twisted.

- The difference in length between the CANL bus wire and CANH bus wire should be 100 mm (3.937 in.) or less.
- Leave approximately 80 mm (3.150 in.) loose in the twisted wires around the connector.

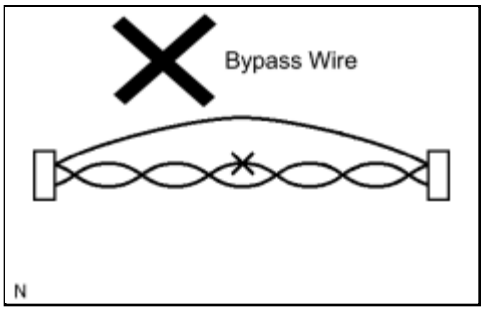

(b) Do not use bypass wiring between the connectors.

NOTICE:

The ability of the twisted bus wires to resist interference will be lost if bypass wire is used.

6. CONNECTOR HANDLING

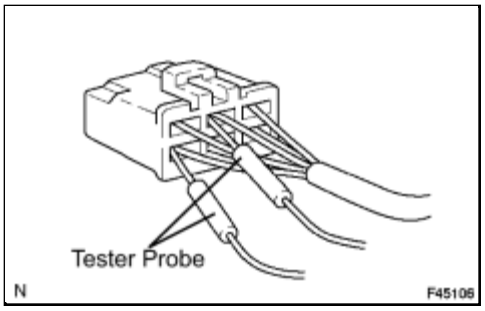

(a) When checking resistance with a tester, insert the tester probes from the backside (harness side) of the connector.

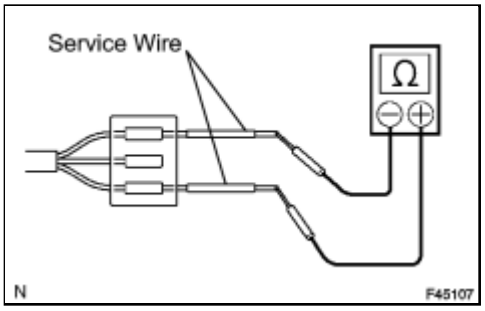

(b) Use service wires to check the connector if it is impossible to check continuity from the rear of the connector.

7. PRECAUTIONS FOR INSPECTING OR REPLACING CAN JUNCTION CONNECTOR

(a) If the CAN junction connector is removed from the vehicle for inspection or replacement, make sure to install the CAN junction connector and all wire harnesses to their original locations with tape and the clamps.

Last Modified: 3-10-2010	6.4 R	**From:** 200901
Model Year: 2010	**Model:** Corolla	**Doc ID:** RM000002DX4018X
Title: NETWORKING: CAN COMMUNICATION SYSTEM: PARTS LOCATION (2010 Corolla)		

PARTS LOCATION

ILLUSTRATION

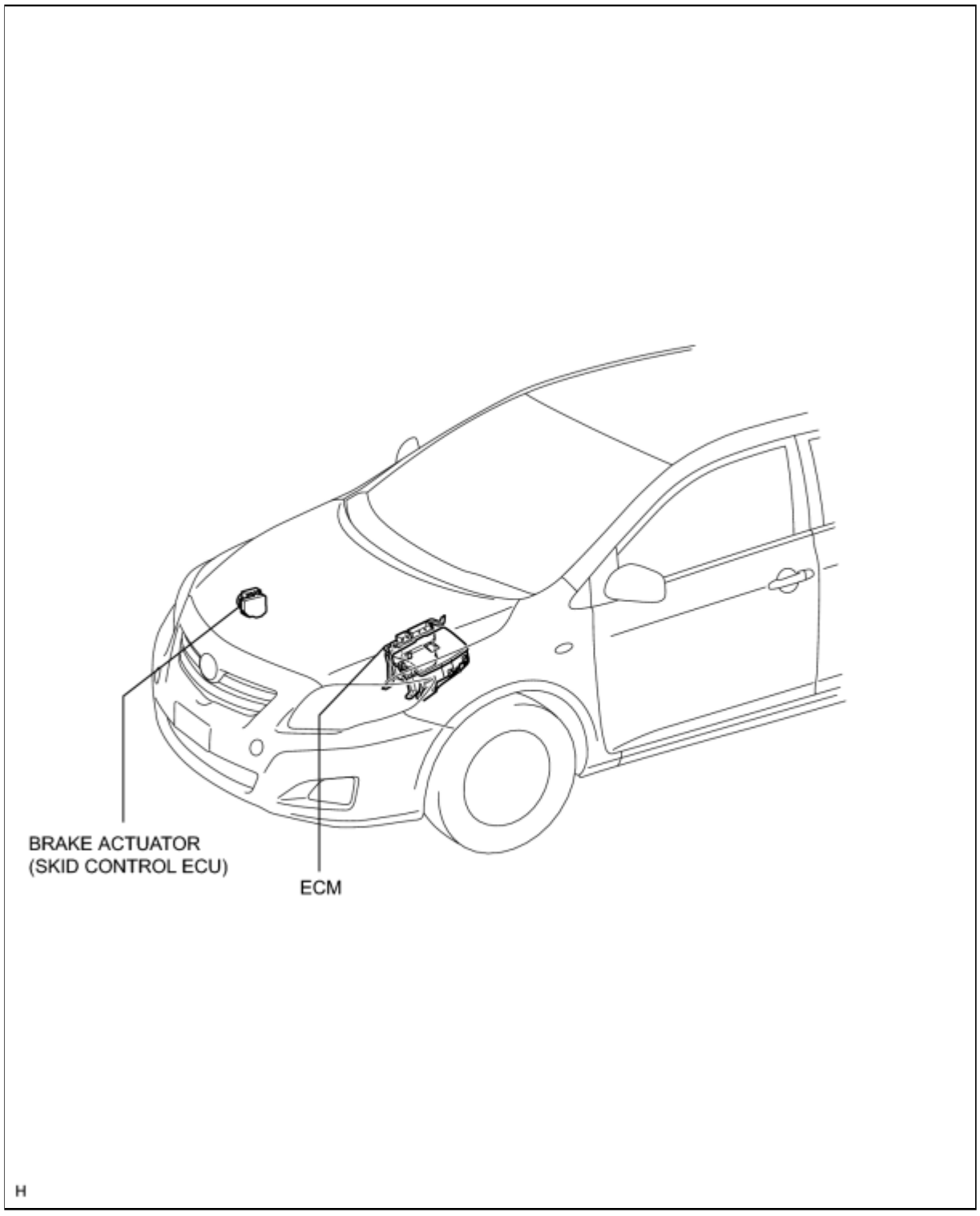

ILLUSTRATION

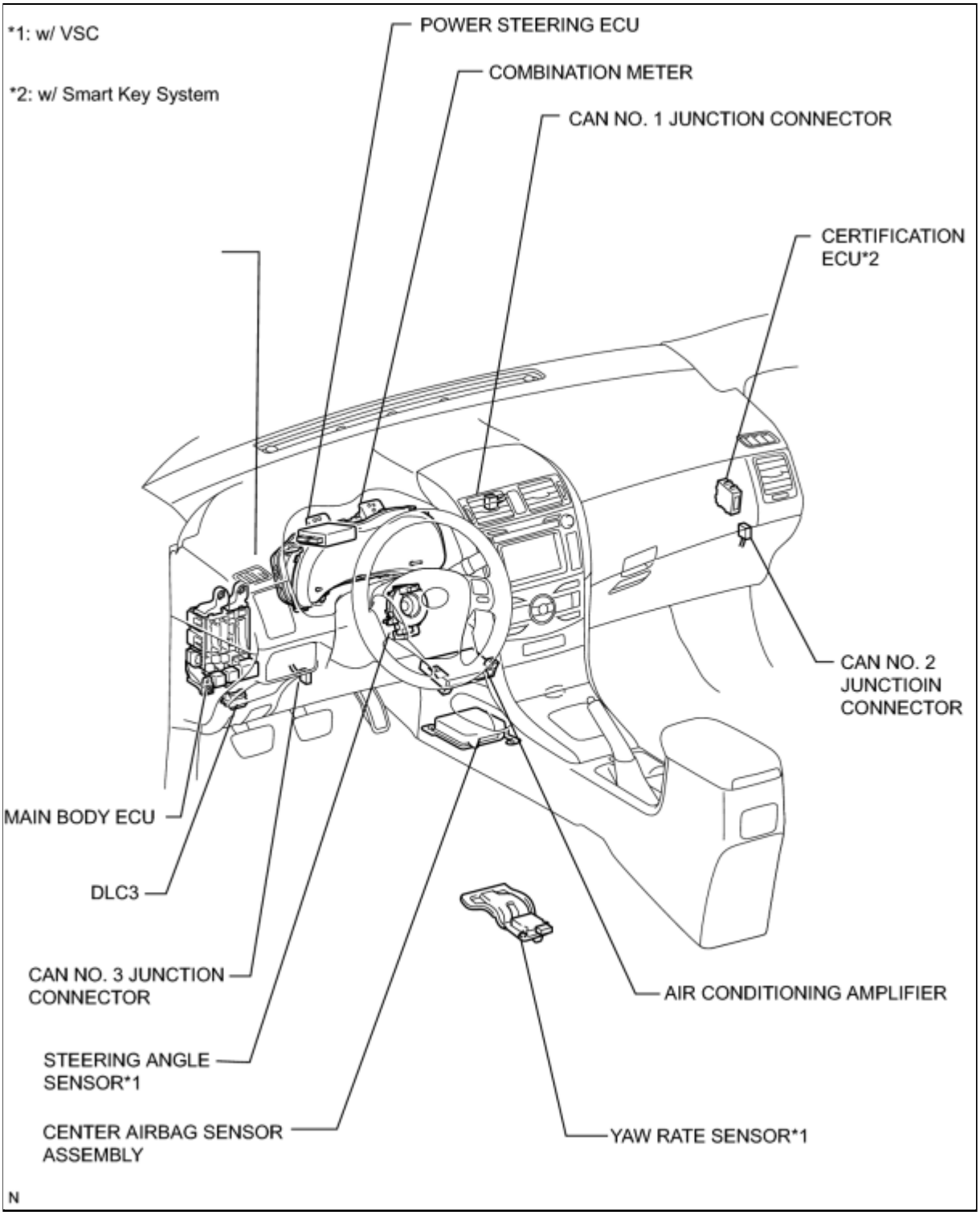

Last Modified: 3-10-2010	6.4 U	**From:** 200901
Model Year: 2010	**Model:** Corolla	**Doc ID:** RM000000XVK04QX
Title: NETWORKING: CAN COMMUNICATION SYSTEM: TERMINALS OF ECU (2010 Corolla)		

TERMINALS OF ECU

NOTICE:

- Turn the ignition switch off before measuring the resistance of the CAN bus main wires and CAN bus branch wires.
- After the ignition switch is turned off, check that the key reminder warning system and light reminder warning system are not in operation.
- Before measuring the resistance, leave the vehicle as is for at least 1 minute and do not operate the ignition switch, any other switches or the doors. If any doors need to be opened in order to check the connectors, open the doors and leave them open.

HINT:

Operating the ignition switch, any other switches or a door triggers related ECU and sensor communication on the CAN.

This communication will cause the resistance value to change.

NOTICE:

This section describes the standard CAN values for all CAN related components.

1. JUNCTION CONNECTOR FOR CAN NO. 1 BUS

(a) CAN No. 1 junction connector (TMC made)

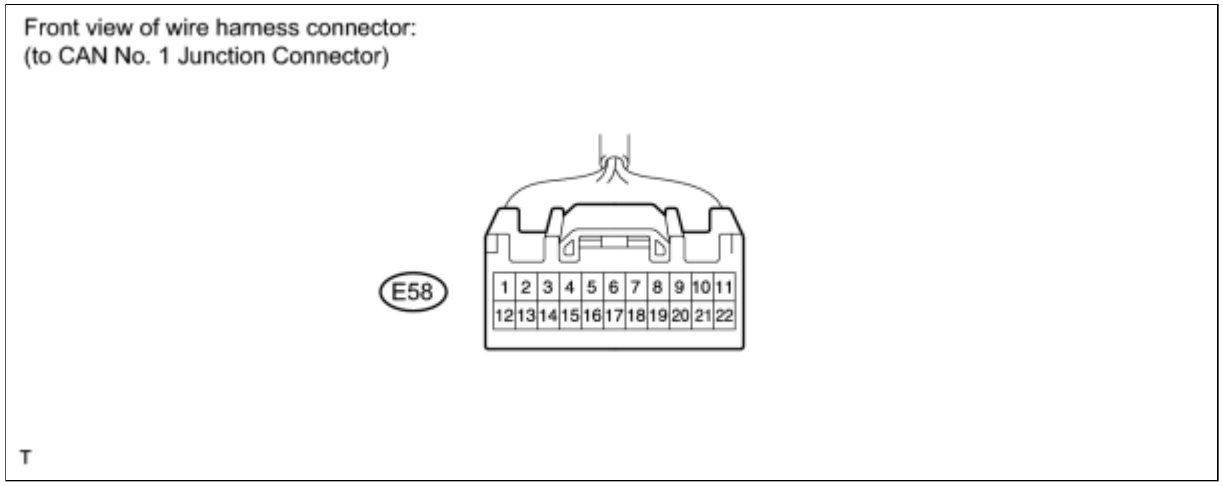

NO. 1 JUNCTION CONNECTOR	WIRING COLOR	CONNECT TO
E58-2 (CANH)	G	Combination meter
E58-13 (CANL)	W	Combination meter
E58-3 (CANH)	SB	Power steering ECU
E58-14 (CANL)	W	Power steering ECU

NO. 1 JUNCTION CONNECTOR	WIRING COLOR	CONNECT TO
E58-4 (CANH)	V	Air conditioning amplifier
E58-15 (CANL)	W	Air conditioning amplifier
E58-5 (CANH)	BR	Steering angle sensor
E58-16 (CANL)	W	Steering angle sensor
E58-6 (CANH)	L	Yaw rate sensor
E58-17 (CANL)	W	Yaw rate sensor
E58-7 (CANH)	LG	DLC3
E58-18 (CANL)	W	DLC3
E58-8 (CANH)	R	Main body ECU
E58-19 (CANL)	W	Main body ECU
E58-9 (CANH)	Y	Center airbag sensor assembly
E58-20 (CANL)	W	Center airbag sensor assembly
E58-10 (CANH)	B	CAN No. 2 junction connector
E58-21 (CANL)	W	CAN No. 2 junction connector
E58-11 (CANH)	GR	Accessory gateway
E58-22 (CANL)	W	Accessory gateway

(b) CAN No. 1 junction connector (Except TMC made)

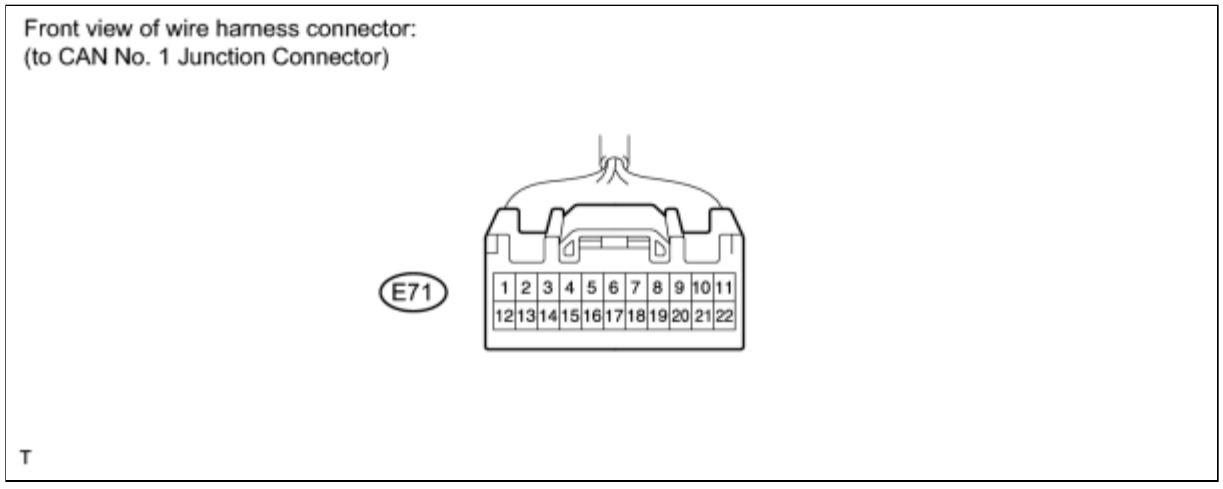

NO. 1 JUNCTION CONNECTOR	WIRING COLOR	CONNECT TO
E7-1 (CANH)	R	Main body ECU
E71-12 (CANL)	W	Main body ECU
E71-2 (CANH)	LG	DLC3

NO. 1 JUNCTION CONNECTOR	WIRING COLOR	CONNECT TO
E71-13 (CANL)	W	DLC3
E71-3 (CANH)	SB	Power steering ECU
E71-14 (CANL)	W	Power steering ECU
E71-4 (CANH)	G	Combination meter
E71-15 (CANL)	W	Combination meter
E71-5 (CANH)	Y	Center airbag sensor assembly
E71-16 (CANL)	W	Center airbag sensor assembly
E71-6 (CANH)	B	CAN No. 2 junction connector
E71-17 (CANL)	W	CAN No. 2 junction connector
E71-7 (CANH)	V	Air conditioning amplifier
E71-18 (CANL)	W	Air conditioning amplifier
E71-8 (CANH)	BR	Steering angle sensor
E71-19 (CANL)	W	Steering angle sensor
E71-9 (CANH)	L	Yaw rate sensor
E71-20 (CANL)	W	Yaw rate sensor
E71-11 (CANH)	GR	Accessory gateway
E71-22 (CANL)	W	Accessory gateway

(c) CAN No. 2 junction connector

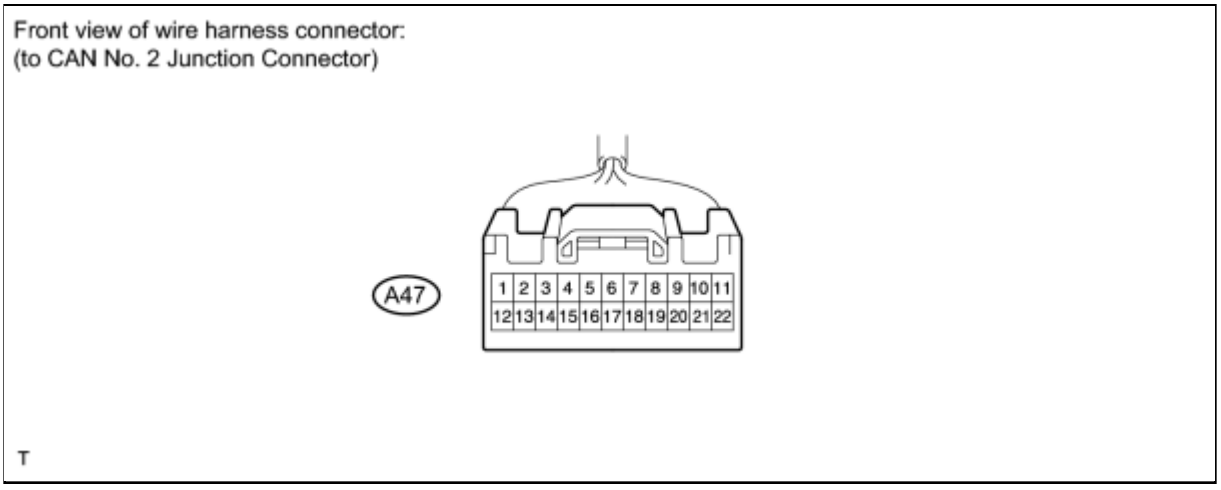

NO. 2 JUNCTION CONNECTOR	WIRING COLOR	CONNECT TO
A47-8 (CANH)	R	Skid control ECU
A47-19 (CANL)	W	Skid control ECU

NO. 2 JUNCTION CONNECTOR	WIRING COLOR	CONNECT TO
A47-9 (CANH)	B	CAN No. 1 junction connector
A47-20 (CANL)	W	CAN No. 1 junction connector
A47-10 (CANH)	Y	ECM
A47-21 (CANL)	W	ECM

(d) The connection diagram of the components which are connected to the CAN junction connector

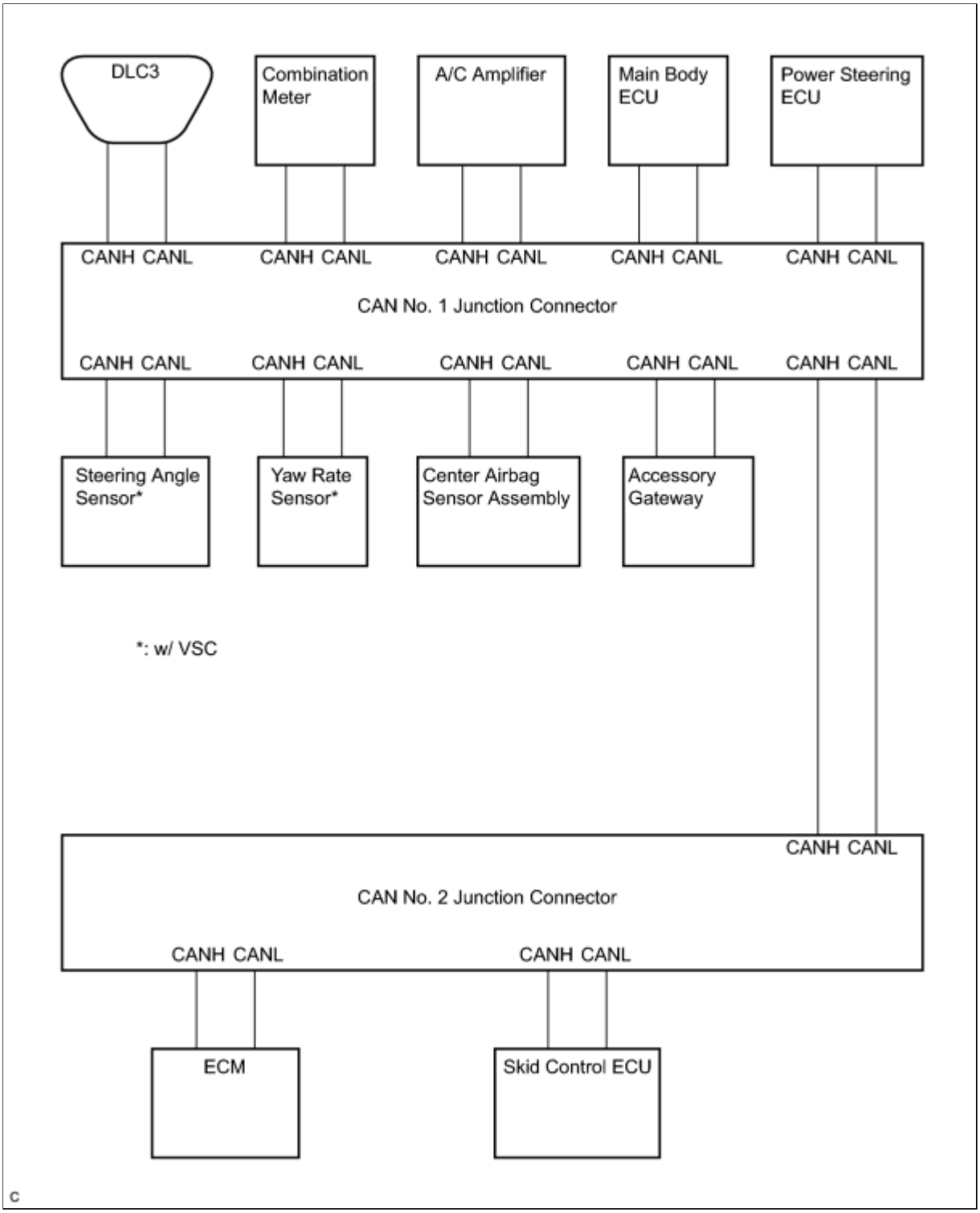

2. JUNCTION CONNECTOR FOR CAN MS BUS

(a) CAN No. 3 junction connector

Front view of wire harness connector:
(to CAN No.3 Junction Connector)

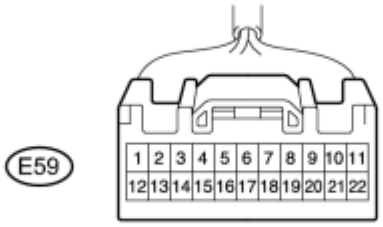

T

NO. 3 JUNCTION CONNECTOR	WIRING COLOR	CONNECT TO
E59-7 (CANH)	SB	Certification ECU
E59-18 (CANL)	W	Certification ECU
E59-8 (CANH)	G	Combination meter
E59-19 (CANL)	W	Combination meter
E59-9 (CANH)	R	Main body ECU
E59-20 (CANL)	W	Main body ECU

(b) The connection diagram of the components which are connected to the CAN junction connector.

w/ Smart Key System:

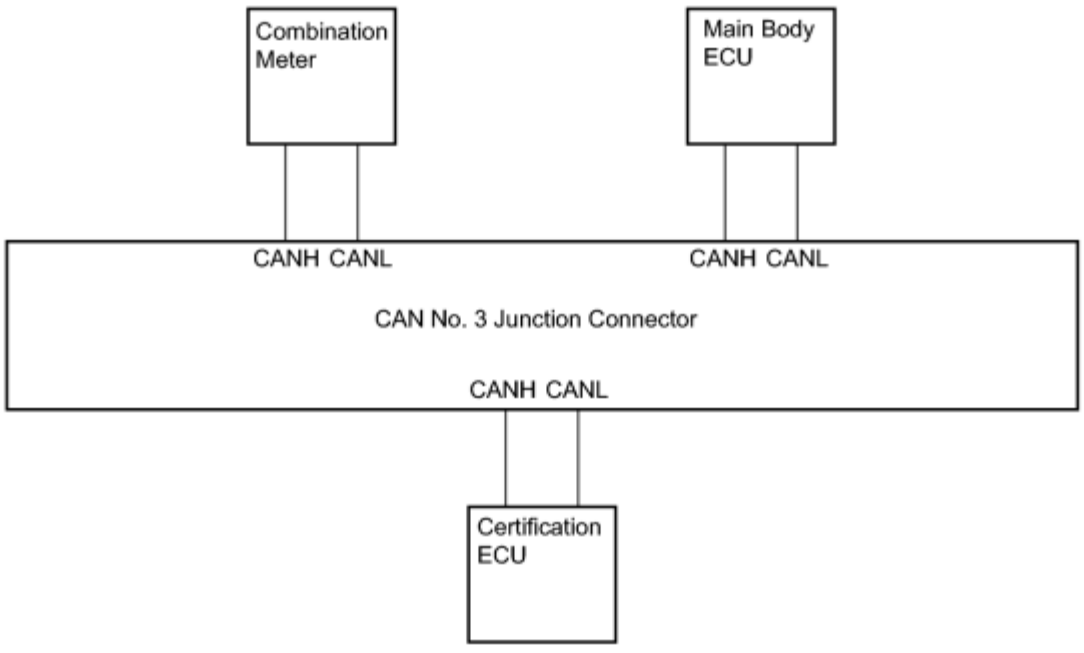

3. DLC3

(a) Measure the resistance according to the value(s) in the table below.

Standard Resistance:

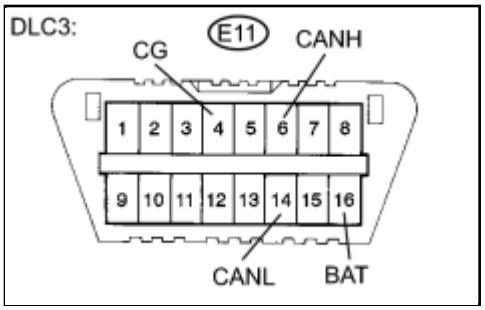

TERMINAL NO. (SYMBOL)	WIRING COLOR	CONDITION	SPECIFIED CONDITION
E11-6 (CANH) - E11-14 (CANL)	LG - W	Ignition switch off	54 to 69 Ω
E11-6 (CANH) - E11-4 (CG)	LG - W-B	Ignition switch off	200 Ω or higher
E11-14 (CANL) - E11-4 (CG)	W - W-B	Ignition switch off	200 Ω or higher
E11-6 (CANH) - E11-16 (BAT)	LG - G	Cable is disconnected from negative (-) battery terminal	6 kΩ or higher
E11-14 (CANL) - E11-16 (BAT)	W - G	Cable is disconnected from negative (-) battery terminal	6 kΩ or higher

4. SKID CONTROL ECU WITH ACTUATOR (w/o VSC)

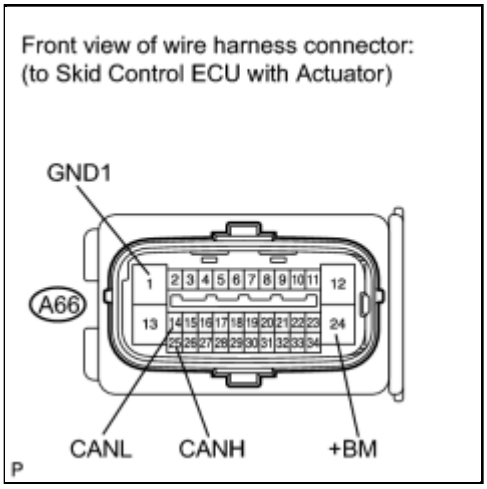

(a) Disconnect the connector from the skid control ECU.

(b) Measure the resistance according to the value(s) in the table below.

Standard Resistance:

TERMINAL NO. (SYMBOL)	WIRING COLOR	CONDITION	SPECIFIED CONDITION
A66-25 (CANH) - A66-14 (CANL)	R - W	Ignition switch off	54 to 69 Ω
A66-25 (CANH) - A66-1 (GND1)	R - W-B	Ignition switch off	200 Ω or higher
A66-14 (CANL) - A66-1 (GND1)	W - W-B	Ignition switch off	200 Ω or higher
A66-25 (CANH) - A66-24 (+BM)	R - L	Cable is disconnected from negative (-) battery terminal	6 kΩ or higher
A66-14 (CANL) - A66-24 (+BM)	W - L	Cable is disconnected from negative (-) battery terminal	6 kΩ or higher

5. SKID CONTROL ECU WITH ACTUATOR (w/ VSC)

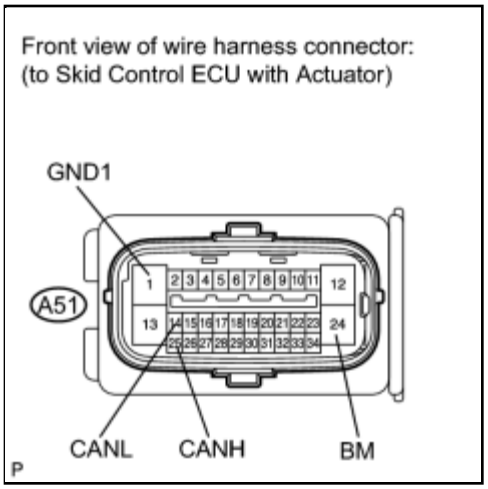

(a) Disconnect the connector from the skid control ECU.

(b) Measure the resistance according to the value(s) in the table below.

Standard Resistance:

TERMINAL NO. (SYMBOL)	WIRING COLOR	CONDITION	SPECIFIED CONDITION
A51-25 (CANH) - A51-14 (CANL)	R - W	Ignition switch off	54 to 69 Ω
A51-25 (CANH) - A51-1 (GND1)	R - W-B	Ignition switch off	200 Ω or higher
A51-14 (CANL) - A51-1 (GND1)	W - W-B	Ignition switch off	200 Ω or higher

TERMINAL NO. (SYMBOL)	WIRING COLOR	CONDITION	SPECIFIED CONDITION
A51-25 (CANH) - A51-24 (BM)	R - L	Cable is disconnected from negative (-) battery terminal	6 kΩ or higher
A51-14 (CANL) - A51-24 (BM)	W - L	Cable is disconnected from negative (-) battery terminal	6 kΩ or higher

6. STEERING ANGLE SENSOR

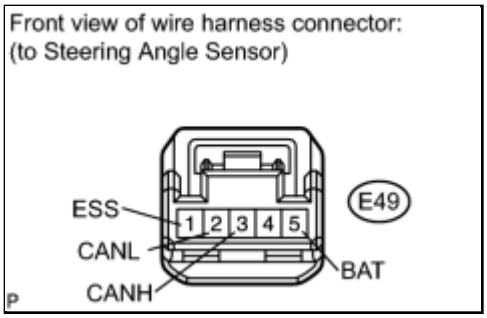

(a) Disconnect the connector from the steering angle sensor.

(b) Measure the resistance according to the value(s) in the table below.

Standard Resistance:

TERMINAL NO. (SYMBOL)	WIRING COLOR	CONDITION	SPECIFIED CONDITION
E49-3 (CANH) - E49-2 (CANL)	BR - W	Ignition switch off	54 to 69 Ω
E49-3 (CANH) - E49-1 (ESS)	BR - BR	Ignition switch off	200 Ω or higher
E49-2 (CANL) - E49-1 (ESS)	W - BR	Ignition switch off	200 Ω or higher
E49-3 (CANH) - E49-5 (BAT)	BR - W	Cable is disconnected from negative (-) battery terminal	6 kΩ or higher
E49-2 (CANL) - E49-5 (BAT)	W - W	Cable is disconnected from negative (-) battery terminal	6 kΩ or higher

7. YAW RATE SENSOR

(a) Disconnect the connector from the yaw rate sensor.

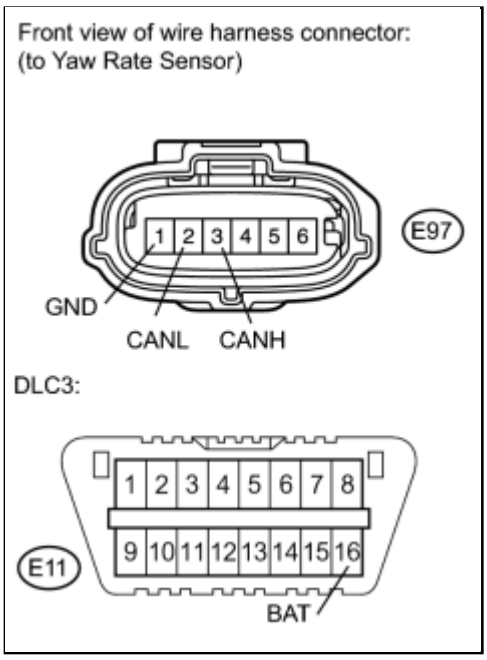

(b) Measure the resistance according to the value(s) in the table below.

Standard Resistance:

TERMINAL NO. (SYMBOL)	WIRING COLOR	CONDITION	SPECIFIED CONDITION
E97-3 (CANH) - E97-2 (CANL)	L - W	Ignition switch off	54 to 69 Ω
E97-3 (CANH) - E97-1 (GND)	L - BR	Ignition switch off	200 Ω or higher
E97-2 (CANL) - E97-1 (GND)	W - BR	Ignition switch off	200 Ω or higher
E97-3 (CANH) - E11-16 (BAT)	L - G	Cable is disconnected from negative (-) battery terminal	6 kΩ or higher
E97-2 (CANL) - E11-16 (BAT)	W - G	Cable is disconnected from negative (-) battery terminal	6 kΩ or higher

8. CENTER AIRBAG SENSOR

(a) Disconnect the connector from the center airbag sensor.

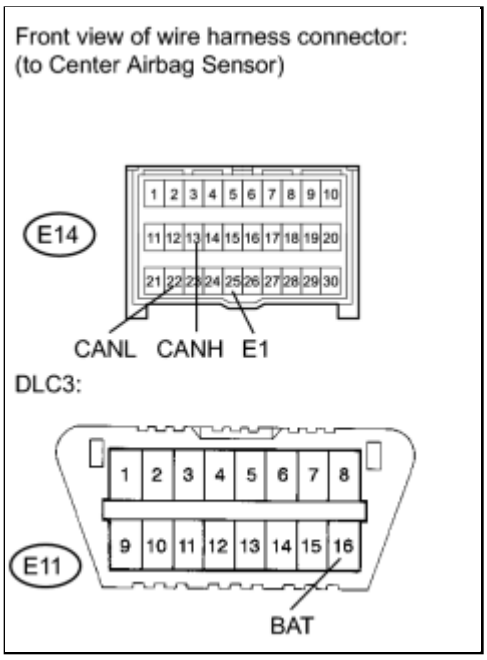

(b) Measure the resistance according to the value(s) in the table below.

Standard Resistance:

TERMINAL NO. (SYMBOL)	WIRING COLOR	CONDITION	SPECIFIED CONDITION
E14-13 (CANH) - E14-22 (CANL)	Y - W	Ignition switch off	54 to 69 Ω
E14-13 (CANH) - E14-25 (E1)	Y - W-B	Ignition switch off	200 Ω or higher
E14-22 (CANL) - E14-25 (E1)	W - W-B	Ignition switch off	200 Ω or higher
E14-13 (CANH) - E11-16 (BAT)	Y - G	Cable is disconnected from negative (-) battery terminal	6 kΩ or higher
E14-22 (CANL) - E11-16 (BAT)	W - G	Cable is disconnected from negative (-) battery terminal	6 kΩ or higher

9. ECM

(a) Disconnect the connector from the ECM.

(b) Measure the resistance according to the value(s) in the table below.

Standard Resistance:

TERMINAL NO. (SYMBOL)	WIRING COLOR	CONDITION	SPECIFIED CONDITION

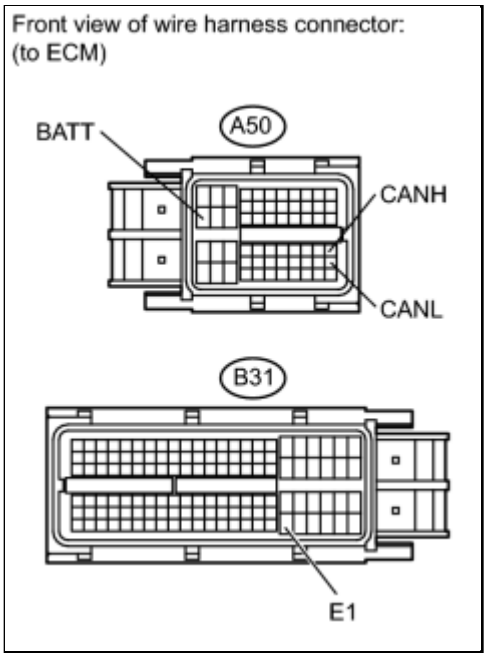

A50-41 (CANH) - A50-49 (CANL)	Y - W	Ignition switch off	108 to 132 Ω
A50-41 (CANH) - B31-104 (E1)	Y - BR	Ignition switch off	200 Ω or higher
A50-49 (CANL) - B31-104 (E1)	W - BR	Ignition switch off	200 Ω or higher
A50-41 (CANH) - A50-20 (BATT)	Y - P	Cable is disconnected from negative (-) battery terminal	6 kΩ or higher
A50-49 (CANL) - A50-20 (BATT)	W - P	Cable is disconnected from negative (-) battery terminal	6 kΩ or higher

10. AIR CONDITIONING AMPLIFIER (for Automatic Air Conditioning System)

(a) Disconnect the amplifier connector.

(b) Measure the resistance according to the value(s) in the table below.

Standard Resistance:

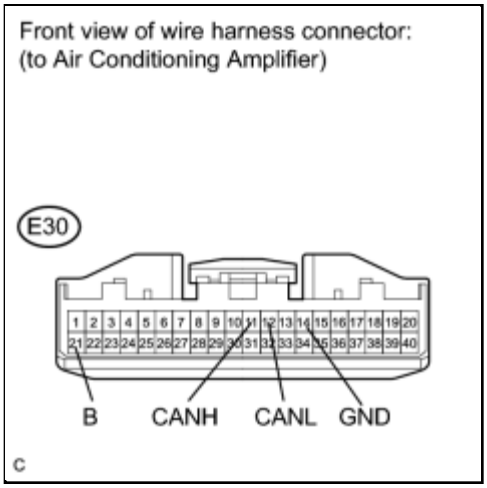

TERMINAL NO. (SYMBOL)	WIRING COLOR	CONDITION	SPECIFIED CONDITION
E30-11 (CANH) - E30-12 (CANL)	V - W	Ignition switch off	54 to 69 Ω
E30-11 (CANH) - E30-14 (GND)	V - BR	Ignition switch off	200 Ω or higher
E30-12 (CANL) - E30-14 (GND)	W - BR	Ignition switch off	200 Ω or higher

E30-11 (CANH) - E30-21 (B)	V - W	Cable is disconnected from negative (-) battery terminal	6 kΩ or higher
E30-12 (CANL) - E30-21 (B)	W - W	Cable is disconnected from negative (-) battery terminal	6 kΩ or higher

11. AIR CONDITIONING AMPLIFIER (for Manual Air Conditioning System)

(a) Disconnect the amplifier connector.

(b) Measure the resistance according to the value(s) in the table below.

Standard Resistance:

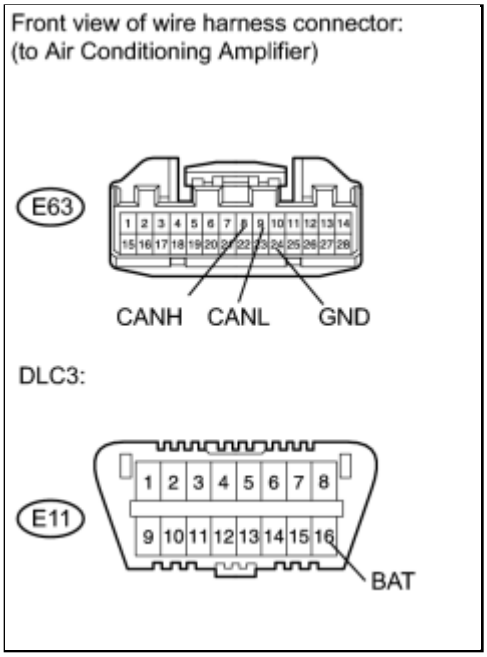

TERMINAL NO. (SYMBOL)	WIRING COLOR	CONDITION	SPECIFIED CONDITION
E63-8 (CANH) - E63-9 (CANL)	V - W	Ignition switch off	54 to 69 Ω
E63-8 (CANH) - E63-24 (GND)	V - BR	Ignition switch off	200 Ω or higher
E63-9 (CANL) - E63-24 (GND)	W - BR	Ignition switch off	200 Ω or higher
E63-8 (CANH) - E11-16 (BAT)	V - G	Cable is disconnected from negative (-) battery terminal	6 kΩ or higher
E63-9 (CANL) - E11-16 (BAT)	W - G	Cable is disconnected from negative (-) battery terminal	6 kΩ or higher

12. COMBINATION METER

(a) Disconnect the connector from the combination meter.

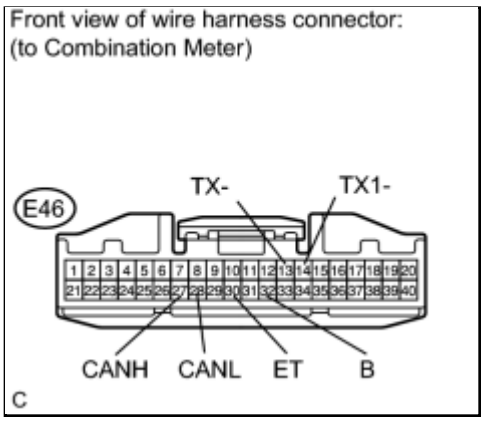

(b) Measure the resistance according to the value(s) in the table below.

Standard Resistance:

TERMINAL NO. (SYMBOL)	WIRING COLOR	CONDITION	SPECIFIED CONDITION
E46-27 (CANH) - E46-28 (CANL)	G - W	Ignition switch off	108 to 132 Ω
E46-27 (CANH) - E46-30 (ET)	G - BR	Ignition switch off	200 Ω or higher
E46-28 (CANL) - E46-30 (ET)	W - BR	Ignition switch off	200 Ω or higher
E46-27 (CANH) - E46-32 (B)	G - W	Cable is disconnected from negative (-) battery terminal	6 kΩ or higher
E46-28 (CANL) - E46-32 (B)	W - W	Cable is disconnected from negative (-) battery terminal	6 kΩ or higher
E46-13 (TX-) - E46-14 (TX1-)	W - G	Ignition switch off	108 to 132 Ω
E46-13 (TX-) - E46-30 (ET)	G - BR	Ignition switch off	200 Ω or higher
E46-14 (TX1-) - E46-30 (ET)	W - BR	Ignition switch off	200 Ω or higher
E46-13 (TX-) - E46-32 (B)	G - W	Cable is disconnected from negative (-) battery terminal	6 kΩ or higher
E46-14 (TX1-) - E46-32 (B)	W - W	Cable is disconnected from negative (-) battery terminal	6 kΩ or higher

13. CERTIFICATION ECU

(a) Disconnect the connector from the certification ECU.

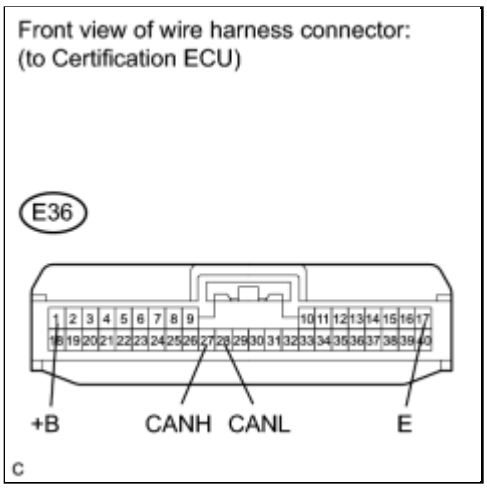

(b) Measure the resistance according to the value(s) in the table below.

Standard Resistance:

TERMINAL NO. (SYMBOL)	WIRING COLOR	CONDITION	SPECIFIED CONDITION
E36-27 (CANH) - E36-28 (CANL)	SB - W	Ignition switch off	54 to 69 Ω
E36-27 (CANH) - E36-17 (E)	SB - W-B	Ignition switch off	200 Ω or higher
E36-28 (CANL) - E36-17 (E)	W - W-B	Ignition switch off	200 Ω or higher
E36-27 (CANH) - E36-1 (+B)	SB - W	Cable is disconnected from negative (-) battery terminal	6 kΩ or higher
E36-28 (CANL) - E36-1 (+B)	W - W	Cable is disconnected from negative (-) battery terminal	6 kΩ or higher

14. MAIN BODY ECU (w/ Smart Key System or Automatic Light Control System)

(a) Disconnect the connector from the main body ECU.

(b) Measure the resistance according to the value(s) in the table below.

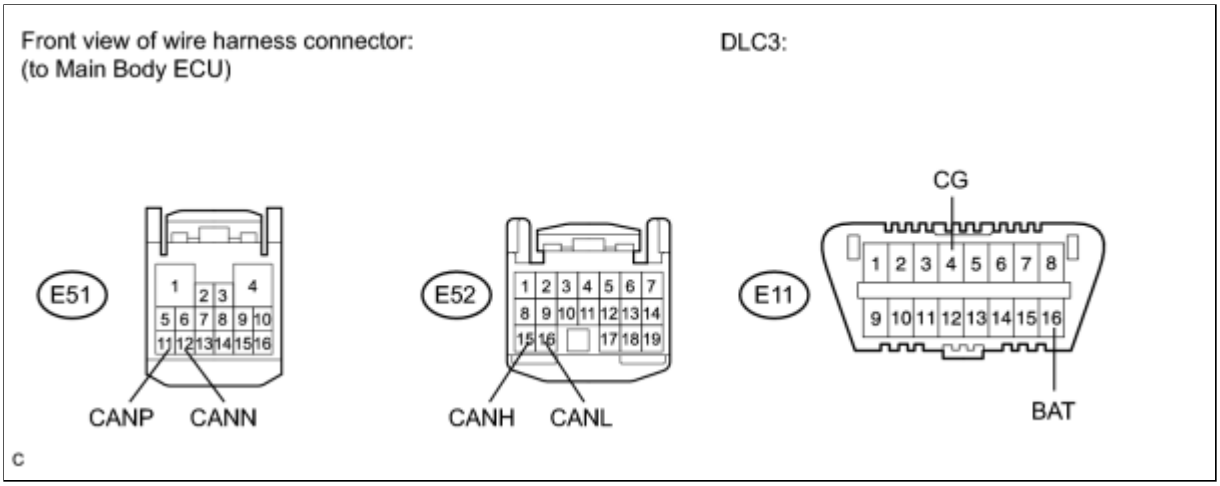

Standard Resistance:

TERMINAL NO. (SYMBOL)	WIRING COLOR	CONDITION	SPECIFIED CONDITION
E52-15 (CANH) - E52-16 (CANL)	R - W	Ignition switch off	54 to 69 Ω
E52-15 (CANH) - E11-4 (CG)	R - W-B	Ignition switch off	200 Ω or higher
E52-16 (CANL) - E11-4 (CG)	W - W-B	Ignition switch off	200 Ω or higher
E52-15 (CANH) - E11-16 (BAT)	R - G	Cable is disconnected from negative (-) battery terminal	6 kΩ or higher
E52-16 (CANL) - E11-16 (BAT)	W - G	Cable is disconnected from negative (-) battery terminal	6 kΩ or higher
E51-11 (CANP) - E51-12 (CANN)	R - W	Ignition switch off	108 to 132 Ω
E51-11 (CANP) - E11-4 (CG)	R - W-B	Ignition switch off	200 Ω or higher
E51-12 (CANN) - E11-4 (CG)	W - W-B	Ignition switch off	200 Ω or higher
E51-11 (CANP) - E11-16 (BAT)	R - G	Cable is disconnected from negative (-) battery terminal	6 kΩ or higher
E51-12 (CANN) - E11-16 (BAT)	W - G	Cable is disconnected from negative (-) battery terminal	6 kΩ or higher

15. MAIN BODY ECU (w/o Smart Key System, Automatic Light Control System)

(a) Disconnect the connector from the main body ECU.

(b) Measure the resistance according to the value(s) in the table below.

Standard Resistance:

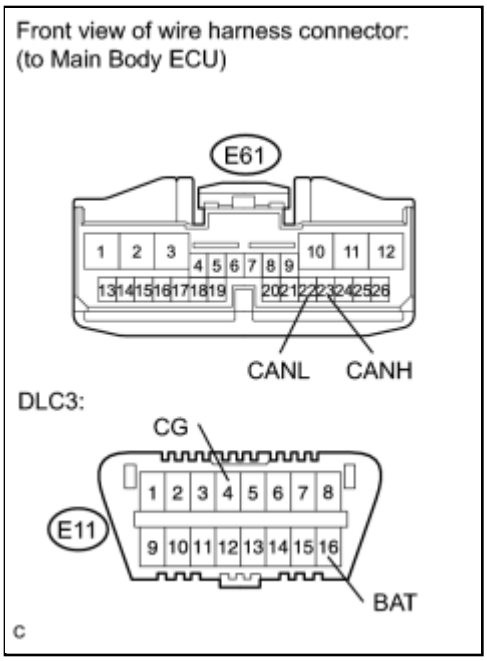

TERMINAL NO. (SYMBOL)	WIRING COLOR	CONDITION	SPECIFIED CONDITION
E61-23 (CANH) - E61-22 (CANL)	R - W	Ignition switch off	54 to 69 Ω
E61-23 (CANH) - E11-4 (CG)	R - W-B	Ignition switch off	200 Ω or higher
E61-22 (CANL) - E11-4 (CG)	W - W-B	Ignition switch off	200 Ω or higher
E61-23 (CANH) - E11-16 (BAT)	R - G	Cable is disconnected from negative (-) battery terminal	6 kΩ or higher
E61-22 (CANL) - E11-16 (BAT)	W - G	Cable is disconnected from negative (-) battery terminal	6 kΩ or higher

16. POWER STEERING ECU

(a) Disconnect the power steering ECU connectors.

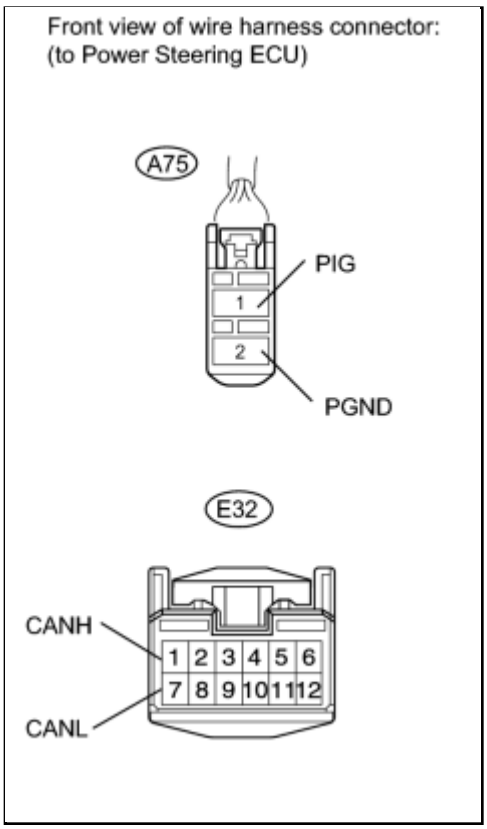

(b) Measure the resistance according to the value(s) in the table below.

Standard Resistance:

TERMINAL NO. (SYMBOL)	WIRING COLOR	CONDITION	SPECIFIED CONDITION
E32-1 (CANH) - E32-7 (CANL)	SB - W	Ignition switch off	54 to 69 Ω
E32-1 (CANH) - A75-2 (PGND)	SB - W-B	Ignition switch off	200 Ω or higher
E32-7 (CANL) - A75-2 (PGND)	W - W-B	Ignition switch off	200 Ω or higher
E32-1 (CANH) - A75-1 (PIG)	SB - L	Cable is disconnected from negative (-) battery terminal	6 kΩ or higher
E32-7 (CANL) - A75-1 (PIG)	W - L	Cable is disconnected from negative (-) battery terminal	6 kΩ or higher

17. ACCESSORY GATEWAY

(a) Measure the resistance according to the value(s) in the table below.

Standard Resistance:

Rear view of wire harness connector:
(Accessory Gateway)

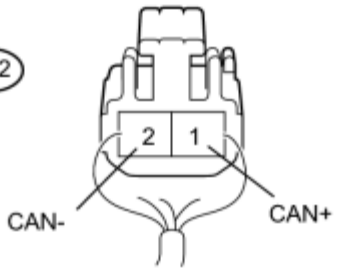

DLC3:

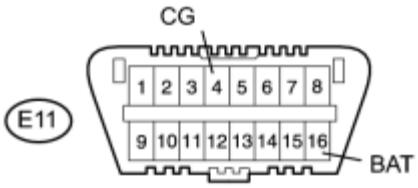

c

TERMINAL NO. (SYMBOL)	WIRING COLOR	CONDITION	SPECIFIED CONDITION
E92-1 (CAN+) - E92-2 (CAN-)	GR - W	Ignition switch off	54 to 69 Ω
E92-1 (CAN+) - E11-4 (CG)	R - W-B	Ignition switch off	200 Ω or higher
E92-2 (CAN-) - E11-4 (CG)	W - W-B	Ignition switch off	200 Ω or higher
E92-1 (CAN+) - E11-16 (BAT)	R - G	Cable is disconnected from negative (-) battery terminal	6 kΩ or higher
E92-2 (CAN-) - E11-16 (BAT)	W - G	Cable is disconnected from negative (-) battery terminal	6 kΩ or higher

Last Modified: 3-10-2010	6.4 U	**From:** 200901
Model Year: 2010	**Model:** Corolla	**Doc ID:** RM000002DX501EX
Title: NETWORKING: CAN COMMUNICATION SYSTEM: SYSTEM DIAGRAM (2010 Corolla)		

SYSTEM DIAGRAM

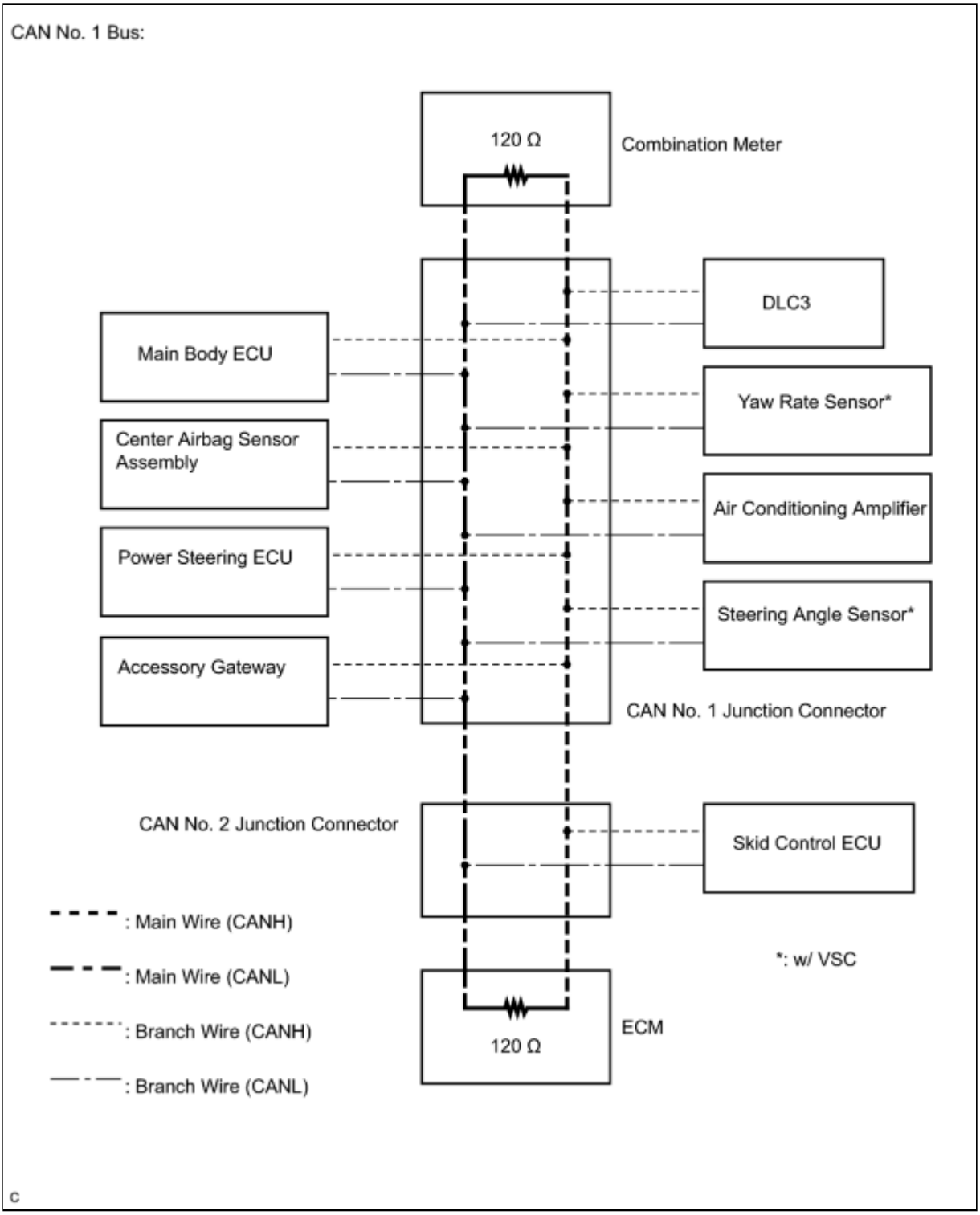

CAN MS Bus (w/ Smart Key System):

: Main Wire (CANH)

: Main Wire (CANL)

: Branch Wire (CANH)

: Branch Wire (CANL)

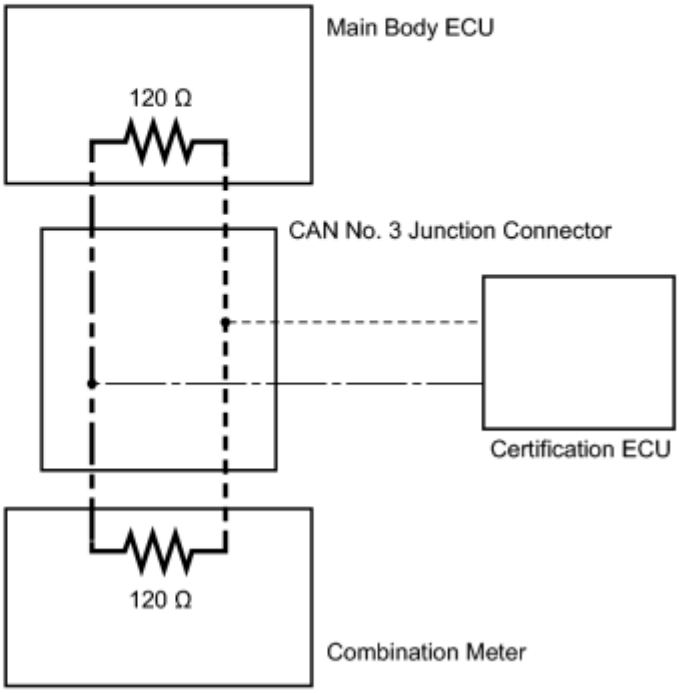

c

Last Modified: 3-10-2010	6.4 D	**From:** 200901
Model Year: 2010	**Model:** Corolla	**Doc ID:** RM000000WI6053X
Title: NETWORKING: CAN COMMUNICATION SYSTEM: HOW TO PROCEED WITH TROUBLESHOOTING (2010 Corolla)		

HOW TO PROCEED WITH TROUBLESHOOTING

NOTICE:

- DTCs for the CAN communication system are as follows: U0073, U0100*1, U0123*1, U0124*1, U0126*1, U0129, U0327*2, U1002*2 and B1499.

  *1: w/ VSC

  *2: w/ Smart key system
- Refer to troubleshooting of each system if DTCs regarding the CAN communication system are not output.

1.	**CHECK AND CLEAR DTCS**

HINT:

- CAN communication DTCs are output when there is an open or short in any of the communication wires. Any problems with the power source of a corresponding ECU or sensor, or problem in the ECU or the sensor itself also cause these DTCs to be output.
- If a CAN communication wire connector is disconnected with the ignition switch ON, the ECUs of the corresponding system and related systems record a DTC.

NEXT

2.	**CHECK CAN NO. 1 BUS WIRE**

(a) Check the CAN bus wire INFO.

HINT:

If the area where an open or short is occurring in a CAN bus wire can be determined, refer to Problem Symptoms Table INFO.

NEXT

3.	CHECK TECHSTREAM

(a) Using the Techstream, display the "CAN Bus Check" screen INFO .

(b) Observe the screen for approximately 1 minute to check the ECUs and sensors displayed on the screen.

Result:

RESULT	PROCEED TO
All ECUs and sensors connected to the CAN communication system are displayed on the screen. (CAN bus circuit is currently normal.)	A
One of the ECUs and sensors connected to the CAN communication system is not displayed on the screen. (Open in ECU or sensor branch wires, or communication interrupted)	B*1
Some ECUs and sensors repeatedly appear and disappear from the screen, during this check. (Open in one side of ECU or sensor branch wires)	C
• All ECUs and sensors except the main body ECU connected to the CAN MS bus are not displayed on the screen. • The main body ECU outputs DTC U1002. (Open in CAN MS bus main wire or short in CAN MS bus wire)	D
All ECUs and sensors connected to the CAN MS bus are not displayed on the screen. (Open in main body ECU branch wire or main body ECU malfunction)	E

NOTICE:

- The systems (ECUs, sensors) that adopt CAN communication vary depending on the vehicle and optional equipment. Check which systems (ECUs, sensors) are installed on the vehicle INFO .
- Non-installed ECUs or sensors will not be displayed. Do not mistake them for being in the communication stop mode.
- The ECUs and sensors that repeatedly appear and disappear from the screen during this check are considered normal. (The response to the Techstream and the tester display are affected by signals output from other ECUs which have an open circuit in either of their CAN branch wires.)

HINT:

- *1: See DTC Chart instead of Communication Stop Mode Table when some of the ECUs connected to the CAN MS bus are not displayed on the screen INFO .

- The ECUs connected to the CAN MS bus are displayed on the screen by the main body ECU.

B ▶ **GO TO COMMUNICATION STOP MODE TABLE**

C ▶ **GO TO OPEN IN ONE SIDE OF CAN BRANCH WIRE**

D ▶ **GO TO U1002 (CAN MS BUS)**

E ▶ **GO TO MAIN BODY ECU COMMUNICATION STOP MODE**

A ▼

4.	**RECHECK DTC**

HINT:

- Sometimes CAN communication system DTCs are output, but all the ECUs and sensors connected to the CAN communication system are displayed on the Techstream. In this case, previous or history DTCs may indicate the cause of the problem.
- ECUs related to a problem in the CAN No. 1 bus will store DTCs to indicate communication malfunctions. The communication stop mode in the CAN No. 1 bus can be determined by comparing the combination of DTCs that has been set. Refer to the DTC combination table for the CAN No. 1 bus.
- The main body ECU will store communication error DTCs when the ECUs connected to the CAN MS bus cannot communicate, or if a network malfunction occurs.

Result:

RESULT	PROCEED TO
Communication error DTCs other than the codes output from the main body ECU are output. (A malfunction occurred in the CAN No. 1 bus.)	A
The main body ECU outputs CAN MS bus DTC U1002. (A malfunction occurred in the CAN MS bus.)	B
The main body ECU outputs CAN MS bus DTC U0327. (A malfunction occurred in an ECU branch wire connected to the CAN MS bus.)	C

B ▶ **GO TO "U1002 (CAN MS BUS)"**

C ▶ **GO TO "U0327"**

A

5.	DTC COMBINATION TABLE

(a) Confirm a trouble according to the combination of output DTCs regarding the CAN communication system INFO .

HINT:

Previous CAN communication system DTCs may be caused if CAN communication system DTCs are output and all ECUs and sensors connected to the CAN communication system are displayed on the Techstream's "CAN Bus Check" screen.

NEXT

6.	CIRCUIT INSPECTION

NEXT

7.	IDENTIFICATION OF PROBLEM

NEXT

8.	REPAIR OR REPLACE

NEXT

9.	CONFIRMATION TEST

NEXT END

Last Modified: 3-10-2010	6.4 D	**From:** 200901
Model Year: 2010	**Model:** Corolla	**Doc ID:** RM000000YDW05BX
Title: NETWORKING: CAN COMMUNICATION SYSTEM: SYSTEM DESCRIPTION (2010 Corolla)		

SYSTEM DESCRIPTION

1. BRIEF DESCRIPTION

(a) The CAN (Control Area Network) is a serial data communication system for real time application. It is a vehicle multiplex communication system which has a high communication speed and the ability to detect malfunctions.

(b) By pairing the CANH and CANL bus wires, the CAN performs communication based on differential voltage.

(c) Many ECUs (sensors) installed on the vehicle operate by sharing information and communicating with each other.

(d) The CAN has two resistors of 120 Ω which are necessary to communicate with the main bus wire.

2. DEFINITION OF TERMS

(a) Main bus wire

(1) The main bus wire is a wire harness between the two terminating resistors on the bus (communication wire). This is the main bus in the CAN communication system.

(b) Branch wire

(1) The branch wire is a wire harness which diverges from the main bus wire to an ECU or sensor.

(c) Terminating resistors

(1) Two resistors of 120 Ω are installed in parallel across the ends of the CAN main bus wire. They are called terminating resistors. These resistors allow the changes of the voltage differential between the CAN bus wires to be accurately judged. To allow proper function of CAN communication, it is necessary to have both terminating resistors installed. Since the two resistors are installed in parallel, a measurement of resistance between the two CAN bus wires should produce a reading of approximately 60 Ω.

3. CIRCUIT DESCRIPTION

(a) For vehicles with the smart key system: The CAN communication system consists of the CAN No. 1 bus and MS bus, which are connected to each system through the main body ECU.

(b) The CAN No. 1 bus and MS bus each have terminus circuits with 120 Ω x 2 of resistance. High speed communication at 500 kbps and 250 kbps is possible.

4. ECUS OR SENSORS WHICH COMMUNICATE THROUGH CAN COMMUNICATION SYSTEM

(a) Skid control ECU

(b) Yaw rate sensor (w/ VSC)

(c) Steering angle sensor (w/ VSC)

(d) Main body ECU

(e) Center airbag sensor assembly

(f) ECM

(g) Certification ECU (w/ Smart key system)

(h) Air conditioning amplifier

(i) Combination meter

(j) Power steering ECU

5. DIAGNOSTIC CODE FOR CAN COMMUNICATION SYSTEM

(a) DTCs for the CAN communication system are as follows: U0073, U0100*1, U0123*1, U0124*1, U0126*1, U0129, U0327*2, U1002*2 and B1499.

*1: w/ VSC

*2: w/ Smart key system

6. TROUBLESHOOTING REMARKS

(a) DTCs for the CAN communication system can be checked using the Techstream. The DLC3 is connected to the CAN communication system, but no DTCs exist regarding problems in the DLC3 or the DLC3 branch wires. If there is a trouble in the DLC3 or the DLC3 branch wires, ECUs on the CAN network cannot output codes to the Techstream.

(b) Trouble in the CAN buses (communication wires) can be checked by measuring the resistance between terminals of the DLC3. However, an open circuit in a branch wire other than the DLC3 branch wires cannot be checked from the DLC3.

NOTICE:

Do not insert the tester probes directly into the DLC3. Be sure to use service wires.

Last Modified: 3-10-2010	6.4 C	**From:** 200901
Model Year: 2010	**Model:** Corolla	**Doc ID:** RM000002DX801IX
Title: NETWORKING: CAN COMMUNICATION SYSTEM: U1002 (CAN MS BUS): Lost Communication with Gateway Module (Main body ECU) (2010 Corolla)		

DTC	**U1002 (CAN MS BUS)**	**Lost Communication with Gateway Module (Main body ECU)**

DESCRIPTION

- The main body ECU will store this DTC when no signals can be received from the ECUs that have been memorized as those that are connected to the CAN MS bus.
- When the main body ECU receives a response signal from the ECUs connected to the CAN MS bus, the main body ECU recognizes and memorizes that the ECU is connected to the CAN MS bus. Based on this memorized data, the main body ECU monitors for malfunctions in the ECUs connected to the CAN MS bus when communicating with those ECUs. If the main body ECU cannot receive response signals from the ECUs that have been memorized as those connected to the CAN MS bus, the main body ECU determines that a malfunction exists.

DTC NO.	DTC DETECTION CONDITION	TROUBLE AREA
U1002	Main body ECU cannot receive signals from all ECUs that have been memorized as those connected to the CAN MS bus.	• Open or short in CAN MS bus main wire or connector • Open or short in CAN MS bus branch wire or connector • Certification ECU • Combination meter • Main body ECU • CAN No. 3 junction connector

WIRING DIAGRAM

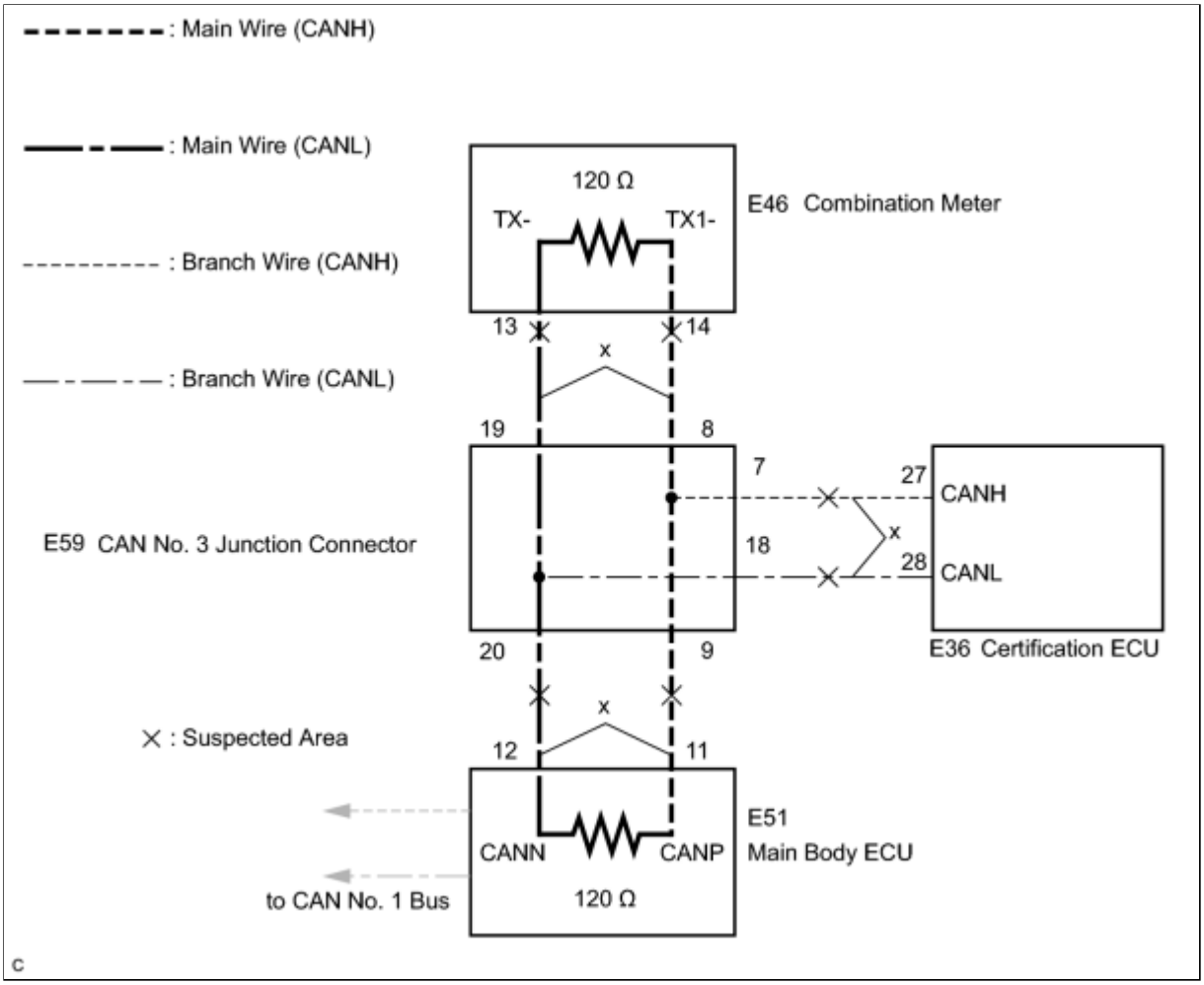

INSPECTION PROCEDURE

NOTICE:

- Turn the ignition switch off before measuring the resistance of the CAN bus main wires and the CAN bus branch wires.
- After the ignition switch is turned off, check that the key reminder warning system and light reminder warning system are not in operation.
- Before measuring the resistance, leave the vehicle as is for at least 1 minute and do not operate the ignition switch, any other switches or the doors. If any doors need to be opened in order to check the connectors, open the doors and leave them open.

HINT:

- Operating the ignition switch, any other switches or a door triggers related ECU and sensor communication on the CAN. This communication will cause the resistance value to change.
- Even after DTCs are cleared, if a DTC is stored again after driving the vehicle for a while, the malfunction may be occurring due to vibration of the vehicle. In such a case, wiggling the ECUs or wire harness while performing the inspection below will help determine the cause of the malfunction.

PROCEDURE

1.	**CHECK CAN MS BUS WIRE**

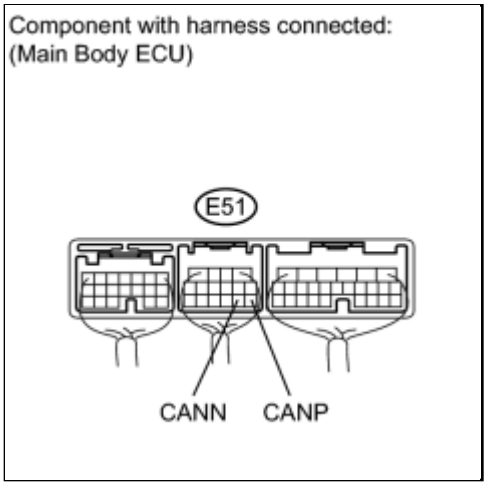

(a) Turn the ignition switch off.

(b) Measure the resistance according to the value(s) in the table below.

Result:

TESTER CONNECTION	SWITCH CONDITION	RESULT	PROCEED TO
E51-11 (CANP) - E51-12 (CANN)	Ignition switch off	54 to 69 Ω	A
E51-11 (CANP) - E51-12 (CANN)	Ignition switch off	70 Ω or higher	B
E51-11 (CANP) - E51-12 (CANN)	Ignition switch off	Less than 54 Ω	C

C ▶ **CHECK FOR SHORT IN CAN MS BUS WIRES (MAIN BODY ECU MAIN WIRE)**

B ▶ **CHECK FOR OPEN IN CAN MS BUS MAIN WIRE (COMBINATION METER MAIN WIRE)**

A ▼

2.	**CHECK FOR SHORT TO +B IN CAN MS BUS WIRE**

(a) Measure the resistance according to the value(s) in the table below.

Standard Resistance:

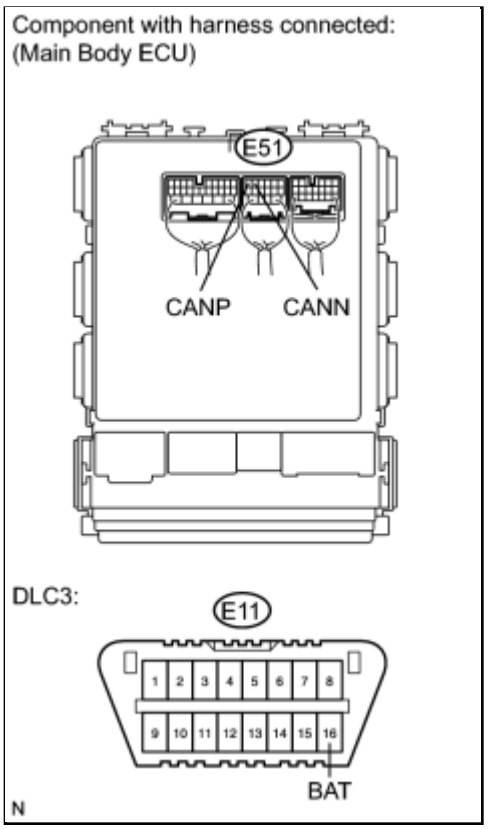

TESTER CONNECTION	CONDITION	SPECIFIED CONDITION
E51-11 (CANP) - E11-16 (BAT)	Cable is disconnected from negative (-) battery terminal	6 kΩ or higher
E51-12 (CANN) - E11-16 (BAT)	Cable is disconnected from negative (-) battery terminal	6 kΩ or higher

NG ▶ **CHECK FOR SHORT TO +B IN CAN MS BUS WIRE (MAIN BODY ECU MAIN WIRE)**

OK ▼

3.	**CHECK FOR SHORT TO GND IN CAN MS BUS WIRE**

(a) Measure the resistance according to the value(s) in the table below.

Standard Resistance:

TESTER CONNECTION	SWITCH CONDITION	SPECIFIED CONDITION
E51-11 (CANP) - E11-4 (CG)	Ignition switch off	200 Ω or higher
E51-12 (CANN) - E11-4 (CG)	Ignition switch off	200 Ω or higher

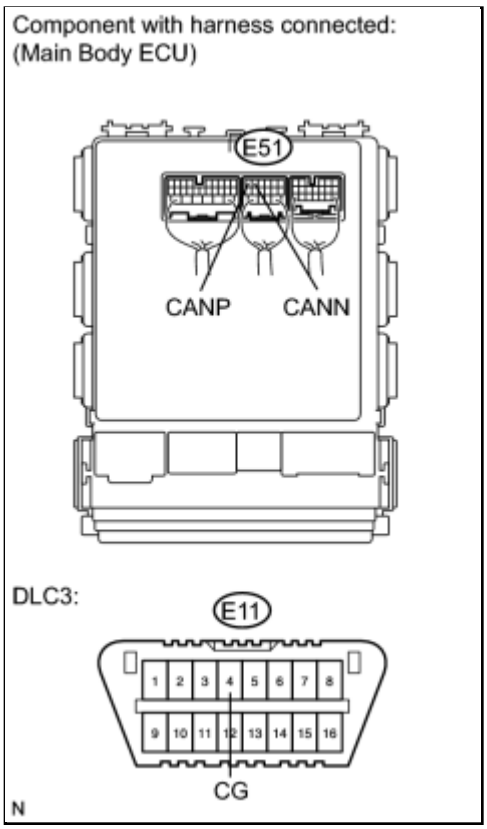

NG ▶ **CHECK FOR SHORT TO GND IN CAN MS BUS WIRE (MAIN BODY ECU MAIN WIRE)**

OK ▼

4.	**CHECK FOR OPEN IN CAN MS BUS WIRE (CAN MS BUS BRANCH WIRE)**

(a) Check for the certification ECU MS bus branch wire INFO .

NG ▶ **REPAIR OR REPLACE CAN MS BUS BRANCH WIRE OR CONNECTOR (CAN NO. 3 JUNCTION CONNECTOR - CERTIFICATION ECU)**

OK ▶ **REPLACE INSTRUMENT PANEL JUNCTION BLOCK (MAIN BODY ECU)**

5.	**CHECK FOR OPEN IN CAN MS BUS MAIN WIRE (COMBINATION METER MAIN WIRE)**

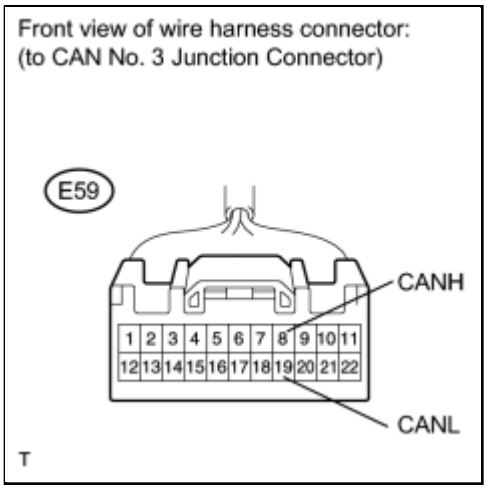

(a) Disconnect the CAN No. 3 junction connector.

(b) Measure the resistance according to the value(s) in the table below.

Standard Resistance:

TESTER CONNECTION	SWITCH CONDITION	SPECIFIED CONDITION
E59-8 (CANH) - E59-19 (CANL)	Ignition switch off	108 to 132 Ω

NG ▶ **CHECK FOR OPEN IN CAN MS BUS MAIN WIRE (COMBINATION METER - CAN NO. 3 JUNCTION CONNECTOR)**

OK ▼

6.	**CHECK FOR OPEN IN CAN MS BUS MAIN WIRE (MAIN BODY ECU MAIN WIRE)**

(a) Disconnect the CAN No. 3 junction connector.

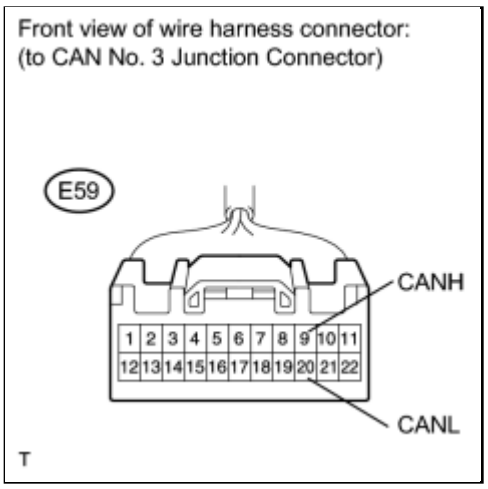

(b) Measure the resistance according to the value(s) in the table below.

Standard Resistance:

TESTER CONNECTION	SWITCH CONDITION	SPECIFIED CONDITION
E59-9 (CANH) - E59-20 (CANL)	Ignition switch off	108 to 132 Ω

NG ▶ **CHECK FOR OPEN IN CAN BUS MAIN WIRE (MAIN BODY ECU - CAN NO. 3 JUNCTION CONNECTOR)**

OK ▶ **REPLACE CAN NO. 3 JUNCTION CONNECTOR**

7.	**CHECK FOR OPEN IN CAN BUS MAIN WIRE (MAIN BODY ECU - CAN NO. 3 JUNCTION CONNECTOR)**

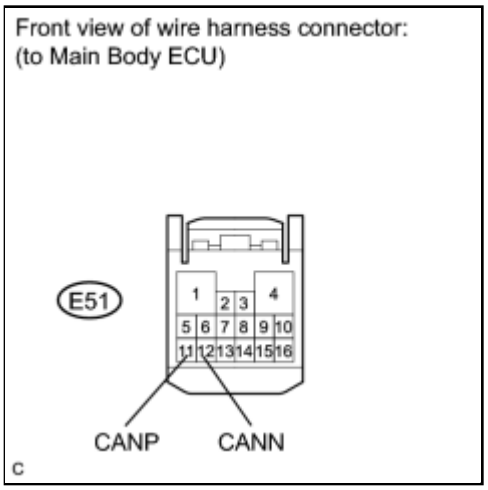

(a) Reconnect the CAN No. 3 junction connector.

(b) Disconnect the main body ECU connector from the main body ECU.

(c) Measure the resistance according to the value(s) in the table below.

Standard Resistance:

TESTER CONNECTION	SWITCH CONDITION	SPECIFIED CONDITION
E51-11 (CANP) - E51-12 (CANN)	Ignition switch off	108 to 132 Ω

NG ▶ **REPAIR OR REPLACE CAN MS BUS MAIN WIRE OR CONNECTOR (CAN NO. 3 JUNCTION CONNECTOR - MAIN BODY ECU)**

OK ▶ **REPLACE INSTRUMENT PANEL JUNCTION BLOCK (MAIN BODY ECU)**

8.	**CHECK FOR OPEN IN CAN MS BUS MAIN WIRE (COMBINATION METER - CAN NO. 3 JUNCTION CONNECTOR)**

(a) Reconnect the CAN No. 3 junction connector.

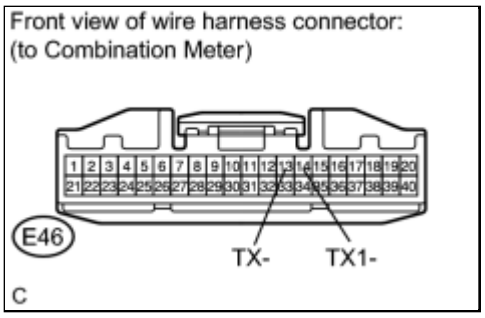

(b) Disconnect the combination meter connector.

(c) Measure the resistance according to the value(s) in the table below.

Standard Resistance:

TESTER CONNECTION	SWITCH CONDITION	SPECIFIED CONDITION
E46-13 (TX-) - E46-14 (TX1-)	Ignition switch off	108 to 132 Ω

NG ▶ **REPAIR OR REPLACE CAN MS BUS MAIN WIRE OR CONNECTOR (CAN NO. 3 JUNCTION CONNECTOR - COMBINATION METER)**

OK ▶ **REPLACE COMBINATION METER ASSEMBLY**

9.	**CHECK FOR SHORT IN CAN MS BUS WIRES (MAIN BODY ECU MAIN WIRE)**

(a) Disconnect the CAN No. 3 junction connector.

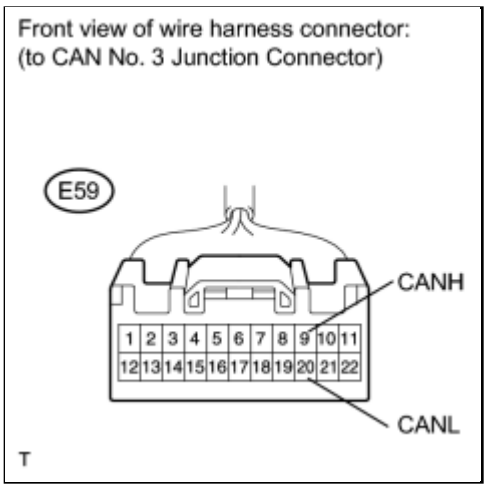

(b) Measure the resistance according to the value(s) in the table below.

Standard Resistance:

TESTER CONNECTION	SWITCH CONDITION	SPECIFIED CONDITION
E59-9 (CANH) - E59-20 (CANL)	Ignition switch off	108 to 132 Ω

NG ▶ **CHECK FOR SHORT IN CAN BUS MAIN WIRE (MAIN BODY ECU - CAN NO. 3 JUNCTION CONNECTOR)**

OK ▼

10.	CHECK FOR SHORT IN CAN MS BUS WIRES (COMBINATION METER MAIN WIRE)

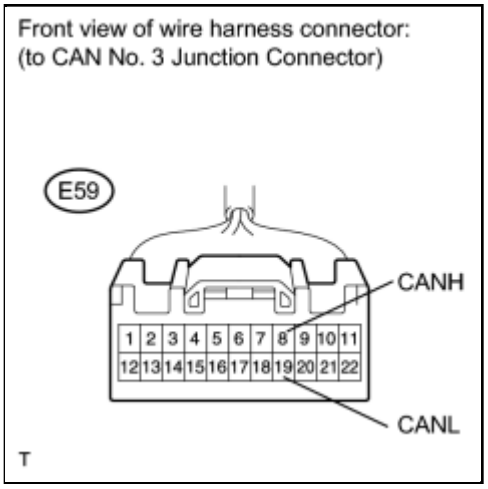

(a) Disconnect the CAN No. 3 junction connector.

(b) Measure the resistance according to the value(s) in the table below.

Standard Resistance:

TESTER CONNECTION	SWITCH CONDITION	SPECIFIED CONDITION
E59-8 (CANH) - E59-19 (CANL)	Ignition switch off	108 to 132 Ω

NG ▶ **CHECK FOR SHORT IN CAN MS BUS WIRES (COMBINATION METER - CAN NO. 3 JUNCTION CONNECTOR)**

OK ▼

11.	**CHECK FOR SHORT IN CAN MS BUS WIRES (CAN NO. 3 JUNCTION CONNECTOR - CERTIFICATION ECU)**

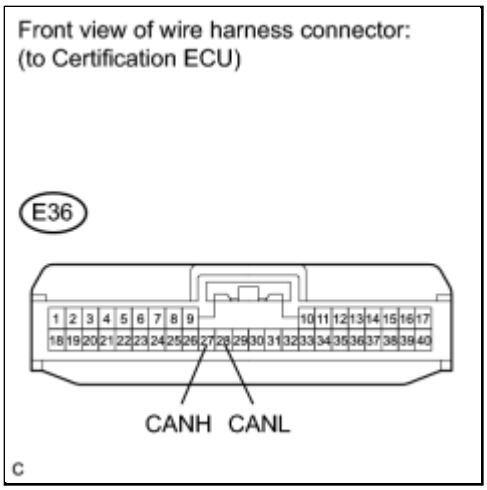

(a) Disconnect the certification ECU connector.

(b) Disconnect the CAN No. 3 junction connector.

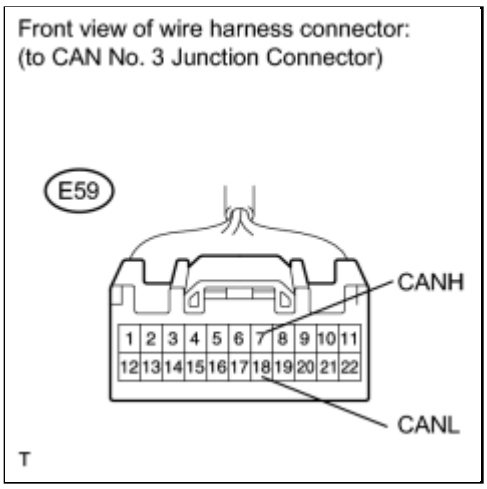

(c) Measure the resistance according to the value(s) in the table below.

Standard Resistance:

TESTER CONNECTION	SWITCH CONDITION	SPECIFIED CONDITION
E59-7 (CANH) - E59-18 (CANL)	Ignition switch off	1 MΩ or higher

NG ▶ **REPAIR OR REPLACE HARNESS OR CONNECTOR (CAN NO. 3 JUNCTION CONNECTOR - CERTIFICATION ECU)**

OK ▼

12.	**CHECK FOR SHORT IN CAN MS BUS WIRES (CAN No. 3 JUNCTION CONNECTOR)**

(a) Reconnect the CAN No. 3 junction connector.

(b) Measure the resistance according to the value(s) in the table below.

NOTICE:

The resistance must be measured after the main body ECU, combination meter and No. 3 junction connectors are reconnected.

Standard Resistance:

TESTER CONNECTION	SWITCH CONDITION	SPECIFIED CONDITION
E36-27 (CANH) -	Ignition switch	54 Ω or higher

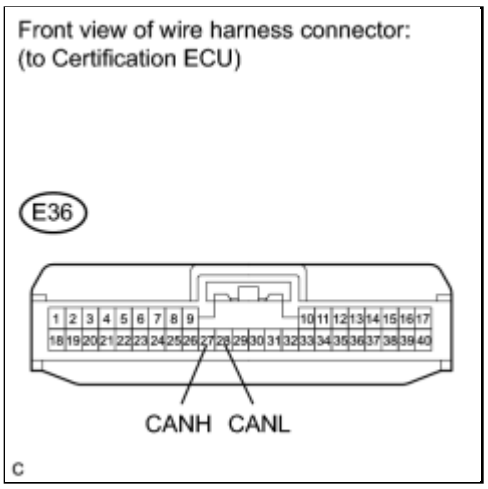

E36-28 (CANL)	off	

NG ▶ **REPLACE CAN NO. 3 JUNCTION CONNECTOR**

OK ▶ **REPLACE CERTIFICATION ECU**

13.	**CHECK FOR SHORT IN CAN BUS MAIN WIRE (MAIN BODY ECU - CAN NO. 3 JUNCTION CONNECTOR)**

(a) Disconnect the main body ECU connector from the main body ECU.

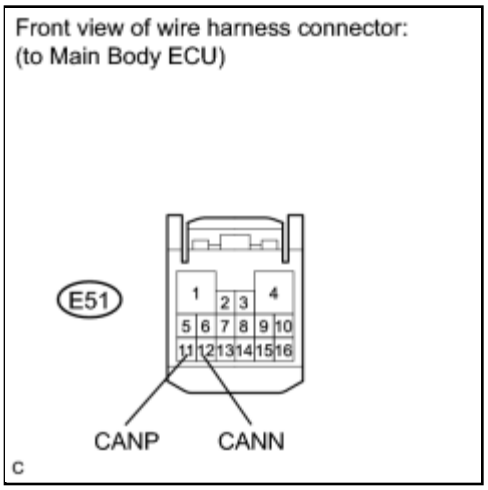

(b) Reconnect the CAN No. 3 junction connector.

(c) Measure the resistance according to the value(s) in the table below.

Standard Resistance:

TESTER CONNECTION	SWITCH CONDITION	SPECIFIED CONDITION
E51-11 (CANP) - E51-12 (CANN)	Ignition switch off	108 to 132 Ω

NG ▶ **REPAIR OR REPLACE CAN MS BUS MAIN WIRE OR CONNECTOR (CAN NO. 3 JUNCTION CONNECTOR -**

MAIN BODY ECU)

OK ▶ REPLACE INSTRUMENT PANEL JUNCTION BLOCK (MAIN BODY ECU)

14.	CHECK FOR SHORT IN CAN MS BUS WIRES (COMBINATION METER - CAN NO. 3 JUNCTION CONNECTOR)

(a) Disconnect the combination meter connector.

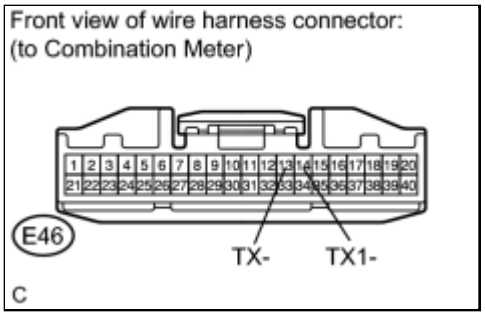

(b) Reconnect the CAN No. 3 junction connector.

(c) Measure the resistance according to the value(s) in the table below.

Standard Resistance:

TESTER CONNECTION	SWITCH CONDITION	SPECIFIED CONDITION
E46-13 (TX-) - E46-14 (TX1-)	Ignition switch off	108 to 132 Ω

NG ▶ REPAIR OR REPLACE CAN MS BUS MAIN WIRE OR CONNECTOR (CAN NO. 3 JUNCTION CONNECTOR - COMBINATION METER)

OK ▶ REPLACE COMBINATION METER ASSEMBLY

15.	CHECK FOR SHORT TO +B IN CAN MS BUS WIRE (MAIN BODY ECU MAIN WIRE)

(a) Disconnect the CAN No. 3 junction connector.

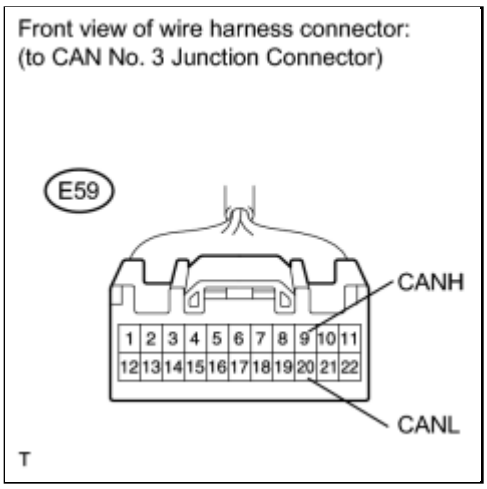

(b) Measure the resistance according to the value(s) in the table below.

Standard Resistance:

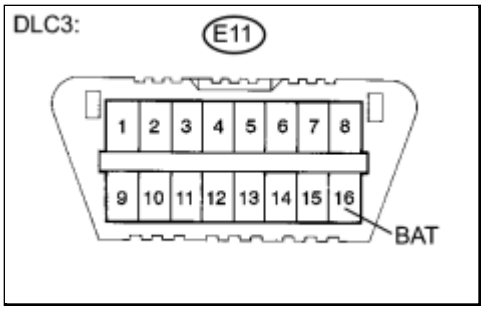

TESTER CONNECTION	CONDITION	SPECIFIED CONDITION
E59-9 (CANH) - E11-16 (BAT)	Cable is disconnected from negative (-) battery terminal	6 kΩ or higher
E59-20 (CANL) - E11-16 (BAT)	Cable is disconnected from negative (-) battery terminal	6 kΩ or higher

NG ▶ **CHECK FOR SHORT TO +B IN CAN MS BUS WIRE (CAN NO. 3 JUNCTION CONNECTOR - MAIN BODY ECU)**

OK ▼

16.	**CHECK FOR SHORT TO +B IN CAN MS BUS WIRE (COMBINATION METER MAIN WIRE)**

(a) Disconnect the CAN No. 3 junction connector.

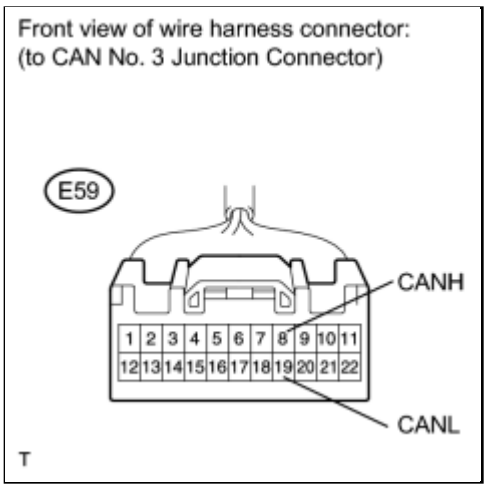

(b) Measure the resistance according to the value(s) in the table below.

Standard Resistance:

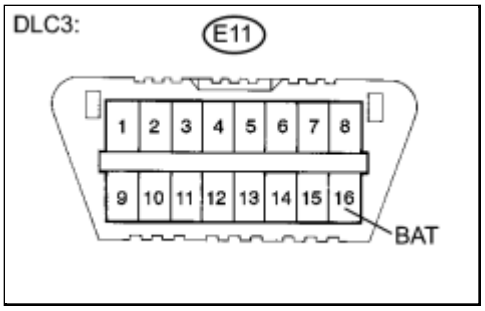

TESTER CONNECTION	CONDITION	SPECIFIED CONDITION
E59-8 (CANH) - E11-16 (BAT)	Cable is disconnected from negative (-) battery terminal	6 kΩ or higher
E59-19 (CANL) - E11-16 (BAT)	Cable is disconnected from negative (-) battery terminal	6 kΩ or higher

NG ▶ **CHECK FOR SHORT TO +B IN CAN MS BUS WIRE (CAN NO. 3 JUNCTION CONNECTOR - COMBINATION METER)**

OK ▼

17.	**CHECK FOR SHORT TO +B IN CAN MS BUS WIRE (CAN NO. 3 JUNCTION CONNECTOR - CERTIFICATION ECU)**

(a) Disconnect the certification ECU connector.

(b) Disconnect the CAN No. 3 junction connector.

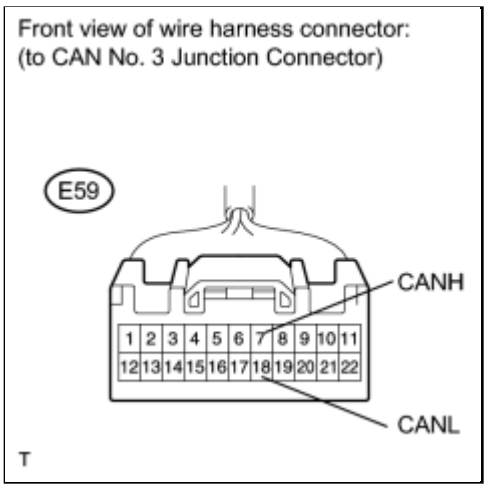

(c) Measure the resistance according to the value(s) in the table below.

Standard Resistance:

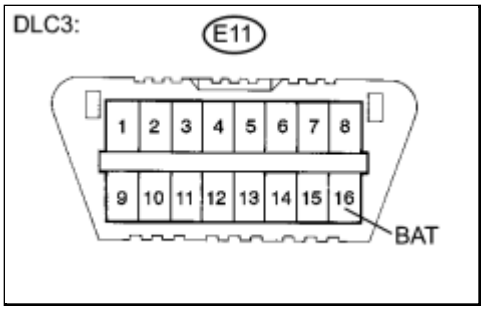

TESTER CONNECTION	CONDITION	SPECIFIED CONDITION
E59-7 (CANH) - E11-16 (BAT)	Cable is disconnected from negative (-) battery terminal	6 kΩ or higher
E59-18 (CANL) - E11-16 (BAT)	Cable is disconnected from negative (-) battery terminal	6 kΩ or higher

NG ▶ **REPAIR OR REPLACE CAN MS BUS BRANCH WIRE OR CONNECTOR (CAN NO. 3 JUNCTION CONNECTOR - CERTIFICATION ECU)**

OK ▶ **REPAIR OR REPLACE HARNESS OR CONNECTOR (CAN NO. 3 JUNCTION CONNECTOR - CERTIFICATION ECU)**

18.	**CHECK FOR SHORT TO +B IN CAN MS BUS WIRE (CAN NO. 3 JUNCTION CONNECTOR - MAIN BODY ECU)**

(a) Disconnect the main body ECU connector from the main body ECU.

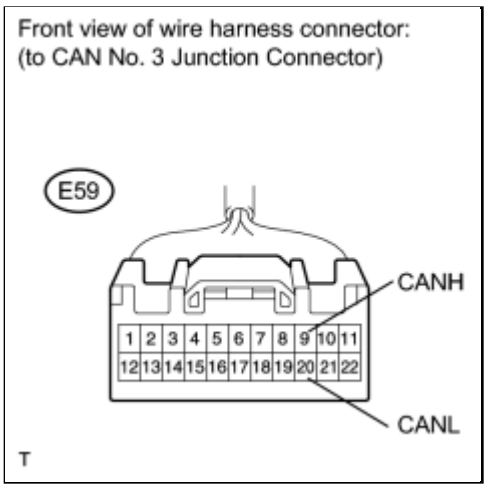

(b) Measure the resistance according to the value(s) in the table below.

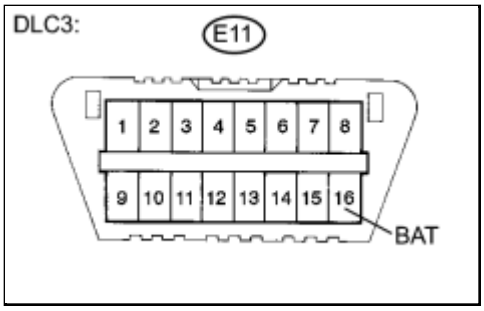

Standard Resistance:

TESTER CONNECTION	CONDITION	SPECIFIED CONDITION
E59-9 (CANH) - E11-16 (BAT)	Cable is disconnected from negative (-) battery terminal	6 kΩ or higher
E59-20 (CANL) - E11-16 (BAT)	Cable is disconnected from negative (-) battery terminal	6 kΩ or higher

NG ▶ **REPAIR OR REPLACE CAN MS BUS MAIN WIRE OR CONNECTOR (CAN NO. 3 JUNCTION CONNECTOR - MAIN BODY ECU)**

OK ▶ **REPLACE INSTRUMENT PANEL JUNCTION BLOCK (MAIN BODY ECU)**

19.	**CHECK FOR SHORT TO +B IN CAN MS BUS WIRE (CAN NO. 3 JUNCTION CONNECTOR - COMBINATION METER)**

(a) Disconnect the CAN No. 3 junction connector.

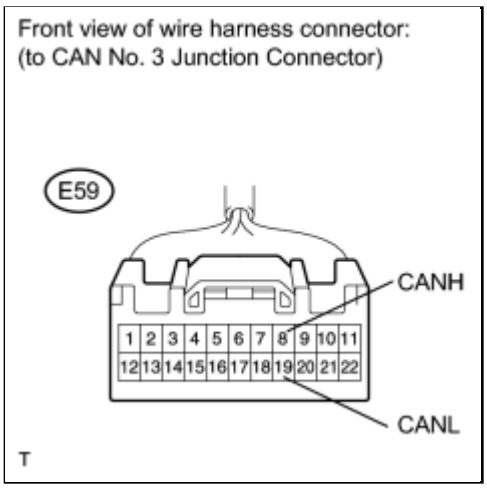

(b) Disconnect the combination meter connector.

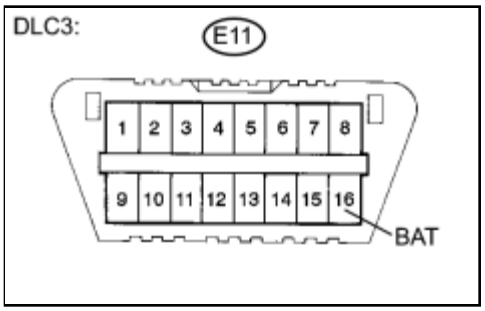

(c) Measure the resistance according to the value(s) in the table below.

Standard Resistance:

TESTER CONNECTION	CONDITION	SPECIFIED CONDITION
E59-8 (CANH) - E11-16 (BAT)	Cable is disconnected from negative (-) battery terminal	6 kΩ or higher
E59-19 (CANL) - E11-16 (BAT)	Cable is disconnected from negative (-) battery terminal	6 kΩ or higher

NG ▶ **REPAIR OR REPLACE CAN MS BUS MAIN WIRE OR CONNECTOR (CAN NO. 3 JUNCTION CONNECTOR - COMBINATION METER)**

OK ▶ **REPLACE COMBINATION METER ASSEMBLY**

20.	**CHECK FOR SHORT TO GND IN CAN MS BUS WIRE (MAIN BODY ECU MAIN WIRE)**

(a) Disconnect the CAN No. 3 junction connector.

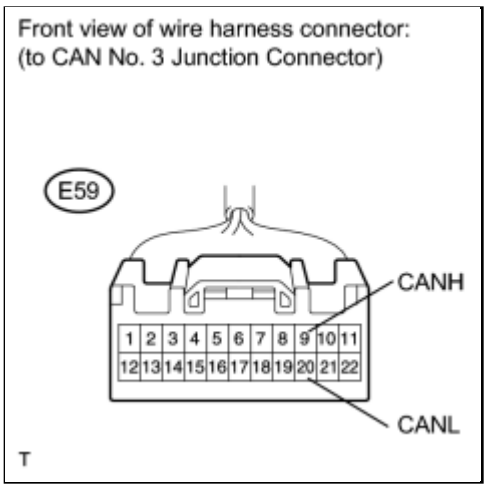

(b) Measure the resistance according to the value(s) in the table below.

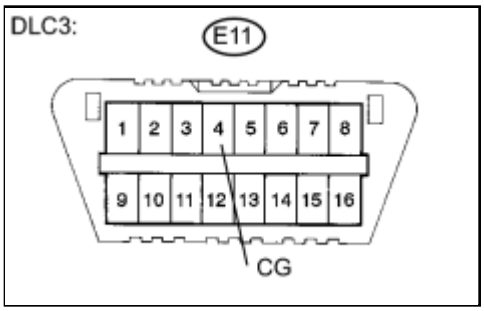

Standard Resistance:

TESTER CONNECTION	SWITCH CONDITION	SPECIFIED CONDITION
E58-9 (CANH) - E11-4 (CG)	Ignition switch off	200 Ω or higher
E59-20 (CANL) - E11-4 (CG)	Ignition switch off	200 Ω or higher

NG ▶ **CHECK FOR SHORT TO GND IN CAN MS BUS WIRE (CAN NO. 3 JUNCTION CONNECTOR - MAIN BODY ECU)**

OK ▼

21.	**CHECK FOR SHORT TO GND IN CAN MS BUS WIRE (COMBINATION METER MAIN WIRE)**

(a) Disconnect the CAN No. 3 junction connector.

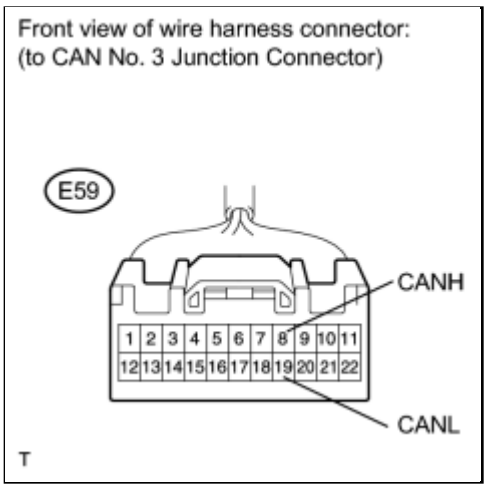

(b) Measure the resistance according to the value(s) in the table below.

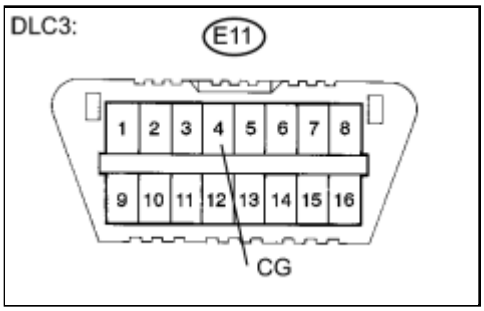

Standard Resistance:

TESTER CONNECTION	SWITCH CONDITION	SPECIFIED CONDITION
E59-8 (CANH) - E11-4 (CG)	Ignition switch off	200 Ω or higher
E59-19 (CANL) - E11-4 (CG)	Ignition switch off	200 Ω or higher

NG ▶ **CHECK FOR SHORT TO GND IN CAN MS BUS WIRE (CAN NO. 3 JUNCTION CONNECTOR - COMBINATION METER)**

OK ▼

22.	**CHECK FOR SHORT TO GND IN CAN MS BUS WIRE (CAN NO. 3 JUNCTION CONNECTOR - CERTIFICATION ECU)**

(a) Disconnect the certification ECU connector.

(b) Disconnect the CAN No. 3 junction connector.

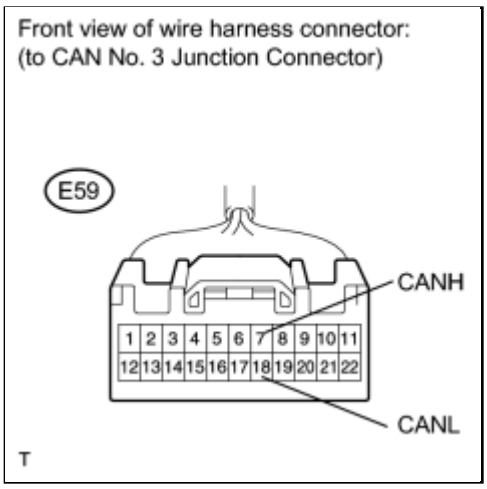

(c) Measure the resistance according to the value(s) in the table below.

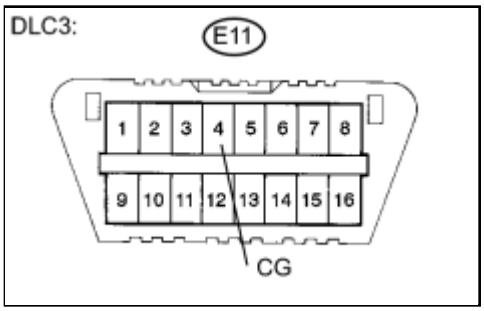

Standard Resistance:

TESTER CONNECTION	SWITCH CONDITION	SPECIFIED CONDITION
E59-7 (CANH) - E11-4 (CG)	Ignition switch off	200 Ω or higher
E59-18 (CANL) - E11-4 (CG)	Ignition switch off	200 Ω or higher

NG ▶ **REPAIR OR REPLACE CAN MS BUS BRANCH WIRE OR CONNECTOR (CAN NO. 3 JUNCTION CONNECTOR - CERTIFICATION ECU)**

OK ▶ **REPLACE CERTIFICATION ECU**

23.	**CHECK FOR SHORT TO GND IN CAN MS BUS WIRE (CAN NO. 3 JUNCTION CONNECTOR - COMBINATION METER)**

(a) Disconnect the combination meter connector.

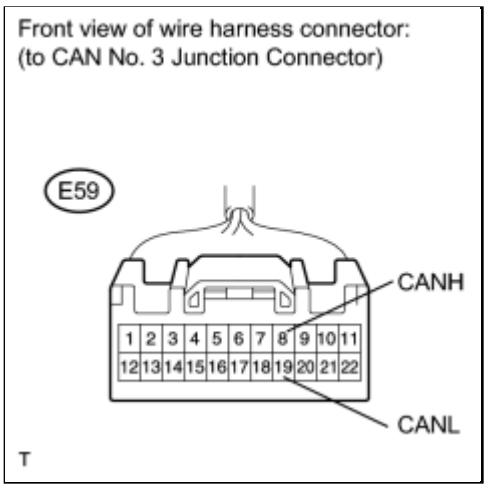

(b) Measure the resistance according to the value(s) in the table below.

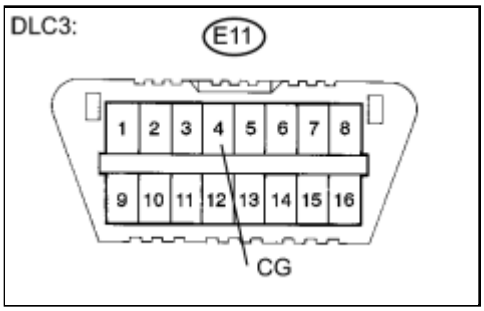

Standard Resistance:

TESTER CONNECTION	SWITCH CONDITION	SPECIFIED CONDITION
E59-8 (CANH) - E11-4 (CG)	Ignition switch off	200 Ω or higher
E59-19 (CANL) - E11-4 (CG)	Ignition switch off	200 Ω or higher

NG ▶ **REPAIR OR REPLACE CAN MS BUS MAIN WIRE OR CONNECTOR (CAN NO. 3 JUNCTION CONNECTOR - COMBINATION METER)**

OK ▶ **REPLACE COMBINATION METER ASSEMBLY**

24.	**CHECK FOR SHORT TO GND IN CAN MS BUS WIRE (CAN NO. 3 JUNCTION CONNECTOR - MAIN BODY ECU)**

(a) Disconnect the main body ECU connector from the main body ECU.

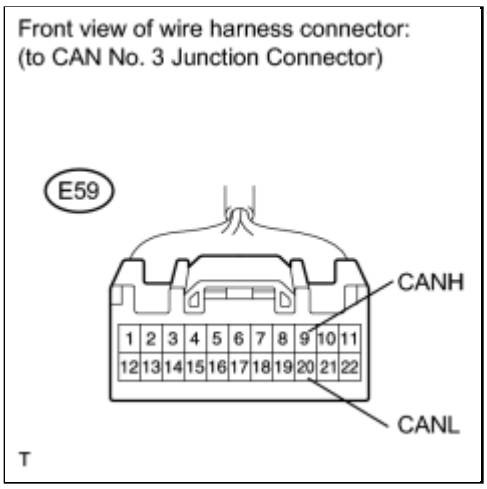

(b) Measure the resistance according to the value(s) in the table below.

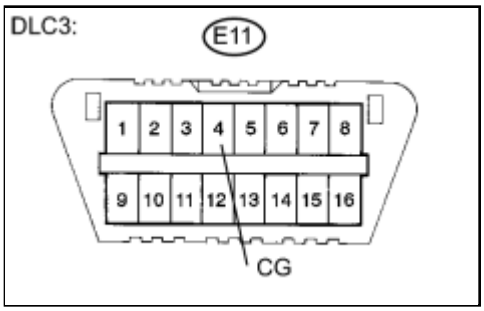

Standard Resistance:

TESTER CONNECTION	SWITCH CONDITION	SPECIFIED CONDITION
E59-9 (CANH) - E11-4 (CG)	Ignition switch off	200 Ω or higher
E59-20 (CANL) - E11-4 (CG)	Ignition switch off	200 Ω or higher

NG ▶ **REPAIR OR REPLACE CAN MS BUS MAIN WIRE OR CONNECTOR (CAN NO. 3 JUNCTION CONNECTOR - MAIN BODY ECU)**

OK ▶ **REPLACE INSTRUMENT PANEL JUNCTION BLOCK (MAIN BODY ECU)**

Last Modified: 3-10-2010	6.4 T	**From:** 200901
Model Year: 2010	**Model:** Corolla	**Doc ID:** RM000000WI8057X
Title: NETWORKING: CAN COMMUNICATION SYSTEM: PROBLEM SYMPTOMS TABLE (2010 Corolla)		

PROBLEM SYMPTOMS TABLE

HINT:

- Use the table below to help determine the cause of problem symptoms. If multiple suspected areas are listed, the potential causes of the symptoms are listed in order of probability in the "Suspected Area" column of the table. Check each symptom by checking the suspected areas in the order they are listed. Replace parts as necessary.
- Inspect the fuses and relays related to this system before inspecting the suspected areas below.

Result List of CAN Bus Wire Check

SYMPTOM	SUSPECTED AREA	SEE PAGE
The result of "CAN BUS WIRE CHECK" is "Open in CAN Main Bus Line".	Open in CAN Main Bus Line	INFO
The result of "CAN BUS WIRE CHECK" CAN BUS WIRE CHECK" is "Short in CAN Bus Line".	Short in CAN Bus Lines	INFO
The result of "CAN BUS WIRE CHECK" is "Short to B+ in CAN Bus Line".	Short to B+ in CAN Bus Line	INFO
The result of "CAN BUS WIRE CHECK" is "Short to GND in CAN Bus Line".	Short to GND in CAN Bus Line	INFO
The result of "CAN BUS WIRE CHECK" is "Open in One Side of CAN Branch Line".	Open in One Side of CAN Branch Line	INFO

Communication Stop Mode Table

SYMPTOM	SUSPECTED AREA	SEE PAGE
"Engine" is not displayed on the Techstream.	ECM Communication Stop Mode	INFO
"ABS/VSC/TRAC" is not displayed on the Techstream.	Skid Control ECU Communication Stop Mode	INFO
"Steering Angle Sensor" is not displayed on the Techstream.	Steering Angle Sensor Communication Stop Mode	INFO
"Yaw Rate / Decelerate Sensor" is not displayed on the Techstream.	Yaw Rate Sensor Communication Stop Mode	INFO
"EPS" is not displayed on the Techstream.	Power Steering ECU Communication Stop Mode	INFO

SYMPTOM	SUSPECTED AREA	SEE PAGE
"Air Conditioner" is not displayed on the Techstream.	Air Conditioning Amplifier Communication Stop Mode	INFO
"SRS Airbag" is not displayed on the Techstream.	Center Airbag Sensor Communication Stop Mode	INFO
"Main Body" is not displayed on the Techstream.	Main Body ECU Communication Stop Mode	INFO
"Combination Meter" is not displayed on the Techstream.	Combination Meter ECU Communication Stop Mode	INFO

Last Modified: 3-10-2010	6.4 D	**From:** 200901
Model Year: 2010	**Model:** Corolla	**Doc ID:** RM000000WIB05BX
Title: NETWORKING: CAN COMMUNICATION SYSTEM: DIAGNOSIS SYSTEM (2010 Corolla)		

DIAGNOSIS SYSTEM

1. CAN BUS CHECK

(a) Using the Techstream, select "CAN Bus Check" from the "System Select".

2. CHECK FOR INSTALLED SYSTEMS (ECUS AND SENSORS) THAT ADOPT CAN COMMUNICATION

(a) Systems (ECUs, sensors) that adopt CAN communication vary depending on the vehicle's optional settings. Check which systems (ECUs, sensors) are installed on the vehicle.

HINT:

ECUs and sensors that are connected to the LIN communication system and the local CAN system are also displayed.

ECU/SENSOR NAME	CHECK METHOD
ECM	Installed on all vehicles
Combination meter	Installed on all vehicles
Air conditioning amplifier	Installed on all vehicles
Center airbag sensor	Installed on all vehicles
Power steering ECU	Installed on all vehicles
Main body ECU	Installed on all vehicles
Skid control ECU	Installed on all vehicles
Steering angle sensor	w/ VSC
Yaw rate sensor	w/ VSC
Certification ECU	w/ Smart key system

3. DTC TABLE BY ECU

HINT:

- In the CAN communication system, CAN communication system DTCs can be displayed by the ECU using the Techstream.
- If CAN communication system DTCs are output, trouble cannot be determined only by the DTCs. Perform troubleshooting according to How to Proceed with Troubleshooting INFO .

(a) SKID CONTROL ECU (w/o VSC)

HINT:

DTC communication uses the CAN communication system.

DTC NO.	DETECTION ITEM
U0073	Control Module Communication Bus Off

(b) SKID CONTROL ECU (w/ VSC)

HINT:

DTC communication uses the CAN communication system.

DTC NO.	DETECTION ITEM
U0073	Control Module Communication Bus Off
U0100	Lost Communication with ECM/PCM "A"
U0123	Lost Communication with Yaw Rate Sensor Module
U0124	Lost Communication with Lateral Acceleration Sensor Module
U0126	Lost Communication with Steering Angle Sensor Module

(c) AIR CONDITIONING AMPLIFIER

HINT:

- DTC communication uses the CAN communication system.
- The following DTC is output only for current malfunctions.

DTC NO.	DETECTION ITEM
B1499	Multiplex Communication Circuit

(d) COMBINATION METER

HINT:

DTC communication uses the CAN communication system.

DTC NO.	DETECTION ITEM
U0100	Lost Communication with ECM/PCM "A"
U0129	Lost Communication with Brake System Control Module

(e) POWER STEERING ECU

HINT:

DTC communication uses the CAN system.

DTC NO.	DETECTION ITEM
U0100	Lost Communication with ECM
U0129	Lost Communication with Anti-lock Brake System (ABS) Control Module

(f) MAIN BODY ECU

HINT:

DTC communication uses the CAN system.

DTC NO.	DETECTION ITEM
U0327	Software Incompatibility with Vehicle Security Control Module
U1002	Lost Communication with Gateway Module

(g) ECM

HINT:

The ECM is connected to the CAN communication system, but CAN communication DTCs are not output.

(h) CENTER AIRBAG SENSOR

HINT:

The center airbag sensor is connected to the CAN communication system, but CAN communication DTCs are not output.

(i) STEERING ANGLE SENSOR (w/ VSC)

HINT:

The steering angle sensor is connected to the CAN communication system, but CAN communication DTCs are not output.

(j) YAW RATE SENSOR (w/ VSC)

HINT:

The yaw rate sensor is connected to the CAN communication system, but CAN communication DTCs are not output.

(k) CERTIFICATION ECU

HINT:

The certification ECU is connected to the CAN communication system, but CAN communication DTCs are not output.

4. DTC COMBINATION TABLE

(a) CAN No. 1 Bus (w/o VSC)

DTC		TROUBLE MODE						
OUTPUT FROM	OUTPUT DTC	ECM COMMUNICATION STOP MODE	SKID CONTROL ECU COMMUNICATION STOP MODE	POWER STEERING ECU COMMUNICATION STOP MODE	CENTER AIRBAG SENSOR COMMUNICATION STOP MODE	AIR CONDITIONING AMPLIFIER COMMUNICATION STOP MODE	COMBINATION METER ECU COMMUNICATION STOP MODE	MAIN BODY ECU COMMUNICATION STOP MODE
Skid Control ECU	U0073	X	○*1	X	X	X	X	X
Combination Meter	U0100	○	X	X	X	X	○*1	X
	U0129	X	○	X	X	X	○*1	X
Power Steering ECU	U0100	○	X	○*1	X	X	X	X
	U0129	X	○	○*1	X	X	X	X

HINT:

- ○: Set
- X: Not set or may be set according to the malfunctioning part when one side of the CAN bus wire opens
- *1: Does not output it during communication error

(b) CAN No. 1 Bus (w/ VSC)

DTC	TROUBLE MODE

OUTPUT FROM	OUTPUT DTC	ECM COMMUNICATION STOP MODE	SKID CONTROL ECU COMMUNICATION STOP MODE	STEERING ANGLE SENSOR COMMUNICATION STOP MODE	YAW RATE SENSOR COMMUNICATION STOP MODE	POWER STEERING ECU COMMUNICATION STOP MODE
Skid Control ECU	U0073	X	○*1	X	X	X
	U0100	○	○*1	X	X	X
	U0123	X	○*1	X	○	X
	U0124	X	○*1	X	○	X
	U0126	X	○*1	○	X	X
Combination Meter	U0100	○	X	X	X	X
	U0129	X	○	X	X	X
Power Steering ECU	U0100	○	X	X	X	○*1
	U0129	X	○	X	X	○*1

HINT:

- ○: Set
- X: Not set or may be set according to the malfunctioning part when one side of the CAN bus wire opens
- *1: Does not output it during communication error

DTC		TROUBLE MODE			
OUTPUT FROM	OUTPUT DTC	CENTER AIRBAG SENSOR COMMUNICATION STOP MODE	AIR CONDITIONING AMPLIFIER COMMUNICATION STOP MODE	COMBINATION METER ECU COMMUNICATION STOP MODE	MAIN BODY ECU COMMUNICATION STOP MODE
Skid Control ECU	U0073	X	X	X	X
	U0100	X	X	X	X
	U0123	X	X	X	X
	U0124	X	X	X	X
	U0126	X	X	X	X
Combination Meter	U0100	X	X	○*1	X
	U0129	X	X	○*1	X
Power Steering ECU	U0100	X	X	X	X
	U0129	X	X	X	X

HINT:

- ○: Set
- X: Not set or may be set according to the malfunctioning part when one side of the CAN bus wire opens
- *1: Does not output it during communication error
- ECM Communication Stop Mode INFO
- Skid Control ECU Communication Stop Mode INFO
- Steering Angle Sensor Communication Stop Mode INFO
- Yaw Rate Sensor Communication Stop Mode INFO
- Combination Meter Communication Stop Mode INFO
- Air Conditioning Amplifier Communication Stop Mode INFO
- Center Airbag Sensor Communication Stop Mode INFO
- Power Steering ECU Communication Stop Mode INFO
- Main Body ECU Communication Stop Mode INFO

Last Modified: 3-10-2010	6.4 U	**From:** 200901
Model Year: 2010	**Model:** Corolla	**Doc ID:** RM000000WID04KX
Title: NETWORKING: CAN COMMUNICATION SYSTEM: FAIL-SAFE CHART (2010 Corolla)		

FAIL-SAFE CHART

1. FAIL-SAFE FUNCTION

(a) When communication fails in any of the CAN bus wires (communication wires) due to a short circuit or other causes, the fail-safe function which is specified for each system, operates to prevent the system from malfunctioning.

(b) The following chart shows the relationships between components, system functions, and effects of communication failure on these functions. (For further details, see the pages for each system.)

FUNCTION (FUNCTION DESCRIPTION)	CONTROL MASTER	SYSTEM RELATED	FAIL-SAFE OPERATION	DTC (DRIVER DETECTABLE)
Air conditioning control	Air Conditioning Amplifier	• ECM • Combination Meter • Main Body ECU • Accessory Gateway	Air conditioning function and PTC heater function stop	B1499 (Air Conditioning inoperative)
VSC control*1 (Controls driving force while VSC in operation)	Skid Control ECU	• ECM • Steering Angle Sensor • Yaw Rate Sensor	VSC control is inoperative (VSC control gradually stops)	U0073, U0100, U0123, U0124, U0126 (Warning light comes on)
VSC control*1 (Engine power control by VSC/TRC)	Skid Control ECU	• ECM • Steering Angle Sensor • Yaw Rate Sensor	VSC control is inoperative (VSC control gradually stops)	U0073, U0100, U0123, U0124, U0126 (Warning light comes on)
ABS control (Controls driving force while ABS in operation)	Skid Control ECU	Yaw Rate Sensor*1	Control inoperative (gradually stops controlling during ABS control)	U0073, U0123*1, U0124*1 (Warning light comes on)
Electric power steering (Speed of vehicle induction type torque control)	Power Steering ECU	• ECM • Skid Control ECU • Steering	VSC Malfunction: Depression of EPS assist (Deterioration of steering)	U0100, U0129 (VSC failure: Warning light comes on, and decrease of assistance power at

FUNCTION (FUNCTION DESCRIPTION)	CONTROL MASTER	SYSTEM RELATED	FAIL-SAFE OPERATION	DTC (DRIVER DETECTABLE)
		Angle Sensor • Combination Meter	ECM Malfunction (before assist beginning): stop the assist operation ECM Malfunction (after assist beginning): continue the assist operation	vehicle speed 70 km/h) (ECM failure: Warning light comes on [only before assist beginning])
Entry function/Power door lock control*2	Main Body ECU	• ECM • Center Airbag Sensor Assembly • Combination Meter • Certification ECU	Unlock permitted	U0327, U1002 (Wireless door lock cannot operate)
Meter display (Displays operation condition and DTCs)	Combination Meter	• ECM • Skid Control ECU • Power Steering ECU • Center Airbag Sensor Assembly • Air Conditioner Amplifier • Certification ECU • Main Body ECU	Light does not come on, illuminates abnormally, or blinks abnormally	U0100, U0129 (Abnormal light illumination)

*1: w/ VSC

*2: w/ Smart key system

Last Modified: 3-10-2010	6.4 J	**From:** 200901
Model Year: 2010	**Model:** Corolla	**Doc ID:** RM000001FAE01AX
Title: NETWORKING: CAN COMMUNICATION SYSTEM: Check CAN Bus Line for Short to +B (2010 Corolla)		

Check CAN Bus Line for Short to +B

DESCRIPTION

There may be a short circuit between the CAN bus line and +B when no resistance exists between terminals 6 (CANH) and 16 (BAT) or terminals 14 (CANL) and 16 (BAT) of the DLC3.

SYMPTOM	TROUBLE AREA
No resistance exists between terminals 6 (CANH) and 16 (BAT) or terminals 14 (CANL) and 16 (BAT) of the DLC3.	Short to +B in CAN bus wire • Skid control ECU • Power steering ECU • Steering angle sensor (w/ VSC) • Yaw rate sensor (w/ VSC) • ECM • Center airbag sensor assembly • Air conditioning amplifier • Combination meter ECU • Main body ECU • Accessory gateway

WIRING DIAGRAM

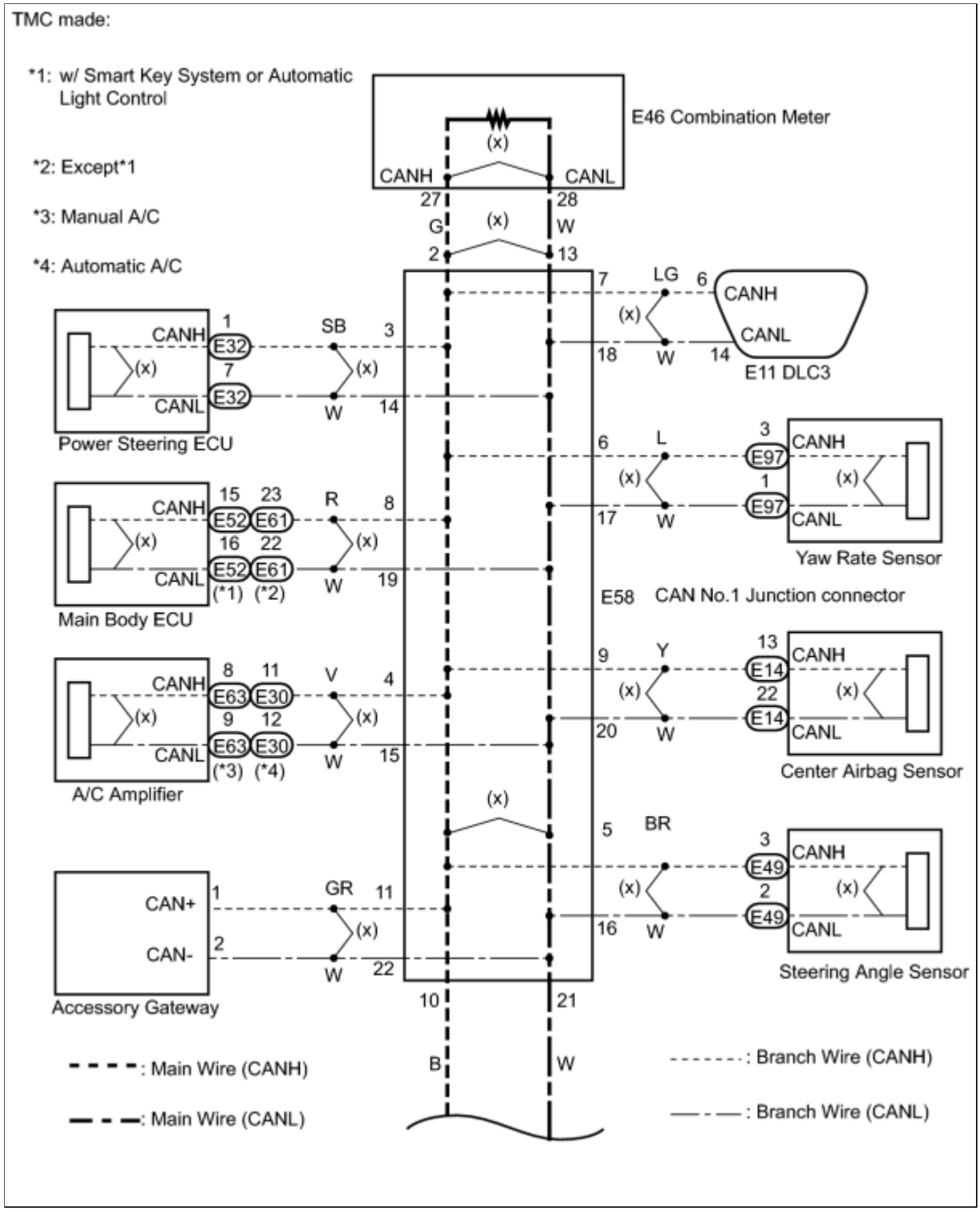
TMC made:
*1: w/ Smart Key System or Automatic Light Control
*2: Except*1
*3: Manual A/C
*4: Automatic A/C
E46 Combination Meter
CANH
CANL
(x)
27
28
G
W
2
13
7
LG
6
CANH
CANL
18
W
14
E11 DLC3
Power Steering ECU
1
E32
7
E32
SB
3
14
Main Body ECU
15
23
E52
E61
16
22
(*1)
(*2)
R
8
19
Yaw Rate Sensor
3
E97
1
E97
6
L
17
E58
CAN No.1 Junction connector
A/C Amplifier
8
11
E63
E30
9
12
(*3)
(*4)
V
4
15
Center Airbag Sensor
13
E14
22
E14
9
Y
20
Accessory Gateway
CAN+
CAN-
1
2
GR
11
22
Steering Angle Sensor
3
E49
2
E49
5
BR
16
10
21
B
W
: Main Wire (CANH)
: Main Wire (CANL)
: Branch Wire (CANH)
: Branch Wire (CANL)

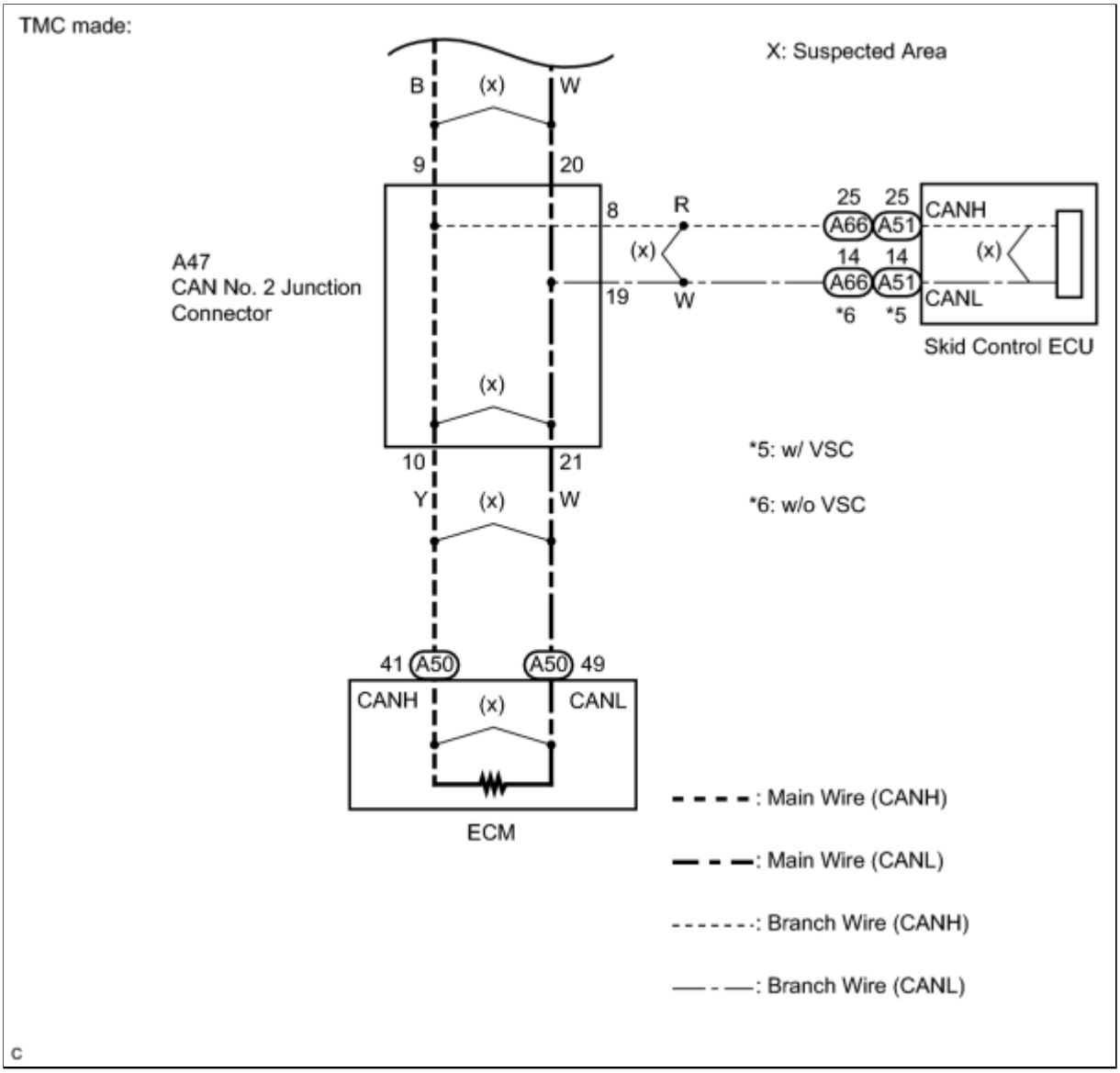
TMC made:
X: Suspected Area
B
(x)
W
9
20
8
R
25
25
CANH
A66
A51
(x)
14
14
(x)
A47
CAN No. 2 Junction
Connector
19
W
A66
A51
CANL
*6
*5
Skid Control ECU
(x)
*5: w/ VSC
10
21
Y
(x)
W
*6: w/o VSC
41
A50
A50
49
CANH
(x)
CANL
ECM
: Main Wire (CANH)
: Main Wire (CANL)
: Branch Wire (CANH)
: Branch Wire (CANL)
c

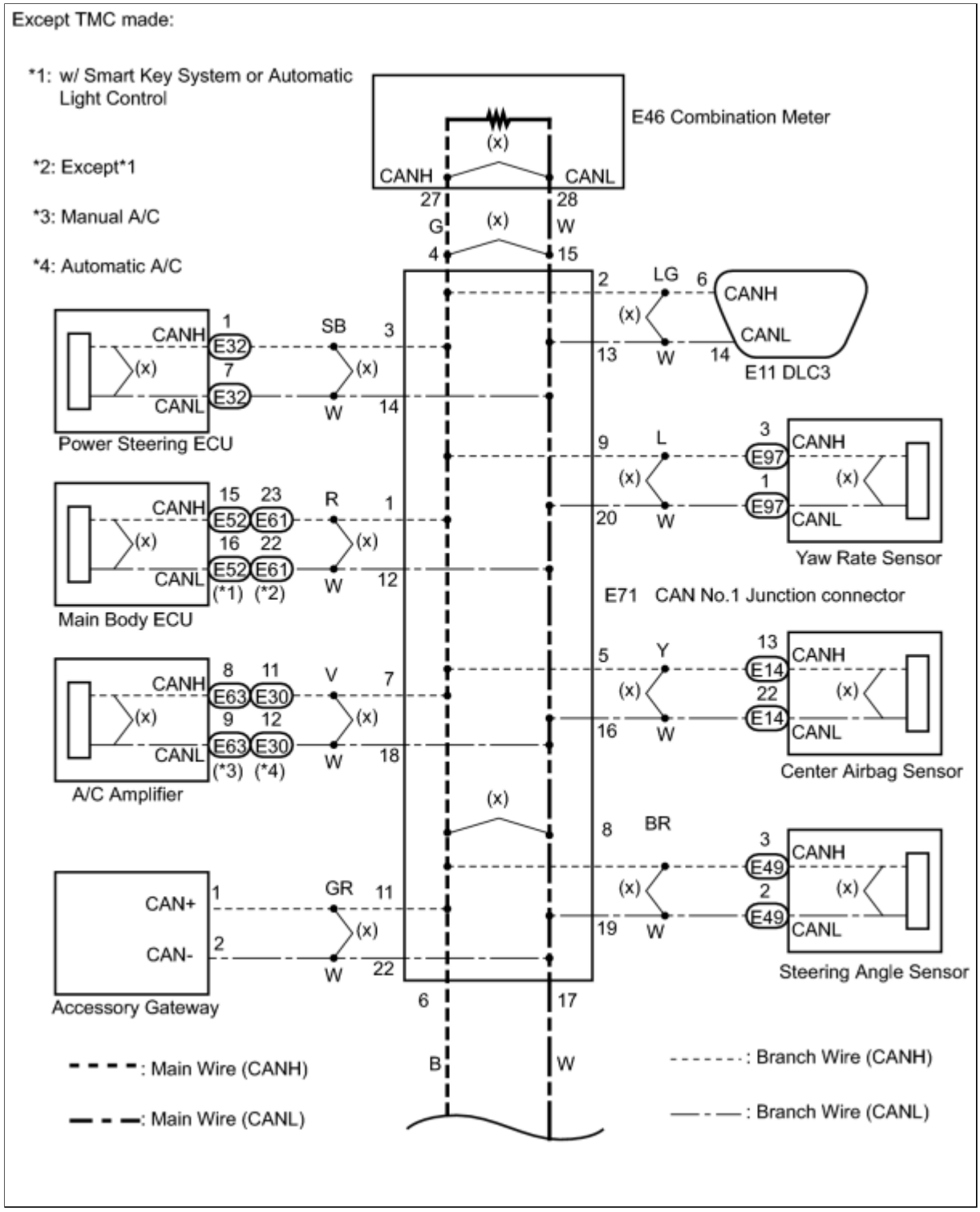
Except TMC made:
*1: w/ Smart Key System or Automatic Light Control
*2: Except*1
*3: Manual A/C
*4: Automatic A/C
E46 Combination Meter
CANH
CANL
27
28
G
W
4
15
E11 DLC3
Power Steering ECU
Main Body ECU
A/C Amplifier
Yaw Rate Sensor
E71 CAN No.1 Junction connector
Center Airbag Sensor
Steering Angle Sensor
Accessory Gateway
CAN+
CAN-
E32
E52
E61
E63
E30
E97
E14
E49
SB
R
V
GR
L
Y
BR
LG
B
17
6
: Main Wire (CANH)
: Main Wire (CANL)
: Branch Wire (CANH)
: Branch Wire (CANL)

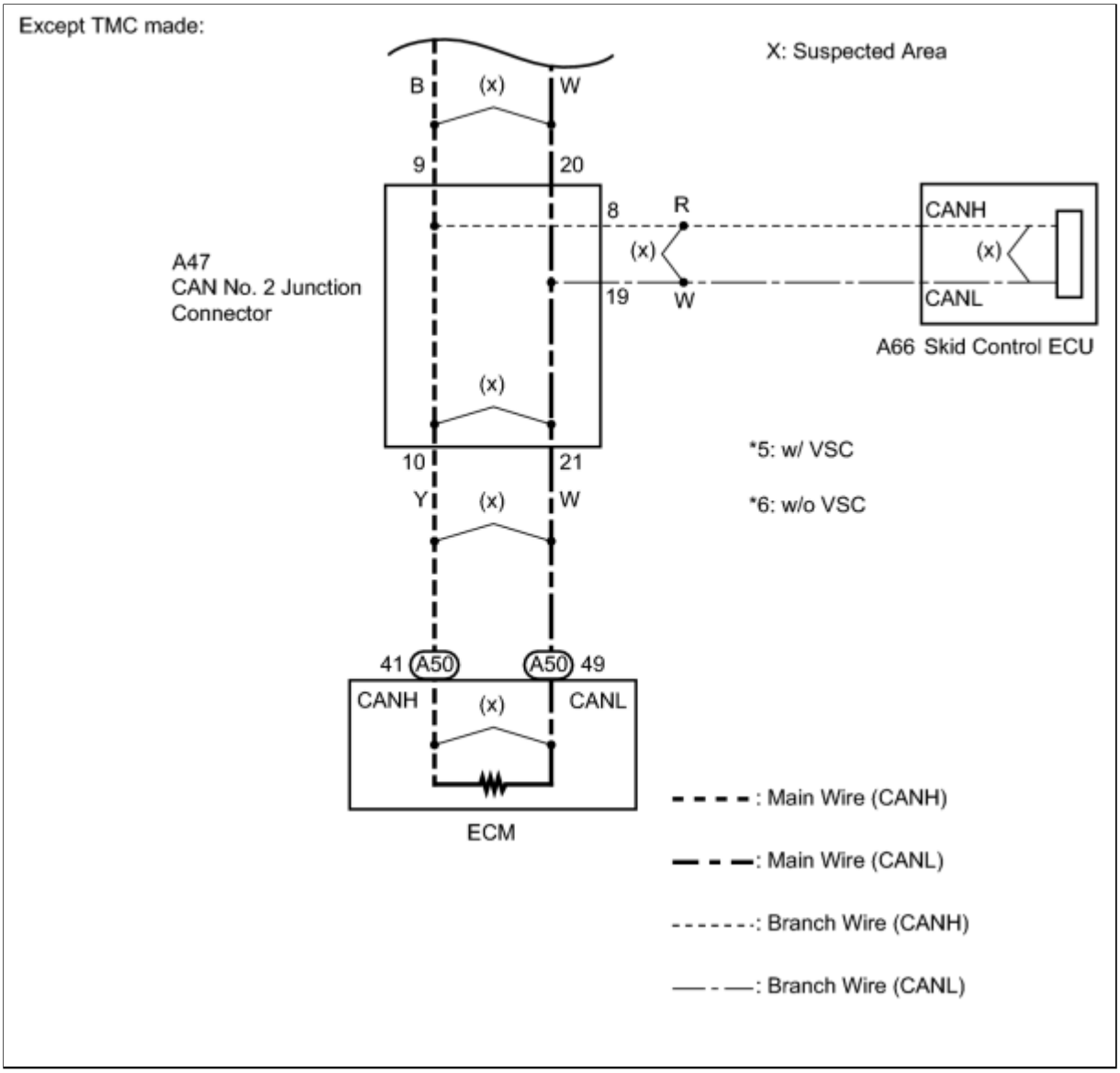

INSPECTION PROCEDURE

NOTICE:

- Turn the ignition switch off before measuring the resistance of the main CAN bus wires and the CAN Bus branch wire.
- After the ignition switch is turned off, check that the key reminder warning system and light reminder warning system are not in operation.
- Before measuring the resistance, leave the vehicle as is for at least 1 minute and do not operate the ignition switch, any other switches or the doors. If any doors need to be opened in order to check the connectors, open the doors and leave them open.

HINT:

- Operating the ignition switch, any other switches or a door triggers related ECU and sensor communication on the CAN. This communication will cause the resistance value to change.
- Even after DTCs are cleared, if a DTC is stored again after driving the vehicle for a while, the malfunction may be occurring due to vibration of the vehicle. In such a case, wiggling the ECUs or wire harness while performing the inspection below will help determine the cause of the malfunction.

PROCEDURE

1.	**CHECK FOR SHORT TO B+ IN CAN BUS WIRE (DLC3 BRANCH WIRE)**

(a) Turn the ignition switch off, and disconnect negative battery terminal.

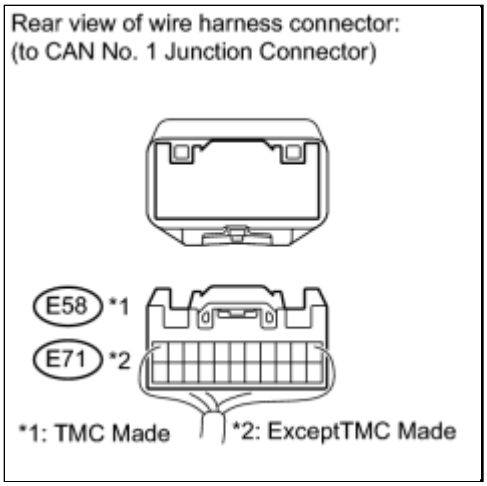

(b) Disconnect the CAN No. 1 junction connector.

(c) Measure the resistance according to the value(s) in the table below.

Standard Resistance:

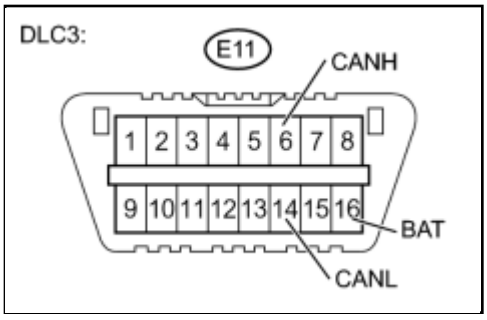

TESTER CONNECTION	CONDITION	SPECIFIED CONDITION
E11-6 (CANH) - E11-16 (BAT)	Cable is disconnected from negative (-) battery terminal	6 kΩ or higher
E11-14 (CANL) - E11-16 (BAT)	Cable is disconnected from negative (-) battery terminal	6 kΩ or higher

NG ▶ **REPAIR OR REPLACE CAN BRANCH WIRE CONNECTED TO DLC3**

OK ▼

2.	CHECK FOR SHORT TO B+ IN CAN BUS WIRE (CAN NO. 2 JUNCTION CONNECTOR)

(a) Reconnect the CAN No. 1 junction connector.

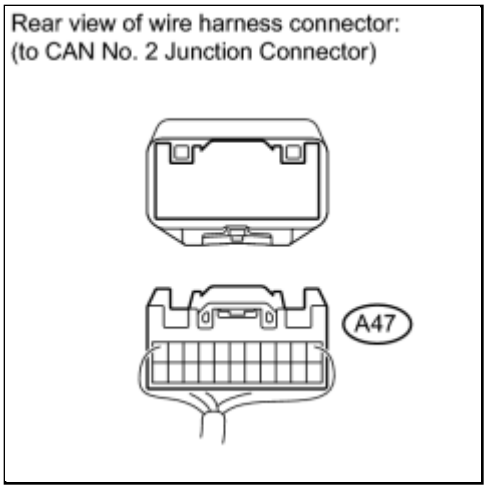

(b) Disconnect the CAN No. 2 junction connector.

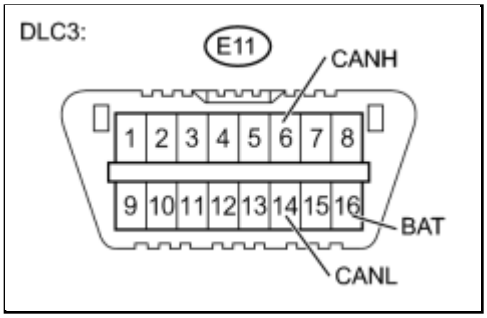

(c) Measure the resistance according to the value(s) in the table below.

Standard Resistance:

TESTER CONNECTION	CONDITION	SPECIFIED CONDITION
E11-6 (CANH) - E11-16 (BAT)	Cable is disconnected from negative (-) battery terminal	6 kΩ or higher
E11-14 (CANL) - E11-16 (BAT)	Cable is disconnected from negative (-) battery terminal	6 kΩ or higher

NG ▶ **CHECK FOR SHORT TO B+ IN CAN BUS WIRE (POWER STEERING ECU BRANCH WIRE)**

OK ▼

3.	CHECK FOR SHORT TO B+ IN CAN BUS WIRE (ECM MAIN WIRE)

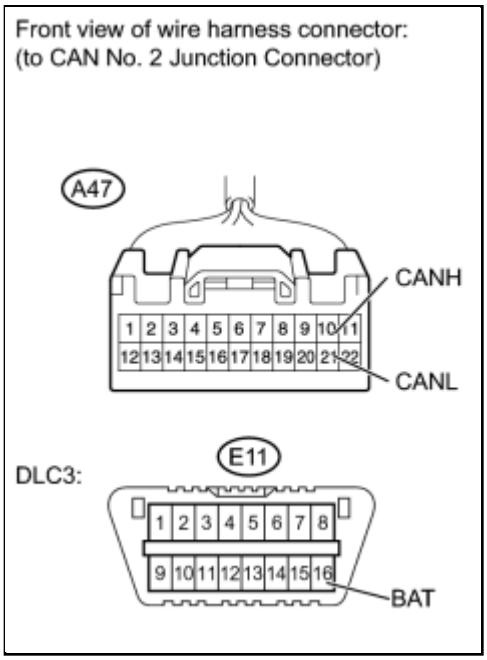

(a) Measure the resistance according to the value(s) in the table below.

NOTICE:

The resistance must be measured after the CAN No. 2 junction connector is disconnected.

Standard Resistance:

TESTER CONNECTION	CONDITION	SPECIFIED CONDITION
A47-10 (CANH) - E11-16 (BAT)	Cable is disconnected from negative (-) battery terminal	6 kΩ or higher
A47-21 (CANL) - E11-16 (BAT)	Cable is disconnected from negative (-) battery terminal	6 kΩ or higher

NG ▶ **CHECK FOR SHORT TO B+ IN CAN BUS WIRE (CAN NO. 2 JUNCTION CONNECTOR - ECM)**

OK ▼

4.	**CHECK FOR SHORT TO B+ IN CAN BUS WIRE (CAN NO. 2 JUNCTION CONNECTOR - SKID CONTROL ECU)**

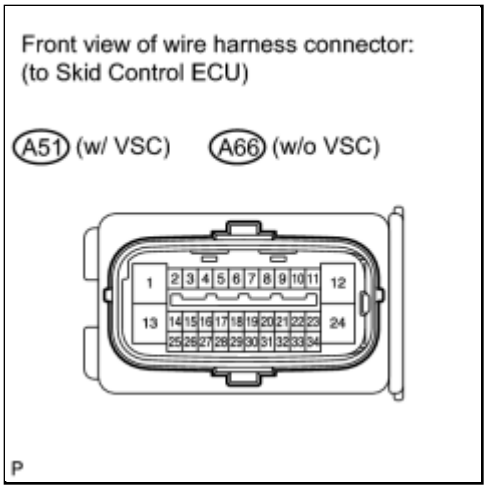

(a) Disconnect the skid control ECU connector.

(b) Measure the resistance according to the value(s) in

the table below.

NOTICE:

The resistance must be measured after the skid control ECU connector and CAN No. 2 junction connector are disconnected.

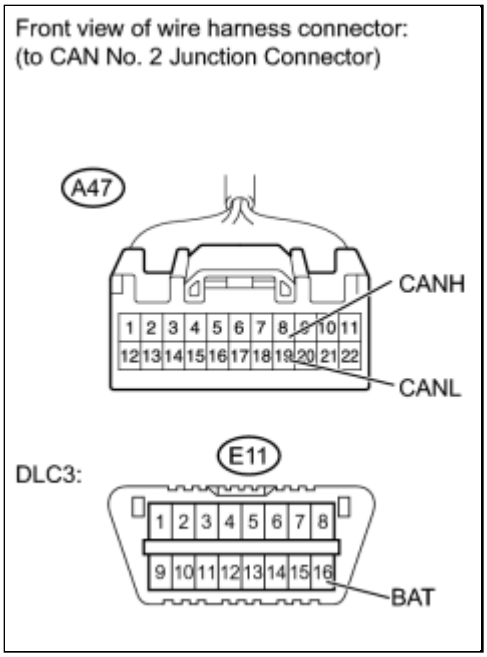

Standard Resistance:

TESTER CONNECTION	CONDITION	SPECIFIED CONDITION
A47-8 (CANH) - E11-16 (BAT)	Cable is disconnected from negative (-) battery terminal	6 kΩ or higher
A47-19 (CANL) - E11-16 (BAT)	Cable is disconnected from negative (-) battery terminal	6 kΩ or higher

Result:

RESULT	PROCEED TO
OK (w/o VSC)	A
OK (w/ VSC)	B
NG	C

C ▶ **REPAIR OR REPLACE CAN BUS BRANCH WIRE OR CONNECTOR (CAN NO. 2 JUNCTION CONNECTOR - SKID CONTROL ECU)**

B ▶ **REPLACE BRAKE ACTUATOR ASSEMBLY**

A ▶ **REPLACE BRAKE ACTUATOR ASSEMBLY**

5.	**CHECK FOR SHORT TO B+ IN CAN BUS WIRE (CAN NO. 2 JUNCTION CONNECTOR - ECM)**

(a) Disconnect the ECM connector.

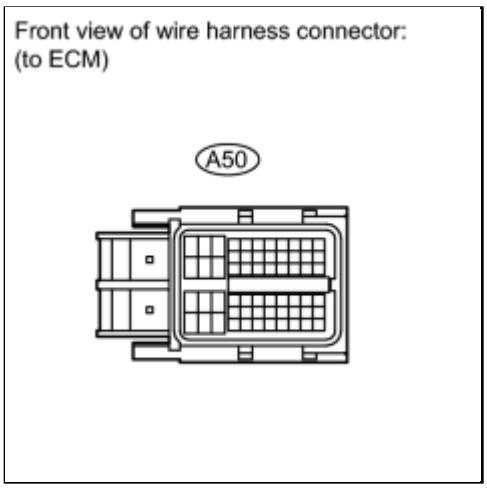

(b) Measure the resistance according to the value(s) in the table below.

NOTICE:

The resistance must be measured after the ECM connector and CAN No. 2 junction connector are disconnected.

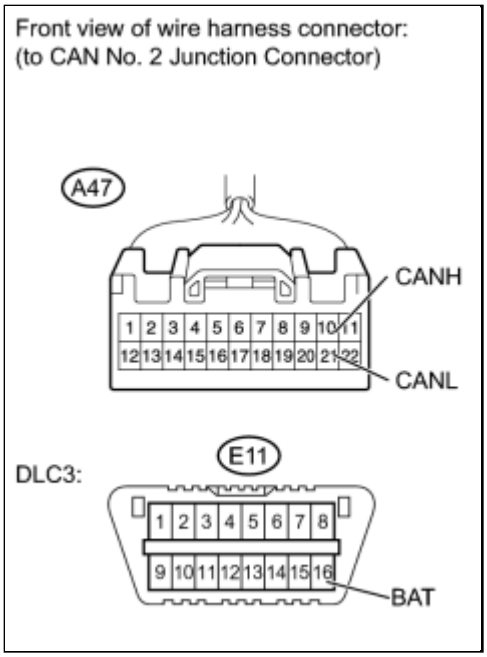

Standard Resistance:

TESTER CONNECTION	CONDITION	SPECIFIED CONDITION
A47-10 (CANH) - E11-16 (BAT)	Cable is disconnected from negative (-) battery terminal	6 kΩ or higher
A47-21 (CANL) - E11-16 (BAT)	Cable is disconnected from negative (-) battery terminal	6 kΩ or higher

Result:

RESULT	PROCEED TO
OK (for 2ZR-FE)	A
OK (for 2AZ-FE)	B
NG	C

C ▶ **REPAIR OR REPLACE CAN MAIN WIRE OR CONNECTOR (CAN NO. 2 JUNCTION CONNECTOR - ECM)**

B ▶ **REPLACE ECM**

A ▶ **REPLACE ECM**

6.	**CHECK FOR SHORT TO B+ IN CAN BUS WIRE (POWER STEERING ECU BRANCH WIRE)**

(a) Reconnect the CAN No. 2 junction connector.

(b) TMC made:

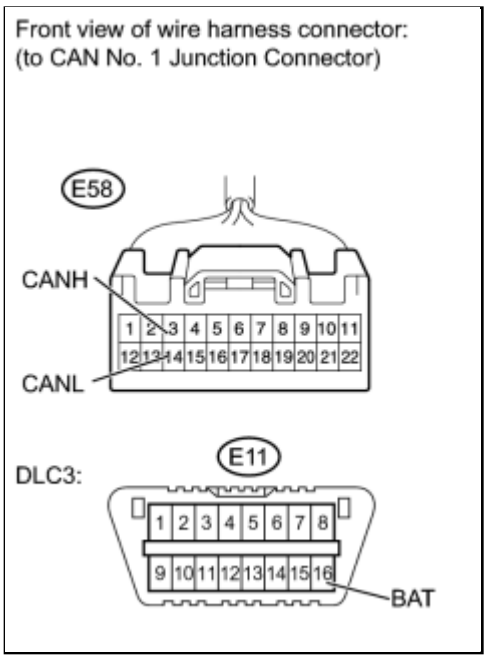

(1) Disconnect the CAN No. 1 junction connector.

(2) Measure the resistance according to the value(s) in the table below.

NOTICE:

- The resistance must be measured after the CAN No. 2 junction connector is reconnected.
- The resistance must be measured after the CAN No. 1 junction connector is disconnected.

Standard Resistance:

TESTER CONNECTION	CONDITION	SPECIFIED CONDITION
E58-3 (CANH) - E11-16 (BAT)	Cable is disconnected from negative (-) battery terminal	6 kΩ or higher
E58-14 (CANL) - E11-16 (BAT)	Cable is disconnected from negative (-) battery terminal	6 kΩ or higher

(c) Except TMC made:

(1) Disconnect the CAN No. 1 junction connector.

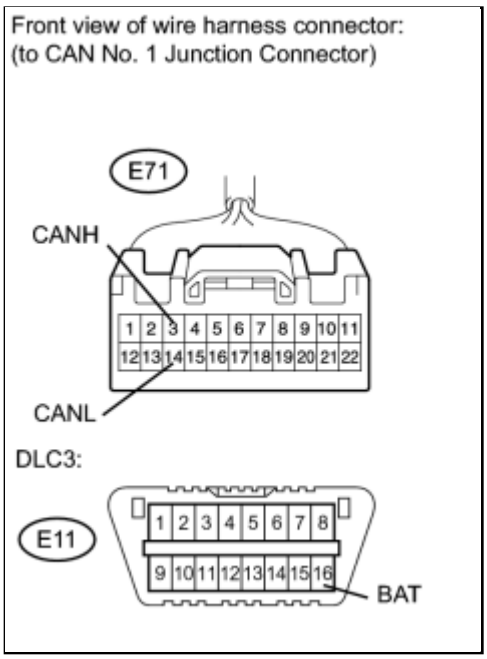

(2) Measure the resistance according to the value(s) in the table below.

NOTICE:

- The resistance must be measured after the CAN No. 2 junction connector is reconnected.
- The resistance must be measured after the CAN No. 1 junction connector is disconnected.

Standard Resistance:

TESTER CONNECTION	CONDITION	SPECIFIED CONDITION
E71-3 (CANH) - E11-16 (BAT)	Cable is disconnected from negative (-) battery terminal	6 kΩ or higher
E71-14 (CANL) - E11-16 (BAT)	Cable is disconnected from negative (-) battery terminal	6 kΩ or higher

NG ▶ **CHECK FOR SHORT TO B+ IN CAN BUS WIRE (CAN NO. 1 JUNCTION CONNECTOR - POWER STEERING ECU)**

OK ▼

7.	**CHECK FOR SHORT TO B+ IN CAN BUS WIRE (STEERING ANGLE SENSOR BRANCH WIRE)**

(a) TMC made:

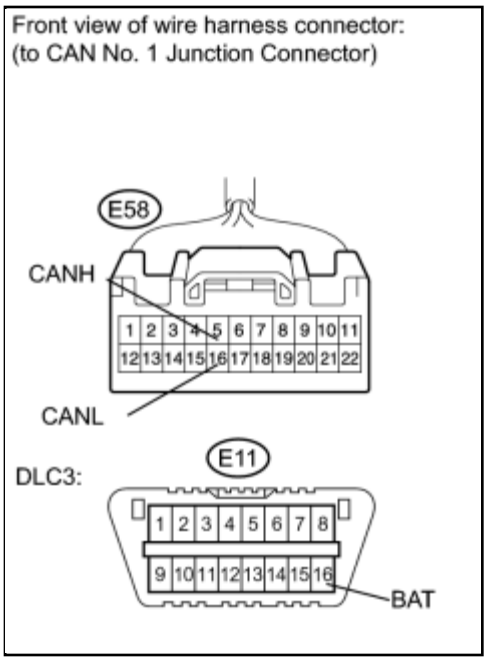

(1) Measure the resistance according to the value(s) in the table below.

NOTICE:

The resistance must be measured after the CAN No. 1 junction connector is disconnected.

Standard Resistance:

TESTER CONNECTION	CONDITION	SPECIFIED CONDITION
E58-5 (CANH) - E11-16 (BAT)	Cable is disconnected from negative (-) battery terminal	6 kΩ or higher
E58-16 (CANL) - E11-16 (BAT)	Cable is disconnected from negative (-) battery terminal	6 kΩ or higher

(b) Except TMC made:

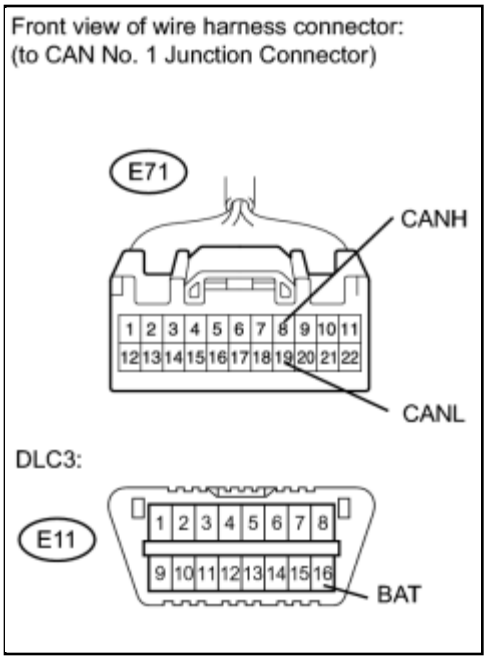

(1) Disconnect the CAN No. 1 junction connector.

(2) Measure the resistance according to the value(s) in the table below.

NOTICE:

The resistance must be measured after the CAN No. 1 junction connector is disconnected.

Standard Resistance:

TESTER CONNECTION	CONDITION	SPECIFIED CONDITION
E71-8 (CANH) - E11-16 (BAT)	Cable is disconnected from negative (-) battery terminal	6 kΩ or higher
E71-19 (CANL) - E11-16 (BAT)	Cable is disconnected from negative (-) battery terminal	6 kΩ or higher

NG ▶ **CHECK FOR SHORT TO B+ IN CAN BUS WIRE (CAN NO. 1 JUNCTION CONNECTOR - STEERING ANGLE SENSOR)**

OK ▼

8.	CHECK FOR SHORT TO B+ IN CAN BUS WIRE (YAW RATE SENSOR BRANCH WIRE)

(a) TMC made:

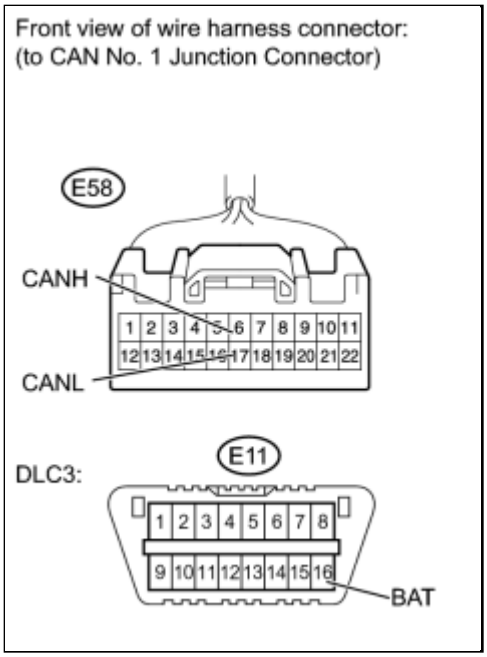

(1) Measure the resistance according to the value(s) in the table below.

NOTICE:

The resistance must be measured after the CAN No. 1 junction connector is disconnected.

Standard Resistance:

TESTER CONNECTION	CONDITION	SPECIFIED CONDITION
E58-6 (CANH) - E11-16 (BAT)	Cable is disconnected from negative (-) battery terminal	6 kΩ or higher
E58-17 (CANL) - E11-16 (BAT)	Cable is disconnected from negative (-) battery terminal	6 kΩ or higher

(b) Except TMC made:

(1) Disconnect the CAN No. 1 junction connector.

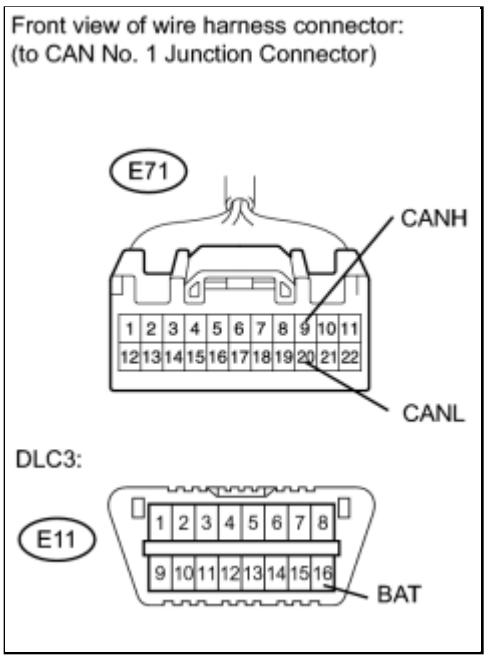

(2) Measure the resistance according to the value(s) in the table below.

NOTICE:

The resistance must be measured after the CAN No. 1 junction connector is disconnected.

Standard Resistance:

TESTER CONNECTION	CONDITION	SPECIFIED CONDITION
E71-9 (CANH) - E11-16 (BAT)	Cable is disconnected from negative (-) battery terminal	6 kΩ or higher
E71-20 (CANL) - E11-16 (BAT)	Cable is disconnected from negative (-) battery terminal	6 kΩ or higher

NG ▶ **CHECK FOR SHORT TO B+ IN CAN BUS WIRE (CAN NO. 1 JUNCTION CONNECTOR - YAW RATE SENSOR)**

OK ▼

9.	**CHECK FOR SHORT TO B+ IN CAN BUS WIRE (MAIN BODY ECU BRANCH WIRE)**

(a) TMC made:

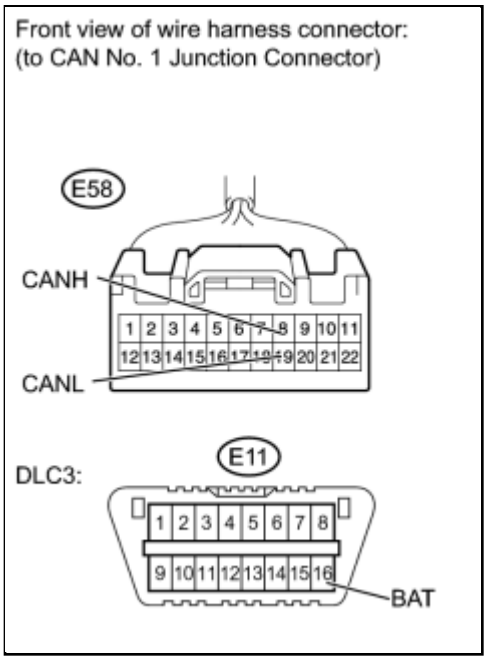

(1) Measure the resistance according to the value(s) in the table below.

NOTICE:

The resistance must be measured after the CAN No. 1 junction connector is disconnected.

Standard Resistance:

TESTER CONNECTION	CONDITION	SPECIFIED CONDITION
E58-8 (CANH) - E11-16 (BAT)	Cable is disconnected from negative (-) battery terminal	6 kΩ or higher
E58-19 (CANL) - E11-16 (BAT)	Cable is disconnected from negative (-) battery terminal	6 kΩ or higher

(b) Except TMC made:

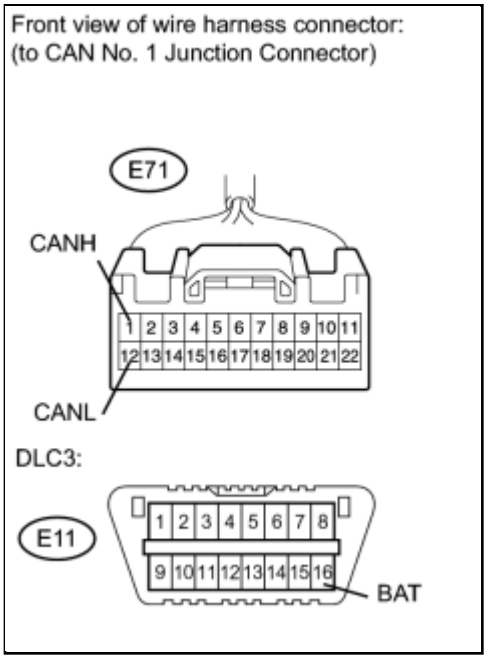

(1) Disconnect the CAN No. 1 junction connector.

(2) Measure the resistance according to the value(s) in the table below.

NOTICE:

The resistance must be measured after the CAN No. 1 junction connector is disconnected.

Standard Resistance:

TESTER CONNECTION	CONDITION	SPECIFIED CONDITION

TESTER CONNECTION	CONDITION	SPECIFIED CONDITION
E71-1 (CANH) - E11-16 (BAT)	Cable is disconnected from negative (-) battery terminal	6 kΩ or higher
E71-12 (CANL) - E11-16 (BAT)	Cable is disconnected from negative (-) battery terminal	6 kΩ or higher

NG ▶ **CHECK FOR SHORT TO B+ IN CAN BUS WIRE (CAN NO. 1 JUNCTION CONNECTOR - MAIN BODY ECU)**

OK ▼

10.	**CHECK FOR SHORT TO B+ IN CAN BUS WIRE (AIR CONDITIONING AMPLIFIER BRANCH WIRE)**

(a) TMC made:

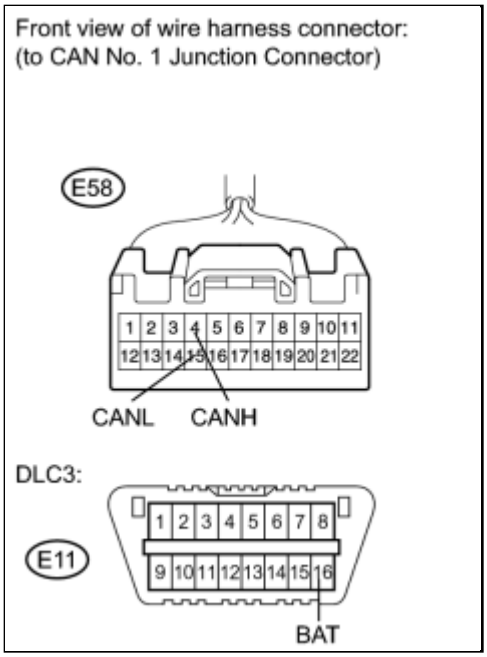

(1) Measure the resistance according to the value(s) in the table below.

NOTICE:

The resistance must be measured after the CAN No. 1 junction connector is disconnected.

Standard Resistance:

TESTER CONNECTION	CONDITION	SPECIFIED CONDITION
E58-4 (CANH) - E11-16 (BAT)	Cable is disconnected from negative (-) battery terminal	6 kΩ or higher
E58-15 (CANL) - E11-16 (BAT)	Cable is disconnected from negative (-) battery terminal	6 kΩ or higher

(b) Except TMC made:

(1) Disconnect the CAN No. 1 junction connector.

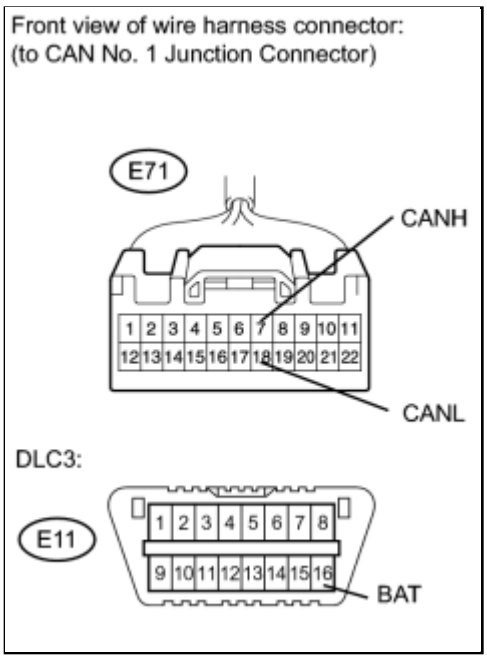

(2) Measure the resistance according to the value(s) in the table below.

NOTICE:

The resistance must be measured after the CAN No. 1 junction connector is disconnected.

Standard Resistance:

TESTER CONNECTION	CONDITION	SPECIFIED CONDITION
E71-7 (CANH) - E11-16 (BAT)	Cable is disconnected from negative (-) battery terminal	6 kΩ or higher
E71-18 (CANL) - E11-16 (BAT)	Cable is disconnected from negative (-) battery terminal	6 kΩ or higher

NG ▶ **CHECK FOR SHORT TO B+ IN CAN BUS WIRE (CAN NO. 1 JUNCTION CONNECTOR - AIR CONDITIONING AMPLIFIER)**

OK ▼

11.	**CHECK FOR SHORT TO B+ IN CAN BUS WIRE (CENTER AIRBAG SENSOR ASSEMBLY BRANCH WIRE)**

(a) TMC made:

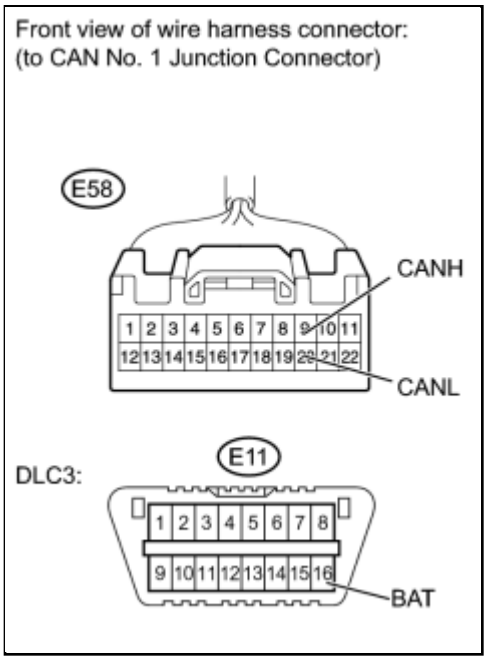

(1) Measure the resistance according to the value(s) in the table below.

NOTICE:

The resistance must be measured after the CAN No. 1 junction connector is disconnected.

Standard Resistance:

TESTER CONNECTION	CONDITION	SPECIFIED CONDITION
E58-9 (CANH) - E11-16 (BAT)	Cable is disconnected from negative (-) battery terminal	6 kΩ or higher
E58-20 (CANL) - E11-16 (BAT)	Cable is disconnected from negative (-) battery terminal	6 kΩ or higher

(b) Except TMC made:

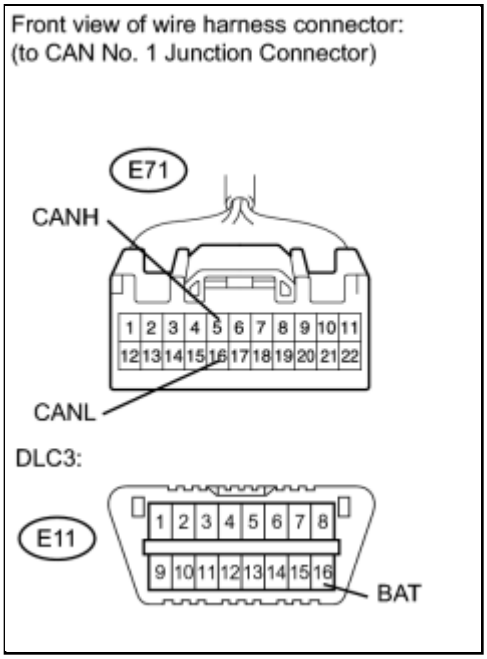

(1) Disconnect the CAN No. 1 junction connector.

(2) Measure the resistance according to the value(s) in the table below.

NOTICE:

The resistance must be measured after the CAN No. 1 junction connector is disconnected.

Standard Resistance:

TESTER CONNECTION	CONDITION	SPECIFIED CONDITION

TESTER CONNECTION	CONDITION	SPECIFIED CONDITION
E71-5 (CANH) - E11-16 (BAT)	Cable is disconnected from negative (-) battery terminal	6 kΩ or higher
E71-16 (CANL) - E11-16 (BAT)	Cable is disconnected from negative (-) battery terminal	6 kΩ or higher

NG ▶ **CHECK FOR SHORT TO B+ IN CAN BUS WIRE (CAN NO. 1 JUNCTION CONNECTOR - CENTER AIRBAG SENSOR ASSEMBLY)**

OK ▼

12.	CHECK FOR SHORT TO B+ IN CAN BUS WIRE (COMBINATION METER MAIN WIRE)

(a) TMC made:

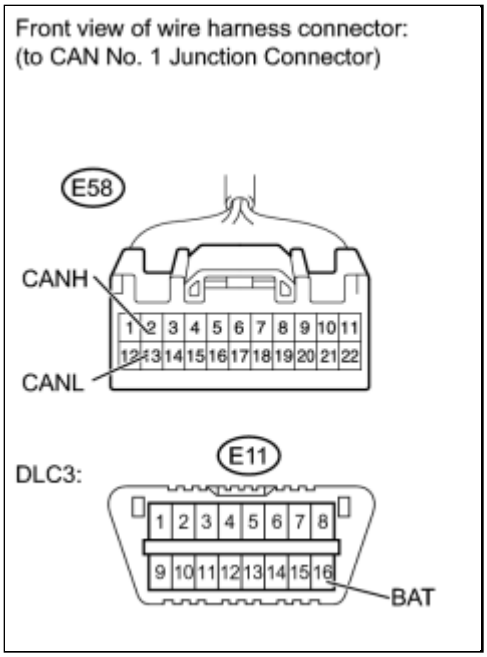

(1) Measure the resistance according to the value(s) in the table below.

NOTICE:

The resistance must be measured after the CAN No. 1 junction connector is disconnected.

Standard Resistance:

TESTER CONNECTION	CONDITION	SPECIFIED CONDITION
E58-2 (CANH) - E11-16 (BAT)	Cable is disconnected from negative (-) battery terminal	6 kΩ or higher
E58-13 (CANL) - E11-16 (BAT)	Cable is disconnected from negative (-) battery terminal	6 kΩ or higher

(b) Except TMC made:

(1) Disconnect the CAN No. 1 junction connector.

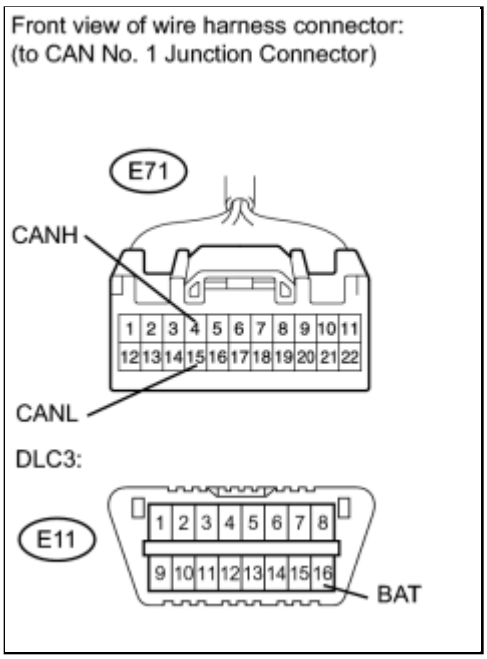

(2) Measure the resistance according to the value(s) in the table below.

NOTICE:

The resistance must be measured after the CAN No. 1 junction connector is disconnected.

Standard Resistance:

TESTER CONNECTION	CONDITION	SPECIFIED CONDITION
E71-4 (CANH) - E11-16 (BAT)	Cable is disconnected from negative (-) battery terminal	6 kΩ or higher
E71-15 (CANL) - E11-16 (BAT)	Cable is disconnected from negative (-) battery terminal	6 kΩ or higher

NG ▶ **CHECK FOR SHORT TO B+ IN CAN BUS WIRE (CAN NO. 1 JUNCTION CONNECTOR - COMBINATION METER)**

OK ▼

13.	**CHECK FOR SHORT TO B+ IN CAN BUS WIRE (ACCESSORY GATEWAY BRANCH WIRE)**

(a) TMC made:

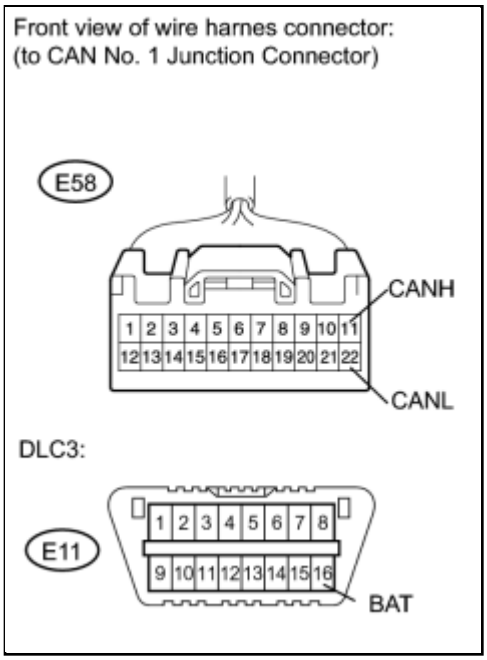

(1) Measure the resistance according to the value(s) in the table below.

NOTICE:

The resistance must be measured after the CAN No. 1 junction connector is disconnected.

Standard Resistance:

TESTER CONNECTION	CONDITION	SPECIFIED CONDITION
E58-11 (CANH) - E11-16 (BAT)	Cable is disconnected from negative (-) battery terminal	6 kΩ or higher
E58-22 (CANL) - E11-16 (BAT)	Cable is disconnected from negative (-) battery terminal	6 kΩ or higher

(b) Except TMC made:

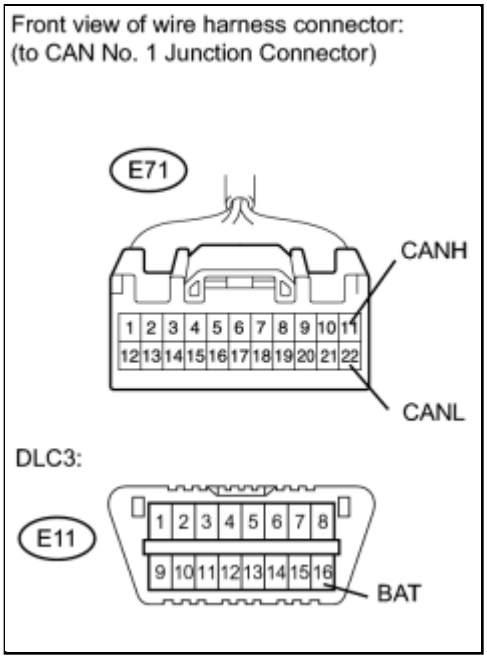

(1) Disconnect the CAN No. 1 junction connector.

(2) Measure the resistance according to the value(s) in the table below.

NOTICE:

The resistance must be measured after the CAN No. 1 junction connector is disconnected.

Standard Resistance:

TESTER CONNECTION	CONDITION	SPECIFIED CONDITION

TESTER CONNECTION	CONDITION	SPECIFIED CONDITION
E71-11 (CANH) - E11-16 (BAT)	Cable is disconnected from negative (-) battery terminal	6 kΩ or higher
E71-22 (CANL) - E11-16 (BAT)	Cable is disconnected from negative (-) battery terminal	6 kΩ or higher

Result:

RESULT	PROCEED TO
OK	A
NG (w/o remote engine starter)	B
NG (w/ remote engine starter)	C

C ▶ **CHECK FOR SHORT TO B+ IN CAN BUS WIRE (CAN NO. 1 JUNCTION CONNECTOR - ACCESSORY GATEWAY)**

B ▶ **REPAIR OR REPLACE CAN BUS BRANCH WIRE OR CONNECTOR (CAN NO. 1 JUNCTION CONNECTOR - ACCESSORY GATEWAY)**

A ▶ **REPAIR OR REPLACE CAN MAIN WIRE OR CONNECTOR (CAN NO. 1 JUNCTION CONNECTOR - CAN NO. 2 JUNCTION CONNECTOR)**

14.	**CHECK FOR SHORT TO B+ IN CAN BUS WIRE (CAN NO. 1 JUNCTION CONNECTOR - POWER STEERING ECU)**

Front view of wire harness connector:
(to Power Steering ECU)

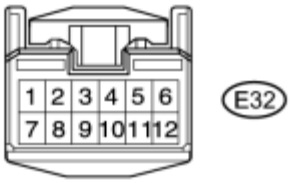

(a) Disconnect the power steering ECU connector.

(b) TMC made:

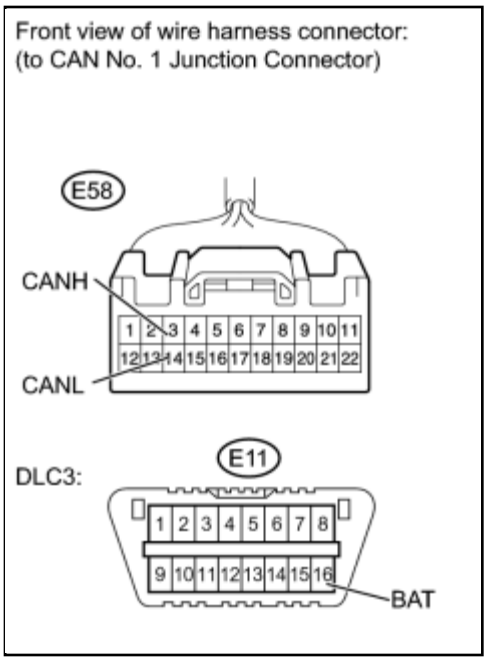

(1) Measure the resistance according to the value(s) in the table below.

NOTICE:

The resistance must be measured after the power steering ECU connector and CAN No. 1 junction connector are disconnected.

Standard Resistance:

TESTER CONNECTION	CONDITION	SPECIFIED CONDITION
E58-3 (CANH) - E11-16 (BAT)	Cable is disconnected from negative (-) battery terminal	6 kΩ or higher
E58-14 (CANL) - E11-16 (BAT)	Cable is disconnected from negative (-) battery terminal	6 kΩ or higher

(c) Except TMC made:

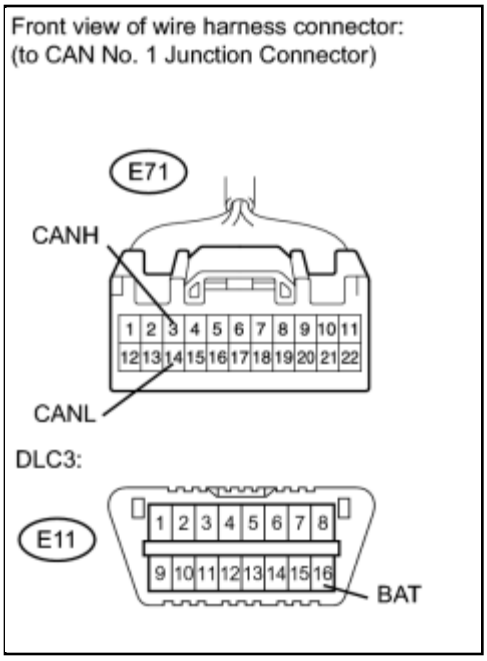

(1) Measure the resistance according to the value(s) in the table below.

NOTICE:

The resistance must be measured after the power steering ECU connector and CAN No. 1 junction connector are disconnected.

Standard Resistance:

TESTER CONNECTION	CONDITION	SPECIFIED CONDITION
E71-3 (CANH) - E11-16 (BAT)	Cable is disconnected from negative (-) battery terminal	6 kΩ or higher
E71-14 (CANL) - E11-16 (BAT)	Cable is disconnected from negative (-) battery terminal	6 kΩ or higher

Result:

RESULT	PROCEED TO
OK (for 2AZ-FE)	A
OK (for 2ZR-FE)	B

RESULT	PROCEED TO
NG	C

C ▶ **REPAIR OR REPLACE CAN BUS BRANCH WIRE OR CONNECTOR (CAN NO. 1 JUNCTION CONNECTOR - POWER STEERING ECU)**

B ▶ **REPLACE POWER STEERING ECU**

A ▶ **REPLACE POWER STEERING ECU**

15.	**CHECK FOR SHORT TO B+ IN CAN BUS WIRE (CAN NO. 1 JUNCTION CONNECTOR - STEERING ANGLE SENSOR)**

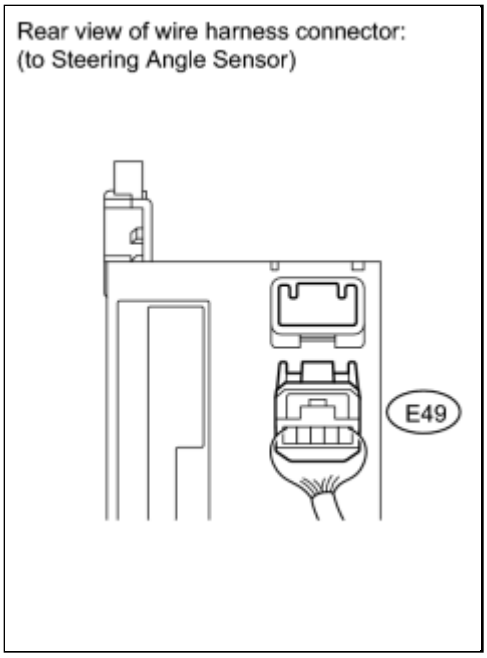

(a) Disconnect the steering angle sensor connector.

(b) TMC made:

(1) Measure the resistance according to the value(s) in the table below.

NOTICE:

The resistance must be measured after the steering angle sensor and CAN No. 1 junction connector are disconnected.

Standard Resistance:

TESTER CONNECTION	CONDITION	SPECIFIED CONDITION

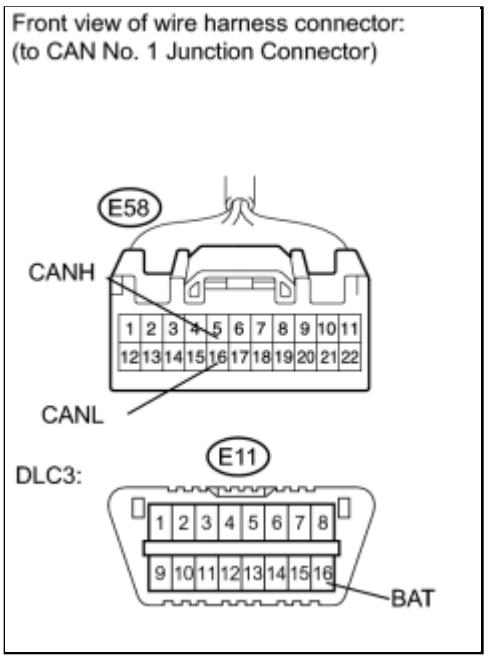

E58-5 (CANH) - E11-16 (BAT)	Cable is disconnected from negative (-) battery terminal	6 kΩ or higher
E58-16 (CANL) - E11-16 (BAT)	Cable is disconnected from negative (-) battery terminal	6 kΩ or higher

(c) Except TMC made:

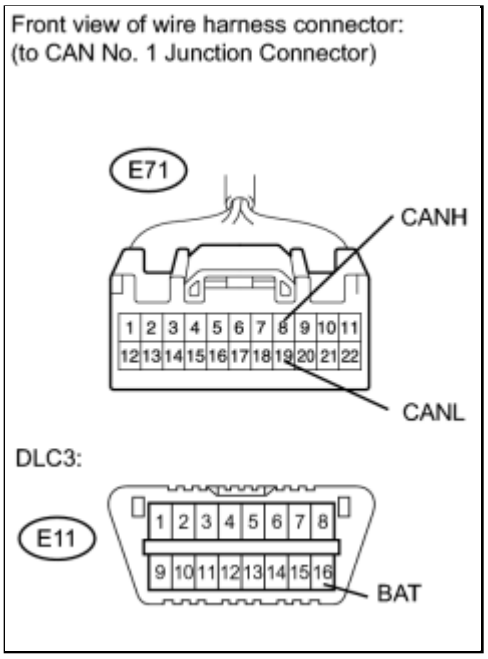

(1) Disconnect the CAN No. 1 junction connector.

(2) Measure the resistance according to the value(s) in the table below.

NOTICE:

The resistance must be measured after the steering angle sensor and CAN No. 1 junction connector are disconnected.

Standard Resistance:

TESTER CONNECTION	CONDITION	SPECIFIED CONDITION

TESTER CONNECTION	CONDITION	SPECIFIED CONDITION
E71-8 (CANH) - E11-16 (BAT)	Cable is disconnected from negative (-) battery terminal	6 kΩ or higher
E71-19 (CANL) - E11-16 (BAT)	Cable is disconnected from negative (-) battery terminal	6 kΩ or higher

NG ▶ **REPAIR OR REPLACE CAN BUS BRANCH WIRE OR CONNECTOR (CAN NO. 1 JUNCTION CONNECTOR - STEERING ANGLE SENSOR)**

OK ▶ **REPLACE STEERING ANGLE SENSOR**

16.	**CHECK FOR SHORT TO B+ IN CAN BUS WIRE (CAN NO. 1 JUNCTION CONNECTOR - YAW RATE SENSOR)**

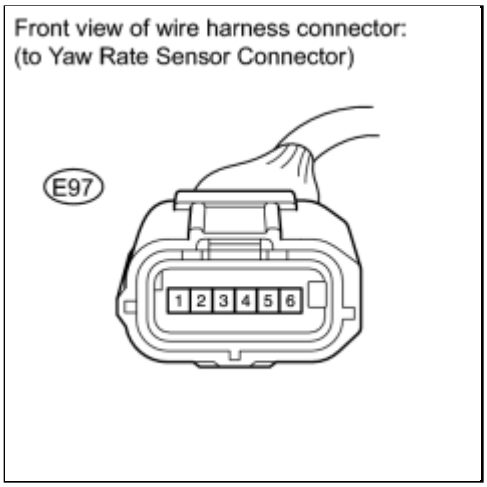

(a) Disconnect the yaw rate sensor connector.

(b) TMC made:

(1) Measure the resistance according to the value(s) in the table below.

NOTICE:

The resistance must be measured after the CAN No. 1 junction connector is disconnected.

NOTICE:

The resistance must be measured after the yaw rate sensor connector and CAN No. 1 junction connector are disconnected.

Standard Resistance:

TESTER	CONDITION	SPECIFIED

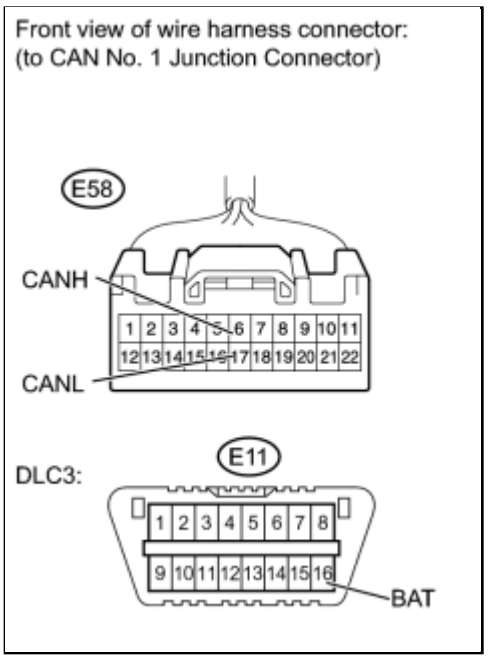

CONNECTION		CONDITION
E58-6 (CANH) - E11-16 (BAT)	Cable is disconnected from negative (-) battery terminal	6 kΩ or higher
E58-17 (CANL) - E11-16 (BAT)	Cable is disconnected from negative (-) battery terminal	6 kΩ or higher

(c) Except TMC made:

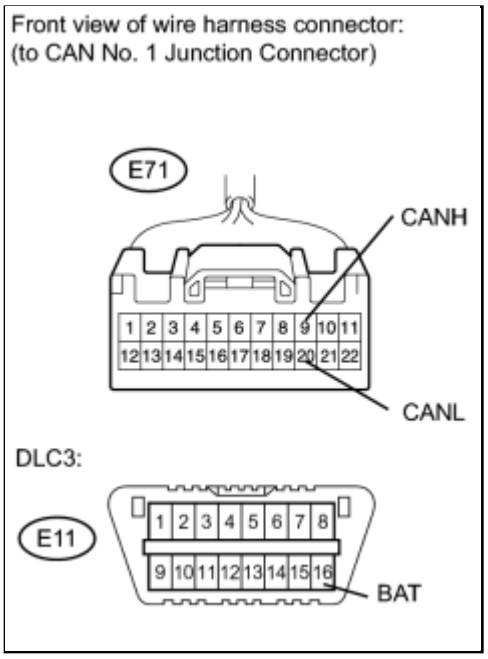

(1) Disconnect the CAN No. 1 junction connector.

(2) Measure the resistance according to the value(s) in the table below.

NOTICE:

The resistance must be measured after the yaw rate sensor connector and CAN No. 1 junction connector are disconnected.

Standard Resistance:

TESTER CONNECTION	CONDITION	SPECIFIED CONDITION

TESTER CONNECTION	CONDITION	SPECIFIED CONDITION
E71-9 (CANH) - E11-16 (BAT)	Cable is disconnected from negative (-) battery terminal	6 kΩ or higher
E71-20 (CANL) - E11-16 (BAT)	Cable is disconnected from negative (-) battery terminal	6 kΩ or higher

NG ▶ **REPAIR OR REPLACE CAN BUS BRANCH WIRE OR CONNECTOR (CAN NO. 1 JUNCTION CONNECTOR - YAW RATE SENSOR)**

OK ▶ **REPLACE YAW RATE SENSOR**

17.	**CHECK FOR SHORT TO B+ IN CAN BUS WIRE (CAN NO. 1 JUNCTION CONNECTOR - MAIN BODY ECU)**

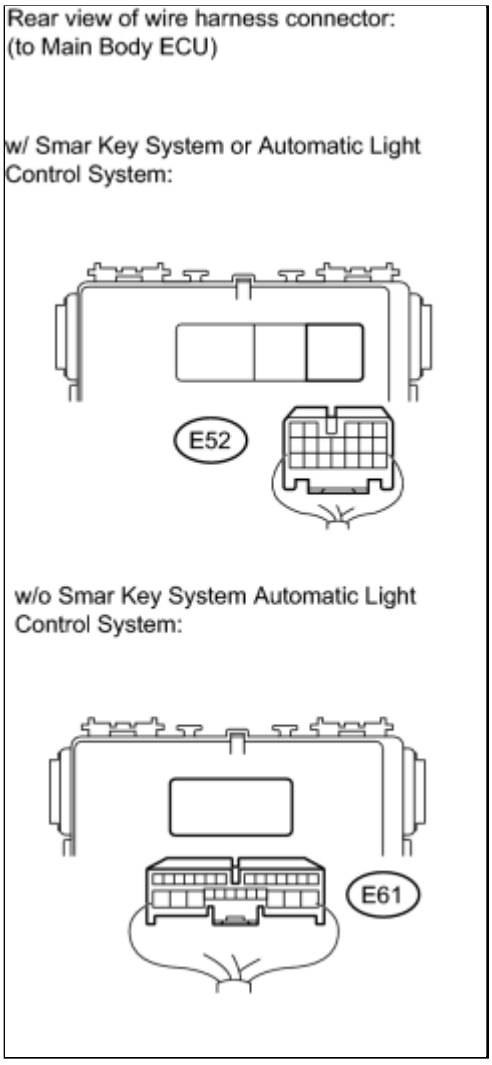

(a) Disconnect the main body ECU connector.

(b) TMC made:

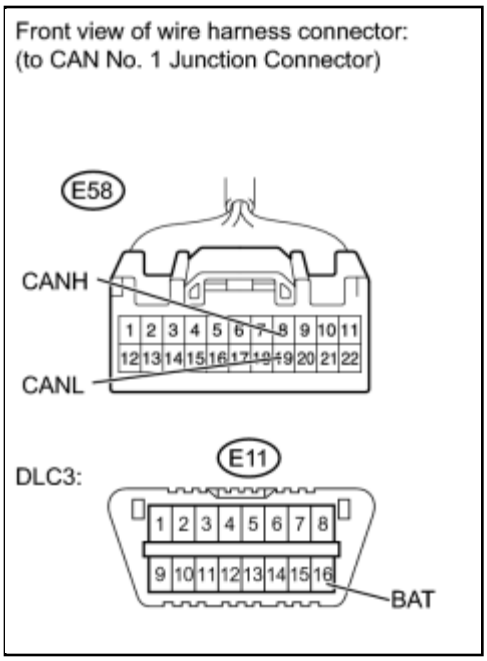

(1) Measure the resistance according to the value(s) in the table below.

NOTICE:

The resistance must be measured after the main body ECU connector and CAN No. 1 junction connector are disconnected.

Standard Resistance:

TESTER CONNECTION	CONDITION	SPECIFIED CONDITION
E58-8 (CANH) - E11-16 (BAT)	Cable is disconnected from negative (-) battery terminal	6 kΩ or higher
E58-19 (CANL) - E11-16 (BAT)	Cable is disconnected from negative (-) battery terminal	6 kΩ or higher

(c) Except TMC made:

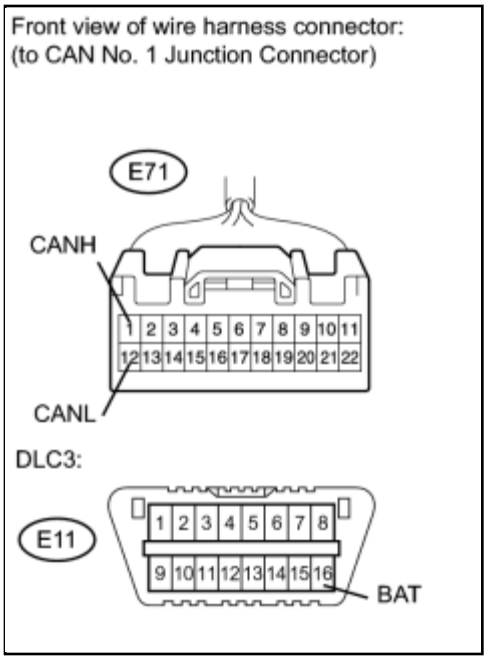

(1) Disconnect the CAN No. 1 junction connector.

(2) Measure the resistance according to the value(s) in the table below.

NOTICE:

The resistance must be measured after the main body ECU connector and CAN No. 1 junction connector are disconnected.

Standard Resistance:

TESTER CONNECTION	CONDITION	SPECIFIED CONDITION
E71-1 (CANH) - E11-16 (BAT)	Cable is disconnected from negative (-) battery terminal	6 kΩ or higher
E71-12 (CANL) - E11-16 (BAT)	Cable is disconnected from negative (-) battery terminal	6 kΩ or higher

NG ▶ **REPAIR OR REPLACE CAN BUS BRANCH WIRE OR CONNECTOR (CAN NO. 1 JUNCTION CONNECTOR - MAIN BODY ECU)**

OK ▶ **REPLACE MAIN BODY ECU**

18.	**CHECK FOR SHORT TO B+ IN CAN BUS WIRE (CAN NO. 1 JUNCTION CONNECTOR - AIR CONDITIONING AMPLIFIER)**

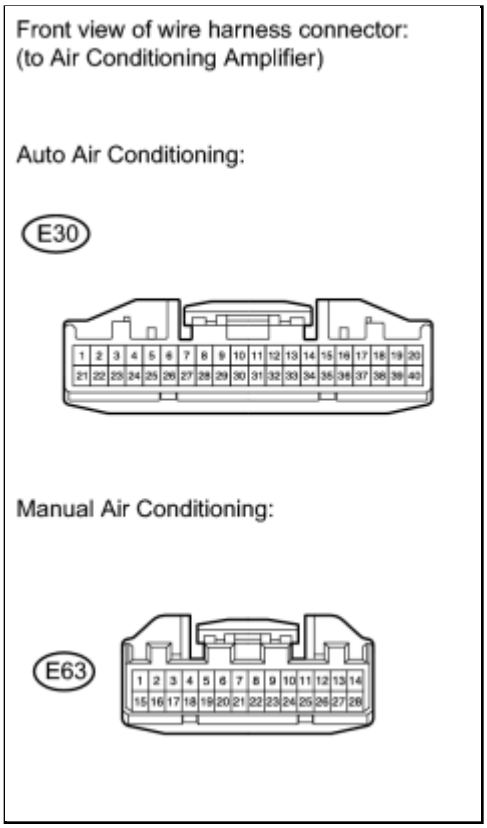

(a) Disconnect the air conditioning amplifier connector.

(b) TMC made:

(1) Measure the resistance according to the value(s) in the table below.

NOTICE:

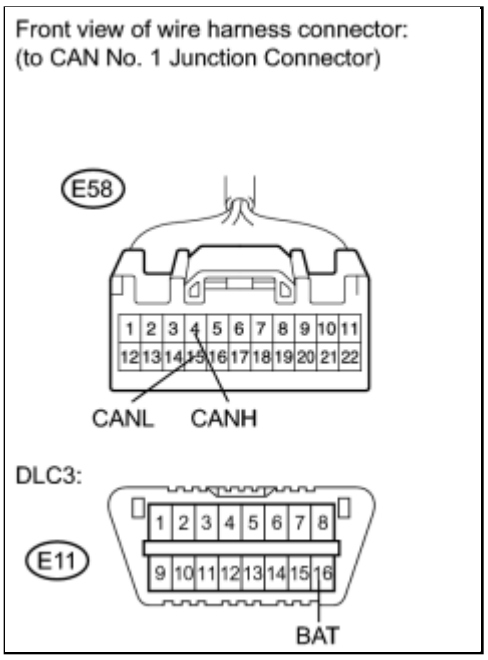

The resistance must be measured after the air conditioning amplifier connector and CAN No. 1 junction connector are disconnected.

Standard Resistance:

TESTER CONNECTION	CONDITION	SPECIFIED CONDITION
E58-4 (CANH) - E11-16 (BAT)	Cable is disconnected from negative (-) battery terminal	6 kΩ or higher
E58-15 (CANL) - E11-16 (BAT)	Cable is disconnected from negative (-) battery terminal	6 kΩ or higher

(c) Except TMC made:

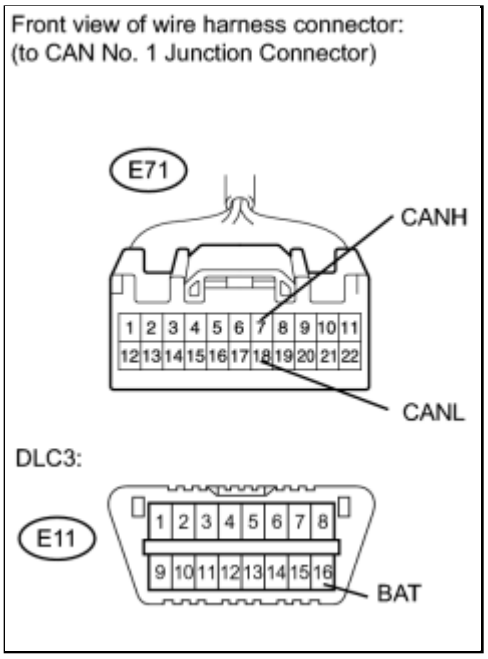

(1) Disconnect the CAN No. 1 junction connector.

(2) Measure the resistance according to the value(s) in the table below.

NOTICE:

The resistance must be measured after the air conditioning amplifier connector and CAN No. 1 junction connector are disconnected.

Standard Resistance:

TESTER CONNECTION	CONDITION	SPECIFIED CONDITION

TESTER CONNECTION	CONDITION	SPECIFIED CONDITION
E71-7 (CANH) - E11-16 (BAT)	Cable is disconnected from negative (-) battery terminal	6 kΩ or higher
E71-18 (CANL) - E11-16 (BAT)	Cable is disconnected from negative (-) battery terminal	6 kΩ or higher

NG ▶ **REPAIR OR REPLACE CAN BUS BRANCH WIRE OR CONNECTOR (CAN NO. 1 JUNCTION CONNECTOR - AIR CONDITIONING AMPLIFIER)**

OK ▶ **REPLACE AIR CONDITIONING AMPLIFIER**

19.	**CHECK FOR SHORT TO B+ IN CAN BUS WIRE (CAN NO. 1 JUNCTION CONNECTOR - CENTER AIRBAG SENSOR ASSEMBLY)**

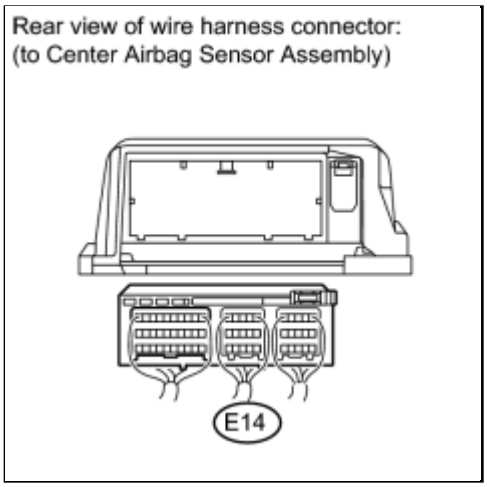

(a) Disconnect the center airbag sensor assembly connector.

(b) TMC made:

(1) Measure the resistance according to the value(s) in the table below.

NOTICE:

The resistance must be measured after the center airbag sensor assembly connector and CAN No. 1 junction connector are disconnected.

Standard Resistance:

TESTER CONNECTION	CONDITION	SPECIFIED CONDITION
E58-9 (CANH) -	Cable is disconnected	6 kΩ or higher

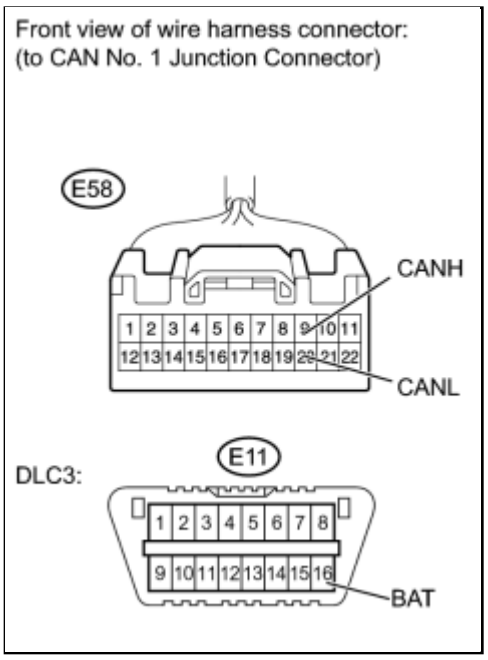

E11-16 (BAT)	from negative (-) battery terminal	
E58-20 (CANL) - E11-16 (BAT)	Cable is disconnected from negative (-) battery terminal	6 kΩ or higher

(c) Except TMC made:

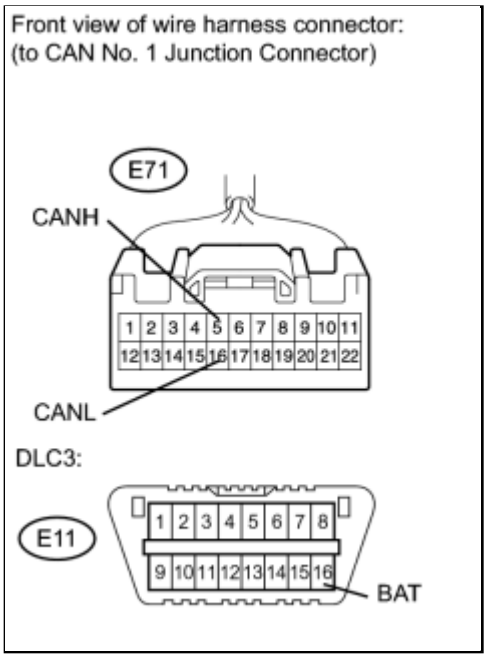

(1) Disconnect the CAN No. 1 junction connector.

(2) Measure the resistance according to the value(s) in the table below.

NOTICE:

The resistance must be measured after the center airbag sensor assembly connector and CAN No. 1 junction connector are disconnected.

Standard Resistance:

TESTER CONNECTION	CONDITION	SPECIFIED CONDITION

TESTER CONNECTION	CONDITION	SPECIFIED CONDITION
E71-5 (CANH) - E11-16 (BAT)	Cable is disconnected from negative (-) battery terminal	6 kΩ or higher
E71-16 (CANL) - E11-16 (BAT)	Cable is disconnected from negative (-) battery terminal	6 kΩ or higher

NG ▶ **REPAIR OR REPLACE CAN BUS BRANCH WIRE OR CONNECTOR (CAN NO. 1 JUNCTION CONNECTOR - CENTER AIRBAG SENSOR ASSEMBLY)**

OK ▶ **REPLACE CENTER AIRBAG SENSOR ASSEMBLY**

20.	**CHECK FOR SHORT TO B+ IN CAN BUS WIRE (CAN NO. 1 JUNCTION CONNECTOR - COMBINATION METER)**

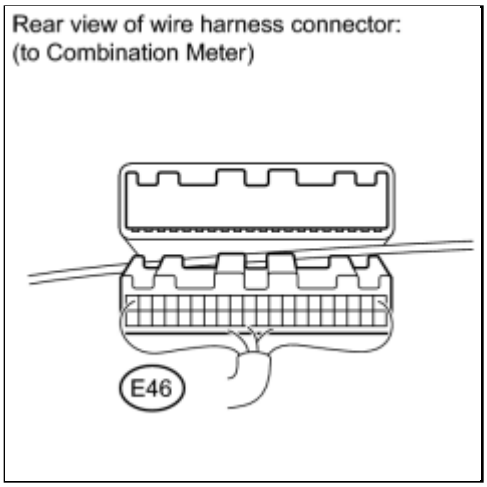

(a) Disconnect the combination meter connector.

(b) TMC made:

(1) Measure the resistance according to the value(s) in the table below.

NOTICE:

The resistance must be measured after the combination meter connector and CAN No. 1 junction connector are disconnected.

Standard Resistance:

TESTER CONNECTION	CONDITION	SPECIFIED CONDITION
E58-2 (CANH) -	Cable is disconnected	6 kΩ or higher

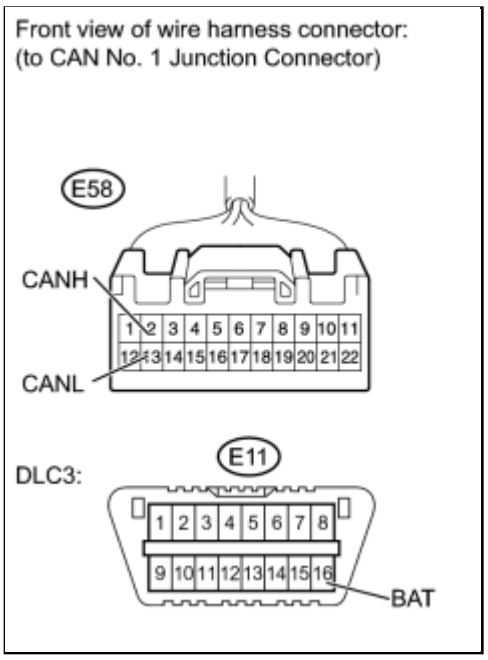

E11-16 (BAT)	from negative (-) battery terminal	
E58-13 (CANL) - E11-16 (BAT)	Cable is disconnected from negative (-) battery terminal	6 kΩ or higher

(c) Except TMC made:

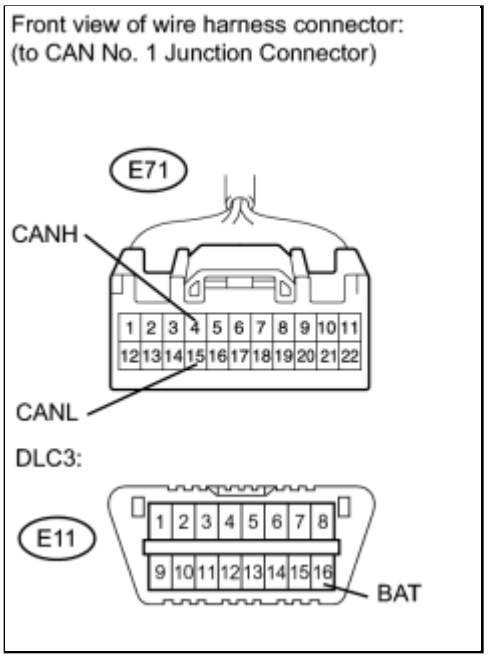

(1) Disconnect the CAN No. 1 junction connector.

(2) Measure the resistance according to the value(s) in the table below.

NOTICE:

The resistance must be measured after the combination meter connector and CAN No. 1 junction connector are disconnected.

Standard Resistance:

TESTER CONNECTION	CONDITION	SPECIFIED CONDITION

TESTER CONNECTION	CONDITION	SPECIFIED CONDITION
E71-4 (CANH) - E11-16 (BAT)	Cable is disconnected from negative (-) battery terminal	6 kΩ or higher
E71-15 (CANL) - E11-16 (BAT)	Cable is disconnected from negative (-) battery terminal	6 kΩ or higher

NG ▶ **REPAIR OR REPLACE CAN BUS BRANCH WIRE OR CONNECTOR (CAN NO. 1 JUNCTION CONNECTOR - COMBINATION METER)**

OK ▶ **REPLACE COMBINATION METER**

21.	**CHECK FOR SHORT TO B+ IN CAN BUS WIRE (CAN NO. 1 JUNCTION CONNECTOR - ACCESSORY GATEWAY)**

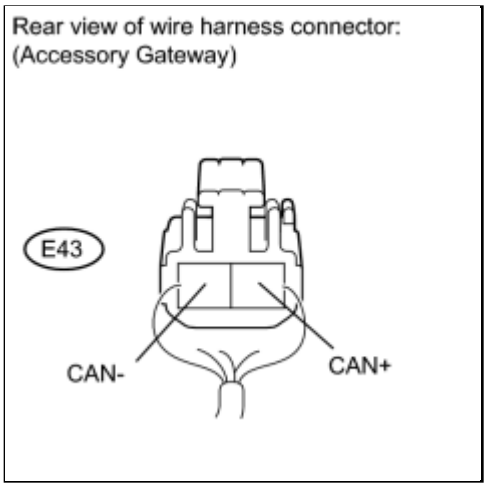

(a) Disconnect the accessory gateway connector from the accessory.

(b) TMC made:

(1) Measure the resistance according to the value(s) in the table below.

NOTICE:

The resistance must be measured after the accessory option and CAN No. 1 junction connector are disconnected.

Standard Resistance:

TESTER CONNECTION	CONDITION	SPECIFIED CONDITION
E58-11 (CANH) -	Cable is disconnected	6 kΩ or higher

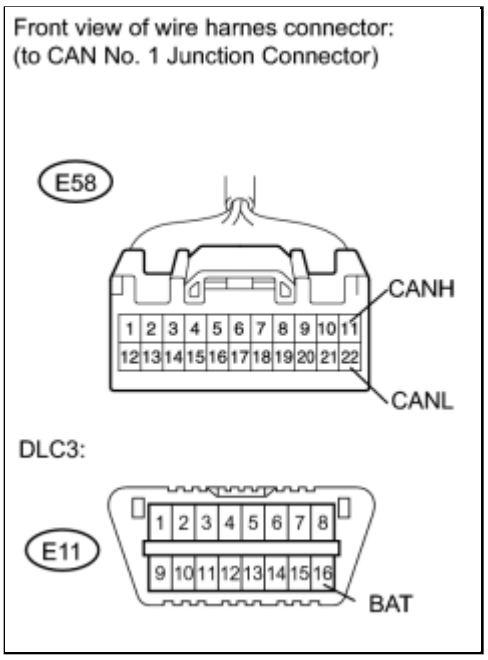

E11-16 (BAT)	from negative (-) battery terminal	
E58-22 (CANL) - E11-16 (BAT)	Cable is disconnected from negative (-) battery terminal	6 kΩ or higher

(c) Except TMC made:

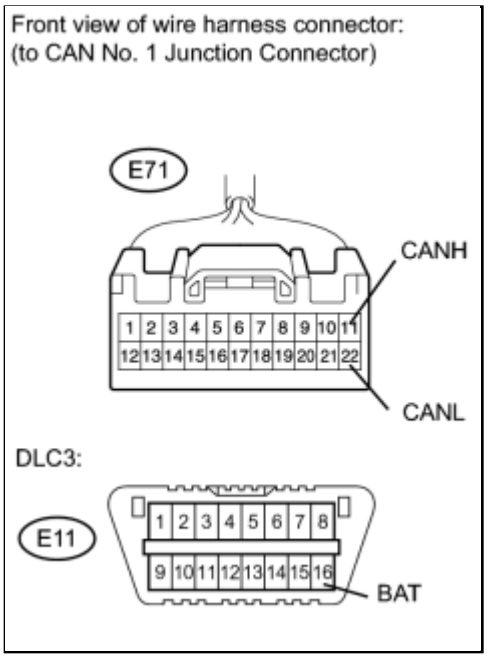

(1) Disconnect the CAN No. 1 junction connector.

(2) Measure the resistance according to the value(s) in the table below.

NOTICE:

The resistance must be measured after the accessory option and CAN No. 1 junction connector are disconnected.

Standard Resistance:

TESTER CONNECTION	CONDITION	SPECIFIED CONDITION

TESTER CONNECTION	CONDITION	SPECIFIED CONDITION
E71-11 (CANH) - E11-16 (BAT)	Cable is disconnected from negative (-) battery terminal	6 kΩ or higher
E71-22 (CANL) - E11-16 (BAT)	Cable is disconnected from negative (-) battery terminal	6 kΩ or higher

NG ▶ **REPAIR OR REPLACE CAN BUS BRANCH WIRE OR CONNECTOR (CAN NO. 1 JUNCTION CONNECTOR - ACCESSORY GATEWAY)**

OK ▶ **REPLACE THE ACCESSORY**

Last Modified: 3-10-2010	6.4 C	**From:** 200901
Model Year: 2010	**Model:** Corolla	**Doc ID:** RM000002E79019X
Title: NETWORKING: CAN COMMUNICATION SYSTEM: U0327: Software Incompatibility with Vehicle Security Control Module (2010 Corolla)		

DTC	**U0327**	**Software Incompatibility with Vehicle Security Control Module**

DESCRIPTION

The main body ECU will store this DTC when no signals can be received from the certification ECU while the CAN MS main bus is normal.

DTC NO.	DTC DETECTION CONDITION	TROUBLE AREA
U0327	No communication from certification ECU continues	• Certification ECU power source circuit • Certification ECU • Certification ECU branch wire or connector

WIRING DIAGRAM

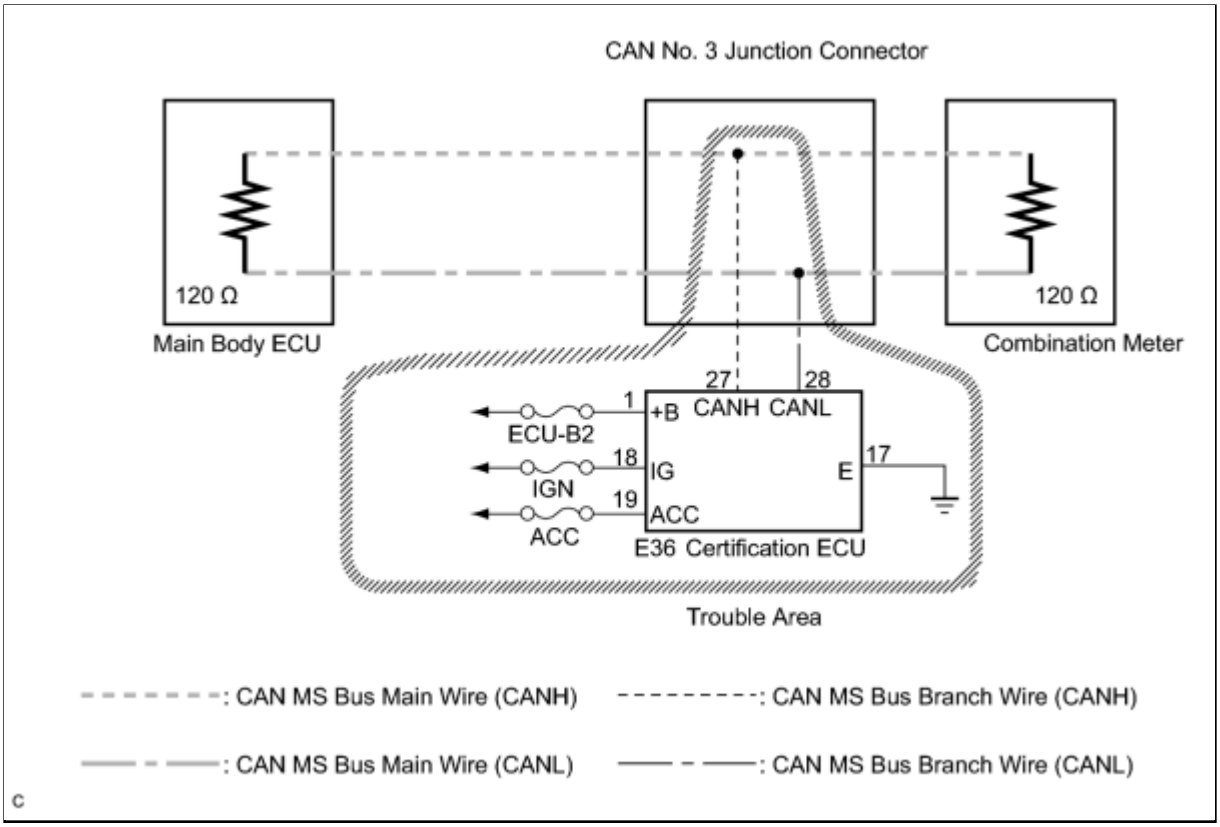

INSPECTION PROCEDURE

NOTICE:

- Turn the ignition switch off before measuring the resistance of the CAN bus main wires and the CAN bus branch wires.
- After the ignition switch is turned off, check that the key reminder warning system and light reminder warning system are not in operation.
- Before measuring the resistance, leave the vehicle as is for at least 1 minute and do not operate the ignition switch, any other switches or the doors. If any doors need to be opened in order to check the connectors, open the doors and leave them open.

HINT:

- Operating the ignition switch, any other switches or a door triggers related ECU and sensor communication on the CAN. This communication will cause the resistance value to change.
- Even after DTCs are cleared, if a DTC is stored again after driving the vehicle for a while, the malfunction may be occurring due to vibration of the vehicle. In such a case, wiggling the ECUs or wire harness while performing the inspection below will help determine the cause of the malfunction.

PROCEDURE

1.	**CHECK DTC**

(a) Check the DTC.

HINT:

If the CAN MS bus communication error DTC U1002 is output, troubleshoot for U1002 and check for malfunctions in the CAN MS main bus circuit INFO .

Result:

RESULT	PROCEED TO
U1002 is not output	A
U1002 is output	B

B GO TO DTC CHART

A

2.	CHECK CAN MS BUS WIRE (CERTIFICATION ECU)

(a) Turn the ignition switch off.

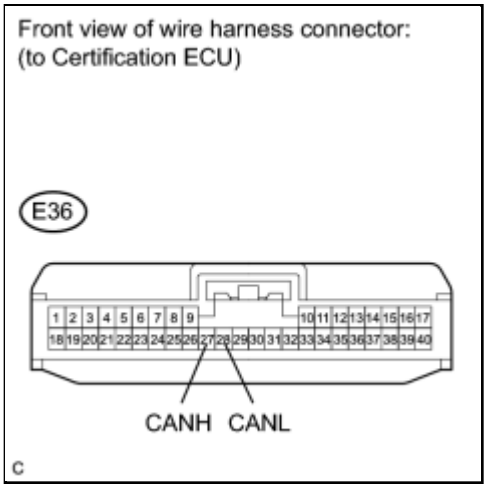

(b) Disconnect the certification ECU connector from the certification ECU.

(c) Measure the resistance according to the value(s) in the table below.

Standard Resistance:

TESTER CONNECTION	SWITCH CONDITION	SPECIFIED CONDITION
E36-27 (CANH) - E36-28 (CANL)	Ignition switch off	54 to 69 Ω

NG REPAIR OR REPLACE CAN MS BUS BRANCH WIRE

OR CONNECTOR (CERTIFICATION ECU)

OK

3.	**CHECK HARNESS AND CONNECTOR (POWER SOURCE CIRCUIT)**

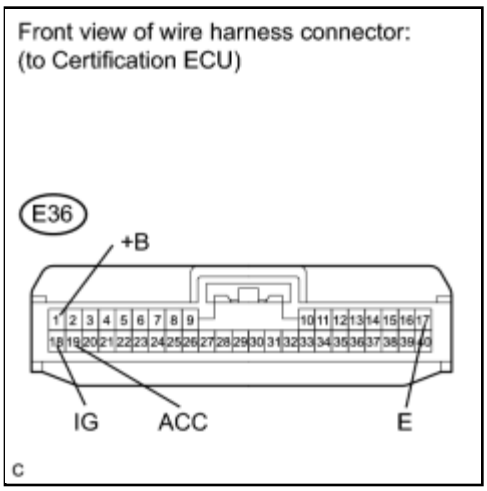

(a) Measure the resistance according to the value(s) in the table below.

Standard Resistance:

TESTER CONNECTION	CONDITION	SPECIFIED CONDITION
E36-17 (E) - Body ground	Always	Below 1 Ω

(b) Measure the voltage according to the value(s) in the table below.

Standard Voltage:

TESTER CONNECTION	CONDITION	SPECIFIED CONDITION
E36-18 (IG) - Body ground	Ignition switch ON	10 to 14 V
E36-1 (+B) - Body ground	Always	10 to 14 V
E36-19 (ACC) - Body ground	Ignition switch ACC	10 to 14 V

NG ▶ **REPAIR OR REPLACE HARNESS OR CONNECTOR**

OK ▶ **REPLACE CERTIFICATION ECU**

Last Modified: 3-10-2010	6.4 S	**From:** 200901
Model Year: 2010	**Model:** Corolla	**Doc ID:** RM000002B6V01OX
Title: NETWORKING: CAN COMMUNICATION SYSTEM: DIAGNOSTIC TROUBLE CODE CHART (2010 Corolla)		

DIAGNOSTIC TROUBLE CODE CHART

CAN Communication System

DTC CODE	DETECTION ITEM	TROUBLE AREA	SEE PAGE
U0327	Software Incompatibility with Vehicle Security Control Module	1. Certification ECU branch wire or connector 2. Certification ECU power source circuit 3. Certification ECU	INFO
U1002 (CAN MS BUS)	Lost Communication with Gateway Module (Main body ECU)	1. Open or short in CAN MS bus main wire or connector 2. Open or short in CAN MS bus branch wire or connector 3. Certification ECU 4. Combination meter 5. Main body ECU 6. CAN No. 3 junction connector	INFO

Last Modified: 3-10-2010	6.4 J	**From:** 200901
Model Year: 2010	**Model:** Corolla	**Doc ID:** RM000001FAF01AX
Title: NETWORKING: CAN COMMUNICATION SYSTEM: Check CAN Bus Line for Short to GND (2010 Corolla)		

Check CAN Bus Line for Short to GND

DESCRIPTION

There may be a short circuit between the CAN bus line and GND when there is no resistance between terminals 6 (CANH) and 4 (CG) or terminals 14 (CANL) and 4 (CG) of the DLC3.

SYMPTOM	TROUBLE AREA
No resistance exists between terminals 6 (CANH) and 4 (CG) or terminals 14 (CANL) and 4 (CG) of DLC3.	Short to GND in CAN bus wire • Short to GND in CAN bus wire • Skid control ECU • Power steering ECU • Steering angle sensor (w/ VSC) • Yaw rate sensor (w/ VSC) • ECM • Center airbag sensor assembly • Air conditioning amplifier • Combination meter ECU • Main body ECU • Accessory Gateway

WIRING DIAGRAM

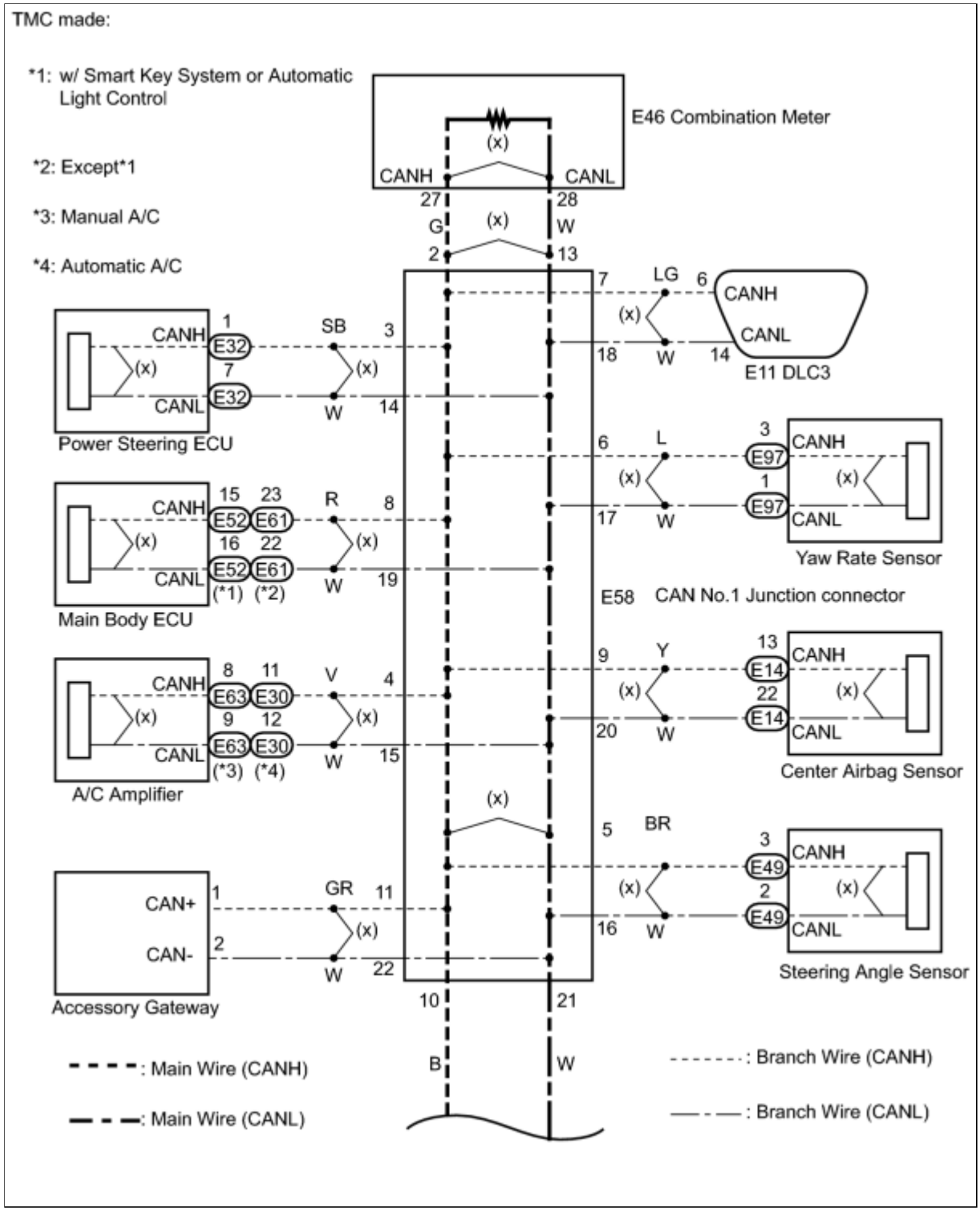
TMC made:
*1: w/ Smart Key System or Automatic Light Control
*2: Except*1
*3: Manual A/C
*4: Automatic A/C
E46 Combination Meter
CANH
CANL
(x)
27
28
G
W
2
13
7
LG
6
CANH
CANL
18
W
14
E11 DLC3
Power Steering ECU
1
E32
7
E32
SB
3
14
Main Body ECU
15
23
E52
E61
16
22
(*1)
(*2)
R
8
19
Yaw Rate Sensor
3
E97
1
E97
6
L
17
E58
CAN No.1 Junction connector
A/C Amplifier
8
11
E63
E30
9
12
(*3)
(*4)
V
4
15
Center Airbag Sensor
13
E14
22
E14
9
Y
20
Accessory Gateway
CAN+
CAN-
1
2
GR
11
22
Steering Angle Sensor
3
E49
2
E49
5
BR
16
10
21
B
W
: Main Wire (CANH)
: Main Wire (CANL)
: Branch Wire (CANH)
: Branch Wire (CANL)

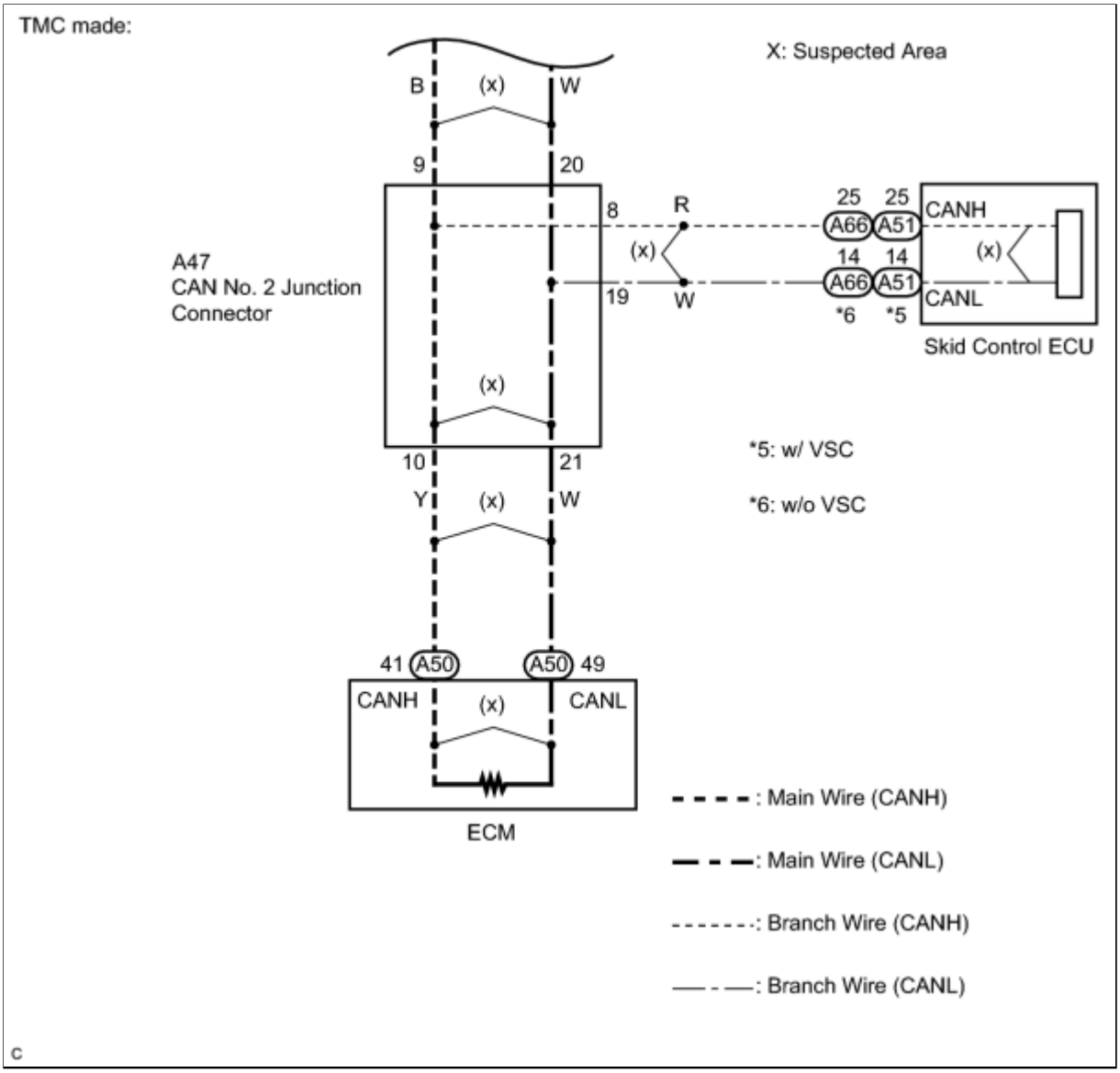
TMC made:
X: Suspected Area
B
(x)
W
9
20
8
R
25
25
CANH
A66
A51
(x)
14
14
(x)
A47
CAN No. 2 Junction
Connector
19
W
A66
A51
CANL
*6
*5
Skid Control ECU
(x)
*5: w/ VSC
10
21
Y
(x)
W
*6: w/o VSC
41
A50
A50
49
CANH
(x)
CANL
ECM
: Main Wire (CANH)
: Main Wire (CANL)
: Branch Wire (CANH)
: Branch Wire (CANL)
c

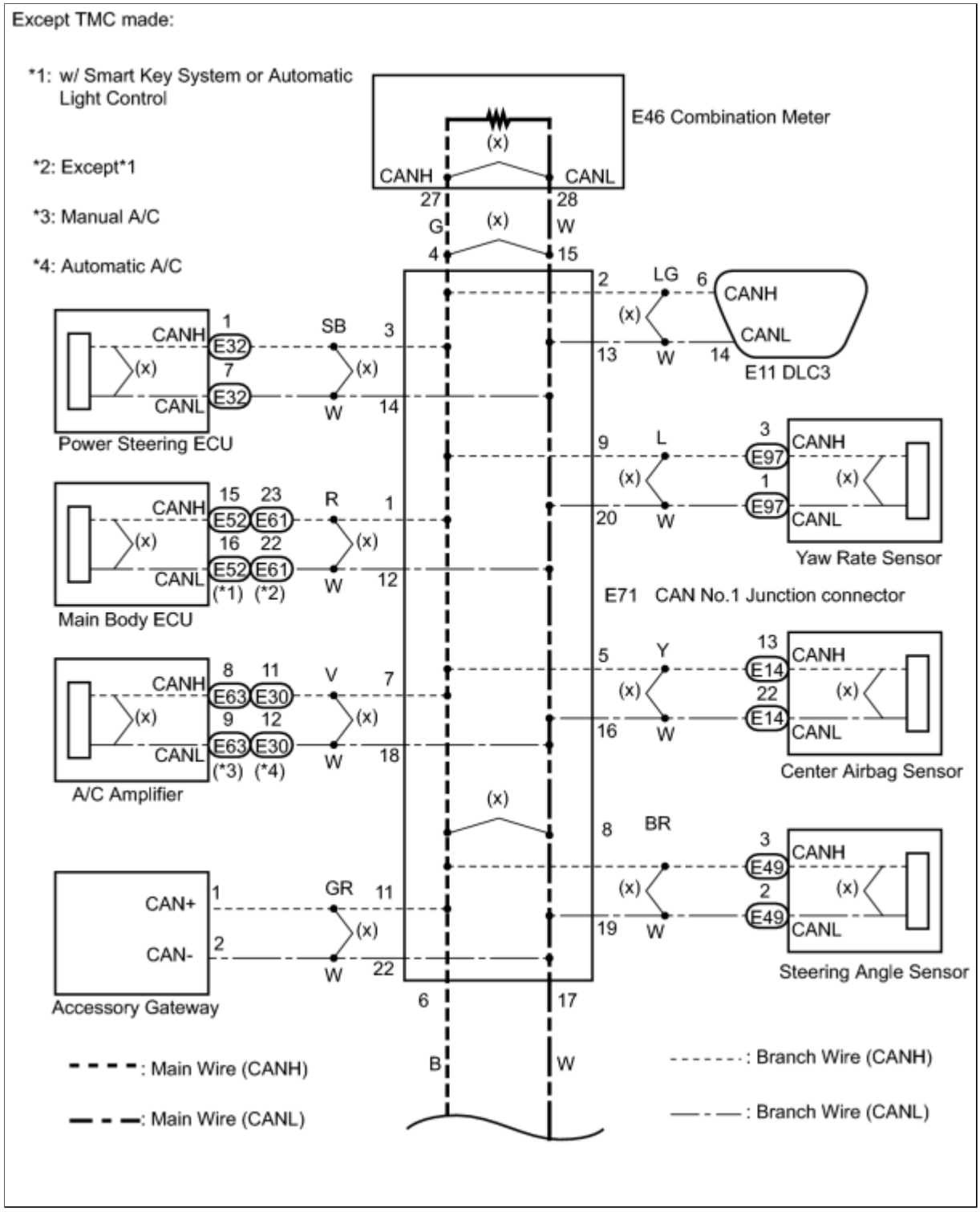
Except TMC made:
*1: w/ Smart Key System or Automatic Light Control
*2: Except*1
*3: Manual A/C
*4: Automatic A/C
E46 Combination Meter
CANH
CANL
27
28
G
W
4
15
E11 DLC3
Power Steering ECU
Main Body ECU
A/C Amplifier
Yaw Rate Sensor
E71 CAN No.1 Junction connector
Center Airbag Sensor
Steering Angle Sensor
Accessory Gateway
CAN+
CAN-
E32
E52
E61
E63
E30
E97
E14
E49
SB
R
V
GR
L
Y
BR
LG
B
17
6
: Main Wire (CANH)
: Main Wire (CANL)
: Branch Wire (CANH)
: Branch Wire (CANL)

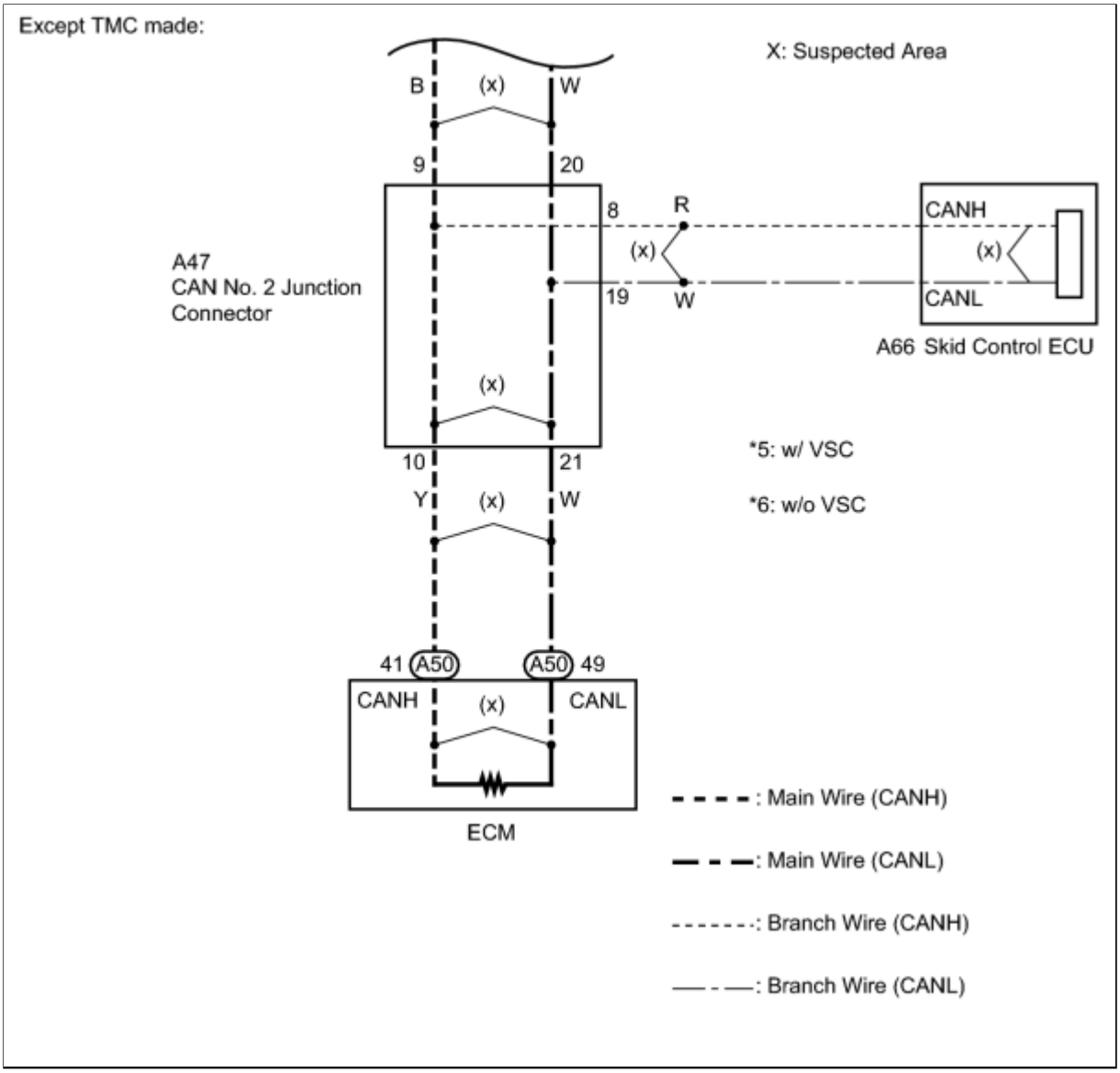

INSPECTION PROCEDURE

NOTICE:

- Turn the ignition switch off before measuring the resistance of the main CAN bus wires and the CAN Bus branch wire.
- After the ignition switch is turned off, check that the key reminder warning system and light reminder warning system are not in operation.
- Before measuring the resistance, leave the vehicle as is for at least 1 minute and do not operate the ignition switch, any other switches or the doors. If any doors need to be opened in order to check the connectors, open the doors and leave them open.

HINT:

- Operating the ignition switch, any switches or any doors triggers related ECU and sensor communication with the CAN. This communication will cause the resistance value to change.
- Even after DTCs are cleared, if a DTC is stored again after driving the vehicle for a while, the malfunction may be occurring due to vibration of the vehicle. In such a case, wiggling the ECUs or wire harness while performing the inspection below will help determine the cause of the malfunction.

PROCEDURE

1.	**CHECK FOR SHORT TO GND IN CAN BUS WIRE (DLC3 BRANCH WIRE)**

(a) Turn the ignition switch off.

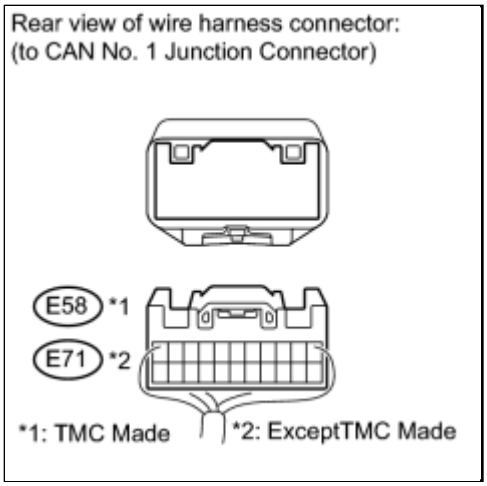

(b) Disconnect the CAN No. 1 junction connector.

(c) Measure the resistance according to the value(s) in the table below.

NOTICE:

The resistance must be measured after the CAN No. 1 junction connector is disconnected.

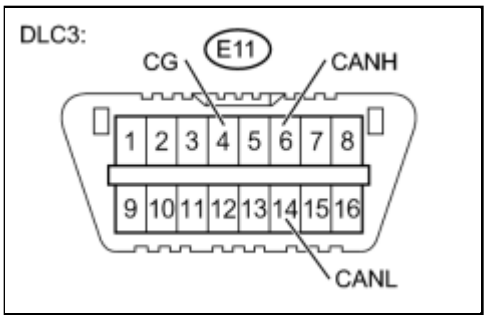

Standard Resistance:

TESTER CONNECTION	SWITCH CONDITION	SPECIFIED CONDITION
E11-6 (CANH) - E11-4 (CG)	Ignition switch off	200 Ω or higher
E11-14 (CANL) - E11-4 (CG)	Ignition switch off	200 Ω or higher

NG ▶ **REPAIR OR REPLACE CAN BRANCH WIRE CONNECTED TO DLC3**

OK ▼

2.	CHECK FOR SHORT TO GND IN CAN BUS WIRE (CAN NO. 2 JUNCTION CONNECTOR)

(a) Reconnect the CAN No. 1 junction connector.

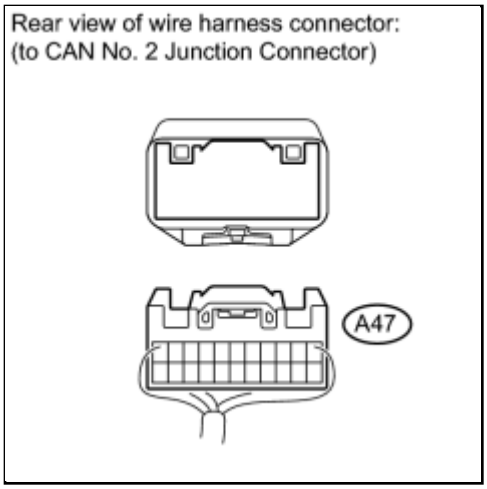

(b) Disconnect the CAN No. 2 junction connector.

(c) Measure the resistance according to the value(s) in the table below.

NOTICE:

The resistance must be measured after the CAN No. 2 junction connector is disconnected.

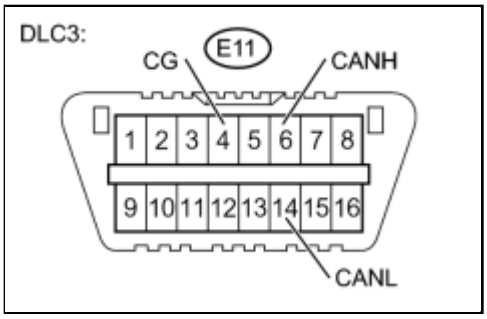

Standard Resistance:

TESTER CONNECTION	SWITCH CONDITION	SPECIFIED CONDITION
E11-6 (CANH) - E11-4 (CG)	Ignition switch off	200 Ω or higher
E11-14 (CANL) - E11-4 (CG)	Ignition switch off	200 Ω or higher

NG ▶ **CHECK FOR SHORT TO GND IN CAN BUS WIRE (POWER STEERING ECU BRANCH WIRE)**

OK ▼

3.	CHECK FOR SHORT TO GND IN CAN BUS WIRE (ECM MAIN WIRE)

(a) Measure the resistance according to the value(s) in

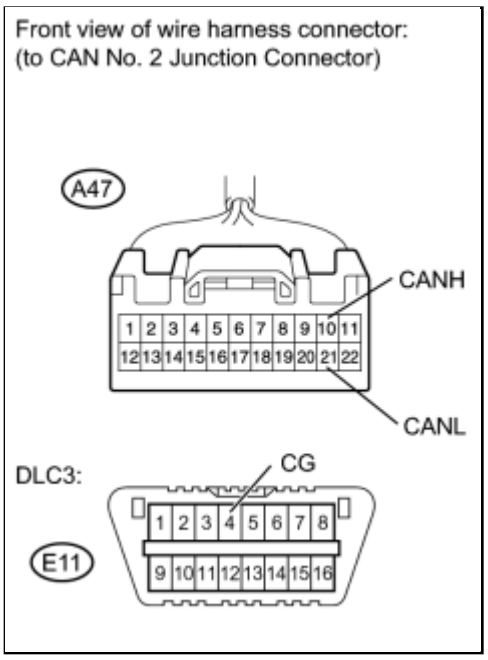

the table below.

NOTICE:

The resistance must be measured after the CAN No. 2 junction connector is disconnected.

Standard Resistance:

TESTER CONNECTION	SWITCH CONDITION	SPECIFIED CONDITION
A47-10 (CANH) - E11-4 (CG)	Ignition switch off	200 Ω or higher
A47-21 (CANL) - E11-4 (CG)	Ignition switch off	200 Ω or higher

NG ▶ **CHECK FOR SHORT TO GND IN CAN BUS WIRE (CAN NO. 2 JUNCTION CONNECTOR - ECM)**

OK ▼

4.	**CHECK FOR SHORT TO GND IN CAN BUS WIRE (CAN NO. 2 JUNCTION CONNECTOR - SKID CONTROL ECU)**

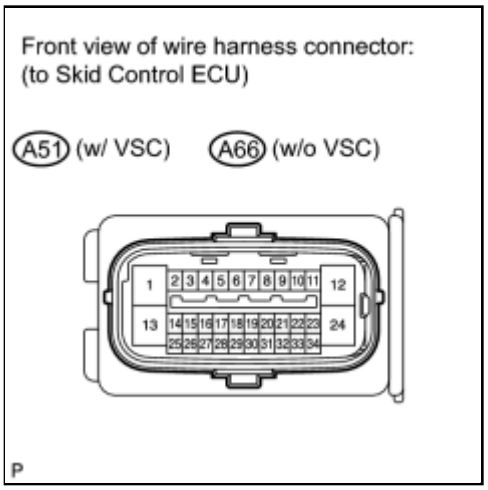

(a) Disconnect the skid control ECU connector.

(b) Measure the resistance according to the value(s) in the table below.

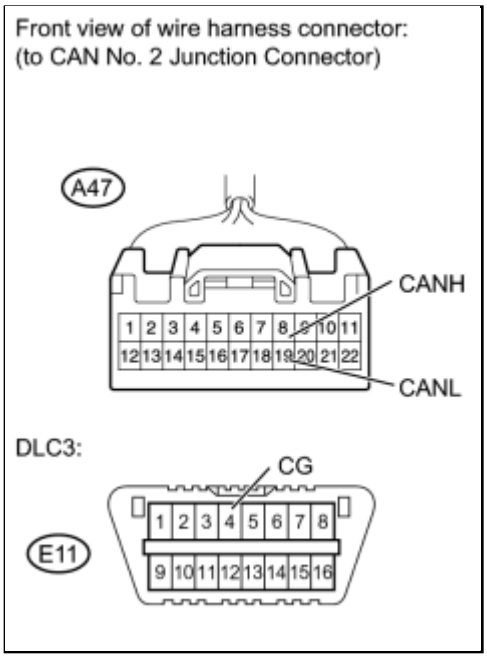

NOTICE:

The resistance must be measured after the skid control ECU connector and CAN No. 2 junction connector are disconnected.

Standard Resistance:

TESTER CONNECTION	SWITCH CONDITION	SPECIFIED CONDITION
A47-8 (CANH) - E11-4 (CG)	Ignition switch off	200 Ω or higher
A47-19 (CANL) - E11-4 (CG)	Ignition switch off	200 Ω or higher

Result:

RESULT	PROCEED TO
OK (w/o VSC)	A
OK (w/ VSC)	B
NG	C

C ▶ **REPAIR OR REPLACE CAN BUS BRANCH WIRE OR CONNECTOR (CAN NO. 2 JUNCTION CONNECTOR - SKID CONTROL ECU)**

B ▶ **REPLACE BRAKE ACTUATOR ASSEMBLY**

A ▶ **REPLACE BRAKE ACTUATOR ASSEMBLY**

5.	**CHECK FOR SHORT TO GND IN CAN BUS WIRE (CAN NO. 2 JUNCTION CONNECTOR - ECM)**

(a) Disconnect the ECM connector.

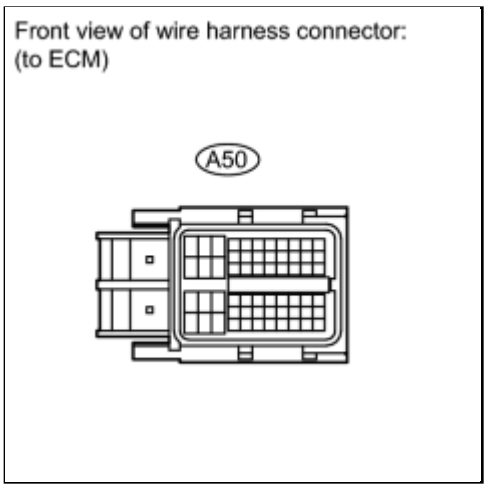

(b) Measure the resistance according to the value(s) in the table below.

NOTICE:

The resistance must be measured after the ECM connector and CAN No.2 junction connector are disconnected.

Standard Resistance:

TESTER CONNECTION	SWITCH CONDITION	SPECIFIED CONDITION
A47-10 (CANH) - E11-4 (CG)	Ignition switch off	200 Ω or higher
A47-21 (CANL) - E11-4 (CG)	Ignition switch off	200 Ω or higher

Result:

RESULT	PROCEED TO
OK (for 2ZR-FE)	A
OK (for 2AZ-FE)	B
NG	C

C ▶ **REPAIR OR REPLACE CAN BUS MAIN WIRE OR CONNECTOR (CAN NO. 2 JUNCTION CONNECTOR - ECM)**

B ▶ **REPLACE ECM**

A ▶ **REPLACE ECM**

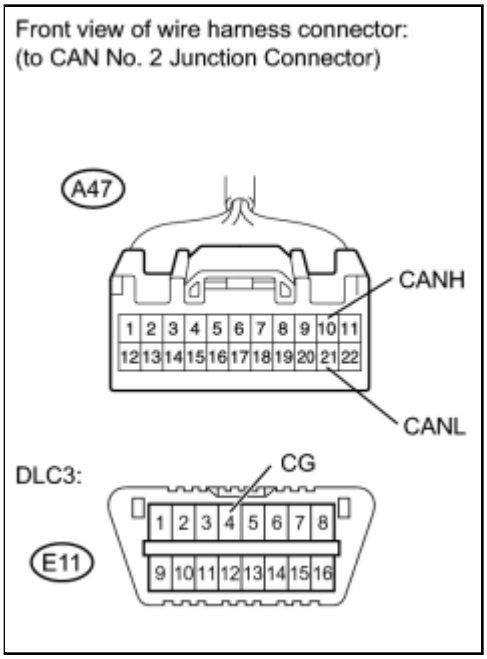

6.	CHECK FOR SHORT TO GND IN CAN BUS WIRE (POWER STEERING ECU BRANCH WIRE)

(a) Reconnect the CAN No. 2 junction connector.

(b) Disconnect the CAN No. 1 junction connector.

(c) TMC made:

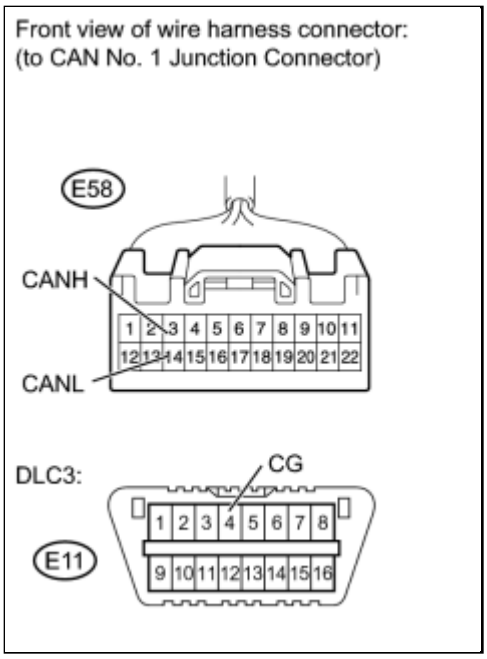

(1) Measure the resistance according to the value(s) in the table below.

NOTICE:

- The resistance must be measured after the CAN No. 2 junction connector is reconnected.
- The resistance must be measured after the CAN No. 1 junction connector is disconnected.

Standard Resistance:

TESTER CONNECTION	SWITCH CONDITION	SPECIFIED CONDITION
E58-3 (CANH) - E11-4 (CG)	Ignition switch off	200 Ω or higher
E58-14 (CANL) - E11-4 (CG)	Ignition switch off	200 Ω or higher

(d) Except TMC made:

(1) Measure the resistance according to the value(s) in the table below.

NOTICE:

- The resistance must be measured after the CAN No. 2 junction connector is reconnected.
- The resistance must be measured after the CAN No. 1 junction connector is disconnected.

Standard Resistance:

TESTER CONNECTION	SWITCH CONDITION	SPECIFIED CONDITION
E71-3 (CANH) - E11-4 (CG)	Ignition switch off	200 Ω or higher

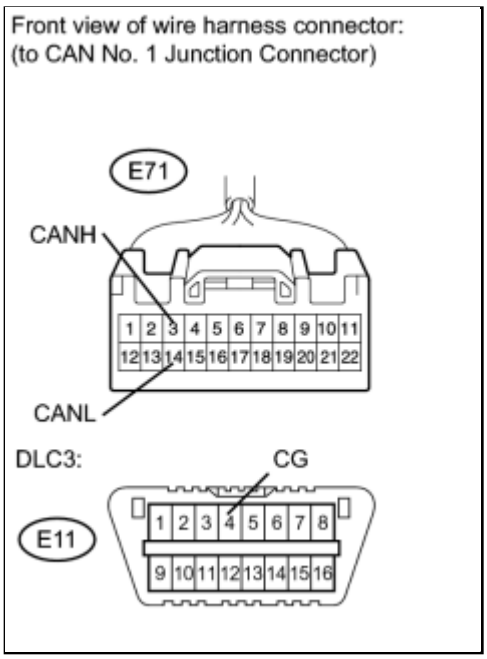

E71-14 (CANL) - E11-4 (CG)	Ignition switch off	200 Ω or higher

NG ▶ **CHECK FOR SHORT TO GND IN CAN BUS WIRE (CAN NO. 1 JUNCTION CONNECTOR - POWER STEERING ECU)**

OK ▼

7.	**CHECK FOR SHORT TO GND IN CAN BUS WIRE (STEERING ANGLE SENSOR BRANCH WIRE)**

(a) TMC made:

(1) Measure the resistance according to the value(s) in the table below.

NOTICE:

The resistance must be measured after the CAN No. 1 junction connector is disconnected.

Standard Resistance:

TESTER CONNECTION	SWITCH CONDITION	SPECIFIED CONDITION
E58-5 (CANH) - E11-4 (CG)	Ignition switch off	200 Ω or higher

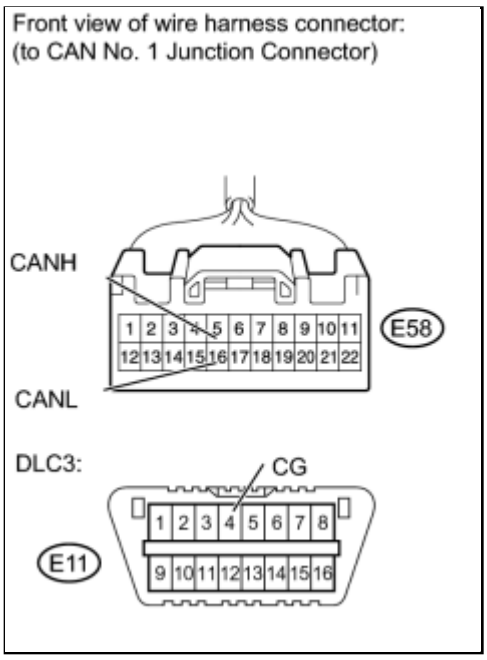

E58-16 (CANL) - E11-4 (CG)	Ignition switch off	200 Ω or higher

(b) Except TMC made:

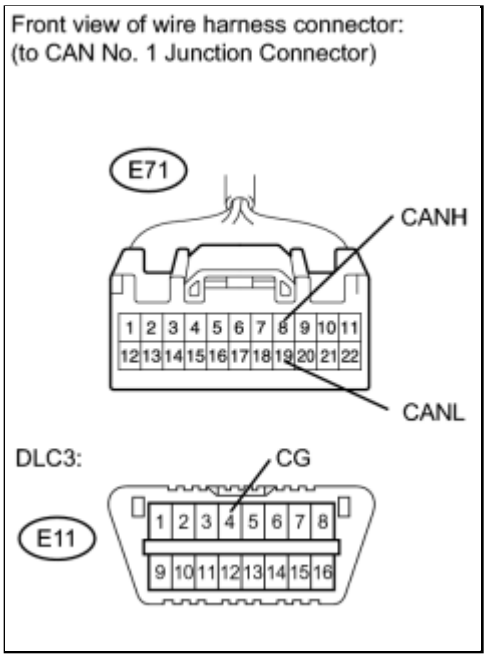

(1) Measure the resistance according to the value(s) in the table below.

NOTICE:

The resistance must be measured after the CAN No. 1 junction connector is disconnected.

Standard Resistance:

TESTER CONNECTION	SWITCH CONDITION	SPECIFIED CONDITION
E71-8 (CANH) - E11-4 (CG)	Ignition switch off	200 Ω or higher
E71-19 (CANL) - E11-4 (CG)	Ignition switch off	200 Ω or higher

NG ▶ **CHECK FOR SHORT TO GND IN CAN BUS WIRE (CAN NO. 1 JUNCTION CONNECTOR - STEERING ANGLE SENSOR)**

OK ▼

8.	CHECK FOR SHORT TO GND IN CAN BUS WIRE (YAW RATE SENSOR BRANCH WIRE)

(a) TMC made:

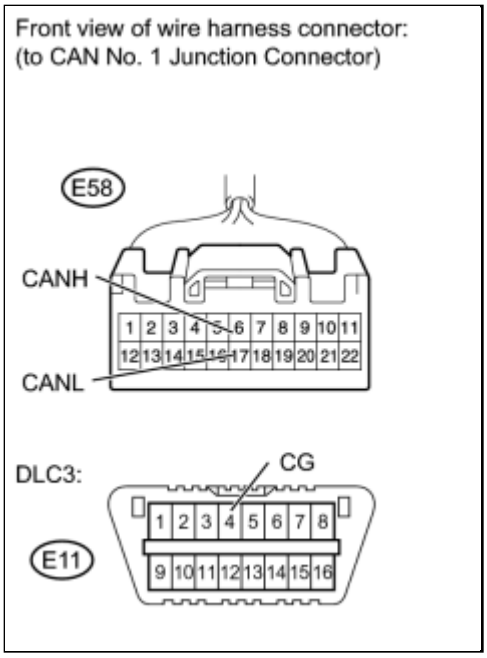

(1) Measure the resistance according to the value(s) in the table below.

NOTICE:

The resistance must be measured after the CAN No. 1 junction connector is disconnected.

Standard Resistance:

TESTER CONNECTION	SWITCH CONDITION	SPECIFIED CONDITION
E58-6 (CANH) - E11-4 (CG)	Ignition switch off	200 Ω or higher
E58-17 (CANL) - E11-4 (CG)	Ignition switch off	200 Ω or higher

(b) Except TMC made:

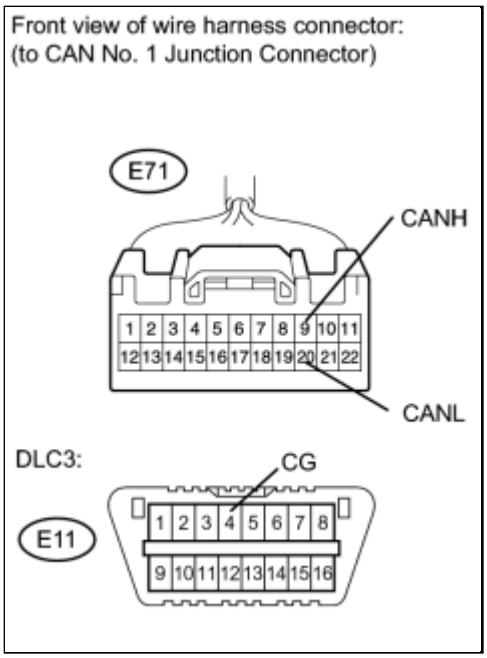

(1) Measure the resistance according to the value(s) in the table below.

NOTICE:

The resistance must be measured after the CAN No. 1 junction connector is disconnected.

Standard Resistance:

TESTER CONNECTION	SWITCH CONDITION	SPECIFIED CONDITION
E71-9 (CANH) - E11-4 (CG)	Ignition switch off	200 Ω or higher
E71-20 (CANL) - E11-4 (CG)	Ignition switch off	200 Ω or higher

NG ▶ **CHECK FOR SHORT TO GND IN CAN BUS WIRE (CAN NO. 1 JUNCTION CONNECTOR - YAW RATE SENSOR)**

OK

9.	CHECK FOR SHORT TO GND IN CAN BUS WIRE (MAIN BODY ECU BRANCH WIRE)

(a) TMC made:

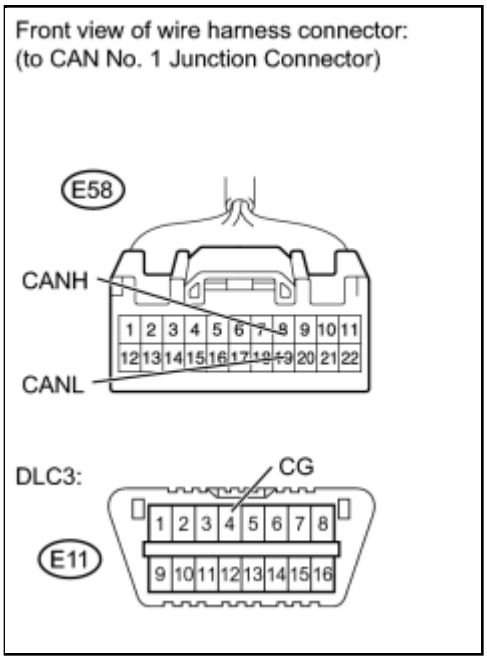

(1) Measure the resistance according to the value(s) in the table below.

NOTICE:

The resistance must be measured after the CAN No. 1 junction connector is disconnected.

Standard Resistance:

TESTER CONNECTION	SWITCH CONDITION	SPECIFIED CONDITION
E58-8 (CANH) - E11-4 (CG)	Ignition switch off	200 Ω or higher
E58-19 (CANL) - E11-4 (CG)	Ignition switch off	200 Ω or higher

(b) Except TMC made:

(1) Measure the resistance according to the value(s) in the table below.

NOTICE:

The resistance must be measured after the CAN No. 1 junction connector is disconnected.

Standard Resistance:

TESTER CONNECTION	SWITCH CONDITION	SPECIFIED CONDITION
E71-1 (CANH) - E11-4 (CG)	Ignition switch off	200 Ω or higher
E71-12 (CANL) - E11-4 (CG)	Ignition switch off	200 Ω or higher

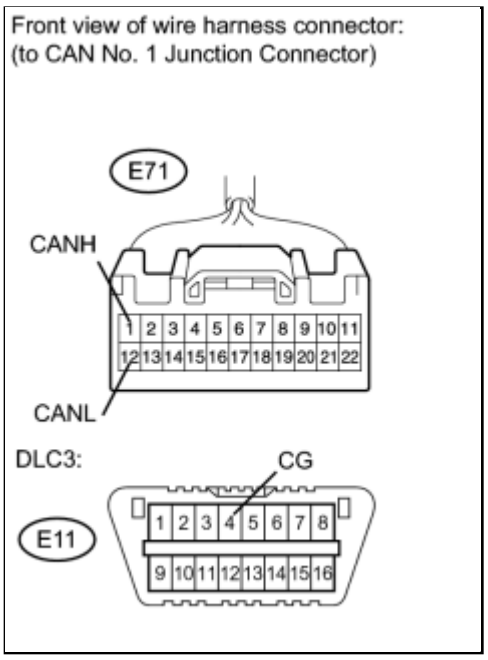

NG ▶ **CHECK FOR SHORT TO GND IN CAN BUS WIRE (CAN NO. 1 JUNCTION CONNECTOR - MAIN BODY ECU)**

OK ▼

10.	**CHECK FOR SHORT TO GND IN CAN BUS WIRE (AIR CONDITIONING AMPLIFIER BRANCH WIRE)**

(a) TMC made:

(1) Measure the resistance according to the value(s) in the table below.

NOTICE:

The resistance must be measured after the CAN No. 1 junction connector is disconnected.

Standard Resistance:

TESTER CONNECTION	SWITCH CONDITION	SPECIFIED CONDITION
E58-4 (CANH) - E11-4 (CG)	Ignition switch off	200 Ω or higher

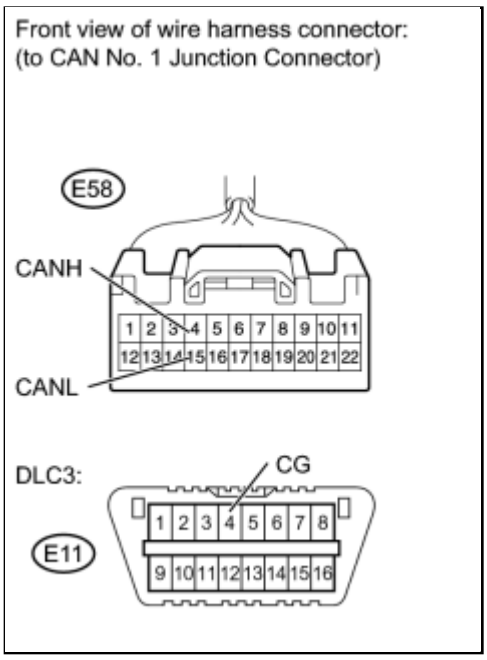

E58-15 (CANL) - E11-4 (CG)	Ignition switch off	200 Ω or higher

(b) Except TMC made:

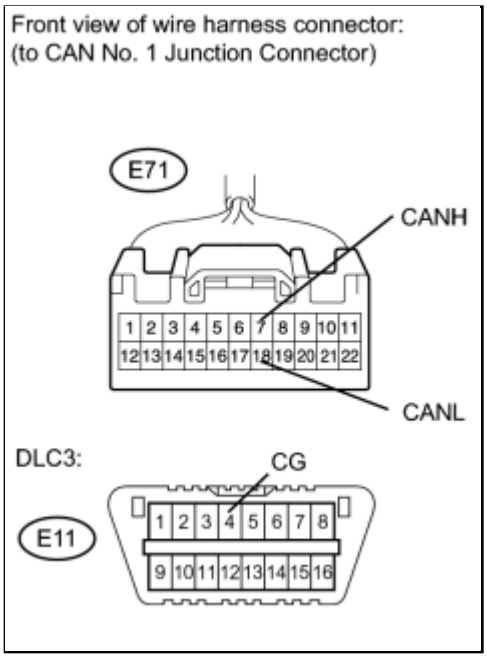

(1) Measure the resistance according to the value(s) in the table below.

NOTICE:

The resistance must be measured after the CAN No. 1 junction connector is disconnected.

Standard Resistance:

TESTER CONNECTION	SWITCH CONDITION	SPECIFIED CONDITION
E71-7 (CANH) - E11-4 (CG)	Ignition switch off	200 Ω or higher
E71-18 (CANL) - E11-4 (CG)	Ignition switch off	200 Ω or higher

NG ▶ **CHECK FOR SHORT TO GND IN CAN BUS WIRE (CAN NO. 1 JUNCTION CONNECTOR - AIR CONDITIONING AMPLIFIER)**

OK ▼

11.	**CHECK FOR SHORT TO GND IN CAN BUS WIRE (CENTER AIRBAG SENSOR ASSEMBLY BRANCH WIRE)**

(a) TMC made:

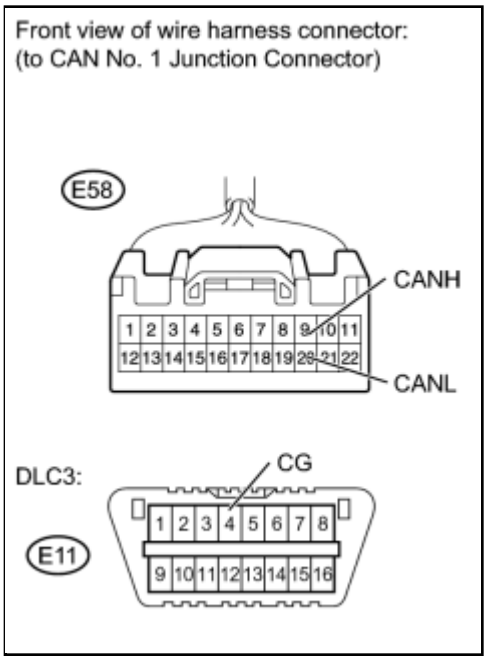

(1) Measure the resistance according to the value(s) in the table below.

NOTICE:

The resistance must be measured after the CAN No. 1 junction connector is disconnected.

Standard Resistance:

TESTER CONNECTION	SWITCH CONDITION	SPECIFIED CONDITION
E58-9 (CANH) - E11-4 (CG)	Ignition switch off	200 Ω or higher
E58-20 (CANL) - E11-4 (CG)	Ignition switch off	200 Ω or higher

(b) Except TMC made:

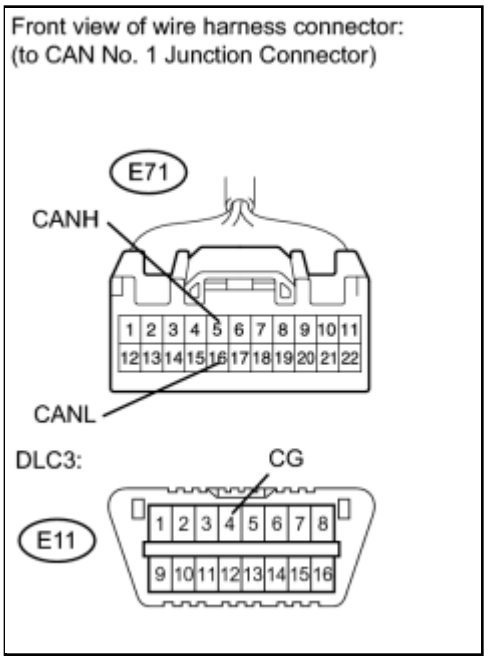

(1) Measure the resistance according to the value(s) in the table below.

NOTICE:

The resistance must be measured after the CAN No. 1 junction connector is disconnected.

Standard Resistance:

TESTER CONNECTION	SWITCH CONDITION	SPECIFIED CONDITION
E71-5 (CANH) - E11-4 (CG)	Ignition switch off	200 Ω or higher
E71-16 (CANL) - E11-4 (CG)	Ignition switch off	200 Ω or higher

NG ▶ **CHECK FOR SHORT TO GND IN CAN BUS WIRE (CAN NO. 1 JUNCTION CONNECTOR - CENTER AIRBAG**

SENSOR ASSEMBLY)

OK

12.	CHECK FOR SHORT TO GND IN CAN BUS WIRE (COMBINATION METER MAIN WIRE)

(a) TMC made:

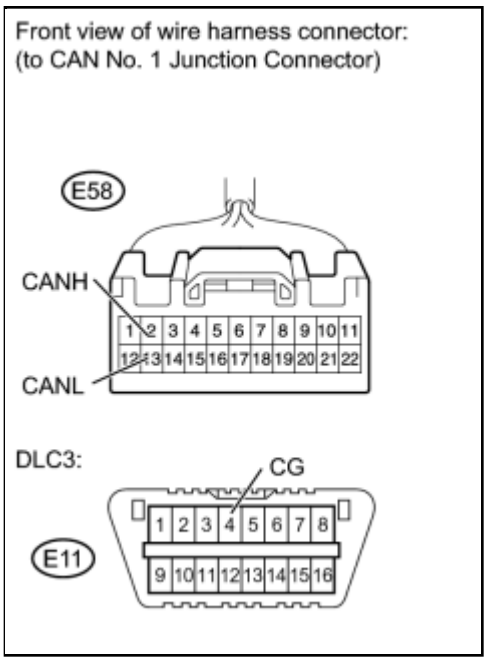

(1) Measure the resistance according to the value(s) in the table below.

NOTICE:

The resistance must be measured after the CAN No. 1 junction connector is disconnected.

Standard Resistance:

TESTER CONNECTION	SWITCH CONDITION	SPECIFIED CONDITION
E58-2 (CANH) - E11-4 (CG)	Ignition switch off	200 Ω or higher
E58-13 (CANL) - E11-4 (CG)	Ignition switch off	200 Ω or higher

(b) Except TMC made:

(1) Measure the resistance according to the value(s) in the table below.

NOTICE:

The resistance must be measured after the CAN No. 1 junction connector is disconnected.

Standard Resistance:

TESTER CONNECTION	SWITCH CONDITION	SPECIFIED CONDITION
E71-4 (CANH) - E11-4 (CG)	Ignition switch off	200 Ω or higher

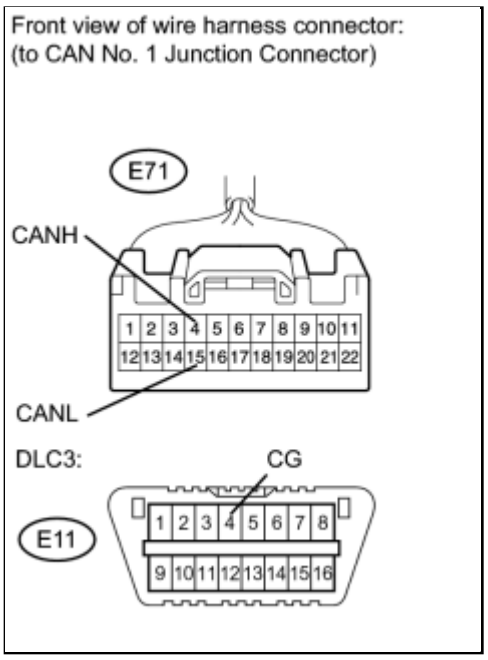

E71-15 (CANL) - E11-4 (CG)	Ignition switch off	200 Ω or higher

NG ▶ **CHECK FOR SHORT TO GND IN CAN BUS WIRE (CAN NO. 1 JUNCTION CONNECTOR - COMBINATION METER)**

OK ▼

13.	**CHECK FOR SHORT TO GND IN CAN BUS WIRE (ACCESSORY GATEWAY BRANCH WIRE)**

(a) TMC made:

(1) Measure the resistance according to the value(s) in the table below.

NOTICE:

The resistance must be measured after the CAN No. 1 junction connector is disconnected.

Standard Resistance:

TESTER CONNECTION	SWITCH CONDITION	SPECIFIED CONDITION
E58-11 (CANH) - E11-4 (CG)	Ignition switch off	200 Ω or higher

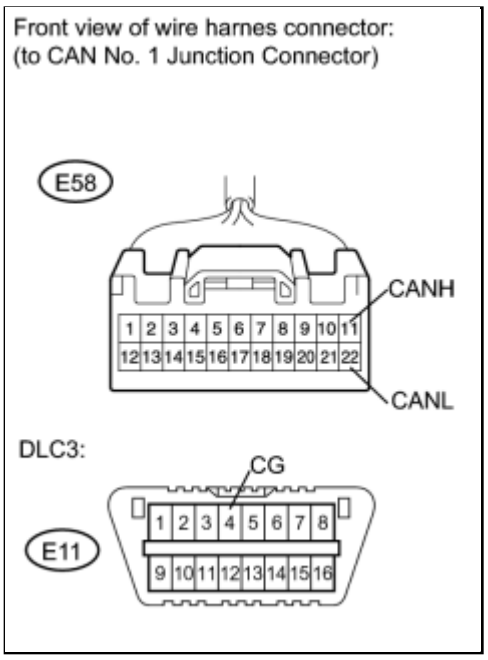

E58-22 (CANL) - E11-4 (CG)	Ignition switch off	200 Ω or higher

(b) Except TMC made:

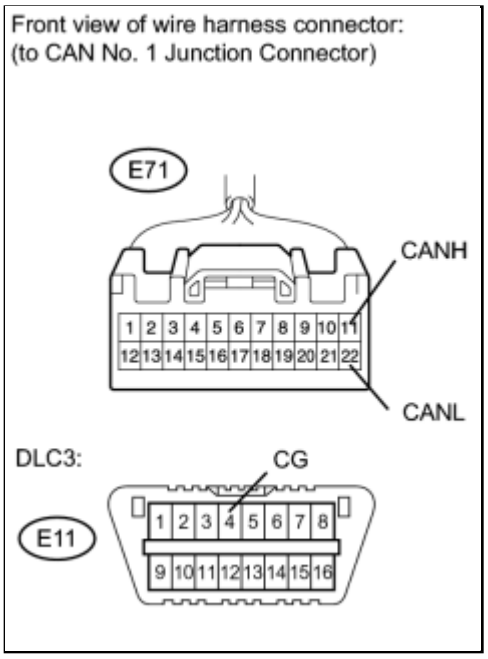

(1) Measure the resistance according to the value(s) in the table below.

NOTICE:

The resistance must be measured after the CAN No. 1 junction connector is disconnected.

Standard Resistance:

TESTER CONNECTION	SWITCH CONDITION	SPECIFIED CONDITION
E71-11 (CANH) - E11-4 (CG)	Ignition switch off	200 Ω or higher
E71-22 (CANL) - E11-4 (CG)	Ignition switch off	200 Ω or higher

Result:

RESULT	PROCEED TO
OK	A
NG (w/o remote engine start)	B
NG (w/ remote engine start)	C

C ▶ **CHECK FOR SHORT TO GND IN CAN BUS WIRE (CAN**

NO. 1 JUNCTION CONNECTOR - ACCESSORY GATEWAY)

B ▶ REPAIR OR REPLACE CAN BUS BRANCH WIRE OR CONNECTOR (CAN NO. 1 JUNCTION CONNECTOR - ACCESSORY GATEWAY)

A ▶ REPAIR OR REPLACE CAN MAIN WIRE OR CONNECTOR (CAN NO. 1 JUNCTION CONNECTOR - CAN NO. 2 JUNCTION CONNECTOR)

14.	CHECK FOR SHORT TO GND IN CAN BUS WIRE (CAN NO. 1 JUNCTION CONNECTOR - POWER STEERING ECU)

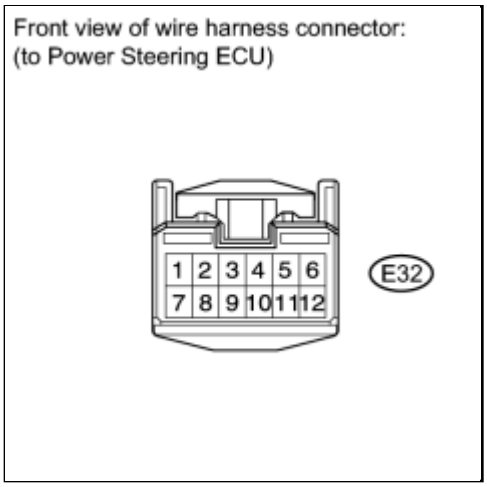

(a) Disconnect the power steering ECU connector.

(b) TMC made:

(1) Measure the resistance according to the value(s) in the table below.

NOTICE:

The resistance must be measured after the power steering ECU and CAN No. 1 junction connector are disconnected.

Standard Resistance:

TESTER CONNECTION	SWITCH CONDITION	SPECIFIED CONDITION
E58-3 (CANH) - E11-4 (CG)	Ignition switch off	200 Ω or higher
E58-14 (CANL) - E11-4 (CG)	Ignition switch off	200 Ω or higher

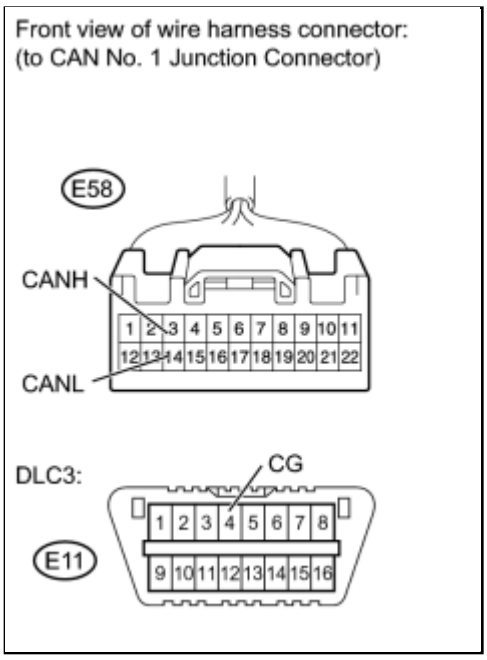

(c) Except TMC made:

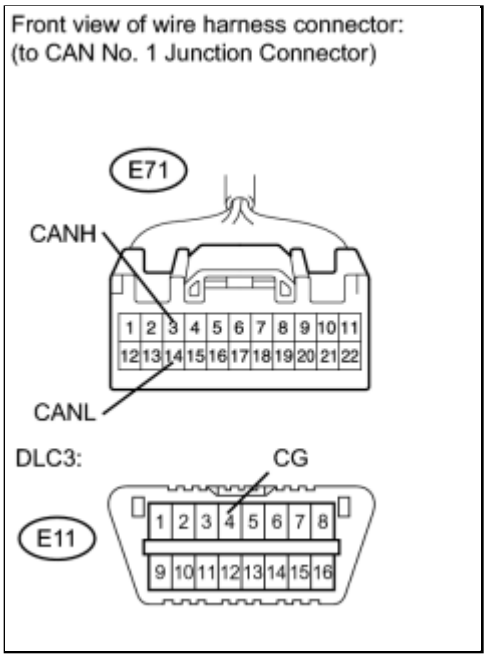

(1) Measure the resistance according to the value(s) in the table below.

NOTICE:

The resistance must be measured after the power steering ECU and CAN No. 1 junction connector are disconnected.

Standard Resistance:

TESTER CONNECTION	SWITCH CONDITION	SPECIFIED CONDITION
E71-3 (CANH) - E11-4 (CG)	Ignition switch off	200 Ω or higher
E71-14 (CANL) - E11-4 (CG)	Ignition switch off	200 Ω or higher

Result:

RESULT	PROCEED TO
OK (for 2AZ-FE)	A
OK (for 2ZR-FE)	B
NG	C

C ▶ **REPAIR OR REPLACE CAN BUS BRANCH WIRE OR**

CONNECTOR (CAN NO. 1 JUNCTION CONNECTOR - POWER STEERING ECU)

B ▶ **REPLACE POWER STEERING ECU**

A ▶ **REPLACE POWER STEERING ECU**

15.	**CHECK FOR SHORT TO GND IN CAN BUS WIRE (CAN NO. 1 JUNCTION CONNECTOR - STEERING ANGLE SENSOR)**

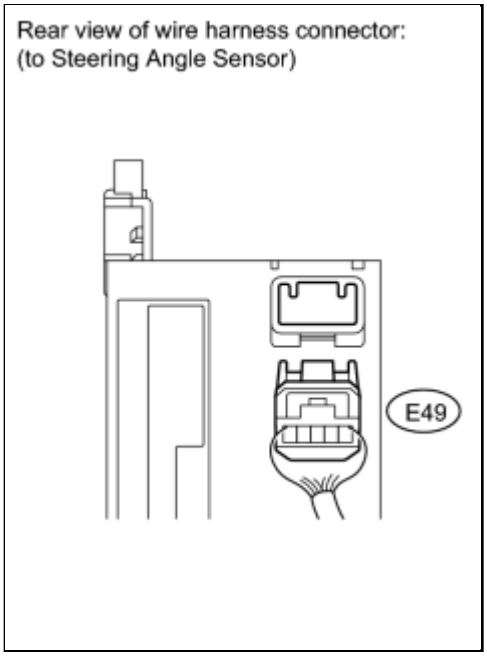

(a) Disconnect the steering angle sensor connector.

(b) TMC made:

(1) Measure the resistance according to the value(s) in the table below.

NOTICE:

The resistance must be measured after the steering angle sensor and CAN No. 1 junction connector are disconnected.

Standard Resistance:

TESTER CONNECTION	SWITCH CONDITION	SPECIFIED CONDITION
E58-5 (CANH) - E11-4 (CG)	Ignition switch off	200 Ω or higher
E58-16 (CANL) - E11-4 (CG)	Ignition switch off	200 Ω or higher

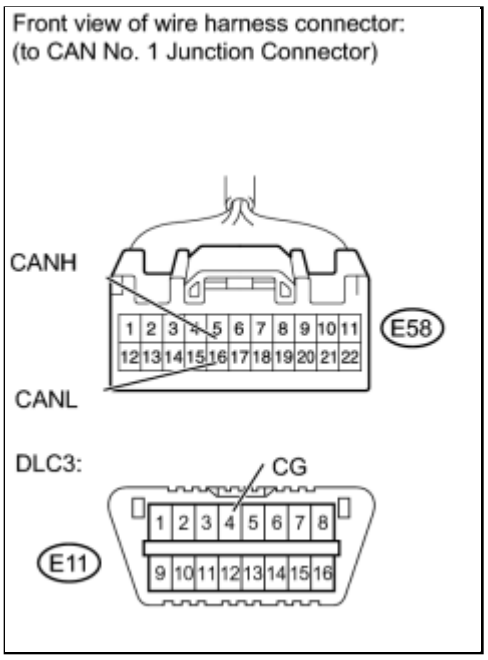

(c) Except TMC made:

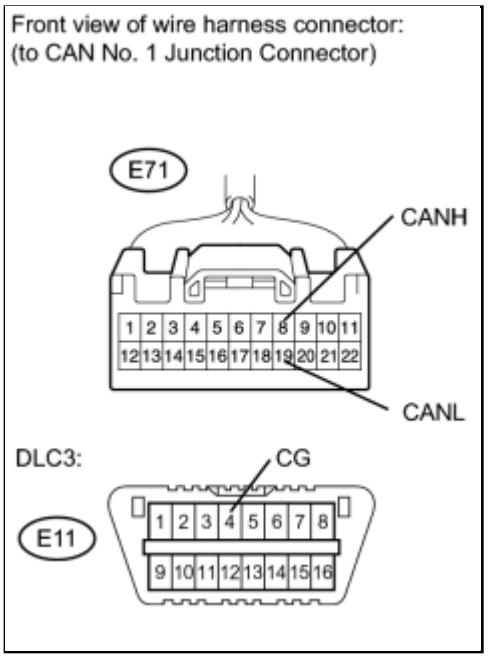

(1) Measure the resistance according to the value(s) in the table below.

NOTICE:

The resistance must be measured after the steering angle sensor and CAN No. 1 junction connector are disconnected.

Standard Resistance:

TESTER CONNECTION	SWITCH CONDITION	SPECIFIED CONDITION
E71-8 (CANH) - E11-4 (CG)	Ignition switch off	200 Ω or higher
E71-19 (CANL) - E11-4 (CG)	Ignition switch off	200 Ω or higher

NG ▶ **REPAIR OR REPLACE CAN BUS BRANCH WIRE OR CONNECTOR (CAN NO. 1 JUNCTION CONNECTOR - STEERING ANGLE SENSOR)**

OK ▶ **REPLACE STEERING ANGLE SENSOR**

16.	**CHECK FOR SHORT TO GND IN CAN BUS WIRE (CAN NO. 1 JUNCTION CONNECTOR - YAW RATE SENSOR)**

(a) Disconnect the yaw rate sensor connector.

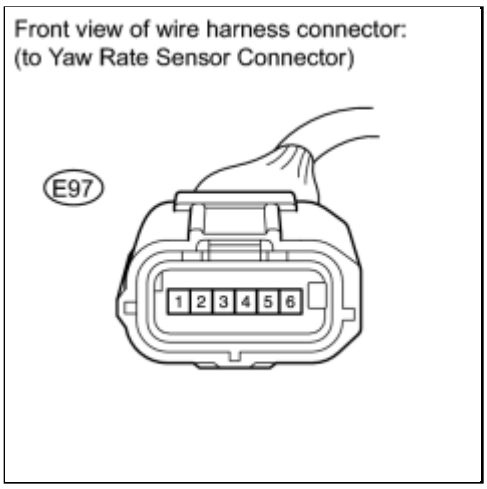

(b) TMC made:

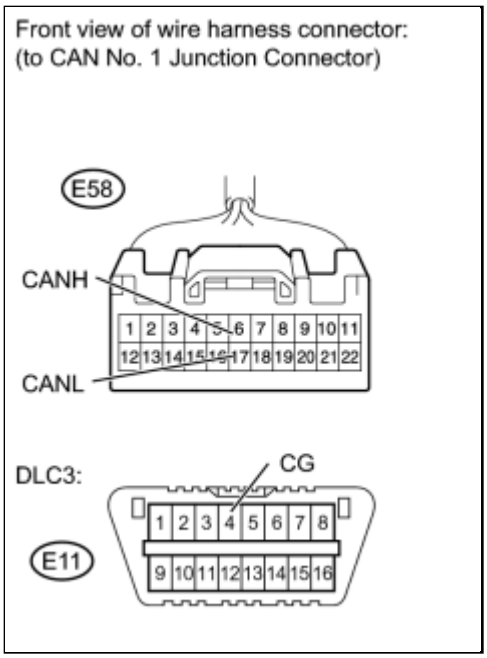

(1) Measure the resistance according to the value(s) in the table below.

NOTICE:

The resistance must be measured after the yaw rate sensor connector and CAN No. 1 junction connector are disconnected.

Standard Resistance:

TESTER CONNECTION	SWITCH CONDITION	SPECIFIED CONDITION
E58-6 (CANH) - E11-4 (CG)	Ignition switch off	200 Ω or higher
E58-17 (CANL) - E11-4 (CG)	Ignition switch off	200 Ω or higher

(c) Except TMC made:

(1) Measure the resistance according to the value(s) in the table below.

NOTICE:

The resistance must be measured after the yaw rate sensor connector and CAN No. 1 junction connector are disconnected.

Standard Resistance:

TESTER CONNECTION	SWITCH CONDITION	SPECIFIED CONDITION
E71-9 (CANH) -	Ignition switch off	200 Ω or higher

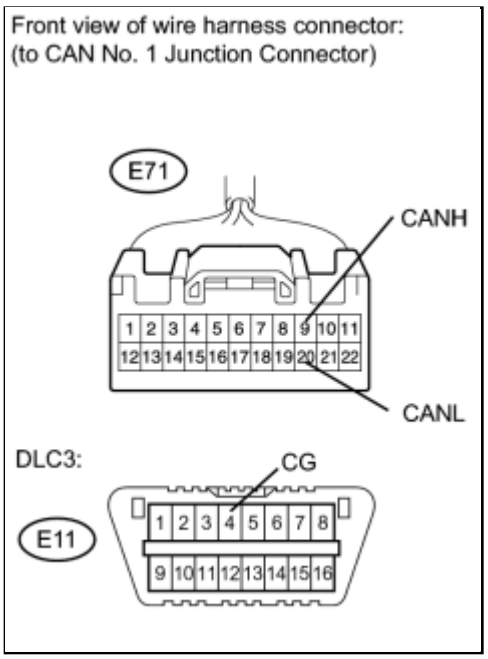

E11-4 (CG)		
E71-20 (CANL) - E11-4 (CG)	Ignition switch off	200 Ω or higher

NG ▶ **REPAIR OR REPLACE CAN BUS BRANCH WIRE OR CONNECTOR (CAN NO. 1 JUNCTION CONNECTOR - YAW RATE SENSOR)**

OK ▶ **REPLACE YAW RATE SENSOR**

17.	**CHECK FOR SHORT TO GND IN CAN BUS WIRE (CAN NO. 1 JUNCTION CONNECTOR - MAIN BODY ECU)**

(a) Disconnect the main body ECU connector.

Rear view of wire harness connector:
(to Main Body ECU)

w/ Smar Key System or Automatic Light Control System:

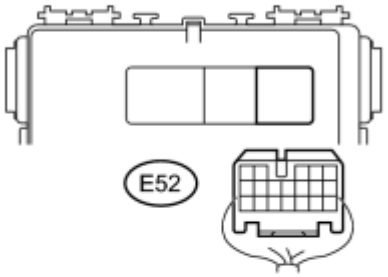

w/o Smar Key System Automatic Light Control System:

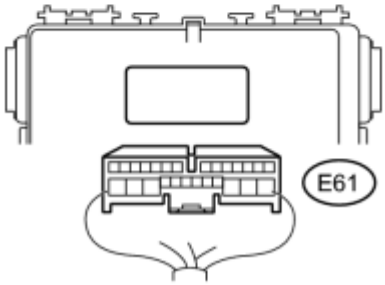

(b) TMC made:

Front view of wire harness connector:
(to CAN No. 1 Junction Connector)

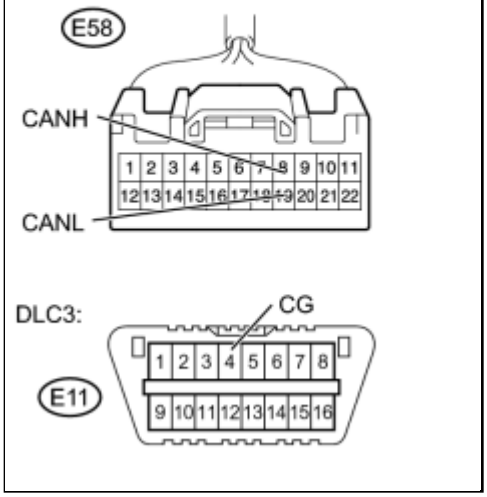

(1) Measure the resistance according to the value(s) in the table below.

NOTICE:

The resistance must be measured after the main body ECU and CAN No. 1 junction connector are disconnected.

Standard Resistance:

TESTER CONNECTION	SWITCH CONDITION	SPECIFIED CONDITION
E58-8 (CANH) - E11-4 (CG)	Ignition switch off	200 Ω or higher
E58-19 (CANL) - E11-4 (CG)	Ignition switch off	200 Ω or higher

(c) Except TMC made:

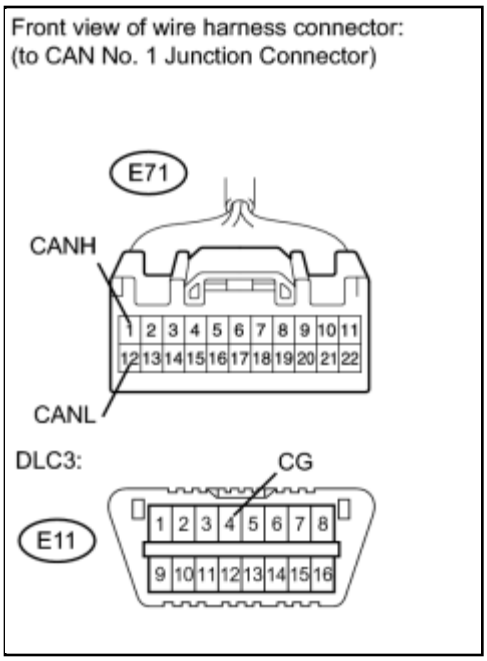

(1) Measure the resistance according to the value(s) in the table below.

NOTICE:

The resistance must be measured after the main body ECU and CAN No. 1 junction connector are disconnected.

Standard Resistance:

TESTER CONNECTION	SWITCH CONDITION	SPECIFIED CONDITION
E71-1 (CANH) - E11-4 (CG)	Ignition switch off	200 Ω or higher
E71-12 (CANL) - E11-4 (CG)	Ignition switch off	200 Ω or higher

NG ▶ **REPAIR OR REPLACE CAN BUS BRANCH WIRE OR CONNECTOR (CAN NO. 1 JUNCTION CONNECTOR - MAIN BODY ECU)**

OK ▶ **REPLACE MAIN BODY ECU**

18.	**CHECK FOR SHORT TO GND IN CAN BUS WIRE (CAN NO. 1 JUNCTION CONNECTOR - AIR CONDITIONING AMPLIFIER)**

(a) Disconnect the air conditioning amplifier connector.

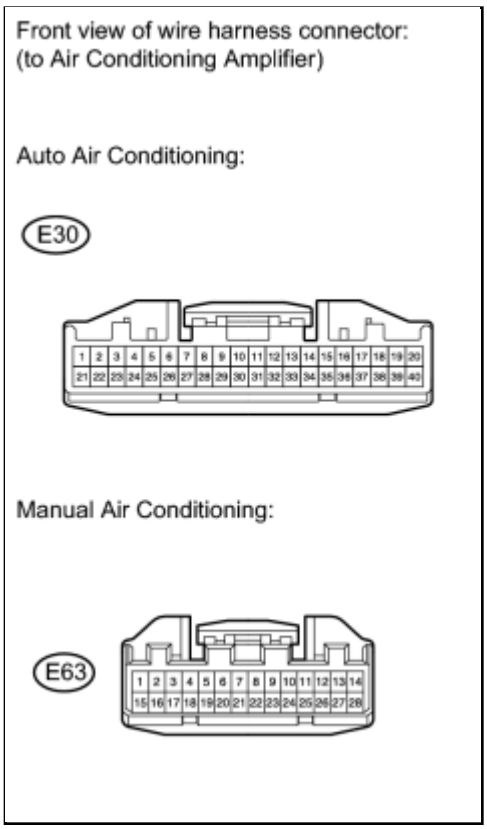

(b) TMC made:

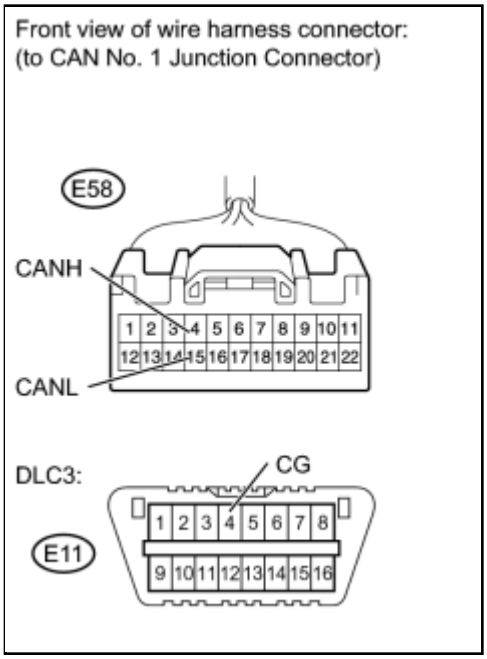

(1) Measure the resistance according to the value(s) in the table below.

NOTICE:

The resistance must be measured after the air conditioning amplifier and CAN No. 1 junction connector are disconnected.

Standard Resistance:

TESTER CONNECTION	SWITCH CONDITION	SPECIFIED CONDITION
E58-4 (CANH) - E11-4 (CG)	Ignition switch off	200 Ω or higher
E58-15 (CANL) - E11-4 (CG)	Ignition switch off	200 Ω or higher

(c) Except TMC made:

(1) Measure the resistance according to the value(s) in the table below.

NOTICE:

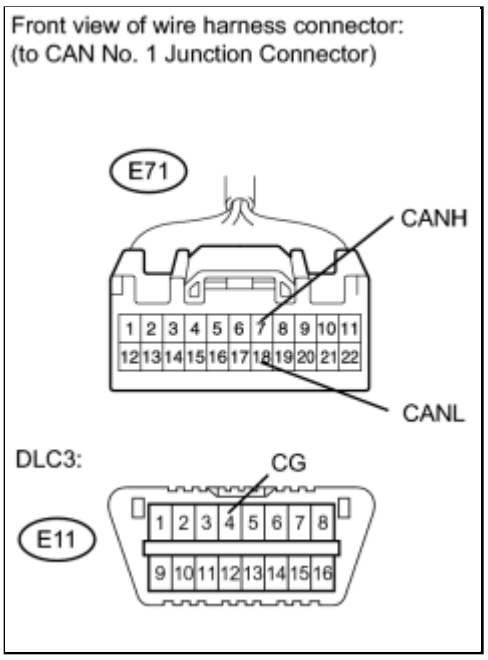

The resistance must be measured after the air conditioning amplifier and CAN No. 1 junction connector are disconnected.

Standard Resistance:

TESTER CONNECTION	SWITCH CONDITION	SPECIFIED CONDITION
E71-7 (CANH) - E11-4 (CG)	Ignition switch off	200 Ω or higher
E71-18 (CANL) - E11-4 (CG)	Ignition switch off	200 Ω or higher

NG ▶ **REPAIR OR REPLACE CAN BUS BRANCH WIRE OR CONNECTOR (CAN NO. 1 JUNCTION CONNECTOR - AIR CONDITIONING AMPLIFIER)**

OK ▶ **REPLACE AIR CONDITIONING AMPLIFIER**

19.	**CHECK FOR SHORT TO GND IN CAN BUS WIRE (CAN NO. 1 JUNCTION CONNECTOR - CENTER AIRBAG SENSOR ASSEMBLY)**

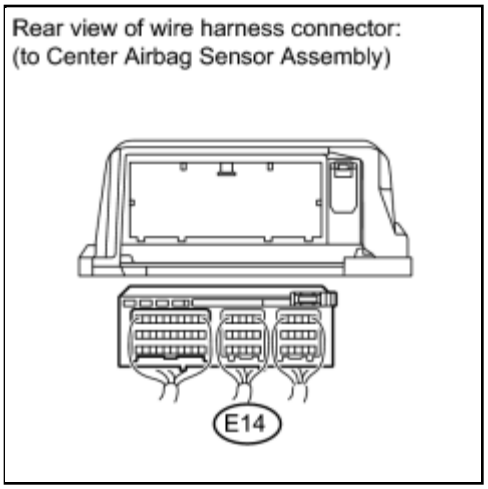

(a) Disconnect the center airbag sensor assembly connector.

(b) TMC made:

(1) Measure the resistance according to the value(s) in the table below.

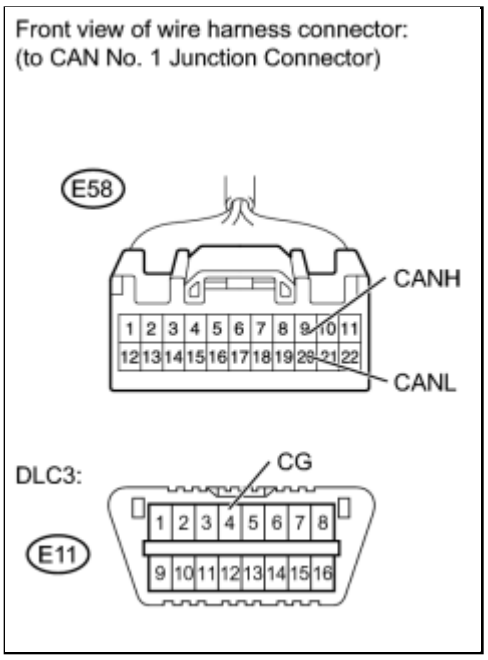

NOTICE:

The resistance must be measured after the center airbag sensor assembly and CAN No. 1 junction connector are disconnected.

Standard Resistance:

TESTER CONNECTION	SWITCH CONDITION	SPECIFIED CONDITION
E58-9 (CANH) - E11-4 (CG)	Ignition switch off	200 Ω or higher
E58-20 (CANL) - E11-4 (CG)	Ignition switch off	200 Ω or higher

(c) Except TMC made:

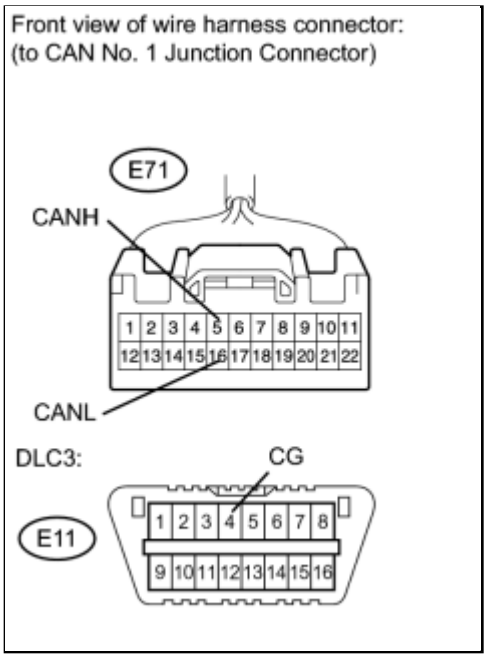

(1) Measure the resistance according to the value(s) in the table below.

NOTICE:

The resistance must be measured after the center airbag sensor assembly and CAN No. 1 junction connector are disconnected.

Standard Resistance:

TESTER CONNECTION	SWITCH CONDITION	SPECIFIED CONDITION
E71-5 (CANH) - E11-4 (CG)	Ignition switch off	200 Ω or higher
E71-16 (CANL) - E11-4 (CG)	Ignition switch off	200 Ω or higher

NG ▶ **REPAIR OR REPLACE CAN BUS BRANCH WIRE OR CONNECTOR (CAN NO. 1 JUNCTION CONNECTOR - CENTER AIRBAG SENSOR ASSEMBLY)**

OK ▶ **REPLACE CENTER AIRBAG SENSOR ASSEMBLY**

20.	**CHECK FOR SHORT TO GND IN CAN BUS WIRE (CAN NO. 1 JUNCTION CONNECTOR - COMBINATION METER)**

(a) Disconnect the combination meter connector.

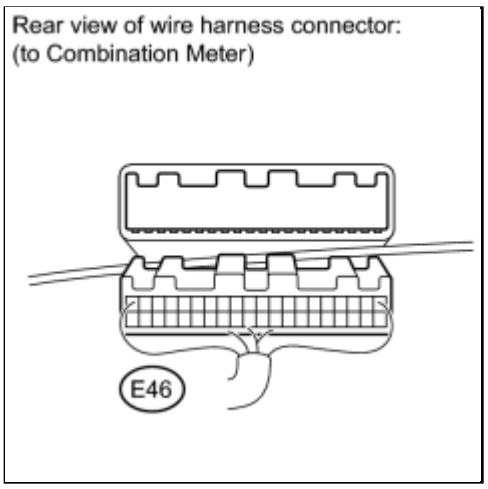

(b) TMC made:

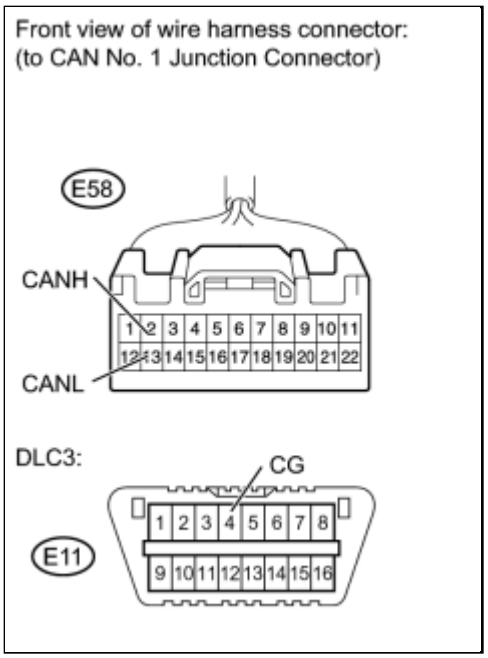

(1) Measure the resistance according to the value(s) in the table below.

NOTICE:

The resistance must be measured after the combination meter and CAN No. 1 junction connector are disconnected.

Standard Resistance:

TESTER CONNECTION	SWITCH CONDITION	SPECIFIED CONDITION
E58-2 (CANH) - E11-4 (CG)	Ignition switch off	200 Ω or higher
E58-13 (CANL) - E11-4 (CG)	Ignition switch off	200 Ω or higher

(c) Except TMC made:

(1) Measure the resistance according to the value(s) in the table below.

NOTICE:

The resistance must be measured after the combination meter and CAN No. 1 junction connector are disconnected.

Standard Resistance:

TESTER CONNECTION	SWITCH CONDITION	SPECIFIED CONDITION
E71-4 (CANH) -	Ignition switch off	200 Ω or higher

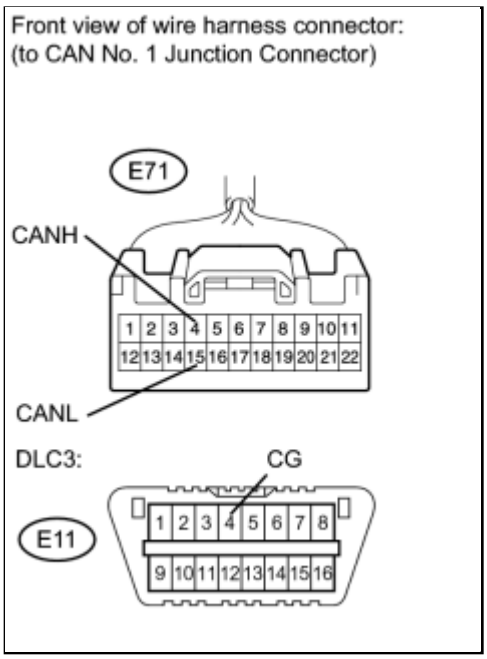

E11-4 (CG)		
E71-15 (CANL) - E11-4 (CG)	Ignition switch off	200 Ω or higher

NG ▶ **REPAIR OR REPLACE CAN BUS MAIN WIRE OR CONNECTOR (CAN NO. 1 JUNCTION CONNECTOR - COMBINATION METER)**

OK ▶ **REPLACE COMBINATION METER**

21.	**CHECK FOR SHORT TO GND IN CAN BUS WIRE (CAN NO. 1 JUNCTION CONNECTOR - ACCESSORY GATEWAY)**

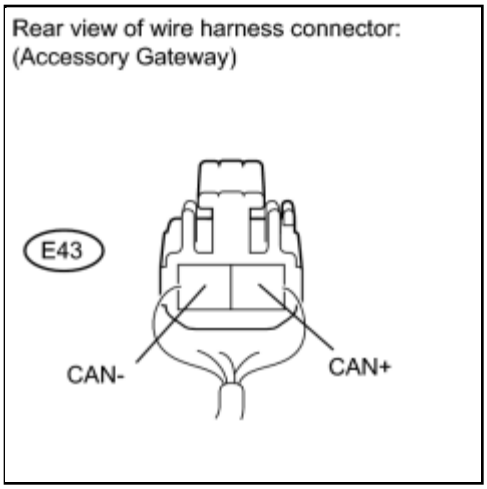

(a) Disconnect the accessory gateway connector from the accessory

(b) TMC made:

(1) Measure the resistance according to the value(s) in the table below.

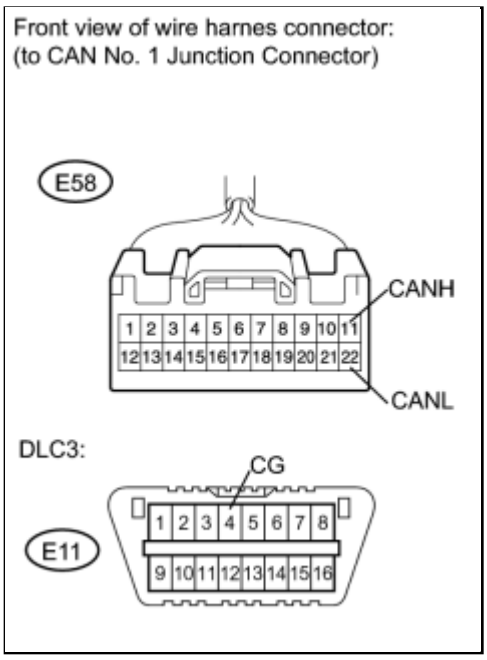

NOTICE:

The resistance must be measured after the accessory option and CAN No. 1 junction connector are disconnected.

Standard Resistance:

TESTER CONNECTION	SWITCH CONDITION	SPECIFIED CONDITION
E58-11 (CANH) - E11-4 (CG)	Ignition switch off	200 Ω or higher
E58-22 (CANL) - E11-4 (CG)	Ignition switch off	200 Ω or higher

(c) Except TMC made:

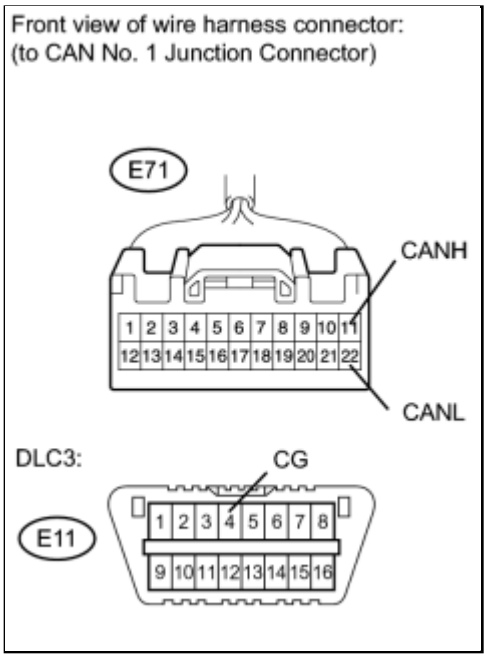

(1) Measure the resistance according to the value(s) in the table below.

NOTICE:

The resistance must be measured after the accessory option and CAN No. 1 junction connector are disconnected.

Standard Resistance:

TESTER CONNECTION	SWITCH CONDITION	SPECIFIED CONDITION
E71-11 (CANH) - E11-4 (CG)	Ignition switch off	200 Ω or higher
E71-22 (CANL) - E11-4 (CG)	Ignition switch off	200 Ω or higher

NG ▶ **REPAIR OR REPLACE CAN BUS BRANCH WIRE OR CONNECTOR (CAN NO. 1 JUNCTION CONNECTOR - ACCESSORY GATEWAY)**

OK ▶ **REPLACE THE ACCESSORY**

Last Modified: 3-10-2010	6.4 J	**From:** 200901
Model Year: 2010	**Model:** Corolla	**Doc ID:** RM000001V2C01IX
Title: NETWORKING: CAN COMMUNICATION SYSTEM: Skid Control ECU Communication Stop Mode (2010 Corolla)		

Skid Control ECU Communication Stop Mode

DESCRIPTION

DETECTION ITEM	SYMPTOM	TROUBLE AREA
Skid Control ECU Communication Stop Mode	• "ABS/VSC/TRAC" is not displayed on "CAN Bus Check" screen of the Techstream • Applies to "Skid Control ECU Communication Stop Mode" in "DTC Combination Table"	• Power source circuit of skid control ECU • Skid control ECU branch wire or connector • Skid control ECU

WIRING DIAGRAM

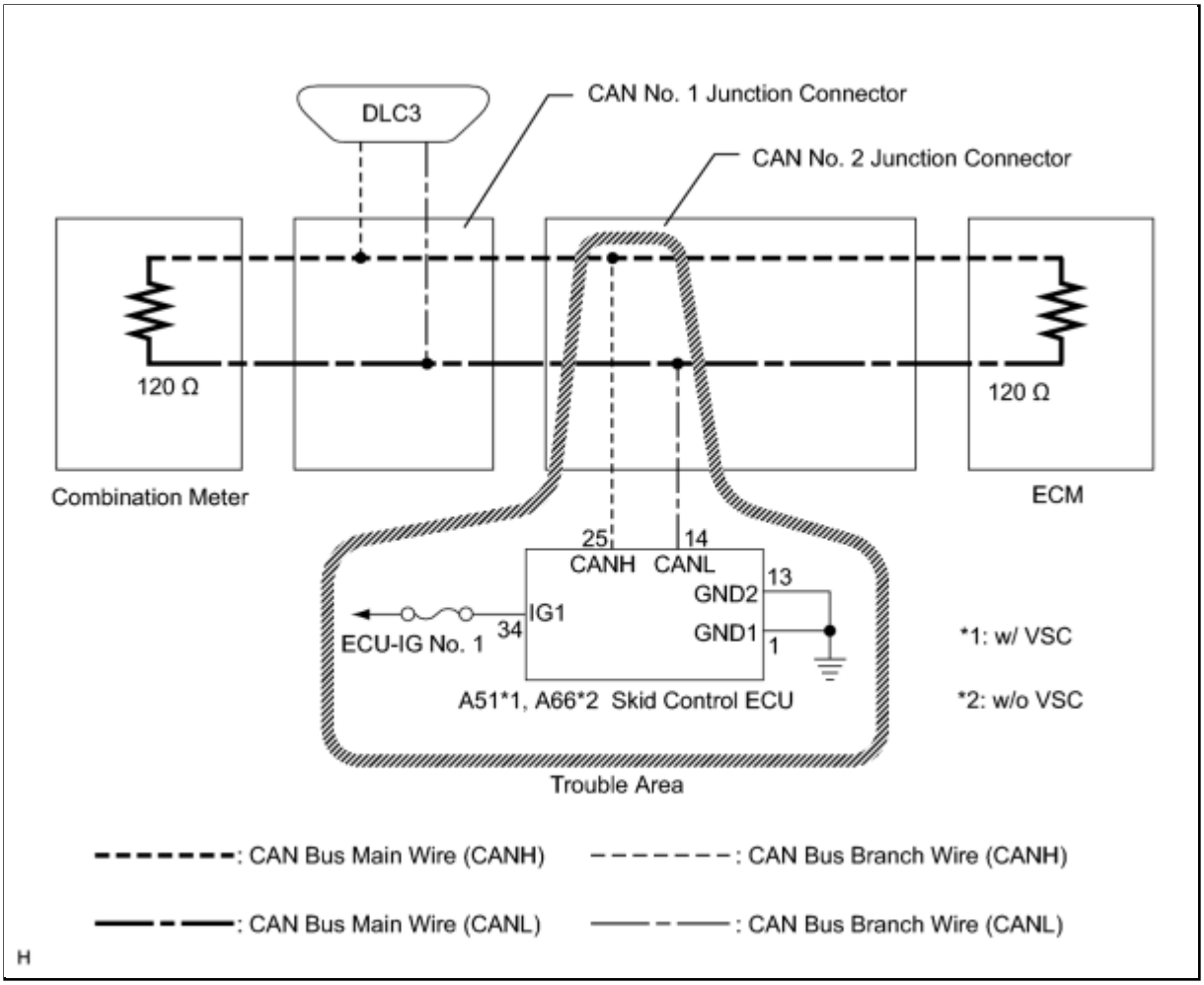

INSPECTION PROCEDURE

NOTICE:

- Turn the ignition switch off before measuring the resistance of the main CAN bus wires and the CAN Bus branch wire.
- After the ignition switch is turned off, check that the key reminder warning system and light reminder warning system are not in operation.
- Before measuring the resistance, leave the vehicle as is for at least 1 minute and do not operate the ignition switch, any other switches or the doors. If any doors need to be opened in order to check the connectors, open the doors and leave them open.

HINT:

- Operating the ignition switch, any other switches or a door triggers related ECU and sensor communication on the CAN. This communication will cause the resistance value to change.
- Even after DTCs are cleared, if a DTC is stored again after driving the vehicle for a while, the malfunction may be occurring due to vibration of the vehicle. In such a case, wiggling the ECUs or wire harness while performing the inspection below will help determine the cause of the malfunction.

PROCEDURE

1.	**CHECK CAN BUS WIRE FOR DISCONNECTION (SKID CONTROL ECU BRANCH WIRE)**

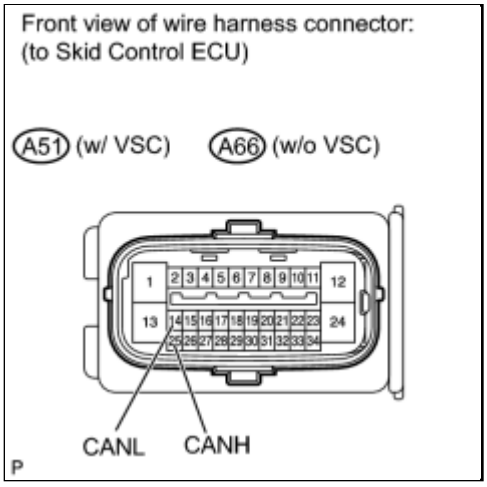

(a) Turn the ignition switch off.

(b) Disconnect the skid control ECU connector.

(c) Measure the resistance according to the value(s) in the table below.

Standard Resistance:

w/ VSC

w/o VSC

TESTER CONNECTION	SWITCH CONDITION	SPECIFIED CONDITION
A51-25 (CANH) - A51-14 (CANL)	Ignition switch off	54 to 69 Ω

TESTER CONNECTION	SWITCH CONDITION	SPECIFIED CONDITION
A66-25 (CANH) - A66-14 (CANL)	Ignition switch off	54 to 69 Ω

NG ▶ **REPAIR OR REPLACE CAN BUS BRANCH WIRE OR CONNECTOR (SKID CONTROL ECU BRANCH WIRE)**

OK ▼

2.	**CHECK HARNESS AND CONNECTOR (IG1, GND1)**

(a) Disconnect the skid control ECU connector.

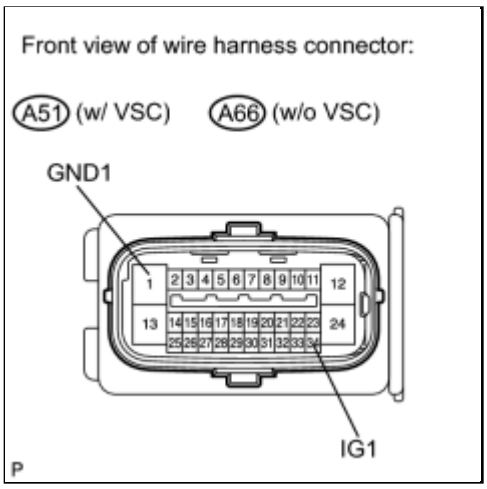

(b) Measure the resistance according to the value(s) in the table below.

Standard Resistance:

w/ VSC

w/o VSC

TESTER CONNECTION	CONDITION	SPECIFIED CONDITION
A51-1 (GND1) - Body ground	Always	Below 1 Ω

TESTER CONNECTION	CONDITION	SPECIFIED CONDITION
A66-1 (GND1) - Body ground	Always	Below 1 Ω

(c) Measure the voltage according to the value(s) in the table below.

Standard Voltage:

w/ VSC

w/o VSC

TESTER CONNECTION	SWITCH CONDITION	SPECIFIED CONDITION
A51-34 (IG1) - Body ground	Ignition switch ON	10 to 14 V

TESTER CONNECTION	SWITCH CONDITION	SPECIFIED CONDITION
A66-34 (IG1) - Body ground	Ignition switch ON	10 to 14 V

NG ▶ **REPAIR OR REPLACE HARNESS OR CONNECTOR**

OK ▼

3.	CHECK DTC OUTPUT

(a) Connect the Techstream to the DLC3.

(b) Turn the ignition switch to ON.

(c) Turn the Techstream on.

(d) Enter the following menus: Chassis / ABS/VSC/TRC / DTC.

(e) Read the DTC.

OK:
C1241 is not stored.
Result:

RESULT	PROCEED TO
OK (w/o VSC)	A
OK (w/ VSC)	B
NG (w/o VSC)	C
NG (w/ VSC)	D

D ▶ **GO TO DTC CHART (C1241 w/ VSC)**

C ▶ **GO TO DTC CHART (C1241 w/o VSC)**

B ▶ **REPLACE BRAKE ACTUATOR ASSEMBLY (w/ VSC)**

A ▶ **REPLACE BRAKE ACTUATOR ASSEMBLY (w/o VSC)**

Last Modified: 3-10-2010	6.4 J	**From:** 200901
Model Year: 2010	**Model:** Corolla	**Doc ID:** RM000001F1U02JX
Title: NETWORKING: CAN COMMUNICATION SYSTEM: Air Conditioning Amplifier Communication Stop Mode (2010 Corolla)		

Air Conditioning Amplifier Communication Stop Mode

DESCRIPTION

DETECTION ITEM	SYMPTOM	TROUBLE AREA
Air Conditioning Amplifier Communication Stop Mode	• "Air Conditioner" is not displayed on "CAN Bus Check" screen of the Techstream • Applies to "Air Conditioning Amplifier Communication Stop Mode" in "DTC Combination Table"	• Power source circuit of the air conditioning amplifier • Air conditioning amplifier branch wire or connector • Air conditioning amplifier

WIRING DIAGRAM

for Automatic Air Conditioning:

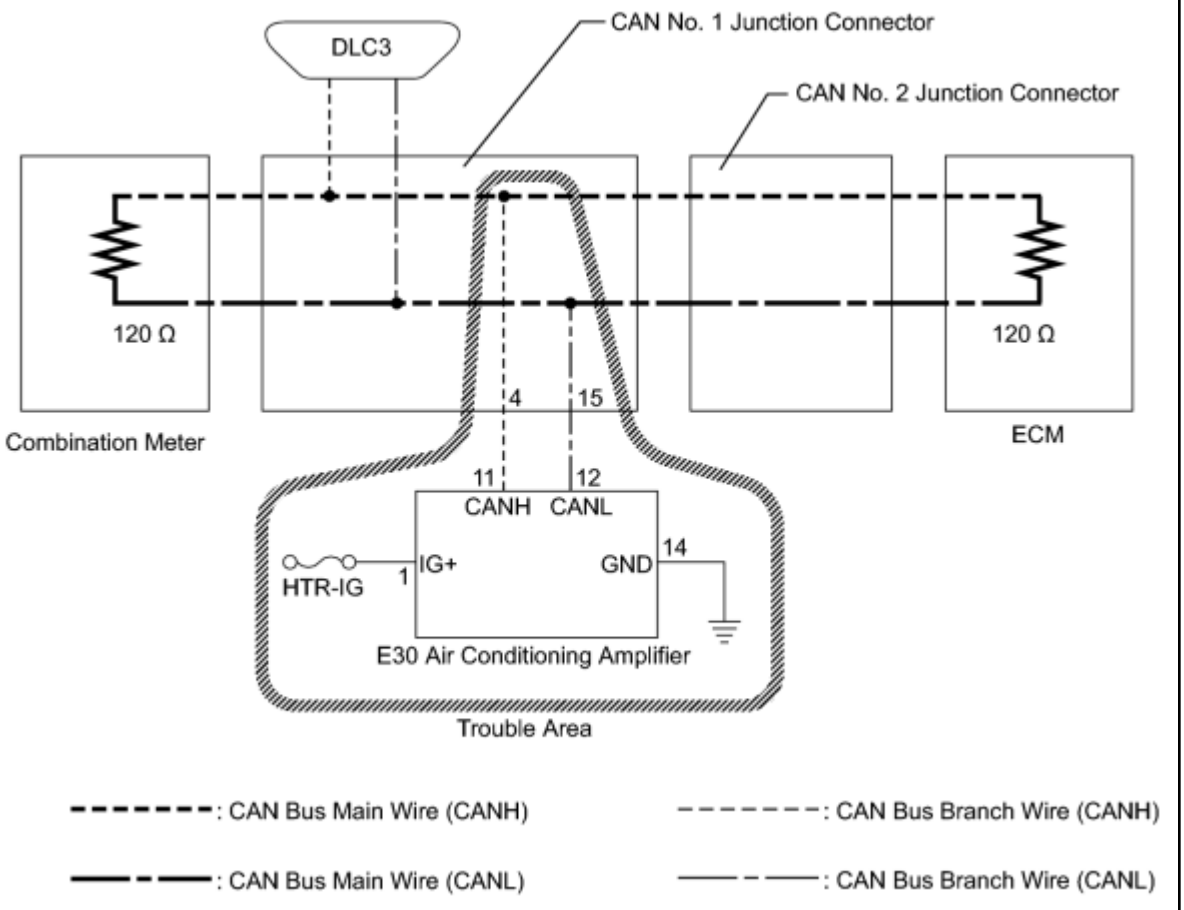

H

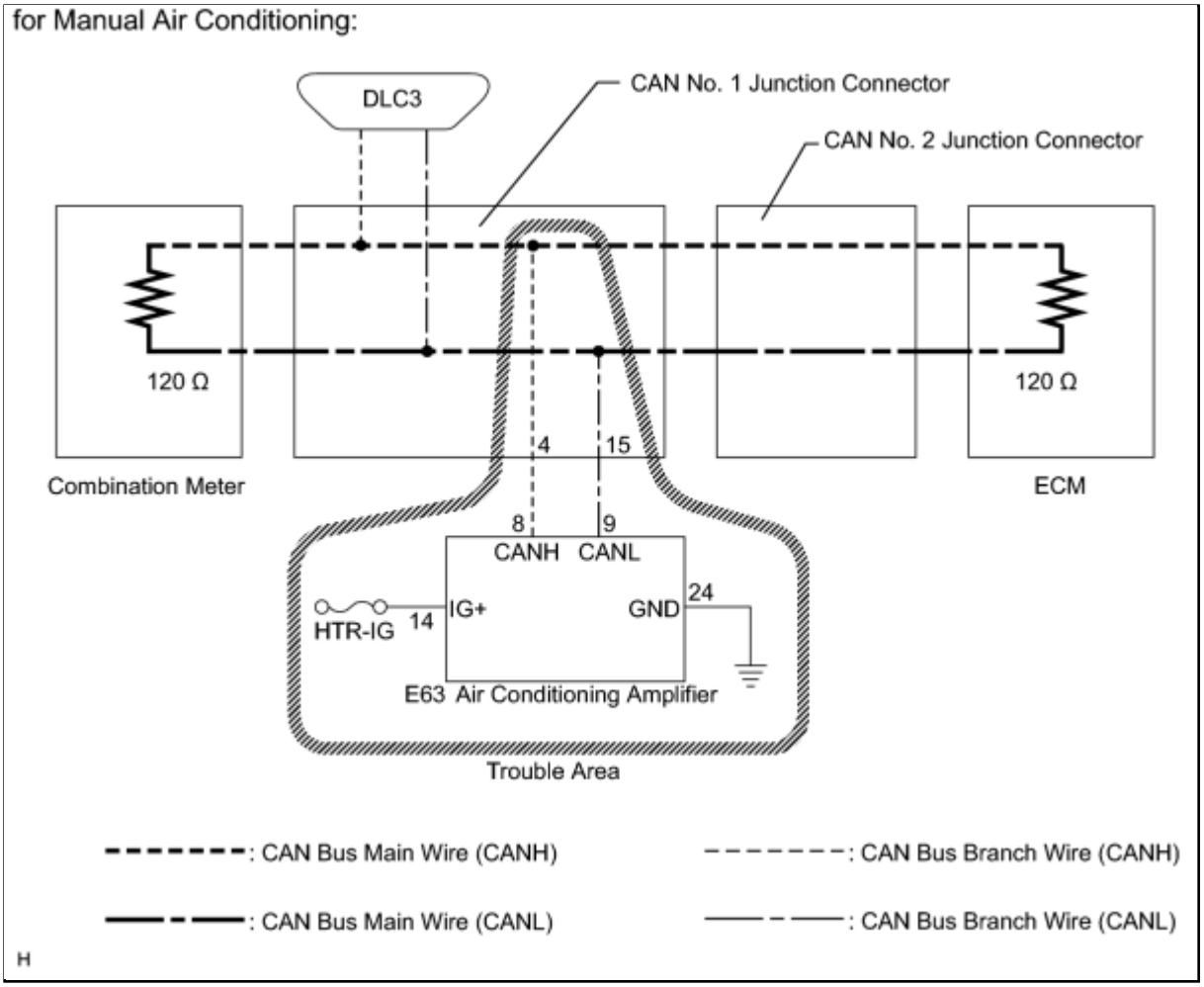

INSPECTION PROCEDURE

NOTICE:

- Turn the ignition switch off before measuring the resistance of the main CAN bus wires and the CAN Bus branch wire.
- After the ignition switch is turned off, check that the key reminder warning system and light reminder warning system are not in operation.
- Before measuring the resistance, leave the vehicle as is for at least 1 minute and do not operate the ignition switch, any other switches or the doors. If any doors need to be opened in order to check the connectors, open the doors and leave them open.

HINT:

- Operating the ignition switch, any other switches or a door triggers related ECU and sensor communication on the CAN. This communication will cause the resistance value to change.
- Even after DTCs are cleared, if a DTC is stored again after driving the vehicle for a while, the malfunction may be occurring due to vibration of the vehicle. In such a case, wiggling the ECUs or wire harness while performing the inspection below will help determine the cause of the malfunction.

PROCEDURE

1.	**CHECK CAN BUS LINE FOR DISCONNECTION (AIR CONDITIONING AMPLIFIER BRANCH WIRE)**

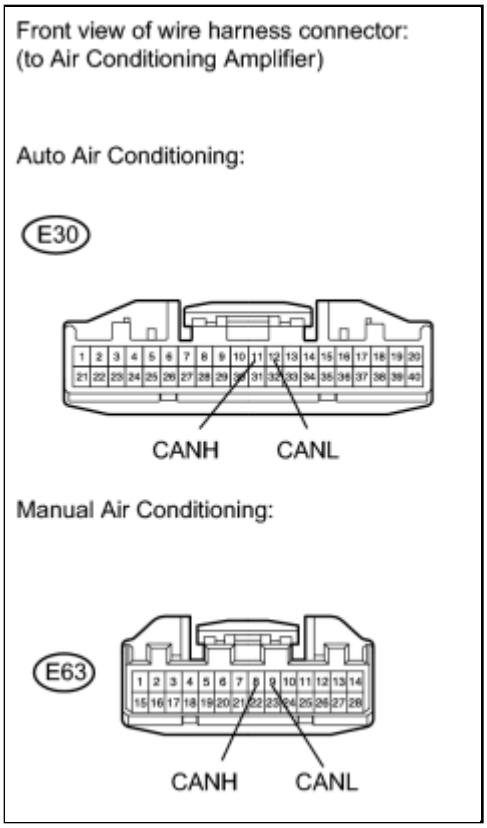

(a) Turn the ignition switch off.

(b) Disconnect the air conditioning amplifier connector.

(c) Measure the resistance according to the value(s) in the table below.

Standard Resistance:

Automatic Air Conditioning

Manual Air Conditioning

TESTER CONNECTION	SWITCH CONDITION	SPECIFIED CONDITION
E30-11 (CANH) - E30-12 (CANL)	Ignition switch off	54 to 69 Ω

TESTER CONNECTION	SWITCH CONDITION	SPECIFIED CONDITION
E63-8 (CANH) - E63-9 (CANL)	Ignition switch off	54 to 69 Ω

NG ▶ **REPAIR OR REPLACE CAN BUS BRANCH WIRE OR CONNECTOR (AIR CONDITIONING AMPLIFIER BRANCH WIRE)**

OK

2.	CHECK HARNESS AND CONNECTOR (IG+, GND)

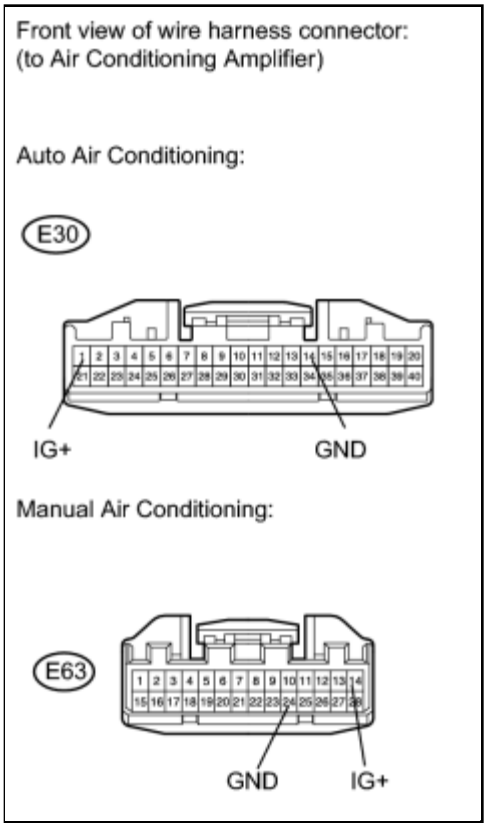

(a) Disconnect the air conditioning amplifier connector.

(b) Measure the resistance according to the value(s) in the table below.

Standard Resistance:

Automatic Air Conditioning

Manual Air Conditioning

TESTER CONNECTION	CONDITION	SPECIFIED CONDITION
E30-14 (GND) - Body ground	Always	Below 1 Ω

TESTER CONNECTION	CONDITION	SPECIFIED CONDITION
E63-24 (GND) - Body ground	Always	Below 1 Ω

(c) Measure the voltage according to the value(s) in the table below.

Standard Voltage:

Automatic Air Conditioning

Manual Air Conditioning

TESTER CONNECTION	SWITCH CONDITION	SPECIFIED CONDITION
E30-1 (IG+) - Body ground	Ignition switch ON	10 to 14 V

TESTER CONNECTION	SWITCH CONDITION	SPECIFIED CONDITION
E63-14 (IG+) - Body ground	Ignition switch ON	10 to 14 V

NG ▶ **REPAIR OR REPLACE HARNESS OR CONNECTOR**

OK ▶ **REPLACE AIR CONDITIONING AMPLIFIER ASSEMBLY**

Last Modified: 3-10-2010	6.4 J	**From:** 200901
Model Year: 2010	**Model:** Corolla	**Doc ID:** RM000001FAD01DX
Title: NETWORKING: CAN COMMUNICATION SYSTEM: Check CAN Bus Lines for Short Circuit (2010 Corolla)		

Check CAN Bus Lines for Short Circuit

DESCRIPTION

There may be a short circuit in the CAN main wire and/or CAN branch wire when the resistance between terminals 6 (CANH) and 14 (CANL) of the DLC3 is below 54 Ω.

SYMPTOM	TROUBLE AREA
Resistance between terminals 6 (CANH) and 14 (CANL) of DLC3 is below 54 Ω.	Short in CAN bus wire • Skid control ECU • Power steering ECU • Steering angle sensor • Yaw rate sensor • ECM • Center airbag sensor assembly • Air conditioning amplifier • Combination meter • Main body ECU • Accessory gateway • CAN No. 1 junction connector • CAN No. 2 junction connector

WIRING DIAGRAM

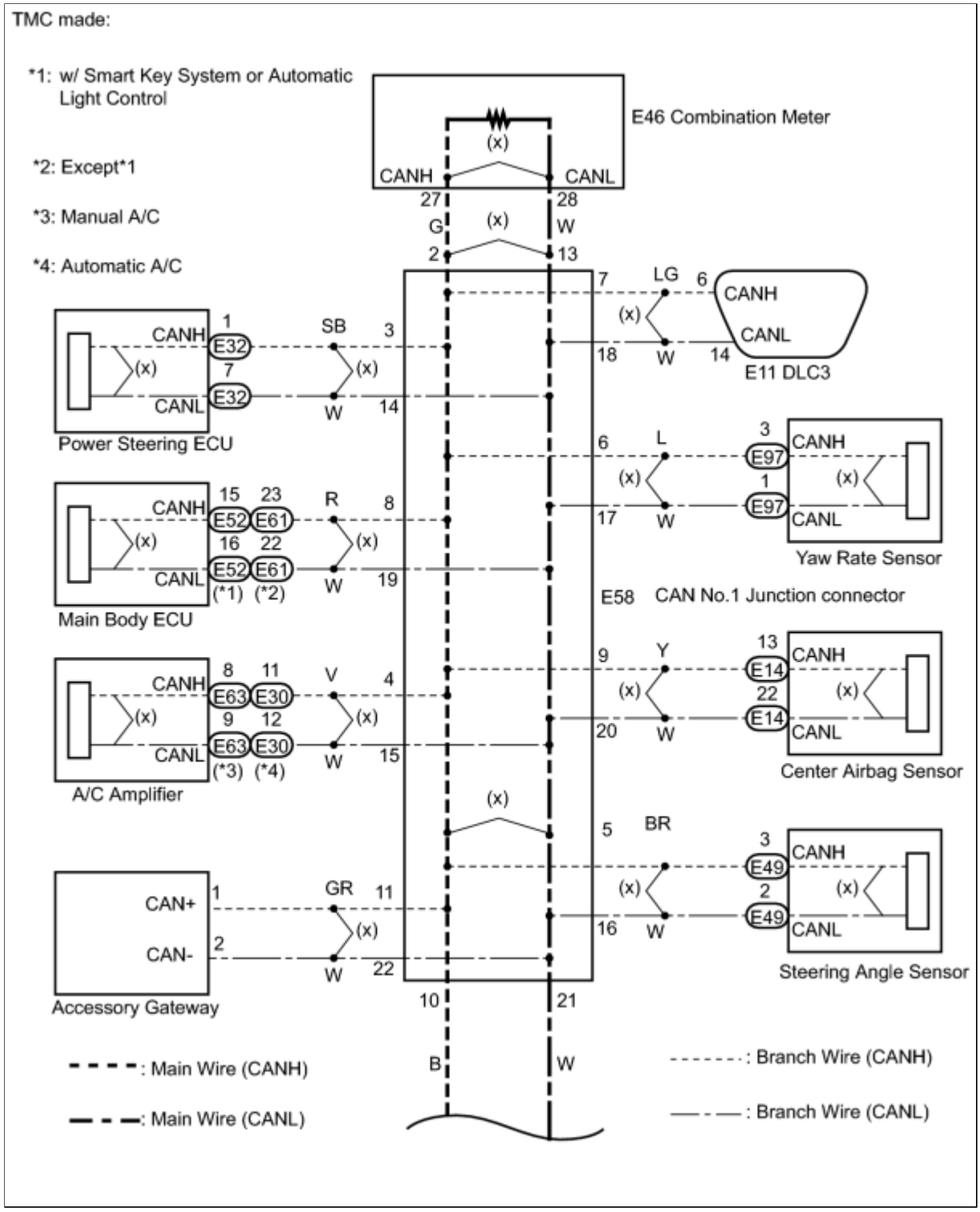
TMC made:
*1: w/ Smart Key System or Automatic Light Control
*2: Except*1
*3: Manual A/C
*4: Automatic A/C
E46 Combination Meter
CANH
CANL
(x)
27
28
G
W
2
13
7
LG
6
CANH
CANL
18
W
14
E11 DLC3
Power Steering ECU
1
E32
7
E32
SB
3
14
Main Body ECU
15
23
E52
E61
16
22
(*1)
(*2)
R
8
19
Yaw Rate Sensor
3
E97
1
E97
6
L
17
E58
CAN No.1 Junction connector
A/C Amplifier
8
11
E63
E30
9
12
(*3)
(*4)
V
4
15
Center Airbag Sensor
13
E14
22
E14
9
Y
20
Accessory Gateway
CAN+
CAN-
1
2
GR
11
22
Steering Angle Sensor
3
E49
2
E49
5
BR
16
10
21
B
W
: Main Wire (CANH)
: Main Wire (CANL)
: Branch Wire (CANH)
: Branch Wire (CANL)

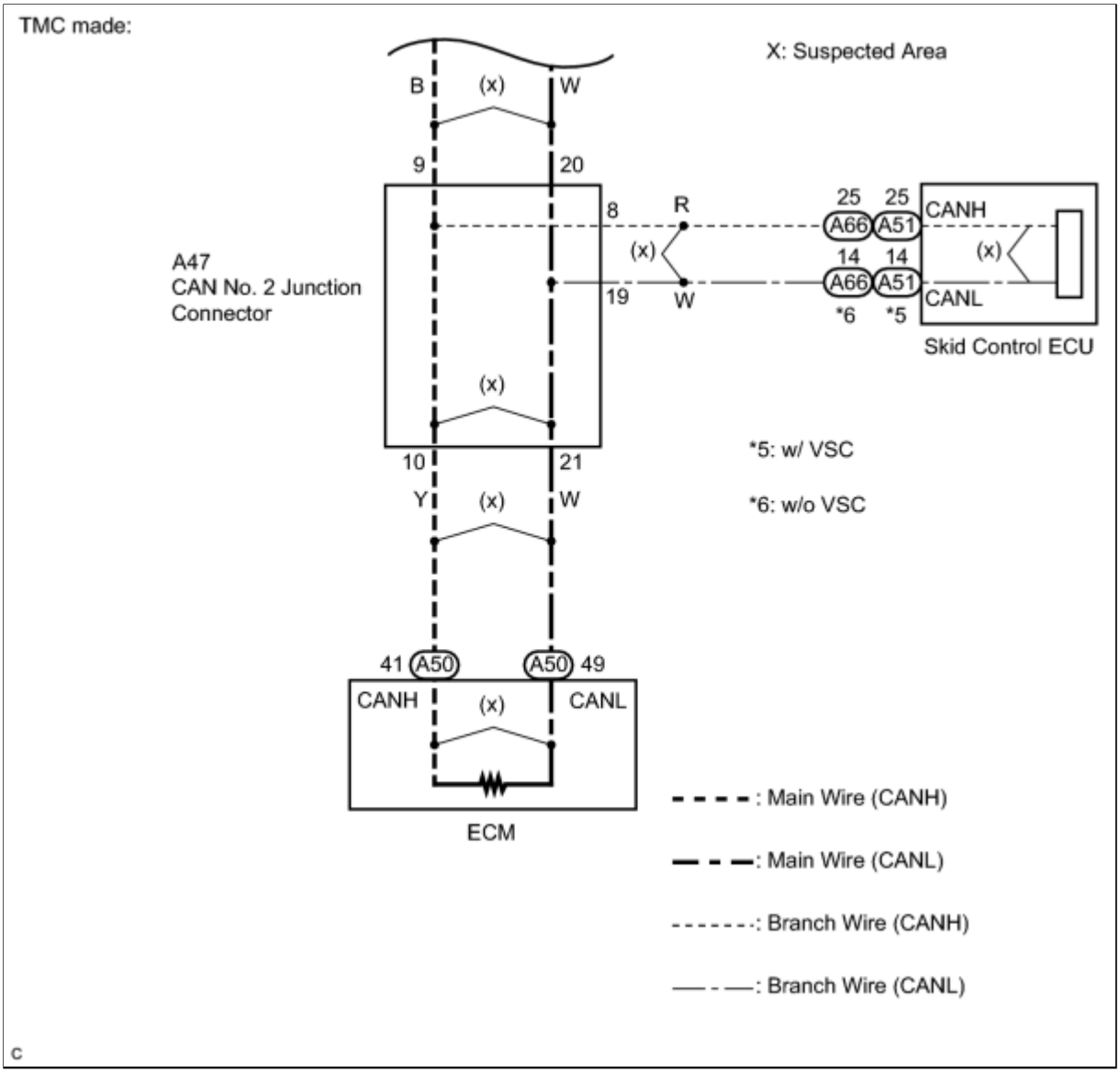
TMC made:
X: Suspected Area
B
(x)
W
9
20
8
R
25
25
CANH
A66
A51
(x)
14
14
(x)
A47
CAN No. 2 Junction
Connector
19
W
A66
A51
CANL
*6
*5
Skid Control ECU
(x)
*5: w/ VSC
10
21
Y
(x)
W
*6: w/o VSC
41
A50
A50
49
CANH
(x)
CANL
ECM
: Main Wire (CANH)
: Main Wire (CANL)
: Branch Wire (CANH)
: Branch Wire (CANL)
c

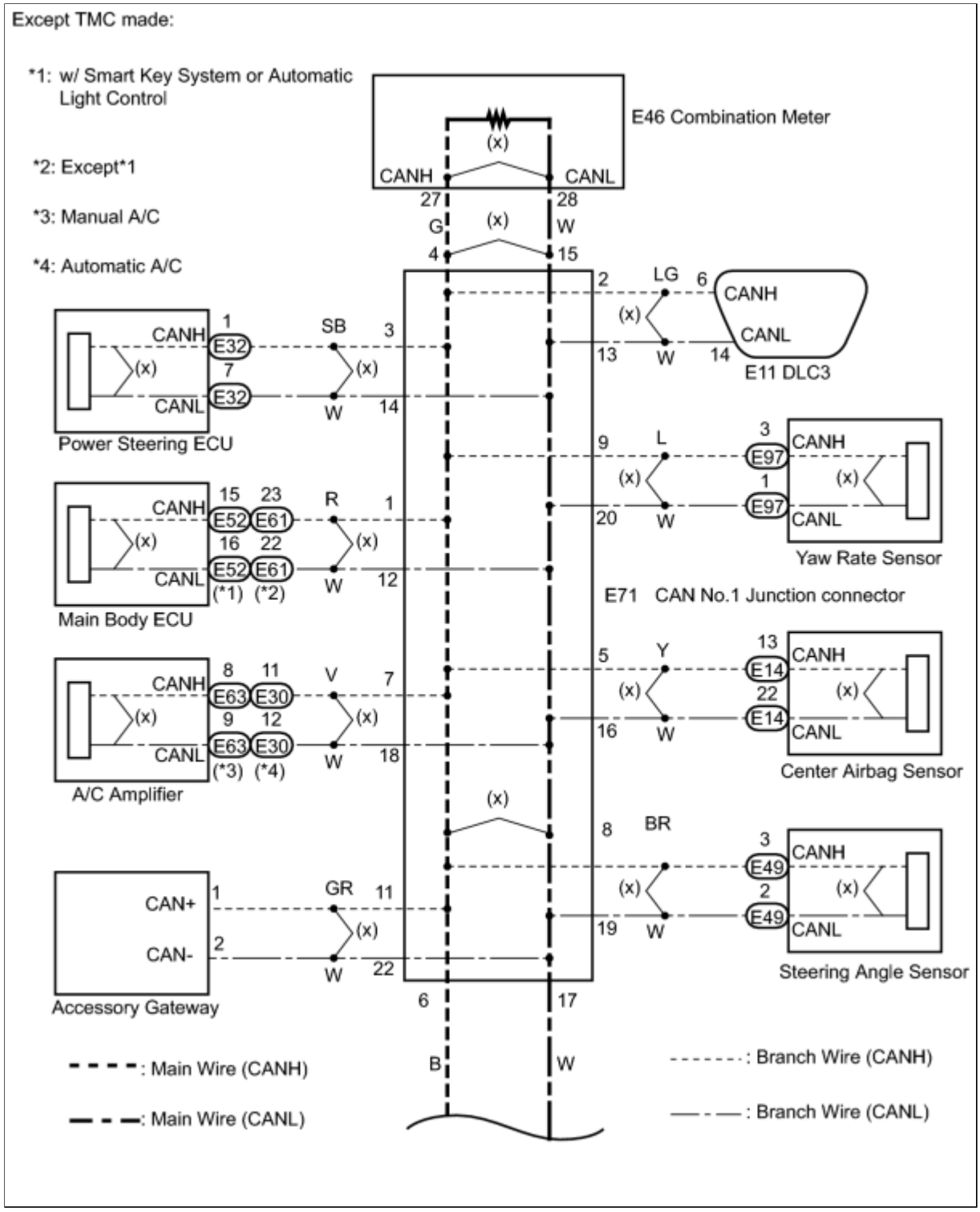
Except TMC made:
*1: w/ Smart Key System or Automatic Light Control
*2: Except*1
*3: Manual A/C
*4: Automatic A/C
E46 Combination Meter
CANH
CANL
27
28
G
W
4
15
E11 DLC3
Power Steering ECU
Main Body ECU
A/C Amplifier
Yaw Rate Sensor
E71 CAN No.1 Junction connector
Center Airbag Sensor
Steering Angle Sensor
Accessory Gateway
CAN+
CAN-
E32
E52
E61
E63
E30
E97
E14
E49
SB
R
V
GR
L
Y
BR
LG
B
17
6
: Main Wire (CANH)
: Main Wire (CANL)
: Branch Wire (CANH)
: Branch Wire (CANL)

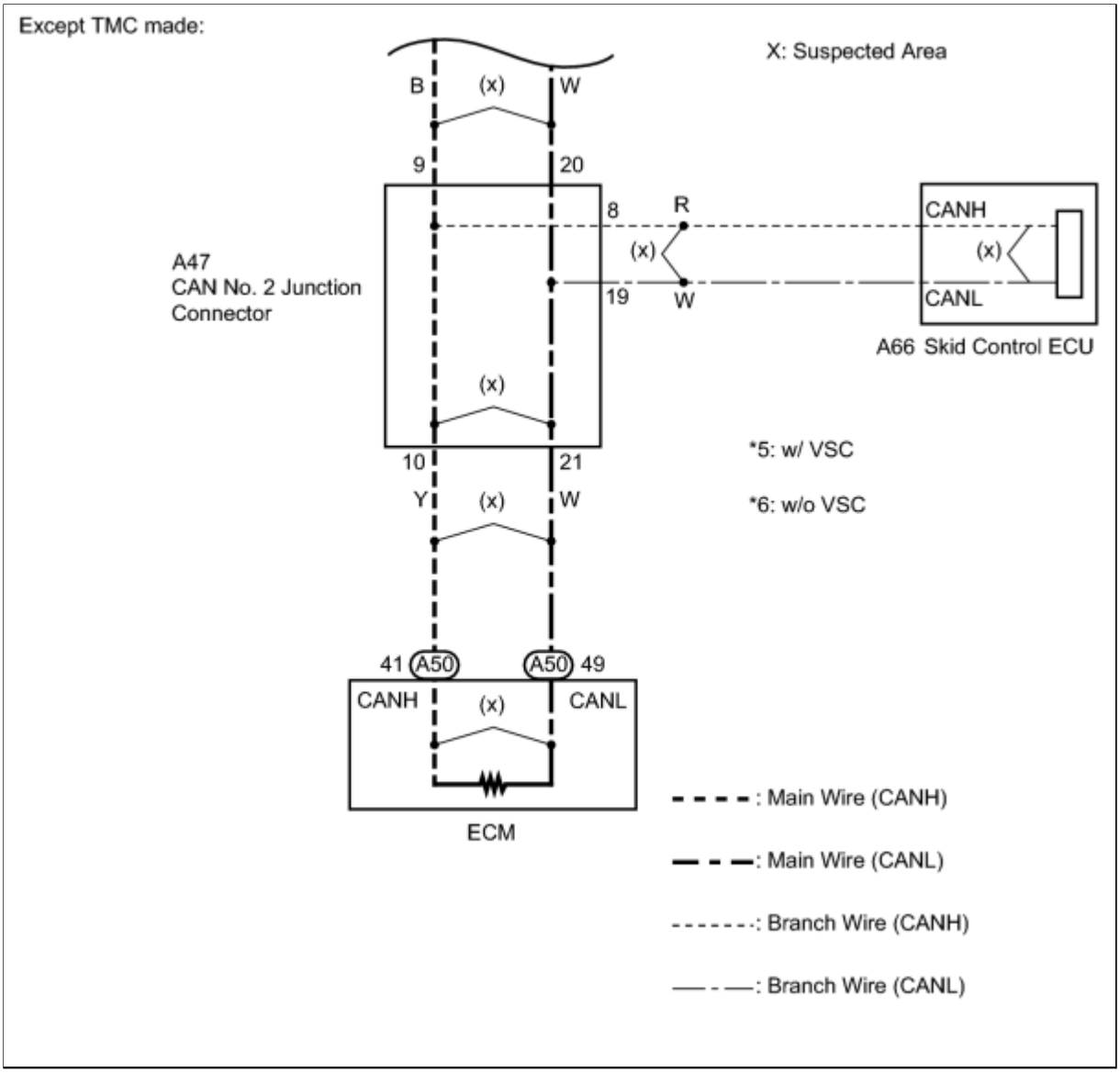

INSPECTION PROCEDURE

NOTICE:

- Turn the ignition switch off before measuring the resistance of the main CAN bus wires and the CAN Bus branch wire.
- After the ignition switch is turned off, check that the key reminder warning system and light reminder warning system are not in operation.
- Before measuring the resistance, leave the vehicle as is for at least 1 minute and do not operate the ignition switch, any other switches or the doors. If any doors need to be opened in order to check the connectors, open the doors and leave them open.

HINT:

- Operating the ignition switch, any other switches, or a door triggers related ECU and sensor communication on the CAN. This communication will cause the resistance value to change.
- Even after DTCs are cleared, if a DTC is stored again after driving the vehicle for a while, the malfunction may be occurring due to vibration of the vehicle. In such a case, wiggling the ECUs or wire harness while performing the inspection below will help determine the cause of the malfunction.

PROCEDURE

1.	**CHECK FOR SHORT IN CAN BUS WIRES (DLC3 BRANCH WIRE)**

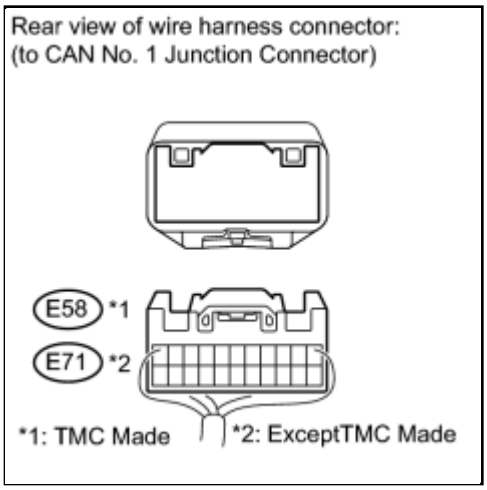

(a) Turn the ignition switch off.

(b) Disconnect the CAN No. 1 junction connector.

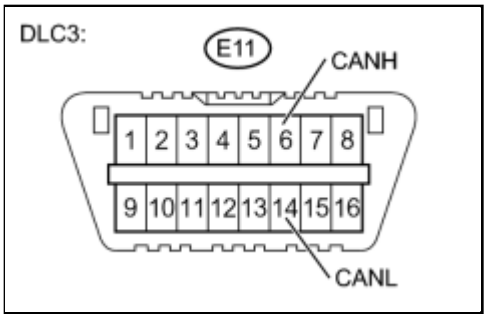

(c) Measure the resistance according to the value(s) in the table below.

Standard Resistance:

TESTER CONNECTION	SWITCH CONDITION	SPECIFIED CONDITION
E11-6 (CANH) - E11-14 (CANL)	Ignition switch off	1 MΩ or higher

NG ▶ **REPAIR OR REPLACE CAN BRANCH WIRE CONNECTED TO DLC3**

OK ▼

2.	**CHECK FOR SHORT IN CAN BUS WIRES (CAN NO. 2 JUNCTION CONNECTOR)**

(a) Reconnect the CAN No. 1 junction connector.

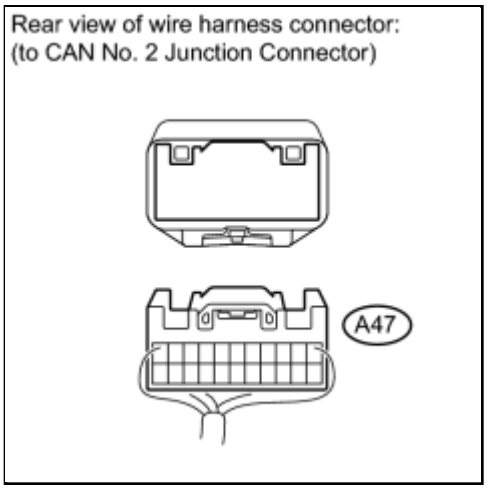

(b) Disconnect the CAN No. 2 junction connector.

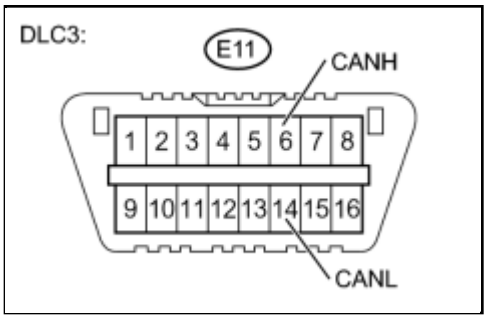

(c) Measure the resistance according to the value(s) in the table below.

Standard Resistance:

TESTER CONNECTION	SWITCH CONDITION	SPECIFIED CONDITION
E11-6 (CANH) - E11-14 (CANL)	Ignition switch off	108 to 132 Ω

NG ▶ **CHECK FOR SHORT IN CAN BUS WIRES (CAN NO. 1 JUNCTION CONNECTOR - CAN NO. 2 JUNCTION CONNECTOR)**

OK ▼

3.	**CHECK FOR SHORT IN CAN BUS WIRES (ECM MAIN WIRE)**

(a) Measure the resistance according to the value(s) in the table below.

NOTICE:

The resistance must be measured after the CAN No. 2 junction connector is disconnected.

Standard Resistance:

TESTER	SWITCH	SPECIFIED

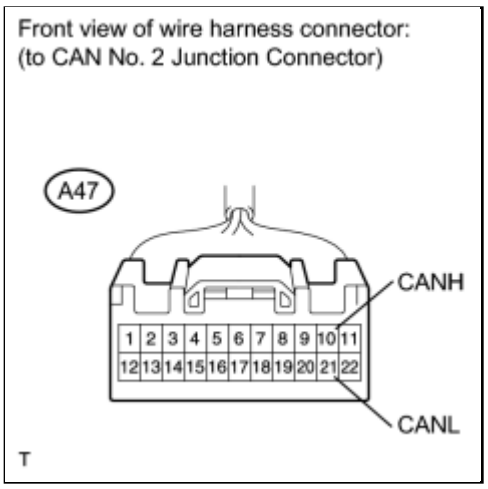

CONNECTION	CONDITION	CONDITION
A47-10 (CANH) - A47-21 (CANL)	Ignition switch off	108 to 132 Ω

NG ▶ **CHECK FOR SHORT IN CAN BUS WIRES (CAN NO. 2 JUNCTION CONNECTOR - ECM MAIN WIRE)**

OK ▼

4.	**CHECK FOR SHORT IN CAN BUS WIRES (CAN NO. 2 JUNCTION CONNECTOR - SKID CONTROL ECU)**

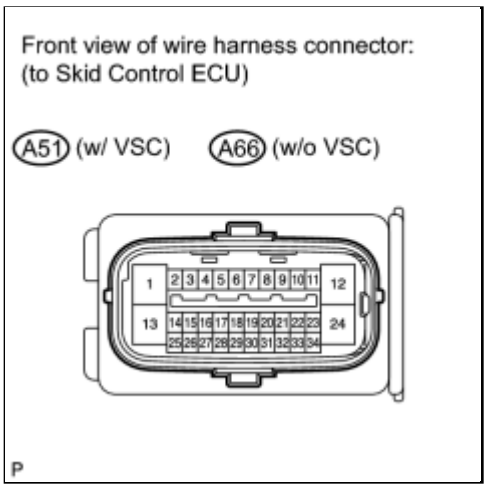

(a) Disconnect the skid control ECU connector.

(b) Measure the resistance according to the value(s) in the table below.

NOTICE:

The resistance must be measured after the skid control ECU connector and CAN No. 2 junction connector are disconnected.

Standard Resistance:

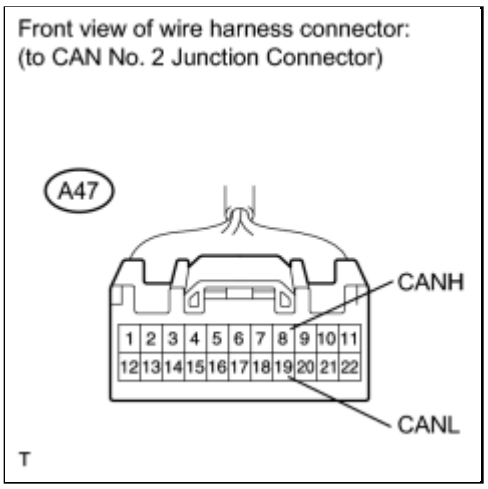

TESTER CONNECTION	SWITCH CONDITION	SPECIFIED CONDITION
A47-8 (CANH) - A47-19 (CANL)	Ignition switch off	1 MΩ or higher

NG ▶ **REPAIR OR REPLACE CAN BUS BRANCH WIRE OR CONNECTOR (CAN NO. 2 JUNCTION CONNECTOR - SKID CONTROL ECU)**

OK ▼

5.	**CHECK FOR SHORT IN CAN BUS WIRES (SKID CONTROL ECU)**

(a) Reconnect the CAN No. 2 junction connector.

(b) Measure the resistance according to the value(s) in the table below.

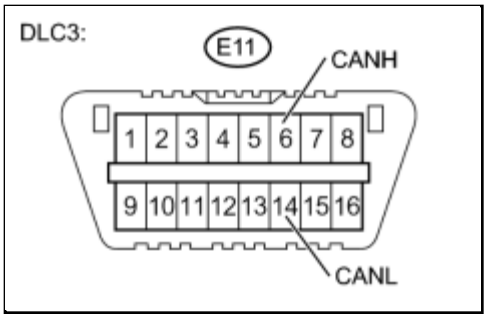

NOTICE:

The resistance must be measured after the skid control ECU connector is disconnected.

The resistance must be measured after the CAN No. 1and CAN No. 2 junction connector are reconnected.

Standard Resistance:

TESTER CONNECTION	SWITCH CONDITION	SPECIFIED CONDITION
E11-6 (CANH) - E11-14 (CANL)	Ignition switch off	54 Ω or higher

Result:

RESULT	PROCEED TO

RESULT	PROCEED TO
OK (w/o VSC)	A
OK (w/ VSC)	B
NG	C

C ▶ **REPLACE JUNCTION CONNECTOR (CAN No. 2)**

B ▶ **REPLACE BRAKE ACTUATOR ASSEMBLY**

A ▶ **REPLACE BRAKE ACTUATOR ASSEMBLY**

6.	**CHECK FOR SHORT IN CAN BUS WIRES (CAN NO. 2 JUNCTION CONNECTOR - ECM MAIN WIRE)**

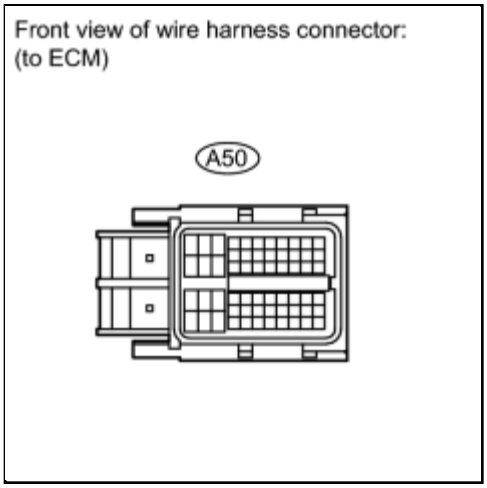

(a) Disconnect the ECM connector.

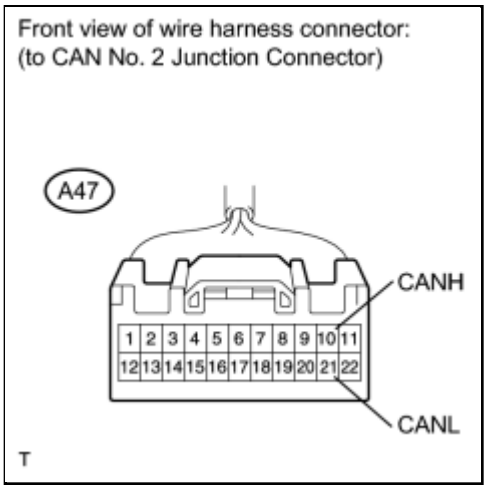

(b) Measure the resistance according to the value(s) in the table below.

NOTICE:

The resistance must be measured after the ECM connector and CAN No. 2 junction connector are disconnected.

Standard Resistance:

TESTER CONNECTION	SWITCH CONDITION	SPECIFIED CONDITION
A47-10 (CANH) - A47-21 (CANL)	Ignition switch off	1 MΩ or higher

Result:

RESULT	PROCEED TO
OK (for 2ZR-FE)	A
OK (for 2AZ-FE)	B
NG	C

C ▶ **REPAIR OR REPLACE CAN MAIN WIRE OR CONNECTOR (CAN NO. 2 JUNCTION CONNECTOR - ECM)**

B ▶ **REPLACE ECM**

A ▶ **REPLACE ECM**

7.	**CHECK FOR SHORT IN CAN BUS WIRES (CAN NO. 1 JUNCTION CONNECTOR - CAN NO. 2 JUNCTION CONNECTOR)**

(a) TMC made:

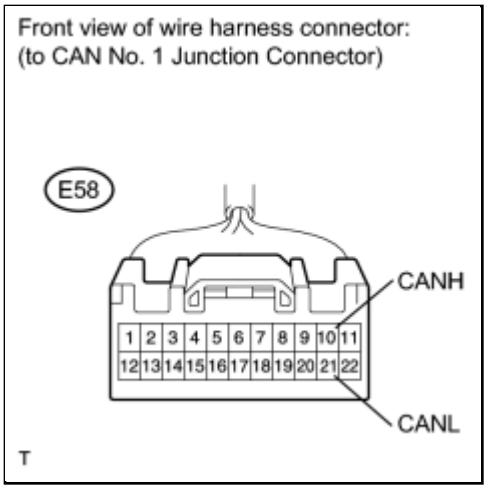

(1) Disconnect the CAN No. 1 junction connector.

(2) Measure the resistance according to the value(s) in the table below.

NOTICE:

The resistance must be measured after the CAN No. 2 junction connector is disconnected.

Standard Resistance:

TESTER CONNECTION	SWITCH CONDITION	SPECIFIED CONDITION
E58-10 (CANH) - E58-21 (CANL)	Ignition switch off	1 MΩ or higher

(b) Except TMC made:

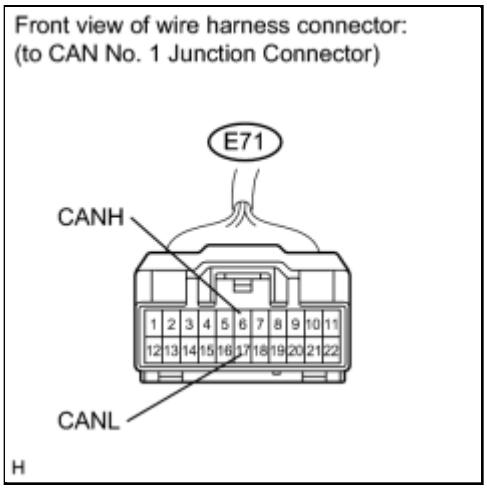

(1) Disconnect the CAN No. 1 junction connector.

(2) Measure the resistance according to the value(s) in the table below.

NOTICE:

The resistance must be measured after the CAN No. 2 junction connector is disconnected.

Standard Resistance:

TESTER CONNECTION	SWITCH CONDITION	SPECIFIED CONDITION
E71-6 (CANH) - E71-17 (CANL)	Ignition switch off	1 MΩ or higher

NG ▶ **REPAIR OR REPLACE CAN MAIN WIRE OR CONNECTOR (CAN NO. 1 JUNCTION CONNECTOR - CAN NO. 2 JUNCTION CONNECTOR)**

OK ▼

8.	**CHECK FOR SHORT IN CAN BUS WIRES (CAN NO. 1 JUNCTION CONNECTOR - COMBINATION METER)**

(a) TMC made:

(1) Measure the resistance according to the value(s) in the table below.

NOTICE:

The resistance must be measured after the CAN No. 1 junction connector is disconnected.

Standard Resistance:

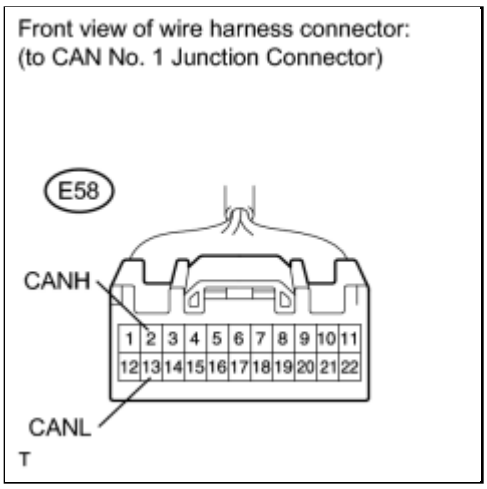

TESTER CONNECTION	SWITCH CONDITION	SPECIFIED CONDITION
E58-2 (CANH) - E58-13 (CANL)	Ignition switch off	108 to 132 Ω

(b) Except TMC made:

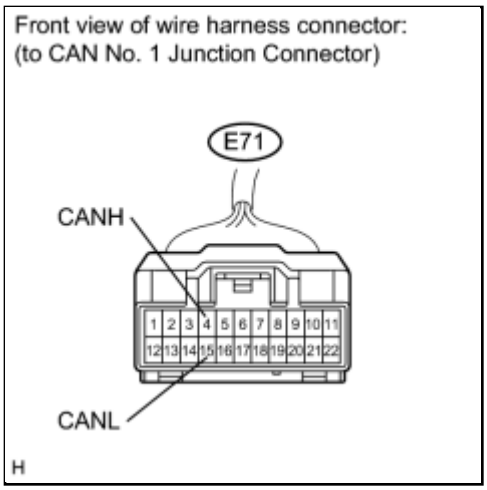

(1) Measure the resistance according to the value(s) in the table below.

NOTICE:

The resistance must be measured after the CAN No. 1 junction connector is disconnected.

Standard Resistance:

TESTER CONNECTION	SWITCH CONDITION	SPECIFIED CONDITION
E71-4 (CANH) - E71-15 (CANL)	Ignition switch off	1 MΩ or higher

NG ▶ **CHECK FOR SHORT IN CAN BUS WIRES (COMBINATION METER ECU)**

OK ▼

9.	**CHECK FOR SHORT IN CAN BUS WIRES (CAN NO. 1 JUNCTION CONNECTOR - STEERING ANGLE SENSOR)**

(a) Disconnect the steering angle sensor connector.

Rear view of wire harness connector:
(to Steering Angle Sensor)

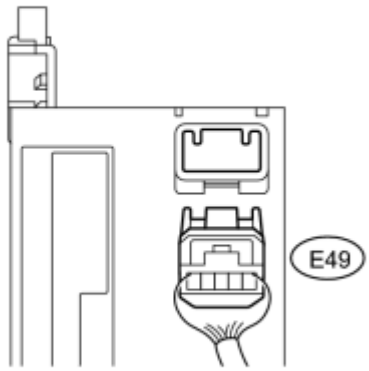

(b) TMC made:

Front view of wire harness connector:
(to CAN No. 1 Junction Connector)

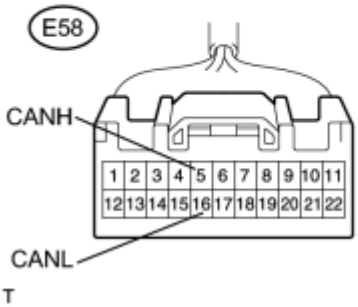

T

(1) Measure the resistance according to the value(s) in the table below.

NOTICE:

The resistance must be measured after the steering angle sensor connector and CAN No. 1 junction connector are disconnected.

Standard Resistance:

TESTER CONNECTION	SWITCH CONDITION	SPECIFIED CONDITION
E58-5 (CANH) - E58-16 (CANL)	Ignition switch off	1 MΩ or higher

(c) Except TMC made:

(1) Measure the resistance according to the value(s) in the table below.

NOTICE:

The resistance must be measured after the CAN No. 1 junction connector is disconnected.

Standard Resistance:

TESTER CONNECTION	SWITCH CONDITION	SPECIFIED CONDITION
E71-8 (CANH) -	Ignition switch	1 MΩ or higher

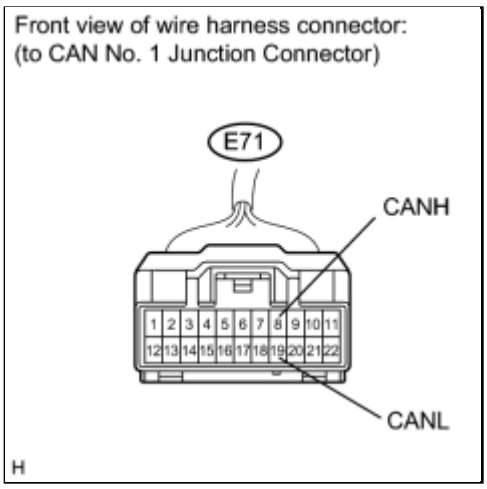

E71-19 (CANL)	off	

NG ▶ **REPAIR OR REPLACE CAN BUS BRANCH WIRE OR CONNECTOR (CAN NO. 1 JUNCTION CONNECTOR - STEERING ANGLE SENSOR)**

OK ▼

10.	**CHECK FOR SHORT IN CAN BUS WIRES (CAN NO. 1 JUNCTION CONNECTOR - POWER STEERING ECU)**

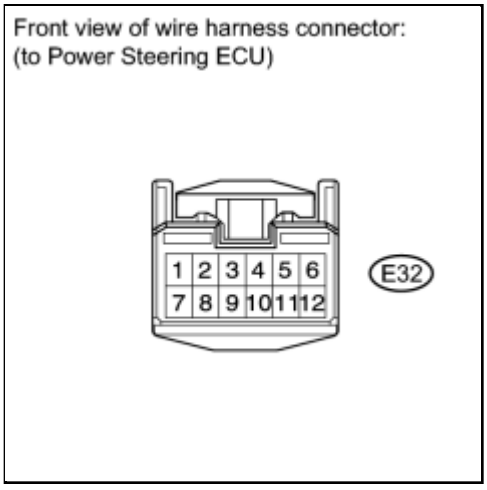

(a) Disconnect the power steering ECU connector.

(b) TMC made:

(1) Measure the resistance according to the value(s) in the table below.

NOTICE:

The resistance must be measured after the power steering ECU

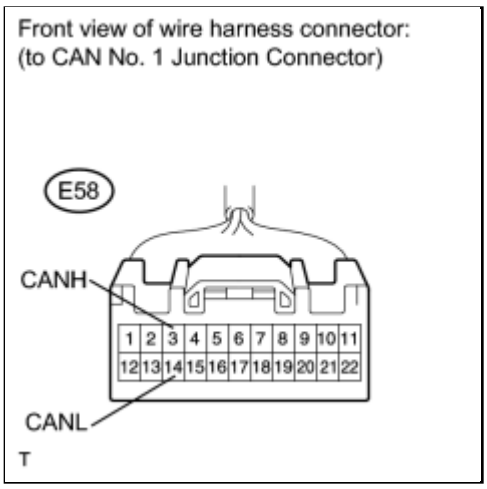

connector and CAN No. 1 junction connector are disconnected.

Standard Resistance:

TESTER CONNECTION	SWITCH CONDITION	SPECIFIED CONDITION
E58-3 (CANH) - E58-14 (CANL)	Ignition switch off	1 MΩ or higher

(c) Except TMC made:

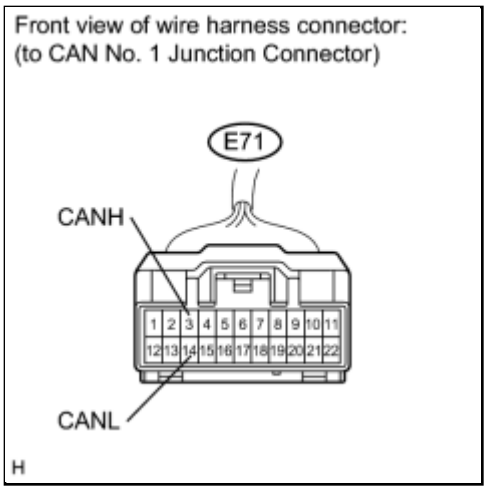

(1) Measure the resistance according to the value(s) in the table below.

NOTICE:

The resistance must be measured after the CAN No. 1 junction connector is disconnected.

Standard Resistance:

TESTER CONNECTION	SWITCH CONDITION	SPECIFIED CONDITION
E71-3 (CANH) - E71-14 (CANL)	Ignition switch off	1 MΩ or higher

NG ▶ **REPAIR OR REPLACE CAN BUS BRANCH WIRE OR CONNECTOR (CAN NO. 1 JUNCTION CONNECTOR - POWER STEERING ECU)**

OK ▼

11.	**CHECK FOR SHORT IN CAN BUS WIRES (CAN NO. 1 JUNCTION CONNECTOR - CENTER AIRBAG SENSOR ASSEMBLY)**

(a) Disconnect the center airbag sensor assembly connector.

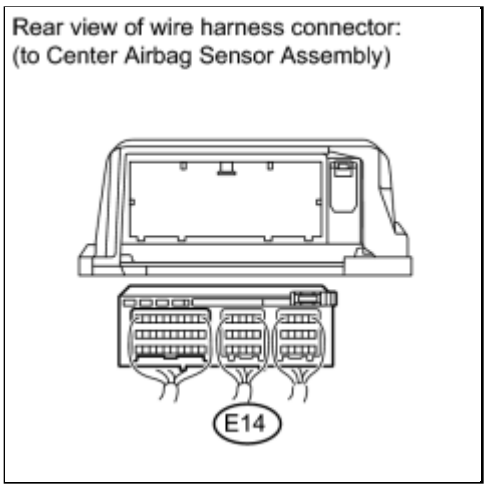

(b) TMC made:

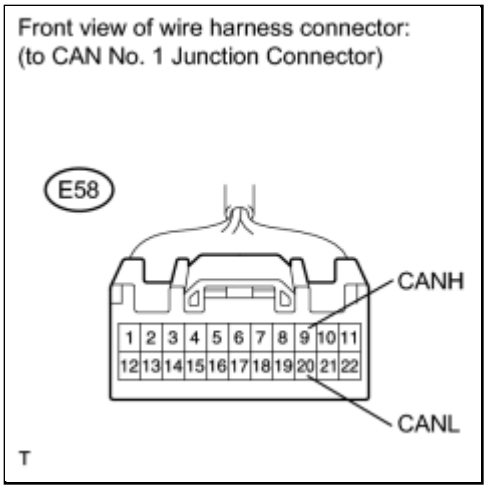

(1) Measure the resistance according to the value(s) in the table below.

NOTICE:

The resistance must be measured after the center airbag sensor assembly connector and CAN No. 1 junction connector are disconnected.

Standard Resistance:

TESTER CONNECTION	SWITCH CONDITION	SPECIFIED CONDITION
E58-9 (CANH) - E58-20 (CANL)	Ignition switch off	1 MΩ or higher

(c) Except TMC made:

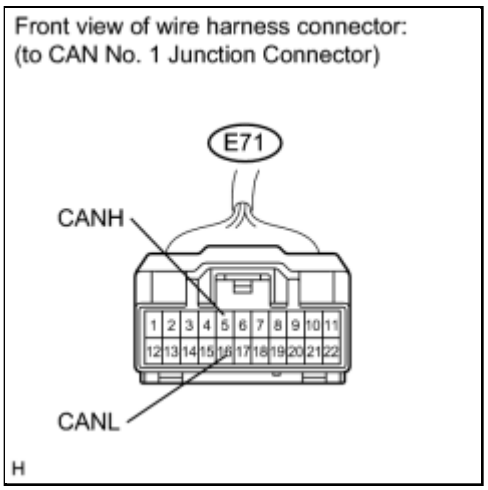

(1) Measure the resistance according to the value(s) in the table below.

NOTICE:

The resistance must be measured after the CAN No. 1 junction connector is disconnected.

Standard Resistance:

TESTER CONNECTION	SWITCH CONDITION	SPECIFIED CONDITION
E71-5 (CANH) - E71-16 (CANL)	Ignition switch off	1 MΩ or higher

NG ▶ **REPAIR OR REPLACE CAN BUS BRANCH WIRE OR CONNECTOR (CAN NO. 1 JUNCTION CONNECTOR -**

OK

12.	**CHECK FOR SHORT IN CAN BUS WIRES (CAN NO. 1 JUNCTION CONNECTOR - AIR CONDITIONING AMPLIFIER)**

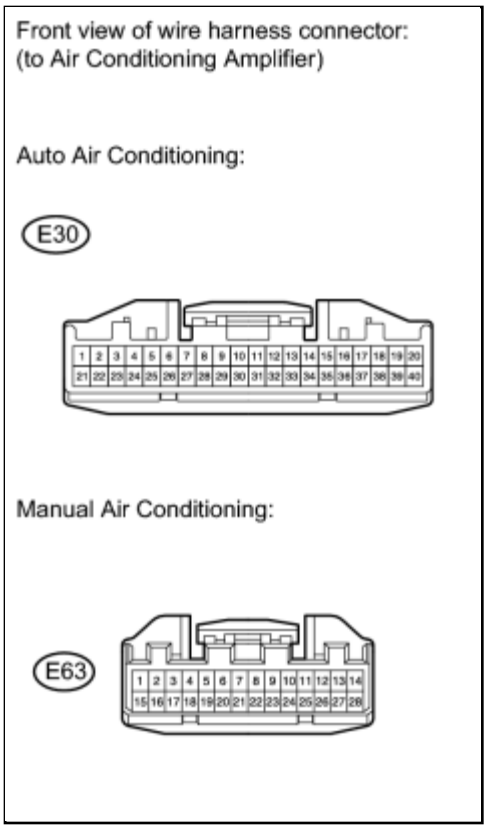

(a) Disconnect the air conditioning amplifier connector.

(b) TMC made:

(1) Measure the resistance according to the value(s) in the table below.

NOTICE:

The resistance must be measured after the air conditioning amplifier connector and CAN No. 1 junction connector are disconnected.

Standard Resistance:

TESTER CONNECTION	SWITCH CONDITION	SPECIFIED CONDITION

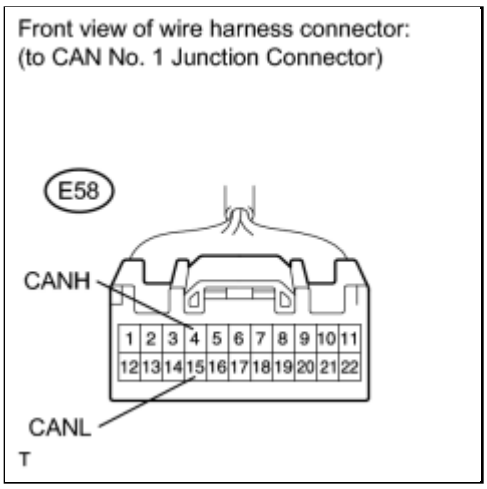

E58-4 (CANH) - E58-15 (CANL)	Ignition switch off	1 MΩ or higher

(c) Except TMC made:

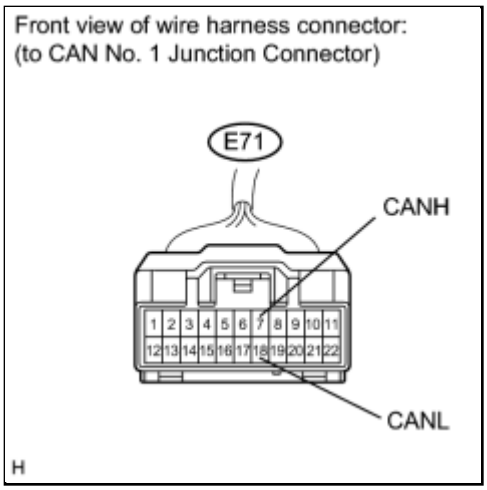

(1) Measure the resistance according to the value(s) in the table below.

NOTICE:

The resistance must be measured after the CAN No. 1 junction connector is disconnected.

Standard Resistance:

TESTER CONNECTION	SWITCH CONDITION	SPECIFIED CONDITION
E71-7 (CANH) - E71-18 (CANL)	Ignition switch off	1 MΩ or higher

NG ▶ **REPAIR OR REPLACE CAN BUS BRANCH WIRE OR CONNECTOR (CAN NO. 1 JUNCTION CONNECTOR - AIR CONDITIONING AMPLIFIER)**

OK ▼

13.	**CHECK FOR SHORT IN CAN BUS WIRES (CAN NO. 1 JUNCTION CONNECTOR - MAIN BODY ECU)**

(a) Disconnect the main body ECU connector.

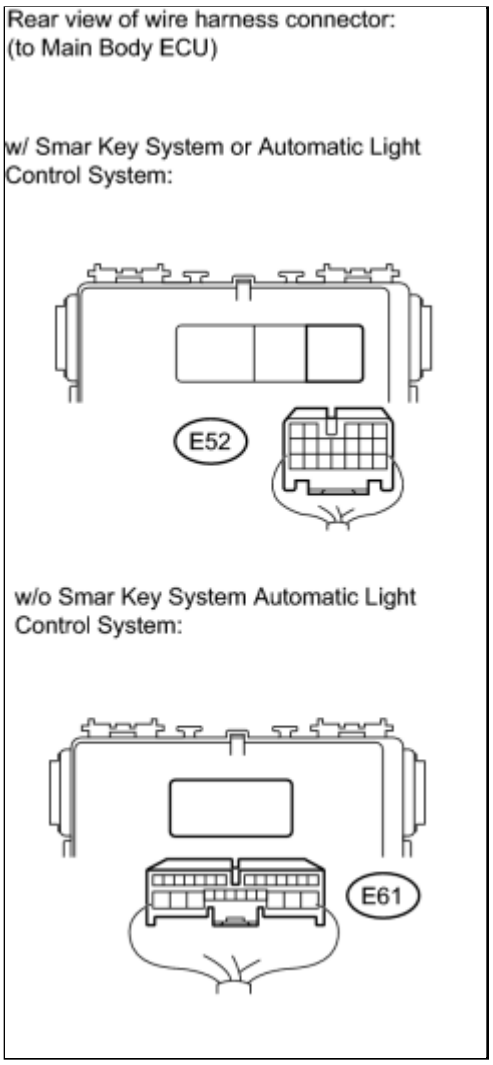

(b) TMC made:

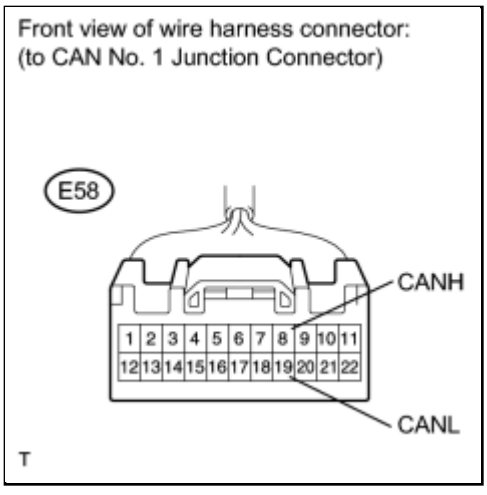

(1) Measure the resistance according to the value(s) in the table below.

NOTICE:

The resistance must be measured after the main body ECU connector and CAN No. 1 junction connector are disconnected.

Standard Resistance:

TESTER CONNECTION	SWITCH CONDITION	SPECIFIED CONDITION
E58-8 (CANH) - E58-19 (CANL)	Ignition switch off	1 MΩ or higher

(c) Except TMC made:

(1) Measure the resistance according to the value(s) in

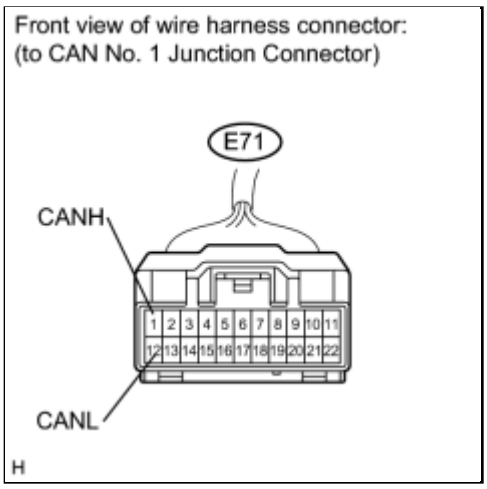

the table below.

NOTICE:

The resistance must be measured after the CAN No. 1 junction connector is disconnected.

Standard Resistance:

TESTER CONNECTION	SWITCH CONDITION	SPECIFIED CONDITION
E71-1 (CANH) - E71-12 (CANL)	Ignition switch off	1 MΩ or higher

NG ▶ **REPAIR OR REPLACE CAN BUS BRANCH WIRE OR CONNECTOR (CAN NO. 1 JUNCTION CONNECTOR - MAIN BODY ECU)**

OK ▼

14.	**CHECK FOR SHORT IN CAN BUS WIRES (CAN NO. 1 JUNCTION CONNECTOR - YAW RATE SENSOR)**

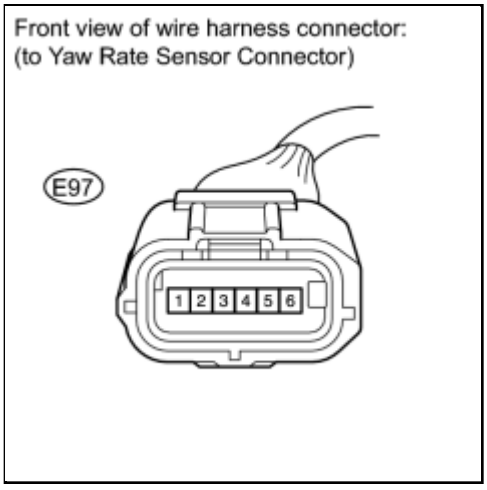

(a) Disconnect the yaw rate sensor connector.

(b) TMC made:

(1) Measure the resistance according to the value(s) in the table below.

NOTICE:

The resistance must be measured after the yaw rate sensor

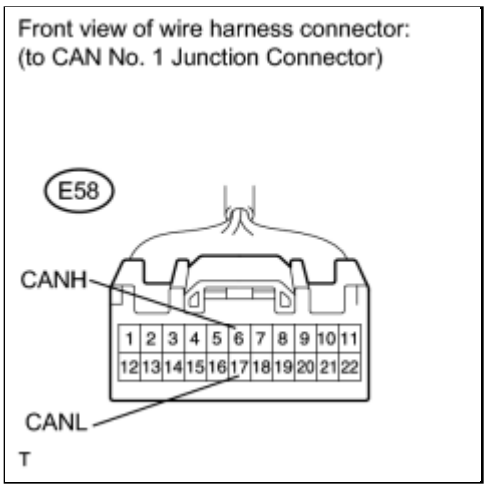

connector and CAN No. 1 junction connector are disconnected.

Standard Resistance:

TESTER CONNECTION	SWITCH CONDITION	SPECIFIED CONDITION
E58-6 (CANH) - E58-17 (CANL)	Ignition switch off	1 MΩ or higher

(c) Except TMC made:

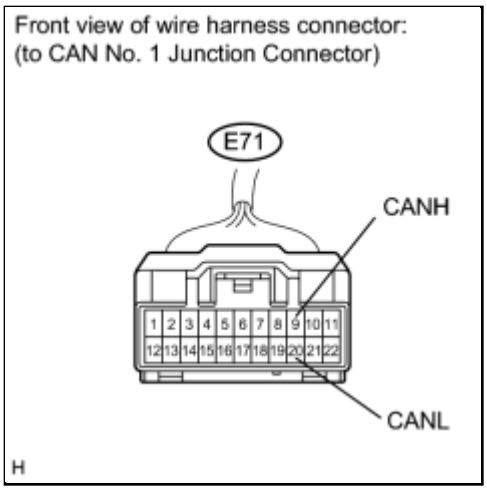

(1) Measure the resistance according to the value(s) in the table below.

NOTICE:

The resistance must be measured after the CAN No. 1 junction connector is disconnected.

Standard Resistance:

TESTER CONNECTION	SWITCH CONDITION	SPECIFIED CONDITION
E71-9 (CANH) - E71-20 (CANL)	Ignition switch off	1 MΩ or higher

NG ▶ **REPAIR OR REPLACE CAN BUS BRANCH WIRE OR CONNECTOR (CAN NO. 1 JUNCTION CONNECTOR - YAW RATE SENSOR)**

OK ▼

15.	**CHECK FOR SHORT IN CAN BUS WIRES (CAN NO. 1 JUNCTION CONNECTOR - ACCESSORY GATEWAY)**

(a) w/ remote engine starter:

(1) Disconnect the accessory gateway connector from the accessory.

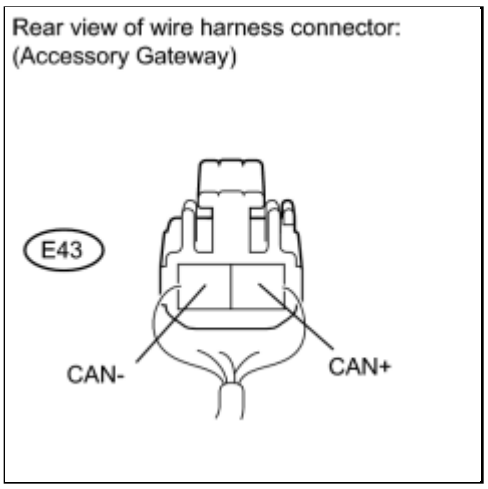

(b) TMC made:

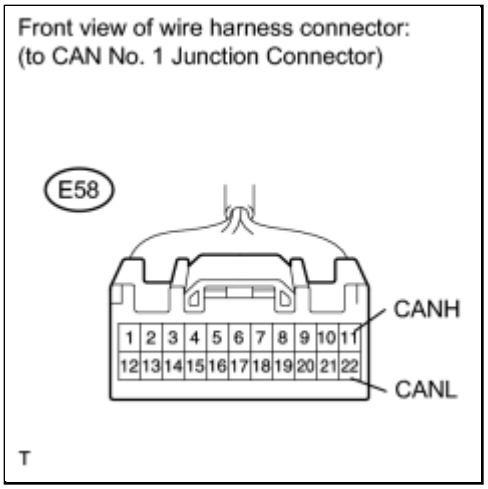

(1) Measure the resistance according to the value(s) in the table below.

NOTICE:

The resistance must be measured after the yaw rate sensor connector and CAN No. 1 junction connector are disconnected.

Standard Resistance:

TESTER CONNECTION	SWITCH CONDITION	SPECIFIED CONDITION
E58-11 (CAN+) - E58-22 (CAN-)	Ignition switch off	1 MΩ or higher

(c) Except TMC made:

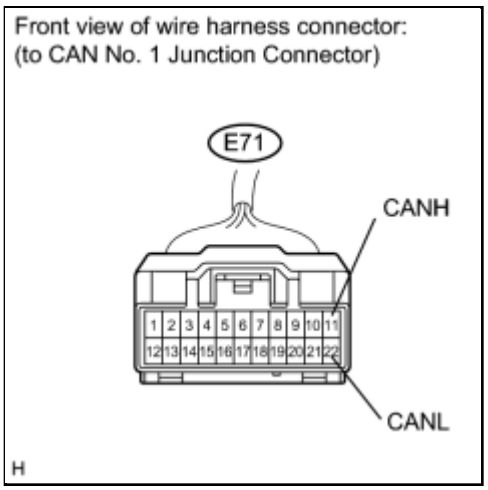

(1) Measure the resistance according to the value(s) in the table below.

NOTICE:

The resistance must be measured after the CAN No. 1 junction connector is disconnected.

Standard Resistance:

TESTER CONNECTION	SWITCH CONDITION	SPECIFIED CONDITION
E71-11 (CANH) - E71-22 (CANL)	Ignition switch off	1 MΩ or higher

Result:

RESULT	PROCEED TO
OK	A
NG (w/o remote engine starter)	B
NG (w/ remote engine starter)	C

C ▶ **CHECK FOR SHORT IN CAN BUS WIRES (ACCESSORY GATEWAY)**

B ▶ **REPAIR OR REPLACE CAN BUS BRANCH WIRE OR CONNECTOR (CAN NO. 1 JUNCTION CONNECTOR - ACCESSORY GATEWAY)**

A ▼

16.	CHECK FOR SHORT IN CAN BUS WIRES (CAN NO. 1 JUNCTION CONNECTOR)

(a) Reconnect the CAN No. 1 junction connector and CAN No. 2 junction connector.

(b) Measure the resistance according to the value(s) in the table below.

NOTICE:

- The resistance must be measured after the main wire connected ECUs (ECM and combination meter), and CAN No. 1 and No. 2 junction connectors are reconnected.
- The resistance must be measured after the all branch wire connected ECUs and sensor connectors are disconnected.

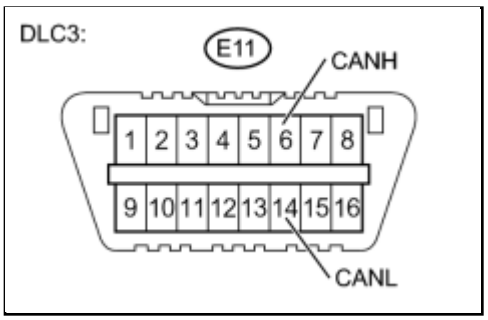

Standard Resistance:

TESTER CONNECTION	SWITCH CONDITION	SPECIFIED CONDITION
E11-6 (CANH) - E11-14 (CANL)	Ignition switch off	54 Ω or higher

NG ▶ **REPLACE JUNCTION CONNECTOR (CAN No. 1)**

OK

17.	CHECK FOR SHORT IN CAN BUS WIRES (STEERING ANGLE SENSOR)

(a) Reconnect the steering angle sensor connector.

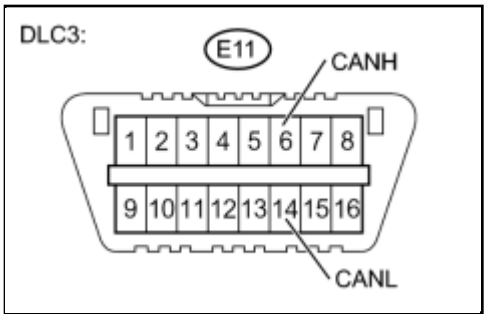

(b) Measure the resistance according to the value(s) in the table below.

NOTICE:

The resistance must be measured after the steering angle sensor, main wire connected ECUs (ECM and combination meter), and CAN No. 1 and No. 2 junction connectors are reconnected.

Standard Resistance:

TESTER CONNECTION	SWITCH CONDITION	SPECIFIED CONDITION
E11-6 (CANH) - E11-14 (CANL)	Ignition switch off	54 Ω or higher

NG ▶ **REPLACE STEERING ANGLE SENSOR**

OK

18.	CHECK FOR SHORT IN CAN BUS WIRES (POWER STEERING ECU)

(a) Reconnect the power steering ECU connector.

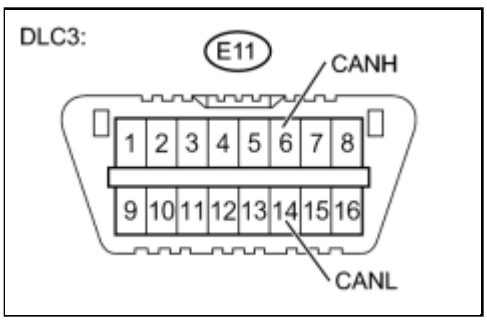

(b) Measure the resistance according to the value(s) in the table below.

NOTICE:

The resistance must be measured after the power steering ECU, main wire connected ECUs (ECM and combination meter), and CAN No. 1 and No. 2 junction connectors are reconnected.

Standard Resistance:

TESTER CONNECTION	SWITCH CONDITION	SPECIFIED CONDITION
E11-6 (CANH) - E11-14 (CANL)	Ignition switch off	54 Ω or higher

Result:

RESULT	PROCEED TO
OK	A
NG (for 2AZ-FE)	B
NG (for 2ZR-FE)	C

C ▶ **REPLACE POWER STEERING ECU**

B ▶ **REPLACE POWER STEERING ECU**

A ▼

19.	CHECK FOR SHORT IN CAN BUS WIRES (CENTER AIRBAG SENSOR ASSEMBLY)

(a) Reconnect the center airbag sensor assembly connector.

(b) Measure the resistance according to the value(s) in the table below.

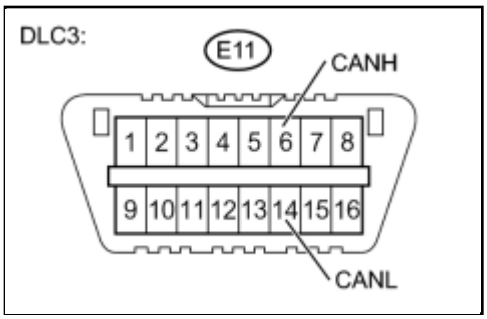

NOTICE:

The resistance must be measured after the center airbag sensor assembly, main wire connected ECUs (ECM and combination meter), and CAN No. 1 and No. 2 junction connectors are reconnected.

Standard Resistance:

TESTER CONNECTION	SWITCH CONDITION	SPECIFIED CONDITION
E11-6 (CANH) - E11-14 (CANL)	Ignition switch off	54 Ω or higher

NG ▶ **REPLACE CENTER AIRBAG SENSOR ASSEMBLY**

OK

20.	**CHECK FOR SHORT IN CAN BUS WIRES (AIR CONDITIONING AMPLIFIER)**

(a) Reconnect the air conditioning amplifier connector.

(b) Measure the resistance according to the value(s) in the table below.

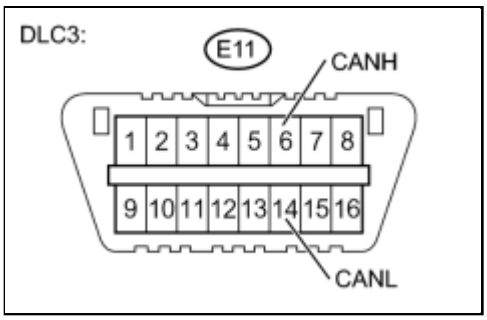

NOTICE:

The resistance must be measured after the air conditioning amplifier, main wire connected ECUs (ECM and combination meter), and CAN No. 1 and No. 2 junction connectors are reconnected.

Standard Resistance:

TESTER CONNECTION	SWITCH CONDITION	SPECIFIED CONDITION
E11-6 (CANH) - E11-14 (CANL)	Ignition switch off	54 Ω or higher

NG ▶ **REPLACE AIR CONDITIONING AMPLIFIER**

OK

21.	**CHECK FOR SHORT IN CAN BUS WIRES (MAIN BODY ECU)**

(a) Reconnect the main body ECU connector.

(b) Measure the resistance according to the value(s) in the table below.

NOTICE:

The resistance must be measured after the main body ECU, main wire connected ECUs (ECM and combination meter), and CAN No. 1 and No. 2 junction connectors are reconnected.

Standard Resistance:

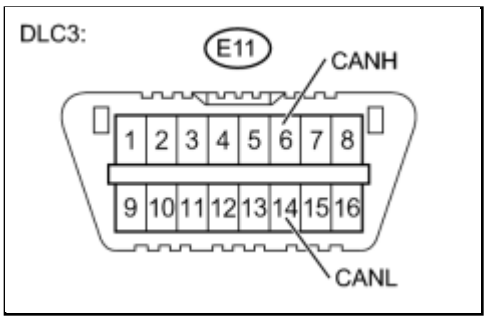

TESTER CONNECTION	SWITCH CONDITION	SPECIFIED CONDITION
E11-6 (CANH) - E11-14 (CANL)	Ignition switch off	54 Ω or higher

NG ▶ **REPLACE MAIN BODY ECU**

OK ▼

22.	CHECK FOR SHORT IN CAN BUS WIRES (ACCESSORY GATEWAY)

(a) Reconnect the accessory gateway connector.

(b) Measure the resistance according to the value(s) in the table below.

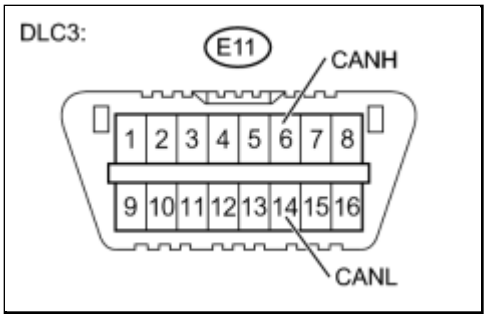

NOTICE:

The resistance must be measured after the main body ECU, main wire connected ECUs (ECM and combination meter), and CAN No. 1 and No. 2 junction connectors are reconnected.

Standard Resistance:

TESTER CONNECTION	SWITCH CONDITION	SPECIFIED CONDITION
E11-6 (CANH) - E11-14 (CANL)	Ignition switch off	54 Ω or higher

NG ▶ **REPLACE THE ACCESSORY**

OK ▶ **REPLACE YAW RATE SENSOR**

23.	CHECK FOR SHORT IN CAN BUS WIRES (COMBINATION METER ECU)

(a) Disconnect the combination meter ECU connector.

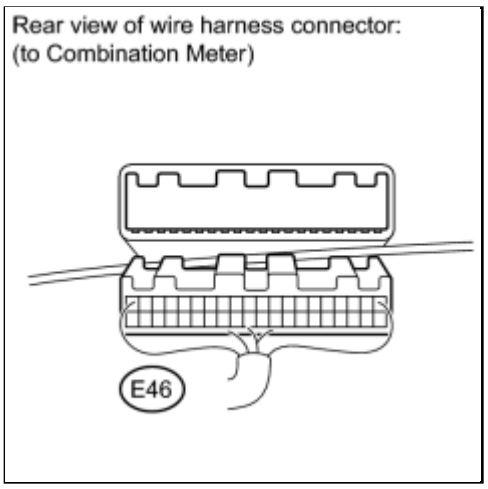

(b) TMC made:

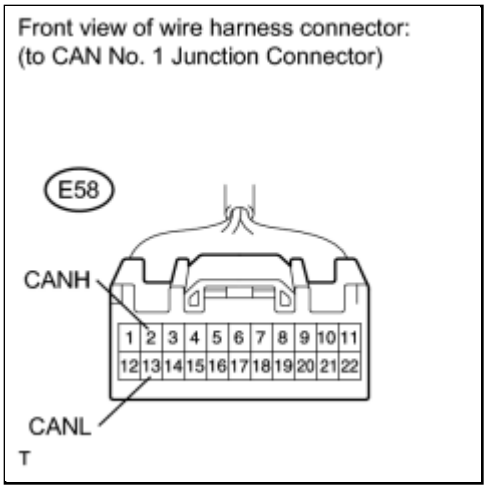

(1) Measure the resistance according to the value(s) in the table below.

NOTICE:

The resistance must be measured after the combination meter ECU connector and CAN No. 1 junction connector are disconnected.

Standard Resistance:

TESTER CONNECTION	SWITCH CONDITION	SPECIFIED CONDITION
E58-2 (CANH) - E58-13 (CANL)	Ignition switch off	108 to 132 Ω

(c) Except TMC made:

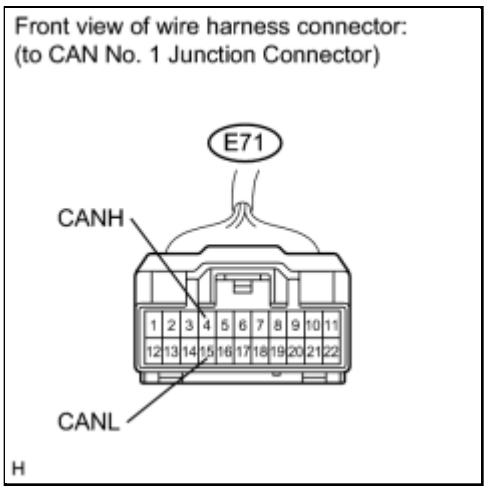

(1) Measure the resistance according to the value(s) in the table below.

NOTICE:

The resistance must be measured after the combination meter ECU connector and CAN No. 1 junction connector are disconnected.

Standard Resistance:

TESTER CONNECTION	SWITCH CONDITION	SPECIFIED CONDITION
E71-4 (CANH) - E71-15 (CANL)	Ignition switch off	1 MΩ or higher

NG ▶ **REPAIR OR REPLACE CAN MAIN WIRE OR CONNECTOR (CAN NO. 1 JUNCTION CONNECTOR -**

COMBINATION METER)

OK ▶ REPLACE COMBINATION METER

Last Modified: 3-10-2010	6.4 J	**From:** 200901
Model Year: 2010	**Model:** Corolla	**Doc ID:** RM000001RT0016X
Title: NETWORKING: CAN COMMUNICATION SYSTEM: Power Steering ECU Communication Stop Mode (2010 Corolla)		

Power Steering ECU Communication Stop Mode

DESCRIPTION

DETECTION ITEM	SYMPTOM	TROUBLE AREA
Power Steering ECU Communication Stop Mode	• EPS is not displayed on "CAN Bus Check" screen of the Techstream • Applies to "POWER STEERING ECU COMMUNICATION STOP MODE" in "DTC Combination Table"	• Power source circuit of the power steering ECU • Power steering ECU branch wire or connector • Power steering ECU

WIRING DIAGRAM

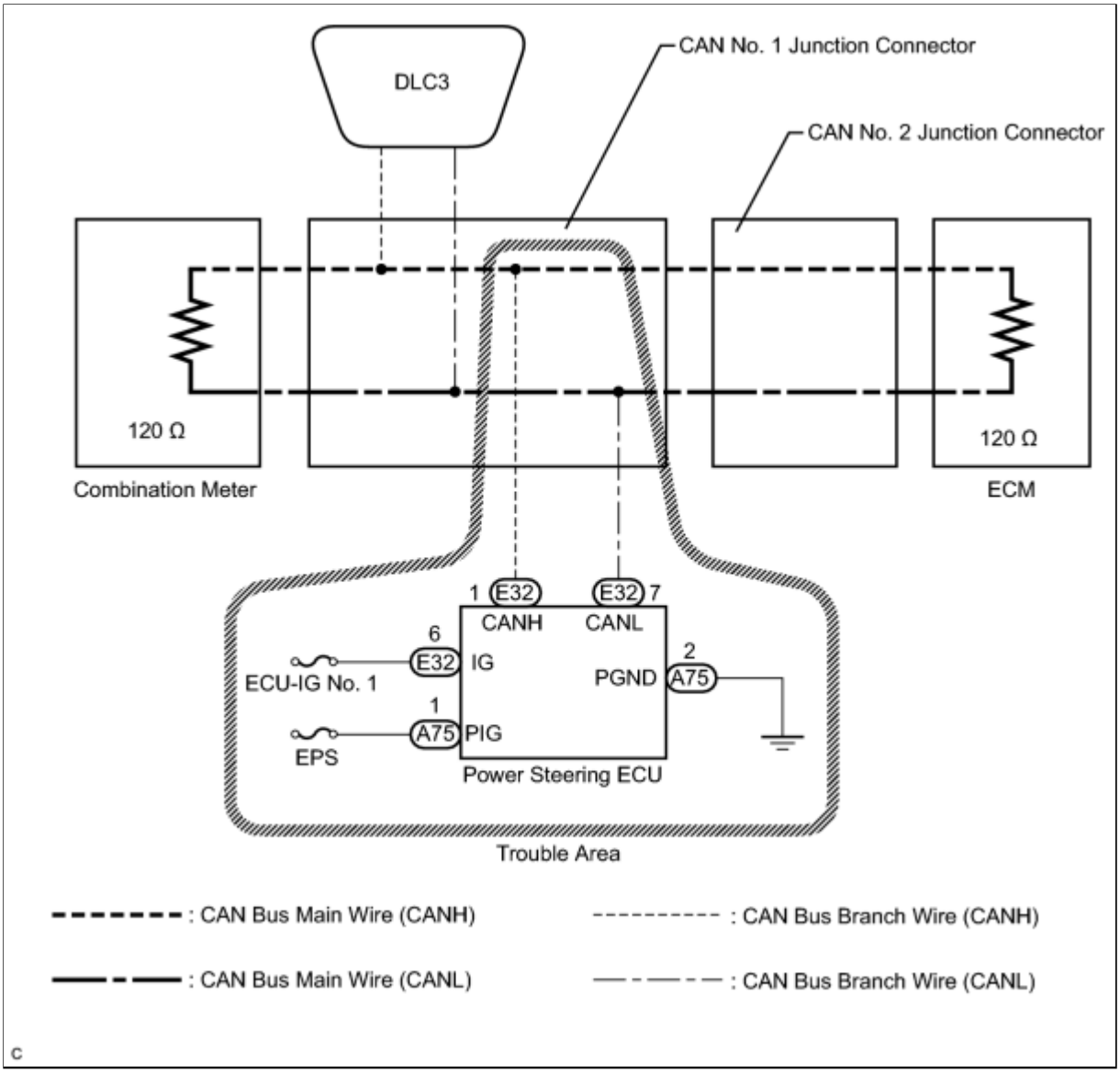

INSPECTION PROCEDURE

NOTICE:

- Turn the ignition switch off before measuring the resistance of the main CAN bus wires and the CAN Bus branch wire.
- After the ignition switch is turned off, check that the key reminder warning system and light reminder warning system are not in operation.
- Before measuring the resistance, leave the vehicle as is for at least 1 minute and do not operate the ignition switch, any other switches or the doors. If any doors need to be opened in order to check the connectors, open the doors and leave them open.

HINT:

- Operating the ignition switch, any other switches, or a door triggers related ECU and sensor communication on the CAN. This communication will cause the resistance value to change.
- Even after DTCs are cleared, if a DTC is stored again after driving the vehicle for a while, the malfunction may be occurring due to vibration of the vehicle. In such a case, wiggling the ECUs or wire harness while performing the inspection below will help determine the cause of the malfunction.

PROCEDURE

1.	**CHECK CAN BUS WIRE FOR DISCONNECTION (POWER STEERING ECU BRANCH WIRE)**

(a) Turn the ignition switch off.

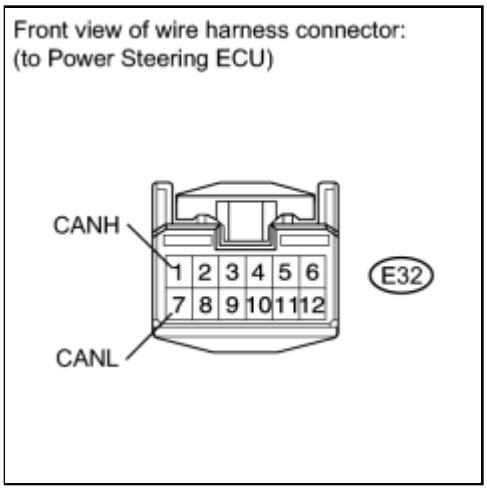

(b) Disconnect the power steering ECU connector.

(c) Measure the resistance according to the value(s) in the table below.

Standard Resistance:

TESTER CONNECTION	SWITCH CONDITION	SPECIFIED CONDITION
E32-1 (CANH) - E32-7 (CANL)	Ignition switch off	54 to 69 Ω

NG ▶ **REPAIR OR REPLACE CAN BRANCH WIRE OR CONNECTOR (POWER STEERING ECU BRANCH WIRE)**

OK ▼

2.	**CHECK WIRE HARNESS (POWER STEERING ECU - BATTERY AND BODY GROUND)**

(a) Disconnect the power steering ECU connectors.

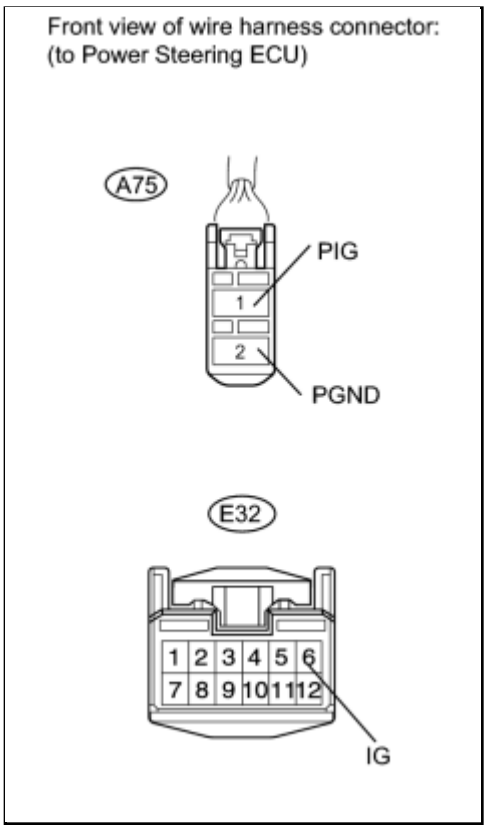

(b) Measure the resistance according to the value(s) in the table below.

Standard Resistance:

TESTER CONNECTION	CONDITION	SPECIFIED CONDITION
A75-2 (PGND) - Body ground	Always	Below 1 Ω

(c) Measure the voltage according to the value(s) in the table below.

Standard Voltage:

TESTER CONNECTION	CONDITION	SPECIFIED CONDITION
A75-1 (PIG) - Body ground	Always	10 to 14 V
E32-6 (IG) - Body ground	Ignition switch ON	10 to 14 V

Result:

RESULT	PROCEED TO
OK (for 2AZ-FE)	A
OK (for 2ZR-FE)	B
NG	C

C ▶ **REPAIR OR REPLACE HARNESS OR CONNECTOR**

B ▶ REPLACE POWER STEERING ECU (for 2ZR-FE)

A ▶ REPLACE POWER STEERING ECU (for 2AZ-FE)

Last Modified: 3-10-2010	6.4 J	**From:** 200901
Model Year: 2010	**Model:** Corolla	**Doc ID:** RM000000WIH03KX
Title: NETWORKING: CAN COMMUNICATION SYSTEM: Steering Angle Sensor Communication Stop Mode (2010 Corolla)		

Steering Angle Sensor Communication Stop Mode

DESCRIPTION

DETECTION ITEM	SYMPTOM	TROUBLE AREA
Steering Angle Sensor Communication Stop Mode	• "Steering Angle Sensor" is not displayed on "CAN Bus Check" screen of the Techstream • Applies to "Steering Angle Sensor Communication Stop Mode" in "DTC Combination Table"	• Power source circuit of steering angle sensor • Steering angle sensor branch wire or connector • Steering angle sensor

WIRING DIAGRAM

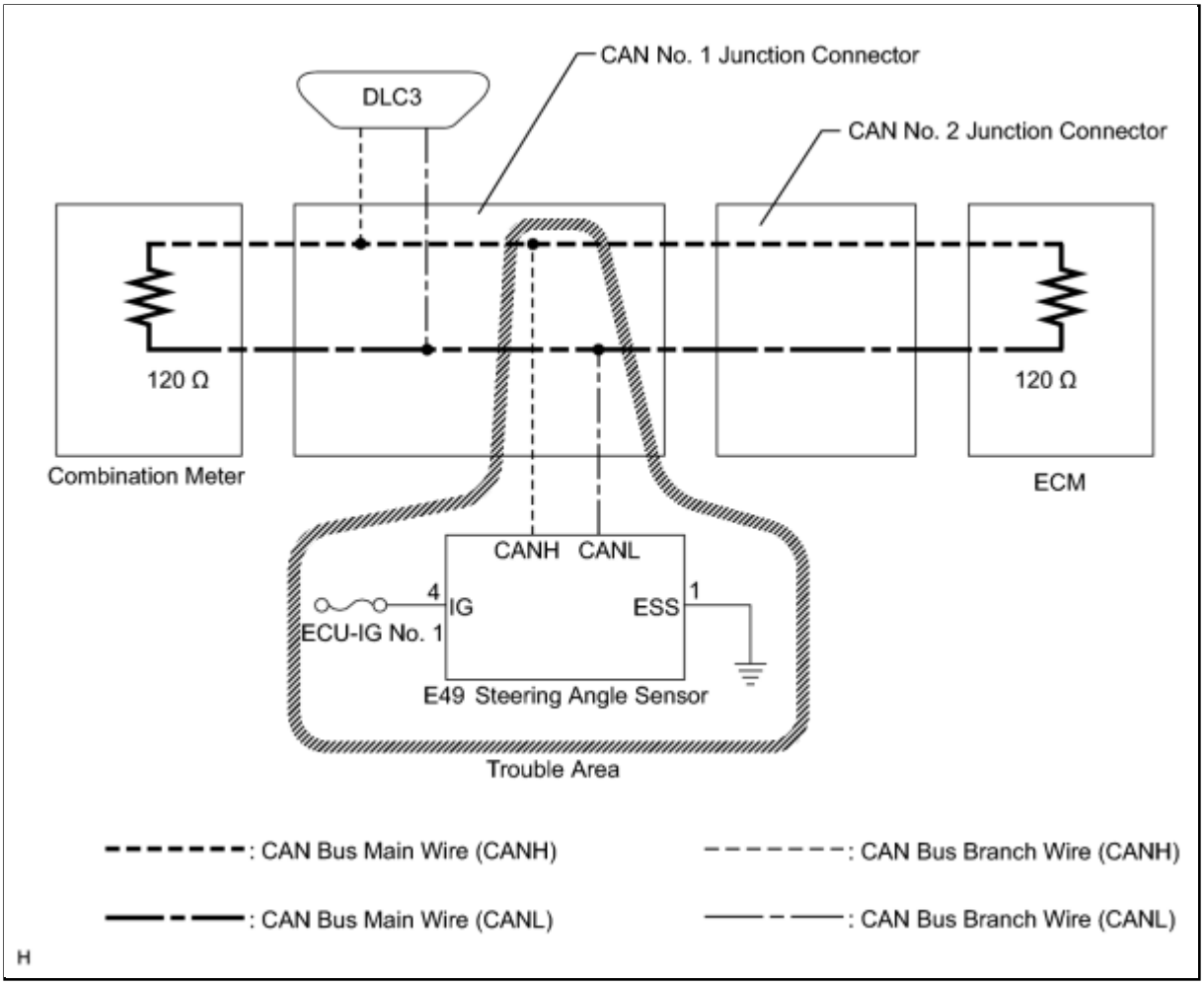

INSPECTION PROCEDURE

NOTICE:

- Turn the ignition switch off before measuring the resistance of the main CAN bus wires and the CAN Bus branch wire.
- After the ignition switch is turned off, check that the key reminder warning system and light reminder warning system are not in operation.
- Before measuring the resistance, leave the vehicle as is for at least 1 minute and do not operate the ignition switch, any other switches or the doors. If any doors need to be opened in order to check the connectors, open the doors and leave them open.

HINT:

- Operating the ignition switch, any other switches or a door triggers related ECU and sensor communication on the CAN. This communication will cause the resistance value to change.
- Even after DTCs are cleared, if a DTC is stored again after driving the vehicle for a while, the malfunction may be occurring due to vibration of the vehicle. In such a case, wiggling the ECUs or wire harness while performing the inspection below will help determine the cause of the malfunction.

PROCEDURE

1.	**CHECK CAN BUS LINE FOR DISCONNECTION (STEERING ANGLE SENSOR BRANCH WIRE)**

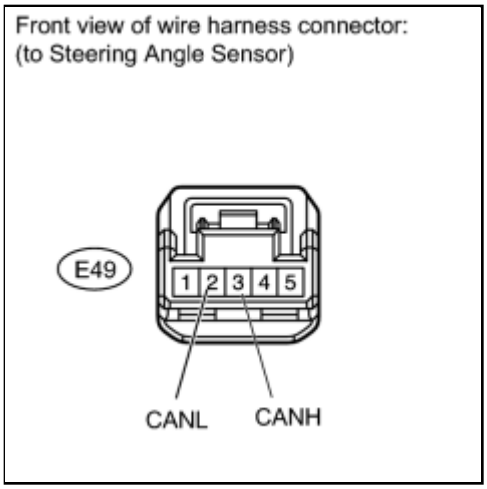

(a) Turn the ignition switch off.

(b) Disconnect the steering angle sensor connector.

(c) Measure the resistance according to the value(s) in the table below.

Standard Resistance:

TESTER CONNECTION	SWITCH CONDITION	SPECIFIED CONDITION
E49-3 (CANH) - E49-2 (CANL)	Ignition switch off	54 to 69 Ω

NG ▶ **REPAIR OR REPLACE CAN BRANCH WIRE CONNECTED TO STEERING ANGLE SENSOR**

OK ▼

2.	**CHECK HARNESS AND CONNECTOR (IG, ESS)**

(a) Disconnect the steering angle sensor connector.

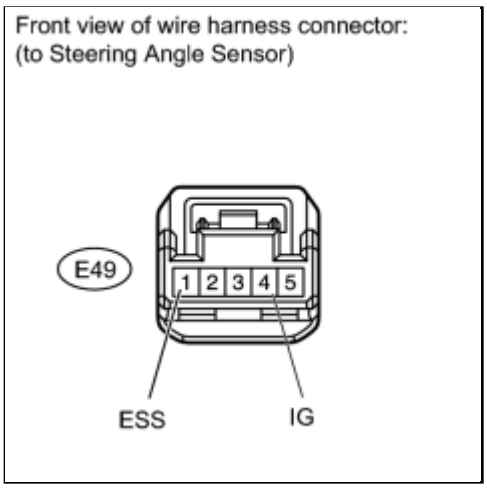

(b) Measure the resistance according to the value(s) in the table below.

Standard Resistance:

TESTER CONNECTION	CONDITION	SPECIFIED CONDITION
E49-1 (ESS) - Body ground	Always	Below 1 Ω

(c) Measure the voltage according to the value(s) in the table below.

Standard Voltage:

TESTER CONNECTION	SWITCH CONDITION	SPECIFIED CONDITION
E49-4 (IG) - Body ground	Ignition switch ON	10 to 14 V

NG ▶ **REPAIR OR REPLACE HARNESS OR CONNECTOR**

OK ▶ **REPLACE STEERING ANGLE SENSOR**

Last Modified: 3-10-2010	6.4 J	**From:** 200901
Model Year: 2010	**Model:** Corolla	**Doc ID:** RM000000WIJ03LX
Title: NETWORKING: CAN COMMUNICATION SYSTEM: Yaw Rate Sensor Communication Stop Mode (2010 Corolla)		

Yaw Rate Sensor Communication Stop Mode

DESCRIPTION

DETECTION ITEM	SYMPTOM	TROUBLE AREA
Yaw Rate Sensor Communication Stop Mode	• "Yaw Rate/Decelerate Sensor" is not displayed on "CAN Bus Check" screen of Techstream • Applies to "Yaw Rate Sensor Communication Stop Mode" in "DTC Combination Table"	• Power source circuit of yaw rate sensor • Yaw rate sensor branch wire or connector • Yaw rate sensor

WIRING DIAGRAM

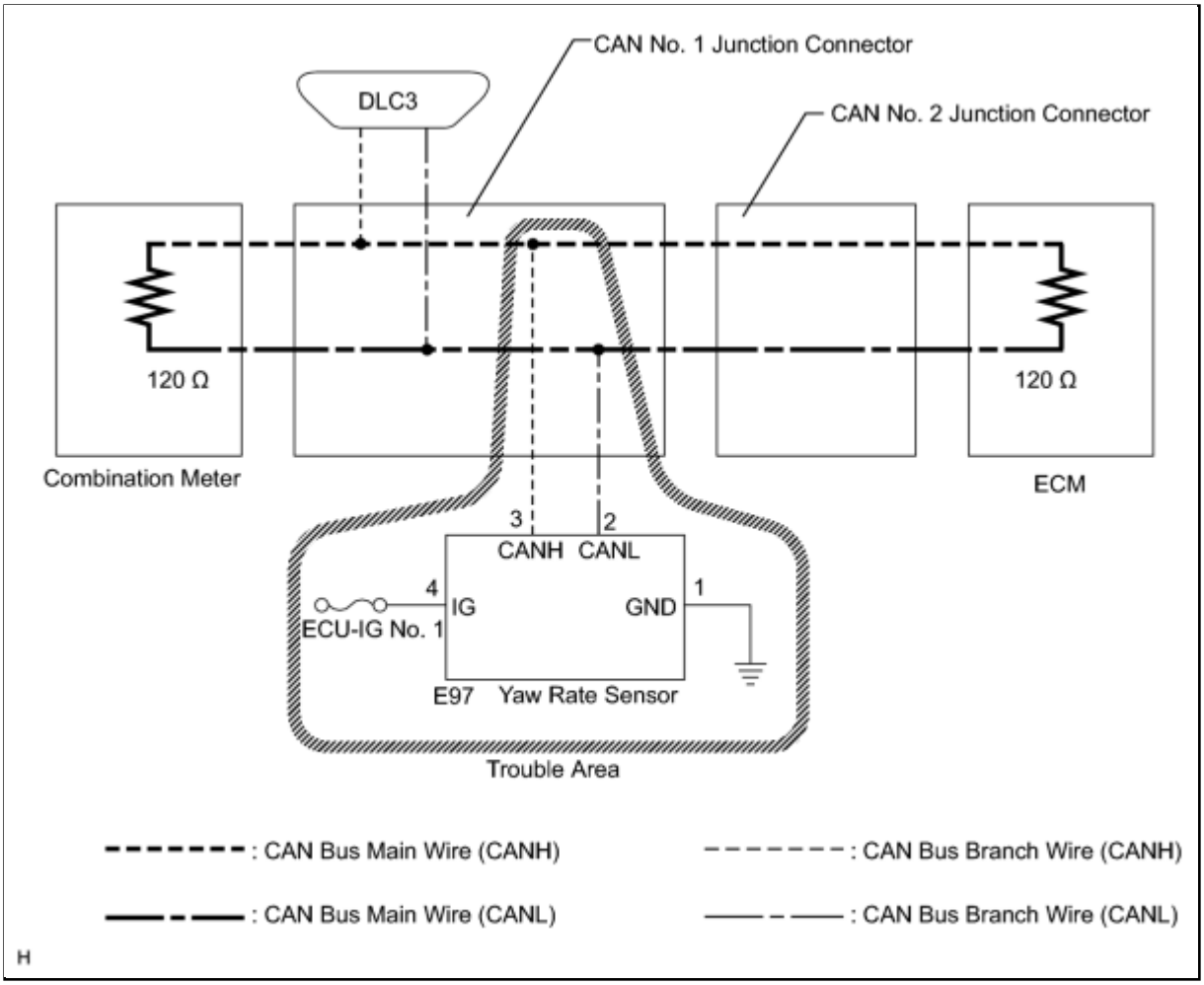

INSPECTION PROCEDURE

NOTICE:

- Turn the ignition switch off before measuring the resistance of the main CAN bus wires and the CAN Bus branch wire.
- After the ignition switch is turned off, check that the key reminder warning system and light reminder warning system are not in operation.
- Before measuring the resistance, leave the vehicle as is for at least 1 minute and do not operate the ignition switch, any other switches or the doors. If any doors need to be opened in order to check the connectors, open the doors and leave them open.

HINT:

- Operating the ignition switch, any other switches or a door triggers related ECU and sensor communication on the CAN. This communication will cause the resistance value to change.
- Even after DTCs are cleared, if a DTC is stored again after driving the vehicle for a while, the malfunction may be occurring due to vibration of the vehicle. In such a case, wiggling the ECUs or wire harness while performing the inspection below will help determine the cause of the malfunction.

PROCEDURE

1.	**CHECK FOR OPEN IN CAN BUS WIRE (YAW RATE SENSOR BRANCH WIRE)**

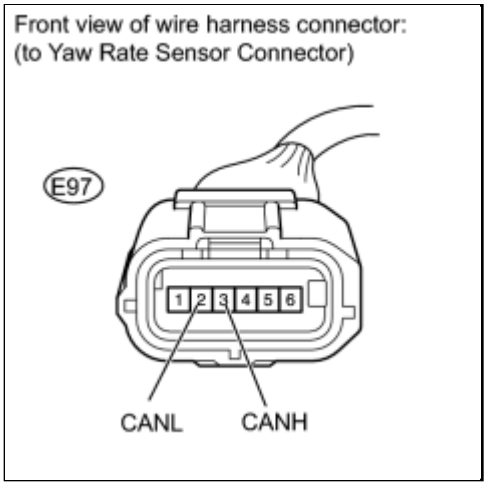

(a) Turn the ignition switch off.

(b) Disconnect the yaw rate sensor connector.

(c) Measure the resistance according to the value(s) in the table below.

Standard Resistance:

TESTER CONNECTION	SWITCH CONDITION	SPECIFIED CONDITION
E97-3 (CANH) - E97-2 (CANL)	Ignition switch off	54 to 69 Ω

NG ▶ **REPAIR OR REPLACE YAW RATE SENSOR BRANCH WIRE OR CONNECTOR**

OK ▼

2.	**CHECK WIRE HARNESS (IG, GND)**

(a) Disconnect the yaw rate sensor connector.

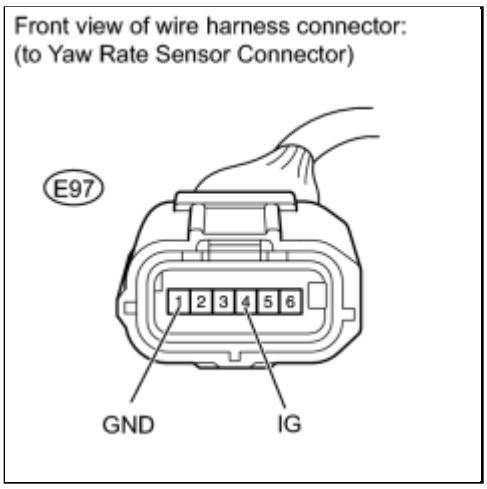

(b) Measure the resistance according to the value(s) in the table below.

Standard Resistance:

TESTER CONNECTION	CONDITION	SPECIFIED CONDITION
E97-1 (GND) - Body ground	Always	Below 1 Ω

(c) Measure the voltage according to the value(s) in the table below.

Standard Voltage:

TESTER CONNECTION	SWITCH CONDITION	SPECIFIED CONDITION
E97-4 (IG) - Body ground	Ignition switch ON	10 to 14 V

NG ▶ **REPAIR OR REPLACE HARNESS OR CONNECTOR**

OK ▶ **REPLACE YAW RATE SENSOR**

Last Modified: 3-10-2010	6.4 J	**From:** 200901
Model Year: 2010	**Model:** Corolla	**Doc ID:** RM000000WIP04FX
Title: NETWORKING: CAN COMMUNICATION SYSTEM: ECM Communication Stop Mode (2010 Corolla)		

ECM Communication Stop Mode

DESCRIPTION

DETECTION ITEM	SYMPTOM	TROUBLE AREA
ECM Communication Stop Mode	• "Engine" is not displayed on "CAN Bus Check" screen of the Techstream • Applies to "ECM Communication Stop Mode" in "DTC Combination Table"	• Power source circuit of ECM • ECM

WIRING DIAGRAM

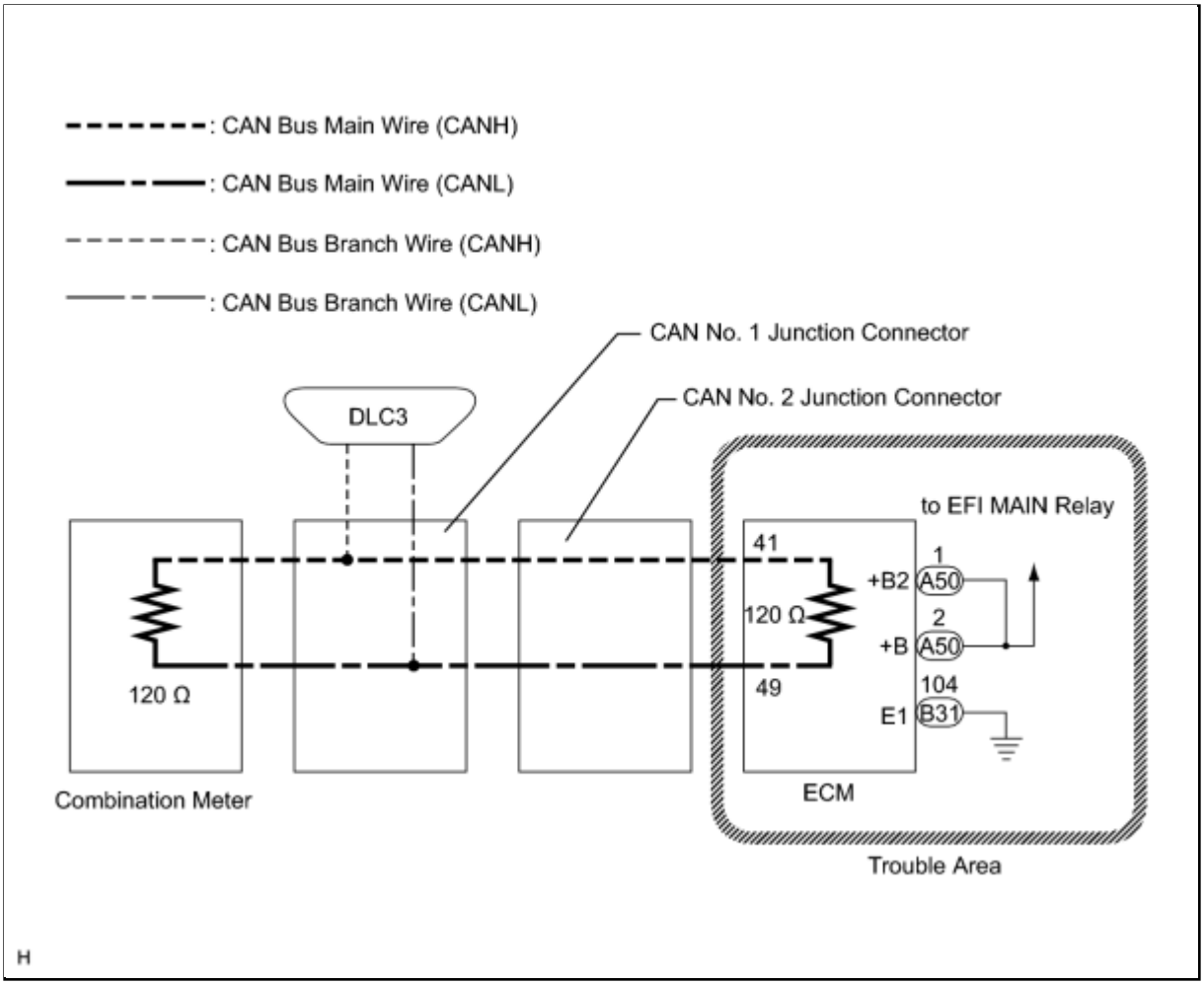

INSPECTION PROCEDURE

NOTICE:

- Turn the ignition switch off before measuring the resistance of the main CAN bus wires and the CAN Bus branch wire.
- After the ignition switch is turned off, check that the key reminder warning system and light reminder warning system are not in operation.
- Before measuring the resistance, leave the vehicle as is for at least 1 minute and do not operate the ignition switch, any other switches or the doors. If any doors need to be opened in order to check the connectors, open the doors and leave them open.

HINT:

- Operating the ignition switch, any other switches, or a door triggers related ECU and sensor communication on the CAN. This communication will cause the resistance value to change.
- Even after DTCs are cleared, if a DTC is stored again after driving the vehicle for a while, the malfunction may be occurring due to vibration of the vehicle. In such a case, wiggling the ECUs or wire harness while performing the inspection below will help determine the cause of the malfunction.

PROCEDURE

1.	CHECK FOR OPEN IN CAN NO. 1 BUS MAIN WIRE (ECM MAIN WIRE)

(a) Turn the ignition switch off.

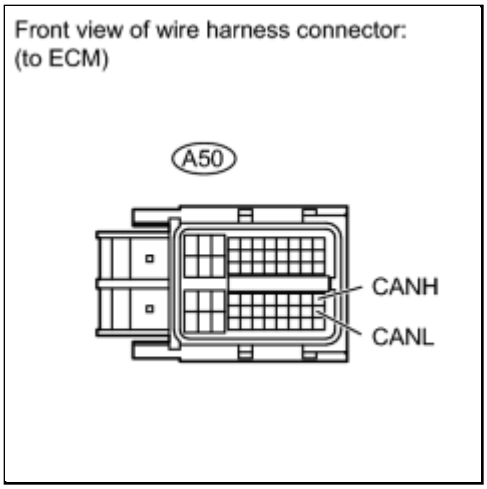

(b) Disconnect the ECM connector.

(c) Measure the resistance according to the value(s) in the table below.

Standard Resistance:

TESTER CONNECTION	SWITCH CONDITION	SPECIFIED CONDITION
A50-41 (CANH) - A50-49 (CANL)	Ignition switch off	108 to 132 Ω

NG ▶ **REPAIR OR REPLACE HARNESS OR CONNECTOR**

OK ▼

2.	CHECK WIRE HARNESS (POWER SOURCE CIRCUIT)

(a) Check the ECM power source circuit (2ZR-FE: INFO, 2AZ-FE: INFO).

Result:

RESULT	PROCEED TO
OK (2ZR-FE)	A
OK (2AZ-FE)	B

RESULT	PROCEED TO
NG	C

C ▶ **REPAIR OR REPLACE HARNESS OR CONNECTOR**

B ▶ **REPLACE ECM (2AZ-FE)**

A ▶ **REPLACE ECM (2ZR-FE)**

Last Modified: 3-10-2010	6.4 J	**From:** 200901
Model Year: 2010	**Model:** Corolla	**Doc ID:** RM000001F1V02PX
Title: NETWORKING: CAN COMMUNICATION SYSTEM: Main Body ECU Communication Stop Mode (2010 Corolla)		

Main Body ECU Communication Stop Mode

DESCRIPTION

DETECTION ITEM	SYMPTOM	TROUBLE AREA
Main Body ECU Communication Stop Mode	• "Main body" is not displayed on "CAN Bus Check" screen of the Techstream • Applies to "Main Body ECU Communication Stop Mode" in "DTC Combination Table"	• Power source circuit of the main body ECU • Main body ECU branch wire or connector • Main body ECU

WIRING DIAGRAM

w/ Smart Key System or Automatic Light Control System:

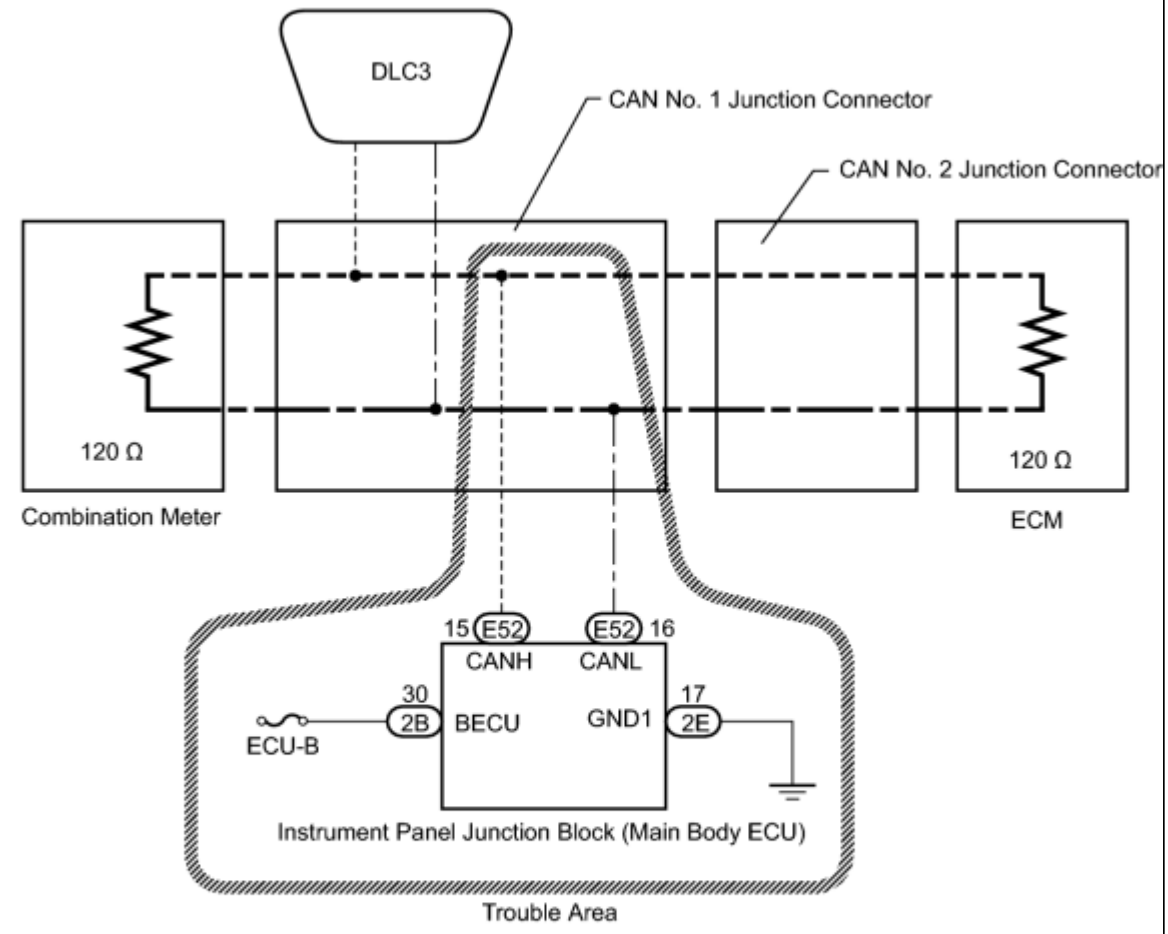

C

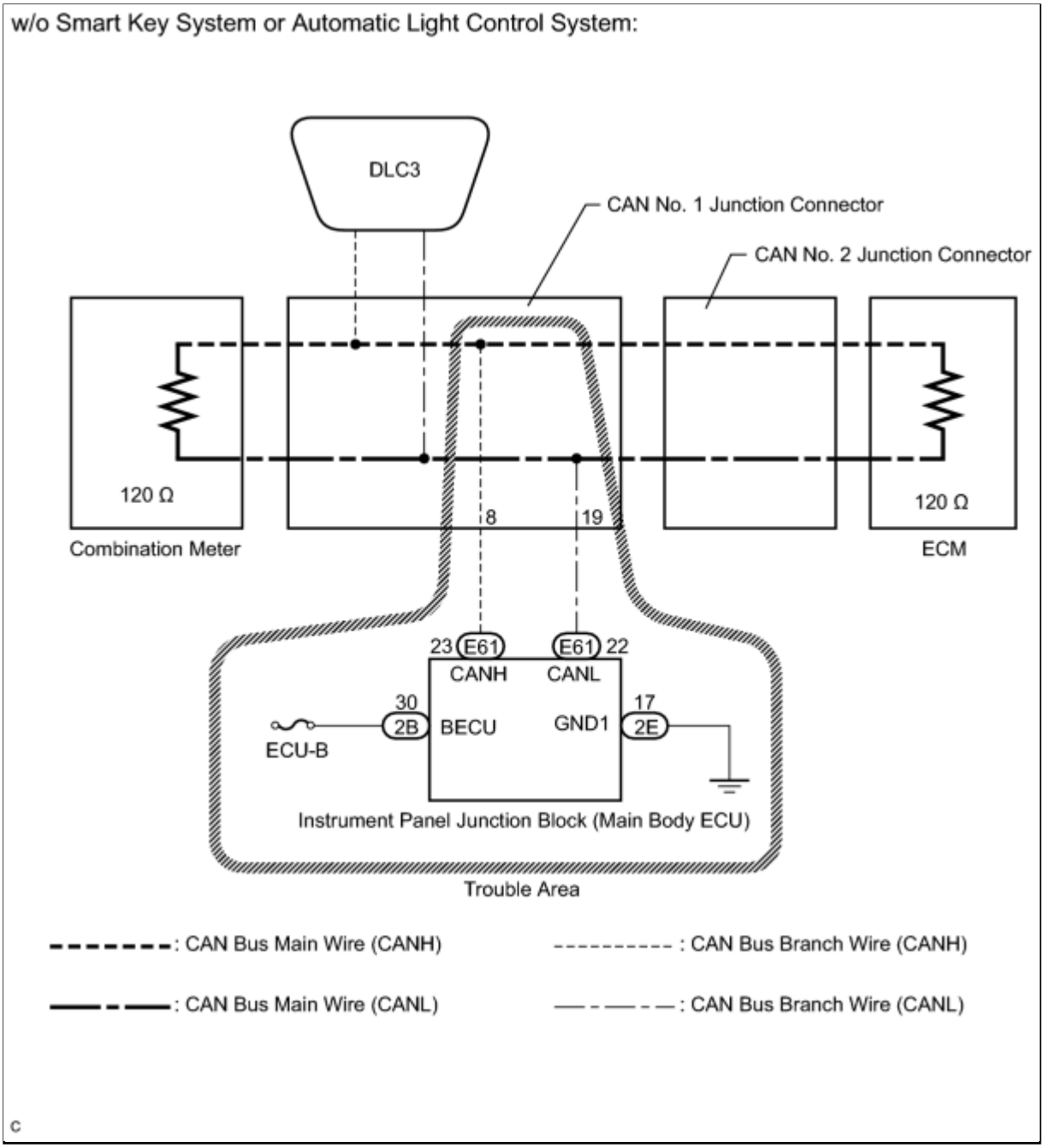

INSPECTION PROCEDURE

NOTICE:

- Turn the ignition switch off before measuring the resistance of the main CAN bus wires and the CAN Bus branch wire.
- After the ignition switch is turned off, check that the key reminder warning system and light reminder warning system are not in operation.
- Before measuring the resistance, leave the vehicle as is for at least 1 minute and do not operate the ignition switch, any other switches or the doors. If any doors need to be opened in order to check the connectors, open the doors and leave them open.

HINT:

- Operating the ignition switch, any other switches or a door triggers related ECU and sensor

communication on the CAN. This communication will cause the resistance value to change.

- Even after DTCs are cleared, if a DTC is stored again after driving the vehicle for a while, the malfunction may be occurring due to vibration of the vehicle. In such a case, wiggling the ECUs or wire harness while performing the inspection below will help determine the cause of the malfunction.

PROCEDURE

1.	**CHECK CAN BUS LINE FOR DISCONNECTION (MAIN BODY ECU BRANCH WIRE)**

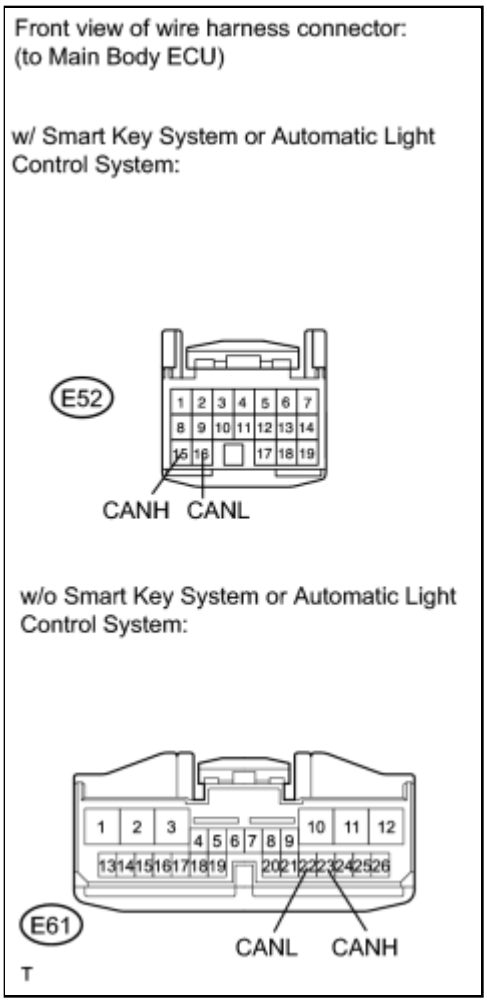

(a) Turn the ignition switch off.

(b) Disconnect the main body ECU connector.

(c) Measure the resistance according to the value(s) in the table below.

Standard Resistance:

w/ Smart Key System or Automatic Light Control System

w/o Smart Key and Start System or Automatic Light Control System

TESTER CONNECTION	SWITCH CONDITION	SPECIFIED CONDITION

TESTER CONNECTION	SWITCH CONDITION	SPECIFIED CONDITION
E52-15 (CANH) - E52-16 (CANL)	Ignition switch off	54 to 69 Ω

TESTER CONNECTION	SWITCH CONDITION	SPECIFIED CONDITION
E61-23 (CANH) - E61-22 (CANL)	Ignition switch off	54 to 69 Ω

NG ▶ **REPAIR OR REPLACE CAN BUS BRANCH WIRE OR CONNECTOR (MAIN BODY ECU BRANCH WIRE)**

OK ▼

2.	**CHECK HARNESS AND CONNECTOR (BECU, IG, GND1)**

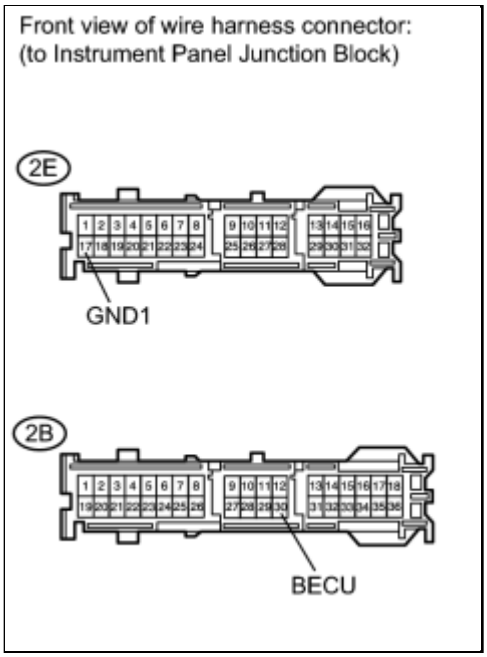

(a) Disconnect the instrument panel junction block connectors.

(b) Measure the resistance according to the value(s) in the table below.

Standard Resistance:

TESTER CONNECTION	CONDITION	SPECIFIED CONDITION
2E-17 (GND1) - Body ground	Always	Below 1 Ω

(c) Measure the voltage according to the value(s) in the table below.

Standard Voltage:

TESTER CONNECTION	CONDITION	SPECIFIED CONDITION
2B-30 (BECU) - Body ground	Always	10 to 14 V

NG ▶ **REPAIR OR REPLACE HARNESS OR CONNECTOR**

OK ▶ **REPLACE INSTRUMENT PANEL JUNCTION BLOCK (MAIN BODY ECU)**

Last Modified: 3-10-2010	6.4 J	**From:** 200901
Model Year: 2010	**Model:** Corolla	**Doc ID:** RM000001F1S02TX
Title: NETWORKING: CAN COMMUNICATION SYSTEM: Combination Meter ECU Communication Stop Mode (2010 Corolla)		

Combination Meter ECU Communication Stop Mode

DESCRIPTION

DETECTION ITEM	SYMPTOM	TROUBLE AREA
Combination Meter ECU Communication Stop Mode	• "Combination Meter" is not displayed on the "CAN Bus Check" screen of the Techsteam • Applies to "Combination Meter ECU Communication Stop Mode" in the "DTC Combination Table"	• Power source circuit of the combination meter • Combination meter main wire or connector • Combination meter

WIRING DIAGRAM

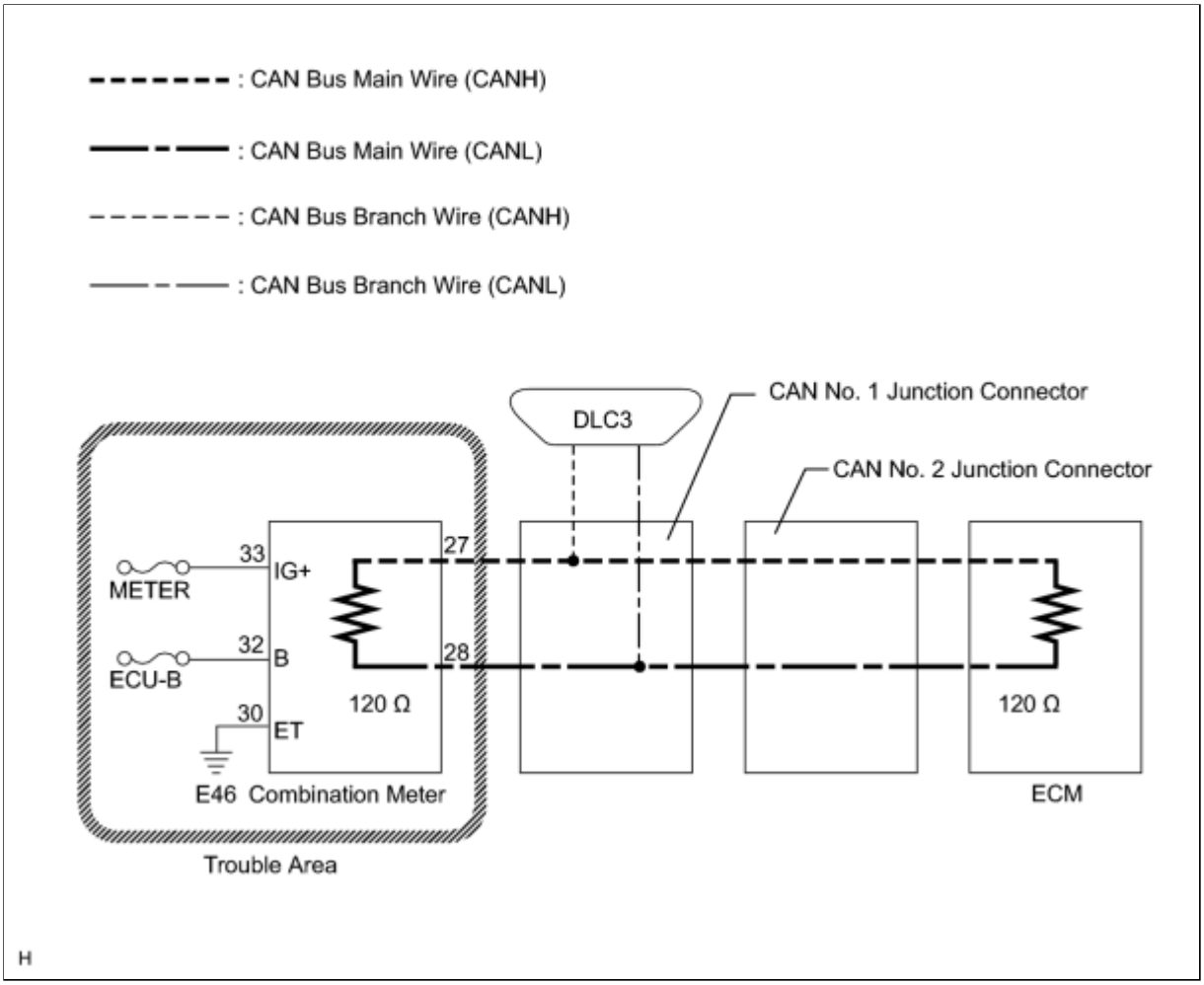

INSPECTION PROCEDURE

NOTICE:

- Turn the ignition switch off before measuring the resistance of the main CAN bus wires and the CAN Bus branch wire.
- After the ignition switch is turned off, check that the key reminder warning system and light reminder warning system are not in operation.
- Before measuring the resistance, leave the vehicle as is for at least 1 minute and do not operate the ignition switch, any other switches or the doors. If any doors need to be opened in order to check the connectors, open the doors and leave them open.

HINT:

- Operating the ignition switch, any other switches or a door triggers related ECU and sensor communication on the CAN. This communication will cause the resistance value to change.
- Even after DTCs are cleared, if a DTC is stored again after driving the vehicle for a while, the malfunction may be occurring due to vibration of the vehicle. In such a case, wiggling the ECUs or wire harness while performing the inspection below will help determine the cause of the malfunction.

PROCEDURE

1.	**CHECK FOR OPEN IN CAN NO. 1 BUS WIRE (COMBINATION METER MAIN BUS WIRE)**

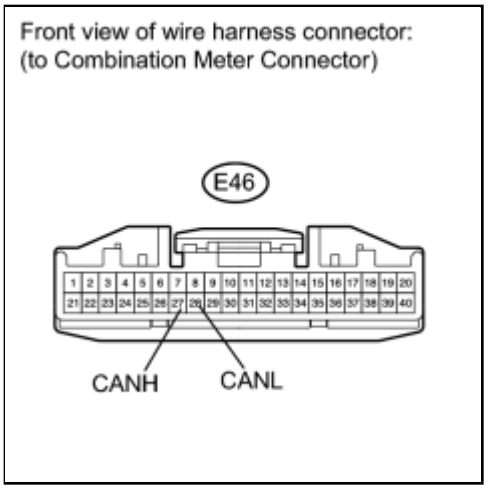

(a) Turn the ignition switch off.

(b) Disconnect the combination meter connector.

(c) Measure the resistance according to the value(s) in the table below.

Standard Resistance:

TESTER CONNECTION	SWITCH CONDITION	SPECIFIED CONDITION
E46-27 (CANH) - E46-28 (CANL)	Ignition switch off	108 to 132 Ω

NG ▶ **REPAIR OR REPLACE CAN BUS MAIN WIRE OR CONNECTOR (COMBINATION METER MAIN BUS WIRE)**

OK ▼

2.	**CHECK HARNESS AND CONNECTOR (POWER SOURCE CIRCUIT)**

(a) Disconnect the combination meter connector.

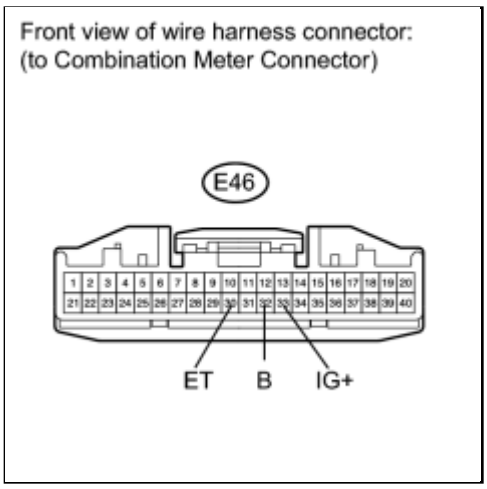

(b) Measure the resistance according to the value(s) in the table below.

Standard Resistance:

TESTER CONNECTION	CONDITION	SPECIFIED CONDITION
E46-30 (ET) - Body ground	Always	Below 1 Ω

(c) Measure the voltage according to the value(s) in the table below.

Standard Voltage:

TESTER CONNECTION	CONDITION	SPECIFIED CONDITION
E46-33 (IG+) - Body ground	Ignition switch ON	10 to 14 V
E46-32 (B) - Body ground	Always	10 to 14 V

NG ▶ **REPAIR OR REPLACE HARNESS OR CONNECTOR**

OK ▶ **REPLACE COMBINATION METER ASSEMBLY**

Last Modified: 3-10-2010	6.4 J	**From:** 200901
Model Year: 2010	**Model:** Corolla	**Doc ID:** RM000001V9P01CX
Title: NETWORKING: CAN COMMUNICATION SYSTEM: Open in CAN Main Bus Line (2010 Corolla)		

Open in CAN Main Bus Line

DESCRIPTION

There may be an open circuit in the CAN main wire and/or the DLC3 branch wire when the resistance between terminals 6 (CANH) and 14 (CANL) of the DLC3 is 70 Ω or higher.

SYMPTOM	TROUBLE AREA
Resistance between terminals 6 (CANH) and 14 (CANL) of DLC3 is 70 Ω or higher.	• CAN bus main wire or connector • CAN No. 1 junction connector • CAN No. 2 junction connector • ECM • Combination meter

WIRING DIAGRAM

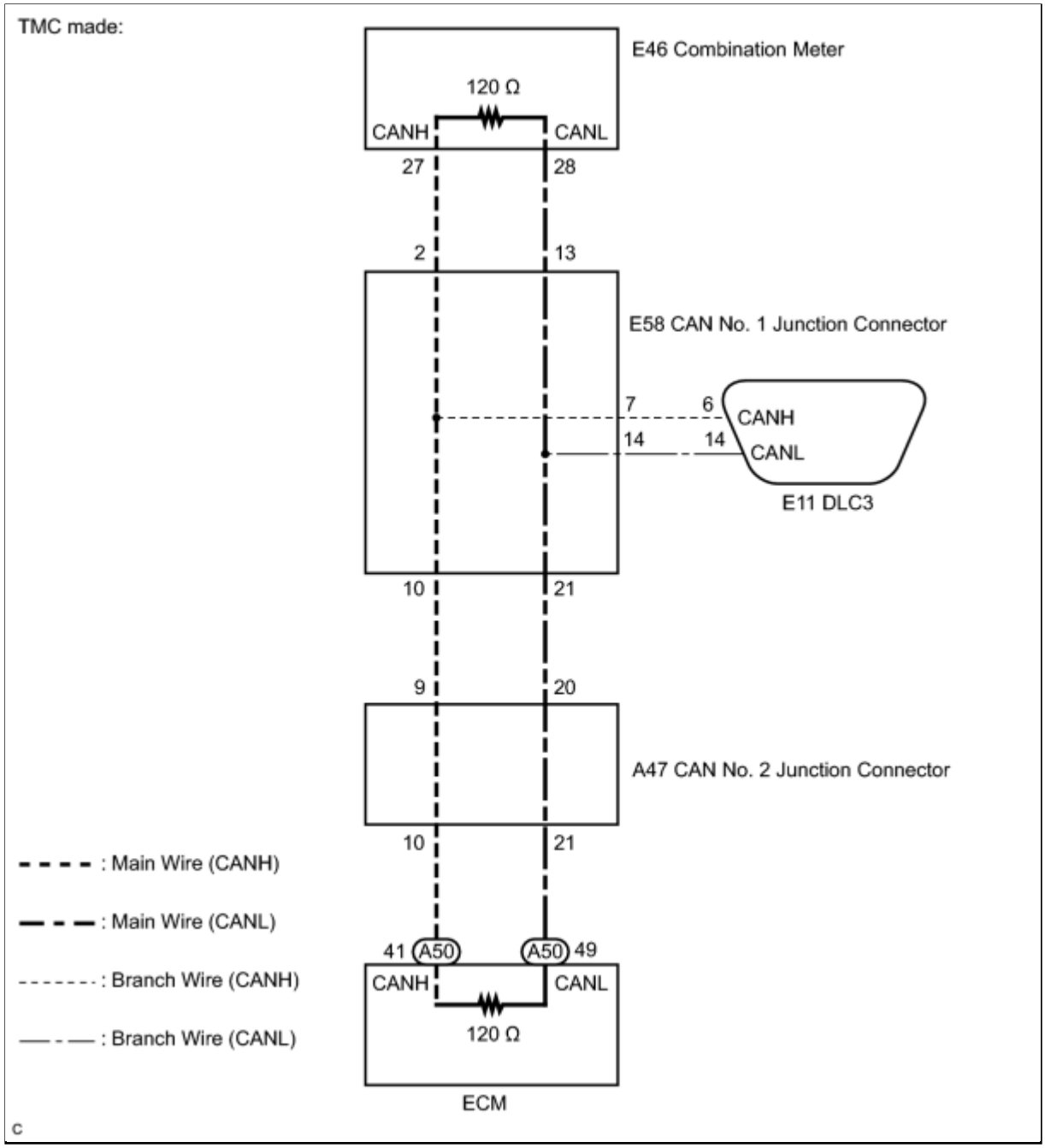
TMC made:
E46 Combination Meter
120 Ω
CANH
CANL
27
28
2
13
E58 CAN No. 1 Junction Connector
7
6
CANH
14
14
CANL
E11 DLC3
10
21
9
20
A47 CAN No. 2 Junction Connector
10
21
: Main Wire (CANH)
: Main Wire (CANL)
: Branch Wire (CANH)
: Branch Wire (CANL)
41
A50
A50
49
CANH
CANL
120 Ω
ECM
c

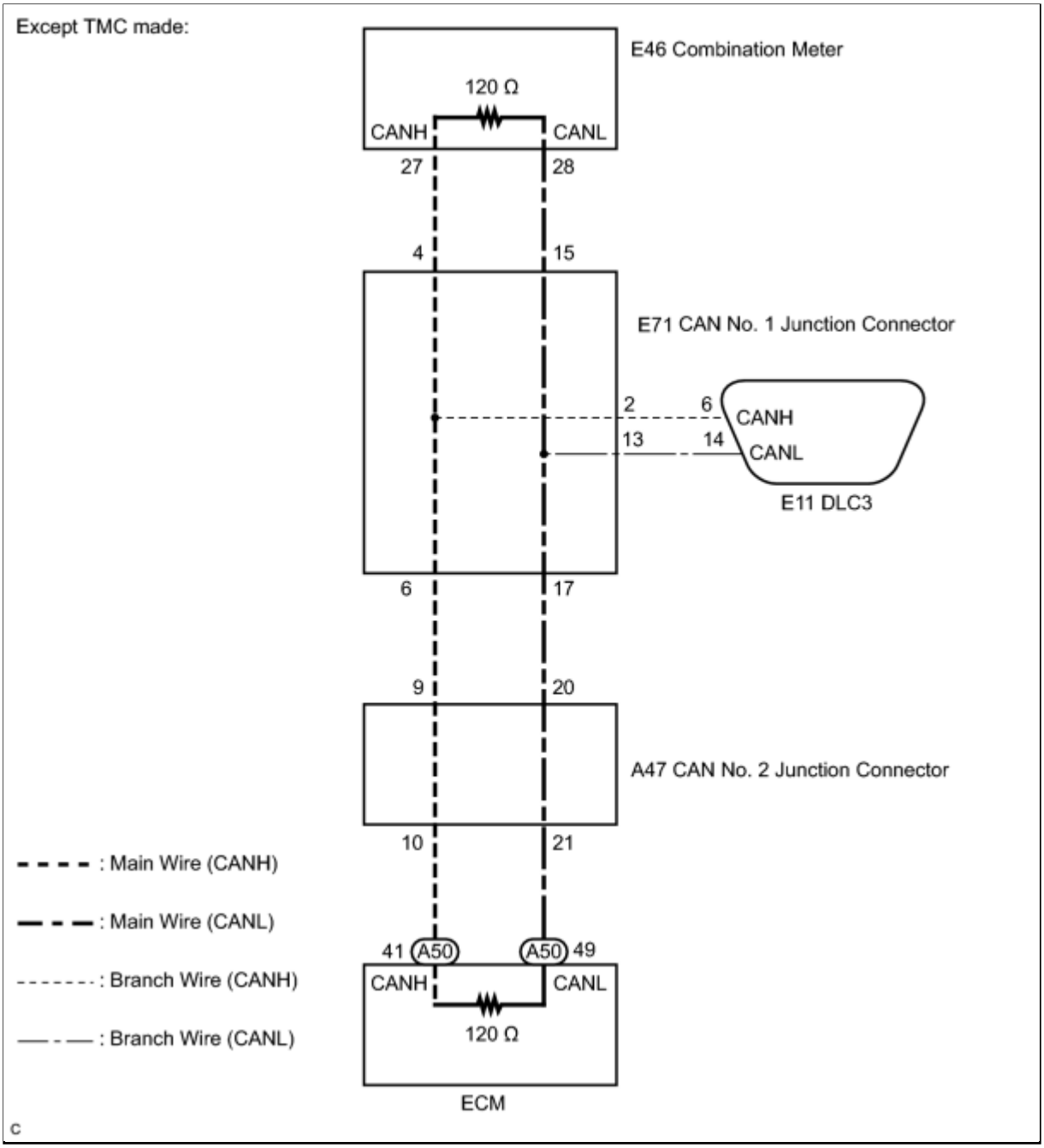

INSPECTION PROCEDURE

NOTICE:

- Turn the ignition switch off before measuring the resistance of the main CAN bus wires and the CAN Bus branch wire.
- After the ignition switch is turned off, check that the key reminder warning system and light reminder warning system are not in operation.
- Before measuring the resistance, leave the vehicle as is for at least 1 minute and do not operate the ignition switch, any other switches or the doors. If any doors need to be opened in order to check the connectors, open the doors and leave them open.

HINT:

- Operating the ignition switch, any other switches or a door triggers related ECU and sensor

communication on the CAN. This communication will cause the resistance value to change.

- Even after DTCs are cleared, if a DTC is stored again after driving the vehicle for a while, the malfunction may be occurring due to vibration of the vehicle. In such a case, wiggling the ECUs or wire harness while performing the inspection below will help determine the cause of the malfunction.

PROCEDURE

1.	**CHECK DLC3**

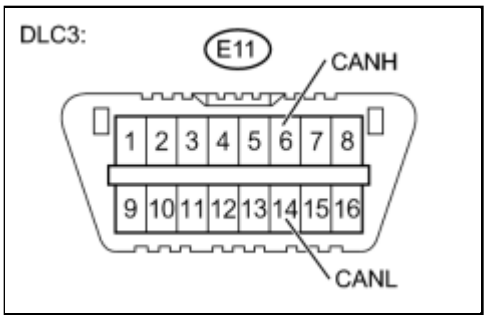

(a) Turn the ignition switch off.

(b) Measure the resistance according to the value(s) in the table below.

Standard Resistance:

TESTER CONNECTION	SWITCH CONDITION	SPECIFIED CONDITION
E11-6 (CANH) - E11-14 (CANL)	Ignition switch off	108 to 132 Ω

NOTICE:

When the measured value is 132 Ω or higher and a CAN communication system diagnostic trouble code is output, there may be a fault besides disconnection of the DLC3 branch wire. For that reason, troubleshooting should be performed again from How to Proceed with Troubleshooting INFO after repairing the trouble area.

NG ▶ **REPAIR OR REPLACE CAN BRANCH WIRE CONNECTED TO DLC3**

OK ▼

2.	**CHECK FOR OPEN IN CAN BUS MAIN WIRE (CAN NO. 2 JUNCTION CONNECTOR)**

(a) Turn the ignition switch off.

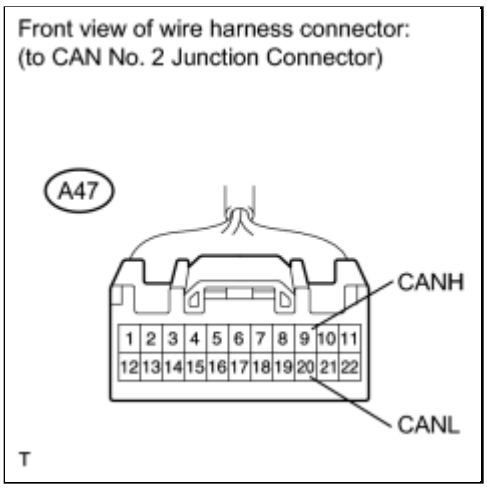

(b) Disconnect the CAN No. 2 junction connector.

(c) Measure the resistance according to the value(s) in the table below.

Standard Resistance:

TESTER CONNECTION	SWITCH CONDITION	SPECIFIED CONDITION
A47-9 (CANH) - A47-20 (CANL)	Ignition switch off	108 to 132 Ω

NG ▶ **CHECK FOR OPEN IN CAN BUS MAIN WIRE (COMBINATION METER)**

OK ▼

3.	**CHECK FOR OPEN IN CAN BUS MAIN WIRE (ECM)**

(a) Turn the ignition switch off.

(b) Reconnect the CAN No. 2 junction connector.

(c) Disconnect the ECM connector.

(d) Measure the resistance according to the value(s) in the table below.

Standard Resistance:

TESTER CONNECTION	SWITCH CONDITION	SPECIFIED CONDITION

Front view of wire harness connector:
(to ECM)

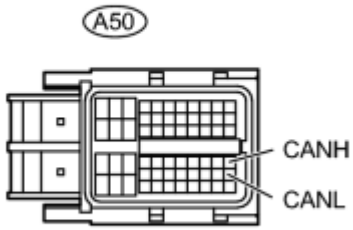

A50-41 (CANH) - A50-49 (CANL)	Ignition switch off	108 to 132 Ω

Result:

RESULT	PROCEED TO
OK (for 2ZR-FE)	A
OK (for 2AZ-FE)	B
NG	C

C ▶ **CHECK FOR OPEN IN CAN BUS MAIN WIRE (CAN NO. 2 JUNCTION CONNECTOR - ECM)**

B ▶ **REPLACE ECM**

A ▶ **REPLACE ECM**

4.	**CHECK FOR OPEN IN CAN BUS MAIN WIRE (CAN NO. 2 JUNCTION CONNECTOR - ECM)**

Front view of wire harness connector:
(to CAN No. 2 Junction Connector)

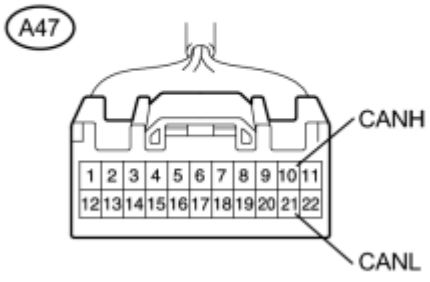

T

(a) Reconnect the ECM connector.

(b) Turn the ignition switch off.

(c) Disconnect the CAN No. 2 junction connector.

(d) Measure the resistance according to the value(s) in the table below.

Standard Resistance:

TESTER CONNECTION	SWITCH CONDITION	SPECIFIED CONDITION
A47-10 (CANH) - A47-21 (CANL)	Ignition switch off	108 to 132 Ω

NG ▶ **REPAIR OR REPLACE CAN MAIN WIRE OR CONNECTOR (CAN NO. 2 JUNCTION CONNECTOR - ECM)**

OK ▶ **REPLACE CAN NO. 2 JUNCTION CONNECTOR**

5.	**CHECK FOR OPEN IN CAN BUS MAIN WIRE (COMBINATION METER)**

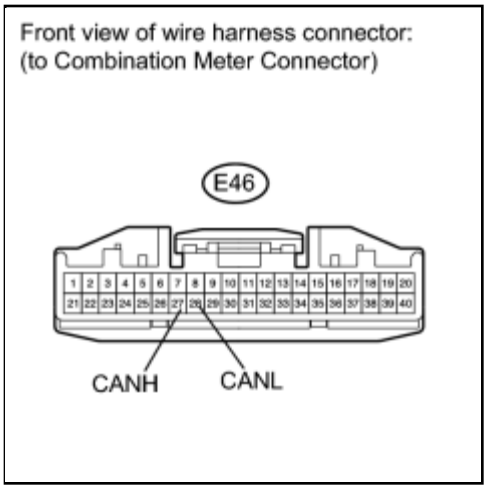

(a) Reconnect the CAN No. 2 junction connector.

(b) Turn the ignition switch off.

(c) Disconnect the combination meter connector.

(d) Measure the resistance according to the value(s) in the table below.

Standard Resistance:

TESTER CONNECTION	SWITCH CONDITION	SPECIFIED CONDITION
E46-27 (CANH) - E46-28 (CANL)	Ignition switch off	108 to 132 Ω

OK ▶ **CHECK FOR OPEN IN CAN BUS MAIN WIRE (CAN NO. 1 JUNCTION CONNECTOR - COMBINATION METER)**

NG ▶ **REPLACE COMBINATION METER ASSEMBLY**

6.	**CHECK FOR OPEN IN CAN BUS MAIN WIRE (CAN NO. 1 JUNCTION CONNECTOR - COMBINATION METER)**

(a) Reconnect the combination meter connector.

(b) Turn the ignition switch off.

(c) TMC made:

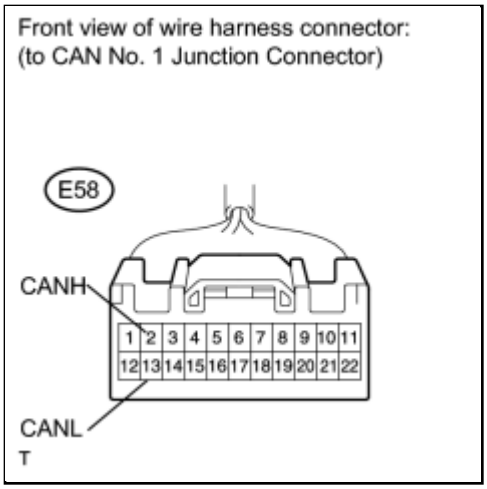

(1) Disconnect the CAN No. 1 junction connector.

(2) Measure the resistance according to the value(s) in the table below.

Standard Resistance:

TESTER CONNECTION	SWITCH CONDITION	SPECIFIED CONDITION
E58-2 (CANH) - E58-13 (CANL)	Ignition switch off	108 to 132 Ω

(d) Except TMC made:

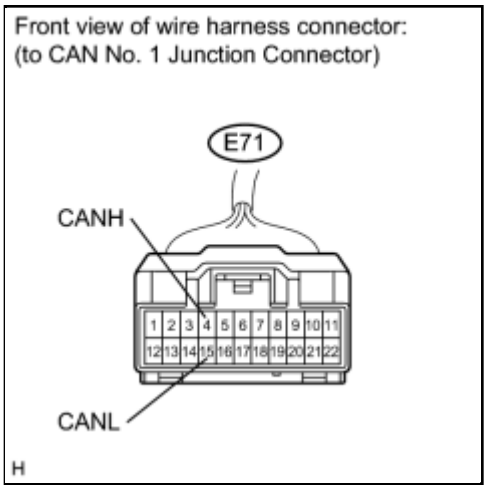

(1) Disconnect the CAN No. 1 junction connector.

(2) Measure the resistance according to the value(s) in the table below.

Standard Resistance:

TESTER CONNECTION	SWITCH CONDITION	SPECIFIED CONDITION
E71-4 (CANH) - E71-15 (CANL)	Ignition switch off	108 to 132 Ω

NG ▶ **REPAIR OR REPLACE CAN MAIN WIRE OR CONNECTOR (CAN NO. 1 JUNCTION CONNECTOR - COMBINATION METER)**

OK ▼

7.	**CHECK FOR OPEN IN CAN BUS MAIN WIRE (CAN NO. 1 JUNCTION CONNECTOR - CAN NO. 2 JUNCTION CONNECTOR)**

(a) TMC made:

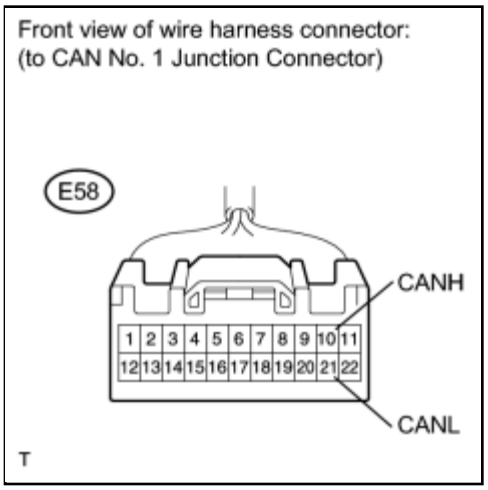

(1) Disconnect the CAN No. 1 junction connector.

(2) Measure the resistance according to the value(s) in the table below.

Standard Resistance:

TESTER CONNECTION	SWITCH CONDITION	SPECIFIED CONDITION
E58-10 (CANH) - E58-21 (CANL)	Ignition switch off	108 to 132 Ω

(b) Except TMC made:

(1) Disconnect the CAN No. 1 junction connector.

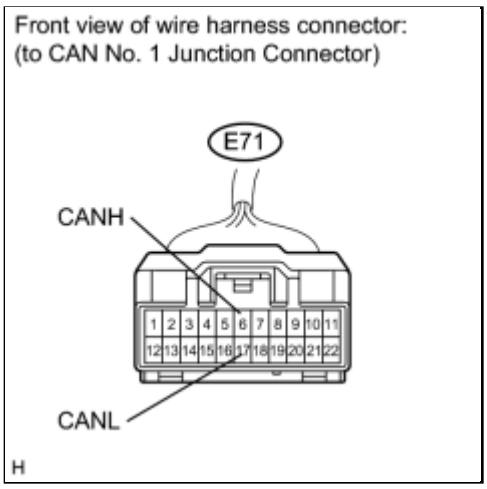

(2) Measure the resistance according to the value(s) in the table below.

Standard Resistance:

TESTER CONNECTION	SWITCH CONDITION	SPECIFIED CONDITION
E71-6 (CANH) - E71-17 (CANL)	Ignition switch off	108 to 132 Ω

NG ▶ **REPAIR OR REPLACE CAN MAIN WIRE OR CONNECTOR (CAN NO. 1 JUNCTION CONNECTOR - CAN NO. 2 JUNCTION CONNECTOR)**

OK ▶ **REPLACE CAN NO. 1 JUNCTION CONNECTOR**

Last Modified: 3-10-2010	6.4 J	**From:** 200901
Model Year: 2010	**Model:** Corolla	**Doc ID:** RM000001WG9021X
Title: NETWORKING: CAN COMMUNICATION SYSTEM: Center Airbag Sensor Communication Stop Mode (2010 Corolla)		

Center Airbag Sensor Communication Stop Mode

DESCRIPTION

DETECTION ITEM	SYMPTOM	TROUBLE AREA
Center Airbag Sensor Communication Stop Mode	• "SRS Airbag" is not displayed on the "CAN Bus Check" screen of the Techstream • Applies to "Center Airbag Sensor Communication Stop Mode" in the "DTC Combination Table"	• Power source circuit of the center airbag sensor • Center airbag sensor branch wire or connector • Center airbag sensor assembly

WIRING DIAGRAM

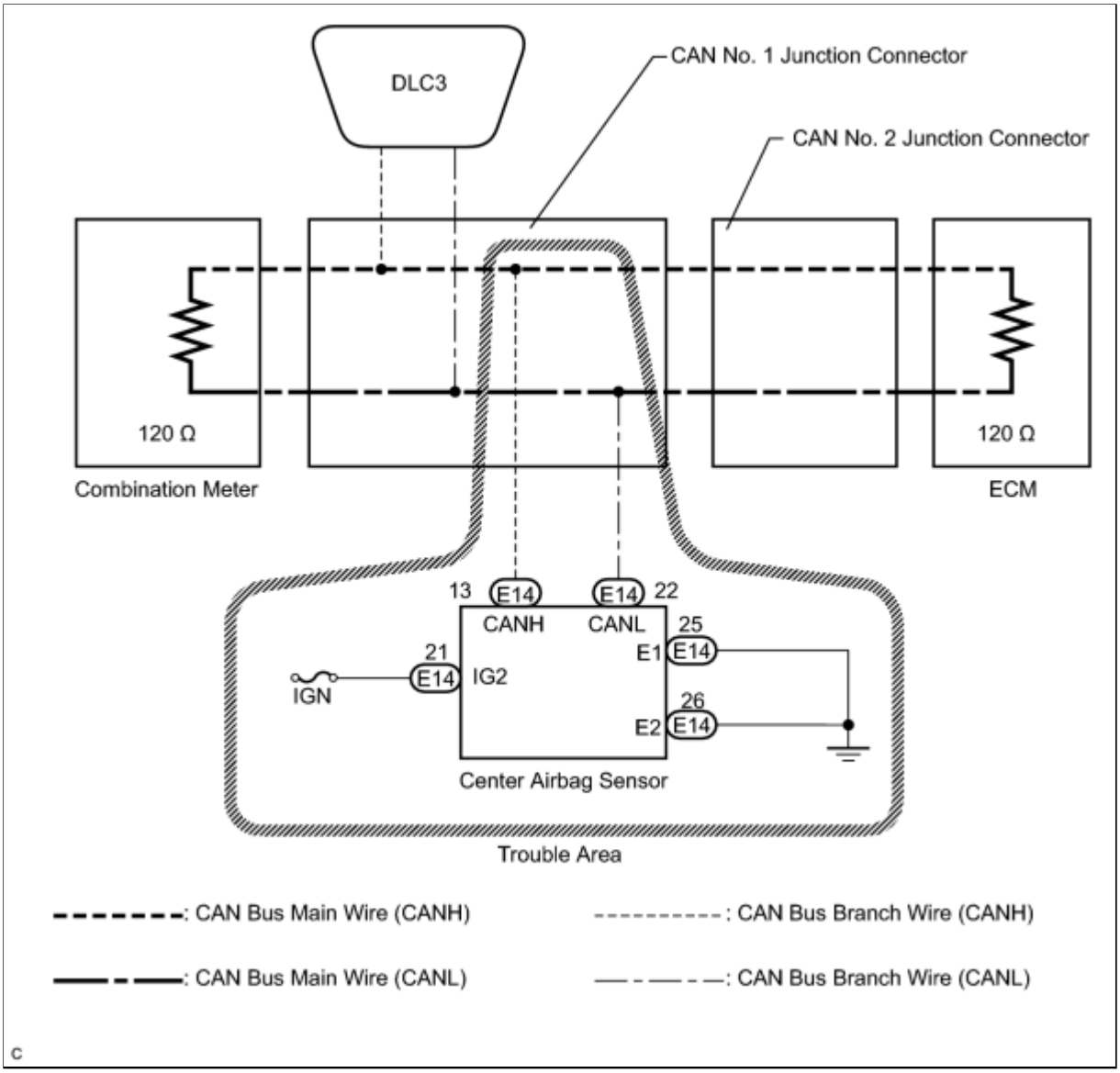

INSPECTION PROCEDURE

NOTICE:

- Turn the ignition switch off before measuring the resistance of the main CAN bus wires and the CAN Bus branch wire.
- After the ignition switch is turned off, check that the key reminder warning system and light reminder warning system are not in operation.
- Before measuring the resistance, leave the vehicle as is for at least 1 minute and do not operate the ignition switch, any other switches or the doors. If any doors need to be opened in order to check the connectors, open the doors and leave them open.

HINT:

- Operating the ignition switch, any other switches, or a door triggers related ECU and sensor communication on the CAN. This communication will cause the resistance value to change.
- Even after DTCs are cleared, if a DTC is stored again after driving the vehicle for a while, the malfunction may be occurring due to vibration of the vehicle. In such a case, wiggling the ECUs or wire harness while performing the inspection below will help determine the cause of the malfunction.

PROCEDURE

1.	**CHECK FOR OPEN IN CAN BUS WIRE (CENTER AIRBAG SENSOR BRANCH WIRE)**

(a) Turn the ignition switch off.

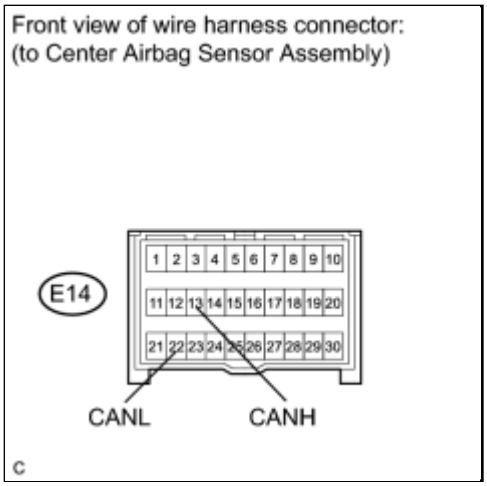

(b) Disconnect the center airbag sensor assembly connector.

(c) Measure the resistance according to the value(s) in the table below.

Standard Resistance:

TESTER CONNECTION	SWITCH CONDITION	SPECIFIED CONDITION
E14-13 (CANH) - E14-22 (CANL)	Ignition switch off	54 to 69 Ω

NG ▶ **REPAIR OR REPLACE CAN BUS BRANCH WIRE OR CONNECTOR (CENTER AIRBAG SENSOR ASSEMBLY BRANCH WIRE)**

OK ▼

2.	**CHECK HARNESS AND CONNECTOR (IG2, E1, E2)**

(a) Disconnect the center airbag sensor assembly connector.

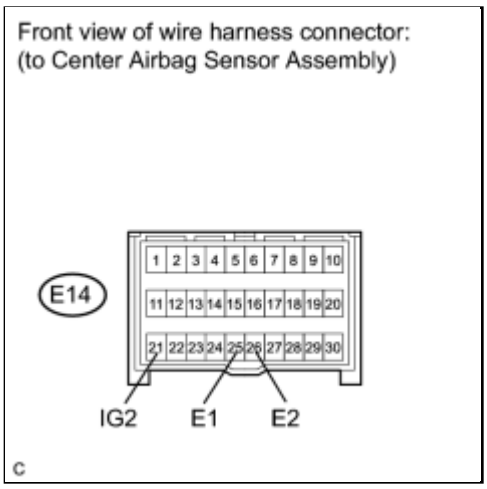

(b) Measure the resistance according to the value(s) in the table below.

Standard Resistance:

TESTER CONNECTION	CONDITION	SPECIFIED CONDITION
E14-25 (E1) - Body ground	Always	Below 1 Ω
E14-26 (E2) - Body ground	Always	Below 1 Ω

(c) Measure the voltage according to the value(s) in the table below.

Standard Voltage:

TESTER CONNECTION	SWITCH CONDITION	SPECIFIED CONDITION
E14-21 (IG2) - Body ground	Ignition switch ON	10 to 14 V

NG ▶ **REPAIR OR REPLACE HARNESS OR CONNECTOR**

OK ▶ **REPLACE CENTER AIRBAG SENSOR ASSEMBLY**

Last Modified: 3-10-2010	6.4 J	**From:** 200901
Model Year: 2010	**Model:** Corolla	**Doc ID:** RM000000VC8010X
Title: NETWORKING: CAN COMMUNICATION SYSTEM: Check CAN Bus Line (2010 Corolla)		

Check CAN Bus Line

DESCRIPTION

If any DTCs from the CAN communication system are not output, first measure the resistance between the terminals of the DLC3 to specify the trouble area, and check that there is no short in the CAN wire, and +B or GND.

WIRING DIAGRAM

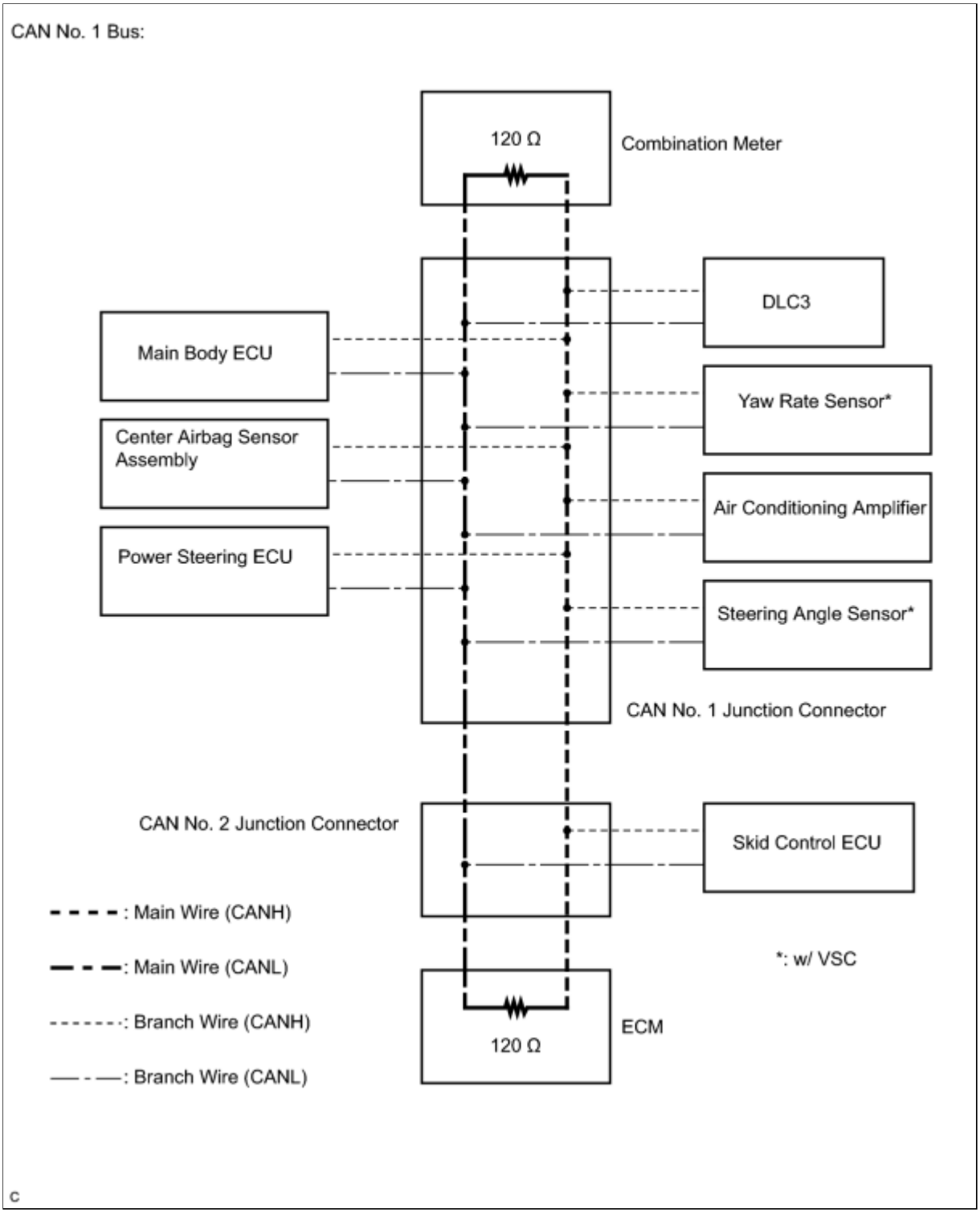

INSPECTION PROCEDURE

NOTICE:

- Turn the ignition switch off before measuring the resistance of the main CAN bus wires and the CAN Bus branch wire.
- After the ignition switch is turned off, check that the key reminder warning system and light reminder warning system are not in operation.
- Before measuring the resistance, leave the vehicle as is for at least 1 minute and do not operate the ignition switch, any other switches or the doors. If any doors need to be opened in order to

check the connectors, open the doors and leave them open.

HINT:

- Operating the ignition switch, any other switches, or a door triggers related ECU and sensor communication on the CAN. This communication will cause the resistance value to change.
- Even after DTCs are cleared, if a DTC is stored again after driving the vehicle for a while, the malfunction may be occurring due to vibration of the vehicle. In such a case, wiggling the ECUs or wire harness while performing the inspection below will help determine the cause of the malfunction.

PROCEDURE

1.	**CHECK CAN BUS WIRE (MAIN WIRE FOR DISCONNECTION, CAN BUS LINES FOR SHORT CIRCUIT)**

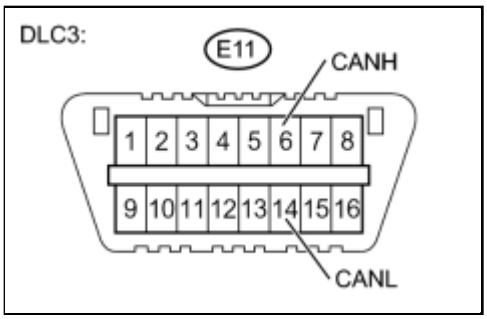

(a) Turn the ignition switch off.

(b) Measure the resistance according to the value(s) in the table below.

Standard Resistance:

TESTER CONNECTION	SWITCH CONDITION	RESULT	PROCEED TO
E11-6 (CANH) - E11-14 (CANL)	Ignition switch off	54 to 69 Ω	A
E11-6 (CANH) - E11-14 (CANL)	Ignition switch off	70 Ω or higher	B
E11-6 (CANH) - E11-14 (CANL)	Ignition switch off	Below 54 Ω	C

C ▶ **CHECK CAN BUS LINES FOR SHORT CIRCUIT**

B ▶ **CHECK FOR OPEN IN CAN MAIN BUS LINE**

A ▼

2.	CHECK FOR SHORT TO B+ IN CAN BUS WIRE

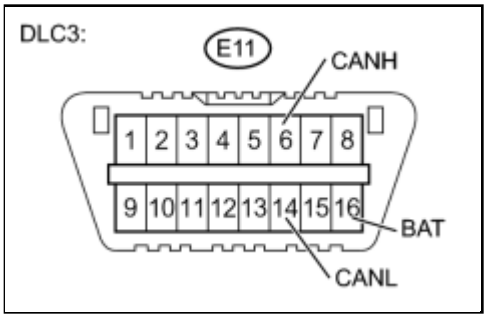

(a) Measure the resistance according to the value(s) in the table below.

Standard Resistance:

TESTER CONNECTION	CONDITION	SPECIFIED CONDITION
E11-6 (CANH) - E11-16 (BAT)	Cable is disconnected from negative (-) battery terminal	6 kΩ or higher
E11-14 (CANL) - E11-16 (BAT)	Cable is disconnected from negative (-) battery terminal	6 kΩ or higher

NG ▶ **CHECK CAN BUS LINE FOR SHORT TO +B**

OK ▼

3.	CHECK FOR SHORT TO GND IN CAN BUS WIRE

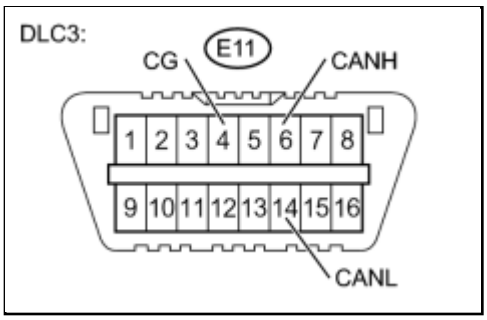

(a) Measure the resistance according to the value(s) in the table below.

Standard Resistance:

TESTER CONNECTION	SWITCH CONDITION	SPECIFIED CONDITION
E11-6 (CANH) - E11-4 (CG)	Ignition switch off	200 Ω or higher
E11-14 (CANL) - E11-4 (CG)	Ignition switch off	200 Ω or higher

NG ▶ **CHECK CAN BUS LINE FOR SHORT TO GND**

OK ▶ **GO TO HOW TO PROCEED WITH TROUBLESHOOTING**

Last Modified: 3-10-2010	6.4 J	**From:** 200901
Model Year: 2010	**Model:** Corolla	**Doc ID:** RM000001ZUR022X
Title: NETWORKING: CAN COMMUNICATION SYSTEM: Open in One Side of CAN Branch Line (2010 Corolla)		

Open in One Side of CAN Branch Line

DESCRIPTION

If some ECUs and sensors are not displayed the "CAN Bus Check" on screen of the Techstream and some ECUs and sensors repeatedly appear and disappear from the screen when the CAN main bus wires are normal (there is no open, short, short to B+, or short to GND in the main bus wires), there may be an open circuit in either of the CAN branch wires.

HINT:

If some ECUs and sensors repeatedly appear and disappear the "CAN Bus Check" from screen, communication between the normal ECUs (sensors) and the Techstream may be affected by the incomplete signals that are output from the ECU that has an open circuit in either of its CAN branch wires. In this case, the CAN branch wires for the ECUs and sensors that repeatedly appear and disappear from the screen are normal and the ECU that is not displayed on the screen may be the main cause of the problem (this ECU may have an open circuit in either of its CAN branch wires).

SYMPTOM	TROUBLE AREA
2 or more ECUs and/or sensors do not appear on the Techstream "CAN Bus Check" screen.	One side of the CAN branch wire is open, or output signals are incomplete. • Skid control ECU • Steering angle sensor • Yaw rate sensor • Power steering ECU • Air conditioning amplifier • Main body ECU • Center airbag sensor assembly • ECM • Combination meter • Accessory gateway

INSPECTION PROCEDURE

HINT:

Even after DTCs are cleared, if a DTC is stored again after driving the vehicle for a while, the malfunction may be occurring due to vibration of the vehicle. In such a case, wiggling the ECUs or wire harness while performing the inspection below will help determine the cause of the malfunction.

PROCEDURE

1.	**CHECK FOR OPEN IN ONE SIDE OF CAN NO. 1 BUS BRANCH WIRE**

(a) Confirm the systems (ECUs and sensors), which use CAN communication, equipped on the vehicle INFO .

(b) Using the Techstream, select and perform "CAN Bus Check" INFO .

(c) Observe the screen for approximately 1 minute to check the ECUs and sensors that are not displayed on the screen and also those that repeatedly appear and disappear from the screen.

(d) Check that the ECUs and sensors, which are connected to the ECUs or sensors that are not displayed on the screen.

(e) Check that the ECUs and sensors, which repeatedly appear and disappear the "Bus Check" screen, are constantly displayed.

NEXT ▶ **GO TO CORRESPONDING COMMUNICATION STOP MODE**

Last Modified: 3-10-2010	6.4 L	**From:** 200901
Model Year: 2010	**Model:** Corolla	**Doc ID:** RM000002XHH01EX
Title: NETWORKING: LIN COMMUNICATION SYSTEM: PRECAUTION (2010 Corolla)		

PRECAUTION

1. PRECAUTIONS WHEN USING TECHSTREAM

(a) When using the Techstream with the engine switch off to troubleshoot: Connect the Techstream to the vehicle, and turn the courtesy light switch on and off at 1.5-second intervals until communication between the Techstream and the vehicle begins.

(b) After all DTCs are cleared, check if the trouble occurs again 6 seconds after the engine switch is turned on (IG).

2. PRECAUTIONS WHEN WORKING ON ELECTRIC STEERING LOCK

(a) If the steering lock ECU (steering lock actuator assembly) is replaced, open and close the driver door. The engine may not start until this is performed.

HINT:

Opening and closing the driver door causes the steering lock ECU (steering lock actuator assembly) to memorize the correct steering lock bar position.

Last Modified: 3-10-2010	6.4 R	**From:** 200901
Model Year: 2010	**Model:** Corolla	**Doc ID:** RM000002XHK014X
Title: NETWORKING: LIN COMMUNICATION SYSTEM: PARTS LOCATION (2010 Corolla)		

PARTS LOCATION

ILLUSTRATION

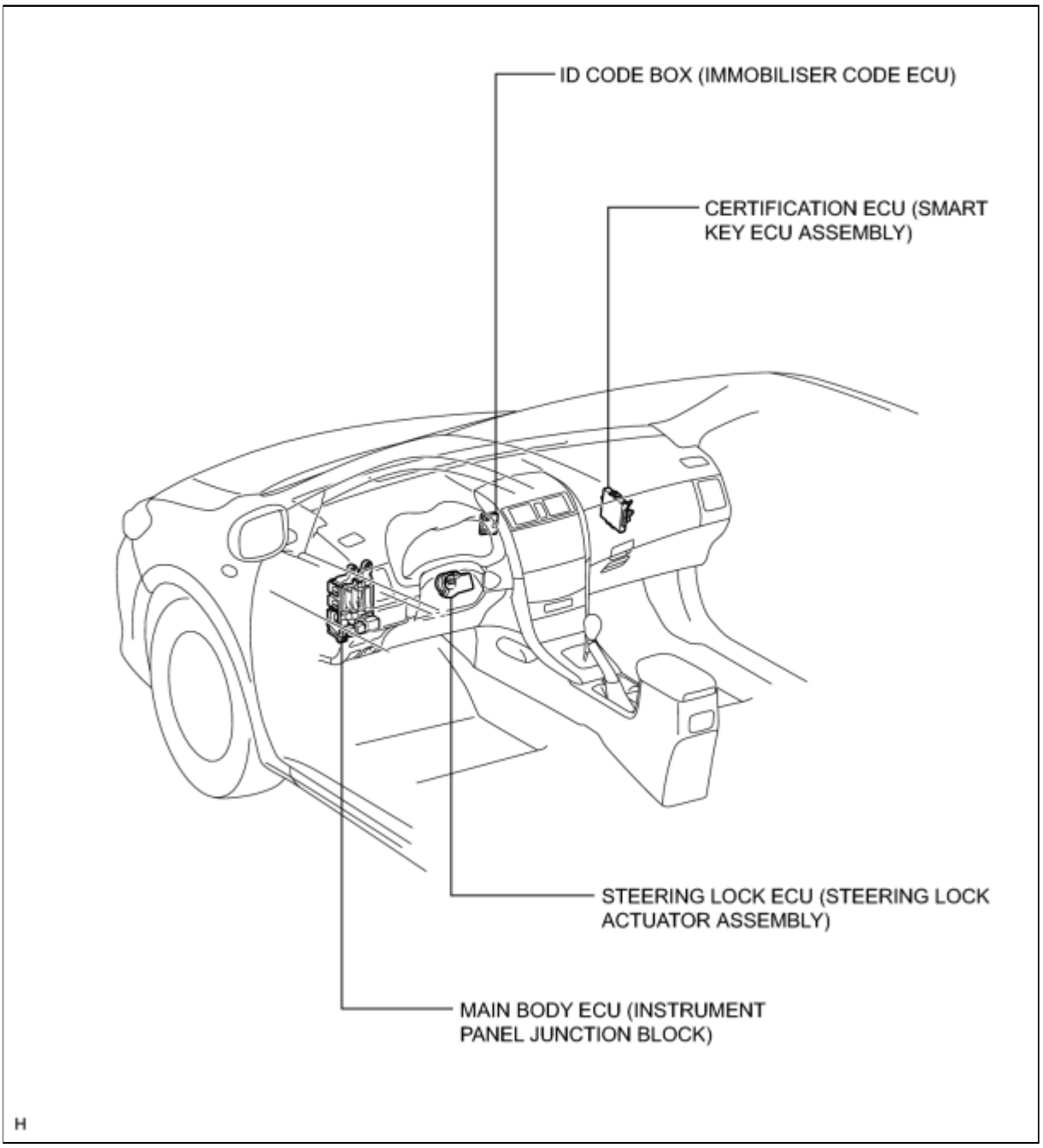

Last Modified: 3-10-2010	6.4 U	**From:** 200901
Model Year: 2010	**Model:** Corolla	**Doc ID:** RM000002XHT015X
Title: NETWORKING: LIN COMMUNICATION SYSTEM: SYSTEM DIAGRAM (2010 Corolla)		

SYSTEM DIAGRAM

1. CERTIFICATION ECU BUS LINES

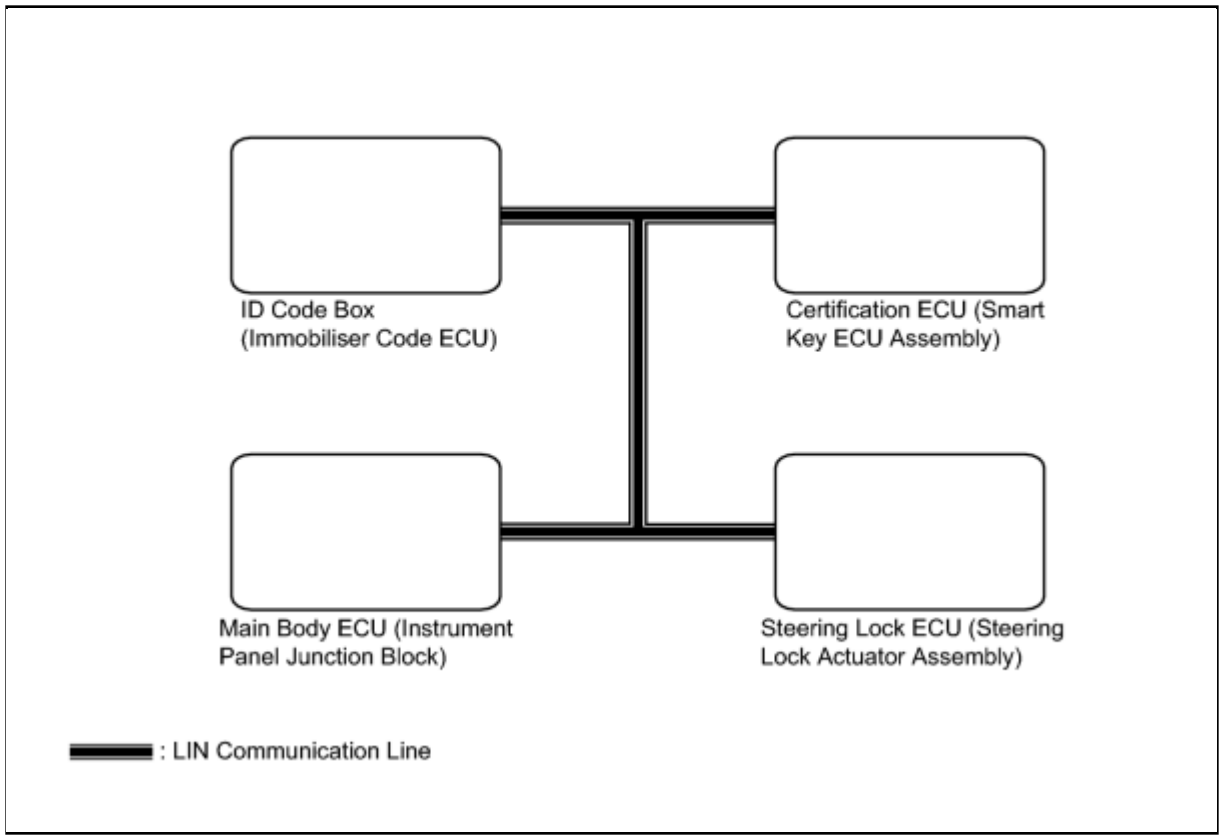

Last Modified: 3-10-2010	6.4 D	**From:** 200901
Model Year: 2010	**Model:** Corolla	**Doc ID:** RM000002XHI01IX
Title: NETWORKING: LIN COMMUNICATION SYSTEM: HOW TO PROCEED WITH TROUBLESHOOTING (2010 Corolla)		

HOW TO PROCEED WITH TROUBLESHOOTING

HINT:

- Use the following procedure to troubleshoot the LIN communication system.
- *: Use the Techstream.

1.	**VEHICLE BROUGHT TO WORKSHOP**

NEXT

2.	**CUSTOMER PROBLEM ANALYSIS**

HINT:

- In troubleshooting, confirm that the problem symptoms have been accurately identified. Preconceptions should be discarded in order to make an accurate judgment. To clearly understand what the problem symptoms are, it is extremely important to ask the customer about the problem and the conditions at the time the malfunction occurred.
- Gather as much information as possible for reference. Past problems that seem unrelated may also help in some cases.
- The following 5 items are important points in the problem analysis:

What	Vehicle, system name
When	Date, time, occurrence frequency
Where	Road conditions
Under what conditions?	Driving conditions, weather conditions
How did it happen?	Problem symptoms

NEXT

3.	INSPECT BATTERY VOLTAGE

(a) Measure the battery voltage.

Standard Voltage:
11 to 14 V

HINT:

If the voltage is below 11 V, recharge or replace the battery before proceeding.

NEXT

4.	INSPECT COMMUNICATION FUNCTION OF LIN COMMUNICATION SYSTEM*

(a) Using the Techstream, inspect the LIN communication function to ensure there are no malfunctions in the communication system INFO .

Result:

RESULT	PROCEED TO
No DTCs output	A
DTCs output	B

B INFO **Go to DIAGNOSTIC TROUBLE CODE CHART**

A

5.	OVERALL ANALYSIS AND TROUBLESHOOTING

(a) Terminals of ECU INFO

NEXT

6.	REPAIR OR REPLACE

NEXT

7.	CONFIRMATION TEST

NEXT END

Last Modified: 3-10-2010	6.4 D	**From:** 200901
Model Year: 2010	**Model:** Corolla	**Doc ID:** RM000002XHQ016X
Title: NETWORKING: LIN COMMUNICATION SYSTEM: SYSTEM DESCRIPTION (2010 Corolla)		

SYSTEM DESCRIPTION

1. LIN COMMUNICATION SYSTEM DESCRIPTION

The multiplex communication system (LIN) is used to control communication between the ECUs of the body system. If communication cannot be performed through the LIN because of an open in the communication lines or other reason, the master control ECU of the relevant system will output a DTC. For the communication system and the connected ECUs, refer to the table below.

HINT:

Each ECU has a fail safe function which activates to maintain the minimum performance of the system and protect the system.

(a) LIN Communication Certification System

ECU	MASTER CONTROL (LIN COMMUNICATION DTC OUTPUT FUNCTION)
Certification ECU (Smart Key ECU Assembly)	○ (with output function)
Main Body ECU (Instrument Panel Junction Block)	○ (with output function)
Steering Lock ECU (Steering Lock Actuator Assembly)	x (no output function)
ID Code Box (Immobiliser Code ECU)	x (no output function)

Last Modified: 3-10-2010	6.4 U	**From:** 200901
Model Year: 2010	**Model:** Corolla	**Doc ID:** RM000002XHL017X
Title: NETWORKING: LIN COMMUNICATION SYSTEM: TERMINALS OF ECU (2010 Corolla)		

TERMINALS OF ECU

1. CHECK MAIN BODY ECU (INSTRUMENT PANEL JUNCTION BLOCK)

(a) Disconnect the 2B, 2E, 2F and 2G junction block and E51 ECU connectors.

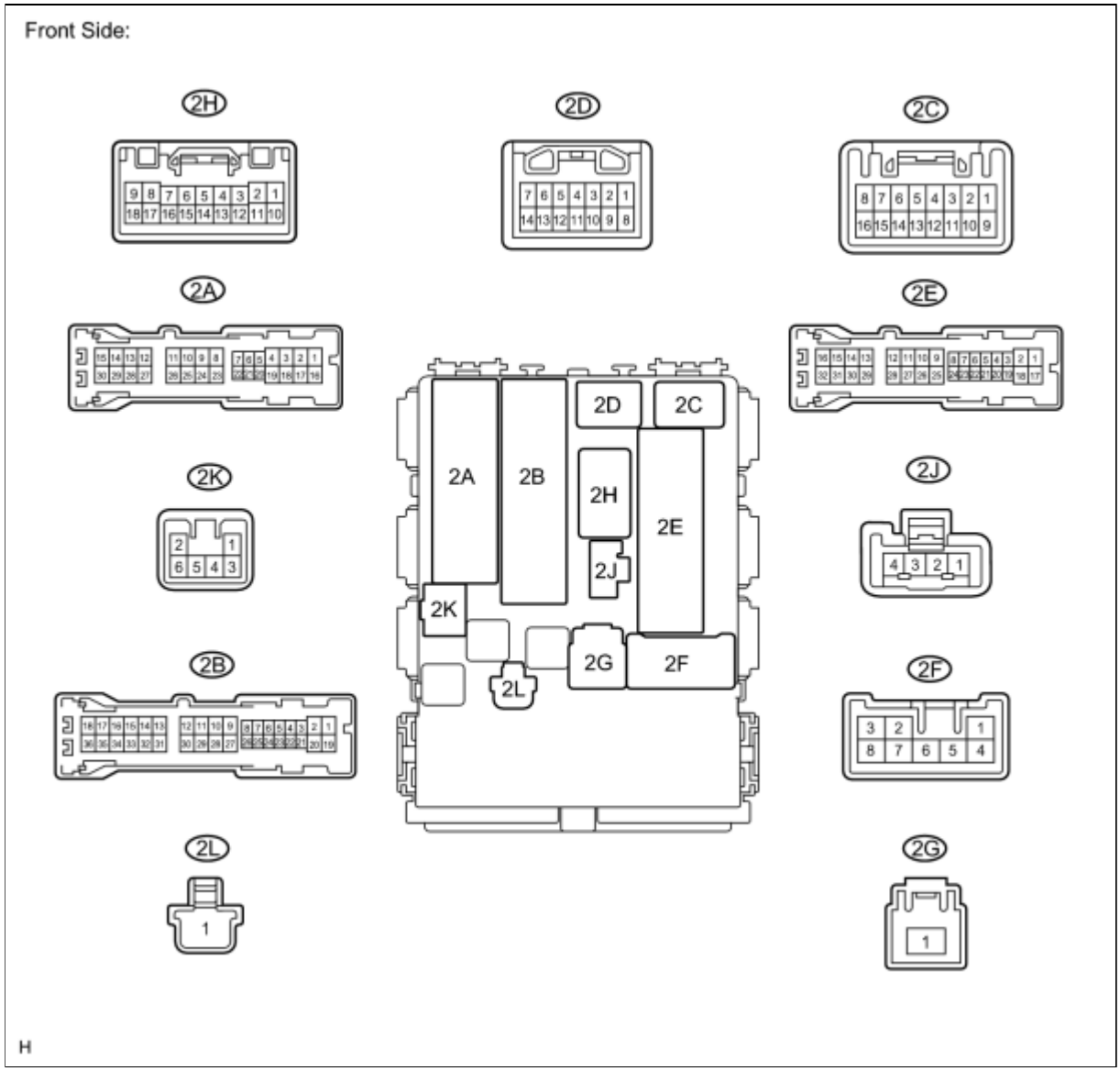

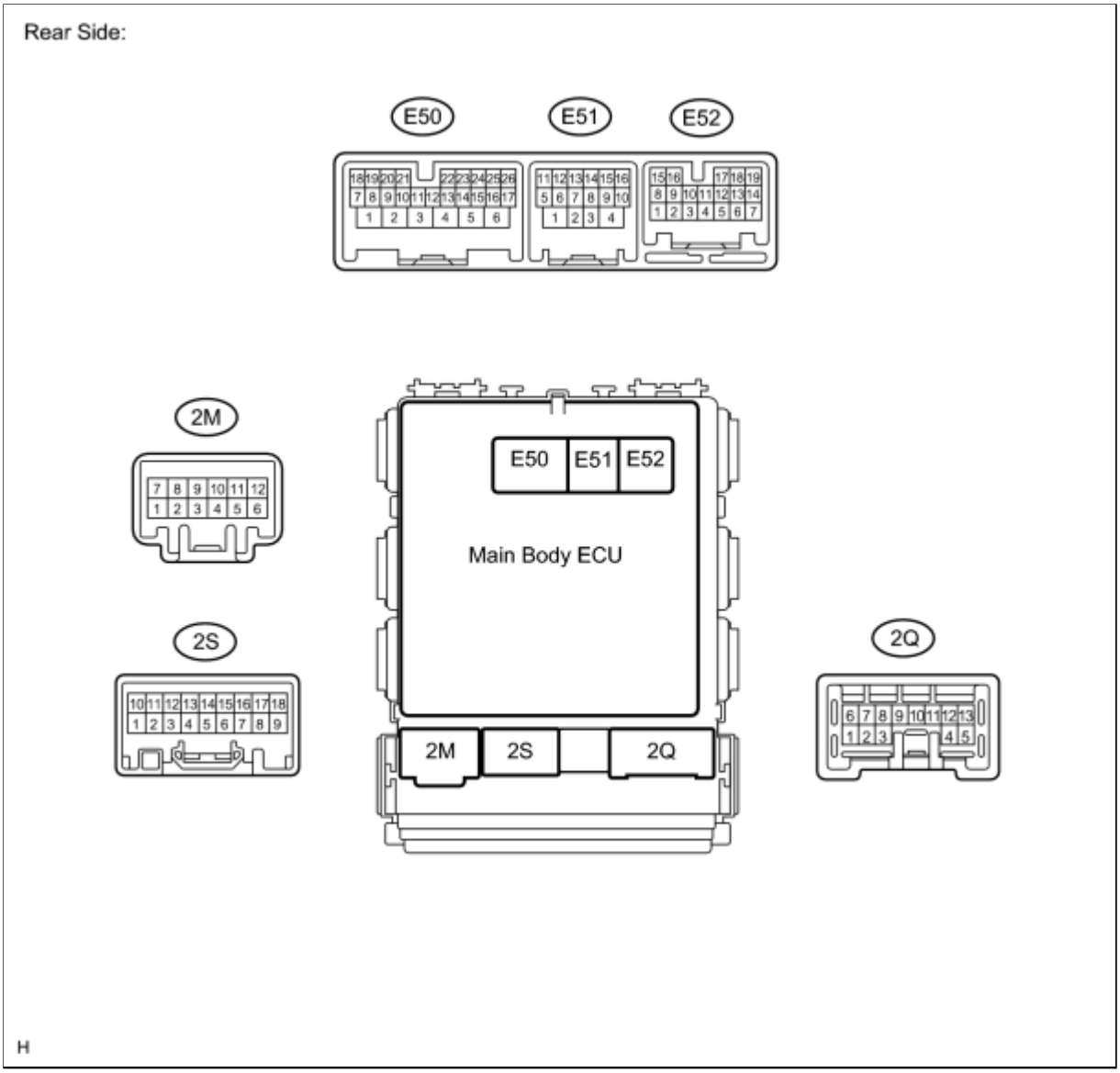

(b) Measure the voltage and resistance according to the value(s) in the table below.

TESTER CONNECTION	WIRING COLOR	TERMINAL DESCRIPTION	CONDITION	SPECIFIED CONDITION
2B-30 (BECU) - Body ground	W - Body ground	Battery power supply	Always	11 to 14 V
2F-5 (ACC) - Body ground	W - Body ground*1 L - Body ground*2	ACC power supply	Engine switch on (ACC)	11 to 14 V
2G-1 (IG) - Body ground	W - Body ground	Battery power supply	Engine switch on (IG)	11 to 14 V
2E-17 (GND1) - Body ground	W-B - Body ground	Ground	Always	Below 1 Ω

TESTER CONNECTION	WIRING COLOR	TERMINAL DESCRIPTION	CONDITION	SPECIFIED CONDITION
E51-4 (GND2) - Body ground	W-B - Body ground	Ground	Always	Below 1 Ω

- *1: for TMC Made
- *2: Except for TMC made

If the result is not as specified, there may be a malfunction on the wire harness side.

(c) Reconnect the 2B, 2E, 2F and 2G junction block and E51 ECU connectors.

(d) Measure the pulse according to the value(s) in the table below.

TESTER CONNECTION	WIRING COLOR	TERMINAL DESCRIPTION	CONDITION	SPECIFIED CONDITION
2C-12 (LIN1) - E51-4 (GND2)	V - W-B	LIN Communication line	Engine switch on (IG)	Pulse generation

If the result is not as specified, the ECU may have a malfunction.

2. CHECK CERTIFICATION ECU (SMART KEY ECU ASSEMBLY)

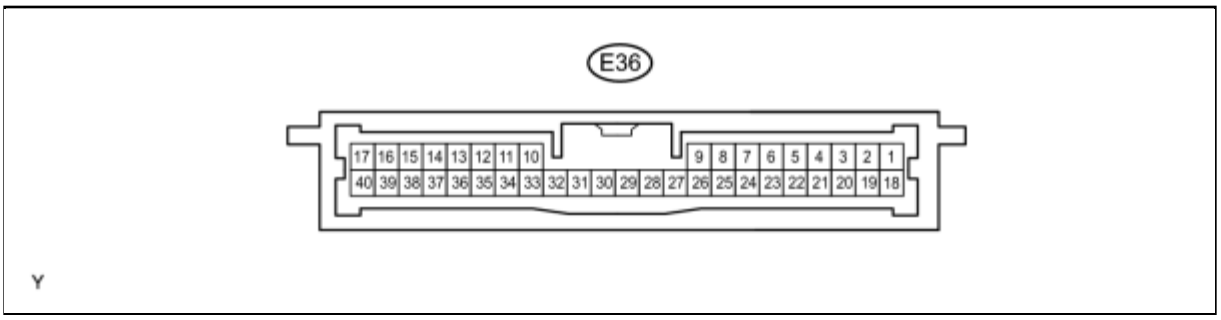

(a) Disconnect the E36 ECU connector.

(b) Measure the voltage and resistance according to the value(s) in the table below.

TESTER CONNECTION	WIRING COLOR	TERMINAL DESCRIPTION	CONDITION	SPECIFIED CONDITION
E36-1 (+B) - E36-17 (E)	W - W-B*1 BR - W-B*2	Battery power supply	Always	11 to 14 V
E36-17 (E) - Body ground	W-B - Body ground	Ground	Always	Below 1 Ω

- *1: for TMC Made
- *2: Except for TMC made

If the result is not as specified, there may be a malfunction on the wire harness side.

(c) Reconnect the E36 ECU connector.

(d) Measure the voltage and pulse according to value(s) in the table below.

TESTER CONNECTION	WIRING COLOR	TERMINAL DESCRIPTION	CONDITION	SPECIFIED CONDITION
E36-18 (IG) - E36-17 (E)	L - W-B*1 B - W-B*2	Engine switch power supply	Engine switch on (IG)	11 to 14 V
E36-18 (IG) - E36-17 (E)	L - W-B*1 B - W-B*2	Engine switch power supply	Engine switch off	Below 1 V
E36-10 (LIN) - E36-17 (E)	V - W-B	LIN Communication line	Engine switch on (IG)	Pulse generation

- *1: for TMC Made
- *2: Except for TMC made

If the result is not as specified, the ECU may have a malfunction.

3. CHECK ID CODE BOX (IMMOBILISER CODE ECU)

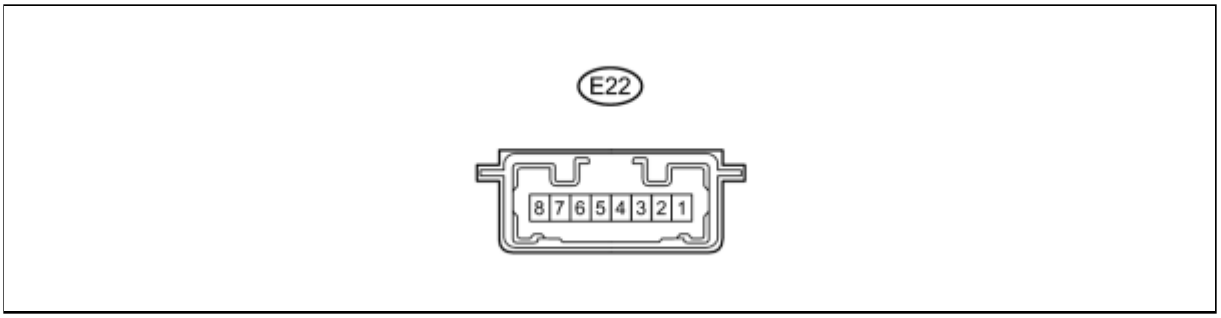

(a) Disconnect the E22 ECU connector.

(b) Measure the voltage and resistance according to the value(s) in the table below.

TESTER CONNECTION	WIRING COLOR	TERMINAL DESCRIPTION	CONDITION	SPECIFIED CONDITION
E22-1 (+B) - E22-8 (GND)	W - BR*1 BR - BR*2	Battery power supply	Always	11 to 14 V
E22-8 (GND) - Body ground	BR - Body ground	Ground	Always	Below 1 Ω

- *1: for TMC Made
- *2: Except for TMC made

If the result is not as specified, there may be a malfunction on the wire harness side.

(c) Reconnect the E22 ECU connector.

(d) Measure the pulse according to value(s) in the table below.

TESTER	WIRING	TERMINAL	CONDITION	SPECIFIED

CONNECTION	COLOR	DESCRIPTION		CONDITION
E22-3 (LIN1) - E22-8 (GND)	V - BR	LIN Communication line	Engine switch on (IG)	Pulse generation

If the result is not as specified, the ECU may have a malfunction.

4. CHECK STEERING LOCK ECU (STEERING LOCK ACTUATOR ASSEMBLY)

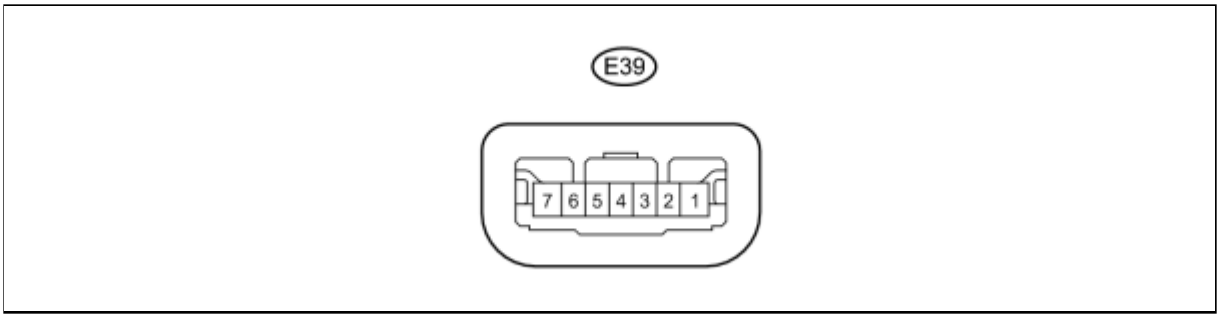

(a) Disconnect the E39 ECU connector.

(b) Measure the voltage and resistance according to the value(s) in the table below.

TESTER CONNECTION	WIRING COLOR	TERMINAL DESCRIPTION	CONDITION	SPECIFIED CONDITION
E39-7 (B) - E39-1 (GND)	L - W-B	Battery power supply	Always	11 to 14 V
E39-1 (GND) - Body ground	W-B - Body ground	Ground	Always	Below 1 Ω
E39-6 (IG2) - E39-1 (GND)	B - W-B	Engine switch power supply	Engine switch on (IG)	11 to 14 V
E39-6 (IG2) - E39-1 (GND)	B - W-B	Engine switch power supply	Engine switch off	Below 1 V

If the result is not as specified, there may be a malfunction on the wire harness side.

(c) Reconnect the E39 ECU connector.

(d) Measure the pulse according to value(s) in the table below.

TESTER CONNECTION	WIRING COLOR	TERMINAL DESCRIPTION	CONDITION	SPECIFIED CONDITION
E39-5 (LIN) - E39-1 (GND)	V - W-B	LIN Communication line	Engine switch on (IG)	Pulse generation

If the result is not as specified, the ECU may have a malfunction.

Last Modified: 3-10-2010	6.4 D	**From:** 200901
Model Year: 2010	**Model:** Corolla	**Doc ID:** RM000001VJO00TX
Title: NETWORKING: LIN COMMUNICATION SYSTEM: DIAGNOSIS SYSTEM (2010 Corolla)		

DIAGNOSIS SYSTEM

1. DESCRIPTION

(a) The certification ECU (smart key ECU assembly) controls the LIN communication system. LIN communication system data and Diagnostic Trouble Codes (DTCs) can be read through the Data Link Connector 3 (DLC3). When the system seems to be malfunctioning, use the Techstream to check for malfunctions and perform repairs.

2. CHECK DLC3

(a) Check the DLC3 INFO .

3. INSPECT BATTERY VOLTAGE

(a) Measure the battery voltage.

Standard Voltage:
11 to 14 V

If the voltage is below 11 V, recharge or replace the battery before proceeding.

Last Modified: 3-10-2010	6.4 D	**From:** 200901
Model Year: 2010	**Model:** Corolla	**Doc ID:** RM000002XHS018X
Title: NETWORKING: LIN COMMUNICATION SYSTEM: DTC CHECK / CLEAR (2010 Corolla)		

DTC CHECK / CLEAR

1. CHECK DTC

(a) Connect the Techstream to the DLC3.

(b) Turn the engine switch on (IG).

(c) Turn the Techstream on.

(d) Enter the following menus: Body Electrical / Smart Key or Main Body / Trouble Codes.

(e) Check the detail of the DTC(s) INFO .

2. CLEAR DTC

(a) Connect the Techstream to the DLC3.

(b) Turn the engine switch on (IG).

(c) Turn the Techstream on.

(d) Enter the following menus: Body Electrical / Smart Key or Main Body / Trouble Codes.

(e) Clear the DTC(s).

Last Modified: 3-10-2010	6.4 C	**From:** 200901
Model Year: 2010	**Model:** Corolla	**Doc ID:** RM000002XHW00YX
Title: NETWORKING: LIN COMMUNICATION SYSTEM: B2287: LIN Communication Master Malfunction (2010 Corolla)		

DTC	**B2287**	**LIN Communication Master Malfunction**

DESCRIPTION

This DTC is output when there is an open, short or ECU communication malfunction between the main body ECU (instrument panel junction block) and certification ECU (smart key ECU assembly).

DTC NO.	DTC DETECTION CONDITION	TROUBLE AREA
B2287	There is an open, short or ECU communication malfunction between the main body ECU (instrument panel junction block) and certification ECU (smart key ECU assembly).	• Certification ECU (smart key ECU assembly) • Main body ECU (instrument panel junction block) • Wire harness or connector

WIRING DIAGRAM

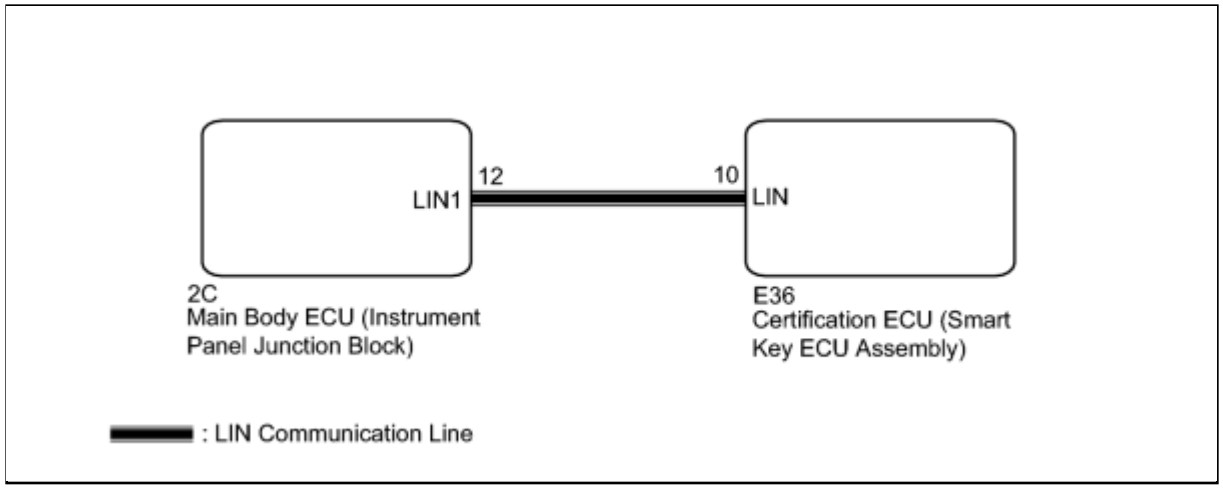

INSPECTION PROCEDURE

HINT:

When DTC B2785 and B2287 are output simultaneously, perform the troubleshooting for DTC B2785 first.

NOTICE:

If the certification ECU (smart key ECU assembly) is replaced, register the keys and ECU communication ID INFO .

PROCEDURE

1.	**CLEAR DTC**

(a) Clear the DTC INFO .

NEXT

2.	**CHECK FOR DTC**

(a) Recheck for the DTC INFO .

OK:

B2287 is not output.

NG ▶ **CHECK HARNESS AND CONNECTOR (CERTIFICATION ECU - MAIN BODY ECU)**

OK ▶ **USE SIMULATION METHOD TO CHECK**

3.	**CHECK HARNESS AND CONNECTOR (CERTIFICATION ECU - MAIN BODY ECU)**

(a) Disconnect the E36 and 2C connectors.

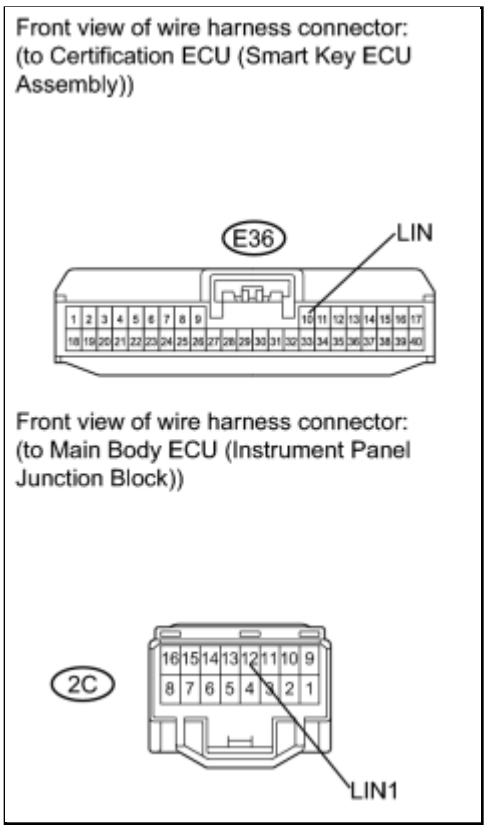

(b) Measure the resistance and voltage according to the value(s) in the table below.

Standard Resistance:

TESTER CONNECTION	CONDITION	SPECIFIED CONDITION
E36-10 (LIN) - 2C-12 (LIN1)	Always	Below 1 Ω
E36-10 (LIN) - Body ground	Always	10 kΩ or higher

Standard Voltage:

TESTER CONNECTION	CONDITION	SPECIFIED CONDITION
E36-10 (LIN) - Body ground	Always	Below 1 V

NG ▶ **REPAIR OR REPLACE HARNESS OR CONNECTOR**

OK ▼

4.	**REPLACE MAIN BODY ECU (INSTRUMENT PANEL JUNCTION BLOCK)**

(a) Replace the main body ECU (instrument panel junction block).

NEXT

5.	**CHECK FOR DTC**

(a) Clear the DTC INFO .

(b) Recheck for the DTC.

OK:
B2287 is not output.

NG → **REPLACE CERTIFICATION ECU (SMART KEY ECU ASSEMBLY)**

OK → **END (MAIN BODY ECU (INSTRUMENT PANEL JUNCTION BLOCK) IS DEFECTIVE)**

Last Modified: 3-10-2010	6.4 S	**From:** 200901
Model Year: 2010	**Model:** Corolla	**Doc ID:** RM000002XHJ00ZX
Title: NETWORKING: LIN COMMUNICATION SYSTEM: DIAGNOSTIC TROUBLE CODE CHART (2010 Corolla)		

DIAGNOSTIC TROUBLE CODE CHART

1. MAIN BODY ECU (INSTRUMENT PANEL JUNCTION BLOCK) DIAGNOSTIC TROUBLE CODE CHART

Main Body ECU (Instrument Panel Junction Block)

DTC CODE	DETECTION ITEM	TROUBLE AREA	SEE PAGE
B2287	LIN Communication Master Malfunction	1. Certification ECU (smart key ECU assembly) 2. Main body ECU (instrument panel junction block) 3. Wire harness or connector	INFO

2. CERTIFICATION ECU (SMART KEY ECU ASSEMBLY) DIAGNOSTIC TROUBLE CODE CHART

Certification ECU (Smart Key ECU Assembly)

DTC CODE	DETECTION ITEM	TROUBLE AREA	SEE PAGE
B2785	Communication Malfunction between ECUs Connected by LIN	1. Certification ECU (smart key ECU assembly) 2. Main body ECU (instrument panel junction block) 3. Steering lock ECU (steering lock actuator assembly) 4. ID code box (immobiliser code ECU) 5. Wire harness or connector	INFO
B2786	No Response from Steering Lock ECU	1. Steering lock ECU (steering lock actuator assembly) 2. Certification ECU (smart key ECU assembly) 3. Wire harness or connector	INFO
B2789	No Response from ID BOX	1. ID code box (immobiliser code ECU) 2. Certification ECU (smart key ECU assembly) 3. Wire harness or connector	INFO

Last Modified: 3-10-2010	6.4 C	**From:** 200901
Model Year: 2010	**Model:** Corolla	**Doc ID:** RM000002XHV018X
Title: NETWORKING: LIN COMMUNICATION SYSTEM: B2785: Communication Malfunction between ECUs Connected by LIN (2010 Corolla)		

DTC	**B2785**	**Communication Malfunction between ECUs Connected by LIN**

DESCRIPTION

The certification ECU (smart key ECU assembly) monitors communication between all the ECUs connected to the certification ECU system LIN bus lines. When the certification ECU (smart key ECU assembly) detects an error in communication with all the ECUs connected to the certification ECU system LIN bus lines at a set interval and 3 times in a row, DTC B2785 will be output.

DTC NO.	DTC DETECTION CONDITION	TROUBLE AREA
B2785	• Error in LIN communication between ECUs and an open or short in communication lines • LIN communication from the certification ECU (smart key ECU assembly) stops for a set amount of time or more	• Certification ECU (smart key ECU assembly) • Main body ECU (instrument panel junction block) • Steering lock ECU (steering lock actuator assembly) • ID code box (immobiliser code ECU) • Wire harness or connector

WIRING DIAGRAM

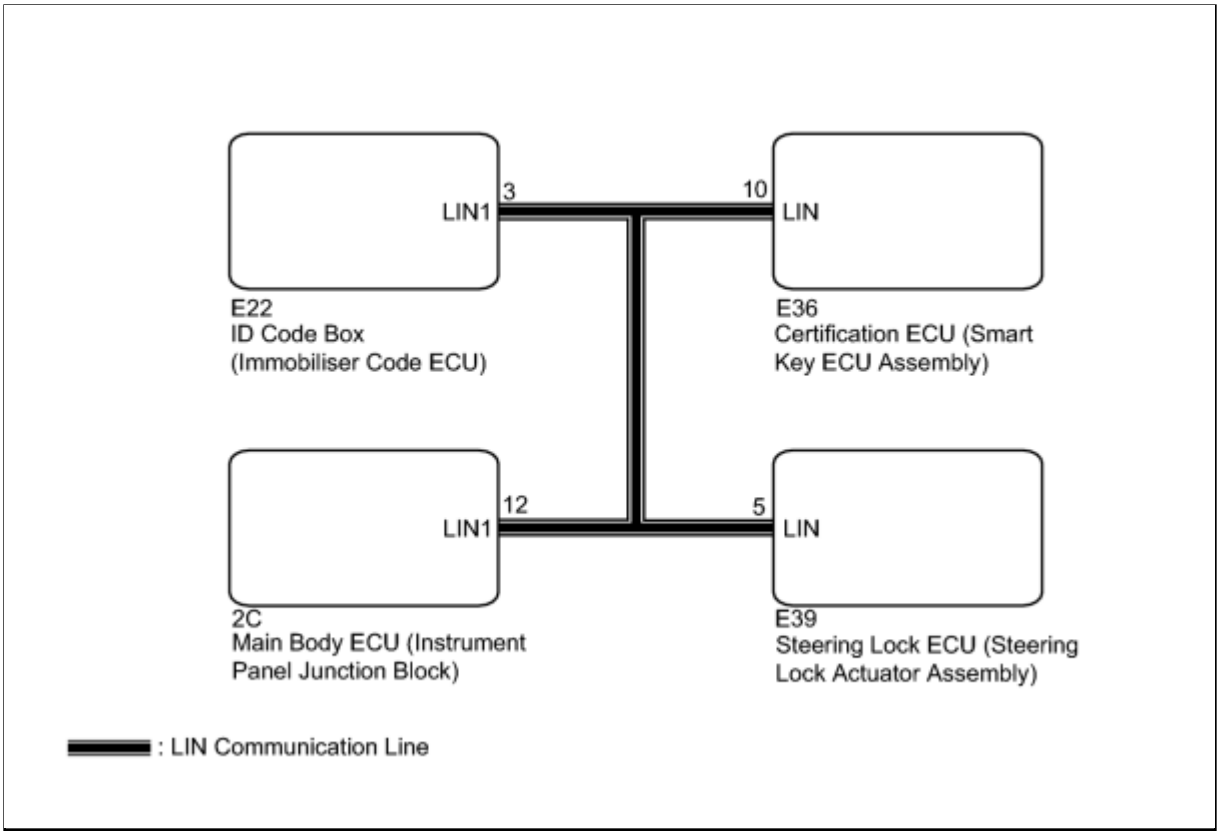

INSPECTION PROCEDURE

HINT:

When DTC B2785 and B2287 are output simultaneously, perform the troubleshooting for DTC B2785 first.

NOTICE:

- If the certification ECU (smart key ECU assembly) is replaced, register the keys and ECU communication ID INFO .
- If the steering lock ECU (steering lock actuator assembly) is replaced, register the ECU code INFO .
- If the ID code box (immobiliser code ECU) is replaced, register the ECU code and ECU communication ID INFO .

PROCEDURE

1.	**CLEAR DTC**

(a) Clear the DTC INFO .

NEXT

2.	**CHECK FOR DTC**

(a) Recheck for the DTC INFO .

OK:

B2785 is not output.

NG ▶ **CHECK HARNESS AND CONNECTOR (CERTIFICATION ECU - EACH ECU)**

OK ▶ **USE SIMULATION METHOD TO CHECK**

3.	**CHECK HARNESS AND CONNECTOR (CERTIFICATION ECU - EACH ECU)**

(a) Disconnect the E22, E36, E39 and 2C connectors.

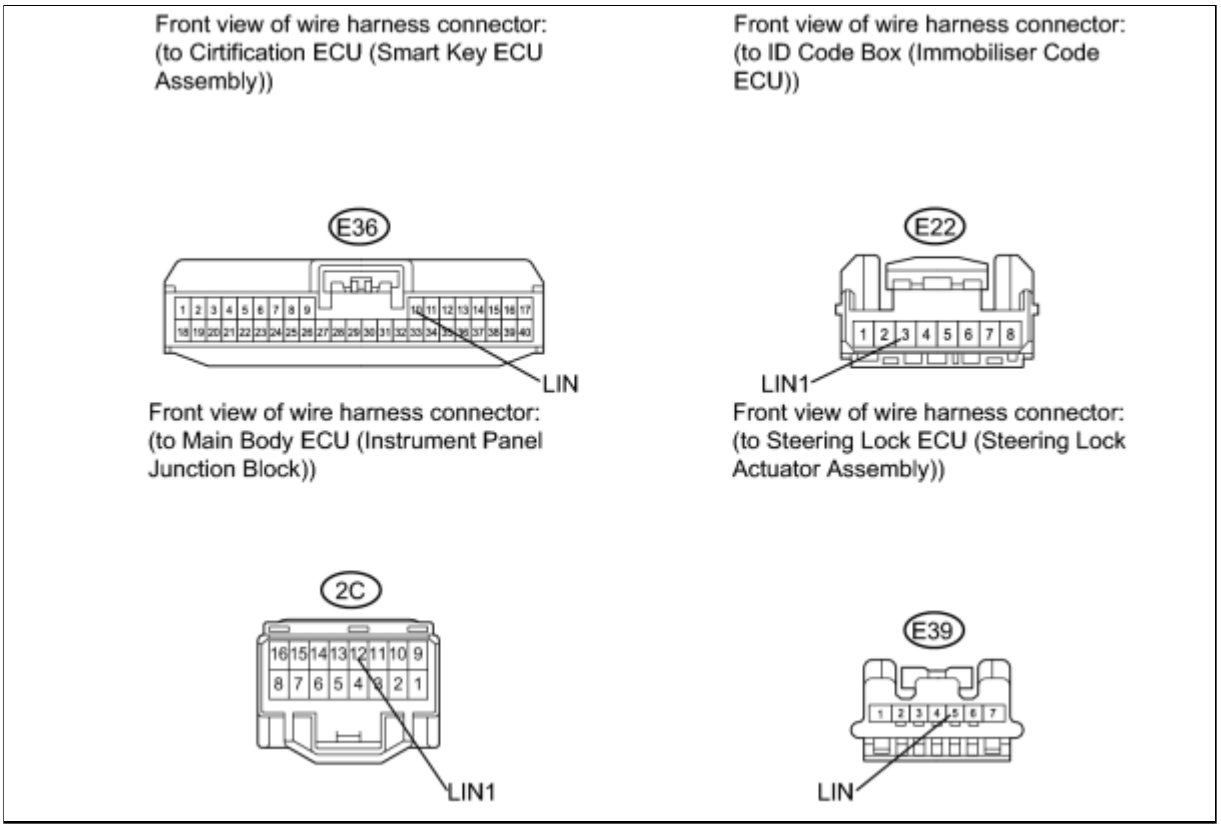

(b) Measure the resistance and voltage according to the value(s) in the table below.

Standard Resistance:

TESTER CONNECTION	CONDITION	SPECIFIED CONDITION
E36-10 (LIN) - E39-5 (LIN)	Always	Below 1 Ω
E36-10 (LIN) - E22-3 (LIN1)	Always	Below 1 Ω
E36-10 (LIN) - 2C-12 (LIN1)	Always	Below 1 Ω
E36-10 (LIN) - Body ground	Always	10 kΩ or higher

Standard Voltage:

TESTER CONNECTION	CONDITION	SPECIFIED CONDITION
E36-10 (LIN) - Body ground	Always	Below 1 V

NG ▶ **REPAIR OR REPLACE HARNESS OR CONNECTOR**

OK ▼

4.	**CHECK FOR DTC (STEERING LOCK ECU)**

(a) Reconnect the E36, E22 and 2C connectors.

(b) Clear the DTC INFO.

(c) Recheck for the DTC.

Result:

RESULT	PROCEED TO
B2785 is output	A
B2785 is not output	B

B ▶ **REPLACE STEERING LOCK ECU (STEERING LOCK ACTUATOR ASSEMBLY)**

A ▼

5.	CHECK FOR DTC (ID CODE BOX)

(a) Reconnect the E39 connector.

(b) Disconnect the E22 connector.

(c) Clear the DTC INFO .

(d) Recheck for the DTC.

Result:

RESULT	PROCEED TO
B2785 is output	A
B2785 is not output	B

B ▶ **REPLACE ID CODE BOX (IMMOBILISER CODE ECU)**

A ▼

6.	CHECK FOR DTC (MAIN BODY ECU)

(a) Reconnect the E22 connector.

(b) Disconnect the 2C connector.

(c) Clear the DTC INFO .

(d) Recheck for the DTC.

OK:
B2785 is not output.

NG ▶ **REPLACE CERTIFICATION ECU (SMART KEY ECU ASSEMBLY)**

OK ▶ **REPLACE MAIN BODY ECU (INSTRUMENT PANEL JUNCTION BLOCK)**

Last Modified: 3-10-2010	6.4 C	**From:** 200901
Model Year: 2010	**Model:** Corolla	**Doc ID:** RM000002XHX00VX
Title: NETWORKING: LIN COMMUNICATION SYSTEM: B2786: No Response from Steering Lock ECU (2010 Corolla)		

DTC	**B2786**	**No Response from Steering Lock ECU**

DESCRIPTION

This DTC is output when LIN communication between the certification ECU (smart key ECU assembly) and the steering lock ECU (steering lock actuator assembly) stops for more than 10 seconds.

DTC NO.	DTC DETECTION CONDITION	TROUBLE AREA
B2786	No communication between the steering lock ECU (steering lock actuator assembly) and the certification ECU (smart key ECU assembly) for more than 10 seconds	• Steering lock ECU (steering lock actuator assembly) • Certification ECU (smart key ECU assembly) • Wire harness or connector

WIRING DIAGRAM

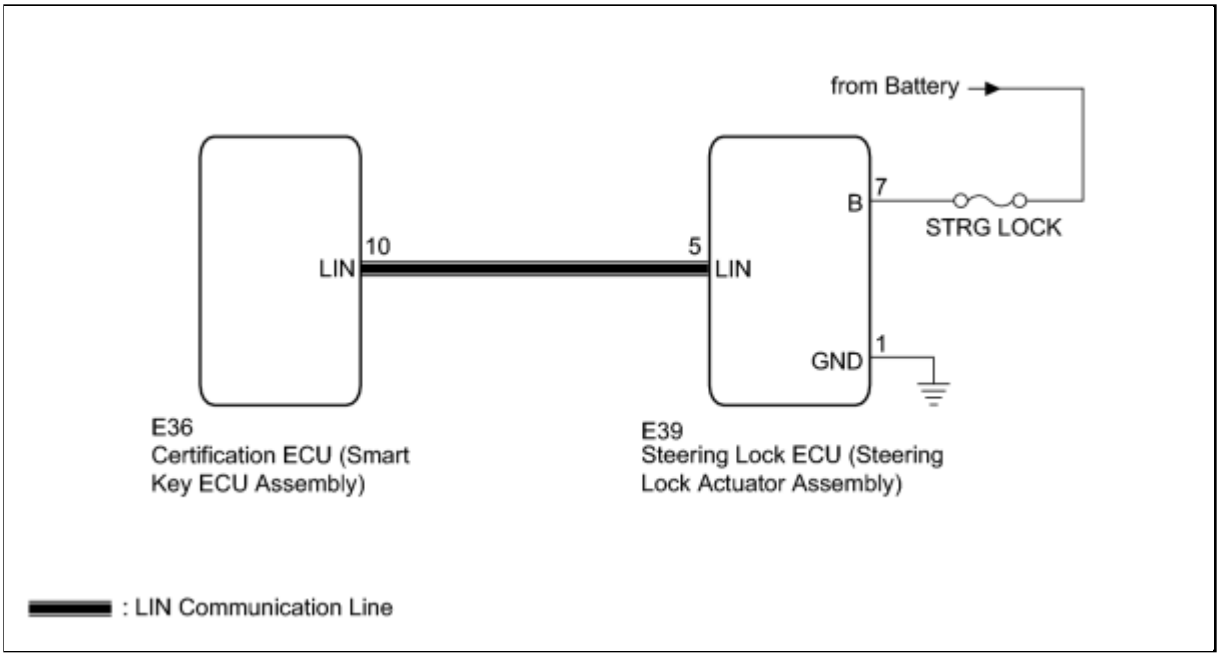

INSPECTION PROCEDURE

NOTICE:

- If the certification ECU (smart key ECU assembly) is replaced, register the keys and ECU communication ID INFO .
- If the steering lock ECU (steering lock actuator assembly) is replaced, register the ECU code INFO .

PROCEDURE

1.	**CLEAR DTC**

(a) Clear the DTC INFO .

NEXT

2.	**CHECK FOR DTC**

(a) Recheck for the DTC INFO .

OK:
B2786 is not output.

NG ▶ **CHECK HARNESS AND CONNECTOR (CERTIFICATION ECU - STEERING LOCK ECU)**

OK ▶ **USE SIMULATION METHOD TO CHECK**

3.	**CHECK HARNESS AND CONNECTOR (CERTIFICATION ECU - STEERING LOCK ECU)**

(a) Disconnect the E36 and E39 ECU connectors.

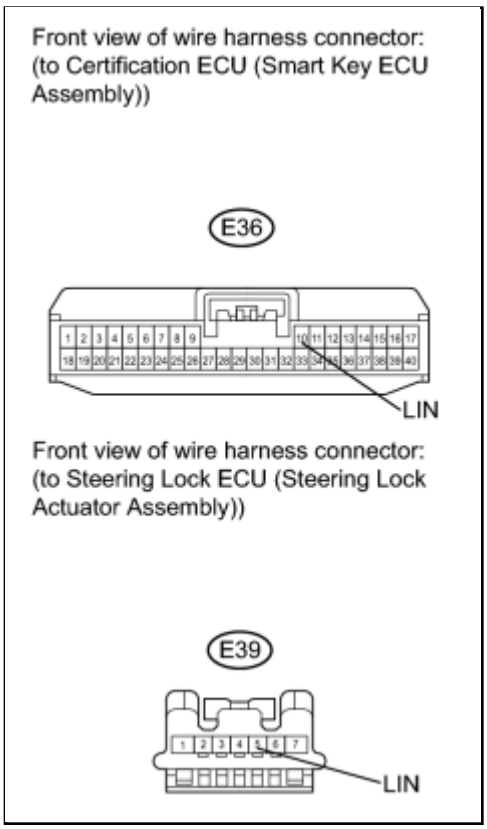

(b) Measure the resistance according to the value(s) in the table below.

Standard Resistance:

TESTER CONNECTION	CONDITION	SPECIFIED CONDITION
E36-10 (LIN) - E39-5 (LIN)	Always	Below 1 Ω
E36-10 (LIN) - Body ground	Always	10 kΩ or higher

NG ▶ **REPAIR OR REPLACE HARNESS OR CONNECTOR**

OK ▼

4.	**CHECK HARNESS AND CONNECTOR (STEERING LOCK ECU BATTERY VOLTAGE AND GROUND)**

(a) Measure the resistance and voltage according to the value(s) in the table below.

Standard Resistance:

Front view of wire harness connector:
(to Steering Lock ECU (Steering Lock Actuator Assembly))

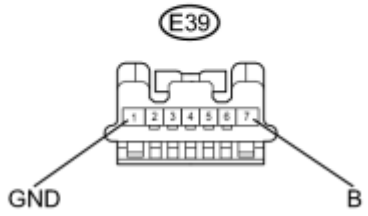

TESTER CONNECTION	CONDITION	SPECIFIED CONDITION
E39-1 (GND) - Body ground	Always	Below 1 Ω

Standard Voltage:

TESTER CONNECTION	CONDITION	SPECIFIED CONDITION
E39-7 (B) - Body ground	Always	11 to 14 V

NG ▶ **REPAIR OR REPLACE HARNESS OR CONNECTOR**

OK ▼

5.	REPLACE STEERING LOCK ECU

(a) Replace the steering lock ECU (steering lock actuator assembly).

NEXT ▼

6.	CHECK FOR DTC

(a) Clear the DTC [INFO].

(b) Recheck for the DTC.

OK:
B2786 is not output.

NG ▶ **REPLACE CERTIFICATION ECU (SMART KEY ECU ASSEMBLY)**

OK ▶ **END (STEERING LOCK ECU IS DEFECTIVE)**

Last Modified: 3-10-2010	6.4 C	**From:** 200901
Model Year: 2010	**Model:** Corolla	**Doc ID:** RM000002XI700XX
Title: NETWORKING: LIN COMMUNICATION SYSTEM: B2789: No Response from ID BOX (2010 Corolla)		

DTC	**B2789**	**No Response from ID BOX**

DESCRIPTION

This DTC is output when LIN communication between the certification ECU (smart key ECU assembly) and the ID code box (immobiliser code ECU) stops for more than 10 seconds.

DTC NO.	DTC DETECTION CONDITION	TROUBLE AREA
B2789	No communication between the certification ECU (smart key ECU assembly) and the ID code box (immobiliser code ECU) for more than 10 seconds	• ID code box (immobiliser code ECU) • Certification ECU (smart key ECU assembly) • Wire harness or connector

WIRING DIAGRAM

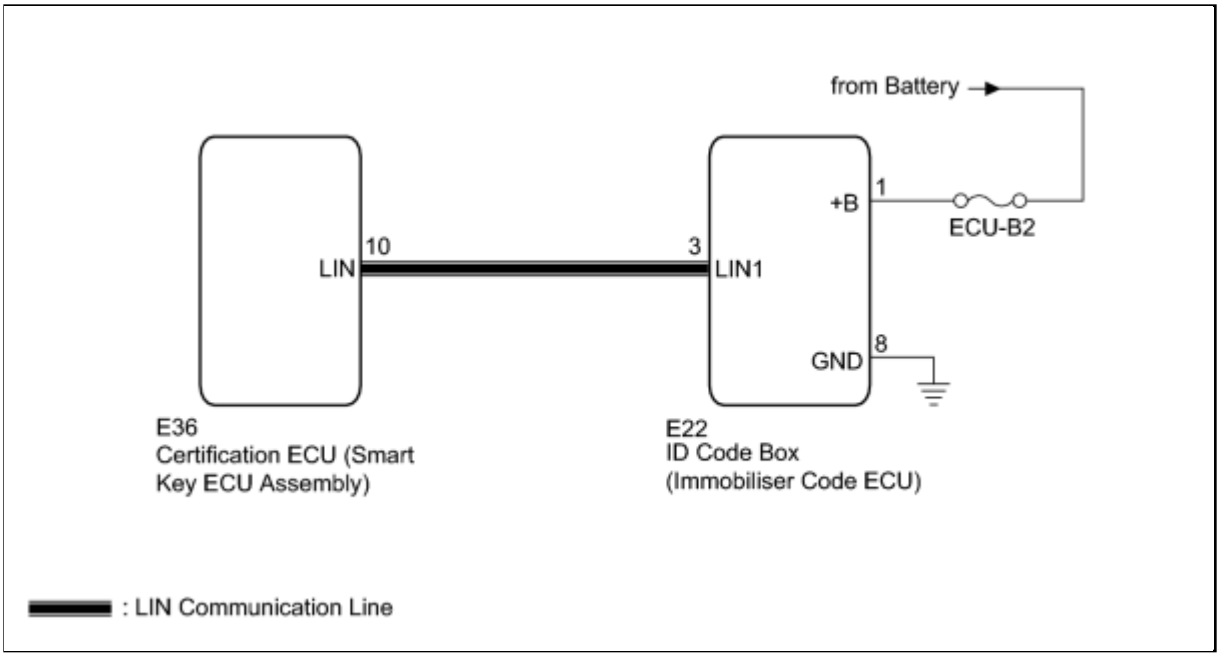

INSPECTION PROCEDURE

NOTICE:

- If the certification ECU (smart key ECU assembly) is replaced, register the keys and ECU communication ID INFO .
- If the ID code box (immobiliser code ECU) is replaced, register the ECU code and ECU communication ID INFO .

PROCEDURE

1.	**CLEAR DTC**

(a) Clear the DTC INFO .

NEXT

2.	**CHECK FOR DTC**

(a) Recheck for the DTC INFO .

OK:
B2789 is not output.

NG ▶ **CHECK HARNESS AND CONNECTOR (CERTIFICATION ECU - ID CODE BOX)**

OK ▶ **USE SIMULATION METHOD TO CHECK**

3.	**CHECK HARNESS AND CONNECTOR (CERTIFICATION ECU - ID CODE BOX)**

(a) Disconnect the E36 and E22 connectors.

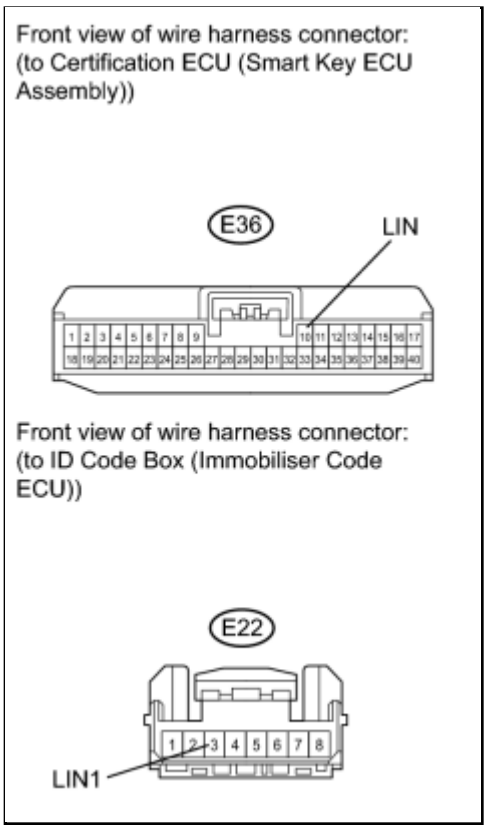

(b) Measure the resistance according to the value(s) in the table below.

Standard Resistance:

TESTER CONNECTION	CONDITION	SPECIFIED CONDITION
E36-10 (LIN) - E22-3 (LIN1)	Always	Below 1 Ω
E36-10 (LIN) - Body ground	Always	10 kΩ or higher

NG ▶ **REPAIR OR REPLACE HARNESS OR CONNECTOR**

OK ▼

4.	**CHECK HARNESS AND CONNECTOR (ID CODE BOX BATTERY VOLTAGE AND GROUND)**

(a) Measure the resistance and voltage according to the value(s) in the table below.

Standard Resistance:

Front view of wire harness connector:
(to ID Code Box (Immobiliser Code ECU))

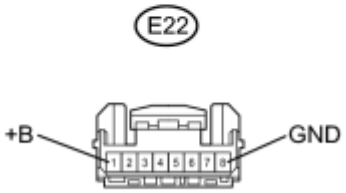

TESTER CONNECTION	CONDITION	SPECIFIED CONDITION
E22-8 (GND) - Body ground	Always	Below 1 Ω

Standard Voltage:

TESTER CONNECTION	CONDITION	SPECIFIED CONDITION
E22-1 (+B) - Body ground	Always	11 to 14 V

NG ▶ **REPAIR OR REPLACE HARNESS OR CONNECTOR**

OK ▼

5.	REPLACE ID CODE BOX (IMMOBILISER CODE ECU)

(a) Replace the ID code box (immobiliser code ECU) INFO .

NEXT ▼

6.	CHECK FOR DTC

(a) Clear the DTC INFO .

(b) Recheck for the DTC.

OK:
B2789 is not output.

NG ▶ **REPLACE CERTIFICATION ECU (SMART KEY ECU ASSEMBLY)**

OK ▶ **END (ID CODE BOX (IMMOBILISER CODE ECU) IS DEFECTIVE)**

Last Modified: 3-10-2010	6.4 K	**From:** 200901
Model Year: 2010	**Model:** Corolla	**Doc ID:** RM000002XN500PX
Title: POWER ASSIST SYSTEMS: POWER STEERING ECU (for 2AZ-FE): COMPONENTS (2010 Corolla)		

COMPONENTS

ILLUSTRATION

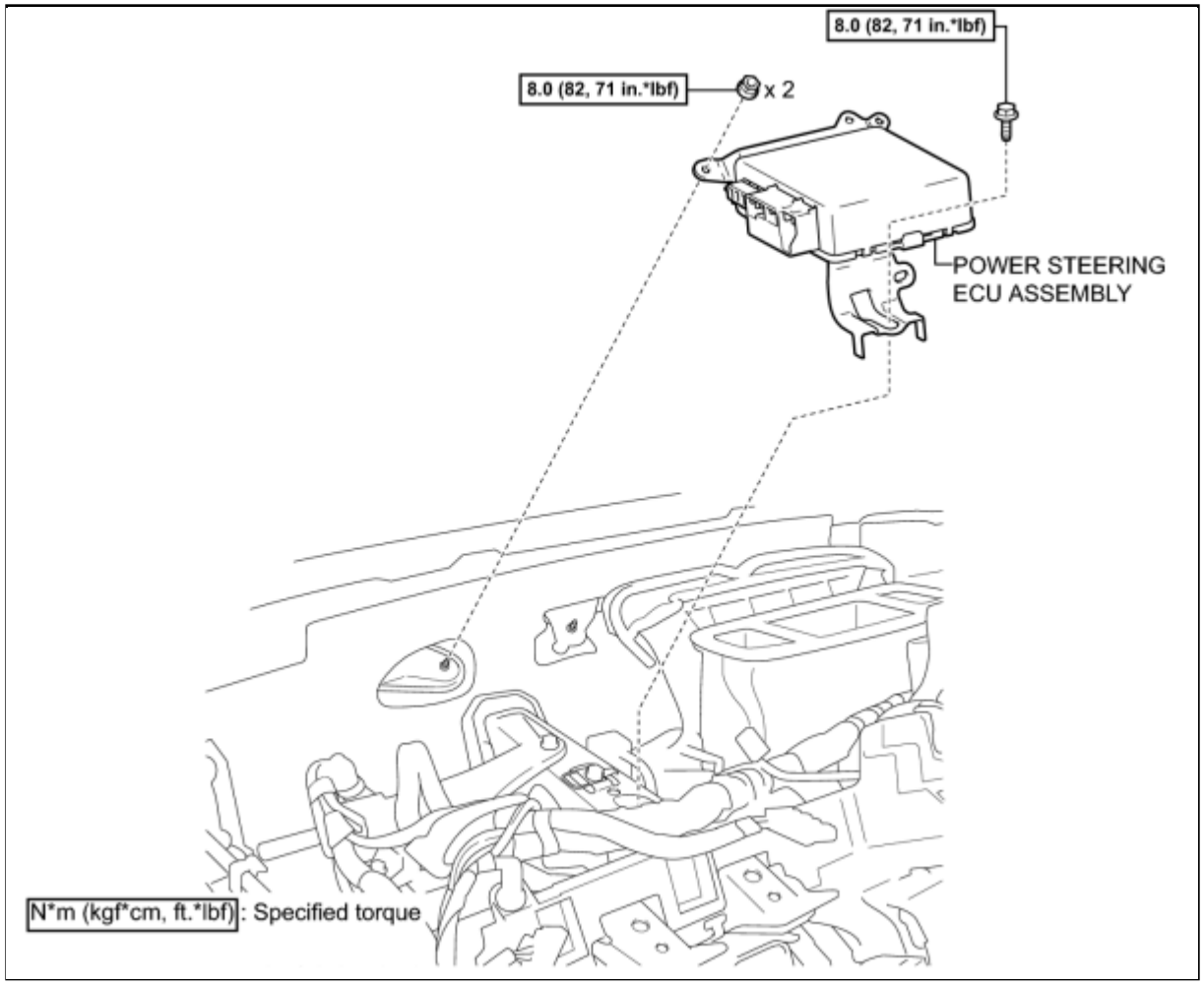

Last Modified: 3-10-2010	6.4 A	**From:** 200901
Model Year: 2010	**Model:** Corolla	**Doc ID:** RM000002XN6016X
Title: POWER ASSIST SYSTEMS: POWER STEERING ECU (for 2AZ-FE): REMOVAL (2010 Corolla)		

REMOVAL

1. PRECAUTION

HINT: INFO .

2. PLACE FRONT WHEELS FACING STRAIGHT AHEAD

3. REMOVE UPPER INSTRUMENT PANEL SUB-ASSEMBLY

HINT: INFO .

4. REMOVE POWER STEERING ECU ASSEMBLY

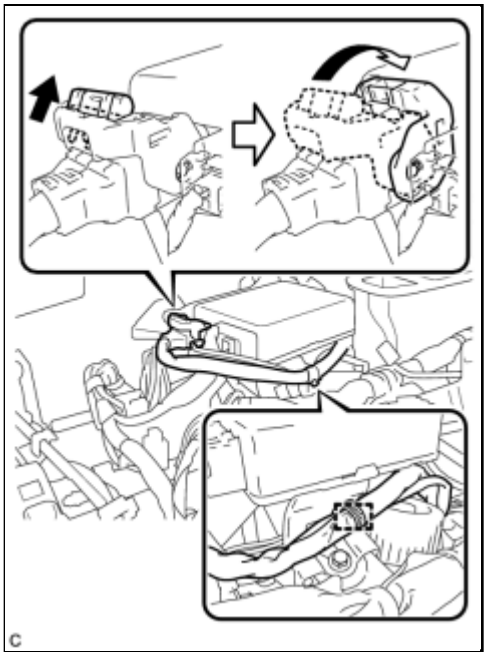

(a) Separate the wire harness clamp from the power steering ECU assembly.

(b) Disconnect the connector from the power steering ECU assembly.

HINT:

As shown in the illustration, pull out the lock of the lock lever and turn the lock lever to disconnect the connector.

(c) Disconnect the 3 connectors from the power steering ECU assembly.

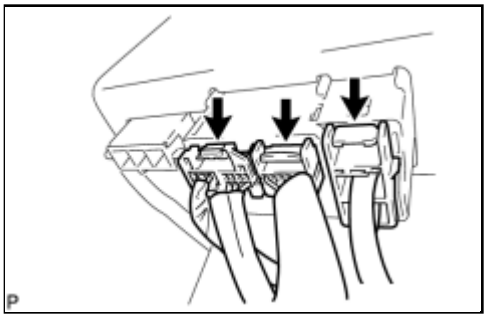

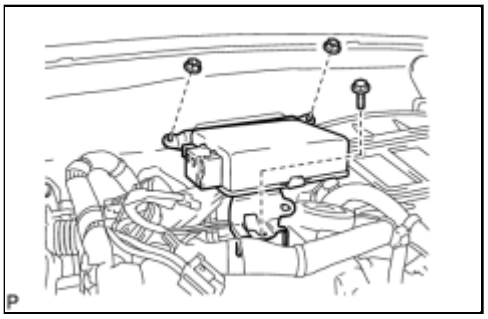

(d) Remove the bolt, 2 nuts, and the power steering ECU assembly.

Last Modified: 3-10-2010	6.4 A	**From:** 200901
Model Year: 2010	**Model:** Corolla	**Doc ID:** RM000002XN4016X
Title: POWER ASSIST SYSTEMS: POWER STEERING ECU (for 2AZ-FE): INSTALLATION (2010 Corolla)		

INSTALLATION

1. PRECAUTION

HINT: INFO .

2. INSTALL POWER STEERING ECU ASSEMBLY

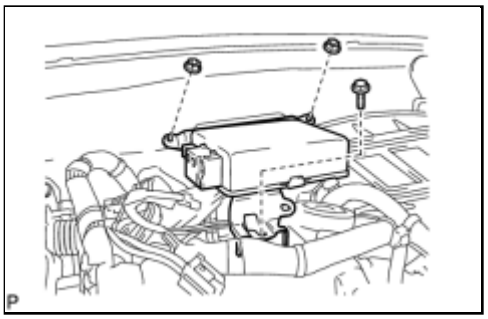

(a) Install the power steering ECU assembly with the bolt and 2 nuts.

Torque: 8.0 N·m (82 kgf·cm, 71in·lbf)

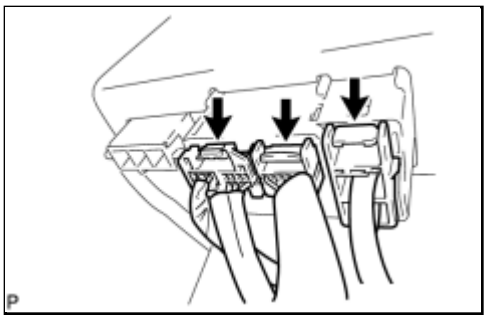

(b) Connect the 3 connectors to the power steering ECU assembly.

(c) Connect the connector to the power steering ECU assembly.

HINT:

As shown in the illustration, return the lock lever to its original position to connect the connector and securely push in the lock of the lock lever.

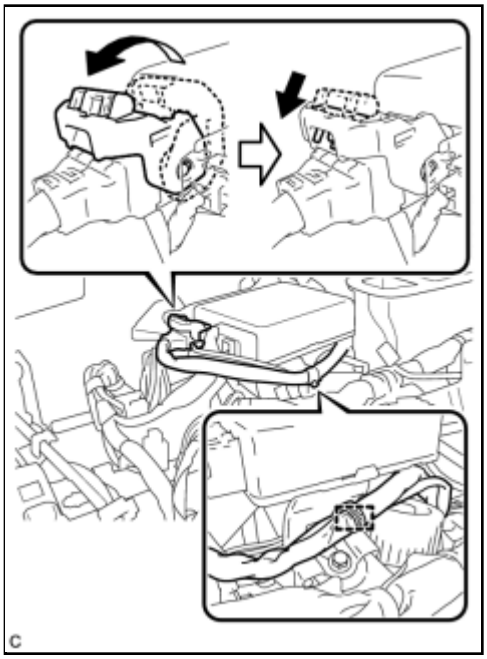

(d) Install the wire harness clamp to the power steering ECU assembly.

3. INSTALL UPPER INSTRUMENT PANEL SUB-ASSEMBLY

HINT: INFO .

4. INITIALIZE ROTATION ANGLE SENSOR AND CALIBRATE TORQUE SENSOR ZERO POINT

HINT: INFO .

Last Modified: 3-10-2010	6.4 K	**From:** 200901
Model Year: 2010	**Model:** Corolla	**Doc ID:** RM0000034K000BX
Title: POWER ASSIST SYSTEMS: POWER STEERING ECU (for 2ZR-FE): COMPONENTS (2010 Corolla)		

COMPONENTS

ILLUSTRATION

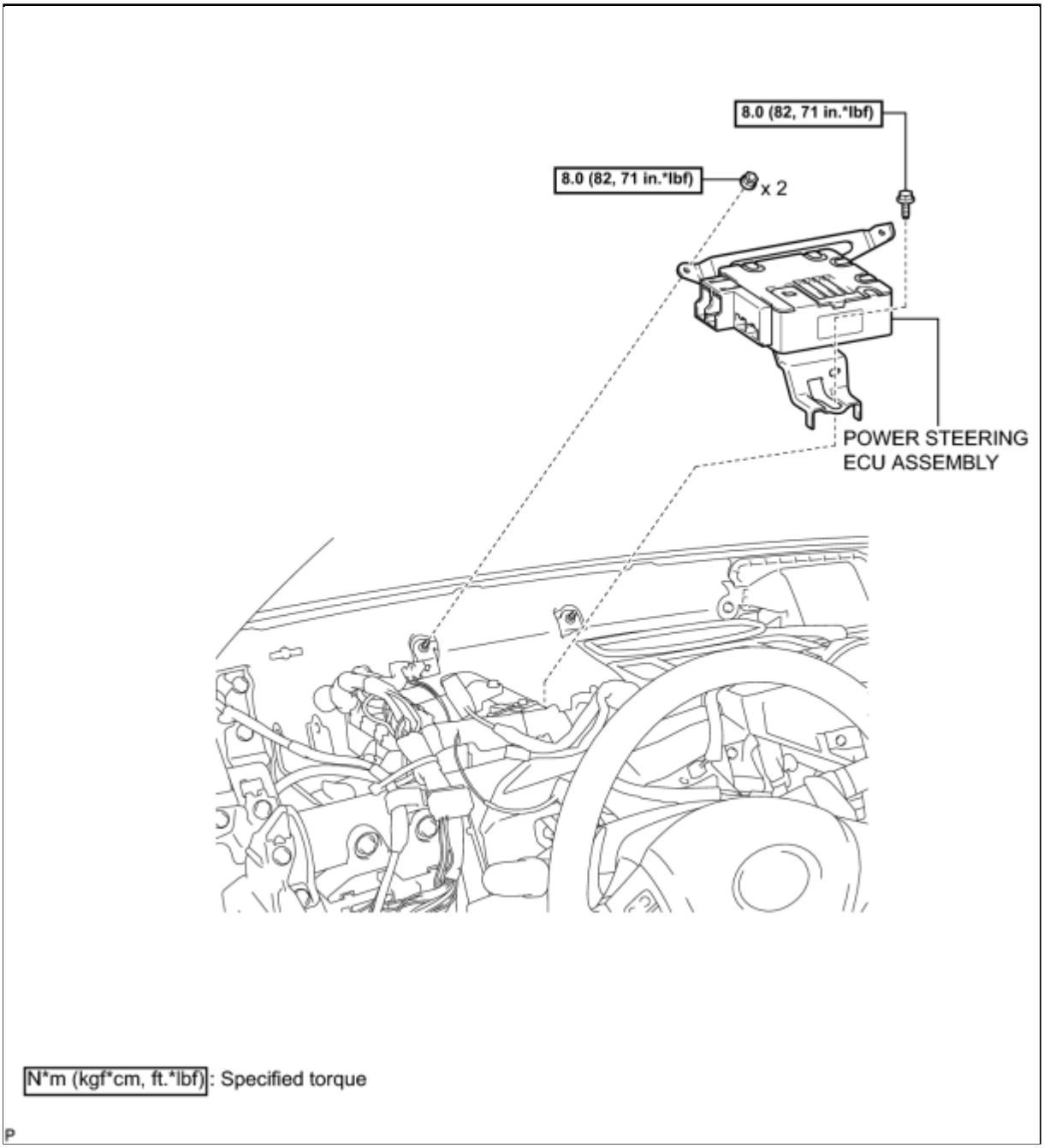

Last Modified: 3-10-2010	6.4 A	**From:** 200901
Model Year: 2010	**Model:** Corolla	**Doc ID:** RM000002XN6017X
Title: POWER ASSIST SYSTEMS: POWER STEERING ECU (for 2ZR-FE): REMOVAL (2010 Corolla)		

REMOVAL

1. PRECAUTION

HINT: INFO .

2. PLACE FRONT WHEELS FACING STRAIGHT AHEAD

3. REMOVE UPPER INSTRUMENT PANEL

HINT: INFO .

4. REMOVE POWER STEERING ECU ASSEMBLY

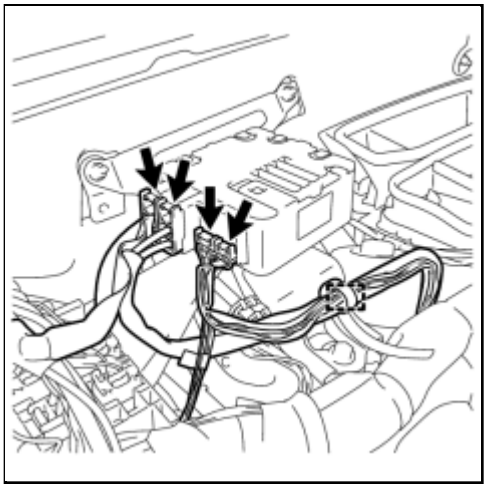

(a) Separate the wire harness clamp from the power steering ECU assembly.

(b) Disconnect the 4 connectors from the power steering ECU assembly.

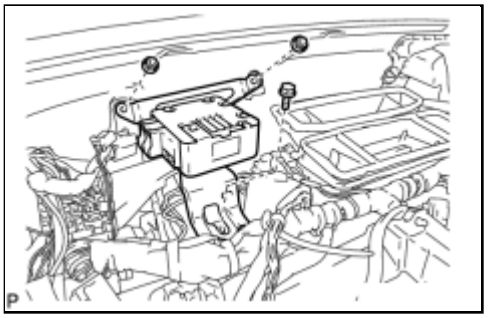

(c) Remove the bolt, 2 nuts, and the power steering ECU assembly.

Last Modified: 3-10-2010	6.4 A	**From:** 200901
Model Year: 2010	**Model:** Corolla	**Doc ID:** RM000002XN4017X
Title: POWER ASSIST SYSTEMS: POWER STEERING ECU (for 2ZR-FE): INSTALLATION (2010 Corolla)		

INSTALLATION

1. PRECAUTION

HINT: INFO .

2. INSTALL POWER STEERING ECU ASSEMBLY

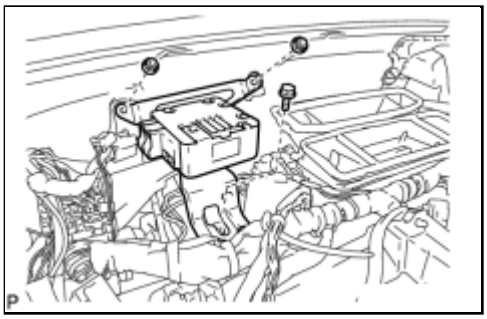

(a) Install the power steering ECU assembly with the bolt and 2 nuts.

Torque: 8.0 N·m (82 kgf·cm, 71in·lbf)

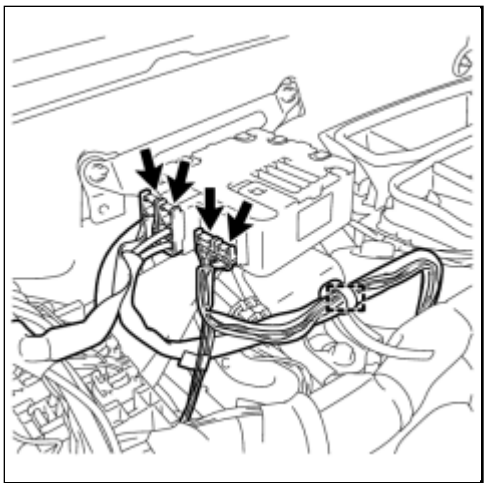

(b) Connect the 4 connectors to the power steering ECU assembly.

(c) Install the wire harness clamp to the power steering ECU assembly.

3. INSTALL UPPER INSTRUMENT PANEL

HINT: INFO .

4. ASSIST MAP WRITING

HINT: INFO .

5. CALIBRATE TORQUE SENSOR ZERO POINT

HINT: INFO .



Last Modified: 3-10-2010	6.4 R	**From:** 200901
Model Year: 2010	**Model:** Corolla	**Doc ID:** RM00000274V00HX
Title: POWER ASSIST SYSTEMS: POWER STEERING SYSTEM (for 2AZ-FE): PARTS LOCATION (2010 Corolla)		

PARTS LOCATION

ILLUSTRATION

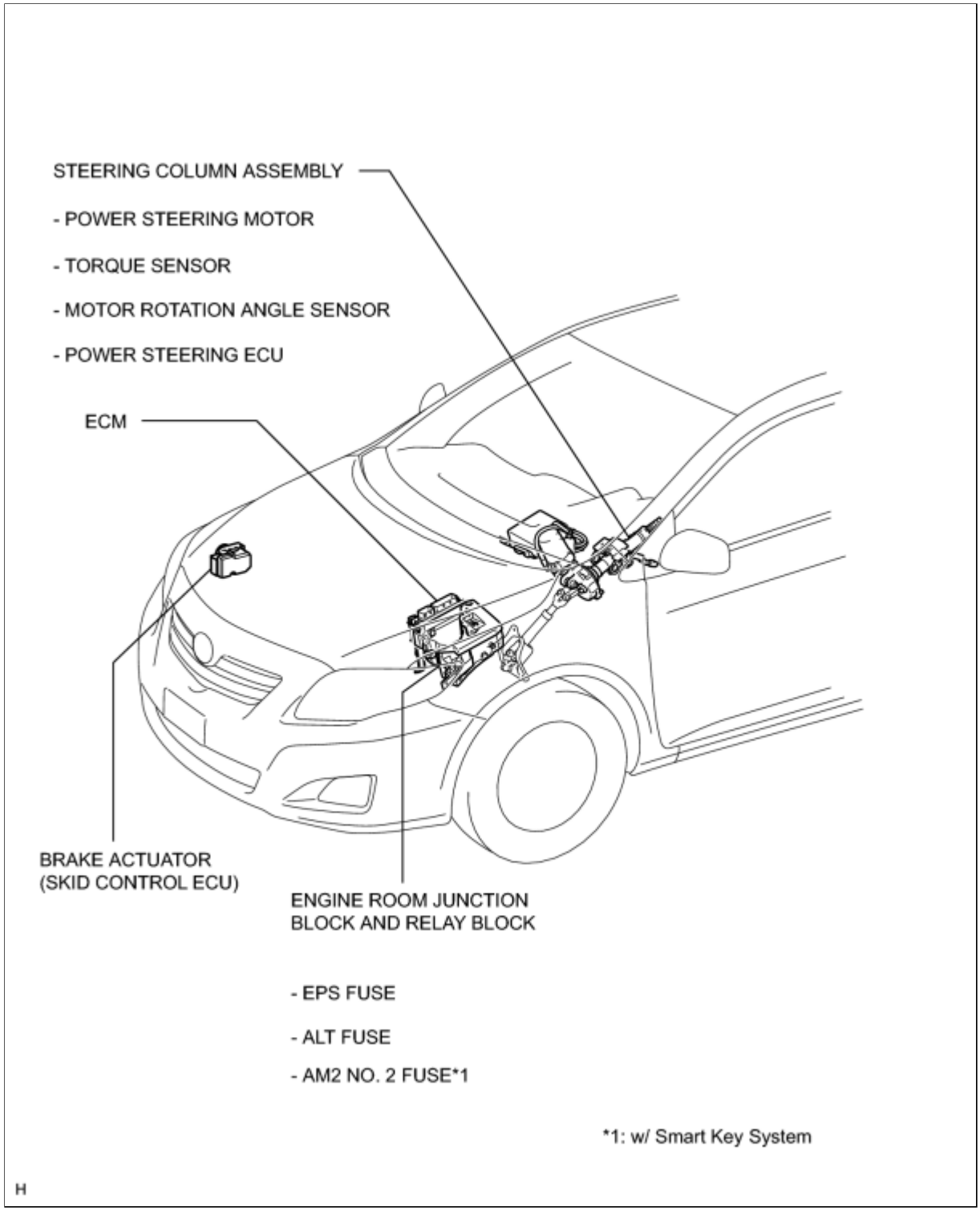

ILLUSTRATION

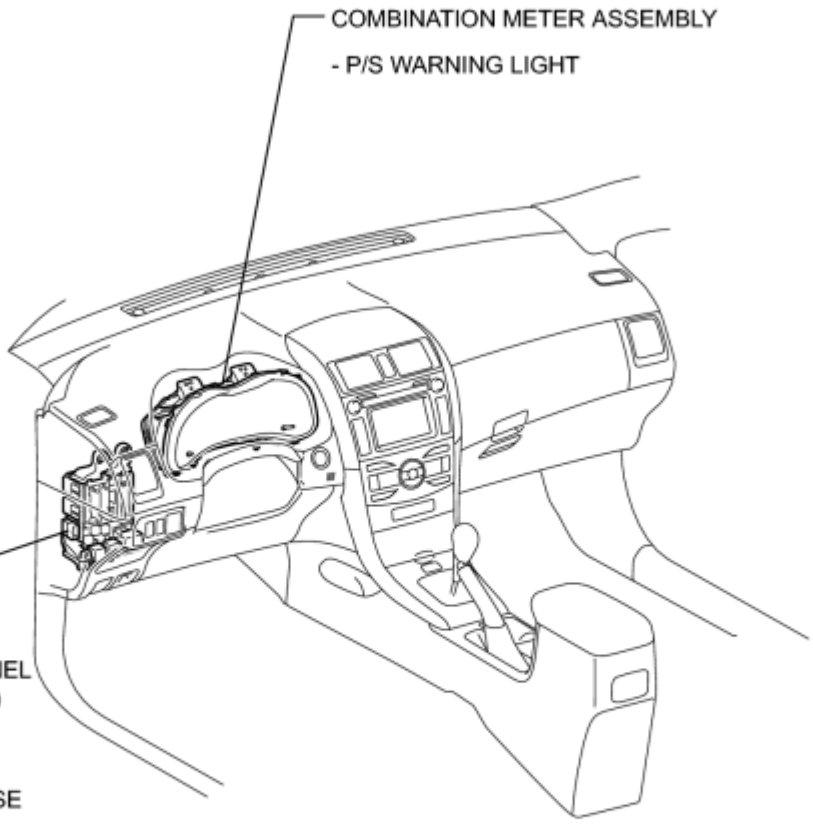

*1: w/o Smart Key System

H

Last Modified: 3-10-2010	6.4 L	**From:** 200901
Model Year: 2010	**Model:** Corolla	**Doc ID:** RM00000274S00OX
Title: POWER ASSIST SYSTEMS: POWER STEERING SYSTEM (for 2AZ-FE): PRECAUTION (2010 Corolla)		

PRECAUTION

1. IGNITION SWITCH EXPRESSIONS

HINT:

The type of ignition switch used on this model differs according to the specifications of the vehicle. The expressions listed in the table below are used in this section.

SWITCH TYPE		IGNITION SWITCH (POSITION)	ENGINE SWITCH (CONDITION)
Expression	Ignition switch off	LOCK	Off
	Ignition switch on (IG)	ON	On (IG)
	Ignition switch on (ACC)	ACC	On (ACC)
	Engine start	START	Start

2. HANDLING PRECAUTIONS FOR SRS AIRBAG SYSTEM

(a) The vehicle is equipped with an SRS (Supplemental Restraint System). Failure to carry out service operations in the correct sequence could cause the SRS to unexpectedly deploy during servicing. This may cause a serious accident.

Before servicing (including inspection, replacement, removal and installation of parts), be sure to read the precautionary notices for the Supplemental Restraint System INFO .

3. PRECAUTIONS FOR REMOVAL, INSTALLATION AND REPLACEMENT OF ELECTRONIC MOTOR POWER STEERING COMPONENTS

(a) Be sure to align the front wheels straight ahead when removing and installing the power steering gear assembly.

(b) If disconnecting the steering sliding yoke sub-assembly and the pinion shaft of the power steering gear assembly, be sure to place matchmarks before starting the operation.

(c) After replacing the power steering gear assembly or power steering ECU, clear the rotation angle sensor calibration value, initialize the rotation angle sensor, and calibrate the torque sensor zero point INFO .

4. HANDLING PRECAUTION

(a) When handling the electronic parts:

- Avoid any impact to electronic parts such as ECUs and relays. Replace them with new ones if dropped or subjected to a severe blow.
- Do not expose any electronic parts to high temperatures or humidity.
- Do not touch the connector terminals in order to prevent deformation or malfunctions due

to static electricity.

(b) When handling the steering column assembly:

- Avoid any impact to the steering column assembly, especially to the motor and torque sensor. Replace them with new ones if dropped or subjected to a severe blow.
- Do not pull the wire harness when moving the steering column assembly.

(c) When disconnecting and reconnecting the connectors:

When disconnecting the connectors related to the power steering system, turn the ignition switch on (IG), center the steering wheel, turn the ignition switch off, and then disconnect the connectors.

5. PRECAUTIONS FOR CAN COMMUNICATION

(a) CAN communication lines are used to receive information from the skid control ECU and the ECM, and to transmit warnings to the combination meter.

When there are any problems in the CAN communication lines, DTCs of the CAN communication line are output.

(b) Perform troubleshooting for the communication line problems when the CAN communication DTCs are output. Be sure to start troubleshooting on the power steering system after confirming that the CAN communication system is normal.

(c) Since the CAN communication line has its own length and route, it cannot be repaired temporarily with a bypass wire, etc.

Last Modified: 3-10-2010	6.4 U	**From:** 200901
Model Year: 2010	**Model:** Corolla	**Doc ID:** RM00000275100HX
Title: POWER ASSIST SYSTEMS: POWER STEERING SYSTEM (for 2AZ-FE): SYSTEM DIAGRAM (2010 Corolla)		

SYSTEM DIAGRAM

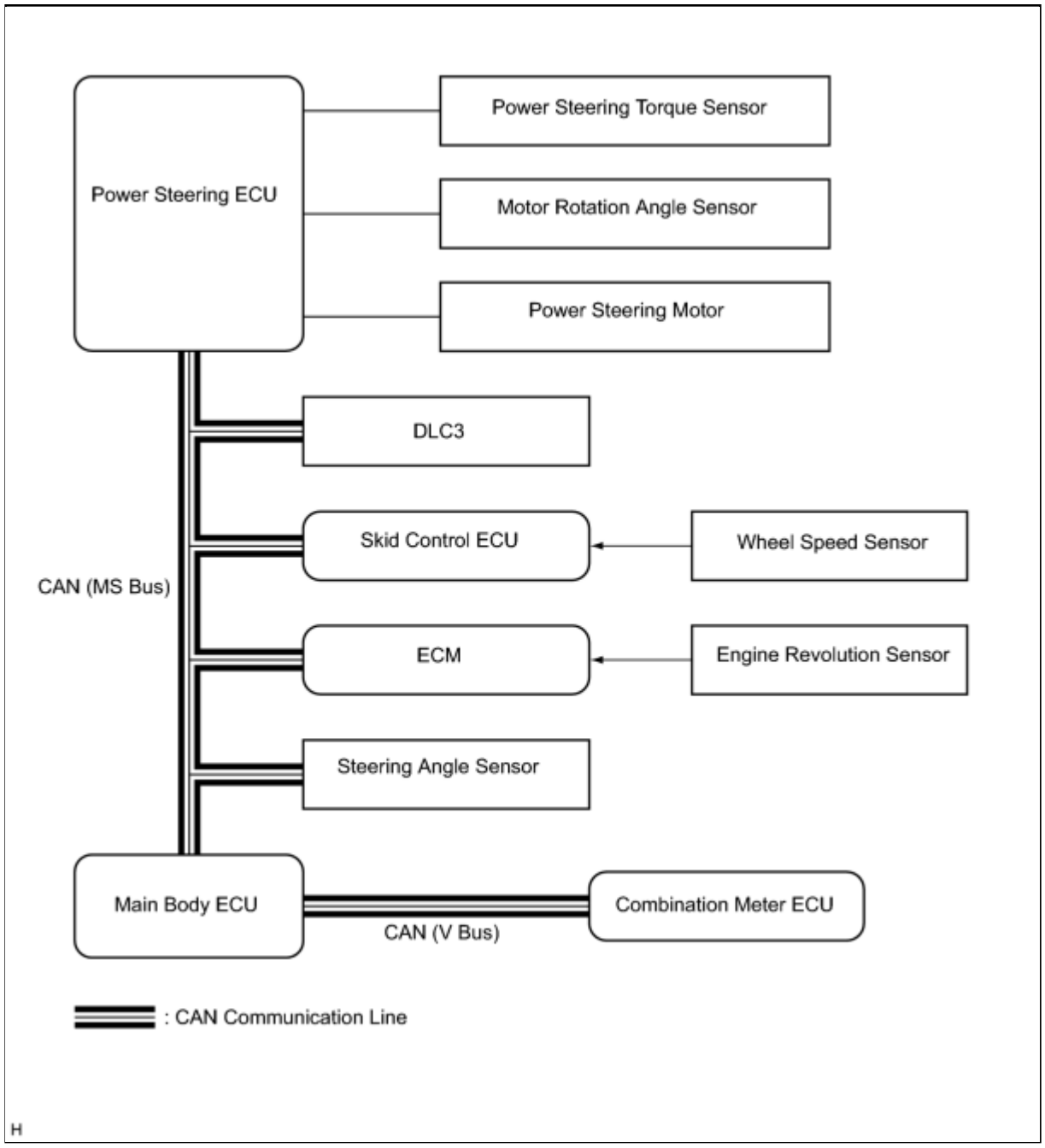

Last Modified: 3-10-2010	6.4 D	**From:** 200901
Model Year: 2010	**Model:** Corolla	**Doc ID:** RM00000274T00VX
Title: POWER ASSIST SYSTEMS: POWER STEERING SYSTEM (for 2AZ-FE): HOW TO PROCEED WITH TROUBLESHOOTING (2010 Corolla)		

HOW TO PROCEED WITH TROUBLESHOOTING

HINT:

- Use these procedures to troubleshoot the power steering system.
- *: Use the Techstream.

1.	**VEHICLE BROUGHT TO WORKSHOP**

NEXT

2.	**INSPECT BATTERY VOLTAGE**

Standard Voltage:
11 to 14 V

If the voltage is below 11 V, recharge or replace the battery before proceeding.

NEXT

3.	**CHECK DTC AND FREEZE FRAME DATA***

HINT:

Refer to Clear DTCs INFO .

NEXT

4.	**PROBLEM SYMPTOM CONFIRMATION**

Result:

RESULT	PROCEED TO
Symptom does not occur.	A
Symptom occurs.	B

B ▶ **Go to step 6**

A

▼

5.	**SYMPTOM SIMULATION**

NEXT

▼

6.	**CHECK CAN COMMUNICATION SYSTEM***

(a) Check for DTCs INFO .

Result:

RESULT	PROCEED TO
CAN system DTC is not output	A
CAN system DTC is output	B

HINT:

- If any CAN communication system DTCs are output, perform troubleshooting on the CAN communication system first.
- If communication to the power steering ECU cannot be established through the Techstream, inspect terminals CANH and CANL of the DLC3 and the power steering ECU, and the IG circuit of the power steering ECU.

B ▶ INFO **PROCEED TO CAN COMMUNICATION SYSTEM**

A ▼

7.	**CHECK FOR DTC***

(a) Check for DTCs INFO .

HINT:

Refer to Diagnostic Trouble Code Chart when any DTCs are output INFO .

Result:

RESULT	PROCEED TO
DTC is not output	A
DTC is output	B

B ▶ Go to step 9

A ▼

8.	**PROBLEM SYMPTOMS TABLE**

(a) Refer to Problem Symptoms Table INFO .

Result:

RESULT	PROCEED TO
Fault is not listed in problem symptoms table	A
Fault is listed in problem symptoms table	B

B ▶ Go to step 9

A

9.	OVERALL ANALYSIS AND TROUBLESHOOTING*

(a) Refer to Terminals of ECU INFO .

(b) Refer to Data List / Active Test INFO .

NEXT

10.	REPAIR OR REPLACE

NEXT

11.	CONFIRMATION TEST

NEXT END

Last Modified: 3-10-2010	6.4 D	**From:** 200901
Model Year: 2010	**Model:** Corolla	**Doc ID:** RM00000274Y00HX
Title: POWER ASSIST SYSTEMS: POWER STEERING SYSTEM (for 2AZ-FE): SYSTEM DESCRIPTION (2010 Corolla)		

SYSTEM DESCRIPTION

1. DESCRIPTION

- The power steering system generates torque through the operation of the motor and the reduction gear installed on the column shaft in order to assist steering effort.
- The power steering ECU determines directions and the amount of assisting power in accordance with vehicle speed signals and signals from the torque sensor built into the steering column assembly. As a result, the power steering ECU adjusts the steering effort so that it is lighter during low speed driving and heavier during high speed driving.

(a) Power steering ECU:

The power steering ECU calculates assisting power based on steering torque signals from the torque sensor and vehicle speed signals from the skid control ECU.

(b) Torque sensor:

The torque sensor detects the steering effort generated when the steering wheel is turned and converts it to an electrical signal.

(c) Power steering motor:

The power steering motor is activated by the current from the power steering ECU and generates torque to assist the steering effort.

(d) Motor rotation angle sensor:

The motor rotation angle sensor consists of the resolver sensor, which excels in reliability and durability. The rotation angle sensor detects the rotation angle of the motor and outputs it to the power steering ECU. As a result, it ensures efficient EPS control.

Last Modified: 3-10-2010	6.4 D	**From:** 200901
Model Year: 2010	**Model:** Corolla	**Doc ID:** RM000002753012X
Title: POWER ASSIST SYSTEMS: POWER STEERING SYSTEM (for 2AZ-FE): CALIBRATION (2010 Corolla)		

CALIBRATION

1. ROTATION ANGLE SENSOR INITIALIZATION AND TORQUE SENSOR ZERO POINT CALIBRATION

NOTICE:

Clear the rotation angle sensor calibration value, initialize the rotation angle sensor, and calibrate the torque sensor zero point if any of the following has occurred:

- The power steering ECU has been replaced.
- The steering column assembly has been replaced.
- Steering effort differs between left and right.

(a) Inspection before calibration.

(1) Turn the ignition switch off.

(2) Connect the Techstream to the DLC3.

(3) Turn the ignition switch on (IG).

(4) Turn the Techstream on.

(5) Calibrate the power steering ECU. Enter the following menus: Chassis / EMPS / Data List.

(6) Check the values by referring to the table below.

Power Steering ECU

TESTER DISPLAY	MEASUREMENT ITEM/RANGE	NORMAL CONDITION	DIAGNOSTIC NOTE
IG Power Supply	ECU power source voltage/ Min.: 0 V Max.: 20.1531 V	11 to 14 V	Ignition switch on (IG)

Standard voltage:
11 to 14 V

NOTICE:

If the IG power supply voltage is 9 V or less, calibration cannot be performed. In this case, charge or replace the battery, and then perform calibration.

(b) Rotation angle sensor calibration value clear, rotation angle sensor initialization, and torque sensor zero point calibration.

NOTICE:

- If DTC C1516 (Torque Sensor Zero Point Adjustment Incomplete) is stored, the torque sensor zero point cannot be calibrated. Clear the DTC before starting calibration.
- If DTC C1526 (Rotation Angle Sensor Initialization Incomplete) is stored, the rotation angle sensor cannot be initialized. Clear the DTC before starting initialization.

(1) Turn the ignition switch off.

(2) Connect the Techstream to the DLC3.

(3) Turn the ignition switch on (IG).

(4) Turn the Techstream on.

(5) Enter the following menus: Chassis / EMPS / Utility / Torque Sensor Adjustment.

NOTICE:

- Set the steering wheel to the center point and align the front tires straight ahead.
- Do not turn the steering wheel sharply.
- Do not touch the steering wheel during the torque sensor zero point calibration (for 3 seconds).



Last Modified: 3-10-2010	6.4 T	**From:** 200901
Model Year: 2010	**Model:** Corolla	**Doc ID:** RM00000274X014X
Title: POWER ASSIST SYSTEMS: POWER STEERING SYSTEM (for 2AZ-FE): PROBLEM SYMPTOMS TABLE (2010 Corolla)		

PROBLEM SYMPTOMS TABLE

HINT:

- Use the table below to help determine the cause of problem symptoms. If multiple suspected areas are listed, the potential causes of the symptoms are listed in order of probability in the "Suspected Area" column of the table. Check each symptom by checking the suspected areas in the order they are listed. Replace parts as necessary.
- Inspect the fuses and relays related to this system before inspecting the suspected areas below.

Power Steering System

SYMPTOM	SUSPECTED AREA	SEE PAGE
Heavy steering	Front tires (improperly inflated, unevenly worn)	INFO
	Front wheel alignment (incorrect)	INFO
	Front suspension (lower ball joint)	INFO
	Steering column	INFO
	Torque sensor (built into steering column)	INFO
	Power steering motor	INFO
	Speed sensor (w/ VSC)	INFO
	Speed sensor (w/o VSC)	INFO
	Skid control ECU (w/ VSC)	INFO
	Skid control ECU (w/o VSC)	INFO
	Battery and power source system	-
	Power steering ECU power source voltage and relay	INFO
	Power steering ECU	INFO
Steering effort differs between right and left, or steering effort is uneven.	Initialization of rotation angle sensor and calibration of torque sensor zero point are not completed	INFO
	Front tires (improperly inflated, unevenly worn)	INFO
	Front wheel alignment (incorrect)	INFO

SYMPTOM	SUSPECTED AREA	SEE PAGE
	Front suspension (lower ball joint)	INFO
	Power steering gear	INFO
	Torque sensor (built into steering column)	INFO
	Steering column	INFO
	Power steering motor	INFO
	Power steering ECU	INFO
While driving, steering effort does not change in accordance with vehicle speed or the steering wheel does not return properly.	Front suspension (lower ball joint)	INFO
	Speed sensor (w/ VSC)	INFO
	Speed sensor (w/o VSC)	INFO
	Skid control ECU (w/ VSC)	INFO
	Skid control ECU (w/o VSC)	INFO
	Combination meter	INFO
	Torque sensor (built into steering column)	INFO
	Power steering motor	INFO
	Power steering ECU	INFO
	CAN communication system	INFO
A knocking (or cranking) sound occurs when turning the steering wheel back and forth while power steering is in operation.	Front suspension (lower ball joint)	INFO
	Steering intermediate shaft	INFO
	Power steering ECU	INFO
Noise occurs when turning the steering wheel during low-speed driving.	Power steering gear	INFO
	Steering column	INFO
Friction occurs when turning the steering wheel during low-speed driving.	Power steering motor	INFO
	Steering column	INFO
A high-pitched sound (squeaking) occurs when turning the steering wheel slowly with the vehicle stopped.	Power steering motor	INFO
The steering wheel vibrates and noise occurs when turning the steering wheel from lock to lock with the vehicle stopped.	Power steering gear	INFO
	Steering column	INFO
P/S warning is always indicated on the combination meter	Power source voltage of power steering ECU	INFO

SYMPTOM	SUSPECTED AREA	SEE PAGE
	Combination meter	INFO
	Power steering ECU	INFO

Last Modified: 3-10-2010	6.4 U	**From:** 200901
Model Year: 2010	**Model:** Corolla	**Doc ID:** RM00000274W00HX
Title: POWER ASSIST SYSTEMS: POWER STEERING SYSTEM (for 2AZ-FE): TERMINALS OF ECU (2010 Corolla)		

TERMINALS OF ECU

1. CHECK POWER STEERING ECU

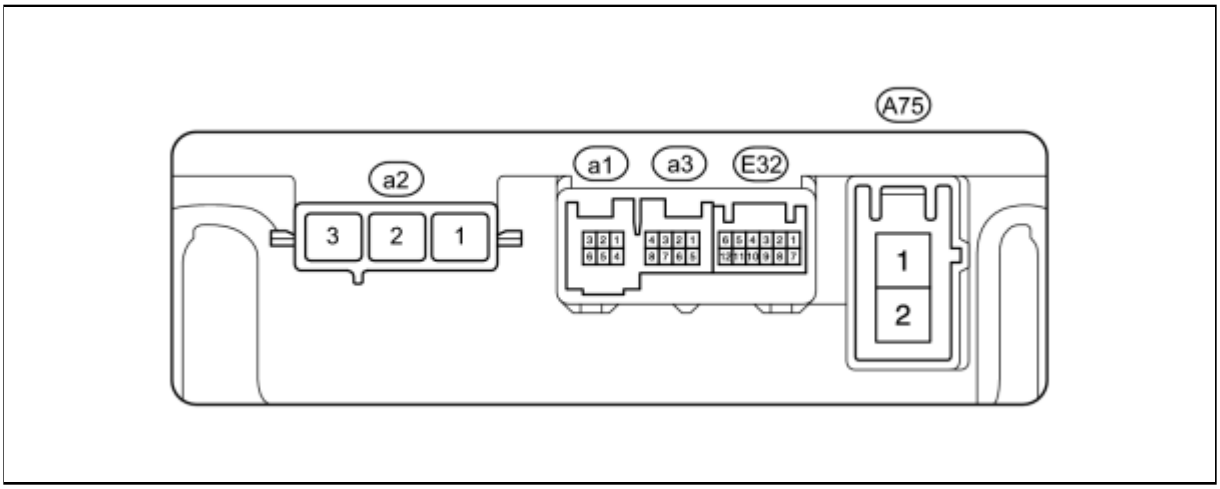

HINT:

As connector a2 uses a lock lever, each terminal cannot be checked while the connector is still connected to the power steering ECU.

TERMINAL NO. (SYMBOLS)	WIRING COLOR	TERMINAL DESCRIPTION
a2-1 (V)	W	V phase motor output
a2-2 (U)	B	U phase motor output
a2-3 (W)	R	W phase motor output

(a) Measure the voltage and resistance according to the value(s) in the table below.

NOTICE:

When the P/S warning light is illuminated during a malfunction, the fail-safe function may cause the voltage of the power steering ECU's terminals to become 0 V.

TERMINAL NO. (SYMBOLS)	WIRING COLOR	TERMINAL DESCRIPTION	CONDITION	SPECIFIED CONDITION
A75-1 (PIG) - A75-2 (PGND)	L - W-B	Power source	Always	11 to 14 V
A75-2 (PGND) - Body ground	W-B - Body ground	Power ground	Always	Below 1 Ω

TERMINAL NO. (SYMBOLS)	WIRING COLOR	TERMINAL DESCRIPTION	CONDITION	SPECIFIED CONDITION
E32-1 (CANH) - E32-7 (CANL)	SB - W	CAN communication line	Ignition switch off	54 to 69 Ω
E32-6 (IG) - A75-2 (PGND)	L - W-B	IG power source	Ignition switch on (IG)	11 to 14 V
a1-1 (RZV) - A75-2 (PGND)	- W-B	Rotation angle sensor excitation output signal	Ignition switch on (IG) Steering wheel is turned	0.68 to 4.42 V
a1-3 (RZG) - A75-2 (PGND)	- W-B	Rotation angle sensor excitation circuit GND	Always	Below 1 Ω
a1-5 (RZCS) - A75-2 (PGND)	- W-B	Rotation angle sensor COS aspect output signal	Ignition switch on (IG) Steering wheel is turned	0.68 to 4.42 V
a1-6 (RZSN) - A75-2 (PGND)	- W-B	Rotation angle sensor SIN aspect output signal	Ignition switch on (IG) Steering wheel is turned	0.68 to 4.42 V
a3-5 (TRQ1) - a3-8 (TRQG)	-	Torque sensor signal	Ignition switch on (IG) Steering wheel not turned (without load)	2.3 to 2.7 V
			Ignition switch on (IG) Steering wheel turned to right with vehicle stopped	2.5 to 3.8 V
			Ignition switch on (IG) Steering wheel turned to left with vehicle stopped	1.2 to 2.5 V
a3-6 (TRQV) - a3-8 (TRQG)	-	Torque sensor voltage source	Ignition switch on (IG)	4.5 to 5.5 V
a3-7 (TRQ2) - a3-8 (TRQG)	-	Torque sensor signal	Ignition switch on (IG) Steering wheel not turned (without load)	2.3 to 2.7 V
			Ignition switch on (IG) Steering wheel turned to right with vehicle stopped	1.2 to 2.5 V
			Ignition switch on (IG) Steering wheel turned to left with vehicle stopped	2.5 to 3.8 V
a3-8 (TRQG) - Body ground	- Body ground	Torque sensor ground	Always	Below 1 Ω

If the result is not as specified, the ECU may have a malfunction.

Last Modified: 3-10-2010	6.4 D	**From:** 200901
Model Year: 2010	**Model:** Corolla	**Doc ID:** RM00000274Z00WX
Title: POWER ASSIST SYSTEMS: POWER STEERING SYSTEM (for 2AZ-FE): DIAGNOSIS SYSTEM (2010 Corolla)		

DIAGNOSIS SYSTEM

1. CHECK DLC3

(a) The ECU uses ISO 15765-4 for communication. The terminal arrangement of the DLC3 complies with SAE J1962 and matches the ISO 15765-4 format.

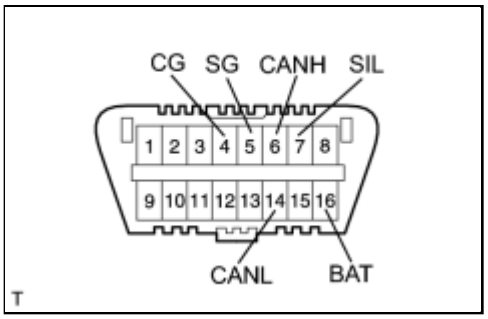

SYMBOL (TERMINAL NO.)	TERMINAL DESCRIPTION	CONDITION	SPECIFIED CONDITION
SIL (7) - SG (5)	Bus "+" line	During transmission	Pulse generation
CG (4) - Body ground	Chassis ground	Always	Below 1 Ω
SG (5) - Body ground	Signal ground	Always	Below 1 Ω
BAT (16) - Body ground	Battery positive	Always	11 to 14 V
CANH (6) - CANL (14)	CAN bus line	Ignition switch off*	54 to 69 Ω
CANH (6) - CG (4)	HIGH-level CAN bus line	Ignition switch off*	200 Ω or higher
CANL (14) - CG (4)	LOW-level CAN bus line	Ignition switch off*	200 Ω or higher
CANH (6) - BAT (16)	HIGH-level CAN bus line	Ignition switch off*	6 Ω or higher
CANL (14) - BAT (16)	LOW-level CAN bus line	Ignition switch off*	6 Ω or higher

NOTICE:

***: Before measuring the resistance, leave the vehicle as is for at least 1 minute and do not operate the ignition switch or any other switches or the doors.**

(b) If the result is not as specified, the DLC3 may have a malfunction. Repair or replace the harness and connector.

HINT:

Connect the Techstream cable to the DLC3, turn the ignition switch on (IG) and attempt to use the Techstream.

If the display indicates that a communication error has occurred, there is a problem either with the vehicle or with the Techstream.

- If communication is normal when the Techstream is connected to another vehicle, inspect the DLC3 of the original vehicle.
- If communication is still not possible when the Techstream is connected to another vehicle, the problem may be in the Techstream itself. Consult the Service Department listed in the Techstream instruction manual.

2. CHECK WARNING LIGHT

(a) When a problem occurs in the power steering system, the P/S warning light on the combination meter comes on to inform the driver of the problem.

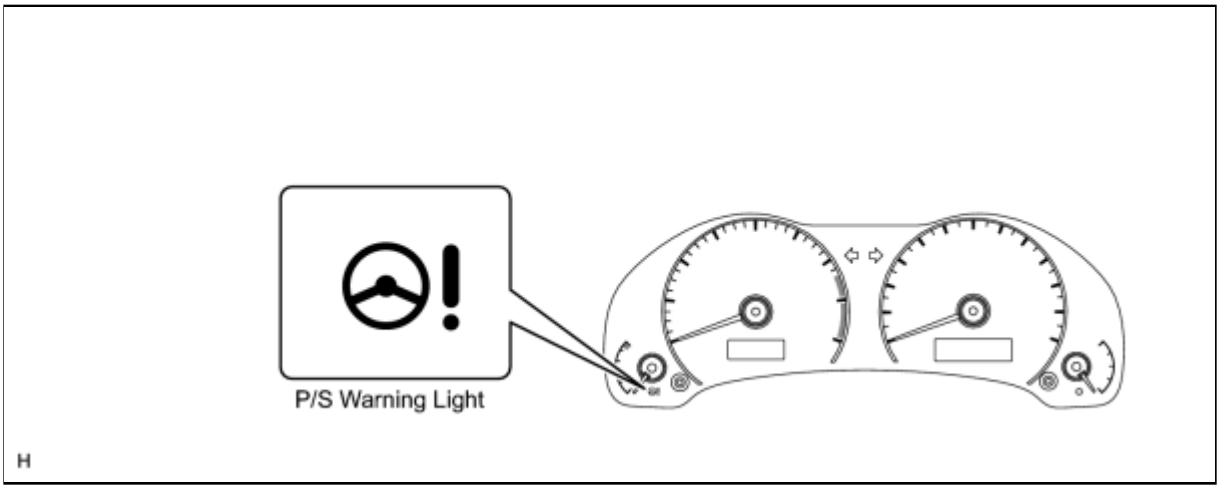

TOYOTA

Last Modified: 3-10-2010	6.4 D	**From:** 200901
Model Year: 2010	**Model:** Corolla	**Doc ID:** RM000002750010X
Title: POWER ASSIST SYSTEMS: POWER STEERING SYSTEM (for 2AZ-FE): DTC CHECK / CLEAR (2010 Corolla)		

DTC CHECK / CLEAR

1. CHECK DTC

(a) Turn the ignition switch off.

(b) Connect the Techstream to the DLC3.

(c) Turn the ignition switch on (IG).

(d) Turn the Techstream on.

(e) Read the DTCs following the display on the Techstream. Enter the following menus: Chassis / EMPS / Trouble Codes.

(f) Refer to the Diagnostic Trouble Code Chart for DTC information INFO .

2. CLEAR DTC

(a) Turn the ignition switch off.

(b) Connect the Techstream to the DLC3.

(c) Turn the ignition switch on (IG).

(d) Turn the Techstream on.

(e) Clear the DTCs following the display on the Techstream. Enter the following menus: Chassis / EMPS / Trouble Codes.

(f) According to the display on the Techstream, select the trouble code data display with the clear button.

(g) Turn the ignition switch off.

(h) Disconnect the Techstream from the DLC3.

Last Modified: 3-10-2010	6.4 D	**From:** 200901
Model Year: 2010	**Model:** Corolla	**Doc ID:** RM000002755012X
Title: POWER ASSIST SYSTEMS: POWER STEERING SYSTEM (for 2AZ-FE): FREEZE FRAME DATA (2010 Corolla)		

FREEZE FRAME DATA

1. FREEZE FRAME DATA

NOTICE:

- It is difficult to show the specified values (judgment values) clearly because freeze frame data values change significantly due to differences in measurement conditions, surroundings, or vehicle conditions. For this reason, there may be a problem even when the values are within specifications.
- Turn the ignition switch on (IG) and park the vehicle on level ground. Check the freeze frame data by using the Techstream.

(a) Turn the ignition switch off.

(b) Connect the Techstream to the DLC3.

(c) Turn the ignition switch on (IG).

(d) Turn the Techstream on.

(e) Check the freeze frame data on the Techstream.

EMPS

TESTER DISPLAY	ITEM DESCRIPTION/RANGE (DISPLAY)	INSPECTION CONDITION	REFERENCE VALUE
Meter Vehicle Velocity	Vehicle speed from meter/ Min.: 0 km/h (0 mph) Max.: 300 km/h (186.4 mph)	Vehicle stopped	0 km/h (0 mph)
		Vehicle driven at a constant speed	No significant fluctuation
Engine Revolution	Engine revolution/ Min.: 0 rpm Max.: 12800 rpm	Engine is running at a constant speed	No significant fluctuation
Motor Actual Current	Amount of current to motor/ Min.: -327.68 A Max.: 327.67 A	Power steering is in operation	Value changes in proportion to steering effort
Command Value Current	Demanded amount of current to motor/ Min.: -327.68 A Max.: 327.67 A	Power steering is in operation	Value changes in proportion to steering effort
Steering Angle Velocity	Steering angle speed/ Min.: -32768 deg/s Max.: 32767 deg/s	Steering wheel is turned	Value changes in proportion to steering effort

TESTER DISPLAY	ITEM DESCRIPTION/RANGE (DISPLAY)	INSPECTION CONDITION	REFERENCE VALUE
Thermistor Temperature	ECU substrate temperature/ Min.: -40°C (-40°F) Max.: 150°C (302°F)	Ignition switch on (IG)	-
PIG Power Supply	Power source voltage to activate motor/ Min.: 0 V Max.: 20.1531 V	Power steering is in operation	11 to 14 V
IG Power Supply	ECU power source voltage/ Min.: 0 V Max.: 20.1531 V	Ignition switch on (IG)	11 to 14 V
Motor Rotation Angle	Motor rotation angle/ Min.: 0 deg Max.: 1441.77 deg	Power steering is in operation	During steering operation, motor rotation angle value changes from 0 to 360°
Command Val Current 2	Demanded amount of current to motor/ Min.: -327.68 A Max.: 327.67 A	Power steering is in operation	Value changes in proportion to steering effort
PIG2 Voltage	Coil rear pressurization voltage/ Min.: 0 V Max.: 45.955 V	Ignition switch on (IG) Steering wheel is not turned	Approximately 27 V
		Ignition switch on (IG) Steering wheel is turned	Value changes within 4 to 35 V range
Motor Voltage	Motor power supply voltage/ Min.: 0 V Max.: 45.955 V	Ignition switch on (IG) Steering wheel is not turned	Approximately 27 V
		Ignition switch on (IG) Steering wheel is turned	Value changes within 4 to 35 V range
Motor Terminal Volt(U)	Motor terminal voltage (U phase)/ Min.: 0 V Max.: 46.667 V	Steering wheel is turned	Value changes within 4 to 35 V range
Motor Terminal Volt(V)	Motor terminal voltage (V phase)/ Min.: 0 V Max.: 46.667 V	Steering wheel is turned	Value changes within 4 to 35 V range
Motor Terminal Volt(W)	Motor terminal voltage (W phase)/ Min.: 0 V	Steering wheel is turned	Value changes within 4 to 35 V range

TESTER DISPLAY	ITEM DESCRIPTION/RANGE (DISPLAY)	INSPECTION CONDITION	REFERENCE VALUE
	Max.: 46.667 V		
Torque Sensor 1 Output	Torque sensor voltage/ Min.: 0 V Max.: 5 V	Ignition switch on (IG) Steering wheel not turned (without load)	2.3 to 2.7 V
		Ignition switch on (IG) Steering wheel turned to right with vehicle stopped	2.5 to 3.8 V
		Ignition switch on (IG) Steering wheel turned to left with vehicle stopped	1.2 to 2.5 V
Torque Sensor 2 Output	Torque sensor voltage/ Min.: 0 V Max.: 5 V	Ignition switch on (IG) Steering wheel not turned (without load)	2.3 to 2.7 V
		Ignition switch on (IG) Steering wheel turned to right with vehicle stopped	1.2 to 2.5 V
		Ignition switch on (IG) Steering wheel turned to left with vehicle stopped	2.5 to 3.8 V
TRQ1 Zero Point Value	Torque sensor voltage/ Min.: 0 V Max.: 5 V	Steering wheel is not turned	Values differ depending on vehicle
TRQ2 Zero Point Value	Torque sensor voltage/ Min.: 0 V Max.: 5 V	Steering wheel is not turned	Values differ depending on vehicle
PS Assist Signal	Power steering assist signal/ ON or OFF	No steering load (in neutral position)	OFF
		Ignition switch on (IG) Steering wheel is turned	ON

Last Modified: 3-10-2010	6.4 U	**From:** 200901
Model Year: 2010	**Model:** Corolla	**Doc ID:** RM00000275200HX
Title: POWER ASSIST SYSTEMS: POWER STEERING SYSTEM (for 2AZ-FE): DATA LIST / ACTIVE TEST (2010 Corolla)		

DATA LIST / ACTIVE TEST

1. DATA LIST

HINT:

Using the Techstream to read the Data List allows the values or states of switches, sensors, actuators and other items to be read without removing any parts. This non-intrusive inspection can be very useful because intermittent conditions or signals may be discovered before parts or wiring is disturbed. Reading the Data List information early in troubleshooting is one way to save diagnostic time.

NOTICE:

In the table below, the values listed under "Normal Condition" are reference values. Do not depend solely on these reference values when deciding whether a part is faulty or not.

(a) Turn the ignition switch off.

(b) Connect the Techstream to the DLC3.

(c) Turn the ignition switch on (IG).

(d) Turn the Techstream on.

(e) Enter the following menus: Chassis / EMPS / Data List.

(f) According to the display on the Techstream, read the "Data List".

EMPS

TESTER DISPLAY	MEASUREMENT ITEM/RANGE	NORMAL CONDITION	DIAGNOSTIC NOTE
Meter Vehicle Velocity	Vehicle speed from meter/ Min.: 0 km/h (0 mph) Max.: 300 km/h (186.4 mph)	0 km/h (0 mph)	Vehicle stopped
		No significant fluctuation	Vehicle driven at a constant speed
Engine Revolution	Engine revolution/ Min.: 0 rpm Max.: 12800 rpm	No significant fluctuation	Engine is running at a constant speed
Motor Actual Current	Amount of current to motor/ Min.: -327.68 A Max.: 327.67 A	Value changes in proportion to steering effort	Power steering is in operation
Command Value Current	Demanded amount of current to motor/ Min.: -327.68 A Max.: 327.67 A	Value changes in proportion to steering effort	Power steering is in operation

TESTER DISPLAY	MEASUREMENT ITEM/RANGE	NORMAL CONDITION	DIAGNOSTIC NOTE
Steering Angle Velocity	Steering angle speed/ Min.: -32768 deg/s Max.: 32767 deg/s	Value changes in proportion to steering effort	Steering wheel is turned
Thermistor Temperature	ECU substrate temperature/ Min.: -40°C (-40°F) Max.: 150°C (302°F)	-40°C to 150°C (-40°F to 302°F)	Ignition switch on (IG)
PIG Power Supply	Power source voltage to active motor/ Min.: 0 V Max.: 20.1531 V	11 to 14 V	Power steering is in operation
IG Power Supply	ECU power source voltage/ Min.: 0 V Max.: 20.1531 V	11 to 14 V	Ignition switch on (IG)
Steering Angle Sens Sig	Steering angle sensor signal state/ OK or NG(1) or NG(2) or NG(3)	OK: Steering angle sensor signal is received NG(1): The learning has not completed NG(2): Steering Sensor Abnormal NG(3): Communication Error	-
Steering Wheel Torque	Steering wheel torque/ Min.: -327.68 Nm Max.: 7 Nm	Value changes in proportion to steering effort	Ignition switch on (IG) and power steering is in operation
Motor Rotation Angle	Motor rotation angle/ Min.: 0 deg Max.: 1441.77 deg	During steering operation, motor rotation angle value changes from 0 to 360°	Power steering in operation
Command Val Current 2	Demanded amount of current to motor/ Min.: -327.68 A Max.: 327.67 A	Value changes in proportion to steering effort	Power steering is in operation
PIG2 Voltage	Coil rear pressurization voltage/ Min.: 0 V Max.: 45.955 V	Approximately 27 V	Ignition switch on (IG) and steering wheel is not turned
		Value changes within 4 to 35 V range	Ignition switch on (IG) and steering wheel is turned
Motor Voltage	Motor power supply voltage/ Min.: 0 V Max.: 45.955 V	Approximately 27 V	Ignition switch on (IG) and steering wheel is not turned
		Value changes within 4 to 35 V range	Ignition switch on (IG) and steering wheel is turned

TESTER DISPLAY	MEASUREMENT ITEM/RANGE	NORMAL CONDITION	DIAGNOSTIC NOTE
Motor Terminal Volt(U)	Motor terminal voltage (U phase)/ Min.: 0 V Max.: 46.667 V	Value changes within 4 to 35 V range	Ignition switch on (IG) and steering wheel is turned
Motor Terminal Volt(V)	Motor terminal voltage (V phase)/ Min.: 0 V Max.: 46.667 V	Value changes within 4 to 35 V range	Ignition switch on (IG) and steering wheel is turned
Motor Terminal Volt(W)	Motor terminal voltage (W phase)/ Min.: 0 V Max.: 46.667 V	Value changes within 4 to 35 V range	Ignition switch on (IG) and steering wheel is turned
Torque Sensor 1 Output	Torque sensor voltage/ Min.: 0 V Max.: 5 V	2.3 to 2.7 V	Ignition switch on (IG) and steering wheel is not turned (without load)
		2.5 to 3.8 V	Ignition switch on (IG) and steering wheel turned to right with vehicle stopped
		1.2 to 2.5 V	Ignition switch on (IG) and steering wheel turned to left with vehicle stopped
Torque Sensor 2 Output	Torque sensor voltage/ Min.: 0 V Max.: 5 V	2.3 to 2.7 V	Ignition switch on (IG) and steering wheel is not turned (without load)
		1.2 to 2.5 V	Ignition switch on (IG) and steering wheel turned to right with vehicle stopped
		2.5 to 3.8 V	Ignition switch on (IG) and steering wheel turned to left with vehicle stopped
TRQ1 Zero Point Value	Torque sensor voltage/ Min.: 0 V Max.: 5 V	Values differ depending on vehicle	Steering wheel is not turned
TRQ2 Zero Point Value	Torque sensor voltage/ Min.: 0 V Max.: 5 V	Values differ depending on vehicle	Steering wheel is not turned
IG ON/OFF Times	Number of times of ignition switch ON/OFF after fail detection/ Min.: 0 time Max.: 65535 times	-	This value indicate the number of times of IG ON/OFF after the latest DTC detection.

TESTER DISPLAY	MEASUREMENT ITEM/RANGE	NORMAL CONDITION	DIAGNOSTIC NOTE
Motor Overheat Record	Continuous overheat prevention control record/ Unrec or Rec	Unrec	-
Motor Lo Power Record	PIG power source voltage drop record/ Unrec or Rec	Unrec	-
Eng Rev Inter Record	Record of engine revolution signal interruption/ Unrec or Rec	Unrec	-
Str Angle Inter Record	Record of steering sensor signal interruption occurrence display/ Unrec or Rec	Unrec	-
Spd Sig Invalid Record	Record of vehicle speed signal invalid/ Unrec or Rec	Unrec	-
PS Assist Signal	Power steering assist signal/ ON or OFF	OFF	No steering load (in neutral position)
		ON	Ignition switch on (IG) and steering wheel is turned
The Number of DTCs	Number of detected DTCs when freeze frame data stored/ Min.: 0 Max.: 255	0 to 255	-

Last Modified: 3-10-2010	6.4 U	**From:** 200901
Model Year: 2010	**Model:** Corolla	**Doc ID:** RM00000275400HX
Title: POWER ASSIST SYSTEMS: POWER STEERING SYSTEM (for 2AZ-FE): FAIL-SAFE CHART (2010 Corolla)		

FAIL-SAFE CHART

If a problem occurs in the power steering system, the P/S warning light will come on in the combination meter and power steering assist will be stopped, fixed at a particular point, or decreased simultaneously to protect the system.

Power Steering System

<table>
<tr><th>DTC NO.</th><th>DETECTION CONDITION</th><th>FAIL-SAFE</th></tr>
<tr><td>C1511</td><td rowspan="6">Torque sensor malfunction</td><td rowspan="11">Power assist stops</td></tr>
<tr><td>C1512</td></tr>
<tr><td>C1513</td></tr>
<tr><td>C1514</td></tr>
<tr><td>C1515</td></tr>
<tr><td>C1516</td></tr>
<tr><td>C1517</td><td rowspan="4">Motor circuit malfunction</td></tr>
<tr><td>C1521</td></tr>
<tr><td>C1522</td></tr>
<tr><td>C1523</td></tr>
<tr><td>C1524</td><td rowspan="3">Motor rotation angle sensor malfunction</td></tr>
<tr><td>C1525</td></tr>
<tr><td>C1526</td></tr>
<tr><td>C1528</td><td rowspan="4">ECU malfunction</td></tr>
<tr><td>C1531</td><td rowspan="3">Assist force restricted</td></tr>
<tr><td>C1532</td></tr>
<tr><td>C1533</td></tr>
<tr><td>C1534</td><td rowspan="2">Skid control malfunction</td><td>Amount of power assist is locked at 100 km/h (62 mph) level of power assist</td></tr>
<tr><td>C1541</td><td rowspan="4">Power assist stops</td></tr>
<tr><td>C1551</td><td>IG power source voltage error</td></tr>
<tr><td>C1552</td><td>PIG power source voltage error</td></tr>
<tr><td>C1554</td><td>Power source relay malfunction</td></tr>
</table>

DTC NO.	DETECTION CONDITION	FAIL-SAFE
C1555	Motor relay malfunction	
C1581	ECU malfunction	
U0100	ECM communication	
U0129	Skid control ECU communication error	Amount of power assist is locked at 100 km/h (62 mph) level of power assist

HINT:

The amount of power assist may be decreased to prevent the motor and ECUs from overheating if the steering wheel is continuously turned when the vehicle is either stopped or driven at a low speed, or if the steering wheel is kept at either full lock position for a long time. In such cases, the amount of power assist returns to normal if the steering wheel is not turned for approximately 10 minutes with the engine idling.

Last Modified: 3-10-2010	6.4 S	**From:** 200901
Model Year: 2010	**Model:** Corolla	**Doc ID:** RM00000274U00JX
Title: POWER ASSIST SYSTEMS: POWER STEERING SYSTEM (for 2AZ-FE): DIAGNOSTIC TROUBLE CODE CHART (2010 Corolla)		

DIAGNOSTIC TROUBLE CODE CHART

HINT:

If a trouble code is displayed during the DTC check, inspect the trouble areas listed for that code. For details of the code, refer to the "See page" below.

Power Steering System

DTC CODE	DETECTION ITEM	TROUBLE AREA	RETURN-TO-NORMAL CONDITION	P/S WARNING LIGHT	SEE PAGE
C1511	Torque Sensor Circuit Malfunction	1. Steering column assembly (torque sensor) 2. Power steering ECU	Ignition switch on (IG) again	○	INFO
C1512	Torque Sensor Circuit Malfunction	1. Steering column assembly (torque sensor) 2. Power steering ECU	Ignition switch on (IG) again	○	INFO
C1513	Torque Sensor Circuit Malfunction	1. Steering column assembly (torque sensor) 2. Power steering ECU	Ignition switch on (IG) again	○	INFO
C1514	Torque Sensor Power Supply Abnormal	1. Steering column assembly (torque sensor) 2. Power steering ECU	Ignition switch on (IG) again	○	INFO
C1515	Torque Sensor Zero Point Adjustment Undone	-	Zero point calibration occurs	○	INFO
C1516	Torque Sensor Zero Point Adjustment Incomplete	-	Clear DTC	○	INFO
C1517	Torque Hold Abnormal	1. Steering column assembly (torque sensor) 2. Power steering	Ignition switch on (IG) again	○	INFO

DTC CODE	DETECTION ITEM	TROUBLE AREA	RETURN-TO-NORMAL CONDITION	P/S WARNING LIGHT	SEE PAGE
		ECU			
C1521	Motor Circuit Malfunction	Power steering ECU	Ignition switch on (IG) again	○	INFO
C1522	Motor Circuit Malfunction	1. Steering column assembly 2. Power steering ECU	Ignition switch on (IG) again	○	INFO
C1523	Motor Circuit Malfunction	1. Steering column assembly 2. Power steering ECU	Ignition switch on (IG) again	○	INFO
C1524	Motor Circuit Malfunction	1. Steering column assembly 2. Power steering ECU	Ignition switch on (IG) again	○	INFO
C1525	Rotation Angle Sensor Initialization Undone	-	Rotation angle sensor calibration occurs	○	INFO
C1526	Rotation Angle Sensor Initialization Incomplete	-	Clear DTC	○	INFO
C1528	Motor Rotation Angle Sensor Malfunction	1. Steering column assembly 2. Power steering ECU	Ignition switch on (IG) again	○	INFO
C1531	ECU Malfunction	Power steering ECU	Ignition switch on (IG) again	○	INFO
C1532	ECU Malfunction	Power steering ECU	Ignition switch on (IG) again	○	INFO
C1533	ECU Malfunction	Power steering ECU	After normal judgment	X	INFO
C1534	ECU Malfunction	Power steering ECU	After normal judgment	X	INFO
C1541	Vehicle Speed Signal Malfunction	1. Speed sensor circuit 2. Skid control ECU 3. CAN communication system 4. Power steering ECU	Ignition switch on (IG) again	○	INFO

DTC CODE	DETECTION ITEM	TROUBLE AREA	RETURN-TO-NORMAL CONDITION	P/S WARNING LIGHT	SEE PAGE
C1551	IG Power Supply Voltage Malfunction	1. ECU-IG No. 1 fuse 2. IG power source circuit 3. Power steering ECU	Ignition switch on (IG) again or after normal confirmation	○	INFO
C1552	PIG Power Supply Voltage Malfunction	1. PIG power source circuit 2. Power steering ECU	Ignition switch on (IG) again or after normal confirmation	○	INFO
C1554	Power Supply Relay Failure	Power steering ECU	Ignition switch on (IG) again	○	INFO
C1555	Motor Relay Welding Failure	Power steering ECU	Ignition switch on (IG) again	○	INFO
C1581	Assist Map Number Un-Writing	Power steering ECU	Assist map write or ignition switch on (IG) again	○	INFO
U0100	Lost Communication with ECM / PCM "A"	1. CAN communication system 2. ECM	Ignition switch on (IG) again or after normal confirmation	X	INFO
U0129	Lost Communication with Brake System Control Module	1. CAN communication system 2. Skid control ECU	Ignition switch on (IG) again or after normal confirmation	○	INFO

HINT:

- ○: Warning light comes on
- X: Warning light turns off (normal reset)

Last Modified: 3-10-2010	6.4 C	**From:** 200901
Model Year: 2010	**Model:** Corolla	**Doc ID:** RM00000277F00JX
Title: POWER ASSIST SYSTEMS: POWER STEERING SYSTEM (for 2AZ-FE): C1511-C1514,C1517: Torque Sensor Circuit Malfunction (2010 Corolla)		

DTC	**C1511**	**Torque Sensor Circuit Malfunction**

DTC	**C1512**	**Torque Sensor Circuit Malfunction**

DTC	**C1513**	**Torque Sensor Circuit Malfunction**

DTC	**C1514**	**Torque Sensor Power Supply Abnormal**

DTC	**C1517**	**Torque Hold Abnormal**

DESCRIPTION

The torque sensor converts the rotation torque input from the steering wheel into electric signals and sends them to the power steering ECU.

DTC NO.	DTC DETECTION CONDITION	TROUBLE AREA
C1511	Torque sensor malfunction	• Steering column assembly (torque sensor) • Power steering ECU
C1512		
C1513		
C1514		
C1517		

WIRING DIAGRAM

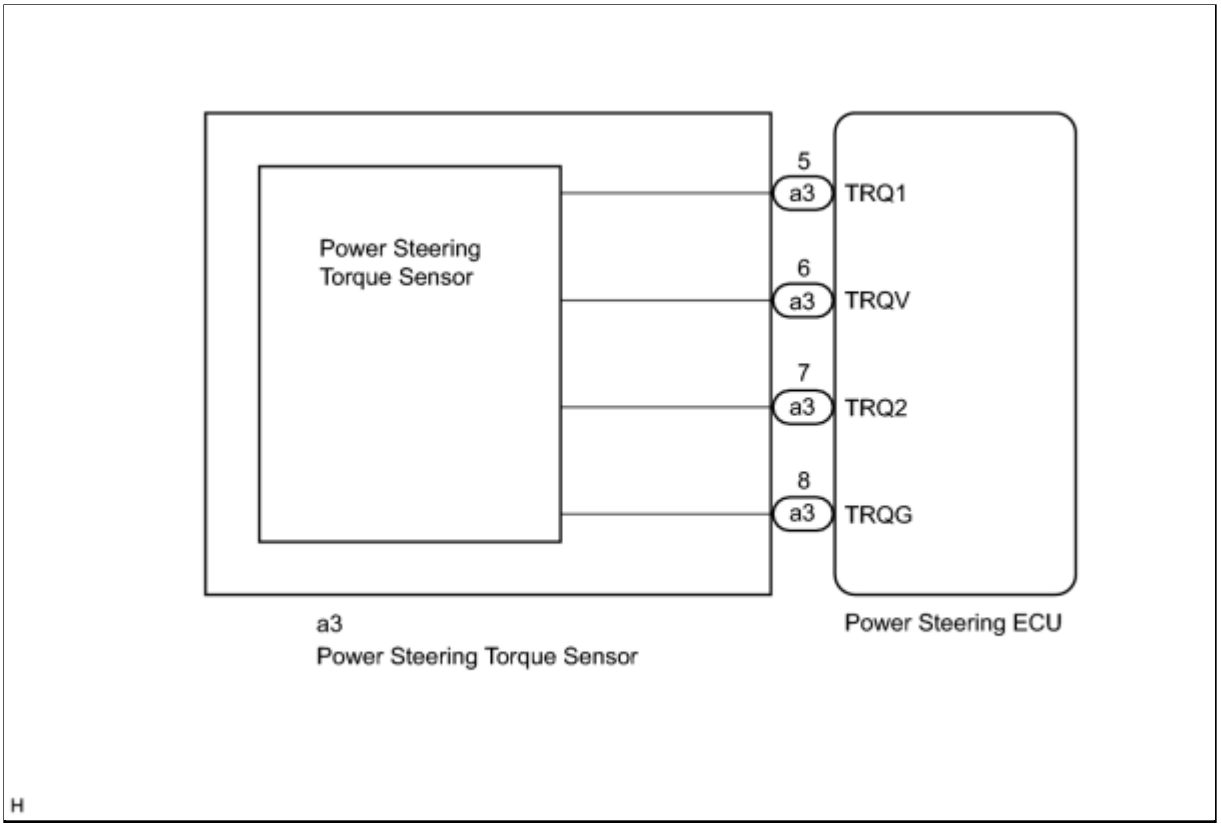

INSPECTION PROCEDURE

NOTICE:

If the steering column assembly or power steering ECU has been replaced, perform the rotation angle sensor initialization and torque sensor zero point calibration INFO **.**

PROCEDURE

1.	**CHECK CONNECTOR CONNECTION CONDITION (TORQUE SENSOR - ECU)**

(a) Check the installation condition of the torque sensor connector.

OK:

Torque sensor connector is securely connected to the power steering ECU.

NG ▶ **CONNECT CONNECTOR**

OK ▼

2.	**READ VALUE USING TECHSTREAM (TORQUE SENSOR1, TORQUE SENSOR2)**

(a) Turn the ignition switch off.

(b) Connect the Techstream to the DLC3.

(c) Turn the ignition switch on (IG).

(d) Turn the Techstream on.

(e) Enter the following menus: Chassis / EMPS / Data List.

(f) Select the items "Torque sensor 1 output" and "Torque sensor 2 output" in the Data List and read the value displayed on the Techstream.

EMPS

TESTER DISPLAY	MEASUREMENT ITEM/RANGE	NORMAL CONDITION	DIAGNOSTIC NOTE
Torque Sensor 1 Output	Torque sensor voltage/ Min.: 0 V Max.: 5 V	2.3 to 2.7 V	Steering wheel not turned (without load)
		2.5 to 3.8 V	Steering wheel turned to right with vehicle stopped
		1.2 to 2.5 V	Steering wheel turned to left with vehicle stopped
Torque Sensor 2 Output	Torque sensor voltage/ Min.: 0 V Max.: 5 V	2.3 to 2.7 V	Steering wheel not turned (without load)
		1.2 to 2.5 V	Steering wheel turned to right with vehicle stopped
		2.5 to 3.8 V	Steering wheel turned to left with vehicle stopped

OK:
Normal condition value is displayed on the Techstream during each steering operation.

NG ▶ **CHECK POWER STEERING ECU (TRQV VOLTAGE)**

OK ▶ **REPLACE POWER STEERING ECU**

3.	**CHECK POWER STEERING ECU (TRQV VOLTAGE)**

(a) Turn the ignition switch on (IG).

(b) Measure the voltage according to the value(s) in the table below.

Standard Voltage:

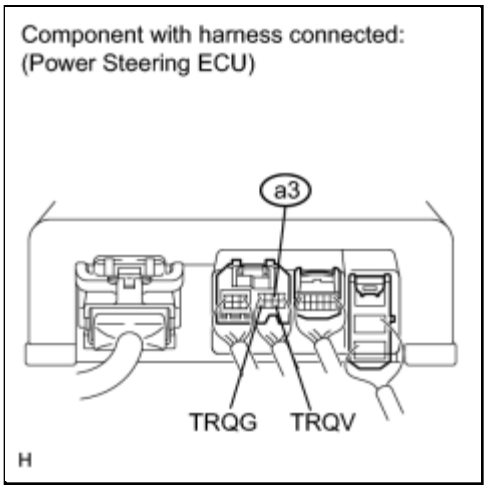

TESTER CONNECTION	SWITCH CONDITION	SPECIFIED CONDITION
a3-6 (TRQV) - a3-8 (TRQG)	Ignition switch on (IG)	4.5 to 5.5 V

NG ▶ **REPLACE POWER STEERING ECU**

OK ▼

4.	**CHECK POWER STEERING ECU (TRQ1, TRQ2 VOLTAGE)**

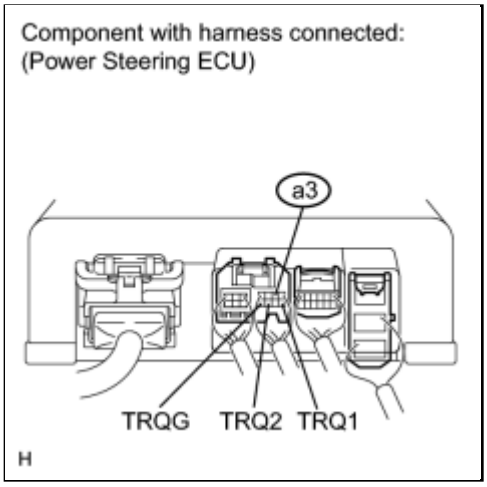

(a) Turn the ignition switch on (IG).

(b) Measure the voltage according to the value(s) in the table below.

Standard Voltage:

TESTER CONNECTION	SWITCH CONDITION (STEERING POSITION)	SPECIFIED CONDITION
a3-5 (TRQ1) - a3-8 (TRQG)	Ignition switch on (IG) Steering wheel not turned (without load)	2.3 to 2.7 V
	Ignition switch on (IG) Steering wheel turned to right with vehicle stopped	2.5 to 3.8 V

TESTER CONNECTION	SWITCH CONDITION (STEERING POSITION)	SPECIFIED CONDITION
	Ignition switch on (IG) Steering wheel turned to left with vehicle stopped	1.2 to 2.5 V
a3-7 (TRQ2) - a3-8 (TRQG)	Ignition switch on (IG) Steering wheel not turned (without load)	2.3 to 2.7 V
	Ignition switch on (IG) Steering wheel turned to right with vehicle stopped	1.2 to 2.5 V
	Ignition switch on (IG) Steering wheel turned to left with vehicle stopped	2.5 to 3.8 V

NG ▶ **REPLACE STEERING COLUMN ASSEMBLY**

OK ▶ **REPLACE POWER STEERING ECU**

Last Modified: 3-10-2010	6.4 G	**From:** 200901
Model Year: 2010	**Model:** Corolla	**Doc ID:** RM000000WF601MX
Title: POWER ASSIST SYSTEMS: POWER STEERING SYSTEM (for 2AZ-FE): ON-VEHICLE INSPECTION (2010 Corolla)		

ON-VEHICLE INSPECTION

1. CHECK STEERING EFFORT (TORQUE)

NOTICE:

Some of these service operations may affect the SRS airbags. Read the precautionary notices concerning the SRS airbag system before servicing.

(a) Stop the vehicle on a level, paved surface and align the wheels straight ahead.

(b) Disconnect the cable from the negative (-) battery terminal.

CAUTION:

Wait at least 90 seconds after disconnecting the cable from the negative (-) battery terminal to disable the SRS system.

(c) Remove the steering pad INFO .

(d) Connect the cable to the negative (-) battery terminal.

(e) Using a torque wrench, check that the steering wheel set nut is properly tightened.

Torque: 50 N·m (510 kgf·cm, 37ft·lbf)

(f) Turn the ignition switch to ON (the engine is stopped) so that the power steering is ready to operate.

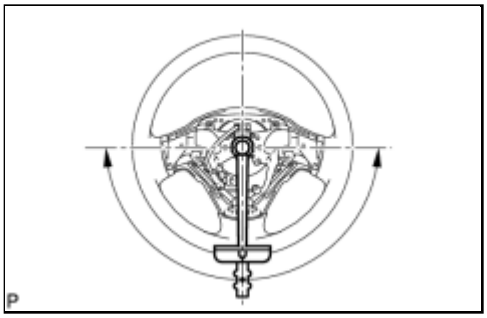

(g) Turn the steering wheel 90 degrees to the right and check the steering effort (torque) while continuing to turn it further in the same direction.

Standard steering effort (Reference):
5.5 N*m (56 kgf*cm, 49 in.*lbf) or less

(h) Align the front wheels facing straight ahead.

(i) Disconnect the cable from the negative (-) battery terminal.

CAUTION:

Wait at least 90 seconds after disconnecting the cable from the negative (-) battery terminal to disable the SRS system.

(j) Install the steering pad INFO .

(k) Connect the cable to the negative (-) battery terminal.

(l) Clear the DTCs INFO .

(m) Inspect the airbag warning light INFO .

Last Modified: 3-10-2010	6.4 C	**From:** 200901
Model Year: 2010	**Model:** Corolla	**Doc ID:** RM00000277G00JX
Title: POWER ASSIST SYSTEMS: POWER STEERING SYSTEM (for 2AZ-FE): C1515,C1525: Torque Sensor Zero Point Adjustment Undone (2010 Corolla)		

DTC	**C1515**	**Torque Sensor Zero Point Adjustment Undone**

DTC	**C1525**	**Rotation Angle Sensor Initialization Undone**

DESCRIPTION

These DTCs do not indicate a malfunction. The power steering ECU outputs these DTCs when it determines that the rotation angle sensor value initialization and torque sensor zero point calibration have not been performed.

DTC NO.	DTC DETECTION CONDITION	TROUBLE AREA
C1515	This DTC is detected when torque sensor zero point calibration has not been performed.	There is no malfunction if this DTC is not output again after performing zero point calibration.
C1525	This DTC is detected when rotation angle sensor value initialization has not been performed.	There is no malfunction if this DTC is not output again after performing rotation angle sensor value initialization.

INSPECTION PROCEDURE

NOTICE:

If the steering column assembly or power steering ECU has been replaced, perform the rotation angle sensor initialization and torque sensor zero point calibration INFO **.**

PROCEDURE

1.	**INITIALIZE ROTATION ANGLE SENSOR AND CALIBRATE TORQUE SENSOR ZERO POINT**

(a) Initialize the rotation angle sensor value and calibrate the torque sensor zero point INFO .

NEXT

2.	CHECK FOR DTC

(a) Check for DTCs INFO .

Result:

CONDITION	PROCEED TO
DTCs are still output after performing rotation angle sensor value initialization and steering zero point calibration 3 times*1.	A
DTCs are still output even after performing rotation angle sensor value initialization and steering zero point calibration once or twice*2.	B
Normal system code is output.	C

HINT:

- *1: The power steering ECU must be replaced if DTC C1515 or C1525 is still output even after the torque sensor zero point calibration is performed 3 times.
- *2: Perform the torque sensor zero point calibration again if DTC C1515 or C1525 is still output even after the calibration is performed once or twice.

C **END**

B **PERFORM ZERO POINT CALIBRATION AGAIN (TORQUE SENSOR)**

A

3.	REPLACE POWER STEERING ECU

(a) Replace the power steering ECU INFO .

NEXT

4.	**INITIALIZE ROTATION ANGLE SENSOR AND CALIBRATE TORQUE SENSOR ZERO POINT**

(a) Initialize the rotation angle sensor value and calibrate the torque sensor zero point INFO .

NEXT

5.	**CHECK FOR DTC**

(a) Check for DTCs INFO .

Result:

CONDITION	PROCEED TO
DTCs are still output after performing rotation angle sensor value initialization and steering zero point calibration 3 times*1.	A
DTCs are still output even after performing rotation angle sensor value initialization and steering zero point calibration twice*2.	B
Normal system code is output.	C

HINT:

- *1: The steering column assembly must be replaced if DTC C1515 or C1525 is still output even after the torque sensor zero point calibration is performed 3 times.
- *2: Perform the torque sensor zero point calibration again if DTC C1515 or C1525 is still output even after the calibration is performed twice.

NOTICE:

If replacing the steering column assembly, clear the rotation angle sensor calibration value, initialize the rotation angle sensor value, and calibrate the torque sensor zero point INFO .

C END

B ▶ PERFORM ZERO POINT CALIBRATION AGAIN (TORQUE SENSOR)

A ▶ REPLACE STEERING COLUMN ASSEMBLY

Last Modified: 3-10-2010	6.4 C	**From:** 200901
Model Year: 2010	**Model:** Corolla	**Doc ID:** RM0000027BY00JX
Title: POWER ASSIST SYSTEMS: POWER STEERING SYSTEM (for 2AZ-FE): C1516,C1526: Torque Sensor Zero Point Adjustment Incomplete (2010 Corolla)		

DTC	**C1516**	**Torque Sensor Zero Point Adjustment Incomplete**

DTC	**C1526**	**Rotation Angle Sensor Initialization Incomplete**

DESCRIPTION

These DTCs do not indicate a malfunction. The power steering ECU outputs these DTCs when it determines that the rotation angle sensor value initialization and torque sensor zero point calibration are incomplete.

DTC NO.	DTC DETECTION CONDITION	TROUBLE AREA
C1516	Torque sensor zero point calibration is incomplete due to the steering wheel being touched during calibration.	There is no malfunction if this DTC is not output again after clearing the DTCs and torque sensor calibration value, and performing zero point calibration.
C1526	Rotation angle sensor value initialization is incomplete due to the steering wheel being touched during calibration.	There is no malfunction if this DTC is not output again after clearing the DTCs and torque sensor calibration value, and performing rotation angle sensor value initialization.

INSPECTION PROCEDURE

NOTICE:

If the steering column assembly or power steering ECU has been replaced, perform the rotation angle sensor initialization and torque sensor zero point calibration INFO **.**

PROCEDURE

1.	**CLEAR DTC**

(a) Clear the DTCs INFO .

NEXT

2.	**INITIALIZE ROTATION ANGLE SENSOR AND CALIBRATE TORQUE SENSOR ZERO POINT**

(a) Initialize the rotation angle sensor value and calibrate the torque sensor zero point INFO .

NEXT

3.	**CHECK FOR DTC**

(a) Check for DTCs INFO .

Result:

CONDITION	PROCEED TO
DTCs are still output after performing rotation angle sensor value initialization and steering zero point calibration 3 times*1.	A
DTCs are still output even after performing rotation angle sensor value initialization and steering zero point calibration once or twice*2.	B
Normal system code is output.	C

HINT:

- *1: The power steering ECU must be replaced if DTC C1516 or C1526 is still output even after the torque sensor zero point calibration is performed 3 times.
- *2: Perform the torque sensor zero point calibration again if DTC C1516 or C1526 is still output even after the calibration is performed once or twice.

C ▶ **END**

B ▶ **PERFORM ZERO POINT CALIBRATION AGAIN (TORQUE SENSOR)**

A

4.	**REPLACE POWER STEERING ECU**

(a) Replace the power steering ECU INFO .

NEXT

5.	**CLEAR DTC**

(a) Clear the DTCs INFO .

NEXT

6.	**INITIALIZE ROTATION ANGLE SENSOR AND CALIBRATE TORQUE SENSOR ZERO POINT**

(a) Initialize the rotation angle sensor value and calibrate the torque sensor zero point INFO .

NEXT

7.	**CHECK FOR DTC**

(a) Check for DTCs INFO .

Result:

CONDITION	PROCEED TO
DTCs are still output after performing rotation angle sensor value initialization and steering zero point calibration 3 times*1.	A
DTCs are still output even after performing rotation angle sensor value initialization and steering zero point calibration twice*2.	B
Normal system code is output.	C

HINT:

- *1: The steering column assembly must be replaced if DTC C1516 or C1526 is still output even after the torque sensor zero point calibration is performed 3 times.
- *2: Perform the torque sensor zero point calibration again if DTC C1516 or C1526 is still output even after the calibration is performed twice.

NOTICE:

If replacing the steering column assembly, clear the rotation angle sensor calibration value, initialize the rotation angle sensor value, and calibrate the torque sensor zero point INFO **.**

C ▶ **END**

B ▶ **PERFORM ZERO POINT CALIBRATION AGAIN (TORQUE SENSOR)**

A ▶ **REPLACE STEERING COLUMN ASSEMBLY**

Last Modified: 3-10-2010	6.4 C	**From:** 200901
Model Year: 2010	**Model:** Corolla	**Doc ID:** RM0000027BZ00JX
Title: POWER ASSIST SYSTEMS: POWER STEERING SYSTEM (for 2AZ-FE): C1521,C1531-C1534,C1554: Motor Circuit Malfunction (2010 Corolla)		

DTC	**C1521**	**Motor Circuit Malfunction**

DTC	**C1531**	**ECU Malfunction**

DTC	**C1532**	**ECU Malfunction**

DTC	**C1533**	**ECU Malfunction**

DTC	**C1534**	**ECU Malfunction**

DTC	**C1554**	**Power Supply Relay Failure**

DESCRIPTION

If the power steering ECU detects these DTCs, it will shut off the motor relay circuit (built into the power steering ECU) and stop power assist. However, power assist continues if DTC C1533 or C1534 is output.

DTC NO.	DTC DETECTION CONDITION	TROUBLE AREA
C1521	Motor overcurrent	Power steering ECU
C1531	ECU internal malfunction (CPU malfunction)	Power steering ECU
C1532	ECU internal malfunction (Peripheral circuit malfunction)	Power steering ECU
C1533	ECU internal malfunction (Substrate temperature sensor malfunction)	Power steering ECU
C1534	ECU internal malfunction (EEPROM error)	Power steering ECU
C1554	Power source relay circuit malfunction	Power steering ECU

INSPECTION PROCEDURE

NOTICE:

If the steering column assembly or power steering ECU has been replaced, perform the rotation angle sensor initialization and torque sensor zero point calibration INFO .

PROCEDURE

1.	**CHECK FOR DTC**

(a) Clear the DTCs INFO .

(b) Check for DTCs. INFO

OK:

DTC is not output.

NG ▶ **REPLACE POWER STEERING ECU**

OK ▶ **CHECK INTERMITTENT PROBLEMS**

Last Modified: 3-10-2010	6.4 C	**From:** 200901
Model Year: 2010	**Model:** Corolla	**Doc ID:** RM00000277N00JX
Title: POWER ASSIST SYSTEMS: POWER STEERING SYSTEM (for 2AZ-FE): C1522-C1555: Motor Circuit Malfunction (2010 Corolla)		

DTC	**C1522**	**Motor Circuit Malfunction**

DTC	**C1523**	**Motor Circuit Malfunction**

DTC	**C1524**	**Motor Circuit Malfunction**

DTC	**C1555**	**Motor Relay Welding Failure**

DESCRIPTION

The power steering ECU supplies the current to the power steering motor through the motor circuit.

DTC NO.	DTC DETECTION CONDITION	TROUBLE AREA
C1522	Motor current sensor malfunction	• Steering column assembly • Power steering ECU
C1523	Excessively large current deviation	
C1524	Short (or open) in motor circuit or abnormal voltage or current in motor circuit	
C1555	Motor relay circuit malfunction	

WIRING DIAGRAM

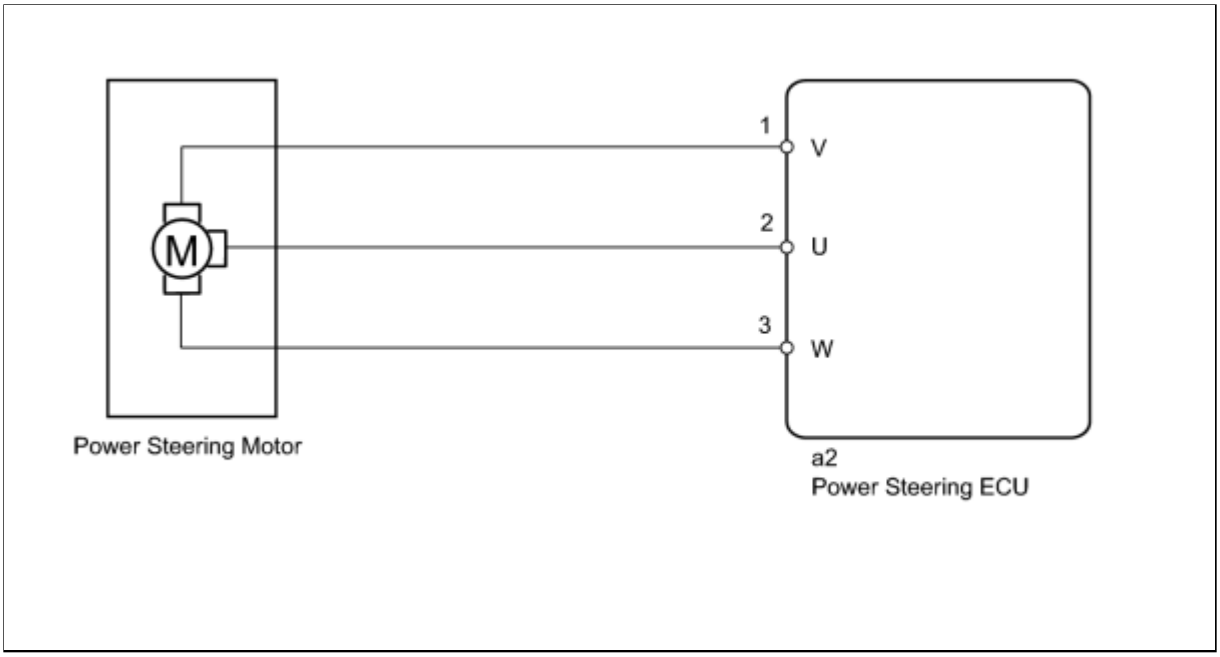

INSPECTION PROCEDURE

NOTICE:

If the steering column assembly or power steering ECU has been replaced, perform the rotation angle sensor initialization and torque sensor zero point calibration INFO **.**

PROCEDURE

1.	**READ VALUE USING TECHSTREAM (MOTOR VOLTAGE)**

(a) Turn the ignition switch off.

(b) Connect the Techstream to the DLC3.

(c) Turn the ignition switch on (IG).

(d) Turn the Techstream on.

(e) Enter the following menus: Chassis / EMPS / Data List.

(f) Select the items "Motor Terminal Volt(U)", "Motor Terminal Volt(V)" and "Motor Terminal Volt(W)" in the Data List and read the value displayed on the Techstream.

EMPS

TESTER DISPLAY	MEASUREMENT ITEM/RANGE	NORMAL CONDITION	DIAGNOSTIC NOTE
Motor Terminal Volt(U)	Motor terminal voltage (U phase)/ Min.: 0 V	During steering operation, value changes within 4 to 35 V range	Steering wheel is turned

TESTER DISPLAY	MEASUREMENT ITEM/RANGE	NORMAL CONDITION	DIAGNOSTIC NOTE
	Max.: 46.667 V		
Motor Terminal Volt(V)	Motor terminal voltage (V phase)/ Min.: 0 V Max.: 46.667 V	During steering operation, value changes within 4 to 35 V range	Steering wheel is turned
Motor Terminal Volt(W)	Motor terminal voltage (W phase)/ Min.: 0 V Max.: 46.667 V	During steering operation, value changes within 4 to 35 V range	Steering wheel is turned

Result:

RESULT	PROCEED TO
During steering operation, value changes within 4 to 35 V range	A
During steering operation, voltage is not generated	B

B ▶ **REPLACE STEERING COLUMN ASSEMBLY**

A ▶ **REPLACE POWER STEERING ECU**

Last Modified: 3-10-2010	6.4 C	**From:** 200901
Model Year: 2010	**Model:** Corolla	**Doc ID:** RM0000027O00JX
Title: POWER ASSIST SYSTEMS: POWER STEERING SYSTEM (for 2AZ-FE): C1528: Motor Rotation Angle Sensor Malfunction (2010 Corolla)		

DTC	**C1528**	**Motor Rotation Angle Sensor Malfunction**

DESCRIPTION

The motor rotation angle sensor detects the motor rotation angle and sends this information to the power steering ECU.

DTC NO.	DTC DETECTION CONDITION	TROUBLE AREA
C1528	Motor rotation angle sensor malfunction	• Motor rotation angle sensor (built into steering column assembly) • Power steering ECU

WIRING DIAGRAM

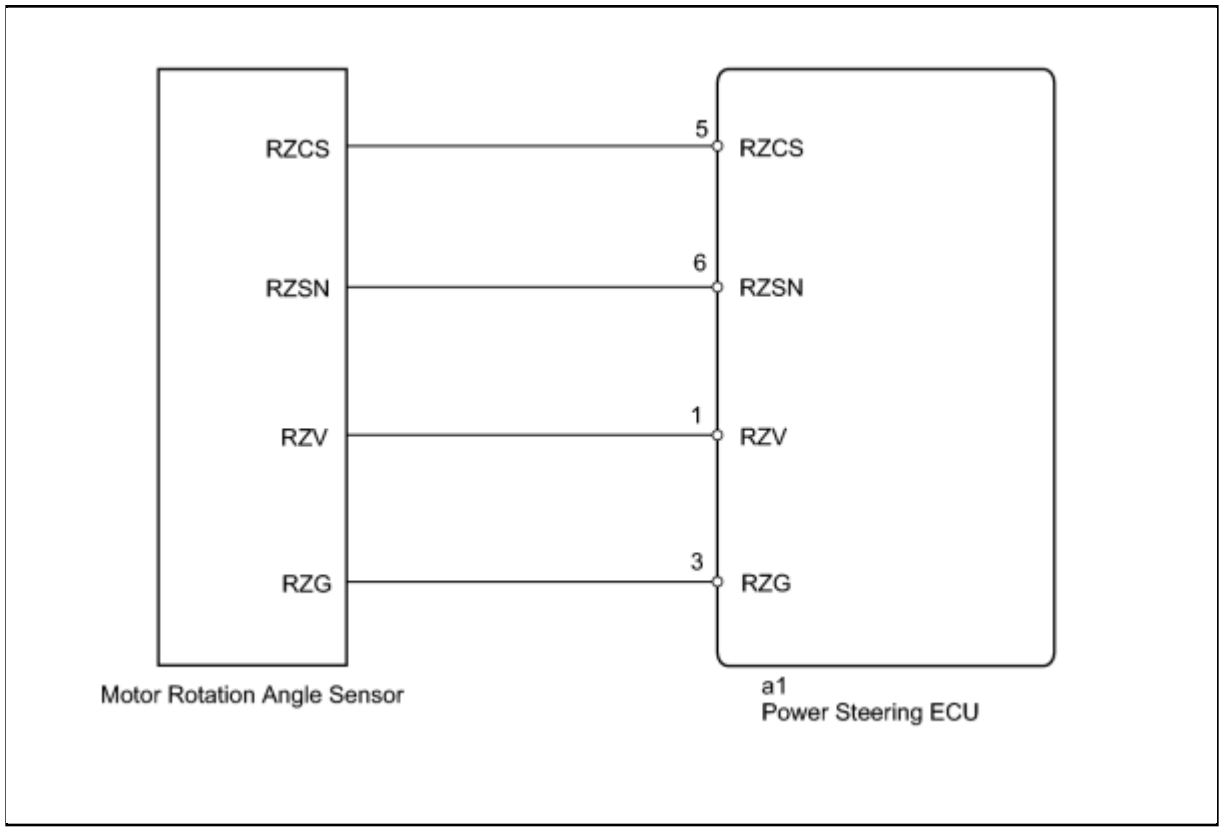

INSPECTION PROCEDURE

NOTICE:

If the steering column assembly or power steering ECU has been replaced, perform the rotation angle sensor initialization and torque sensor zero point calibration INFO .

PROCEDURE

1.	**CHECK CONNECTOR CONNECTION CONDITION**

(a) Check the installation condition of the motor rotation angle sensor connector.

OK:

Motor rotation angle sensor connector is securely connected to the power steering ECU.

NG ▶ **CONNECT CONNECTOR**

OK ▼

2.	**READ VALUE USING TECHSTREAM (MOTOR ROTATION ANGLE SENSOR)**

(a) Turn the ignition switch off.

(b) Connect the Techstream to the DLC3.

(c) Turn the ignition switch on (IG).

(d) Turn the Techstream on.

(e) Enter the following menus: Chassis / EMPS / Data List.

(f) Select the item "Motor Rotation Angle" in the Data List and read the value displayed on the Techstream.

EMPS

TESTER DISPLAY	MEASUREMENT ITEM/RANGE	NORMAL CONDITION	DIAGNOSTIC NOTE
Motor Rotation Angle	Motor rotation angle/ Min.: 0 deg Max.: 1441.77 deg	During steering operation, motor rotation angle value changes from 0 to 360°	Power steering in operation

OK:

During steering operation, motor rotation angle value changes from 0 to 360°.

NG ▶ CHECK STEERING COLUMN ASSEMBLY

OK ▶ REPLACE POWER STEERING ECU

3.	CHECK STEERING COLUMN ASSEMBLY

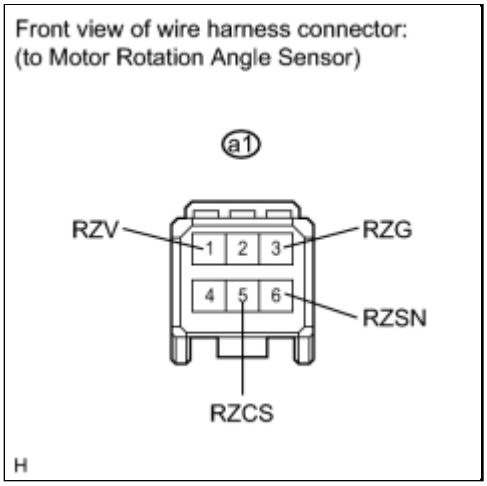

(a) Disconnect the connector from the motor rotation angle sensor.

(b) Measure the resistance according to the value(s) in the table below.

Standard Resistance:

TESTER CONNECTION	CONDITION	SPECIFIED CONDITION
a1-6 (RZSN) - a1-3 (RZG)	Always	75.2 to 112.8 Ω
a1-1 (RZV) - a1-3 (RZG)	Always	27.6 to 41.4 Ω
a1-5 (RZCS) - a1-3 (RZG)	Always	73.2 to 110.8 Ω

NG ▶ REPLACE STEERING COLUMN ASSEMBLY

OK ▶ END

Last Modified: 3-10-2010	6.4 C	**From:** 200901
Model Year: 2010	**Model:** Corolla	**Doc ID:** RM0000027C000JX
Title: POWER ASSIST SYSTEMS: POWER STEERING SYSTEM (for 2AZ-FE): C1541: Vehicle Speed Signal Malfunction (2010 Corolla)		

DTC	**C1541**	**Vehicle Speed Signal Malfunction**

DESCRIPTION

The power steering ECU receives vehicle speed signals from the skid control ECU via CAN communication. The ECU provides appropriate assisting force in accordance with the vehicle speed, based on the signals.

If the ECU detects this DTC, it adjusts the amount of power assistance for a speed of 100 km/h (62 mph) and continues the system control.

DTC NO.	DTC DETECTION CONDITION	TROUBLE AREA
C1541	This DTC is detected when vehicle speed signals via CAN communication are cut off for 3 seconds or more.	• Speed sensor circuit • Skid control ECU • CAN communication system • Power steering ECU

INSPECTION PROCEDURE

NOTICE:

If the steering column assembly or power steering ECU has been replaced, perform the rotation angle sensor initialization and torque sensor zero point calibration INFO **.**

PROCEDURE

1.	**CHECK OTHER DTC OUTPUT (CAN COMMUNICATION SYSTEM)**

(a) Check if DTC U0129 is output.

Result:

RESULT	PROCEED TO
No output	A
U0129 is output	B

HINT:

DTC U0129 indicates a ABS ECU communication malfunction in the power steering system.

B ▶ **GO TO CAN COMMUNICATION SYSTEM**

A

2.	**CHECK OTHER DTC OUTPUT (BRAKE CONTROL SYSTEM)**

(a) Check for DTCs of the brake control system.

HINT:

- Anti-lock brake system: INFO .
- Vehicle stability control system: INFO .

Result:

RESULT	PROCEED TO
No output	A
C0200 or C0210 is output (for Anti-lock Brake System)	B
C0200 or C0210 is output (for Vehicle Stability Control System)	C

HINT:

These DTCs indicate a speed sensor signal malfunction in the Anti-lock Brake System or Vehicle Stability Control System.

NOTICE:

If replacing the power steering ECU, initialize the rotation angle sensor and calibrate the torque sensor zero point INFO .

C ▶ **REPAIR CIRCUIT INDICATED BY OUTPUT CODE (for Vehicle Stability Control System)**

B ▶ **REPAIR CIRCUIT INDICATED BY OUTPUT CODE (for Anti-lock Brake System)**

A ▶ **REPLACE POWER STEERING ECU**

Last Modified: 3-10-2010	6.4 C	**From:** 200901
Model Year: 2010	**Model:** Corolla	**Doc ID:** RM0000027I00JX
Title: POWER ASSIST SYSTEMS: POWER STEERING SYSTEM (for 2AZ-FE): C1551: IG Power Supply Voltage Malfunction (2010 Corolla)		

DTC	**C1551**	**IG Power Supply Voltage Malfunction**

DESCRIPTION

The power steering ECU distinguishes the ignition switch status as on (IG) or off through the IG power source circuit.

DTC NO.	DTC DETECTION CONDITION	TROUBLE AREA
C1551	IG power source circuit malfunction inside ECU	• ECU-IG No. 1 fuse • IG power source circuit • Power steering ECU

WIRING DIAGRAM

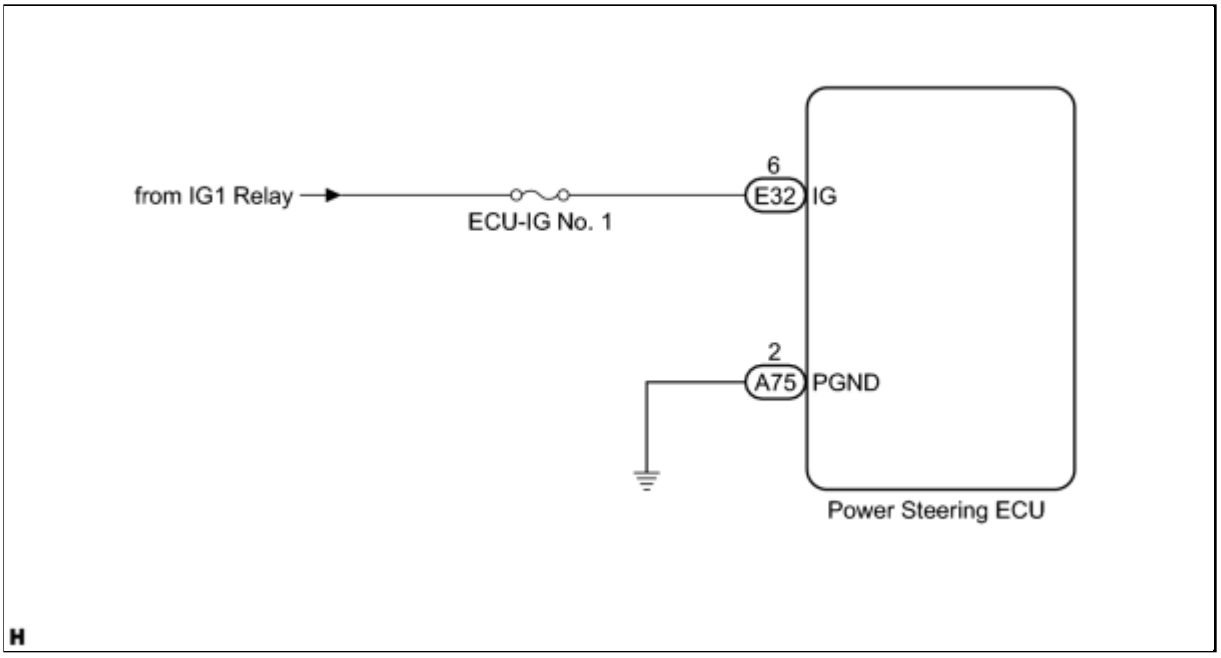

INSPECTION PROCEDURE

NOTICE:

If the steering column assembly or power steering ECU has been replaced, perform the rotation angle sensor initialization and torque sensor zero point calibration INFO **.**

PROCEDURE

1.	**READ VALUE USING TECHSTREAM (IG POWER SUPPLY)**

(a) Turn the ignition switch off.

(b) Connect the Techstream to the DLC3.

(c) Turn the ignition switch on (IG).

(d) Turn the Techstream on.

(e) Enter the following menus: Chassis / EMPS / Data List.

(f) Select the item "IG power supply" in the Data List and read the value displayed on the Techstream.

EMPS

TESTER DISPLAY	MEASUREMENT ITEM/RANGE	NORMAL CONDITION	DIAGNOSTIC NOTE
IG power supply	IG power supply/ Min.: 0 V Max.: 20.1531 V	11 to 14 V	Ignition switch on (IG)

OK:

The normal condition value is displayed on the Techstream.

NG ▶ **INSPECT FUSE (ECU-IG NO. 1)**

OK ▶ **CHECK INTERMITTENT PROBLEMS**

2.	**INSPECT FUSE (ECU-IG NO. 1)**

(a) Remove the ECU-IG No. 1 fuse from the instrument panel junction block.

(b) Measure the resistance according to the value(s) in the table below.

Standard Resistance:

FUSE	CONDITION	SPECIFIED CONDITION
ECU-IG No. 1	Always	Below 1 Ω

NG ▶ **REPLACE FUSE**

OK

3.	CHECK HARNESS AND CONNECTOR (BATTERY - POWER STEERING ECU)

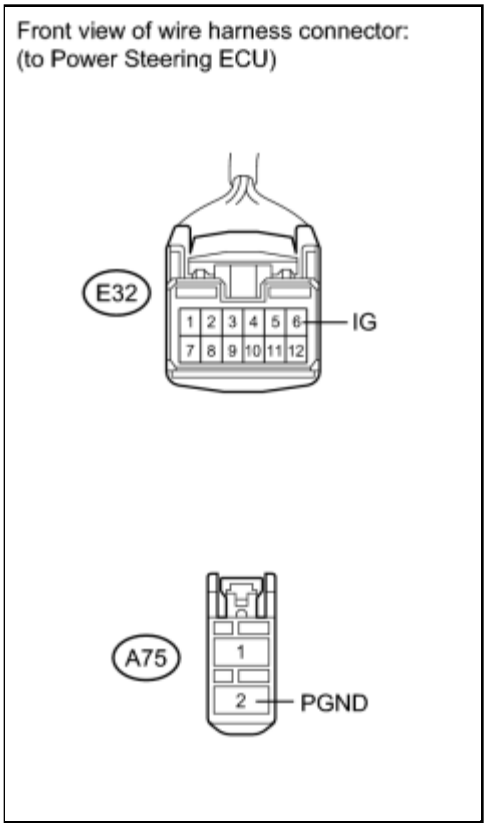

(a) Disconnect the connectors from the power steering ECU.

(b) Measure the voltage according to the value(s) in the table below.

Standard Voltage:

TESTER CONNECTION	SWITCH CONDITION	SPECIFIED CONDITION
E32-6 (IG) - Body ground	Ignition switch on (IG)	11 to 14 V

(c) Measure the resistance according to the value(s) in the table below.

Standard Resistance:

TESTER CONNECTION	CONDITION	SPECIFIED CONDITION
A75-2 (PGND) - Body ground	Always	Below 1 Ω

NG **REPAIR OR REPLACE HARNESS OR CONNECTOR**

OK ▶ REPLACE POWER STEERING ECU

Last Modified: 3-10-2010	6.4 C	**From:** 200901
Model Year: 2010	**Model:** Corolla	**Doc ID:** RM0000027 7J00JX
Title: POWER ASSIST SYSTEMS: POWER STEERING SYSTEM (for 2AZ-FE): C1552: PIG Power Supply Voltage Malfunction (2010 Corolla)		

DTC	**C1552**	**PIG Power Supply Voltage Malfunction**

DESCRIPTION

When a problem occurs in the power steering system, the power source relay circuit is shut off to stop the power assist.

DTC NO.	DTC DETECTION CONDITION	TROUBLE AREA
C1552	PIG power source circuit malfunction inside ECU	• PIG power source circuit • Power steering ECU

WIRING DIAGRAM

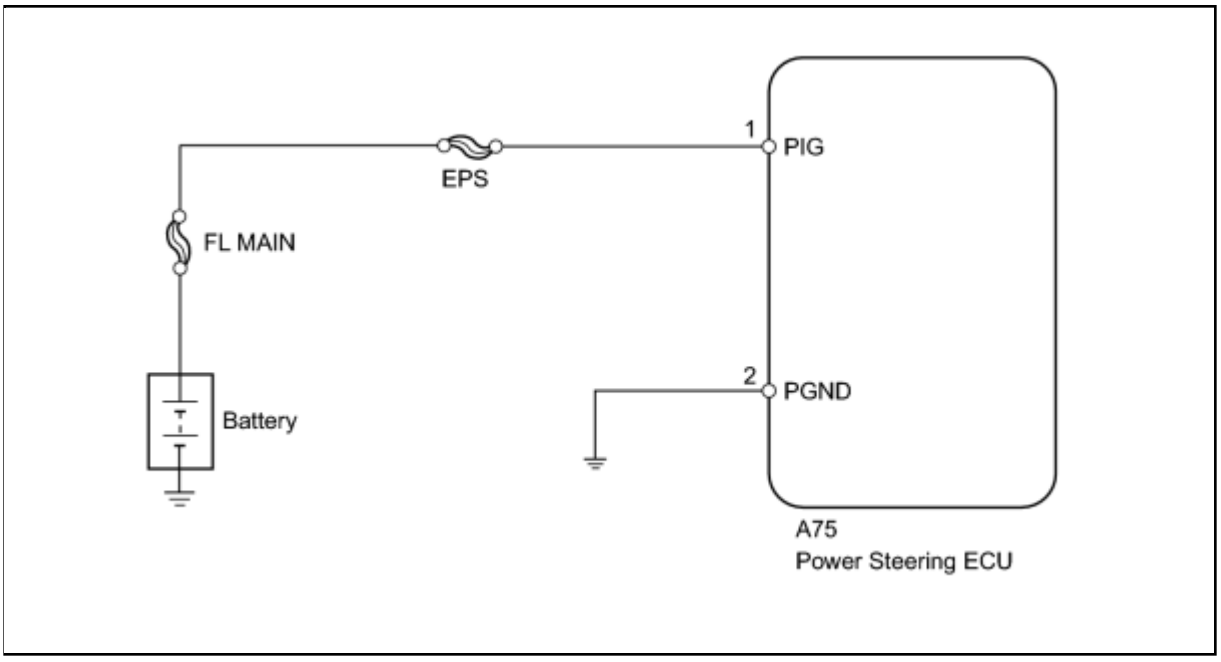

INSPECTION PROCEDURE

NOTICE:

If the steering column assembly or power steering ECU has been replaced, perform the rotation angle sensor initialization and torque sensor zero point calibration INFO **.**

PROCEDURE

1.	**READ VALUE USING TECHSTREAM (PIG POWER SUPPLY)**

(a) Turn the ignition switch off.

(b) Connect the Techstream to the DLC3.

(c) Turn the ignition switch on (IG).

(d) Turn the Techstream on.

(e) Enter the following menus: Chassis / EMPS / Data List.

(f) Select the item "PIG power supply" in the Data List and read the value displayed on the Techstream.

EMPS

TESTER DISPLAY	MEASUREMENT ITEM/RANGE	NORMAL CONDITION	DIAGNOSTIC NOTE
PIG power supply	PIG power supply/ Min.: 0 V Max.: 20.1531 V	11 to 14 V	Power steering in operation

OK:
The normal condition value is displayed on the Techstream.

NG ▶ **CHECK HARNESS AND CONNECTOR (POWER STEERING ECU - BATTERY AND BODY GROUND)**

OK ▶ **CHECK INTERMITTENT PROBLEMS**

2.	**CHECK HARNESS AND CONNECTOR (POWER STEERING ECU - BATTERY AND BODY GROUND)**

(a) Disconnect the connector from the power steering ECU.

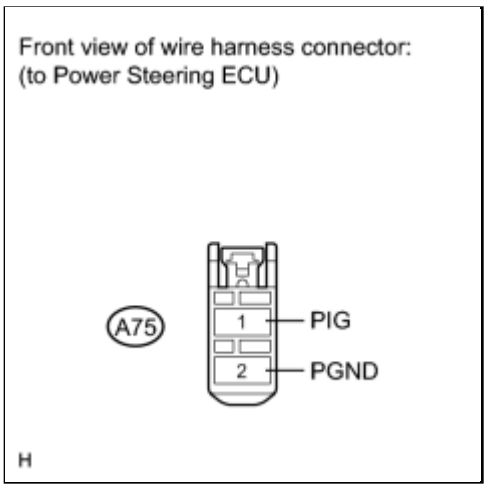

(b) Measure the voltage according to the value(s) in the table below.

Standard Voltage:

TESTER CONNECTION	CONDITION	SPECIFIED CONDITION
A75-1 (PIG) - Body ground	Always	11 to 14 V

(c) Measure the resistance according to the value(s) in the table below.

Standard Resistance:

TESTER CONNECTION	CONDITION	SPECIFIED CONDITION
A75-2 (PGND) - Body ground	Always	Below 1 Ω

NG ▶ **REPAIR OR REPLACE HARNESS OR CONNECTOR**

OK ▶ **REPLACE POWER STEERING ECU**

Last Modified: 3-10-2010	6.4 C	**From:** 200901
Model Year: 2010	**Model:** Corolla	**Doc ID:** RM00000277L014X
Title: POWER ASSIST SYSTEMS: POWER STEERING SYSTEM (for 2AZ-FE): C1581: Assist Map Number Un-Writing (2010 Corolla)		

DTC	**C1581**	**Assist Map Number Un-Writing**

DESCRIPTION

The power steering ECU outputs this DTC when it determines that the assist map is not written in the ECU.

DTC NO.	DTC DETECTION CONDITION	TROUBLE AREA
C1581	Assist map not written in power steering ECU	Power steering ECU

INSPECTION PROCEDURE

NOTICE:

If the steering column assembly or power steering ECU has been replaced, perform the rotation angle sensor initialization and torque sensor zero point calibration INFO **.**

PROCEDURE

1.	**PERFORM ASSIST MAP WRITING**

(a) Turn the ignition switch on (IG).

(b) Wait for 1 second or more.

(c) Check for DTCs.

HINT:

Approximately 1 second after turning the ignition switch on (IG), the assist map writing is automatically performed. After the automatic assist map writing, DTC C1581 is erased.

OK:
DTC C1581 is not output.

NG ▶ **CHECK FOR DTC (CAN COMMUNICATION SYSTEM)**

OK ▶ **END (COMPLETION OF ASSIST MAP WRITING RETURNS SYSTEM TO NORMAL)**

2.	**CHECK FOR DTC (CAN COMMUNICATION SYSTEM)**

(a) Check for DTCs.

OK:

DTC is not output.

NG ▶ **GO TO CAN COMMUNICATION SYSTEM**

OK ▶ **REPLACE POWER STEERING ECU**

Last Modified: 3-10-2010	6.4 J	**From:** 200901
Model Year: 2010	**Model:** Corolla	**Doc ID:** RM00000277E00HX
Title: POWER ASSIST SYSTEMS: POWER STEERING SYSTEM (for 2AZ-FE): EPS Warning Light Circuit (2010 Corolla)		

EPS Warning Light Circuit

DESCRIPTION

If the power steering ECU detects a malfunction, the P/S warning light comes on. At this time, the power steering ECU stores a DTC in its memory.

WIRING DIAGRAM

w/o Smart Key System:

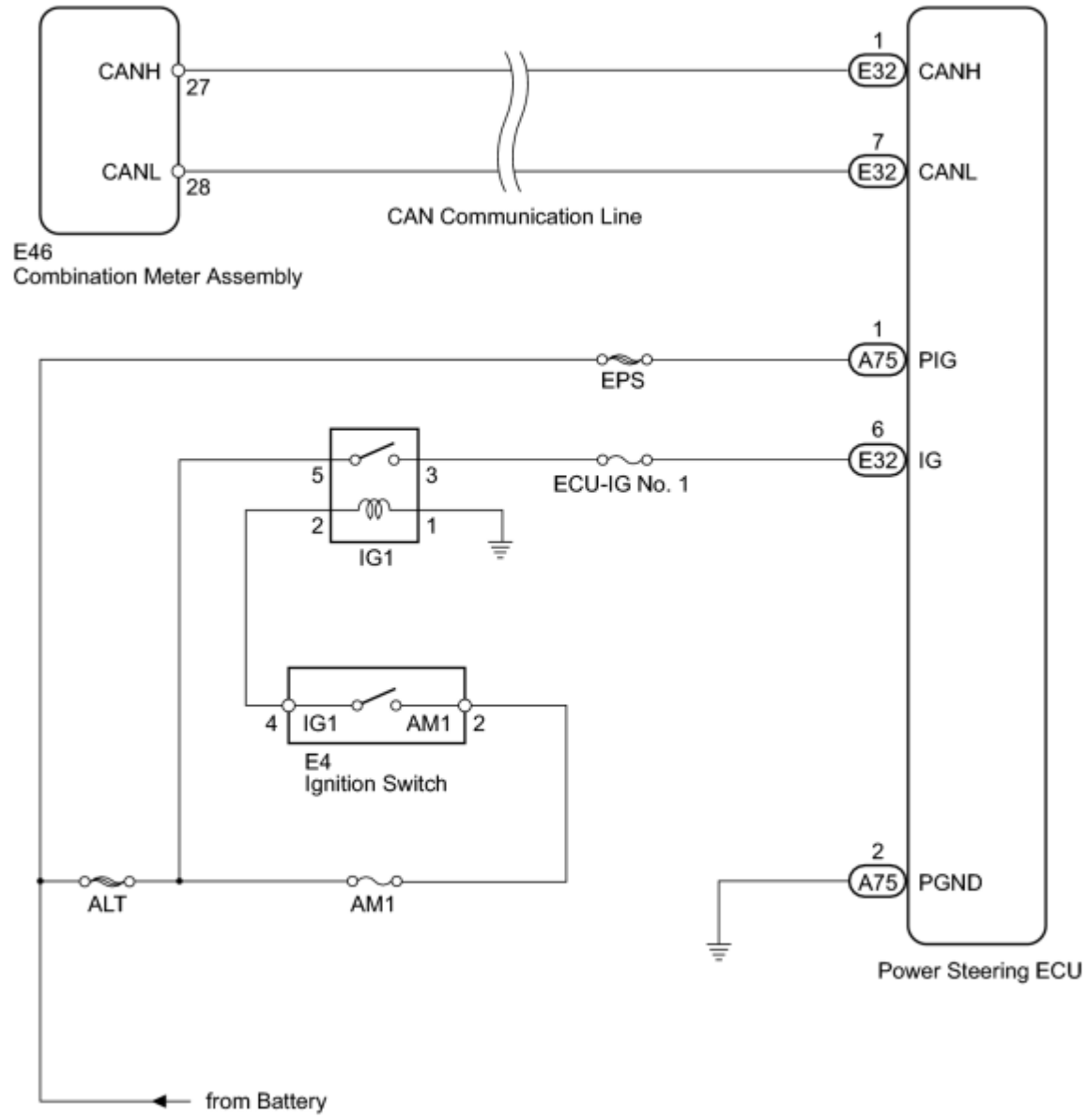

H

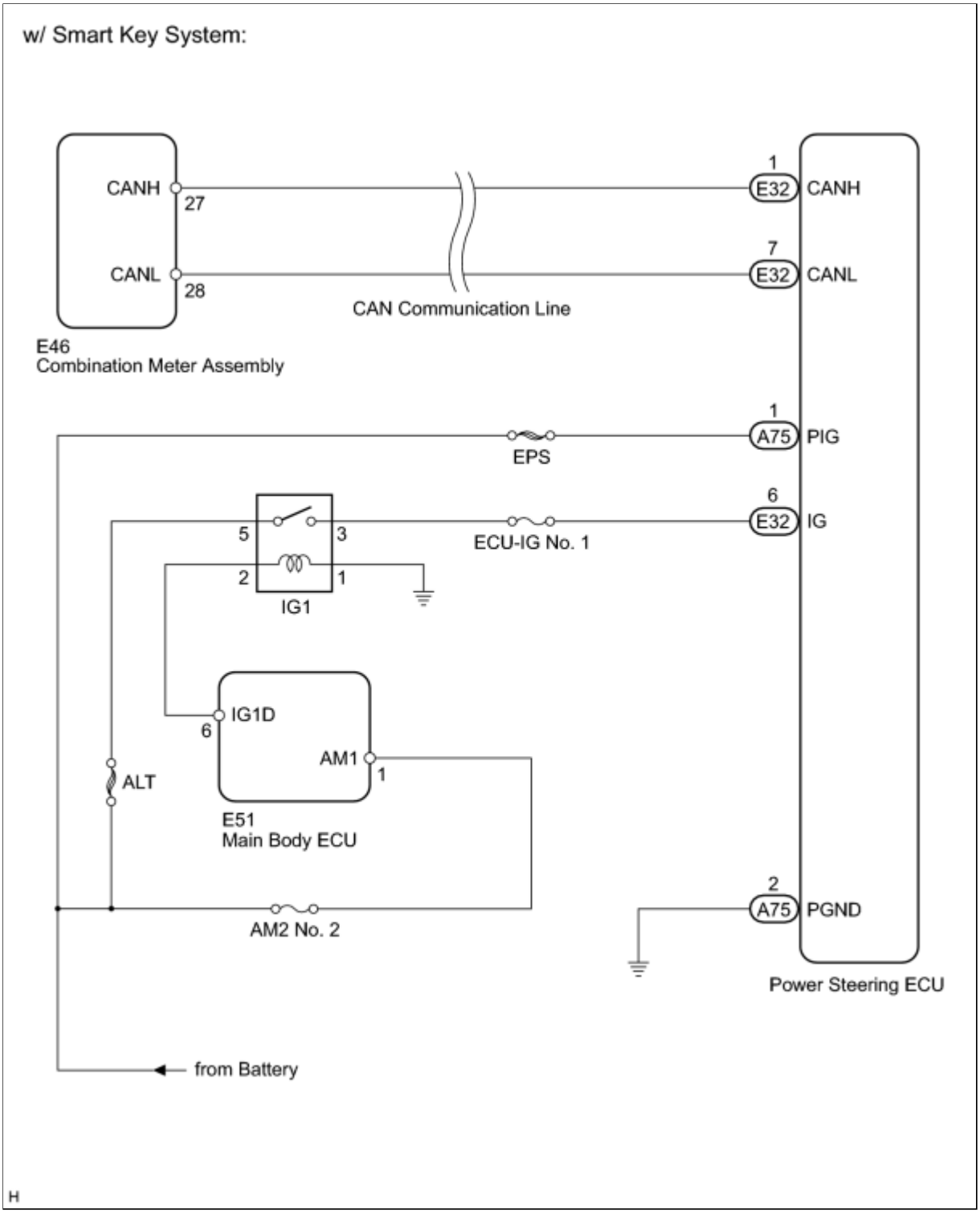

INSPECTION PROCEDURE

NOTICE:

If the steering column assembly or power steering ECU has been replaced, perform the rotation angle sensor initialization and torque sensor zero point calibration INFO **.**

PROCEDURE

1.	CHECK FOR DTC (CAN COMMUNICATION SYSTEM)

(a) Check for DTCs.

OK:

DTC is not output.

NG ▶ GO TO CAN COMMUNICATION SYSTEM

OK ▼

2.	CHECK HARNESS AND CONNECTOR (POWER STEERING ECU - BODY GROUND)

(a) Disconnect the connectors from the power steering ECU.

(b) Measure the voltage according to the value(s) in the table below.

Standard Voltage:

TESTER CONNECTION	SWITCH CONDITION	SPECIFIED CONDITION
E32-6 (IG) - A75-2 (PGND)	Ignition switch on (IG)	11 to 14 V

(c) Measure the resistance according to the value(s) in the table below.

Standard Resistance:

TESTER CONNECTION	SWITCH CONDITION	SPECIFIED CONDITION
A75-2 (PGND) - Body ground	Always	Below 1 Ω

B ▶ REPAIR OR REPLACE HARNESS OR CONNECTOR

A ▼

3.	REPLACE POWER STEERING ECU

(a) Replace the power steering ECU INFO .

(b) Check the P/S warning light condition.

OK:

P/S warning light operates normally.

NG ▶ **GO TO COMBINATION METER SYSTEM**

OK ▶ **PROCEED TO NEXT CIRCUIT INSPECTION SHOWN IN PROBLEM SYMPTOMS TABLE**

Last Modified: 3-10-2010	6.4 C	**From:** 200901
Model Year: 2010	**Model:** Corolla	**Doc ID:** RM00000277M010X
Title: POWER ASSIST SYSTEMS: POWER STEERING SYSTEM (for 2AZ-FE): U0100,U0129: Lost Communication with ECM / PCM "A" (2010 Corolla)		

DTC	**U0100**	**Lost Communication with ECM / PCM "A"**

DTC	**U0129**	**Lost Communication with Brake System Control Module**

DESCRIPTION

The power steering ECU receives signals from the ECM and the skid control ECU via the CAN communication system.

DTC NO.	DTC DETECTION CONDITION	TROUBLE AREA
U0100	Lost communication with ECM/PCM "A"	• CAN communication system • ECM
U0129	Lost communication with brake system control module	• CAN communication system • Skid control ECU

INSPECTION PROCEDURE

PROCEDURE

1.	**CHECK FOR DTC**

(a) Clear the DTCs INFO.

(b) Check for DTCs INFO.

OK:

DTC is not output.

NG ▶ **GO TO CAN COMMUNICATION SYSTEM**

OK ▶ CHECK INTERMITTENT PROBLEMS

Last Modified: 3-10-2010	6.4 R	**From:** 200901
Model Year: 2010	**Model:** Corolla	**Doc ID:** RM000001AKE010X
Title: POWER ASSIST SYSTEMS: POWER STEERING SYSTEM (for 2ZR-FE): PARTS LOCATION (2010 Corolla)		

PARTS LOCATION

ILLUSTRATION

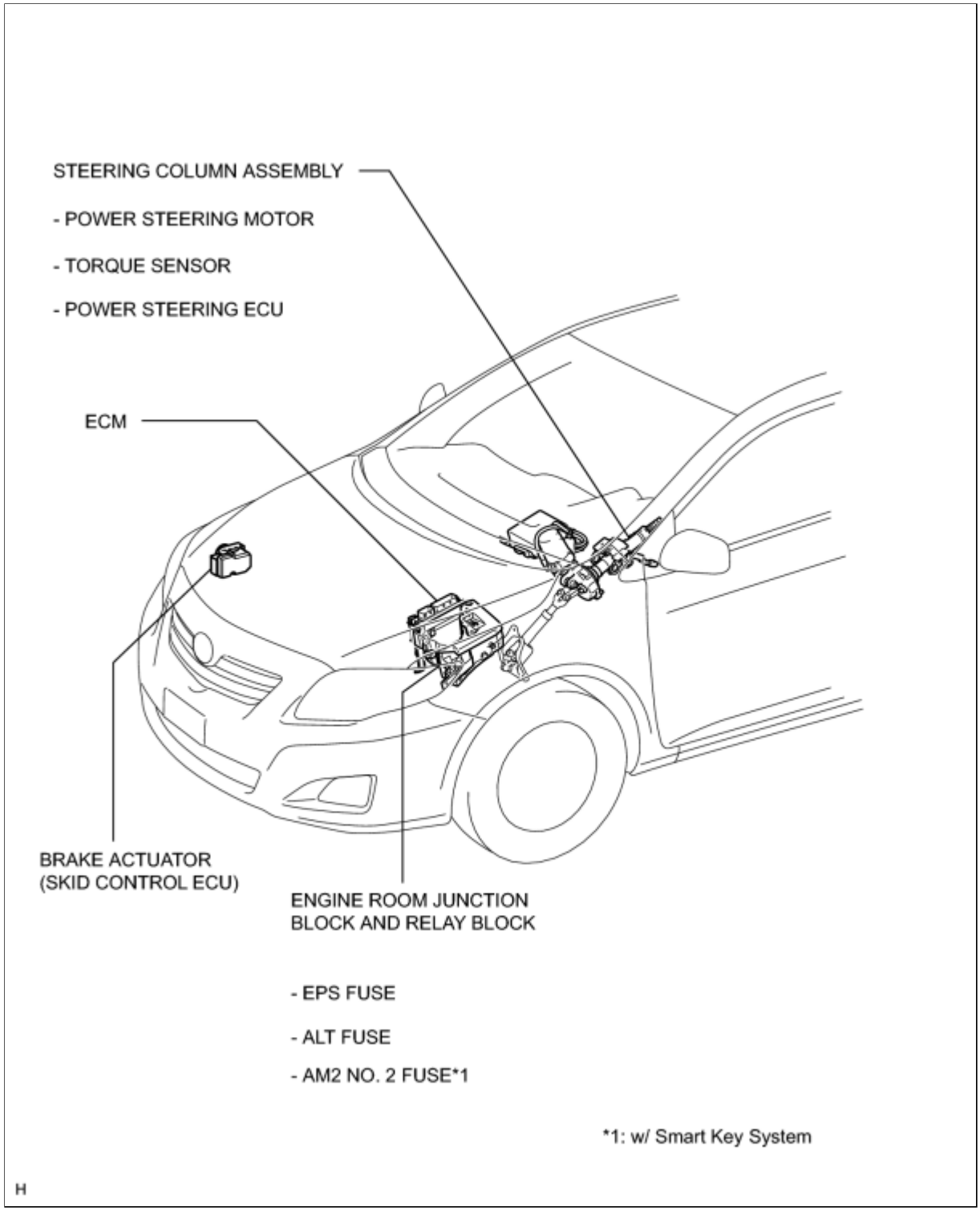

ILLUSTRATION

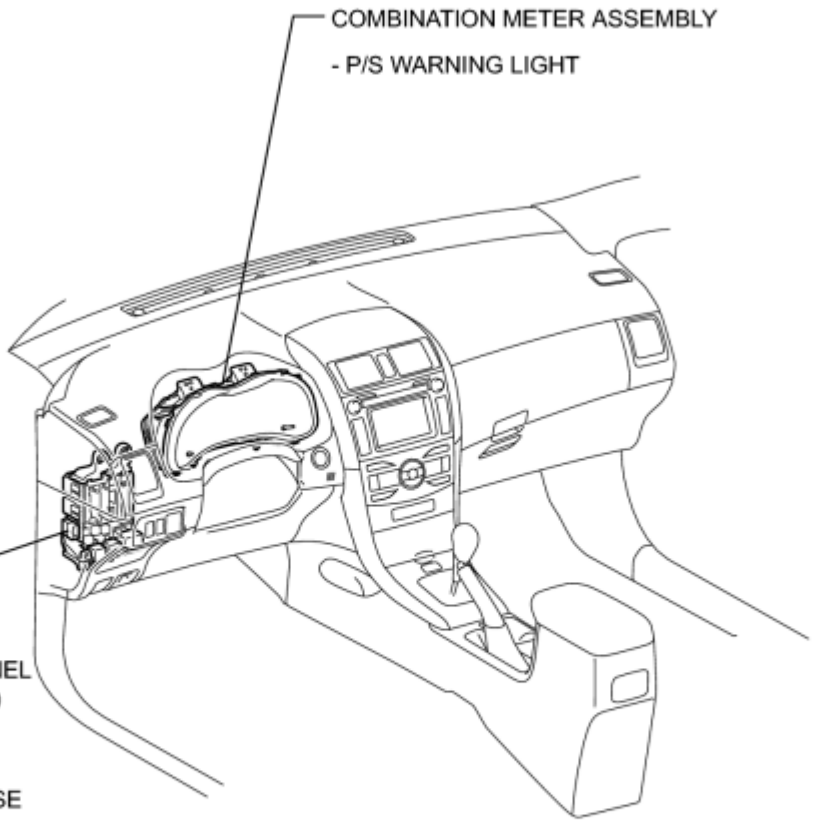

*1: w/o Smart Key System

H

Last Modified: 3-10-2010	6.4 L	**From:** 200901
Model Year: 2010	**Model:** Corolla	**Doc ID:** RM000001AKB016X
Title: POWER ASSIST SYSTEMS: POWER STEERING SYSTEM (for 2ZR-FE): PRECAUTION (2010 Corolla)		

PRECAUTION

1. IGNITION SWITCH EXPRESSIONS

HINT:

The type of ignition switch used on this model differs according to the specifications of the vehicle. The expressions listed in the table below are used in this section.

SWITCH TYPE		IGNITION SWITCH (POSITION)	ENGINE SWITCH (CONDITION)
Expression	Ignition switch off	LOCK	Off
	Ignition switch on (IG)	ON	On (IG)
	Ignition switch on (ACC)	ACC	On (ACC)
	Engine start	START	Start

2. HANDLING PRECAUTIONS FOR SRS AIRBAG SYSTEM

(a) The vehicle is equipped with an SRS (Supplemental Restraint System). Failure to carry out service operations in the correct sequence could cause the SRS to unexpectedly deploy during servicing. This may cause a serious accident.

Before servicing (including inspection, replacement, removal and installation of parts), be sure to read the precautionary notices for the Supplemental Restraint System INFO .

3. PRECAUTIONS FOR REMOVAL, INSTALLATION AND REPLACEMENT OF ELECTRONIC MOTOR POWER STEERING COMPONENTS

(a) Be sure to align the front wheels straight ahead when removing and installing the power steering gear assembly.

(b) If disconnecting the steering sliding yoke sub-assembly and the pinion shaft of the power steering gear assembly, be sure to place matchmarks before starting the operation.

(c) After replacing the steering column assembly or power steering ECU, calibrate the torque sensor zero point INFO .

4. HANDLING PRECAUTION

(a) When handling electronic parts:

(1) Avoid any impact to parts such as ECUs and relays. Replace them with new ones if dropped or subjected to a severe blow.

(2) Do not expose to high temperatures or humidity.

(3) In order to prevent deformation or malfunctions due to static electricity, do not touch the connector terminals.

(b) When handling power steering ECU:

(1) When the power steering ECU has been replaced with a new one, perform the assist map writing and the torque sensor zero point calibration INFO .

(c) When handling the steering column assembly:

(1) Avoid any impact to the steering column assembly, especially to the motor and torque sensor. Replace them with new ones if dropped or subjected to a severe blow.

(2) Do not pull the wire harness when moving the steering column assembly.

(3) When the steering column assembly has been replaced, perform the torque sensor zero point calibration after initializing the torque sensor zero point INFO .

(d) When disconnecting and reconnecting the connectors:

(1) Before disconnecting the connectors related to the power steering system, turn the ignition switch on (IG), center the steering wheel, turn the ignition switch off, and then disconnect the connectors.

(2) Before reconnecting the connectors related to the power steering system, ensure that the ignition switch is off. Then center the steering wheel and turn the ignition switch on (IG).

NOTICE:

Do not turn the ignition switch on (IG) when the steering wheel is not centered.

(3) If the above operations are not carried out properly, the steering center point (zero point) will deviate, which may lead to a difference in steering effort between turning right and left. If there is a difference in steering effort between turning right and left, perform the torque sensor zero point calibration after initializing the torque sensor zero point INFO .

5. PRECAUTIONS FOR CAN COMMUNICATION

(a) CAN communication lines are used to receive information from the skid control ECU and the ECM, and to transmit warnings to the combination meter. When there are any problems in the CAN communication lines, DTCs of the CAN communication line are output.

(b) Perform troubleshooting of the communication line problems when the CAN communication DTCs are output. Be sure to start troubleshooting on the electronic power steering system after confirming that the CAN communication system is normal.

(c) Since the CAN communication line has its own length and route, it cannot be temporarily repaired with a bypass wire, etc.

Last Modified: 3-10-2010	6.4 U	**From:** 200901
Model Year: 2010	**Model:** Corolla	**Doc ID:** RM000001AL7010X
Title: POWER ASSIST SYSTEMS: POWER STEERING SYSTEM (for 2ZR-FE): SYSTEM DIAGRAM (2010 Corolla)		

SYSTEM DIAGRAM

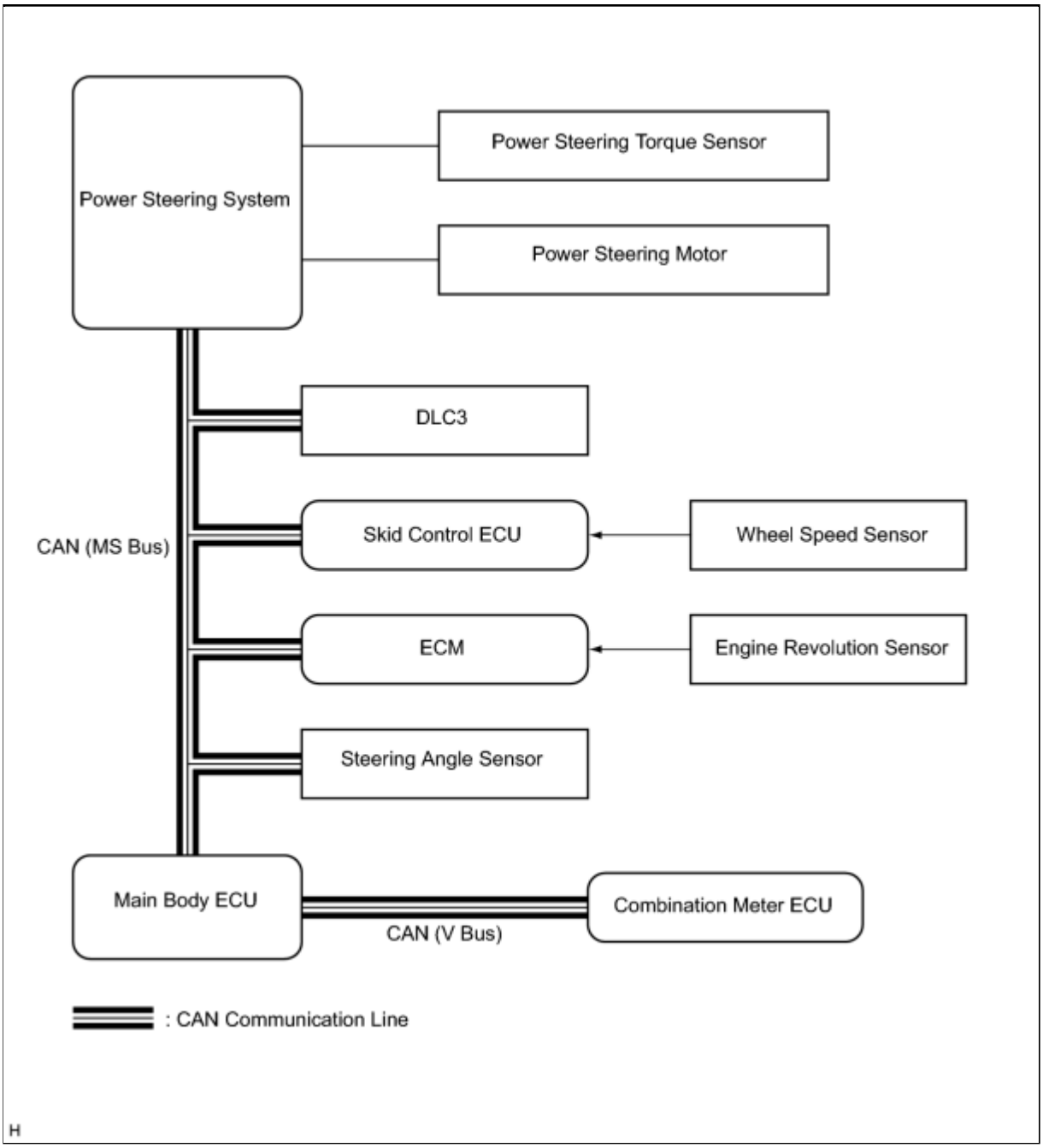

Last Modified: 3-10-2010	6.4 D	**From:** 200901
Model Year: 2010	**Model:** Corolla	**Doc ID:** RM000001AKC00YX
Title: POWER ASSIST SYSTEMS: POWER STEERING SYSTEM (for 2ZR-FE): HOW TO PROCEED WITH TROUBLESHOOTING (2010 Corolla)		

HOW TO PROCEED WITH TROUBLESHOOTING

HINT:

- Use these procedures to troubleshoot the power steering system.
- *: Use the Techstream.

1.	**VEHICLE BROUGHT TO WORKSHOP**

NEXT

2.	**INSPECT BATTERY VOLTAGE**

Standard Voltage:
11 to 14 V

If the voltage is below 11 V, recharge or replace the battery before proceeding.

NEXT

3.	**CHECK DTC AND FREEZE FRAME DATA***

HINT:

Refer to Clear DTCs INFO .

NEXT

4.	**PROBLEM SYMPTOM CONFIRMATION**

Result:

RESULT	PROCEED TO
Symptom does not occur.	A
Symptom occurs.	B

B ▶ **Go to step 6**

A

▼

5.	**SYMPTOM SIMULATION**

NEXT

▼

6.	**CHECK CAN COMMUNICATION SYSTEM***

(a) Check for DTCs INFO .

Result:

RESULT	PROCEED TO
CAN system DTC is not output	A
CAN system DTC is output	B

HINT:

- If any CAN communication system DTCs are output, perform troubleshooting on the CAN communication system first.
- If communication to the power steering ECU cannot be established through the Techstream, inspect terminals CANH and CANL of the DLC3 and the power steering ECU, and the IG circuit of the power steering ECU.

B ▶ INFO **PROCEED TO CAN COMMUNICATION SYSTEM**

A ▼

7.	**CHECK FOR DTC***

(a) Check for DTCs INFO .

HINT:

Refer to Diagnostic Trouble Code Chart when any DTCs are output INFO .

Result:

RESULT	PROCEED TO
DTC is not output	A
DTC is output	B

B ▶ Go to step 9

A ▼

8.	**PROBLEM SYMPTOMS TABLE**

(a) Refer to Problem Symptoms Table INFO .

Result:

RESULT	PROCEED TO
Fault is not listed in problem symptoms table	A
Fault is listed in problem symptoms table	B

B ▶ Go to step 9

A

9.	OVERALL ANALYSIS AND TROUBLESHOOTING*

(a) Refer to Terminals of ECU INFO .

(b) Refer to Data List / Active Test INFO .

NEXT

10.	REPAIR OR REPLACE

NEXT

11.	CONFIRMATION TEST

NEXT END

Last Modified: 3-10-2010	6.4 D	**From:** 200901
Model Year: 2010	**Model:** Corolla	**Doc ID:** RM000001AL4010X
Title: POWER ASSIST SYSTEMS: POWER STEERING SYSTEM (for 2ZR-FE): SYSTEM DESCRIPTION (2010 Corolla)		

SYSTEM DESCRIPTION

1. DESCRIPTION

The power steering system generates torque through the operation of the motor and the reduction gear installed on the column shaft in order to assist steering effort.

The power steering ECU determines the direction and the amount of assisting power in accordance with the vehicle speed signals and signals from the torque sensor built into the steering column assembly. As a result, steering effort is controlled to be light during low speed driving and moderately high during high speed driving.

(a) Power steering ECU:

The power steering ECU calculates assisting power based on steering torque signals from the torque sensor and vehicle speed signals from the skid control ECU.

(b) Torque sensor:

The torque sensor detects the steering effort generated when the steering wheel is turned and converts it to an electrical signal.

(c) Power steering motor:

The power steering motor is activated by the current from the power steering ECU and generates torque to assist the steering effort.

Last Modified: 3-10-2010	6.4 D	**From:** 200901
Model Year: 2010	**Model:** Corolla	**Doc ID:** RM000002753013X
Title: POWER ASSIST SYSTEMS: POWER STEERING SYSTEM (for 2ZR-FE): CALIBRATION (2010 Corolla)		

CALIBRATION

1. TORQUE SENSOR ZERO POINT CALIBRATION (USING TECHSTREAM)

NOTICE:

Perform the torque sensor zero point calibration if any of the following conditions occur:

- The steering column assembly (containing the torque sensor) has been replaced.
- The power steering ECU has been replaced.
- There is a difference in steering effort between turning right and left.

HINT:

When torque sensor zero point calibration is performed, the assist map is written automatically at the same time.

(a) Perform the torque sensor zero point calibration.

NOTICE:

If DTC C1516 (Torque Sensor Zero Point Adjustment Incomplete) is stored, the torque sensor zero point cannot be calibrated. Clear the DTC before starting calibration.

(1) Set the steering wheel to the center point and align the front wheels straight ahead.

(2) Turn the ignition switch off.

(3) Connect the Techstream to the DLC3.

(4) Start the engine.

(5) Turn the Techstream on.

(6) Calibrate the power steering ECU. Enter the following menus: Chassis / EMPS / Utility / Torque Sensor Adjustment.

NOTICE:

- Do not touch the steering wheel during the torque sensor zero point calibration.
- Perform the calibration only when the vehicle is stopped.

(7) Check for DTCs INFO.

NOTICE:

- After zero point calibration is completed normally, confirm that DTC is not output.
- If DTC C1515, C1516, C1534 or C1581 is output, perform troubleshooting for the corresponding DTC.

Result:

RESULT	SEE PROCEDURE
DTC C1515 is output.	INFO
DTC C1516 is output.	INFO

RESULT	SEE PROCEDURE
DTC C1534 is output.	INFO
DTC C1581 is output.	INFO

2. ASSIST MAP WRITING (USING TECHSTREAM)

HINT:

If DTC C1581 is output after torque sensor zero point calibration, perform assist map writing.

(a) Turn the ignition switch off.

(b) Connect the Techstream to the DLC3.

(c) Start the engine.

(d) Turn the Techstream on.

(e) Enter the following menus: Chassis / EMPS / Utility / Signal Check.

HINT:

- Follow the instructions on the Techstream to perform Signal Check.
- With DTC C1581 output, performing Signal Check will cause the power steering ECU to enter Test Mode and the assist map will be written automatically.

(f) Check for DTCs INFO .

HINT:

After writing the assist map, if DTC C1581 is output, perform the troubleshooting procedure for DTC C1581 INFO .

Last Modified: 3-10-2010	6.4 T	**From:** 200901
Model Year: 2010	**Model:** Corolla	**Doc ID:** RM00000274X015X
Title: POWER ASSIST SYSTEMS: POWER STEERING SYSTEM (for 2ZR-FE): PROBLEM SYMPTOMS TABLE (2010 Corolla)		

PROBLEM SYMPTOMS TABLE

HINT:

- Use the table below to help determine the cause of problem symptoms. If multiple suspected areas are listed, the potential causes of the symptoms are listed in order of probability in the "Suspected Area" column of the table. Check each symptom by checking the suspected areas in the order they are listed. Replace parts as necessary.
- Inspect the fuses and relays related to this system before inspecting the suspected areas below.

Power Steering System

SYMPTOM	SUSPECTED AREA	SEE PAGE
Heavy steering	Front tires (improperly inflated, unevenly worn)	INFO
	Front wheel alignment (incorrect)	INFO
	Front suspension (lower ball joint)	INFO
	Steering gear assembly	INFO
	Torque sensor (built into steering column)	INFO
	Power steering motor	INFO
	Battery and power source system	-
	Power steering ECU power source voltage and relay	INFO
	Power steering ECU	INFO
Steering effort differs between turning right and left, or steering effort is uneven.	Steering center point (zero point) recorded incorrectly	INFO
	Front tires (improperly inflated, unevenly worn)	INFO
	Front wheel alignment (incorrect)	INFO
	Front suspension (lower ball joint)	INFO
	Steering gear assembly	INFO

SYMPTOM	SUSPECTED AREA	SEE PAGE
	Torque sensor (built into steering column)	INFO
	Steering column assembly	INFO
	Power steering motor	INFO
	Power steering ECU	INFO
While driving, steering effort does not change in accordance with vehicle speed or the steering wheel does not return properly.	Front suspension (lower ball joint)	INFO
	Torque sensor (built into steering column)	INFO
	Power steering motor	INFO
	Power steering ECU	INFO
	CAN communication system	INFO
A knocking (or cranking) sound occurs when turning the steering wheel back and forth while operating the power steering.	Front suspension (lower ball joint)	INFO
	Steering intermediate shaft	INFO
	Power steering ECU	INFO
Noise occurs when turning the steering wheel during low-speed driving.	Power steering gear	INFO
	Steering column assembly	INFO
Friction occurs when turning the steering wheel during low-speed driving.	Power steering motor	INFO
	Steering column assembly	INFO
A high-pitched sound (squeaking) occurs when turning the steering wheel slowly with the vehicle stopped.	Power steering motor	INFO
The steering wheel vibrates and noise occurs when turning the steering wheel from lock to lock with the vehicle stopped.	Power steering gear	INFO
	Steering column assembly	INFO
The P/S warning light does not come on, or is always on.	Power source voltage of power steering ECU	INFO
	EPS warning light circuit	INFO
	Power steering ECU	INFO

Last Modified: 3-10-2010	6.4 U	**From:** 200901
Model Year: 2010	**Model:** Corolla	**Doc ID:** RM000001AKF011X
Title: POWER ASSIST SYSTEMS: POWER STEERING SYSTEM (for 2ZR-FE): TERMINALS OF ECU (2010 Corolla)		

TERMINALS OF ECU

1. CHECK POWER STEERING ECU

Power Steering ECU:

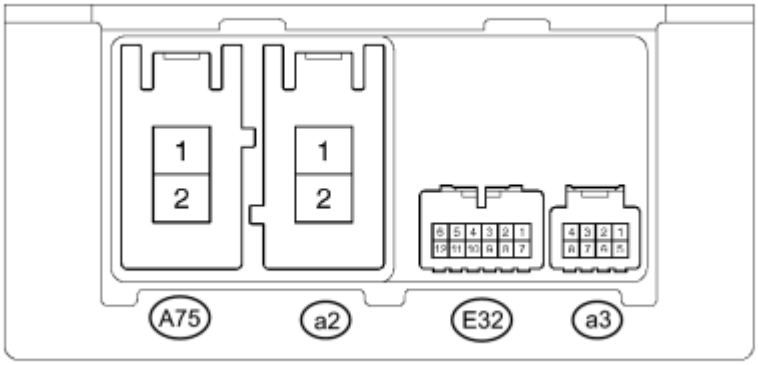

N

(a) Measure the voltage and resistance according to the value(s) in the table below.

NOTICE:

- Check if the power steering ECU connectors are securely connected by pulling on them from the backside.
- If the P/S warning light is illuminated due to a malfunction, the fail-safe function may cause the voltage of the power steering ECU's terminals to become 0 V.

TERMINALS NO. (SYMBOL)	WIRING COLOR	TERMINAL DESCRIPTION	CONDITION	SPECIFIED CONDITION
A75-1 (PIG) - Body ground	L - Body ground	Power steering motor power supply input signal	Always	11 to 14 V
A75-2 (PGND) - Body ground	W-B - Body ground	Power ground	Always	Below 1 Ω
a2-1 (M1) - Body ground	R - Body ground	Power steering motor output signal 1	Ignition switch on (IG), steering wheel turned to left	11 to 14 V
			Ignition switch on (IG), steering wheel turned to right	Below 1 V

TERMINALS NO. (SYMBOL)	WIRING COLOR	TERMINAL DESCRIPTION	CONDITION	SPECIFIED CONDITION
a2-2 (M2) - Body ground	B - Body ground	Power steering motor output signal 2	Ignition switch on (IG), steering wheel turned to left	Below 1 V
			Ignition switch on (IG), steering wheel turned to right	11 to 14 V
E32-1 (CANH) - E32-7 (CANL)	SB - W	CAN communication line (CAN HI signal)	Ignition switch off	54 to 69 Ω
E32-6 (IG) - Body ground	L - Body ground	IG power source	Ignition switch on (IG)	11 to 14 V
E32-7 (CANL) - E32-1 (CANH)	W - SB	CAN communication line (CAN LO signal)	Ignition switch off	54 to 69 Ω
a3-5 (TRQ1) - Body ground	W - Body ground	Torque sensor 1 input signal	Ignition switch on (IG), steering wheel is not turned (without load)	2.3 to 2.7 V
			Ignition switch on (IG), steering wheel is turned to right	2.5 to 4.7 V
			Ignition switch on (IG), steering wheel is turned to left	0.3 to 2.5 V
a3-6 (TRQV) - Body ground	R - Body ground	Torque sensor power source	Ignition switch on (IG)	7.5 to 8.5 V
a3-7 (TRQ2) - Body ground	Y - Body ground	Torque sensor 2 input signal	Ignition switch on (IG), steering wheel is not turned (without load)	2.3 to 2.7 V
			Ignition switch on (IG), steering wheel is turned to right	2.5 to 4.7 V
			Ignition switch on (IG), steering wheel is turned to left	0.3 to 2.5 V
a3-8 (TRQG) - Body ground	B - Body ground	Torque sensor ground	Always	Below 1 Ω

If the result is not as specified, the ECU may have a malfunction.

Last Modified: 3-10-2010	6.4 D	**From:** 200901
Model Year: 2010	**Model:** Corolla	**Doc ID:** RM00000274Z00XX
Title: POWER ASSIST SYSTEMS: POWER STEERING SYSTEM (for 2ZR-FE): DIAGNOSIS SYSTEM (2010 Corolla)		

DIAGNOSIS SYSTEM

1. CHECK DLC3

(a) The ECU uses ISO 15765-4 for communication protocol. The terminal arrangement of the DLC3 complies with SAE J1962 and matches the ISO 15765-4 format.

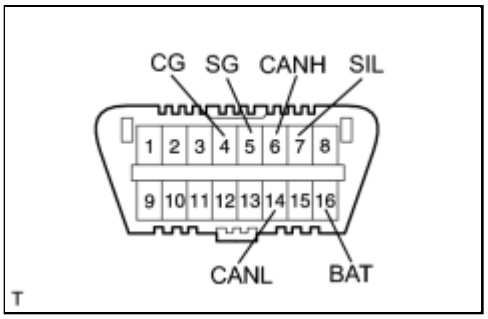

SYMBOL (TERMINAL NO.)	TERMINAL DESCRIPTION	CONDITION	SPECIFIED CONDITION
SIL (7) - SG (5)	Bus "+" line	During transmission	Pulse generation
CG (4) - Body ground	Chassis ground	Always	Below 1 Ω
SG (5) - Body ground	Signal ground	Always	Below 1 Ω
BAT (16) - Body ground	Battery positive	Always	11 to 14 V
CANH (6) - CANL (14)	CAN bus line	Ignition switch off*	54 to 69 Ω
CANH (6) - CG (4)	HIGH-level CAN bus line	Ignition switch off*	200 Ω or higher
CANL (14) - CG (4)	LOW-level CAN bus line	Ignition switch off*	200 Ω or higher
CANH (6) - BAT (16)	HIGH-level CAN bus line	Ignition switch off*	6 Ω or higher
CANL (14) - BAT (16)	LOW-level CAN bus line	Ignition switch off*	6 Ω or higher

NOTICE:

***: Before measuring the resistance, leave the vehicle as is for at least 1 minute and do not operate the ignition switch or any other switches or the doors.**

(b) If the result is not as specified, the DLC3 may have a malfunction. Repair or replace the harness and connector.

HINT:

Connect the Techstream cable to the DLC3, turn the ignition switch on (IG) and attempt to use the Techstream.

If the display indicates that a communication error has occurred, there is a problem either with the vehicle or with the Techstream.

- If communication is normal when the Techstream is connected to another vehicle, inspect the DLC3 of the original vehicle.
- If communication is still not possible when the Techstream is connected to another vehicle, the problem may be in the Techstream itself. Consult the Service Department listed in the Techstream instruction manual.

2. CHECK WARNING LIGHT

(a) If a problem occurs in the power steering system, the P/S warning light on the combination meter comes on to inform the driver of the problem.

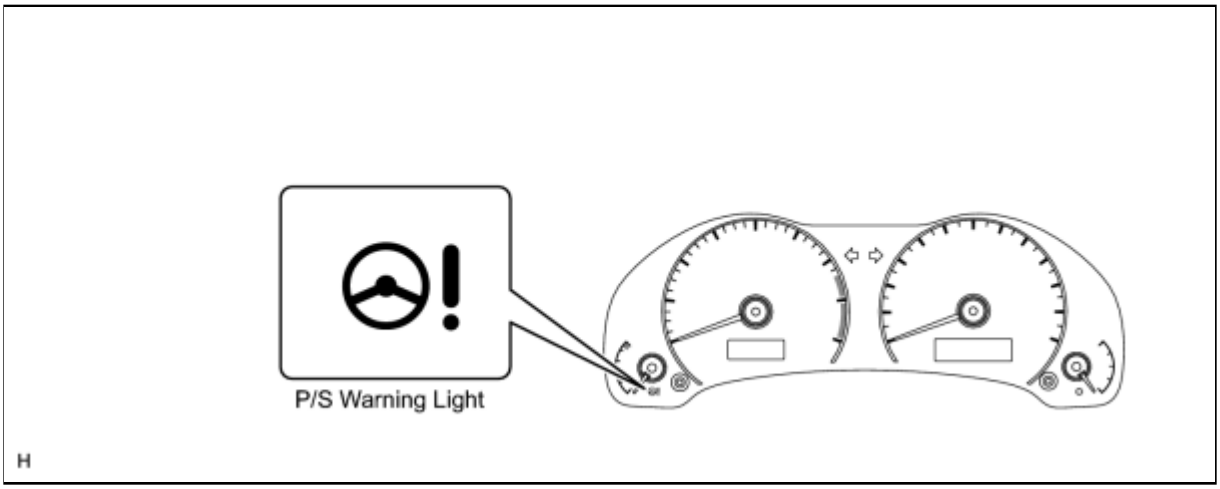

Last Modified: 3-10-2010	6.4 D	**From:** 200901
Model Year: 2010	**Model:** Corolla	**Doc ID:** RM000002750011X
Title: POWER ASSIST SYSTEMS: POWER STEERING SYSTEM (for 2ZR-FE): DTC CHECK / CLEAR (2010 Corolla)		

DTC CHECK / CLEAR

1. CHECK DTCs

(a) Turn the ignition switch off.

(b) Connect the Techstream to the DLC3.

(c) Turn the ignition switch on (IG).

(d) Turn the Techstream on.

(e) Read the DTCs following the display on the Techstream. Enter the following menus: Chassis / EMPS / Trouble Codes.

(f) Refer to the Diagnostic Trouble Code Chart for DTC information INFO .

2. CLEAR DTCs

(a) Turn the ignition switch off.

(b) Connect the Techstream to the DLC3.

(c) Start the engine.

(d) Turn the Techstream on.

(e) Clear the DTCs following the display on the Techstream. Enter the following menus: Chassis / EMPS / Trouble Codes.

(f) According to the display on the Techstream, select the trouble code data display with the clear button.

(g) Turn the ignition switch off.

(h) Disconnect the Techstream from the DLC3.

Last Modified: 3-10-2010	6.4 D	**From:** 200901
Model Year: 2010	**Model:** Corolla	**Doc ID:** RM000002755013X
Title: POWER ASSIST SYSTEMS: POWER STEERING SYSTEM (for 2ZR-FE): FREEZE FRAME DATA (2010 Corolla)		

FREEZE FRAME DATA

1. FREEZE FRAME DATA

NOTICE:

- Freeze frame data values will vary depending on the measurement conditions, surroundings, or vehicle conditions. For this reason, there may be a problem even if the values are within specifications.
- Turn the ignition switch on (IG) and park the vehicle on level ground. Check the freeze frame data by using the Techstream.

(a) Turn the ignition switch off.

(b) Connect the Techstream to the DLC3.

(c) Turn the ignition switch on (IG).

(d) Turn the Techstream on.

(e) Check the freeze frame data on the Techstream.

EMPS

TESTER DISPLAY	MEASUREMENT ITEM/RANGE	NORMAL CONDITION	DIAGNOSTIC NOTE
Meter Vehicle Velocity	Vehicle speed from meter/ Min.: 0 km/h (0 mph) Max.: 300 km/h (186.4 mph)	0 km/h (0 mph)	Vehicle stopped
		No significant fluctuation	Vehicle driven at a constant speed
Engine Revolution	Engine revolution/ Min.: 0 rpm Max.: 12800 rpm	No significant fluctuation	Engine is running at a constant speed
Motor Actual Current	Amount of current to motor/ Min.: -327.68 A Max.: 327.67 A	Value changes in proportion to steering effort	Engine running, power steering is in operation
Command Value Current	Demanded amount of current to motor/ Min.: -327.68 A Max.: 327.67 A	Value changes in proportion to steering effort	Engine running, power steering is in operation
Thermistor Temperature	ECU substrate temperature/ Min.: -40°C (-40°F) Max.: 150°C (302°F)	-40 to 150°C (-40 to 302°F)	-

TESTER DISPLAY	MEASUREMENT ITEM/RANGE	NORMAL CONDITION	DIAGNOSTIC NOTE
PIG Power Supply	Power source voltage to activate motor/ Min.: 0 V Max.: 20.1531 V	11 to 14 V	Ignition switch on (IG)
IG Power Supply	ECU power source voltage/ Min.: 0 V Max.: 20.1531 V	11 to 14 V	Ignition switch on (IG)
Torque Sensor 1 Output	Torque sensor 1 output value/ Min.: 0 V Max.: 5 V	2.3 to 2.7 V	Engine running, steering wheel not turned (without load)
		2.5 to 4.7 V	Engine running, steering wheel turned to right with vehicle stopped
		0.3 to 2.5 V	Engine running, steering wheel turned to left with vehicle stopped
Torque Sensor 2 Output	Torque sensor 2 output value/ Min.: 0 V Max.: 5 V	2.3 to 2.7 V	Engine running, steering wheel not turned (without load)
		2.5 to 4.7 V	Engine running, steering wheel turned to right with vehicle stopped
		0.3 to 2.5 V	Engine running, steering wheel turned to left with vehicle stopped
Torque Sensor 3 Output	Torque sensor output value for assist control/ Min.: 0 V Max.: 5 V	2.3 to 2.7 V	Engine running, steering wheel not turned (without load)
		2.5 to 4.7 V	Engine running, steering wheel turned to right with vehicle stopped
		0.3 to 2.5 V	Engine running, steering wheel turned to left with vehicle stopped
TRQ1 Zero Point Value	Zero point value of torque sensor 1/ Min.: 0 V Max.: 5 V	2.3 to 2.7 V	Engine running, steering wheel not turned (without load)
TRQ2 Zero Point Value	Zero point value of torque sensor 2/ Min.: 0 V Max.: 5 V	2.3 to 2.7 V	Engine running, steering wheel not turned (without load)

TESTER DISPLAY	MEASUREMENT ITEM/RANGE	NORMAL CONDITION	DIAGNOSTIC NOTE
TRQ3 Zero Point Value	Zero point value of torque sensor for assist control/ Min.: 0 V Max.: 5 V	2.3 to 2.7 V	Engine running, steering wheel not turned (without load)
Motor Terminal Volt(+)	Motor terminal M1 voltage/ Min.: 0 V Max.: 25.5 V	11 to 14 V	Engine running, steering wheel turned to right
		Below 1 V	Engine running, steering wheel turned to left
Motor Terminal Volt(-)	Motor terminal M2 voltage/ Min.: 0 V Max.: 25.5 V	Below 1 V	Engine running, steering wheel turned to right
		11 to 14 V	Engine running, steering wheel turned to left

Last Modified: 3-10-2010	6.4 U	**From:** 200901
Model Year: 2010	**Model:** Corolla	**Doc ID:** RM000001ALA016X
Title: POWER ASSIST SYSTEMS: POWER STEERING SYSTEM (for 2ZR-FE): FAIL-SAFE CHART (2010 Corolla)		

FAIL-SAFE CHART

If a problem occurs in the power steering system, the P/S warning light on the combination meter comes on, and the ECU stops the steering power assist, maintains a constant amount of power assist, or reduces the amount of power assist to protect the system.

DTC CODE	MALFUNCTION	FAIL-SAFE
C1511 C1512 C1513 C1514 C1515 C1516	Torque sensor malfunction	Power assist stopped
C1517	Torque sensor malfunction	Power assist stopped
C1524	Motor malfunction	Power assist stopped
C1531 C1532	Power steering ECU malfunction	Power assist stopped
C1533	Temperature sensor malfunction in power steering ECU	Assist force restricted
C1534	EEPROM abnormal	Power assist stopped
C1535	Steering wheel location data error	Power assist stopped
C1551	IG power source voltage error	Power assist stopped
C1552	PIG power source voltage error	Power assist stopped
C1553	Overvoltage at IG and PIG terminals	Power assist stopped
C1554	Power source relay malfunction	Power assist stopped
C1555	Motor relay malfunction	Power assist stopped
C1581	ECU malfunction (Assist map number un-writing)	Permission of control assist map
U0100	ECM communication error	Power assist stopped
U0129	Skid control ECU communication error	Amount of power assist remains constant at speed of 70 km/h (43 mph)

HINT:

The amount of power assist may be decreased to prevent the motor and ECUs from overheating if the steering wheel is continuously turned when the vehicle is either stopped or driven at a low speed, or if the steering

wheel is kept in either full lock position for a long time. In such cases, the amount of power assist returns to normal if the steering wheel is not turned for approximately 10 minutes with the engine idling.



Last Modified: 3-10-2010	6.4 S	**From:** 200901
Model Year: 2010	**Model:** Corolla	**Doc ID:** RM000001AKD01AX
Title: POWER ASSIST SYSTEMS: POWER STEERING SYSTEM (for 2ZR-FE): DIAGNOSTIC TROUBLE CODE CHART (2010 Corolla)		

DIAGNOSTIC TROUBLE CODE CHART

HINT:

If any DTCs are displayed during the DTC check, inspect the circuit listed for those DTCs. For details of each DTC, refer to the page indicated in the DTC chart.

Power Steering System

DTC CODE	DETECTION ITEM	TROUBLE AREA	RETURN-TO-NORMAL CONDITION	P/S WARNING LIGHT	SEE PAGE
C1511	Torque Sensor Circuit Malfunction	1. Steering column assembly (Torque sensor) 2. Power steering ECU	Ignition switch on (IG) again	○	INFO
C1512	Torque Sensor Circuit Malfunction	1. Steering column assembly (Torque sensor) 2. Power steering ECU	Ignition switch on (IG) again	○	INFO
C1513	Torque Sensor Circuit Malfunction	1. Steering column assembly (Torque sensor) 2. Power steering ECU	Ignition switch on (IG) again	○	INFO
C1514	Torque Sensor Power Supply Abnormal	1. Steering column assembly (Torque sensor) 2. Power steering ECU	Ignition switch on (IG) again	○	INFO
C1515	Torque Sensor Zero Point Adjustment Undone	-	After calibrating torque sensor zero point	○	INFO
C1516	Torque Sensor Zero Point Adjustment Incomplete	-	After calibrating torque sensor zero point normally	○	INFO
C1517	Torque Hold Abnormal	1. Steering column assembly (Torque sensor) 2. Power steering	Ignition switch on (IG) again	○	INFO

DTC CODE	DETECTION ITEM	TROUBLE AREA	RETURN-TO-NORMAL CONDITION	P/S WARNING LIGHT	SEE PAGE
		ECU			
C1524	Motor Circuit Malfunction	1. Steering column assembly (Power steering motor) 2. Power steering ECU	Ignition switch on (IG) again	○	INFO
C1531	ECU Malfunction	Power steering ECU	Ignition switch on (IG) again	○	INFO
C1532	ECU Malfunction	Power steering ECU	Ignition switch on (IG) again	○*1	INFO
C1533	ECU Malfunction	Power steering ECU	Ignition switch on (IG) again	○	INFO
C1534	ECU Malfunction	Power steering ECU	Ignition switch on (IG) again	○*1	INFO
C1535	ECU Malfunction	Power steering ECU	-	○	INFO
C1551	IG Power Supply Voltage Malfunction	1. ECU-IG No. 1 fuse 2. IG power source circuit 3. Power steering ECU	Ignition switch on (IG) again and after normal confirmation	○	INFO
C1552	PIG Power Supply Voltage Malfunction	1. EPS fuse 2. PIG power source circuit 3. Power steering ECU	Ignition switch on (IG) again and after normal confirmation	○	INFO
C1553	PIG Power Supply Overvoltage	1. IG and PIG power source circuit 2. Power steering ECU	Ignition switch on (IG) again and after normal confirmation	○	INFO
C1554	Power Supply Relay Failure	1. EPS fuse 2. PIG power source circuit 3. Power steering ECU	Ignition switch on (IG) again	○	INFO
C1555	Motor Relay Welding Failure	1. Steering column assembly (Power steering motor) 2. Power steering ECU	Ignition switch on (IG) again	○	INFO

DTC CODE	DETECTION ITEM	TROUBLE AREA	RETURN-TO-NORMAL CONDITION	P/S WARNING LIGHT	SEE PAGE
C1581	Assist Map Number Un-Writing	1. Power steering ECU 2. SFI system 3. CAN communication system	-	○	INFO
U0100	Lost Communication with ECM / PCM "A"	1. CAN communication system 2. ECM	Ignition switch on (IG) again or after normal confirmation	○	INFO
U0129	Lost Communication with Brake System Control Module	1. CAN communication system 2. Skid control ECU	Ignition switch on (IG) again or after normal confirmation	○	INFO

○: Warning light comes on

*1: Depending on some detection conditions, there is a case that the warning light does not come on.

Last Modified: 3-10-2010	6.4 U	**From:** 200901
Model Year: 2010	**Model:** Corolla	**Doc ID:** RM000001AL8012X
Title: POWER ASSIST SYSTEMS: POWER STEERING SYSTEM (for 2ZR-FE): DATA LIST / ACTIVE TEST (2010 Corolla)		

DATA LIST / ACTIVE TEST

1. DATA LIST

HINT:

Using the Techstream to read the Data List allows the values or states of switches, sensors, actuators and other items to be read without removing any parts. This non-intrusive inspection can be very useful because intermittent conditions or signals may be discovered before parts or wiring is disturbed. Reading the Data List information early in troubleshooting is one way to save diagnostic time.

NOTICE:

In the table below, the values listed under "Normal Condition" are reference values. Do not depend solely on these reference values when deciding whether a part is faulty or not.

(a) Warm up the engine.

(b) Turn the ignition switch off.

(c) Connect the Techstream to the DLC3.

(d) Turn the ignition switch on (IG).

(e) Turn the Techstream on.

(f) Enter the following menus: Chassis / EMPS / Data List.

(g) According to the display on the Techstream, read the "Data List".

EMPS

TESTER DISPLAY	MEASUREMENT ITEM/RANGE	NORMAL CONDITION	DIAGNOSTIC NOTE
Meter Vehicle Velocity	Vehicle speed from meter/ Min.: 0 km/h (mph) Max.: 300 km/h (186.4 mph)	0 km/h (0 mph)	Vehicle stopped
		No significant fluctuation	Vehicle driven at constant speed
Engine Revolution	Engine revolution/ Min.: 0 rpm Max.: 12800 rpm	No significant fluctuation	Engine is running at a constant speed
Motor Actual Current	Current to motor/ Min.: -327.68 A Max.: 327.67 A	Value changes in proportion to steering effort	Engine running, power steering is in operation
Command Value Current	Requested current to motor/ Min.: -327.68 A Max.: 327.67 A	Value changes in proportion to steering effort	Engine running, power steering is in operation
hermistor Temperature	ECU substrate temperature/ Min.: -40°C (-40°F) Max.: 150°C (302°F)	-40 to 150°C (-40 to 302°F)	-
	Power source voltage to		

Last Modified: 3-10-2010	6.4 C	**From:** 200901
Model Year: 2010	**Model:** Corolla	**Doc ID:** RM000001AKH013X
Title: POWER ASSIST SYSTEMS: POWER STEERING SYSTEM (for 2ZR-FE): C1511-C1514,C1517: Torque Sensor Circuit Malfunction (2010 Corolla)		

DTC	**C1511**	**Torque Sensor Circuit Malfunction**

DTC	**C1512**	**Torque Sensor Circuit Malfunction**

DTC	**C1513**	**Torque Sensor Circuit Malfunction**

DTC	**C1514**	**Torque Sensor Power Supply Abnormal**

DTC	**C1517**	**Torque Hold Abnormal**

DESCRIPTION

The power steering ECU calculates assisting power based on steering torque signals from the torque sensor. If these DTCs are stored in the power steering ECU, the ECU stops steering power assist as a fail-safe function.

DTC NO.	DTC DETECTION CONDITION	TROUBLE AREA
C1511	Torque sensor (TRQ1) signal error or stop	• Steering column assembly (torque sensor) • Power steering ECU
C1512	Torque sensor (TRQ2) signal error or stop	
C1513	Deviation between torque sensor TRQ1 and TRQ2 exceeds specified value	
C1514	Torque sensor power source voltage error	
C1517	Temporary control due to malfunction related to torque sensor continues for long time	

WIRING DIAGRAM

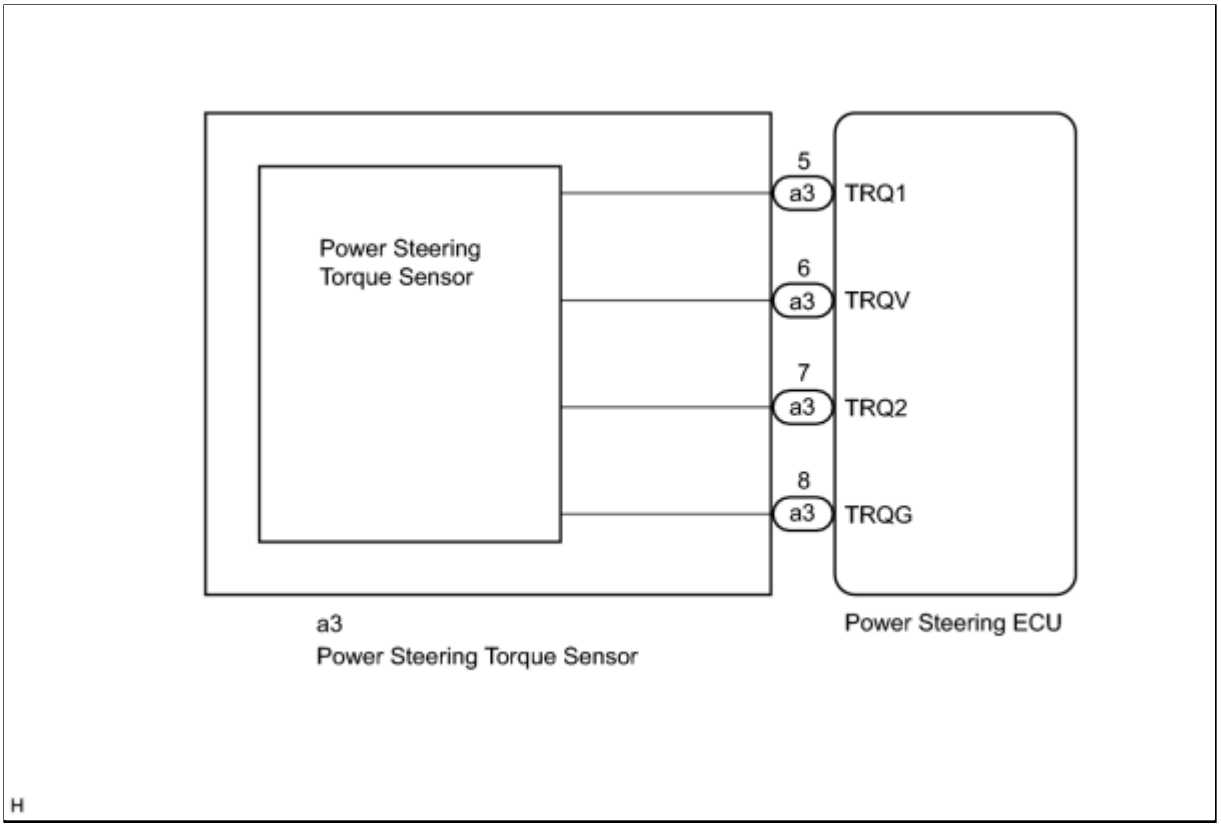

INSPECTION PROCEDURE

NOTICE:

- If the power steering ECU has been replaced with a new one, perform the assist map writing and the torque sensor zero point calibration INFO .
- If the steering column assembly has been replaced with a new one, perform the torque sensor zero point calibration after performing the initialization of the torque sensor zero point value INFO .

PROCEDURE

1.	**CHECK POWER STEERING ECU (TOQUE SENSOR OUTPUT)**

(a) Turn the ignition switch on (IG).

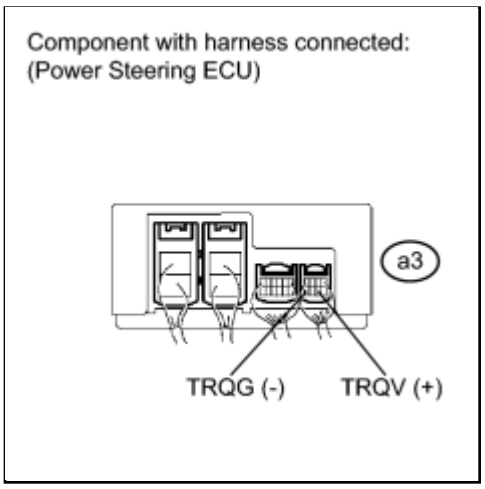

(b) Measure the voltage according to the value(s) in the table below.

Standard Voltage:

TESTER CONNECTION	SWITCH CONDITION	SPECIFIED CONDITION
a3-6 (TRQV) - a3-8 (TRQG)	Ignition switch on (IG)	7.5 to 8.5 V

NG ▶ **REPLACE POWER STEERING ECU**

OK ▼

2.	**CHECK STEERING COLUMN ASSEMBLY (TORQUE SENSOR)**

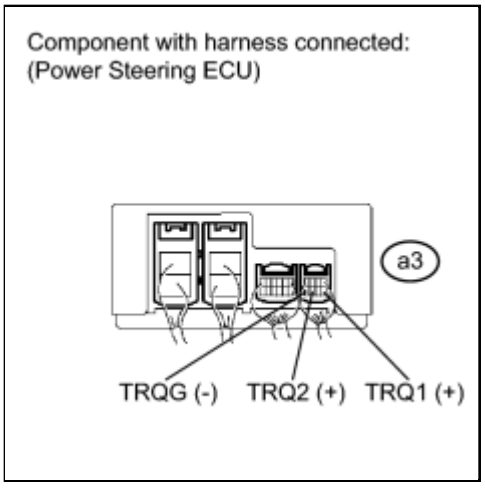

(a) Turn the ignition switch on (IG).

(b) Measure the voltage according to the value(s) in the table below.

Standard Voltage:

TESTER CONNECTION	SWITCH CONDITION (STEERING POSITION)	SPECIFIED CONDITION
a3-5 (TRQ1) - a3-8 (TRQG)	Ignition switch on (IG) Center position	2.3 to 2.7 V
a3-7 (TRQ2) - a3-8 (TRQG)	Ignition switch on (IG) Center position	2.3 to 2.7 V
a3-5 (TRQ1) - a3-8 (TRQG)	Ignition switch on (IG) Turned to right	2.5 to 4.7 V
a3-7 (TRQ2) - a3-8 (TRQG)	Ignition switch on (IG) Turned to right	2.5 to 4.7 V
a3-5 (TRQ1) - a3-8 (TRQG)	Ignition switch on (IG) Turned to left	0.3 to 2.5 V
a3-7 (TRQ2) - a3-8 (TRQG)	Ignition switch on (IG) Turned to left	0.3 to 2.5 V

NG ▶ **REPLACE STEERING COLUMN ASSEMBLY**

OK ▶ **REPLACE POWER STEERING ECU**

Last Modified: 3-10-2010	6.4 G	**From:** 200901
Model Year: 2010	**Model:** Corolla	**Doc ID:** RM000001T31013X
Title: POWER ASSIST SYSTEMS: POWER STEERING SYSTEM (for 2ZR-FE): ON-VEHICLE INSPECTION (2010 Corolla)		

ON-VEHICLE INSPECTION

1. CHECK STEERING EFFORT (TORQUE)

NOTICE:

Some of these service operations may affect the SRS airbags. Read the precautionary notices concerning the SRS airbag system before servicing.

(a) Stop the vehicle on a level, paved road and align the wheels facing straight ahead.

(b) Disconnect the cable from the negative (-) battery terminal.

CAUTION:

Wait at least 90 seconds after disconnecting the cable from the negative (-) battery terminal to disable the SRS system.

(c) Remove the steering pad INFO .

(d) Connect the cable to the negative (-) battery terminal.

(e) Using a torque wrench, check that the steering wheel set nut is properly tightened.

Torque: 50 N·m (510 kgf·cm, 37ft·lbf)

(f) Turn the ignition switch to the ON position (the engine is stopped) so that the power steering is ready to operate.

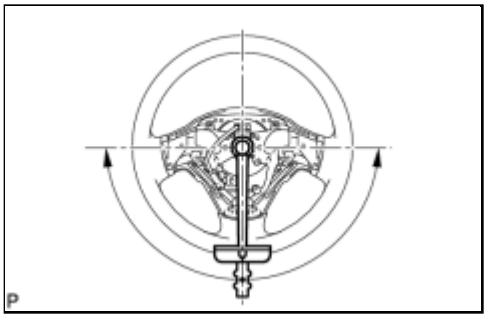

(g) Turn the steering wheel 90 degrees to the right and check the steering effort (torque) while continuing to turn it further in the same direction.

Steering effort (Reference):
5.5 N*m (56 kgf*cm, 49 in.*lbf) or less

(h) Align the front wheels facing straight ahead.

(i) Disconnect the cable from the negative (-) battery terminal.

CAUTION:

Wait at least 90 seconds after disconnecting the cable from the negative (-) battery terminal to disable the SRS system.

(j) Install the steering pad INFO .

(k) Connect the cable to the negative (-) battery terminal.

(l) Clear the DTCs INFO .

(m) Inspect the airbag warning light INFO .

Last Modified: 3-10-2010	6.4 C	**From:** 200901
Model Year: 2010	**Model:** Corolla	**Doc ID:** RM000001WCS00YX
Title: POWER ASSIST SYSTEMS: POWER STEERING SYSTEM (for 2ZR-FE): C1515: Torque Sensor Zero Point Adjustment Undone (2010 Corolla)		

DTC	**C1515**	**Torque Sensor Zero Point Adjustment Undone**

DESCRIPTION

This DTC does not indicate a malfunction. The power steering ECU stores this DTC when it determines that the torque sensor zero point calibration has not been performed.

DTC NO.	DTC DETECTION CONDITION	TROUBLE AREA
C1515	Torque sensor zero point calibration not performed.	There is no malfunction if DTC is not output after performing the torque sensor zero point calibration.

INSPECTION PROCEDURE

NOTICE:

- If the power steering ECU has been replaced with a new one, perform the assist map writing and the torque sensor zero point calibration INFO .
- If the steering column assembly has been replaced with a new one, perform the torque sensor zero point calibration after performing the initialization of the torque sensor zero point value INFO .

PROCEDURE

1.	**PERFORM ZERO POINT CALIBRATION (TORQUE SENSOR)**

(a) Perform the torque sensor zero point calibration INFO .

NEXT

2.	**CHECK FOR DTC**

(a) Check for DTCs INFO .

Result:

RESULT	PROCEED TO
DTC is still output even after performing torque sensor zero point calibration 3 times*1.	A
DTC is still output even after performing torque sensor zero point calibration once or twice*2.	B
Normal system code is output.	C

HINT:

- *1: The power steering ECU must be replaced if DTC C1515 is still output even after the torque sensor zero point calibration is performed 3 times.
- *2: Perform the torque sensor zero point calibration again if DTC C1515 is still output even after the calibration is performed once or twice.

C ▶ **END**

B ▶ **PERFORM ZERO POINT CALIBRATION AGAIN (TORQUE SENSOR)**

A
▼

3.	**REPLACE POWER STEERING ECU**

(a) Replace the power steering ECU INFO .

NEXT
▼

4.	**PERFORM ZERO POINT CALIBRATION (TORQUE SENSOR)**

(a) Perform the torque sensor zero point calibration INFO .

NEXT

5.	CHECK FOR DTC

(a) Check for DTCs INFO .

Result:

RESULT	PROCEED TO
DTC is still output even after performing torque sensor zero point calibration 3 times*1.	A
DTC is still output even after performing torque sensor zero point calibration twice*2.	B
Normal system code is output.	C

HINT:

- *1: The steering column assembly must be replaced if DTC C1515 is still output even after the torque sensor zero point calibration is performed 3 times.
- *2: Perform the torque sensor zero point calibration again if DTC C1515 is still output even after the calibration is performed twice.

C ▶ **END**

B ▶ **PERFORM ZERO POINT CALIBRATION AGAIN (TORQUE SENSOR)**

A ▶ **REPLACE STEERING COLUMN ASSEMBLY**

Last Modified: 3-10-2010	6.4 C	**From:** 200901
Model Year: 2010	**Model:** Corolla	**Doc ID:** RM000001WCT00YX
Title: POWER ASSIST SYSTEMS: POWER STEERING SYSTEM (for 2ZR-FE): C1516: Torque Sensor Zero Point Adjustment Incomplete (2010 Corolla)		

DTC	**C1516**	**Torque Sensor Zero Point Adjustment Incomplete**

DESCRIPTION

This DTC does not indicate a malfunction. The power steering ECU stores this DTC if it determines that the torque sensor zero point calibration has not been completed successfully.

DTC NO.	DTC DETECTION CONDITION	TROUBLE AREA
C1516	Torque sensor zero point calibration is not completed successfully.	There is no malfunction if DTC is not output after performing the torque sensor zero point calibration.

INSPECTION PROCEDURE

NOTICE:

- If the power steering ECU has been replaced with a new one, perform the assist map writing and the torque sensor zero point calibration INFO .
- If the steering column assembly has been replaced with a new one, perform the torque sensor zero point calibration after performing the initialization of the torque sensor zero point value INFO .

PROCEDURE

1.	**CLEAR DTC**

(a) Clear the DTCs INFO .

NEXT

2.	**PERFORM ZERO POINT CALIBRATION (TORQUE SENSOR)**

(a) Perform the torque sensor zero point calibration INFO .

NEXT

3.	CHECK FOR DTC

(a) Check for DTCs INFO .

Result:

RESULT	PROCEED TO
DTC is still output even after performing torque sensor zero point calibration 3 times*1.	A
DTC is still output even after performing torque sensor zero point calibration once or twice*2.	B
Normal system code is output.	C

HINT:

- *1: The power steering ECU must be replaced if DTC C1516 is still output even after the torque sensor zero point calibration is performed 3 times.
- *2: Perform the torque sensor zero point calibration again if DTC C1516 is still output even after the calibration is performed once or twice.

C **END**

B **PERFORM ZERO POINT CALIBRATION AGAIN (TORQUE SENSOR)**

A

4.	REPLACE POWER STEERING ECU

(a) Replace the power steering ECU INFO .

NEXT

5.	**PERFORM ZERO POINT CALIBRATION (TORQUE SENSOR)**

(a) Perform the torque sensor zero point calibration INFO .

NEXT

6.	**CHECK FOR DTC**

(a) Check for DTCs INFO .

Result:

RESULT	PROCEED TO
DTC is still output even after performing torque sensor zero point calibration 3 times*1.	A
DTC is still output even after performing torque sensor zero point calibration twice*2.	B
Normal system code is output.	C

HINT:

- *1: The steering column assembly must be replaced if DTC C1516 is still output even after the torque sensor zero point calibration is performed 3 times.
- *2: Perform the torque sensor zero point calibration again if DTC C1516 is still output even after the calibration is performed twice.

C ▶ **END**

B ▶ **PERFORM ZERO POINT CALIBRATION AGAIN (TORQUE SENSOR)**

A ▶ **REPLACE STEERING COLUMN ASSEMBLY**

Last Modified: 3-10-2010	6.4 C	**From:** 200901
Model Year: 2010	**Model:** Corolla	**Doc ID:** RM000001AKN014X
Title: POWER ASSIST SYSTEMS: POWER STEERING SYSTEM (for 2ZR-FE): C1524,C1555: Motor Circuit Malfunction (2010 Corolla)		

DTC	**C1524**	**Motor Circuit Malfunction**

DTC	**C1555**	**Motor Relay Welding Failure**

DESCRIPTION

The power steering ECU supplies current to the power steering motor through the motor circuit.

DTC NO.	DTC DETECTION CONDITION	TROUBLE AREA
C1524	Short (or open) in motor circuit or abnormal voltage in motor circuit.	• Steering column assembly (power steering motor) • Power steering ECU
C1555	Predriver (Motor relay circuit) malfunction	

WIRING DIAGRAM

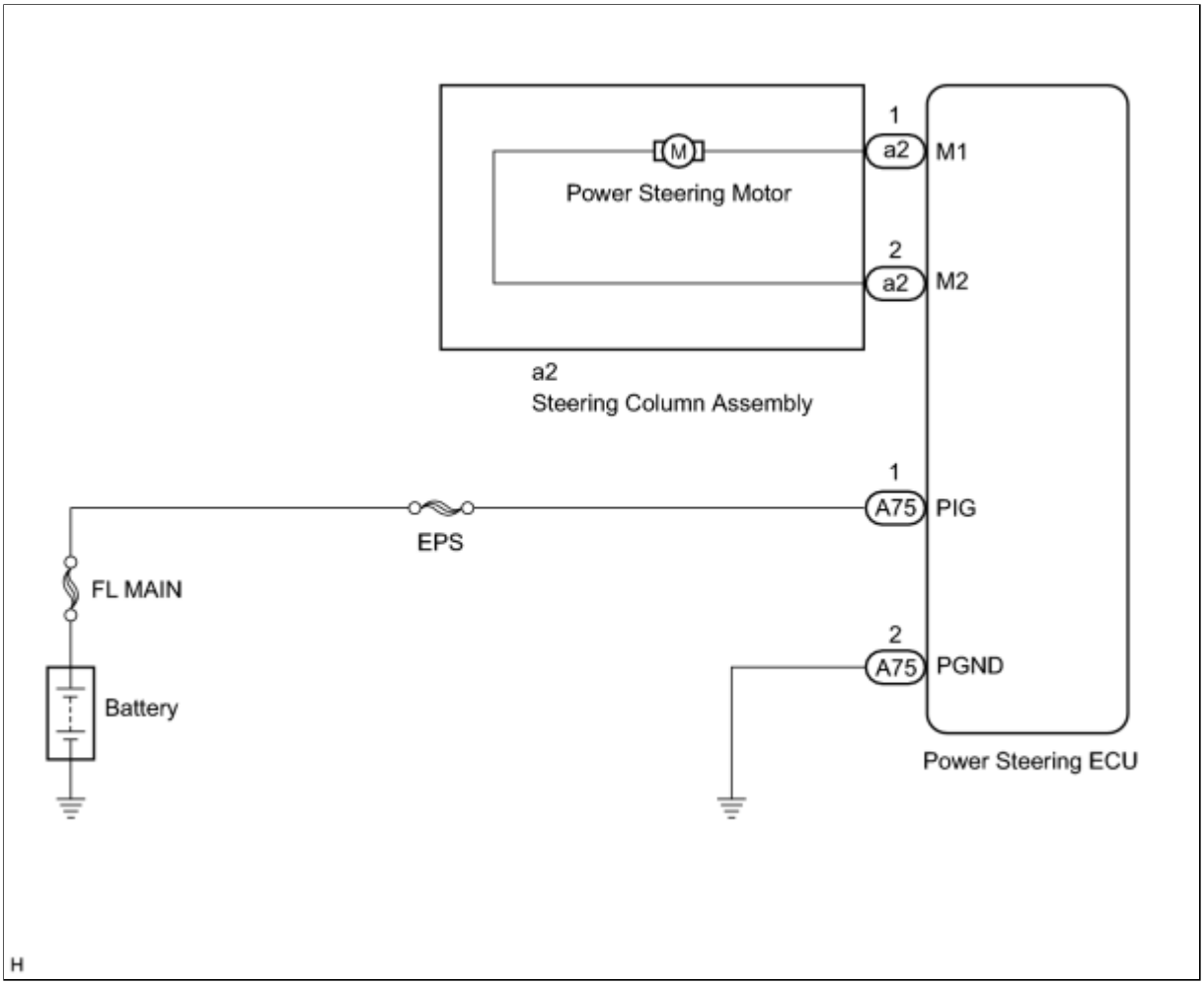

INSPECTION PROCEDURE

NOTICE:

- If the power steering ECU has been replaced with a new one, perform the assist map writing and the torque sensor zero point calibration INFO .
- If the steering column assembly has been replaced with a new one, perform the torque sensor zero point calibration after performing the initialization of the torque sensor zero point value INFO .

PROCEDURE

1.	**CHECK POWER STEERING ECU**

(a) Turn the ignition switch on (IG).

(b) Measure the voltage according to the value(s) in the table below.

Standard Voltage:

Component with harness connected:
(Power Steering ECU)

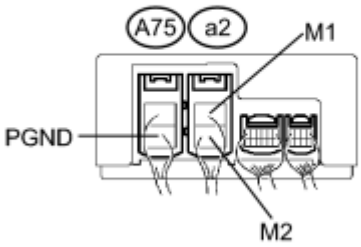

TESTER CONNECTION	CONDITION (STEERING POSITION)	SPECIFIED CONDITION
a2-1 (M1) - A75-2 (PGND)	Engine running (Turned to right)	Below 1 V
a2-1 (M1) - A75-2 (PGND)	Engine running (Turned to left)	11 to 14 V
a2-2 (M2) - A75-2 (PGND)	Engine running (Turned to right)	11 to 14 V
a2-2 (M2) - A75-2 (PGND)	Engine running (Turned to left)	Below 1 V

NG ▶ **CHECK HARNESS AND CONNECTOR (POWER STEERING ECU - BODY GROUND)**

OK ▼

2.	**CHECK STEERING COLUMN ASSEMBLY (POWER STEERING MOTOR)**

Front view of wire harness connector:
(to Power Steering ECU)

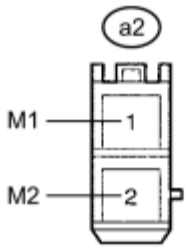

(a) Disconnect the connector from the power steering ECU.

(b) Measure the resistance according to the value(s) in the table below.

Standard Resistance:

TESTER CONNECTION	CONDITION	SPECIFIED CONDITION
a2-1 (M1) - a2-2 (M2)	Always	0.08 to 0.15 Ω
a2-1 (M1) - Body ground	Always	1 MΩ or higher

TESTER CONNECTION	CONDITION	SPECIFIED CONDITION
a2-2 (M2) - Body ground	Always	1 MΩ or higher

NG ▶ **REPLACE STEERING COLUMN ASSEMBLY**

OK ▼

3.	CHECK HARNESS AND CONNECTOR (POWER STEERING ECU - BODY GROUND)

(a) Disconnect the connector from the power steering ECU.

(b) Measure the voltage according to the value(s) in the table below.

Standard Voltage:

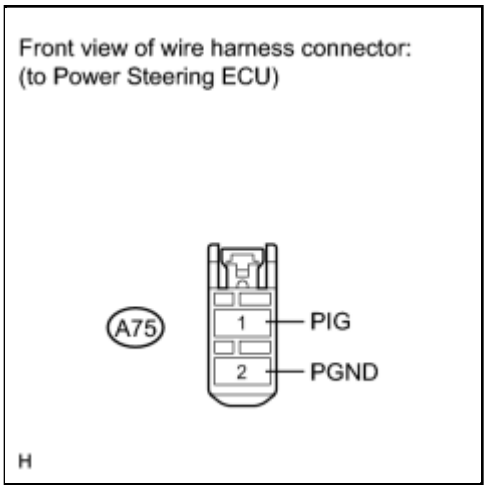

TESTER CONNECTION	SWITCH CONDITION	SPECIFIED CONDITION
A75-1 (PIG) - Body ground	Ignition switch on (IG)	11 to 14 V

(c) Measure the resistance according to the value(s) in the table below.

Standard Resistance:

TESTER CONNECTION	CONDITION	SPECIFIED CONDITION
A75-2 (PGND) - Body ground	Always	Below 1 Ω

NG ▶ **REPAIR OR REPLACE**

HARNESS OR CONNECTOR

OK ▶ REPLACE POWER STEERING ECU

Last Modified: 3-10-2010	6.4 C	**From:** 200901
Model Year: 2010	**Model:** Corolla	**Doc ID:** RM000001CHX017X
Title: POWER ASSIST SYSTEMS: POWER STEERING SYSTEM (for 2ZR-FE): C1531-C1535: ECU Malfunction (2010 Corolla)		

DTC	**C1531**	**ECU Malfunction**

DTC	**C1532**	**ECU Malfunction**

DTC	**C1533**	**ECU Malfunction**

DTC	**C1534**	**ECU Malfunction**

DTC	**C1535**	**ECU Malfunction**

DESCRIPTION

The fail-safe function operates to stop power assist when DTCs indicating ECU malfunctions are stored. However, the power assist operation continues when DTC C1533 or C1534 is stored because it indicates an EEPROM error in the ECU.

DTC NO.	DTC DETECTION CONDITION	TROUBLE AREA
C1531	ECU internal malfunction (CPU malfunction)	Power steering ECU
C1532	ECU internal malfunction (Peripheral circuit malfunction)	
C1533	ECU internal malfunction (Substrate temperature sensor malfunction)	
C1534	ECU internal malfunction (EEPROM error)	
C1535	ECU internal malfunction (Steering wheel location data error)	

INSPECTION PROCEDURE

NOTICE:

If the power steering ECU has been replaced with a new one, perform the assist map writing and the torque sensor zero point calibration INFO **.**

PROCEDURE

1.	**CHECK FOR DTC**

(a) Check for DTCs INFO .

OK:

DTCs other than C1531, C1532, C1533, C1534 and C1535 are not output.

NG ▶ **REPAIR CIRCUITS INDICATED BY OUTPUT DTCS**

OK ▶ **REPLACE POWER STEERING ECU**

Last Modified: 3-10-2010	6.4 C	**From:** 200901
Model Year: 2010	**Model:** Corolla	**Doc ID:** RM000001CJG015X
Title: POWER ASSIST SYSTEMS: POWER STEERING SYSTEM (for 2ZR-FE): C1551: IG Power Supply Voltage Malfunction (2010 Corolla)		

DTC	**C1551**	**IG Power Supply Voltage Malfunction**

DESCRIPTION

The power steering ECU distinguishes the ignition switch status as on (IG) or off through the IG power source circuit.

DTC NO.	DTC DETECTION CONDITION	TROUBLE AREA
C1551	Open or short in IG power source circuit with ignition switch on (IG).	• ECU-IG No. 1 fuse • IG power source circuit • Power steering ECU

WIRING DIAGRAM

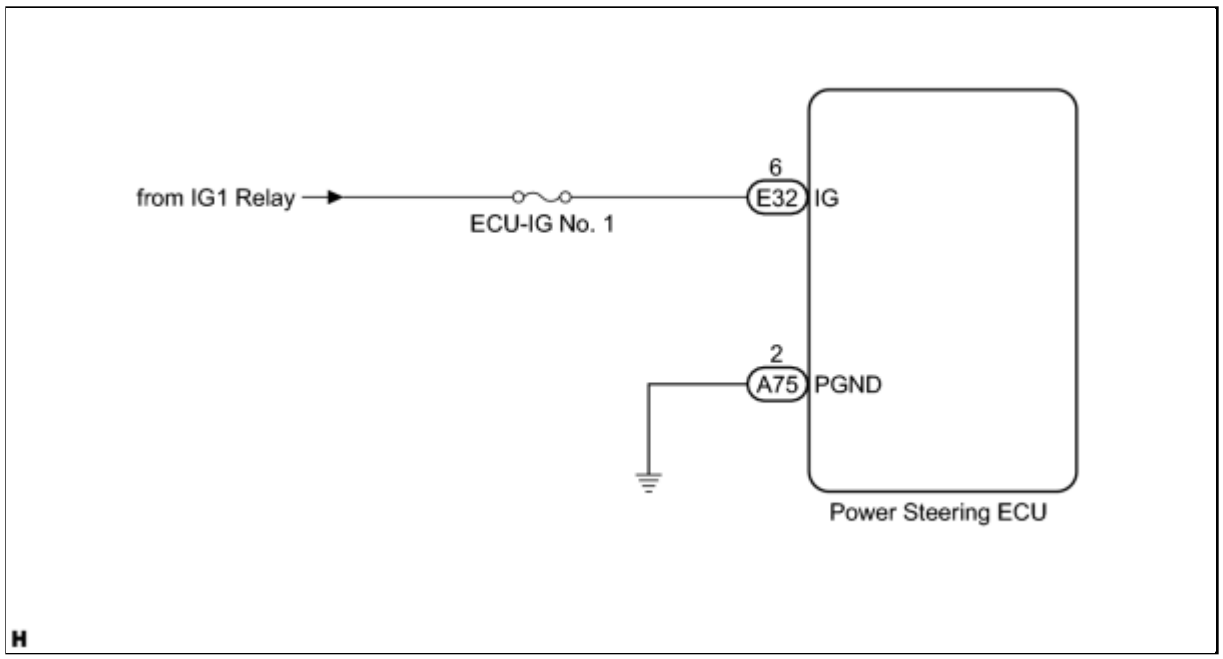

INSPECTION PROCEDURE

NOTICE:

If the power steering ECU has been replaced with a new one, perform the assist map writing and the

torque sensor zero point calibration INFO .

PROCEDURE

1.	**INSPECT FUSE (ECU-IG NO. 1)**

(a) Remove the ECU-IG No. 1 fuse from the instrument panel junction block.

(b) Check the resistance according to the value(s) in the table below.

Standard Resistance:

FUSE	CONDITION	SPECIFIED CONDITION
ECU-IG No. 1 fuse	Always	Below 1 Ω

NG ▶ **REPLACE FUSE**

OK ▼

2.	**CHECK HARNESS AND CONNECTOR (POWER STEERING ECU - BODY GROUND)**

(a) Disconnect the connectors from the power steering ECU.

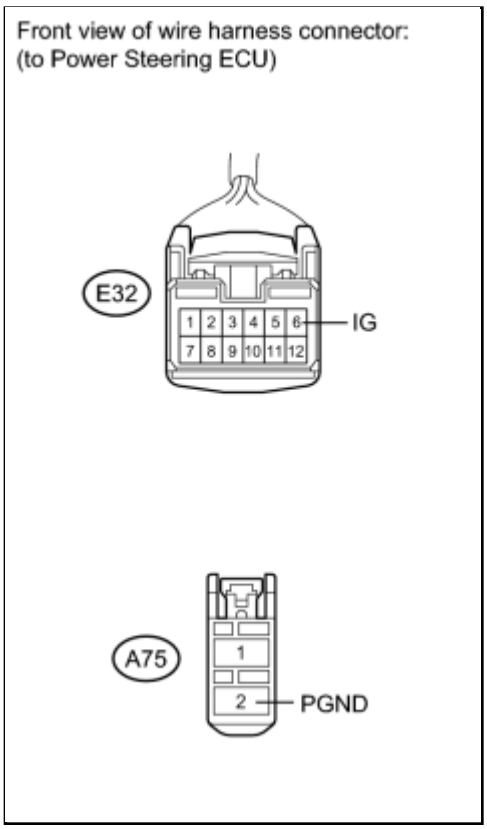

(b) Measure the voltage according to the value(s) in the table below.

Standard Voltage:

TESTER CONNECTION	SWITCH CONDITION	SPECIFIED CONDITION
E32-6 (IG) - A75-2 (PGND)	Ignition switch on (IG)	11 to 14 V

(c) Measure the resistance according to the value(s) in the table below.

Standard Resistance:

TESTER CONNECTION	CONDITION	SPECIFIED CONDITION
A75-2 (PGND) - Body ground	Always	Below 1 Ω

NG ▶ **REPAIR OR REPLACE HARNESS OR CONNECTOR**

OK ▶ **REPLACE POWER STEERING ECU**

Last Modified: 3-10-2010	6.4 C	**From:** 200901
Model Year: 2010	**Model:** Corolla	**Doc ID:** RM000001CJH017X
Title: POWER ASSIST SYSTEMS: POWER STEERING SYSTEM (for 2ZR-FE): C1552,C1554: PIG Power Supply Voltage Malfunction (2010 Corolla)		

DTC	**C1552**	**PIG Power Supply Voltage Malfunction**

DTC	**C1554**	**Power Supply Relay Failure**

DESCRIPTION

When a problem occurs in the system, the power source relay circuit and the motor relay circuit are shut off to stop the power assist. The ECU must be replaced when there is a problem with the relays because the relays are built into the ECU.

DTC NO.	DTC DETECTION CONDITION	TROUBLE AREA
C1552	PIG power source circuit malfunction	• EPS fuse • PIG power source circuit • Power steering ECU
C1554	Power source relay circuit malfunction	• EPS fuse • PIG power source circuit • Power steering ECU

WIRING DIAGRAM

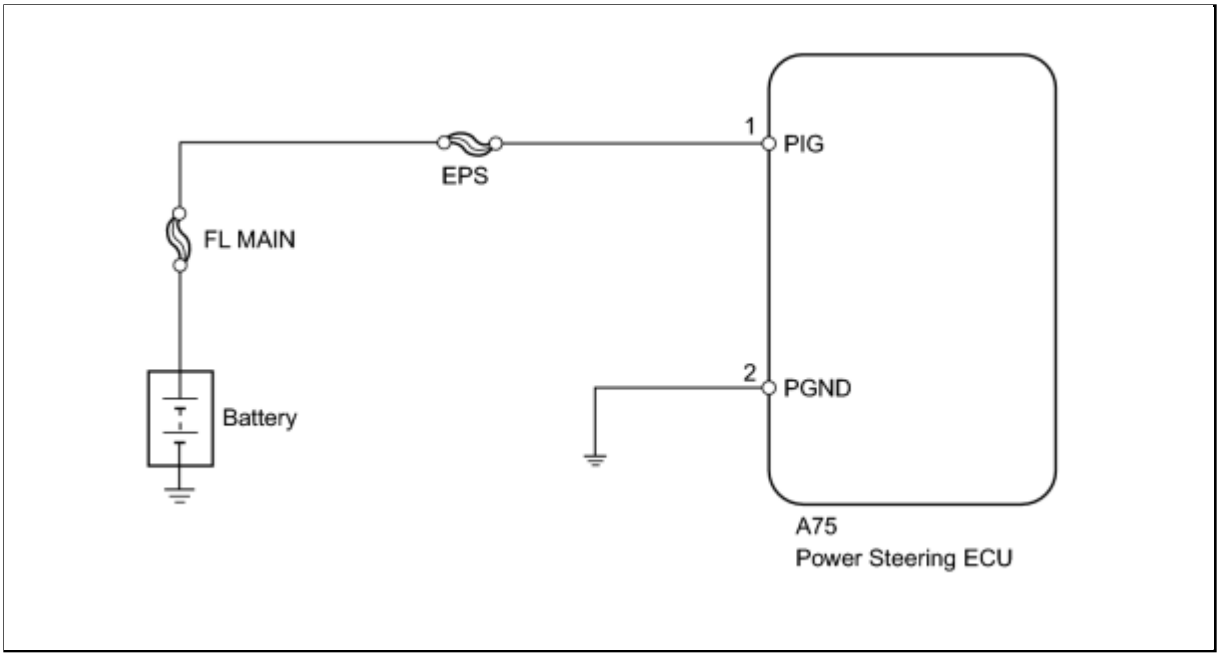

INSPECTION PROCEDURE

NOTICE:

If the power steering ECU has been replaced with a new one, perform the assist map writing and the torque sensor zero point calibration INFO **.**

PROCEDURE

1.	**INSPECT FUSE (EPS FUSE)**

(a) Remove the EPS fuse from the engine room relay block.

(b) Measure the resistance according to the value(s) in the table below.

Standard Resistance:

FUSE	CONDITION	SPECIFIED CONDITION
EPS fuse	Always	Below 1 Ω

NG ▶ **REPLACE FUSE**

OK ▼

2.	**CHECK HARNESS AND CONNECTOR (BATTERY - POWER STEERING ECU - BODY**

	GROUND)

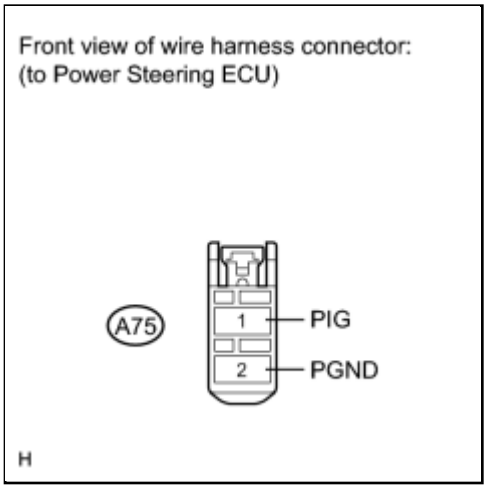

(a) Disconnect the connector from the power steering ECU.

(b) Measure the voltage according to the value(s) in the table below.

Standard Voltage:

TESTER CONNECTION	SWITCH CONDITION	SPECIFIED CONDITION
A75-1 (PIG) - Body ground	Ignition switch on (IG)	11 to 14 V

(c) Measure the resistance according to the value(s) in the table below.

Standard Resistance:

TESTER CONNECTION	CONDITION	SPECIFIED CONDITION
A75-2 (PGND) - Body ground	Always	Below 1 Ω

NG ▶ **REPAIR OR REPLACE HARNESS OR CONNECTOR**

OK ▶ **REPLACE POWER STEERING ECU**

Last Modified: 3-10-2010	6.4 C	**From:** 200901
Model Year: 2010	**Model:** Corolla	**Doc ID:** RM0000037R3005X
Title: POWER ASSIST SYSTEMS: POWER STEERING SYSTEM (for 2ZR-FE): C1553: PIG Power Supply Overvoltage (2010 Corolla)		

DTC	**C1553**	**PIG Power Supply Overvoltage**

DESCRIPTION

If the power steering ECU determines that the motor power source voltage and the IG voltage are not within the specified range, it stops the power assist as a fail-safe function.

DTC NO.	DTC DETECTION CONDITION	TROUBLE AREA
C1553	• PIG power source overvoltage • IG power source overvoltage	• IG and PIG power source circuits • Power steering ECU

WIRING DIAGRAM

w/o Smart Key System:

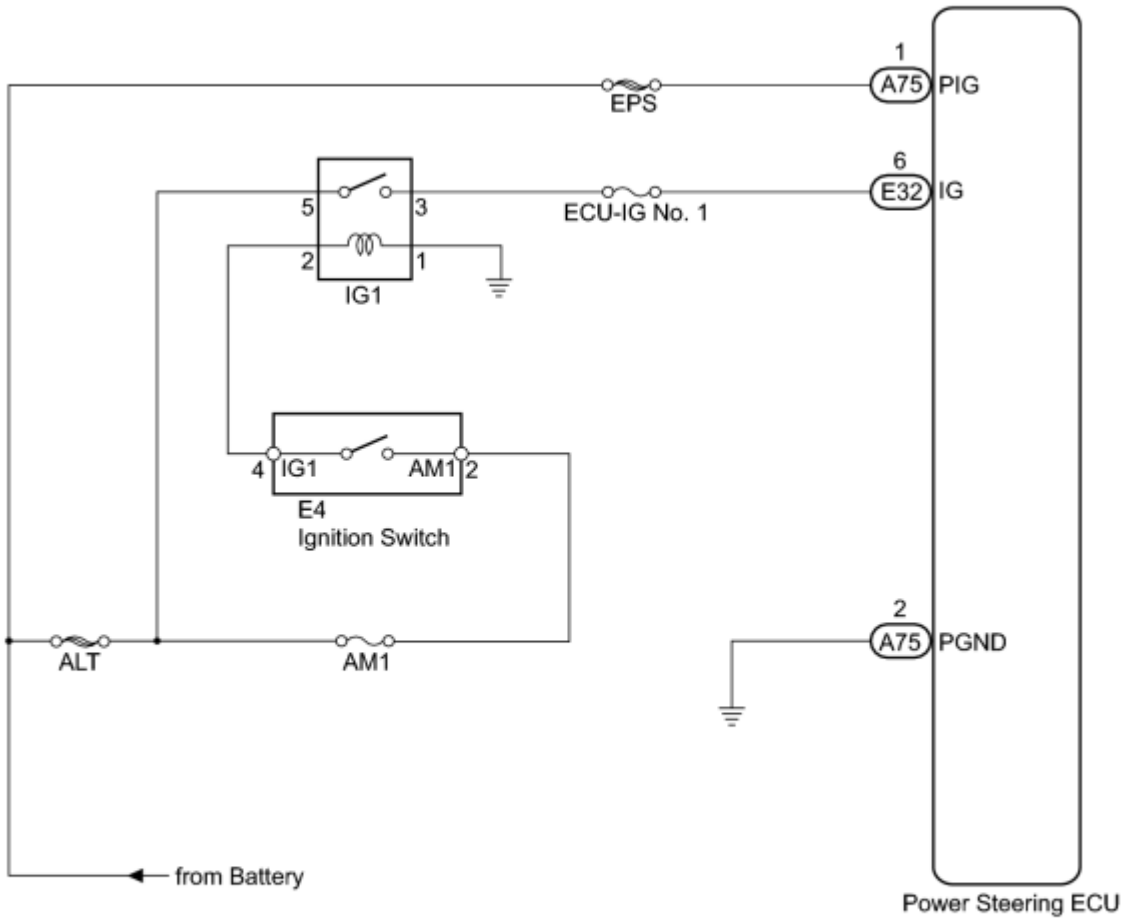

H

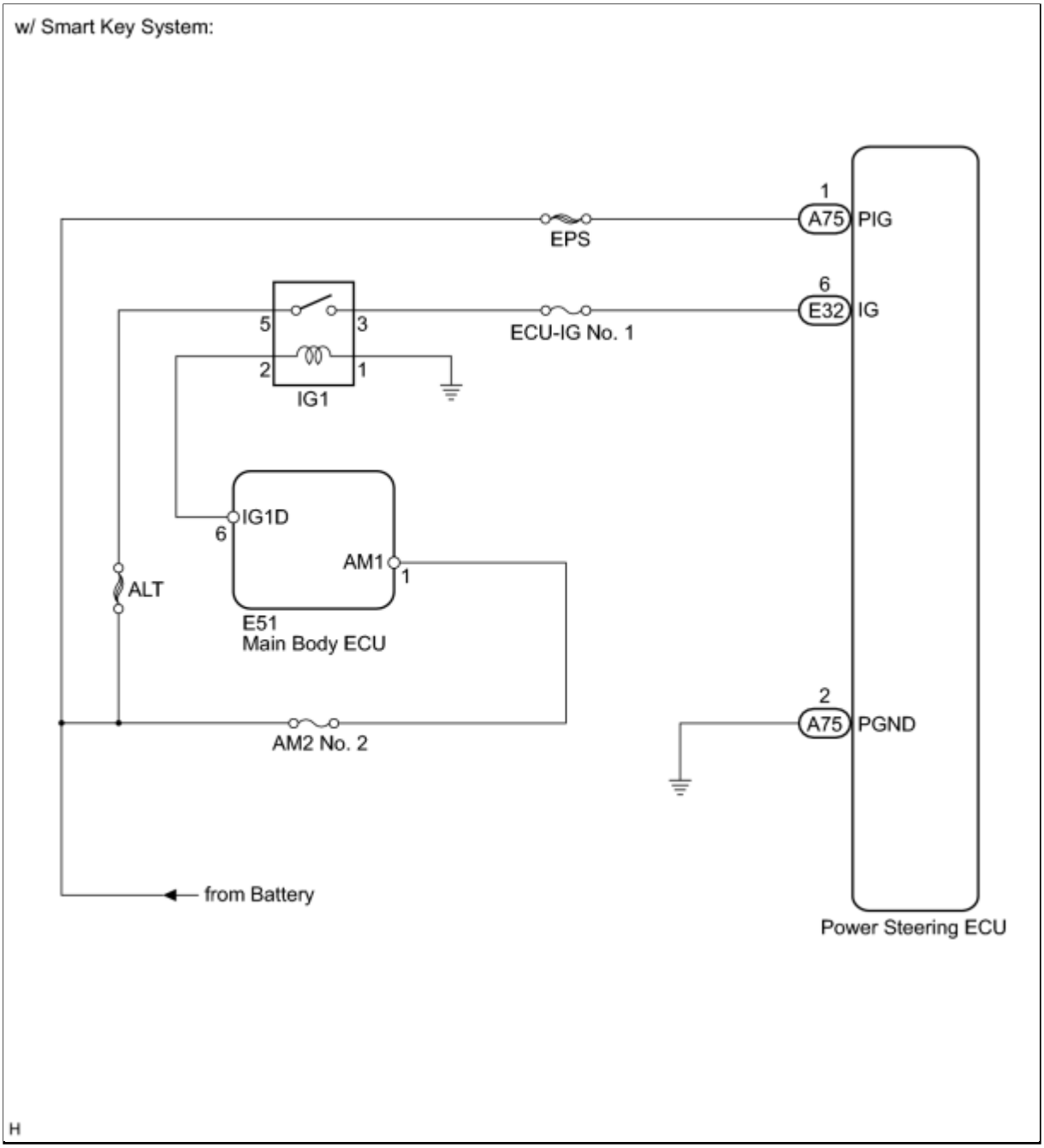

INSPECTION PROCEDURE

NOTICE:

If the power steering ECU has been replaced with a new one, perform the assist map writing and the torque sensor zero point calibration INFO **.**

PROCEDURE

1.	**CHECK HARNESS AND CONNECTOR (IG, PIG)**

(a) Disconnect the connectors from the power steering

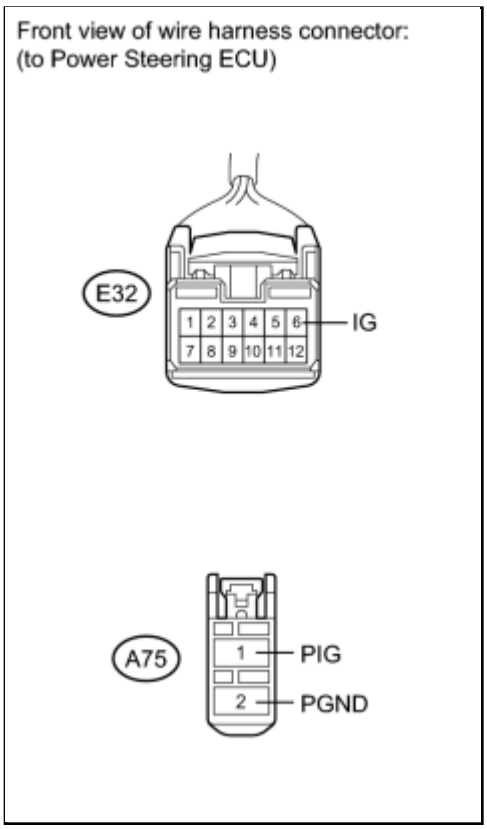

ECU.

(b) Measure the voltage according to the value(s) in the table below.

Standard Voltage:

TESTER CONNECTION	SWITCH CONDITION	SPECIFIED CONDITION
A75-1 (PIG) - A75-2 (PGND)	Always	11 to 14 V
E32-6 (IG) - A75-2 (PGND)	Ignition switch on (IG)	11 to 14 V

NG ▶ **REPAIR OR REPLACE HARNESS OR CONNECTOR**

OK ▶ **REPLACE POWER STEERING ECU**

Last Modified: 3-10-2010	6.4 C	**From:** 200901
Model Year: 2010	**Model:** Corolla	**Doc ID:** RM00000277L015X
Title: POWER ASSIST SYSTEMS: POWER STEERING SYSTEM (for 2ZR-FE): C1581: Assist Map Number Un-Writing (2010 Corolla)		

DTC	**C1581**	**Assist Map Number Un-Writing**

DESCRIPTION

DTC C1581 will be stored if the power steering ECU determines that the assist map is not written in the ECU.

DTC NO.	DTC DETECTION CONDITION	TROUBLE AREA
C1581	Assist map is not written in power steering ECU	• Power steering ECU • SFI system • CAN communication system

INSPECTION PROCEDURE

NOTICE:

If the power steering ECU has been replaced with a new one, perform the assist map writing and the torque sensor zero point calibration INFO **.**

PROCEDURE

1.	**PERFORM ASSIST MAP WRITING**

(a) Perform the assist map writing INFO .

NEXT

2.	**CHECK FOR DTC**

(a) Check for DTCs INFO .

Result:

RESULT	PROCEED TO
DTC is still output even after performing assist map writing 3 times.	A
DTC is still output even after performing assist map writing once or twice*1	B
DTC is not output.	C

HINT:

***1: Perform the assist map writing again if DTC C1581 is still output even after the assist map writing is performed once or twice.**

C ▶ **END**

B ▶ **PERFORM ASSIST MAP WRITING AGAIN**

A
▼

3.	CHECK FOR DTC (CAN COMMUNICATION SYSTEM)

(a) Check for DTCs INFO .

OK:
DTC is not output.

HINT:

If the CAN communication system DTC is output, first troubleshoot the CAN communication system malfunction, then perform the assist map writing again INFO .

NG ▶ **GO TO CAN COMMUNICATION SYSTEM**

OK
▼

4.	CHECK FOR DTC (SFI SYSTEM)

(a) Check for DTCs INFO .

OK:

DTC is not output.

HINT:

If the SFI system DTC is output, first troubleshoot the SFI system, then perform the assist map writing again INFO **.**

NG ▶ **REPAIR CIRCUITS INDICATED BY OUTPUT DTCS**

OK ▶ **REPLACE POWER STEERING ECU**

Last Modified: 3-10-2010	6.4 J	**From:** 200901
Model Year: 2010	**Model:** Corolla	**Doc ID:** RM000001AKY017X
Title: POWER ASSIST SYSTEMS: POWER STEERING SYSTEM (for 2ZR-FE): EPS Warning Light Circuit (2010 Corolla)		

EPS Warning Light Circuit

DESCRIPTION

If the power steering ECU detects a malfunction, the P/S warning light comes on. At this time, the power steering ECU stores the appropriate DTC in its memory.

WIRING DIAGRAM

w/o Smart Key System:

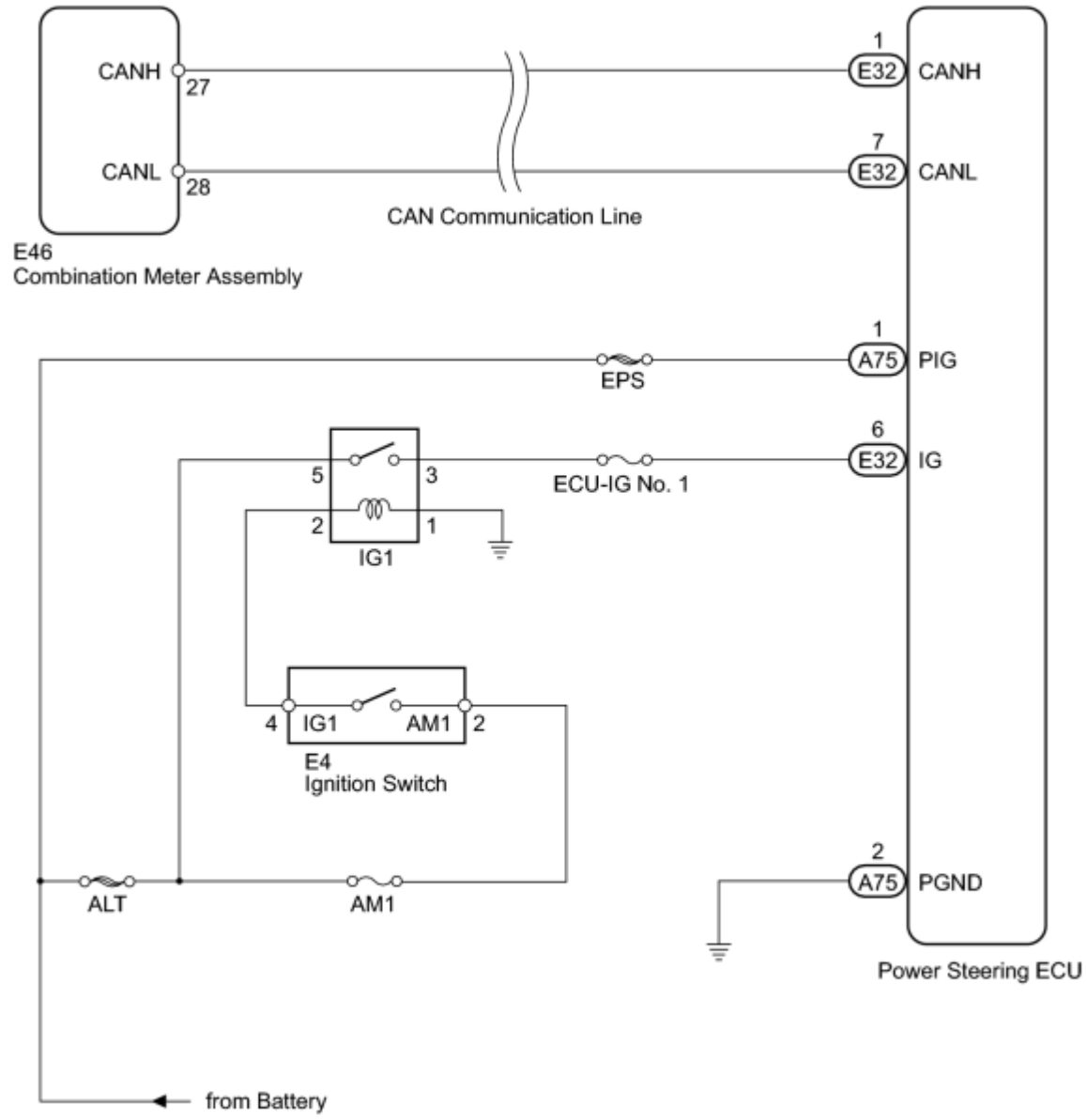

H

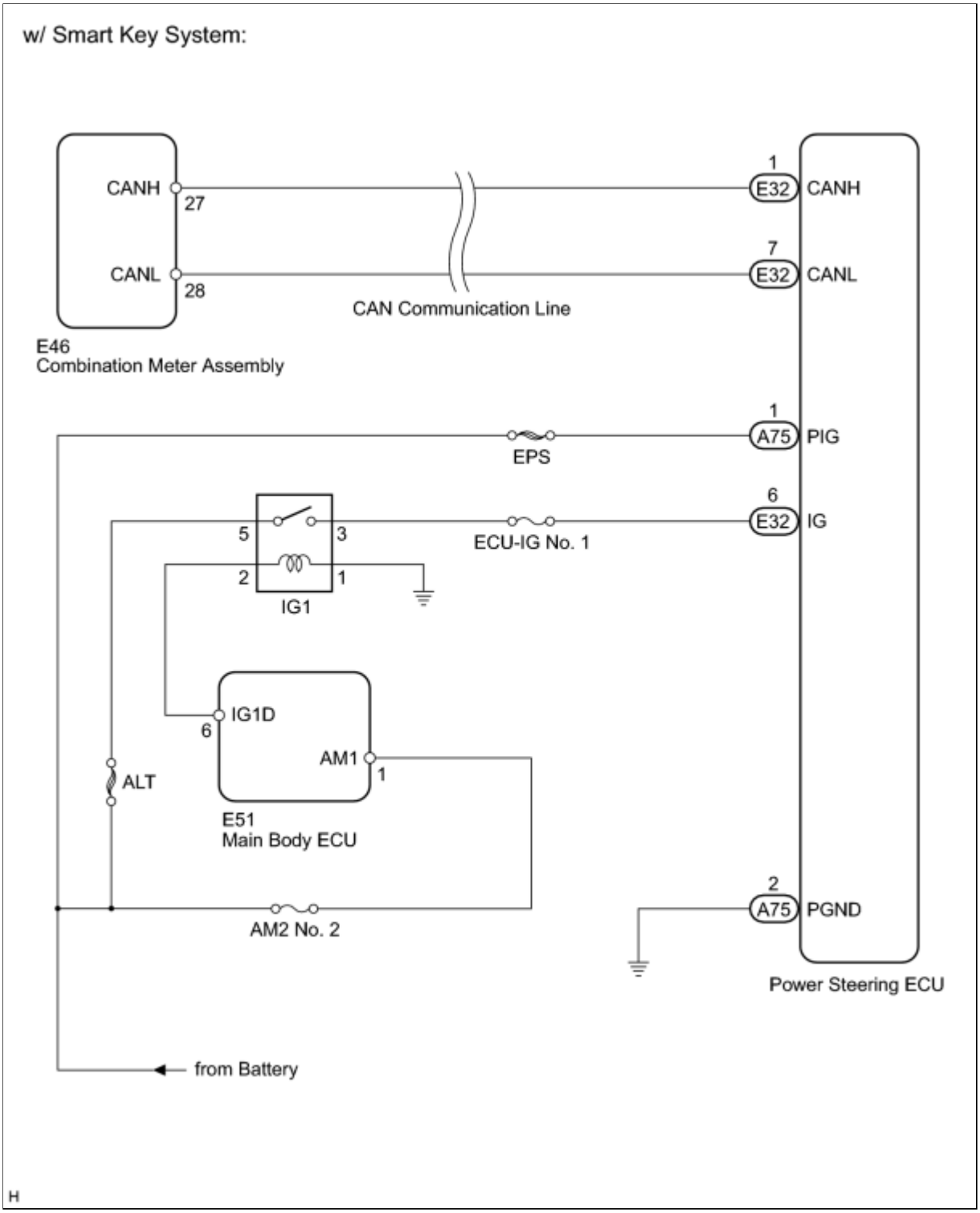

INSPECTION PROCEDURE

PROCEDURE

1.	**CHECK FOR DTC (CAN COMMUNICATION SYSTEM)**

(a) Check for DTCs INFO .

OK:

DTC is not output.

NG ▶ GO TO CAN COMMUNICATION SYSTEM

OK ▼

2.	CHECK HARNESS AND CONNECTOR (POWER STEERING ECU - BODY GROUND)

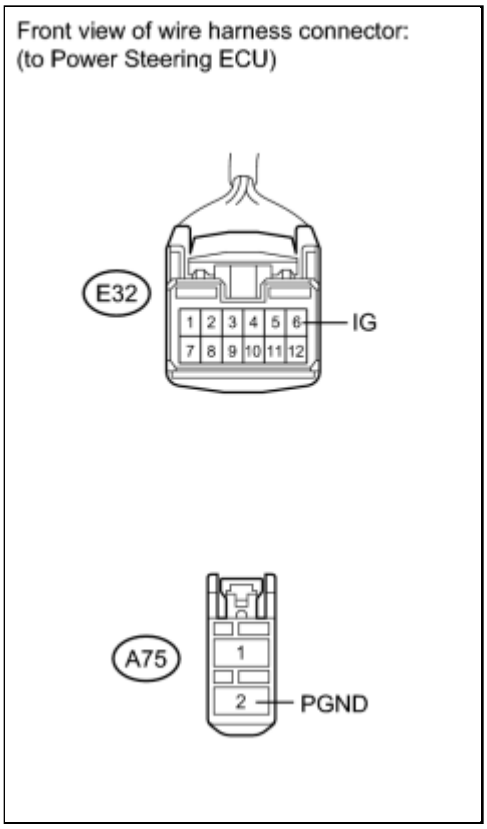

(a) Disconnect the connectors from the power steering ECU.

(b) Measure the voltage according to the value(s) in the table below.

Standard Voltage:

TESTER CONNECTION	SWITCH CONDITION	SPECIFIED CONDITION
E32-6 (IG) - A75-2 (PGND)	Ignition switch on (IG)	11 to 14 V

(c) Measure the resistance according to the value(s) in the table below.

Standard Resistance:

TESTER CONNECTION	CONDITION	SPECIFIED CONDITION
A75-2 (PGND) - Body ground	Always	Below 1 Ω

NG ▶ **REPAIR OR REPLACE HARNESS OR CONNECTOR**

OK ▼

3.	**REPLACE POWER STEERING ECU**

(a) Replace the power steering ECU INFO .

(b) Check the P/S warning light condition.

OK:

P/S warning light operates normally.

NG ▶ **GO TO COMBINATION METER SYSTEM**

OK ▶ **PROCEED TO NEXT CIRCUIT INSPECTION SHOWN IN PROBLEM SYMPTOMS TABLE**

Last Modified: 3-10-2010	6.4 C	**From:** 200901
Model Year: 2010	**Model:** Corolla	**Doc ID:** RM00000277M011X
Title: POWER ASSIST SYSTEMS: POWER STEERING SYSTEM (for 2ZR-FE): U0100,U0129: Lost Communication with ECM / PCM "A" (2010 Corolla)		

DTC	**U0100**	**Lost Communication with ECM / PCM "A"**

DTC	**U0129**	**Lost Communication with Brake System Control Module**

DESCRIPTION

The power steering ECU receives signals from the ECM and the skid control ECU via the CAN communication system.

DTC NO.	DTC DETECTION CONDITION	TROUBLE AREA
U0100	Lost communication with ECM/PCM "A"	• CAN communication system • ECM
U0129	Lost communication with brake system control module	• CAN communication system • Skid control ECU

INSPECTION PROCEDURE

PROCEDURE

1.	**CHECK FOR DTC**

(a) Clear the DTCs INFO.

(b) Check for DTCs INFO.

OK:

DTC is not output.

NG ▶ **GO TO CAN COMMUNICATION SYSTEM**

OK ▶ CHECK INTERMITTENT PROBLEMS

Last Modified: 3-10-2010	6.4 A	**From:** 200901
Model Year: 2010	**Model:** Corolla	**Doc ID:** RM0000029SZ010X
Title: STEERING COLUMN: STEERING COLUMN ASSEMBLY: REMOVAL (2010 Corolla)		

REMOVAL

CAUTION:

Some of these service operations affect the SRS airbag system. Read the precautionary notices concerning the SRS airbag system before servicing INFO .

1. REMOVE STEERING WHEEL ASSEMBLY (w/ Steering Pad Switch)

HINT:

Refer to the procedures up to "Remove steering wheel assembly" INFO .

2. REMOVE STEERING WHEEL ASSEMBLY (w/o Steering Pad Switch)

HINT:

Refer to the procedures up to "Remove steering wheel assembly" INFO .

3. REMOVE LOWER INSTRUMENT PANEL FINISH PANEL SUB-ASSEMBLY INFO

4. REMOVE LOWER STEERING COLUMN COVER

NOTICE:

Removing the lower steering column cover in the incorrect order will cause the lower steering column cover to break.

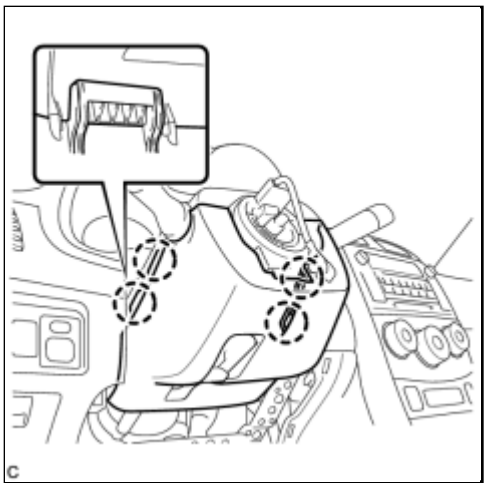

(a) Push the right and left sides of the lower steering column cover, and disengage the 4 claws.

(b) Insert your fingers into the opening of the tilt lever of the lower steering column cover to disengage the claw.

HINT:

Spread the claw to disengage it.



(c) Using a screwdriver, insert the tip into each service hole to disengage the 2 claws and remove the lower steering column cover as shown in the illustration.

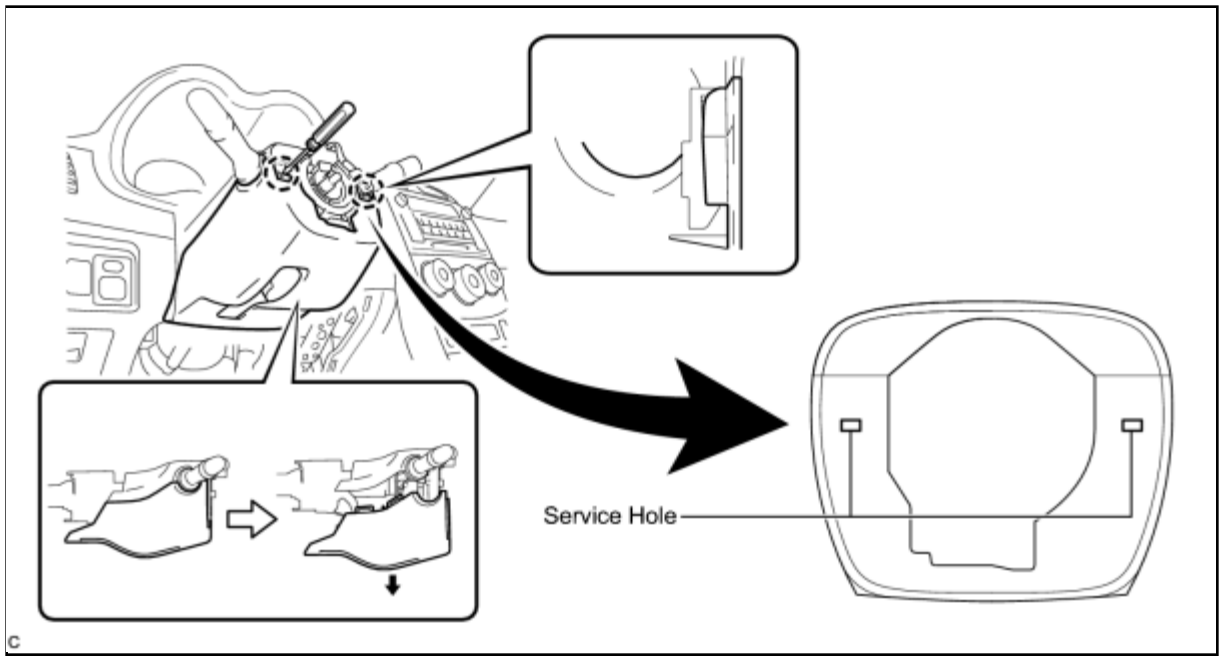

5. REMOVE UPPER STEERING COLUMN COVER

(a) Disengage the claw and the 2 pins, and remove the upper steering column cover.

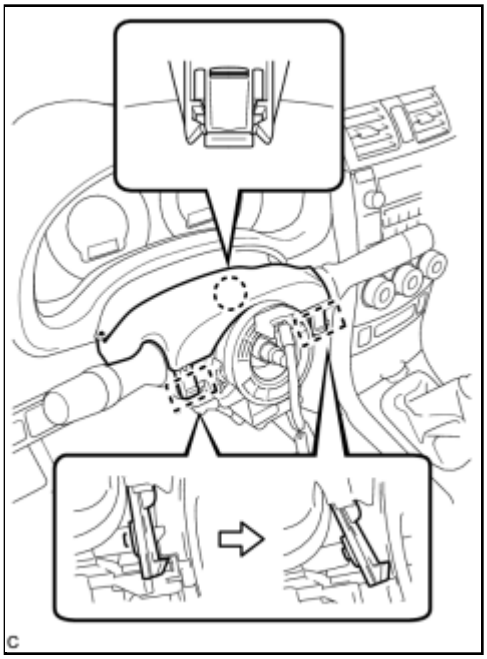

6. REMOVE TURN SIGNAL SWITCH ASSEMBLY WITH SPIRAL CABLE SUB-ASSEMBLY

(a) Disconnect the connectors from the turn signal switch assembly with spiral cable sub-assembly.

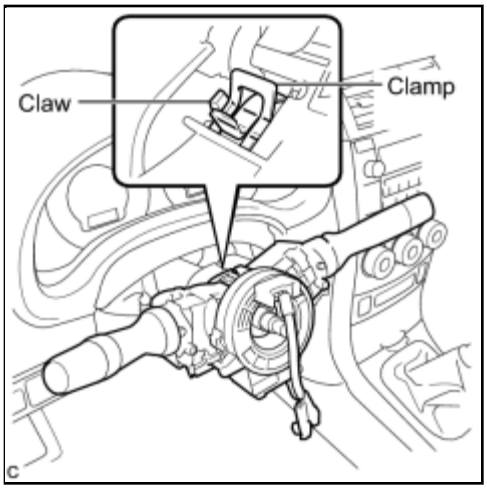

(b) Use pliers to hold the clamp and raise the claw with a screwdriver. Remove the turn signal switch assembly with spiral cable sub-assembly from the steering column assembly.

7. REMOVE UPPER INSTRUMENT PANEL SUB-ASSEMBLY

HINT:

Refer to the instructions for Removal of the upper instrument panel INFO .

8. REMOVE COLUMN HOLE COVER SILENCER SHEET

(a) Turn back the floor carpet, and remove the 2 clips and column hole cover silencer sheet.

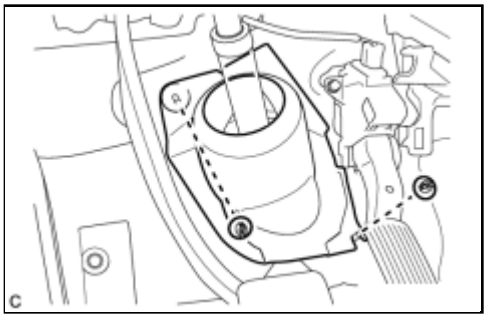

9. SEPARATE NO. 2 STEERING INTERMEDIATE SHAFT ASSEMBLY

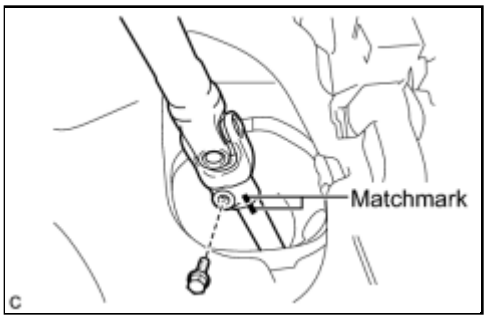

(a) Put matchmarks on the No. 2 steering intermediate shaft assembly and the steering intermediate shaft.

(b) Remove the bolt and separate the No. 2 steering intermediate shaft assembly from the steering intermediate shaft.

10. REMOVE INSTRUMENT PANEL SUB REINFORCEMENT

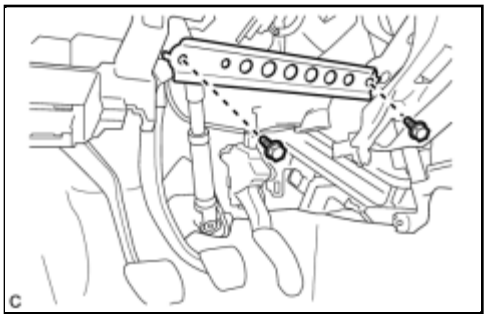

(a) Remove the 2 bolts and instrument panel sub reinforcement.

11. REMOVE NO. 3 AIR DUCT SUB-ASSEMBLY

(a) Disengage the 2 claws and remove the No. 3 air duct sub-assembly.

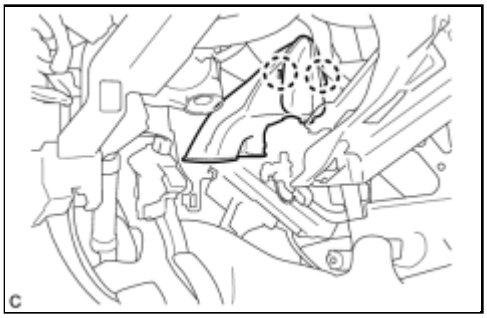

12. REMOVE TRANSPONDER KEY AMPLIFIER (w/o Smart Key System)

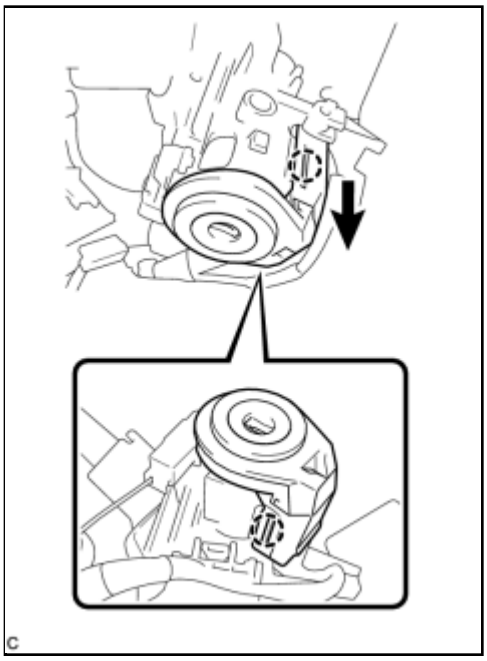

(a) Slide the transponder key amplifier to disengage the 2 claws as shown in the illustration.

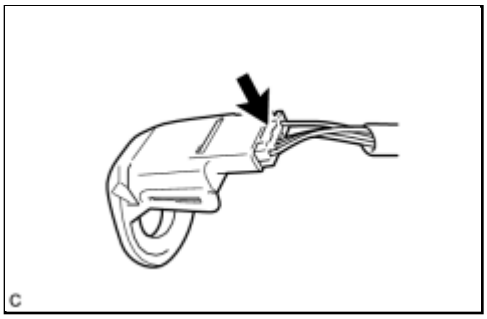

(b) Disconnect the connector and remove the transponder key amplifier.

13. REMOVE STOP LIGHT SWITCH ASSEMBLY INFO

14. REMOVE STEERING POST ASSEMBLY (for 2ZR-FE)

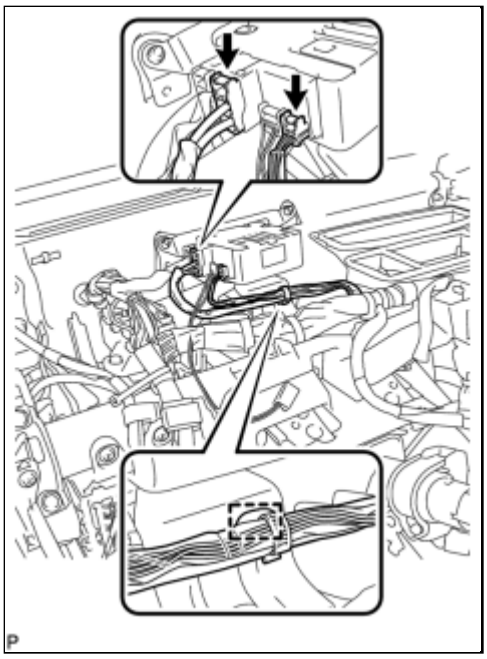

(a) Separate the wire harness clamp from the power steering ECU assembly.

(b) Disconnect the 2 connectors from the power steering ECU assembly.

(c) Disconnect the connectors and disengage the wire harness clamps from the steering column assembly.

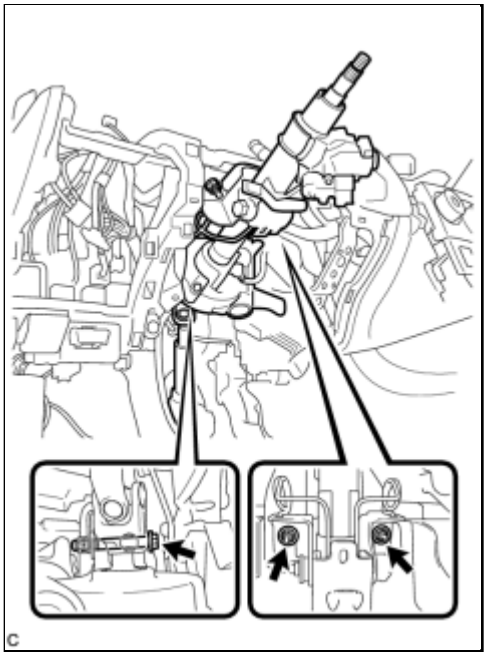

(d) Remove the bolt, 2 nuts and steering post assembly.

NOTICE:

- Do not release the tilt lever when the steering column assembly is not installed on the vehicle.
- Do not drop or strike the steering column assembly. If dropped or struck, replace it with a new one.

15. REMOVE STEERING POST ASSEMBLY (for 2AZ-FE)

(a) Disconnect the connector from the power steering ECU

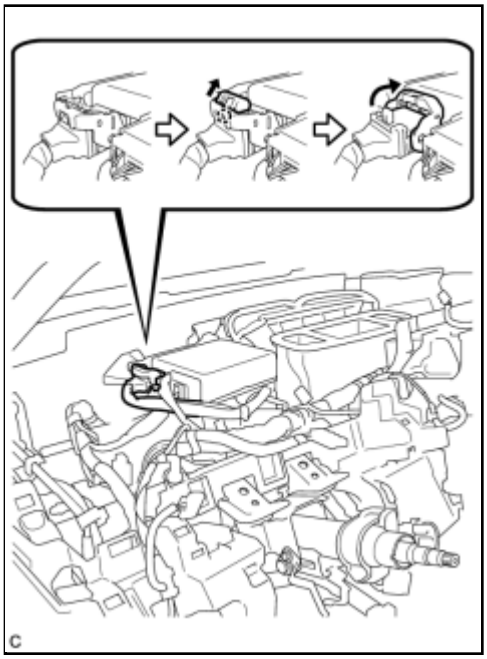

assembly.

HINT:

Pull out the lock of the lock lever, disengage the claw, and turn the lock lever to disconnect the connector, as shown in the illustration.

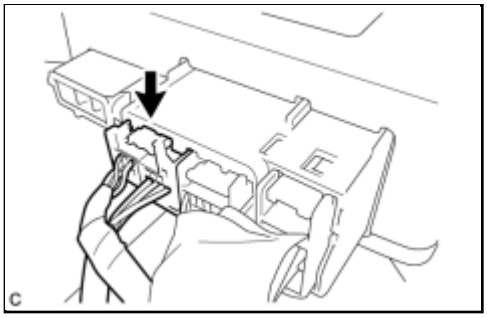

(b) Disconnect the connector from the power steering ECU assembly.

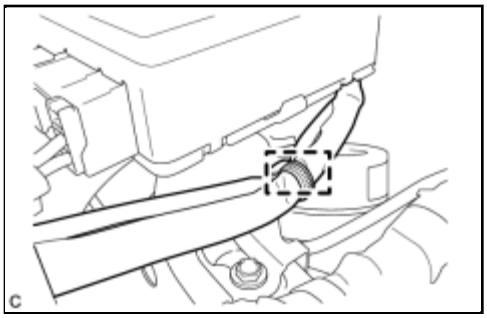

(c) Separate the wire harness clamp from the power steering ECU assembly.

(d) Remove the bolt, 2 nuts, and steering post assembly.

NOTICE:

- Do not release the tilt lever when the steering column assembly is not installed on the vehicle.
- Do not drop or strike the steering column assembly. If

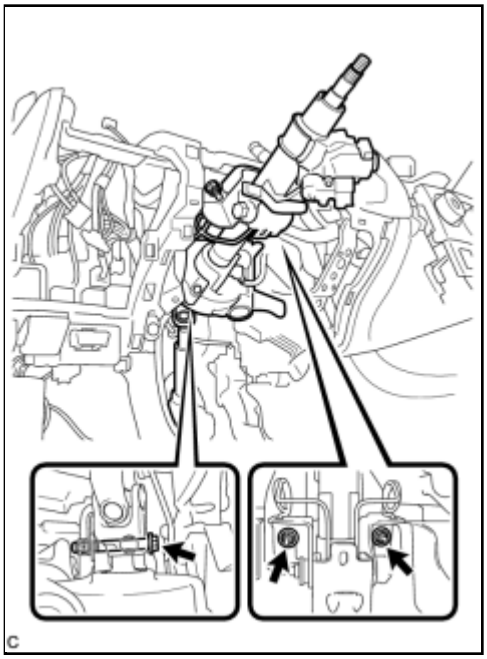

dropped or struck, replace it with a new one.

16. REMOVE NO. 2 STEERING INTERMEDIATE SHAFT ASSEMBLY

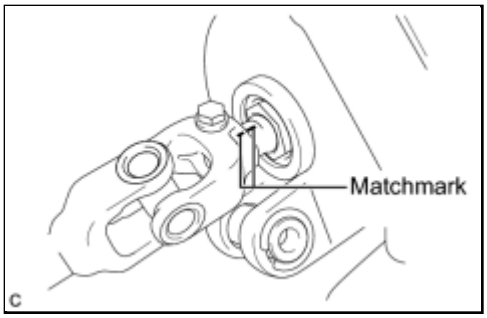

(a) Put matchmarks on the No. 2 steering intermediate shaft assembly and the steering column assembly.

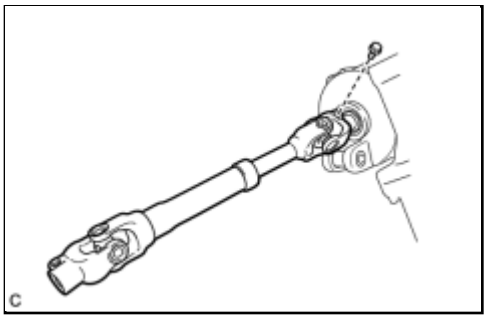

(b) Remove the bolt and the No. 2 steering intermediate shaft assembly from the steering column assembly.

Last Modified: 3-10-2010	6.4 K	**From:** 200901
Model Year: 2010	**Model:** Corolla	**Doc ID:** RM0000029SY00SX
Title: STEERING COLUMN: STEERING COLUMN ASSEMBLY: COMPONENTS (2010 Corolla)		

COMPONENTS

ILLUSTRATION

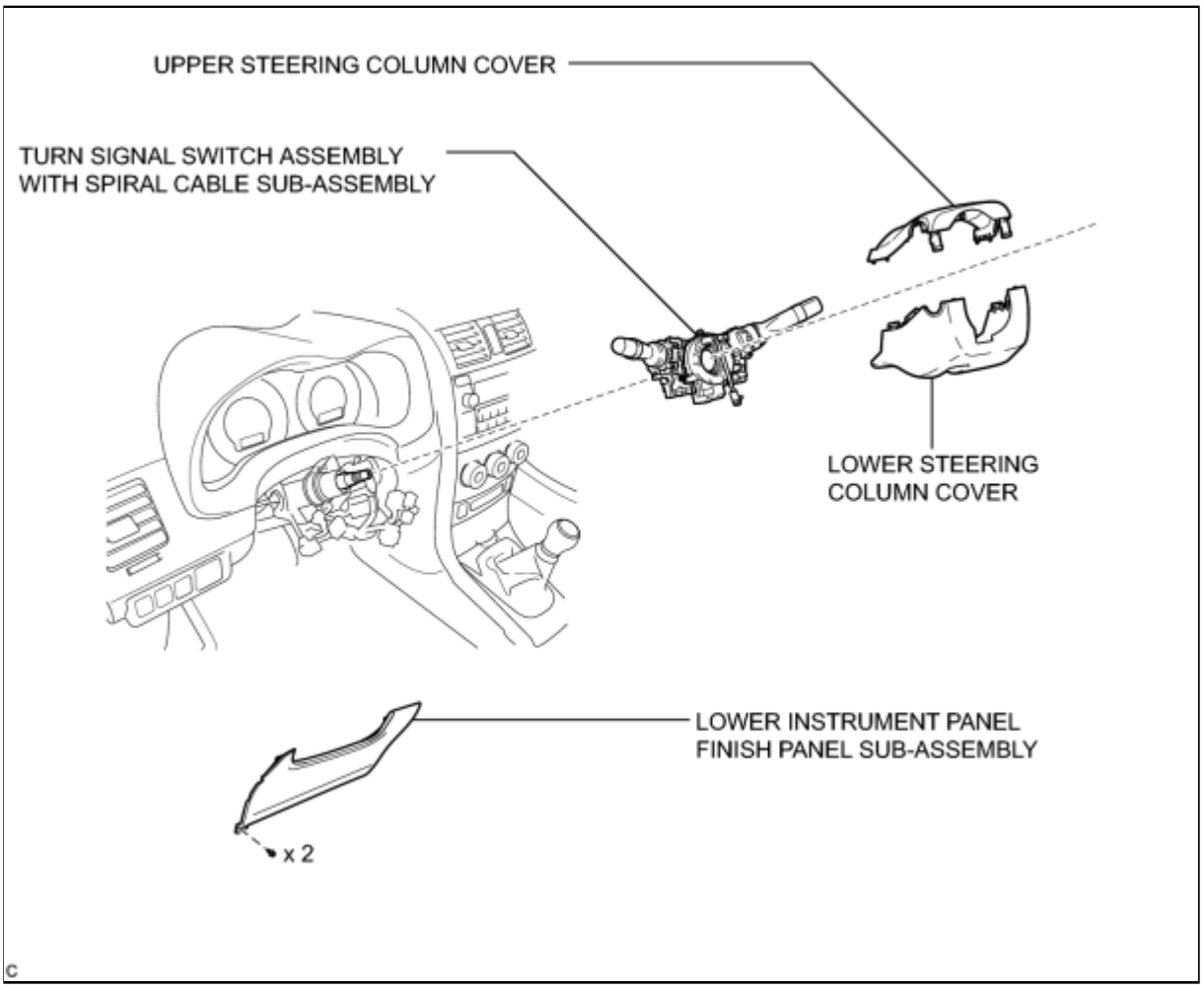

ILLUSTRATION

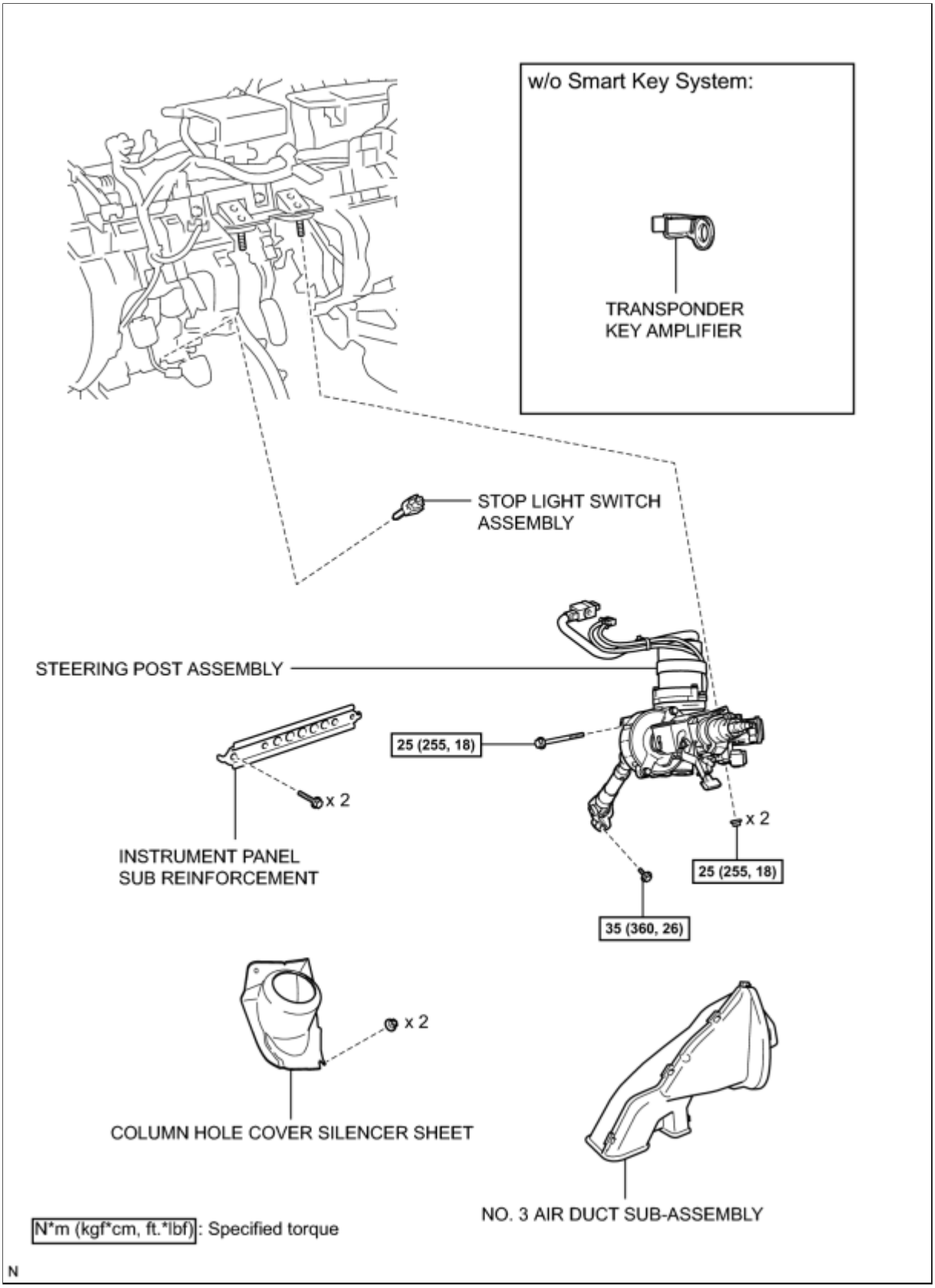

ILLUSTRATION

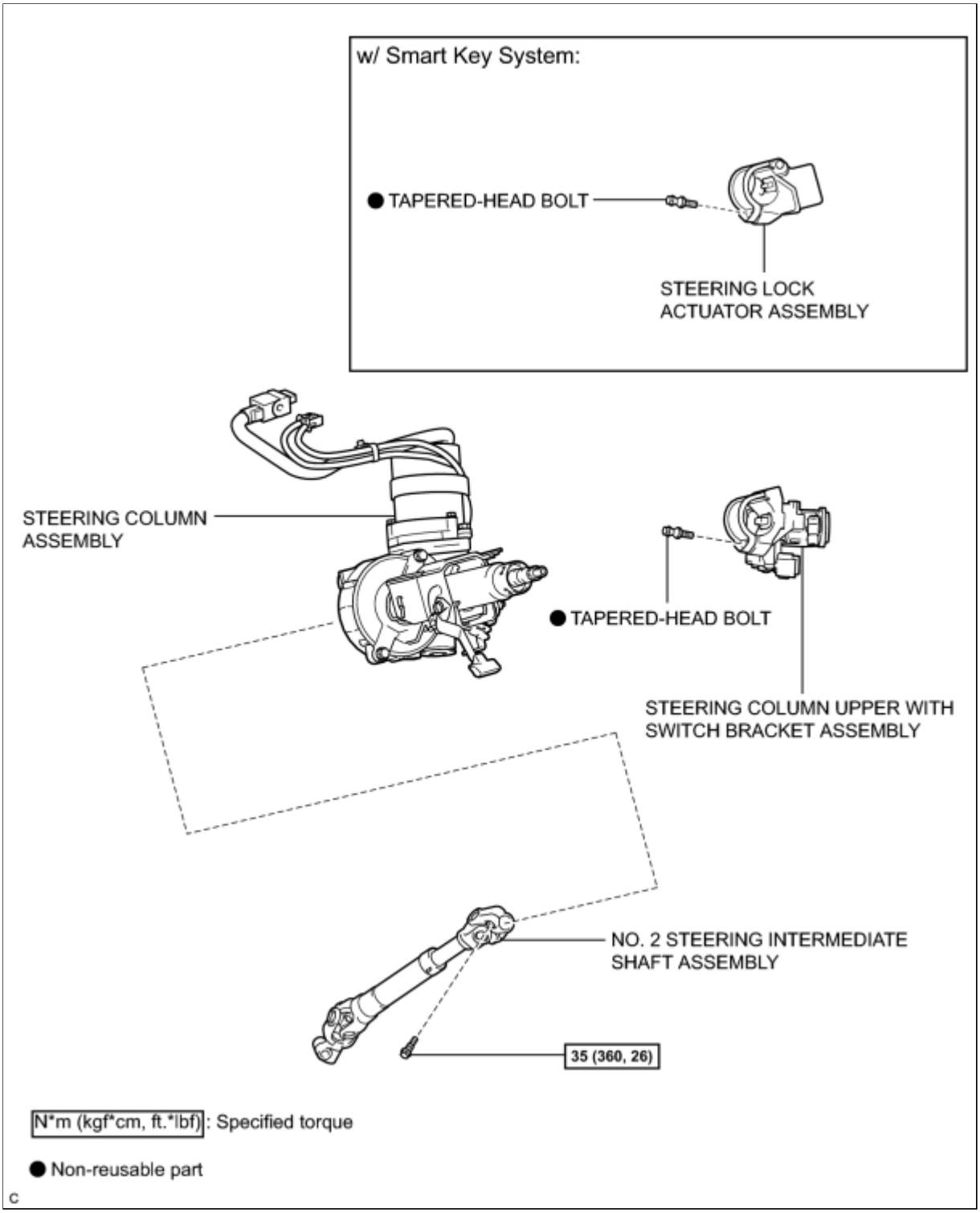

ILLUSTRATION

w/o Smart Key System:

for Automatic Transaxle:

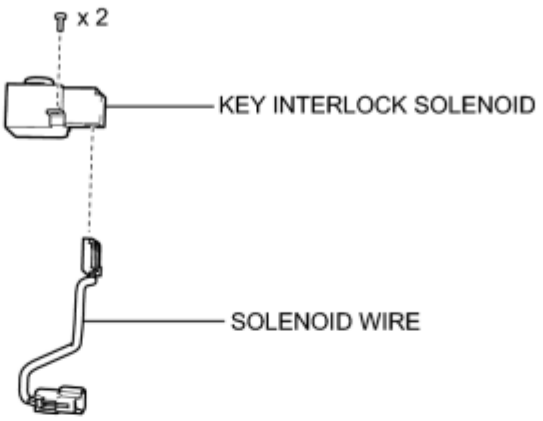

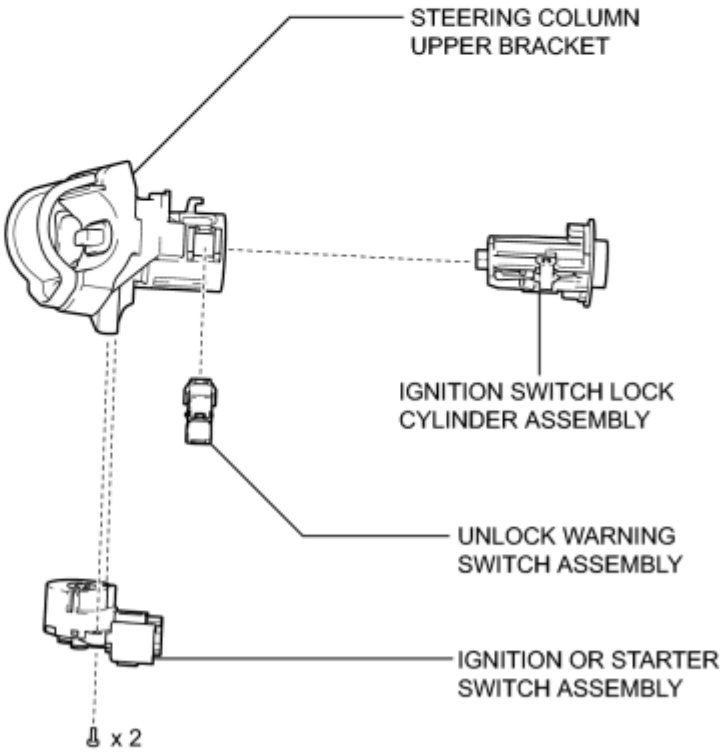

C

Last Modified: 3-10-2010	6.4 A	**From:** 200901
Model Year: 2010	**Model:** Corolla	**Doc ID:** RM000000UD0033X
Title: STEERING COLUMN: STEERING COLUMN ASSEMBLY: DISASSEMBLY (2010 Corolla)		

DISASSEMBLY

NOTICE:

When using a vise, do not overtighten it.

1. REMOVE STEERING LOCK ACTUATOR ASSEMBLY (w/ Smart Key System)

(a) Secure the steering column assembly in a vise.

(b) Using a center punch, mark the center of the tapered-head bolt.

(c) Using a 3 to 4 mm (0.118 to 0.157 in.) diameter drill bit, drill a hole in the tapered-head bolt.

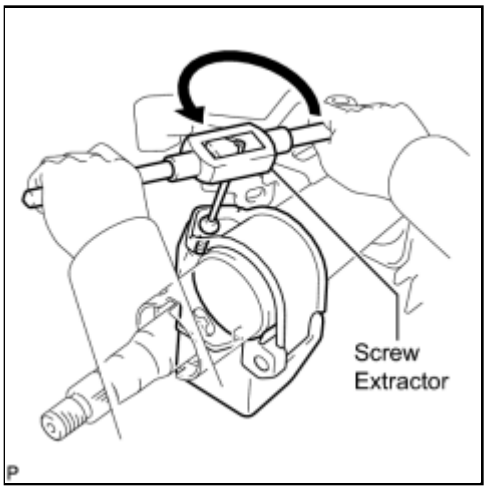

(d) Using a screw extractor, remove the tapered-head bolt, and then remove the steering lock actuator assembly from the steering column assembly.

2. REMOVE STEERING COLUMN UPPER WITH SWITCH BRACKET ASSEMBLY (w/o Smart Key System)

(a) Secure the steering column assembly in a vise.

(b) Using a center punch, mark the center of the tapered-head bolt.

(c) Using a 3 to 4 mm (0.118 to 0.157 in.) diameter drill bit, drill a hole in the tapered-head bolt.

(d) Using a screw extractor, remove the tapered-head bolt, and then remove the steering column upper with switch bracket assembly from the steering column assembly.

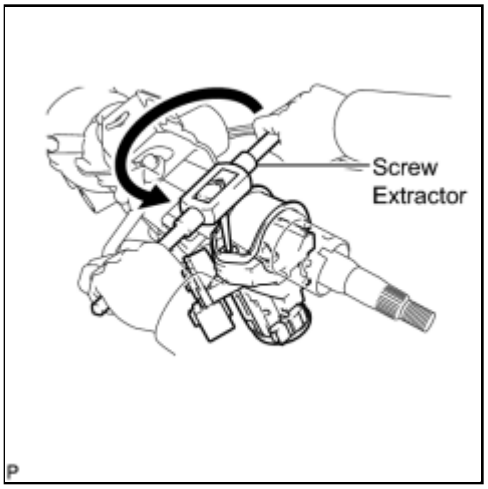

3. REMOVE IGNITION OR STARTER SWITCH ASSEMBLY (for Manual Transaxle)

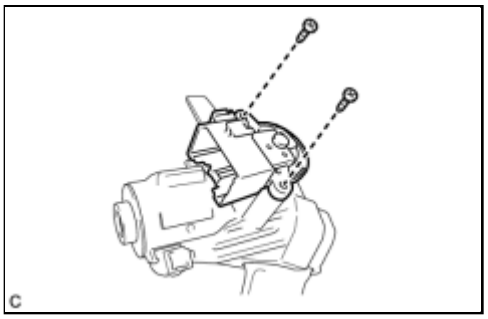

(a) Remove the 2 screws and the ignition or starter switch assembly from the steering column upper bracket.

4. REMOVE IGNITION OR STARTER SWITCH ASSEMBLY (for Automatic Transaxle without Smart Key System)

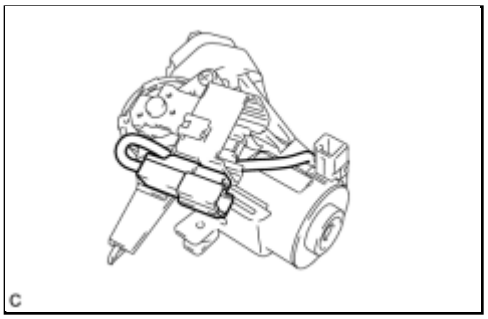

(a) Remove the solenoid wire connector from the ignition or starter switch assembly.

(b) Remove the 2 screws and the ignition or starter switch assembly from the steering column upper bracket.

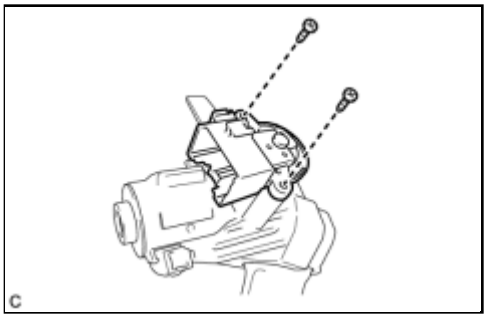

5. REMOVE KEY INTERLOCK SOLENOID (for Automatic Transaxle without Smart Key System)

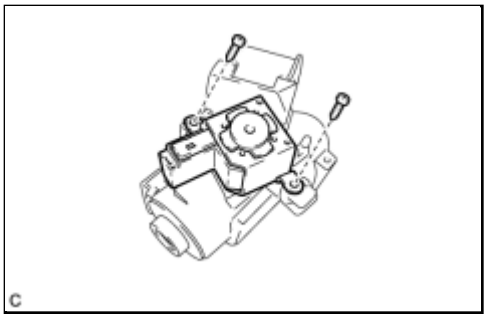

(a) Remove the 2 screws and the key interlock solenoid from the steering column upper bracket.

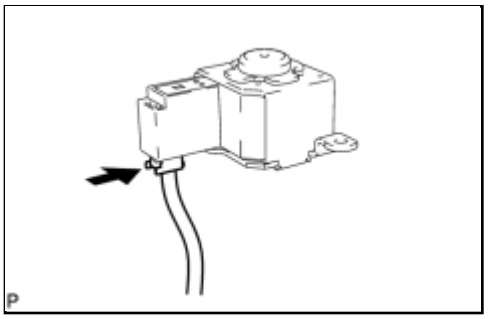

(b) Disconnect the solenoid wire connector from the key interlock solenoid.

6. REMOVE SOLENOID WIRE (for Automatic Transaxle without Smart Key System)

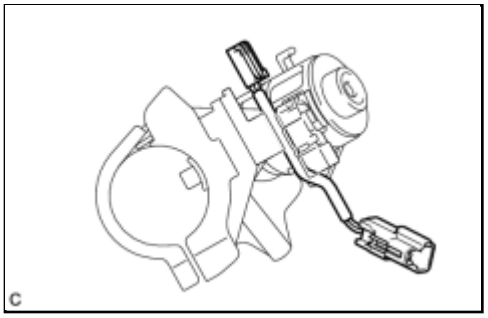

(a) Remove the solenoid wire from the steering column upper bracket.

7. REMOVE IGNITION SWITCH LOCK CYLINDER ASSEMBLY (w/o Smart Key System)

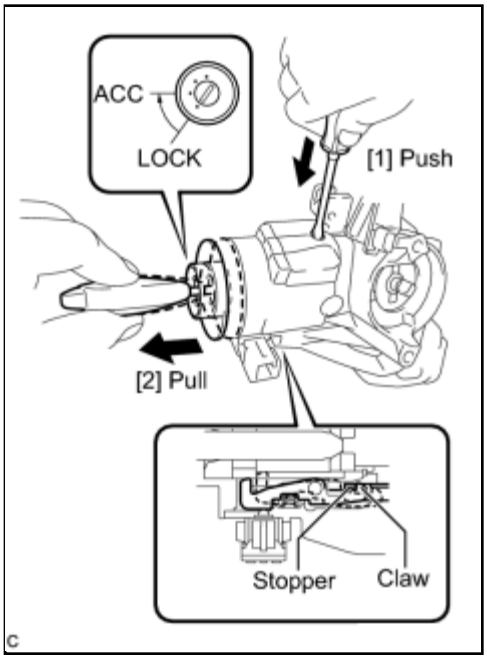

(a) Turn the ignition switch lock cylinder assembly to the ACC position.

(b) Insert a screwdriver into the hole of the steering column upper with switch bracket assembly as shown in the illustration. Pull the ignition switch lock cylinder assembly until its claw contacts the stopper of the steering column upper with switch bracket assembly.

NOTICE:

Make sure to pull the ignition switch lock cylinder assembly until its claw contacts the stopper of the steering column upper with switch bracket assembly. Failure to do so will affect later work operations.

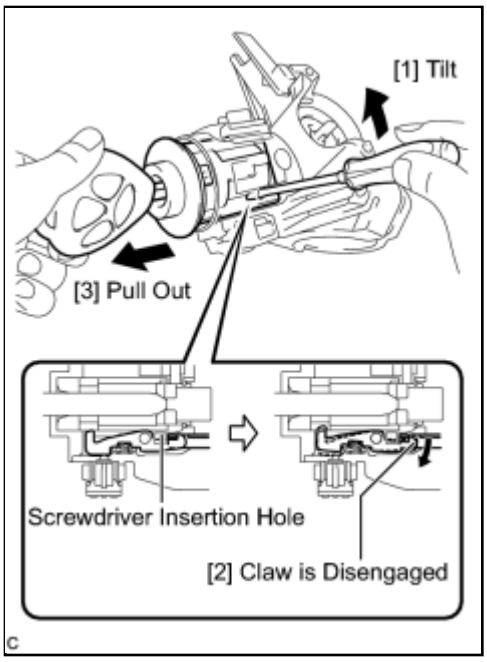

(c) Insert a screwdriver into the hole of the steering column upper with switch bracket assembly. Tilt the screwdriver as shown in the illustration to disengage the claw of the ignition switch lock cylinder assembly, and pull out the ignition switch lock cylinder assembly.

8. REMOVE UNLOCK WARNING SWITCH ASSEMBLY (w/o Smart Key System)

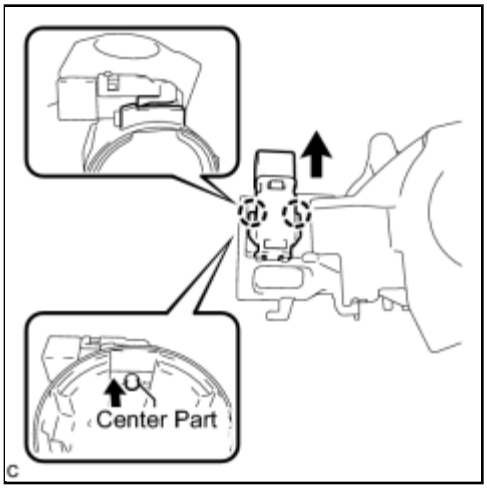

(a) Remove the unlock warning switch assembly by pushing up the center part and releasing the 2 claws.

HINT:

Slide the unlock warning switch in the direction shown by the arrow in the illustration to remove it.

Last Modified: 3-10-2010	6.4 A	**From:** 200901
Model Year: 2010	**Model:** Corolla	**Doc ID:** RM0000029SX00ZX
Title: STEERING COLUMN: STEERING COLUMN ASSEMBLY: INSTALLATION (2010 Corolla)		

INSTALLATION

1. INSTALL NO. 2 STEERING INTERMEDIATE SHAFT ASSEMBLY

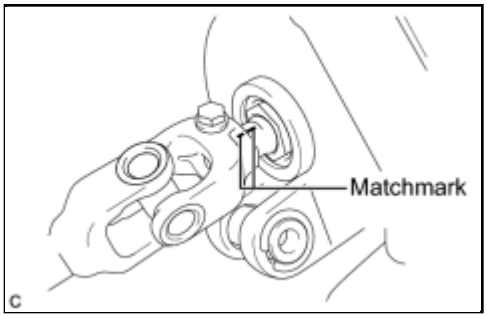

(a) Align the matchmarks on the No. 2 steering intermediate shaft assembly and the steering column assembly.

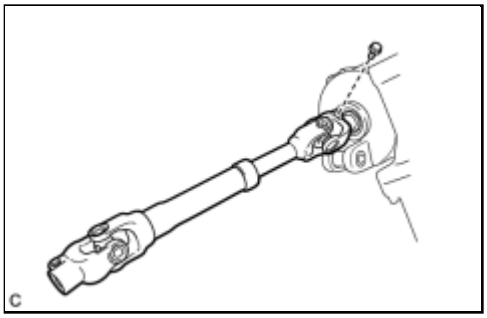

(b) Install the bolt.

Torque: 35 N·m (360 kgf·cm, 26ft·lbf)

2. INSTALL STEERING POST ASSEMBLY (for 2ZR-FE)

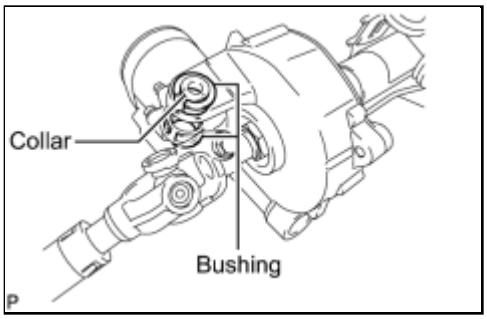

(a) Check that the 2 bushings are securely installed to the steering column assembly.

HINT:

If the bushings are missing or damaged, replace the steering column assembly with a new one.

(b) Install the steering post assembly with the bolt and 2 nuts.

Torque: 25 N·m (255 kgf·cm, 18ft·lbf)

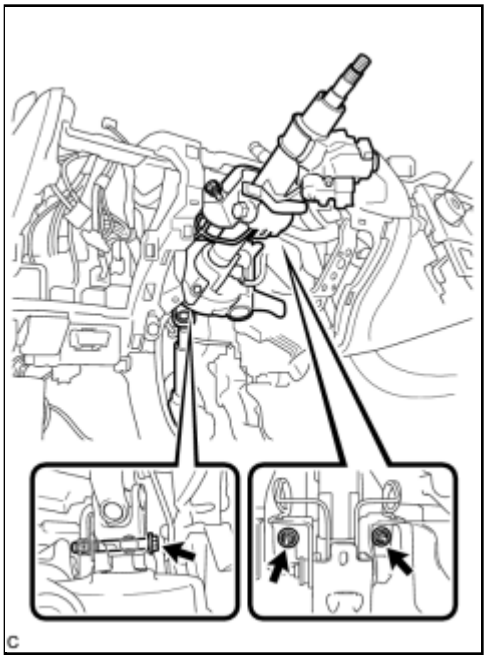

NOTICE:

- Do not damage the 2 bushings.
- Do not line up the bolt hole by prying on the collar or bushings. Only install the bolt in straight, without applying any force to the bushings.

(c) Connect the connectors and engage the wire harness clamps to the steering column assembly.

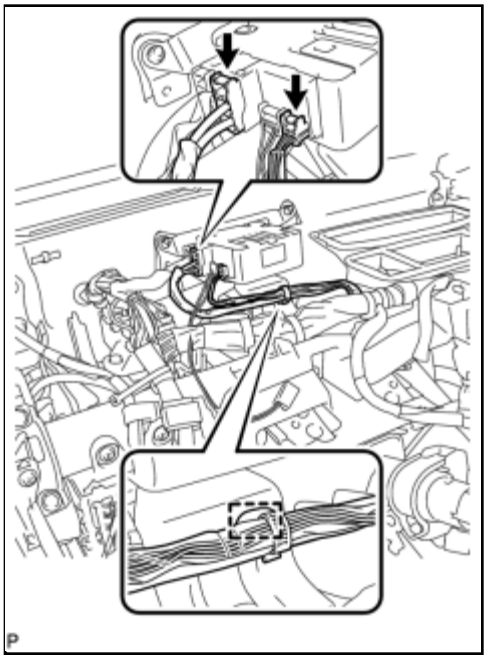

(d) Connect the 2 connectors to the power steering ECU assembly.

(e) Install the wire harness clamp to the power steering ECU assembly.

3. INSTALL STEERING POST ASSEMBLY (for 2AZ-FE)

(a) Check that the 2 bushings are securely installed to the steering column assembly.

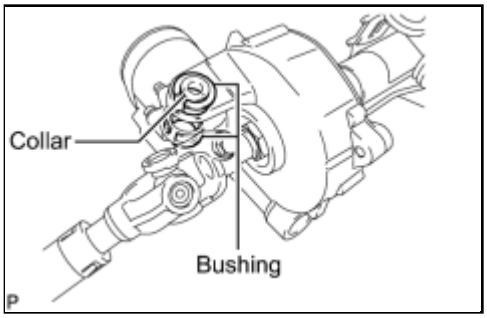

HINT:

If the bushings are missing or damaged, replace the steering column assembly with a new one.

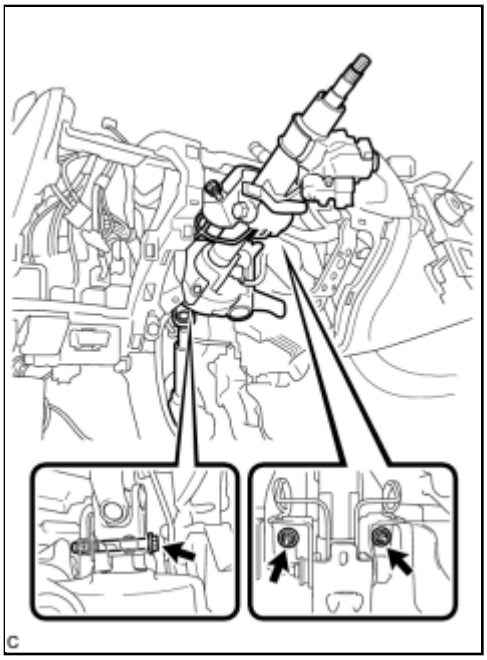

(b) Install the steering post assembly with the bolt and 2 nuts.

Torque: 25 N·m (255 kgf·cm, 18ft·lbf)

NOTICE:

- Do not damage the 2 bushings.
- Do not line up the bolt hole by prying on the collar or bushings. Only install the bolt in straight, without applying any force to the bushings.

(c) Connect the connectors and engage the wire harness clamps to the steering column assembly.

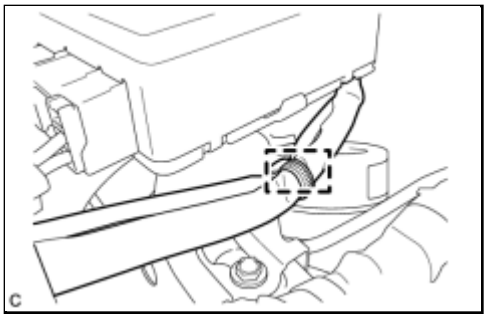

(d) Engage the wire harness clamp to the power steering ECU assembly.

(e) Connect the connector to the power steering ECU assembly.

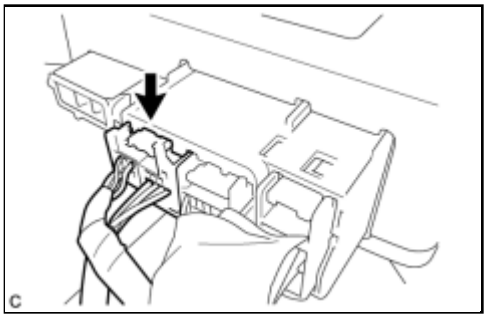

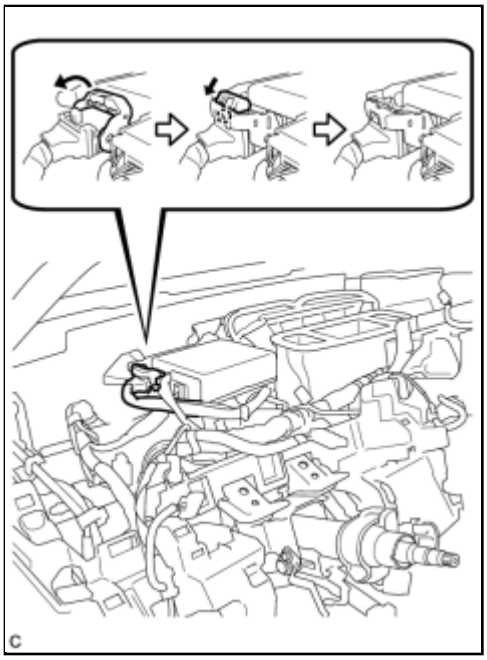

(f) Connect the connector to the power steering ECU assembly.

HINT:

Return the lock lever to the original position, engage the claw, and push in the lock of the lock lever, as shown in the illustration.

4. TURN FRONT WHEELS TO FACE STRAIGHT AHEAD

5. CONNECT NO. 2 STEERING INTERMEDIATE SHAFT ASSEMBLY

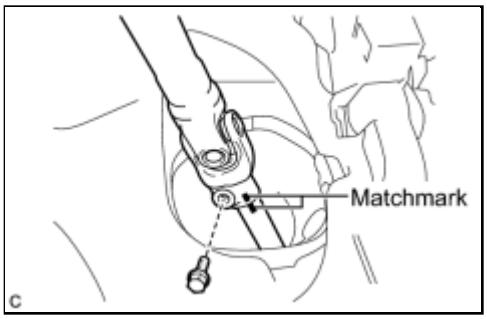

(a) Align the matchmarks on the No. 2 steering intermediate shaft assembly and the steering intermediate shaft assembly.

(b) Install the bolt.

Torque: 35 N·m (360 kgf·cm, 26ft·lbf)

6. INSTALL STOP LIGHT SWITCH ASSEMBLY INFO

7. INSTALL NO. 3 AIR DUCT SUB-ASSEMBLY

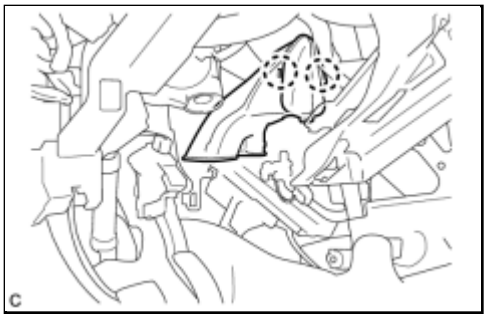

(a) Engage the 2 claws and install the No. 3 air duct sub-assembly.

8. INSTALL INSTRUMENT PANEL SUB REINFORCEMENT

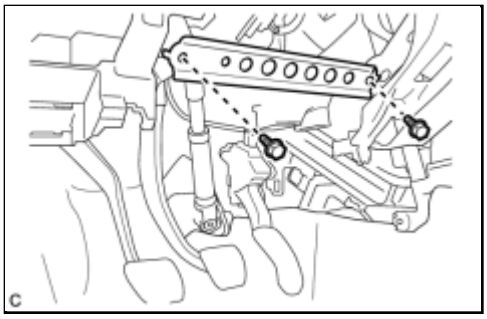

(a) Install the instrument panel sub reinforcement with the 2 bolts.

9. INSTALL COLUMN HOLE COVER SILENCER SHEET

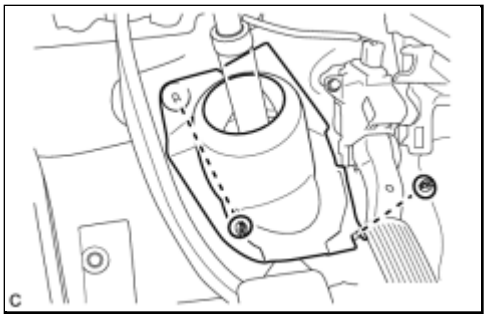

(a) Install the column hole cover silencer sheet with the 2 clips.

(b) Install the floor carpet.

10. INSTALL TRANSPONDER KEY AMPLIFIER (w/o Smart Key System)

(a) Connect the connector to the transponder key amplifier.

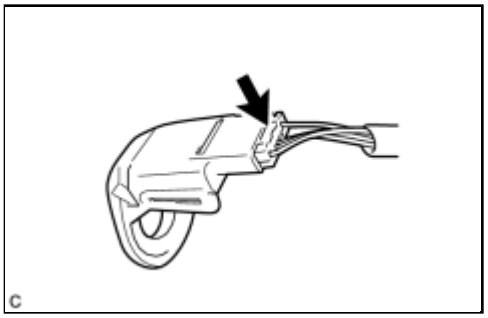

(b) Align the transponder key amplifier with the steering column upper bracket. Tilt the amplifier slightly and slide it into position.

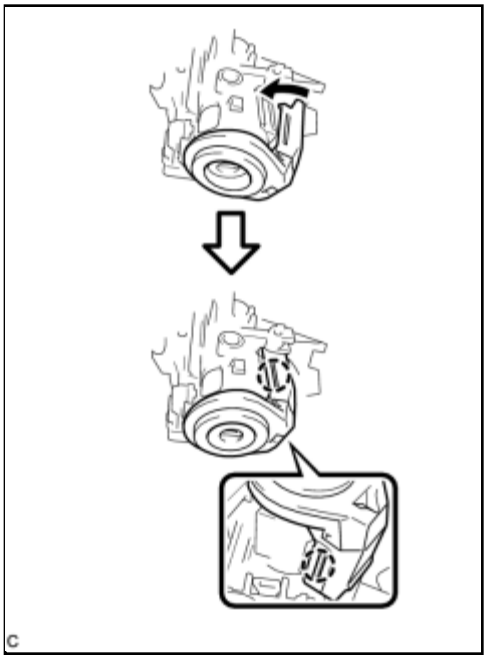

(c) Push the transponder key amplifier, and engage the 2 claws to install the transponder key amplifier to the steering column upper bracket.

11. INSTALL UPPER INSTRUMENT PANEL SUB-ASSEMBLY

HINT:

Refer to the instructions for Installation of the upper instrument panel INFO **.**

12. INSTALL TURN SIGNAL SWITCH ASSEMBLY WITH SPIRAL CABLE SUB-ASSEMBLY

(a) Using pliers, engage the claw. Install the turn signal switch assembly with spiral cable sub-assembly to the steering column assembly.

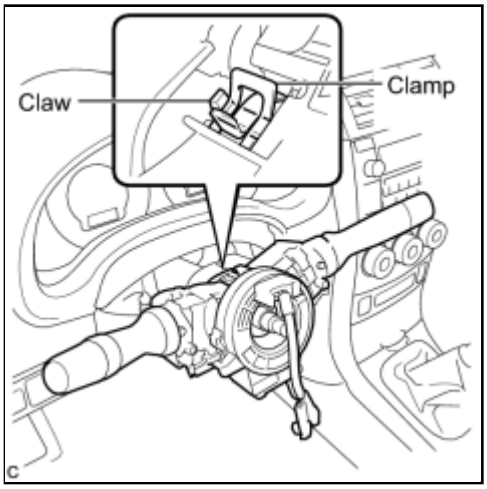

(b) Install the connectors to the turn signal switch assembly with spiral cable sub-assembly.

13. INSTALL UPPER STEERING COLUMN COVER

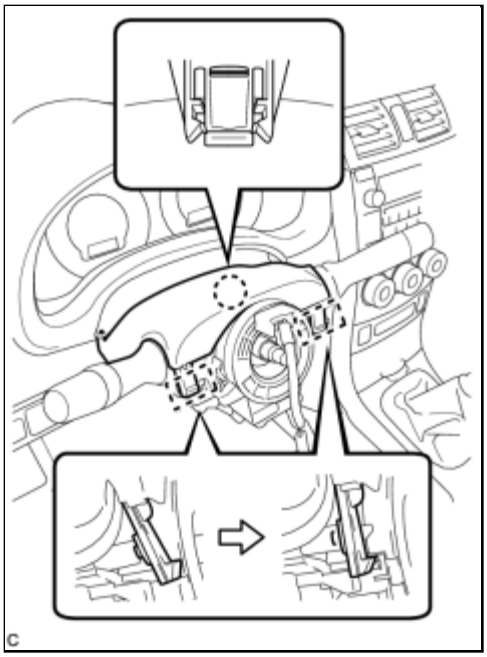

(a) Engage the claw and the 2 pins, and install the upper steering column cover.

14. INSTALL LOWER STEERING COLUMN COVER

NOTICE:

If the lower steering column cover is installed in the incorrect order, it will not be possible to assemble the lower steering column cover.

(a) Engage the 2 claws to install the lower steering column cover.

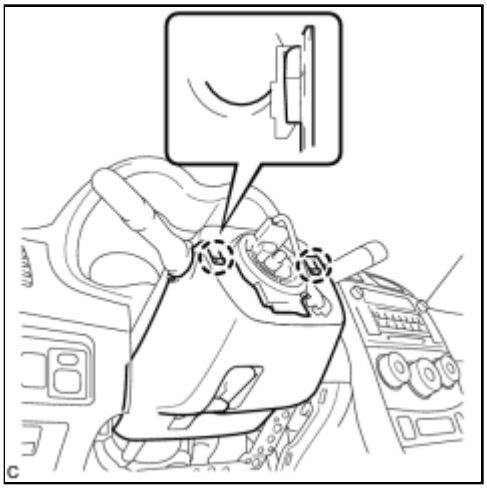

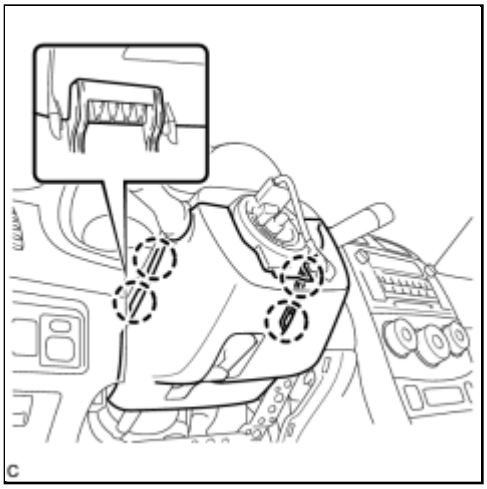

(b) Engage the 4 claws.



(c) Engage the claw.

HINT:

Press the area around the claw to engage it.

15. INSTALL LOWER INSTRUMENT PANEL FINISH PANEL SUB-ASSEMBLY INFO

16. TURN FRONT WHEELS TO FACE STRAIGHT AHEAD

17. ADJUST SPIRAL CABLE INFO

18. INSTALL STEERING WHEEL ASSEMBLY (w/ Steering Pad Switch)

HINT:

Refer to the procedures from "Install steering wheel assembly" INFO .

19. INSTALL STEERING WHEEL ASSEMBLY (w/o Steering Pad Switch)

HINT:

Refer to the procedures from "Install steering wheel assembly" INFO .

20. REGISTER ECU CODE

NOTICE:

When replacing the steering lock actuator assembly, perform initialization INFO .

21. CALIBRATE TORQUE SENSOR ZERO POINT (for 2AZ-FE)

HINT: INFO .

22. CALIBRATE TORQUE SENSOR ZERO POINT (for 2ZR-FE)

HINT: INFO .

Last Modified: 3-10-2010	6.4 A	**From:** 200901
Model Year: 2010	**Model:** Corolla	**Doc ID:** RM000000UD1033X
Title: STEERING COLUMN: STEERING COLUMN ASSEMBLY: REASSEMBLY (2010 Corolla)		

REASSEMBLY

NOTICE:

When using a vise, do not overtighten it.

1. INSTALL STEERING LOCK ACTUATOR ASSEMBLY (w/ Smart Key System)

(a) Secure the steering column assembly in a vise.

(b) Temporarily install the steering lock actuator assembly to the steering column assembly with a new tapered-head bolt.

NOTICE:

Be sure to use a new tapered-head bolt.

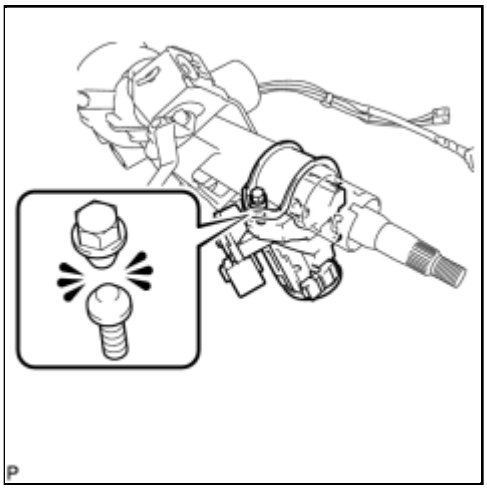

(c) Tighten the tapered-head bolt until the bolt heads break off.

2. INSTALL UNLOCK WARNING SWITCH ASSEMBLY (w/o Smart Key System)

(a) Attach the 2 claws to install the unlock warning switch onto the steering column upper bracket.

HINT:

Slide the unlock warning switch in the direction shown by the arrow in the illustration to install it.

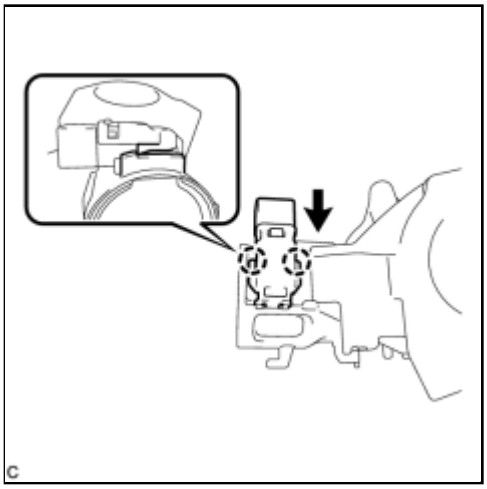

3. INSTALL IGNITION SWITCH LOCK CYLINDER ASSEMBLY (w/o Smart Key System)

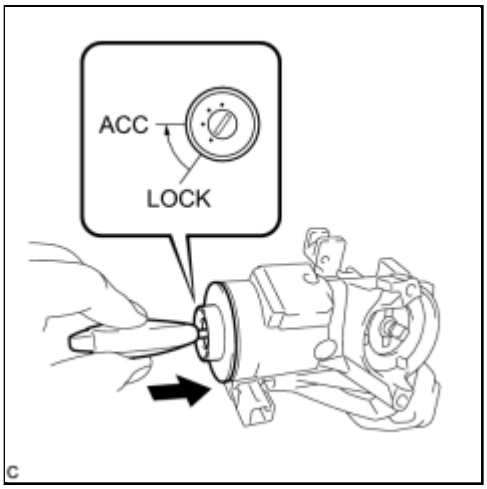

(a) Make sure that the ignition switch lock cylinder assembly is in the ACC position.

(b) Install the ignition switch lock cylinder assembly to the steering lock sub-assembly.

(c) Make sure that the ignition switch lock cylinder assembly is securely installed.

4. INSTALL SOLENOID WIRE (for Automatic Transaxle without Smart Key System)

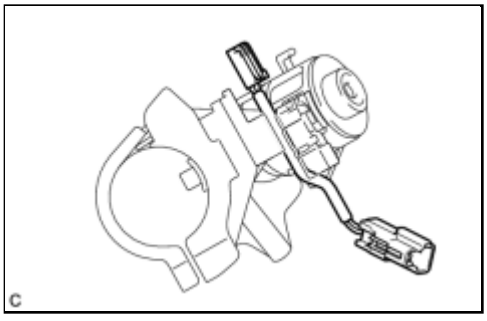

(a) Install the solenoid wire to the steering column upper bracket.

5. INSTALL KEY INTERLOCK SOLENOID (for Automatic Transaxle without Smart Key System)

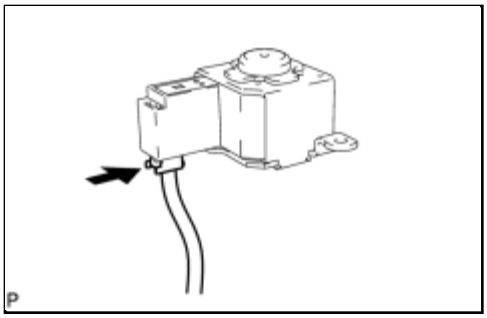

(a) Connect the solenoid wire connector to the key interlock solenoid.

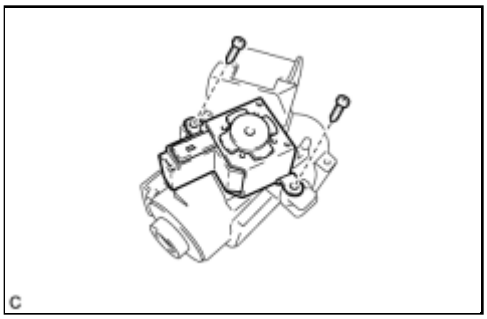

(b) Install the key interlock solenoid to the steering column upper bracket with the 2 screws.

6. INSTALL IGNITION OR STARTER SWITCH ASSEMBLY (for Manual Transaxle)

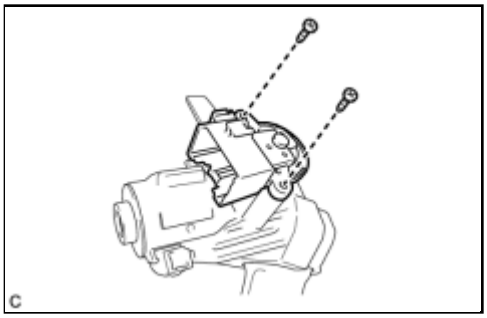

(a) Install the ignition or starter switch assembly to the steering column upper bracket with the 2 screws.

7. INSTALL IGNITION OR STARTER SWITCH ASSEMBLY (for Automatic Transaxle without Smart Key System)

(a) Install the ignition or starter switch assembly to the steering column upper bracket with the 2 screws.

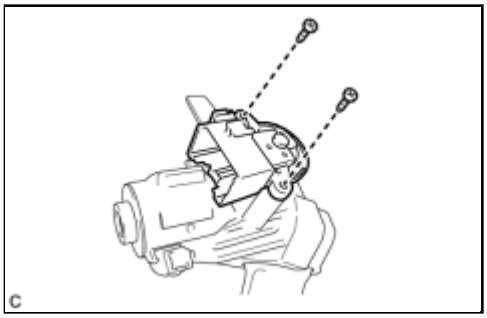

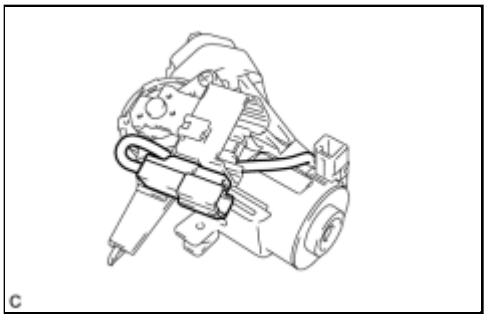

(b) Install the solenoid wire connector to the ignition or starter switch assembly.

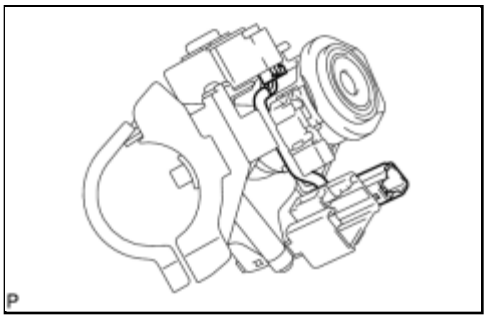

(c) Make sure that the solenoid wire runs securely through the gap of the steering column upper bracket as shown in the illustration.

8. INSPECT STEERING LOCK OPERATION (w/o Smart Key System) INFO

9. INSTALL STEERING COLUMN UPPER WITH SWITCH BRACKET ASSEMBLY (w/o Smart Key System)

(a) Secure the steering column assembly in a vise.

(b) Temporarily install the steering column upper with switch bracket assembly to the steering column assembly with a new tapered-head bolt.

NOTICE:

Be sure to use a new tapered-head bolt.

(c) Tighten the tapered-head bolt until the bolt heads break off.

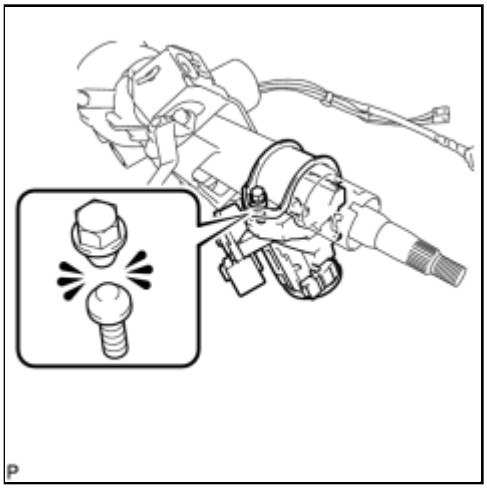
P

Last Modified: 3-10-2010	6.4 G	**From:** 200901
Model Year: 2010	**Model:** Corolla	**Doc ID:** RM000002W8B00SX
Title: STEERING COLUMN: STEERING COLUMN ASSEMBLY: INSPECTION (2010 Corolla)		

INSPECTION

NOTICE:

When using a vise, do not overtighten it.

1. INSPECT PRELOAD

(a) Secure the steering column assembly in a vise.

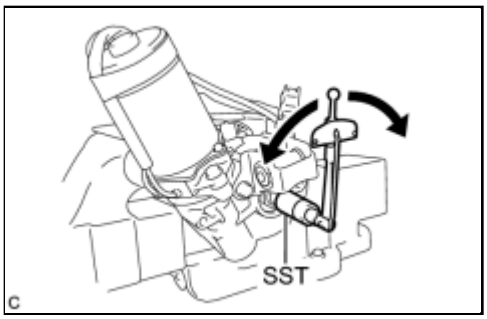

(b) Using SST, turn the main shaft and measure the preload.

SST: 09616-00011

Preload - Torque: 0.8 to 1.2 N·m (8 to 12 kgf·cm, 7 to 10in·lbf)

If the preload is not as specified, replace the steering column assembly.

2. INSPECT STEERING LOCK OPERATION (w/o Smart Key System)

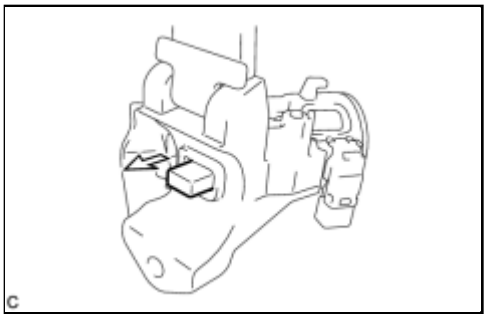

(a) Check that the steering lock mechanism is activated when the key is removed.

(b) Check that the steering lock mechanism is deactivated when the key is inserted and turned to the ACC position.

HINT:

If there is any abnormality, replace the ignition switch lock cylinder assembly or steering column upper with switch bracket assembly.

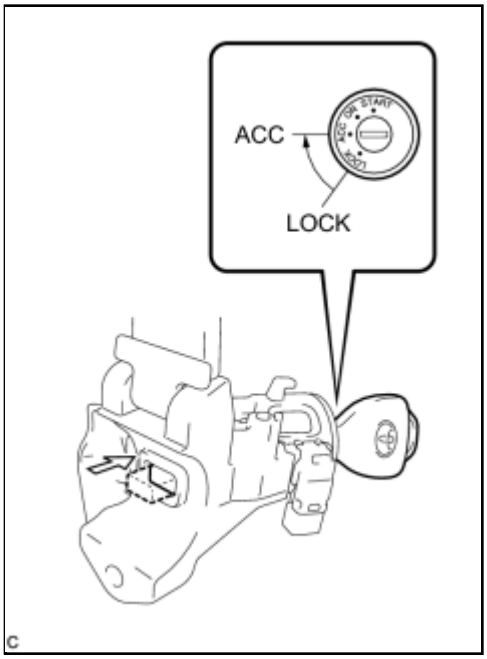
ACC
LOCK
C

Last Modified: 3-10-2010	6.4 L	**From:** 200901
Model Year: 2010	**Model:** Corolla	**Doc ID:** RM000000XWK030X
Title: STEERING COLUMN: STEERING LOCK SYSTEM: PRECAUTION (2010 Corolla)		

PRECAUTION

1. PRECAUTIONS WHEN WORKING ON STEERING LOCK SYSTEM

(a) After replacing the steering lock actuator assembly (steering lock ECU), perform the key ID code registration.

(b) If the steering lock actuator assembly is replaced, open and close the driver's door. The engine may not start until the driver's door is opened or closed.

HINT:

Opening and closing the driver's door causes the steering lock actuator assembly (steering lock ECU) to memorize the correct steering lock bar position.

(c) If checking for DTCs of the smart key system function or if checking the Data List with the engine switch off, make sure that the driver's door is open.

HINT:

When the engine switch is off, the main body ECU may be in a sleep mode. If the main body ECU is in this sleep mode, it will not be possible for the Techstream to communicate with it. Opening and closing the driver's door will cause the ECU to exit the sleep mode.

2. PRECAUTIONS FOR STEERING LOCK ACTUATOR

NOTICE:

If the steering lock actuator (steering lock ECU) is replaced, open and close the driver side door with the engine switch off and the shift lever in neutral to record the current steering lock position into the steering lock ECU. If this is not performed, the engine may not start.

Last Modified: 3-10-2010	6.4 R	**From:** 200901
Model Year: 2010	**Model:** Corolla	**Doc ID:** RM000000XWN02DX
Title: STEERING COLUMN: STEERING LOCK SYSTEM: PARTS LOCATION (2010 Corolla)		

PARTS LOCATION

ILLUSTRATION

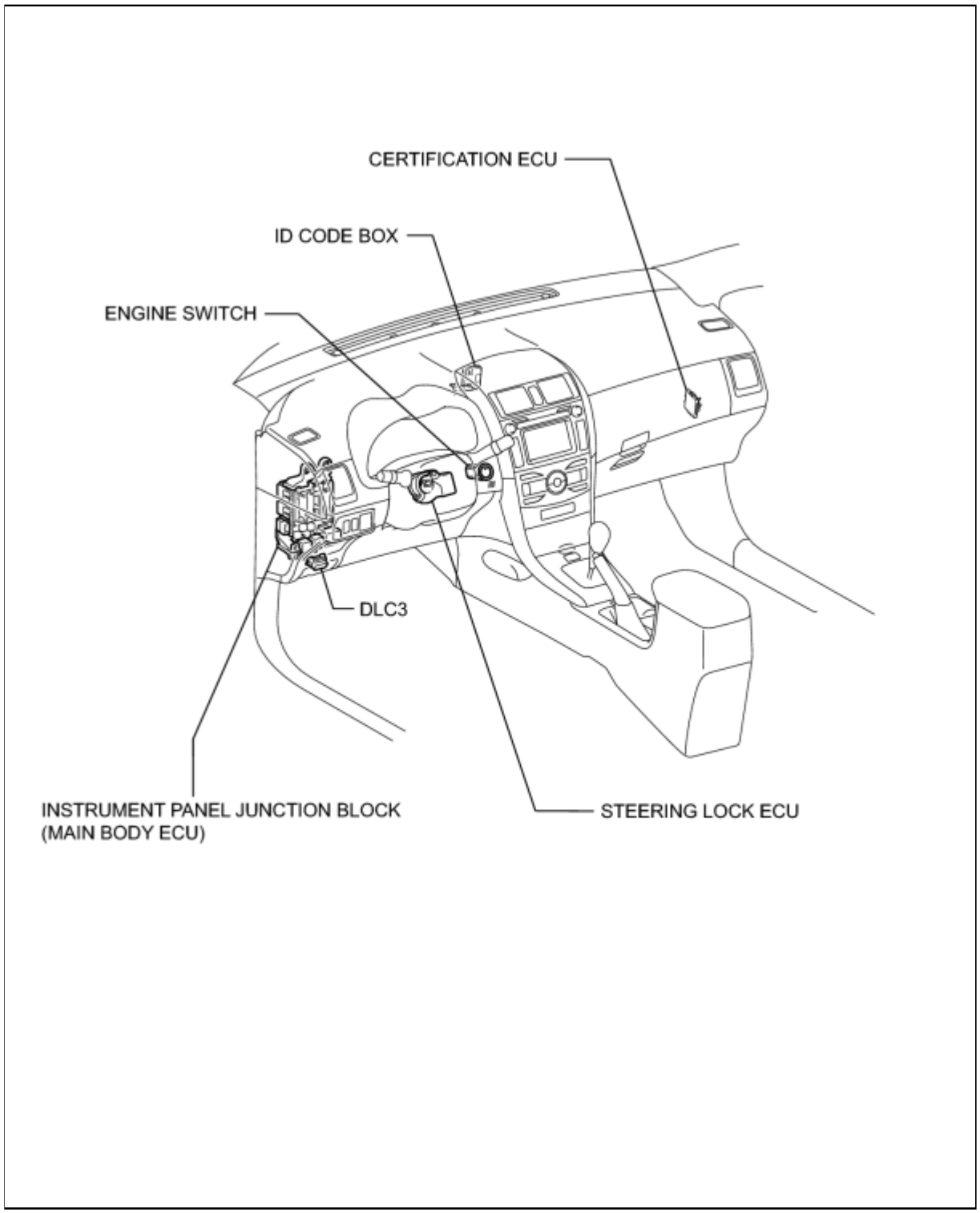

Last Modified: 3-10-2010	6.4 U	**From:** 200901
Model Year: 2010	**Model:** Corolla	**Doc ID:** RM000000XWU02EX
Title: STEERING COLUMN: STEERING LOCK SYSTEM: SYSTEM DIAGRAM (2010 Corolla)		

SYSTEM DIAGRAM

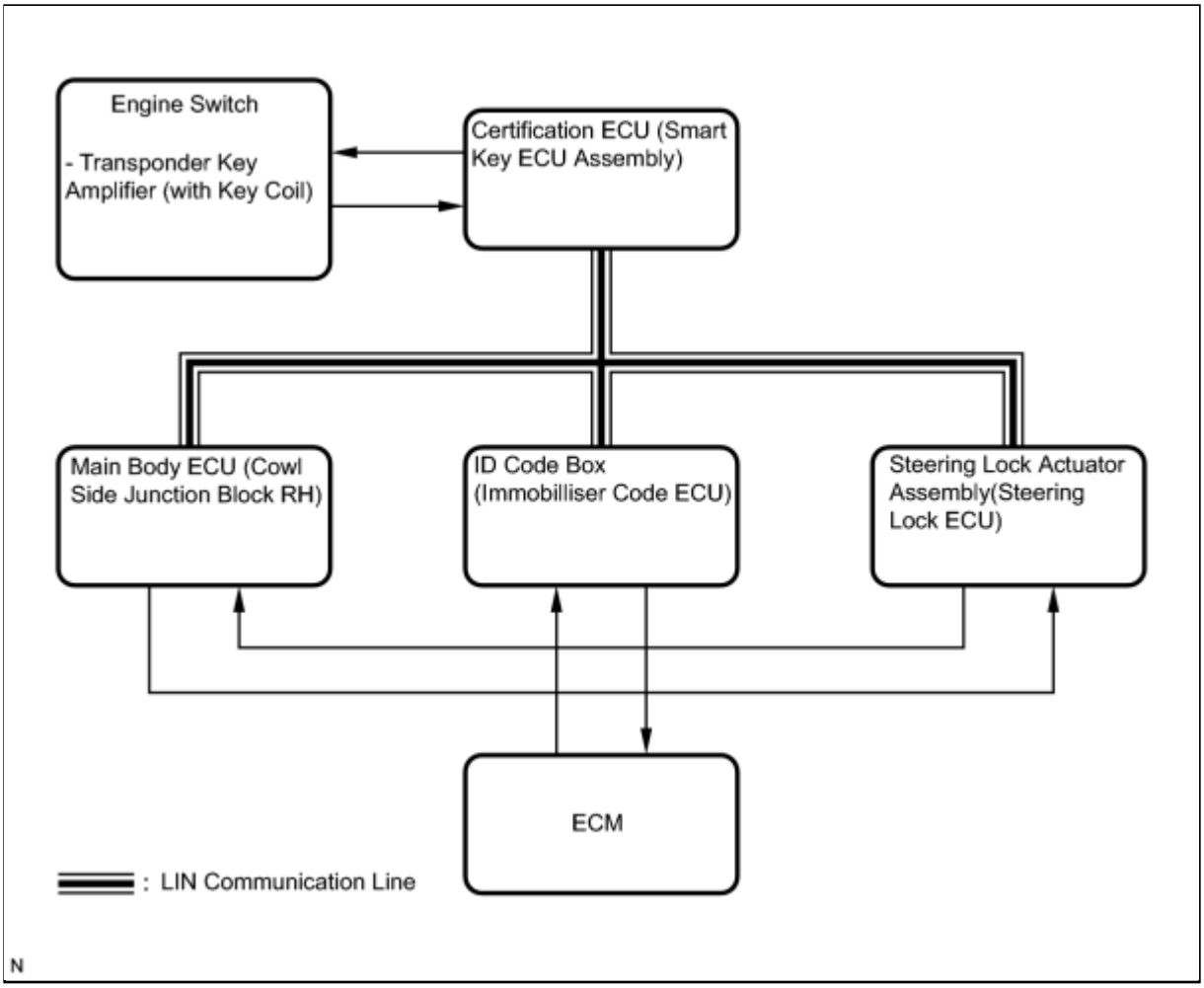

Input and Output Signals of Each ECU

TRANSMITTING ECU (TRANSMITTER)	RECEIVING ECU	SIGNAL	COMMUNICATION METHOD
Main Body ECU	Steering Lock ECU	Power supply status (to steering lock motor)	LIN
Steering Lock ECU	• Certification ECU • Main Body ECU • ID Code Box	Sleep available status	LIN

TRANSMITTING ECU (TRANSMITTER)	RECEIVING ECU	SIGNAL	COMMUNICATION METHOD
Steering Lock ECU	• Certification ECU • Main Body ECU • ID Code Box	Lock/Unlock sensor status	LIN
Steering Lock ECU	• Certification ECU • Main Body ECU • ID Code Box	Steering lock status	LIN
Steering Lock ECU	• Certification ECU • Main Body ECU • ID Code Box	Motor control status	LIN
Steering Lock ECU	• Certification ECU • Main Body ECU • ID Code Box	Diagnostic response status	LIN
Steering Lock ECU	• Certification ECU • Main Body ECU • ID Code Box	Lock/Unlock sensor malfunction	LIN
Steering Lock ECU	• Certification ECU • Main Body ECU • ID Code Box	Power supply malfunction (to steering lock motor)	LIN
Steering Lock ECU	• Certification ECU • Main Body ECU • ID Code Box	Motor driver malfunction	LIN
Steering Lock ECU	• Certification ECU	Lock bar (stuck) status	LIN

TRANSMITTING ECU (TRANSMITTER)	RECEIVING ECU	SIGNAL	COMMUNICATION METHOD
	• Main Body ECU • ID Code Box		
Steering Lock ECU	• Certification ECU • Main Body ECU • ID Code Box	Push start status	LIN
Steering Lock ECU	• Certification ECU • Main Body ECU • ID Code Box	Lock/Unlock relay drive status	LIN
Steering Lock ECU	• Certification ECU • Main Body ECU • ID Code Box	Engine start control status	LIN

Last Modified: 3-10-2010	6.4 D	**From:** 200901
Model Year: 2010	**Model:** Corolla	**Doc ID:** RM000000XWL02GX
Title: STEERING COLUMN: STEERING LOCK SYSTEM: HOW TO PROCEED WITH TROUBLESHOOTING (2010 Corolla)		

HOW TO PROCEED WITH TROUBLESHOOTING

HINT:

- Perform troubleshooting in accordance with the following flowchart.
- *: Use the Techstream.

1.	**VEHICLE BROUGHT TO WORKSHOP**

NEXT

2.	**INSPECT BATTERY VOLTAGE**

Standard voltage:
11 to 14 V

If the voltage is below 11 V, recharge or replace the battery before proceeding to the next step.

NEXT

3.	**CHECK AND CLEAR DTCs***

NEXT

4.	**PROBLEM SYMPTOM CONFIRMATION**

Result:

RESULT	PROCEED TO
Symptom does not occur.	A
Symptom occurs.	B

B ▶ **Go to step 6**

A ▼

5.	**SYMPTOM SIMULATION**

NEXT ▼

6.	**CHECK CAN COMMUNICATION SYSTEM***

HINT:

Check that there are no problems in the CAN communication system before troubleshooting of the steering lock system.

NEXT ▼

7.	**DTC CHECK***

(a) Check for DTCs INFO .

Result:

RESULT	PROCEED TO
DTC is output.	A

RESULT	PROCEED TO
DTC is not output.	B

A ▶ **Go to step 9**

B
▼

8.	**PROBLEM SYMPTOMS TABLE**

Result:

RESULT	PROCEED TO
Fault is not listed in problem symptoms table.	A
Fault is listed in problem symptoms table.	B

B ▶ **Go to step 10**

A
▼

9.	**DTC CHART**

NEXT
▼

10.	**CIRCUIT INSPECTION***

NEXT

11.	PROBLEM IDENTIFICATION

NEXT

12.	REPAIR OR REPLACEMENT

NEXT

13.	CONFIRMATION TEST*

NEXT END

Last Modified: 3-10-2010	6.4 D	**From:** 200901
Model Year: 2010	**Model:** Corolla	**Doc ID:** RM000000XWR02DX
Title: STEERING COLUMN: STEERING LOCK SYSTEM: SYSTEM DESCRIPTION (2010 Corolla)		

SYSTEM DESCRIPTION

1. DESCRIPTION

(a) The steering lock system locks or unlocks the steering by activating the steering lock actuator assembly. The steering lock ECU activates the motor that is built into the actuator assembly based on signals from the certification ECU and main body ECU.

(b) A LIN (Local Interconnect Network) is used for communication between different ECUs in this system.

2. FUNCTION OF COMPONENTS

(a) The steering lock ECU controls the system based on information from the following components.

ITEM	FUNCTION
Steering lock actuator assembly	Consists of a motor, lock bar, lock and unlock position sensors, etc. Activated by the steering lock ECU.
Steering lock ECU	Included in the steering lock actuator assembly. This ECU activates the steering lock motor based on permission signals from the main body ECU and certification ECU. Detects steering lock or unlock state and transmits this status to other ECUs.
Main body ECU	Permits the steering lock ECU to supply power to activate the motor. The main body ECU and certification ECU permit engine start after receiving an unlock signal from the steering lock ECU.
Certification ECU	Orders the steering lock ECU to lock/unlock the steering. The main body ECU and certification ECU permit engine start after receiving an unlock signal from the steering lock ECU.
IG2 relay	Controlled by the main body ECU. This ECU sends IG signals to the steering lock ECU.
ID code box	Transmits command to set or cancel immobiliser to ECM based on permission signals from certification ECU.

Last Modified: 3-10-2010	6.4 D	**From:** 200901
Model Year: 2010	**Model:** Corolla	**Doc ID:** RM000001PWX01PX
Title: STEERING COLUMN: STEERING LOCK SYSTEM: INITIALIZATION (2010 Corolla)		

INITIALIZATION

HINT:

In vehicles equipped with the smart key system, the starting function may not operate after recharging or while jump-starting a discharged battery. This condition is most common if the battery voltage drops below 9 V. The following procedure has been developed to address this condition.

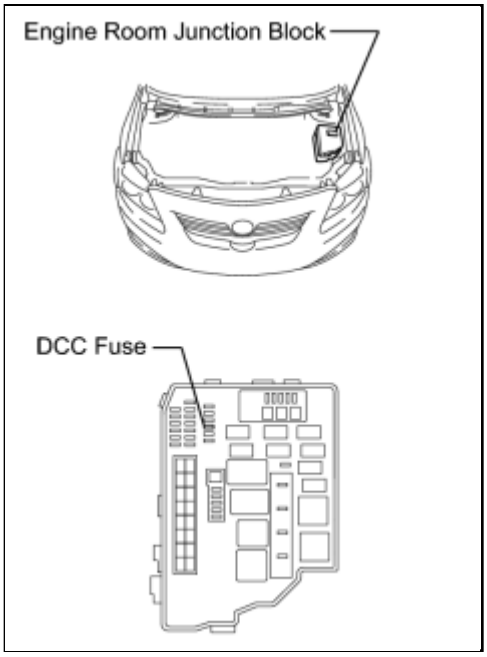

1. INITIALIZATION PROCEDURE

(a) Confirm that the DCC fuse is installed.

HINT:

If the DCC fuse is not installed, install it at this time.

(b) Move the shift lever to neutral.

(c) Turn the engine switch off.

(d) Open the driver's door.

HINT:

Opening the driver's door will start an initialization process between the steering lock ECU and the engine room junction block.

(e) Depress the brake pedal.

(f) Press the engine switch.

Last Modified: 3-10-2010	6.4 T	**From:** 200901
Model Year: 2010	**Model:** Corolla	**Doc ID:** RM000000XWP02TX
Title: STEERING COLUMN: STEERING LOCK SYSTEM: PROBLEM SYMPTOMS TABLE (2010 Corolla)		

PROBLEM SYMPTOMS TABLE

HINT:

- Use the table below to help determine the cause of problem symptoms. If multiple suspected areas are listed in order of probability in the causes of the symptoms are listed in order of probability in the "Suspected Area" column of the table. Check each symptom by checking the suspected areas in the order they are listed. Replace parts as necessary.
- Inspect the fuses and relays related the this system before inspecting the suspected areas below.

Steering Lock System

SYMPTOM	SUSPECTED AREA	SEE PAGE
Steering wheel cannot be unlocked (the engine cannot be started).	Initialization	INFO
	Check for DTCs in the smart key system. (for Start Function)	INFO
	Check for DTCs in the engine immobiliser system. (for w/ smart key system)	INFO
	Check that the Lck/Unlck Rec item in the Data List of the certification ECU displays YES within 10 seconds after starting the engine. (If it displays NO, see "No steering unlock" command in this table.)	INFO
	Steering lock ECU power source circuit	INFO
	Check the input signal from the IGE terminal of the steering lock ECU.	INFO
	Replace the steering lock ECU.	INFO
Steering wheel cannot be unlocked (no steering unlock command).	Check that the S Code Chk item in the Data List of the certification ECU displays OK. (If it displays NG, replace the ID code box.)	-
	Check that the L Code Chk item in the Data List of the certification ECU displays OK. (If it displays NG, replace the ID code box.)	-
	Replace the certification ECU.	-
	Check for DTCs in the smart key system. (for Start Function)	INFO
	Check for DTCs in the engine immobiliser system. (for w/ smart key system)	INFO
	With the engine switch off and the shift in the P position, open and close the drivers door. After that, check that the Lck/Unlck Rec item in the DATA LIST of the certification ECU displays YES within 10	INFO

SYMPTOM	SUSPECTED AREA	SEE PAGE
	seconds. (If it displays NO, see "No steering lock" command in this table.)	
	Steering lock ECU power source circuit	INFO
	Check the input signal from the IGE terminal of the steering lock ECU.	INFO
	Replace the steering lock ECU.	INFO
Steering wheel cannot be locked (no steering lock command).	Courtesy light switch circuit	INFO
	Check that the S Code Chk item in the Data List of the certification ECU displays OK. (If it displays NG, replace the ID code box.)	-
	Check that the L Code Chk item in the Data List of the certification ECU displays OK. (If it displays NG, replace the ID code box.)	-
	Replace the certification ECU.	-

Smart Key System

SYMPTOM	SUSPECTED AREA	SEE PAGE
Engine does not start.	Initialization	INFO
	Check for DTCs in the smart key system. (for Start Function)	INFO
	Check for DTCs in the engine immobiliser system. (for w/ smart key system)	INFO
	Check that the engine switch is turned on (IG).	-
	Check cranking operation. (If cranking operation is possible, see "Engine does not start due to the engine immobiliser" in this table.)	-
	Check Shift P Sig in the Data List of the main body ECU and confirm that the shift signal is normal.	-
	Check whether the steering wheel is locked or unlocked. (If it is locked, see "Steering wheel cannot be unlocked" in the steering lock function table.)	-
	Steering lock ECU power source circuit	INFO
	Check the output from the SLP terminal of the steering lock ECU.	INFO
	Check the output signal from the ST SW of the certification ECU (DTC B2275).	INFO
	Replace the main body ECU.	-

SYMPTOM	SUSPECTED AREA	SEE PAGE
Engine does not start due to the engine immobiliser.	Check that the L Code Chk item in the Data List of the certification ECU displays OK. (If it displays NG, replace the ID code box.)	-
	Check that the Start Rqst item in the Data List of the certification ECU displays YES. (If it displays NO, replace the certification ECU.)	-
	Check that the S Code Chk item in the Data List of the certification ECU displays OK. (If it displays NG, replace the ID code box.)	-
	Replace the ID code box.	-

Last Modified: 3-10-2010	6.4 U	**From:** 200901
Model Year: 2010	**Model:** Corolla	**Doc ID:** RM000000XWO02DX
Title: STEERING COLUMN: STEERING LOCK SYSTEM: TERMINALS OF ECU (2010 Corolla)		

TERMINALS OF ECU

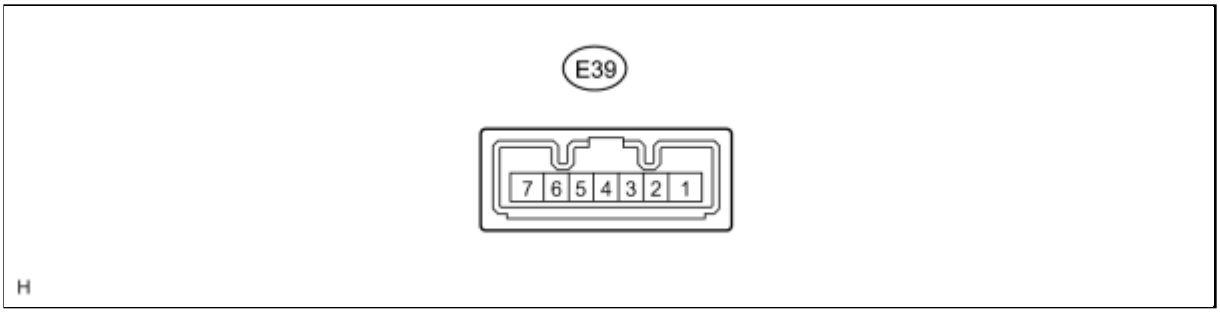

1. STEERING LOCK ACTUATOR ASSEMBLY (STEERING LOCK ECU)

TERMINAL NO. (SYMBOL)	WIRING COLOR	TERMINAL DESCRIPTION	CONDITION	SPECIFIED CONDITION
E39-1 (GND) - Body ground	W-B - Body ground	Ground	Always	Below 1 V
E39-2 (SGND) - Body ground	BR - Body ground*1 W-B - Body ground*2	Signal ground	Always	Below 1 V
E39-3 (IGE) - E39-1 (GND)	P - W-B*1 LG - W-B*2	Power source for driving motor	• Motor is in operation • Motor is not in operation	• Below 1 V • 11 to 14 V
E39-4 (SLP1) - E39-2 (SGND)	G - BR*1 BR - W-B*2	Unlock position sensor output signal	• Steering is locked • Steering lock is released	• 11 to 14 V • Below 1 V
E39-5 (LIN) - E39-2 (SGND)	V - BR*1 V - W-B*2	LIN communication bus	Engine switch on (IG)	Pulse generation
E39-6 (IG2) - E39-1 (GND)	B - W-B	IG signal input	Engine switch on (IG)	11 to 14 V
E39-7 (B) - E39-1 (GND)	L - W-B	Power source	Always	11 to 14 V

HINT:

***1: TMC made**

***2: NUMMI , TMMC made**



Last Modified: 3-10-2010	6.4 D	**From:** 200901
Model Year: 2010	**Model:** Corolla	**Doc ID:** RM000000XWS02HX
Title: STEERING COLUMN: STEERING LOCK SYSTEM: DIAGNOSIS SYSTEM (2010 Corolla)		

DIAGNOSIS SYSTEM

1. DESCRIPTION

(a) DIAGNOSTIC SYSTEM

When troubleshooting a vehicle with a diagnostic system, the only difference from the usual troubleshooting procedure is connecting the Techstream to the vehicle and reading various data output from the vehicle's steering lock ECU.

The steering lock ECU records DTCs when the computer detects a malfunction in the computer itself or in system circuits.

To check the DTCs, connect the Techstream to the DLC3 on the vehicle. The Techstream enables the DTCs to be cleared, the indicators to be activated, and the Data List to be checked.

(b) The steering lock ECU diagnosis information cannot be read directly from the steering lock ECU by the Techstream. The diagnosis information from the steering lock ECU is transmitted to the Techstream via the certification ECU to the Techstream using the Controller Area Network (CAN).

2. CHECK DLC3

(a) Check the DLC3 INFO .

3. WARNING FUNCTION OF ENGINE SWITCH INDICATOR

(a) The steering lock ECU blinks the LED indicator of the engine switch when any of the following problems occurs in the system:

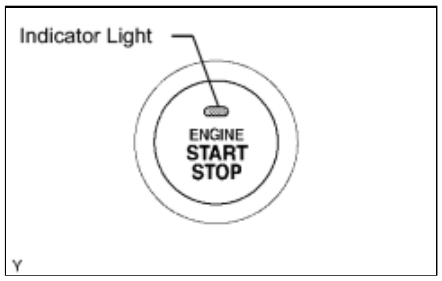

DETECTION ITEM	INDICATOR LIGHT BLINK PATTERN	INDICATION STATUS	COUNTERMEASURE
Steering lock is still not released	• Blinks green at 1-second intervals • Goes off 15 seconds after blinking starts	The motor operates to release the steering lock, but the steering lock cannot be released (e.g. the lock bar is stuck in the steering column).	Push the engine switch while turning the steering wheel left or right.
Malfunction in smart key system	• Blinks amber at 2-second intervals • Goes off 15 seconds after the engine switch is turned off	• There is a short in the devices activating the motor. • There is a problem in the steering	Troubleshoot by following How To Proceed With Troubleshooting INFO .

	while blinking	lock ECU or main body ECU.	

4. WARNING FUNCTION OF COMBINATION METER

(a) The steering lock ECU displays a warning on the combination meter when any of the following problems occurs in the system.

DETECTION ITEM	DISPLAY	INDICATION STATUS	COUNTERMEASURE
Steering lock is still not released	"S/T is not Unlocked" • Goes off 15 seconds after blinking starts	The motor operates to release the steering lock, but the steering lock cannot be released (e.g. the lock bar is stuck in the steering column).	Push the engine switch while turning the steering wheel left or right.
Malfunction in smart key system	"Check S/T Lock" • Goes off 15 seconds after the engine switch is turned off while blinking	• There is a short in the devices activating the motor. • There is a problem in the steering lock ECU or main body ECU.	Troubleshoot by following How To Proceed With Troubleshooting INFO .

Last Modified: 3-10-2010	6.4 U	**From:** 200901
Model Year: 2010	**Model:** Corolla	**Doc ID:** RM000000XWV02BX
Title: STEERING COLUMN: STEERING LOCK SYSTEM: DATA LIST / ACTIVE TEST (2010 Corolla)		

DATA LIST / ACTIVE TEST

1. DATA LIST

HINT:

Using the Techstream to read the Data List allows the values or states of switches, sensors, actuators and other items to be read without removing any parts. This non-intrusive inspection can be very useful because intermittent conditions or signals may be discovered before parts or wiring is disturbed. Reading the Data List information early in troubleshooting is one way to save diagnostic time.

NOTICE:

In the table below, the values listed under "Normal Condition" are reference values. Do not depend solely on these reference values when deciding whether a part is faulty or not.

(a) Turn the engine switch off.

(b) Connect the Techstream to the DLC3.

(c) Turn the engine switch on (IG).

(d) Turn the Techstream on.

(e) Enter the following menus: Body Electrical / Smart Key / Data List.

(f) According to the display on the Techstream, read the Data List.

Smart Key

TESTER DISPLAY	MEASUREMENT ITEM/RANGE	NORMAL CONDITION	DIAGNOSTIC NOTE
Slck Sleep Cond	Steering lock ECU sleep condition / YES or NO	YES: Steering lock ECU sleep mode can be entered NO: Steering lock ECU sleep mode cannot be entered	-
Slck Start Cond	Steering lock ECU start signal / YES or NO	YES: Steering lock ECU sent a start signal NO: Steering lock ECU did not send a start signal	-
Eng Start Cond	Engine start condition / OK or NG	OK: Engine is allowed to start NG: Engine is not allowed to start	-
Sensor Value	Sensor malfunction / NG (PAST) or OK	NG (PAST): Sensor malfunction OK: No malfunction	-
Pwr Supply Shrt	Short in ECU / NG (PAST) or OK	NG (PAST): Short in ECU OK: No malfunction	-

TESTER DISPLAY	MEASUREMENT ITEM/RANGE	NORMAL CONDITION	DIAGNOSTIC NOTE
Pwr Supply Open	Open in ECU / NG (PAST) or OK	NG (PAST): Open in ECU OK: No malfunction	-
Mtr Driver Shrt	Short in driver ECU / NG (PAST) or OK	NG (PAST): Short in driver ECU OK: No malfunction	-
Mtr Driver Open	Open in driver ECU / NG (PAST) or OK	NG (PAST): Open in driver ECU OK: No malfunction	-
Lck/Unlck Rec	Steering lock command reception record / YES or NO	YES: Steering lock/unlock signal received NO: Steering lock/unlock signal no received	-
Lck Bar Stuck	Lock bar stuck malfunction / NG (PAST) or OK	NG (PAST): Lock bar stuck malfunction OK: No malfunction	-
Push Start Err	Smart key system function malfunction / NG (PAST) or OK	NG (PAST): Malfunction in smart key system OK: No malfunction	-
IG2	IG2 voltage / ON or OFF	ON: 10 to 14 V OFF: Below 1 V	-
IG (Lin)	LIN bus IG status / ON or OFF	ON: LIN bus IG ON status OFF: LIN bus IG OFF status	-

2. ACTIVE TEST

HINT:

Using the Techstream to perform Active Tests allows relays, VSVs, actuators and other items to be operated without removing any parts. This non-intrusive functional inspection can be very useful because intermittent operation may be discovered before parts or wiring is disturbed. Performing Active Tests early in troubleshooting is one way to save diagnostic time. Data List information can be displayed while performing Active Tests.

(a) Turn the engine switch off.

(b) Connect the Techstream to the DLC3.

(c) Turn the engine switch on (IG).

(d) Turn the Techstream on.

(e) Enter the following menus: Body Electrical / Main Body / Active Test.

(f) According to the display on the Techstream, perform the Active Test.

Main Body

TESTER DISPLAY	TEST PART	CONTROL RANGE	DIAGNOSTIC NOTE
S Lock Pwr	Power supply for steering lock system	ON or OFF	-

Last Modified: 3-10-2010	6.4 D	**From:** 200901
Model Year: 2010	**Model:** Corolla	**Doc ID:** RM000000XWT02PX
Title: STEERING COLUMN: STEERING LOCK SYSTEM: DTC CHECK / CLEAR (2010 Corolla)		

DTC CHECK / CLEAR

1. CHECK DTC

(a) Prepare the Techstream.

(b) Connect the Techstream to the DLC3 at the lower part of the instrument panel.

(c) Turn the engine switch on (IG) and turn the Techstream on.

(d) Use the Techstream to check for DTCs, and note or print the result (see Operator's Manual for operating instructions).

(e) Confirm the details of the DTCs INFO .

2. CLEAR DTC

(a) Operate the Techstream to clear the DTCs (see Operator's Manual for operation instructions).

Last Modified: 3-10-2010	6.4 S	**From:** 200901
Model Year: 2010	**Model:** Corolla	**Doc ID:** RM000000XWM02PX
Title: STEERING COLUMN: STEERING LOCK SYSTEM: DIAGNOSTIC TROUBLE CODE CHART (2010 Corolla)		

DIAGNOSTIC TROUBLE CODE CHART

If a trouble code is displayed during the DTC check, check the parts listed for that code in the table below and proceed to the appropriate page.

HINT:

The steering lock ECU does not store DTCs regarding the past problems.

Steering Lock System

DTC CODE	DETECTION ITEM	TROUBLE AREA	SEE PAGE
B2781	Open / Short in Steering Lock ECU	Steering lock actuator assembly (Steering lock ECU)	INFO
B2782	Power Source Control ECU Malfunction	1. Wire harness 2. Steering lock actuator assembly (Steering lock ECU) 3. Main body ECU	INFO
B2788	IG2 Signal Malfunction	1. IG2 relay 2. Wire harness 3. Main body ECU 4. Steering lock actuator assembly (Steering lock ECU)	INFO

Last Modified: 3-10-2010	6.4 C	**From:** 200901
Model Year: 2010	**Model:** Corolla	**Doc ID:** RM000000YQZ02TX
Title: STEERING COLUMN: STEERING LOCK SYSTEM: B2781: Open / Short in Steering Lock ECU (2010 Corolla)		

DTC	**B2781**	**Open / Short in Steering Lock ECU**

DESCRIPTION

If the steering lock ECU determines that there is a malfunction inside the ECU, it outputs this DTC. The steering lock ECU diagnosis information cannot be read directly from the steering lock ECU by the Techstream. The diagnosis information from the steering lock ECU is transmitted to the Techstream via the certification ECU to the Techstream using the Controller Area Network (CAN).

DTC NO.	DTC DETECTING CONDITION	TROUBLE AREA
B2781	• Steering lock motor drive circuit is defective. • Both lock and unlock position sensors detect "ON".	Steering lock actuator assembly (Steering lock ECU)

INSPECTION PROCEDURE

HINT:

When the engine switch is off, the main body ECU may occasionally go into a non-active state called sleep mode. Therefore, before proceeding with the inspection, it is necessary to perform the following step to wake up the ECU:

Before starting the inspection, open the driver door with the engine switch off. Then (with the engine switch still off) open and close any door several times at 1.5-second intervals.

NOTICE:

If the steering lock actuator (steering lock ECU) is replaced, open and close the driver side door with the engine switch off and the shift lever in neutral to record the current lock position into the steering lock ECU. If this is not performed, the engine may not start.

PROCEDURE

1.	**REPLACE STEERING LOCK ACTUATOR ASSEMBLY (STEERING LOCK ECU)**

HINT:

The steering lock ECU and steering lock actuator assembly are supplied as a unit.

(a) Replace the steering lock actuator assembly INFO .

NEXT END

Last Modified: 3-10-2010	6.4 C	**From:** 200901
Model Year: 2010	**Model:** Corolla	**Doc ID:** RM000000YR002GX
Title: STEERING COLUMN: STEERING LOCK SYSTEM: B2782: Power Source Control ECU Malfunction (2010 Corolla)		

DTC	**B2782**	**Power Source Control ECU Malfunction**

DESCRIPTION

The steering lock ECU activates the steering lock motor by the power from the main body ECU* through the IGE circuit. This prevents the steering from being locked while the vehicle is moving.

The diagnosis information of the steering lock ECU is transmitted to the Techstream via the certification ECU as the steering lock ECU is not connected to the CAN communication system.

HINT:

***: The power source control ECU is not a physical part. This code refers to the power source control function performed by the main body ECU.**

DTC NO.	DTC DETECTING CONDITION	TROUBLE AREA
B2782	Steering lock motor drive control circuit is defective.	• Wire harness • Steering lock actuator assembly (Steering lock ECU) • Main body ECU

WIRING DIAGRAM

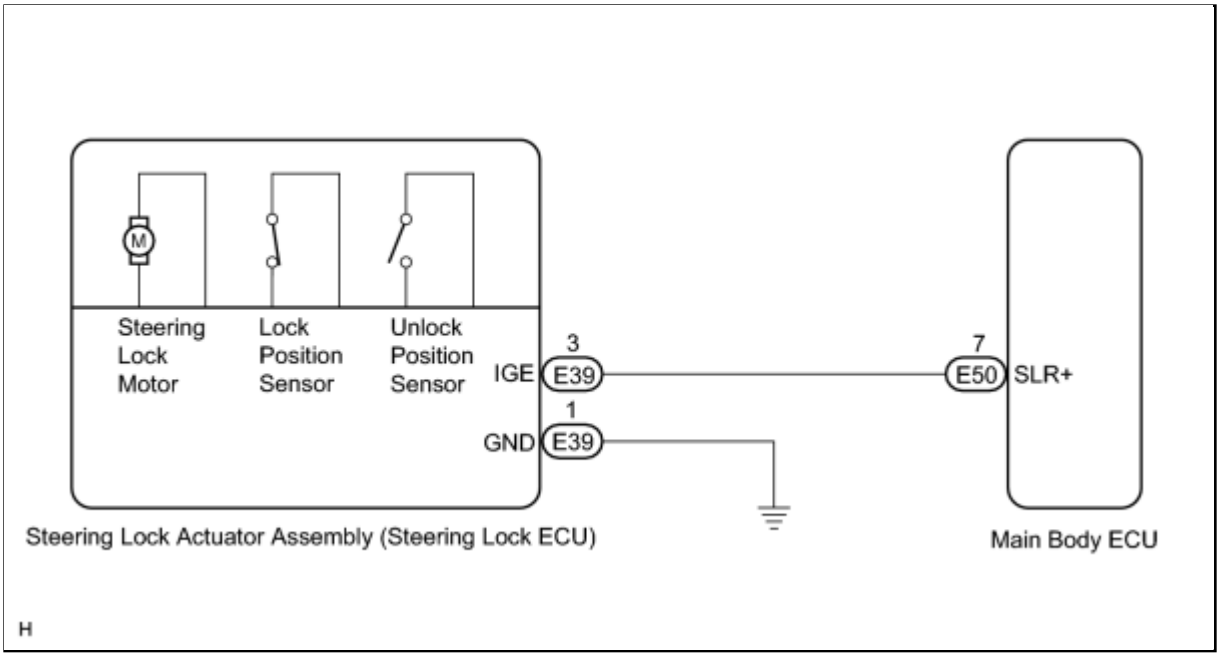

INSPECTION PROCEDURE

When the engine switch is off, the main body ECU may occasionally go into a non-active state called sleep mode. Therefore, before proceeding with the inspection, it is necessary to perform the following step to wake up the ECU:

Before starting the inspection, open the driver side door with the engine switch off. Then (with the engine switch still off) open and close any door several times at 1.5-second intervals.

NOTICE:

If the steering lock actuator (steering lock ECU) is replaced, open and close the driver side door with the engine switch off and the shift lever in neutral to record the current lock position into the steering lock ECU. If this is not performed, the engine may not start.

PROCEDURE

1.	**INSPECT STEERING LOCK ACTUATOR ASSEMBLY (STEERING LOCK ECU)**

(a) Measure the voltage according to the value(s) in the table below.

Standard Voltage:

TESTER CONNECTION	CONDITION	SPECIFIED CONDITION
E39-3 (IGE) - E39-1 (GND)	The specified condition should be checked after performing the following:	• Motor activated: Below 1 V • Motor not

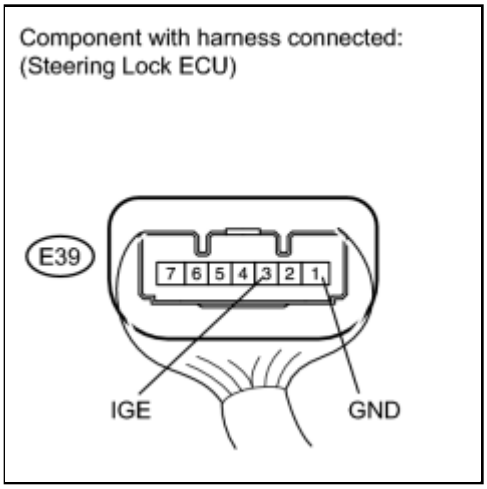

	1. Turn the engine switch off 2. Turn the engine switch on (ACC or IG)	activated: 11 to 14 V
E39-3 (IGE) - E39-1 (GND)	The specified condition should be checked after performing the following: 1. Move the shift lever to P 2. Turn the engine switch off 3. Open the driver's door	• Motor activated: Below 1 V • Motor not activated: 11 to 14 V

HINT:

The steering lock ECU and steering lock actuator assembly are supplied as a unit.

NG ▶ **CHECK HARNESS AND CONNECTOR (STEERING LOCK ACTUATOR ASSEMBLY - BODY GROUND)**

OK ▶ **REPLACE STEERING LOCK ACTUATOR ASSEMBLY (STEERING LOCK ECU)**

2.	**CHECK HARNESS AND CONNECTOR (STEERING LOCK ACTUATOR ASSEMBLY - BODY GROUND)**

(a) Disconnect the E39 connector from the steering lock actuator assembly.

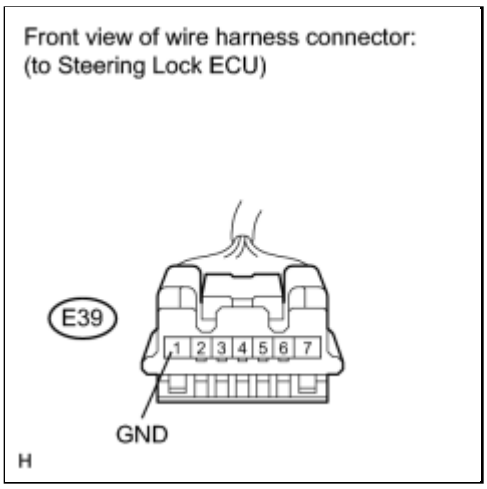

(b) Measure the resistance according to the value(s) in the table below.

Standard Resistance:

TESTER CONNECTION	CONDITION	SPECIFIED CONDITION
E39-1 (GND) - Body ground	Always	Below 1 Ω

NG ▶ **REPAIR OR REPLACE HARNESS OR CONNECTOR**

OK ▼

3.	**CHECK HARNESS AND CONNECTOR (STEERING LOCK ACTUATOR ASSEMBLY - MAIN BODY ECU)**

(a) Disconnect the E50 connector from the main body ECU.

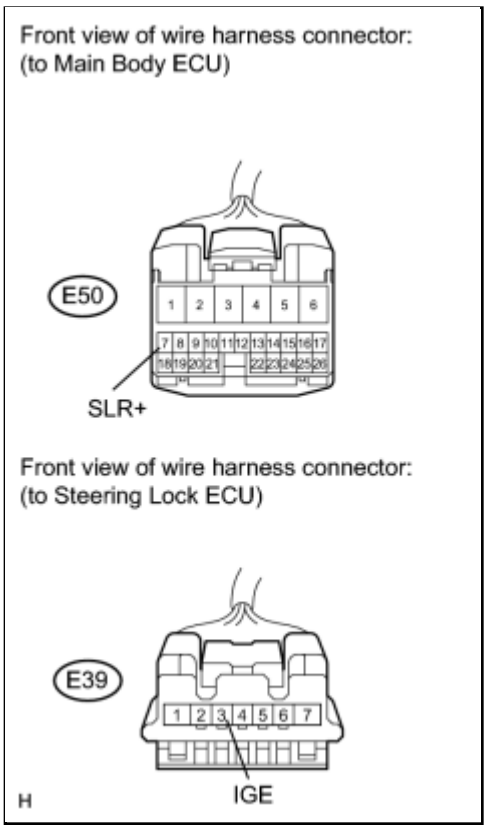

(b) Measure the resistance according to the value(s) in the table below.

Standard Resistance:

TESTER CONNECTION	CONDITION	SPECIFIED CONDITION
E39-3 (IGE) - E50-7 (SLR+)	Always	Below 1 Ω
E39-3 (IGE) - Body ground	Always	10 kΩ or higher

NG ▶ **REPAIR OR REPLACE HARNESS OR CONNECTOR**

OK ▶ **REPLACE MAIN BODY ECU**

Last Modified: 3-10-2010	6.4 C	**From:** 200901
Model Year: 2010	**Model:** Corolla	**Doc ID:** RM000000YR102GX
Title: STEERING COLUMN: STEERING LOCK SYSTEM: B2788: IG2 Signal Malfunction (2010 Corolla)		

DTC	**B2788**	**IG2 Signal Malfunction**

DESCRIPTION

The steering lock ECU determines the on/off status of the engine switch through the IG2 signal circuit.

After receiving an IG2 relay ON signal, the steering lock ECU determines that the vehicle is moving. The steering lock ECU does not lock the steering when it receives the IG2 relay ON signal. This prevents the steering from being locked while the vehicle is moving.

The diagnosis information of the steering lock ECU is transmitted to the Techstream via the certification ECU as the steering lock ECU is not connected to the CAN communication system.

DTC NO.	DTC DETECTING CONDITION	TROUBLE AREA
B2788	Different information is obtained from IG2 signal received directly from the IG2 circuit, and from IG2 signal sent via LIN communication for a period of 1 second.	• IG2 relay • Wire harness • Main body ECU • Steering lock actuator assembly (Steering lock ECU)

WIRING DIAGRAM

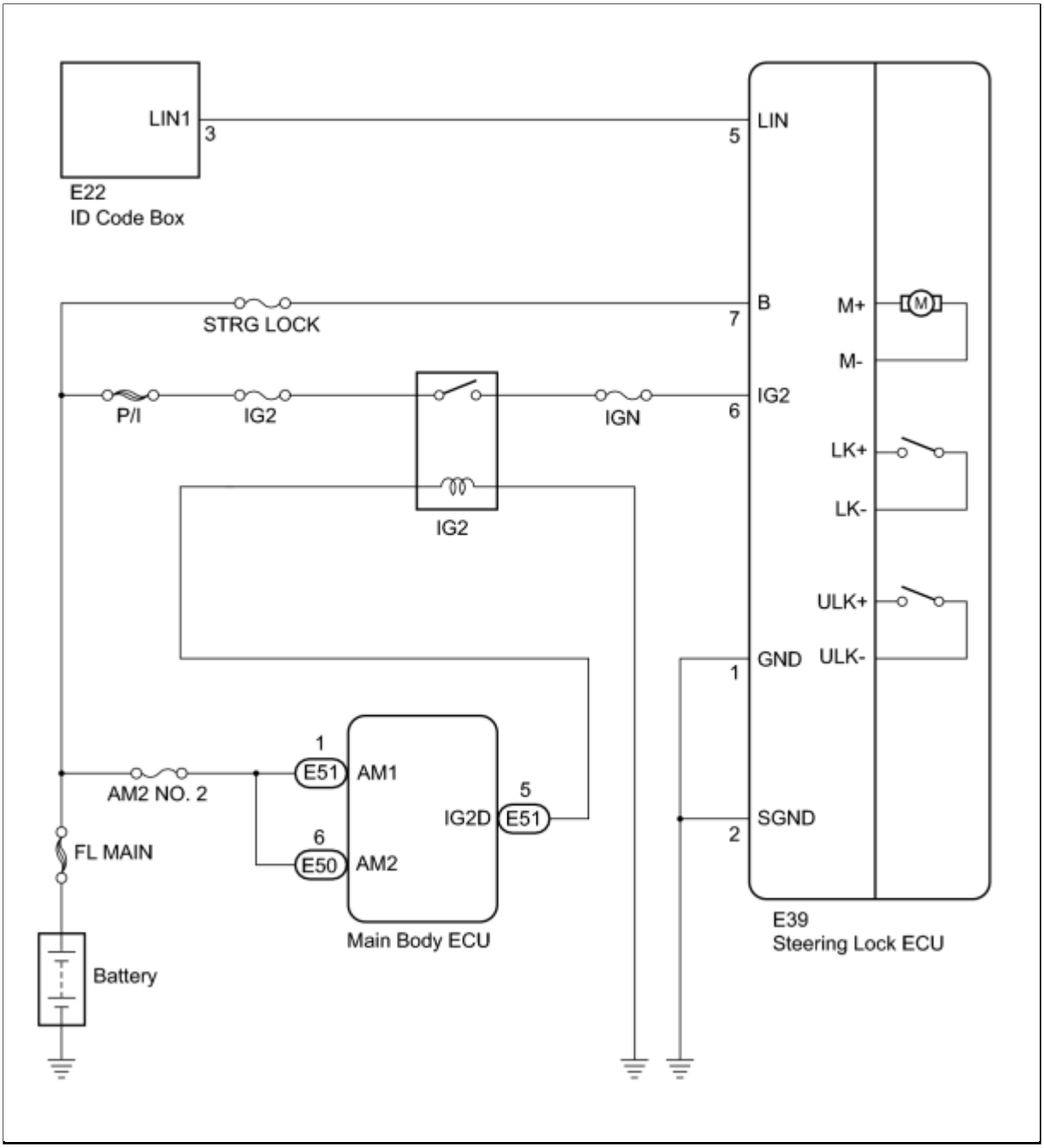

INSPECTION PROCEDURE

When the engine switch is off, the main body ECU may occasionally go into a non-active state called sleep mode. Therefore, before proceeding with the inspection, it is necessary to perform the following step to wake up the ECU:

Before starting the inspection, open the driver door with the engine switch off. Then (with the engine switch still off) open and close any door several times at 1.5-second intervals.

NOTICE:

If the steering lock actuator (steering lock ECU) is replaced, open and close the driver side door with the engine switch off and the shift lever in neutral to record the current lock position into the steering lock ECU. If this is not performed, the engine may not start.

PROCEDURE

1.	**INSPECT NO. 2 IGNITION RELAY (IG2)**

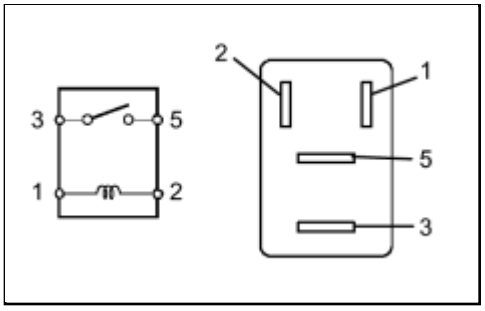

(a) Remove the IG2 relay from the engine room relay block.

(b) Measure the resistance according to the value(s) in the table below.

Standard Resistance:

TESTER CONNECTION	CONDITION	SPECIFIED CONDITION
3 - 5	Always	10 kΩ or higher
3 - 5	When battery voltage is applied to terminals 1 and 2	Below 1 Ω

NG ▶ **REPLACE NO. 2 IGNITION RELAY (IG2)**

OK ▼

2.	**CHECK HARNESS AND CONNECTOR (STEERING LOCK ACTUATOR ASSEMBLY - BODY GROUND)**

(a) Disconnect the E39 connector from the steering lock actuator assembly.

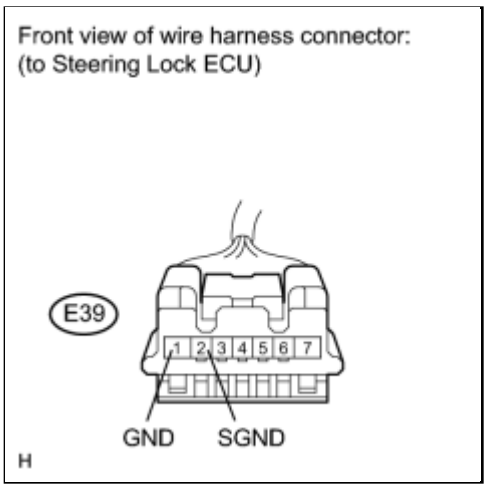

(b) Measure the resistance according to the value(s) in the table below.

Standard Resistance:

TESTER CONNECTION	CONDITION	SPECIFIED CONDITION
E39-1 (GND) - Body ground	Always	Below 1 Ω
E39-2 (SGND) - Body ground	Always	Below 1 Ω

NG ▶ **REPAIR OR REPLACE HARNESS OR CONNECTOR**

OK ▼

3.	**CHECK HARNESS AND CONNECTOR (STEERING LOCK ACTUATOR ASSEMBLY - BATTERY)**

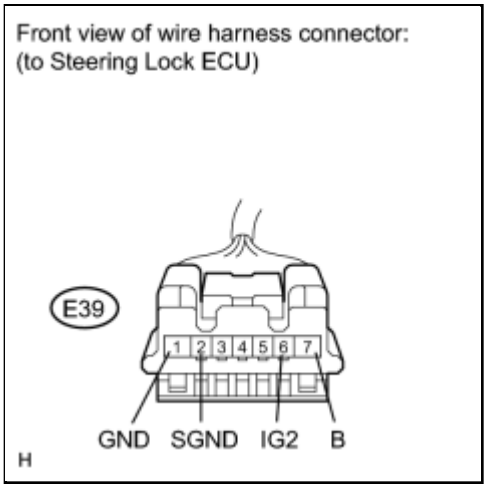

(a) Measure the voltage according to the value(s) in the table below.

Standard Voltage:

TESTER CONNECTION	SWITCH CONDITION	SPECIFIED CONDITION
E39-6 (IG2) - E39-1 (GND)	Engine switch on (IG)	11 to 14 V
E39-6 (IG2) - E39-2 (SGND)	Engine switch on (IG)	11 to 14 V

(b) Measure the resistance according to the value(s) in the table below.

Standard Resistance:

TESTER CONNECTION	SWITCH CONDITION	SPECIFIED CONDITION
*E39-6 (IG2) - E39-7 (B)	Engine switch off	10 kΩ or higher

*: This measurement is performed with the engine switch off to check for a short between IG2 and battery.

NG ▶ **REPAIR OR REPLACE HARNESS OR CONNECTOR (STEERING LOCK ACTUATOR ASSEMBLY - BATTERY)**

OK ▶ **REPLACE STEERING LOCK ACTUATOR ASSEMBLY (STEERING LOCK ECU)**

Last Modified: 3-10-2010	6.4 J	**From:** 200901
Model Year: 2010	**Model:** Corolla	**Doc ID:** RM000000XWX02NX
Title: STEERING COLUMN: STEERING LOCK SYSTEM: Steering Lock Motor Drive Power Circuit (2010 Corolla)		

Steering Lock Motor Drive Power Circuit

DESCRIPTION

The steering lock ECU is connected to the main body ECU and certification ECU. The steering lock ECU cannot activate the motor unless it receives permission signals from both ECUs. (The main body ECU permits the steering lock ECU to supply power to activate the motor.)

WIRING DIAGRAM

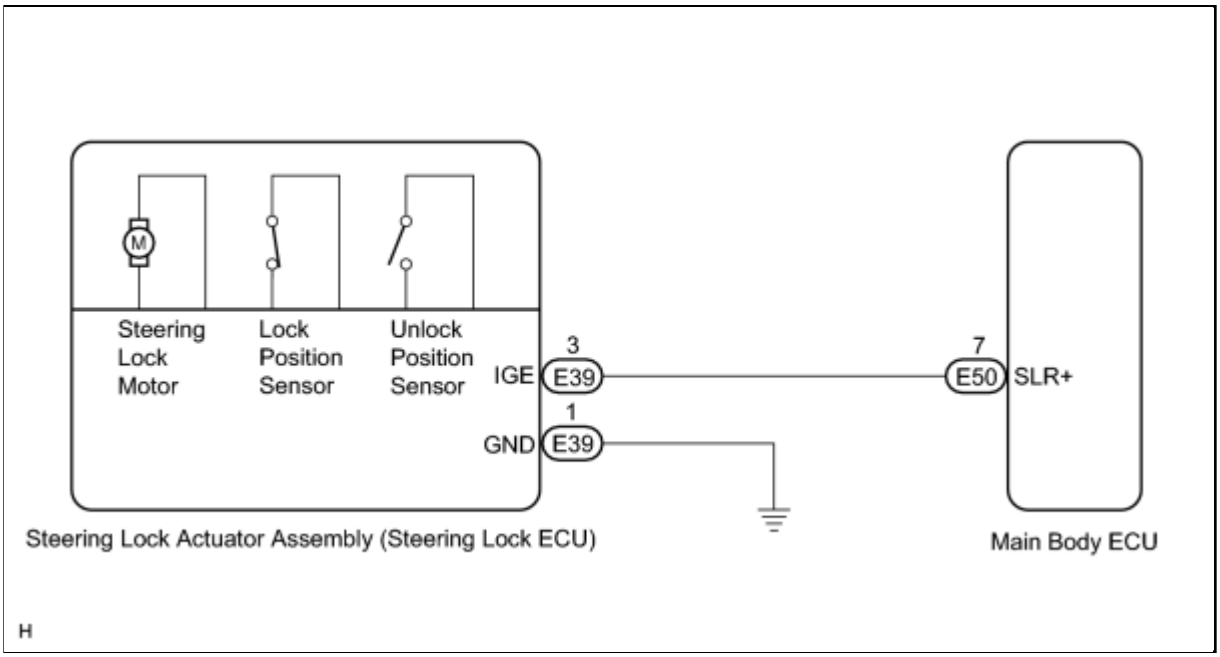

INSPECTION PROCEDURE

PROCEDURE

1.	**CHECK VEHICLE CONDITION**

(a) Check the problem symptom of the steering lock system.

Result:

CONDITION	PROCEED TO
Steering lock cannot be released	A
Steering cannot be locked	B

B ▶ INSPECT STEERING LOCK ACTUATOR ASSEMBLY (STEERING LOCK ECU)

A ▼

2.	READ VALUE USING TECHSTREAM

(a) Turn the engine switch off.

(b) Connect the Techstream to the DLC3.

(c) Turn the engine switch on (IG).

(d) Turn the Techstream on.

(e) Enter the following menus: Body Electrical / Smart Key / Data List.

(f) Select the item below in the Data List, and read its value displayed on the Techstream.

Smart Key

TESTER DISPLAY	MEASUREMENT ITEM/RANGE	NORMAL CONDITION	DIAGNOSTIC NOTE
Lck/Unlck Rec	Steering lock command reception record / YES or NO	YES: Steering lock/unlock signal received NO: Steering lock/unlock signal not received	-

(g) Check if a steering unlock command signal has been received.

OK:
"YES" is displayed on the Techstream display.

NG ▶ CHECK SMART KEY SYSTEM (for Start Function)

OK

3.	**INSPECT STEERING LOCK ACTUATOR ASSEMBLY (STEERING LOCK ECU)**

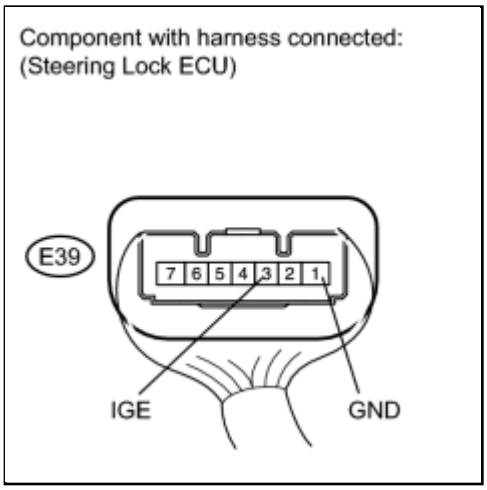

(a) Measure the voltage according to the value(s) in the table below.

Standard Voltage:

TESTER CONNECTION	CONDITION	SPECIFIED CONDITION
E39-3 (IGE) - E39-1 (GND)	1. Engine switch off 2. Engine switch on (ACC or IG)	• Motor activated: Below 1 V • Motor not activated: 11 to 14 V

NG ▶ **CHECK HARNESS AND CONNECTOR (STEERING LOCK ACTUATOR ASSEMBLY - BODY GROUND)**

OK ▶ **PROCEED TO NEXT CIRCUIT INSPECTION SHOWN IN PROBLEM SYMPTOMS TABLE**

4.	**CHECK HARNESS AND CONNECTOR (STEERING LOCK ACTUATOR ASSEMBLY - BODY GROUND)**

(a) Disconnect the E39 connector from the steering lock actuator assembly.

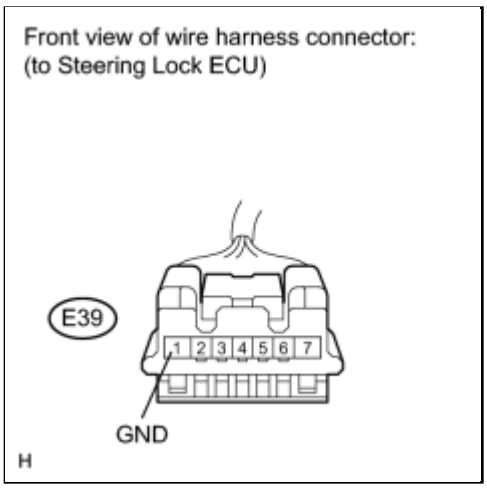

(b) Measure the resistance according to the value(s) in the table below.

Standard Resistance:

TESTER CONNECTION	CONDITION	SPECIFIED CONDITION
E39-1 (GND) - Body ground	Always	Below 1 Ω

NG ▶ **REPAIR OR REPLACE HARNESS OR CONNECTOR**

OK ▼

5.	**CHECK HARNESS AND CONNECTOR (STEERING LOCK ACTUATOR ASSEMBLY - MAIN BODY ECU)**

(a) Disconnect the E50 connector from the main body ECU.

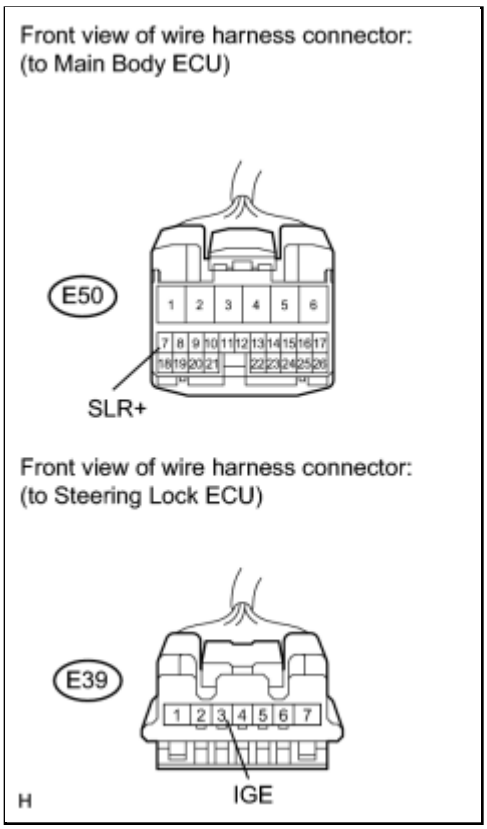

(b) Measure the resistance according to the value(s) in the table below.

Standard Resistance:

TESTER CONNECTION	CONDITION	SPECIFIED CONDITION
E39-3 (IGE) - E50-7 (SLR+)	Always	Below 1 Ω
E39-3 (IGE) - Body ground	Always	10 kΩ or higher

NG ▶ **REPAIR OR REPLACE HARNESS OR CONNECTOR**

OK ▶ **REPLACE MAIN BODY ECU**

6.	**INSPECT STEERING LOCK ACTUATOR ASSEMBLY (STEERING LOCK ECU)**

(a) Measure the voltage according to the value(s) in the table below.

Standard Voltage:

TESTER CONNECTION	CONDITION	SPECIFIED CONDITION

Component with harness connected: (Steering Lock ECU) 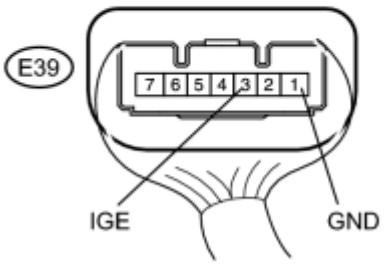 	E39-3 (IGE) - E39-1 (GND)	The specified condition should be checked after performing the following: 1. Move the shift lever to neutral 2. Turn the engine switch off 3. Open the driver's door	• Motor activated: Below 1 V • Motor not activated: 11 to 14 V

NG ▶ **REPAIR OR REPLACE HARNESS OR CONNECTOR**

OK ▼

7.	**CHECK HARNESS AND CONNECTOR (STEERING LOCK ACTUATOR ASSEMBLY - MAIN BODY ECU)**

(a) Disconnect the E39 connector from the steering lock actuator assembly.

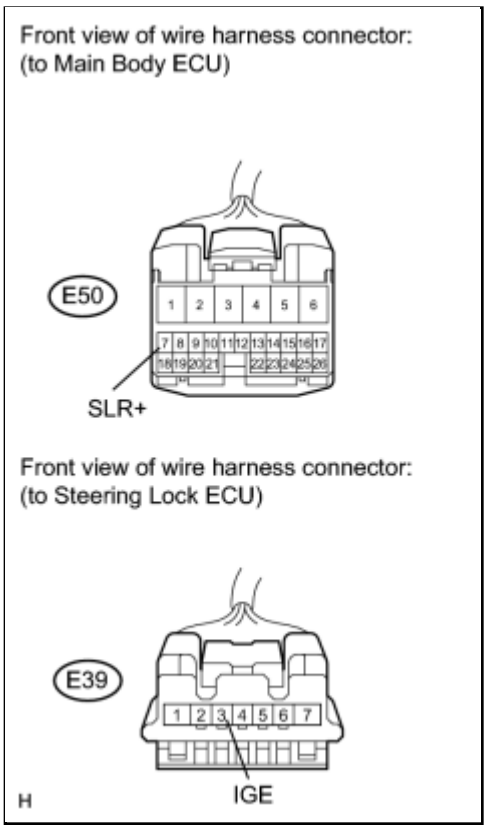

(b) Disconnect the E50 connector from the main body ECU.

(c) Measure the resistance according to the value(s) in the table below.

Standard Resistance:

TESTER CONNECTION	CONDITION	SPECIFIED CONDITION
E39-3 (IGE) - E50-7 (SLR+)	Always	Below 1 Ω
E39-3 (IGE) - Body ground	Always	10 kΩ or higher

NG ▶ **REPAIR OR REPLACE HARNESS OR CONNECTOR**

OK ▶ **REPLACE MAIN BODY ECU**

Last Modified: 3-10-2010	6.4 J	**From:** 200901
Model Year: 2010	**Model:** Corolla	**Doc ID:** RM000000XWW02IX
Title: STEERING COLUMN: STEERING LOCK SYSTEM: Unlock Position Sensor Signal Circuit (2010 Corolla)		

Unlock Position Sensor Signal Circuit

DESCRIPTION

The unlock position sensor is one of the components in the steering lock actuator. The sensor switch contact closes when the steering lock is released. The steering lock release signal is then sent to the main body ECU. Receiving the signal, the ECU permits engine start. (This prevents the engine from being started with the steering locked.)

WIRING DIAGRAM

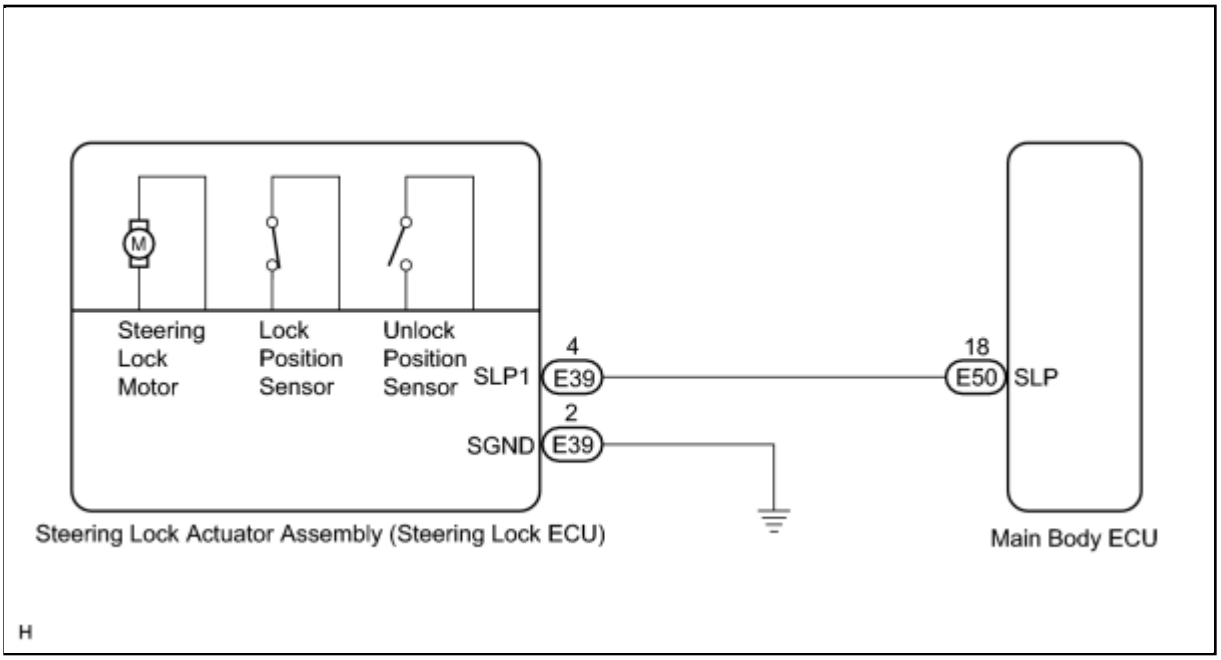

INSPECTION PROCEDURE

PROCEDURE

1.	**INSPECT STEERING LOCK ACTUATOR ASSEMBLY (STEERING LOCK ECU)**

(a) Measure the voltage according to the value(s) in the table below.

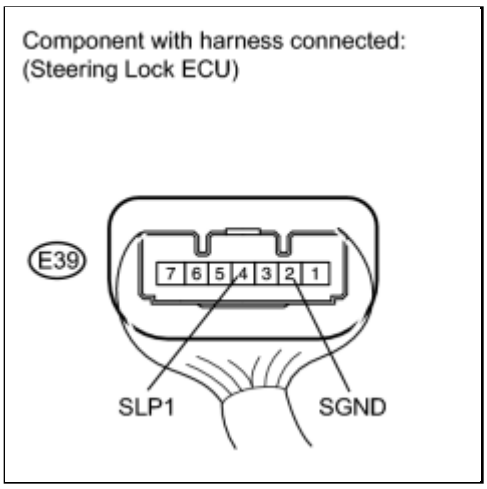

Standard Voltage:

TESTER CONNECTION	SWITCH CONDITION	SPECIFIED CONDITION
E39-4 (SLP1) - E39-2 (SGND)	1. Engine switch off 2. Engine switch on (ACC or IG)	Below 1 V

NG ▶ **CHECK SMART KEY SYSTEM (for Smart Function)**

OK ▼

2.	**CHECK HARNESS AND CONNECTOR (STEERING LOCK ACTUATOR ASSEMBLY - MAIN BODY ECU)**

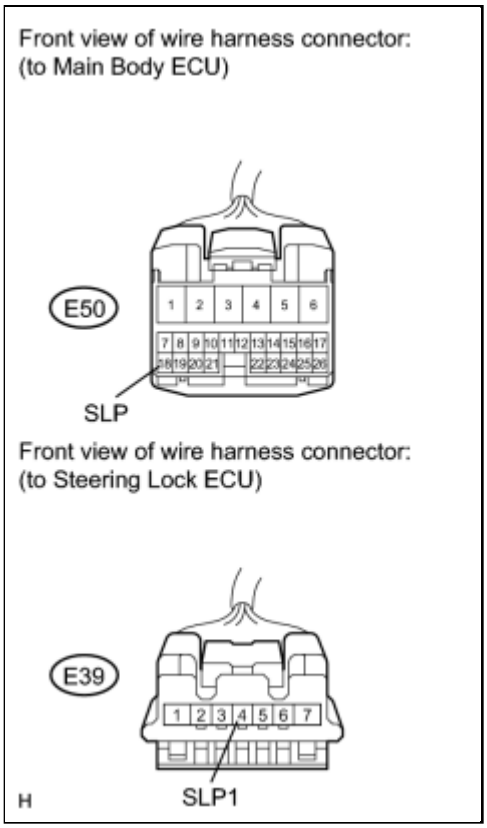

(a) Disconnect the E39 connector from the steering lock actuator assembly.

(b) Disconnect the E50 connector from the main body ECU.

(c) Measure the resistance according to the value(s) in the table below.

Standard Resistance:

TESTER CONNECTION	CONDITION	SPECIFIED CONDITION
E39-4 (SLP1) - E50-18 (SLP)	Always	Below 1 Ω
E39-4 (SLP1) - Body ground	Always	10 kΩ or higher

NG ▶ **REPAIR OR REPLACE HARNESS OR CONNECTOR**

OK ▶ **PROCEED TO NEXT CIRCUIT INSPECTION SHOWN IN PROBLEM SYMPTOMS TABLE**

Last Modified: 3-10-2010	6.4 J	**From:** 200901
Model Year: 2010	**Model:** Corolla	**Doc ID:** RM000000XWQ02DX
Title: STEERING COLUMN: STEERING LOCK SYSTEM: Power Source Circuit (2010 Corolla)		

Power Source Circuit

DESCRIPTION

This circuit supplies voltage from the battery to terminal B of the steering lock ECU. This circuit is used as power source for the steering lock ECU, motor, communication, and peripheral circuits.

WIRING DIAGRAM

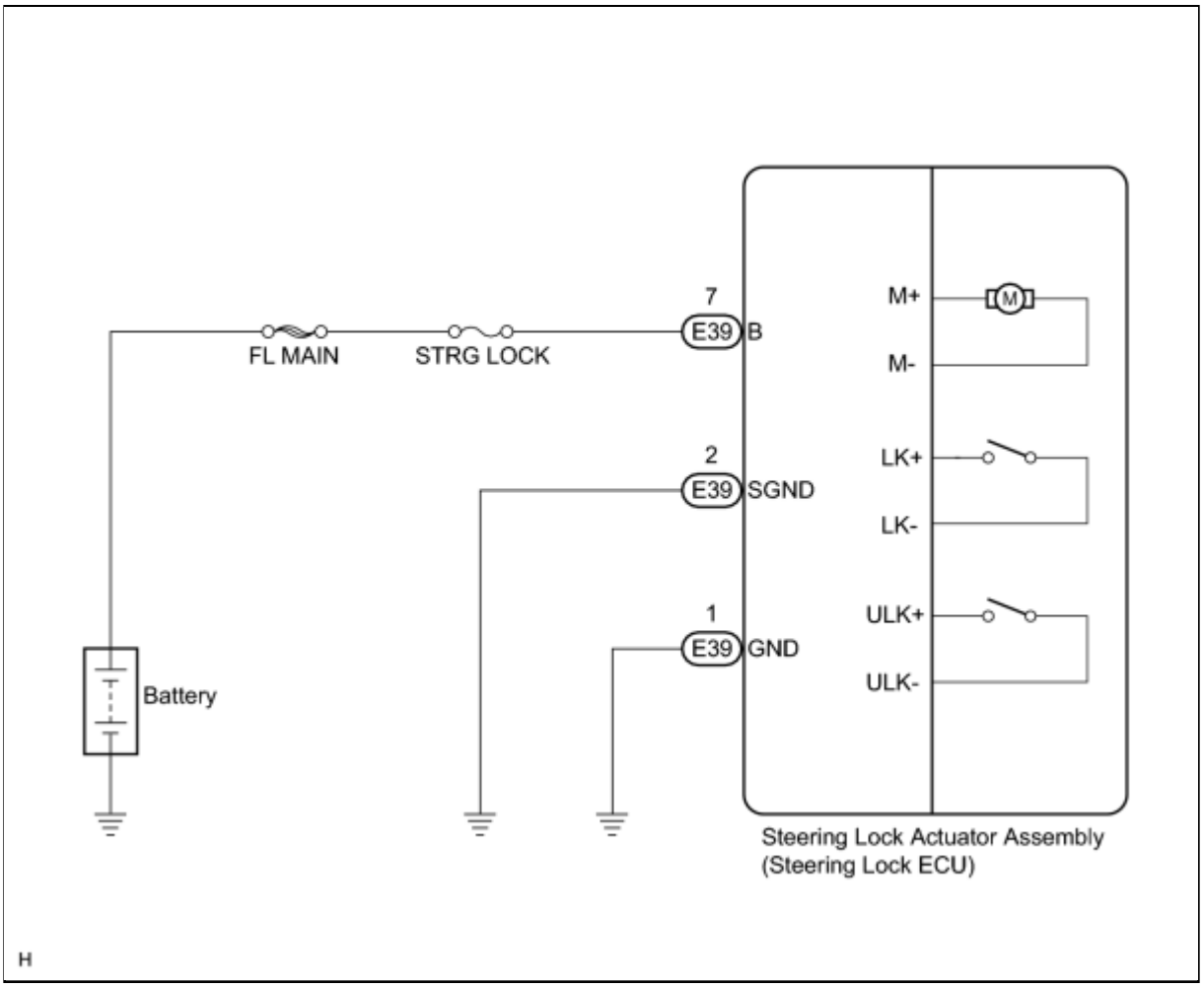

INSPECTION PROCEDURE

PROCEDURE

1.	**CHECK HARNESS AND CONNECTOR (STEERING LOCK ACTUATOR ASSEMBLY - BODY GROUND)**

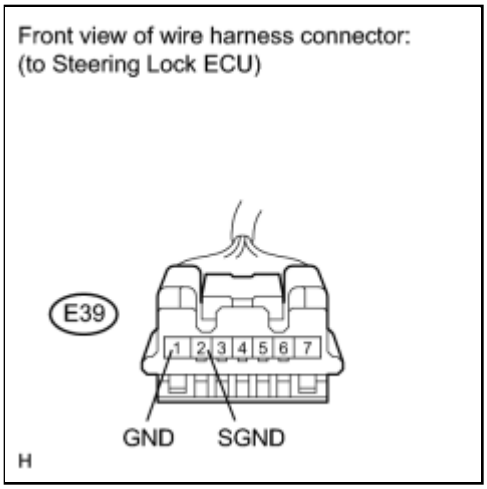

(a) Disconnect the E39 connector from the steering lock actuator assembly.

(b) Measure the resistance according to the value(s) in the table below.

Standard Resistance:

TESTER CONNECTION	CONDITION	SPECIFIED CONDITION
E39-1 (GND) - Body ground	Always	Below 1 Ω
E39-2 (SGND) - Body ground	Always	Below 1 Ω

NG ▶ **REPAIR OR REPLACE HARNESS OR CONNECTOR**

OK ▼

2.	**CHECK HARNESS AND CONNECTOR (STEERING LOCK ACTUATOR ASSEMBLY - BATTERY)**

(a) Measure the voltage according to the value(s) in the table below.

Standard Voltage:

TESTER CONNECTION	CONDITION	SPECIFIED CONDITION

Front view of wire harness connector:
(to Steering Lock ECU)

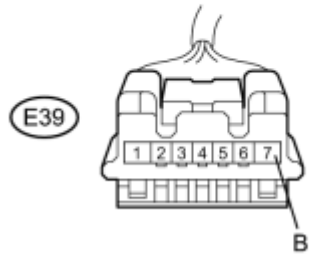

H

E39-7 (B) - Body ground	Always	11 to 14 V

NG ▶ **REPAIR OR REPLACE HARNESS OR CONNECTOR (STEERING LOCK ACTUATOR ASSEMBLY - BATTERY)**

OK ▶ **PROCEED TO NEXT CIRCUIT INSPECTION SHOWN IN PROBLEM SYMPTOMS TABLE**

Last Modified: 3-10-2010	6.4 L	**From:** 200901
Model Year: 2010	**Model:** Corolla	**Doc ID:** RM000001I9Z01TX
Title: STEERING COLUMN: STEERING SYSTEM: PRECAUTION (2010 Corolla)		

PRECAUTION

1. IGNITION SWITCH EXPRESSIONS

HINT:

The type of ignition switch used on this model differs according to the specifications of the vehicle. The expressions listed in the table below are used in this section.

EXPRESSION	SWITCH TYPE	
	IGNITION SWITCH (POSITION)	ENGINE SWITCH (CONDITION)
Ignition Switch off	LOCK	Off
Ignition Switch ACC	ACC	On (ACC)
Ignition Switch ON	ON	On (IG)
Engine Start	START	Start

2. HANDLING PRECAUTIONS FOR SRS AIRBAG SYSTEM

(a) The vehicle is equipped with an SRS (Supplemental Restraint System). Failure to carry out service operations in the correct sequence could cause the SRS to unexpectedly deploy during servicing. This may cause a serious accident. Before servicing (including inspection, replacement, removal and installation of parts), be sure to read the precautionary notices for the Supplemental Restraint System INFO .

3. HANDLING PRECAUTIONS FOR STEERING COLUMN

(a) When handling the steering column assembly:

(1) Avoid any impacts to the steering column assembly, especially to the motor or the torque sensor. Replace the steering column assembly with a new one if it is dropped or subjected to any severe impacts.

(2) Do not pull on any wire harness when moving the steering column assembly.

(3) After replacing the steering column assembly or power steering ECU assembly, calibrate torque sensor zero point INFO for 2AZ-FE, INFO for 2ZR-FE).

(4) Do not release the tilt lever when the steering column assembly is not installed on the vehicle.

(b) When disconnecting or reconnecting the connectors:

(1) When disconnecting the connectors related to the electric motor power steering system, turn the ignition switch to ON (the engine is stopped), center the steering wheel, turn the ignition switch off, and then disconnect the connectors.

(2) When reconnecting the connectors related to the electric motor power steering system, make sure that the ignition switch is turned off, center the steering wheel and then turn the ignition switch to ON (the engine is stopped).

NOTICE:

Do not turn the ignition switch to ON without the steering wheel centered.

(3) If the above operations are not carried out correctly, the steering center point (zero point) will deviate, causing a difference in steering effort between right and left turns. If there is a difference in the steering effort between right and left turns, perform the torque sensor zero point calibration INFO for 2AZ-FE, INFO for 2ZR-FE).

Last Modified: 3-10-2010	6.4 T	**From:** 200901
Model Year: 2010	**Model:** Corolla	**Doc ID:** RM000001IA001LX
Title: STEERING COLUMN: STEERING SYSTEM: PROBLEM SYMPTOMS TABLE (2010 Corolla)		

PROBLEM SYMPTOMS TABLE

HINT:

Use the table below to help determine the cause of problem symptoms. If multiple suspected areas are listed, the potential causes of the symptoms are listed in order of probability in the "Suspected Area" column of the table. Check each symptom by checking the suspected areas in the order they are listed. Replace parts as necessary.

Steering System

SYMPTOM	SUSPECTED AREA	SEE PAGE
Heavy steering	Front tires (Improperly inflated or unevenly worn)	INFO
	Front wheel alignment (Incorrect)	INFO
	Front suspension (Lower ball joint)	INFO
	Steering intermediate shaft	-
	Steering column	INFO
	Steering gear	INFO
	Power steering ECU (for 2AZ-FE)	INFO
	Power steering ECU (for 2ZR-FE)	INFO
Poor return	Front tires (Improperly inflated or unevenly worn)	INFO
	Front wheel alignment (Incorrect)	INFO
	Steering column	INFO
	Steering gear	INFO
	Power steering ECU (for 2AZ-FE)	INFO
	Power steering ECU (for 2ZR-FE)	INFO
No free play or excessive play	Steering intermediate shaft	-

SYMPTOM	SUSPECTED AREA	SEE PAGE
	Steering gear	INFO
Knocking (or cranking) sound occurs when steering wheel turned while power steering is in operation	Steering intermediate shaft	-
	Front suspension (Lower ball joint)	INFO
	Front axle hub (Hub bearing)	INFO
	Steering gear	INFO
Friction sound occurs when steering wheel turned during low-speed driving	Power steering motor	-
	Steering column	INFO
High-pitched sound (squealing sound) occurs when steering wheel turned slowly with vehicle stopped	Power steering motor	-
Steering wheel vibrates and noise occurs when steering wheel turned while vehicle stopped	Power steering motor	-
	Steering column	INFO

Last Modified: 3-10-2010	6.4 G	**From:** 200901
Model Year: 2010	**Model:** Corolla	**Doc ID:** RM000001IA101MX
Title: STEERING COLUMN: STEERING SYSTEM: ON-VEHICLE INSPECTION (2010 Corolla)		

ON-VEHICLE INSPECTION

1. CHECK STEERING WHEEL FREE PLAY

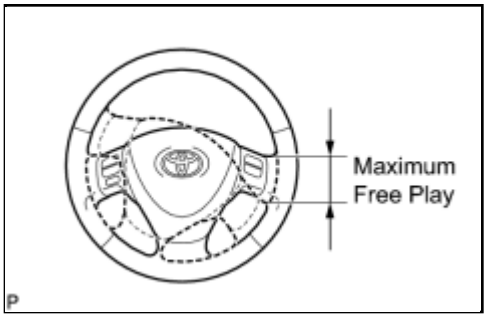

(a) Stop the vehicle and align the tires facing straight ahead.

(b) Turn the steering wheel gently right and left, and check the steering wheel free play.

Maximum free play:
30 mm (1.18 in.)

If the free play exceeds the maximum, check the steering system INFO .

Last Modified: 3-10-2010	6.4 N	**From:** 200901
Model Year: 2010	**Model:** Corolla	**Doc ID:** RM000001R4401OX
Title: STEERING COLUMN: STEERING SYSTEM: ADJUSTMENT (2010 Corolla)		

ADJUSTMENT

1. ADJUST STEERING WHEEL OFF CENTER

(a) Inspect steering wheel off center.



(1) Apply masking tape on the top center of the steering wheel and upper steering column cover.

(2) Drive the vehicle in a straight line for 100 meters at a constant speed of 56 km/h (35 mph), while holding the steering wheel straight.

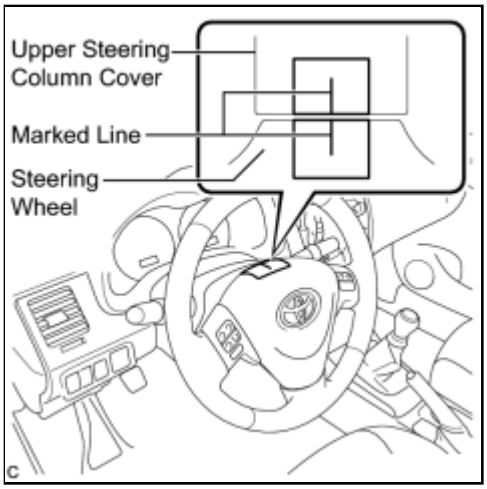

(3) Draw a line on the masking tape as shown in the illustration.

(4) Turn the steering wheel to the center position.

HINT:

Look at the upper surface of the steering wheel, steering spoke, and SRS airbag line to find the center position.

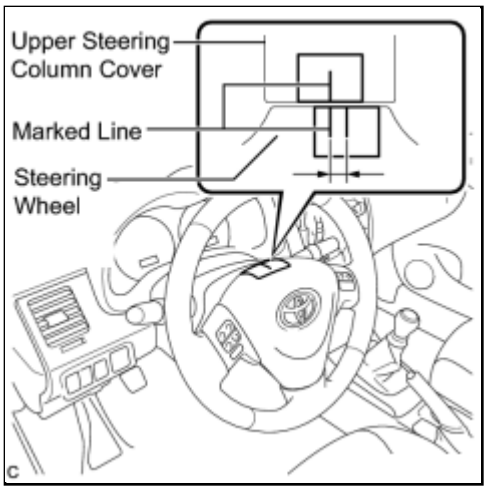

(5) Draw a new line on the masking tape on the steering wheel as shown in the illustration.

(6) Measure the distance between the 2 lines on the masking tape on the steering wheel.

(7) Convert the measured distance to steering angle.

HINT:

- Measured distance 1 mm (0.0394 in.) = Steering angle of approximately 1 degree.
- Make a note of the steering angle.

(b) Adjust steering angle.

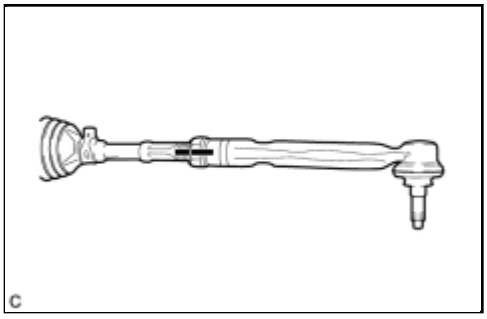

(1) Draw a line on the RH and LH tie rod ends and rack ends respectively where it can be easily seen.

(2) Using a paper gauge, measure the distance from the RH and LH tie rod ends to the rack end screws.

HINT:

- Perform measurement on both RH and LH sides.
- Make a note of the measured values.

(3) Remove the RH and LH boot clips from the rack boots.

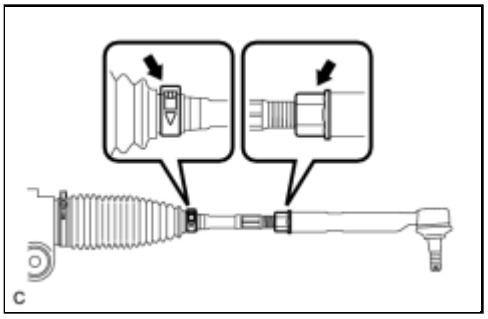

(4) Loosen the RH and LH lock nuts.

(5) Turn the RH and LH rack ends by the same amount (but in different directions) according to the steering angle.

HINT:

One 360 degree turn of the rack end (1.5 mm (0.0591 in.) horizontal movement) equals to 12 degrees of steering angle.

(6) Tighten the RH and LH lock nuts to the specified torque.

Torque: 74 N·m (755 kgf·cm, 55ft·lbf)

NOTICE:

Make sure that the difference in length between the RH and LH tie rod ends and rack end screws is within 1.5 mm (0.0591 in.).

(7) Install the RH and LH boot clips.

Last Modified: 3-10-2010	6.4 K	**From:** 200901
Model Year: 2010	**Model:** Corolla	**Doc ID:** RM0000033RS015X
Title: STEERING COLUMN: STEERING WHEEL (w/ Steering Pad Switch): COMPONENTS (2010 Corolla)		

COMPONENTS

ILLUSTRATION

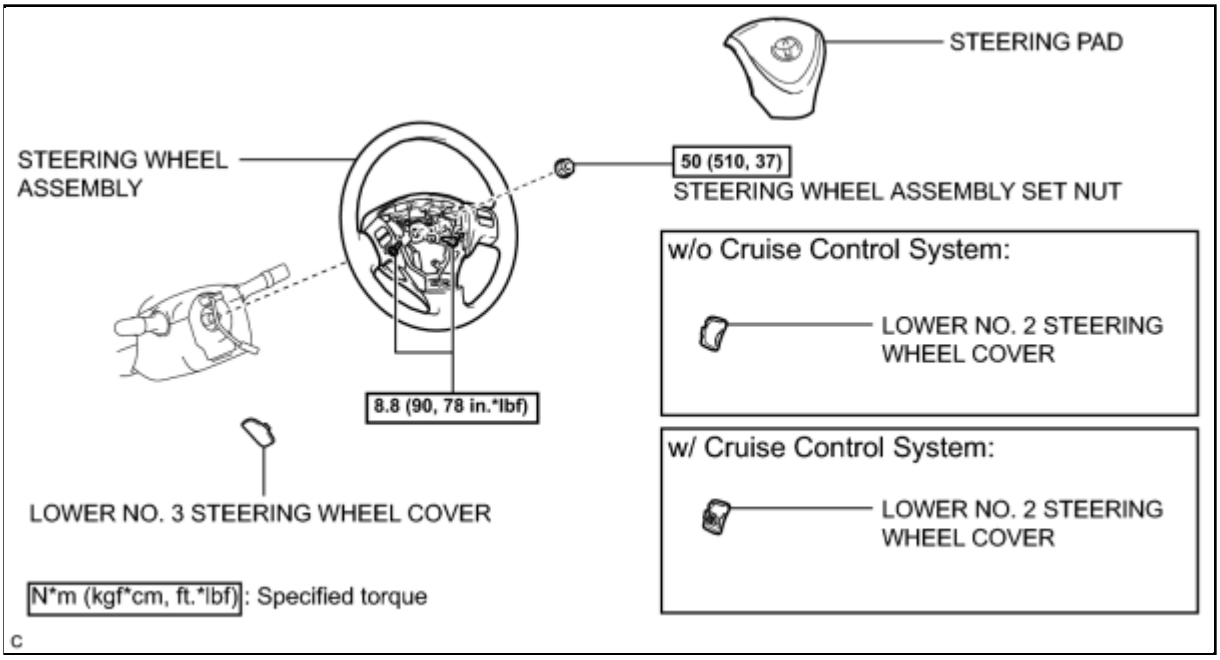

ILLUSTRATION

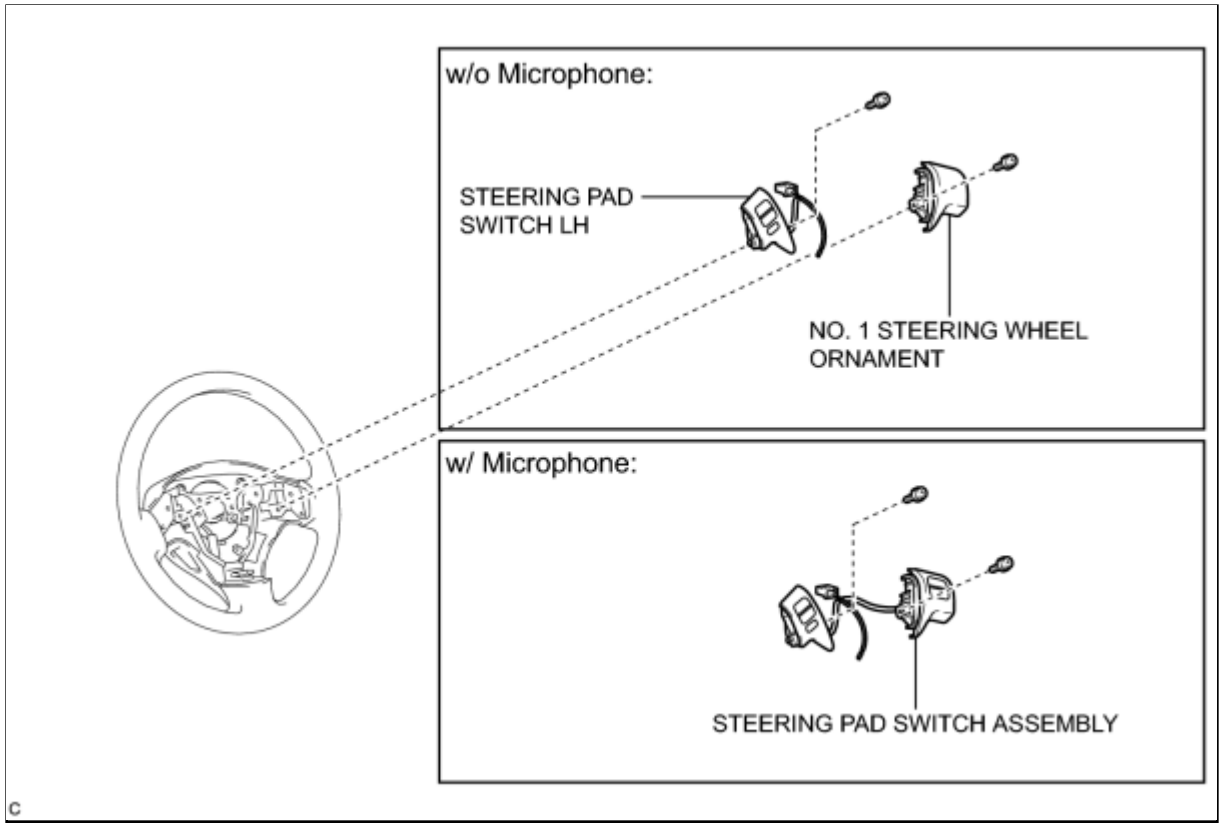

ILLUSTRATION

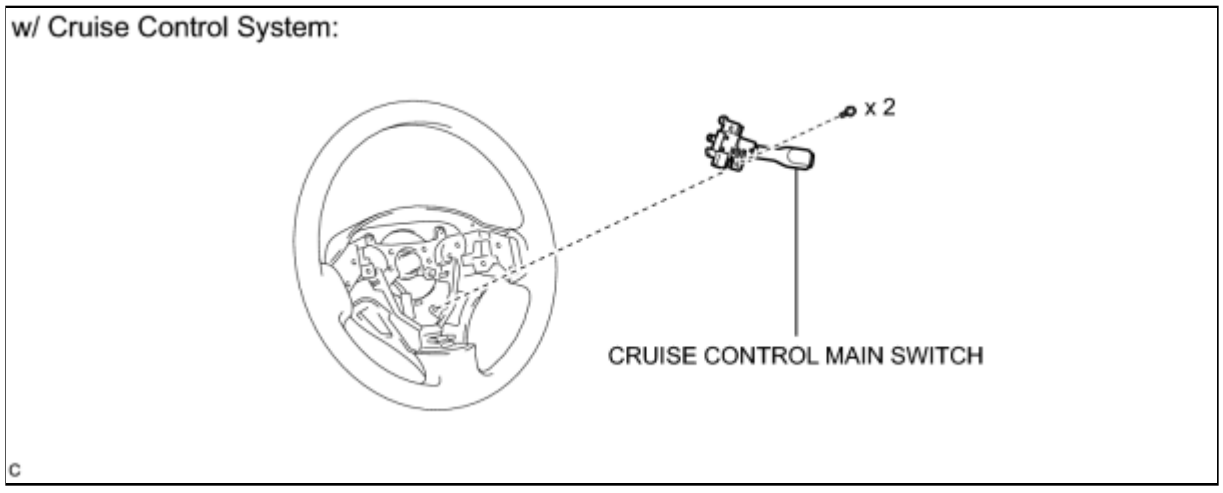

ILLUSTRATION

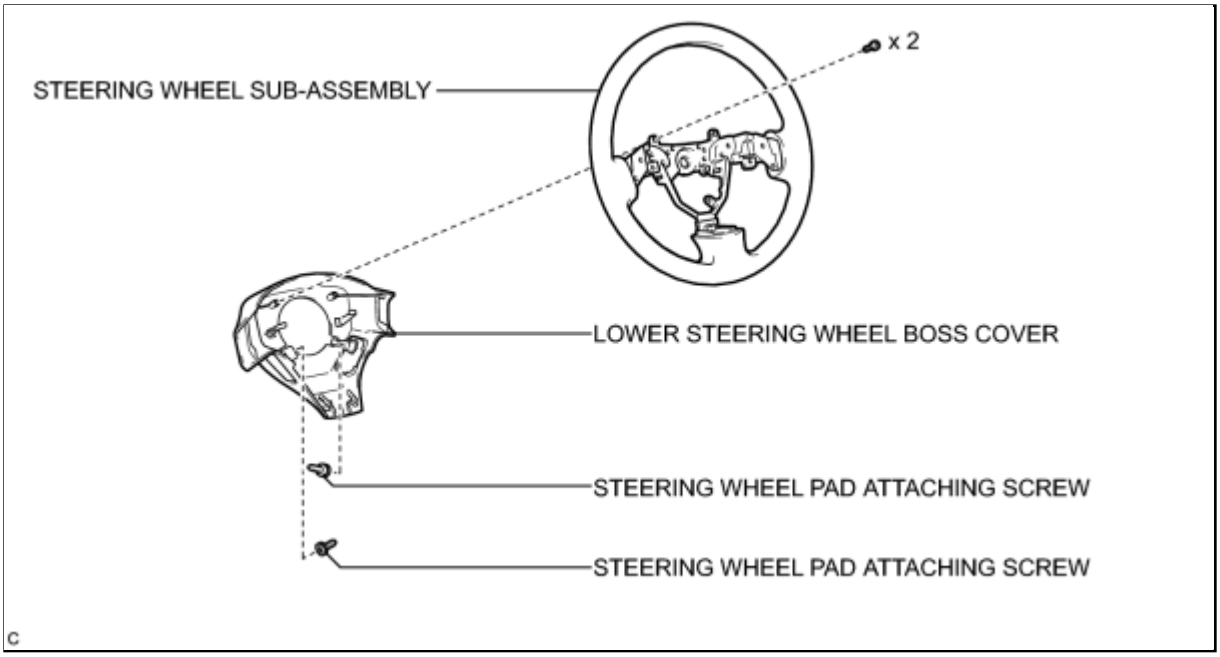
STEERING WHEEL SUB-ASSEMBLY
x 2
LOWER STEERING WHEEL BOSS COVER
STEERING WHEEL PAD ATTACHING SCREW
STEERING WHEEL PAD ATTACHING SCREW
C

Last Modified: 3-10-2010	6.4 A	**From:** 200901
Model Year: 2010	**Model:** Corolla	**Doc ID:** RM0000033RT017X
Title: STEERING COLUMN: STEERING WHEEL (w/ Steering Pad Switch): REMOVAL (2010 Corolla)		

REMOVAL

CAUTION:

Some of these service operations affect the SRS airbag system. Read the precautionary notices concerning the SRS airbag system before servicing INFO **.**

1. TURN FRONT WHEELS TO FACE STRAIGHT AHEAD

2. DISCONNECT CABLE FROM NEGATIVE BATTERY TERMINAL

CAUTION:

Wait at least 90 seconds after disconnecting the cable from the negative (-) battery terminal to disable the SRS system.

3. REMOVE LOWER NO. 3 STEERING WHEEL COVER INFO

4. REMOVE LOWER NO. 2 STEERING WHEEL COVER INFO

5. REMOVE STEERING PAD INFO

6. REMOVE STEERING WHEEL ASSEMBLY

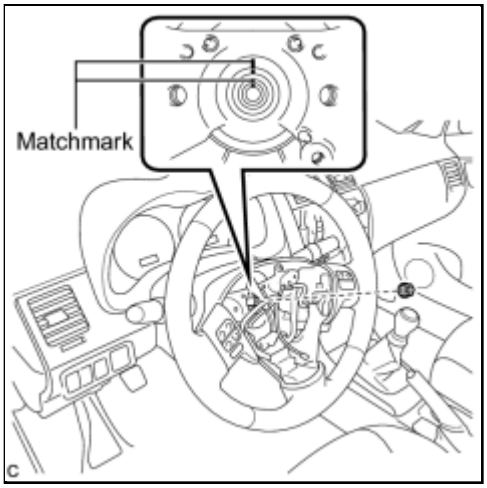

(a) Remove the steering wheel assembly set nut.

(b) Put matchmarks on the steering wheel assembly and the steering main shaft.

(c) Disconnect the connectors from the spiral cable.

(d) Using SST, remove the steering wheel assembly.

SST: 09950-50013

09951-05010

09952-05010

09953-05020

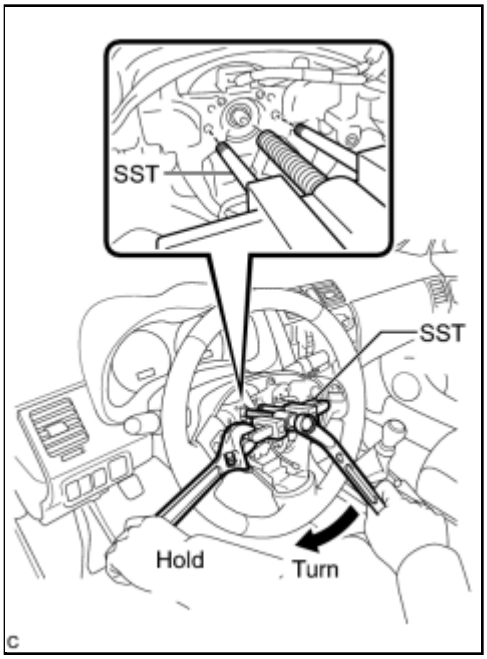

09954-05021

NOTICE:

Apply a small amount of grease to the threads and tip of SST (09953-05020) before use.

7. REMOVE STEERING PAD SWITCH LH (w/o Microphone) INFO

8. REMOVE NO. 1 STEERING WHEEL ORNAMENT (w/o Microphone)

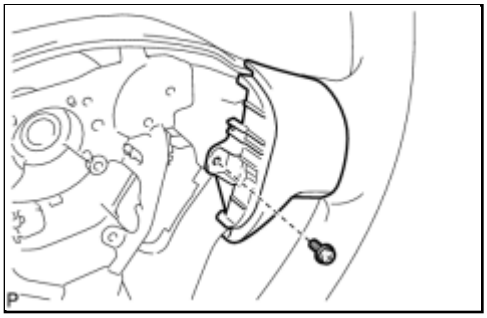

(a) Remove the screw.

(b) Disengage the 2 pins to remove the No. 1 steering wheel ornament from the steering wheel sub-assembly.

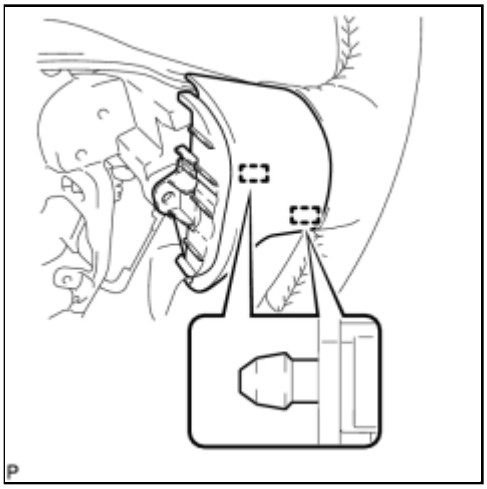

9. REMOVE STEERING PAD SWITCH ASSEMBLY (w/ Microphone) INFO

10. REMOVE CRUISE CONTROL MAIN SWITCH (w/ Cruise Control System) INFO

11. REMOVE LOWER STEERING WHEEL BOSS COVER

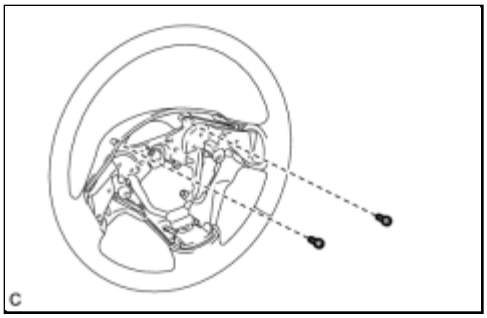

(a) Remove the 2 screws.

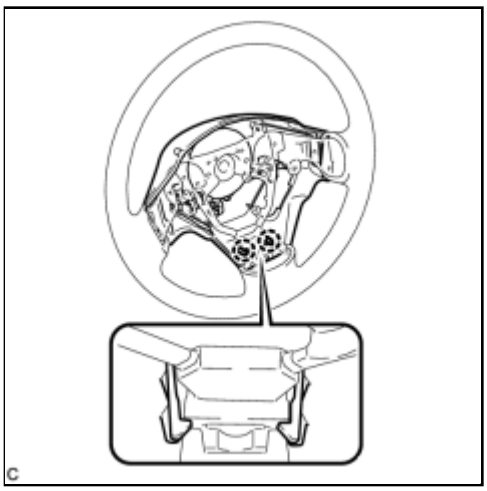

(b) Disengage the 2 claws to remove the lower steering wheel boss cover from the steering wheel sub-assembly.

12. REMOVE STEERING WHEEL PAD ATTACHING SCREW

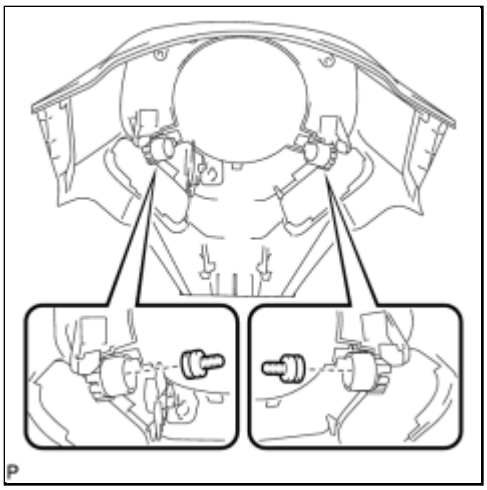

(a) Remove the 2 steering wheel pad attaching screws from the lower steering wheel boss cover.

Last Modified: 3-10-2010	6.4 A	**From:** 200901
Model Year: 2010	**Model:** Corolla	**Doc ID:** RM0000033RR017X
Title: STEERING COLUMN: STEERING WHEEL (w/ Steering Pad Switch): INSTALLATION (2010 Corolla)		

INSTALLATION

1. INSTALL STEERING WHEEL PAD ATTACHING SCREW

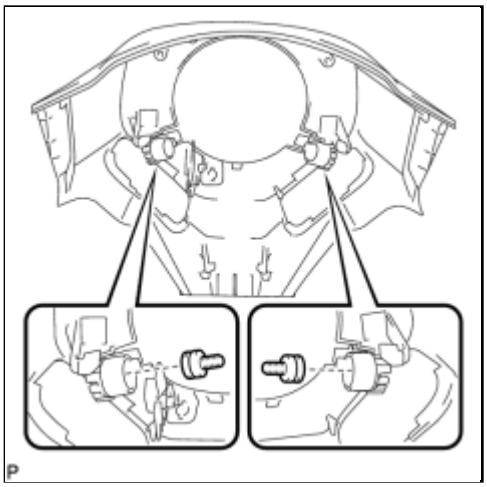

(a) Install the 2 steering wheel pad attaching screws to the lower steering wheel boss cover.

2. INSTALL LOWER STEERING WHEEL BOSS COVER

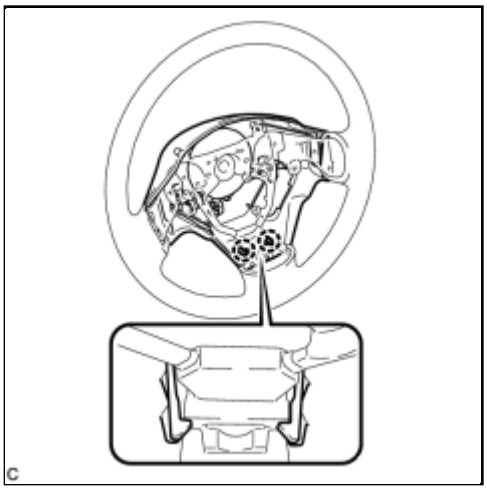

(a) Engage the 2 claws to install the lower steering wheel boss cover to the steering wheel sub-assembly.

(b) Install the 2 screws.

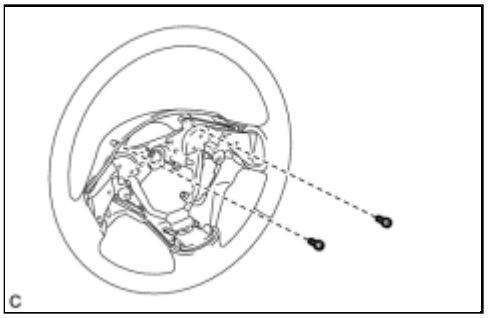

3. INSTALL CRUISE CONTROL MAIN SWITCH (w/ Cruise Control System) INFO

4. INSTALL STEERING PAD SWITCH LH (w/o Microphone) INFO

5. INSTALL NO. 1 STEERING WHEEL ORNAMENT (w/o Microphone)

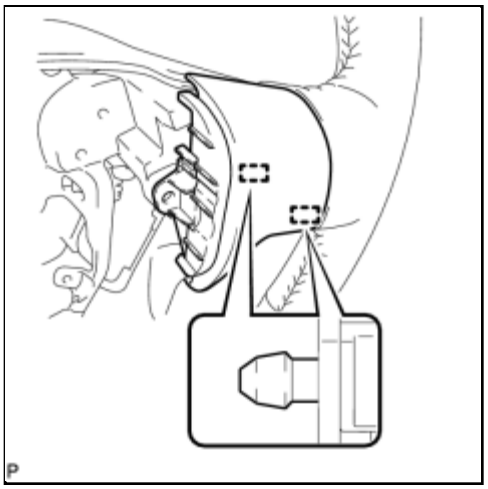

(a) Engage the 2 pins to install the No. 1 steering wheel ornament to the steering wheel sub-assembly.

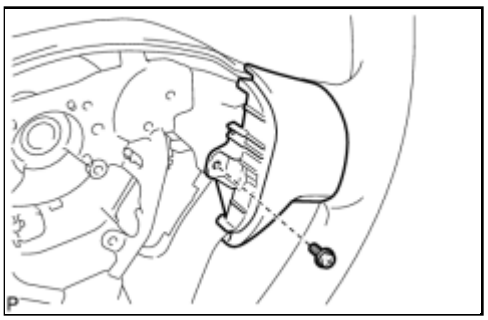

(b) Install the screw.

6. INSTALL STEERING PAD SWITCH ASSEMBLY (w/ Microphone) INFO

7. TURN FRONT WHEELS TO FACE STRAIGHT AHEAD

8. ADJUST SPIRAL CABLE INFO

9. INSTALL STEERING WHEEL ASSEMBLY

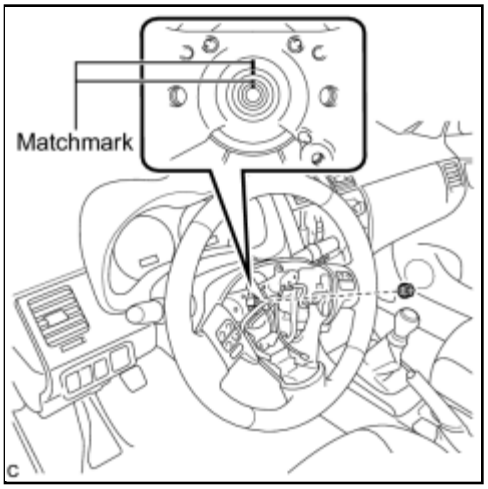

(a) Align the matchmarks on the steering wheel assembly and steering main shaft.

(b) Install the steering wheel assembly set nut.

Torque: 50 N·m (510 kgf·cm, 37ft·lbf)

(c) Connect the connectors to the spiral cable sub-assembly.

10. INSTALL STEERING PAD INFO

11. INSTALL LOWER NO. 3 STEERING WHEEL COVER INFO

12. INSTALL LOWER NO. 2 STEERING WHEEL COVER INFO

13. INSPECT STEERING WHEEL CENTER POINT

14. CONNECT CABLE TO NEGATIVE BATTERY TERMINAL

15. INSPECT STEERING PAD INFO

16. INSPECT SRS WARNING LIGHT

HINT: INFO .

Last Modified: 3-10-2010	6.4 K	**From:** 200901
Model Year: 2010	**Model:** Corolla	**Doc ID:** RM0000033RS018X
Title: STEERING COLUMN: STEERING WHEEL (w/o Steering Pad Switch): COMPONENTS (2010 Corolla)		

COMPONENTS

ILLUSTRATION

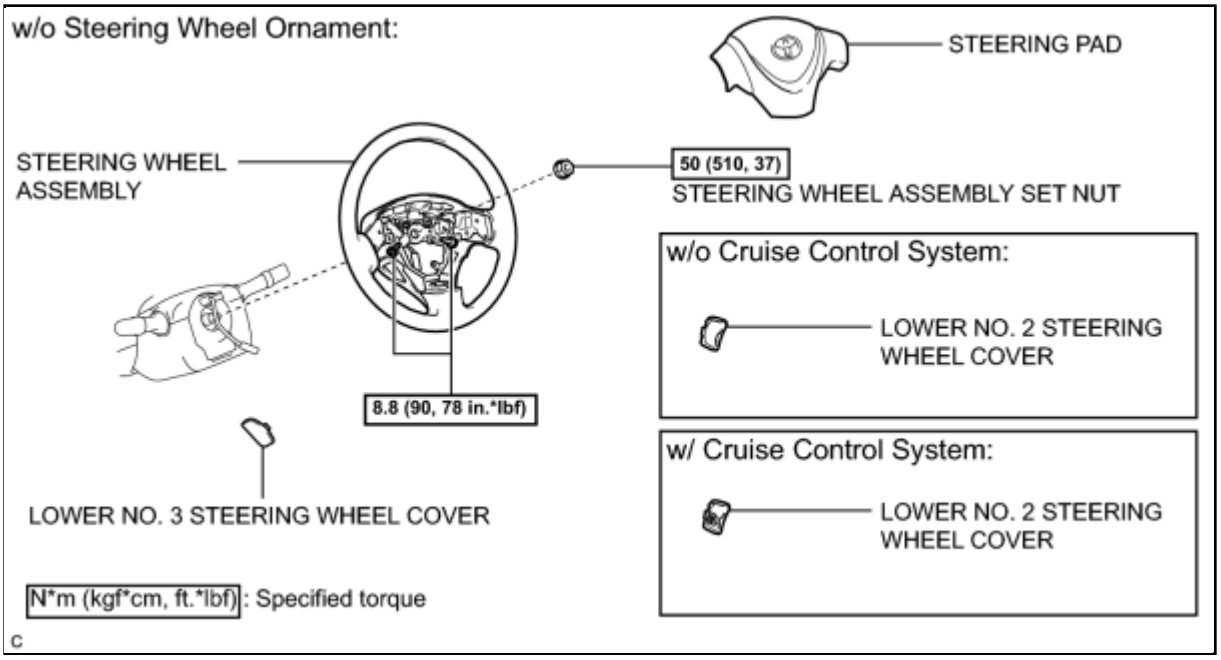

ILLUSTRATION

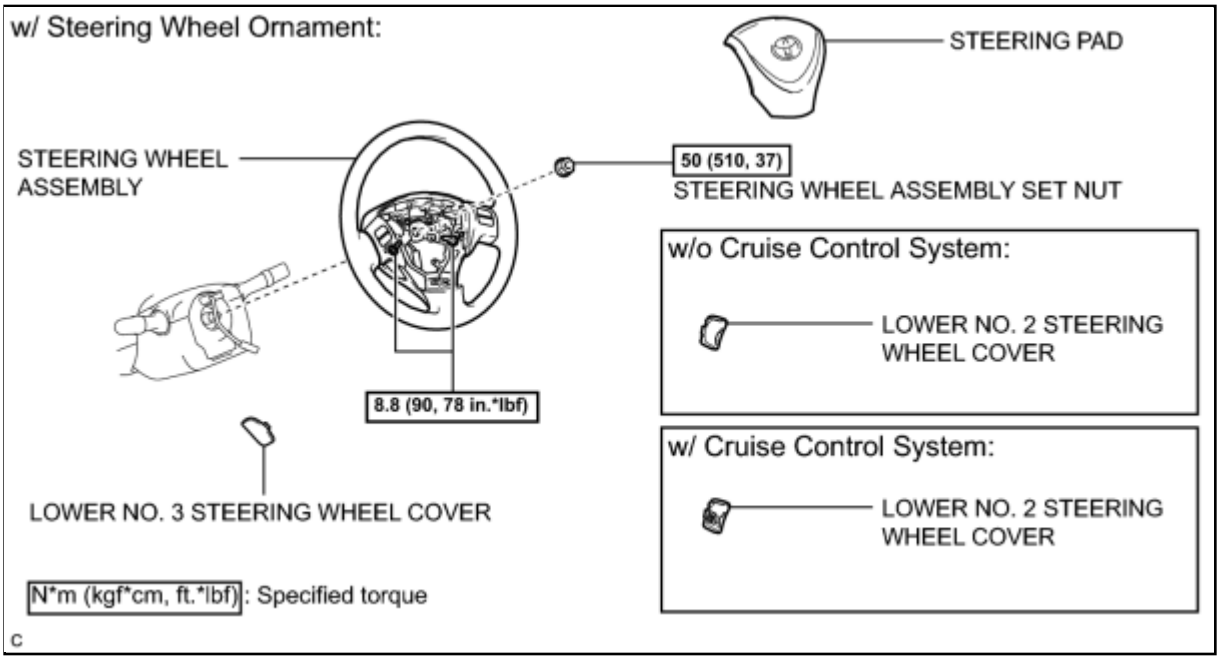

ILLUSTRATION

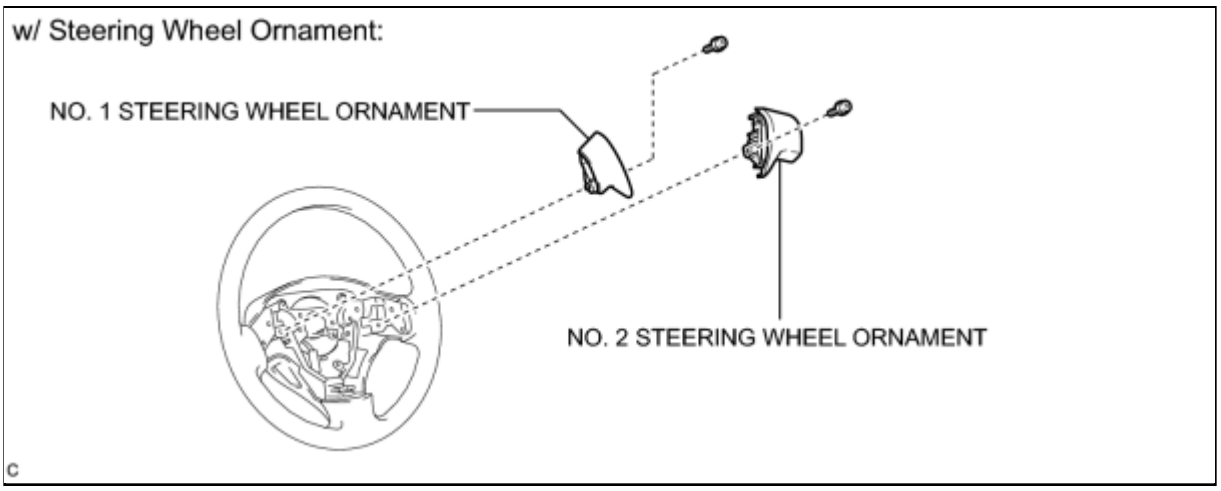

ILLUSTRATION

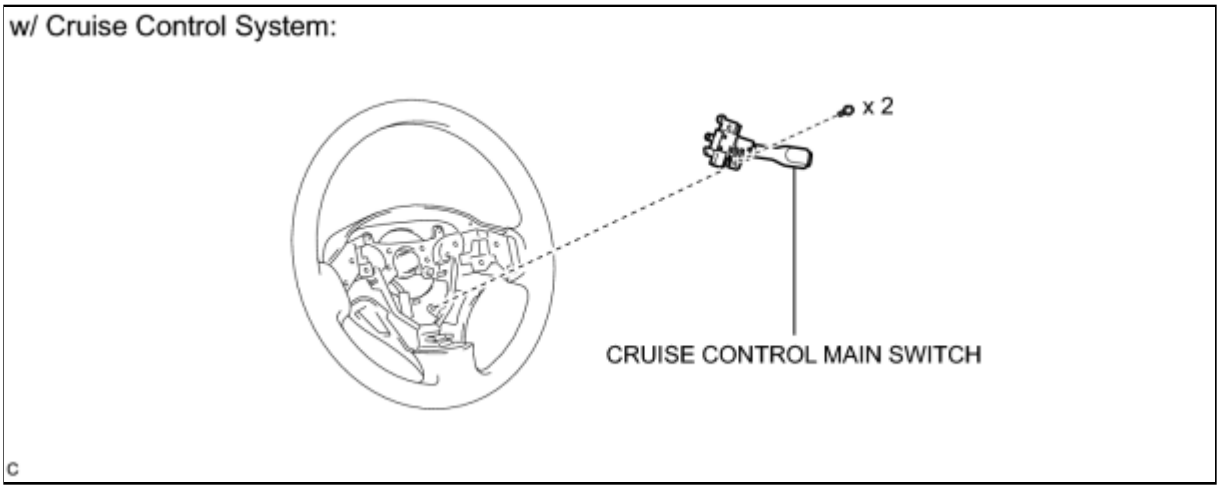

ILLUSTRATION

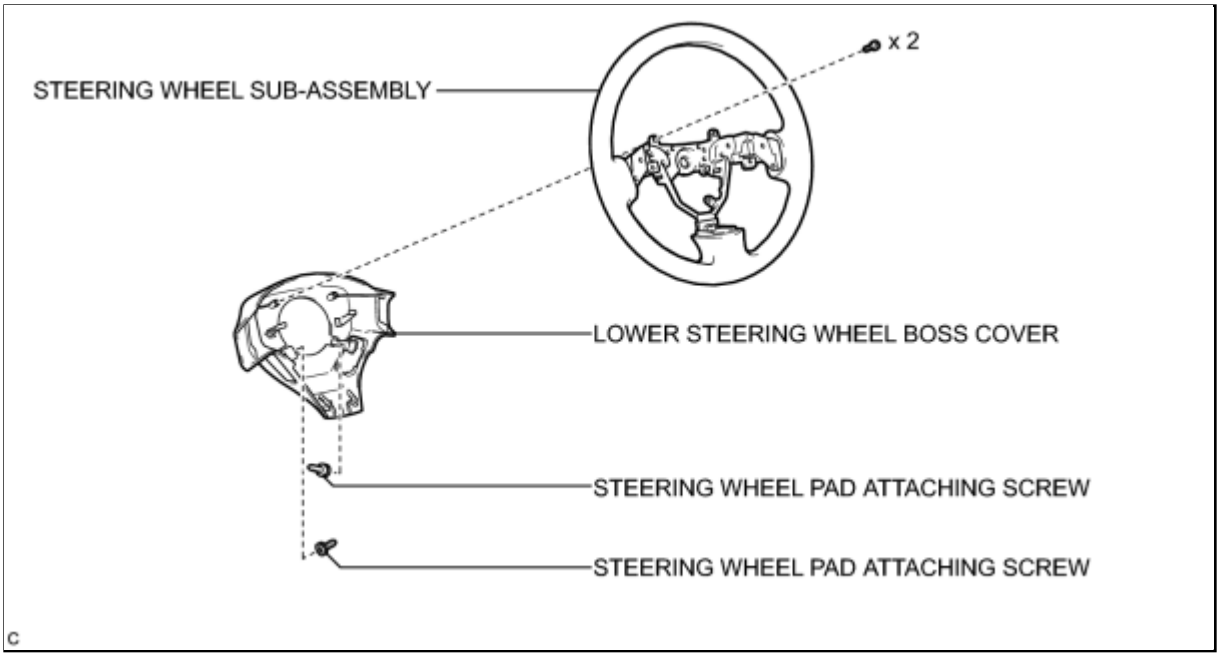
STEERING WHEEL SUB-ASSEMBLY
x 2
LOWER STEERING WHEEL BOSS COVER
STEERING WHEEL PAD ATTACHING SCREW
STEERING WHEEL PAD ATTACHING SCREW
C

Last Modified: 3-10-2010	6.4 A	**From:** 200901
Model Year: 2010	**Model:** Corolla	**Doc ID:** RM0000033RT01AX
Title: STEERING COLUMN: STEERING WHEEL (w/o Steering Pad Switch): REMOVAL (2010 Corolla)		

REMOVAL

CAUTION:

Some of these service operations affect the SRS airbag system. Read the precautionary notices concerning the SRS airbag system before servicing INFO **.**

1. TURN FRONT WHEELS TO FACE STRAIGHT AHEAD

2. DISCONNECT CABLE FROM NEGATIVE BATTERY TERMINAL

CAUTION:

Wait at least 90 seconds after disconnecting the cable from the negative (-) battery terminal to disable the SRS system.

3. REMOVE LOWER NO. 3 STEERING WHEEL COVER INFO

4. REMOVE LOWER NO. 2 STEERING WHEEL COVER INFO

5. REMOVE STEERING PAD INFO

6. REMOVE STEERING WHEEL ASSEMBLY

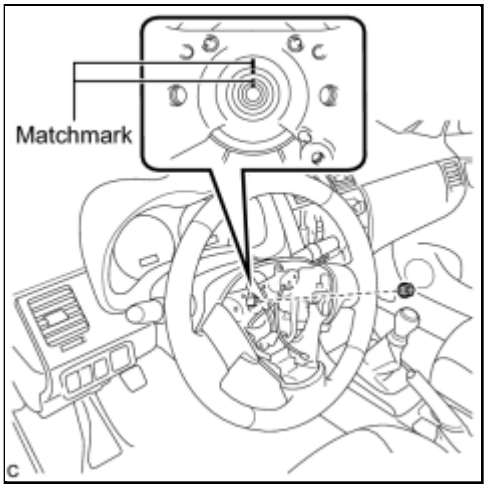

(a) Remove the steering wheel assembly set nut.

(b) Put matchmarks on the steering wheel assembly and the steering main shaft.

(c) Disconnect the connectors from the spiral cable.

(d) Using SST, remove the steering wheel assembly.

SST: 09950-50013

09951-05010

09952-05010

09953-05020

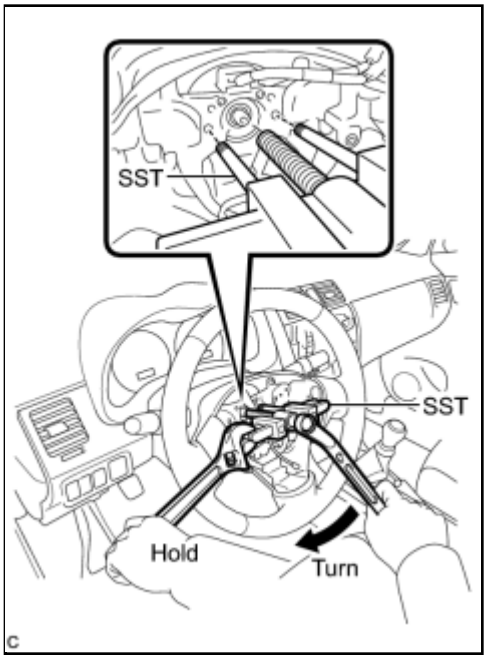

09954-05021

NOTICE:

Apply a small amount of grease to the threads and tip of SST (09953-05020) before use.

7. REMOVE NO. 1 STEERING WHEEL ORNAMENT (w/ Steering Wheel Ornament)

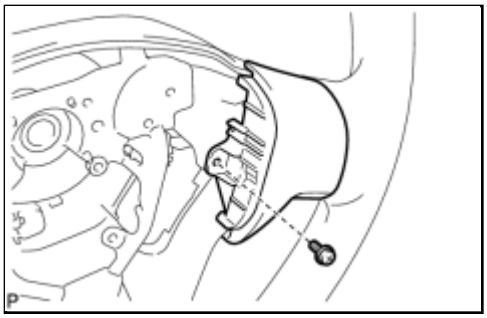

(a) Remove the screw.

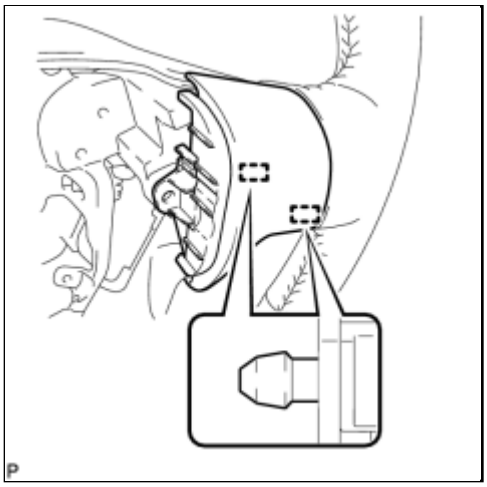

(b) Disengage the 2 pins to remove the No. 1 steering wheel ornament from the steering wheel sub-assembly.

8. REMOVE NO. 2 STEERING WHEEL ORNAMENT (w/ Steering Wheel Ornament)

HINT:

Perform the same procedure as for the No. 1 steering wheel ornament.

9. REMOVE CRUISE CONTROL MAIN SWITCH (w/ Cruise Control System) INFO

10. REMOVE LOWER STEERING WHEEL BOSS COVER

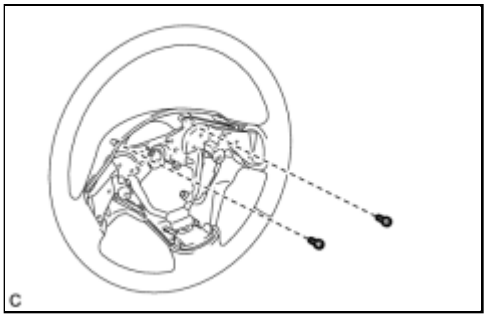

(a) Remove the 2 screws.

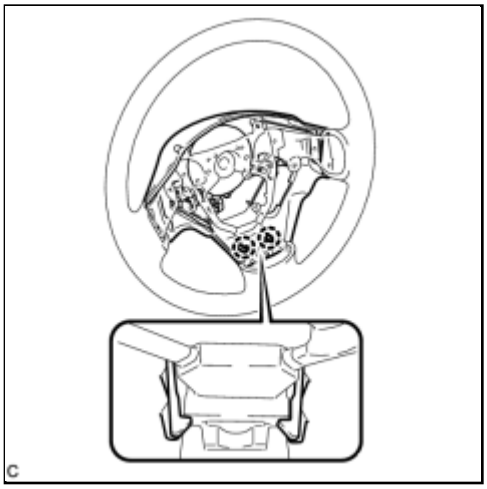

(b) Disengage the 2 claws to remove the lower steering wheel boss cover from the steering wheel sub-assembly.

11. REMOVE STEERING WHEEL PAD ATTACHING SCREW

(a) Remove the 2 steering wheel pad attaching screws from the lower steering wheel boss cover.

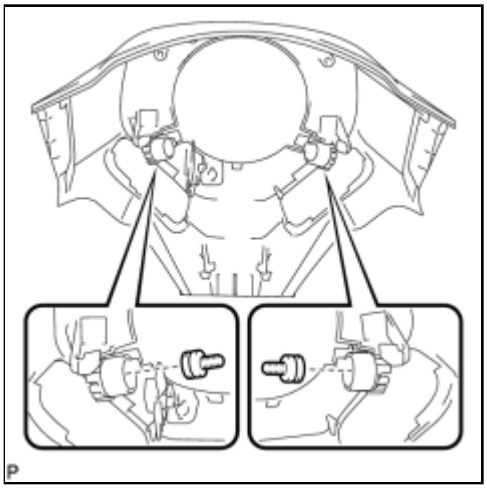
P

Last Modified: 3-10-2010	6.4 A	**From:** 200901
Model Year: 2010	**Model:** Corolla	**Doc ID:** RM0000033RR01AX
Title: STEERING COLUMN: STEERING WHEEL (w/o Steering Pad Switch): INSTALLATION (2010 Corolla)		

INSTALLATION

1. INSTALL STEERING WHEEL PAD ATTACHING SCREW

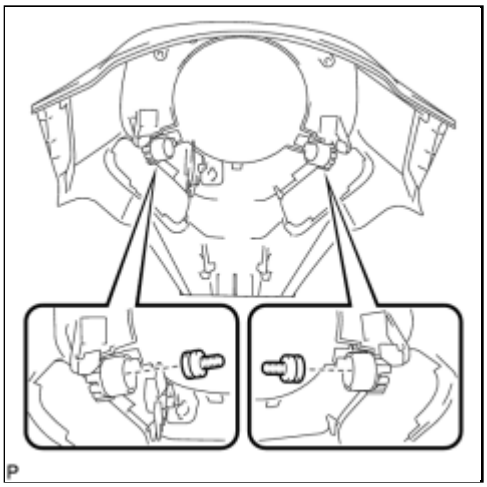

(a) Install the 2 steering wheel pad attaching screws to the lower steering wheel boss cover.

2. INSTALL LOWER STEERING WHEEL BOSS COVER

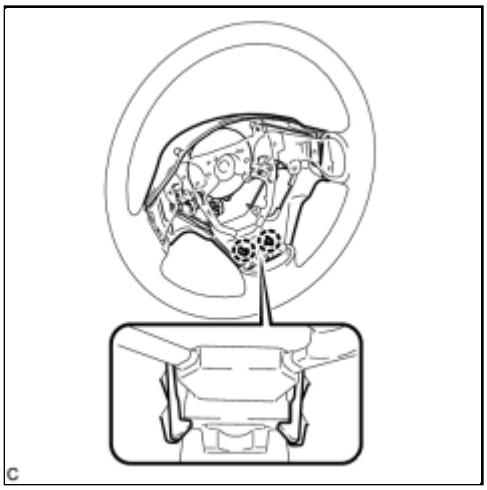

(a) Engage the 2 claws to install the lower steering wheel boss cover to the steering wheel sub-assembly.

(b) Install the 2 screws.

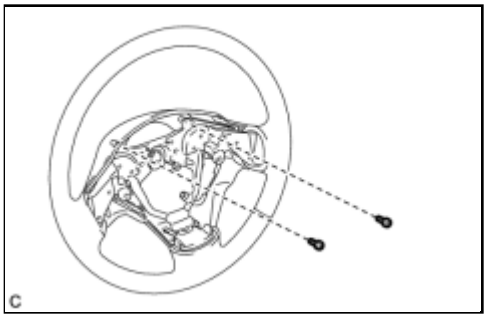

3. INSTALL CRUISE CONTROL MAIN SWITCH (w/ Cruise Control System) INFO

4. INSTALL NO. 1 STEERING WHEEL ORNAMENT (w/ Steering Wheel Ornament)

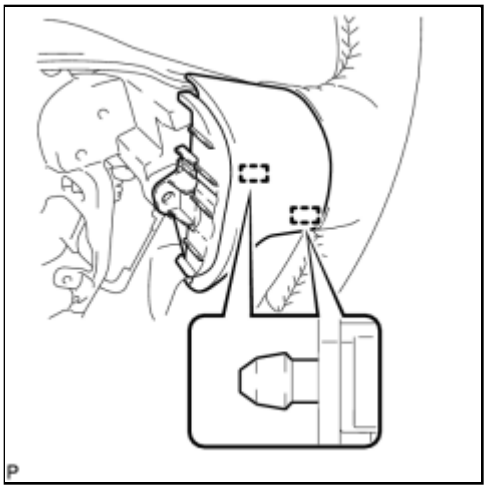

(a) Engage the 2 pins to install the No. 1 steering wheel ornament to the steering wheel sub-assembly.

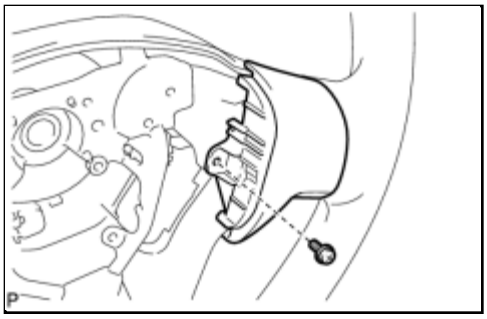

(b) Install the screw.

5. INSTALL NO. 2 STEERING WHEEL ORNAMENT (w/ Steering Wheel Ornament)

HINT:

Perform the same procedure as for the No. 1 steering wheel ornament.

6. TURN FRONT WHEELS TO FACE STRAIGHT AHEAD

7. ADJUST SPIRAL CABLE INFO

8. INSTALL STEERING WHEEL ASSEMBLY

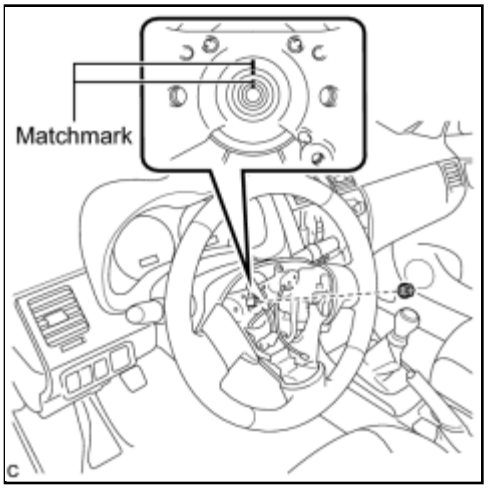

(a) Align the matchmarks on the steering wheel assembly and steering main shaft.

(b) Install the steering wheel assembly set nut.

Torque: 50 N·m (510 kgf·cm, 37ft·lbf)

(c) Connect the connectors to the spiral cable sub-assembly.

9. INSTALL STEERING PAD INFO

10. INSTALL LOWER NO. 3 STEERING WHEEL COVER INFO

11. INSTALL LOWER NO. 2 STEERING WHEEL COVER INFO

12. INSPECT STEERING WHEEL CENTER POINT

13. CONNECT CABLE TO NEGATIVE BATTERY TERMINAL

14. INSPECT STEERING PAD INFO

15. INSPECT SRS WARNING LIGHT

HINT: INFO .

Last Modified: 3-10-2010	6.4 K	**From:** 200901
Model Year: 2010	**Model:** Corolla	**Doc ID:** RM0000029T600TX
Title: STEERING GEAR / LINKAGE: STEERING GEAR: COMPONENTS (2010 Corolla)		

COMPONENTS

ILLUSTRATION

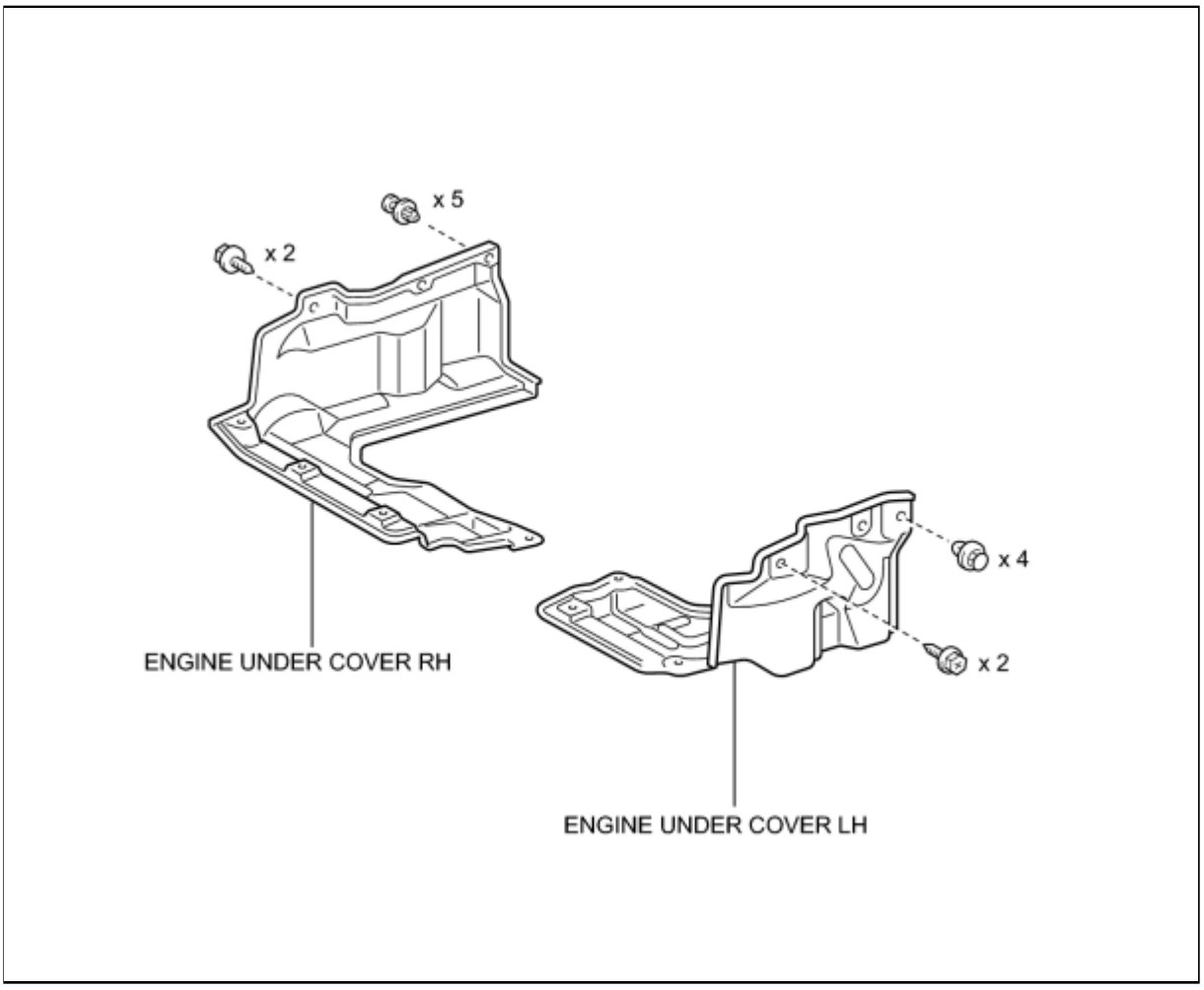

ILLUSTRATION

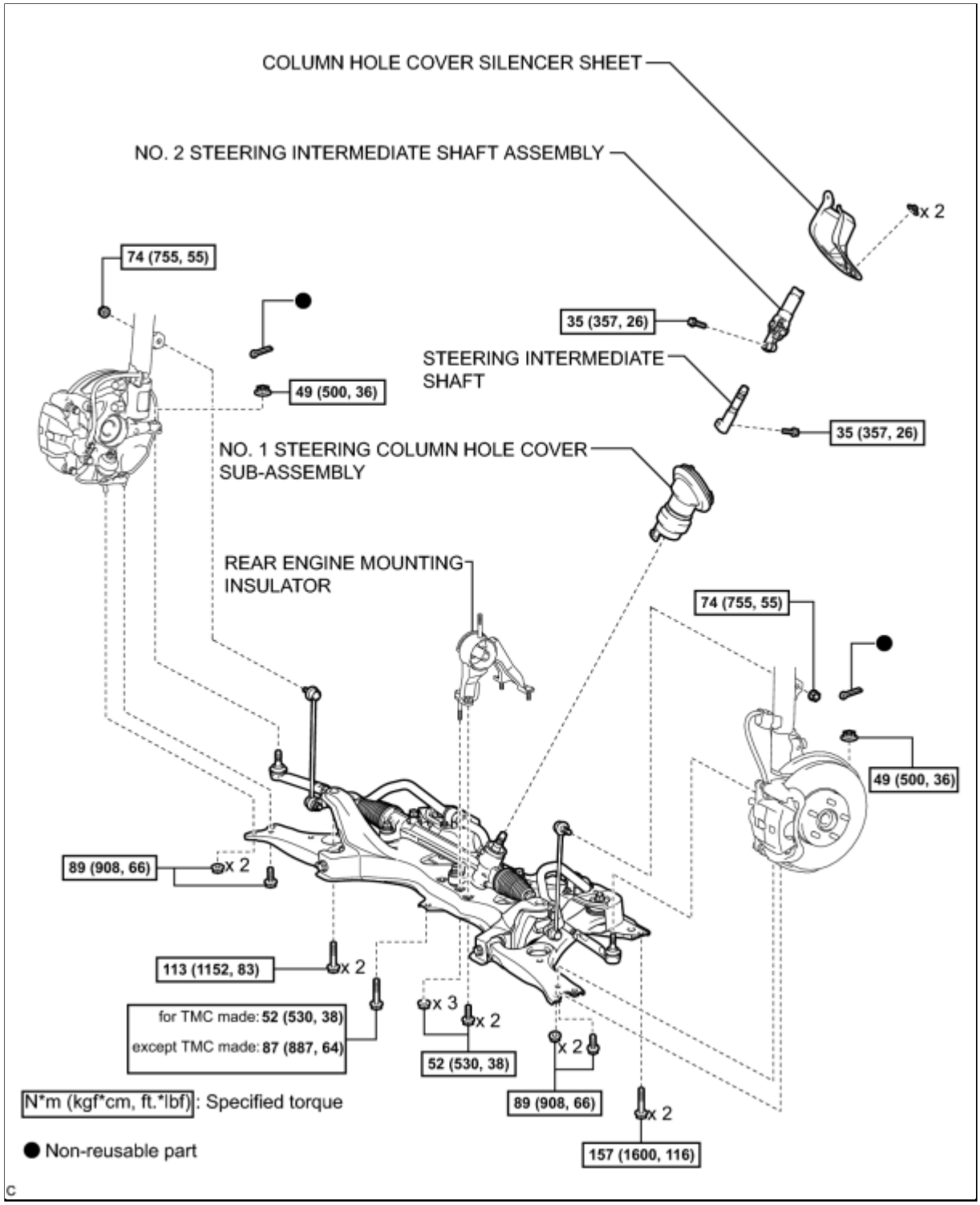

ILLUSTRATION

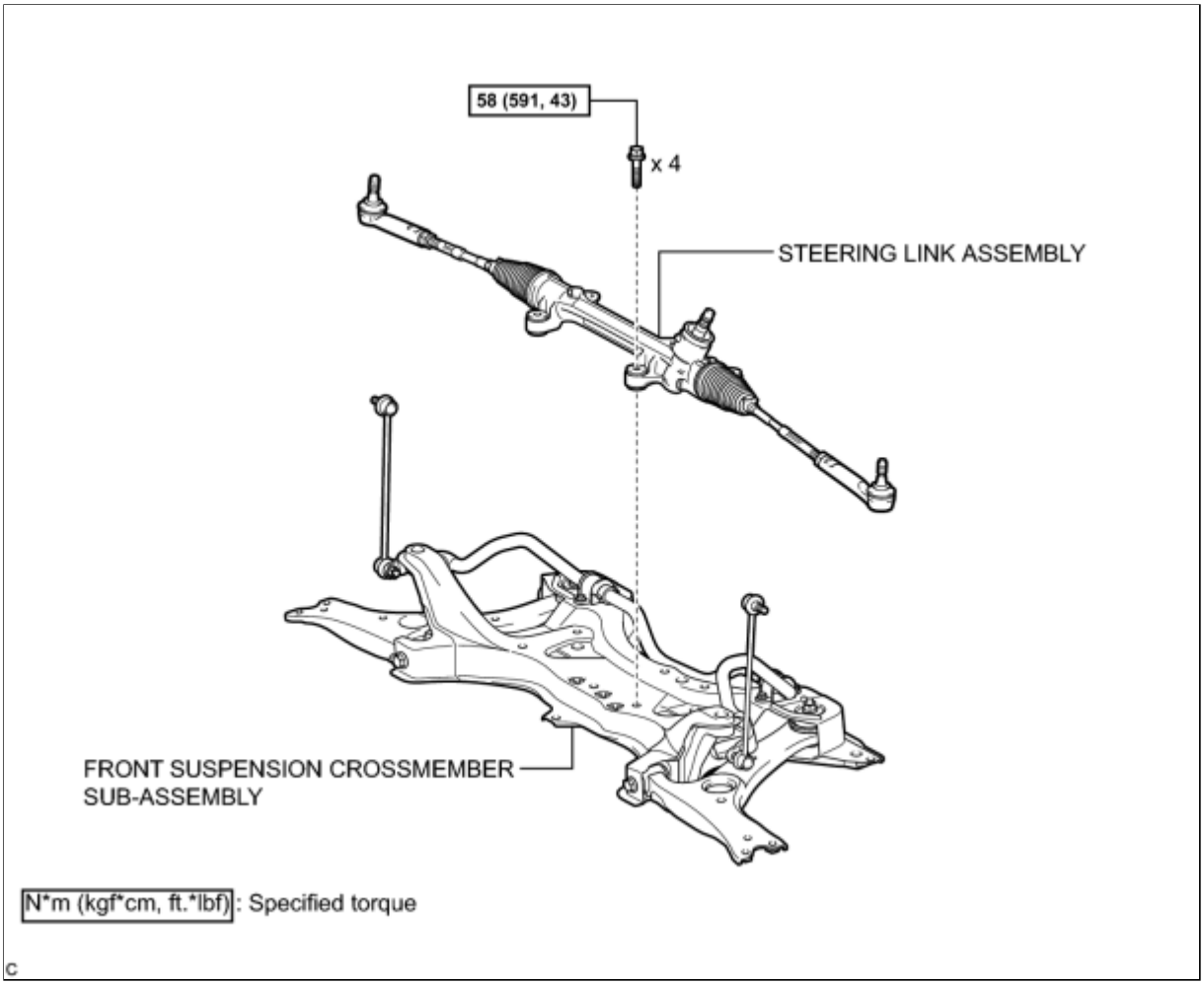

ILLUSTRATION

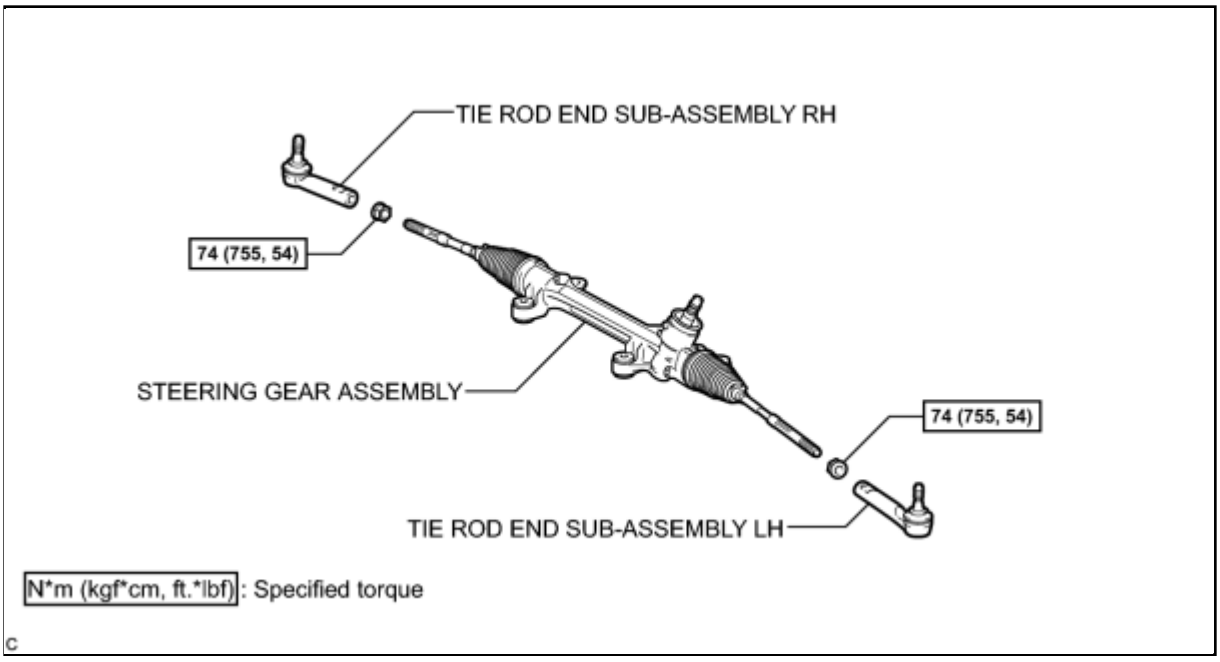

Last Modified: 3-10-2010	6.4 A	**From:** 200901
Model Year: 2010	**Model:** Corolla	**Doc ID:** RM0000029T701VX
Title: STEERING GEAR / LINKAGE: STEERING GEAR: REMOVAL (2010 Corolla)		

REMOVAL

1. PLACE FRONT WHEELS FACING STRAIGHT AHEAD

2. SECURE STEERING WHEEL

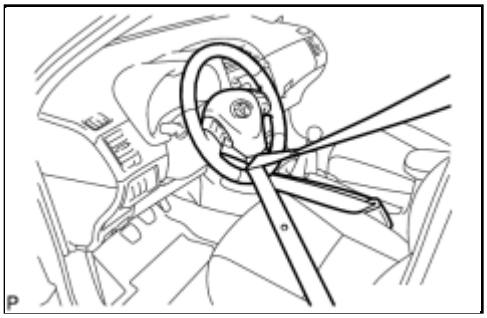

(a) Secure the steering wheel with the seat belt in order to prevent rotation.

HINT:

This operation is useful to prevent damage to the spiral cable.

3. REMOVE COLUMN HOLE COVER SILENCER SHEET INFO

4. SEPARATE NO. 2 STEERING INTERMEDIATE SHAFT ASSEMBLY INFO

5. SEPARATE NO. 1 STEERING COLUMN HOLE COVER SUB-ASSEMBLY

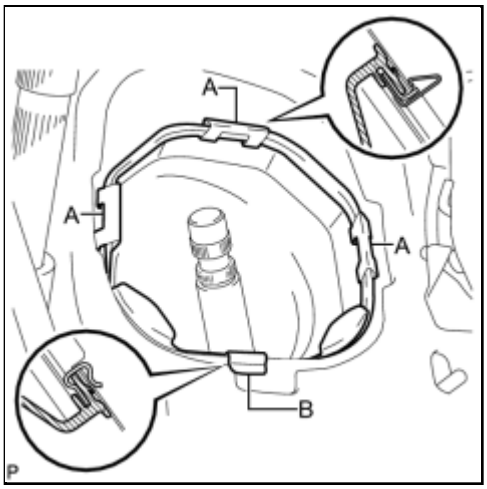

(a) Remove clips A and the No. 1 steering column hole cover sub-assembly and disengage clip B from the body.

NOTICE:

Do not damage clips A and B.

6. REMOVE FRONT WHEELS

7. REMOVE ENGINE UNDER COVER LH

8. REMOVE ENGINE UNDER COVER RH

9. SEPARATE TIE ROD END SUB-ASSEMBLY LH

(a) Remove the cotter pin and the nut.

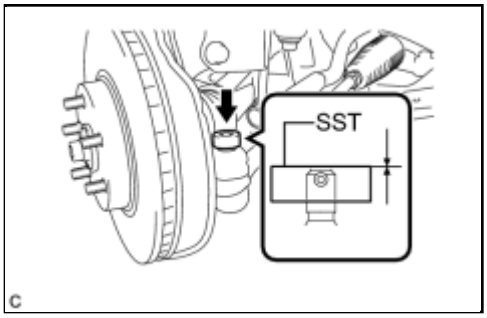

(b) Install SST to the tie rod end.

SST: 09960-20010

09961-02060

NOTICE:

Make sure that the upper ends of the tie rod end and SST are aligned.

(c) Using SST, separate the tie rod end from the steering knuckle.

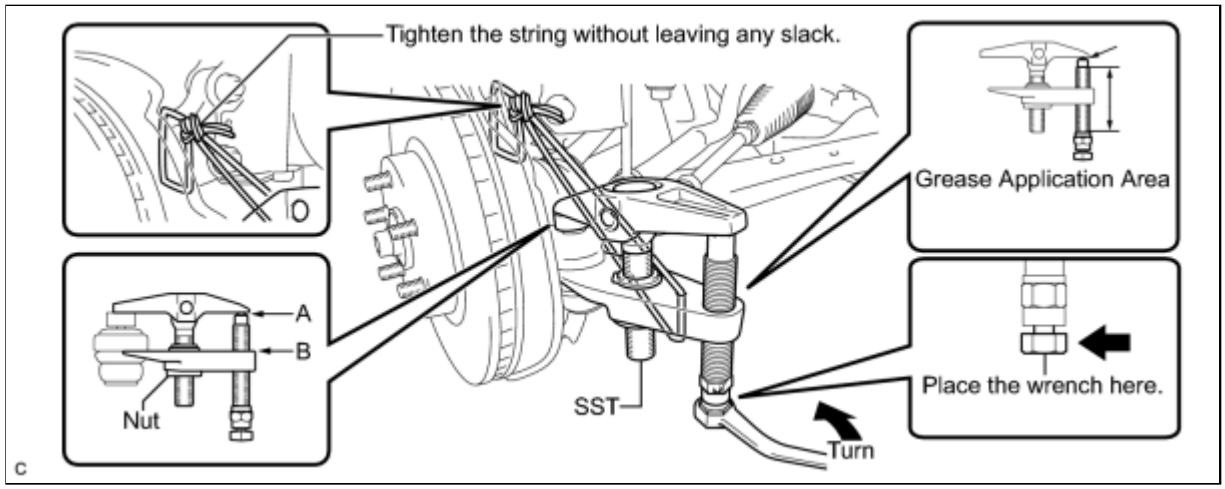

SST: 09960-20010

09961-02010

CAUTION:

Apply grease to the threads of the bolt and the tip of SST.

NOTICE:

- Be sure to tighten the string firmly to secure SST to the steering knuckle to prevent SST from falling off.
- Install SST with the center nut so that A and B are parallel. Otherwise, the dust cover may be damaged.
- Be sure to place the wrench on the part indicated in the illustration.
- Do not damage the front disc brake dust cover.
- Do not damage the ball joint dust cover.
- Do not damage the steering knuckle.

10. SEPARATE TIE ROD END SUB-ASSEMBLY RH

HINT:

Perform the same procedure as for the LH side.

11. SEPARATE FRONT STABILIZER LINK ASSEMBLY LH INFO

12. SEPARATE FRONT STABILIZER LINK ASSEMBLY RH

HINT:

Perform the same procedure as for the LH side.

13. SEPARATE FRONT LOWER SUSPENSION ARM LH INFO

14. SEPARATE FRONT LOWER SUSPENSION ARM RH

HINT:

Perform the same procedure as for the LH side.

15. REMOVE FRONT SUSPENSION CROSSMEMBER SUB-ASSEMBLY INFO

16. REMOVE NO. 1 STEERING COLUMN HOLE COVER SUB-ASSEMBLY

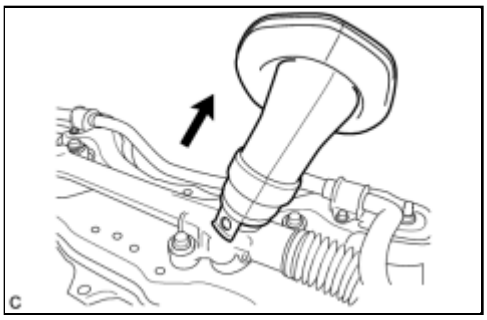

(a) Remove the No. 1 steering column hole cover sub-assembly from the steering link assembly.

17. REMOVE STEERING INTERMEDIATE SHAFT

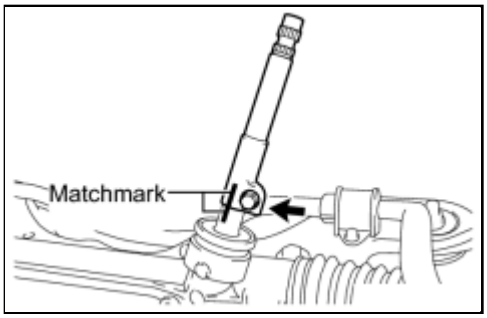

(a) Put matchmarks on the steering intermediate shaft and the steering link assembly.

(b) Remove the bolt and the steering intermediate shaft from the steering link assembly.

18. REMOVE STEERING LINK ASSEMBLY

(a) Remove the 4 bolts and steering link assembly from the front suspension crossmember sub-assembly.

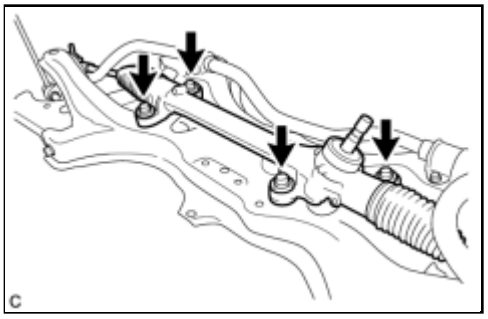

19. SECURE STEERING LINK ASSEMBLY

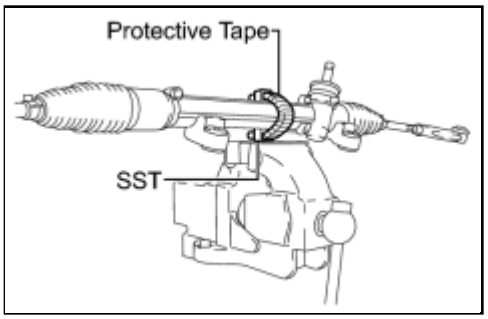

(a) Using SST, secure the steering link assembly in a vise.

SST: 09612-00012

HINT:

Tape SST before use.

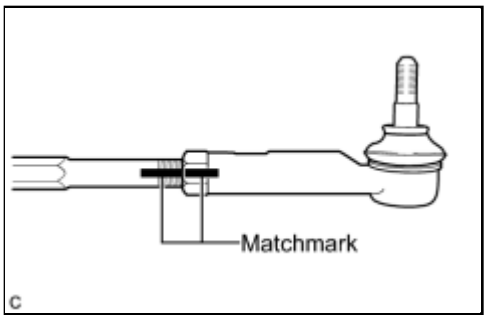

20. REMOVE TIE ROD END SUB-ASSEMBLY LH

(a) Put matchmarks on the tie rod end sub-assembly LH and steering gear assembly.

(b) Remove the tie rod end sub-assembly LH and lock nut.

21. REMOVE TIE ROD END SUB-ASSEMBLY RH

HINT:

Perform the same procedure as for the LH side.

Last Modified: 3-10-2010	6.4 G	**From:** 200901
Model Year: 2010	**Model:** Corolla	**Doc ID:** RM0000029T5012X
Title: STEERING GEAR / LINKAGE: STEERING GEAR: INSPECTION (2010 Corolla)		

INSPECTION

1. INSPECT TIE ROD END SUB-ASSEMBLY LH

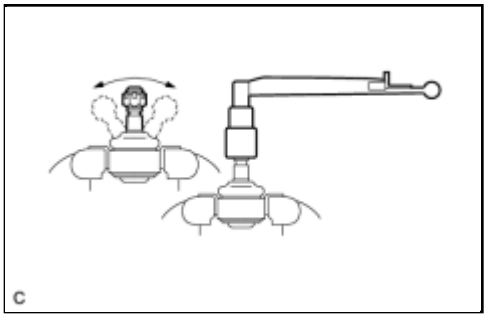

(a) Secure the tie rod end sub-assembly LH in a vise.

NOTICE:

Do not overtighten the vise.

(b) Install the nut to the stud bolt.

(c) Flip the ball joint back and forth 5 times.

(d) Set a torque wrench to the nut, turn the ball joint continuously at a rate of 2 to 4 seconds per turn, and check the turning torque on the 5th turn.

Standard turning torque:

0.3 to 2.0 N*m (3 to 20 kgf*cm, 3 to 17 in.*lbf)

HINT:

If the turning torque is not within the specified range, replace the tie rod end sub-assembly LH with a new one.

2. INSPECT TIE ROD END SUB-ASSEMBLY RH

HINT:

Perform the same procedure as for the LH side.

3. INSPECT TOTAL PRELOAD

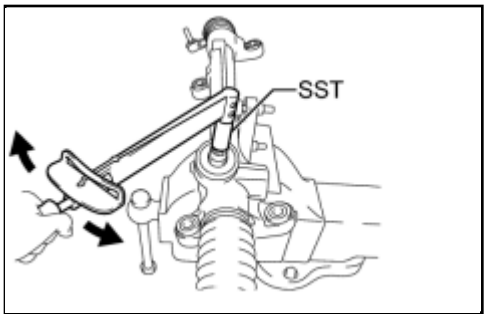

(a) Using SST and a torque wrench, inspect the total preload.

SST: 09616-00011

Standard Preload

for 2AZ-FE	0.7 to 1.1 N*m (8 to 11 kgf*cm, 7 to 9 in.*lbf)
for 2ZR-FE	0.5 to 0.9 N*m (6 to 9 kgf*cm, 5 to 7 in.*lbf)

NOTICE:

Inspect the total preload around the steering rack center position.

HINT:

If the total preload is not within the specified range, replace the steering gear assembly with a new one.

Last Modified: 3-10-2010	6.4 A	**From:** 200901
Model Year: 2010	**Model:** Corolla	**Doc ID:** RM0000029T401VX
Title: STEERING GEAR / LINKAGE: STEERING GEAR: INSTALLATION (2010 Corolla)		

INSTALLATION

1. INSTALL TIE ROD END SUB-ASSEMBLY LH

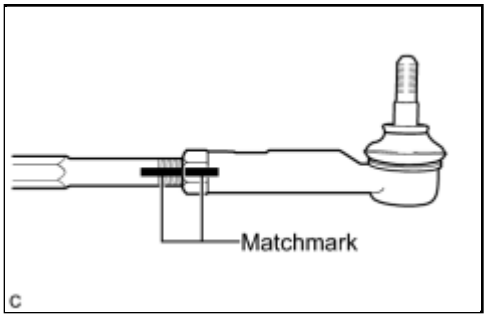

(a) Install the lock nut and the tie rod end sub-assembly LH to the steering gear assembly until the matchmarks are aligned.

HINT:

After adjusting the toe-in, tighten the lock nut.

2. INSTALL TIE ROD END SUB-ASSEMBLY RH

HINT:

Perform the same procedure as for the LH side.

3. INSTALL STEERING LINK ASSEMBLY

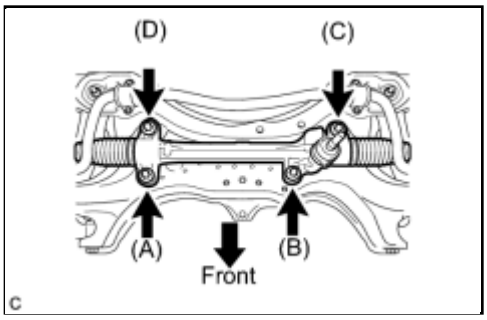

(a) Install the steering link assembly to the front suspension crossmember sub-assembly with the 4 bolts.

(1) Temporarily tighten the bolts in order of (A), (B), (C), and then (D).

(2) Tighten the bolts in order of (A), (B), (C), and then (D).

Torque: 58 N·m (591 kgf·cm, 43ft·lbf)

4. INSTALL STEERING INTERMEDIATE SHAFT

(a) Align the matchmarks and install the steering intermediate shaft to the steering link assembly.

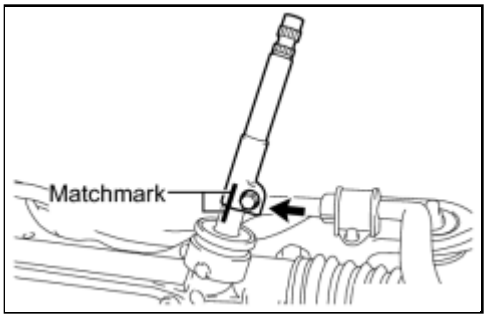

(b) Install the bolt.

Torque: 35 N·m (357 kgf·cm, 26ft·lbf)

5. INSTALL NO. 1 STEERING COLUMN HOLE COVER SUB-ASSEMBLY

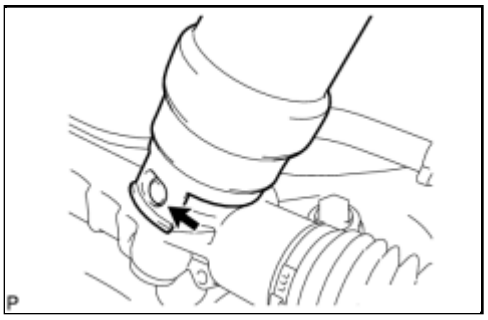

(a) Align the round hole in the No. 1 steering column hole cover sub-assembly with the protrusion of the steering link assembly to install the cover.

6. INSTALL FRONT SUSPENSION CROSSMEMBER SUB-ASSEMBLY (for TMC Made) INFO

7. INSTALL FRONT SUSPENSION CROSSMEMBER SUB-ASSEMBLY (except TMC Made) INFO

8. CONNECT FRONT LOWER SUSPENSION ARM LH INFO

9. CONNECT FRONT LOWER SUSPENSION ARM RH

HINT:

Perform the same procedure as for the LH side.

10. CONNECT FRONT STABILIZER LINK ASSEMBLY LH INFO

11. CONNECT FRONT STABILIZER LINK ASSEMBLY RH

HINT:

Perform the same procedure as for the LH side.

12. CONNECT TIE ROD END SUB-ASSEMBLY LH

(a) Connect the tie rod end sub-assembly LH to the steering knuckle with the nut.

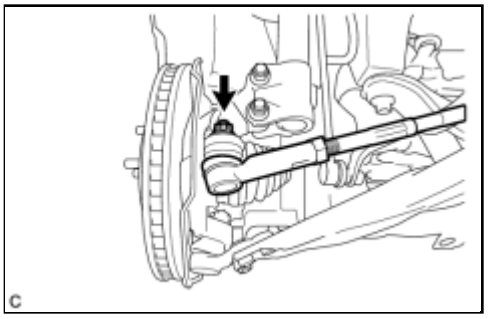

Torque: 49 N·m (500 kgf·cm, 36ft·lbf)

NOTICE:

Further tighten the nut up to 60° if the holes for the cotter pin are not aligned.

(b) Install a new cotter pin.

13. CONNECT TIE ROD END SUB-ASSEMBLY RH

HINT:

Perform the same procedure as for the LH side.

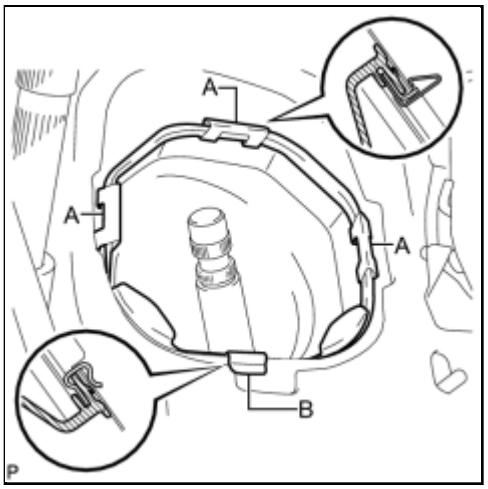

14. CONNECT NO. 1 STEERING COLUMN HOLE COVER SUB-ASSEMBLY

(a) Engage clip B onto the body and install the No. 1 steering column hole cover sub-assembly onto the body with clips A.

NOTICE:

Make sure that the lip of the No. 1 steering column hole cover sub-assembly is not damaged.

15. CONNECT NO. 2 STEERING INTERMEDIATE SHAFT ASSEMBLY INFO

16. PLACE FRONT WHEELS FACING STRAIGHT AHEAD

17. INSTALL COLUMN HOLE COVER SILENCER SHEET INFO

18. INSTALL ENGINE UNDER COVER LH

19. INSTALL ENGINE UNDER COVER RH

20. INSTALL FRONT WHEELS

Torque: 103 N·m (1050 kgf·cm, 75ft·lbf)

21. STABILIZE SUSPENSION INFO

22. ADJUST FRONT WHEEL ALIGNMENT

HINT: INFO .

Last Modified: 3-10-2010	6.4 N	**From:** 200901
Model Year: 2010	**Model:** Corolla	**Doc ID:** RM000001Y3B010X
Title: ALIGNMENT / HANDLING DIAGNOSIS: FRONT WHEEL ALIGNMENT: ADJUSTMENT (2010 Corolla)		

ADJUSTMENT

NOTICE:

For vehicles equipped with VSC, if the wheel alignment has been adjusted, and if suspension or underbody components have been removed/installed or replaced, be sure to perform the following initialization procedure in order for the system to function normally:

1. Disconnect the cable from the negative (-) battery terminal for more than 2 seconds.
2. Reconnect the cable to the negative (-) battery terminal.
3. Perform zero point calibration of the yaw rate and acceleration sensor and test mode inspection.

1. INSPECT TIRES

INFO

2. MEASURE VEHICLE HEIGHT

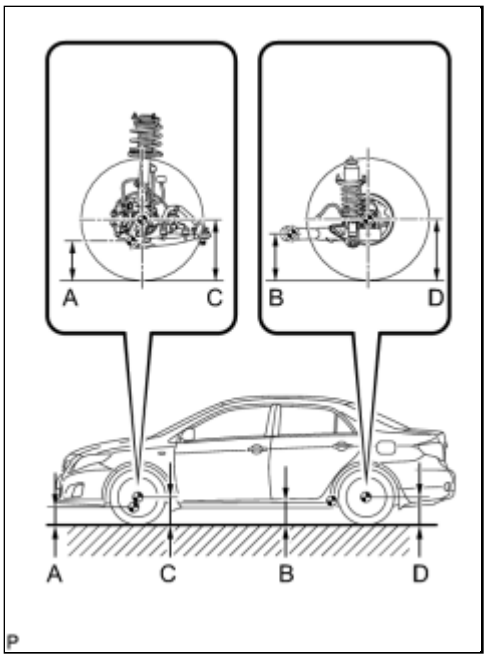

NOTICE:

- Before inspecting the wheel alignment, adjust the vehicle height to the specified value.
- Be sure to perform measurement on a level surface.
- If it is necessary to go under the vehicle for measurement, confirm that the parking brake is applied and the vehicle is secured with chocks.

(a) Bounce the vehicle up and down at the corners several times to stabilize the suspension.

(b) Measure the vehicle height.

Measuring points:

A

No. 1 lower suspension arm bushing set bolt ground clearance

B

Rear axle beam set bolt ground clearance

C

Front wheel center ground clearance

D

Rear wheel center ground clearance

Vehicle Height (Unloaded Vehicle):

-	ENGINE	FRONT C - A	REAR D - B
for TMC Made	2ZR-FE	92 mm (3.62 in.)	45 mm (1.77 in.)

except TMC Made	2ZR-FE	92 mm (3.62 in.) 80 mm (3.15 in.)*	45 mm (1.77 in.) 32 mm (1.26 in.)*
	2AZ-FE	96 mm (3.78 in.) 81 mm (3.19 in.)*	51 mm (2.01 in.) 36 mm (1.42 in.)*

* For vehicle height for Mexico, add 15 mm (0.591 in.).

3. INSPECT WHEEL ANGLE

(a) Put tread center marks on the rearmost points of the turning radius gauge.

(b) Turn the steering wheel to the left and right full lock positions, and measure the turning angle.

Wheel Angle (Unloaded Vehicle):

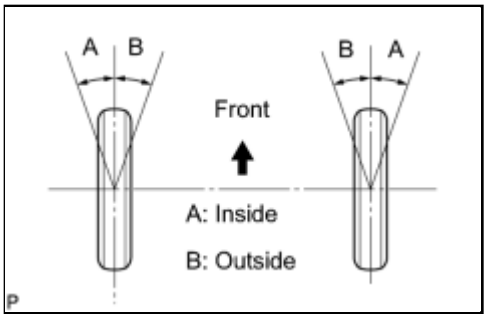

-	ENGINE	TIRE SIZE	INSIDE WHEEL	OUTSIDE WHEEL REFERENCE
for TMC Made	2ZR-FE	195/65R15	38°13' +/- 2° (38.22° +/- 2°)	32°50' (32.83°)
		205/55R16		
except TMC Made	2ZR-FE	195/65R15	38°13' +/- 2° (38.22° +/- 2°)	32°50' (32.83°)
		205/55R16	38°13' +/- 2° (38.22° +/- 2°) 38°31' +/- 2° (38.52° +/- 2°)*	32°50' (32.83°) 33°04' (33.07°)*
	2AZ-FE	205/55R16*	37°19' +/- 2° (37.32° +/- 2°)*	32°18' (32.30°)*
		215/45R17	36°59' +/- 2° (36.98° +/- 2°)	32°01' (32.02°)

* For vehicle height for Mexico, add 15 mm (0.591 in.).

If the angles are not as specified, check and adjust the right and left rack end lengths.

4. INSPECT CAMBER, CASTER AND STEERING AXIS INCLINATION

(a) Install a camber-caster-kingpin gauge or place the front wheels on the center of a wheel alignment tester.

(b) Inspect the camber, caster and steering axis inclination.

Camber (Unloaded Vehicle):

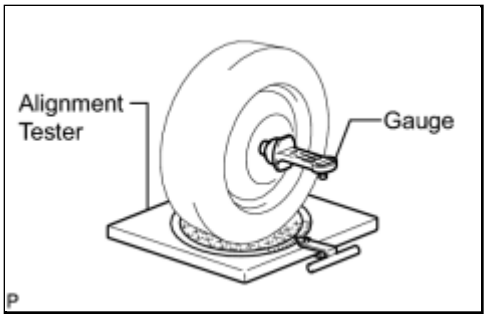

-	ENGINE	TIRE SIZE	CAMBER INCLINATION	RIGHT-LEFT DIFFERENCE
for TMC Made	2ZR-FE	195/65R15	-0°35' +/- 45' (-0.58° +/- 0.75°)	45' (0.75°) or less
		205/55R16		
except TMC Made	2ZR-FE	195/65R15	- 0°34' +/- 45' (- 0.57° +/- 0.75°)	
		205/55R16	- 0°35' +/- 45' (- 0.58° +/- 0.75°) - 0°26' +/- 45' (- 0.43° +/- 0.75°)*	
	2AZ-FE	205/55R16*	- 0°27' +/- 45' (- 0.45° +/- 0.75°)*	
		215/45R17	- 0°37' +/- 45' (- 0.62° +/- 0.75°)	

* For vehicle height for Mexico, add 15 mm (0.591 in.).

Caster (Unloaded Vehicle):

-	ENGINE	TIRE SIZE	CASTER INCLINATION	RIGHT-LEFT DIFFERENCE
for TMC Made	2ZR-FE	195/65R15	2°50' +/- 45' (2.83° +/- 0.75°)	45' (0.75°) or less

		205/55R16	2°51' +/- 45' (2.85° +/- 0.75°)
except TMC Made	2ZR-FE	195/65R15	2°50' +/- 45' (2.83° +/- 0.75°)
		205/55R16	2°50' +/- 45' (2.83° +/- 0.75°) 2°41' +/- 45' (2.68° +/- 0.75°)*
	2AZ-FE	205/55R16*	2°45' +/- 45' (2.75° +/- 0.75°)*
		215/45R17	2°55' +/- 45' (2.92° +/- 0.75°)

* For vehicle height for Mexico, add 15 mm (0.591 in.).

Steering Axis Inclination (Unloaded Vehicle):

-	ENGINE	TIRE SIZE	STEERING AXIS INCLINATION
for TMC Made	2ZR-FE	195/65R15	12°32' (12.53°)
		205/55R16	
except TMC Made	2ZR-FE	195/65R15	12°32' (12.53°) 12°13' (12.22°)*
		205/55R16	
	2AZ-FE	205/55R16*	12°16' (12.27°)*
		215/45R17	12°37' (12.62°)

* For vehicle height for Mexico, add 15 mm (0.591 in.).

5. ADJUST CAMBER

NOTICE:

Inspect toe-in after the camber has been adjusted.

(a) Remove the front wheel.

(b) Remove the bolt and separate the front flexible hose from the front shock absorber.

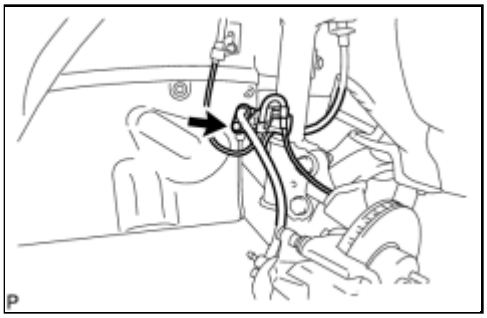

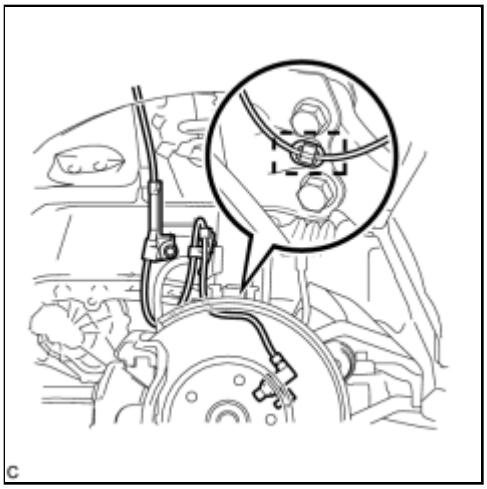

(c) Remove the clamp and separate the front speed sensor from the front shock absorber (except TMC Made).

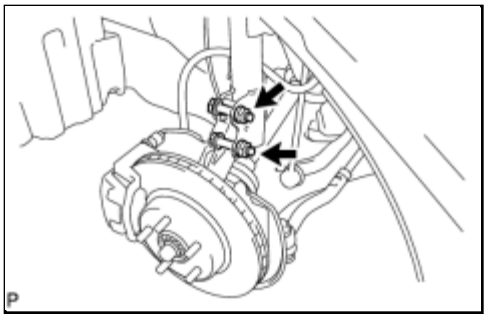

(d) Remove the 2 nuts on the lower side of the front shock absorber.

NOTICE:

Keep the bolts inserted.

(e) Clean the installation surfaces of the front shock absorber and the steering knuckle.

(f) Temporarily install the 2 nuts (Step A).

(g) Fully push or pull the front axle hub in the direction of the required adjustment (Step B).

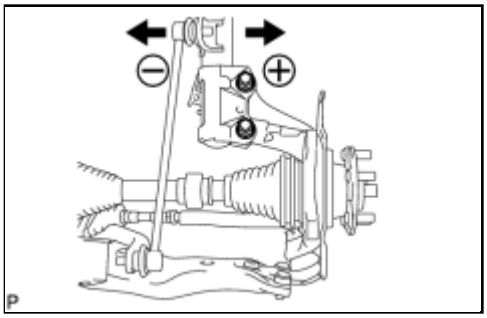

(h) Tighten the nuts.

Torque: 240 N·m (2448 kgf·cm, 176ft·lbf)

NOTICE:

Keep the bolts from rotating when tightening the nuts.

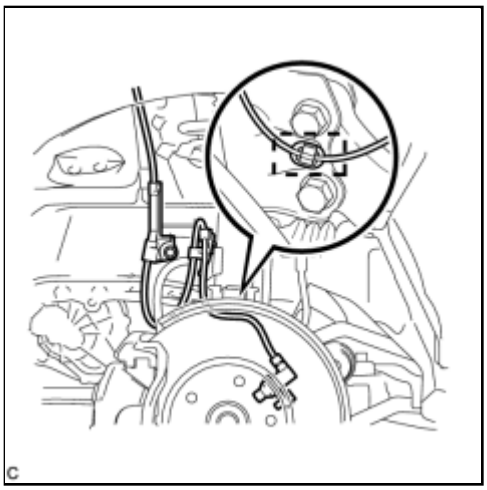

(i) Install the front speed sensor with the clamp to the front shock absorber (except TMC Made).

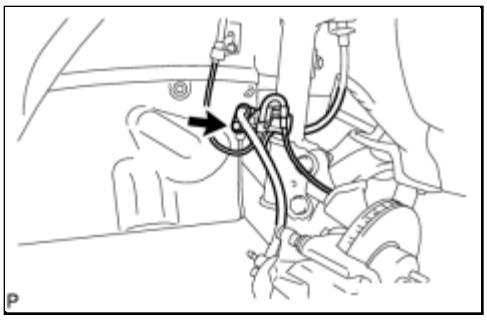

(j) Install the front speed sensor and the front flexible hose to the front shock absorber with the bolt.

Torque: 29 N·m (296 kgf·cm, 21ft·lbf)

(k) Install the front wheel.

Torque: 103 N·m (1050 kgf·cm, 76ft·lbf)

(l) Check the camber.

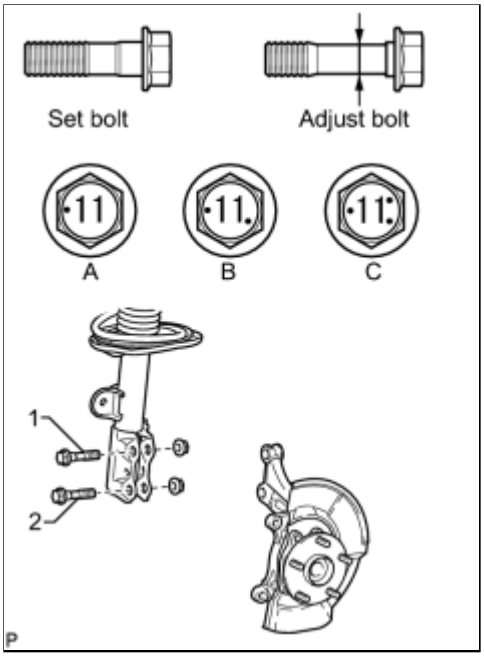

If the measured value is not within the specification, calculate the required adjustment amount using the formula below.

Camber adjustment amount = center value of the specified range - measured value

Check the combination of installed bolts. Select appropriate bolts from the table below to adjust the camber to the specified values.

HINT:

Try to adjust the camber to the center of the specified values.

MOVE THE AXLE TOWARD (+) IN STEP (B)	MOVE THE AXLE TOWARD (-) IN STEP (B)
Refer to table (1) (Move the axle toward the positive side)	Refer to table (2) (Move the axle toward the negative side)

for TMC Made: Table (1) (Move the axle toward the positive side)

Installed Bolt / Adjusting Value								
	1	 90105-17008	 90105-17008	 90105-17008	 90105-17008	 90105-17009	 90105-17010	 90105-17011
	2	 90105-17008	 90105-17009	 90105-17010	 90105-17011	 90105-17011	 90105-17011	 90105-17011
-1°30' to -1°15' (-1.50° to -1.25°)								G
-1°15' to -1°00' (-1.25° to -1°)							G	A
-1°00' to -0°45' (-1° to -0.75°)						G	A	B
-0°45' to -0°30' (-0.75° to -0.5°)					G	A	B	C
-0°30' to -0°15' (-0.5° to -0.25°)				G	A	B	C	D
-0°15' to 0° (-0.25° to 0°)			G	A	B	C	D	E
0° to 0°15' (0° to 0.25°)		A	B	C	D	E	F	
0°15' to 0°30' (0.25° to 0.5°)		B	C	D	E	F		
0°30' to 0°45' (0.5° to 0.75°)		C	D	E	F			
0°45' to 1°00' (0.75° to 1°)		D	E	F				
1°00' to 1°15' (1° to 1.25°)		E	F					
1°15' to 1°30' (1.25° to 1.5°)		F						

Selected Bolt Combination

	A	B	C	D	E	F	G
1	 90105-17008	 90105-17008	 90105-17008	 90105-17009	 90105-17010	 90105-17011	 90105-17008
2	 90105-17009	 90105-17010	 90105-17011	 90105-17011	 90105-17011	 90105-17011	 90105-17008

for TMC Made: Table (2) (Move the axle toward the negative side)

Installed Bolt / Adjusting Value	1	2
	 90105-17008	 90105-17008
	 90105-17008	 90105-17009
	 90105-17008	 90105-17010
	 90105-17008	 90105-17011
	 90105-17009	 90105-17011
	 90105-17010	 90105-17011
	 90105-17011	 90105-17011

-1°30' to -1°15' (-1.50° to -1.25°)	F						
-1°15' to -1°00' (-1.25° to -1°)	E	F					
-1°00' to -0°45' (-1° to -0.75°)	D	E	F				
-0°45' to -0°30' (-0.75° to -0.5°)	C	D	E	F			
-0°30' to -0°15' (-0.5° to -0.25°)	B	C	D	E	F		
-0°15' to 0° (-0.25° to 0°)	A	B	C	D	E	F	
0° to 0°15' (0° to 0.25°)		G	A	B	C	D	E
0°15' to 0°30' (0.25° to 0.5°)			G	A	B	C	D
0°30' to 0°45' (0.5° to 0.75°)				G	A	B	C
0°45' to 1°00' (0.75° to 1°)					G	A	B
1°00' to 1°15' (1° to 1.25°)						G	A
1°15' to 1°30' (1.25° to 1.5°)							G

Selected Bolt Combination

	A	B	C	D	E	F	G
1	 90105-17008	 90105-17008	 90105-17008	 90105-17009	 90105-17010	 90105-17011	 90105-17008
2	 90105-17009	 90105-17010	 90105-17011	 90105-17011	 90105-17011	 90105-17011	 90105-17008

except TMC Made: Table (1) (Move the axle toward the positive side)

Installed Bolt / Adjusting Value								
	1	 90080-10335	 90080-10335	 90080-10335	 90080-10335	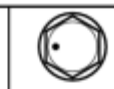 90105-17009	 90105-17010	 90105-17011
	2	 90080-10335	 90105-17009	 90105-17010	 90105-17011	 90105-17011	 90105-17011	 90105-17011
-1°30' to -1°15' (-1.50° to -1.25°)								G
-1°15' to -1°00' (-1.25° to -1°)							G	A
-1°00' to -0°45' (-1° to -0.75°)						G	A	B
-0°45' to -0°30' (-0.75° to -0.5°)					G	A	B	C
-0°30' to -0°15' (-0.5° to -0.25°)				G	A	B	C	D
-0°15' to 0° (-0.25° to 0°)			G	A	B	C	D	E
0° to 0°15' (0° to 0.25°)		A	B	C	D	E	F	
0°15' to 0°30' (0.25° to 0.5°)		B	C	D	E	F		
0°30' to 0°45' (0.5° to 0.75°)		C	D	E	F			
0°45' to 1°00' (0.75° to 1°)		D	E	F				
1°00' to 1°15' (1° to 1.25°)		E	F					
1°15' to 1°30' (1.25° to 1.5°)		F						

Selected Bolt Combination

	A	B	C	D	E	F	G
1	 90080-10335	 90080-10335	 90080-10335	 90105-17009	 90105-17010	 90105-17011	 90080-10335
2	 90105-17009	 90105-17010	 90105-17011	 90105-17011	 90105-17011	 90105-17011	 90080-10335

except TMC Made: Table (2) (Move the axle toward the negative side)

Installed Bolt / Adjusting Value	1	90080-10335	90080-10335	90080-10335	90080-10335	90105-17009	90105-17010	90105-17011
	2	90080-10335	90105-17009	90105-17010	90105-17011	90105-17011	90105-17011	90105-17011
-1°30' to -1°15' (-1.50° to -1.25°)		F						
-1°15' to -1°00' (-1.25° to -1°)		E	F					
-1°00' to -0°45' (-1° to -0.75°)		D	E	F				
-0°45' to -0°30' (-0.75° to -0.5°)		C	D	E	F			
-0°30' to -0°15' (-0.5° to -0.25°)		B	C	D	E	F		
-0°15' to 0° (-0.25° to 0°)		A	B	C	D	E	F	
0° to 0°15' (0° to 0.25°)			G	A	B	C	D	E
0°15' to 0°30' (0.25° to 0.5°)				G	A	B	C	D
0°30' to 0°45' (0.5° to 0.75°)					G	A	B	C
0°45' to 1°00' (0.75° to 1°)						G	A	B
1°00' to 1°15' (1° to 1.25°)							G	A
1°15' to 1°30' (1.25° to 1.5°)								G

Selected Bolt Combination

	A	B	C	D	E	F	G
1	90080-10335	90080-10335	90080-10335	90105-17009	90105-17010	90105-17011	90080-10335
2	90105-17009	90105-17010	90105-17011	90105-17011	90105-17011	90105-17011	90080-10335

The body and suspension may be damaged if the camber is not correctly adjusted according to the table above.

NOTICE:

Replace the nut with a new one when replacing the bolt.

(m) Repeat the steps mentioned above. In step (A), replace 1 or 2 selected bolts.

HINT:

Replace 1 bolt at a time when replacing the 2 bolts.

6. INSPECT TOE-IN

(a) Bounce the vehicle up and down at the corners several times to stabilize the suspension.

(b) Release the parking brake and move the shift lever to N.

(c) Push the vehicle straight ahead approximately 5 m (16.4 ft.). (*1)

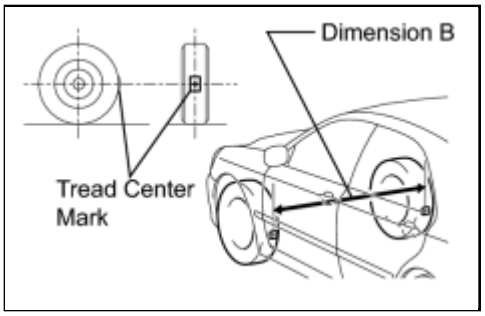

(d) Put tread center marks on the rearmost points of the front wheels and measure the distance between the marks (dimension B).

(e) Slowly push the vehicle straight ahead to rotate the front wheels 180° using the front tire valve as a reference point.

HINT:

Do not allow the wheels to rotate more than 180°. If the wheels rotate more than 180°, perform the procedure from (*1) again.

(f) Measure the distance between the tread center marks on the front side of the wheels (dimension A).

Toe-in:

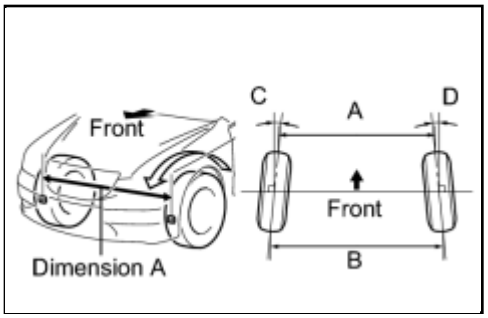

SPECIFIED CONDITION
C + D: 0°00' +/- 0°12' (0° +/- 0.2°) B - A: 0 +/- 2.0 mm (0 +/- 0.0787 in.)

HINT:

- Measure "B - A" only when "C + D" cannot be measured.
- If the toe-in is not within the specified range, adjust it at the rack ends.

7. ADJUST TOE-IN

(a) Make sure that the lengths of the right and left rack ends

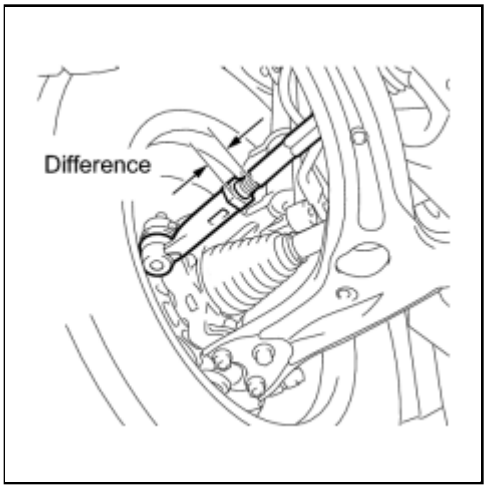

are almost the same.

Difference between right and left rack ends:
1.5 mm (0.0591 in.) or less

(b) Remove the boot clips.

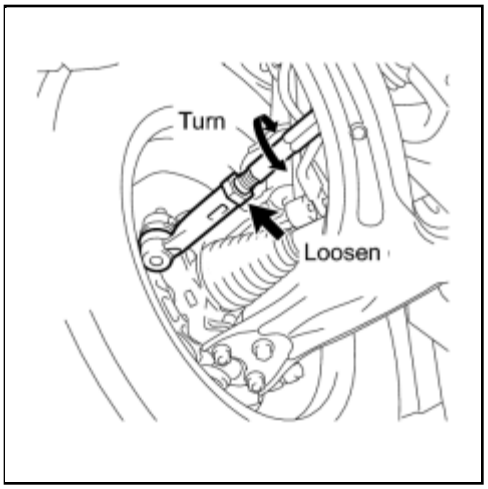

(c) Loosen the tie rod end lock nuts.

(d) Turn the right and left rack ends by an equal amount to adjust the toe-in to the center value.

(1) Extend the shorter rack end if the measured toe-in deviates toward the outer side.

(2) Shorten the longer rack end if the measured toe-in deviates toward the inner side.

(e) Tighten the tie rod end lock nuts.

Torque: 74 N·m (755 kgf·cm, 55ft·lbf)

(f) Place the boots on the seats and install the clips.

HINT:

Make sure that the boots are not twisted.

8. PLACE FRONT WHEELS FACING STRAIGHT AHEAD

9. DISCONNECT CABLE FROM NEGATIVE BATTERY TERMINAL (w/ VSC)

NOTICE:

Disconnect the cable from the negative (-) battery terminal for more than 2 seconds.

10. CONNECT CABLE TO NEGATIVE BATTERY TERMINAL (w/ VSC)

11. PERFORM YAW RATE SENSOR ZERO POINT CALIBRATION (w/ VSC)

INFO .

12. CHECK STEERING ANGLE SENSOR ZERO POINT CALIBRATION (w/ VSC)

INFO .

Last Modified: 3-10-2010	6.4 G	**From:** 200901
Model Year: 2010	**Model:** Corolla	**Doc ID:** RM000002Y7V00SX
Title: ALIGNMENT / HANDLING DIAGNOSIS: REAR WHEEL ALIGNMENT: INSPECTION (2010 Corolla)		

INSPECTION

NOTICE:

For vehicles equipped with VSC, if the wheel alignment has been adjusted, and if suspension or underbody components have been removed/installed or replaced, be sure to perform the following initialization procedure in order for the system to function normally:

1. Disconnect the cable from the negative (-) battery terminal for more than 2 seconds.
2. Reconnect the cable to the negative (-) battery terminal.
3. Perform zero point calibration of the yaw rate and acceleration sensor and test mode inspection.

1. INSPECT TIRES INFO

2. MEASURE VEHICLE HEIGHT INFO

3. INSPECT TOE-IN

Toe-in (Unloaded Vehicle):

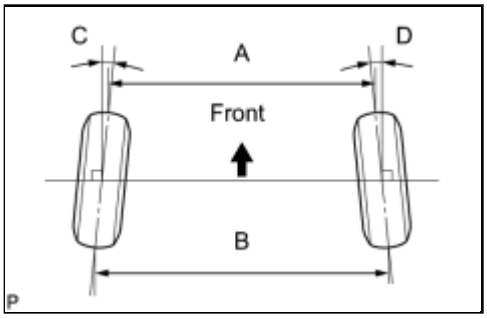

-	GRADE	SPECIFIED CONDITION	RIGHT-LEFT DIFFERENCE
for TMC Made	except XRS	C + D: 0°16' +/- 15' (0.27° +/- 0.25°)	45' (0.75°) or less
		B - A: 2.8 +/- 2.7 mm (0.110 +/- 0.106 in.)	-
except TMC Made	except XRS	C + D: 0°16' +/- 15' (0.27° +/- 0.25°) C + D: 0°16' +/- 15' (0.27° +/- 0.25°)*	45' (0.75°) or less
		B - A: 2.8 +/- 2.7 mm (0.110 +/- 0.106 in.) B - A: 2.0 +/- 2.8 mm (0.0787 +/- 0.110 in.)*	-
	for XRS	C + D: 0°16' +/- 15' (0.27° +/- 0.25°) C + D: 0°16' +/- 15' (0.27° +/- 0.25°)*	45' (0.75°) or less
		B - A: 3.1 +/- 2.6 mm (0.122 +/- 0.102 in.) B - A: 2.2 +/- 2.8 mm (0.0866 +/- 0.110	-

	in.)*	

* For vehicle height for Mexico, add 15 mm (0.591 in.).

If the toe-in is not within the specified range, inspect the suspension parts and replace them if necessary.

HINT:

- Measure "B - A" only when "C + D" cannot be measured.

4. INSPECT CAMBER

(a) Install the camber-caster-kingpin gauge or set the vehicle on the wheel alignment tester.

(b) Inspect the camber.

Camber (Unloaded Vehicle):

-	GRADE	CAMBER INCLINATION	RIGHT-LEFT DIFFERENCE
for TMC Made	except XRS	-1°28' +/- 30' (-1.47° +/- 0.50°)	30' (0.50°) or less
except TMC Made	except XRS	-1°27' +/- 30' (-1.45° +/- 0.50°)	
	for XRS	-1°28' +/- 30' (-1.47° +/- 0.50°)	

HINT:

Camber is not adjustable. If the measurement is not within the specified range, inspect the suspension parts for damage and/or wear, and replace them if necessary.

Last Modified: 3-10-2010	6.4 K	**From:** 200901
Model Year: 2010	**Model:** Corolla	**Doc ID:** RM000002PCF00RX
Title: FRONT SUSPENSION: FRONT LOWER BALL JOINT: COMPONENTS (2010 Corolla)		

COMPONENTS

ILLUSTRATION

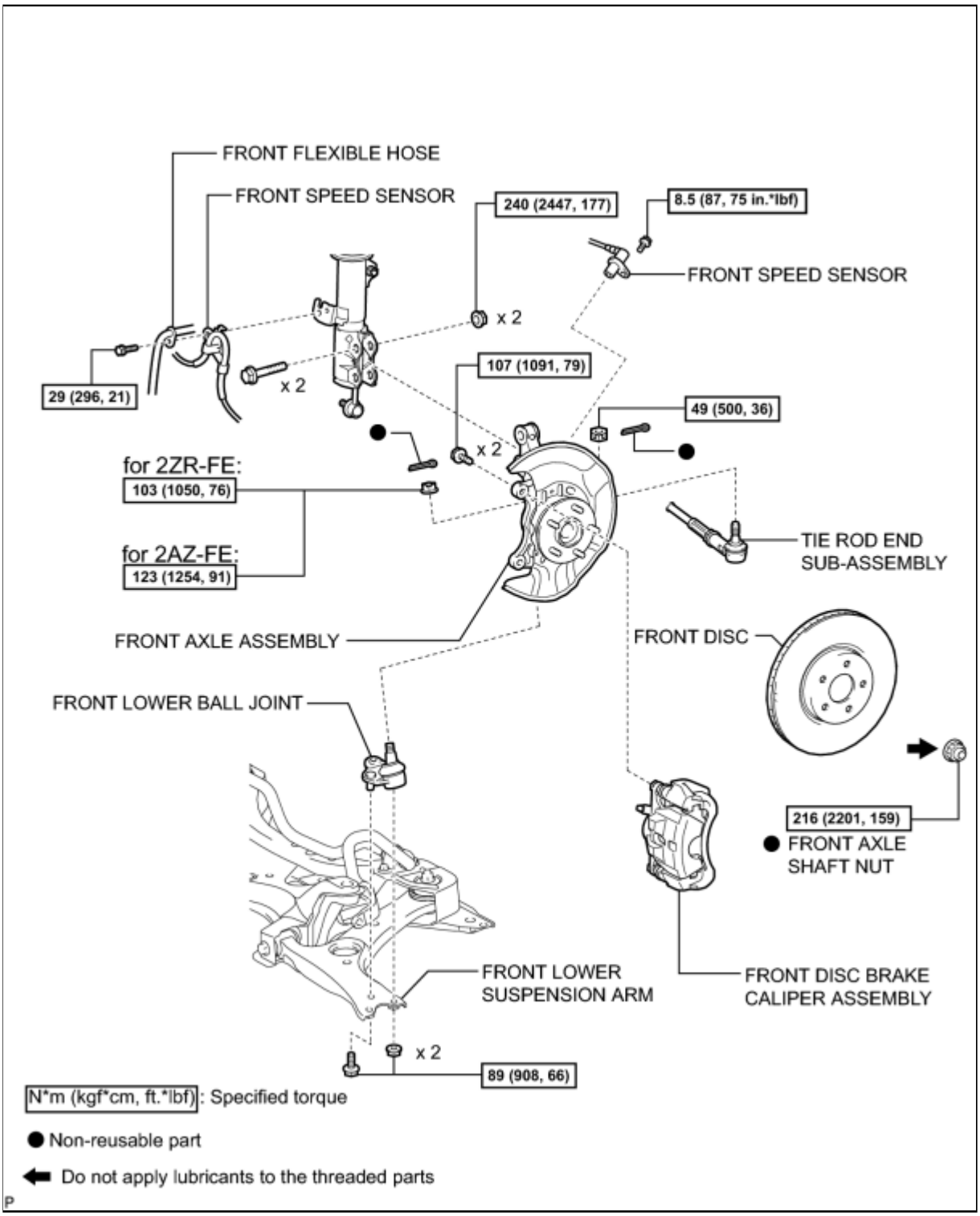

Last Modified: 3-10-2010	6.4 A	**From:** 200901
Model Year: 2010	**Model:** Corolla	**Doc ID:** RM0000003H3014X
Title: FRONT SUSPENSION: FRONT LOWER BALL JOINT: REMOVAL (2010 Corolla)		

REMOVAL

HINT:

- Use the same procedure for the LH side and RH side.
- The following procedure listed is for the LH side.

1. REMOVE FRONT WHEEL

2. REMOVE FRONT AXLE SHAFT NUT (for 2AZ-FE) INFO

3. REMOVE FRONT AXLE SHAFT NUT (for 2ZR-FE) INFO

4. SEPARATE FRONT SPEED SENSOR

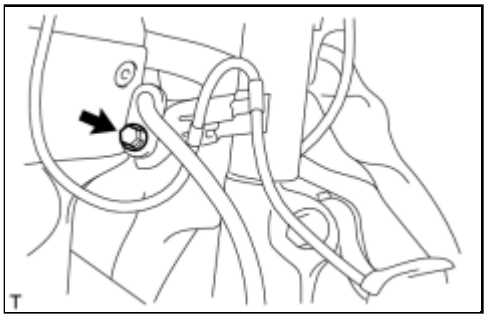

(a) Remove the bolt and separate the front speed sensor and flexible hose from the front shock absorber bracket.

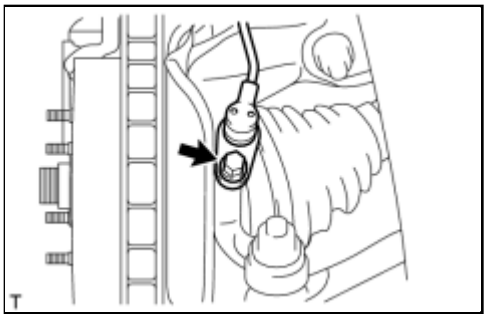

(b) Remove the bolt and separate the front speed sensor from the steering knuckle.

NOTICE:

- Keep the front speed sensor tip and installation surfaces free of foreign matter.
- Remove the front speed sensor without turning it from its original installation angle.

5. SEPARATE FRONT DISC BRAKE CALIPER ASSEMBLY INFO

6. REMOVE FRONT DISC INFO

7. SEPARATE TIE ROD END SUB-ASSEMBLY INFO

8. SEPARATE FRONT LOWER SUSPENSION ARM

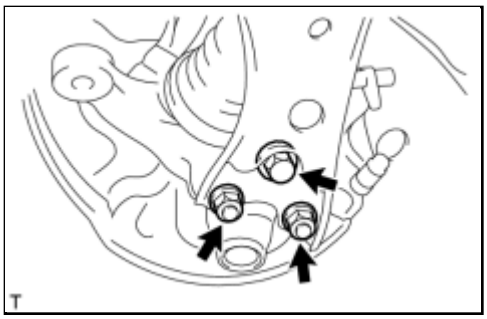

(a) Remove the bolt and 2 nuts, and separate the front lower suspension arm from the lower ball joint.

9. REMOVE FRONT AXLE ASSEMBLY INFO

10. REMOVE FRONT LOWER BALL JOINT

(a) Secure the front axle assembly in a vise.

NOTICE:

When using a vise, do not overtighten it.

(b) Remove the cotter pin and nut.

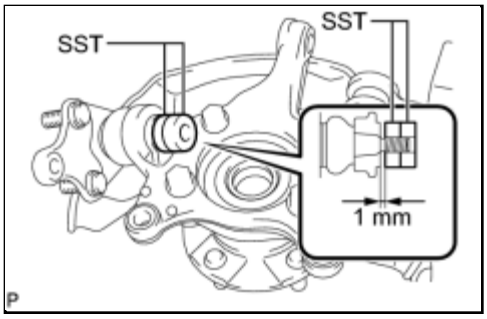

(c) Install SST to the front lower ball joint as shown in the illustration.

SST: 09960-20010

09961-02050

09961-02050

NOTICE:

Check that the clearance measurement between SST and the front axle assembly is 1 mm (0.04 in.).

(d) Using SST, remove the front lower ball joint from the front axle assembly as shown in the illustration.

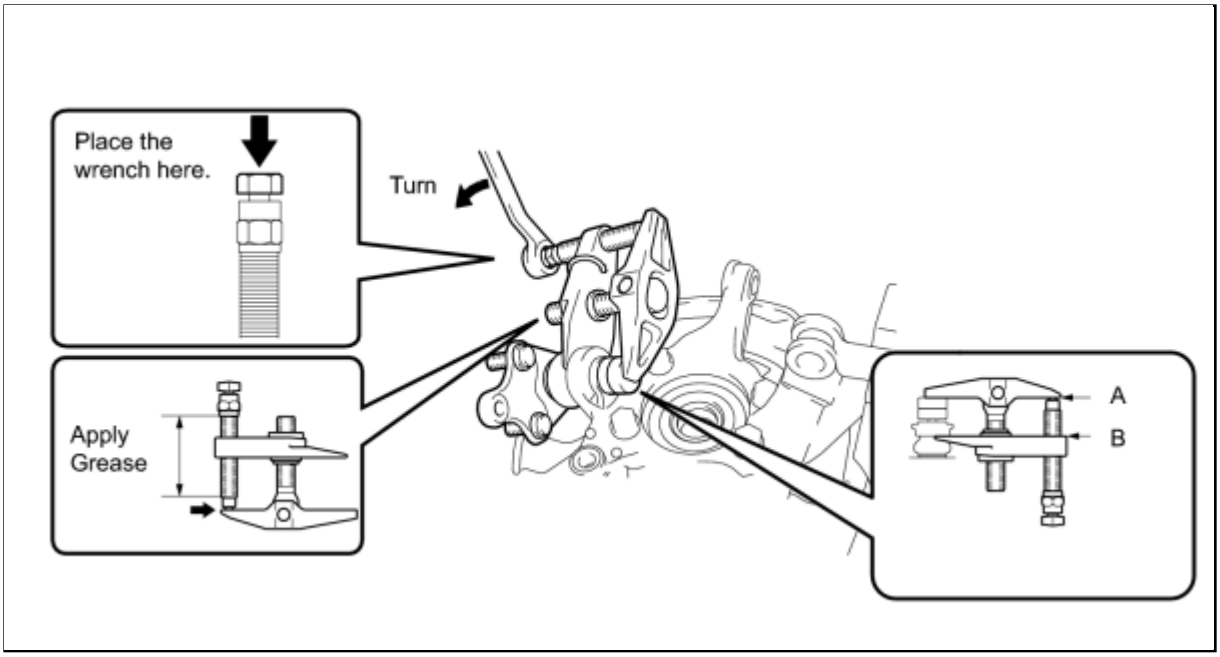

SST: 09960-20010

09961-02010

09961-02050

09961-02050

CAUTION:

Apply grease to the threads and end of the SST bolt.

NOTICE:

- Install SST so that A and B are parallel.
- Be sure to place a wrench on the part indicated in the illustration.
- Do not damage the front lower ball joint dust cover.

Last Modified: 3-10-2010	6.4 G	**From:** 200901
Model Year: 2010	**Model:** Corolla	**Doc ID:** RM0000011DL01QX
Title: FRONT SUSPENSION: FRONT LOWER BALL JOINT: INSPECTION (2010 Corolla)		

INSPECTION

1. INSPECT FRONT LOWER BALL JOINT

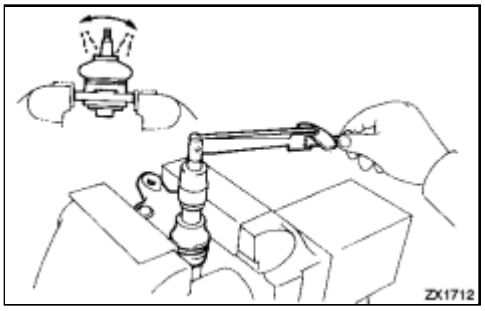

(a) Inspect the turning torque of the ball joint.

(1) Secure the front lower ball joint in a vise using aluminum plates.

(2) Install the nut to the front lower ball joint stud.

(3) Using a torque wrench, turn the nut continuously at a rate of 3 to 5 seconds per turn and take the torque reading on the 5th turn.

Turning Torque (for 2AZ-FE) - Torque: 1.0 to 3.4 N·m (10 to 35 kgf·cm, 9 to 30in·lbf)

Turning Torque (for 2ZR-FE) - Torque: 1.0 to 4.9 N·m (10 to 50 kgf·cm, 9 to 43in·lbf)

If the turning torque is not within the specified range, replace the front lower ball joint with a new one.

(b) Inspect the dust cover.

(1) Check that the dust cover is not cracked and that there is no grease on it.

Last Modified: 3-10-2010	6.4 A	**From:** 200901
Model Year: 2010	**Model:** Corolla	**Doc ID:** RM0000003H2014X
Title: FRONT SUSPENSION: FRONT LOWER BALL JOINT: INSTALLATION (2010 Corolla)		

INSTALLATION

HINT:

- Use the same procedure for the LH side and RH side.
- The following procedure listed is for the LH side.

1. INSTALL FRONT LOWER BALL JOINT

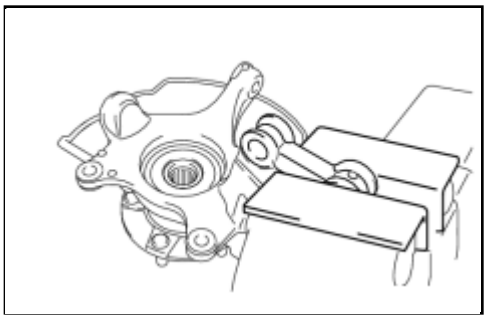

(a) Secure the front axle assembly in a vise using aluminum plates.

NOTICE:

When using a vise, do not overtighten it.

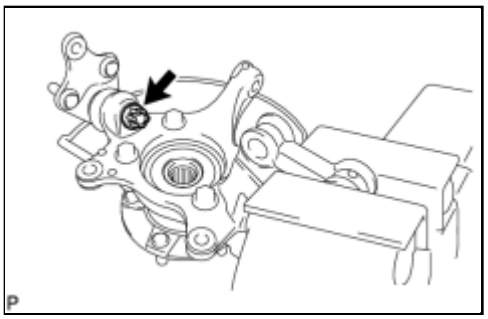

(b) Install the front lower ball joint to the front axle assembly with the nut.

2ZR-FE - Torque: 103 N·m (1050 kgf·cm, 76ft·lbf)

2AZ-FE - Torque: 123 N·m (1254 kgf·cm, 91ft·lbf)

(c) Install a new cotter pin.

NOTICE:

Further tighten the nut up to 60° if the holes for the cotter pin are not aligned.

2. INSTALL FRONT AXLE ASSEMBLY INFO

3. CONNECT FRONT LOWER SUSPENSION ARM

(a) Install the front lower suspension arm to the lower ball joint with the bolt and 2 nuts.

Torque: 89 N·m (908 kgf·cm, 66ft·lbf)

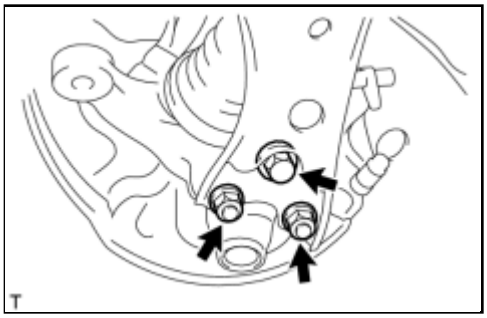

4. CONNECT TIE ROD END SUB-ASSEMBLY INFO

5. INSTALL FRONT DISC INFO

6. INSTALL FRONT DISC BRAKE CALIPER ASSEMBLY INFO

7. INSTALL FRONT SPEED SENSOR

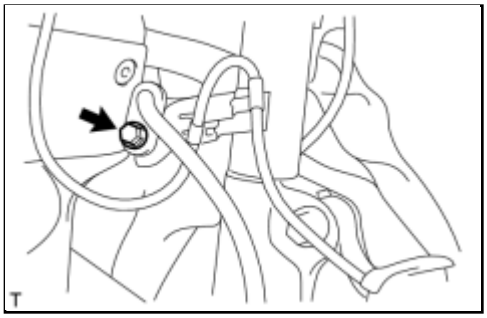

(a) Install the front flexible hose and front speed sensor with the bolt.

Torque: 29 N·m (296 kgf·cm, 21ft·lbf)

NOTICE:

Install the flexible hose and speed sensor without twisting them.

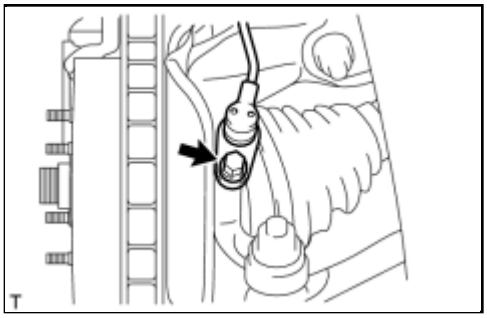

(b) Install the front speed sensor onto the steering knuckle with the bolt.

Torque: 8.5 N·m (87 kgf·cm, 75in·lbf)

8. INSTALL FRONT AXLE SHAFT NUT (for 2AZ-FE) INFO

9. INSTALL FRONT AXLE SHAFT NUT (for 2ZR-FE) INFO

10. INSTALL FRONT WHEEL

Torque: 103 N·m (1050 kgf·cm, 76ft·lbf)

11. INSPECT AND ADJUST FRONT WHEEL ALIGNMENT

HINT:

Inspect and adjust front wheel alignment INFO **.**

12. CHECK FOR SPEED SENSOR SIGNAL

HINT:

Check for speed sensor signal INFO **.**

Last Modified: 3-10-2010	6.4 K	**From:** 200901
Model Year: 2010	**Model:** Corolla	**Doc ID:** RM000002PCE00UX
Title: FRONT SUSPENSION: FRONT LOWER SUSPENSION ARM: COMPONENTS (2010 Corolla)		

COMPONENTS

ILLUSTRATION

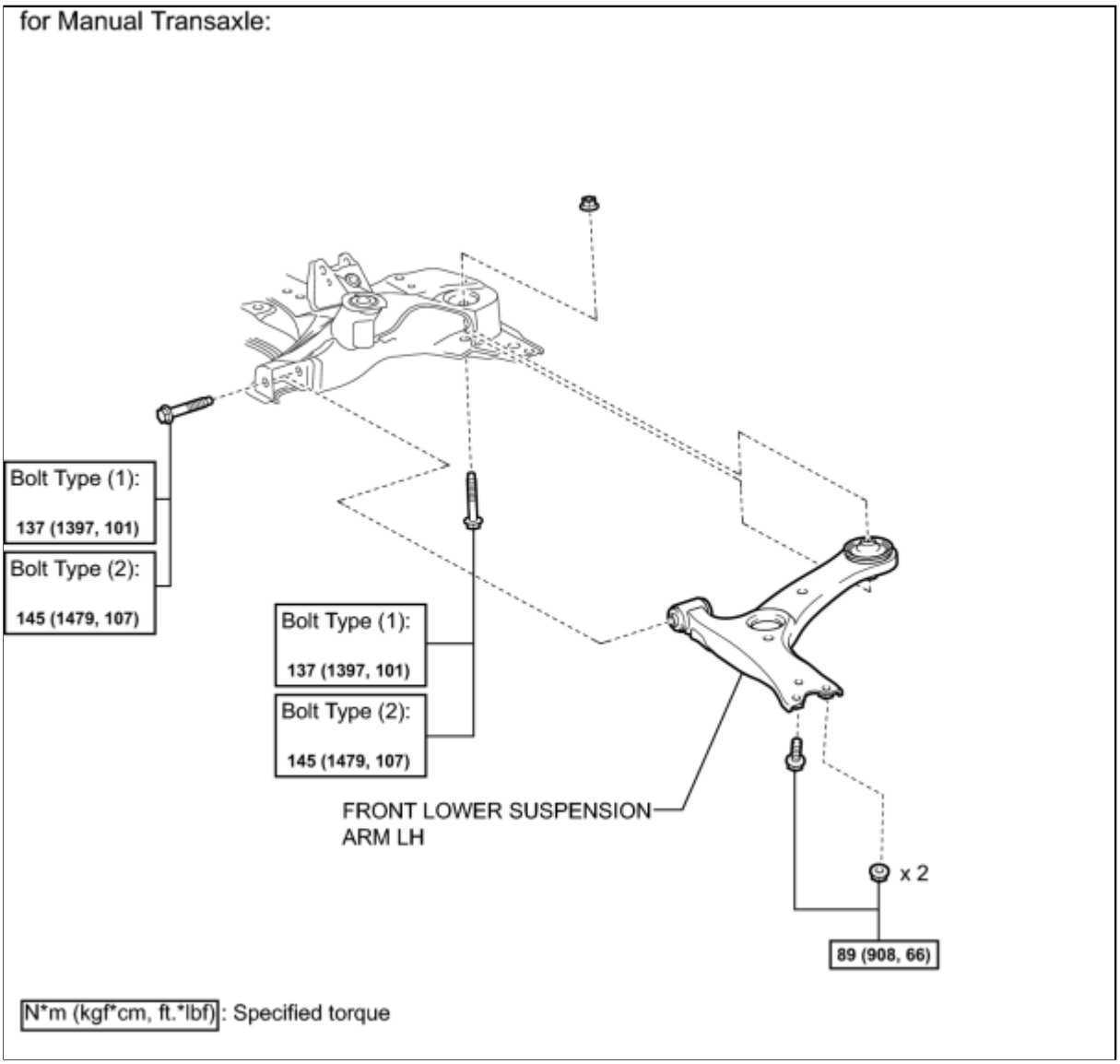

ILLUSTRATION

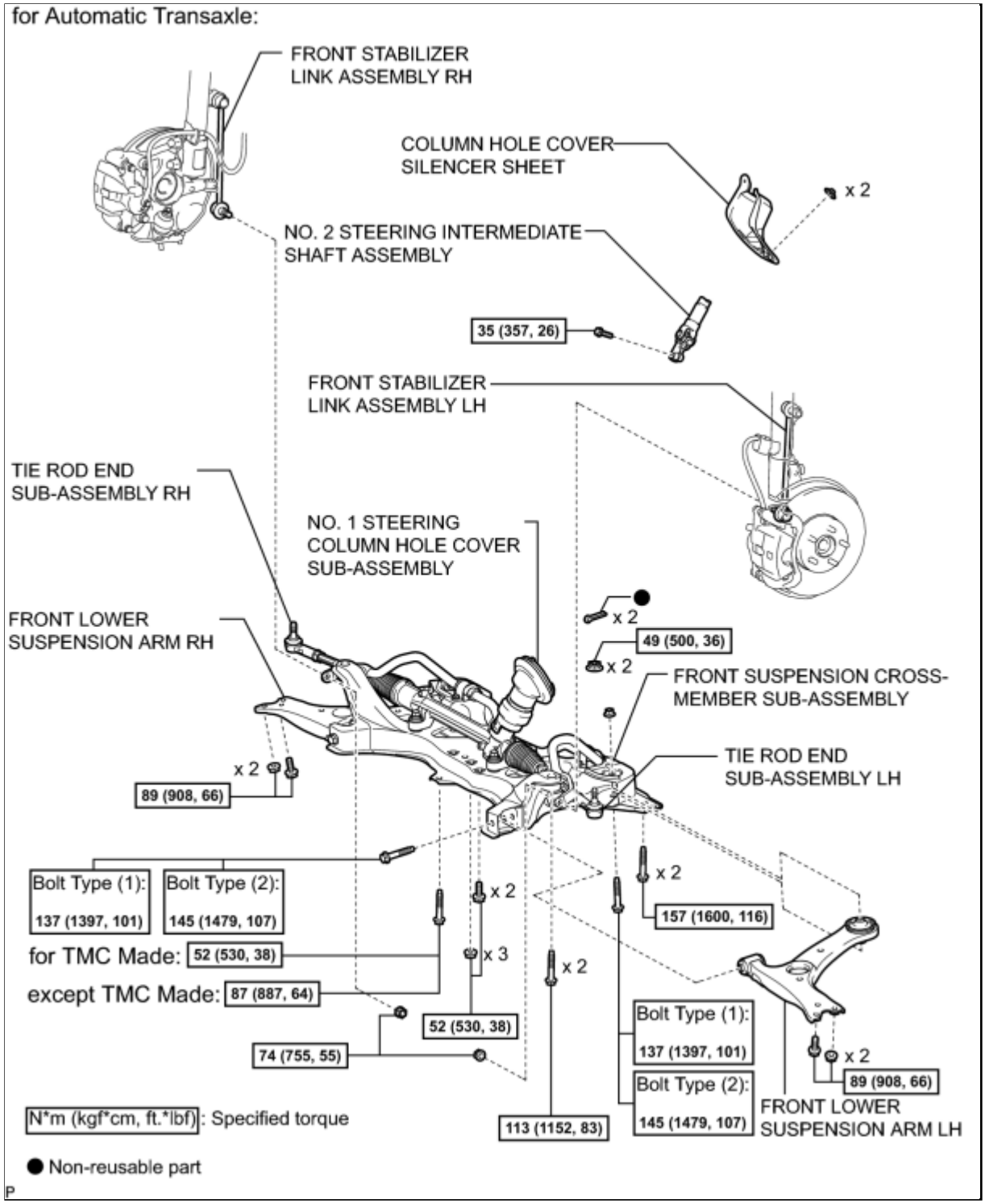
for Automatic Transaxle:
FRONT STABILIZER LINK ASSEMBLY RH
COLUMN HOLE COVER SILENCER SHEET
x 2
NO. 2 STEERING INTERMEDIATE SHAFT ASSEMBLY
35 (357, 26)
FRONT STABILIZER LINK ASSEMBLY LH
TIE ROD END SUB-ASSEMBLY RH
NO. 1 STEERING COLUMN HOLE COVER SUB-ASSEMBLY
x 2
49 (500, 36)
x 2
FRONT LOWER SUSPENSION ARM RH
FRONT SUSPENSION CROSS-MEMBER SUB-ASSEMBLY
TIE ROD END SUB-ASSEMBLY LH
x 2
89 (908, 66)
Bolt Type (1):
137 (1397, 101)
Bolt Type (2):
145 (1479, 107)
x 2
157 (1600, 116)
for TMC Made:
52 (530, 38)
x 3
except TMC Made:
87 (887, 64)
x 2
52 (530, 38)
74 (755, 55)
Bolt Type (1):
137 (1397, 101)
Bolt Type (2):
145 (1479, 107)
x 2
89 (908, 66)
FRONT LOWER SUSPENSION ARM LH
113 (1152, 83)
N*m (kgf*cm, ft.*lbf): Specified torque
Non-reusable part

P

Last Modified: 3-10-2010	6.4 A	**From:** 200901
Model Year: 2010	**Model:** Corolla	**Doc ID:** RM0000029T401UX
Title: FRONT SUSPENSION: FRONT LOWER SUSPENSION ARM: INSTALLATION (2010 Corolla)		

INSTALLATION

HINT:

- Use the same procedure for the LH side and RH side.
- The following procedure listed is for the LH side.

1. TEMPORARILY INSTALL FRONT LOWER SUSPENSION ARM LH

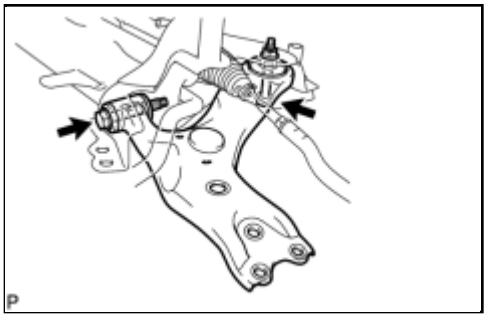

(a) Temporarily install the front lower suspension arm LH to the front suspension crossmember with the 2 bolts and nut.

NOTICE:

Because the nut has its own stopper, do not turn the nut. While securing the nut, tighten the bolt.

HINT:

Fully tighten the 2 bolts after stabilizing the suspension.

2. TEMPORARILY INSTALL FRONT LOWER SUSPENSION ARM LH (for Manual Transaxle)

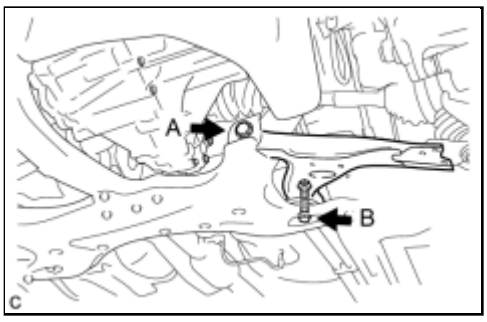

(a) Temporarily install the front lower suspension arm LH to the front suspension crossmember sub-assembly with the 2 bolts and nut.

NOTICE:

Because the nut has its own stopper, do not turn the nut. While securing the nut, tighten the bolt B.

HINT:

Fully tighten the 2 bolts after stabilizing the suspension.

3. INSTALL FRONT SUSPENSION CROSSMEMBER SUB-ASSEMBLY

(a) for TMC Made:

(1) While alternately inserting SST into the guide holes on both sides of the front suspension crossmember RH and LH, tighten 2 bolts (A), 2 bolts (B), 3 bolts (C), and 3 nuts (D) on the RH and LH sides to the respective specified torque in several steps.

SST: 09670-00010

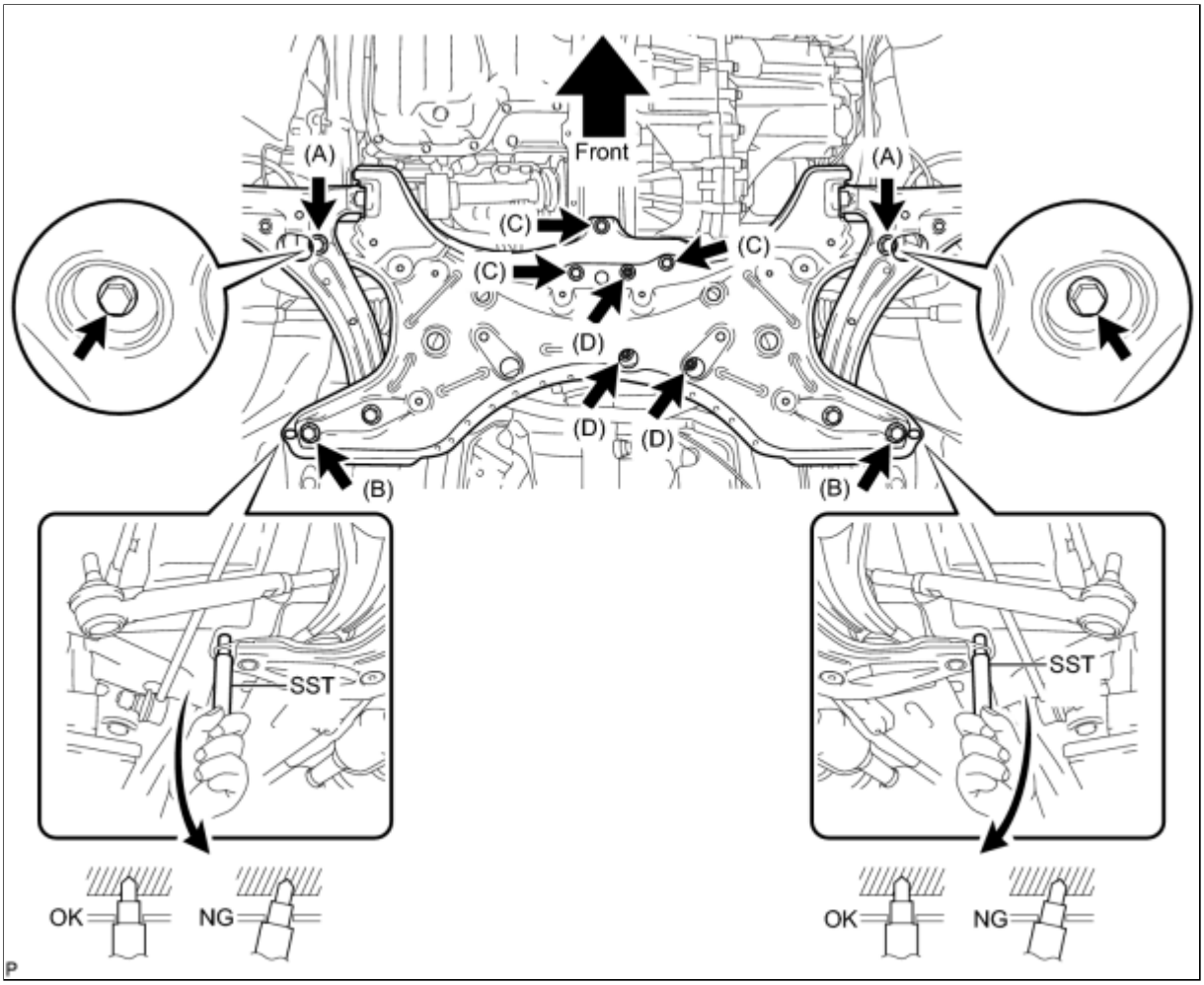

Bolt (A) - Torque: 113 N·m (1152 kgf·cm, 83ft·lbf)

Bolt (B) - Torque: 157 N·m (1600 kgf·cm, 116ft·lbf)

Bolt (C) - Torque: 52 N·m (530 kgf·cm, 38ft·lbf)

Nut (D) - Torque: 52 N·m (530 kgf·cm, 38ft·lbf)

(b) except TMC Made:

(1) While alternately inserting SST into the guide holes on both sides of the front suspension crossmember RH and LH, tighten 2 bolts (A), 2 bolts (B), 2 bolts (C), bolt (D) and 3 nuts (E) on the RH and LH sides to the respective specified torque in several steps.

SST: 09670-00010

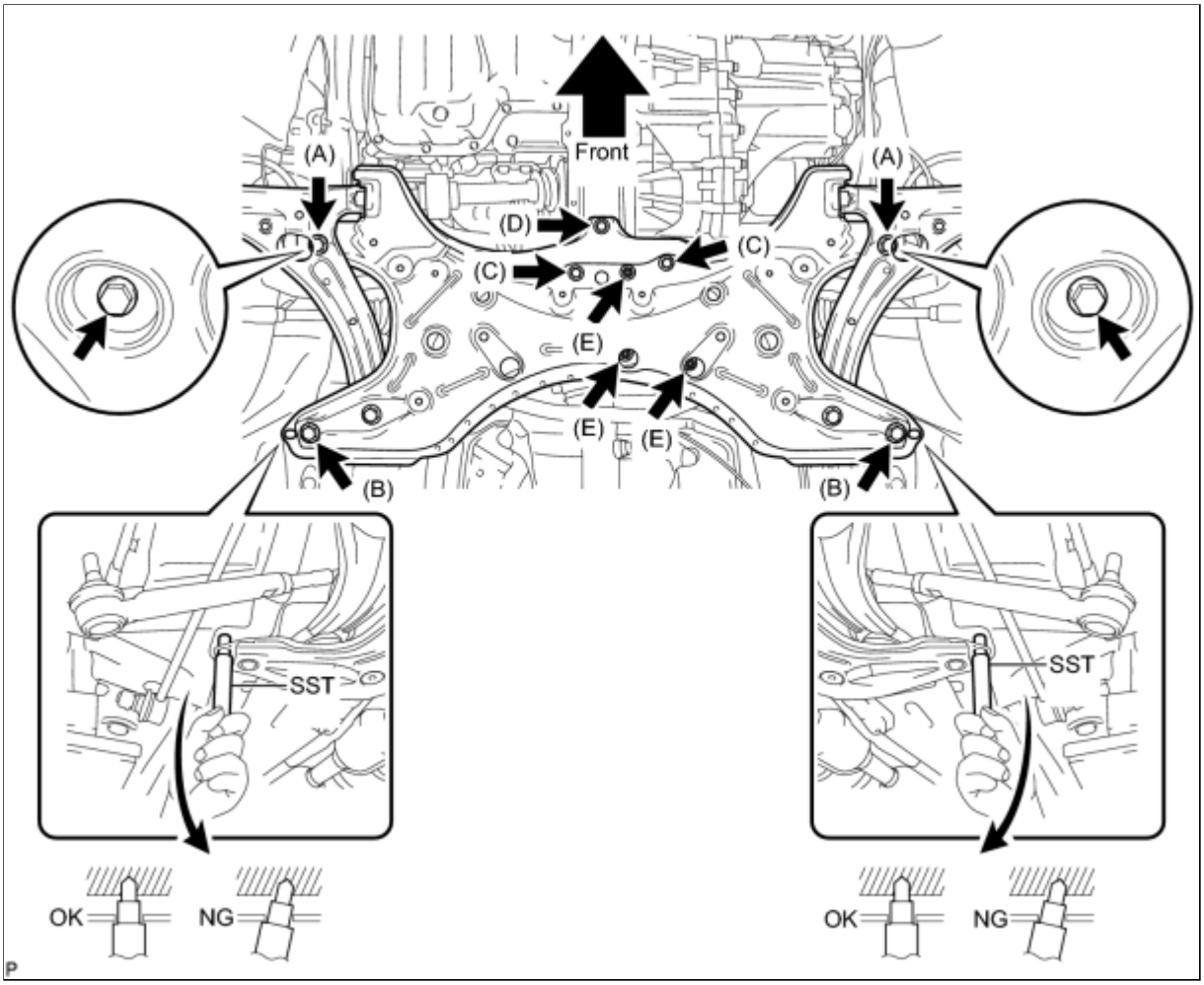

Bolt (A) - Torque: 113 N·m (1152 kgf·cm, 83ft·lbf)
Bolt (B) - Torque: 157 N·m (1600 kgf·cm, 116ft·lbf)
Bolt (C) - Torque: 52 N·m (530 kgf·cm, 38ft·lbf)
Bolt (D) - Torque: 87 N·m (887 kgf·cm, 64ft·lbf)
Nut (E) - Torque: 52 N·m (530 kgf·cm, 38ft·lbf)

4. CONNECT FRONT LOWER SUSPENSION ARM LH INFO

5. CONNECT FRONT LOWER SUSPENSION ARM RH

HINT:

Perform the same procedure as the LH side.

6. CONNECT FRONT STABILIZER LINK ASSEMBLY LH INFO

7. CONNECT FRONT STABILIZER LINK ASSEMBLY RH

HINT:

Perform the same procedure as the LH side.

8. CONNECT TIE ROD END SUB-ASSEMBLY LH INFO

9. CONNECT TIE ROD END SUB-ASSEMBLY RH

HINT:

Perform the same procedure as the LH side.

10. CONNECT NO. 1 STEERING COLUMN HOLE COVER SUB-ASSEMBLY INFO

11. CONNECT NO. 2 STEERING INTERMEDIATE SHAFT ASSEMBLY INFO

12. PLACE FRONT WHEELS FACING STRAIGHT AHEAD

13. INSTALL COLUMN HOLE COVER SILENCER SHEET INFO

14. INSTALL FRONT WHEELS

Torque: 103 N·m (1050 kgf·cm, 76ft·lbf)

15. STABILIZE SUSPENSION

(a) Lower the vehicle and bounce it up and down several times to stabilize the front suspension. Raise the vehicle.

16. FULLY TIGHTEN FRONT LOWER SUSPENSION ARM LH

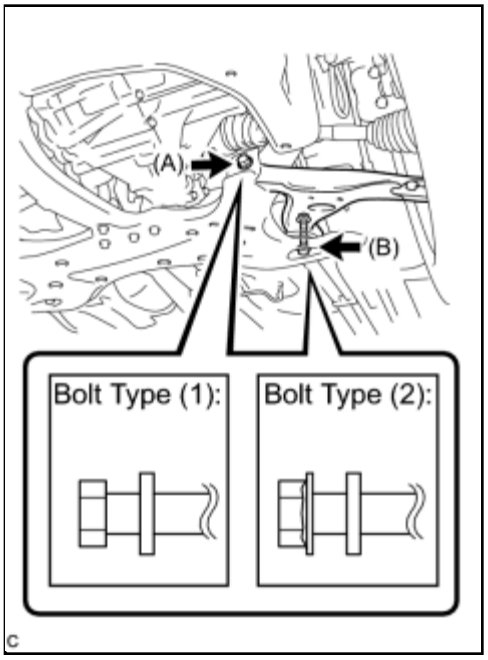

(a) Fully tighten the bolt (A).

Bolt type (1) - Torque: 137 N·m (1397 kgf·cm, 101ft·lbf)
Bolt type (2) - Torque: 145 N·m (1479 kgf·cm, 107ft·lbf)

NOTICE:

The final torque must be applied under standard vehicle height conditions.

(b) Fully tighten the bolt (B).

Bolt type (1) - Torque: 137 N·m (1397 kgf·cm, 101ft·lbf)
Bolt type (2) - Torque: 145 N·m (1479 kgf·cm, 107ft·lbf)

NOTICE:

- The final torque must be applied under standard vehicle height conditions.
- Because the nut has its own stopper, do not turn the nut. While securing the nut, tighten the bolt B.

17. INSPECT AND ADJUST FRONT WHEEL ALIGNMENT

HINT:

Inspect and adjust front wheel alignment INFO .



Last Modified: 3-10-2010	6.4 A	**From:** 200901
Model Year: 2010	**Model:** Corolla	**Doc ID:** RM0000029T701UX
Title: FRONT SUSPENSION: FRONT LOWER SUSPENSION ARM: REMOVAL (2010 Corolla)		

REMOVAL

HINT:

- Use the same procedure for the LH side and RH side.
- The following procedure listed is for the LH side.

1. PLACE FRONT WHEELS FACING STRAIGHT AHEAD

2. SECURE STEERING WHEEL INFO

3. REMOVE FRONT WHEELS

4. SEPARATE FRONT LOWER SUSPENSION ARM LH (for Manual Transaxle) INFO

5. REMOVE FRONT LOWER SUSPENSION ARM LH (for Manual Transaxle)

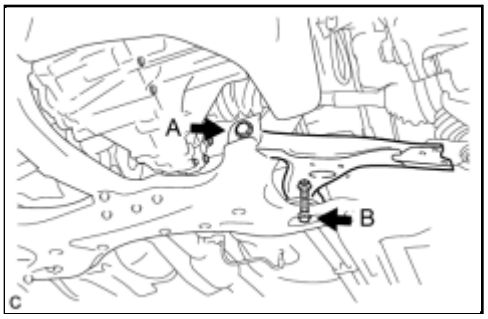

(a) Remove the 2 bolts, nut, and front lower suspension arm LH from the front suspension crossmember sub-assembly.

NOTICE:

Because the nut has its own stopper, do not turn the nut. While securing the nut, loosen bolt B.

6. REMOVE COLUMN HOLE COVER SILENCER SHEET INFO

7. SEPARATE NO. 2 STEERING INTERMEDIATE SHAFT ASSEMBLY INFO

8. SEPARATE NO. 1 STEERING COLUMN HOLE COVER SUB-ASSEMBLY INFO

9. SEPARATE TIE ROD END SUB-ASSEMBLY LH INFO

10. SEPARATE TIE ROD END SUB-ASSEMBLY RH

HINT:

Perform the same procedure as the LH side.

11. SEPARATE FRONT STABILIZER LINK ASSEMBLY LH INFO

12. SEPARATE FRONT STABILIZER LINK ASSEMBLY RH

HINT:

Perform the same procedure as the LH side.

13. SEPARATE FRONT LOWER SUSPENSION ARM LH INFO

14. SEPARATE FRONT LOWER SUSPENSION ARM RH

HINT:

Perform the same procedure as the LH side.

15. REMOVE FRONT SUSPENSION CROSSMEMBER SUB-ASSEMBLY INFO

16. REMOVE FRONT LOWER SUSPENSION ARM LH

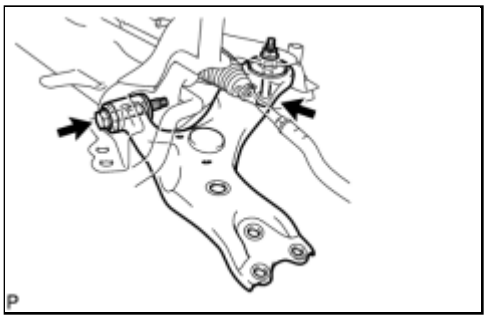

(a) Remove the 2 bolts, nut, and front lower suspension arm LH from the front suspension crossmember.

CAUTION:

Because the nut has its own stopper, do not turn the nut. While securing the nut, loosen bolt.

Last Modified: 3-10-2010	6.4 K	**From:** 200901
Model Year: 2010	**Model:** Corolla	**Doc ID:** RM000002PCD00SX
Title: FRONT SUSPENSION: FRONT SHOCK ABSORBER: COMPONENTS (2010 Corolla)		

COMPONENTS

ILLUSTRATION

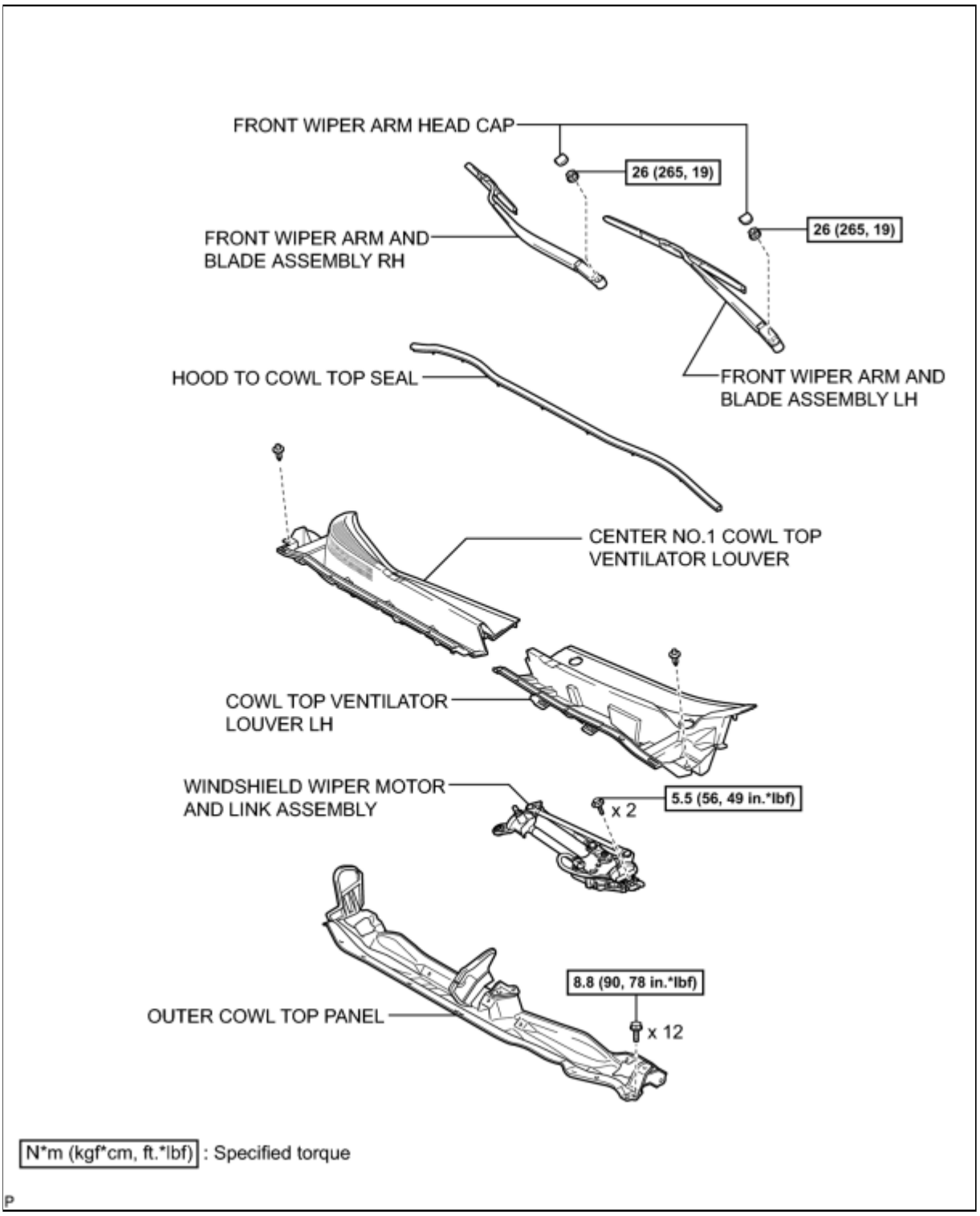

ILLUSTRATION

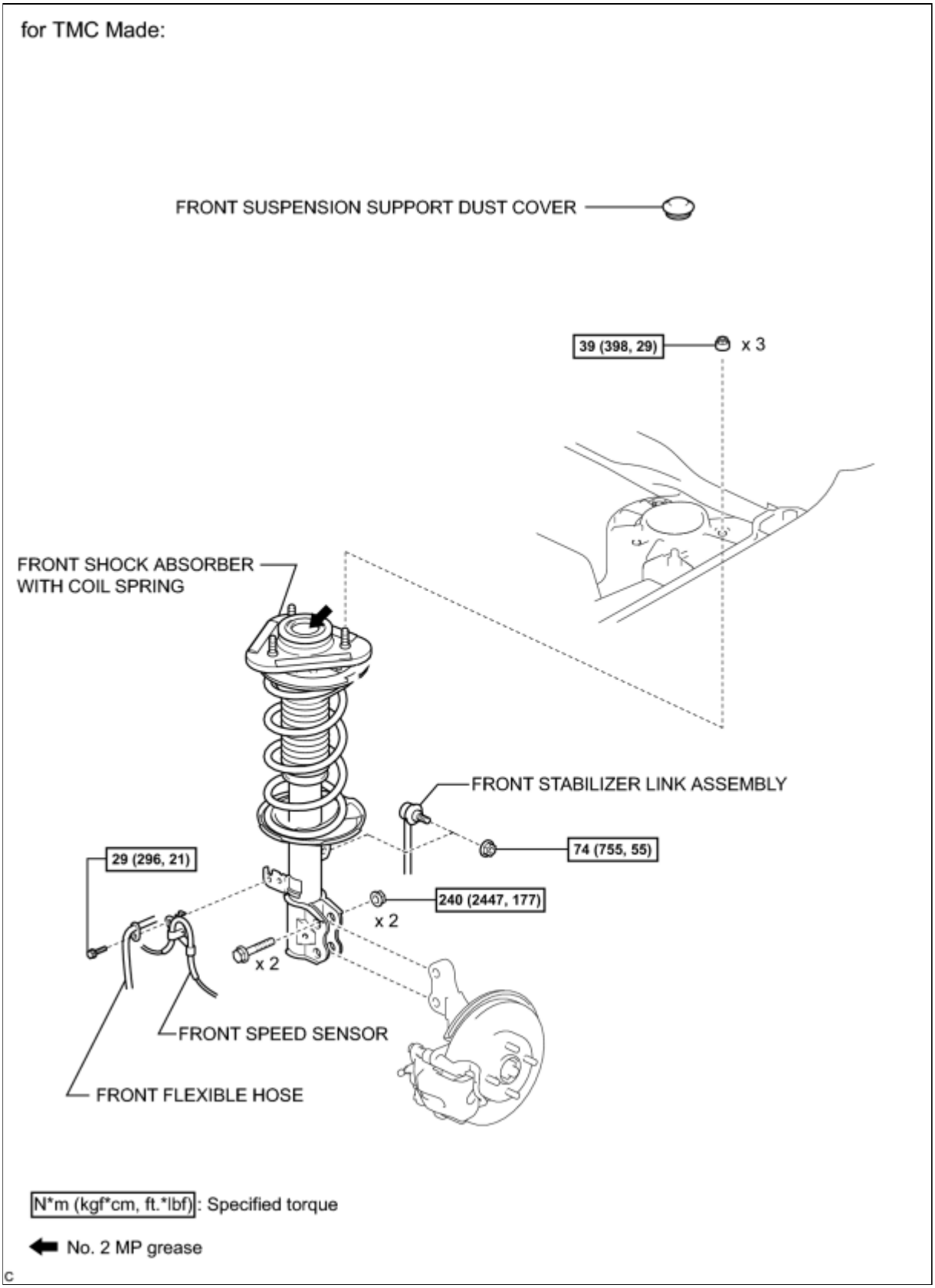

ILLUSTRATION

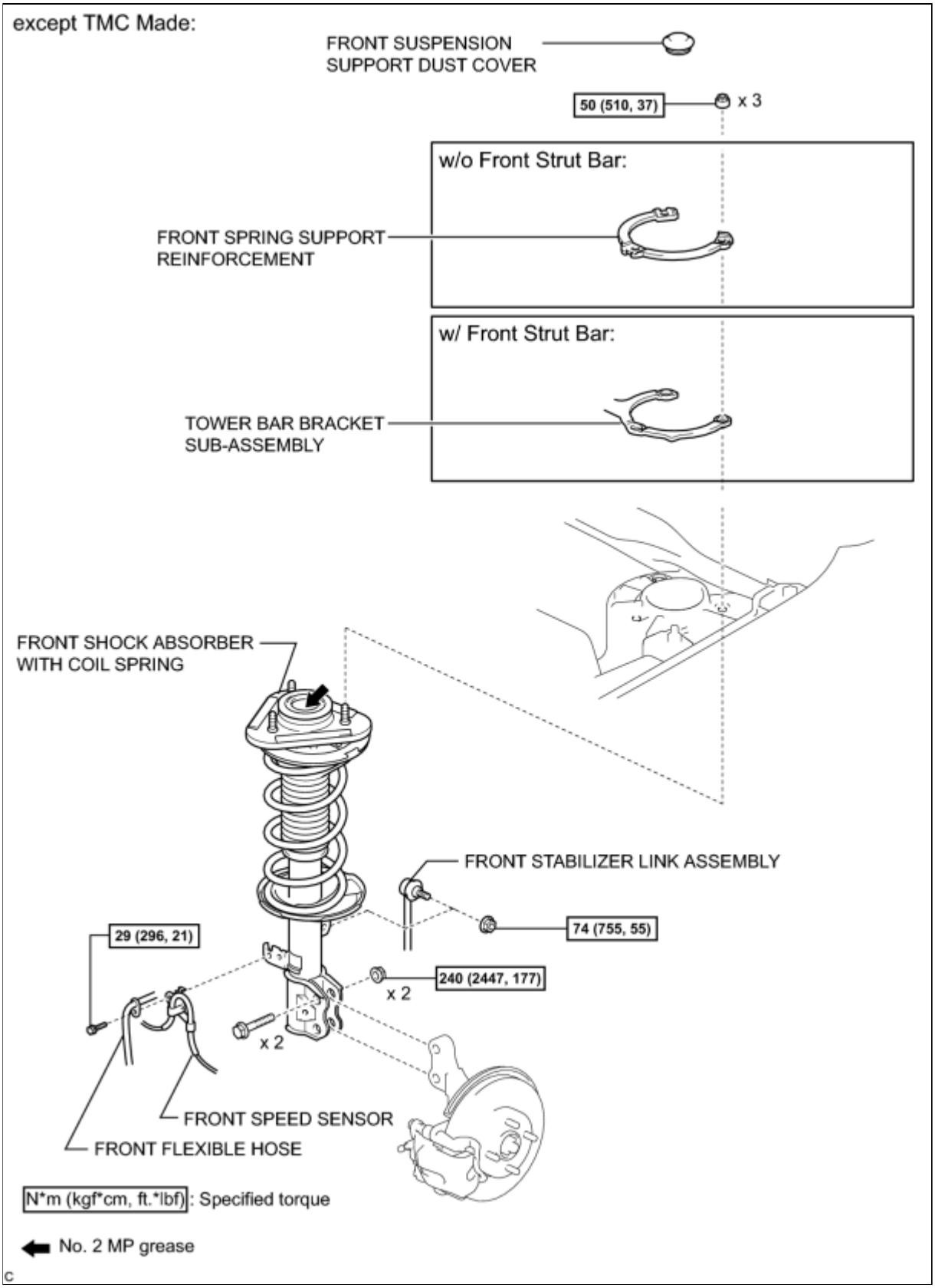

ILLUSTRATION

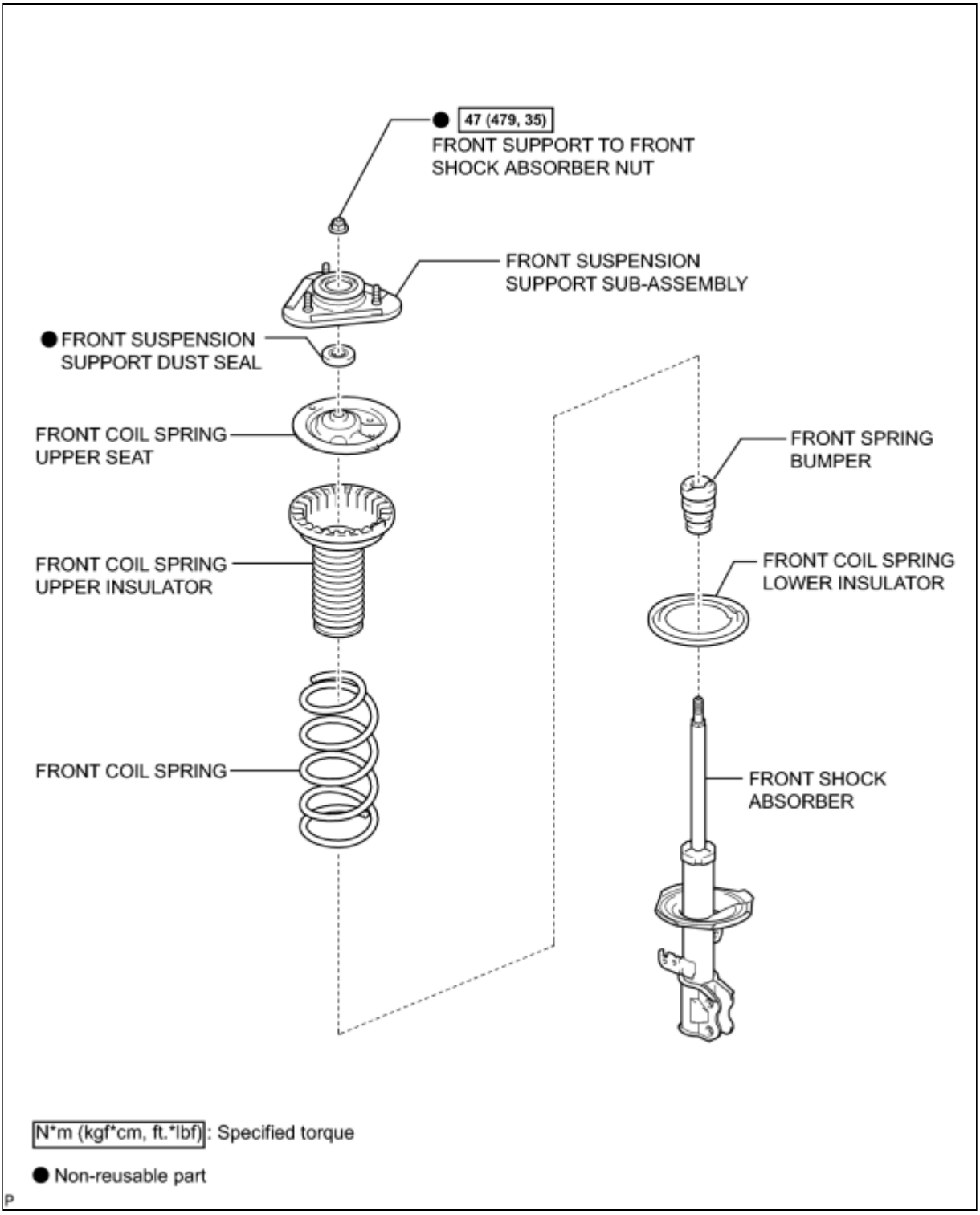

Last Modified: 3-10-2010	6.4 A	**From:** 200901
Model Year: 2010	**Model:** Corolla	**Doc ID:** RM0000003GY010X
Title: FRONT SUSPENSION: FRONT SHOCK ABSORBER: REMOVAL (2010 Corolla)		

REMOVAL

HINT:

- Use the same procedure for the LH side and RH side.
- The following procedure listed is for the LH side.

1. REMOVE FRONT WHEEL

2. REMOVE FRONT WIPER ARM HEAD CAP INFO

3. REMOVE FRONT WIPER ARM AND BLADE ASSEMBLY LH INFO

4. REMOVE FRONT WIPER ARM AND BLADE ASSEMBLY RH INFO

5. REMOVE HOOD TO COWL TOP SEAL INFO

6. REMOVE CENTER NO.1 COWL TOP VENTILATOR LOUVER INFO

7. REMOVE COWL TOP VENTILATOR LOUVER LH INFO

8. REMOVE WINDSHIELD WIPER MOTOR AND LINK ASSEMBLY INFO

9. REMOVE OUTER COWL TOP PANEL (for TMC Made) INFO

10. REMOVE OUTER COWL TOP PANEL (except TMC Made) INFO

11. SEPARATE FRONT STABILIZER LINK ASSEMBLY

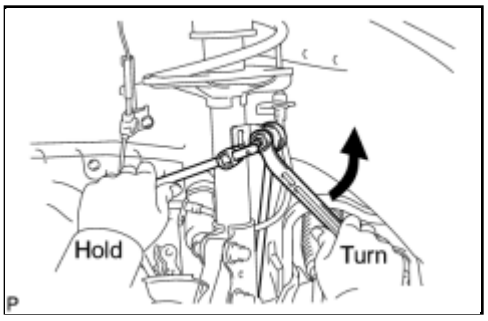

(a) Remove the nut and separate the stabilizer link assembly from the front shock absorber with coil spring.

NOTICE:

If the ball joint turns together with the nut, use a hexagon wrench (6 mm) to hold the stud bolt.

12. SEPARATE FRONT SPEED SENSOR (for TMC Made)

(a) Remove the bolt and separate the front flexible hose and the front speed sensor from the front shock absorber with coil spring.

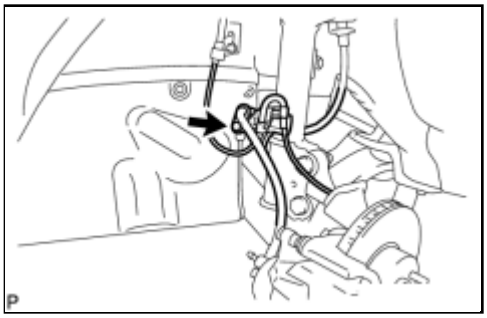

NOTICE:

Be sure to separate the front speed sensor from the front shock absorber with coil spring completely.

13. SEPARATE FRONT SPEED SENSOR (except TMC Made)

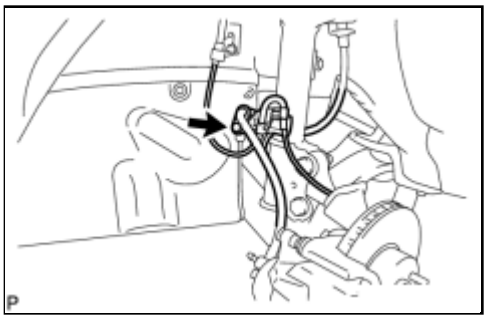

(a) Remove the bolt and separate the front flexible hose and the front speed sensor from the front shock absorber with coil spring.

NOTICE:

Be sure to separate the front speed sensor from the front shock absorber with coil spring completely.



(b) Remove the clamp and separate the front speed sensor from the front shock absorber.

14. REMOVE FRONT SUSPENSION SUPPORT DUST COVER (for TMC Made)

(a) Remove the front suspension support dust cover.

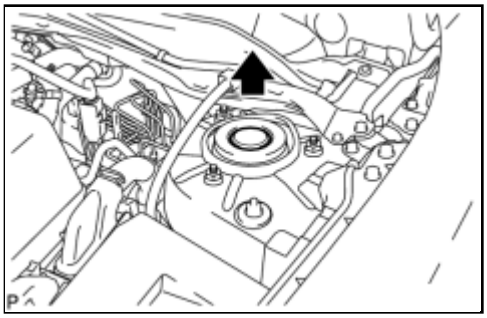

15. REMOVE FRONT SUSPENSION SUPPORT DUST COVER (except TMC Made)

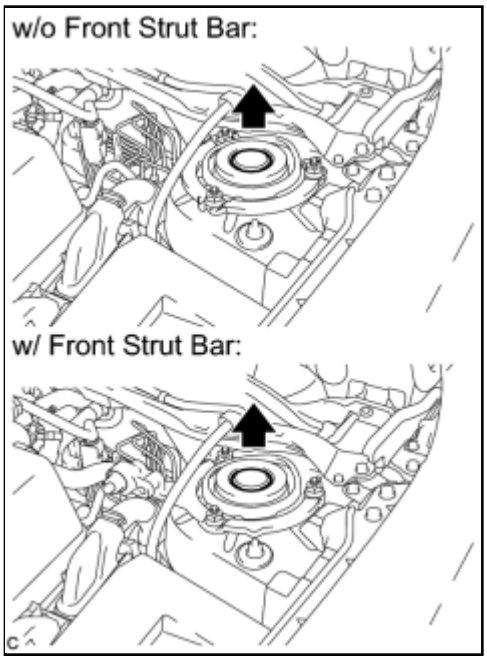

(a) Remove the front suspension support dust cover.

16. REMOVE FRONT SHOCK ABSORBER WITH COIL SPRING (for TMC Made)

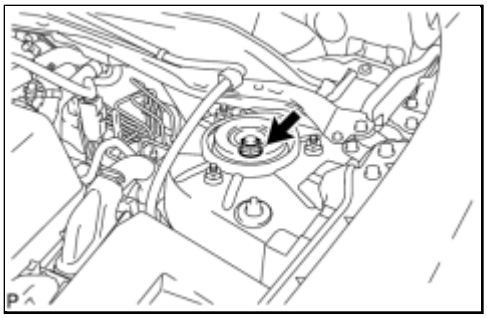

(a) Loosen the front support to front shock absorber nut of the front shock absorber.

NOTICE:

- Do not remove the front support to front shock absorber nut.
- Loosen the nut only when the front shock absorber with coil spring needs to be disassembled.

(b) Support the front axle using a jack and wooden block.

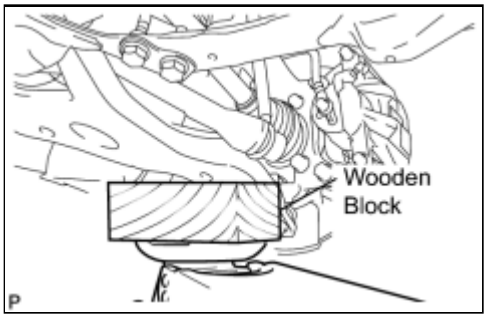

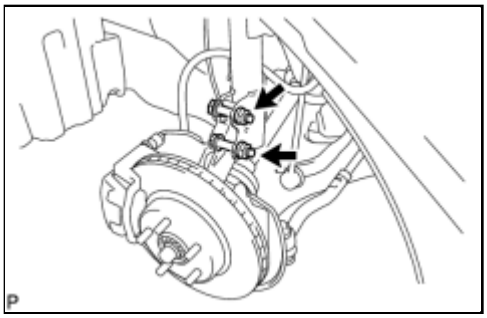

(c) Remove the 2 bolts and 2 nuts, and separate the front shock absorber with coil spring (lower side) from the steering knuckle.

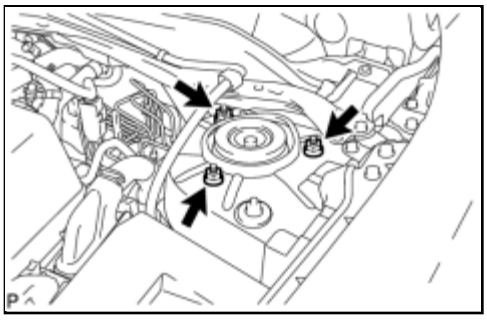

(d) Remove the 3 nuts and front shock absorber with coil spring.

NOTICE:

Make sure that the front speed sensor is completely separated from the front shock absorber with coil spring.

17. REMOVE FRONT SHOCK ABSORBER WITH COIL SPRING (except TMC Made)

(a) Loosen the front support to front shock absorber nut of the front shock absorber.

NOTICE:

- Do not remove the front support to front shock absorber nut.
- Loosen the nut only when the front shock absorber with coil spring needs to be disassembled.

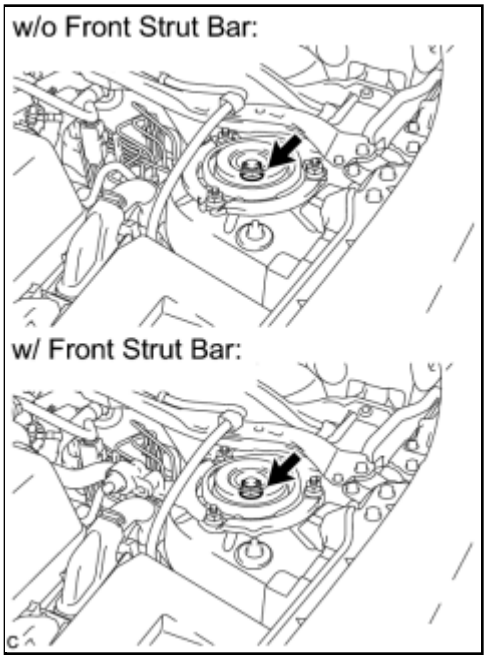

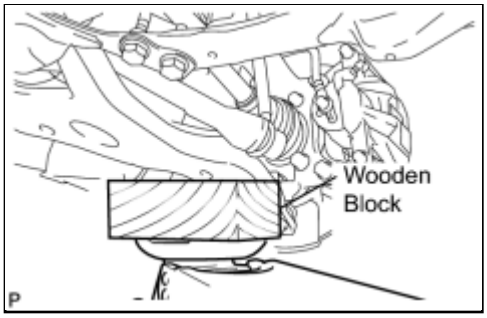

(b) Support the front axle using a jack and wooden block.

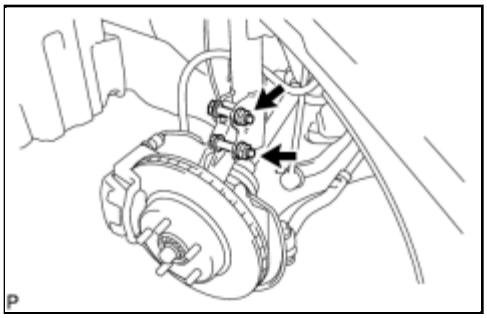

(c) Remove the 2 bolts and 2 nuts, and separate the front shock absorber with coil spring (lower side) from the steering knuckle.

(d) Remove the 3 nuts and front shock absorber with coil spring.

NOTICE:

Make sure that the front speed sensor is completely separated from the front shock absorber with coil spring.

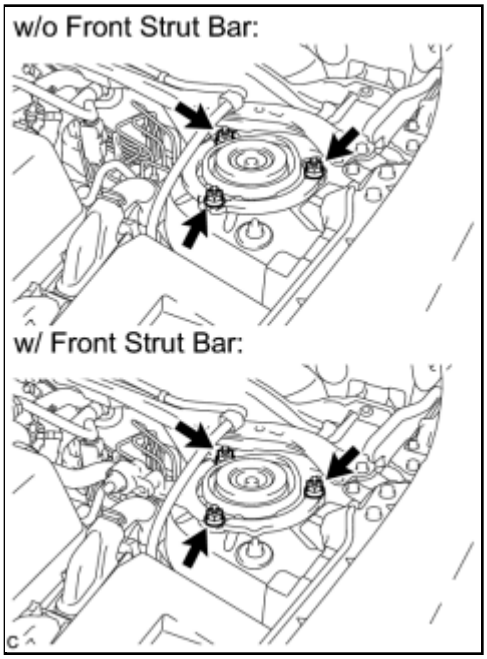

18. SECURE FRONT SHOCK ABSORBER WITH COIL SPRING

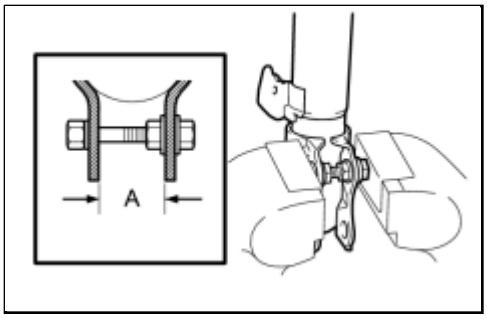

(a) Install the bolt and nut to the front shock absorber as shown in the illustration and secure the front shock absorber in a vise.

A:
28 mm (1.102 in.)

19. REMOVE FRONT SUPPORT TO FRONT SHOCK ABSORBER NUT

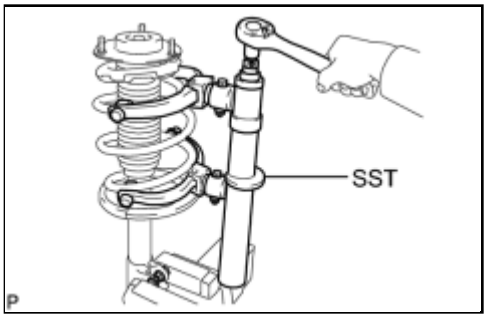

(a) Using SST, compress the front coil spring.

SST: 09727-30021
09727-00010
09727-00021
09727-00031

HINT:

If the front coil spring is compressed at an angle, using 2 SST will make the work easier.

(b) Check that the front coil spring is sufficiently compressed.

NOTICE:

Do not use an impact wrench. It will damage SST.

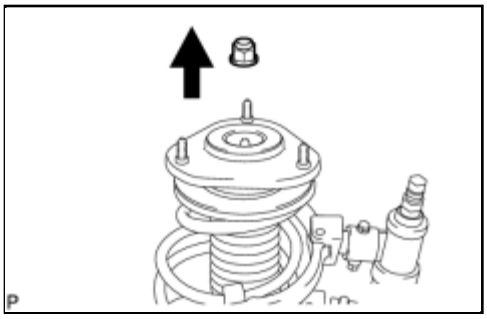

(c) Remove the front support to front shock absorber nut.

20. REMOVE FRONT SUSPENSION SUPPORT SUB-ASSEMBLY

21. REMOVE FRONT SUSPENSION SUPPORT DUST SEAL

22. REMOVE FRONT COIL SPRING UPPER SEAT

23. REMOVE FRONT COIL SPRING UPPER INSULATOR

24. REMOVE FRONT COIL SPRING

25. REMOVE FRONT SPRING BUMPER

26. REMOVE FRONT COIL SPRING LOWER INSULATOR

27. REMOVE FRONT SHOCK ABSORBER

Last Modified: 3-10-2010	6.4 A	**From:** 200901
Model Year: 2010	**Model:** Corolla	**Doc ID:** RM0000003GX010X
Title: FRONT SUSPENSION: FRONT SHOCK ABSORBER: INSTALLATION (2010 Corolla)		

INSTALLATION

HINT:

- Use the same procedure for the LH side and RH side.
- The following procedure listed is for the LH side.

1. SECURE FRONT SHOCK ABSORBER

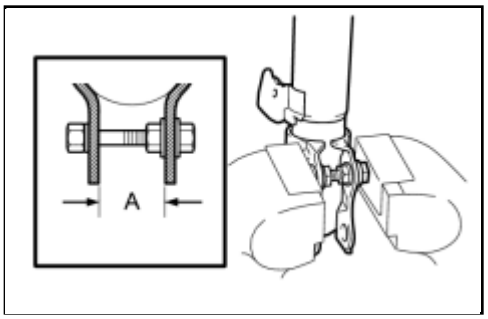

(a) Install the bolt and nut to the front shock absorber as shown in the illustration and secure the front shock absorber in a vise.

A:
28 mm (1.102 in.)

2. INSTALL FRONT COIL SPRING LOWER INSULATOR

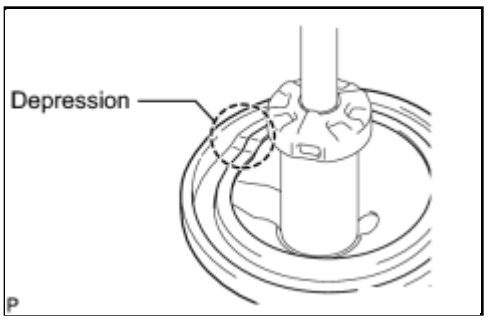

(a) Install the front coil spring lower insulator to the front shock absorber.

NOTICE:

Make sure that the front coil spring lower insulator is positioned in the depression of the lower spring seat.

3. INSTALL FRONT SPRING BUMPER

4. INSTALL FRONT COIL SPRING

(a) Using SST, compress the front coil spring.

SST: 09727-30021

09727-00010
09727-00021
09727-00031

NOTICE:

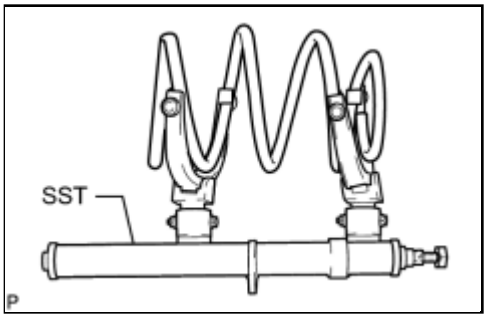

- Do not use an impact wrench. It will damage SST.
- Do not make a damage on the spring surface. The spring has soft coating.

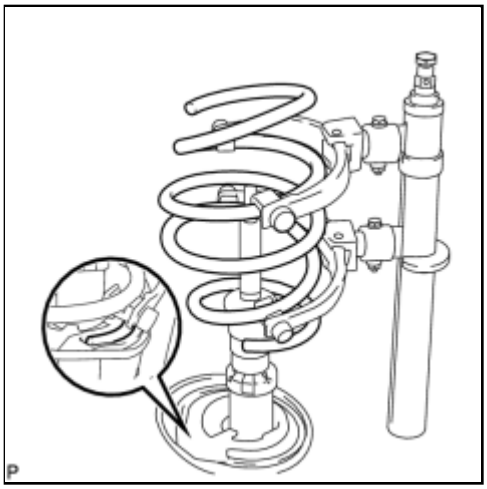

(b) Install the front coil spring.

NOTICE:

Fit the lower end of the front coil spring into the gap of the spring lower seat.

5. INSTALL FRONT COIL SPRING UPPER INSULATOR

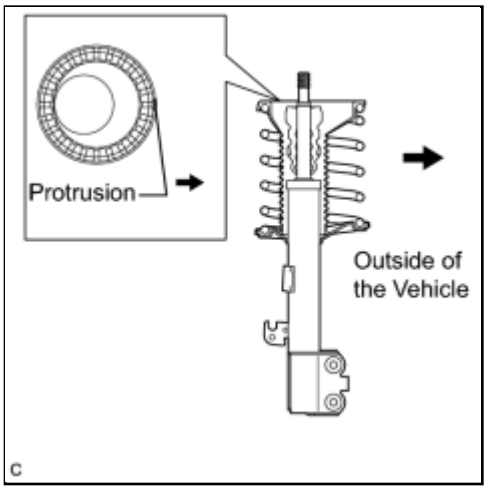

(a) Install the front coil spring upper insulator to the front shock absorber with the protrusion on the insulator facing the outside of the vehicle.

6. INSTALL FRONT COIL SPRING UPPER SEAT

(a) Install the front coil spring upper seat to the front shock

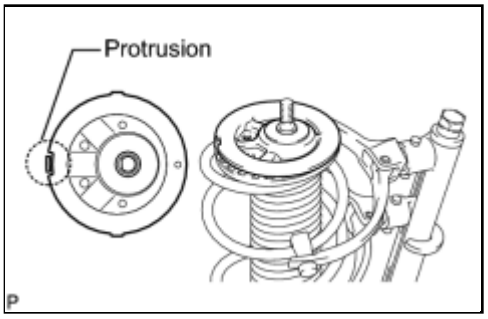

absorber assembly with the mark facing the outside of the vehicle.

NOTICE:

- Align the cutout of the front coil spring upper seat with the protrusion on the front coil spring upper insulator.
- Check that the slot on the piston rod and the slot on the front coil spring upper seat are aligned.

7. INSTALL FRONT SUSPENSION SUPPORT DUST SEAL

(a) Install a new front suspension support dust seal.

8. INSTALL FRONT SUSPENSION SUPPORT SUB-ASSEMBLY

9. TEMPORARILY TIGHTEN FRONT SUPPORT TO FRONT SHOCK ABSORBER NUT

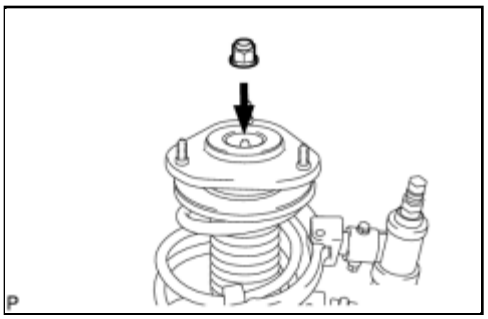

(a) Temporarily tighten a new front support to front shock absorber nut.

(b) Remove SST from the front coil spring.

NOTICE:

Do not use an impact wrench. It will damage SST.

10. INSTALL FRONT SHOCK ABSORBER WITH COIL SPRING (for TMC Made)

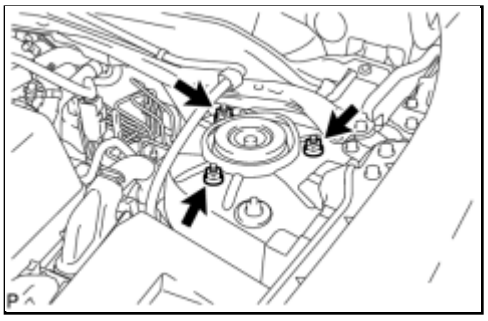

(a) Install the front shock absorber with coil spring (upper side) with the 3 nuts.

Torque: 39 N·m (398 kgf·cm, 29ft·lbf)

NOTICE:

Check the nut size before installing.

for TMC Made	M8

(b) Install the front shock absorber with coil spring (lower side) to the steering knuckle with the 2 bolts and 2 nuts.

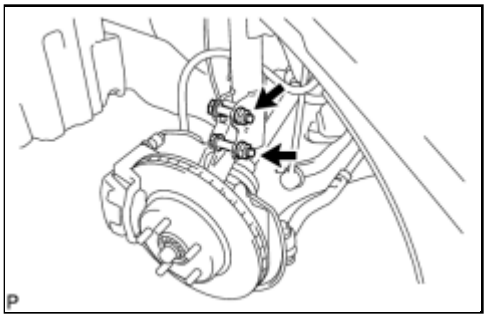

Torque: 240 N·m (2447 kgf·cm, 177ft·lbf)

NOTICE:

Keep the bolts from rotating while tightening the nuts.

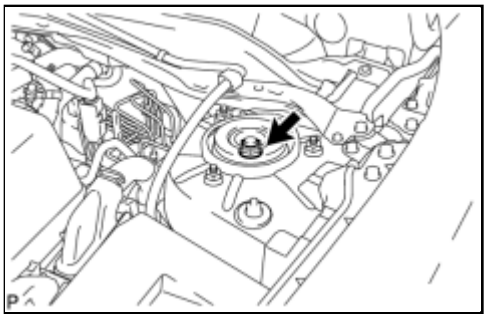

(c) Fully tighten the front support to front shock absorber nut.

Torque: 47 N·m (479 kgf·cm, 35ft·lbf)

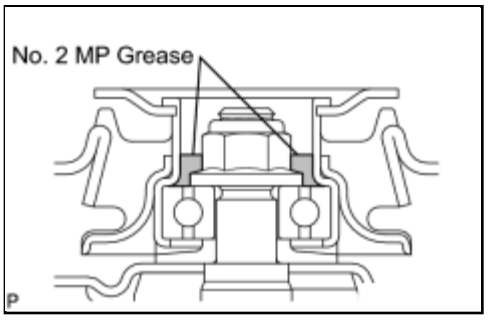

(d) Apply No. 2 MP grease into the suspension support sub-assembly.

NOTICE:

Do not apply any grease to the rubber surface of the front suspension support sub-assembly.

11. INSTALL FRONT SHOCK ABSORBER WITH COIL SPRING (except TMC Made)

(a) Install the front shock absorber with coil spring (upper side) with the 3 nuts.

Torque: 50 N·m (510 kgf·cm, 37ft·lbf)

NOTICE:

Check the nut size before installing.

except TMC Made	M10

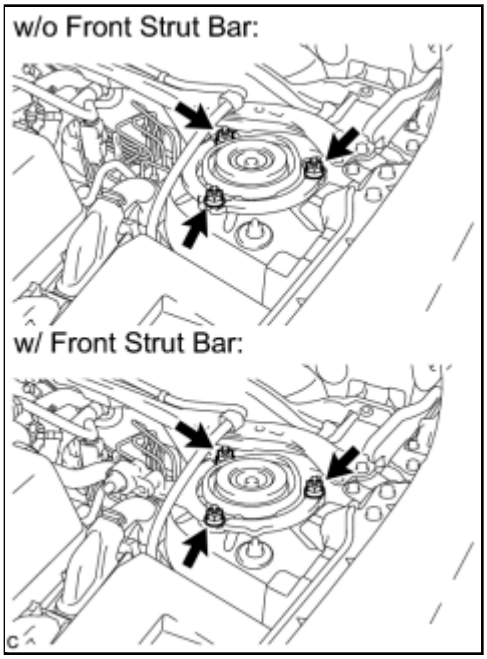

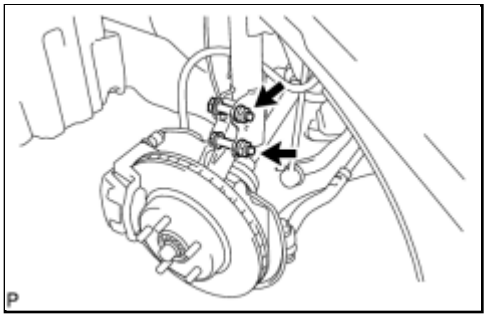

(b) Install the front shock absorber with coil spring (lower side) to the steering knuckle with the 2 bolts and 2 nuts.

Torque: 240 N·m (2447 kgf·cm, 177ft·lbf)

NOTICE:

Keep the bolts from rotating while tightening the nuts.

(c) Fully tighten the front support to front shock absorber nut.

Torque: 47 N·m (479 kgf·cm, 35ft·lbf)

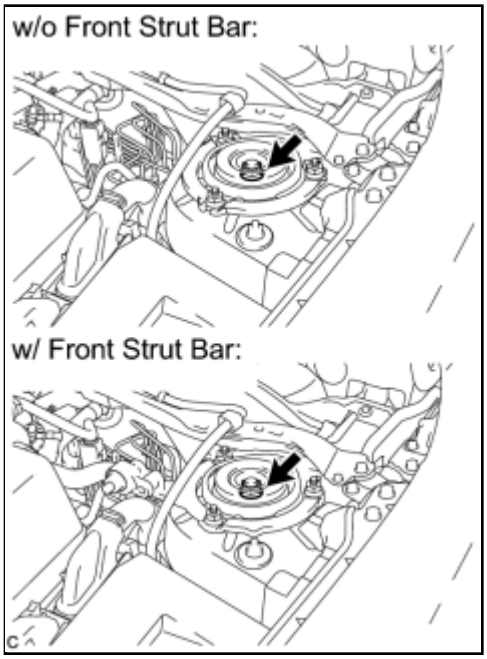

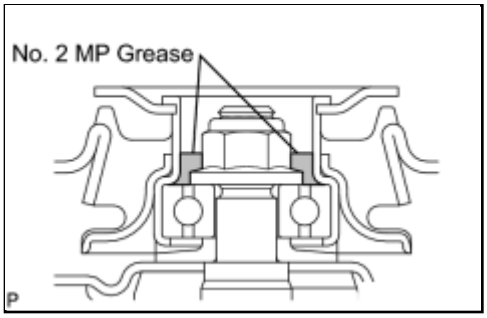

(d) Apply No. 2 MP grease into the suspension support sub-assembly.

NOTICE:

Do not apply any grease to the rubber surface of the front suspension support sub-assembly.

12. INSTALL FRONT SUSPENSION SUPPORT DUST COVER (for TMC Made)

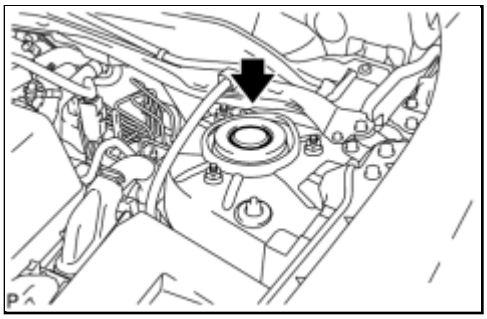

(a) Install the front suspension support dust cover.

13. INSTALL FRONT SUSPENSION SUPPORT DUST COVER (except TMC Made)

(a) Install the front suspension support dust cover.

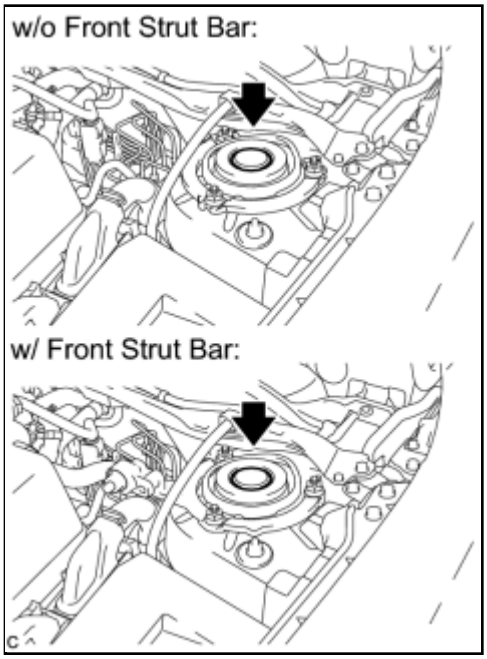

14. INSTALL FRONT SPEED SENSOR (for TMC Made)

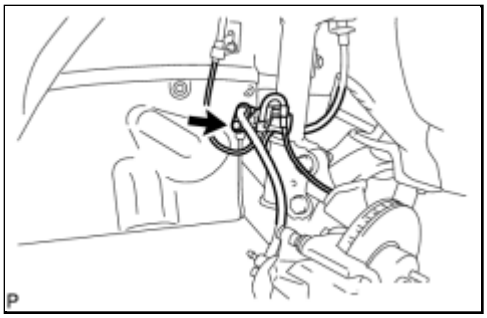

(a) Install the front speed sensor and front flexible hose to the front shock absorber with the bolt.

Torque: 29 N·m (296 kgf·cm, 21ft·lbf)

NOTICE:

Do not twist the front speed sensor when installing it.

HINT:

Install the speed sensor harness bracket first, and then the front flexible hose.

15. INSTALL FRONT SPEED SENSOR (except TMC Made)

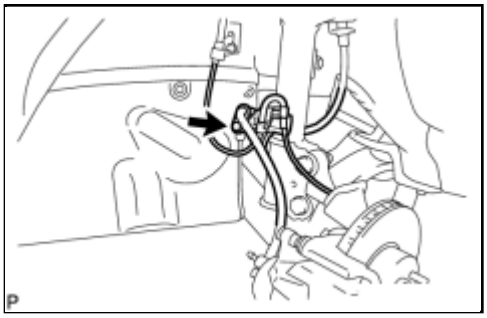

(a) Install the front speed sensor and front flexible hose to the front shock absorber with the bolt.

Torque: 29 N·m (296 kgf·cm, 21ft·lbf)

NOTICE:

Do not twist the front speed sensor when installing it.

HINT:

Install the speed sensor harness bracket first, and then the front flexible hose.



(b) Install the front speed sensor with the clamp to the front shock absorber.

16. INSTALL FRONT STABILIZER LINK ASSEMBLY

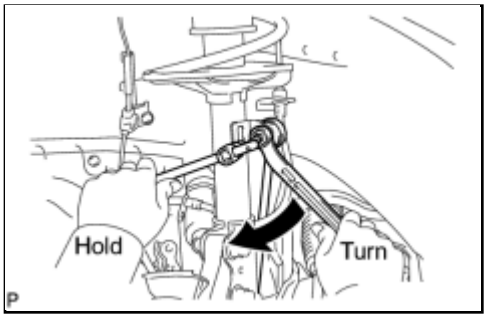

(a) Install the front stabilizer link assembly to the front shock absorber with coil spring with the nut.

Torque: 74 N·m (755 kgf·cm, 55ft·lbf)

NOTICE:

If the ball joint turns together with the nut, use a hexagon wrench (6 mm) to hold the stud bolt.

17. INSTALL OUTER COWL TOP PANEL (for TMC Made) INFO

18. INSTALL OUTER COWL TOP PANEL (except TMC Made) INFO

19. INSTALL WINDSHIELD WIPER MOTOR AND LINK ASSEMBLY INFO

20. INSTALL COWL TOP VENTILATOR LOUVER LH INFO

21. INSTALL CENTER NO.1 COWL TOP VENTILATOR LOUVER INFO

22. INSTALL HOOD TO COWL TOP SEAL INFO

23. INSTALL FRONT WIPER ARM AND BLADE ASSEMBLY RH INFO

24. INSTALL FRONT WIPER ARM AND BLADE ASSEMBLY LH INFO

25. INSTALL FRONT WIPER ARM HEAD CAP INFO

26. INSTALL FRONT WHEEL

Torque: 103 N·m (1050 kgf·cm, 76ft·lbf)

27. INSPECT AND ADJUST FRONT WHEEL ALIGNMENT

HINT:

Inspect and adjust front wheel alignment INFO **.**

Last Modified: 3-10-2010	6.4 G	**From:** 200901
Model Year: 2010	**Model:** Corolla	**Doc ID:** RM000002YJ500PX
Title: FRONT SUSPENSION: FRONT SHOCK ABSORBER: INSPECTION (2010 Corolla)		

INSPECTION

1. INSPECT FRONT SHOCK ABSORBER

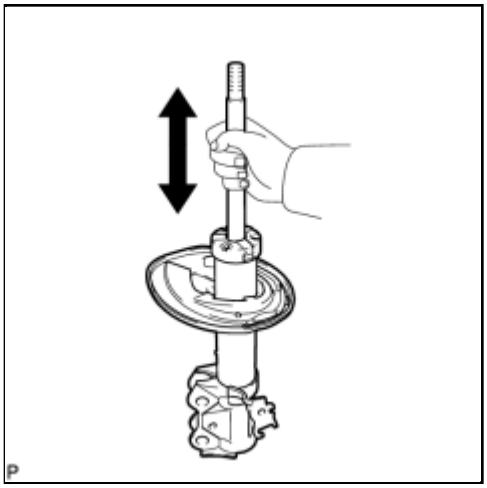

(a) Compress and extend the shock absorber rod 4 times or more .

Standard:

The operational sound and resistance are normal.

HINT:

If there is any abnormality, replace the front shock absorber with a new one.

Last Modified: 3-10-2010	6.4 N	**From:** 200901
Model Year: 2010	**Model:** Corolla	**Doc ID:** RM0000003GW00XX
Title: FRONT SUSPENSION: FRONT SHOCK ABSORBER: DISPOSAL (2010 Corolla)		

DISPOSAL

1. DISPOSE OF FRONT SHOCK ABSORBER ASSEMBLY

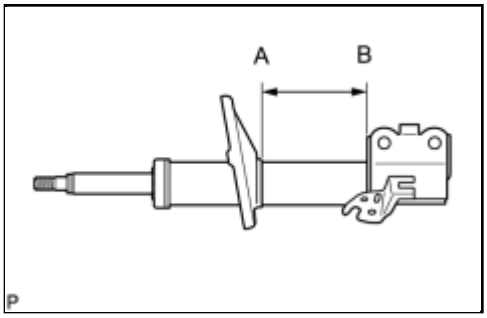

(a) Position the front shock absorber assembly level with the piston rod fully extended. Using a drill, make a hole in the cylinder between A and B shown in the illustration to discharge the gas inside.

NOTICE:

- The gas is colorless, odorless, and non-poisonous.
- Always use proper safety equipment and be careful when drilling because sharde of metal fly about.

Last Modified: 3-10-2010	6.4 K	**From:** 200901
Model Year: 2010	**Model:** Corolla	**Doc ID:** RM000002PCG00VX
Title: FRONT SUSPENSION: FRONT STABILIZER BAR: COMPONENTS (2010 Corolla)		

COMPONENTS

ILLUSTRATION

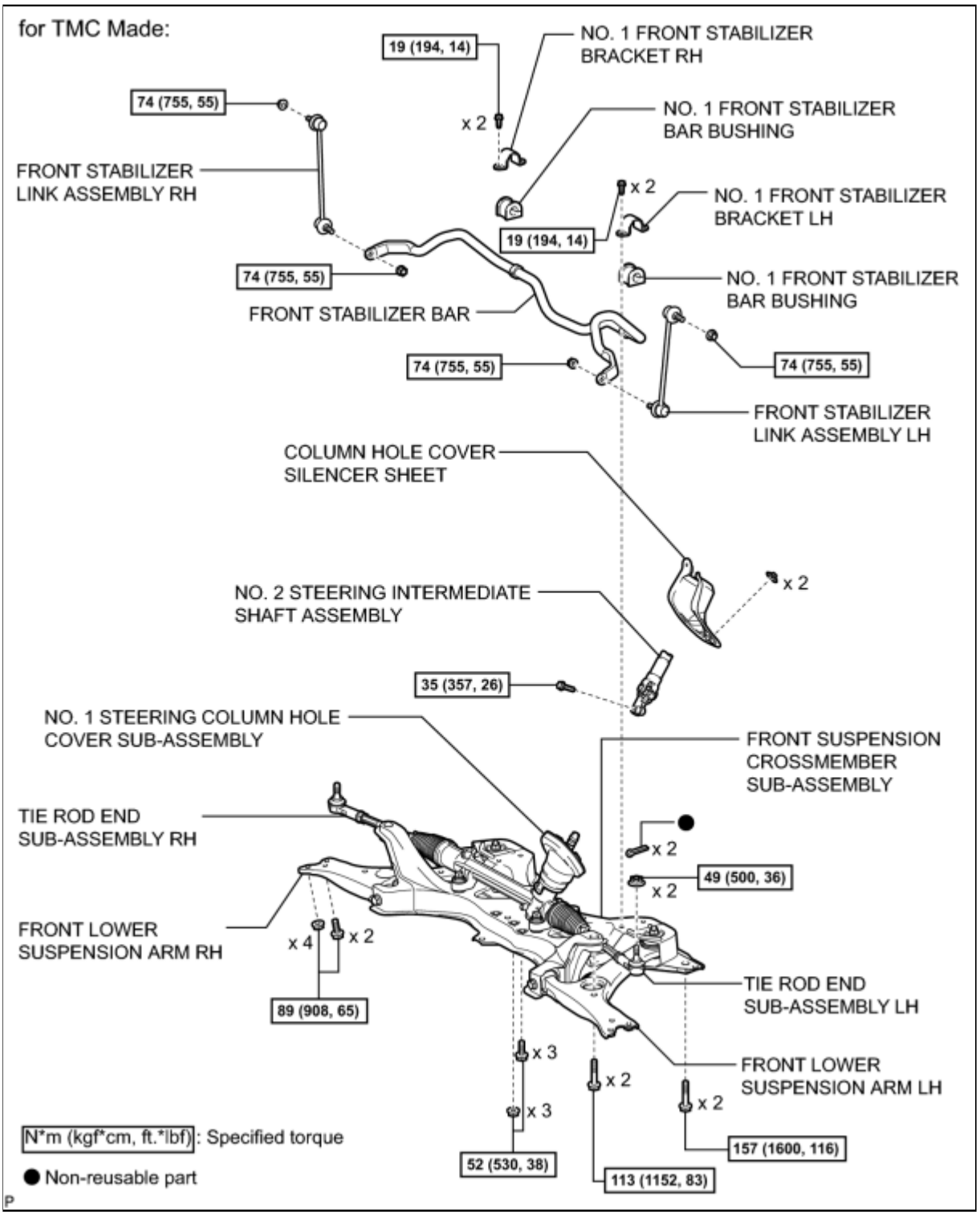

ILLUSTRATION

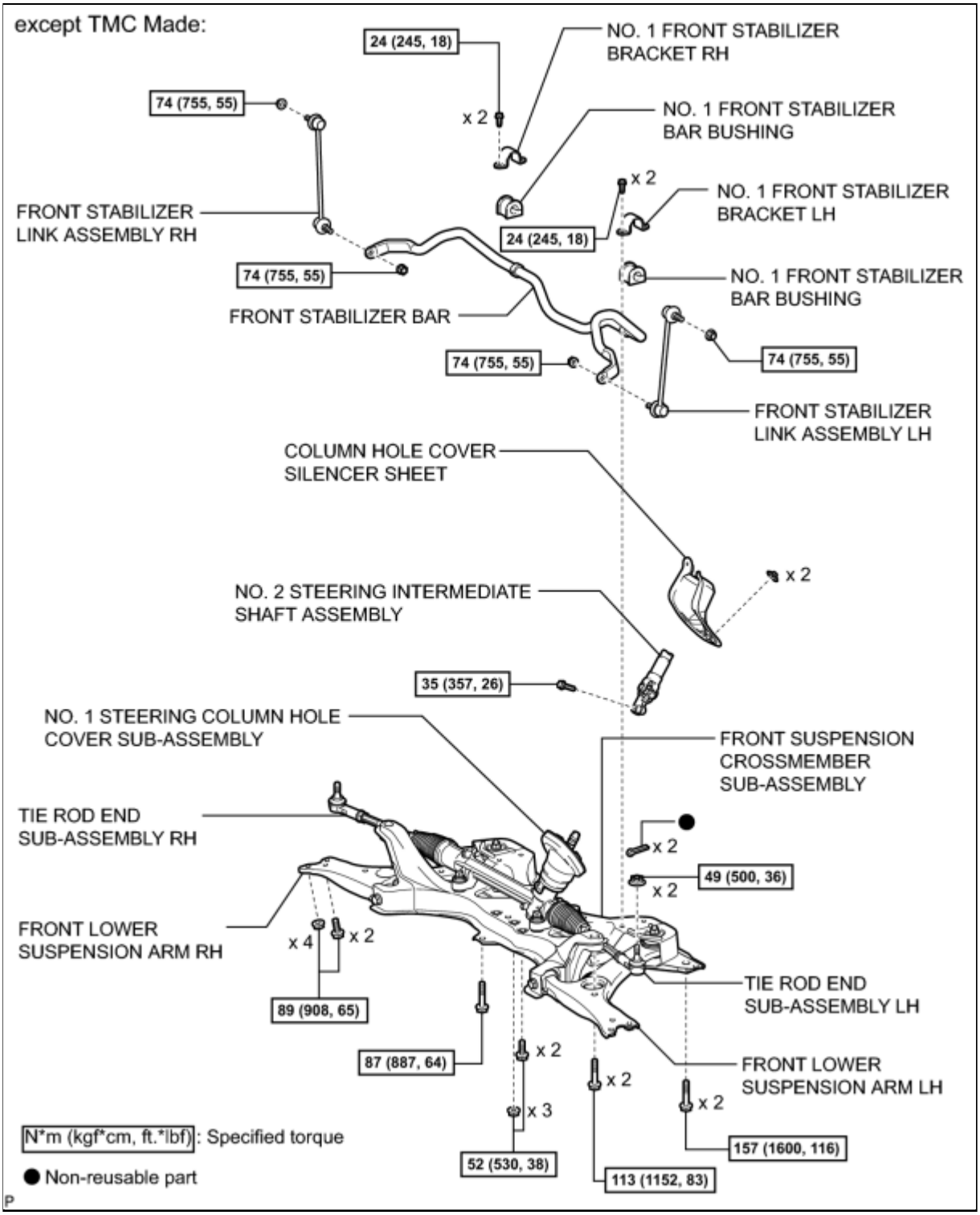

Last Modified: 3-10-2010	6.4 A	**From:** 200901
Model Year: 2010	**Model:** Corolla	**Doc ID:** RM0000029T701SX
Title: FRONT SUSPENSION: FRONT STABILIZER BAR: REMOVAL (2010 Corolla)		

REMOVAL

1. PLACE FRONT WHEELS FACING STRAIGHT AHEAD

2. SECURE STEERING WHEEL INFO

3. REMOVE COLUMN HOLE COVER SILENCER SHEET INFO

4. SEPARATE NO. 2 STEERING INTERMEDIATE SHAFT ASSEMBLY INFO

5. SEPARATE NO. 1 STEERING COLUMN HOLE COVER SUB-ASSEMBLY INFO

6. REMOVE FRONT WHEELS

7. SEPARATE TIE ROD END SUB-ASSEMBLY LH INFO

8. SEPARATE TIE ROD END SUB-ASSEMBLY RH

HINT:

Perform the same procedure as the LH side.

9. REMOVE FRONT STABILIZER LINK ASSEMBLY LH

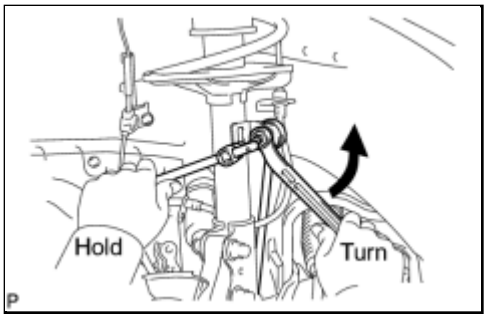

(a) Remove the nut and separate the stabilizer link assembly LH from the front shock absorber with coil spring.

HINT:

If the ball joint turns together with the nut, use a hexagon wrench (6 mm) to hold the stud bolt.

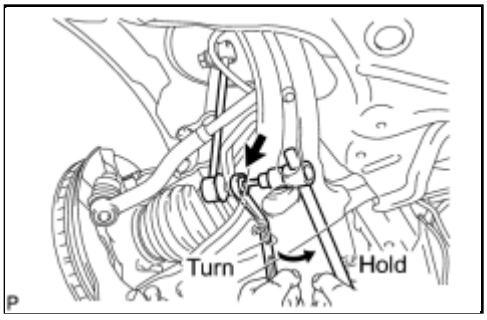

(b) Remove the nut and the stabilizer link assembly LH from the front stabilizer bar.

HINT:

If the ball joint turns together with the nut, use a hexagon wrench (6 mm) to hold the stud bolt.

10. REMOVE FRONT STABILIZER LINK ASSEMBLY RH

HINT:

Perform the same procedure as the LH side.

11. SEPARATE FRONT LOWER SUSPENSION ARM LH INFO

12. SEPARATE FRONT LOWER SUSPENSION ARM RH

HINT:

Perform the same procedure as the LH side.

13. REMOVE FRONT SUSPENSION CROSSMEMBER SUB-ASSEMBLY INFO

14. REMOVE FRONT STABILIZER BAR

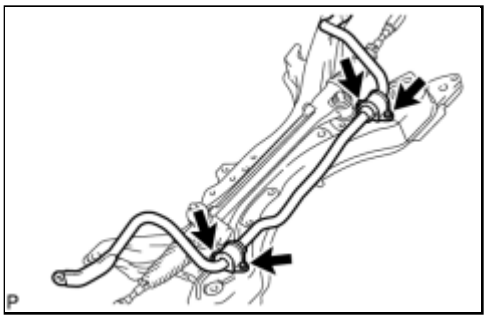

(a) Remove the 4 bolts, 2 No. 1 front stabilizer brackets and front stabilizer bar from the front suspension crossmember.

15. REMOVE NO. 1 FRONT STABILIZER BAR BUSHING

(a) Remove the 2 No. 1 front stabilizer bar bushings from the front stabilizer bar.

Last Modified: 3-10-2010	6.4 G	**From:** 200901
Model Year: 2010	**Model:** Corolla	**Doc ID:** RM0000011DO01UX
Title: FRONT SUSPENSION: FRONT STABILIZER BAR: INSPECTION (2010 Corolla)		

INSPECTION

1. INSPECT FRONT STABILIZER LINK ASSEMBLY

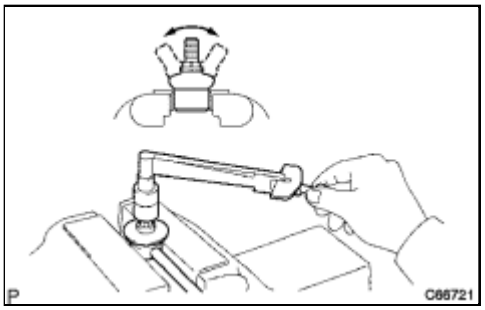

(a) Inspect the turning torque of the ball joint.

(1) Secure the front stabilizer link assembly in a vise using aluminum plates.

(2) Install the nut to the front stabilizer link assembly stud.

(3) Using a torque wrench, turn the nut continuously at a rate of 2 to 4 seconds per turn and take the torque reading on the 5th turn.

Turning Torque - Torque: 0.1 to 2.0 N·m (1 to 20 kgf·cm, 1 to 17in·lbf)

If the turning torque is not within the specified range, replace the front stabilizer link assembly with a new one.

(b) Inspect the dust cover.

(1) Check that the dust cover is not cracked and that there is no grease on it.

Last Modified: 3-10-2010	6.4 A	**From:** 200901
Model Year: 2010	**Model:** Corolla	**Doc ID:** RM0000029T401SX
Title: FRONT SUSPENSION: FRONT STABILIZER BAR: INSTALLATION (2010 Corolla)		

INSTALLATION

1. INSTALL NO. 1 FRONT STABILIZER BAR BUSHING (for LH Side)

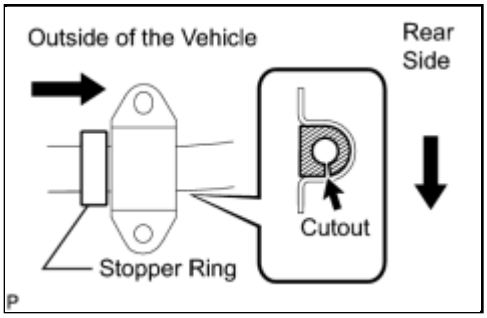

(a) Install the No. 1 front stabilizer bar bushing to the front stabilizer bar as shown in the illustration.

NOTICE:

- Install the No. 1 front stabilizer bar bushing so that the cutout faces the rear of the vehicle.
- Make sure that the amount of deviation of the front stabilizer bar in the horizontal direction is within +/- 5 mm (0.20 in.).

2. INSTALL NO. 1 FRONT STABILIZER BAR BUSHING (for RH Side)

HINT:

Perform the same procedure as the LH side.

3. INSTALL FRONT STABILIZER BAR

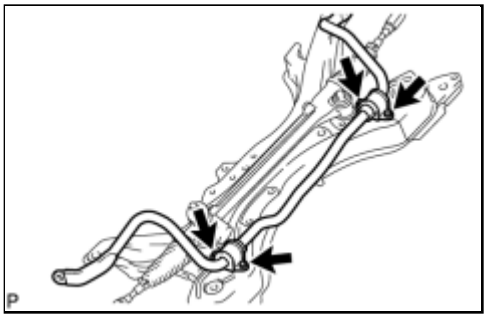

(a) Install the front stabilizer bar and 2 No. 1 front stabilizer brackets to the front suspension crossmember with the 4 bolts.

TMC Made - Torque: 19 N·m (194 kgf·cm, 14ft·lbf)

except TMC Made - Torque: 24 N·m (245 kgf·cm, 18ft·lbf)

NOTICE:

Check the type of bolt before installing, Look at strength division number of the bolt head.

- 11T: TMC Made
- 10T: except TMC Made

4. INSTALL FRONT SUSPENSION CROSSMEMBER SUB-ASSEMBLY (for TMC Made) INFO

5. REMOVE FRONT SUSPENSION CROSSMEMBER SUB-ASSEMBLY (except TMC Made) INFO

6. CONNECT FRONT LOWER SUSPENSION ARM LH INFO

7. CONNECT FRONT LOWER SUSPENSION ARM RH

HINT:

Perform the same procedure as the LH side.

8. INSTALL FRONT STABILIZER LINK ASSEMBLY LH

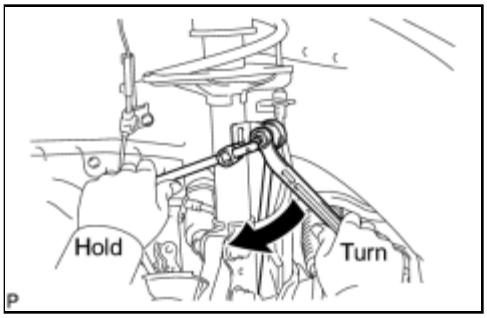

(a) Install the front stabilizer link assembly LH to the front shock absorber with coil spring with the nut.

Torque: 74 N·m (755 kgf·cm, 55ft·lbf)

HINT:

If the ball joint turns together with the nut, use a hexagon wrench (6 mm) to hold the stud bolt.

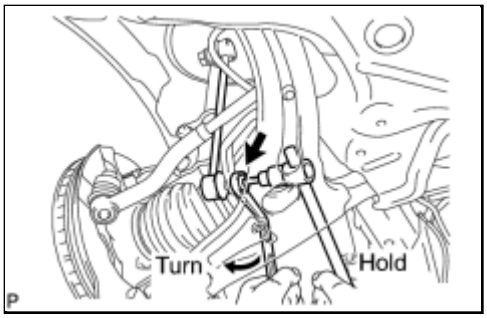

(b) Install the front stabilizer link assembly LH to the front stabilizer bar with the nut.

Torque: 74 N·m (755 kgf·cm, 55ft·lbf)

HINT:

If the ball joint turns together with the nut, use a hexagon wrench (6 mm) to hold the stud bolt.

9. INSTALL FRONT STABILIZER LINK ASSEMBLY RH

HINT:

Perform the same procedure as the LH side.

10. CONNECT TIE ROD END SUB-ASSEMBLY LH INFO

11. CONNECT TIE ROD END SUB-ASSEMBLY RH

HINT:

Perform the same procedure as the LH side.

12. CONNECT NO. 1 STEERING COLUMN HOLE COVER SUB-ASSEMBLY INFO

13. CONNECT NO. 2 STEERING INTERMEDIATE SHAFT ASSEMBLY INFO

14. PLACE FRONT WHEELS FACING STRAIGHT AHEAD

15. INSTALL COLUMN HOLE COVER SILENCER SHEET INFO

16. INSTALL FRONT WHEELS

Torque: 103 N·m (1050 kgf·cm, 76ft·lbf)

17. INSPECT AND ADJUST FRONT WHEEL ALIGNMENT

HINT:

Inspect and adjust front wheel alignment INFO .



Last Modified: 3-10-2010	6.4 K	**From:** 200901
Model Year: 2010	**Model:** Corolla	**Doc ID:** RM000002EY7007X
Title: FRONT SUSPENSION: FRONT STRUT BAR: COMPONENTS (2010 Corolla)		

COMPONENTS

ILLUSTRATION

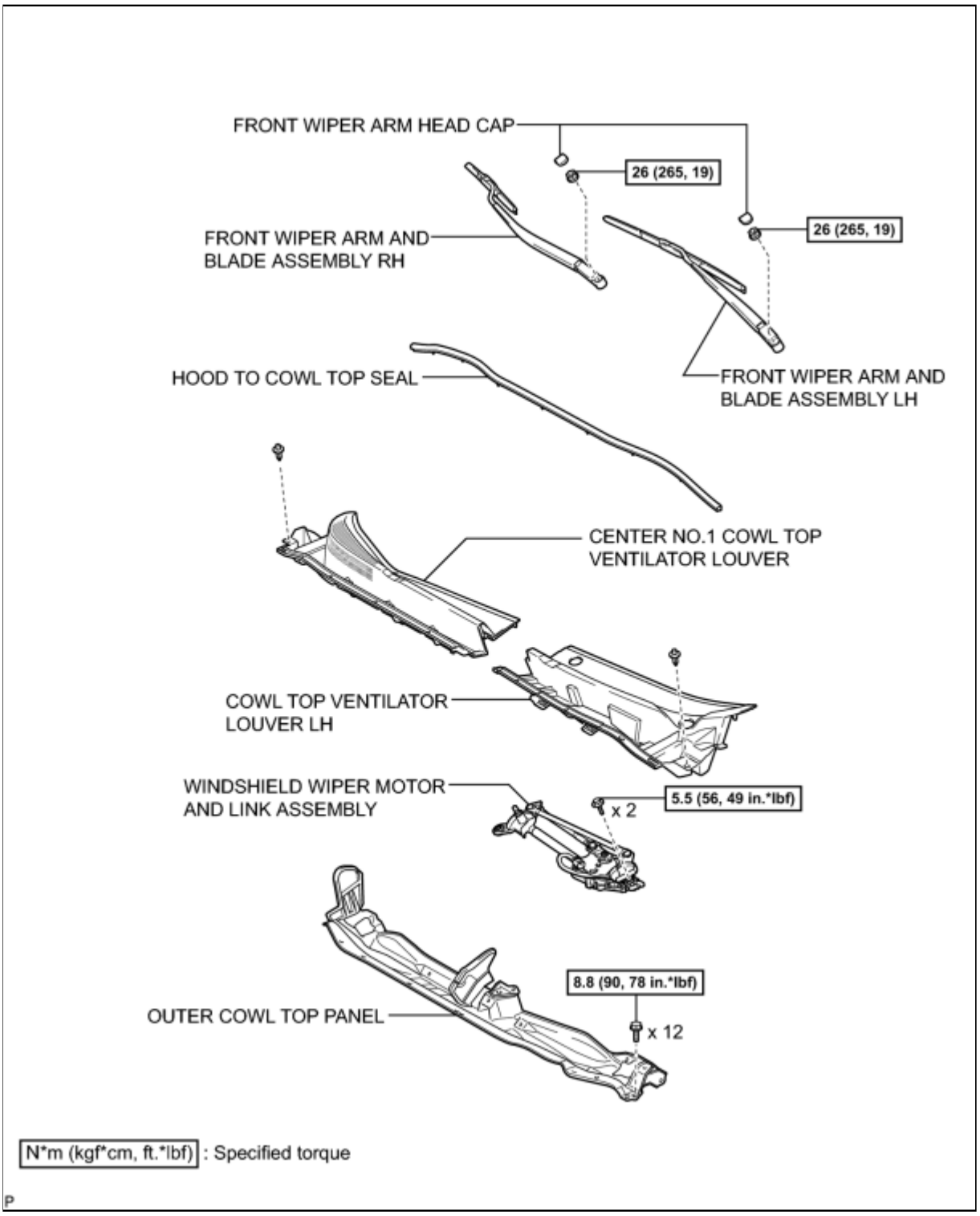

ILLUSTRATION

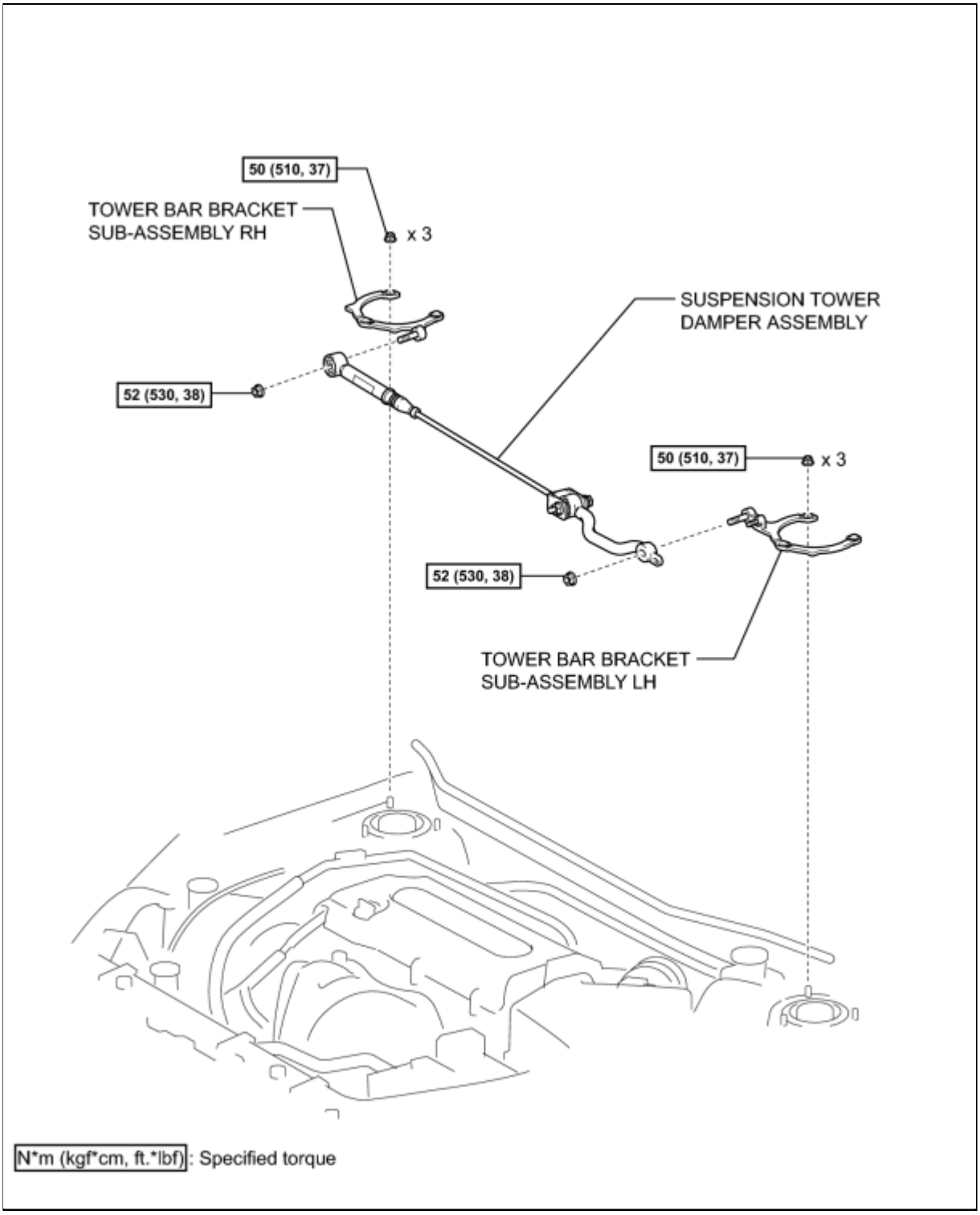

Last Modified: 3-10-2010	6.4 A	**From:** 200901
Model Year: 2010	**Model:** Corolla	**Doc ID:** RM000002EY8007X
Title: FRONT SUSPENSION: FRONT STRUT BAR: REMOVAL (2010 Corolla)		

REMOVAL

1. REMOVE FRONT WIPER ARM HEAD CAP INFO

2. REMOVE FRONT WIPER ARM AND BLADE ASSEMBLY LH INFO

3. REMOVE FRONT WIPER ARM AND BLADE ASSEMBLY RH INFO

4. REMOVE HOOD TO COWL TOP SEAL INFO

5. REMOVE CENTER NO.1 COWL TOP VENTILATOR LOUVER INFO

6. REMOVE COWL TOP VENTILATOR LOUVER LH INFO

7. REMOVE WINDSHIELD WIPER MOTOR AND LINK ASSEMBLY INFO

8. REMOVE OUTER COWL TOP PANEL INFO

9. REMOVE SUSPENSION TOWER DAMPER ASSEMBLY

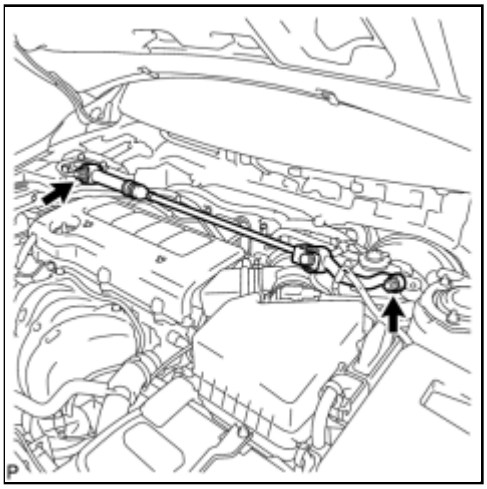

(a) Remove the 2 nuts and suspension tower damper assembly.

10. REMOVE TOWER BAR BRACKET SUB-ASSEMBLY LH

(a) Remove the 3 nuts and tower bar bracket sub assembly LH.

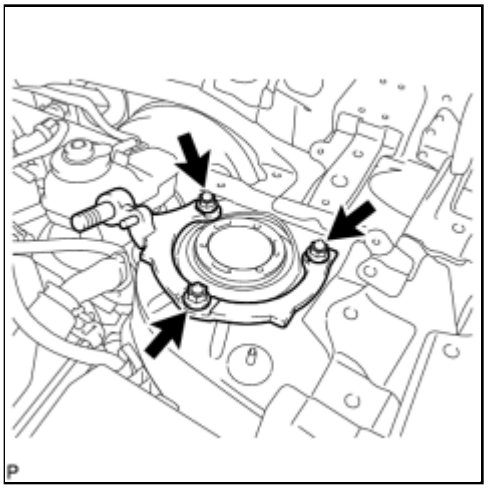

11. REMOVE TOWER BAR BRACKET SUB-ASSEMBLY RH

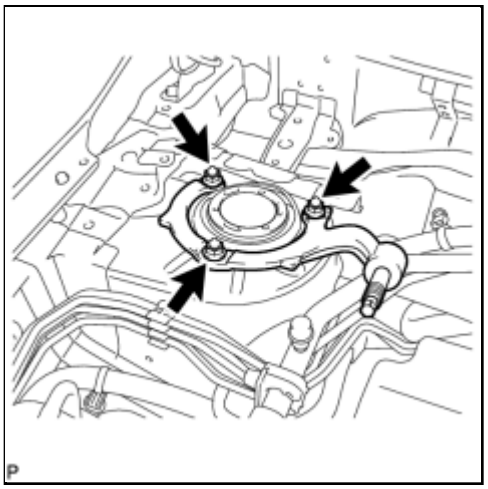

(a) Remove the 3 nuts and tower bar bracket sub assembly RH.

Last Modified: 3-10-2010	6.4 A	**From:** 200901
Model Year: 2010	**Model:** Corolla	**Doc ID:** RM000002EY6007X
Title: FRONT SUSPENSION: FRONT STRUT BAR: INSTALLATION (2010 Corolla)		

INSTALLATION

1. TEMPORARILY TIGHTEN TOWER BAR BRACKET SUB-ASSEMBLY LH

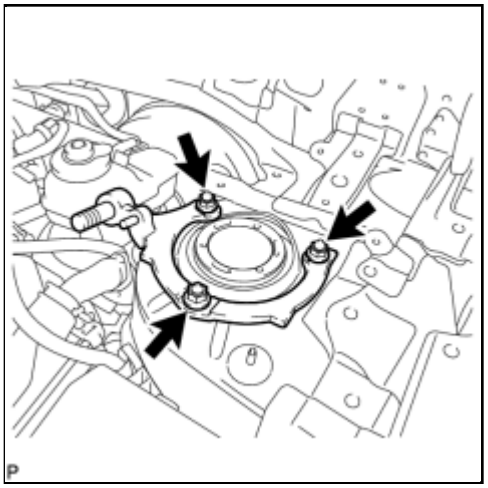

(a) Temporarily tighten the tower bar bracket sub assembly LH with the 3 nuts.

2. TEMPORARILY TIGHTEN TOWER BAR BRACKET SUB-ASSEMBLY RH

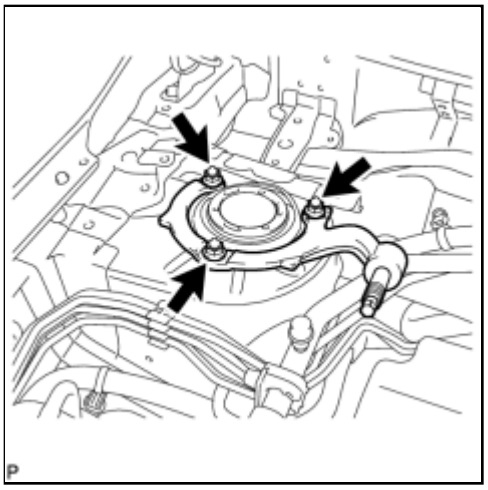

(a) Temporarily tighten the tower bar bracket sub assembly RH with the 3 nuts.

3. TEMPORARILY TIGHTEN SUSPENSION TOWER DAMPER ASSEMBLY

(a) Temporarily tighten the suspension tower damper assembly with the 2 nuts.

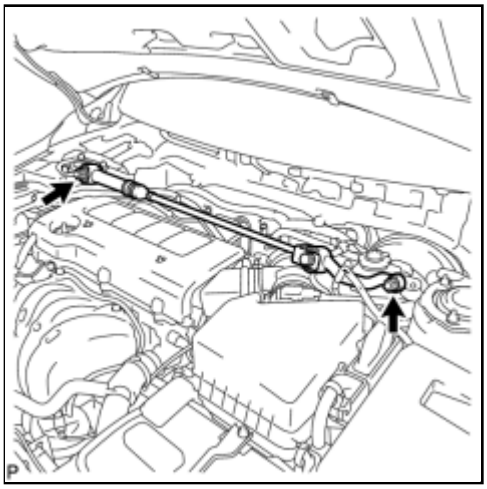

4. FULLY TIGHTEN TOWER BAR BRACKET SUB-ASSEMBLY LH

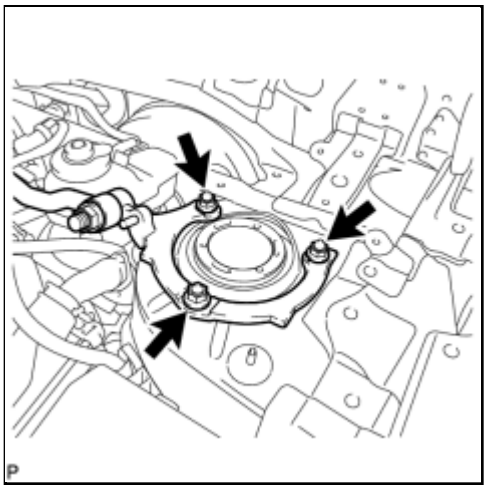

(a) Fully tighten the 3 nuts.

Torque: 50 N·m (510 kgf·cm, 37ft·lbf)

5. FULLY TIGHTEN TOWER BAR BRACKET SUB-ASSEMBLY RH

(a) Fully tighten the 3 nuts.

Torque: 50 N·m (510 kgf·cm, 37ft·lbf)

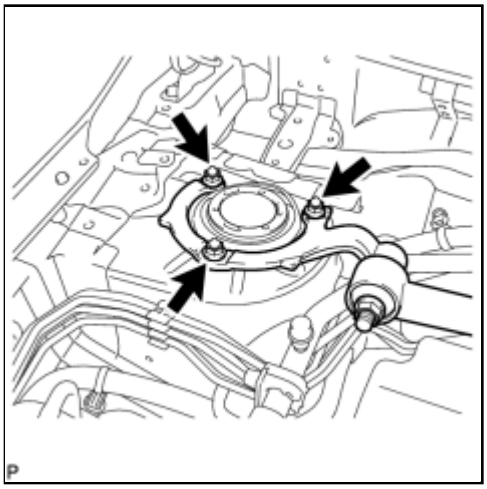

6. FULLY TIGHTEN SUSPENSION TOWER DAMPER ASSEMBLY

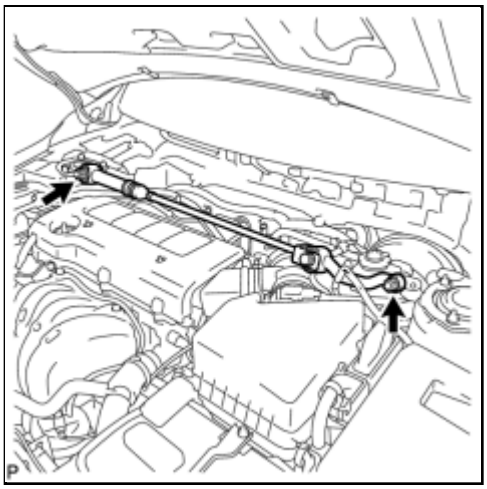

(a) Fully tighten the 2 nuts.

Torque: 52 N·m (530 kgf·cm, 38ft·lbf)

7. INSTALL OUTER COWL TOP PANEL INFO

8. INSTALL WINDSHIELD WIPER MOTOR AND LINK ASSEMBLY INFO

9. INSTALL COWL TOP VENTILATOR LOUVER LH INFO

10. INSTALL CENTER NO.1 COWL TOP VENTILATOR LOUVER INFO

11. INSTALL HOOD TO COWL TOP SEAL INFO

12. INSTALL FRONT WIPER ARM AND BLADE ASSEMBLY RH INFO

13. INSTALL FRONT WIPER ARM AND BLADE ASSEMBLY LH INFO

14. REMOVE FRONT WIPER ARM HEAD CAP INFO

Last Modified: 3-10-2010	6.4 G	**From:** 200901
Model Year: 2010	**Model:** Corolla	**Doc ID:** RM000002F2D007X
Title: FRONT SUSPENSION: FRONT STRUT BAR: INSPECTION (2010 Corolla)		

INSPECTION

1. INSPECT SUSPENSION TOWER DAMPER ASSEMBLY

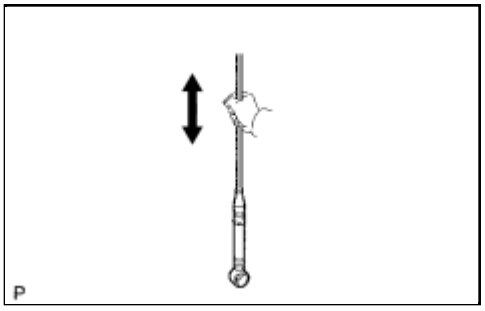

(a) Compress and extend the front strut bar 4 times or more. Check that there is no abnormal resistance/noise, operational resistance, bends/scratches on the rod or oil leaks. If these are found, replace the front strut bar with a new one.

NOTICE:

When disposing of the suspension tower damper assembly, see Disposal. INFO

Last Modified: 3-10-2010	6.4 K	**From:** 200901
Model Year: 2010	**Model:** Corolla	**Doc ID:** RM000003ASB00EX
Title: FRONT SUSPENSION: FRONT SUSPENSION MEMBER: COMPONENTS (2010 Corolla)		

COMPONENTS

ILLUSTRATION

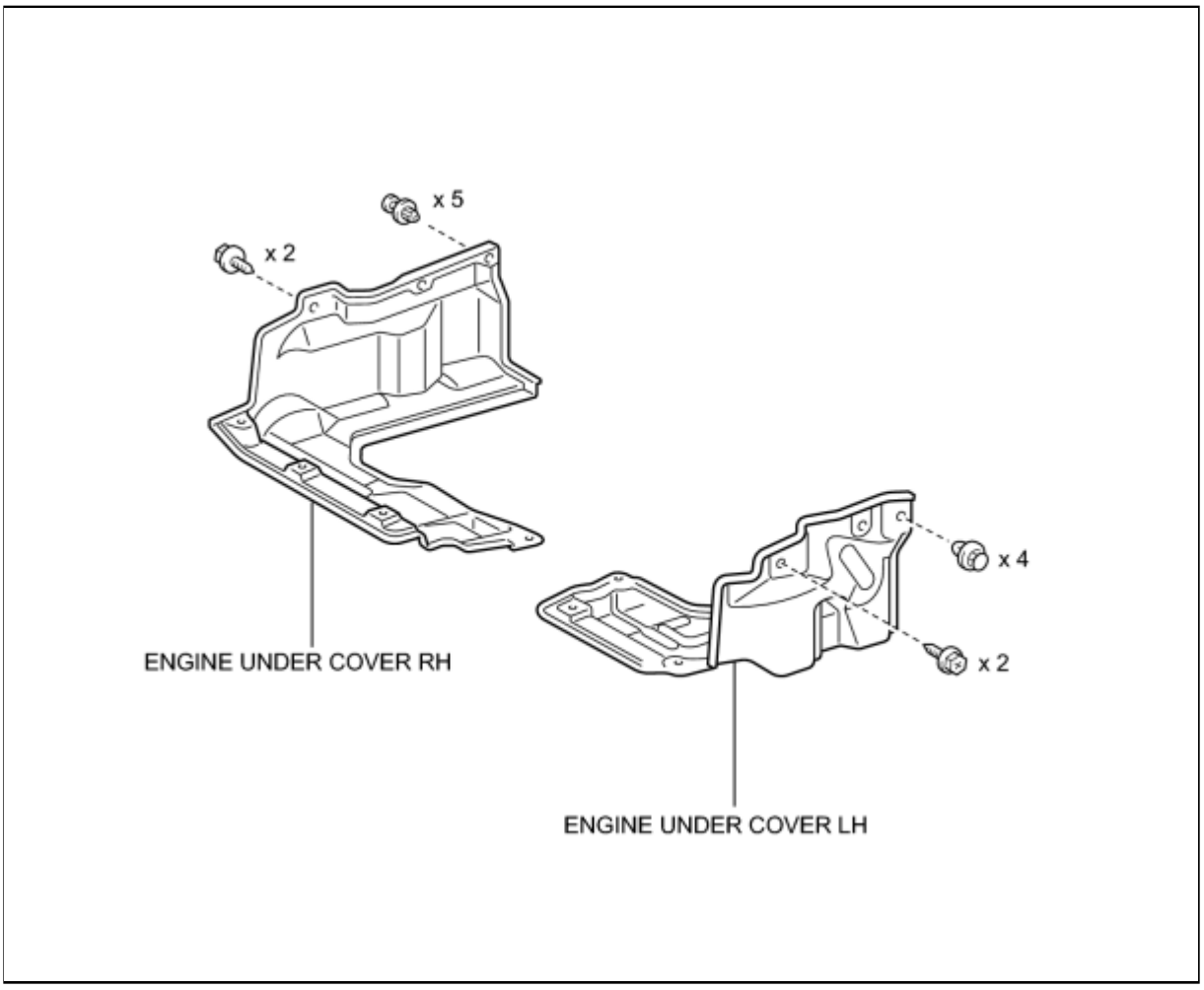

ILLUSTRATION

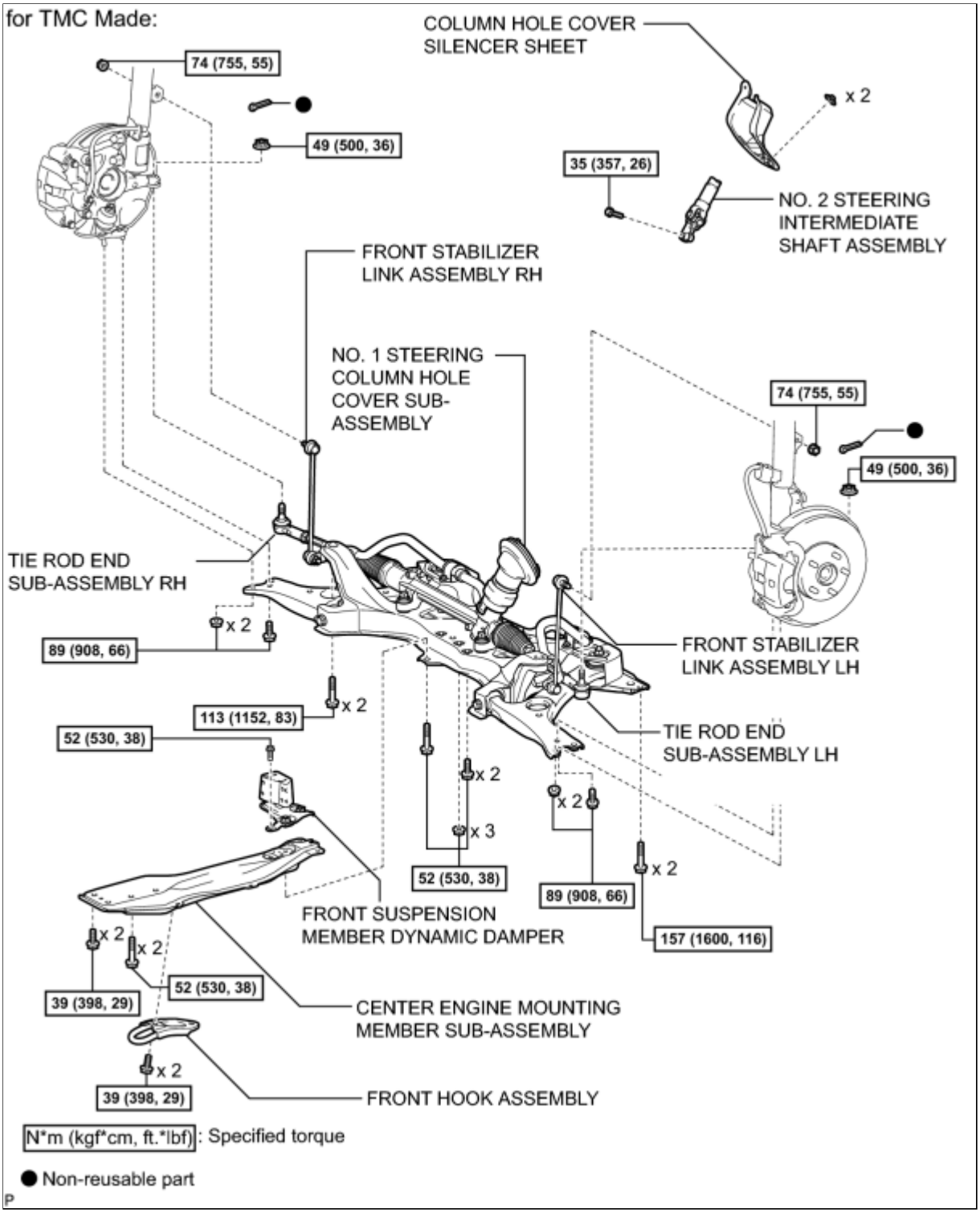

ILLUSTRATION

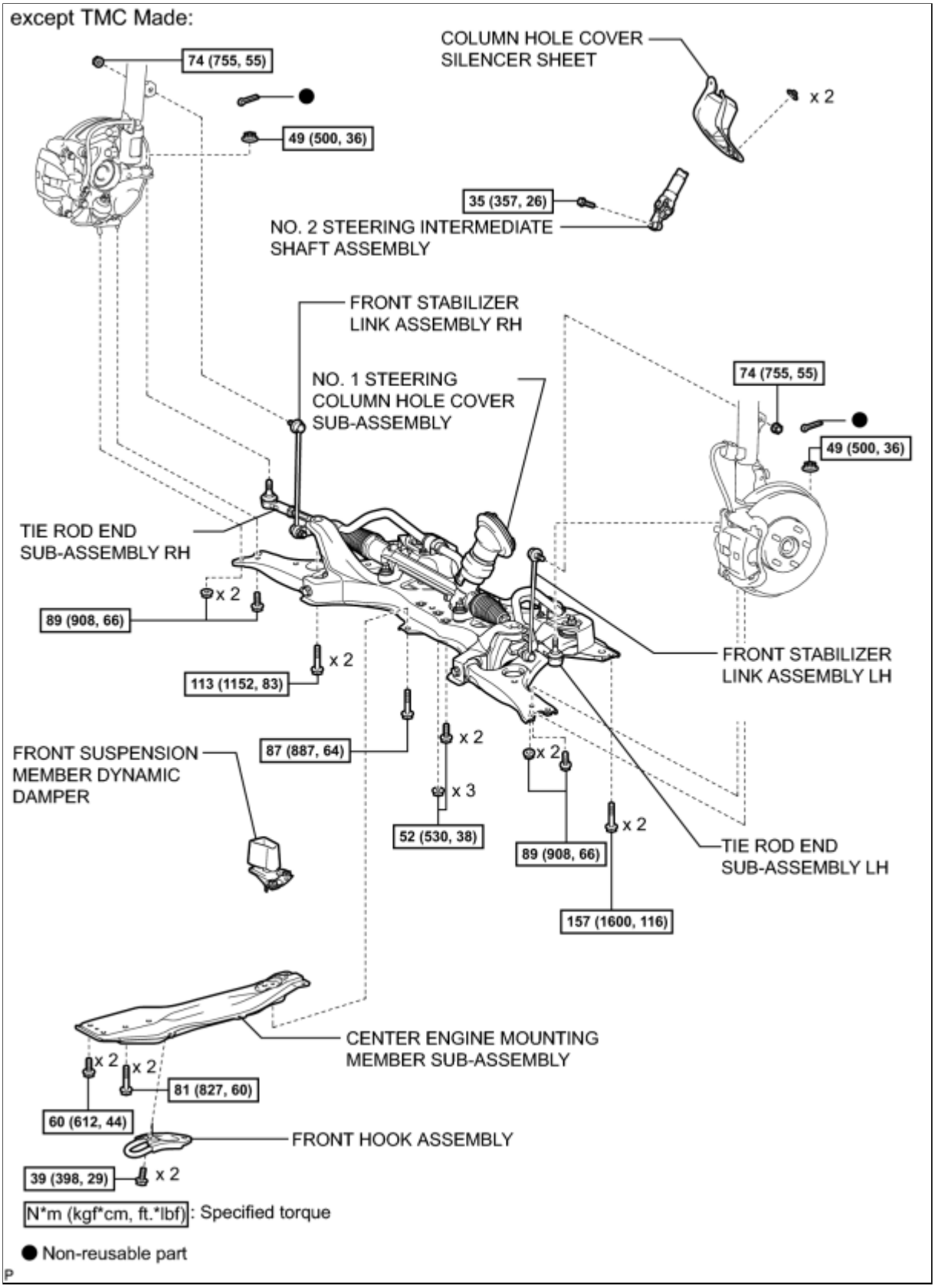

ILLUSTRATION

for TMC Made:

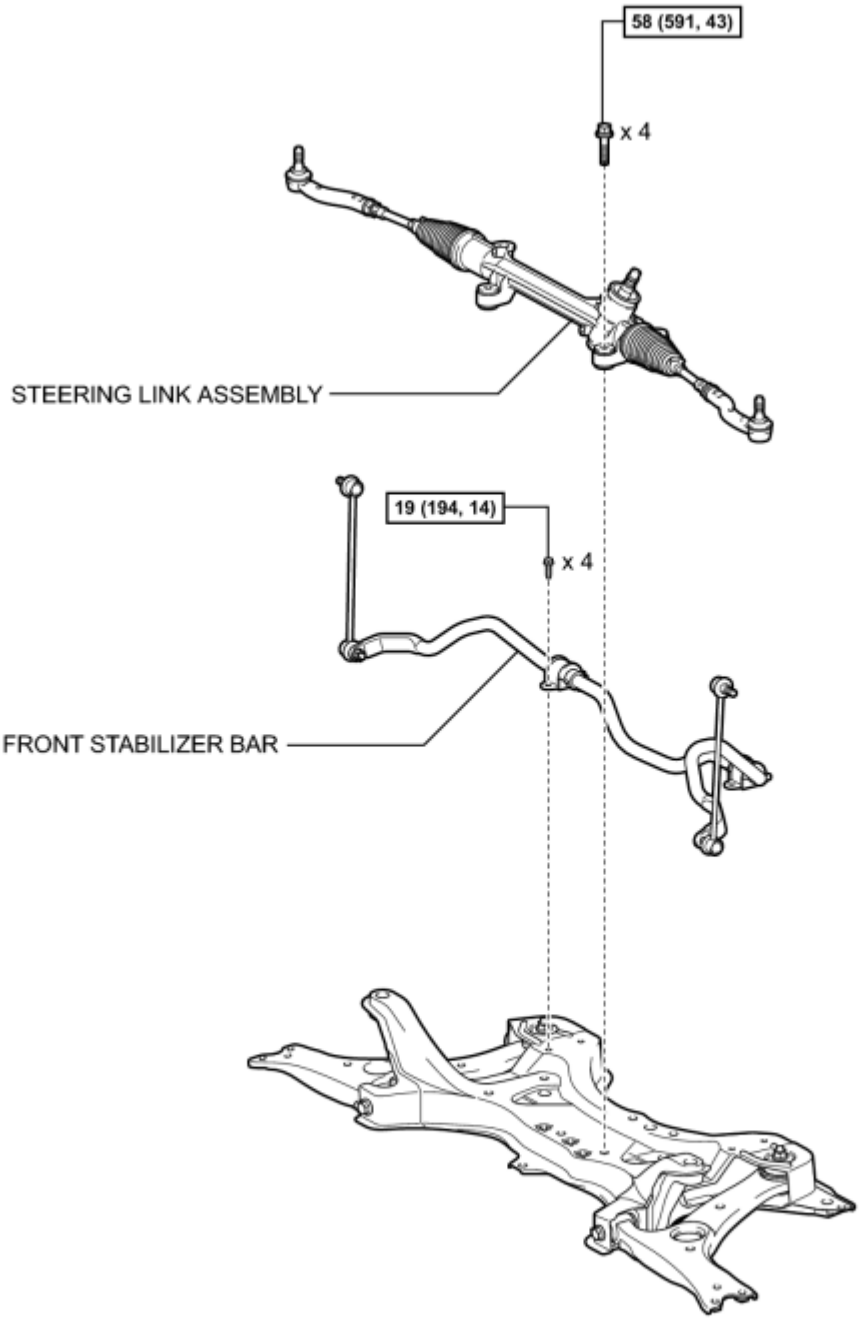

N*m (kgf*cm, ft.*lbf): Specified torque

P

ILLUSTRATION

except TMC Made:

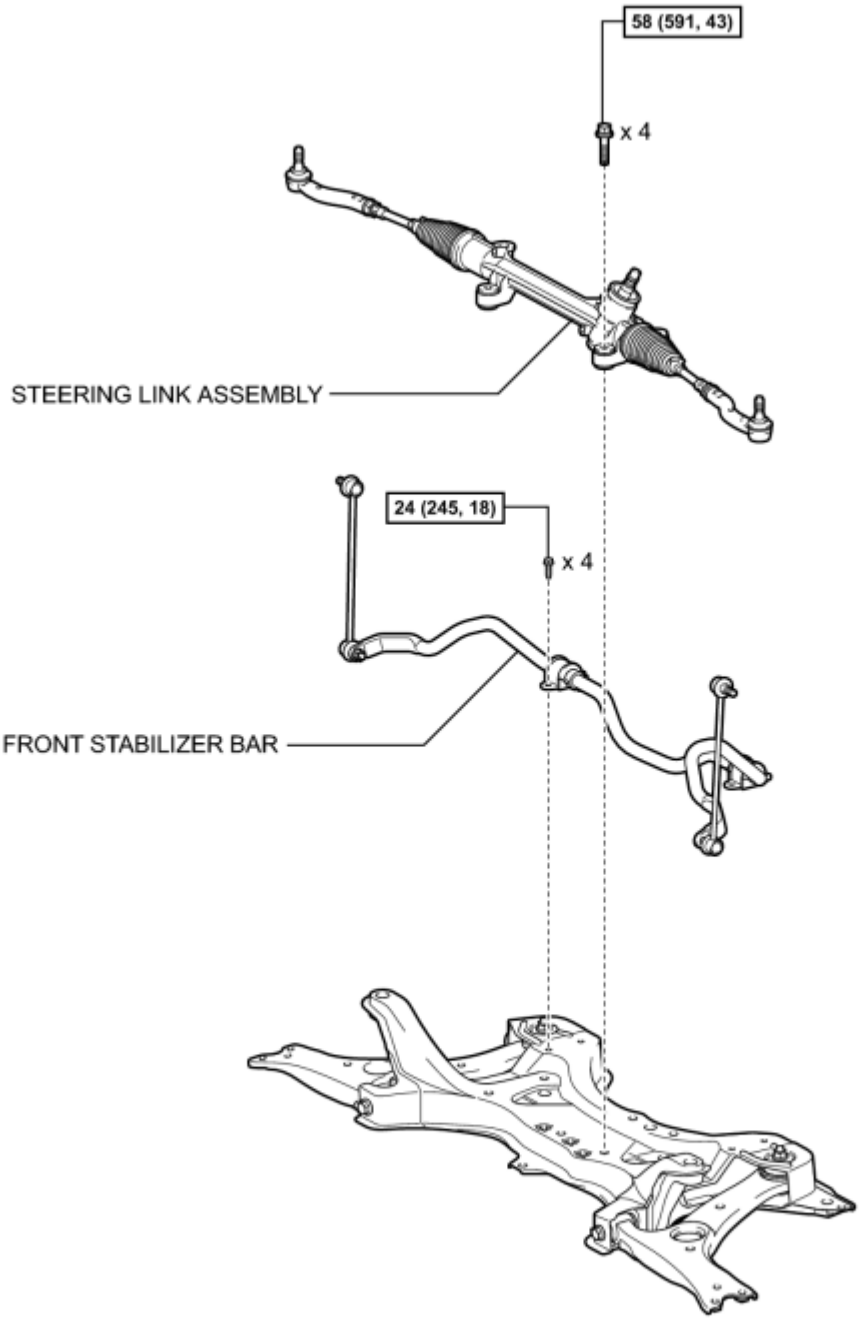

N*m (kgf*cm, ft.*lbf): Specified torque

P

ILLUSTRATION

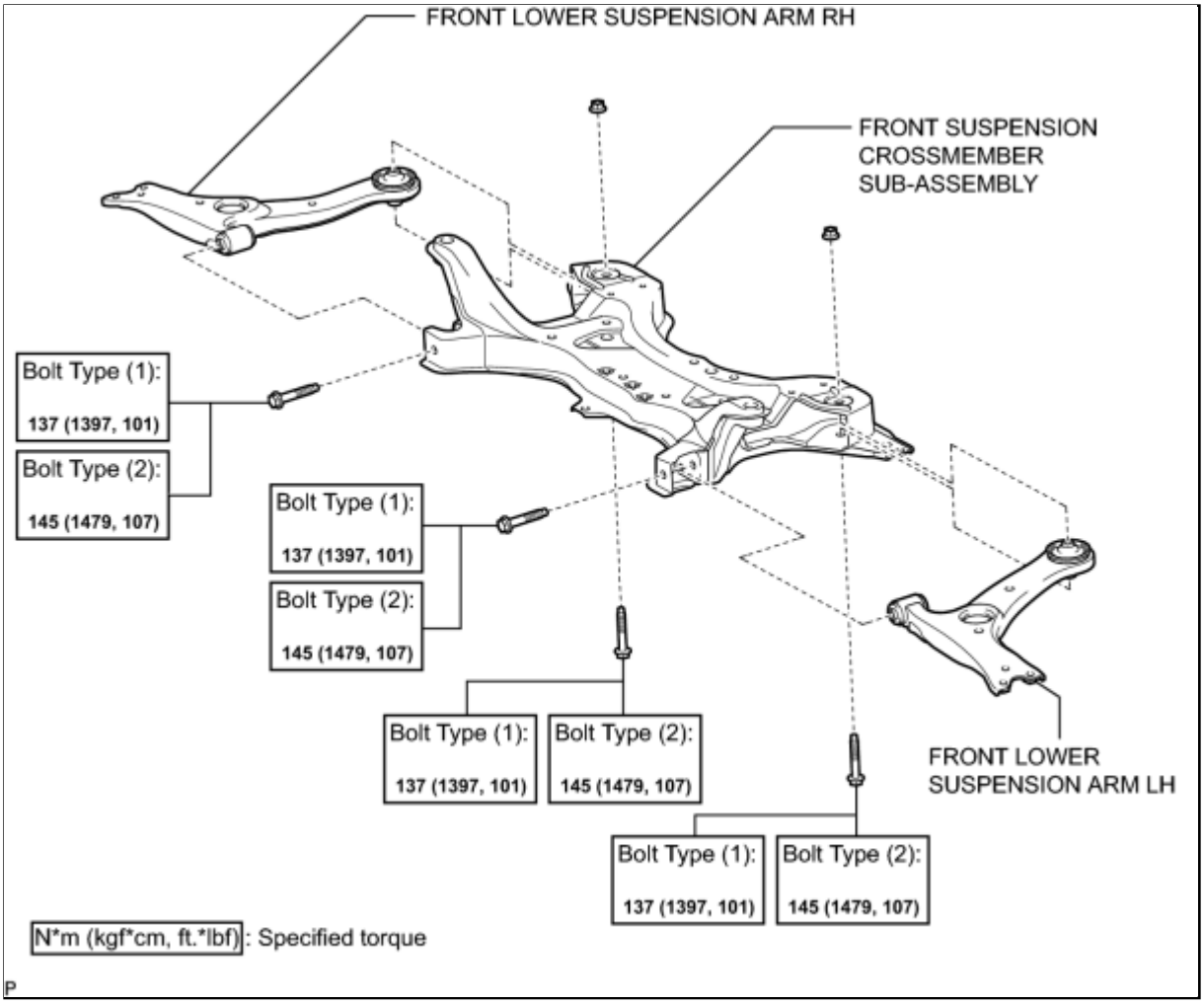
FRONT LOWER SUSPENSION ARM RH
FRONT SUSPENSION CROSSMEMBER SUB-ASSEMBLY
Bolt Type (1): 137 (1397, 101)
Bolt Type (2): 145 (1479, 107)
Bolt Type (1): 137 (1397, 101)
Bolt Type (2): 145 (1479, 107)
Bolt Type (1): 137 (1397, 101)
Bolt Type (2): 145 (1479, 107)
FRONT LOWER SUSPENSION ARM LH
Bolt Type (1): 137 (1397, 101)
Bolt Type (2): 145 (1479, 107)
N*m (kgf*cm, ft.*lbf): Specified torque

P

Last Modified: 3-10-2010	6.4 N	**From:** 200901
Model Year: 2010	**Model:** Corolla	**Doc ID:** RM000002EY5007X
Title: FRONT SUSPENSION: FRONT STRUT BAR: DISPOSAL (2010 Corolla)		

DISPOSAL

1. DISPOSE OF FRONT STRUT BAR

(a) Fully extend the front strut bar.

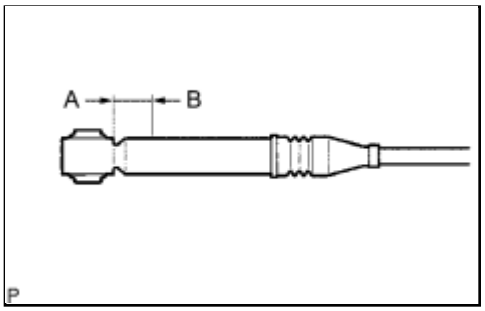

(b) Using a drill, make a hole in the cylinder between A and B as shown in the illustration to discharge the gas inside.

A to B:

10 mm (0.394 in.)

NOTICE:

- Always use proper safety equipment and be careful when drilling because shards of metal fly about.
- The gas is colorless, odorless and non-poisonous.

Last Modified: 3-10-2010	6.4 A	**From:** 200901
Model Year: 2010	**Model:** Corolla	**Doc ID:** RM0000029T401TX
Title: FRONT SUSPENSION: FRONT SUSPENSION MEMBER: INSTALLATION (2010 Corolla)		

INSTALLATION

1. INSTALL FRONT STABILIZER BAR INFO

2. INSTALL STEERING LINK ASSEMBLY INFO

3. TEMPORARILY INSTALL FRONT LOWER SUSPENSION ARM LH INFO

4. TEMPORARILY INSTALL FRONT LOWER SUSPENSION ARM RH

HINT:

Perform the same procedure as the LH side.

5. INSTALL FRONT SUSPENSION MEMBER DYNAMIC DAMPER (for TMC Made)

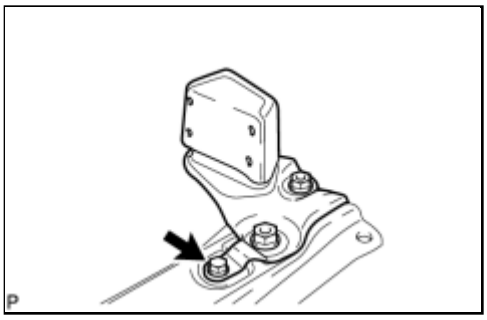

(a) Install the front suspension member dynamic damper with the bolt.

Torque: 52 N·m (530 kgf·cm, 38ft·lbf)

6. INSTALL FRONT SUSPENSION MEMBER DYNAMIC DAMPER (except TMC Made)

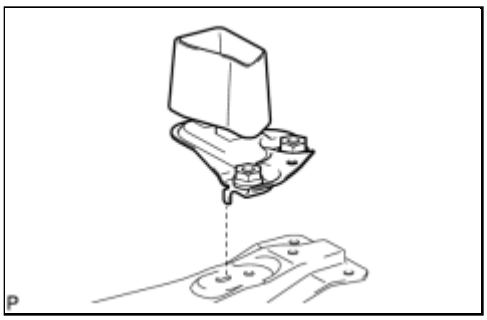

(a) Install the front suspension member dynamic damper.

7. TEMPORARILY INSTALL CENTER ENGINE MOUNTING MEMBER SUB-ASSEMBLY

(a) Temporarily install the center engine mounting member sub-assembly with the 4 bolts.

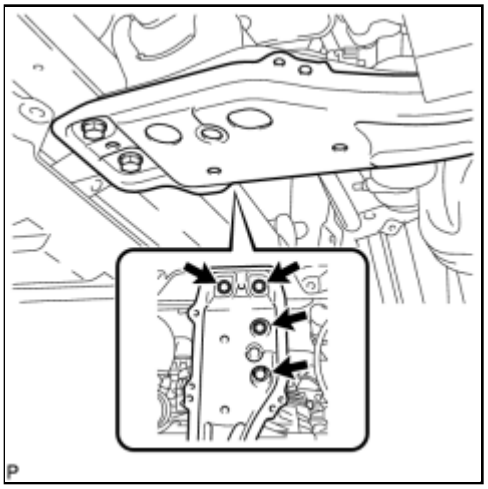

8. INSTALL FRONT SUSPENSION CROSSMEMBER SUB-ASSEMBLY (for TMC Made)

(a) While alternately inserting SST into the guide holes on both sides of the front suspension crossmember RH and LH, tighten 2 bolts (A), 2 bolts (B), 3 bolts (C), and 3 nuts (D) on the RH and LH sides to the respective specified torque in several steps.

SST: 09670-00010

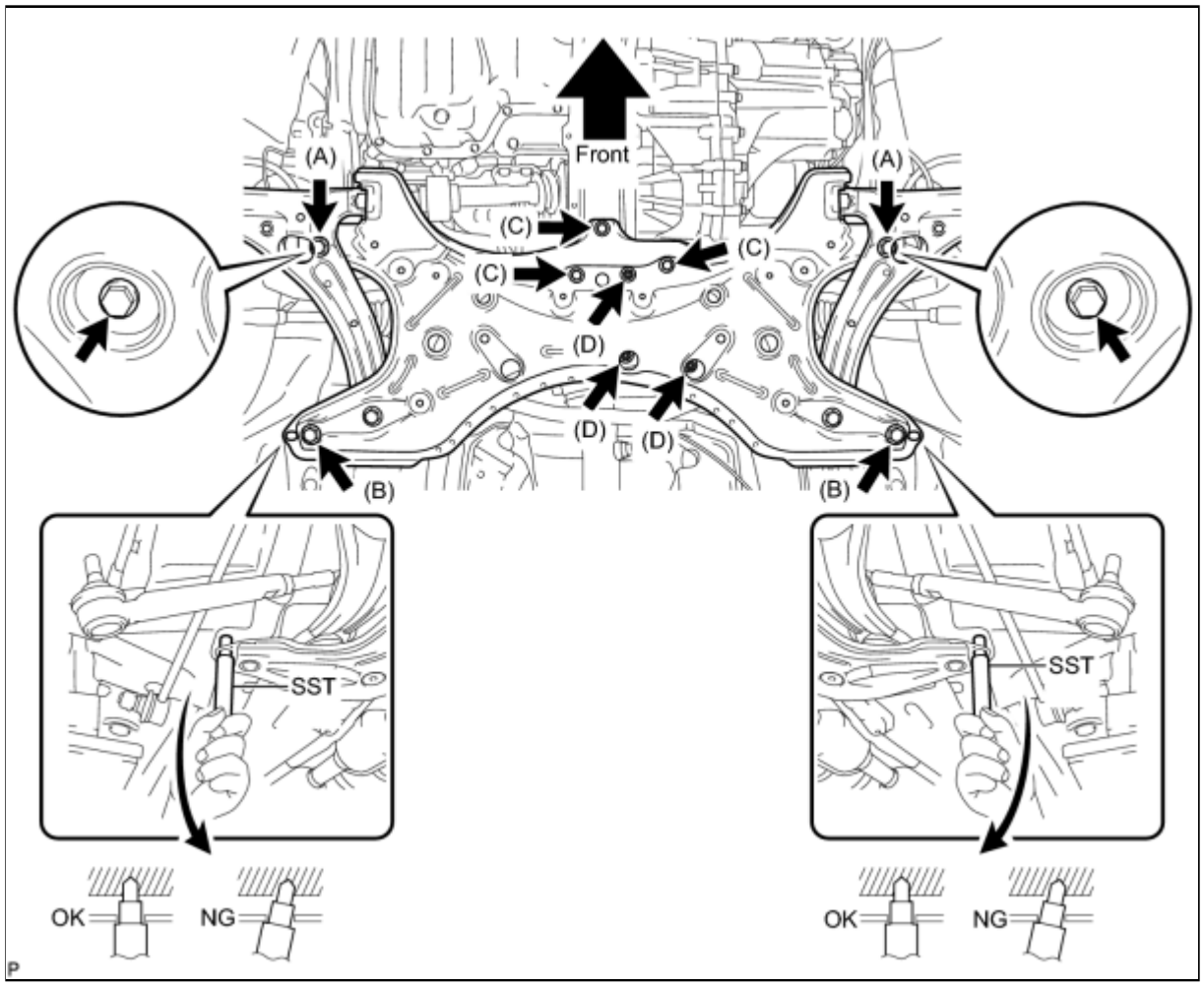

Bolt A - Torque: 113 N·m (1152 kgf·cm, 83ft·lbf)

Bolt B - Torque: 157 N·m (1600 kgf·cm, 116ft·lbf)
Bolt C - Torque: 52 N·m (530 kgf·cm, 38ft·lbf)
Nut D - Torque: 52 N·m (530 kgf·cm, 38ft·lbf)

9. INSTALL FRONT SUSPENSION CROSSMEMBER SUB-ASSEMBLY (except TMC Made)

(a) While alternately inserting SST into the guide holes on both sides of the front suspension crossmember RH and LH, tighten 2 bolts (A), 2 bolts (B), 2 bolts (C), bolt (D) and 3 nuts (E) on the RH and LH sides to the respective specified torque in several steps.

SST: 09670-00010

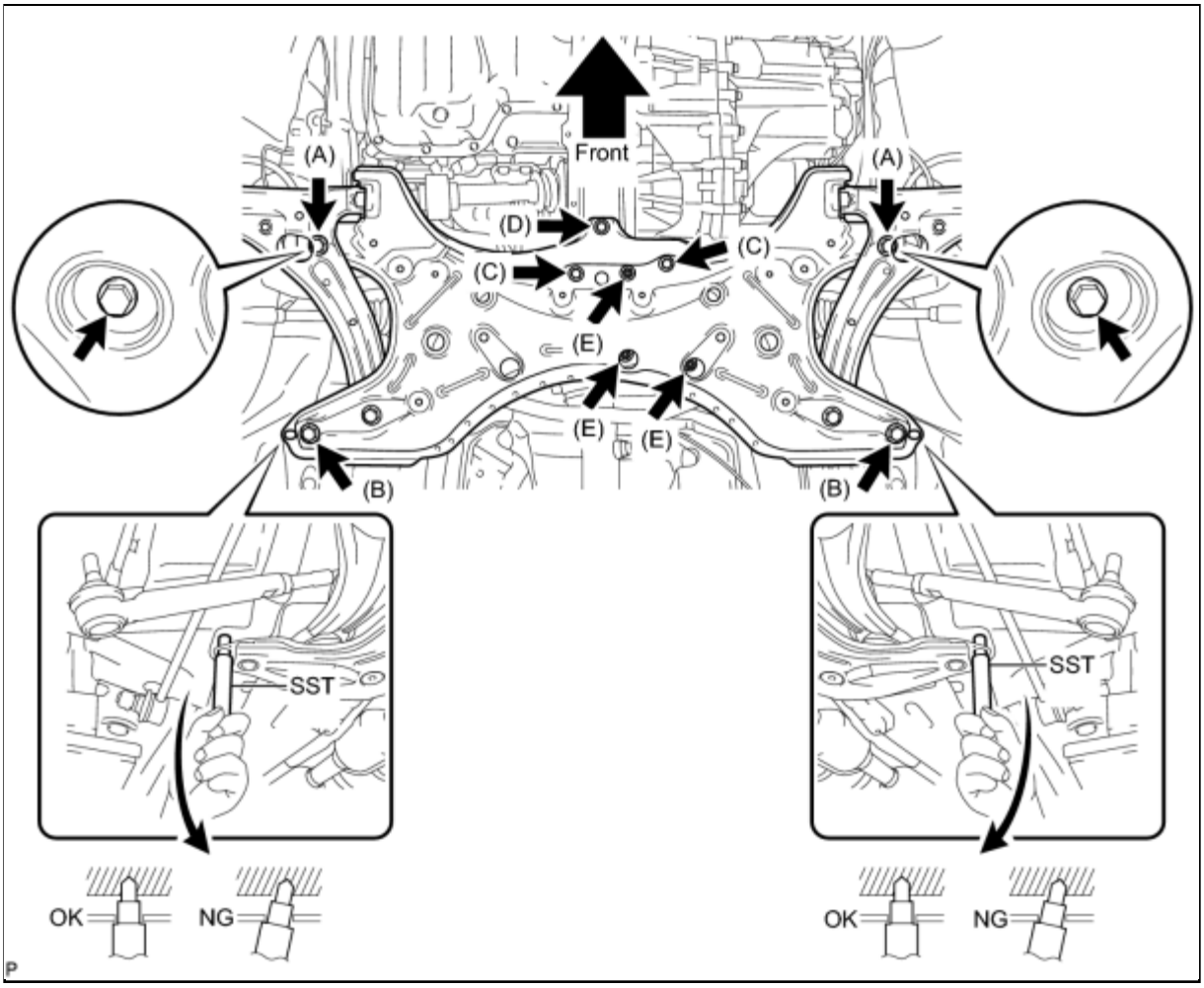

Bolt A - Torque: 113 N·m (1152 kgf·cm, 83ft·lbf)
Bolt B - Torque: 157 N·m (1600 kgf·cm, 116ft·lbf)
Bolt C - Torque: 52 N·m (530 kgf·cm, 38ft·lbf)
Bolt D - Torque: 87 N·m (887 kgf·cm, 64ft·lbf)
Nut E - Torque: 52 N·m (530 kgf·cm, 38ft·lbf)

10. FULLY TIGHTEN CENTER ENGINE MOUNTING MEMBER SUB-ASSEMBLY

(a) Fully tighten the center engine mounting member sub-assembly with the 4 bolts.

Bolt A (TMC Made) - Torque: 39 N·m (398 kgf·cm, 29ft·lbf)
Bolt A (except TMC Made) - Torque: 60 N·m (612 kgf·cm,

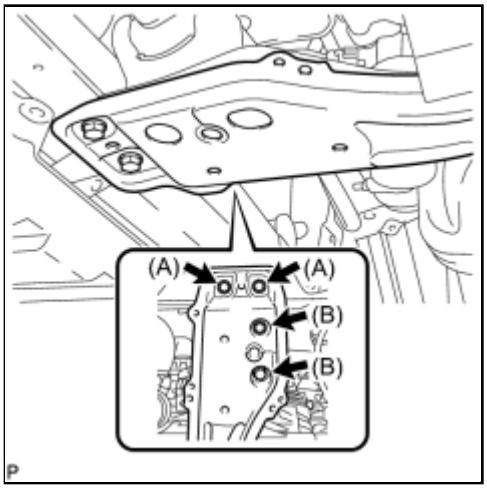

44ft·lbf)

Bolt B (TMC Made) - Torque: 52 N·m (530 kgf·cm, 38ft·lbf)

Bolt B (except TMC Made) - Torque: 81 N·m (827 kgf·cm, 160in·lbf)

11. INSTALL FRONT HOOK ASSEMBLY

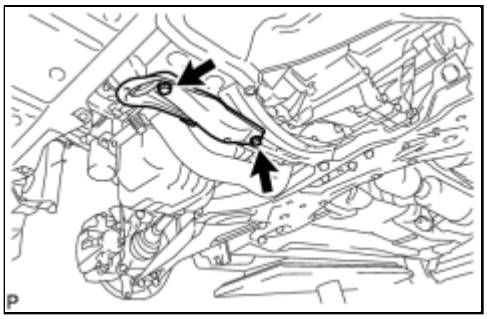

(a) Install the front hook assembly with the 2 bolts.

Torque: 39 N·m (398 kgf·cm, 29ft·lbf)

12. CONNECT FRONT LOWER SUSPENSION ARM LH INFO

13. CONNECT FRONT LOWER SUSPENSION ARM RH

HINT:

Perform the same procedure as the LH side.

14. CONNECT FRONT STABILIZER LINK ASSEMBLY LH INFO

15. CONNECT FRONT STABILIZER LINK ASSEMBLY RH

HINT:

Perform the same procedure as the LH side.

16. CONNECT TIE ROD END SUB-ASSEMBLY LH INFO

17. CONNECT TIE ROD END SUB-ASSEMBLY RH

HINT:

Perform the same procedure as the LH side.

18. INSTALL ENGINE UNDER COVER LH

19. INSTALL ENGINE UNDER COVER RH

20. CONNECT NO. 1 STEERING COLUMN HOLE COVER SUB-ASSEMBLY INFO

21. CONNECT NO. 2 STEERING INTERMEDIATE SHAFT ASSEMBLY INFO

22. PLACE FRONT WHEELS FACING STRAIGHT AHEAD

23. INSTALL COLUMN HOLE COVER SILENCER SHEET INFO

24. INSTALL FRONT WHEELS

Torque: 103 N·m (1050 kgf·cm, 76ft·lbf)

25. STABILIZE SUSPENSION INFO

26. FULLY TIGHTEN FRONT LOWER SUSPENSION ARM LH INFO

27. FULLY TIGHTEN FRONT LOWER SUSPENSION ARM RH

HINT:

Perform the same procedure as the LH side.

28. INSPECT AND ADJUST FRONT WHEEL ALIGNMENT

HINT:

Inspect and adjust front wheel alignment INFO .



Last Modified: 3-10-2010	6.4 A	**From:** 200901
Model Year: 2010	**Model:** Corolla	**Doc ID:** RM0000029T701TX
Title: FRONT SUSPENSION: FRONT SUSPENSION MEMBER: REMOVAL (2010 Corolla)		

REMOVAL

1. **PLACE FRONT WHEELS FACING STRAIGHT AHEAD**
2. **SECURE STEERING WHEEL** INFO
3. **REMOVE COLUMN HOLE COVER SILENCER SHEET** INFO
4. **SEPARATE NO. 2 STEERING INTERMEDIATE SHAFT ASSEMBLY** INFO
5. **SEPARATE NO. 1 STEERING COLUMN HOLE COVER SUB-ASSEMBLY** INFO
6. **REMOVE ENGINE UNDER COVER LH**
7. **REMOVE ENGINE UNDER COVER RH**
8. **REMOVE FRONT WHEELS**
9. **SEPARATE TIE ROD END SUB-ASSEMBLY LH** INFO
10. **SEPARATE TIE ROD END SUB-ASSEMBLY RH**

HINT:

Perform the same procedure as the LH side.

11. **SEPARATE FRONT STABILIZER LINK ASSEMBLY LH** INFO
12. **SEPARATE FRONT STABILIZER LINK ASSEMBLY RH**

HINT:

Perform the same procedure as the LH side.

13. **SEPARATE FRONT LOWER SUSPENSION ARM LH** INFO
14. **SEPARATE FRONT LOWER SUSPENSION ARM RH**

HINT:

Perform the same procedure as the LH side.

15. **REMOVE FRONT SUSPENSION CROSSMEMBER SUB-ASSEMBLY**

(a) Remove the 3 bolts and 3 nuts.

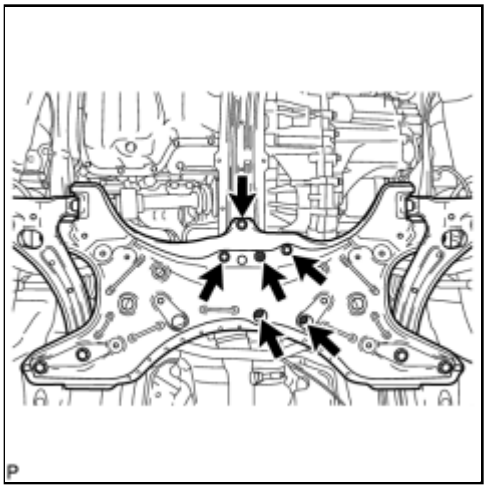

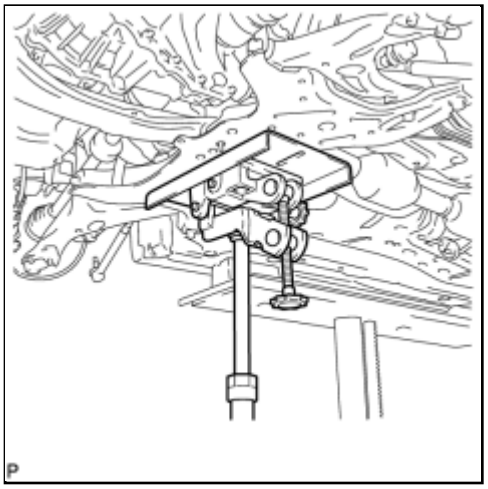

(b) Using a transmission jack or equivalent, support the front suspension crossmember sub-assembly.

(c) Remove the 4 bolts and front suspension crossmember sub-assembly.

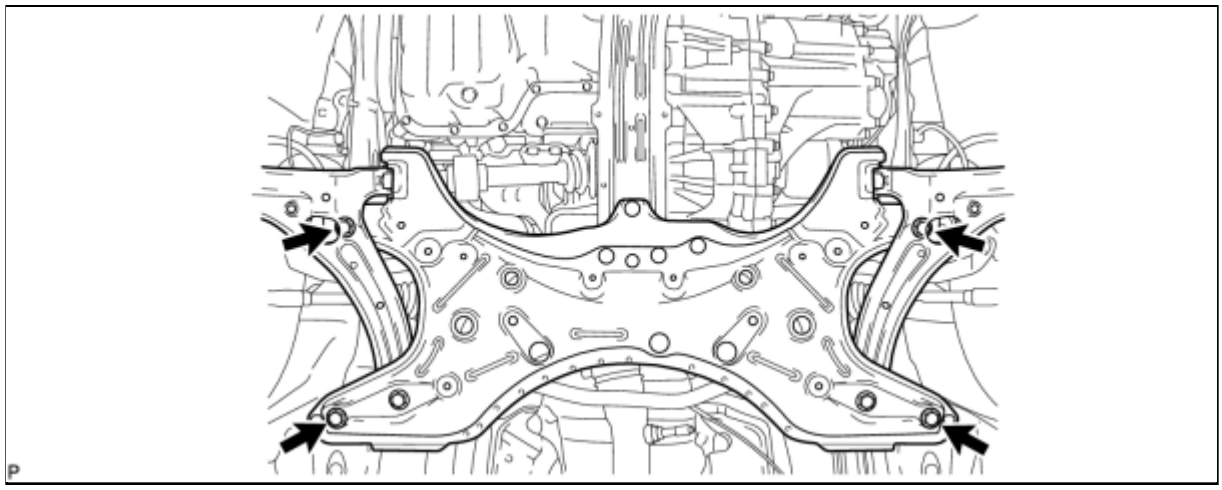

16. REMOVE FRONT HOOK ASSEMBLY

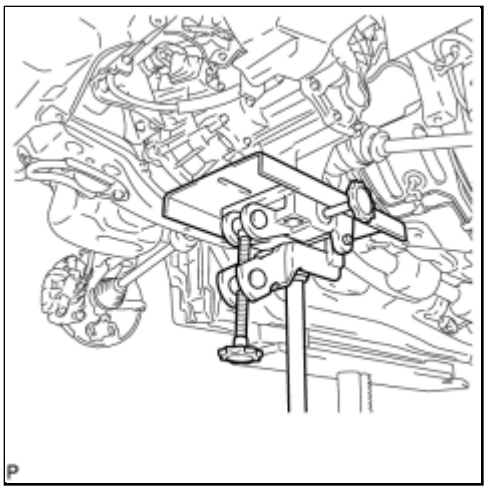

(a) Using a transmission jack or equivalent, support the transmission.

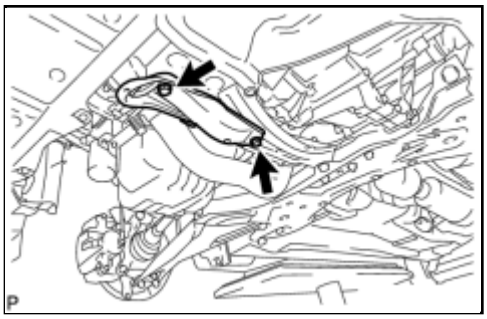

(b) Remove the 2 bolts and front hook assembly.

17. REMOVE CENTER ENGINE MOUNTING MEMBER SUB-ASSEMBLY

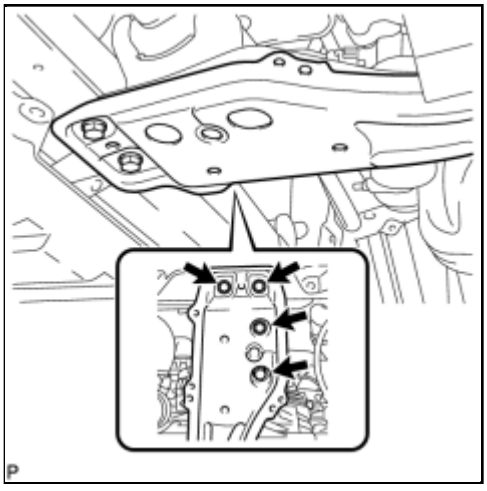

(a) Remove the 4 bolts and center engine mounting member sub-assembly.

18. REMOVE FRONT SUSPENSION MEMBER DYNAMIC DAMPER (for TMC Made)

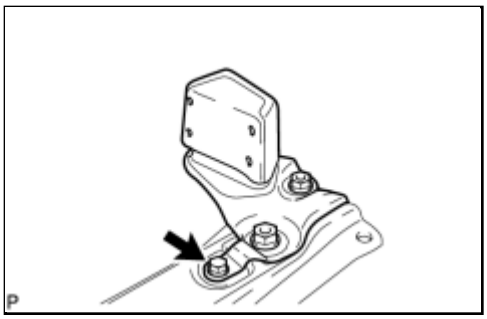

(a) Remove the bolt and front suspension member dynamic damper.

19. REMOVE FRONT SUSPENSION MEMBER DYNAMIC DAMPER (except TMC Made)

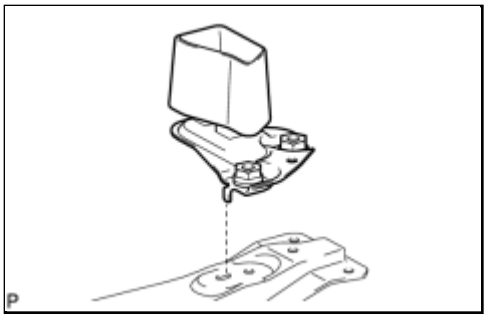

(a) Remove the front suspension member dynamic damper.

20. REMOVE FRONT STABILIZER BAR INFO

21. REMOVE STEERING LINK ASSEMBLY INFO

22. REMOVE FRONT LOWER SUSPENSION ARM LH INFO

23. REMOVE FRONT LOWER SUSPENSION ARM RH

HINT:

Perform the same procedure as the LH side.

Last Modified: 3-10-2010	6.4 T	**From:** 200901
Model Year: 2010	**Model:** Corolla	**Doc ID:** RM000003CRU006X
Title: FRONT SUSPENSION: FRONT SUSPENSION SYSTEM: PROBLEM SYMPTOMS TABLE (2010 Corolla)		

PROBLEM SYMPTOMS TABLE

Use the table below to help determine the cause of problem symptoms. If multiple suspected areas are listed, the potential causes of the symptoms are listed in order of probability in the "Suspected Area" column of the table. Check each symptom by checking the suspected areas in the order they are listed. Replace parts as necessary.

Suspension System

SYMPTOM	SUSPECTED AREA	SEE PAGE
Vehicle pulls to one side while driving	Tire (worn or improperly inflated)	INFO
	Front wheel alignment (incorrect)	INFO
	Front shock absorber (worn)	INFO
	Steering linkage (loose or worn)	INFO
	Front hub bearing (worn)	INFO
	Steering gear (broken)	INFO
	Suspension parts (worn)	-
Bottoming	Vehicle (overloaded)	-
	Front coil spring (weak)	INFO
	Front shock absorber (worn)	INFO
Sway/pitches	Tire (worn or improperly inflated)	INFO
	Front coil spring (weak)	INFO
	Front shock absorber (worn)	INFO
	Front stabilizer bar (bent or broken)	INFO
Wheel shimmy	Tire (worn or improperly inflated)	INFO
	Wheel (out of balance)	INFO
	Front wheel alignment (incorrect)	INFO
	Front shock absorber (worn)	INFO
	Front lower ball joint (worn)	INFO
	Front hub bearing (worn)	INFO
	Steering linkage (loose or worn)	INFO

SYMPTOM	SUSPECTED AREA	SEE PAGE
	Steering gear (broken)	INFO
Abnormal tire wear	Tire (worn or improperly inflated)	INFO
	Wheel (out of balance)	INFO
	Front wheel alignment (incorrect)	INFO
	Suspension parts (worn)	-

Last Modified: 3-10-2010	6.4 K	**From:** 200901
Model Year: 2010	**Model:** Corolla	**Doc ID:** RM000002PCM00OX
Title: REAR SUSPENSION: REAR AXLE BEAM: COMPONENTS (2010 Corolla)		

COMPONENTS

ILLUSTRATION

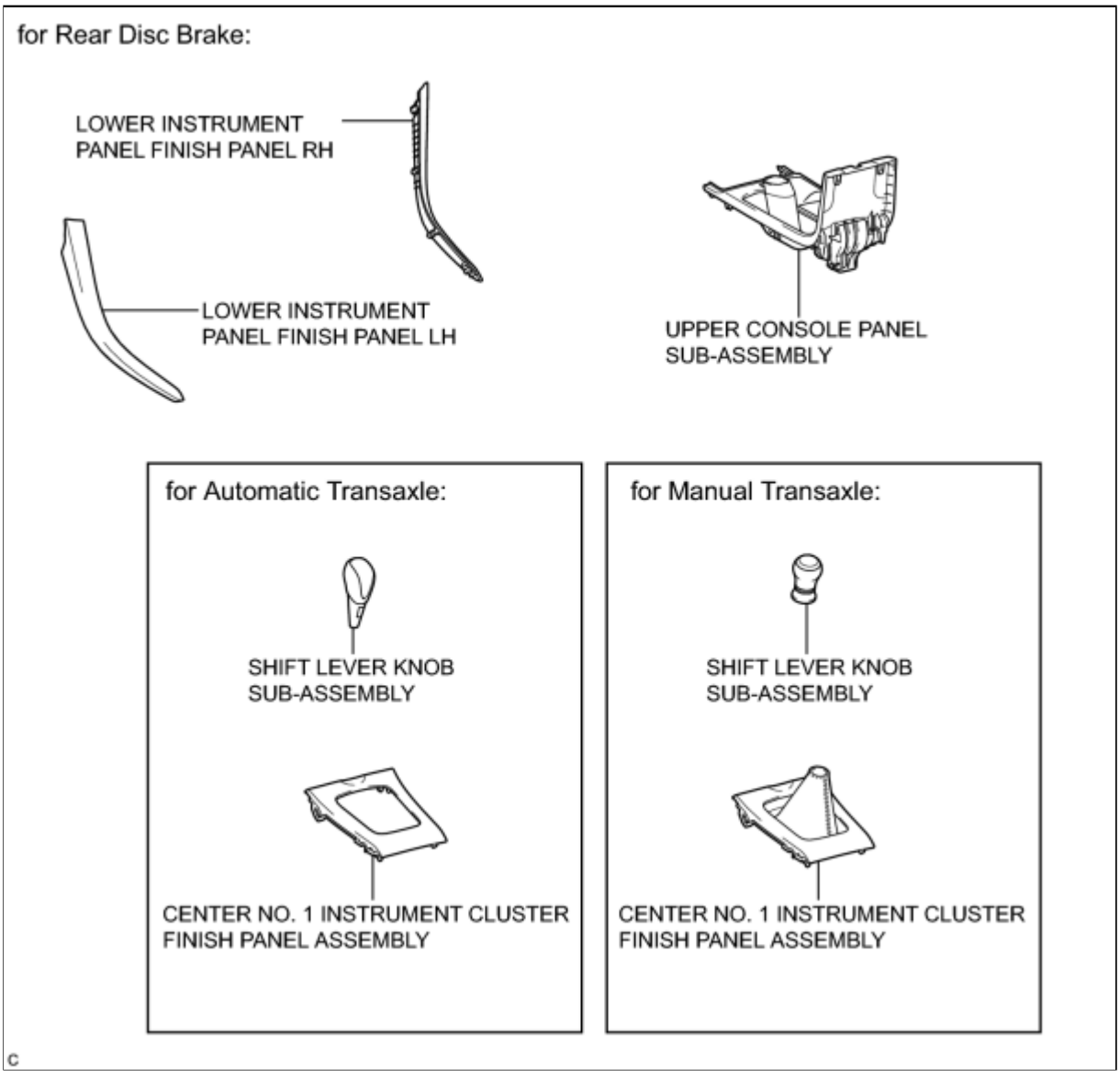

ILLUSTRATION

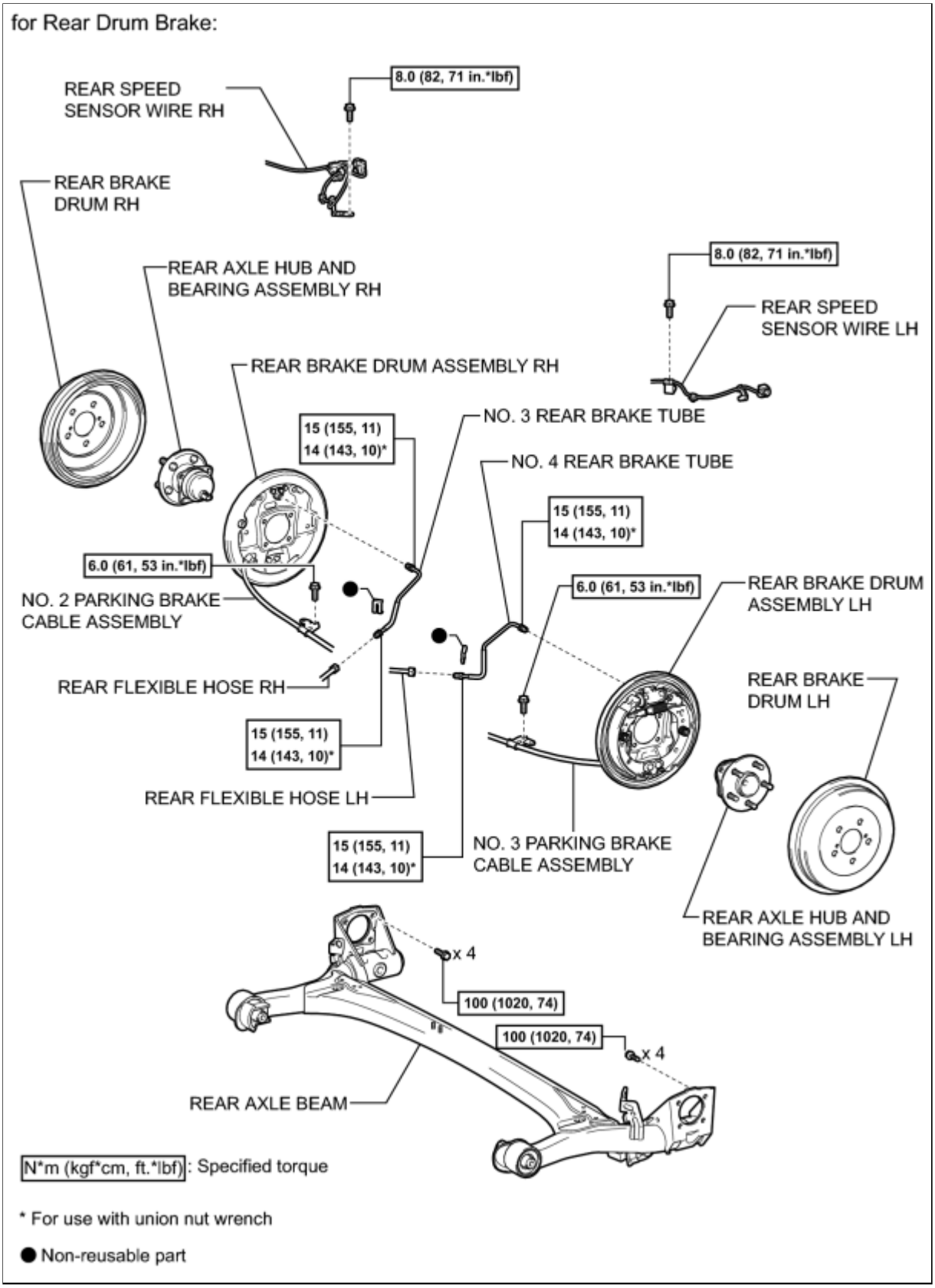

ILLUSTRATION

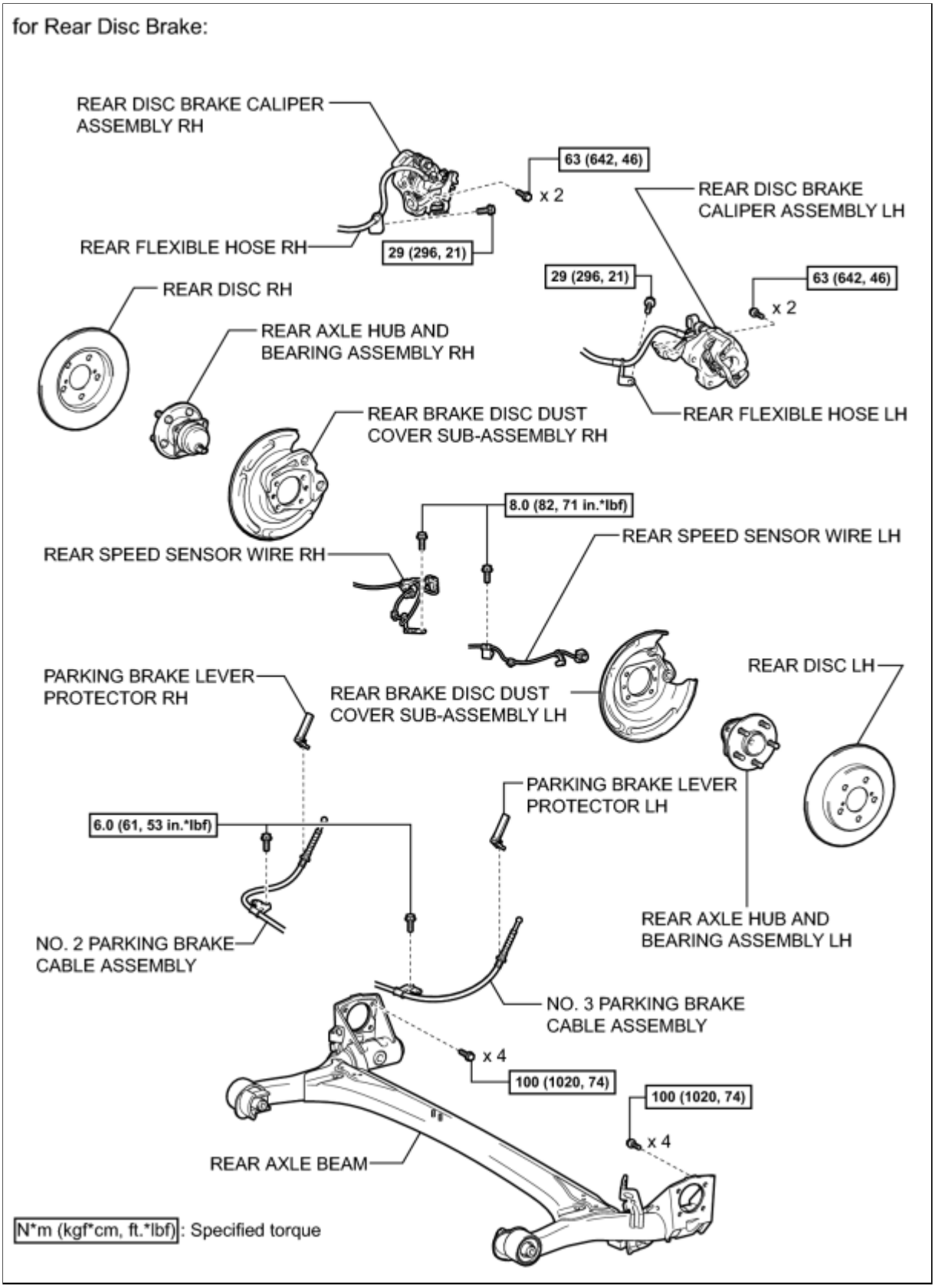

ILLUSTRATION

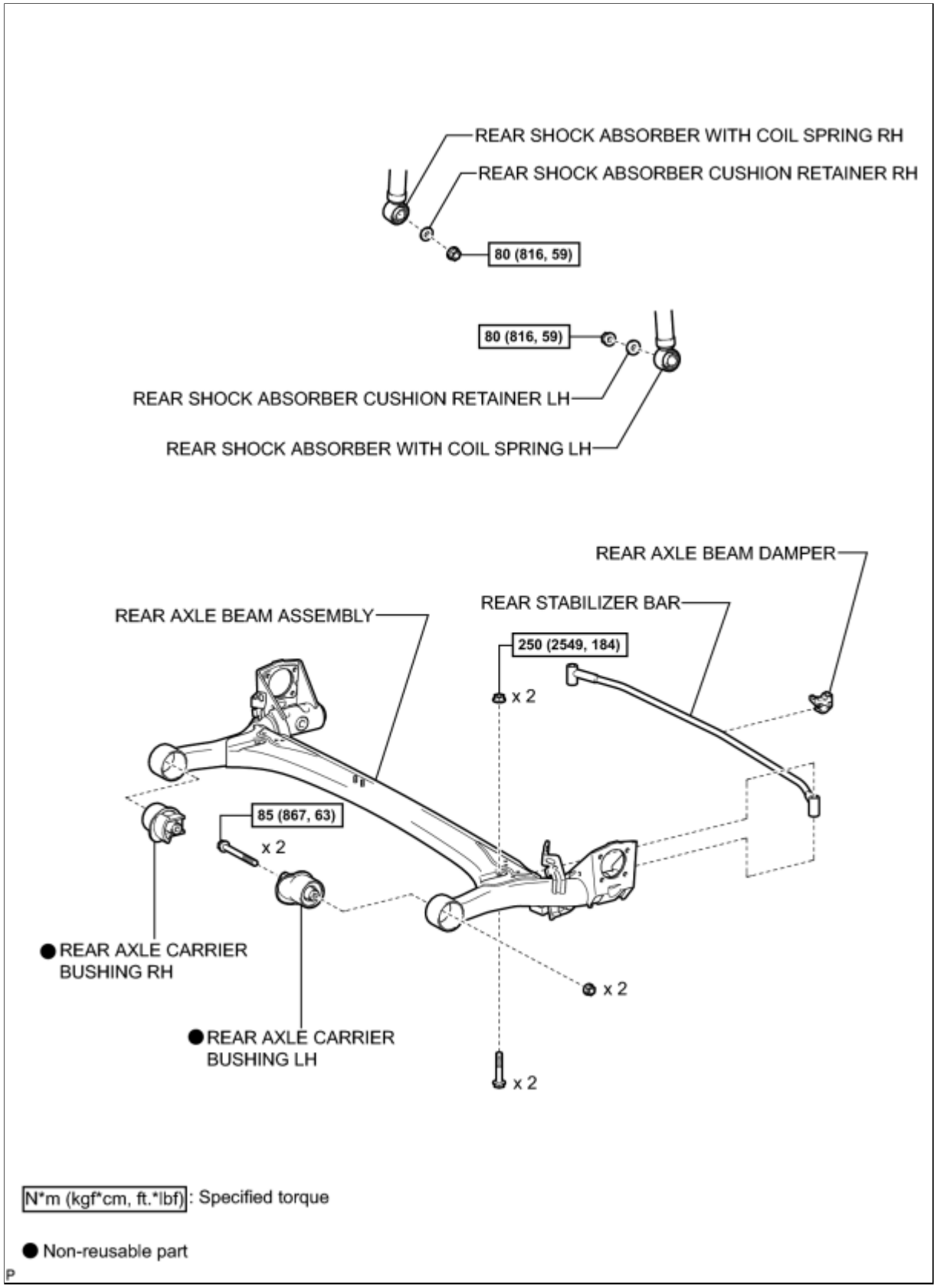

N*m (kgf*cm, ft.*lbf): Specified torque

● Non-reusable part

P

Last Modified: 3-10-2010	6.4 A	**From:** 200901
Model Year: 2010	**Model:** Corolla	**Doc ID:** RM000000WRG012X
Title: REAR SUSPENSION: REAR AXLE BEAM: REMOVAL (2010 Corolla)		

REMOVAL

NOTICE:

For vehicles equipped with VSC, if the wheel alignment has been adjusted, and if suspension or underbody components have been removed/installed or replaced, be sure to perform the following initialization procedure in order for the system to function normally:

1. Disconnect the cable from the negative (-) battery terminal for more than 2 seconds.
2. Reconnect the cable to the negative (-) battery terminal.
3. Perform zero point calibration of the yaw rate and acceleration sensor and test mode inspection.

1. DISCONNECT CABLE FROM NEGATIVE BATTERY TERMINAL

2. REMOVE LOWER INSTRUMENT PANEL FINISH PANEL LH (for Rear Disc Brake) INFO

3. REMOVE LOWER INSTRUMENT PANEL FINISH PANEL RH (for Rear Disc Brake) INFO

4. REMOVE SHIFT LEVER KNOB SUB-ASSEMBLY (for Rear Disc Brake)

HINT:

- for Manual Transaxle INFO .
- for Automatic Transaxle INFO .

5. REMOVE CENTER NO. 1 INSTRUMENT CLUSTER FINISH PANEL ASSEMBLY (for Rear Disc Brake)

HINT:

- for Manual Transaxle INFO .
- for Automatic Transaxle INFO .

6. REMOVE UPPER CONSOLE PANEL SUB-ASSEMBLY (for Rear Disc Brake) INFO

7. LOOSEN PARKING BRAKE CABLE (for Rear Disc Brake) INFO

8. REMOVE REAR WHEELS

9. DRAIN BRAKE FLUID (for Rear Drum Brake)

10. DISCONNECT REAR SPEED SENSOR WIRE LH (for Rear Drum Brake) INFO

11. DISCONNECT REAR SPEED SENSOR WIRE RH (for Rear Drum Brake)

HINT:

Perform the same procedure as the LH side.

12. DISCONNECT REAR SPEED SENSOR WIRE LH (for Rear Disc Brake) INFO

13. DISCONNECT REAR SPEED SENSOR WIRE RH (for Rear Disc Brake)

HINT:

Perform the same procedure as the LH side.

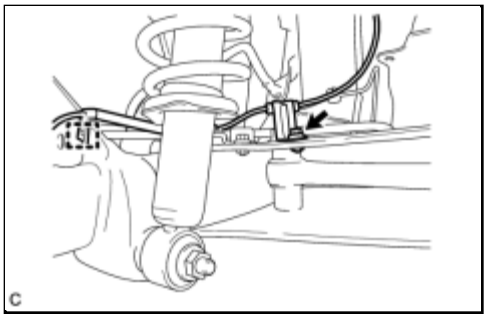

14. SEPARATE REAR SPEED SENSOR WIRE LH

(a) Remove the bolt.

(b) Disengage the clamp and separate the rear speed sensor wire from the rear axle beam.

15. SEPARATE REAR SPEED SENSOR WIRE RH

HINT:

Perform the same procedure as the LH side.

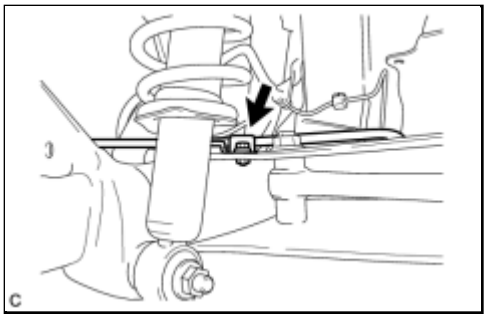

16. SEPARATE NO. 3 PARKING BRAKE CABLE ASSEMBLY

(a) Remove the bolt and separate the No. 3 parking brake cable assembly.

17. SEPARATE NO. 2 PARKING BRAKE CABLE ASSEMBLY

HINT:

Perform the same procedure as the No. 3 parking brake cable assembly.

18. REMOVE REAR BRAKE DRUM LH (for Rear Drum Brake) INFO

19. REMOVE REAR BRAKE DRUM RH (for Rear Drum Brake)

HINT:

Perform the same procedure as the LH side.

20. REMOVE PARKING BRAKE LEVER PROTECTOR LH (for Rear Disc Brake) INFO

21. REMOVE PARKING BRAKE LEVER PROTECTOR RH (for Rear Disc Brake)

HINT:

Perform the same procedure as the LH side.

22. DISCONNECT NO. 3 PARKING BRAKE CABLE ASSEMBLY (for Rear Disc Brake)

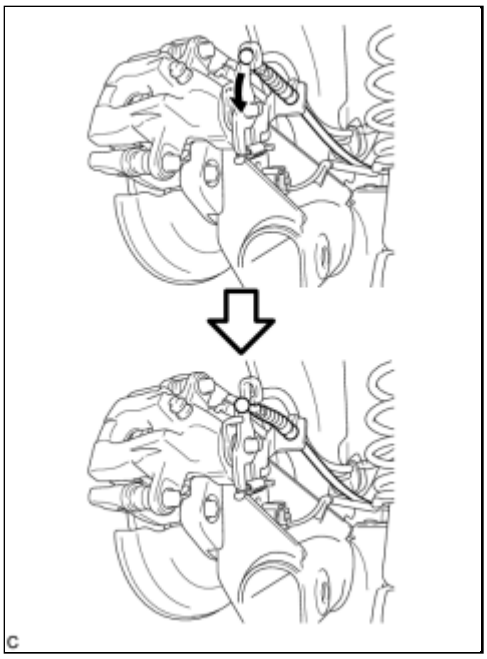

(a) Separate the No. 3 parking brake cable assembly from the rear disc brake cylinder assembly.

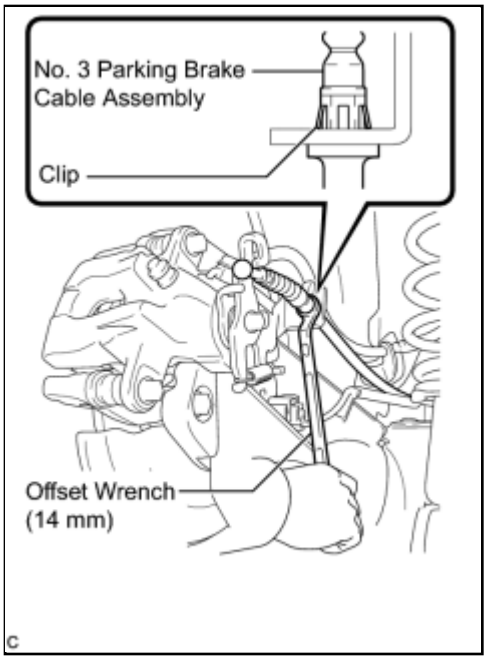

(b) Remove the No. 3 parking brake cable assembly.

HINT:

Insert an offset wrench (14 mm) at the base of the No. 3 parking brake cable assembly as shown in the illustration to disengage the clip. Pull out the No. 3 parking brake cable assembly from the rear disc brake cylinder assembly.

23. DISCONNECT NO. 2 PARKING BRAKE CABLE ASSEMBLY (for Rear Disc Brake)

HINT:

Perform the same procedure as the No. 3 parking brake cable assembly.

24. SEPARATE REAR FLEXIBLE HOSE LH (for Rear Disc Brake)

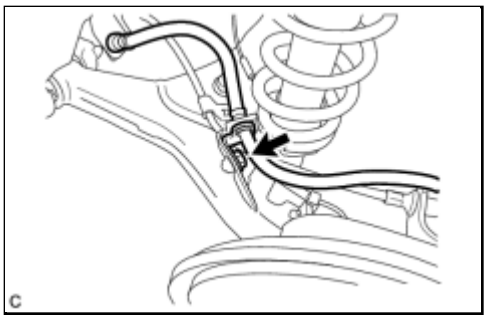

(a) Remove the bolt and separate the rear flexible hose LH from the rear axle beam.

25. SEPARATE REAR FLEXIBLE HOSE RH (for Rear Disc Brake)

HINT:

Perform the same procedure as the LH side.

26. SEPARATE REAR DISC BRAKE CALIPER ASSEMBLY LH (for Rear Disc Brake) INFO

27. SEPARATE REAR DISC BRAKE CALIPER ASSEMBLY RH (for Rear Disc Brake)

HINT:

Perform the same procedure as the LH side.

28. REMOVE REAR DISC LH (for Rear Disc Brake) INFO

29. REMOVE REAR DISC RH (for Rear Disc Brake)

HINT:

Perform the same procedure as the LH side.

30. SEPARATE REAR FLEXIBLE HOSE LH (for Rear Drum Brake)

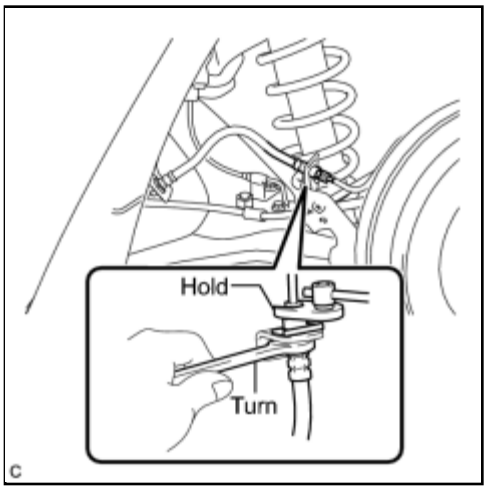

(a) Using a union nut wrench (10 mm), separate the No. 4 rear brake tube while holding the rear flexible hose with a wrench.

NOTICE:

- Do not bend or damage the brake line.
- Do not allow any foreign matter such as dirt and dust to enter the brake line from the clip or bracket.

(b) Remove the clip and disconnect the rear flexible hose LH.

31. SEPARATE REAR FLEXIBLE HOSE RH (for Rear Drum Brake)

HINT:

Perform the same procedure as the LH side.

32. REMOVE NO. 4 REAR BRAKE TUBE (for Rear Drum Brake)

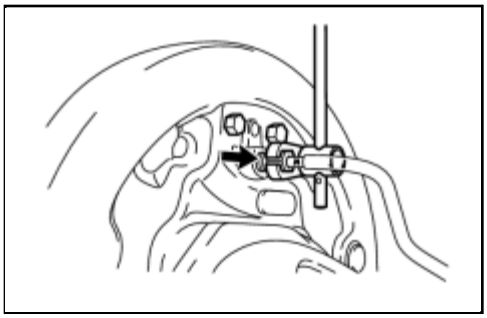

(a) Using a union nut wrench (10 mm), remove the No. 4 rear brake tube.

33. REMOVE NO. 3 REAR BRAKE TUBE (for Rear Drum Brake)

HINT:

Perform the same procedure as the No. 4 rear brake tube.

34. REMOVE REAR AXLE HUB AND BEARING ASSEMBLY LH (for Rear Drum Brake) INFO

35. REMOVE REAR AXLE HUB AND BEARING ASSEMBLY RH (for Rear Drum Brake)

HINT:

Perform the same procedure as the LH side.

36. REMOVE REAR AXLE HUB AND BEARING ASSEMBLY LH (for Rear Disc Brake) INFO

37. REMOVE REAR AXLE HUB AND BEARING ASSEMBLY RH (for Rear Disc Brake)

HINT:

Perform the same procedure as the LH side.

38. REMOVE REAR AXLE BEAM DAMPER INFO

39. REMOVE REAR STABILIZER BAR INFO

40. SEPARATE REAR SHOCK ABSORBER WITH COIL SPRING LH

(a) Support the rear axle beam assembly using a jack and wooden block.

NOTICE:

Do not excessively jack up the rear axle beam assembly.

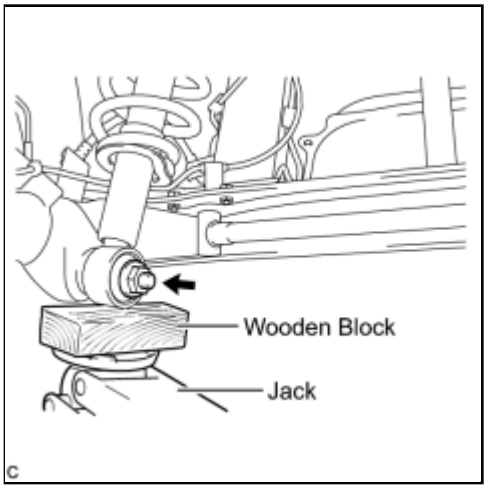

(b) Remove the nut and rear No. 1 shock absorber retainer.

(c) Separate the rear shock absorber with coil spring LH (lower side).

41. SEPARATE REAR SHOCK ABSORBER WITH COIL SPRING RH

HINT:

Perform the same procedure as the LH side.

42. REMOVE REAR AXLE BEAM ASSEMBLY

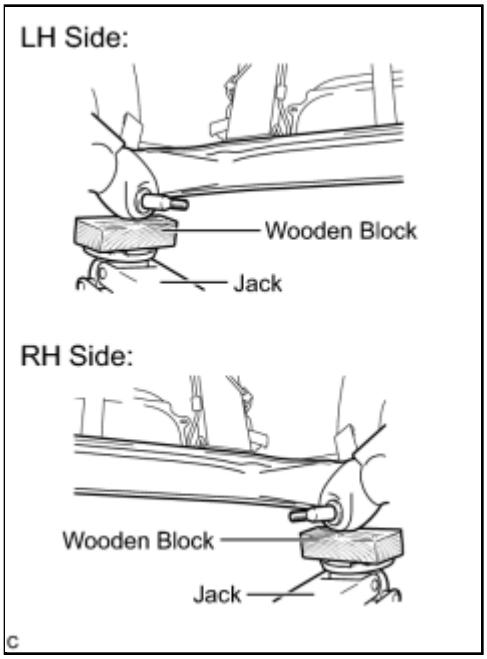

(a) Support the rear axle beam assembly using 2 jacks and 2 wooden blocks.

(b) Remove the 2 bolts, 2 nuts, and rear axle beam assembly.

NOTICE:

Since stopper nuts are used, loosen the bolts.

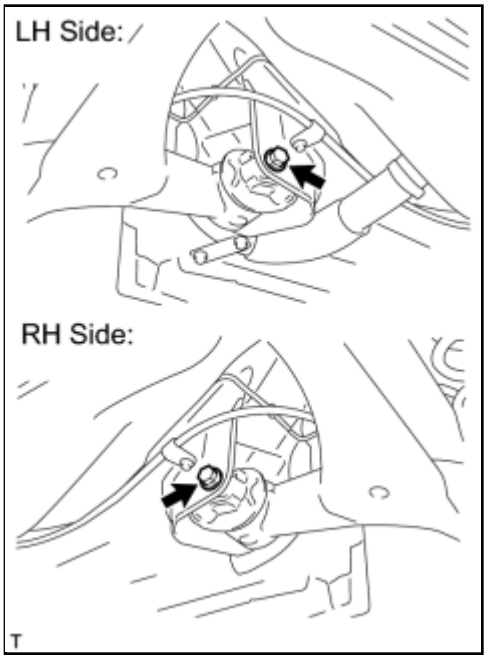

43. REMOVE REAR AXLE CARRIER BUSHING LH

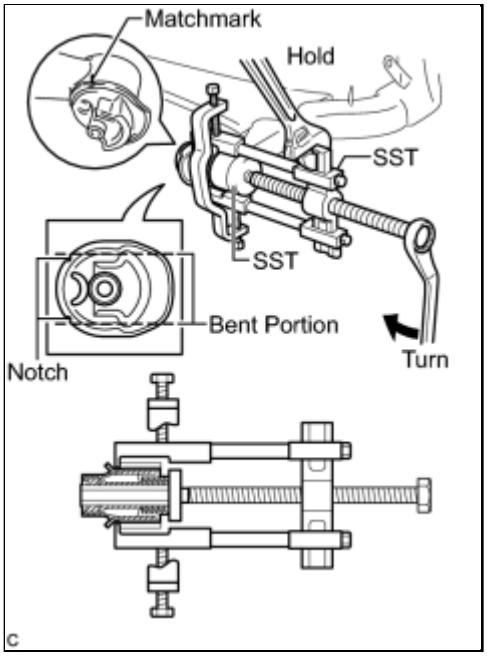

(a) Place matchmarks on the 2 notches of the rear axle carrier bushing and rear axle beam assembly.

(b) Using a chisel and hammer, bend the 2 portions of the rear axle carrier bushing rib.

NOTICE:

- When removing the rear axle carrier bushing, do not erase the matchmarks on the rear axle beam assembly.
- If the axle beam has been scratched, apply the paint to the axle beam assembly.

(c) Using SST, remove the rear axle carrier bushing from the rear axle beam assembly.

SST: 09950-40011

SST: 09950-60010

09951-04020
09952-04010
09953-04030
09954-04020
09955-04051
09957-04010
09958-04011
09951-00630

44. REMOVE REAR AXLE CARRIER BUSHING RH

HINT:

Perform the same procedure as the LH side.

Last Modified: 3-10-2010	6.4 A	**From:** 200901
Model Year: 2010	**Model:** Corolla	**Doc ID:** RM000000WRD014X
Title: REAR SUSPENSION: REAR AXLE BEAM: INSTALLATION (2010 Corolla)		

INSTALLATION

1. INSTALL REAR AXLE CARRIER BUSHING LH

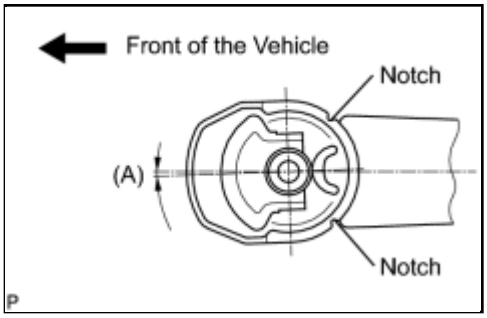

(a) Align the arrow mark on a new rear axle carrier bushing LH with the matchmark on the rear axle beam assembly and temporarily install the rear axle carrier bushing LH to the rear axle beam assembly. (Perform this procedure when reusing the rear axle beam assembly.)

NOTICE:

Install the rear axle carrier bushing LH in the same direction as the removed bushing.

(b) Temporarily install a new rear axle carrier bushing LH to the position shown in the illustration. (Perform this procedure when replacing with a new rear axle beam assembly.)

(A):
0°53' +/- 3° (0.88° +/- 3°)

NOTICE:

Install the rear axle carrier bushing LH in the same direction as the removed bushing.

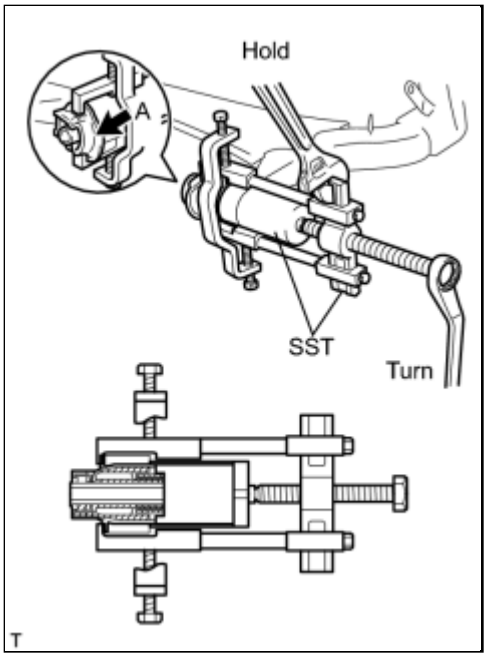

(c) Using SST, install the rear axle carrier bushing LH to the rear axle beam assembly.

SST: 09710-04101

SST: 09950-40011

09951-04020
09952-04010
09953-04030
09954-04020
09955-04051
09957-04010
09958-04011

SST: 09950-60010

09951-00620

NOTICE:

- Hang the claws of SST to the bushing deeply and firmly.
- Do not scratch the rubber portion (A) of the bushing.
- Do not deform the bushing rib.

2. INSTALL REAR AXLE CARRIER BUSHING RH

HINT:

Perform the same procedure as the LH side.

3. TEMPORARILY TIGHTEN REAR AXLE BEAM ASSEMBLY

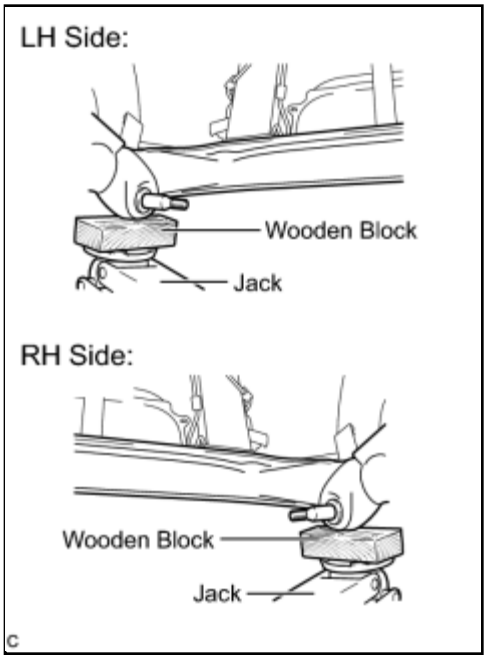

(a) Support the rear axle beam assembly using 2 jacks and 2 wooden blocks.

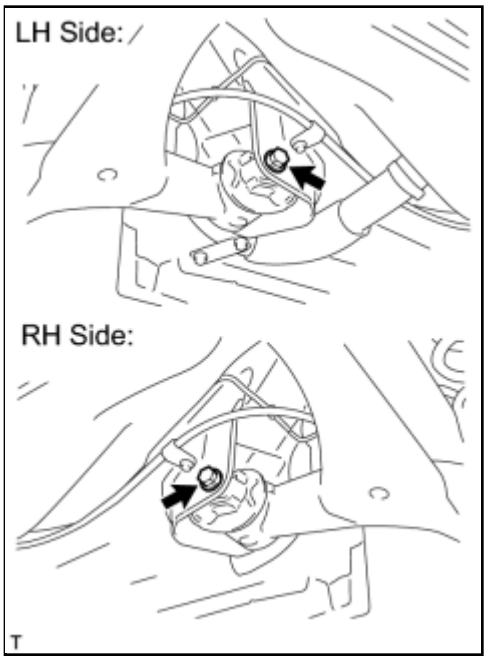

(b) Temporarily install the rear axle beam assembly with the 2 bolts and 2 nuts.

(c) Temporarily tighten the 2 bolts.

NOTICE:

Since stopper nuts are used, temporarily tighten the bolts.

4. TEMPORARILY TIGHTEN REAR SHOCK ABSORBER WITH COIL SPRING LH

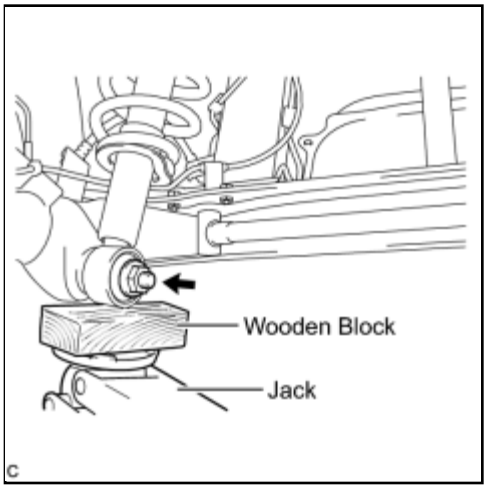

(a) Temporarily install the rear shock absorber with coil spring LH and the rear No. 1 shock absorber cushion retainer with the nut.

5. TEMPORARILY TIGHTEN REAR SHOCK ABSORBER WITH COIL SPRING RH

HINT:

Perform the same procedure as the LH side.

6. INSTALL REAR STABILIZER BAR (for TMC Made) INFO

7. INSTALL REAR STABILIZER BAR (except TMC Made) INFO

8. INSTALL REAR AXLE BEAM DAMPER INFO

9. INSTALL REAR AXLE HUB AND BEARING ASSEMBLY LH (for Rear Drum Brake) INFO

10. INSTALL REAR AXLE HUB AND BEARING ASSEMBLY RH (for Rear Drum Brake)

HINT:

Perform the same procedure as the LH side.

11. INSTALL REAR AXLE HUB AND BEARING ASSEMBLY LH (for Rear Disc Brake) INFO

12. INSTALL REAR AXLE HUB AND BEARING ASSEMBLY RH (for Rear Disc Brake)

HINT:

Perform the same procedure as the LH side.

13. TEMPORARILY TIGHTEN NO. 4 REAR BRAKE TUBE (for Rear Drum Brake)

(a) Using a union nut wrench (10 mm), temporarily install the No. 4 rear brake tube to the rear brake wheel cylinder assembly LH.

NOTICE:

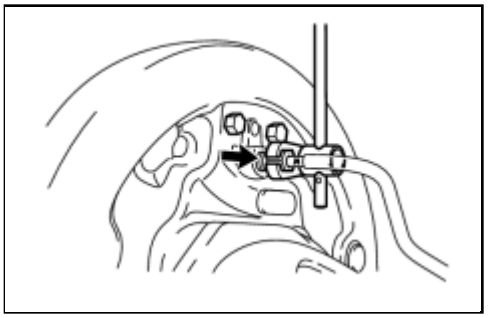

- Do not bend or damage the brake line.
- Do not allow any foreign matter such as dirt and dust to enter the brake line.

14. TEMPORARILY TIGHTEN NO. 3 REAR BRAKE TUBE (for Rear Drum Brake)

HINT:

Perform the same procedure as the No. 4 rear brake tube.

15. INSTALL REAR FLEXIBLE HOSE LH (for Rear Drum Brake)

(a) Install the rear flexible hose LH with a new clip.

NOTICE:

Install the new clip as far as it will go.

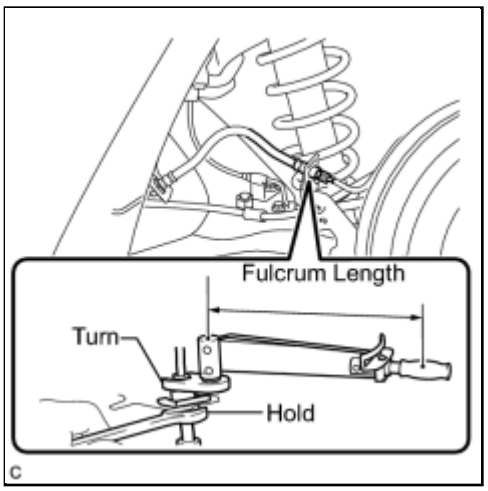

(b) Using a union nut wrench (10 mm), connect the No. 4 rear brake tube to the rear flexible hose while holding the rear flexible hose LH with a wrench.

without union nut wrench - Torque: 15 N·m (155 kgf·cm, 11ft·lbf)

with union nut wrench - Torque: 14 N·m (143 kgf·cm, 10ft·lbf)

NOTICE:

- Do not bend or damage the brake line.
- Do not allow any foreign matter such as dirt and dust to enter the brake line.
- Use a torque wrench with a fulcrum length of 250 mm (9.84 in.).
- This torque value is effective when the union nut wrench is parallel to the torque wrench.

16. INSTALL REAR FLEXIBLE HOSE RH (for Rear Drum Brake)

HINT:

Perform the same procedure as the LH side.

17. FULLY TIGHTEN NO. 4 REAR BRAKE TUBE (for Rear Drum Brake)

(a) Using a union nut wrench (10 mm), fully tighten the No. 4 rear brake tube.

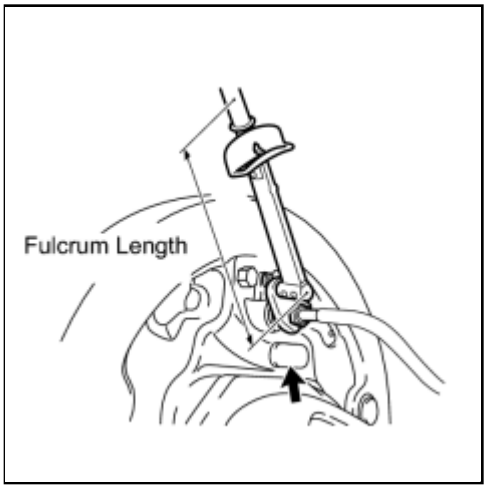

without union nut wrench - Torque: 15 N·m (155 kgf·cm, 11ft·lbf)

with union nut wrench - Torque: 14 N·m (143 kgf·cm, 10ft·lbf)

NOTICE:

- Use a torque wrench with a fulcrum length of 250 mm (9.84 in.).
- This torque value is effective when the union nut wrench is parallel to the torque wrench.

18. FULLY TIGHTEN NO. 3 REAR BRAKE TUBE (for Rear Drum Brake)

HINT:

Perform the same procedure as the No. 4 rear brake tube.

19. INSTALL REAR DISC LH (for Rear Disc Brake) INFO

20. INSTALL REAR DISC RH (for Rear Disc Brake)

HINT:

Perform the same procedure as the LH side.

21. INSTALL REAR DISC BRAKE CALIPER ASSEMBLY LH (for Rear Disc Brake) INFO

22. INSTALL REAR DISC BRAKE CALIPER ASSEMBLY RH (for Rear Disc Brake)

HINT:

Perform the same procedure as the LH side.

23. INSTALL REAR FLEXIBLE HOSE LH (for Rear Disc Brake)

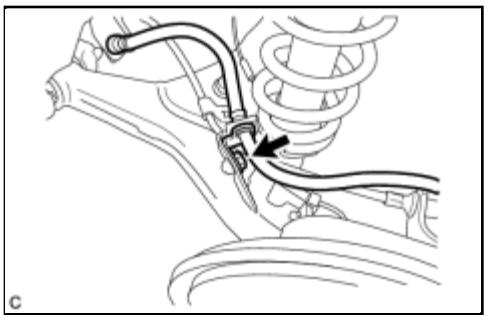

(a) Install the rear flexible hose LH to the rear axle beam with the bolt.

Torque: 29 N·m (296 kgf·cm, 21ft·lbf)

NOTICE:

Do not twist the rear flexible hose LH.

24. INSTALL REAR FLEXIBLE HOSE RH (for Rear Disc Brake)

HINT:

Perform the same procedure as the LH side.

25. CONNECT NO. 3 PARKING BRAKE CABLE ASSEMBLY (for Rear Disc Brake)

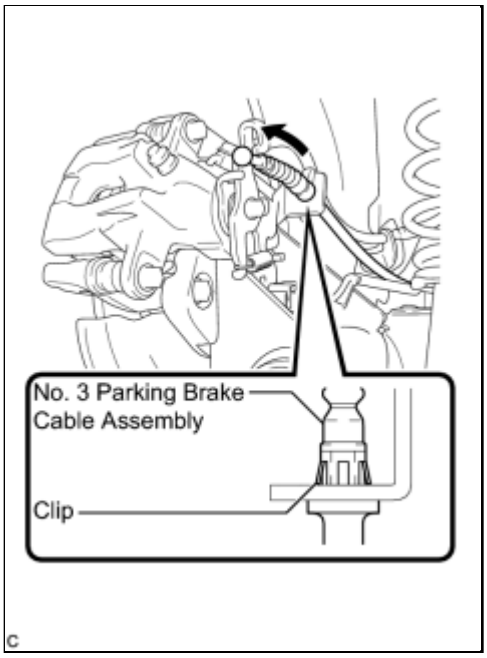

(a) Install the No. 3 parking brake cable assembly to the rear disc brake cylinder assembly LH.

HINT:

Be sure to engage the No. 3 parking cable assembly clip onto the rear disc brake cylinder assembly LH as shown in the illustration.

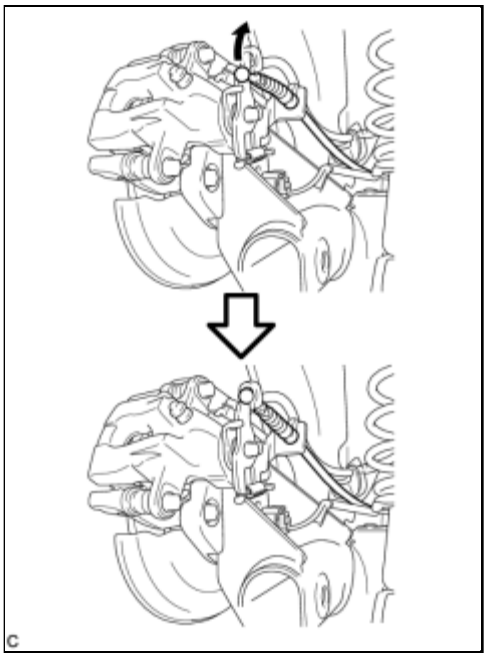

(b) Connect the No. 3 parking brake cable assembly to the rear disc brake cylinder assembly LH.

26. CONNECT NO. 2 PARKING BRAKE CABLE ASSEMBLY (for Rear Disc Brake)

HINT:

Perform the same procedure as the No. 3 parking brake cable assembly side.

27. INSTALL PARKING BRAKE LEVER PROTECTOR LH (for Rear Disc Brake) INFO

28. INSTALL PARKING BRAKE LEVER PROTECTOR RH (for Rear Disc Brake)

HINT:

Perform the same procedure as the LH side.

29. INSTALL REAR BRAKE DRUM LH (for Rear Drum Brake) INFO

30. INSTALL REAR BRAKE DRUM RH (for Rear Drum Brake)

HINT:

Perform the same procedure as the LH side.

31. INSTALL NO. 3 PARKING BRAKE CABLE ASSEMBLY

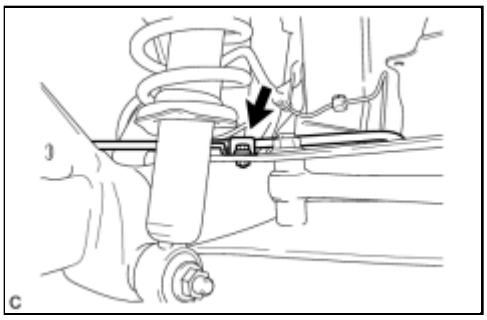

(a) Install the No. 3 parking brake cable assembly with the bolt.

Torque: 6.0 N·m (61 kgf·cm, 53in·lbf)

32. INSTALL NO. 2 PARKING BRAKE CABLE ASSEMBLY

HINT:

Perform the same procedure as the No. 3 parking brake cable assembly.

33. INSTALL REAR SPEED SENSOR WIRE LH

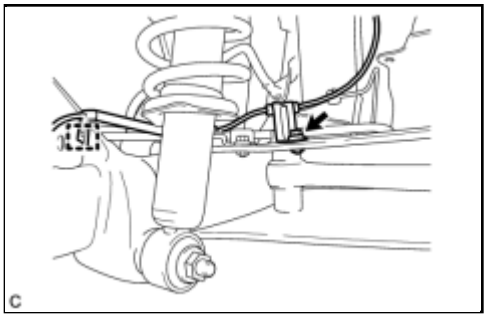

(a) Install the rear speed sensor wire LH with the bolt.

Torque: 8.0 N·m (82 kgf·cm, 71in·lbf)

NOTICE:

Do not twist the rear speed sensor wire LH.

(b) Engage the clamp.

NOTICE:

Do not twist the rear speed sensor wire LH.

34. INSTALL REAR SPEED SENSOR WIRE RH

HINT:

Perform the same procedure as the LH side.

35. CONNECT REAR SPEED SENSOR WIRE LH (for Rear Drum Brake) INFO

36. CONNECT REAR SPEED SENSOR WIRE RH (for Rear Drum Brake)

HINT:

Perform the same procedure as the LH side.

37. CONNECT REAR SPEED SENSOR WIRE LH (for Rear Disc Brake) INFO

38. CONNECT REAR SPEED SENSOR WIRE RH (for Rear Disc Brake)

HINT:

Perform the same procedure as the LH side.

39. ADJUST PARKING BRAKE LEVER TRAVEL (for Rear Disc Brake) INFO

40. INSPECT REAR DISC BRAKE CYLINDER OPERATION LEVER AND STOPPER CLEARANCE (for Rear Disc Brake) INFO

41. ADJUST REAR DRUM BRAKE SHOE CLEARANCE (for Rear Drum Brake) INFO

42. FILL BRAKE FLUID RESERVOIR (for Rear Drum Brake) INFO

43. BLEED BRAKE LINE (for Rear Drum Brake) INFO

44. INSPECT FOR BRAKE FLUID LEAK (for Rear Drum Brake)

45. INSPECT BRAKE FLUID LEVEL (for Rear Drum Brake) INFO

46. CONNECT CABLE TO NEGATIVE BATTERY TERMINAL

47. INSTALL REAR WHEELS

Torque: 103 N·m (1050 kgf·cm, 76ft·lbf)

48. INSTALL UPPER CONSOLE PANEL SUB-ASSEMBLY (for Rear Disc Brake) INFO

49. INSTALL CENTER NO. 1 INSTRUMENT CLUSTER FINISH PANEL ASSEMBLY (for Rear Disc Brake)

HINT:

- for Manual Transaxle INFO
- for Automatic Transaxle INFO

50. INSTALL SHIFT LEVER KNOB SUB-ASSEMBLY (for Rear Disc Brake)

HINT:

- for Manual Transaxle INFO
- for Automatic Transaxle INFO

51. INSTALL LOWER INSTRUMENT PANEL FINISH PANEL LH (for Rear Disc Brake) INFO

52. INSTALL LOWER INSTRUMENT PANEL FINISH PANEL RH (for Rear Disc Brake) INFO

53. STABILIZE SUSPENSION INFO

54. FULLY TIGHTEN REAR AXLE BEAM ASSEMBLY

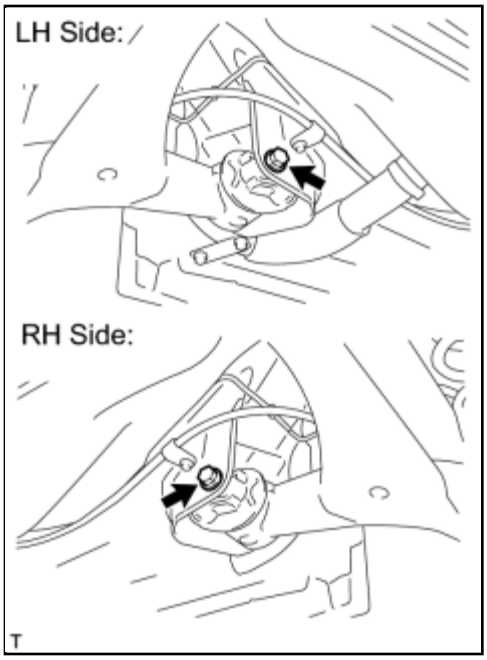

(a) Fully tighten the 2 bolts on the rear axle beam assembly.

Torque: 85 N·m (867 kgf·cm, 63ft·lbf)

NOTICE:

- Since stopper nuts are used, tighten the bolts.
- The final torque must be applied under standard vehicle height conditions.

55. FULLY TIGHTEN REAR SHOCK ABSORBER WITH COIL SPRING LH

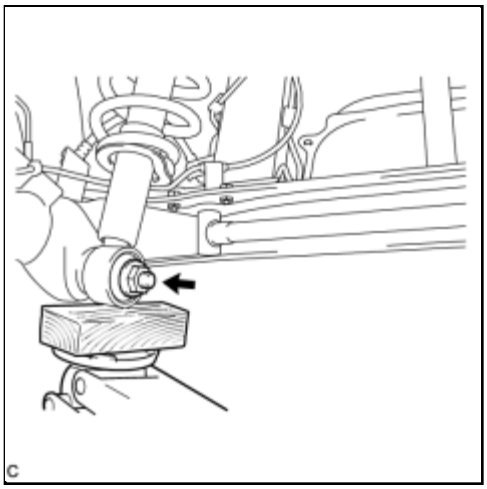

(a) Fully tighten the nut on the rear shock absorber with coil spring LH (lower side).

Torque: 80 N·m (816 kgf·cm, 59ft·lbf)

CAUTION:

The final torque must be applied under standard vehicle height conditions.

56. FULLY TIGHTEN REAR SHOCK ABSORBER WITH COIL SPRING RH

HINT:

Perform the same procedure as the LH side.

57. INSPECT REAR WHEEL ALIGNMENT

INFO .

58. PLACE FRONT WHEELS FACING STRAIGHT AHEAD (w/ VSC)

59. DISCONNECT CABLE FROM NEGATIVE BATTERY TERMINAL (w/ VSC)

NOTICE:

Disconnect the cable from the negative (-) battery terminal for more than 2 seconds.

60. CONNECT CABLE TO NEGATIVE BATTERY TERMINAL (w/ VSC)

61. PERFORM YAW RATE SENSOR ZERO POINT CALIBRATION (w/ VSC)

INFO .

62. CHECK STEERING ANGLE SENSOR ZERO POINT CALIBRATION (w/ VSC)

INFO .

63. CHECK FOR SPEED SENSOR SIGNAL (w/ ABS)

INFO .

64. CHECK FOR SPEED SENSOR SIGNAL (w/ VSC)

INFO .

Last Modified: 3-10-2010	6.4 K	**From:** 200901
Model Year: 2010	**Model:** Corolla	**Doc ID:** RM000002PCL00MX
Title: REAR SUSPENSION: REAR SHOCK ABSORBER: COMPONENTS (2010 Corolla)		

COMPONENTS

ILLUSTRATION

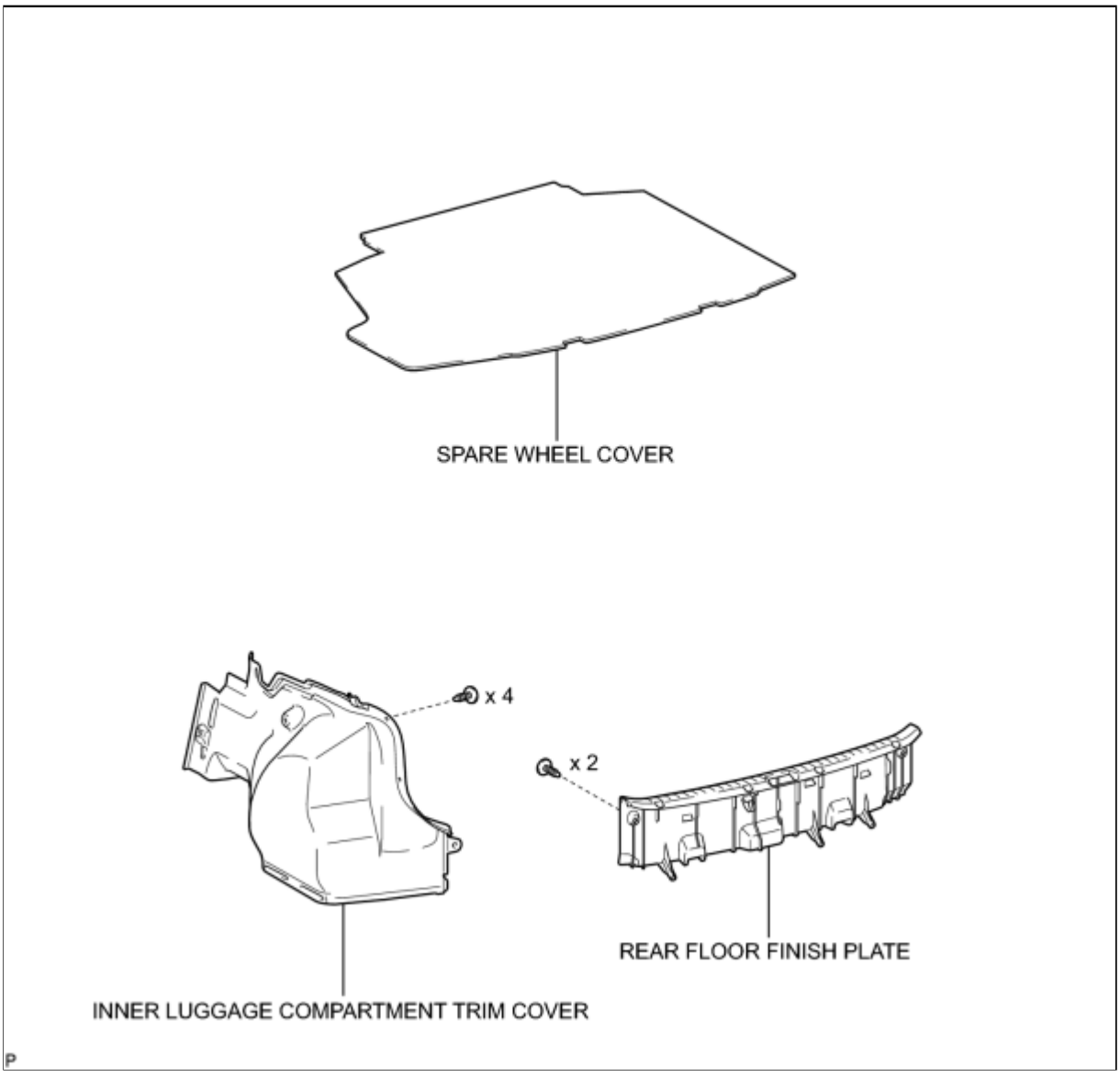

ILLUSTRATION

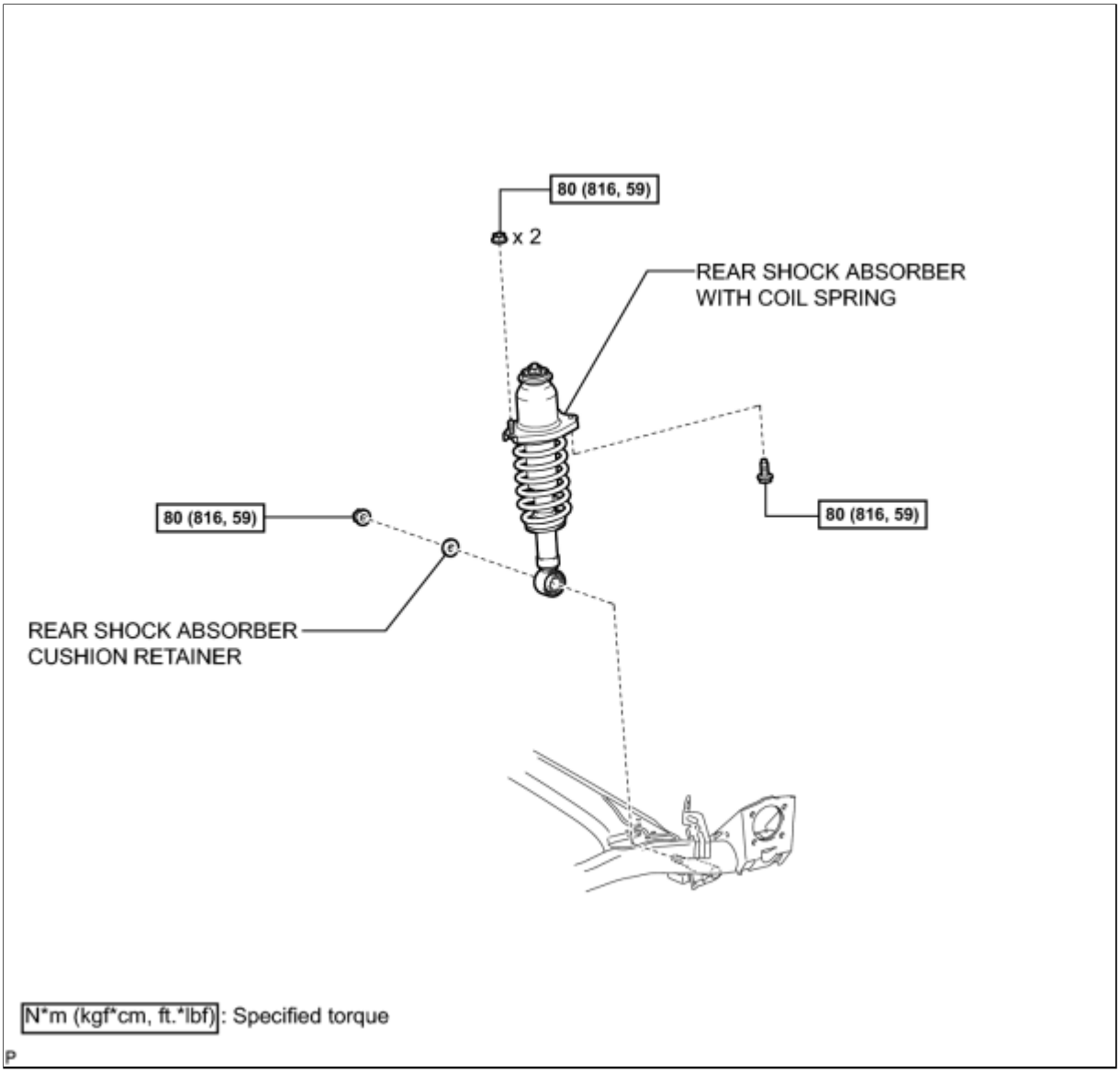

ILLUSTRATION

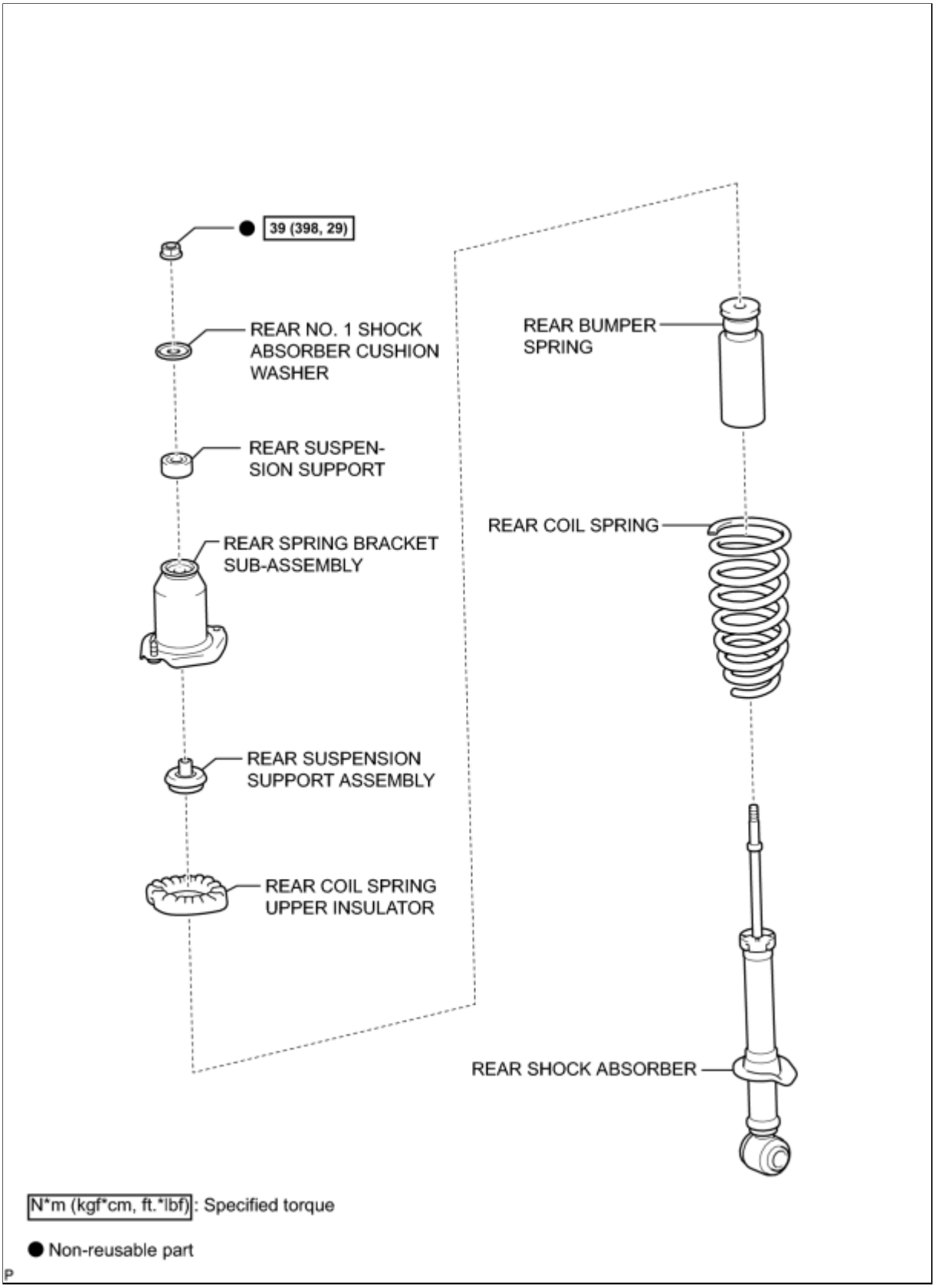
39 (398, 29)
REAR NO. 1 SHOCK ABSORBER CUSHION WASHER
REAR SUSPEN-SION SUPPORT
REAR SPRING BRACKET SUB-ASSEMBLY
REAR SUSPENSION SUPPORT ASSEMBLY
REAR COIL SPRING UPPER INSULATOR
REAR BUMPER SPRING
REAR COIL SPRING
REAR SHOCK ABSORBER
N*m (kgf*cm, ft.*lbf): Specified torque
Non-reusable part

Last Modified: 3-10-2010	6.4 A	**From:** 200901
Model Year: 2010	**Model:** Corolla	**Doc ID:** RM000000WTY010X
Title: REAR SUSPENSION: REAR SHOCK ABSORBER: REMOVAL (2010 Corolla)		

REMOVAL

NOTICE:

For vehicles equipped with VSC, if the wheel alignment has been adjusted, and if suspension or underbody components have been removed/installed or replaced, be sure to perform the following initialization procedure in order for the system to function normally:

1. Disconnect the cable from the negative (-) battery terminal for more than 2 seconds.
2. Reconnect the cable to the negative (-) battery terminal.
3. Perform zero point calibration of the yaw rate and acceleration sensor and test mode inspection.

HINT:

- Use the same procedure for the RH side and LH side.
- The procedure listed below is for the LH side.

1. REMOVE SPARE WHEEL COVER INFO

2. REMOVE REAR FLOOR FINISH PLATE INFO

3. REMOVE INNER LUGGAGE COMPARTMENT TRIM COVER INFO

4. REMOVE REAR WHEEL

5. REMOVE REAR SHOCK ABSORBER WITH COIL SPRING

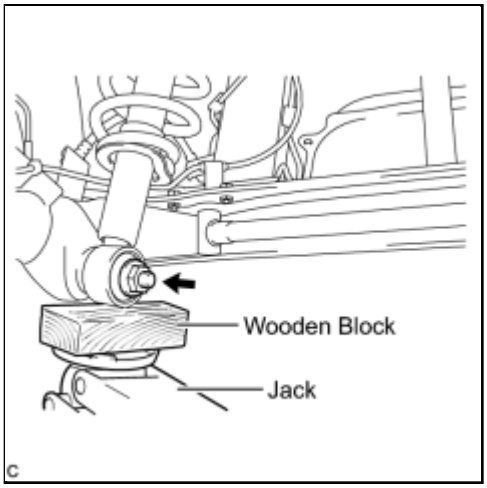

(a) Support the rear axle beam assembly using a jack and wooden block.

(b) Remove the nut and rear shock absorber cushion retainer.

(c) Remove the 2 nuts from the rear shock absorber with coil spring (upper side).

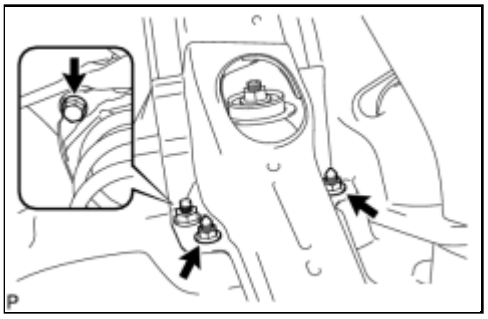

(d) Remove the bolt (lower side) from the rear shock absorber with coil spring.

(e) Slowly lower the jack and remove the rear shock absorber with coil spring.

6. REMOVE REAR NO. 1 SHOCK ABSORBER CUSHION WASHER

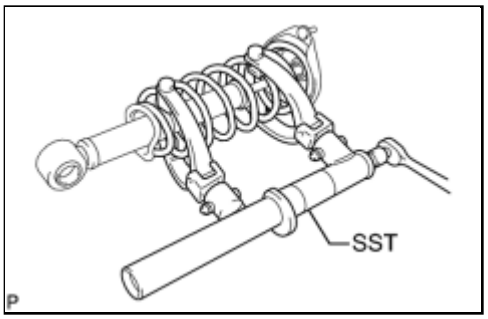

(a) Using SST, compress the rear coil spring.

SST: 09727-30021

09727-00010

09727-00021

09727-00031

If the rear coil spring is compressed at an angle, using 2 SST will make the work easier.

NOTICE:

Do not use an impact wrench. It will damage SST.

(b) Check that the rear coil spring is fully compressed.

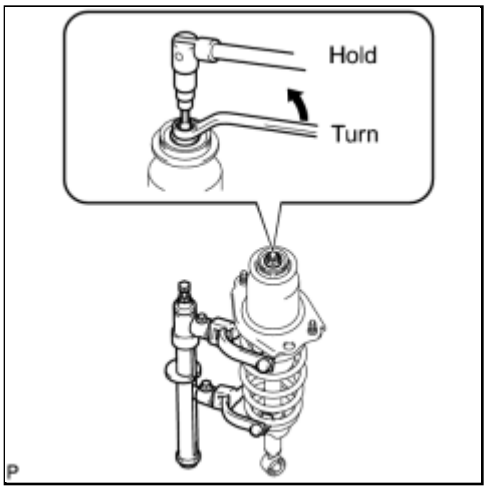

(c) Use a hexagon wrench (6 mm) to hold the rear shock absorber piston rod and remove the nut.

(d) Remove the No. 1 rear shock absorber cushion washer.

7. REMOVE REAR SUSPENSION SUPPORT

8. REMOVE REAR SPRING BRACKET SUB-ASSEMBLY

9. REMOVE REAR SUSPENSION SUPPORT ASSEMBLY

10. REMOVE REAR COIL SPRING UPPER INSULATOR

11. REMOVE REAR BUMPER SPRING

12. REMOVE REAR COIL SPRING

(a) Remove SST and remove the rear coil spring.

NOTICE:

Do not use an impact wrench. It will damage SST.

Last Modified: 3-10-2010	6.4 A	**From:** 200901
Model Year: 2010	**Model:** Corolla	**Doc ID:** RM000000WTW010X
Title: REAR SUSPENSION: REAR SHOCK ABSORBER: INSTALLATION (2010 Corolla)		

INSTALLATION

HINT:

- Use the same procedure for the RH side and LH side.
- The procedure listed below is for the LH side.

1. INSTALL REAR COIL SPRING

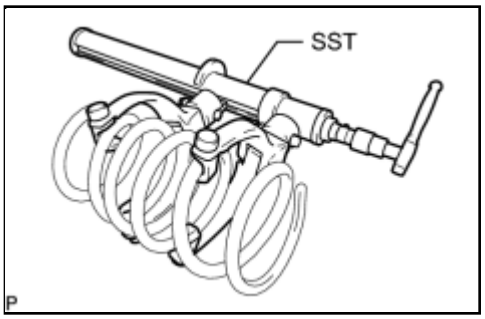

(a) Using SST, compress the rear coil spring.

SST: 09727-30021

09727-00010

09727-00021

09727-00031

NOTICE:

Do not use an impact wrench. It will damage SST.

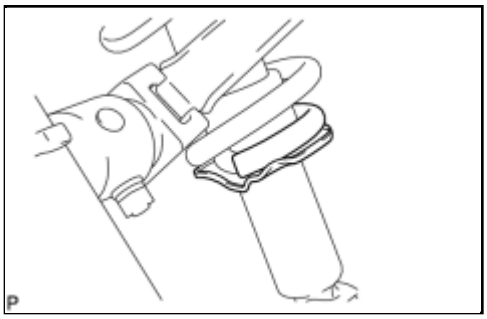

(b) Install the coil spring into the shock absorber assembly.

NOTICE:

Make sure that the end of the rear coil spring is positioned in the depression of the lower spring seat.

2. INSTALL REAR BUMPER SPRING

3. INSTALL REAR COIL SPRING UPPER INSULATOR

4. INSTALL REAR SUSPENSION SUPPORT ASSEMBLY

5. INSTALL REAR SPRING BRACKET SUB-ASSEMBLY

6. INSTALL REAR SUSPENSION SUPPORT

7. INSTALL REAR NO. 1 SHOCK ABSORBER CUSHION WASHER

(a) Install the rear No. 1 shock absorber cushion washer.

HINT:

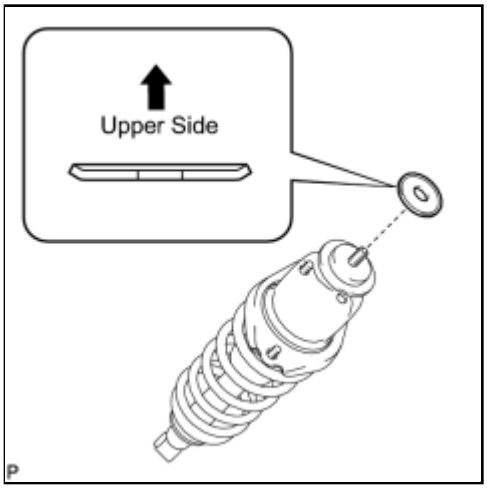

Be sure to install the rear No. 1 shock absorber cushion washer in the correct direction.

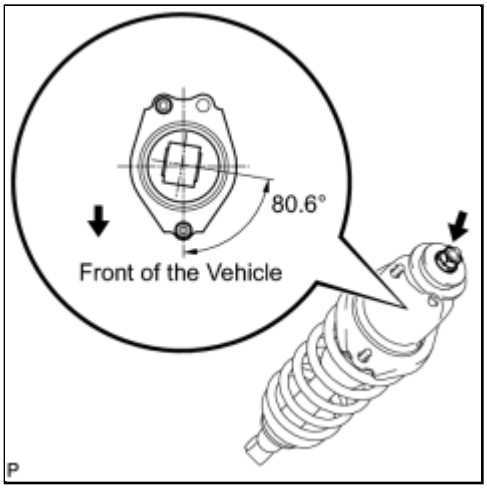

(b) Temporarily install a new nut.

NOTICE:

Position the rear spring bracket sub-assembly with rear shock absorber lower bushing as shown in the illustration.

HINT:

Position the RH side on the symmetrical to the illustration.

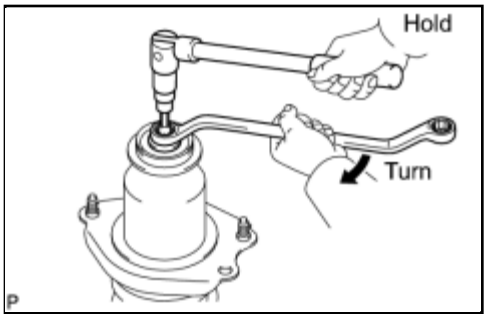

(c) Using a socket hexagon wrench (6 mm), secure the rear shock absorber piston rod and tighten the nut.

Torque: 39 N·m (398 kgf·cm, 29ft·lbf)

(d) Remove SST from the rear coil spring.

NOTICE:

Do not use an impact wrench. It will damage SST.

8. INSTALL REAR SHOCK ABSORBER WITH COIL SPRING

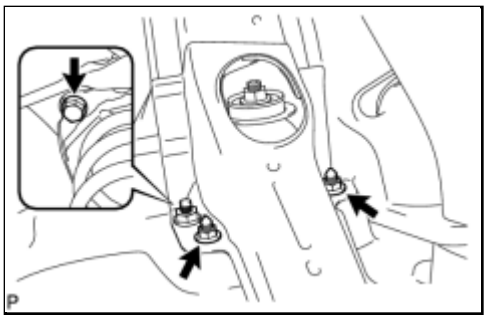

(a) Install the rear shock absorber with coil spring with the bolt (lower side).

Torque: 80 N·m (816 kgf·cm, 59ft·lbf)

(b) Install the rear shock absorber with coil spring with the 2 nuts (upper side).

Torque: 80 N·m (816 kgf·cm, 59ft·lbf)

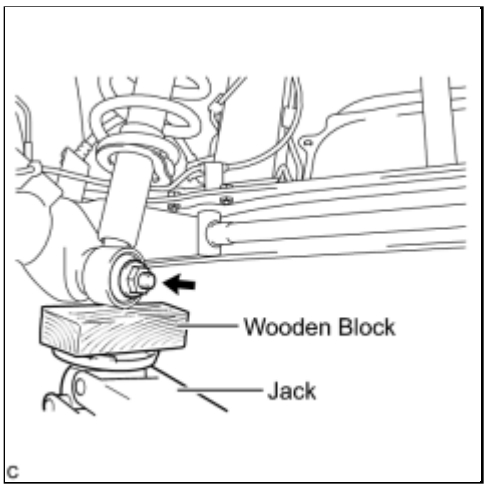

(c) Support the rear axle beam using a jack and wooden block.

(d) Temporarily install the rear shock absorber with coil spring (lower side) and rear shock absorber cushion retainer with the nut.

9. INSTALL REAR WHEEL

Torque: 103 N·m (1050 kgf·cm, 76ft·lbf)

10. STABILIZE SUSPENSION

(a) Lower the vehicle.

(b) Bounce the vehicle up and down several times to stabilize the suspension.

(c) Jack up the rear axle beam, placing a wooden block underneath to avoid damage. Apply load to the suspension so that the rear shock absorber with coil spring is positioned as shown in the illustration.

Length A :
206 mm (8.11 in.)

If the rear shock absorber with coil spring cannot be

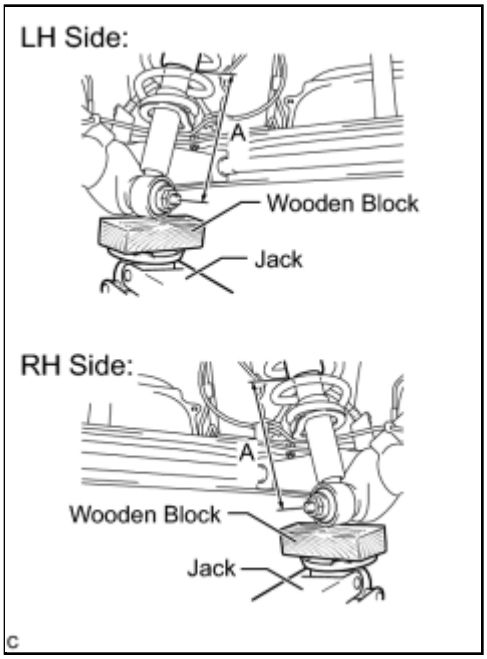

positioned as shown in the illustration even when the rear axle beam is jacked up, apply additional load to the vehicle such as by having a person sit in the rear seat.

CAUTION:

Do not jack up the rear axle beam too high as the vehicle may fall.

11. FULLY TIGHTEN REAR SHOCK ABSORBER WITH COIL SPRING

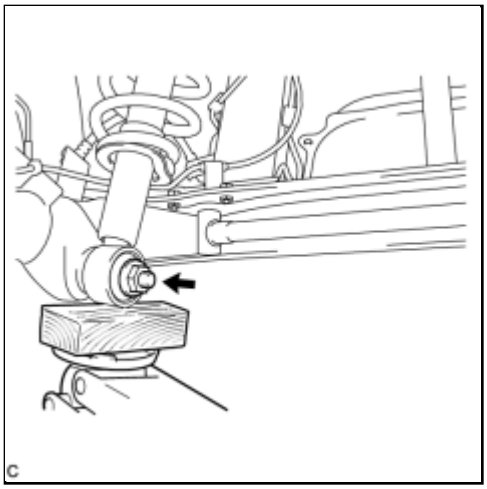

(a) Fully tighten the nut on the rear shock absorber with coil spring (lower side).

Torque: 80 N·m (816 kgf·cm, 59ft·lbf)

NOTICE:

The final torque must be applied under standard vehicle height conditions.

12. INSTALL INNER LUGGAGE COMPARTMENT TRIM COVER INFO

13. INSTALL REAR FLOOR FINISH PLATE INFO

14. INSTALL SPARE WHEEL COVER INFO

15. INSPECT REAR WHEEL ALIGNMENT

INFO .

16. PLACE FRONT WHEELS FACING STRAIGHT AHEAD (w/ VSC)

17. DISCONNECT CABLE FROM NEGATIVE BATTERY TERMINAL (w/ VSC)

NOTICE:

Disconnect the cable from the negative (-) battery terminal for more than 2 seconds.

18. CONNECT CABLE TO NEGATIVE BATTERY TERMINAL (w/ VSC)

19. PERFORM YAW RATE SENSOR ZERO POINT CALIBRATION (w/ VSC)

INFO .

20. CHECK STEERING ANGLE SENSOR ZERO POINT CALIBRATION (w/ VSC)

INFO .

Last Modified: 3-10-2010	6.4 G	**From:** 200901
Model Year: 2010	**Model:** Corolla	**Doc ID:** RM0000025R400OX
Title: REAR SUSPENSION: REAR SHOCK ABSORBER: INSPECTION (2010 Corolla)		

INSPECTION

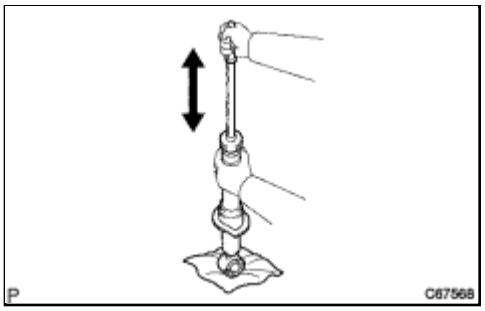

1. INSPECT REAR SHOCK ABSORBER ASSEMBLY

(a) Compress and extend the shock absorber rod, and check that there is no abnormal resistance or unusual sound during operation.

If there is any abnormality, replace the shock absorber with a new one.

Last Modified: 3-10-2010	6.4 N	**From:** 200901
Model Year: 2010	**Model:** Corolla	**Doc ID:** RM000000UA3011X
Title: REAR SUSPENSION: REAR SHOCK ABSORBER: DISPOSAL (2010 Corolla)		

DISPOSAL

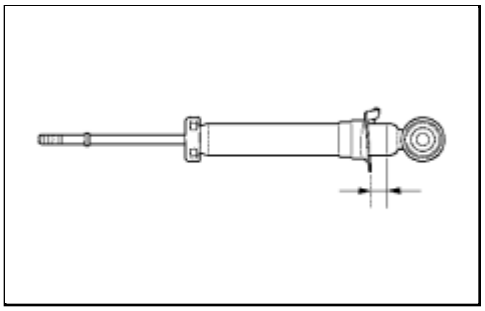

1. DISPOSE OF REAR SHOCK ABSORBER ASSEMBLY

(a) Fully extend the piston rod and secure the rear shock absorber assembly at an angle in a vise.

(b) Using a drill, make a hole in the cylinder as shown in the illustration to discharge the gas inside the cylinder.

NOTICE:

- The gas is colorless, odorless, and non-poisonous.
- Be careful when drilling because shards of metal may fly about, so always use proper safety equipment.

Last Modified: 3-10-2010	6.4 K	**From:** 200901
Model Year: 2010	**Model:** Corolla	**Doc ID:** RM00000228W00KX
Title: REAR SUSPENSION: REAR STABILIZER BAR: COMPONENTS (2010 Corolla)		

COMPONENTS

ILLUSTRATION

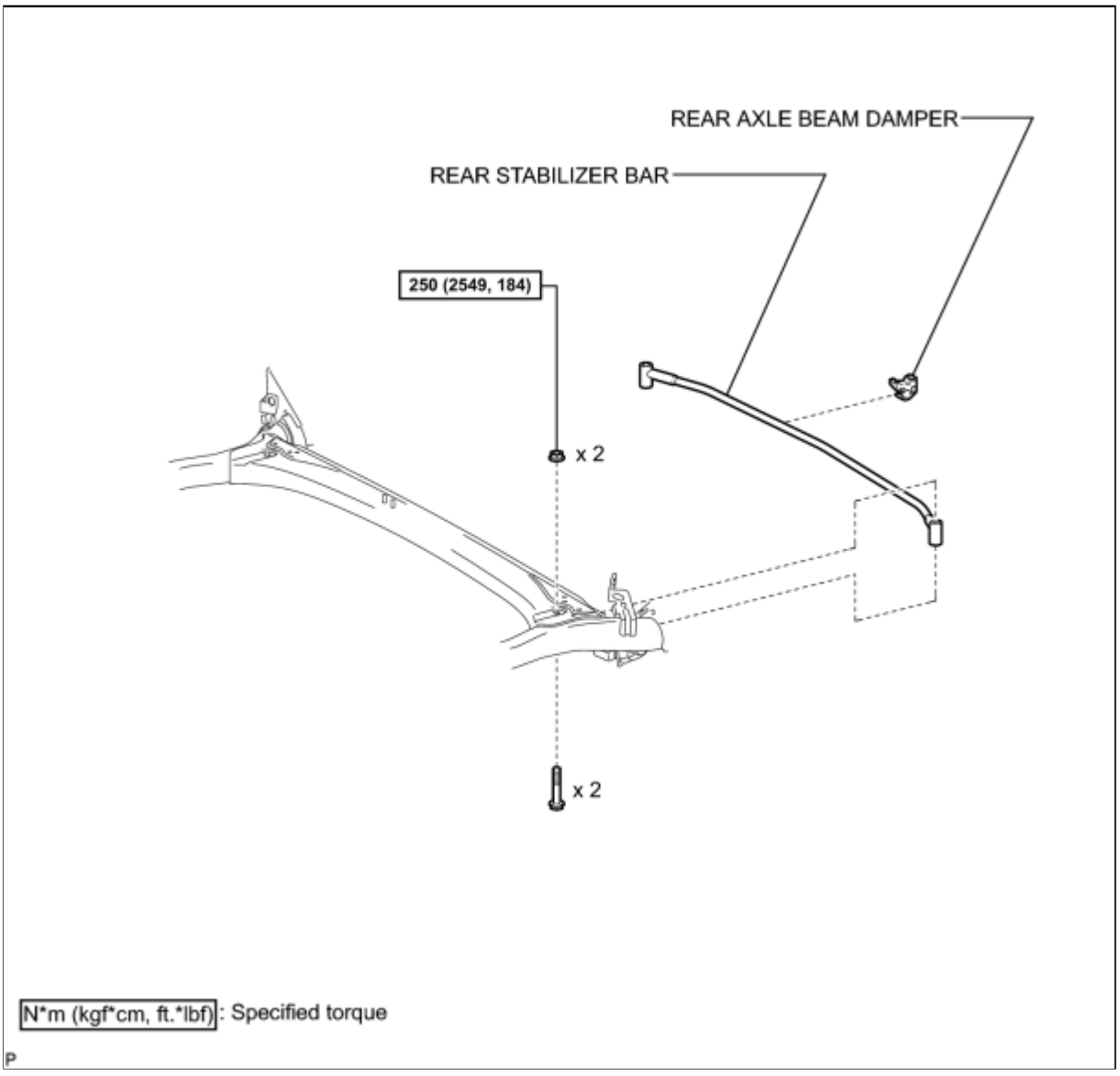

Last Modified: 3-10-2010	6.4 A	**From:** 200901
Model Year: 2010	**Model:** Corolla	**Doc ID:** RM00000228X00NX
Title: REAR SUSPENSION: REAR STABILIZER BAR: REMOVAL (2010 Corolla)		

REMOVAL

1. REMOVE REAR AXLE BEAM DAMPER

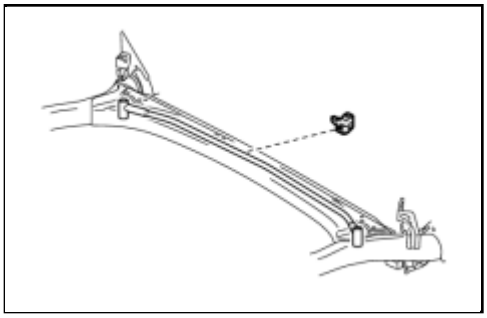

(a) Remove the rear axle beam damper.

2. REMOVE REAR STABILIZER BAR

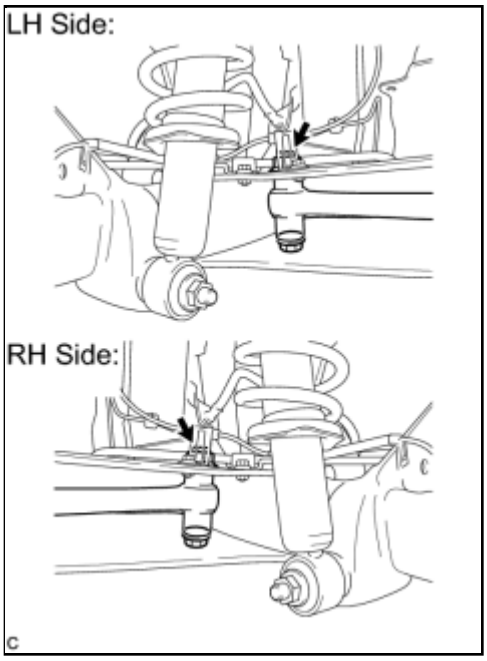

(a) Remove the 2 bolts, 2 nuts and rear stabilizer bar.

NOTICE:

Be sure to loosen the nuts.

Last Modified: 3-10-2010	6.4 A	**From:** 200901
Model Year: 2010	**Model:** Corolla	**Doc ID:** RM00000228U00NX
Title: REAR SUSPENSION: REAR STABILIZER BAR: INSTALLATION (2010 Corolla)		

INSTALLATION

1. INSTALL REAR STABILIZER BAR (for TMC Made)

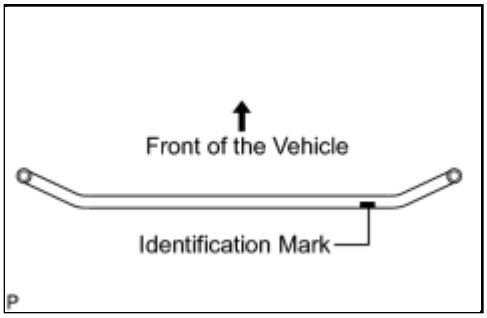

(a) Check that the identification mark of the rear stabilizer bar is positioned on the right side of the vehicle.

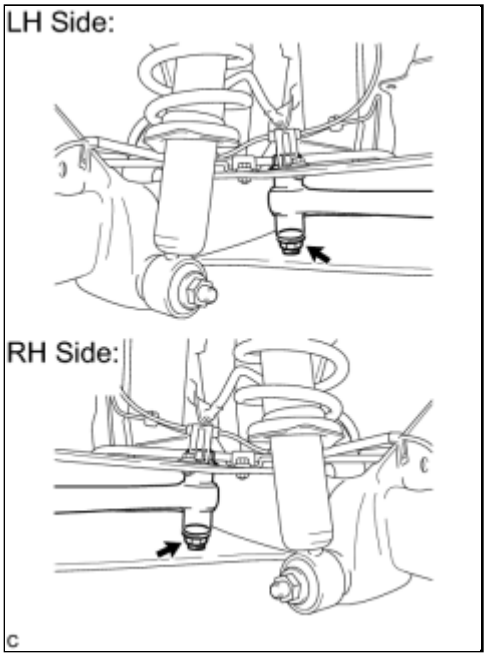

(b) Install the rear stabilizer bar with the 2 bolts and 2 nuts.

Torque: 250 N·m (2549 kgf·cm, 184ft·lbf)

NOTICE:

- Be sure to tighten the nuts.
- If reusing the bolts, insert them from the upper side of the vehicle.

2. INSTALL REAR STABILIZER BAR (except TMC Made)

(a) Check that the identification mark of the rear stabilizer bar is positioned on the left side of the vehicle.

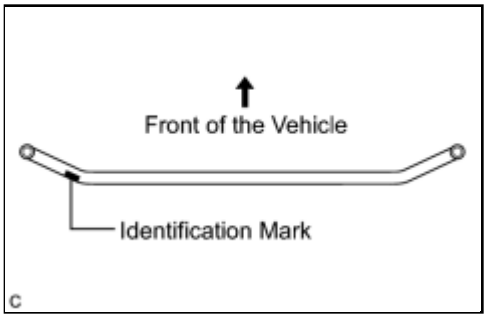

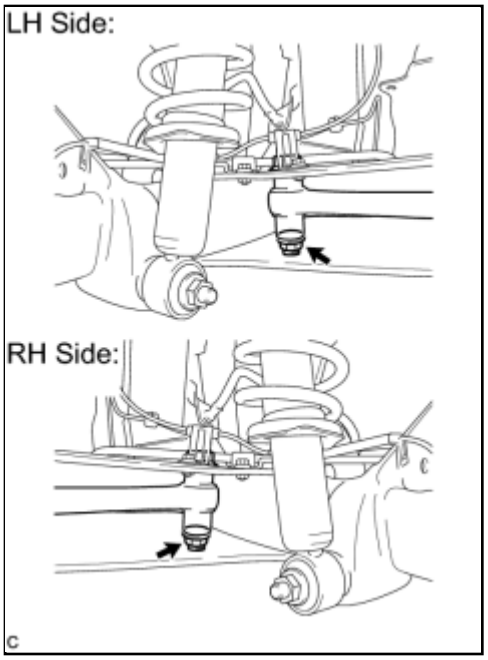

(b) Install the rear stabilizer bar with the 2 bolts and 2 nuts.

Torque: 250 N·m (2549 kgf·cm, 184ft·lbf)

NOTICE:

- Be sure to tighten the nuts.
- If reusing the bolts, insert them from the upper side of the vehicle.

3. INSTALL REAR AXLE BEAM DAMPER

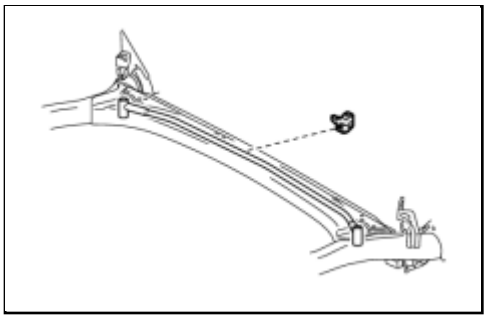

(a) Install the rear axle beam damper to the center of the rear stabilizer bar.

Last Modified: 3-10-2010	6.4 T	**From:** 200901
Model Year: 2010	**Model:** Corolla	**Doc ID:** RM000001Y3700UX
Title: REAR SUSPENSION: REAR SUSPENSION SYSTEM: PROBLEM SYMPTOMS TABLE (2010 Corolla)		

PROBLEM SYMPTOMS TABLE

HINT:

Use the table below to help determine the cause of problem symptoms. If multiple suspected areas are listed, the potential causes of the symptoms are listed in order of probability in the "Suspected Area" column of the table. Check each symptom by checking the suspected areas in the order they are listed. Replace parts as necessary.

Rear Suspension System

SYMPTOM	SUSPECTED AREA	SEE PAGE
Vehicle pulls to one side while driving	Tire (worn or improperly inflated)	INFO
	Rear wheel alignment (incorrect)	INFO
	Rear shock absorber (worn)	INFO
	Rear hub bearing (worn)	INFO
	Suspension parts (worn)	-
Bottoming	Vehicle (overloaded)	-
	Rear coil spring (weak)	INFO
	Rear shock absorber (worn)	INFO
Sway/pitches	Tire (worn or improperly inflated)	INFO
	Rear coil spring (weak)	INFO
	Rear shock absorber (worn)	INFO
	Rear stabilizer bar (bent or broken)	INFO
Wheel shimmy	Tire (worn or improperly inflated)	INFO
	Wheel (out of balance)	INFO
	Rear wheel alignment (incorrect)	INFO
	Rear shock absorber (worn)	INFO
	Rear hub bearing (worn)	INFO
Abnormal tire wear	Tire (worn or improperly inflated)	INFO
	Wheel (out of balance)	INFO
	Rear wheel alignment (incorrect)	INFO

SYMPTOM	SUSPECTED AREA	SEE PAGE
	Suspension parts (worn)	-

Last Modified: 3-10-2010	6.4 F	**From:** 200901
Model Year: 2010	**Model:** Corolla	**Doc ID:** RM000003P8Q00RX
Title: TIRE / WHEEL: TIRE AND WHEEL SYSTEM: HOW TO PROCEED WITH TROUBLESHOOTING (2010 Corolla)		

HOW TO PROCEED WITH TROUBLESHOOTING

1. DIAGNOSIS OF TIRE VIBRATION

1.	**TIGHTEN WHEEL NUTS**

NEXT

2.	**INSPECT TIRES** INFO

NG ▶ **Go to step 3**

OK ▶ **Go to step 4**

3.	**REPAIR OR REPLACE TIRE(S)**

NEXT

4.	**INSPECT AND/OR ADJUST WHEEL BALANCE** INFO

NEXT

5.	INSPECT FRONT AXLE HUB BEARING LOOSENESS AND AXLE HUB RUNOUT INFO

NG ▶ Go to step 6

OK ▶ Go to step 7

6.	REPAIR FRONT AXLE HUB BEARING LOOSENESS AND AXLE HUB RUNOUT INFO

NEXT ▼

7.	INSPECT REAR AXLE HUB BEARING LOOSENESS AND AXLE HUB RUNOUT INFO

NG ▶ Go to step 8

OK ▶ Go to step 9

8.	REPAIR REAR AXLE HUB BEARING LOOSENESS AND AXLE HUB RUNOUT INFO

NEXT ▼

9.	PERFORM ROAD TEST

NEXT ▼

10.	RETURN VEHICLE TO CUSTOMER

2. DIAGNOSIS OF IRREGULAR TIRE WEAR

1.	INSPECT TIRES INFO

NEXT

2.	REPAIR OR REPLACE TIRE(S)

NEXT

3.	INSPECT AND/OR ADJUST FRONT WHEEL ALIGNMENT INFO

NEXT

4.	INSPECT REAR WHEEL ALIGNMENT INFO

NEXT

5.	PERFORM ROAD TEST

NEXT

6.	**RETURN VEHICLE TO CUSTOMER**

Last Modified: 3-10-2010	6.4 G	**From:** 200901
Model Year: 2010	**Model:** Corolla	**Doc ID:** RM0000015KU01AX
Title: TIRE / WHEEL: TIRE AND WHEEL SYSTEM: INSPECTION (2010 Corolla)		

INSPECTION

1. INSPECT TIRES

(a) Check the tires for wear and proper inflation pressure.

Cold Tire Inflation Pressure

TIRE SIZE	FRONT KPA (KGF/CM^2, PSI)	REAR KPA (KGF/CM^2, PSI)
P195/65R15 89S	210 (2.1, 30)	210 (2.1, 30)
P205/55R16 89H P215/45R17 87W 205/55R16 91V	220 (2.2, 32)	220 (2.2, 32)

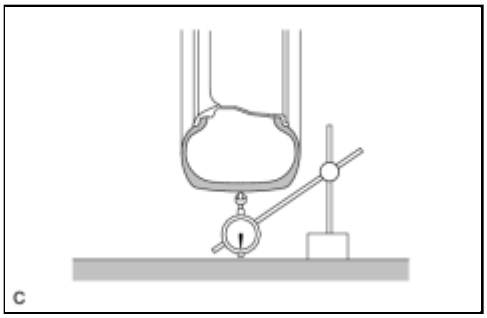

(b) Using a dial indicator, check the runout of the tires.

Maximum tire runout:
1.4 mm (0.0551 in.)

2. ROTATE TIRES

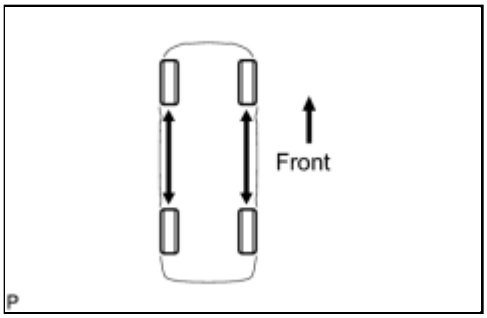

(a) Rotate the tires as shown in the illustration.

3. INSPECT WHEEL BALANCE

(a) Check and adjust the off-the-car balance.

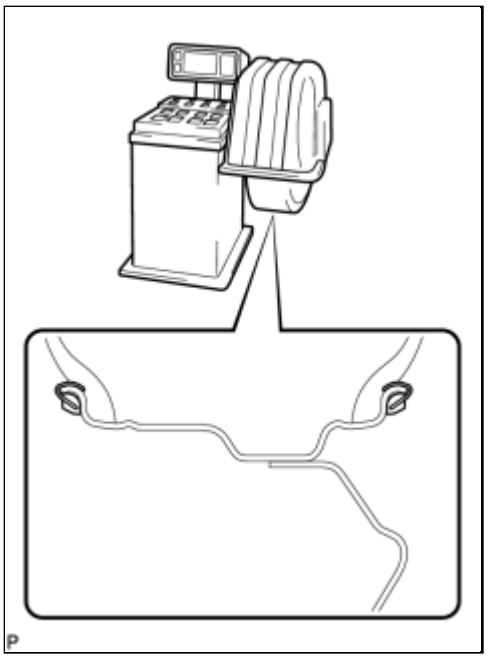

(1) Steel wheel:

Maximum imbalance after adjustment:
8.0 g (0.0176 lb)

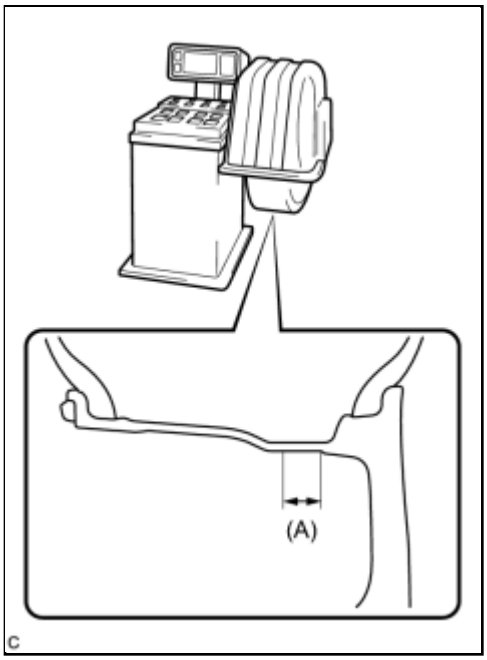

(2) Others (Non-steel wheel):

Maximum imbalance after adjustment:
8.0 g (0.0176 lb)

NOTICE:

- Use a cleaning detergent to remove dirt, oil and water from the surface where the balance weight is to be adhered.
- Do not touch the adhesive surface of the tape.
- Adhere the sticking type balance weight to the flat position (A) shown in the illustration.
  Width (A):
  25 mm (0.984 in.)
- Push the balance weight securely with a finger to adhere it to the position.
- Do not reuse the balance weight.

HINT:

The inner side balance weight should be installed by clipping it to the rim.

4. INSPECT FRONT AXLE HUB BEARING LOOSENESS

HINT: INFO .

5. INSPECT REAR AXLE HUB BEARING LOOSENESS

HINT: INFO .

6. INSPECT FRONT AXLE HUB RUNOUT

HINT: INFO .

7. INSPECT REAR AXLE HUB RUNOUT

HINT: INFO .

Last Modified: 3-10-2010	6.4 K	**From:** 200901
Model Year: 2010	**Model:** Corolla	**Doc ID:** RM000000XV701CX
Title: TIRE PRESSURE MONITORING: TIRE PRESSURE WARNING ECU: COMPONENTS (2010 Corolla)		

COMPONENTS

ILLUSTRATION

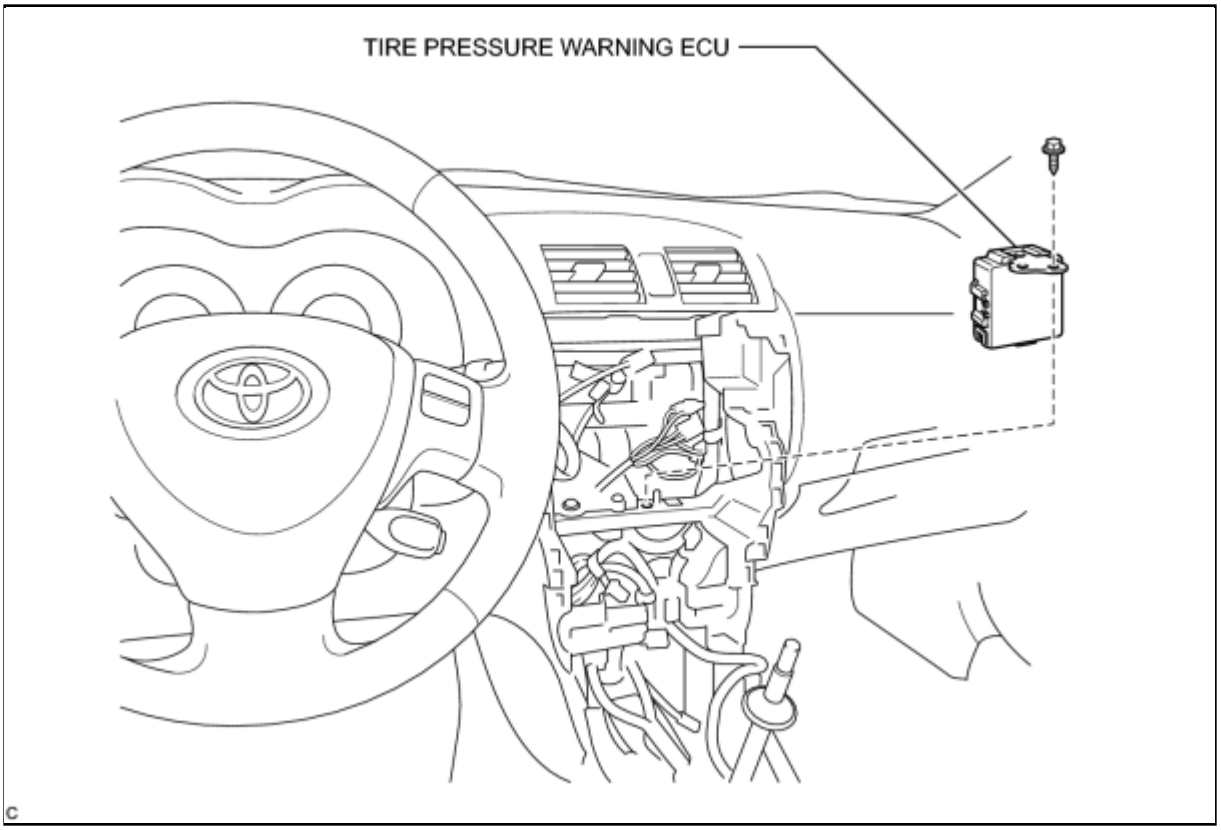

Last Modified: 3-10-2010	6.4 A	**From:** 200901
Model Year: 2010	**Model:** Corolla	**Doc ID:** RM0000024T8011X
Title: TIRE PRESSURE MONITORING: TIRE PRESSURE WARNING ECU: REMOVAL (2010 Corolla)		

REMOVAL

NOTICE:

Before removing the tire pressure warning ECU, read the registered transmitter IDs of all wheels and write them down to use for re-registration of transmitter IDs INFO **.**

1. DISCONNECT CABLE FROM NEGATIVE BATTERY TERMINAL

2. REMOVE AIR CONDITIONING CONTROL ASSEMBLY (for Automatic Air Conditioning System)

HINT:

Refer to the instructions for Removal of the air conditioning panel (for Automatic Air Conditioning System) INFO **.**

3. REMOVE AIR CONDITIONING PANEL ASSEMBLY (for Manual Air Conditioning System)

HINT:

Refer to the instructions for Removal of the air conditioning panel (for Manual Air Conditioning System) INFO **.**

4. REMOVE TIRE PRESSURE WARNING ECU



(a) Remove the screw.

(b) Disconnect the connector and remove the tire pressure warning ECU.

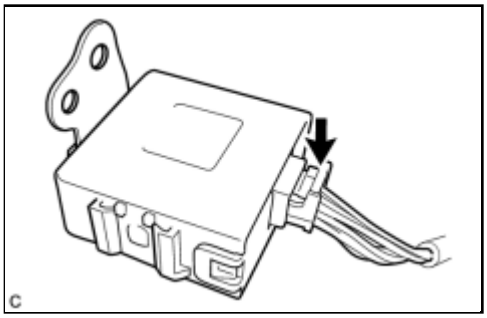
C

Last Modified: 3-10-2010	6.4 A	**From:** 200901
Model Year: 2010	**Model:** Corolla	**Doc ID:** RM0000024T7011X
Title: TIRE PRESSURE MONITORING: TIRE PRESSURE WARNING ECU: INSTALLATION (2010 Corolla)		

INSTALLATION

1. INSTALL TIRE PRESSURE WARNING ECU

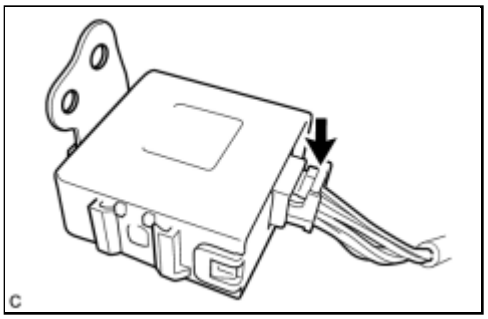

(a) Connect the connector to the tire pressure warning ECU.

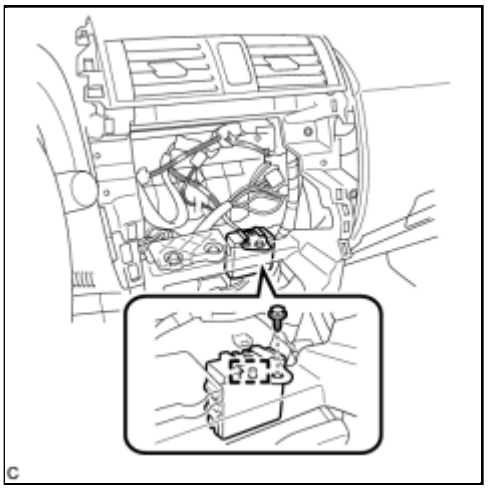

(b) Install the tire pressure warning ECU with the screw.

HINT:

Engage the pin into the hole as shown in the illustration to install the tire pressure warning ECU.

2. INSTALL AIR CONDITIONING CONTROL ASSEMBLY (for Automatic Air Conditioning System)

HINT:

Refer to the instructions for Installation of the air conditioning panel (for Automatic Air Conditioning System) INFO .

3. INSTALL AIR CONDITIONING PANEL ASSEMBLY (for Manual Air Conditioning System)

HINT:

Refer to the instructions for Installation of the air conditioning panel (for Manual Air Conditioning System) INFO .

4. CONNECT CABLE TO NEGATIVE BATTERY TERMINAL

5. REGISTER TRANSMITTER ID

HINT:

It is necessary to register all transmitter IDs INFO .

6. INSPECT TIRE PRESSURE WARNING SYSTEM

HINT: INFO .

7. INITIALIZE SYSTEM

NOTICE:

- Be sure to register the transmitter IDs of all tires in the ECU before initialization.
- Be sure to inflate all tires to the proper inflation pressure before initialization.

HINT: INFO .

Last Modified: 3-10-2010	6.4 K	**From:** 200901
Model Year: 2010	**Model:** Corolla	**Doc ID:** RM0000026X700QX
Title: TIRE PRESSURE MONITORING: TIRE PRESSURE WARNING RECEIVER: COMPONENTS (2010 Corolla)		

COMPONENTS

ILLUSTRATION

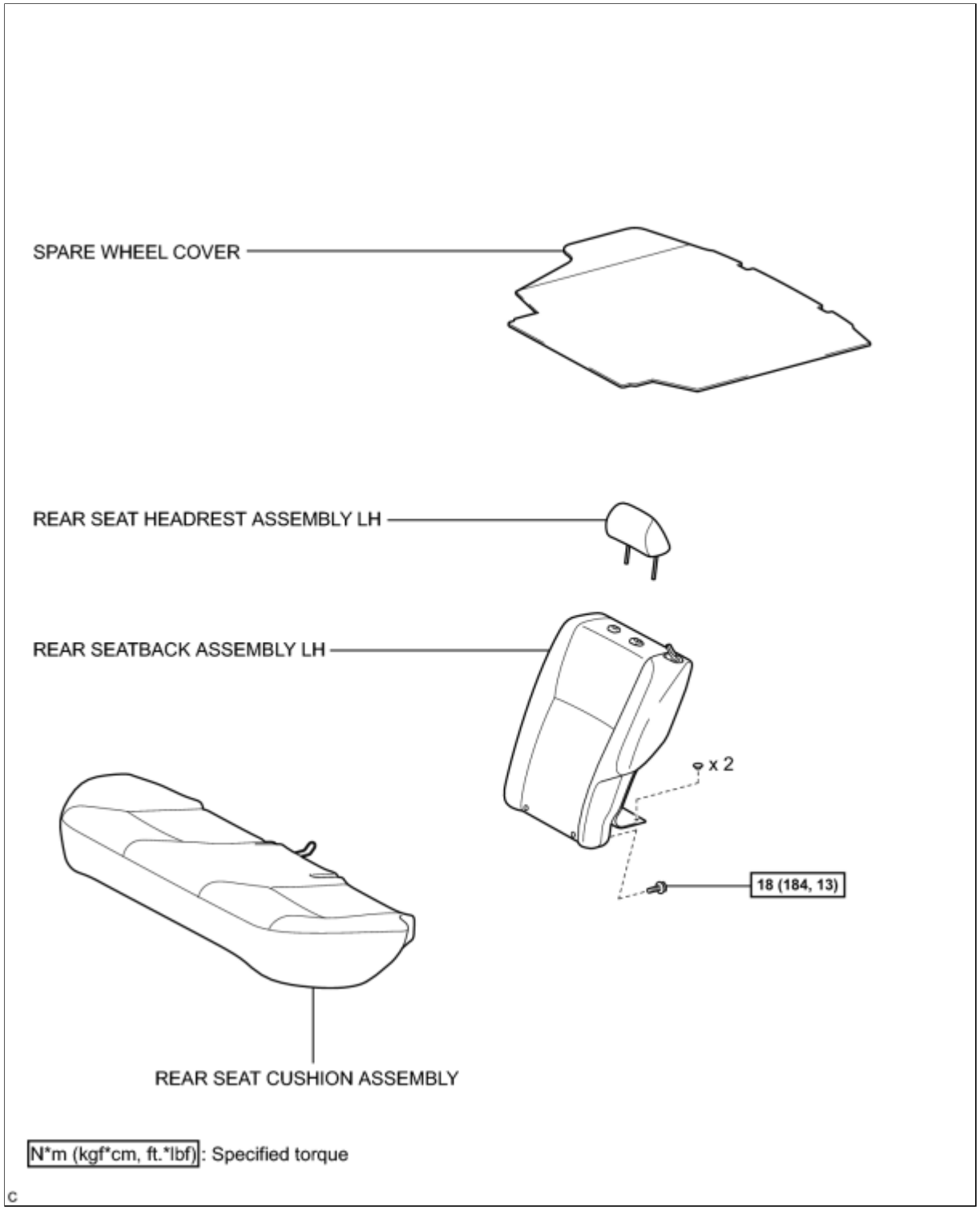

ILLUSTRATION

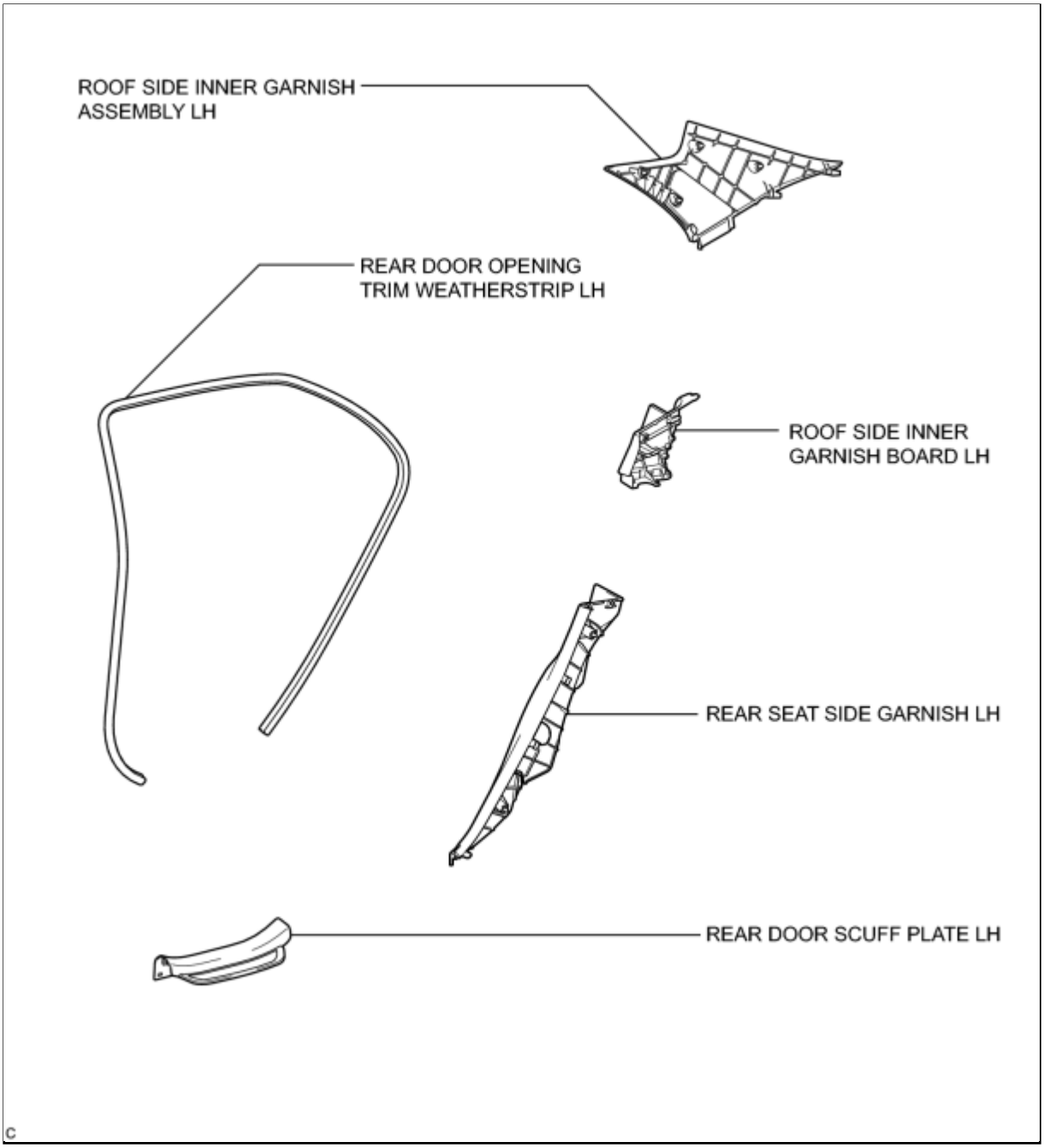

ILLUSTRATION

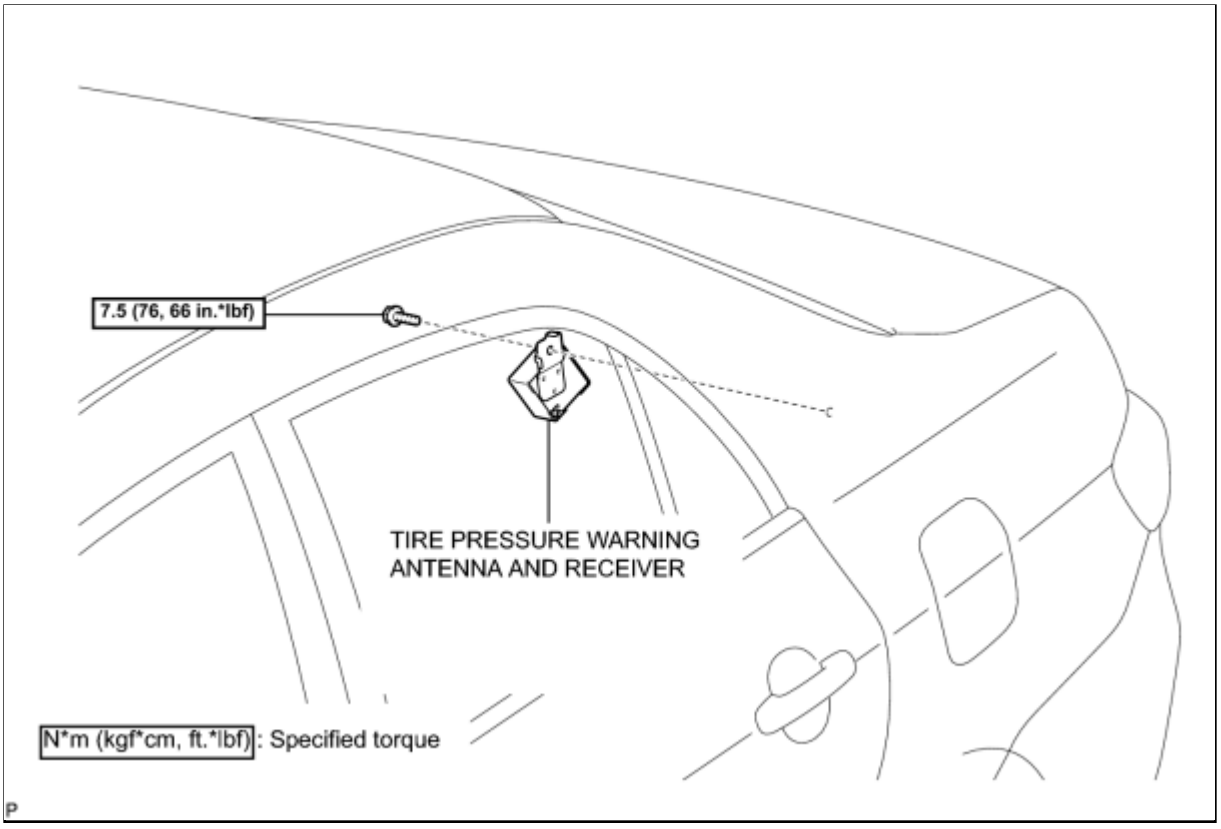
7.5 (76, 66 in.*lbf)
TIRE PRESSURE WARNING
ANTENNA AND RECEIVER
N*m (kgf*cm, ft.*lbf): Specified torque

P

Last Modified: 3-10-2010	6.4 A	**From:** 200901
Model Year: 2010	**Model:** Corolla	**Doc ID:** RM0000026X800QX
Title: TIRE PRESSURE MONITORING: TIRE PRESSURE WARNING RECEIVER: REMOVAL (2010 Corolla)		

REMOVAL

1. DISCONNECT CABLE FROM NEGATIVE BATTERY TERMINAL

2. REMOVE SPARE WHEEL COVER

3. REMOVE REAR SEAT HEADREST ASSEMBLY LH

4. REMOVE REAR SEAT CUSHION ASSEMBLY INFO

5. REMOVE REAR SEATBACK ASSEMBLY LH INFO

6. REMOVE REAR DOOR SCUFF PLATE LH INFO

7. REMOVE REAR DOOR OPENING TRIM WEATHERSTRIP LH INFO

8. REMOVE REAR SEAT SIDE GARNISH LH INFO

9. REMOVE ROOF SIDE INNER GARNISH BOARD LH INFO

10. REMOVE ROOF SIDE INNER GARNISH ASSEMBLY LH INFO

11. REMOVE TIRE PRESSURE WARNING ANTENNA AND RECEIVER



(a) Remove the bolt.

(b) Disconnect the connector and remove the tire pressure warning antenna and receiver.

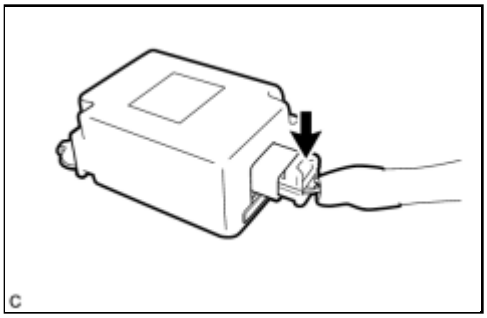
C

Last Modified: 3-10-2010	6.4 A	**From:** 200901
Model Year: 2010	**Model:** Corolla	**Doc ID:** RM0000026X600QX
Title: TIRE PRESSURE MONITORING: TIRE PRESSURE WARNING RECEIVER: INSTALLATION (2010 Corolla)		

INSTALLATION

1. INSTALL TIRE PRESSURE WARNING ANTENNA AND RECEIVER

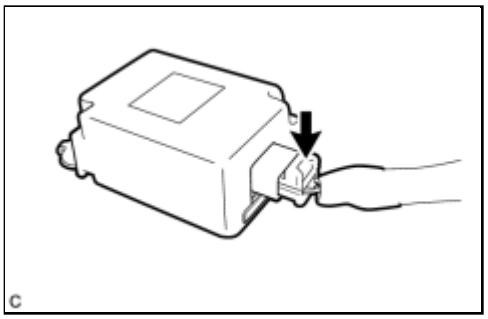

(a) Connect the connector.



(b) Install the tire pressure warning antenna and receiver with the bolt.

Torque: 7.5 N·m (76 kgf·cm, 66in·lbf)

HINT:

Engage the 2 tabs into the holes as shown in the illustration to install the tire pressure warning antenna and receiver.

2. INSTALL ROOF SIDE INNER GARNISH ASSEMBLY LH INFO

3. INSTALL ROOF SIDE INNER GARNISH BOARD LH INFO

4. INSTALL REAR SEAT SIDE GARNISH LH INFO

5. INSTALL REAR DOOR OPENING TRIM WEATHERSTRIP LH INFO

6. INSTALL REAR DOOR SCUFF PLATE LH INFO

7. INSTALL REAR SEATBACK ASSEMBLY LH INFO

8. INSTALL REAR SEAT CUSHION ASSEMBLY INFO

9. INSTALL REAR SEAT HEADREST ASSEMBLY LH

10. CONNECT CABLE TO NEGATIVE BATTERY TERMINAL

11. INSPECT TIRE PRESSURE WARNING SYSTEM

HINT: INFO .

Last Modified: 3-10-2010	6.4 K	**From:** 200901
Model Year: 2010	**Model:** Corolla	**Doc ID:** RM00000271J00PX
Title: TIRE PRESSURE MONITORING: TIRE PRESSURE WARNING RESET SWITCH: COMPONENTS (2010 Corolla)		

COMPONENTS

ILLUSTRATION

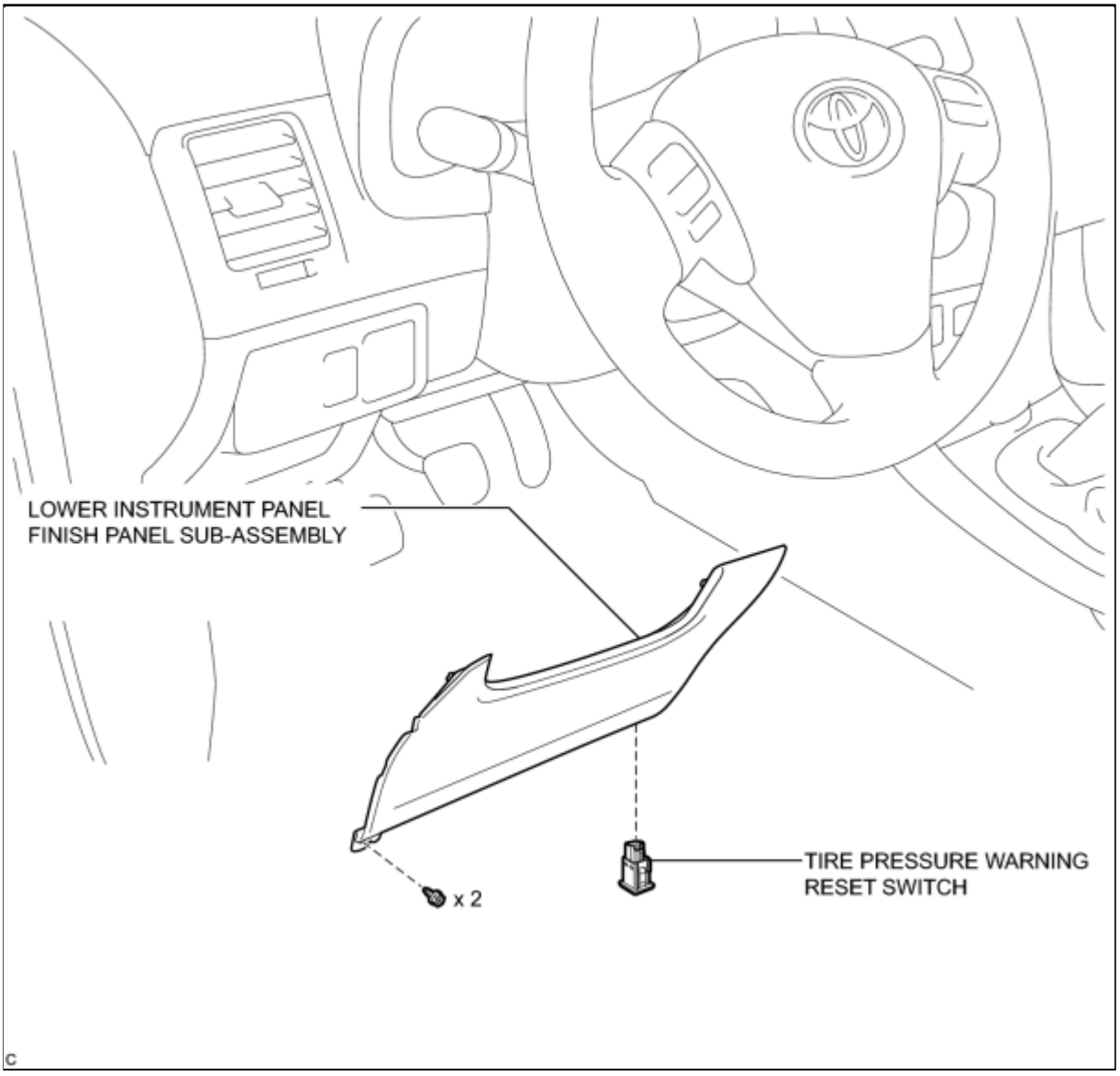

Last Modified: 3-10-2010	6.4 A	**From:** 200901
Model Year: 2010	**Model:** Corolla	**Doc ID:** RM00000271K00PX
Title: TIRE PRESSURE MONITORING: TIRE PRESSURE WARNING RESET SWITCH: REMOVAL (2010 Corolla)		

REMOVAL

1. REMOVE LOWER INSTRUMENT PANEL FINISH PANEL SUB-ASSEMBLY INFO

2. REMOVE TIRE PRESSURE WARNING RESET SWITCH

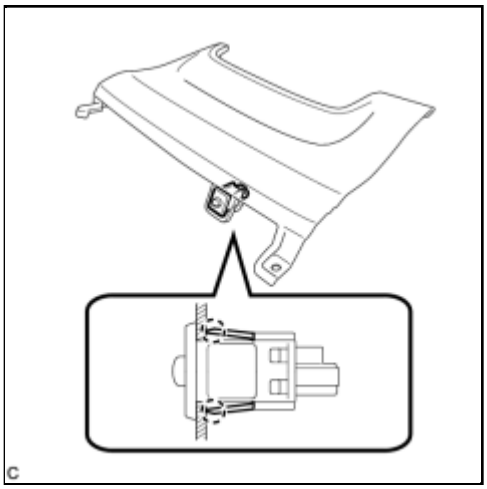

(a) Disengage the 2 claws and remove the tire pressure warning reset switch from the lower instrument panel finish panel sub-assembly.

Last Modified: 3-10-2010	6.4 G	**From:** 200901
Model Year: 2010	**Model:** Corolla	**Doc ID:** RM000002KXC00VX
Title: TIRE PRESSURE MONITORING: TIRE PRESSURE WARNING RESET SWITCH: INSPECTION (2010 Corolla)		

INSPECTION

1. INSPECT TIRE PRESSURE WARNING RESET SWITCH

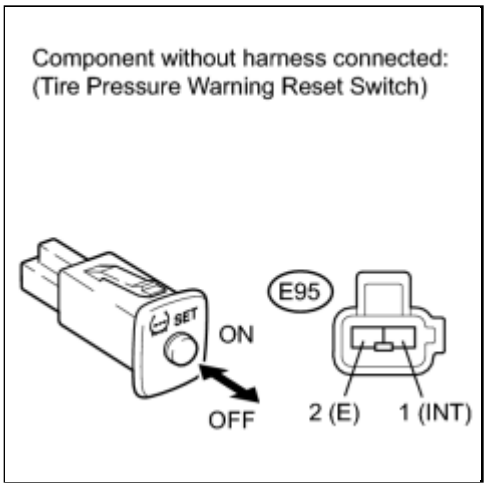

(a) Remove the tire pressure warning reset switch.

(b) Measure the resistance according to the value(s) in the table below.

Standard resistance:

TESTER CONNECTION	SWITCH CONDITION	SPECIFIED CONDITION
E95-1 (INT) - E95-2 (E)	ON	Below 1 Ω
	OFF	10 kΩ or higher

If the result is not as specified, replace the tire pressure warning reset switch.

Last Modified: 3-10-2010	6.4 A	**From:** 200901
Model Year: 2010	**Model:** Corolla	**Doc ID:** RM0000027I00PX
Title: TIRE PRESSURE MONITORING: TIRE PRESSURE WARNING RESET SWITCH: INSTALLATION (2010 Corolla)		

INSTALLATION

1. INSTALL TIRE PRESSURE WARNING RESET SWITCH

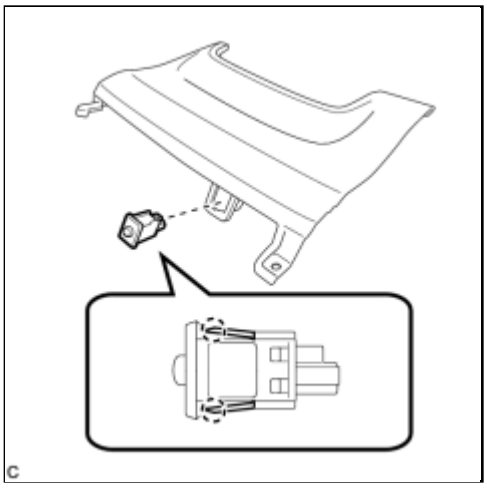

(a) Engage the 2 claws to install the tire pressure warning reset switch to the lower instrument panel finish panel sub-assembly.

2. INSTALL LOWER INSTRUMENT PANEL FINISH PANEL SUB-ASSEMBLY INFO

3. INSPECT TIRE PRESSURE WARNING SYSTEM

HINT: INFO .

Last Modified: 3-10-2010	6.4 L	**From:** 200901
Model Year: 2010	**Model:** Corolla	**Doc ID:** RM000000X9801VX
Title: TIRE PRESSURE MONITORING: TIRE PRESSURE WARNING SYSTEM: PRECAUTION (2010 Corolla)		

PRECAUTION

1. NOTICE FOR INITIALIZATION

NOTICE:

When disconnecting the cable from the negative (-) battery terminal, initialize the following system(s) after the cable is reconnected.

SYSTEM	SEE PROCEDURE
2ZR-FE SFI System	INFO
2AZ-FE SFI System	

2. TIRE PRESSURE WARNING SYSTEM PRECAUTION

(a) When the tire pressure warning light comes on, immediately check the tire pressure of the tire and adjust it to the specified value (The tire pressure warning light will come on after blinking for 1 minute, the system may be malfunction. In this case, refer to following troubleshooting to repair the malfunction).

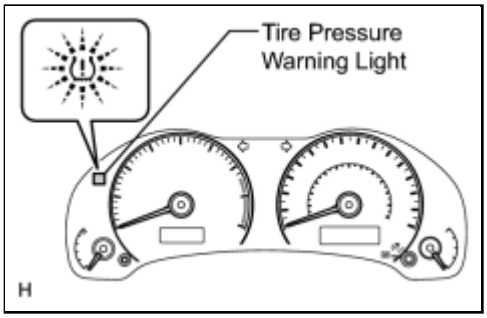

Cold Tire Inflation Pressure

TIRE SIZE	FRONT KPA (KGF/CM^2, PSI)	REAR KPA (KGF/CM^2, PSI)
P195/65R15 89S 195/65R15 91H	210 (2.1, 30)	210 (2.1, 30)
P205/55R16 89H P215/45R17 87W 205/55R16 91V	220 (2.2, 32)	220 (2.2, 32)

(b) When the tire pressure warning light comes on after blinking for 1 minute, there is a malfunction in the system. Check for DTCs.

(c) It is necessary to register the transmitter ID in the tire pressure warning ECU after replacing the tire pressure warning valve and transmitter and/or tire pressure warning ECU INFO .

(d) When replacing the tire pressure warning ECU:

(1) Using the Data List, read the transmitter IDs registered in the ECU and make a note of them before removing the tire pressure warning ECU.

(2) Register the transmitter IDs after installing a new tire pressure warning ECU.

(e) When replacing the tire pressure warning valve and transmitter:

(1) Take a note of the 7-digit number (transmitter ID) written on the new tire pressure warning valve and transmitter when replacing the old one. Register the transmitter IDs in the tire pressure warning ECU after replacing the tire pressure warning valve and transmitter and installing the tires and wheels on the vehicle.

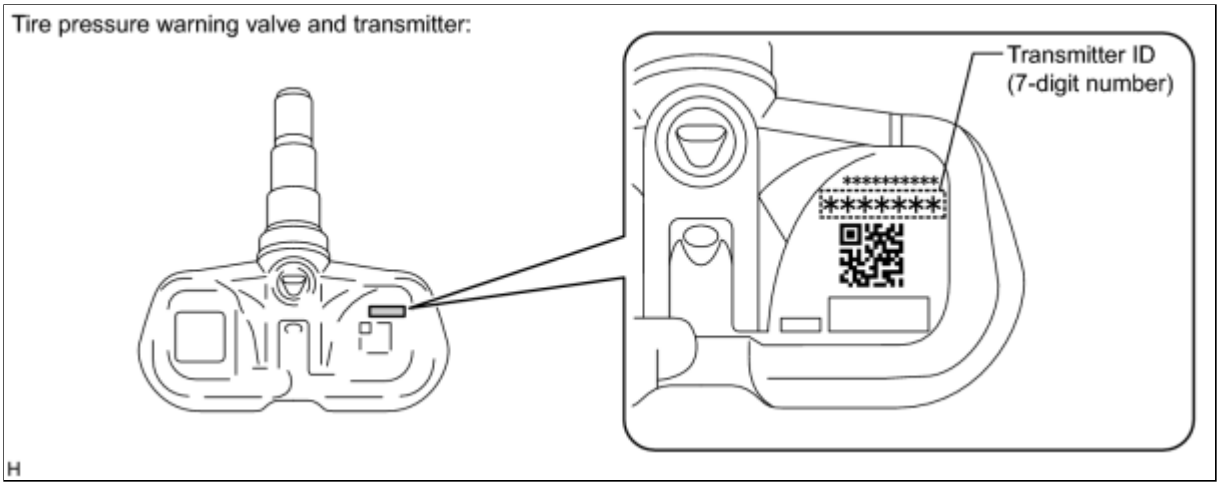

NOTICE:

The transmitter ID is written on the tire pressure warning valve and transmitter. It will be unable to be read after installing the tire pressure warning valve and transmitter on the tire and wheel. Therefore, take a note of the transmitter ID before installing the tire pressure warning valve and transmitter.

(f) Tire and wheel replacement or tire rotation:

- After the tires or wheels are replaced with a new tire pressure warning valve and transmitter, it is necessary to register the transmitter IDs.
- After the set of the tires and wheels are replaced, be sure to select the tire pressure warning select switch.
- It is not necessary to register the transmitter IDs after tire rotation is performed.
- After dropping the tire pressure warning valve and transmitter into the tire, disengage the bead from the wheel.

NOTICE:

Be careful not to damage the tire pressure warning valve and transmitter because of interference between the sensor and tire bead.

- The initialization is necessary to reset the warning threshold in accordance with the variant tire pressure settings due to the tire types.

(g) When replacing the tire pressure warning ECU and the tire pressure warning valve and transmitters, it is necessary to perform the initialization INFO after the registration INFO .

(h) Precautions about the tire pressure:

- The tire pressures decrease naturally.
- In winter, tire pressure may decrease due to low depending on the ambient temperatures (the tire pressure decreases by approximately 10 kPa (0.1 kgf/cm^2, 1.5 psi) for every 10°C (50°F) drop in the ambient temperature).

Therefore, the tire pressure warning system is more likely to operate if the tire pressures are not adjusted appropriately. If the daily temperature variation is large, pressurize the tires high so that the tire pressures are suitable under cold conditions. As a result, incorrect tire pressure warning operation should decrease.

3. IN CASE OF TIRE AND WHEEL REPLACEMENT

(a) When tires and wheels are replaced, always ensure that each transmitter ID is correctly registered.

(b) Before removing the tires from the disc wheels or reinstalling the tires to the disc wheels, be sure to follow the correct procedures for removal and reinstallation of the tire pressure warning valve and transmitter. Failure to do so may cause the tire pressure warning valve and transmitters to break INFO .

4. INITIALIZATION PRECAUTION

(a) Initialize the tire pressure warning system after any of the following is performed:

- Replacing the tire pressure warning ECU and/or the tire pressure warning valve and transmitter
- When rotating tires on vehicles with differing front and rear tire inflation pressures

HINT:

The tire pressure warning system will not operate properly if it is not initialized INFO .

5. FAIL-SAFE FUNCTION

(a) When a system malfunction occurs in the tire pressure warning system, the tire pressure warning light and master warning light comes on after blinking for 1 minute to informs the driver of the system failure.

(b) The result of this diagnosis is stored in the tire pressure warning ECU.

6. CHECK TIRE PRESSURE AFTER REPAIRS

(a) After repairs confirm that the actual tire pressures are displayed in the Data List INFO .

7. REMOVAL AND INSTALLATION TIRE PRESSURE WARNING VALVE AND TRANSMITTER

(a) When installing a tire, make sure that the tire pressure warning valve and transmitter does not interfere with the tire bead in order to prevent damage to the tire pressure warning valve and transmitter.

(b) After completing the operation, remove the valve core to rapidly release the air in the tire and check that the warning light comes on. If the warning light does not come on, the system may be defective.

(c) If there is air leakage, tighten the nut to a torque of 4.0 N*m (41 kgf*cm, 35 in.*lbf) and push the valve core 2 or 3 times to remove any dirt attached to the valve core. If air continues to leak, replace the grommet, washer, and nut.

(d) When installing the tire pressure warning valve and transmitter, make sure the rim, grommet, washer, and nut are clean. Use a manufacturer-specified the valve cap.

(e) When putting air into the tire, first install the tire pressure valve straight onto the stem of the tire pressure warning valve and transmitter.

8. TIRE AND WHEEL REPLACEMENT

(a) To prevent damage to the tire pressure warning valve and transmitter, drop the tire pressure warning valve and transmitter into the tire whenever removing the tire from the wheel.

NOTICE:

Always use a new grommet, washer and nut when installing the tire pressure warning valve and transmitter.

(b) If tires and wheels are replaced, register the transmitter IDs 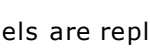

.

Last Modified: 3-10-2010	6.4 R	**From:** 200901
Model Year: 2010	**Model:** Corolla	**Doc ID:** RM000000XML02UX
Title: TIRE PRESSURE MONITORING: TIRE PRESSURE WARNING SYSTEM: PARTS LOCATION (2010 Corolla)		

PARTS LOCATION

ILLUSTRATION

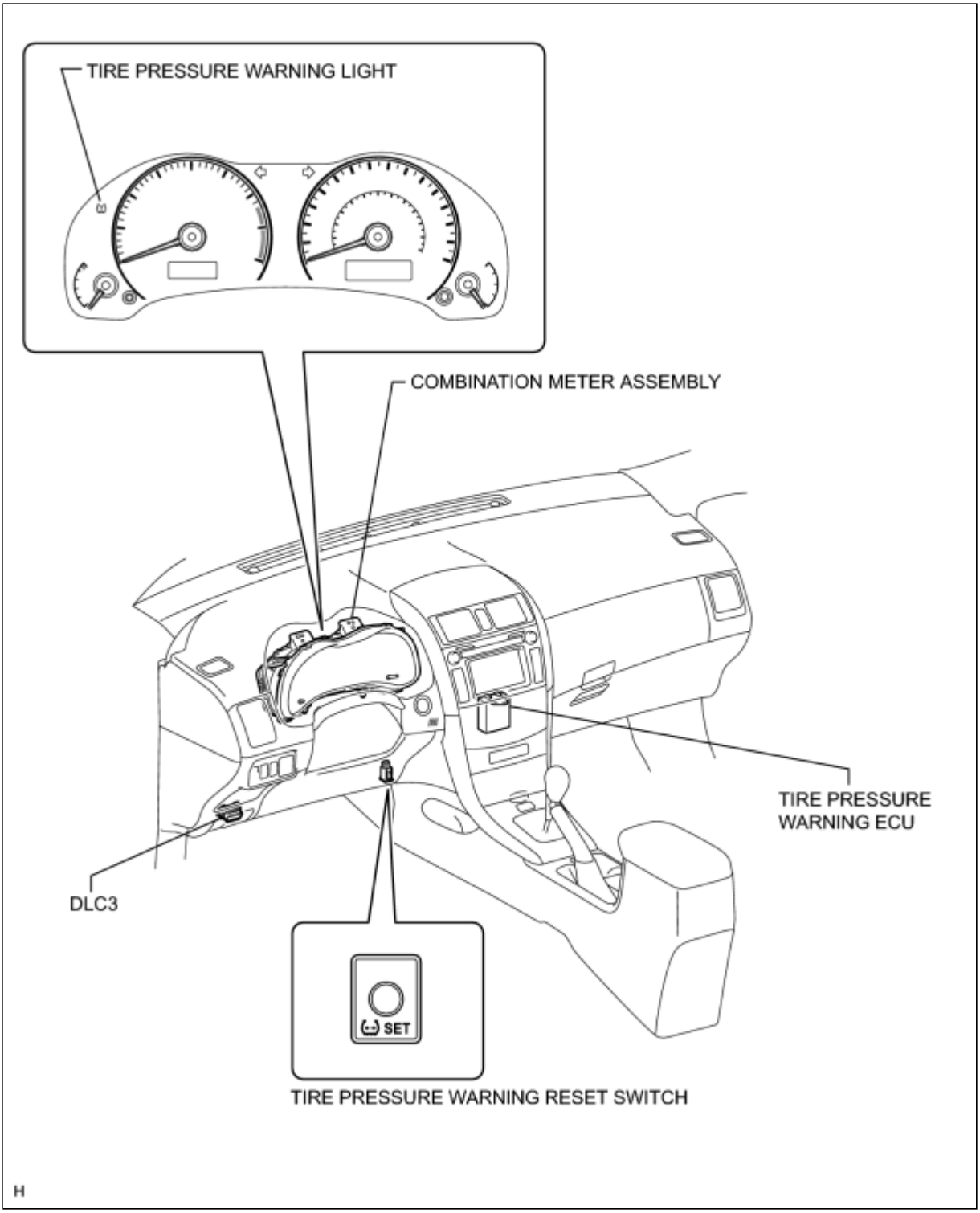

ILLUSTRATION

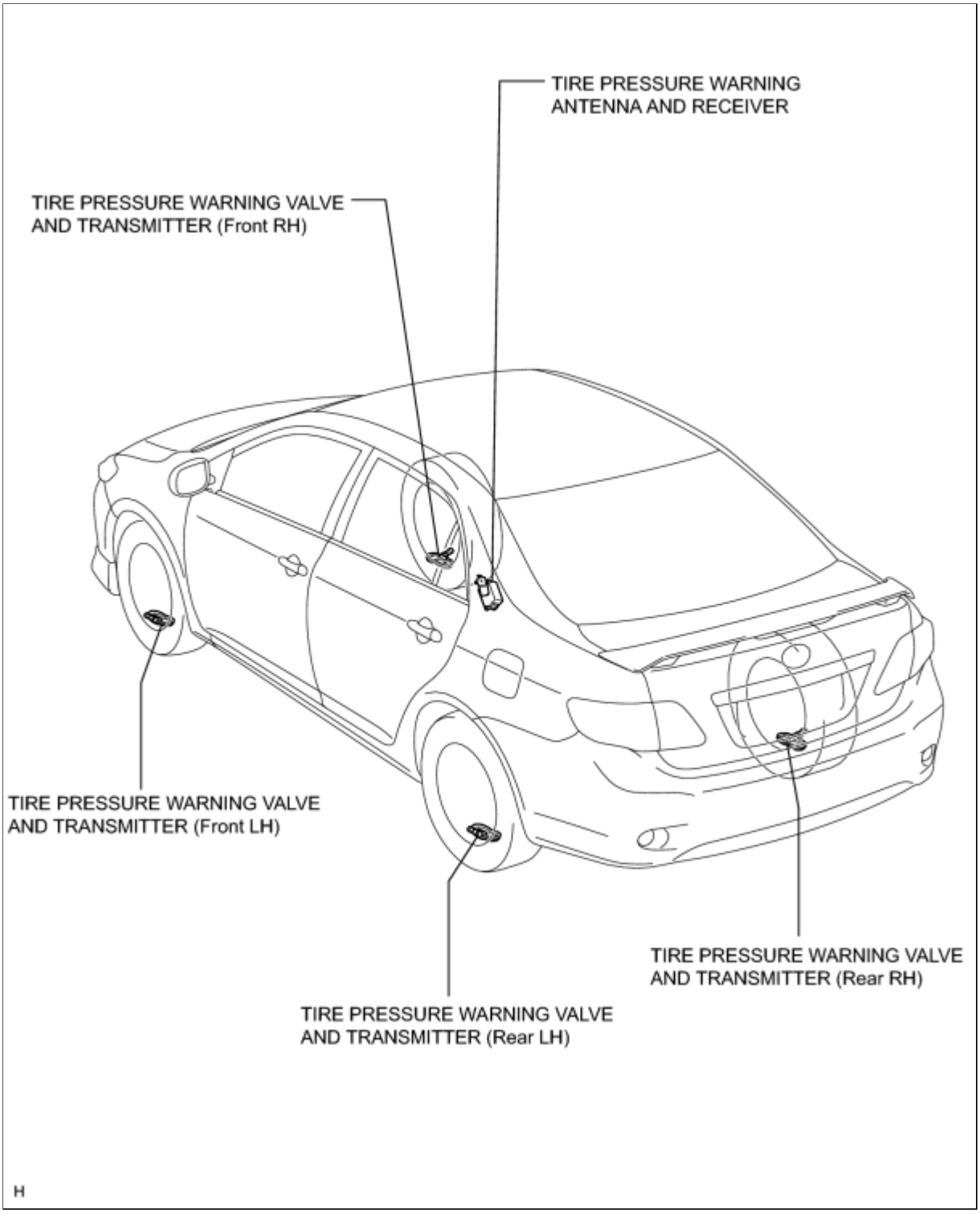
TIRE PRESSURE WARNING
ANTENNA AND RECEIVER
TIRE PRESSURE WARNING VALVE
AND TRANSMITTER (Front RH)
TIRE PRESSURE WARNING VALVE
AND TRANSMITTER (Front LH)
TIRE PRESSURE WARNING VALVE
AND TRANSMITTER (Rear RH)
TIRE PRESSURE WARNING VALVE
AND TRANSMITTER (Rear LH)
H

Last Modified: 3-10-2010	6.4 D	**From:** 200901
Model Year: 2010	**Model:** Corolla	**Doc ID:** RM000000XMQ03LX
Title: TIRE PRESSURE MONITORING: TIRE PRESSURE WARNING SYSTEM: HOW TO PROCEED WITH TROUBLESHOOTING (2010 Corolla)		

HOW TO PROCEED WITH TROUBLESHOOTING

HINT:

- Use the following procedures to troubleshoot the tire pressure warning system.
- *: Use the Techstream.

1.	**VEHICLE BROUGHT TO WORKSHOP**

NEXT

2.	**CUSTOMER PROBLEM ANALYSIS**

(a) Interview the customer to confirm the trouble.

HINT:

It is important to collect as much specific information as possible from the customer to allow for a quick repair.

NEXT

3.	**ADJUST TIRE PRESSURE***

(a) Turn the ignition switch off.

(b) Set the all tire pressure to the specified value INFO .

(c) Connect the Techstream to the DLC3.

(d) Turn the ignition switch to ON.

(e) Enter the following menus: Chassis / Tire Pressure Monitor / Data List.

(f) Read the "ID Tire Inflation Pressure" values.

(g) Check the Data List INFO .

HINT:

- It takes about 2 or 3 minutes to display the updated tire pressure data.
- If the problem is that the tire pressure decreases, wait until all of the tire pressure data is received by the ECU. If the data is received, the tire pressure warning light will goes off.

Result:

CONDITION	PROCEED TO
Tire pressure warning light goes off	A
Tire pressure warning light remains on	B

A ▶ GO TO STEP 9

B ▼

4.	**CHECK FOR DTC***

(a) Check for DTCs INFO .

Result:

RESULT	PROCEED TO
DTC is output	A
DTC is not output	B

B ▶ GO TO STEP 6

A ▼

5.	**DTC CHART**

(a) Refer to Diagnostic Trouble Code Chart INFO .

NEXT ▶ **GO TO STEP 7**

6.	**PROBLEM SYMPTOMS TABLE**

(a) Refer to Problem Symptoms Table INFO .

NEXT
▼

7.	**CIRCUIT INSPECTION***

(a) Refer to Electronic Circuit Inspection Procedure INFO .

NEXT
▼

8.	**REPAIR OR REPLACE**

(a) Repair or replace parts based on the diagnosis result.

NEXT
▼

9.	**CONFIRMATION TEST***

(a) Check the Data List to confirm that the tire inflation pressure has been received INFO .

(b) Perform initialization INFO .

(c) Confirm that the initialization has been completed.

Last Modified: 3-10-2010	6.4 D	**From:** 200901
Model Year: 2010	**Model:** Corolla	**Doc ID:** RM000000XMM042X
Title: TIRE PRESSURE MONITORING: TIRE PRESSURE WARNING SYSTEM: SYSTEM DESCRIPTION (2010 Corolla)		

SYSTEM DESCRIPTION

1. DESCRIPTION OF SYSTEM

(a) A tire pressure warning valve and transmitter is equipped with a tire pressure sensor and a transmitter and is installed in each tire and wheel assembly. The sensor measures the tire pressure. The measured value and transmitter ID are transmitted to the tire pressure warning antenna and receiver on the body as radio waves and then sent to the tire pressure warning ECU from the tire pressure warning antenna and receiver. If the transmitter ID has already been registered, the ECU compares the measured air pressure value with the standard value. When the value is less than the standard value registered in the tire pressure warning ECU, the warning light on the combination meter comes on. The tire pressure warning reset switch addresses the differences in the air pressure settings by the type of tires.

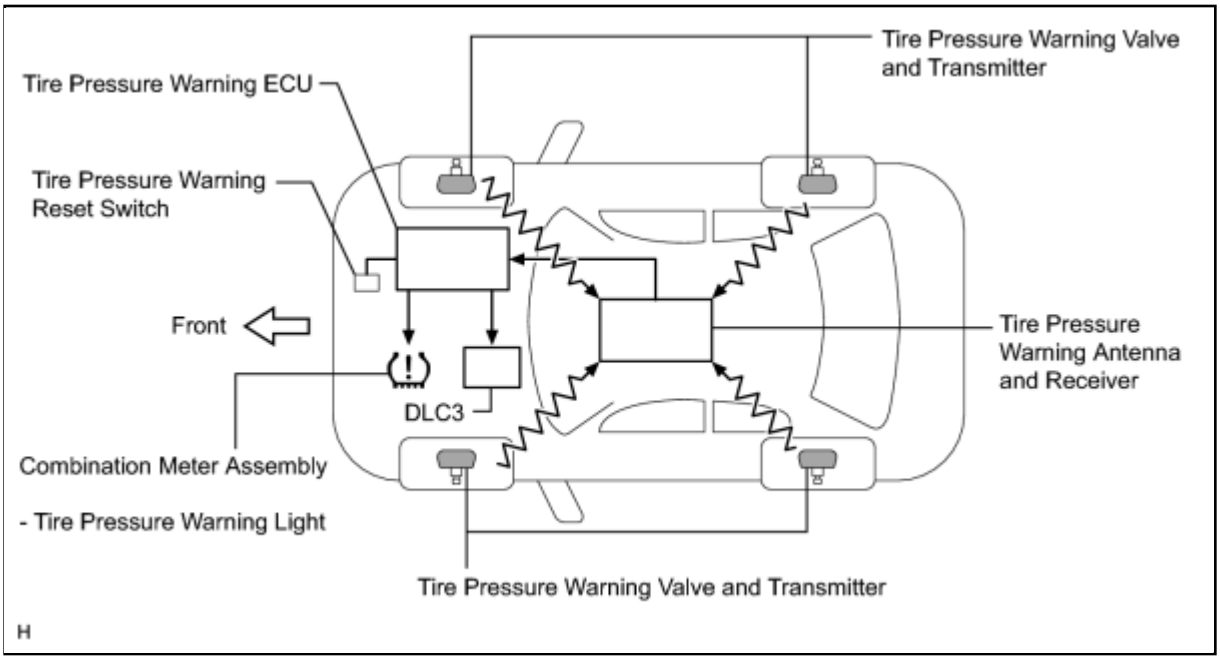

2. INITIAL CHECK

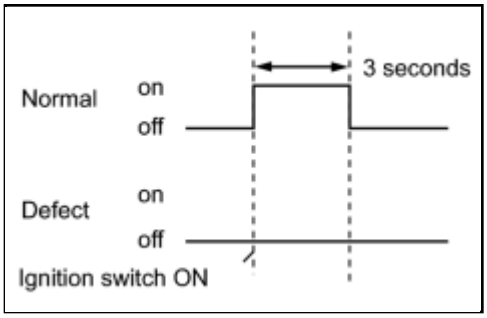

(a) After the ignition switch is turned to ON, the tire pressure warning light comes on for 3 seconds and then go off.

HINT:

If the warning light does not come on for 3 seconds, troubleshoot the tire pressure warning light circuit INFO **.**

3. WHEN TIRE PRESSURE WARNING LIGHT IS LIT

(a) When the tire pressure warning light does not go off, or when it comes on during driving, check the tire pressure. If the tire pressure warning light comes on within several hours of adjusting the tire pressure, the tire may have a slow air leak.

(b) Under the following conditions, the system may not function properly:

(1) The system will be disabled in the following conditions:

(When the condition becomes normal, the system will work properly.)

- If tires not equipped with the tire pressure warning valve and transmitters are used.
- If the ID code on the tire pressure warning valve and transmitters is not registered in the tire pressure warning ECU.
- If the tire inflation pressure is absolute pressure: 600 kPa (6.0 kgf/cm^2, 87 psi) or more; relative pressure: 500 kPa (5.0 kgf/cm^2, 73 psi) or more.
- If the tire pressure warning valve and transmitter battery voltage drops. (battery life: 10 years)

(2) The system may be disabled in the following conditions:

(When the condition becomes normal, the system will work properly.)

- If electronic devices or facilities using similar radio wave frequencies are nearby.
- If a radio set at similar frequencies is in used in the vehicle.
- If a window tint that affects the radio wave signal is installed.
- If there is a lot of snow or ice on the vehicle, in particular around the wheels or wheel housings.
- If non-genuine wheel are used.
- If tire chains are used.

(c) After removing and installing the ECU or a sensor, check for a diagnostic trouble code and verify that it is a normal system code.

4. FUNCTION OF COMPONENTS

COMPONENTS	FUNCTION
Tire pressure warning valve and transmitter	Combined as a single unit with a disc wheel air valve, it measures tire pressure and temperature and transmits an ID number for measurement value and identification. Built-in the battery.
Tire pressure warning antenna and receiver	Receives and transmits a necessary signal from the transmitters to the tire pressure warning ECU.
Tire pressure warning ECU	Receives a signal from the receiver and identifies it as vehicle's own signal. If the measured value is equal to or lower than the specified value, it transmits a signal to illuminate the tire pressure warning light on the combination meter.
Tire pressure warning light	Located in the combination meter, it informs the driver of lowered tire pressure and system failure.
Tire pressure warning reset switch	Allows entering initialization mode for when the standard pressure is changed

5. TIRE PRESSURE WARNING RESET SWITCH

- By operating the tire pressure warning reset switch, the tire pressure warning ECU can be set to issue a warning at an inflation pressure that corresponds to the standard pressure of tires.

  Therefore, the dealer must set the warning threshold to the proper value in order to comply with the local regulations.
- Operate the tire pressure warning reset switch only after the inflation pressures of all tires have been adjusted on the vehicle.
- To initialize the system, press and hold the tire pressure warning reset switch for 3 seconds or longer with the ignition switch in the ON position. When the system receives the initialization signal, the warning light blinks 3 times (1 second on, 1 second off).
- During initialization, the tire pressure warning valve and transmitter measures the inflation pressure of the tire, and registers the signals that are transmitted into the tire pressure warning ECU at a frequency of once per minute. The initialization process is completed when signals from all the tires have been received. It takes a few minutes.



Last Modified: 3-10-2010	6.4 U	**From:** 200901
Model Year: 2010	**Model:** Corolla	**Doc ID:** RM000000XMN033X
Title: TIRE PRESSURE MONITORING: TIRE PRESSURE WARNING SYSTEM: SYSTEM DIAGRAM (2010 Corolla)		

SYSTEM DIAGRAM

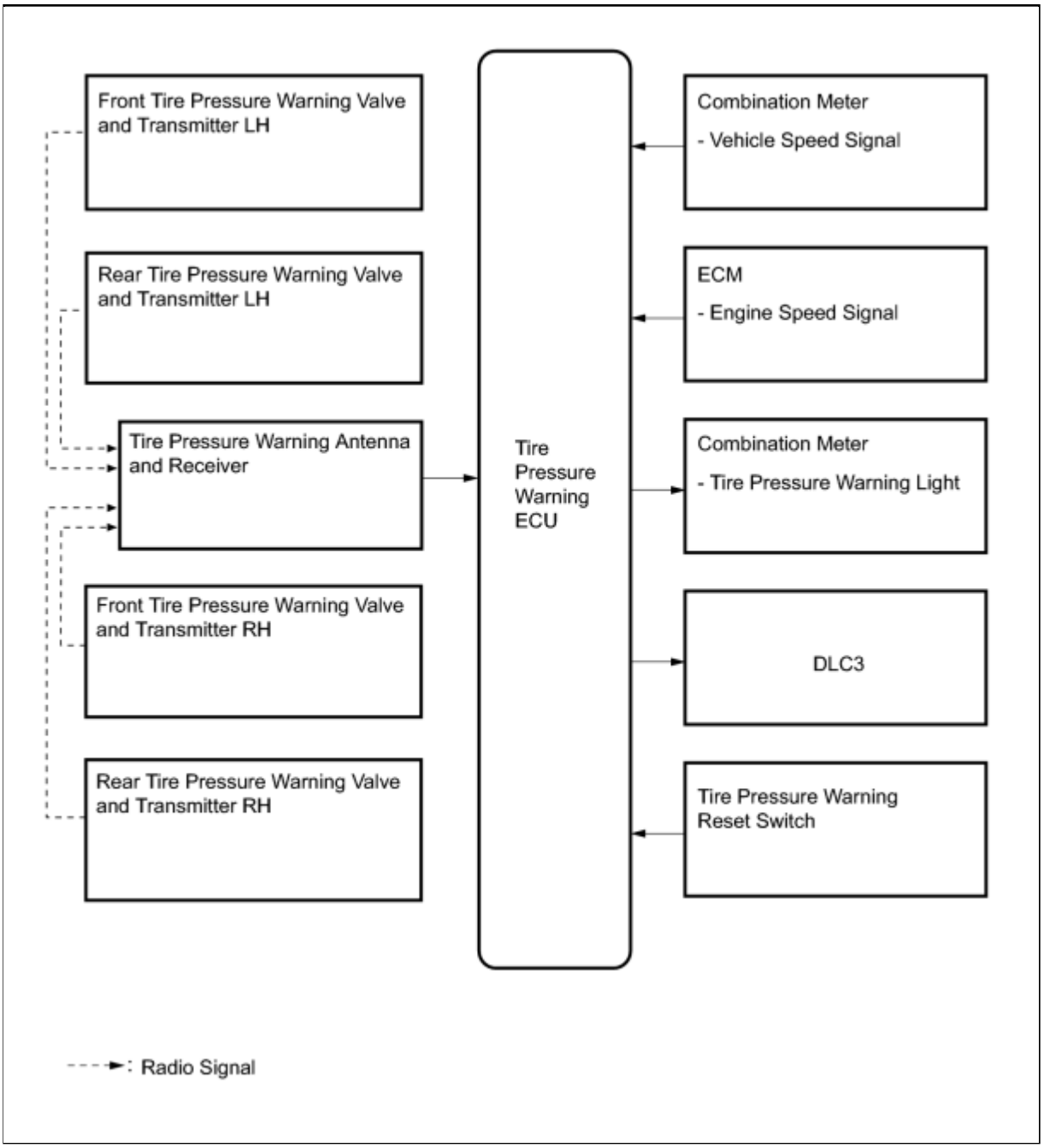

HINT:

Each tire pressure warning valve and transmitter sends information on the temperature inside the tire, the transmitter ID, and the tire pressure.

Last Modified: 3-10-2010	6.4 M	**From:** 200901
Model Year: 2010	**Model:** Corolla	**Doc ID:** RM000000XN104AX
Title: TIRE PRESSURE MONITORING: TIRE PRESSURE WARNING SYSTEM: REGISTRATION (2010 Corolla)		

REGISTRATION

1. DESCRIPTION OF CODE REGISTRATION

It is necessary to register the transmitter ID in the tire pressure warning ECU when replacing the tire pressure warning valve and transmitter and/or tire pressure warning ECU.

Prepare all transmitter ID data before starting registration.

(a) Before registration

(1) When replacing the tire pressure warning ECU:

- Read the registered transmitter IDs that are stored in the old ECU using the Techstream and note them down.
- If reading stored transmitter IDs is impossible due to malfunctions of components such as the tire pressure warning antenna and receiver, remove the tires from the wheels and check the IDs located on the tire pressure warning valve and transmitters INFO .

(2) When replacing a tire pressure warning valve and transmitter:

- Take note of the 7-digit number (transmitter ID) written on the tire pressure warning valve and transmitter.

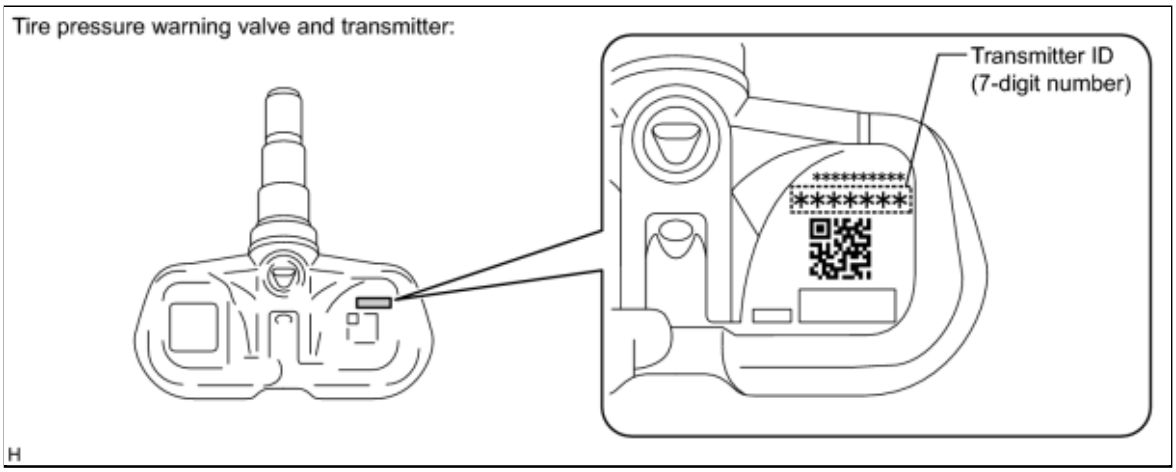

NOTICE:

- The transmitter ID is written on the tire pressure warning valve and transmitter. It will be unable to be read after installing the tire pressure warning valve and transmitter on the tire and wheel. Therefore, take a note of the transmitter ID before installing the tire pressure warning valve and transmitter.
- The ID registration must be performed for all tire pressure warning valve and transmitters. Check the Data List, replace the exchanged ID with a new ID, and make a new DATA LIST of all 4 tires for the vehicle.

2. REGISTER TRANSMITTER ID (Using Techstream)

(a) Set the all tire pressure to the specified value INFO .

(b) Turn the ignition switch off.

(c) Connect the Techstream to the DLC3.

(d) Turn the ignition switch to ON.

(e) Turn the Techstream on.

(f) Enter the following menus: Chassis / Tire Pressure Monitor / Utility / ID Registration.

(g) Perform the following procedures displayed on the screen.

(h) Confirmation of transmitter ID registration.

(1) Enter the following menus: Chassis / Tire Pressure Monitor / Data List.

(2) Read the "ID Tire Inflation Pressure" values.

(3) Confirm that the data of tire pressure of all tires are displayed on the Techstream.

NOTICE:

- It takes about 2 or 3 minutes to display the updated tire pressure data. If the values are not displayed after a few minutes, perform troubleshooting according to the inspection procedure for DTCs C2121/21 to C2124/24 INFO .
- If the IDs have not been registered, DTC C2171/71 is set in the tire pressure warning ECU after 3 minutes or more.
- If normal pressure values are displayed, the IDs have been registration correctly.
- If the tire pressure values are not displayed after a few minutes, the IDs may be incorrect or the system may have a malfunction.
- After all IDs are registered, DTC C2126/26 (Transmitter ID not Received) is set in the tire pressure warning ECU and the tire pressure warning light blinks for 1 minute and then comes on. When the tire pressure warning ECU successfully receives radio waves from all the transmitters whose IDs are stored in the ECU, DTC C2126/26 is deleted and the tire pressure warning light goes off.

Last Modified: 3-10-2010	6.4 D	**From:** 200901
Model Year: 2010	**Model:** Corolla	**Doc ID:** RM000000XMZ040X
Title: TIRE PRESSURE MONITORING: TIRE PRESSURE WARNING SYSTEM: INITIALIZATION (2010 Corolla)		

INITIALIZATION

1. DESCRIPTION OF INITIALIZATION

(a) Perform initialization in the following cases:

- Before delivery of a new vehicle.
- After replacement of the tire pressure warning ECU*.
- After replacement of any of the tire pressure warning valve and transmitters*.

*: Perform initialization after the transmitter ID registration is completed INFO .

(b) Before initialization

(1) Set the all tire pressure to the specified value INFO .

NOTICE:

Make sure the tires are cooled down.

2. INITIALIZATION PROCEDURE

(a) Adjust all tire (except spare tire) to the standard tire inflation pressure, as indicated on the tire and loading information label on the vehicle.

(b) Turn the ignition switch to ON.

(c) Push and hold the tire pressure warning reset switch for 3 seconds or more so that the tire pressure warning light blinks 3 times.

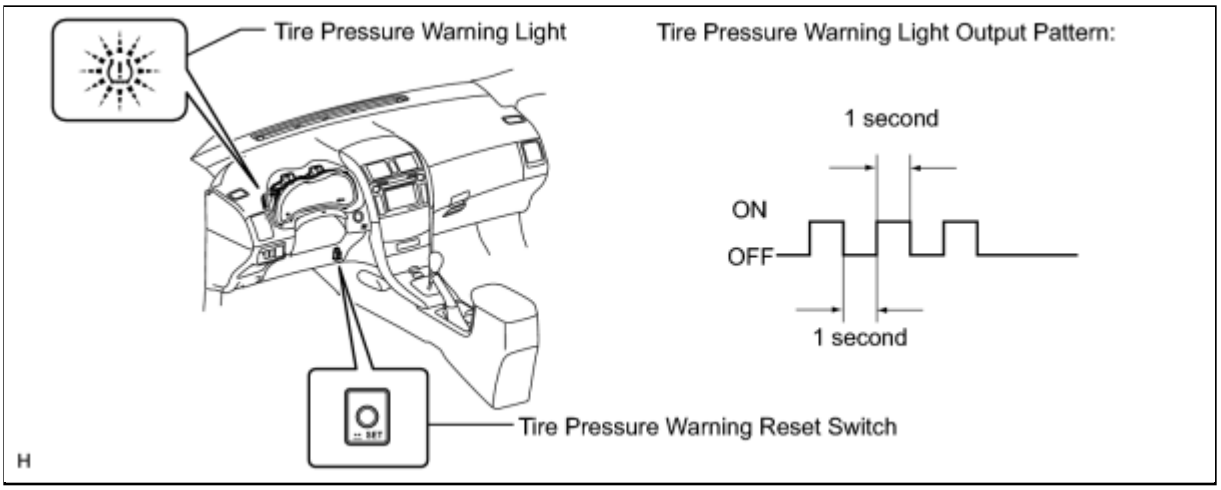

(d) Turn the ignition switch off.

(e) Connect the Techstream to the DLC3.

(f) Turn the ignition switch to ON.

(g) Turn the Techstream on.

(h) Enter the following menus: Chassis / Tire Pressure Monitor / Data List.

(i) Check that the initialization has been completed.

(j) Confirm that the tire pressure data of all wheels are displayed on the Techstream.

NOTICE:

- The initialization is normally completed within 2 or 3 minutes.
- If the initialization has not been completed successfully, DTC C2177/77 is set after a vehicle speed 8 km/h (5 mph) or more continues for 20 minutes or more.
- The initialization can be terminated by connecting terminals TC and CG of the DLC3.

Tire Pressure Monitor

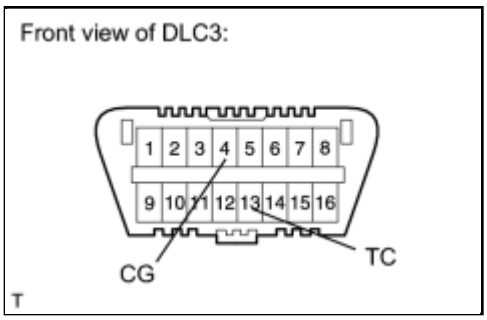

TESTER DISPLAY	MEASUREMENT ITEM/RANGE	NORMAL CONDITION	DIAGNOSTIC NOTE
ID1 Tire Inflation Pressure	ID1 tire inflation pressure/ min.: Absolute pressure / 0 kPa (0 kgf/cm^2, 0 psi), Relative pressure / -100 kPa (-1.0 kgf/cm^2, -14 psi) max.: Absolute pressure / 638 kPa (6.4 kgf/cm^2, 93 psi), Relative pressure / 538 kPa (5.4 kgf/cm^2, 78 psi)	Actual tire inflation pressure	If 0 kPa (0 kgf/cm^2, 0 psi) is displayed for absolute pressure or -100 kPa (-1.0 kgf/cm^2, -14 psi) is displayed for relative pressure, data has not been received.*
ID2 Tire Inflation Pressure	ID2 tire inflation pressure / min.: Absolute pressure / 0 kPa (0 kgf/cm^2, 0 psi), Relative pressure / -100 kPa (-1.0 kgf/cm^2, -14 psi) max.: Absolute pressure / 638 kPa (6.4 kgf/cm^2, 93 psi), Relative pressure / 538 kPa (5.4 kgf/cm^2, 78 psi)	Actual tire inflation pressure	If 0 kPa (0 kgf/cm^2, 0 psi) is displayed for absolute pressure or -100 kPa (-1.0 kgf/cm^2, -14 psi) is displayed for relative pressure, data has not been received.*

ID3 Tire Inflation Pressure	ID3 tire inflation pressure / min.: Absolute pressure / 0 kPa (0 kgf/cm^2, 0 psi), Relative pressure / -100 kPa (-1.0 kgf/cm^2, -14 psi) max.: Absolute pressure / 638 kPa (6.4 kgf/cm^2, 93 psi), Relative pressure / 538 kPa (5.4 kgf/cm^2, 78 psi)	Actual tire inflation pressure	If 0 kPa (0 kgf/cm^2, 0 psi) is displayed for absolute pressure or -100 kPa (-1.0 kgf/cm^2, -14 psi) is displayed for relative pressure, data has not been received.*
ID4 Tire Inflation Pressure	ID4 tire inflation pressure / min.: Absolute pressure / 0 kPa (0 kgf/cm^2, 0 psi), Relative pressure / -100 kPa (-1.0 kgf/cm^2, -14 psi) max.: Absolute pressure / 638 kPa (6.4 kgf/cm^2, 93 psi), Relative pressure / 538 kPa (5.4 kgf/cm^2, 78 psi)	Actual tire inflation pressure	If 0 kPa (0 kgf/cm^2, 0 psi) is displayed for absolute pressure or -100 kPa (-1.0 kgf/cm^2, -14 psi) is displayed for relative pressure, data has not been received.*

HINT:

- The initialization is completed when the "ID Tire Information Pressure" display shows the correct pressures.
- *: It may take about 2 or 3 minutes until the values are displayed. If the values are not displayed after a few minutes, perform troubleshooting according to the inspection procedure for DTCs C2121/21 to C2124/24 INFO .

Last Modified: 3-10-2010	6.4 D	**From:** 200901
Model Year: 2010	**Model:** Corolla	**Doc ID:** RM000000XN0049X
Title: TIRE PRESSURE MONITORING: TIRE PRESSURE WARNING SYSTEM: TEST MODE PROCEDURE (2010 Corolla)		

TEST MODE PROCEDURE

1. ENTER TEST MODE

HINT:

- Operation of the tire pressure warning reset switch can be checked in TEST MODE.
- During TEST MODE, the system is not initialized by pushing the tire pressure warning reset switch. The circuit of the tire pressure warning reset switch can be inspected during this mode.

(a) Turn the ignition switch off.

(b) Connect the Techstream to the DLC3.

(c) Turn the ignition switch to ON.

(d) Check that the tire pressure warning light comes on for 3 seconds and then goes off.

(e) Turn the Techstream on.

(f) Enter the following menus: Chassis / Tire Pressure Monitor / Utility / Signal Check.

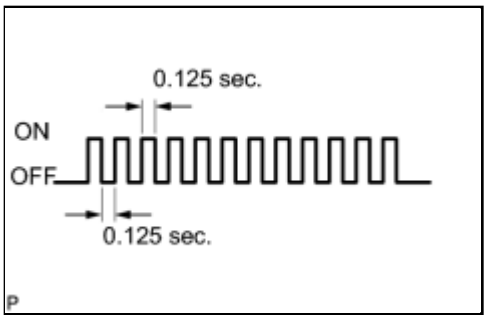

(g) Confirm that the tire pressure warning light in the combination meter blinks at 0.125 second intervals.

2. PERFORM SIGNAL CHECK

HINT:

- When entering signal check mode, the tire pressure warning ECU sets all the signal check DTCs first.

  After completing signal check for each inspection item, the DTCs for systems that are determined to be normal by the tire pressure warning ECU will be erased.

  The DTCs for other inspection items may not be erased when only a certain signal is inspected.
- When signal check returns to normal mode, all the signal check DTCs will be erased.

(a) Turn the ignition switch off.

(b) Connect the Techstream to the DLC3.

(c) Turn the ignition switch to ON.

(d) Turn the Techstream on.

(e) Enter the following menus: Chassis / Tire Pressure Monitor / Utility / Signal Check.

HINT:

Every time the test mode DTC erasure conditions are satisfied, the tire pressure warning light comes on for 1 second. Then, the tire pressure warning light blinks at 0.125 second intervals.

(f) Start the engine and allow it to run at 1000 rpm for 3 seconds or more to check the engine speed signal (C2194/94).

(g) Drive the vehicle at 20 km/h (12 mph) or more for 3 seconds or more to check the vehicle speed signal (C2191/91).

(h) Loosen the valve core and rapidly reduce the pressure (at least 40 kPa (0.4 kg/cm^2, 5.8 psi) within 30 seconds or more) to check the transmitter data (C2181/81 to C2184/84).

HINT:

The transmitter ID can be transmitted by rapidly reducing the tire pressure.

(i) Check that the tire pressure warning system test mode DTCs are erased.

TEST MODE DTC	TEST SIGNAL	TEST MODE DTC CLEAR CONDITION
C2181/81 to C2184/84	Transmitter Data	Data is received from the transmitter which has a registered ID in the tire pressure warning ECU
C2191/91	Vehicle Speed Signal	Vehicle speed of 20 km/h (12 mph) or more is detected for 3 seconds or more
C2194/94	Engine Speed Signal	Engine speed of 1000 rpm or more is detected for 3 seconds or more

(j) Check the tire pressure warning reset switch.

(1) Press the tire pressure warning reset switch.

(2) Check the tire pressure warning light.

TEST SIGNAL	NORMAL CONDITION
Tire Pressure Warning Reset Switch	• Switch ON: Tire pressure warning light comes on • Switch OFF: Tire pressure warning light blinks at 0.125 sec. intervals

(k) Result

HINT:

After the signal check is completed, check for a signal check DTC to confirm the system status.

CONDITION	PROCEDURE
Test mode DTC is output	Repair the faulty part and enter SIGNAL CHECK again

CONDITION	PROCEDURE
Test mode DTCs are cleared	No problem

(l) End of SIGNAL CHECK

(1) After completing the test mode (SIGNAL CHECK), turn the ignition switch off and disconnect the Techstream.

(m) DTC of SIGNAL CHECK (TEST DIAGNOSIS):

(1) If a trouble code is displayed during the test mode DTC check, check the circuit listed for that code. For details of each code, refer to the "See Procedure" below.

DTC NO.	DETECTION ITEM	TROUBLE AREA	SEE PROCEDURE
C2181/81	Transmitter ID1 not received	• Tire pressure warning valve and transmitter • Tire pressure warning antenna and receiver • Wire harness or connector • Tire pressure warning ECU	INFO
C2182/82	Transmitter ID2 not received	• Tire pressure warning valve and transmitter • Tire pressure warning antenna and receiver • Wire harness or connector • Tire pressure warning ECU	INFO
C2183/83	Transmitter ID3 not received	• Tire pressure warning valve and transmitter • Tire pressure warning antenna and receiver • Wire harness or connector • Tire pressure warning ECU	INFO
C2184/84	Transmitter ID4 not received	• Tire pressure warning valve and transmitter • Tire pressure warning antenna and receiver • Wire harness or connector • Tire pressure warning ECU	INFO
C2191/91	Vehicle speed signal error	• Vehicle speed sensor • Combination meter assembly • Wire harness or connector • Tire pressure warning ECU	INFO

DTC NO.	DETECTION ITEM	TROUBLE AREA	SEE PROCEDURE
C2194/94	Engine speed signal error	• ECM • Harness or connector • Tire pressure warning ECU	INFO

Last Modified: 3-10-2010	6.4 C	**From:** 200901
Model Year: 2010	**Model:** Corolla	**Doc ID:** RM000000ZUQ049X
Title: TIRE PRESSURE MONITORING: TIRE PRESSURE WARNING SYSTEM: C2121/21-C2124/24,C2181/81-C2184/84: No Signal from Transmitter ID1 (2010 Corolla)		

DTC	**C2121/21**	**No Signal from Transmitter ID1**

DTC	**C2122/22**	**No Signal from Transmitter ID2**

DTC	**C2123/23**	**No Signal from Transmitter ID3**

DTC	**C2124/24**	**No Signal from Transmitter ID4**

DTC	**C2181/81**	**Transmitter ID1 not Received (Test Mode DTC)**

DTC	**C2182/82**	**Transmitter ID2 not Received (Test Mode DTC)**

DTC	**C2183/83**	**Transmitter ID3 not Received (Test Mode DTC)**

DTC	**C2184/84**	**Transmitter ID4 not Received (Test Mode DTC)**

DESCRIPTION

The tire pressure warning valve and transmitters that are installed in the tire and wheel assemblies measure the tire pressures. The measured values are transmitted to the tire pressure warning antenna and receiver on the body as radio waves and then sent to the tire pressure warning ECU. The ECU compares the measured air pressure values with the air pressure threshold. When the measured air pressure value is less than this threshold, the warning light in the combination meter comes on.

The tire pressure warning valve and transmitters constantly send radio waves to the tire pressure warning antenna and receiver.

Under the conditions below, the tire pressure warning antenna and receiver is unable to receive the signals from the tire pressure warning valve and transmitters, and a DTC is stored.

- Facilities or devices that use similar radio frequencies are located in the vicinity of the vehicle.
- Devices using similar radio frequencies are used in the vehicle.
- The ID of the tire pressure warning valve and transmitter is mistyped during registration.
- A tire/wheel/transmitter from a different vehicle is installed.

HINT:

When no transmitter ID is received from a tire pressure warning valve and transmitter for a total of 20 minutes while the vehicle speed is more than 8 km/h (5 mph) or no transmitter ID is received from all the tire pressure warning valve and transmitters for a total of 20 minutes, DTCs are set.

DTCs from C2121/21 to C2124/24 can only be cleared by using the Techstream. DTCs from C2181/81 to C2184/84 can be cleared when the transmitter in the tire pressure warning valve and transmitter sends a forced transmission signal or test mode ends. DTCs from C2181/81 to C2184/84 are output only in test mode.

DTC NO.	DTC DETECTION CONDITION	TROUBLE AREA
C2121/21 C2122/22 C2123/23 C2124/24	Following condition (a) or (b) is met: (a) When all conditions below are met: • Tire pressure warning valve and transmitter is not in stop mode. • Any transmitter ID is not received from tire pressure warning valve and transmitters. • For 20 minutes or more, vehicle speed is more than 8 km/h (5 mph) or no vehicle speed signal or engine speed signal is received. (b) When all conditions below are met: • Tire Pressure warning valve and transmitter is not in stop mode. • No transmitter ID is received from tire pressure warning valve and transmitters for 20 minutes or more.	• Tire pressure warning valve and transmitter • Tire pressure warning antenna and receiver • Wire harness or connector • Tire pressure warning ECU
C2181/81 C2182/82 C2183/83 C2184/84	Test mode procedure is performed.	• Tire pressure warning valve and transmitter • Tire pressure warning antenna and receiver • Wire harness or connector • Tire pressure warning ECU

NOTICE:

When DTCs C2121/21 to C2124/24 are set, DTC C2173/73 may be set simultaneously. In such cases,

troubleshoot C2173/73 first, then troubleshoot DTCs C2121/21 to C2124/24.

HINT:

It is necessary to perform the procedure to identify the tire pressure warning valve and transmitter that is malfunctioning because it cannot be identified by the output DTC.

WIRING DIAGRAM

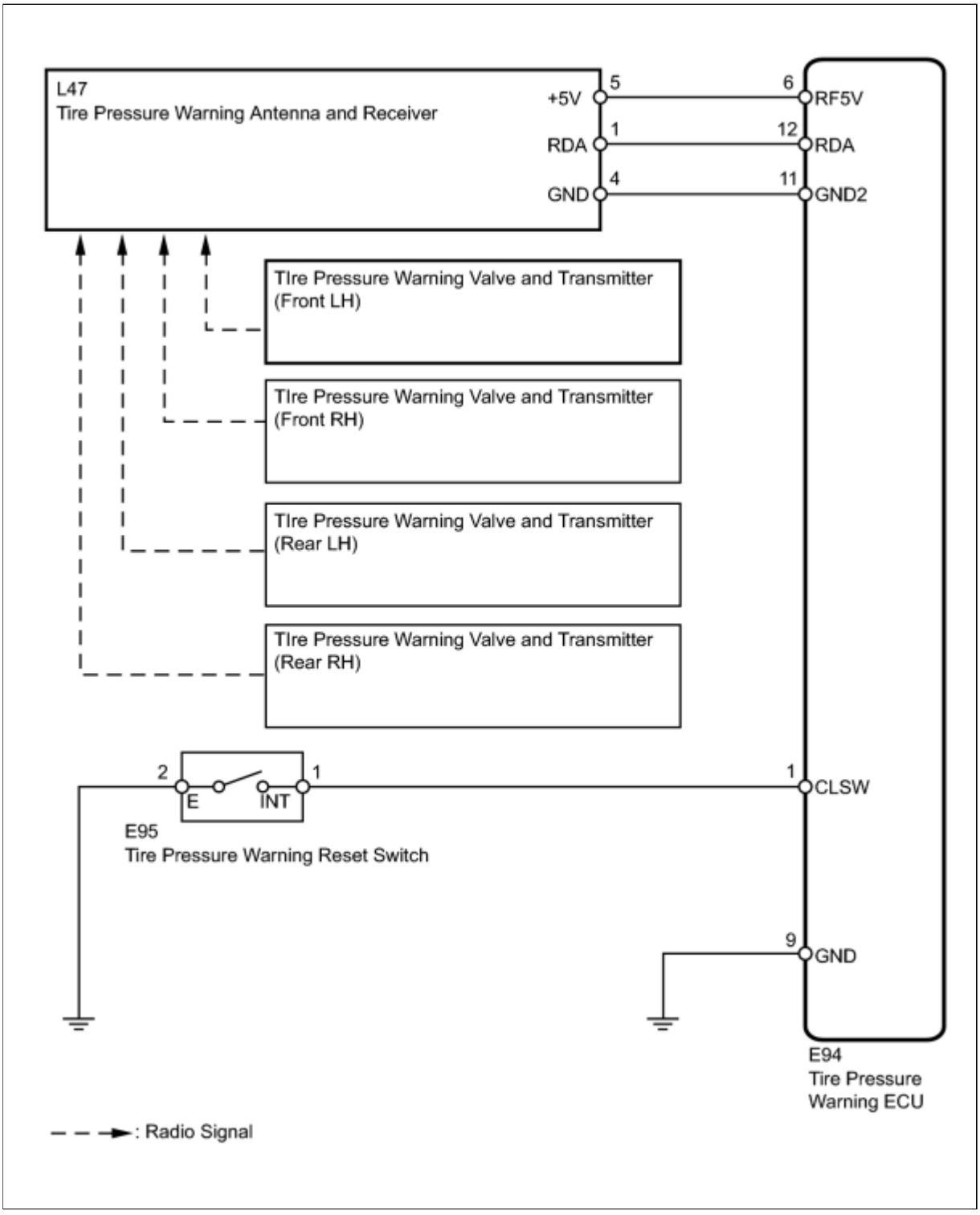

INSPECTION PROCEDURE

NOTICE:

- When replacing the tire pressure warning ECU, read the transmitter IDs stored in the old ECU using the Techstream and write them down before removal.
- It is necessary to perform initialization INFO after registration INFO of the transmitter IDs into the tire pressure warning ECU if the ECU and/or any of the valve and transmitters have been replaced.

PROCEDURE

1.	**READ OUTPUT DTC (DTC C2173/73)**

(a) Turn the ignition switch to off.

(b) Connect the Techstream to the DLC3.

(c) Turn the ignition switch to ON.

(d) Turn the Techstream on.

(e) Enter the following menus: Chassis / Tire Pressure Monitor / Trouble Codes.

(f) Read DTCs.

Result:

RESULT	PROCEED TO
DTC C2173/73 is not output	A
DTC C2173/73 is output	B

NOTICE:

When DTC C2173/73 is output, troubleshoot that DTC first. Then troubleshoot DTCs C2121/21 to C2124/24.

B ▶ **GO TO DTC C2173/73**

A ▼

2.	**CHECK FREQUENCY RECEIVING CONDITION**

(a) Check that the vehicle is not located in an area such as described below:

(1) Facilities or devices that use similar radio frequencies are located in the vicinity of the vehicle.

HINT:

If the vehicle is located in area described above, the tire pressure warning light may come on only in a particular area.

(2) Devices using similar radio frequencies are used in the vehicle.

OK:

Facilities, or devices that use similar radio frequencies are not located in the vicinity of the vehicle.

HINT:

Radio transmissions may be interrupted due to the surroundings or devices installed by the user.

NG ▶ **CHECK IF ANY DEVICE IS INSTALLED BY USER**

OK ▼

3.	**IDENTIFY TRANSMITTER CORRESPONDING TO DTC**

(a) Set the tire pressure to the specified values INFO .

(b) Turn the ignition switch off.

(c) Connect the Techstream to the DLC3.

(d) Turn the ignition switch to ON.

(e) Turn the Techstream on.

(f) Enter the following menus: Chassis / Tire Pressure Monitor / Data List.

(g) Check the values by referring to the table below.

Tire Pressure Monitor

TESTER DISPLAY	MEASUREMENT ITEM/RANGE	NORMAL CONDITION	DIAGNOSTIC NOTE
ID1 Tire Inflation Pressure	ID1 tire inflation pressure/ min.: Absolute pressure / 0 kPa (0 kgf/cm^2, 0 psi), Relative pressure / -100 kPa (-1.0	Actual tire inflation pressure	If 0 kPa (0 kgf/cm^2, 0 psi) is displayed for absolute pressure or -100 kPa (-1.0 kgf/cm^2, -14 psi) is displayed for relative pressure, data

TESTER DISPLAY	MEASUREMENT ITEM/RANGE	NORMAL CONDITION	DIAGNOSTIC NOTE
	kgf/cm^2, -14 psi) max.: Absolute pressure / 638 kPa (6.4 kgf/cm^2, 93 psi), Relative pressure / 538 kPa (5.4 kgf/cm^2, 78 psi)		has not been received.*
ID2 Tire Inflation Pressure	ID2 tire inflation pressure / min.: Absolute pressure / 0 kPa (0 kgf/cm^2, 0 psi), Relative pressure / -100 kPa (-1.0 kgf/cm^2, -14 psi) max.: Absolute pressure / 638 kPa (6.4 kgf/cm^2, 93 psi), Relative pressure / 538 kPa (5.4 kgf/cm^2, 78 psi)	Actual tire inflation pressure	If 0 kPa (0 kgf/cm^2, 0 psi) is displayed for absolute pressure or -100 kPa (-1.0 kgf/cm^2, -14 psi) is displayed for relative pressure, data has not been received.*
ID3 Tire Inflation Pressure	ID3 tire inflation pressure / min.: Absolute pressure / 0 kPa (0 kgf/cm^2, 0 psi), Relative pressure / -100 kPa (-1.0 kgf/cm^2, -14 psi) max.: Absolute pressure / 638 kPa (6.4 kgf/cm^2, 93 psi), Relative pressure / 538 kPa (5.4 kgf/cm^2, 78 psi)	Actual tire inflation pressure	If 0 kPa (0 kgf/cm^2, 0 psi) is displayed for absolute pressure or -100 kPa (-1.0 kgf/cm^2, -14 psi) is displayed for relative pressure, data has not been received.*
ID4 Tire Inflation Pressure	ID4 tire inflation pressure / min.: Absolute pressure / 0 kPa (0 kgf/cm^2, 0 psi), Relative pressure / -100 kPa (-1.0 kgf/cm^2, -14 psi) max.: Absolute pressure / 638 kPa (6.4 kgf/cm^2, 93 psi), Relative pressure / 538 kPa (5.4 kgf/cm^2, 78 psi)	Actual tire inflation pressure	If 0 kPa (0 kgf/cm^2, 0 psi) is displayed for absolute pressure or -100 kPa (-1.0 kgf/cm^2, -14 psi) is displayed for relative pressure, data has not been received.*

HINT:

***: It may take about 2 or 3 minutes until the values are displayed.**

(h) Rapidly reduce the tire pressure for each wheel at least 40 kPa (0.4 kg/cm^2, 5.8 psi) within 30 seconds.

(i) Check the Data List.

NOTICE:

- It takes about 2 or 3 minutes to display the updated tire pressure data.
- When the "ID Tire Inflation Pressure" data has not changed, reset the tire pressure to the appropriate specified value and rotate the tire 90 to 270 degrees. Then rapidly release the tire pressure and recheck it.

- Record the transmitter ID of which "ID Tire Inflation Pressure" data corresponds to each tire.

(j) After confirming that the "ID Tire Inflation Pressure" data for one tire (ID1 to ID4) has changed, repeat this procedure one by one. Identify the transmitter that corresponds to the DTC.

Result:

RESULT	PROCEED TO
One or more of transmitters abnormal	A
All normal	B
All abnormal	C

B ▶ **END**

A ▶ **CHECK TRANSMITTER ID**

C ▼

4.	**CHECK HARNESS AND CONNECTOR (ECU - RECEIVER)**

(a) Disconnect the E94 ECU connector.

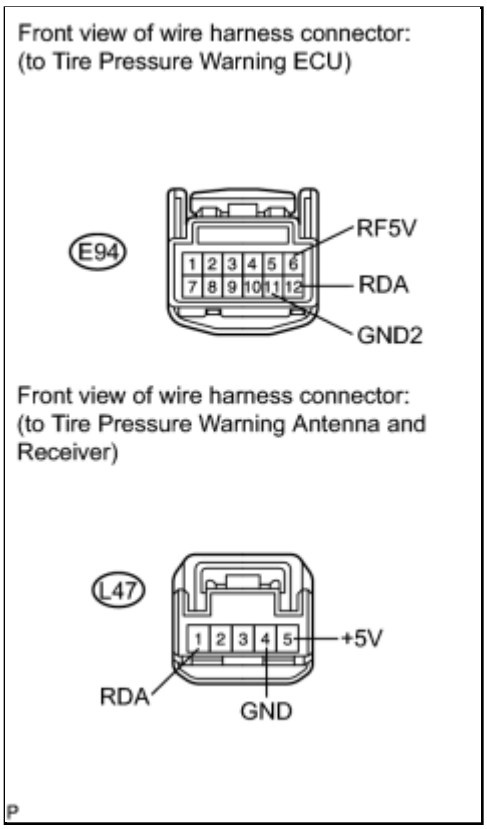

(b) Disconnect the L47 receiver connector.

(c) Measure the resistance according to the value(s) in the table below.

Standard Resistance:

TESTER CONNECTION	CONDITION	SPECIFIED CONDITION
E94-12 (RDA) - L47-1 (RDA)	Always	Below 1 Ω
E94-11 (GND2) - L47-4 (GND)		
E94-6 (RF5V) - L47-5 (+5V)		
E94-12 (RDA) - Body ground		10 kΩ or higher
E94-11 (GND2) - Body ground		
E94-6 (RF5V) - Body ground		

NG ▶ **REPAIR OR REPLACE HARNESS OR CONNECTOR**

OK ▼

5.	**CHECK TRANSMITTER ID**

(a) Turn the ignition switch off.

(b) Connect the Techstream to the DLC3.

(c) Turn the ignition switch to ON.

(d) Turn the Techstream on.

(e) Enter the following menus: Chassis / Tire Pressure Monitor / Data List.

(f) Check the values by referring to the table below.

Tire Pressure Monitor

TESTER DISPLAY	MEASUREMENT ITEM/RANGE	NORMAL CONDITION	DIAGNOSTIC NOTE
ID1 Tire Inflation Pressure	ID1 tire inflation pressure/ min.: Absolute pressure / 0 kPa (0 kgf/cm^2, 0 psi), Relative pressure / -100 kPa (-1.0 kgf/cm^2, -14 psi) max.: Absolute pressure / 638 kPa (6.4 kgf/cm^2, 93 psi), Relative pressure / 538 kPa (5.4 kgf/cm^2, 78 psi)	Actual tire inflation pressure	If 0 kPa (0 kgf/cm^2, 0 psi) is displayed for absolute pressure or -100 kPa (-1.0 kgf/cm^2, -14 psi) is displayed for relative pressure, data has not been received.*
ID2 Tire Inflation Pressure	ID2 tire inflation pressure / min.: Absolute pressure / 0 kPa (0 kgf/cm^2, 0 psi), Relative pressure / -100 kPa (-1.0 kgf/cm^2, -14 psi) max.: Absolute pressure / 638 kPa (6.4 kgf/cm^2, 93 psi), Relative pressure / 538 kPa (5.4 kgf/cm^2, 78 psi)	Actual tire inflation pressure	If 0 kPa (0 kgf/cm^2, 0 psi) is displayed for absolute pressure or -100 kPa (-1.0 kgf/cm^2, -14 psi) is displayed for relative pressure, data has not been received.*
ID3 Tire Inflation Pressure	ID3 tire inflation pressure / min.: Absolute pressure / 0 kPa (0 kgf/cm^2, 0 psi), Relative pressure / -100 kPa (-1.0 kgf/cm^2, -14 psi) max.: Absolute pressure / 638 kPa (6.4 kgf/cm^2, 93 psi), Relative pressure / 538 kPa (5.4 kgf/cm^2, 78 psi)	Actual tire inflation pressure	If 0 kPa (0 kgf/cm^2, 0 psi) is displayed for absolute pressure or -100 kPa (-1.0 kgf/cm^2, -14 psi) is displayed for relative pressure, data has not been received.*
ID4 Tire Inflation Pressure	ID4 tire inflation pressure / min.: Absolute pressure / 0 kPa (0 kgf/cm^2, 0 psi), Relative pressure / -100 kPa (-1.0 kgf/cm^2, -14 psi) max.: Absolute pressure / 638 kPa (6.4 kgf/cm^2, 93 psi), Relative pressure / 538 kPa	Actual tire inflation pressure	If 0 kPa (0 kgf/cm^2, 0 psi) is displayed for absolute pressure or -100 kPa (-1.0 kgf/cm^2, -14 psi) is displayed for relative pressure, data has not been received.*

TESTER DISPLAY	MEASUREMENT ITEM/RANGE	NORMAL CONDITION	DIAGNOSTIC NOTE
	(5.4 kgf/cm^2, 78 psi)		

HINT:

***: Display only when the ID No. is not registered.**

(g) Check the ID number on the identified transmitter by removing it from the tire and wheel.

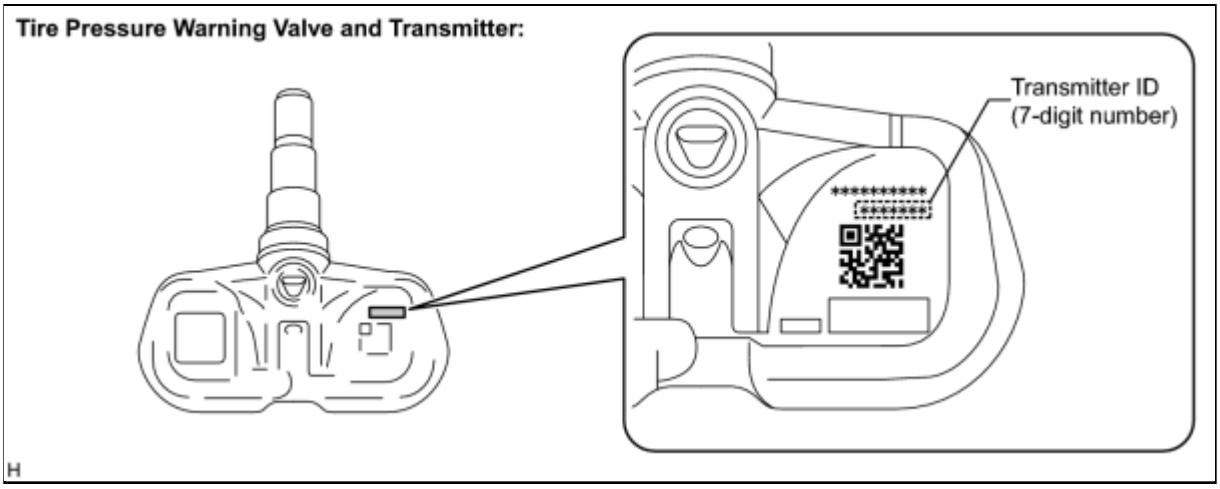

(h) Confirm that the ID number on the transmitter and recorded transmitter ID match.

Result:

RESULT	PROCEED TO
Match	A
Do not match	B

B ▶ REGISTRATION OF TRANSMITTER ID

A ▼

6.	**REPLACE TIRE PRESSURE WARNING VALVE AND TRANSMITTER**

(a) Replace the tire pressure warning valve and transmitter INFO .

NEXT

7.	REGISTRATION OF TRANSMITTER ID

(a) Perform registration INFO .

NEXT

8.	PERFORM INITIALIZATION

(a) Perform initialization INFO .

NEXT

9.	READ VALUE USING TECHSTREAM (DATA LIST)

(a) Turn the ignition switch off.

(b) Connect the Techstream to the DLC3.

(c) Turn the ignition switch to ON.

(d) Turn the Techstream on.

(e) Enter the following menus: Chassis / Tire Pressure Monitor / Data List.

(f) Check the values by referring to the table below.

Tire Pressure Monitor

TESTER DISPLAY	MEASUREMENT ITEM/RANGE	NORMAL CONDITION	DIAGNOSTIC NOTE

TESTER DISPLAY	MEASUREMENT ITEM/RANGE	NORMAL CONDITION	DIAGNOSTIC NOTE
ID1 Tire Inflation Pressure	ID1 tire inflation pressure/ min.: Absolute pressure / 0 kPa (0 kgf/cm^2, 0 psi), Relative pressure / -100 kPa (-1.0 kgf/cm^2, -14 psi) max.: Absolute pressure / 638 kPa (6.4 kgf/cm^2, 93 psi), Relative pressure / 538 kPa (5.4 kgf/cm^2, 78 psi)	Actual tire inflation pressure	If 0 kPa (0 kgf/cm^2, 0 psi) is displayed for absolute pressure or -100 kPa (-1.0 kgf/cm^2, -14 psi) is displayed for relative pressure, data has not been received.*
ID2 Tire Inflation Pressure	ID2 tire inflation pressure / min.: Absolute pressure / 0 kPa (0 kgf/cm^2, 0 psi), Relative pressure / -100 kPa (-1.0 kgf/cm^2, -14 psi) max.: Absolute pressure / 638 kPa (6.4 kgf/cm^2, 93 psi), Relative pressure / 538 kPa (5.4 kgf/cm^2, 78 psi)	Actual tire inflation pressure	If 0 kPa (0 kgf/cm^2, 0 psi) is displayed for absolute pressure or -100 kPa (-1.0 kgf/cm^2, -14 psi) is displayed for relative pressure, data has not been received.*
ID3 Tire Inflation Pressure	ID3 tire inflation pressure / min.: Absolute pressure / 0 kPa (0 kgf/cm^2, 0 psi), Relative pressure / -100 kPa (-1.0 kgf/cm^2, -14 psi) max.: Absolute pressure / 638 kPa (6.4 kgf/cm^2, 93 psi), Relative pressure / 538 kPa (5.4 kgf/cm^2, 78 psi)	Actual tire inflation pressure	If 0 kPa (0 kgf/cm^2, 0 psi) is displayed for absolute pressure or -100 kPa (-1.0 kgf/cm^2, -14 psi) is displayed for relative pressure, data has not been received.*
ID4 Tire Inflation Pressure	ID4 tire inflation pressure / min.: Absolute pressure / 0 kPa (0 kgf/cm^2, 0 psi), Relative pressure / -100 kPa (-1.0 kgf/cm^2, -14 psi) max.: Absolute pressure / 638 kPa (6.4 kgf/cm^2, 93 psi), Relative pressure / 538 kPa (5.4 kgf/cm^2, 78 psi)	Actual tire inflation pressure	If 0 kPa (0 kgf/cm^2, 0 psi) is displayed for absolute pressure or -100 kPa (-1.0 kgf/cm^2, -14 psi) is displayed for relative pressure, data has not been received.*

HINT:

- *: It may take about 2 or 3 minutes until the values are displayed.
- When no "ID Tire Inflation Pressure" data has changed, reset the tire pressure to the appropriate specified value and rotate the tire 90 to 270 degrees. Then rapidly release the tire pressure and recheck it.

Result:

RESULT	PROCEED TO
All tire pressure readings are equal to specified values.	A
Tire pressure values are not displayed.	B

A ▶ END

B ▼

10.	REPLACE TIRE PRESSURE WARNING ANTENNA AND RECEIVER

(a) Replace the tire pressure warning antenna and receiver INFO .

NEXT ▼

11.	READ VALUE USING TECHSTREAM (DATA LIST)

(a) Turn the ignition switch off.

(b) Connect the Techstream to the DLC3.

(c) Turn the ignition switch to ON.

(d) Turn the Techstream on.

(e) Enter the following menus: Chassis / Tire Pressure Monitor / Data List.

(f) Check the values by referring to the table below.

Tire Pressure Monitor

TESTER DISPLAY	MEASUREMENT ITEM/RANGE	NORMAL CONDITION	DIAGNOSTIC NOTE
ID1 Tire Inflation Pressure	ID1 tire inflation pressure/ min.: Absolute pressure / 0 kPa (0 kgf/cm^2, 0 psi), Relative pressure / -100 kPa (-1.0 kgf/cm^2, -14 psi)	Actual tire inflation pressure	If 0 kPa (0 kgf/cm^2, 0 psi) is displayed for absolute pressure or -100 kPa (-1.0 kgf/cm^2, -14 psi) is displayed for relative pressure, data has not been received.*

TESTER DISPLAY	MEASUREMENT ITEM/RANGE	NORMAL CONDITION	DIAGNOSTIC NOTE
	max.: Absolute pressure / 638 kPa (6.4 kgf/cm^2, 93 psi), Relative pressure / 538 kPa (5.4 kgf/cm^2, 78 psi)		
ID2 Tire Inflation Pressure	ID2 tire inflation pressure / min.: Absolute pressure / 0 kPa (0 kgf/cm^2, 0 psi), Relative pressure / -100 kPa (-1.0 kgf/cm^2, -14 psi) max.: Absolute pressure / 638 kPa (6.4 kgf/cm^2, 93 psi), Relative pressure / 538 kPa (5.4 kgf/cm^2, 78 psi)	Actual tire inflation pressure	If 0 kPa (0 kgf/cm^2, 0 psi) is displayed for absolute pressure or -100 kPa (-1.0 kgf/cm^2, -14 psi) is displayed for relative pressure, data has not been received.*
ID3 Tire Inflation Pressure	ID3 tire inflation pressure / min.: Absolute pressure / 0 kPa (0 kgf/cm^2, 0 psi), Relative pressure / -100 kPa (-1.0 kgf/cm^2, -14 psi) max.: Absolute pressure / 638 kPa (6.4 kgf/cm^2, 93 psi), Relative pressure / 538 kPa (5.4 kgf/cm^2, 78 psi)	Actual tire inflation pressure	If 0 kPa (0 kgf/cm^2, 0 psi) is displayed for absolute pressure or -100 kPa (-1.0 kgf/cm^2, -14 psi) is displayed for relative pressure, data has not been received.*
ID4 Tire Inflation Pressure	ID4 tire inflation pressure / min.: Absolute pressure / 0 kPa (0 kgf/cm^2, 0 psi), Relative pressure / -100 kPa (-1.0 kgf/cm^2, -14 psi) max.: Absolute pressure / 638 kPa (6.4 kgf/cm^2, 93 psi), Relative pressure / 538 kPa (5.4 kgf/cm^2, 78 psi)	Actual tire inflation pressure	If 0 kPa (0 kgf/cm^2, 0 psi) is displayed for absolute pressure or -100 kPa (-1.0 kgf/cm^2, -14 psi) is displayed for relative pressure, data has not been received.*

HINT:

- *: It may take about 2 or 3 minutes until the values are displayed.
- When no "ID Tire Inflation Pressure" data has changed, reset the tire pressure to the appropriate specified value and rotate the tire 90 to 270 degrees. Then rapidly release the tire pressure and recheck it.

Result:

RESULT	PROCEED TO
All tire pressure readings are equal to specified values.	A
Tire pressure values are not displayed.	B

B ▶ REPLACE TIRE PRESSURE WARNING ECU

A ▶ END

Last Modified: 3-10-2010	6.4 T	**From:** 200901
Model Year: 2010	**Model:** Corolla	**Doc ID:** RM000000XMT03IX
Title: TIRE PRESSURE MONITORING: TIRE PRESSURE WARNING SYSTEM: PROBLEM SYMPTOMS TABLE (2010 Corolla)		

PROBLEM SYMPTOMS TABLE

HINT:

- Use the table below to help determine the cause of the problem symptom. The potential causes of the symptoms are listed in order of probability in the "Suspected Area" column of the table. Check each symptom by checking the suspected areas in the order they are listed. Replace parts as necessary.
- Inspect the fuses and relays related to this system before inspecting the suspected areas below.

Tire Pressure Warning System

SYMPTOM	SUSPECTED AREA	SEE PAGE
Tire pressure warning light does not illuminate, despite tire pressure decreasing	Initialization	INFO
	Check Data List (ID Tire Inflation Pressure)	INFO
	ID code check (Registration)	INFO
Tire pressure warning light remains illuminated (Goes off during initial check)	ECU power source circuit	INFO
	Tire pressure warning light circuit	INFO
Tire pressure warning light remains illuminated (Comes on during initial check)	Check Data List (ID Tire inflation pressure)	INFO
	Tire pressure warning light circuit	INFO
	ID code check (Registration)	INFO
	Initialization	INFO
Initialization cannot be done	Tire pressure warning reset switch	INFO
DTC check cannot be done	ECU power source circuit	INFO
	TC and CG terminal circuit	INFO

Last Modified: 3-10-2010	6.4 U	**From:** 200901
Model Year: 2010	**Model:** Corolla	**Doc ID:** RM000000XMS02HX
Title: TIRE PRESSURE MONITORING: TIRE PRESSURE WARNING SYSTEM: TERMINALS OF ECU (2010 Corolla)		

TERMINALS OF ECU

1. CHECK TIRE PRESSURE WARNING ECU

HINT:

Inspect the connectors from the back side while the connectors are connected.

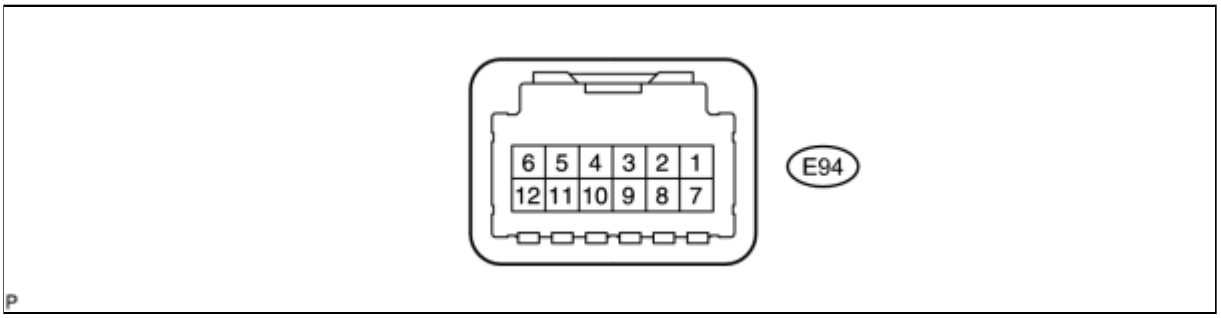

(a) Disconnect the L47 tire pressure warning antenna and receiver connector.

(b) Measure the voltage according to the value(s) in the table below.

TERMINAL NO. (SYMBOL)	WIRING COLOR	TERMINAL DESCRIPTION	CONDITION	SPECIFIED CONDITION
E94-12 (RDA) - E94-9 (GND)	R - W-B*1, BR*2	Tire pressure warning antenna and receiver signal	Ignition switch ON	11 to 14 V

(c) Connect the L47 tire pressure warning antenna and receiver connector.

(d) Measure the voltage and resistance according to the value(s) in the table below. If the result is not as specified, the ECU may have a malfunction.

TERMINAL NO. (SYMBOL)	WIRING COLOR	TERMINAL DESCRIPTION	CONDITION	SPECIFIED CONDITION
E94-1 (CLSW) - E94-9 (GND)	SB - W-B*1, BR*2	Tire pressure warning reset switch	• Ignition switch ON • Tire pressure warning reset switch ON	8.5 to 15 V
			• Ignition switch ON • Tire pressure warning reset	Below 1.5 V

TERMINAL NO. (SYMBOL)	WIRING COLOR	TERMINAL DESCRIPTION	CONDITION	SPECIFIED CONDITION
			switch OFF	
E94-2 (SPD) - E94-9 (GND)	V - W-B*1, BR*2	Vehicle speed signal	Vehicle is running	Pulse generation (see waveform 1)
E94-3 (TC) - E94-9 (GND)	G - W-B*1, BR*2	TC terminal	Terminal TC is not connected	11 to 14 V
E94-4 (TACH) - E94-9 (GND)	GR - W-B*1, BR*2	Engine speed signal	Engine is running	Pulse generation (see waveform 2)
E94-5 (IND) - E94-9 (GND)	P - W-B*1, BR*2	Tire pressure warning light output signal	• Ignition switch ON • Tire pressure warning light OFF	Below 0.5 V
		Tire pressure warning reset switch	After ignition switch is turned ON, tire pressure warning light illuminates for 3 seconds.	0.9 to 3.2 V
E94-6 (RF5V) - E94-9 (GND)	B - W-B*1, BR*2	Tire pressure warning antenna and receiver power source	Ignition switch ON	11 to 14 V
E94-7 (IG) - E94-9 (GND)	L - W-B*1, BR*2	IG power source	Ignition switch ON	11 to 14 V
E94-9 (GND) - Body ground	W-B*1, BR*2 - Body ground	Ground	Always	Below 1 Ω
E94-10 (SIL) - E94-9 (GND)	W - W-B*1, BR*2	Diagnostic communication	Ignition switch ON	8 to 14 V
E94-11 (GND2) - E94-9 (GND)	LG - W-B*1, BR*2	Tire pressure warning antenna and receiver ground	Always	Below 1 Ω
E94-12 (RDA) - E94-9 (GND)	R - W-B*1, BR*2	Tire pressure warning antenna and receiver signal	Ignition switch ON	11 to 14 V

*1: TMC Made

*2: NUMMI, TMMC Made

(e) Using an oscilloscope, check the waveform 1.

Waveform 1:

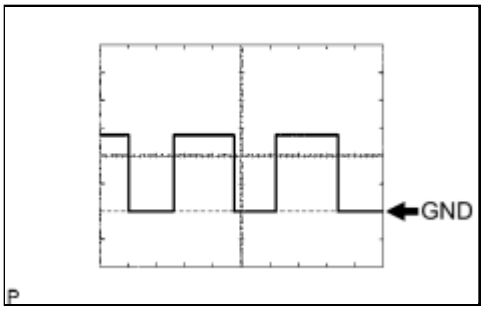

ITEM	CONTENTS
Terminal	E94-2 (SPD) - E94-9 (GND)
Tool setting	5 V/DIV, 20 ms./DIV.
Vehicle condition	Driving at approximately 20 km/h (12 mph)

HINT:

The wavelength becomes shorter as the vehicle speed increases.

(f) Using an oscilloscope, check the waveform 2.

Waveform 2:

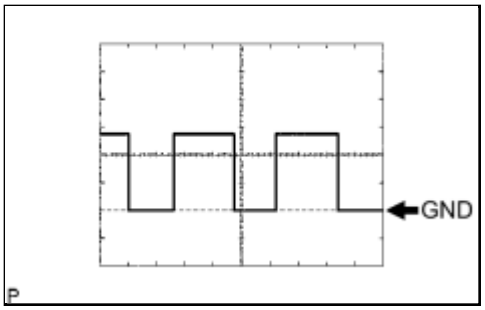

ITEM	CONTENTS
Terminal	E94-4 (TACH) - E94-9 (GND)
Tool setting	5 V/DIV., 10 ms./DIV.
Vehicle condition	Idling

HINT:

The wavelength becomes shorter as the engine speed increases.

Last Modified: 3-10-2010	6.4 D	**From:** 200901
Model Year: 2010	**Model:** Corolla	**Doc ID:** RM000000XMW03WX
Title: TIRE PRESSURE MONITORING: TIRE PRESSURE WARNING SYSTEM: DIAGNOSIS SYSTEM (2010 Corolla)		

DIAGNOSIS SYSTEM

1. CHECK BATTERY VOLTAGE

Standard voltage:
11 to 14 V

If the voltage is below 11 V, recharge the battery before proceeding to the next step.

2. CHECK DLC3 INFO

3. DIAGNOSIS SYSTEM

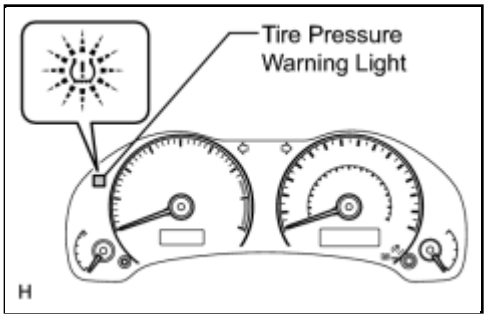

(a) Warning light

(1) When there is a problem with the tire pressure warning system, the tire pressure warning light blinks at 0.5 second intervals, and comes on after 1 minute.

NOTICE:

When the malfunction has been corrected, the tire pressure warning light does not come on.

(b) DTCs (Normal mode)

(1) DTCs are memorized in the tire pressure warning ECU and read by the blinks of the tire pressure warning light or by using the Techstream INFO .

(c) Test mode

(1) By switching from normal mode into test mode (input signal check), you can inspect the tire pressure warning antenna and receiver, each tire pressure warning valve and transmitter, engine speed signal and vehicle speed sensor INFO .

4. CHECK TIRE PRESSURE WARNING LIGHT

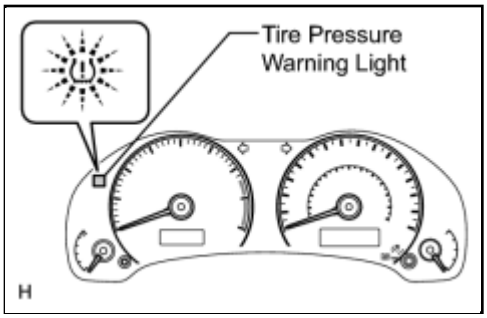

(a) Turn the ignition switch to ON.

(b) Check that the tire pressure warning light comes on for 3 seconds.

If the warning check result is not normal, proceed to the troubleshooting for the tire pressure warning light circuit INFO .

5. TIRE PRESSURE WARNING LIGHT CHART

HINT:

The table below indicates the state of the tire pressure warning light after the ignition switch is turned to ON.

	IMMEDIATELY AFTER TURNING THE IGNITION SWITCH ON	ALWAYS						
		WARNING LIGHT OUTPUT PATTERN						
	COMES ON FOR 3 SEC.	GOES OFF	COMES ON	BLINKS FOR 1 MINUTE AND THEN ILLUMINATES (*1)	BLINKS (*2)	BLINKS (*3)	BLINKS (*4)	OUTPUTS DTC
Normal	○	○	-	-	-	-	-	-
Low tire pressure	○	-	○	-	-	-	-	-
System fail	○	-	-	○	-	-	-	-
Test mode	○	-	-	-	○	-	-	-
Initialization	○	-	-	-	-	○	-	-
ECU connector poorly connected	-	-	-	○ (*5)	-	-	-	-
TC ground (DTC is output)	○	-	-	-	-	-	-	○
TC ground (DTC is not output)	○	-	-	-	-	-	○	-

*1: Comes on and goes off repeatedly at 0.5 second intervals, and stays on after 1 minute.

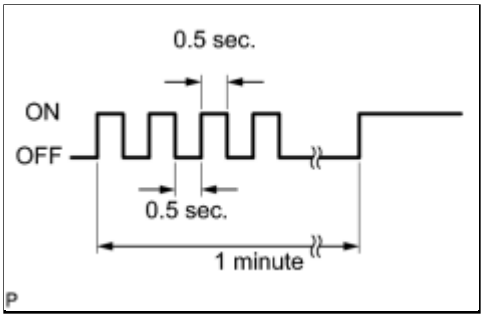

*2: Comes on and goes off repeatedly at 0.125 second intervals.

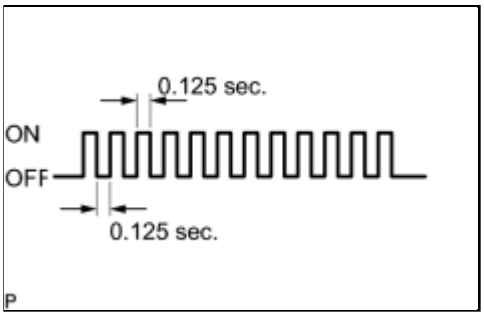

*3: Blinks 3 times (1 second on, 1 second off).

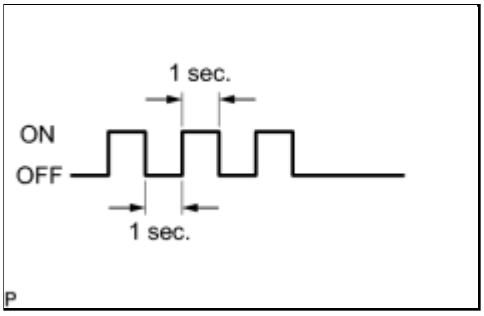

*4: Comes on and goes off repeatedly at 0.25 second intervals.

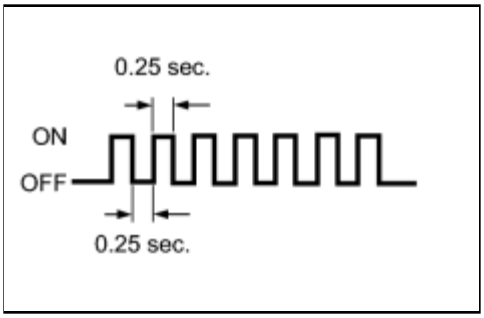

*5: When determining if there is a short circuit (10 seconds), the light is off. Then it blinks at 0.5 second intervals, and stays on after 1 minute.

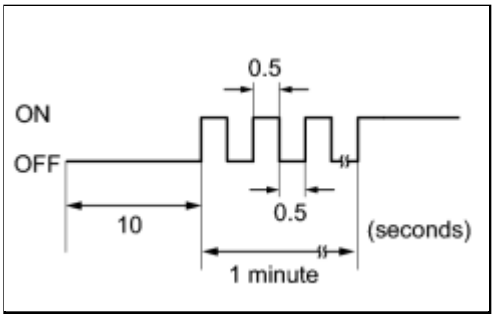

Last Modified: 3-10-2010	6.4 U	**From:** 200901
Model Year: 2010	**Model:** Corolla	**Doc ID:** RM000000XMY03GX
Title: TIRE PRESSURE MONITORING: TIRE PRESSURE WARNING SYSTEM: DATA LIST / ACTIVE TEST (2010 Corolla)		

DATA LIST / ACTIVE TEST

1. DATA LIST

HINT:

Using the Techstream to read the Data List allows the values or states of switches, sensors, actuators and other items to be read without removing any parts. This non-intrusive inspection can be very useful because intermittent conditions or signals may be discovered before parts or wiring is disturbed. Reading the Data List information early in troubleshooting is one way to save diagnostic time.

NOTICE:

In the table below, the values listed under "Normal Condition" are reference values. Do not depend solely on these reference values when deciding whether a part is faulty or not.

(a) Turn the ignition switch off.

(b) Connect the Techstream to the DLC3.

(c) Turn the ignition switch to ON.

(d) Turn the Techstream on.

(e) Enter the following menus: Chassis / Tire Pressure Monitor / Data List.

(f) According to the display on the Techstream, read the "Data List".

Tire Pressure Monitor

TESTER DISPLAY	MEASUREMENT ITEM/RANGE	NORMAL CONDITION	DIAGNOSTIC NOTE
Mode Status	Tire pressure warning system mode/ NORMAL or TEST	NORMAL: Normal mode TEST: Test mode	-
Main Tire	Number of main tire ID to be registered/ 0 or 1 or 2 or 3 or 4	0 to 4 is displayed	-
Vehicle Speed	Vehicle speed reading/ min.: 0 km/h (0 mph), max.: 255 km/h (158 mph)	Actual vehicle speed	Speed indicated on the combination meter
Registered ID1 Code	Registered ID1 code/ min.: 0, max.: FFFFFFF*1	The ID No. registered in the transmitter ID1 is displayed	-
Registered ID2 Code	Registered ID2 code/ min.: 0, max.: FFFFFFF*1	The ID No. registered in the transmitter ID2 is displayed	-

TESTER DISPLAY	MEASUREMENT ITEM/RANGE	NORMAL CONDITION	DIAGNOSTIC NOTE
Registered ID3 Code	Registered ID3 code/ min.: 0, max.: FFFFFFF*1	The ID No. registered in the transmitter ID3 is displayed	-
Registered ID4 Code	Registered ID4 code/ min.: 0, max.: FFFFFFF*1	The ID No. registered in the transmitter ID4 is displayed	-
Transmission Status	ID code transmission status/ FINISH or NOW	FINISH or NOW	-
Initialization Switch	Tire pressure warning reset switch/ ON, OFF	ON: Switch on OFF: Switch off	-
ID1 Tire Inflation Pressure	ID1 tire inflation pressure/ min.: Absolute pressure / 0 kPa (0 kgf/cm^2, 0 psi), Relative pressure / -100 kPa (-1.0 kgf/cm^2, -14 psi) max.: Absolute pressure / 638 kPa (6.4 kgf/cm^2, 93 psi), Relative pressure / 538 kPa (5.4 kgf/cm^2, 78 psi)	Actual tire inflation pressure	If 0 kPa (0 kgf/cm^2, 0 psi) is displayed for absolute pressure or -100 kPa (-1.0 kgf/cm^2, -14 psi) is displayed for relative pressure, data has not been received.*2
ID2 Tire Inflation Pressure	ID2 tire inflation pressure / min.: Absolute pressure / 0 kPa (0 kgf/cm^2, 0 psi), Relative pressure / -100 kPa (-1.0 kgf/cm^2, -14 psi) max.: Absolute pressure / 638 kPa (6.4 kgf/cm^2, 93 psi), Relative pressure / 538 kPa (5.4 kgf/cm^2, 78 psi)	Actual tire inflation pressure	If 0 kPa (0 kgf/cm^2, 0 psi) is displayed for absolute pressure or -100 kPa (-1.0 kgf/cm^2, -14 psi) is displayed for relative pressure, data has not been received.*2
ID3 Tire Inflation Pressure	ID3 tire inflation pressure / min.: Absolute pressure / 0 kPa (0 kgf/cm^2, 0 psi), Relative pressure / -100 kPa (-1.0 kgf/cm^2, -14 psi) max.: Absolute pressure / 638 kPa (6.4 kgf/cm^2, 93 psi), Relative pressure / 538 kPa (5.4 kgf/cm^2, 78 psi)	Actual tire inflation pressure	If 0 kPa (0 kgf/cm^2, 0 psi) is displayed for absolute pressure or -100 kPa (-1.0 kgf/cm^2, -14 psi) is displayed for relative pressure, data has not been received.*2

TESTER DISPLAY	MEASUREMENT ITEM/RANGE	NORMAL CONDITION	DIAGNOSTIC NOTE
ID4 Tire Inflation Pressure	ID4 tire inflation pressure / min.: Absolute pressure / 0 kPa (0 kgf/cm^2, 0 psi), Relative pressure / -100 kPa (-1.0 kgf/cm^2, -14 psi) max.: Absolute pressure / 638 kPa (6.4 kgf/cm^2, 93 psi), Relative pressure / 538 kPa (5.4 kgf/cm^2, 78 psi)	Actual tire inflation pressure	If 0 kPa (0 kgf/cm^2, 0 psi) is displayed for absolute pressure or -100 kPa (-1.0 kgf/cm^2, -14 psi) is displayed for relative pressure, data has not been received.*2
ID1 Temperature in Tire	ID1 temperature in tire/ min.: -40°C (-40°F), max.: 215°C (419°F)	Actual tire temperature	If -40°C (-40°F) is displayed, data has not been received.
ID2 Temperature in Tire	ID2 temperature in tire/ min.: -40°C (-40°F), max.: 215°C (419°F)	Actual tire temperature	If -40°C (-40°F) is displayed, data has not been received.
ID3 Temperature in Tire	ID3 temperature in tire/ min.: -40°C (-40°F), max.: 215°C (419°F)	Actual tire temperature	If -40°C (-40°F) is displayed, data has not been received.
ID4 Temperature in Tire	ID4 temperature in tire/ min.: -40°C (-40°F), max.: 215°C (419°F)	Actual tire temperature	If -40°C (-40°F) is displayed, data has not been received.
ID1 Battery Voltage	ID1 battery voltage/OVER or LESS	OVER	-
ID2 Battery Voltage	ID2 battery voltage/OVER or LESS	OVER	-
ID3 Battery Voltage	ID3 battery voltage/OVER or LESS	OVER	-
ID4 Battery Voltage	ID4 battery voltage/OVER or LESS	OVER	-
Initialization Switch Info	Tire pressure warning reset switch setting information/ WITH or WITHOUT	WITH	-
ID1 Initial Threshold of Low-pressure	ID1 initial threshold of low-pressure/ min.: Absolute pressure / 0 kPa (0 kgf/cm^2, 0 psi), Relative pressure / -100 kPa (-1.0 kgf/cm^2, -14 psi) max.: Absolute pressure / 638 kPa (6.4 kgf/cm^2, 93 psi), Relative pressure /	Tire pressure after initialization	-

TESTER DISPLAY	MEASUREMENT ITEM/RANGE	NORMAL CONDITION	DIAGNOSTIC NOTE
	538 kPa (5.4 kgf/cm^2, 78 psi)		
ID2 Initial Threshold of Low-pressure	ID2 initial threshold of low-pressure/ min.: Absolute pressure / 0 kPa (0 kgf/cm^2, 0 psi), Relative pressure / -100 kPa (-1.0 kgf/cm^2, -14 psi) max.: Absolute pressure / 638 kPa (6.4 kgf/cm^2, 93 psi), Relative pressure / 538 kPa (5.4 kgf/cm^2, 78 psi)	Tire pressure after initialization	-
ID3 Initial Threshold of Low-pressure	ID3 initial threshold of low-pressure/ min.: Absolute pressure / 0 kPa (0 kgf/cm^2, 0 psi), Relative pressure / -100 kPa (-1.0 kgf/cm^2, -14 psi) max.: Absolute pressure / 638 kPa (6.4 kgf/cm^2, 93 psi), Relative pressure / 538 kPa (5.4 kgf/cm^2, 78 psi)	Tire pressure after initialization	-
ID4 Initial Threshold of Low-pressure	ID4 initial threshold of low-pressure/ min.: Absolute pressure / 0 kPa (0 kgf/cm^2, 0 psi), Relative pressure / -100 kPa (-1.0 kgf/cm^2, -14 psi) max.: Absolute pressure / 638 kPa (6.4 kgf/cm^2, 93 psi), Relative pressure / 538 kPa (5.4 kgf/cm^2, 78 psi)	Tire pressure after initialization	-
Engine Speed	Engine speed reading/min.: 0 rpm, max.: 65535 rpm	Actual engine speed	Engine speed indicated on the combination meter
Number of Trouble Code	Number of DTCs recorded/min.: 0, max.: 255	Min.: 0, Max.: -	-

HINT:

***1: Displayed only when the ID No. is not registered.**

***2: It may take about 2 or 3 minutes until the values are displayed. If the values are not displayed after a few minutes, perform troubleshooting according to the inspection procedure for DTCs C2121/21 to C2124/24**

INFO .

2. Active Test

Using the Techstream to perform Active Tests allows the relays, VSVs, actuators and other items to be operated without removing any parts. This non-intrusive functional inspection can be very useful because intermittent operation may be discovered before parts or wiring is disturbed. Performing Active Tests early in trouble shooting is one way to save diagnostic time. Data List information can be displayed while performing Active Tests.

(a) Turn the ignition switch off.

(b) Connect the Techstream to the DLC3.

(c) Turn the ignition switch to ON.

(d) Turn the Techstream on.

(e) Enter the following menus: Body Electrical / Combination Meter / Active Test.

(f) Check the operation by referring to the table below.

Combination Meter

TESTER DISPLAY	TEST PART	CONTROL RANGE	DIAGNOSTIC NOTE
Indicat. Tire Pressure Warning System	Tire pressure warning light	Tire pressure warning light is OFF or ON	Confirm that the vehicle is stopped, engine idling

Last Modified: 3-10-2010	6.4 D	**From:** 200901
Model Year: 2010	**Model:** Corolla	**Doc ID:** RM000000XMX03XX
Title: TIRE PRESSURE MONITORING: TIRE PRESSURE WARNING SYSTEM: DTC CHECK / CLEAR (2010 Corolla)		

DTC CHECK / CLEAR

1. DTC CHECK (USING SST CHECK WIRE)

(a) Turn the ignition switch off.

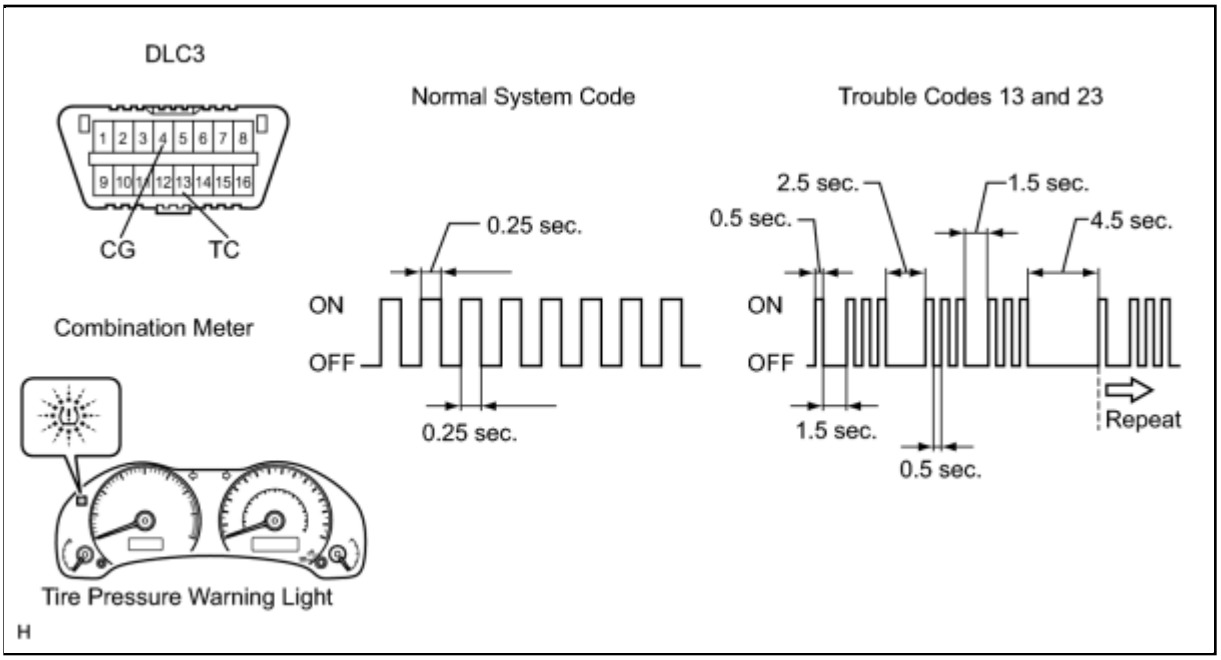

(b) Using SST, connect terminals 13 (TC) and 4 (CG) of the DLC3.

SST: 09843-18040

(c) Turn the ignition switch to ON.

(d) Read and record any DTCs from the tire pressure warning light on the combination meter. Refer to the illustration as examples of the normal system code and codes 13 and 23.

HINT:

- If the tire pressure warning light does not indicate any DTCs or the normal system code, inspect the tire pressure warning light circuit or TC and CG terminal circuit.

TROUBLE AREA	SEE PROCEDURE
Tire pressure warning light circuit	INFO
TC and CG terminal circuit	INFO

- If 2 or more malfunctions are indicated at the same time, the lowest numbered DTC is displayed first.

(e) Refer to the Diagnostic Trouble Code Chart INFO for DTC information.

(f) After completing the check, turn the ignition switch off and remove SST from the DLC3.

SST: 09843-18040

2. DTC CHECK (USING TECHSTREAM)

(a) Turn the ignition switch off.

(b) Connect the Techstream to the DLC3.

(c) Turn the ignition switch to ON.

(d) Turn the Techstream on.

(e) Enter the following menus: Chassis / Tire Pressure Monitor / Trouble Codes.

(f) Read the DTCs following the prompts on the Techstream.

HINT:

Refer to the Techstream's operator's manual for further details.

3. CLEAR DTC

HINT:

After repairing the malfunctions, clear the DTCs.

(a) Turn the ignition switch off.

(b) Connect the Techstream to the DLC3.

(c) Turn the ignition switch to ON.

(d) Turn the Techstream on.

(e) Enter the following menus: Chassis / Tire Pressure Monitor / Trouble Codes.

(f) Clear the DTCs following the prompts on the Techstream.

HINT:

Refer to the Techstream operator's manual for further details.



Last Modified: 3-10-2010	6.4 S	**From:** 200901
Model Year: 2010	**Model:** Corolla	**Doc ID:** RM000000XMR03AX
Title: TIRE PRESSURE MONITORING: TIRE PRESSURE WARNING SYSTEM: DIAGNOSTIC TROUBLE CODE CHART (2010 Corolla)		

DIAGNOSTIC TROUBLE CODE CHART

HINT:

If a trouble code is displayed during the DTC check, inspect the circuit listed for that code. For details of each code, refer to the relevant page listed under respective "DTC Code" in the DTC chart.

Tire Pressure Warning System

DTC CODE	DETECTION ITEM	TROUBLE AREA	SEE PAGE
C2111/11	Transmitter ID1 Operation Stop	1. Tire pressure warning valve and transmitter 2. Tire pressure warning ECU	INFO
C2112/12	Transmitter ID2 Operation Stop	1. Tire pressure warning valve and transmitter 2. Tire pressure warning ECU	INFO
C2113/13	Transmitter ID3 Operation Stop	1. Tire pressure warning valve and transmitter 2. Tire pressure warning ECU	INFO
C2114/14	Transmitter ID4 Operation Stop	1. Tire pressure warning valve and transmitter 2. Tire pressure warning ECU	INFO
C2121/21	No Signal from Transmitter ID1	1. Tire pressure warning valve and transmitter 2. Tire pressure warning antenna and receiver 3. Wire harness or connector 4. Tire pressure warning ECU	INFO
C2122/22	No Signal from Transmitter ID2	1. Tire pressure warning valve and transmitter 2. Tire pressure warning antenna and receiver 3. Wire harness or connector 4. Tire pressure warning ECU	INFO
C2123/23	No Signal from Transmitter ID3	1. Tire pressure warning valve and transmitter 2. Tire pressure warning antenna and receiver 3. Wire harness or connector 4. Tire pressure warning ECU	INFO

DTC CODE	DETECTION ITEM	TROUBLE AREA	SEE PAGE
C2124/24	No Signal from Transmitter ID4	1. Tire pressure warning valve and transmitter 2. Tire pressure warning antenna and receiver 3. Wire harness or connector 4. Tire pressure warning ECU	INFO
C2126/26	Transmitter ID not Received in Main Mode	1. ID registration failure 2. Tire pressure warning valve and transmitter 3. Tire pressure warning antenna and receiver 4. Wire harness or connector 5. Tire pressure warning ECU	INFO
C2141/41	Transmitter ID1 Error	1. Tire pressure warning valve and transmitter 2. Tire pressure warning ECU	INFO
C2142/42	Transmitter ID2 Error	1. Tire pressure warning valve and transmitter 2. Tire pressure warning ECU	INFO
C2143/43	Transmitter ID3 Error	1. Tire pressure warning valve and transmitter 2. Tire pressure warning ECU	INFO
C2144/44	Transmitter ID4 Error	1. Tire pressure warning valve and transmitter 2. Tire pressure warning ECU	INFO
C2165/65	Abnormal Temperature Inside ID1 Tire	1. Tires 2. Tire pressure warning valve and transmitter 3. Tire pressure warning ECU	INFO
C2166/66	Abnormal Temperature Inside ID2 Tire	1. Tires 2. Tire pressure warning valve and transmitter 3. Tire pressure warning ECU	INFO
C2167/67	Abnormal Temperature Inside ID3 Tire	1. Tires 2. Tire pressure warning valve and transmitter 3. Tire pressure warning ECU	INFO
C2168/68	Abnormal Temperature Inside ID4 Tire	1. Tires 2. Tire pressure warning valve and transmitter 3. Tire pressure warning ECU	INFO

DTC CODE	DETECTION ITEM	TROUBLE AREA	SEE PAGE
C2171/71	Transmitter ID not Registered	Tire pressure warning ECU	INFO
C2173/73	Vehicle Speed or Engine Speed Signal Malfunction	1. Combination meter 2. ECM 3. Wire harness or connector 4. Tire pressure warning ECU	INFO
C2176/76	Receiver Error	Tire pressure warning ECU	INFO
C2177/77	Initialization not Completed	1. Tire pressure warning valve and transmitter 2. Tire pressure warning antenna and receiver 3. Wire harness or connector 4. Tire pressure warning ECU	INFO
C2181/81	Transmitter ID1 not Received (Test Mode DTC)	1. Tire pressure warning valve and transmitter 2. Tire pressure warning ECU	INFO
C2182/82	Transmitter ID2 not Received (Test Mode DTC)	1. Tire pressure warning valve and transmitter 2. Tire pressure warning ECU	INFO
C2183/83	Transmitter ID3 not Received (Test Mode DTC)	1. Tire pressure warning valve and transmitter 2. Tire pressure warning ECU	INFO
C2184/84	Transmitter ID4 not Received (Test Mode DTC)	1. Tire pressure warning valve and transmitter 2. Tire pressure warning ECU	INFO
C2191/91	Vehicle Speed Signal Error (Test Mode DTC)	1. Vehicle speed sensor 2. Combination meter 3. Wire harness or connector 4. Tire pressure warning ECU	INFO
C2194/94	Engine Speed Signal Error (Test Mode DTC)	1. ECM 2. Wire harness or connector 3. Tire pressure warning ECU	INFO

Last Modified: 3-10-2010	6.4 C	**From:** 200901
Model Year: 2010	**Model:** Corolla	**Doc ID:** RM000002DZD03BX
Title: TIRE PRESSURE MONITORING: TIRE PRESSURE WARNING SYSTEM: C2111/11-C2114/14: Transmitter ID1 Operation Stop (2010 Corolla)		

DTC	**C2111/11**	**Transmitter ID1 Operation Stop**

DTC	**C2112/12**	**Transmitter ID2 Operation Stop**

DTC	**C2113/13**	**Transmitter ID3 Operation Stop**

DTC	**C2114/14**	**Transmitter ID4 Operation Stop**

DESCRIPTION

The tire pressure warning valve and transmitters that are installed in the tire and wheel assemblies measure the tire pressures. The measured values are transmitted to the tire pressure warning antenna and receiver on the body as radio waves and then sent to the tire pressure warning ECU. The ECU compares the measured air pressure values with the air pressure threshold. When the measured air pressure value is less than this threshold, the warning light in the combination meter comes on. The tire pressure warning ECU stores a DTC when the tire pressure warning valve and transmitter stops transmitting signals. At this time, forcibly transmit the signals by releasing the tire pressure rapidly. The stored DTC is cleared when the signal transmission is resumed.

DTC NO.	DTC DETECTION CONDITION	TROUBLE AREA
C2111/11 C2112/12 C2113/13 C2114/14	Tire pressure warning valve and transmitters stop transmitting signals	• Tire pressure warning valve and transmitter • Tire pressure warning ECU

HINT:

It is necessary to perform the procedure to identify the tire pressure warning valve and transmitter that is malfunctioning because it cannot be identified by the output DTC.

WIRING DIAGRAM

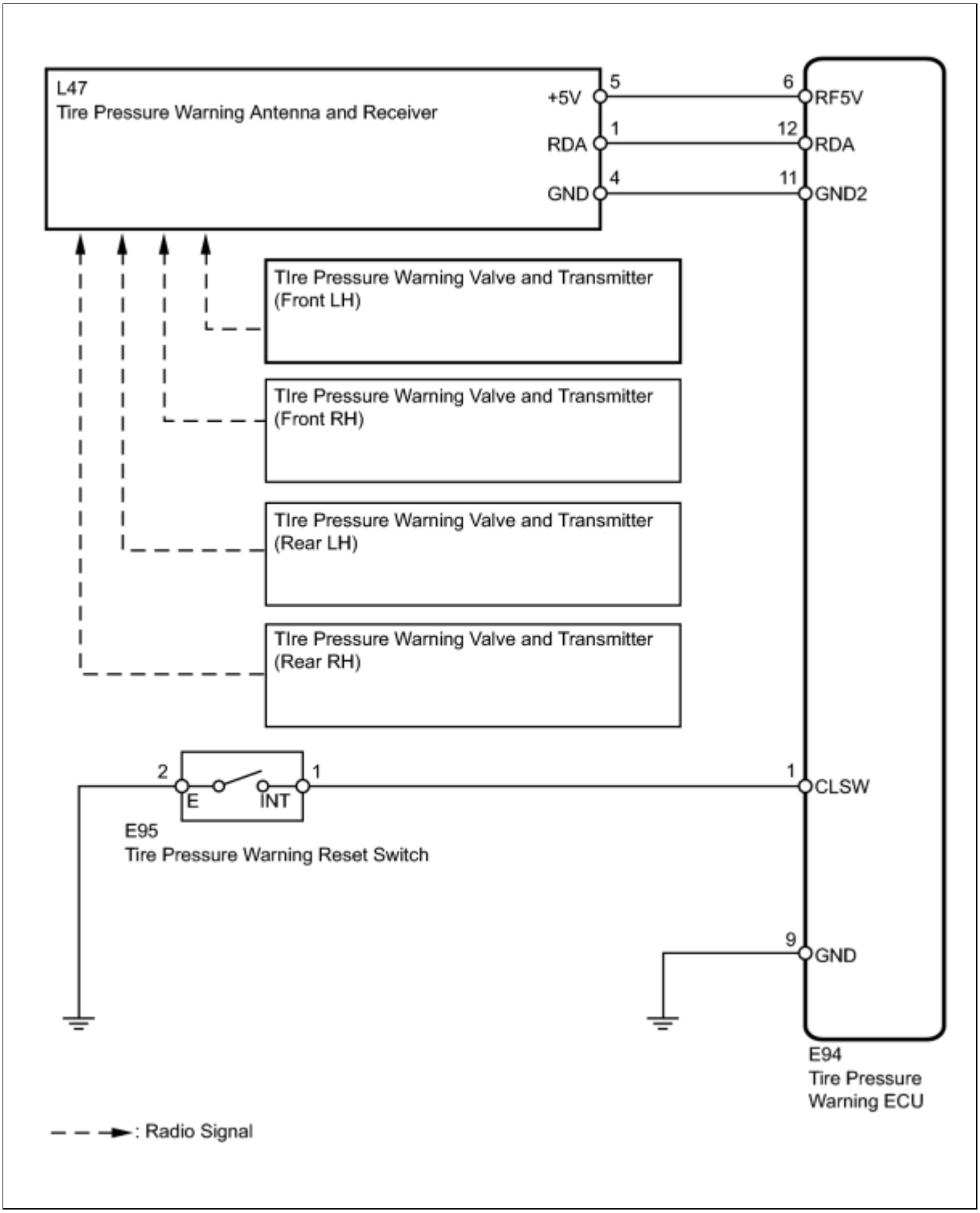

INSPECTION PROCEDURE

PROCEDURE

1.	**PERFORM FORCED TRANSMISSION OF TRANSMITTER ID OF ALL WHEELS**

(a) Set the tire pressure to the specified value INFO .

(b) Turn the ignition switch off.

(c) Connect the Techstream to the DLC3.

(d) Turn the ignition switch to ON.

(e) Turn the Techstream on.

(f) Enter the following menus: Chassis / Tire Pressure Monitor / Data List.

(g) Check the values by referring to the table below.

Tire Pressure Monitor

TESTER DISPLAY	MEASUREMENT ITEM/RANGE	NORMAL CONDITION	DIAGNOSTIC NOTE
ID1 Tire Inflation Pressure	ID1 tire inflation pressure/ min.: Absolute pressure / 0 kPa (0 kgf/cm^2, 0 psi), Relative pressure / -100 kPa (-1.0 kgf/cm^2, -14 psi) max.: Absolute pressure / 638 kPa (6.4 kgf/cm^2, 93 psi), Relative pressure / 538 kPa (5.4 kgf/cm^2, 78 psi)	Actual tire inflation pressure	If 0 kPa (0 kgf/cm^2, 0 psi) is displayed for absolute pressure or -100 kPa (-1.0 kgf/cm^2, -14 psi) is displayed for relative pressure, data has not been received.*
ID2 Tire Inflation Pressure	ID2 tire inflation pressure / min.: Absolute pressure / 0 kPa (0 kgf/cm^2, 0 psi), Relative pressure / -100 kPa (-1.0 kgf/cm^2, -14 psi) max.: Absolute pressure / 638 kPa (6.4 kgf/cm^2, 93 psi), Relative pressure / 538 kPa (5.4 kgf/cm^2, 78 psi)	Actual tire inflation pressure	If 0 kPa (0 kgf/cm^2, 0 psi) is displayed for absolute pressure or -100 kPa (-1.0 kgf/cm^2, -14 psi) is displayed for relative pressure, data has not been received.*
ID3 Tire Inflation Pressure	ID3 tire inflation pressure / min.: Absolute pressure / 0 kPa (0 kgf/cm^2, 0 psi), Relative pressure / -100 kPa (-1.0 kgf/cm^2, -14 psi) max.: Absolute pressure / 638 kPa (6.4 kgf/cm^2, 93 psi), Relative pressure / 538 kPa (5.4 kgf/cm^2, 78 psi)	Actual tire inflation pressure	If 0 kPa (0 kgf/cm^2, 0 psi) is displayed for absolute pressure or -100 kPa (-1.0 kgf/cm^2, -14 psi) is displayed for relative pressure, data has not been received.*
ID4 Tire Inflation Pressure	ID4 tire inflation pressure / min.: Absolute pressure / 0 kPa (0 kgf/cm^2, 0 psi), Relative pressure / -100 kPa (-1.0 kgf/cm^2, -14 psi)	Actual tire inflation pressure	If 0 kPa (0 kgf/cm^2, 0 psi) is displayed for absolute pressure or -100 kPa (-1.0 kgf/cm^2, -14 psi) is displayed for relative pressure, data has not been received.*

TESTER DISPLAY	MEASUREMENT ITEM/RANGE	NORMAL CONDITION	DIAGNOSTIC NOTE
	max.: Absolute pressure / 638 kPa (6.4 kgf/cm^2, 93 psi), Relative pressure / 538 kPa (5.4 kgf/cm^2, 78 psi)		

HINT:

***: It may take about 2 or 3 minutes until the values are displayed. If the values are not displayed after a few minutes, perform troubleshooting according to the inspection procedure for DTCs C2121/21 to C2124/24** INFO .

(h) Rapidly release the tire pressure for each wheel at least 40 kPa (0.4 kgf/cm^2, 5.8 psi) within 30 seconds.

(1) Check that each tire pressure data displayed on the Techstream has changed.

OK:

Each tire pressure data displayed on the Techstream will change to the value of the tire pressure.

NOTICE:

- It takes about 2 or 3 minutes to display the updated tire pressure data.
- When the "ID Tire Inflation Pressure" data has not changed, reset the tire pressure to the appropriate specified value and rotate the tire 90 to 270 degrees. Then rapidly release the tire pressure and recheck it.

(2) After confirming that all of the tire pressure data displayed on the Techstream have changed, set the tire pressure to the appropriate specified values.

HINT:

If the tire pressure data displayed on the Techstream has not changed after rechecking, inspect for another problem INFO .

NG ▶ **GO TO TRANSMITTER AND RECEIVER INSPECTION PROCEDURE**

OK ▶ **END**

Last Modified: 3-10-2010	6.4 C	**From:** 200901
Model Year: 2010	**Model:** Corolla	**Doc ID:** RM00000340702WX
Title: TIRE PRESSURE MONITORING: TIRE PRESSURE WARNING SYSTEM: C2126/26: Transmitter ID not Received in Main Mode (2010 Corolla)		

DTC	**C2126/26**	**Transmitter ID not Received in Main Mode**

DESCRIPTION

After all IDs are registered, DTC C2126/26 is set in the tire pressure warning ECU and the tire pressure warning light blinks for 1 minute and then comes on.

When the tire pressure waning ECU successfully receives radio waves from all the transmitters whose IDs are stored in the ECU, DTC C2126/26 is deleted and the tire pressure warning light goes off.

DTC NO.	DTC DETECTION CONDITION	TROUBLE AREA
C2126/26	After ID registration is completed, ECU does not receive radio waves from transmitters whose IDs are stored in ECU.	• ID registration failure • Tire pressure warning valve and transmitter • Tire pressure warning antenna and receiver • Wire harness or connector • Tire pressure warning ECU

HINT:

If the IDs stored in the tire pressure warning ECU differ from the transmitter IDs, DTC C2126/26 is set. Check that the IDs in the ECU are the same as the transmitter IDs.

WIRING DIAGRAM

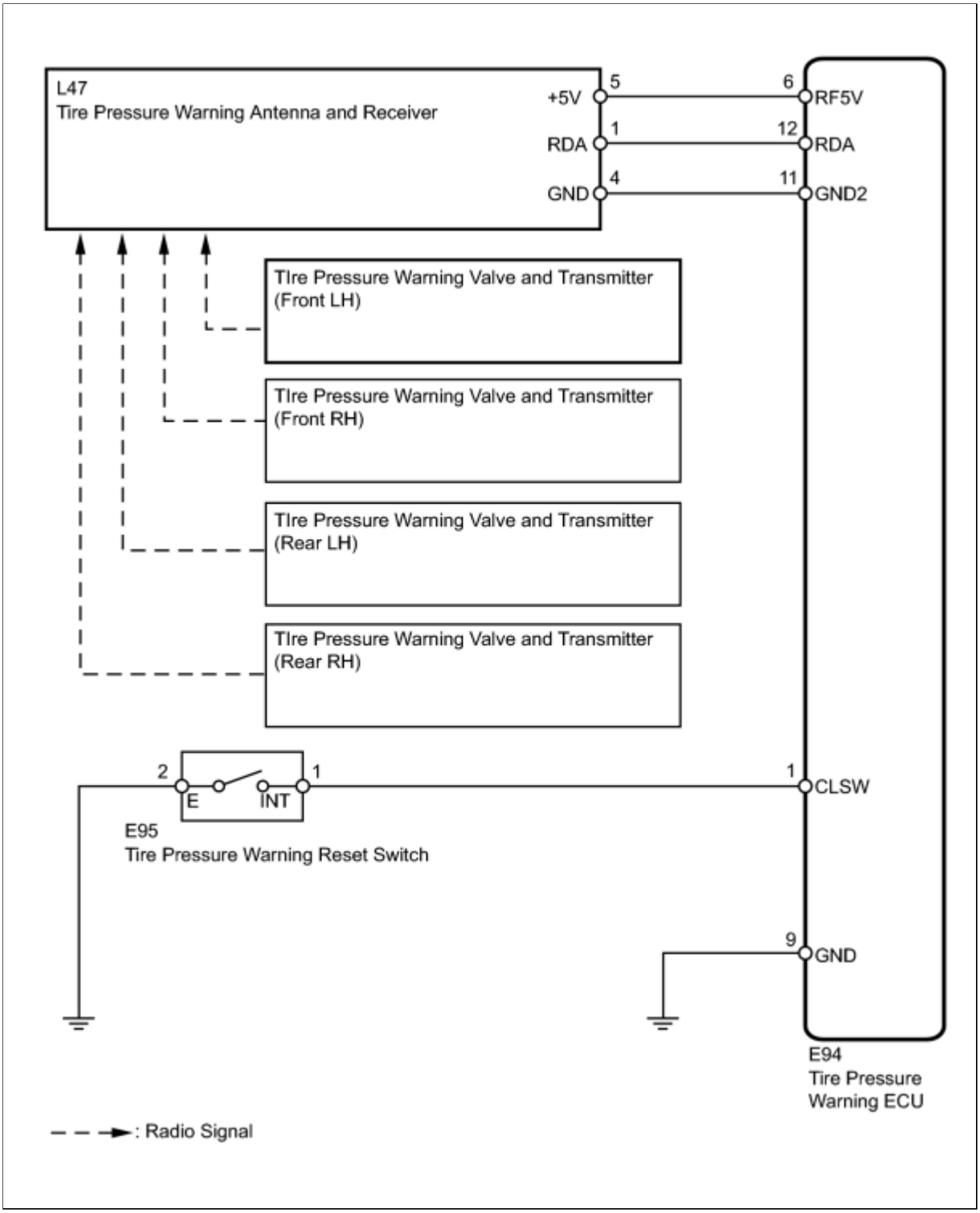

INSPECTION PROCEDURE

NOTICE:

- When replacing the tire pressure warning ECU, read the transmitter IDs stored in the old ECU using the Techstream and write them down before removal.
- It is necessary to perform initialization INFO after registration INFO of the transmitter IDs into the tire pressure warning ECU after the ECU and/or valve and transmitter has been replaced.

PROCEDURE

1.	IDENTIFY TRANSMITTER NOT RECEIVED

(a) Set the tire pressure to the specified values INFO .

(b) Turn the ignition switch off.

(c) Connect the Techstream to the DLC3.

(d) Turn the ignition switch to ON.

(e) Turn the Techstream on.

(f) Enter the following menus: Chassis / Tire Pressure Monitor / Data List.

(g) Check the values by referring to the table below.

Tire Pressure Monitor

TESTER DISPLAY	MEASUREMENT ITEM/RANGE	NORMAL CONDITION	DIAGNOSTIC NOTE
ID1 Tire Inflation Pressure	ID1 tire inflation pressure/ min.: Absolute pressure / 0 kPa (0 kgf/cm^2, 0 psi), Relative pressure / -100 kPa (-1.0 kgf/cm^2, -14 psi) max.: Absolute pressure / 638 kPa (6.4 kgf/cm^2, 93 psi), Relative pressure / 538 kPa (5.4 kgf/cm^2, 78 psi)	Actual tire inflation pressure	If 0 kPa (0 kgf/cm^2, 0 psi) is displayed for absolute pressure or -100 kPa (-1.0 kgf/cm^2, -14 psi) is displayed for relative pressure, data has not been received.*
ID2 Tire Inflation Pressure	ID2 tire inflation pressure / min.: Absolute pressure / 0 kPa (0 kgf/cm^2, 0 psi), Relative pressure / -100 kPa (-1.0 kgf/cm^2, -14 psi) max.: Absolute pressure / 638 kPa (6.4 kgf/cm^2, 93 psi), Relative pressure / 538 kPa (5.4 kgf/cm^2, 78 psi)	Actual tire inflation pressure	If 0 kPa (0 kgf/cm^2, 0 psi) is displayed for absolute pressure or -100 kPa (-1.0 kgf/cm^2, -14 psi) is displayed for relative pressure, data has not been received.*
ID3 Tire Inflation Pressure	ID3 tire inflation pressure / min.: Absolute pressure / 0 kPa (0 kgf/cm^2, 0 psi), Relative pressure / -100 kPa (-1.0 kgf/cm^2, -14 psi) max.: Absolute pressure / 638 kPa (6.4 kgf/cm^2, 93 psi), Relative pressure / 538 kPa (5.4 kgf/cm^2, 78 psi)	Actual tire inflation pressure	If 0 kPa (0 kgf/cm^2, 0 psi) is displayed for absolute pressure or -100 kPa (-1.0 kgf/cm^2, -14 psi) is displayed for relative pressure, data has not been received.*

TESTER DISPLAY	MEASUREMENT ITEM/RANGE	NORMAL CONDITION	DIAGNOSTIC NOTE
ID4 Tire Inflation Pressure	ID4 tire inflation pressure / min.: Absolute pressure / 0 kPa (0 kgf/cm^2, 0 psi), Relative pressure / -100 kPa (-1.0 kgf/cm^2, -14 psi) max.: Absolute pressure / 638 kPa (6.4 kgf/cm^2, 93 psi), Relative pressure / 538 kPa (5.4 kgf/cm^2, 78 psi)	Actual tire inflation pressure	If 0 kPa (0 kgf/cm^2, 0 psi) is displayed for absolute pressure or -100 kPa (-1.0 kgf/cm^2, -14 psi) is displayed for relative pressure, data has not been received.*

HINT:

***: It may take about 2 or 3 minutes until the values are displayed.**

(h) Rapidly reduce the tire pressure for each wheel at least 40 kPa (0.4 kgf/cm^2, 5.8 psi) within 30 seconds.

(i) Check the Data List.

NOTICE:

- It takes about 2 or 3 minutes to display the updated tire pressure data.
- When no "ID Tire Inflation Pressure" data has changed, reset the tire pressure to the appropriate specified value and rotate the tire 90 to 270 degrees. Then rapidly release the tire pressure and recheck it.
- Record the "ID Tire Inflation Pressure" data transmitter ID that corresponds to each tire.

(j) After confirming that the "ID Tire Inflation Pressure" data for one tire (ID1 to ID4) has changed, repeat this procedure one by one. Identify the transmitter not received.

Result

CONDITION	PROCEED TO
One or more of transmitters abnormal	A
All normal	B

B ▶ **END**

A ▼

2.	**CHECK TRANSMITTER ID**

(a) Turn the ignition switch off.

(b) Connect the Techstream to the DLC3.

(c) Turn the ignition switch to ON.

(d) Turn the Techstream on.

(e) Enter the following menus: Chassis / Tire Pressure Monitor / Data List.

(f) Check the values by referring to the table below.

Tire Pressure Monitor

TESTER DISPLAY	MEASUREMENT ITEM/DISPLAY	NORMAL CONDITION	DIAGNOSTIC NOTE
Registered ID1 Code	Registered ID1 code/ min.: 0 max.: FFFFFFF*	The ID No. registered in the transmitter ID1 is displayed	-
Registered ID2 Code	Registered ID2 code/ min.: 0 max.: FFFFFFF*	The ID No. registered in the transmitter ID2 is displayed	-
Registered ID3 Code	Registered ID3 code/ min.: 0 max.: FFFFFFF*	The ID No. registered in the transmitter ID3 is displayed	-
Registered ID4 Code	Registered ID4 code/ min.: 0 max.: FFFFFFF*	The ID No. registered in the transmitter ID4 is displayed	-

HINT:

***: Displayed only when the ID No. is not registered.**

(g) Check the ID number on the identified transmitter by removing it from the tire and wheel.

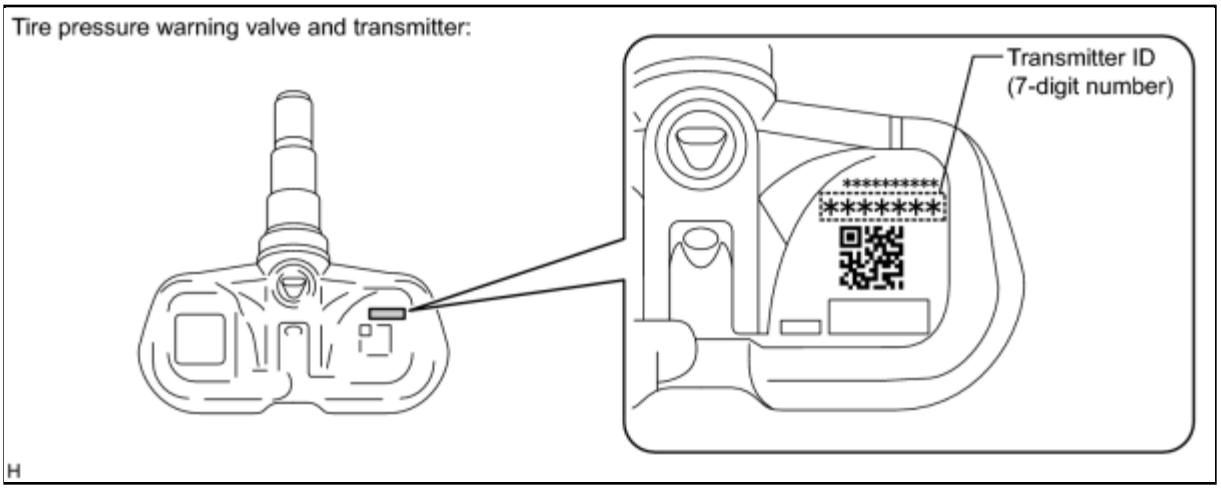

(h) Confirm that the ID number on the transmitter and recorded transmitter ID match.

Result

RESULT	PROCEED TO
Match	A
Do not match	B

B ▶ **REGISTRATION OF TRANSMITTER ID**

A

▼

3.	**REPLACE TIRE PRESSURE WARNING VALVE AND TRANSMITTER**

(a) Replace the tire pressure warning valve and transmitter INFO .

NEXT

▼

4.	**REGISTRATION OF TRANSMITTER ID**

(a) Perform registration INFO .

NEXT

▼

5.	**PERFORM INITIALIZATION**

(a) Perform initialization INFO .

NEXT

6.	CONFIRM TIRE INFLATION PRESSURE (DATA LIST)

(a) Turn the ignition switch off.

(b) Connect Techstream to the DLC3.

(c) Turn the ignition switch to ON.

(d) Turn the Techstream on.

(e) Enter the following menus: Chassis / Tire Pressure Monitor / Data List.

(f) Check the values by referring to the table below.

Tire Pressure Monitor

TESTER DISPLAY	MEASUREMENT ITEM/RANGE	NORMAL CONDITION	DIAGNOSTIC NOTE
ID1 Tire Inflation Pressure	ID1 tire inflation pressure/ min.: Absolute pressure / 0 kPa (0 kgf/cm^2, 0 psi), Relative pressure / -100 kPa (-1.0 kgf/cm^2, -14 psi) max.: Absolute pressure / 638 kPa (6.4 kgf/cm^2, 93 psi), Relative pressure / 538 kPa (5.4 kgf/cm^2, 78 psi)	Actual tire inflation pressure	If 0 kPa (0 kgf/cm^2, 0 psi) is displayed for absolute pressure or -100 kPa (-1.0 kgf/cm^2, -14 psi) is displayed for relative pressure, data has not been received.*
ID2 Tire Inflation Pressure	ID2 tire inflation pressure / min.: Absolute pressure / 0 kPa (0 kgf/cm^2, 0 psi), Relative pressure / -100 kPa (-1.0 kgf/cm^2, -14 psi) max.: Absolute pressure / 638 kPa (6.4 kgf/cm^2, 93 psi), Relative pressure / 538 kPa (5.4 kgf/cm^2, 78 psi)	Actual tire inflation pressure	If 0 kPa (0 kgf/cm^2, 0 psi) is displayed for absolute pressure or -100 kPa (-1.0 kgf/cm^2, -14 psi) is displayed for relative pressure, data has not been received.*
ID3 Tire Inflation Pressure	ID3 tire inflation pressure / min.: Absolute pressure / 0 kPa (0 kgf/cm^2, 0 psi), Relative pressure / -100 kPa (-1.0 kgf/cm^2, -14 psi) max.: Absolute pressure / 638	Actual tire inflation pressure	If 0 kPa (0 kgf/cm^2, 0 psi) is displayed for absolute pressure or -100 kPa (-1.0 kgf/cm^2, -14 psi) is displayed for relative pressure, data has not been received.*

TESTER DISPLAY	MEASUREMENT ITEM/RANGE	NORMAL CONDITION	DIAGNOSTIC NOTE
	kPa (6.4 kgf/cm^2, 93 psi), Relative pressure / 538 kPa (5.4 kgf/cm^2, 78 psi)		
ID4 Tire Inflation Pressure	ID4 tire inflation pressure / min.: Absolute pressure / 0 kPa (0 kgf/cm^2, 0 psi), Relative pressure / -100 kPa (-1.0 kgf/cm^2, -14 psi) max.: Absolute pressure / 638 kPa (6.4 kgf/cm^2, 93 psi), Relative pressure / 538 kPa (5.4 kgf/cm^2, 78 psi)	Actual tire inflation pressure	If 0 kPa (0 kgf/cm^2, 0 psi) is displayed for absolute pressure or -100 kPa (-1.0 kgf/cm^2, -14 psi) is displayed for relative pressure, data has not been received.*

HINT:

- *: It may take about 2 or 3 minutes until the values are displayed.
- When no "ID Tire Inflation Pressure" data has changed, reset the tire pressure to the appropriate specified value and rotate the tire 90 to 270 degrees. Then rapidly release the tire pressure and recheck it.

Result

RESULT	PROCEED TO
Tire pressure values are not displayed.	A
All tire pressure readings are equal to specified values.	B

B ▶ **END**

A ▼

7.	REPLACE TIRE PRESSURE WARNING ANTENNA AND RECEIVER

(a) Replace the tire pressure warning antenna and receiver INFO .

NEXT ▼

8.	CONFIRM TIRE INFLATION PRESSURE (DATA LIST)

(a) Turn the ignition switch off.

(b) Connect the Techstream to the DLC3.

(c) Turn the ignition switch to ON.

(d) Turn the Techstream on.

(e) Enter the following menus: Chassis / Tire Pressure Monitor / Data List.

(f) Check the values by referring to the table below.

Tire Pressure Monitor

TESTER DISPLAY	MEASUREMENT ITEM/RANGE	NORMAL CONDITION	DIAGNOSTIC NOTE
ID1 Tire Inflation Pressure	ID1 tire inflation pressure/ min.: Absolute pressure / 0 kPa (0 kgf/cm^2, 0 psi), Relative pressure / -100 kPa (-1.0 kgf/cm^2, -14 psi) max.: Absolute pressure / 638 kPa (6.4 kgf/cm^2, 93 psi), Relative pressure / 538 kPa (5.4 kgf/cm^2, 78 psi)	Actual tire inflation pressure	If 0 kPa (0 kgf/cm^2, 0 psi) is displayed for absolute pressure or -100 kPa (-1.0 kgf/cm^2, -14 psi) is displayed for relative pressure, data has not been received.*
ID2 Tire Inflation Pressure	ID2 tire inflation pressure / min.: Absolute pressure / 0 kPa (0 kgf/cm^2, 0 psi), Relative pressure / -100 kPa (-1.0 kgf/cm^2, -14 psi) max.: Absolute pressure / 638 kPa (6.4 kgf/cm^2, 93 psi), Relative pressure / 538 kPa (5.4 kgf/cm^2, 78 psi)	Actual tire inflation pressure	If 0 kPa (0 kgf/cm^2, 0 psi) is displayed for absolute pressure or -100 kPa (-1.0 kgf/cm^2, -14 psi) is displayed for relative pressure, data has not been received.*
ID3 Tire Inflation Pressure	ID3 tire inflation pressure / min.: Absolute pressure / 0 kPa (0 kgf/cm^2, 0 psi), Relative pressure / -100 kPa (-1.0 kgf/cm^2, -14 psi) max.: Absolute pressure / 638 kPa (6.4 kgf/cm^2, 93 psi), Relative pressure / 538 kPa (5.4 kgf/cm^2, 78 psi)	Actual tire inflation pressure	If 0 kPa (0 kgf/cm^2, 0 psi) is displayed for absolute pressure or -100 kPa (-1.0 kgf/cm^2, -14 psi) is displayed for relative pressure, data has not been received.*
ID4 Tire Inflation	ID4 tire inflation pressure / min.: Absolute pressure / 0	Actual tire inflation	If 0 kPa (0 kgf/cm^2, 0 psi) is displayed for absolute pressure or

TESTER DISPLAY	MEASUREMENT ITEM/RANGE	NORMAL CONDITION	DIAGNOSTIC NOTE
Pressure	kPa (0 kgf/cm^2, 0 psi), Relative pressure / -100 kPa (-1.0 kgf/cm^2, -14 psi) max.: Absolute pressure / 638 kPa (6.4 kgf/cm^2, 93 psi), Relative pressure / 538 kPa (5.4 kgf/cm^2, 78 psi)	pressure	-100 kPa (-1.0 kgf/cm^2, -14 psi) is displayed for relative pressure, data has not been received.*

HINT:

- *: It may take about 2 or 3 minutes until the values are displayed.
- When no "ID Tire Inflation Pressure" data has changed, reset the tire pressure to the appropriate specified value and rotate the tire 90 to 270 degrees. Then rapidly release the tire pressure and recheck it.

Result

RESULT	PROCEED TO
All tire pressure readings are equal to specified values.	A
Tire pressure values are not displayed.	B

B ▶ **REPLACE TIRE PRESSURE WARNING ECU**

A ▶ **END**

Last Modified: 3-10-2010	6.4 C	**From:** 200901
Model Year: 2010	**Model:** Corolla	**Doc ID:** RM000000XN404DX
Title: TIRE PRESSURE MONITORING: TIRE PRESSURE WARNING SYSTEM: C2141/41-C2144/44: Transmitter ID1 Error (2010 Corolla)		

DTC	**C2141/41**	**Transmitter ID1 Error**

DTC	**C2142/42**	**Transmitter ID2 Error**

DTC	**C2143/43**	**Transmitter ID3 Error**

DTC	**C2144/44**	**Transmitter ID4 Error**

DESCRIPTION

The tire pressure warning valve and transmitters that are installed in the tire and wheel assemblies measure the tire pressures. The measured values are transmitted to the tire pressure warning antenna and receiver on the body as radio waves and then sent to the tire pressure warning ECU. The ECU compares the measured air pressure values with the air pressure threshold. When the measured air pressure value is less than this threshold, the warning light in the combination meter comes on.

When the internal circuit of the tire pressure warning valve and transmitter is malfunctioning, one of these DTC is output.

DTC NO.	DTC DETECTION CONDITION	TROUBLE AREA
C2141/41 C2142/42 C2143/43 C2144/44	If an "ERROR" signal is received 3 times consecutively, the tire pressure warning valve and transmitter will be judged as defective and a DTC will be output. This will happen in situations where the inflation pressure is outside the range -100 to 538 kPa (-1.0 to 5.4 kgf/cm^2, -14 to 78 psi), the temperature inside the tire is outside the specified range -40 to 215°C (-40 to 419°F), or an error occurs in the tire pressure warning valve and transmitter or the surrounding area.	• Tire pressure warning valve and transmitter • Tire pressure warning ECU

HINT:

It is necessary to perform the procedure to identify the tire pressure warning valve and transmitter that is malfunctioning because it cannot be identified by the output DTC.

INSPECTION PROCEDURE

NOTICE:

- When replacing the tire pressure warning ECU, read the transmitter IDs stored in the old ECU using the Techstream and write them down before removal.
- It is necessary to perform initialization INFO after registration INFO of the transmitter IDs into the tire pressure warning ECU if the ECU and/or any of the valve and transmitters have been replaced.

PROCEDURE

1.	**IDENTIFY TRANSMITTER CORRESPONDING TO DTC**

(a) Set the tire pressure to the specified value INFO .

(b) Turn the ignition switch off.

(c) Connect the Techstream to the DLC3.

(d) Turn the ignition switch to ON.

(e) Turn the Techstream on.

(f) Enter the following menus: Chassis / Tire Pressure Monitor / Data List.

(g) Display the "ID Tire Inflation Pressure" data for each wheel using the Techstream.

(h) Rapidly reduce the tire pressure for each wheel at least 40 kPa (0.4 kg/cm^2, 5.8 psi) within 30 seconds. If "ID Tire Inflation Pressure" displayed on the Techstream (ID1 to ID4) does not change, the tire pressure warning valve and transmitter corresponding to the unchanged "ID Tire Inflation Pressure" data was the cause of the output DTC.

HINT:

- Identify the malfunctioning tire pressure warning valve and transmitter by repeatedly decreasing the tire pressure for each tire.
- Record which "ID Tire Inflation Pressure" data (ID1 to ID4) corresponds to each tire.

Tire Pressure Monitor

TESTER DISPLAY	MEASUREMENT ITEM/RANGE	NORMAL CONDITION	DIAGNOSTIC NOTE
ID1 Tire Inflation Pressure	ID1 tire inflation pressure/ min.: Absolute pressure / 0 kPa (0 kgf/cm^2, 0 psi), Relative pressure / -100 kPa (-1.0 kgf/cm^2, -14 psi) max.: Absolute pressure / 638 kPa (6.4 kgf/cm^2, 93 psi),	Actual tire inflation pressure	If 0 kPa (0 kgf/cm^2, 0 psi) is displayed for absolute pressure or -100 kPa (-1.0 kgf/cm^2, -14 psi) is displayed for relative pressure, data has not been received.*

TESTER DISPLAY	MEASUREMENT ITEM/RANGE	NORMAL CONDITION	DIAGNOSTIC NOTE
	Relative pressure / 538 kPa (5.4 kgf/cm^2, 78 psi)		
ID2 Tire Inflation Pressure	ID2 tire inflation pressure / min.: Absolute pressure / 0 kPa (0 kgf/cm^2, 0 psi), Relative pressure / -100 kPa (-1.0 kgf/cm^2, -14 psi) max.: Absolute pressure / 638 kPa (6.4 kgf/cm^2, 93 psi), Relative pressure / 538 kPa (5.4 kgf/cm^2, 78 psi)	Actual tire inflation pressure	If 0 kPa (0 kgf/cm^2, 0 psi) is displayed for absolute pressure or -100 kPa (-1.0 kgf/cm^2, -14 psi) is displayed for relative pressure, data has not been received.*
ID3 Tire Inflation Pressure	ID3 tire inflation pressure / min.: Absolute pressure / 0 kPa (0 kgf/cm^2, 0 psi), Relative pressure / -100 kPa (-1.0 kgf/cm^2, -14 psi) max.: Absolute pressure / 638 kPa (6.4 kgf/cm^2, 93 psi), Relative pressure / 538 kPa (5.4 kgf/cm^2, 78 psi)	Actual tire inflation pressure	If 0 kPa (0 kgf/cm^2, 0 psi) is displayed for absolute pressure or -100 kPa (-1.0 kgf/cm^2, -14 psi) is displayed for relative pressure, data has not been received.*
ID4 Tire Inflation Pressure	ID4 tire inflation pressure / min.: Absolute pressure / 0 kPa (0 kgf/cm^2, 0 psi), Relative pressure / -100 kPa (-1.0 kgf/cm^2, -14 psi) max.: Absolute pressure / 638 kPa (6.4 kgf/cm^2, 93 psi), Relative pressure / 538 kPa (5.4 kgf/cm^2, 78 psi)	Actual tire inflation pressure	If 0 kPa (0 kgf/cm^2, 0 psi) is displayed for absolute pressure or -100 kPa (-1.0 kgf/cm^2, -14 psi) is displayed for relative pressure, data has not been received.*

HINT:

***: It may take about 2 or 3 minutes until the values are displayed. If the values are not displayed after a few minutes, perform troubleshooting according to the inspection procedure for DTCs C2121/21 to C2124/24** INFO .

(i) Check the Data List.

Result:

RESULT	DETECTION CONDITION
One of "ID Tire Inflation Pressure" data (ID1 to ID4) changed.	Normal
"ID Tire Inflation Pressure" data did not change.	Transmitter corresponding to DTC

NOTICE:

- When the "ID Tire Inflation Pressure" data has not changed, reset the tire pressure to the appropriate specified value and rotate the tire 90 to 270 degrees. Then rapidly release the tire pressure and recheck it.
- Record the transmitter IDs and positions of transmitters that are normal.

(j) When the "ID Tire inflation Pressure" data (ID1 to ID4) has changed, repeat this procedure to identify the tire pressure warning valve and transmitter that corresponds to the DTC.

(k) When all of the "ID Tire Inflation Pressure" data (ID1 to ID4) have changed, identify the malfunctioning tire pressure warning valve and transmitter using the recorded ID numbers and output DTCs.

NEXT

2.	REPLACE TIRE PRESSURE WARNING VALVE AND TRANSMITTER

(a) Replace the identified tire pressure warning valve and transmitter with a new one INFO .

HINT:

- Before installing a new tire pressure warning valve and transmitter, read and write down its transmitter ID.
- The IDs for the tire pressure warning valve and transmitters which are not replaced should be checked using the tester and recorded.

NEXT

3.	REGISTRATION OF TRANSMITTER ID

(a) Register the transmitter ID for all wheels INFO .

NEXT

4.	PERFORM INITIALIZATION

(a) Perform initialization INFO .

NEXT

5.	READ VALUE USING TECHSTREAM

(a) Turn the ignition switch off.

(b) Connect the Techstream to the DLC3.

(c) Turn the ignition switch to ON .

(d) Turn the Techstream on.

(e) Enter the following menus: Chassis / Tire Pressure Monitor / Data List.

(f) Check the values by referring to the table below.

Tire Pressure Monitor

TESTER DISPLAY	MEASUREMENT ITEM/RANGE	NORMAL CONDITION	DIAGNOSTIC NOTE
ID1 Tire Inflation Pressure	ID1 tire inflation pressure/ min.: Absolute pressure / 0 kPa (0 kgf/cm^2, 0 psi), Relative pressure / -100 kPa (-1.0 kgf/cm^2, -14 psi) max.: Absolute pressure / 638 kPa (6.4 kgf/cm^2, 93 psi), Relative pressure / 538 kPa (5.4 kgf/cm^2, 78 psi)	Actual tire inflation pressure	If 0 kPa (0 kgf/cm^2, 0 psi) is displayed for absolute pressure or -100 kPa (-1.0 kgf/cm^2, -14 psi) is displayed for relative pressure, data has not been received.*
ID2 Tire Inflation Pressure	ID2 tire inflation pressure / min.: Absolute pressure / 0 kPa (0 kgf/cm^2, 0 psi), Relative pressure / -100 kPa (-1.0 kgf/cm^2, -14 psi) max.: Absolute pressure / 638 kPa (6.4 kgf/cm^2, 93 psi), Relative pressure / 538 kPa (5.4 kgf/cm^2, 78 psi)	Actual tire inflation pressure	If 0 kPa (0 kgf/cm^2, 0 psi) is displayed for absolute pressure or -100 kPa (-1.0 kgf/cm^2, -14 psi) is displayed for relative pressure, data has not been received.*

TESTER DISPLAY	MEASUREMENT ITEM/RANGE	NORMAL CONDITION	DIAGNOSTIC NOTE
ID3 Tire Inflation Pressure	ID3 tire inflation pressure / min.: Absolute pressure / 0 kPa (0 kgf/cm^2, 0 psi), Relative pressure / -100 kPa (-1.0 kgf/cm^2, -14 psi) max.: Absolute pressure / 638 kPa (6.4 kgf/cm^2, 93 psi), Relative pressure / 538 kPa (5.4 kgf/cm^2, 78 psi)	Actual tire inflation pressure	If 0 kPa (0 kgf/cm^2, 0 psi) is displayed for absolute pressure or -100 kPa (-1.0 kgf/cm^2, -14 psi) is displayed for relative pressure, data has not been received.*
ID4 Tire Inflation Pressure	ID4 tire inflation pressure / min.: Absolute pressure / 0 kPa (0 kgf/cm^2, 0 psi), Relative pressure / -100 kPa (-1.0 kgf/cm^2, -14 psi) max.: Absolute pressure / 638 kPa (6.4 kgf/cm^2, 93 psi), Relative pressure / 538 kPa (5.4 kgf/cm^2, 78 psi)	Actual tire inflation pressure	If 0 kPa (0 kgf/cm^2, 0 psi) is displayed for absolute pressure or -100 kPa (-1.0 kgf/cm^2, -14 psi) is displayed for relative pressure, data has not been received.*

HINT:

- *: It may take about 2 or 3 minutes until the values are displayed.
- When no "ID Tire Inflation Pressure" data has changed, reset the tire pressure to the appropriate specified value and rotate the tire 90 to 270 degrees. Then rapidly release the tire pressure and recheck it.

Result:

RESULT	PROCEED TO
Tire pressure values are not displayed.	A
All tire pressure readings are equal to specified values.	B

B ▶ **END**

A ▶ **REPLACE TIRE PRESSURE WARNING ECU**

Last Modified: 3-10-2010	6.4 C	**From:** 200901
Model Year: 2010	**Model:** Corolla	**Doc ID:** RM000000XN704DX
Title: TIRE PRESSURE MONITORING: TIRE PRESSURE WARNING SYSTEM: C2165/65-C2168/68: Abnormal Temperature Inside ID1 Tire (2010 Corolla)		

DTC	**C2165/65**	**Abnormal Temperature Inside ID1 Tire**

DTC	**C2166/66**	**Abnormal Temperature Inside ID2 Tire**

DTC	**C2167/67**	**Abnormal Temperature Inside ID3 Tire**

DTC	**C2168/68**	**Abnormal Temperature Inside ID4 Tire**

DESCRIPTION

Each tire pressure warning valve and transmitter measures the internal temperature of its tire as well as tire pressure, and transmits the information to the tire pressure warning ECU along with the transmitter ID. If the measured temperature is out of the specified range, the tire pressure warning ECU recognizes it as a malfunction, outputs DTCs, and the tire pressure warning light blinks for 1 minute and then remains on.

DTC NO.	DTC DETECTION CONDITION	TROUBLE AREA
C2165/65 C2166/66 C2167/67 C2168/68	Temperature inside the tire exceeds 119°C (246.2°F).	• Tires • Tire pressure warning valve and transmitter • Tire pressure warning ECU

HINT:

It is necessary to perform the procedure to identify the tire pressure warning valve and transmitter that is malfunctioning because it cannot be identified by the output DTC.

INSPECTION PROCEDURE

NOTICE:

- When replacing the tire pressure warning ECU, read the transmitter IDs stored in the old ECU using the Techstream and write them down before removal.
- It is necessary to perform initialization INFO after registration INFO of the transmitter IDs into

the tire pressure warning ECU if the ECU and/or any of the valve and transmitters have been replaced.

PROCEDURE

1.	**CHECK TIRES**

(a) Check that the tires are not flat, and there is no indication of air pressure drop.

OK:
Tires are normal.

HINT:

If a tire is damaged, the tire pressure warning valve and transmitter may also have been damaged at the same time.

NG ▶ **REPLACE TIRE AND TIRE PRESSURE WARNING VALVE AND TRANSMITTER**

OK ▼

2.	**IDENTIFY TRANSMITTER CORRESPONDING TO DTC**

(a) Set the tire pressure to the specified value INFO .

(b) Turn the ignition switch off.

(c) Connect the Techstream to the DLC3.

(d) Turn the ignition switch to ON.

(e) Turn the Techstream on.

(f) Enter the following menus: Chassis / Tire Pressure Monitor / Data List.

(g) Display the "ID Tire Inflation Pressure" data for each wheel using the Techstream.

(h) Rapidly reduce the tire pressure for each wheel at least 40 kPa (0.4 kg/cm^2, 5.8 psi) within 30 seconds.

(i) Check the Data List.

Tire Pressure Monitor

TESTER DISPLAY	MEASUREMENT ITEM/RANGE	NORMAL CONDITION	DIAGNOSTIC NOTE
ID1 Tire Inflation Pressure	ID1 tire inflation pressure/ min.: Absolute pressure / 0 kPa (0 kgf/cm^2, 0 psi), Relative pressure / -100 kPa (-1.0 kgf/cm^2, -14 psi) max.: Absolute pressure / 638 kPa (6.4 kgf/cm^2, 93 psi), Relative pressure / 538 kPa (5.4 kgf/cm^2, 78 psi)	Actual tire inflation pressure	If 0 kPa (0 kgf/cm^2, 0 psi) is displayed for absolute pressure or -100 kPa (-1.0 kgf/cm^2, -14 psi) is displayed for relative pressure, data has not been received.*
ID2 Tire Inflation Pressure	ID2 tire inflation pressure / min.: Absolute pressure / 0 kPa (0 kgf/cm^2, 0 psi), Relative pressure / -100 kPa (-1.0 kgf/cm^2, -14 psi) max.: Absolute pressure / 638 kPa (6.4 kgf/cm^2, 93 psi), Relative pressure / 538 kPa (5.4 kgf/cm^2, 78 psi)	Actual tire inflation pressure	If 0 kPa (0 kgf/cm^2, 0 psi) is displayed for absolute pressure or -100 kPa (-1.0 kgf/cm^2, -14 psi) is displayed for relative pressure, data has not been received.*
ID3 Tire Inflation Pressure	ID3 tire inflation pressure / min.: Absolute pressure / 0 kPa (0 kgf/cm^2, 0 psi), Relative pressure / -100 kPa (-1.0 kgf/cm^2, -14 psi) max.: Absolute pressure / 638 kPa (6.4 kgf/cm^2, 93 psi), Relative pressure / 538 kPa (5.4 kgf/cm^2, 78 psi)	Actual tire inflation pressure	If 0 kPa (0 kgf/cm^2, 0 psi) is displayed for absolute pressure or -100 kPa (-1.0 kgf/cm^2, -14 psi) is displayed for relative pressure, data has not been received.*
ID4 Tire Inflation Pressure	ID4 tire inflation pressure / min.: Absolute pressure / 0 kPa (0 kgf/cm^2, 0 psi), Relative pressure / -100 kPa (-1.0 kgf/cm^2, -14 psi) max.: Absolute pressure / 638 kPa (6.4 kgf/cm^2, 93 psi), Relative pressure / 538 kPa (5.4 kgf/cm^2, 78 psi)	Actual tire inflation pressure	If 0 kPa (0 kgf/cm^2, 0 psi) is displayed for absolute pressure or -100 kPa (-1.0 kgf/cm^2, -14 psi) is displayed for relative pressure, data has not been received.*

HINT:

***: It may take about 2 or 3 minutes until the values are displayed. If the values are not displayed after a few minutes, perform troubleshooting according to the inspection procedure for DTCs C2121/21 to C2124/24**



.

Result:

RESULT	DETECTION CONDITION
One of "ID Tire Inflation Pressure" data (ID1 to ID4) changed.	Normal
No "ID Tire Inflation Pressure" data changed.	Transmitter corresponding to DTC

NOTICE:

- It may take about 2 to 3 minutes to display the updated data.
- When the "ID Tire Inflation Pressure" data has not changed, reset the tire pressure to the appropriate specified value and rotate the tire 90 to 270 degrees. Then rapidly release the tire pressure and recheck the data.
- Record the transmitter IDs and transmitter positions that are normal.

(j) When the "ID Tire Inflation Pressure" data (ID1 to ID4) has changed, repeat this procedure to identify the tire pressure warning valve and transmitter that corresponds to the DTC.

(k) When all of the "ID Tire Inflation Pressure" data (ID1 to ID4) have changed, identify the malfunctioning tire pressure warning valve and transmitter based on the recorded ID numbers and output DTC.

NEXT

3.	REPLACE TIRE PRESSURE WARNING VALVE AND TRANSMITTER

(a) Replace the identified tire pressure warning valve and transmitter with a new one INFO .

HINT:

- Before installing a new tire pressure warning valve and transmitter, read and write down its transmitter ID.
- The IDs for the tire pressure warning valve and transmitters which are not replaced should be checked using the tester and recorded.

NEXT

4.	CHECK REGISTRATION OF TRANSMITTER ID

(a) Register the transmitter IDs for 4 tires INFO .

NEXT

5.	PERFORM INITIALIZATION

(a) Perform initialization INFO .

NEXT

6.	READ VALUE USING TECHSTREAM (DATA LIST)

(a) Turn the ignition switch off.

(b) Connect the Techstream to the DLC3.

(c) Turn the ignition switch to ON.

(d) Turn the Techstream on.

(e) Enter the following menus: Chassis / Tire Pressure Monitor / Data List.

(f) Check the values by referring to the table below.

Tire Pressure Monitor

TESTER DISPLAY	MEASUREMENT ITEM/RANGE	NORMAL CONDITION	DIAGNOSTIC NOTE
ID1 Tire Inflation Pressure	ID1 tire inflation pressure/ min.: Absolute pressure / 0 kPa (0 kgf/cm^2, 0 psi), Relative pressure / -100 kPa (-1.0 kgf/cm^2, -14 psi) max.: Absolute pressure / 638 kPa (6.4 kgf/cm^2, 93 psi), Relative pressure / 538 kPa (5.4 kgf/cm^2, 78 psi)	Actual tire inflation pressure	If 0 kPa (0 kgf/cm^2, 0 psi) is displayed for absolute pressure or -100 kPa (-1.0 kgf/cm^2, -14 psi) is displayed for relative pressure, data has not been received.*
ID2 Tire Inflation Pressure	ID2 tire inflation pressure / min.: Absolute pressure / 0 kPa (0 kgf/cm^2, 0 psi), Relative	Actual tire inflation pressure	If 0 kPa (0 kgf/cm^2, 0 psi) is displayed for absolute pressure or -100 kPa (-1.0 kgf/cm^2, -14 psi) is

TESTER DISPLAY	MEASUREMENT ITEM/RANGE	NORMAL CONDITION	DIAGNOSTIC NOTE
	pressure / -100 kPa (-1.0 kgf/cm^2, -14 psi) max.: Absolute pressure / 638 kPa (6.4 kgf/cm^2, 93 psi), Relative pressure / 538 kPa (5.4 kgf/cm^2, 78 psi)		displayed for relative pressure, data has not been received.*
ID3 Tire Inflation Pressure	ID3 tire inflation pressure / min.: Absolute pressure / 0 kPa (0 kgf/cm^2, 0 psi), Relative pressure / -100 kPa (-1.0 kgf/cm^2, -14 psi) max.: Absolute pressure / 638 kPa (6.4 kgf/cm^2, 93 psi), Relative pressure / 538 kPa (5.4 kgf/cm^2, 78 psi)	Actual tire inflation pressure	If 0 kPa (0 kgf/cm^2, 0 psi) is displayed for absolute pressure or -100 kPa (-1.0 kgf/cm^2, -14 psi) is displayed for relative pressure, data has not been received.*
ID4 Tire Inflation Pressure	ID4 tire inflation pressure / min.: Absolute pressure / 0 kPa (0 kgf/cm^2, 0 psi), Relative pressure / -100 kPa (-1.0 kgf/cm^2, -14 psi) max.: Absolute pressure / 638 kPa (6.4 kgf/cm^2, 93 psi), Relative pressure / 538 kPa (5.4 kgf/cm^2, 78 psi)	Actual tire inflation pressure	If 0 kPa (0 kgf/cm^2, 0 psi) is displayed for absolute pressure or -100 kPa (-1.0 kgf/cm^2, -14 psi) is displayed for relative pressure, data has not been received.*

HINT:

- *: It may take about 2 or 3 minutes until the values are displayed.
- When no "ID Tire Inflation Pressure" data has changed, reset the tire pressure to the appropriate specified value and rotate the tire 90 to 270 degrees. Then rapidly release the tire pressure and recheck it.

Result:

RESULT	PROCEED TO
Tire pressure values are not displayed.	A
All tire pressure readings are equal to specified values.	B

B ▶ **END**

A ▶ **REPLACE TIRE PRESSURE WARNING ECU**

Last Modified: 3-10-2010	6.4 C	**From:** 200901
Model Year: 2010	**Model:** Corolla	**Doc ID:** RM000002DZY02TX
Title: TIRE PRESSURE MONITORING: TIRE PRESSURE WARNING SYSTEM: C2171/71: Transmitter ID not Registered (2010 Corolla)		

DTC	**C2171/71**	**Transmitter ID not Registered**

DESCRIPTION

The IDs of each tire pressure warning valve and transmitter are registered to the tire pressure warning ECU.

When the ECU detects that transmitter ID code is not registered in the ECU, a DTC is output.

DTC NO.	DTC DETECTION CONDITION	TROUBLE AREA
C2171/71	Transmitter ID code is not registered. (When an ID code is unregistered for 3 minutes or more)	Tire pressure warning ECU

INSPECTION PROCEDURE

NOTICE:

- When replacing the tire pressure warning ECU, read the transmitter IDs stored in the old ECU using the Techstream and write them down before removal.
- It is necessary to perform initialization INFO after registration INFO of the transmitter IDs into the tire pressure warning ECU if the ECU has been replaced.

PROCEDURE

1.	**CONFIRM REGISTRATION CONDITION (REGISTERED ID CODES)**

(a) Turn the ignition switch off.

(b) Connect the Techstream to the DLC3.

(c) Turn the ignition switch to ON.

(d) Turn the Techstream on.

(e) Enter the following menus: Chassis / Tire Pressure Monitor / Data List.

(f) Check the values by referring to the table below.

Tire Pressure Monitor

TESTER DISPLAY	MEASUREMENT ITEM/RANGE	NORMAL CONDITION	DIAGNOSTIC NOTE
Registered ID1 code	Registered ID1 code/ min.: 0 max.: FFFFFFF*	The ID No. registered in the transmitter ID1 is displayed	-
Registered ID2 code	Registered ID2 code/ min.: 0 max.: FFFFFFF*	The ID No. registered in the transmitter ID2 is displayed	-
Registered ID3 code	Registered ID3 code/ min.: 0 max.: FFFFFFF*	The ID No. registered in the transmitter ID3 is displayed	-
Registered ID4 code	Registered ID4 code/ min.: 0 max.: FFFFFFF*	The ID No. registered in the transmitter ID4 is displayed	-

HINT:

***: Displayed only when the ID No. is not registered.**

OK:
The registered transmitter ID codes are displayed on the Techstream.

NG ▶ **PERFORM REGISTRATION (TRANSMITTER ID)**

OK ▶ **REPLACE TIRE PRESSURE WARNING ECU**

2.	**PERFORM REGISTRATION (TRANSMITTER ID)**

(a) Register the transmitter IDs for all the wheels INFO.

NEXT
▼

3.	**PERFORM INITIALIZATION**

(a) Perform initialization INFO.

NEXT

4.	READ VALUE USING TECHSTREAM (DATA LIST)

(a) Turn the ignition switch off.

(b) Connect the Techstream to the DLC3.

(c) Turn the ignition switch to ON.

(d) Turn the Techstream on.

(e) Enter the following menus: Chassis / Tire Pressure Monitor / Data List.

(f) Check the values by referring to the table below.

Tire Pressure Monitor

TESTER DISPLAY	MEASUREMENT ITEM/RANGE	NORMAL CONDITION	DIAGNOSTIC NOTE
ID1 Tire Inflation Pressure	ID1 tire inflation pressure/ min.: Absolute pressure / 0 kPa (0 kgf/cm^2, 0 psi), Relative pressure / -100 kPa (-1.0 kgf/cm^2, -14 psi) max.: Absolute pressure / 638 kPa (6.4 kgf/cm^2, 93 psi), Relative pressure / 538 kPa (5.4 kgf/cm^2, 78 psi)	Actual tire inflation pressure	If 0 kPa (0 kgf/cm^2, 0 psi) is displayed for absolute pressure or -100 kPa (-1.0 kgf/cm^2, -14 psi) is displayed for relative pressure, data has not been received.*
ID2 Tire Inflation Pressure	ID2 tire inflation pressure / min.: Absolute pressure / 0 kPa (0 kgf/cm^2, 0 psi), Relative pressure / -100 kPa (-1.0 kgf/cm^2, -14 psi) max.: Absolute pressure / 638 kPa (6.4 kgf/cm^2, 93 psi), Relative pressure / 538 kPa (5.4 kgf/cm^2, 78 psi)	Actual tire inflation pressure	If 0 kPa (0 kgf/cm^2, 0 psi) is displayed for absolute pressure or -100 kPa (-1.0 kgf/cm^2, -14 psi) is displayed for relative pressure, data has not been received.*
ID3 Tire Inflation Pressure	ID3 tire inflation pressure / min.: Absolute pressure / 0 kPa (0 kgf/cm^2, 0 psi), Relative pressure / -100 kPa (-1.0 kgf/cm^2, -14 psi) max.: Absolute pressure / 638	Actual tire inflation pressure	If 0 kPa (0 kgf/cm^2, 0 psi) is displayed for absolute pressure or -100 kPa (-1.0 kgf/cm^2, -14 psi) is displayed for relative pressure, data has not been received.*

TESTER DISPLAY	MEASUREMENT ITEM/RANGE	NORMAL CONDITION	DIAGNOSTIC NOTE
	kPa (6.4 kgf/cm^2, 93 psi), Relative pressure / 538 kPa (5.4 kgf/cm^2, 78 psi)		
ID4 Tire Inflation Pressure	ID4 tire inflation pressure / min.: Absolute pressure / 0 kPa (0 kgf/cm^2, 0 psi), Relative pressure / -100 kPa (-1.0 kgf/cm^2, -14 psi) max.: Absolute pressure / 638 kPa (6.4 kgf/cm^2, 93 psi), Relative pressure / 538 kPa (5.4 kgf/cm^2, 78 psi)	Actual tire inflation pressure	If 0 kPa (0 kgf/cm^2, 0 psi) is displayed for absolute pressure or -100 kPa (-1.0 kgf/cm^2, -14 psi) is displayed for relative pressure, data has not been received.*

HINT:

- *: It may take about 2 or 3 minutes until the values are displayed.
- When no "ID Tire Inflation Pressure" data has changed, reset the tire pressure to the appropriate specified value and rotate the tire 90 to 270 degrees. Then rapidly release the tire pressure and recheck it.

Result:

RESULT	PROCEED TO
All tire pressure readings are equal to specified values.	A
Tire pressure values are not displayed.	B

B ▶ **REPLACE TIRE PRESSURE WARNING ECU**

A ▶ **END**

Last Modified: 3-10-2010	6.4 C	**From:** 200901
Model Year: 2010	**Model:** Corolla	**Doc ID:** RM0000032FT01BX
Title: TIRE PRESSURE MONITORING: TIRE PRESSURE WARNING SYSTEM: C2173/73: Vehicle Speed or Engine Speed Signal Malfunction (2010 Corolla)		

DTC	**C2173/73**	**Vehicle Speed or Engine Speed Signal Malfunction**

DESCRIPTION

The tire pressure warning ECU receives a vehicle speed signal from the combination meter and an engine speed signal from the ECM. The tire pressure warning ECU uses these signals to detect DTCs C2121/21 to C2124/24 (No Signal from Transmitter) and DTC C2177/77 (Initialization not Completed).

DTC NO.	DTC DETECTION CONDITION	TROUBLE AREA
C2173/73	Following condition (a) or (b) is met for a total of 15 minutes: (a) No engine speed signal while vehicle speed is 8 km/h (5 mph) or more (b) No vehicle speed signal while engine speed is a specified value	• Combination meter • ECM • Wire harness or connector • Tire pressure warning ECU

HINT:

This DTC is set at the same time as DTCs C2121/21 to C2124/24 are being set.

WIRING DIAGRAM

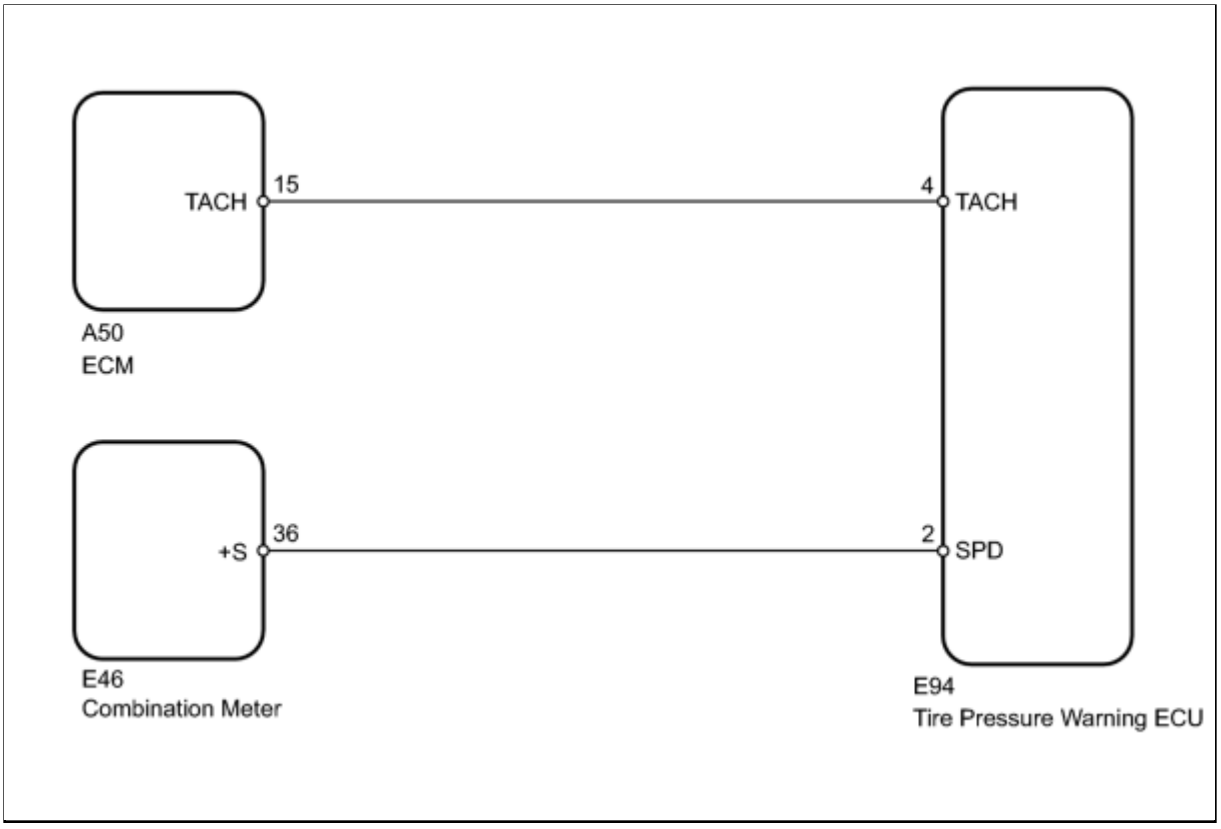

INSPECTION PROCEDURE

NOTICE:

- When replacing the tire pressure warning ECU, read the transmitter IDs stored in the old ECU using the Techstream and write them down before removal.
- It is necessary to perform initialization INFO after registration INFO of the transmitter IDs into the tire pressure warning ECU if the ECU has been replaced.

PROCEDURE

1.	**PERFORM SIGNAL CHECK (VEHICLE SPEED SIGNAL AND ENGINE SPEED SIGNAL)**

(a) Enter the signal check mode in Test Mode Procedure INFO .

(b) Drive the vehicle at 20 km/h (12 mph) or more for 10 seconds to erase DTC C2191/91.

(c) Start the engine and allow it to run at 1000 rpm for 3 seconds or more to DTC C2194/94.

(d) Check for test mode DTCs.

Result:

RESULT	PROCEED TO
DTCs C2191/91 and C2194/94 are erased	A

RESULT	PROCEED TO
DTC C2191/91 is output	B
DTC C2194/94 is output	C

HINT:

DTCs C2181/81 to C2184/84 (Transmitter ID not Received) are output at this time, but they are not related to this check.

C ▶ **GO TO DTC C2194/94**

B ▶ **GO TO DTC C2191/91**

A ▶ **USE SIMULATION METHOD TO CHECK**

Last Modified: 3-10-2010	6.4 C	**From:** 200901
Model Year: 2010	**Model:** Corolla	**Doc ID:** RM0000026PN03OX
Title: TIRE PRESSURE MONITORING: TIRE PRESSURE WARNING SYSTEM: C2176/76: Receiver Error (2010 Corolla)		

DTC	**C2176/76**	**Receiver Error**

DESCRIPTION

The signals are transmitted to the tire pressure warning antenna and receiver on the body as radio waves and then sent to the tire pressure warning ECU.

DTC NO.	DTC DETECTION CONDITION	TROUBLE AREA
C2176/76	Malfunction in the tire pressure warning ECU internal circuit	Tire pressure warning ECU

INSPECTION PROCEDURE

NOTICE:

- When replacing the tire pressure warning ECU, read the transmitter IDs stored in the old ECU using the Techstream and write them down before removal.
- It is necessary to perform initialization INFO after registration INFO of the transmitter IDs into the tire pressure warning ECU if the ECU has been replaced.

PROCEDURE

1.	**CHECK DTC OUTPUT (C2176/76)**

(a) Clear the DTC INFO.

(b) Turn the ignition switch off.

(c) Turn the ignition switch to ON and check for DTC INFO.

OK:
DTC C2176/76 is not output.

NG ▶ **REPLACE TIRE PRESSURE WARNING ECU**

OK ▶ **END**

Last Modified: 3-10-2010	6.4 C	**From:** 200901
Model Year: 2010	**Model:** Corolla	**Doc ID:** RM000000Z81042X
Title: TIRE PRESSURE MONITORING: TIRE PRESSURE WARNING SYSTEM: C2177/77: Initialization not Completed (2010 Corolla)		

DTC	**C2177/77**	**Initialization not Completed**

DESCRIPTION

Initialization is necessary if one of the following occurs:

- Tire pressure warning ECU is replaced
- Tire pressure warning valve and transmitter is replaced
- Tires with a different tire standard pressure are installed
- Tires are rotated
- A new vehicle is delivered

DTC NO.	DTC DETECTION CONDITION	TROUBLE AREA

C2177/77	• All conditions below are met:
	  • During initialization
	  • Tire pressure warning valve and transmitter is not in stop mode
	  • Signal is not received from tire pressure warning valve and transmitter for 20 minutes or more
	  • Vehicle speed is more than 8 km/h (5 mph) for a total of 20 minutes
		• Tire pressure warning valve and transmitter
		• Tire pressure warning ECU
		• Tire pressure warning antenna and receiver
		• Wire harness or connector

WIRING DIAGRAM

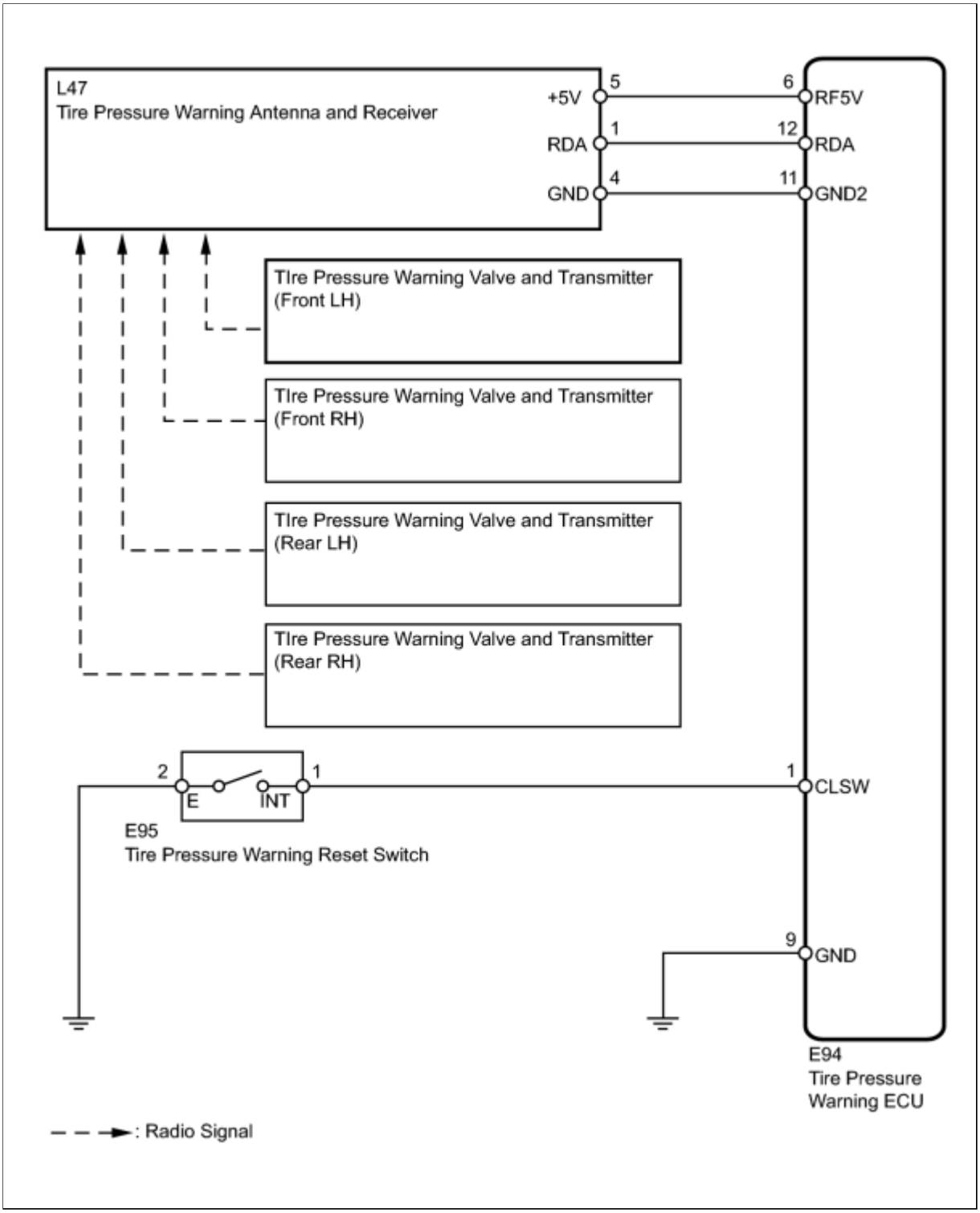

INSPECTION PROCEDURE

NOTICE:

- When replacing the tire pressure warning ECU, read the transmitter IDs stored in the old ECU using the Techstream and write them down before removal.
- It is necessary to perform initialization INFO after registration INFO of the transmitter IDs into the tire pressure warning ECU if the ECU and/or any of the valve and transmitters have been replaced.

PROCEDURE

1.	CHECK FREQUENCY RECEIVING CONDITION

(a) Check that the vehicle is not located in an area such as described below:

(1) Facilities or devices that use similar radio frequencies are located in the vicinity of the vehicle.

HINT:

If the vehicle is located in an area described above, the tire pressure warning light may come on after blinking 1 minute only in a particular area due to interfering radio frequencies.

(2) Devices using similar radio frequencies are used in the vehicle.

OK:

Facilities, or devices that use similar radio frequencies are not located in the vicinity of the vehicle.

HINT:

Radio transmissions may be interrupted due to the surroundings, or devices installed by the user.

NG ▶ **CHECK IF ANY DEVICE IS INSTALLED BY USER**

OK ▼

2.	CONFIRM TIRE INFLATION PRESSURE (DATA LIST)

(a) Turn the ignition switch off.

(b) Connect the Techstream to the DLC3.

(c) Turn the ignition switch to ON.

(d) Turn the Techstream on.

(e) Enter the following menus: Chassis / Tire Pressure Monitor / Data List.

(f) Check the values by referring to the table below.

Tire Pressure Monitor

TESTER	MEASUREMENT	NORMAL	DIAGNOSTIC NOTE

DISPLAY	ITEM/RANGE	CONDITION	
ID1 Tire Inflation Pressure	ID1 tire inflation pressure/ min.: Absolute pressure / 0 kPa (0 kgf/cm^2, 0 psi), Relative pressure / -100 kPa (-1.0 kgf/cm^2, -14 psi) max.: Absolute pressure / 638 kPa (6.4 kgf/cm^2, 93 psi), Relative pressure / 538 kPa (5.4 kgf/cm^2, 78 psi)	Actual tire inflation pressure	If 0 kPa (0 kgf/cm^2, 0 psi) is displayed for absolute pressure or -100 kPa (-1.0 kgf/cm^2, -14 psi) is displayed for relative pressure, data has not been received.*
ID2 Tire Inflation Pressure	ID2 tire inflation pressure / min.: Absolute pressure / 0 kPa (0 kgf/cm^2, 0 psi), Relative pressure / -100 kPa (-1.0 kgf/cm^2, -14 psi) max.: Absolute pressure / 638 kPa (6.4 kgf/cm^2, 93 psi), Relative pressure / 538 kPa (5.4 kgf/cm^2, 78 psi)	Actual tire inflation pressure	If 0 kPa (0 kgf/cm^2, 0 psi) is displayed for absolute pressure or -100 kPa (-1.0 kgf/cm^2, -14 psi) is displayed for relative pressure, data has not been received.*
ID3 Tire Inflation Pressure	ID3 tire inflation pressure / min.: Absolute pressure / 0 kPa (0 kgf/cm^2, 0 psi), Relative pressure / -100 kPa (-1.0 kgf/cm^2, -14 psi) max.: Absolute pressure / 638 kPa (6.4 kgf/cm^2, 93 psi), Relative pressure / 538 kPa (5.4 kgf/cm^2, 78 psi)	Actual tire inflation pressure	If 0 kPa (0 kgf/cm^2, 0 psi) is displayed for absolute pressure or -100 kPa (-1.0 kgf/cm^2, -14 psi) is displayed for relative pressure, data has not been received.*
ID4 Tire Inflation Pressure	ID4 tire inflation pressure / min.: Absolute pressure / 0 kPa (0 kgf/cm^2, 0 psi), Relative pressure / -100 kPa (-1.0 kgf/cm^2, -14 psi) max.: Absolute pressure / 638 kPa (6.4 kgf/cm^2, 93 psi), Relative pressure / 538 kPa (5.4 kgf/cm^2, 78 psi)	Actual tire inflation pressure	If 0 kPa (0 kgf/cm^2, 0 psi) is displayed for absolute pressure or -100 kPa (-1.0 kgf/cm^2, -14 psi) is displayed for relative pressure, data has not been received.*

HINT:

- *: It may take about 2 or 3 minutes until the values are displayed.
- When no "ID Tire Inflation Pressure" data has changed, reset the tire pressure to the appropriate specified value and rotate the tire 90 to 270 degrees. Then rapidly release the tire pressure and recheck it.

Result:

RESULT	PROCEED TO
All tire pressure readings are equal to specified values.	A
Tire pressure values are not displayed.	B

B GO TO DTC C2121/21 TO C2124/24

A

3.	PERFORM INITIALIZATION

(a) Perform initialization INFO.

NEXT

4.	CONFIRM TIRE INFLATION PRESSURE (DATA LIST)

(a) Turn the ignition switch off.

(b) Connect the Techstream to the DLC3.

(c) Turn the ignition switch to ON.

(d) Turn the Techstream on.

(e) Enter the following menus: Chassis / Tire Pressure Monitor / Data List.

(f) Check the values by referring to the table below.

Tire Pressure Monitor

TESTER DISPLAY	MEASUREMENT ITEM/RANGE	NORMAL CONDITION	DIAGNOSTIC NOTE
ID1 Tire Inflation Pressure	ID1 tire inflation pressure/ min.: Absolute pressure / 0 kPa (0 kgf/cm^2, 0 psi), Relative pressure / -100 kPa (-1.0	Actual tire inflation pressure	If 0 kPa (0 kgf/cm^2, 0 psi) is displayed for absolute pressure or -100 kPa (-1.0 kgf/cm^2, -14 psi) is displayed for relative pressure, data

TESTER DISPLAY	MEASUREMENT ITEM/RANGE	NORMAL CONDITION	DIAGNOSTIC NOTE
	kgf/cm^2, -14 psi) max.: Absolute pressure / 638 kPa (6.4 kgf/cm^2, 93 psi), Relative pressure / 538 kPa (5.4 kgf/cm^2, 78 psi)		has not been received.*
ID2 Tire Inflation Pressure	ID2 tire inflation pressure / min.: Absolute pressure / 0 kPa (0 kgf/cm^2, 0 psi), Relative pressure / -100 kPa (-1.0 kgf/cm^2, -14 psi) max.: Absolute pressure / 638 kPa (6.4 kgf/cm^2, 93 psi), Relative pressure / 538 kPa (5.4 kgf/cm^2, 78 psi)	Actual tire inflation pressure	If 0 kPa (0 kgf/cm^2, 0 psi) is displayed for absolute pressure or -100 kPa (-1.0 kgf/cm^2, -14 psi) is displayed for relative pressure, data has not been received.*
ID3 Tire Inflation Pressure	ID3 tire inflation pressure / min.: Absolute pressure / 0 kPa (0 kgf/cm^2, 0 psi), Relative pressure / -100 kPa (-1.0 kgf/cm^2, -14 psi) max.: Absolute pressure / 638 kPa (6.4 kgf/cm^2, 93 psi), Relative pressure / 538 kPa (5.4 kgf/cm^2, 78 psi)	Actual tire inflation pressure	If 0 kPa (0 kgf/cm^2, 0 psi) is displayed for absolute pressure or -100 kPa (-1.0 kgf/cm^2, -14 psi) is displayed for relative pressure, data has not been received.*
ID4 Tire Inflation Pressure	ID4 tire inflation pressure / min.: Absolute pressure / 0 kPa (0 kgf/cm^2, 0 psi), Relative pressure / -100 kPa (-1.0 kgf/cm^2, -14 psi) max.: Absolute pressure / 638 kPa (6.4 kgf/cm^2, 93 psi), Relative pressure / 538 kPa (5.4 kgf/cm^2, 78 psi)	Actual tire inflation pressure	If 0 kPa (0 kgf/cm^2, 0 psi) is displayed for absolute pressure or -100 kPa (-1.0 kgf/cm^2, -14 psi) is displayed for relative pressure, data has not been received.*

HINT:

- *: It may take about 2 or 3 minutes until the values are displayed.
- When no "ID Tire Inflation Pressure" data has changed, reset the tire pressure to the appropriate specified value and rotate the tire 90 to 270 degrees. Then rapidly release the tire pressure and recheck it.

Result:

RESULT	PROCEED TO
All tire pressure readings are equal to specified values.	A

RESULT	PROCEED TO
Tire pressure values are not displayed.	B

B ▶ **GO TO DTC C2121/21 TO C2124/24**

A ▶ **END**

Last Modified: 3-10-2010	6.4 C	**From:** 200901
Model Year: 2010	**Model:** Corolla	**Doc ID:** RM000000XNA05TX
Title: TIRE PRESSURE MONITORING: TIRE PRESSURE WARNING SYSTEM: C2191/91: Vehicle Speed Signal Error (Test Mode DTC) (2010 Corolla)		

DTC	**C2191/91**	**Vehicle Speed Signal Error (Test Mode DTC)**

DESCRIPTION

The tire pressure warning ECU receives a vehicle speed signal from the combination meter. This DTC is stored upon entering test mode, and cleared when a vehicle speed signal of 20 km/h (12 mph) is detected for 3 seconds or more. This DTC is output only in test mode.

DTC NO.	DTC DETECTION CONDITION	TROUBLE AREA
C2191/91	Test mode procedure is performed	• Combination meter • Vehicle speed sensor • Wire harness or connector • Tire pressure warning ECU

WIRING DIAGRAM



INSPECTION PROCEDURE

NOTICE:

- When replacing the tire pressure warning ECU, read the transmitter IDs stored in the old ECU

using Techstream and write them down before removal.

- It is necessary to perform initialization INFO after registration INFO of the transmitter IDs into the tire pressure warning ECU if the ECU has been replaced.

PROCEDURE

1.	**READ VALUE USING TECHSTREAM (VEHICLE SPEED)**

(a) Turn the ignition switch off.

(b) Connect the Techstream to the DLC3.

(c) Turn the ignition switch to ON.

(d) Turn the Techstream on.

(e) Enter the following menus: Chassis / Tire Pressure Monitor / Data List.

(f) Check that the values indicated on the Techstream and on the combination meter are the same.

Tire Pressure Monitor

TESTER DISPLAY	MEASUREMENT ITEM/RANGE	NORMAL CONDITION	DIAGNOSTIC NOTE
Vehicle Speed	Vehicle speed/ min.: 0 km/h (0 mph) max.: 255 km/h (158 mph)	Almost same as actual vehicle speed	Speed indicated on combination meter

OK:
Vehicle speed indicated on the Techstream and on the combination meter are the same.

NG ▶ **INSPECT TIRE PRESSURE WARNING ECU (SPD SIGNAL)**

OK ▶ **USE SIMULATION METHOD TO CHECK**

2.	**INSPECT TIRE PRESSURE WARNING ECU (SPD SIGNAL)**

(a) Disconnect the E94 ECU connector.

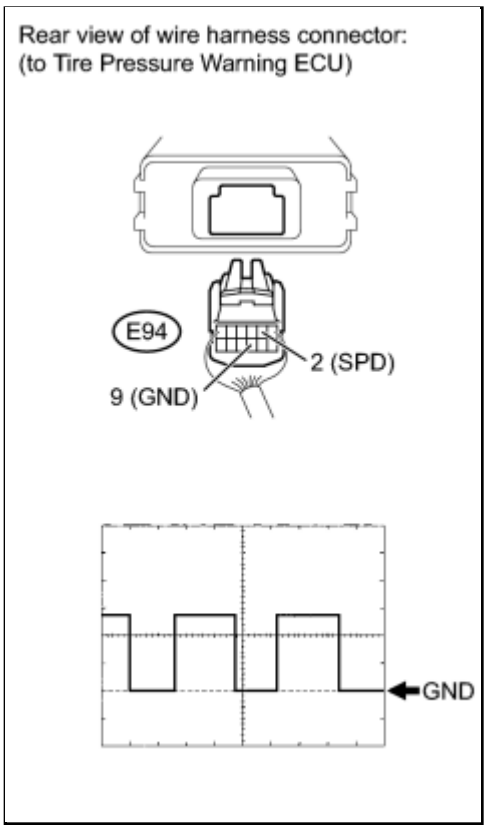

(b) Jack up the vehicle.

(c) Shift the lever to the neutral position.

(d) Turn the ignition switch to ON.

(e) Check the waveform of the ECU connector using an oscilloscope while turning the wheel slowly.

OK:

TESTER CONNECTION	SWITCH CONDITION	SPECIFIED CONDITION
E94-2 (SPD) - E94-9 (GND)	Ignition switch ON	Correct waveform appears as shown

Tool Setting

ITEM	CONTENTS
Tool Setting	5 V/DIV., 20 ms/DIV.
Vehicle Condition	Driving wheels rotating slowly

HINT:

The wavelength becomes shorter as the vehicle speed increases.

NG ▶ **CHECK HARNESS AND CONNECTOR (ECU - COMBINATION METER)**

OK ▶ REPLACE TIRE PRESSURE WARNING ECU

3.	CHECK HARNESS AND CONNECTOR (ECU - COMBINATION METER)

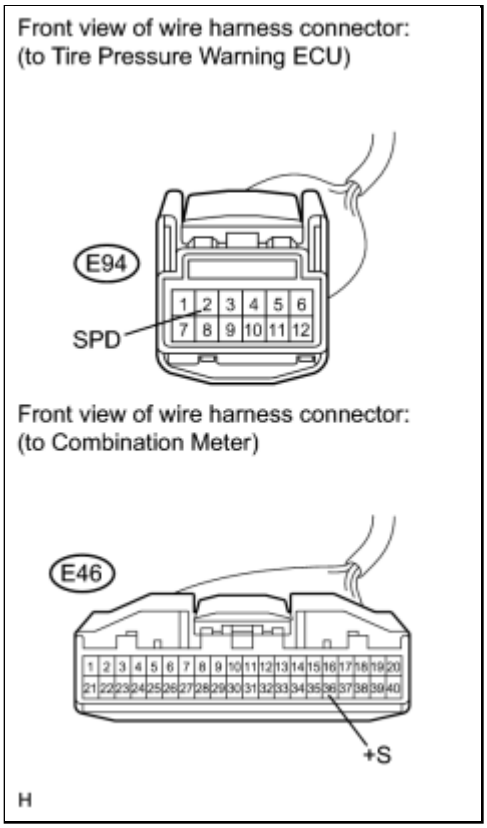

(a) Disconnect the E94 ECU connector.

(b) Disconnect the E46 meter connector.

(c) Measure the resistance according to the value(s) in the table below.

Standard Resistance:

TESTER CONNECTION	CONDITION	SPECIFIED CONDITION
E94-2 (SPD) - E46-36 (+S)	Always	Below 1 Ω
E94-2 (SPD) - Body ground	Always	10 kΩ or higher

NG ▶ REPAIR OR REPLACE HARNESS OR CONNECTOR

OK ▶ REPLACE COMBINATION METER

Last Modified: 3-10-2010	6.4 C	**From:** 200901
Model Year: 2010	**Model:** Corolla	**Doc ID:** RM000000XNA05UX
Title: TIRE PRESSURE MONITORING: TIRE PRESSURE WARNING SYSTEM: C2194/94: Engine Speed Signal Error (Test Mode DTC) (2010 Corolla)		

DTC	**C2194/94**	**Engine Speed Signal Error (Test Mode DTC)**

DESCRIPTION

The tire pressure warning ECU receives an engine speed signal from the ECM. This DTC is stored upon entering test mode, and cleared when an engine speed signal of 1000 rpm is detected for 3 seconds or more. This DTC is output only in test mode.

DTC NO.	DTC DETECTION CONDITION	TROUBLE AREA
C2194/94	Test mode procedure is performed	• ECM • Wire harness or connector • Tire pressure warning ECU

WIRING DIAGRAM



INSPECTION PROCEDURE

NOTICE:

- When replacing the tire pressure warning ECU, read the transmitter IDs stored in the old ECU using Techstream and write them down before removal.

- It is necessary to perform initialization INFO after registration INFO of the transmitter IDs into the tire pressure warning ECU if the ECU has been replaced.

PROCEDURE

1.	**READ VALUE USING TECHSTREAM (ENGINE SPEED)**

(a) Turn the ignition switch off.

(b) Connect the Techstream to the DLC3.

(c) Turn the ignition switch to ON.

(d) Turn the Techstream on.

(e) Enter the following menus: Chassis / Tire Pressure Monitor / Data List.

(f) Check that the values indicated on the Techstream and on the combination meter are the same.

Tire Pressure Monitor

TESTER DISPLAY	MEASUREMENT ITEM/RANGE	NORMAL CONDITION	DIAGNOSTIC NOTE
Engine Speed	Engine speed/ min.: 0 rpm max.: 65535 rpm	Almost same as actual engine speed	Speed indicated on combination meter

OK:
Engine speed indicated on the Techstream and on the combination meter are the same.

NG ▶ **INSPECT TIRE PRESSURE WARNING ECU (TACH SIGNAL)**

OK ▶ **USE SIMULATION METHOD TO CHECK**

2.	**INSPECT TIRE PRESSURE WARNING ECU (TACH SIGNAL)**

(a) Disconnect the E94 ECU connector.

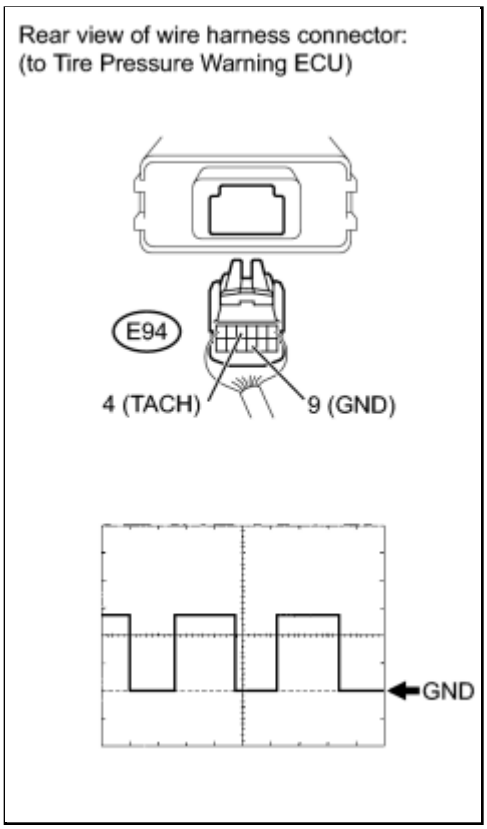

(b) Start the engine.

(c) Check the waveform of the ECU connector using an oscilloscope while idling the engine.

OK:

TESTER CONNECTION	CONDITION	SPECIFIED CONDITION
E94-4 (TACH) - E94-9 (GND)	Idling	Correct waveform appears as shown

Tool Setting

ITEM	CONTENTS
Tool Setting	5 V/DIV., 10 ms/DIV.

HINT:

The wavelength becomes shorter as the engine speed increases.

NG ▶ **CHECK HARNESS AND CONNECTOR (TIRE PRESSURE WARNING ECU - ECM)**

OK ▶ **REPLACE TIRE PRESSURE WARNING ECU**

3.	CHECK HARNESS AND CONNECTOR (TIRE PRESSURE WARNING ECU - ECM)

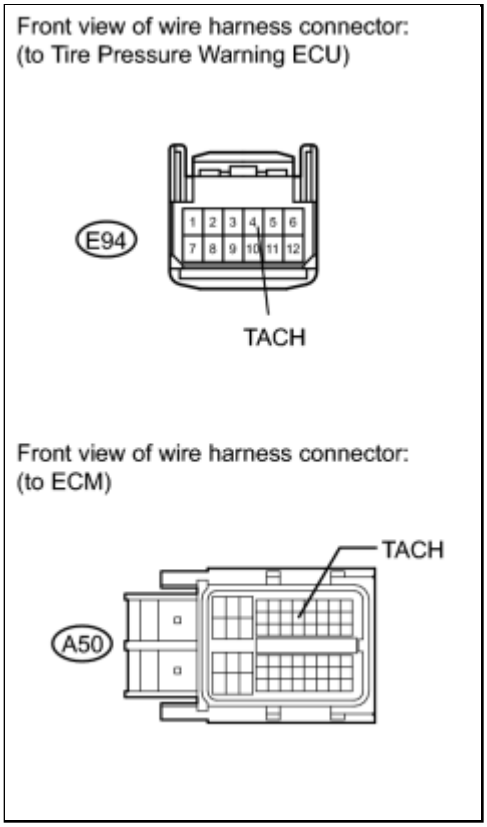

(a) Disconnect the E94 ECU connector.

(b) Disconnect the A50 ECM connector.

(c) Measure the resistance according to the value(s) in the table below.

Standard Resistance:

TESTER CONNECTION	CONDITION	SPECIFIED CONDITION
E94-4 (TACH) - A50-15 (TACH)	Always	Below 1 Ω
E94-4 (TACH) - Body ground	Always	10 kΩ or higher

Result:

RESULT	PROCEED TO
OK (for 2ZR-FE)	A
OK (for 2AZ-FE)	B
NG	C

C ▶ REPLACE ECM (for 2AZ-FE)

B ▶ **REPLACE ECM (for 2ZR-FE)**

A ▶ **REPAIR OR REPLACE HARNESS OR CONNECTOR**

Last Modified: 3-10-2010	6.4 J	**From:** 200901
Model Year: 2010	**Model:** Corolla	**Doc ID:** RM000000XNB034X
Title: TIRE PRESSURE MONITORING: TIRE PRESSURE WARNING SYSTEM: Tire Pressure Warning Reset Switch Circuit (2010 Corolla)		

Tire Pressure Warning Reset Switch Circuit

DESCRIPTION

Initialization can be started by pressing the tire pressure warning reset switch and holding it for 3 seconds or more. If the ECU receives the signal from the switch, the tire pressure warning light blinks 3 times (1 second on, 1 second off).

WIRING DIAGRAM

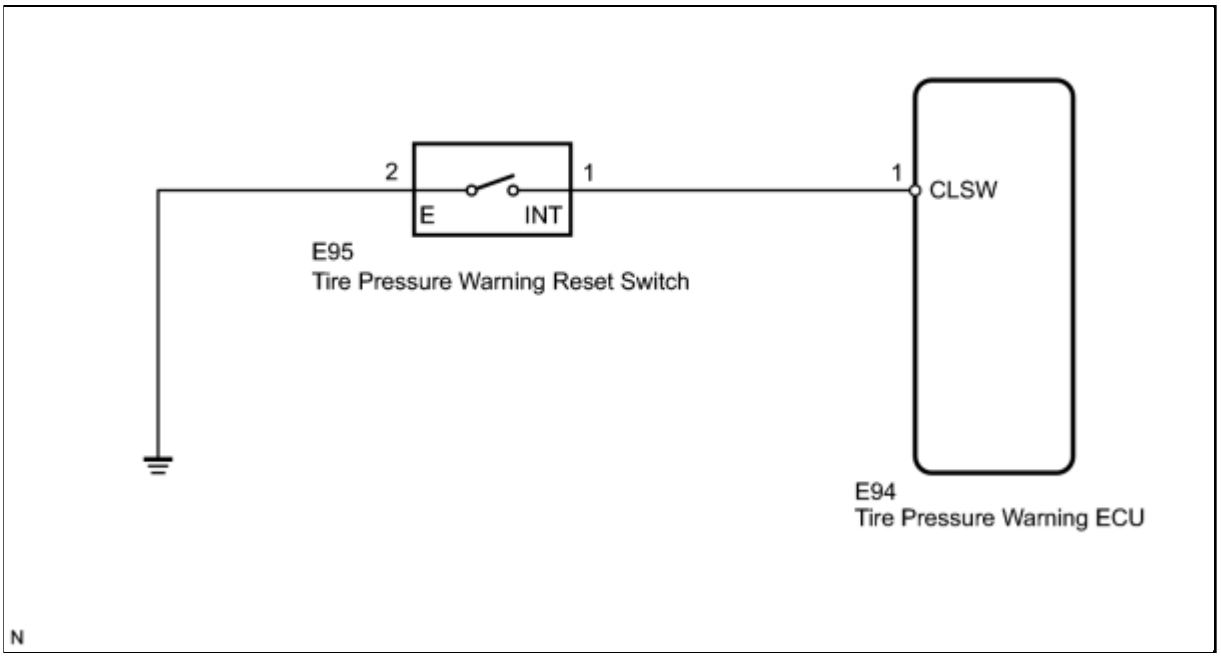

INSPECTION PROCEDURE

NOTICE:

- When replacing the tire pressure warning ECU, read the transmitter IDs stored in the old ECU using the Techstream and write down before removal.
- It is necessary to perform initialization INFO after registration INFO of the transmitter IDs into the tire pressure warning ECU, after the ECU has been replaced.

PROCEDURE

1.	CHECK TIRE PRESSURE WARNING RESET SWITCH FUNCTION

(a) Perform the tire pressure warning reset switch test in Test Mode Procedure INFO.

OK:

Reset switch ON

Tire pressure warning light comes on.

Reset switch OFF

Tire pressure warning light blinks.

NG ▶ **INSPECT TIRE PRESSURE WARNING RESET SWITCH**

OK ▶ **PROCEED TO NEXT CIRCUIT INSPECTION SHOWN IN PROBLEM SYMPTOMS TABLE**

2.	INSPECT TIRE PRESSURE WARNING RESET SWITCH

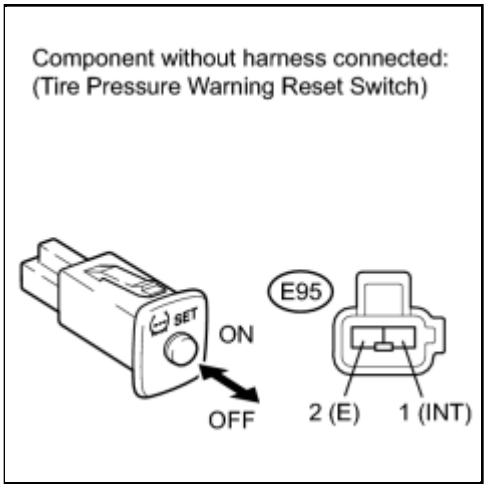

(a) Disconnect the tire pressure warning reset switch connector.

(b) Measure the resistance according to the value(s) in the table below.

Standard Resistance:

TESTER CONNECTION	CONDITION	SPECIFIED CONDITION
E95-1 (INT) - E95-2 (E)	ON	Below 1 Ω
	OFF	10 kΩ or higher

NG ▶ **REPLACE TIRE PRESSURE WARNING RESET SWITCH**

OK

3.	**CHECK HARNESS AND CONNECTOR (TIRE PRESSURE WARNING RESET SW - TIRE PRESSURE WARNING ECU)**

(a) Disconnect the tire pressure warning reset switch E95 connector and tire pressure warning ECU E94 connector.

(b) Measure the resistance according to the value(s) in the table below.

Standard Resistance:

TESTER CONNECTION	SWITCH CONDITION	SPECIFIED CONDITION
E94-1 (CLSW) - E95-1 (INT)	Always	Below 1 Ω
E94-1 (CLSW) - Body ground		10 kΩ or higher
E95-2 (E) - Body ground		Below 1 Ω

NG ▶ **REPAIR OR REPLACE HARNESS OR CONNECTOR**

OK ▶ **REPLACE TIRE PRESSURE WARNING ECU**

Last Modified: 3-10-2010	6.4 J	**From:** 200901
Model Year: 2010	**Model:** Corolla	**Doc ID:** RM000000XN302OX
Title: TIRE PRESSURE MONITORING: TIRE PRESSURE WARNING SYSTEM: Tire Pressure Warning Light Circuit (2010 Corolla)		

Tire Pressure Warning Light Circuit

DESCRIPTION

If the tire pressure warning ECU detects any trouble, the tire pressure warning light blinks (stays on after blinking for 1 minute) and tire pressure monitor is cancelled at the same time. At this time, the ECU records a DTC in the memory.

Connecting terminals TC and CG of the DLC3 makes the tire pressure warning light blink to output DTCs.

WIRING DIAGRAM



INSPECTION PROCEDURE

NOTICE:

- When replacing the tire pressure warning ECU, read the transmitter IDs stored in the old ECU using the Techstream and write them down before removal.
- It is necessary to perform initialization INFO after registration INFO of the transmitter IDs into the tire pressure warning ECU if the ECU has been replaced.

PROCEDURE

1.	**CHECK OPERATION OF TIRE PRESSURE WARNING LIGHT (ACTIVE TEST)**

(a) Turn the ignition switch off.

(b) Connect the Techstream to the DLC3.

(c) Turn the ignition switch to ON.

(d) Turn the Techstream on.

(e) Enter the following menus: Body Electrical / Combination Meter / Active Test.

(f) Check the condition of the tire pressure warning light by operating the Techstream.

Combination Meter

TESTER DISPLAY	TEST PART	CONTROL RANGE	DIAGNOSTIC NOTE
Indicat. Tire Pressure Warning System	Tire pressure warning light	Tire pressure warning light is OFF or ON	Confirm that the vehicle is stopped, engine idling

OK:
The warning light turns on when operating the Techstream.

NG ▶ **GO TO METER / GAUGE SYSTEM**

OK ▼

2.	**CHECK HARNESS AND CONNECTOR (COMBINATION METER - TIRE PRESSURE WARNING ECU)**

(a) Disconnect the E46 combination meter connector.

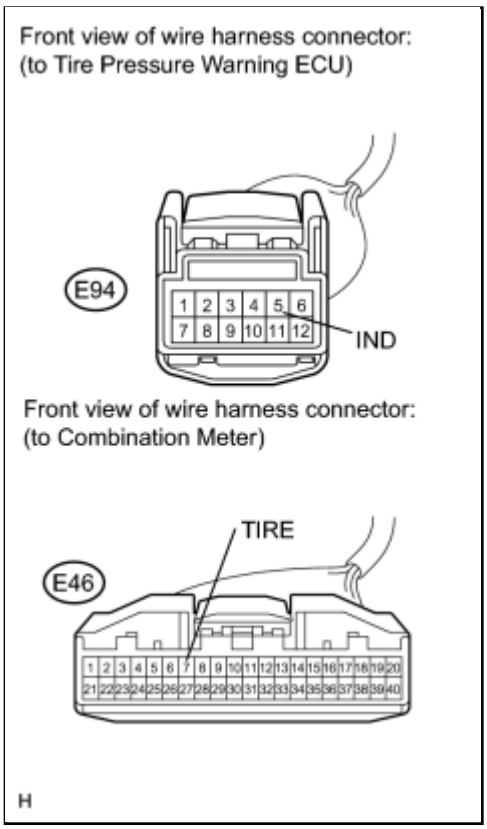

(b) Disconnect the E94 tire pressure warning ECU connector.

(c) Measure the resistance according to the value(s) in the table below.

Standard Resistance:

TESTER CONNECTION	CONDITION	SPECIFIED CONDITION
E46-7 (TIRE) - E94-5 (IND)	Always	Below 1 Ω
E46-7 (TIRE) - Body ground		10 kΩ or higher

NG ▶ **REPAIR OR REPLACE HARNESS OR CONNECTOR**

OK ▶ **REPLACE TIRE PRESSURE WARNING ECU**

Last Modified: 3-10-2010	6.4 J	**From:** 200901
Model Year: 2010	**Model:** Corolla	**Doc ID:** RM000000XN2035X
Title: TIRE PRESSURE MONITORING: TIRE PRESSURE WARNING SYSTEM: ECU Power Source Circuit (2010 Corolla)		

ECU Power Source Circuit

DESCRIPTION

This is the power source for the tire pressure warning ECU.

WIRING DIAGRAM

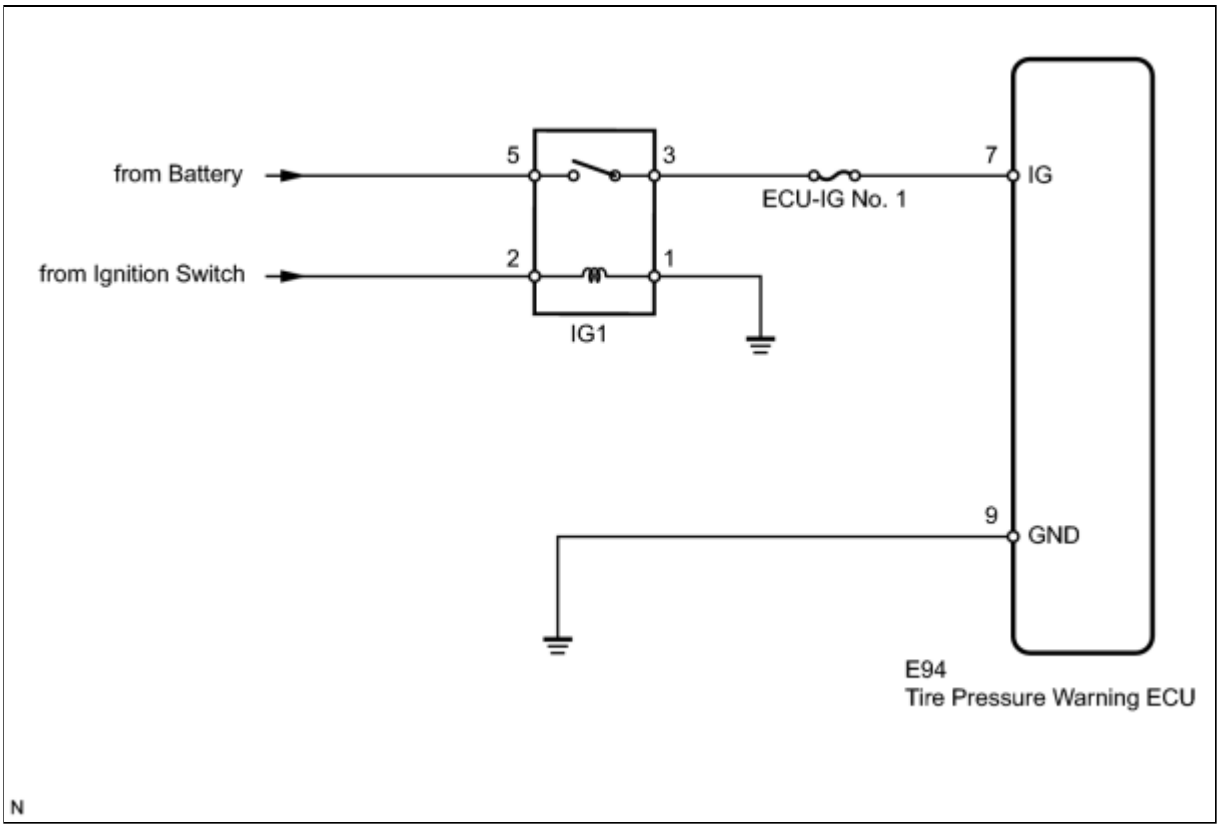

INSPECTION PROCEDURE

NOTICE:

- When replacing the tire pressure warning ECU, read the transmitter IDs stored in the old ECU using the Techstream and write them down before removal.
- It is necessary to perform initialization INFO after registration INFO of the transmitter IDs into the tire pressure warning ECU after the ECU has been replaced.

PROCEDURE

1.	**INSPECT FUSE (ECU-IG)**

(a) Remove the ECU-IG fuse from the instrument panel junction block.

(b) Measure the resistance according to the value(s) in the table below.

Standard Resistance:

TESTER CONNECTION	CONDITION	SPECIFIED CONDITION
EUC-IG	Always	Below 1 Ω

NG ▶ **REPLACE FUSE**

OK ▼

2.	**INSPECT IGNITION RELAY NO. 1**

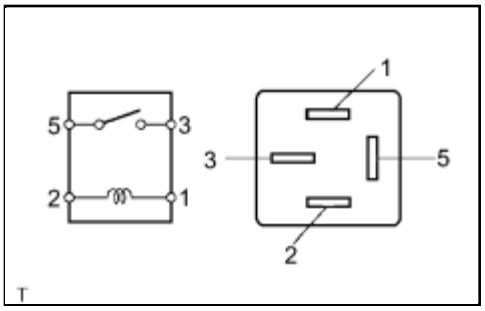

(a) Remove the IG1 relay from the instrument panel junction block.

(b) Measure the resistance according to the value(s) in the table below.

Standard Resistance:

TESTER CONNECTION	CONDITION	SPECIFIED CONDITION
3 - 5	Battery voltage is not applied to terminals 1 and 2	10 kΩ or higher
	Battery voltage is applied to terminals 1 and 2	Below 1 Ω

NG ▶ **REPLACE IGNITION RELAY NO. 1**

OK

3.	CHECK HARNESS AND CONNECTOR (ECU - BATTERY AND BODY GROUND)

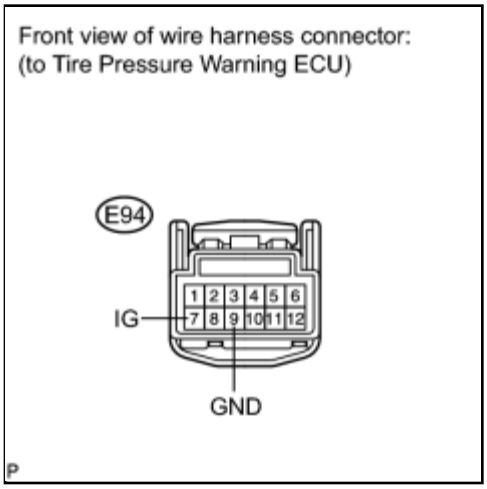

(a) Disconnect the E94 ECU connector.

(b) Measure the voltage according to the value(s) in the table below.

Standard Voltage:

TESTER CONNECTION	SWITCH CONDITION	SPECIFIED CONDITION
E94-7 (IG) - Body ground	Ignition switch ON	11 to 14 V
	Ignition switch off	Below 1 V

(c) Measure the resistance according to the value(s) in the table below.

Standard Resistance:

TESTER CONNECTION	CONDITION	SPECIFIED CONDITION
E94-9 (GND) - Body ground	Always	Below 1 Ω

NG ▶ **REPAIR OR REPLACE HARNESS OR CONNECTOR**

OK ▶ **PROCEED TO NEXT CIRCUIT INSPECTION SHOWN IN PROBLEM SYMPTOMS TABLE**

Last Modified: 3-10-2010	6.4 J	**From:** 200901
Model Year: 2010	**Model:** Corolla	**Doc ID:** RM000000XN502HX
Title: TIRE PRESSURE MONITORING: TIRE PRESSURE WARNING SYSTEM: TC and CG Terminal Circuit (2010 Corolla)		

TC and CG Terminal Circuit

DESCRIPTION

DTC output mode is set by Connecting terminals 13 (TC) and 4 (CG) of the DLC3. The DTCs are indicated by the blinking of the tire pressure warning light.

WIRING DIAGRAM

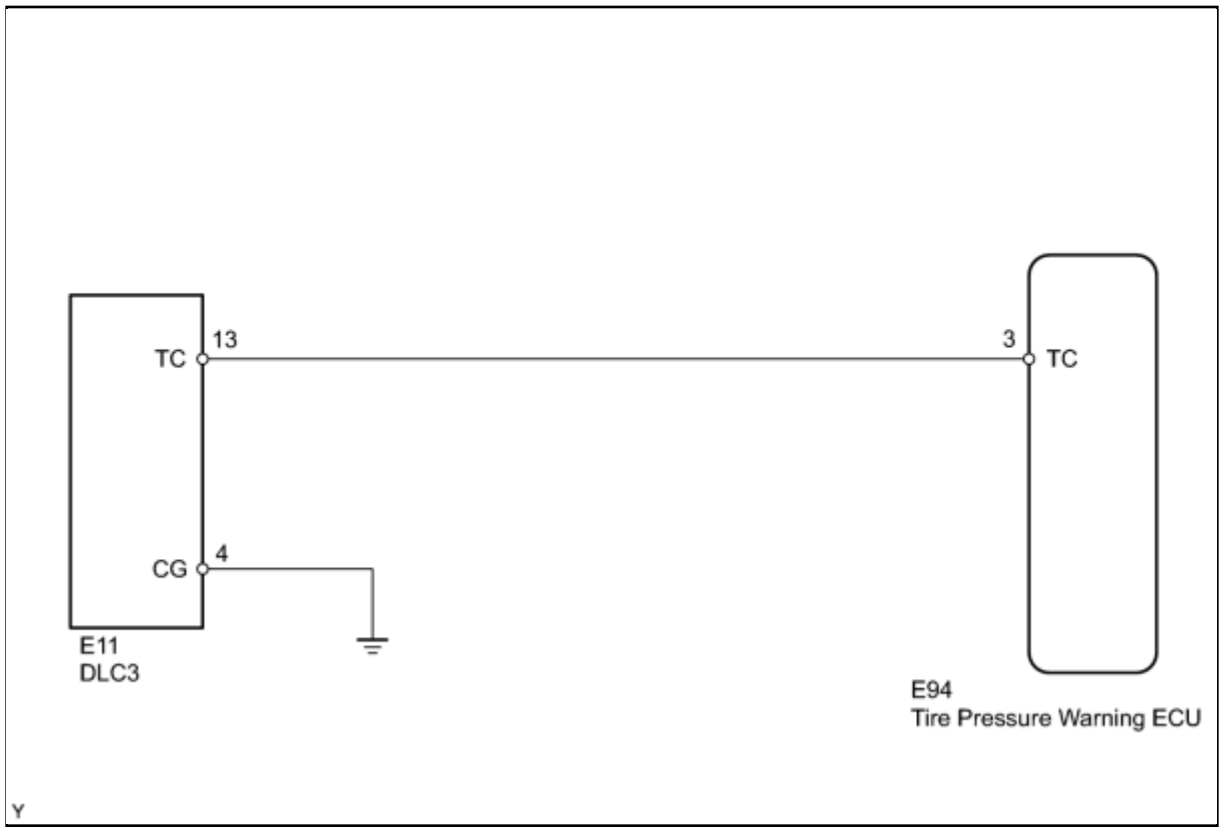

HINT:

When various warning lights blinks continuously, a ground short in the wiring of terminal TC of the DLC3 or an internal ground short in an ECU connected to this circuit may have occurred.

INSPECTION PROCEDURE

NOTICE:

- When replacing the tire pressure warning ECU, read the transmitter IDs stored in the old ECU using the Techstream and write them down before removal.

- It is necessary to perform initialization INFO after registration INFO of the transmitter IDs into the tire pressure warning ECU after the ECU has been replaced.

PROCEDURE

1.	**CHECK HARNESS AND CONNECTOR (DLC3 - TIRE PRESSURE WARNING ECU)**

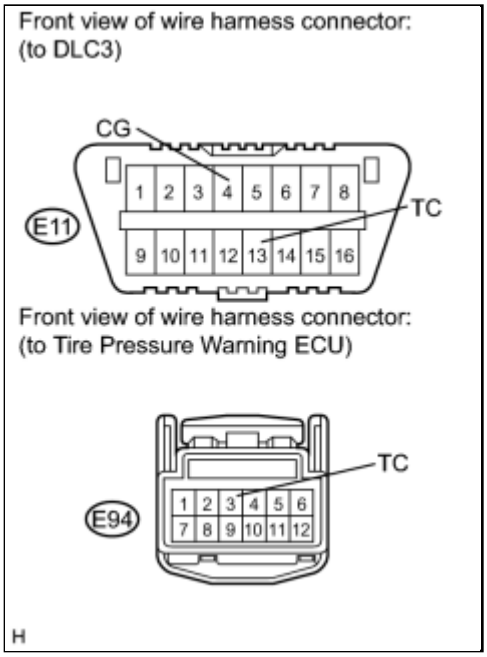

(a) Disconnect the E94 ECU connector.

(b) Measure the resistance according to the value(s) in the table below.

Standard Resistance:

TESTER CONNECTION	CONDITION	SPECIFIED CONDITION
E94-3 (TC) - E11-13 (TC)	Always	Below 1 Ω
E11-4 (CG) - Body ground		

NG ▶ **REPAIR OR REPLACE HARNESS OR CONNECTOR**

OK ▶ **PROCEED TO NEXT CIRCUIT INSPECTION SHOWN IN PROBLEM SYMPTOMS TABLE**

Last Modified: 3-10-2010	6.4 K	**From:** 200901
Model Year: 2010	**Model:** Corolla	**Doc ID:** RM000000XV601MX
Title: TIRE PRESSURE MONITORING: TIRE PRESSURE WARNING VALVE: COMPONENTS (2010 Corolla)		

COMPONENTS

ILLUSTRATION

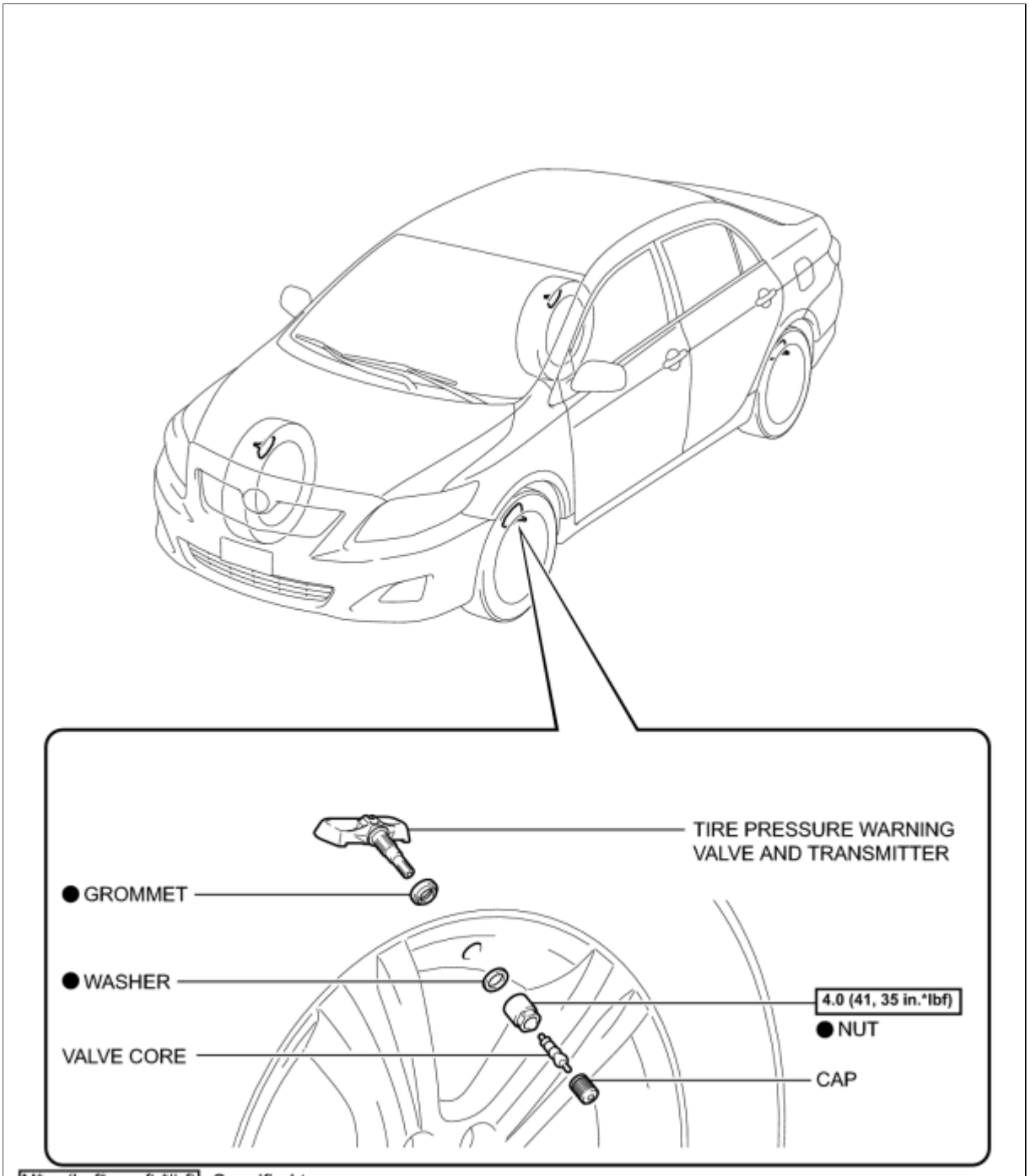

N*m (kgf*cm, ft.*lbf): Specified torque

● Non-reusable part

P

Last Modified: 3-10-2010	6.4 A	**From:** 200901
Model Year: 2010	**Model:** Corolla	**Doc ID:** RM000001F7Q01NX
Title: TIRE PRESSURE MONITORING: TIRE PRESSURE WARNING VALVE: INSTALLATION (2010 Corolla)		

INSTALLATION

1. INSTALL TIRE PRESSURE WARNING VALVE AND TRANSMITTER

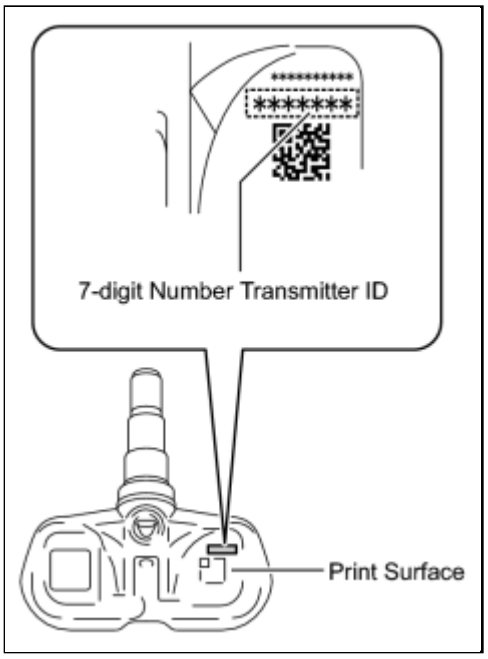

(a) Insert the tire pressure warning valve and transmitter into the valve installation hole. Insert it from the inside of the rim so that the printed surface can be seen.

NOTICE:

- Check that there is no visible deformation, damage, or other abnormalities on the tire pressure warning valve and transmitter.
- Check that there is no foreign matter on the inner grommet and around the rim hole.
- If the tire pressure warning valve and transmitter is installed upside down, it may be damaged or fail to transmit signals when running at high speeds.
- If installing a new tire pressure warning valve and transmitter, write down the ID number before installation.
- It is necessary to register the ID in the ECU after installation INFO .

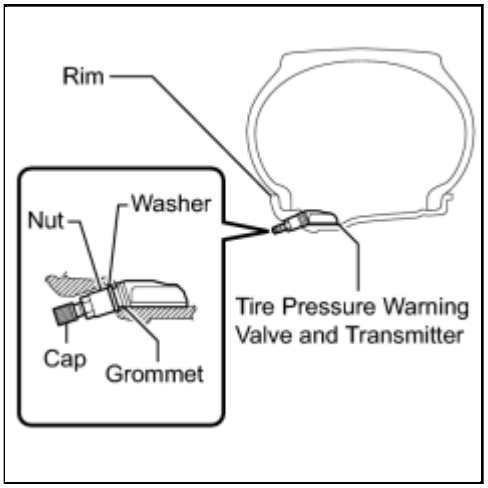

(b) Install a new washer on the tire pressure warning valve and transmitter from the rim side and tighten a new nut.

Torque: 4.0 N·m (41 kgf·cm, 35in·lbf)

NOTICE:

- No further tightening is required once the nut is tightened to the specified torque.
- Check that there is no foreign matter on the washer and nut.
- Always use a new grommet, washer, and nut when installing the tire pressure warning valve and transmitter.
- Check that there is no oil, water, or lubricant around the rim hole, tire pressure warning valve and transmitter, washer, and nut. Failing to do so may result in improper installation.

(c) Set the wheel onto the mounting machine and install the

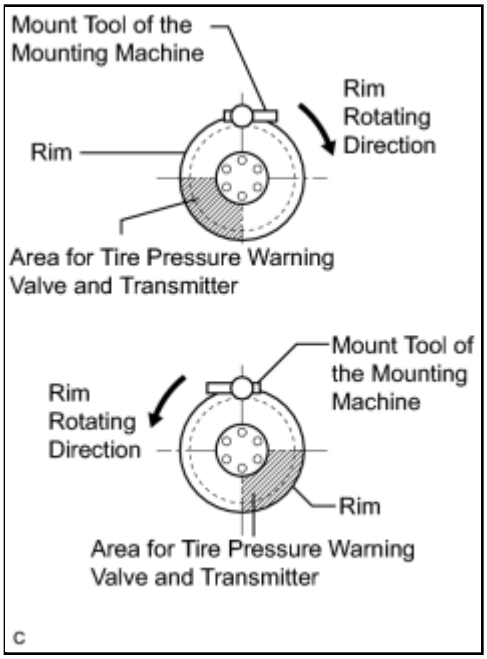

lower bead. Position the main body of the tire pressure warning valve and transmitter in the shaded area shown in the illustration.

NOTICE:

- If the tire pressure warning valve and transmitter is positioned outside this area, it will interfere with the tire bead, and may be damaged.
- If the use of lubricant is required when installing the bead, do not apply the lubricant directly to the tire pressure warning valve and transmitter.

(d) Install the upper bead.

NOTICE:

Make sure that the tire bead and tool do not interfere with the main body of the tire pressure warning valve and transmitter and that it is not clamped by the bead.

(e) After the tire is inflated, the valve nut may be loose. Retighten the nut to the specified torque and then check for air leaks with soapy water.

Torque: 4.0 N·m (41 kgf·cm, 35in·lbf)

NOTICE:

No further tightening is required once the nut is tightened to the specified torque.

2. INSTALL FRONT WHEEL

Torque: 103 N·m (1050 kgf·cm, 76ft·lbf)

3. INSTALL REAR WHEEL

Torque: 103 N·m (1050 kgf·cm, 76ft·lbf)

4. INSPECT TIRES

HINT: INFO .

5. REGISTER TRANSMITTER ID

HINT:

It is necessary to register all transmitter IDs INFO .

6. INSPECT TIRE PRESSURE WARNING SYSTEM

HINT: INFO .

Last Modified: 3-10-2010	6.4 A	**From:** 200901
Model Year: 2010	**Model:** Corolla	**Doc ID:** RM000001F7R01MX
Title: TIRE PRESSURE MONITORING: TIRE PRESSURE WARNING VALVE: REMOVAL (2010 Corolla)		

REMOVAL

1. REMOVE FRONT WHEEL

2. REMOVE REAR WHEEL

3. REMOVE TIRE PRESSURE WARNING VALVE AND TRANSMITTER

(a) Remove the valve core and cap to release the air from the tire.

(b) After ensuring that a sufficient amount of air has been released, remove the nut and washer used to secure the tire pressure warning valve and transmitter. Drop the tire pressure warning valve and transmitter into the tire.

HINT:

Keep the removed cap and valve core.

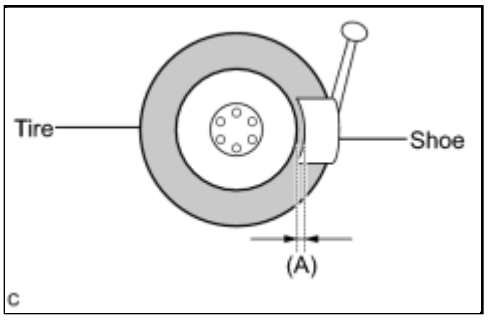

(c) After dropping the tire pressure warning valve and transmitter into the tire, disengage the bead using the shoe of the tire remover.

NOTICE:

- Be careful not to damage the tire pressure warning valve and transmitter due to interference between the valve and the tire bead.
- Set the tire remover shoe as shown in the illustration.

  Width (A):
  10 to 20 mm (0.394 to 0.787 in.)

(d) Separate the upper bead.

(e) Take out the tire pressure warning valve and transmitter from the tire and separate the lower bead.

NOTICE:

Always use a new grommet, washer and nut when installing the tire pressure warning valve and transmitter.

Last Modified: 3-10-2010	6.4 N	**From:** 200901
Model Year: 2010	**Model:** Corolla	**Doc ID:** RM000000X9J01ZX
Title: TIRE PRESSURE MONITORING: TIRE PRESSURE WARNING VALVE: DISPOSAL (2010 Corolla)		

DISPOSAL

HINT:

The tire pressure warning valve and transmitter is powered by a lithium battery. When disposing of the tire pressure warning valve and transmitter, remove the battery and dispose of it correctly.

1. DISPOSE OF TIRE PRESSURE WARNING VALVE AND TRANSMITTER

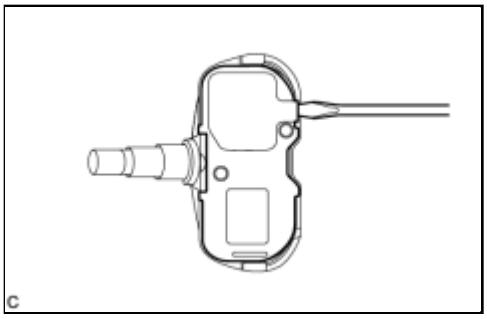

(a) Using a screwdriver, pry off the back cover.

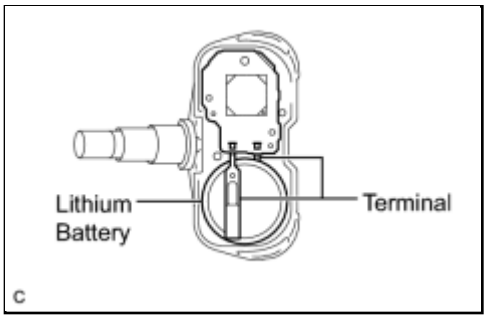

(b) Cut the 2 terminals that connect the battery to the base board to remove the battery.

HINT:

The battery and base board are covered with silicone.

Last Modified: 3-10-2010	6.4 A	**From:** 200901
Model Year: 2010	**Model:** Corolla	**Doc ID:** RM0000011QF02WX
Title: DOOR / HATCH: FRONT DOOR: DISASSEMBLY (2010 Corolla)		

DISASSEMBLY

1. DISCONNECT CABLE FROM NEGATIVE BATTERY TERMINAL

2. REMOVE FRONT DOOR WINDOW REGULATOR HANDLE ASSEMBLY (w/o Power Window)

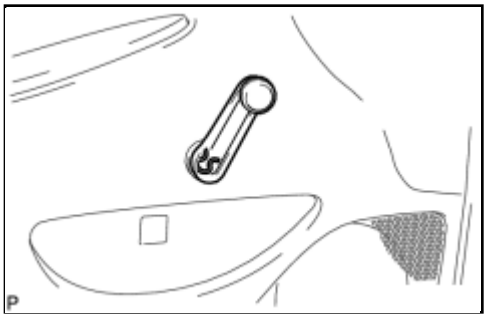

(a) Using a clip remover, remove the snap ring.

(b) Remove the front door window regulator handle assembly and front door regulator inside handle plate.

3. REMOVE FRONT DOOR INSIDE HANDLE BEZEL

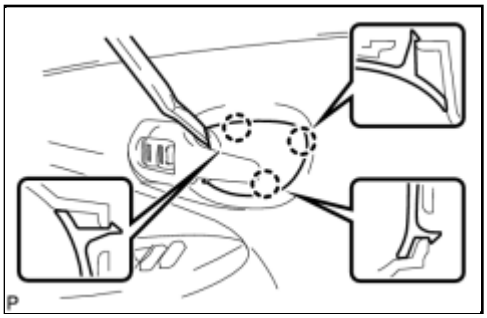

(a) Using a moulding remover, disengage the 3 claws and remove the front door inside handle bezel.

4. REMOVE FRONT ARMREST UPPER BASE PANEL (w/o Power Window)

(a) Using a moulding remover, disengage the 2 clips and 6 claws, and remove the front armrest upper base panel.

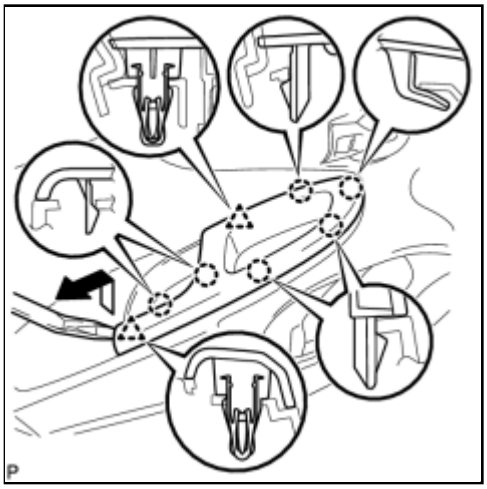

(b) w/ Power Door Lock:

(1) Disconnect the connector.

5. REMOVE FRONT ARMREST UPPER BASE PANEL (w/ Power Window)

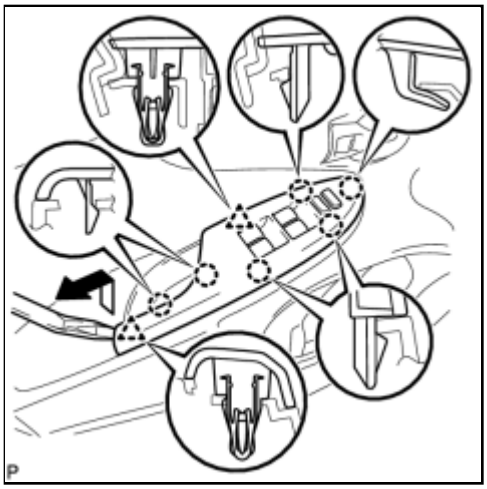

(a) Using a moulding remover, disengage the 2 clips and 6 claws.

(b) Disconnect the connector and remove the front armrest upper base panel.

6. REMOVE DOOR CONTROL SWITCH ASSEMBLY (w/ Power Door Lock)

(a) Using a screwdriver with its tip wrapped with protective tape, disengage the 2 claws and remove the door control switch assembly.

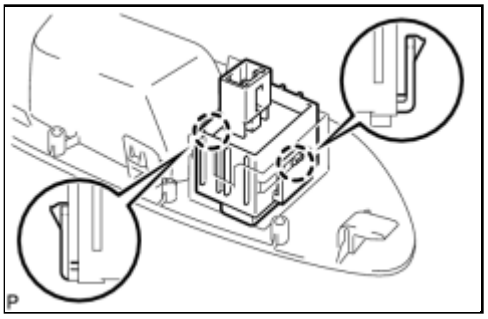

7. REMOVE POWER WINDOW REGULATOR MASTER SWITCH ASSEMBLY (for Driver Side with Power Window)

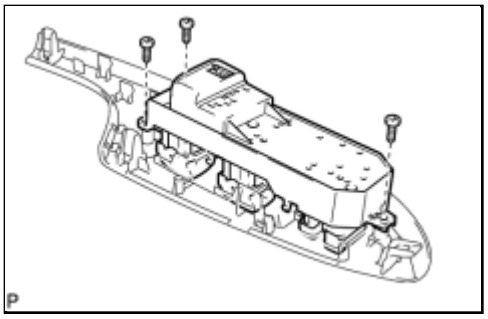

(a) Remove the 3 screws and the power window regulator master switch assembly.

8. REMOVE POWER WINDOW REGULATOR SWITCH ASSEMBLY (for Front Passenger Side with Power Window)

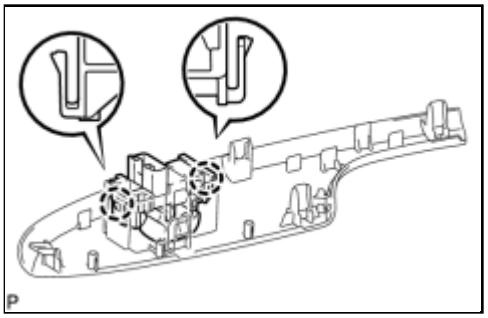

(a) Using a screwdriver with its tip wrapped with protective tape, disengage the 2 claws and remove the power window regulator switch assembly.

9. REMOVE FRONT DOOR TRIM BOARD SUB-ASSEMBLY

(a) Using a screwdriver with its tip wrapped with protective tape, disengage the claw and disconnect the door armrest cap.



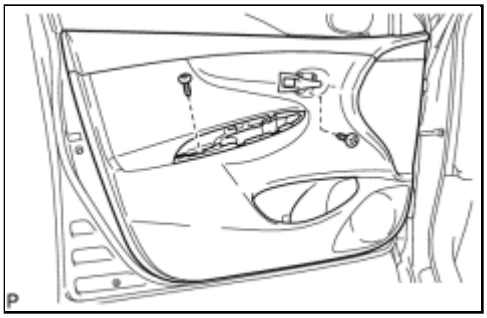

(b) Remove the 2 screws.

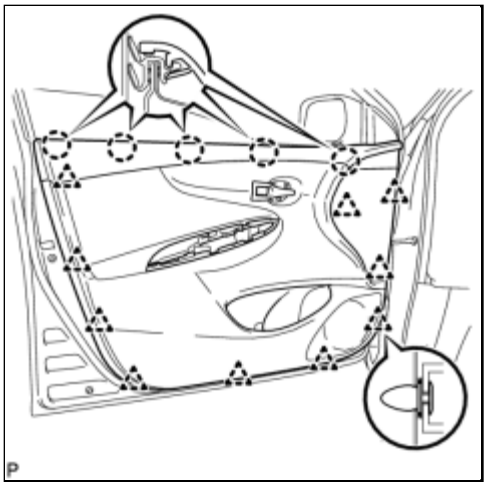

(c) Using a clip remover, disengage the 10 clips.

(d) Disengage the 5 claws and separate the front door trim board sub-assembly from the front door inner glass weatherstrip.

(e) Disengage the 2 claws and disconnect the front door inside handle sub-assembly.

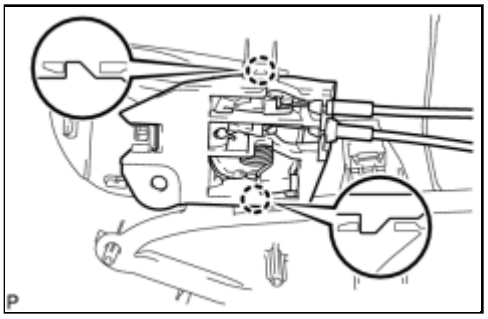

10. REMOVE FRONT DOOR INSIDE HANDLE SUB-ASSEMBLY

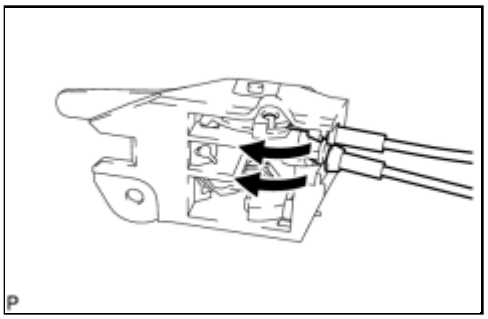

(a) Disconnect the front door lock remote control cable and front door inside locking cable, and remove the front door inside handle sub-assembly.

11. REMOVE FRONT DOOR LOWER FRAME BRACKET GARNISH (w/o Front No. 2 Speaker)

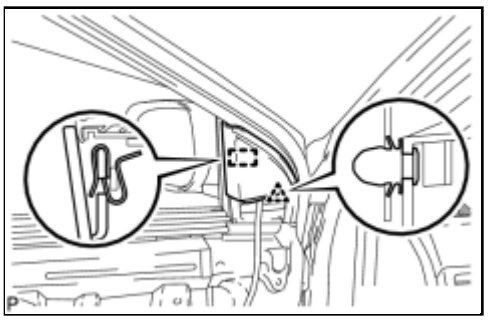

(a) Disengage the clip and clamp, and remove the front door lower frame bracket garnish.

12. REMOVE FRONT DOOR LOWER FRAME BRACKET GARNISH (w/ Front No. 2 Speaker)

(a) Disengage the clip and clamp.

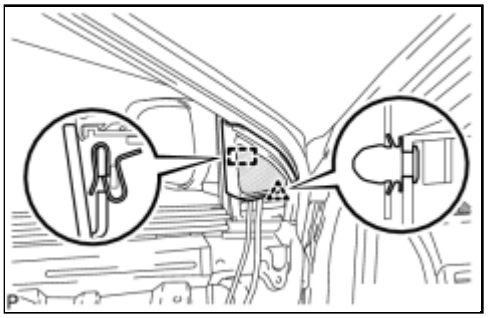

(b) Disconnect the connector and remove the front door lower frame bracket garnish.

13. REMOVE FRONT NO. 2 SPEAKER ASSEMBLY (w/ Front No. 2 Speaker) INFO

14. REMOVE FRONT NO. 3 SPEAKER ASSEMBLY (w/ Front No. 3 Speaker) INFO

15. REMOVE FRONT DOOR INNER GLASS WEATHERSTRIP

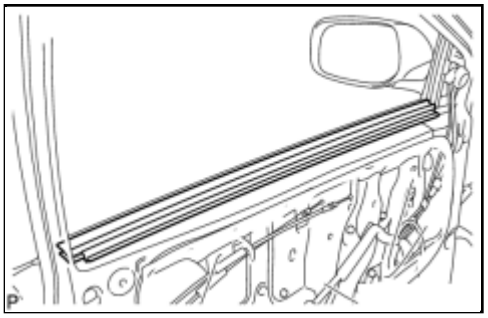

(a) Remove the front door inner glass weatherstrip from the front door panel.

16. REMOVE FRONT NO. 1 SPEAKER ASSEMBLY INFO

17. REMOVE FRONT DOOR TRIM BRACKET

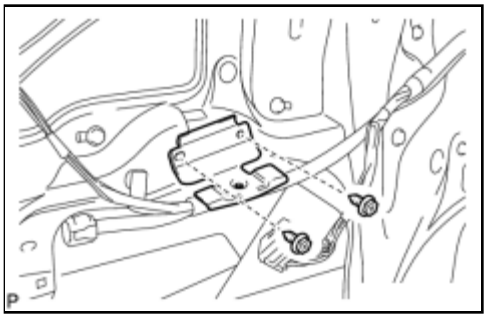

(a) Remove the 2 screws and the front door trim bracket.

18. REMOVE FRONT DOOR SERVICE HOLE COVER

(a) w/ Power door lock:

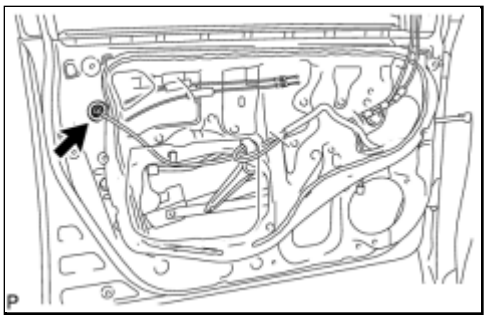

(1) Disconnect the connector.

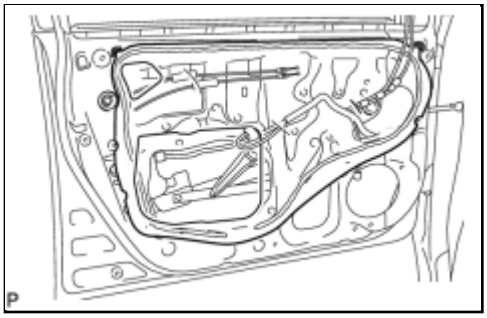

(b) Remove the front door service hole cover.

HINT:

Remove any remaining butyl tape from the door.

19. REMOVE OUTER REAR VIEW MIRROR ASSEMBLY WITH COVER INFO

20. REMOVE FRONT DOOR GLASS SUB-ASSEMBLY (w/o Power Window)

(a) Install the front door window regulator handle assembly and move the front door glass sub-assembly so that the door glass bolts can be seen.

(b) Remove the front door window regulator handle assembly.

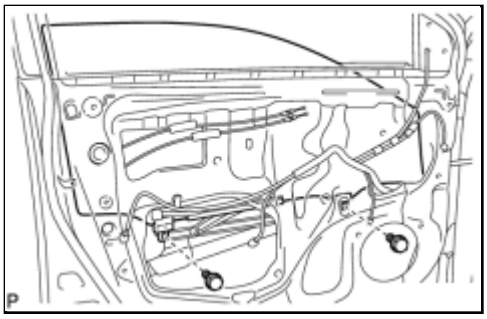

(c) Remove the 2 bolts.

NOTICE:

After the bolts are removed, do not allow the door glass to fall.

(d) Remove the front door glass sub-assembly as shown in the illustration.

NOTICE:

Do not damage the door glass.

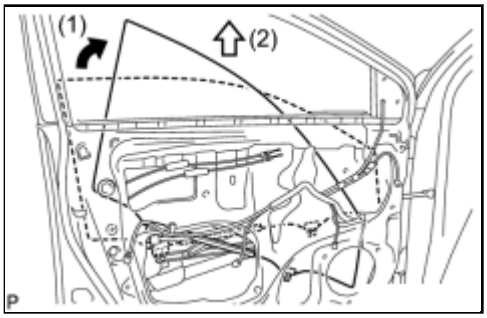

21. REMOVE FRONT DOOR GLASS SUB-ASSEMBLY (w/ Power Window)

(a) Connect the cable to the negative (-) battery terminal.

(b) Connect the power window regulator master switch assembly and move the front door glass sub-assembly so that the door glass bolts can be seen.

(c) Disconnect the cable from the negative (-) battery terminal and power window regulator master switch assembly.

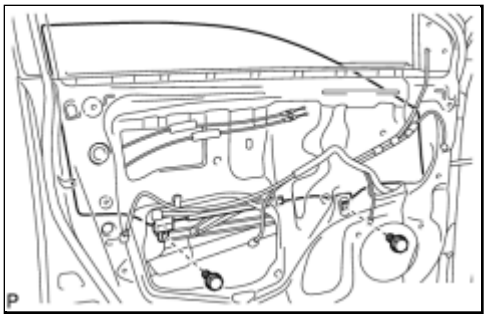

(d) Remove the 2 bolts.

NOTICE:

After the bolts are removed, do not allow the door glass to fall.

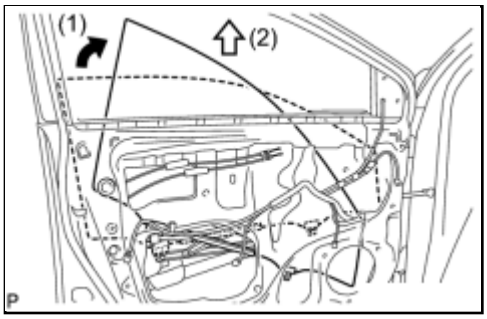

(e) Remove the front door glass sub-assembly as shown in the illustration.

NOTICE:

Do not damage the door glass.

22. REMOVE FRONT DOOR WINDOW REGULATOR ASSEMBLY (w/o Power Window)

(a) Remove the 5 bolts and the front door window regulator assembly.

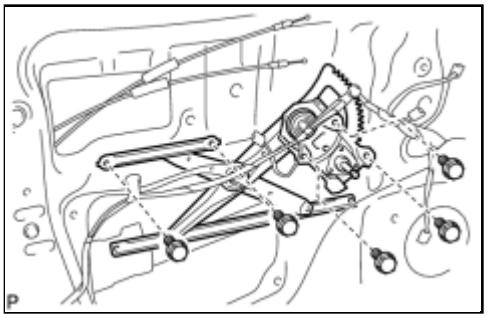

23. REMOVE FRONT DOOR WINDOW REGULATOR SUB-ASSEMBLY (w/ Power Window)

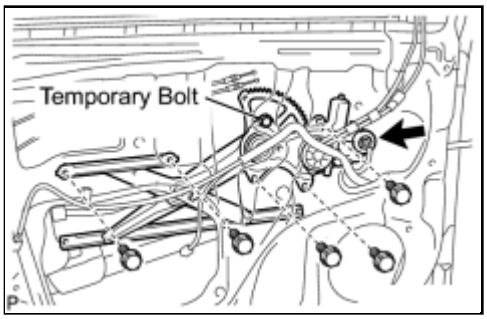

(a) Disconnect the connector.

(b) Loosen the temporary bolt.

NOTICE:

Do not remove the temporary bolt. If the temporary bolt is removed, the front door window regulator may fall and cause damage.

(c) Remove the 5 bolts.

(d) Remove the front door window regulator sub-assembly and the front power window regulator motor assembly as a unit.

(e) Remove the temporary bolt from the front door window regulator sub-assembly.

24. REMOVE FRONT POWER WINDOW REGULATOR MOTOR ASSEMBLY (w/ Power Window)

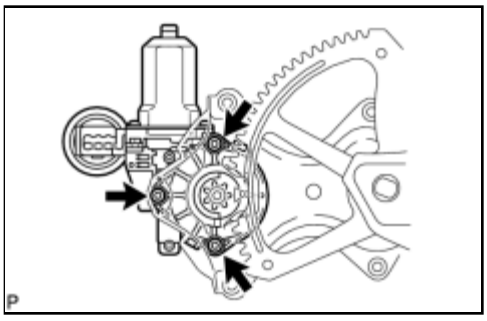

(a) Using a "TORX" socket wrench (T25), remove the 3 screws and the front power window regulator motor assembly.

25. REMOVE FRONT DOOR NO. 2 STIFFENER CUSHION

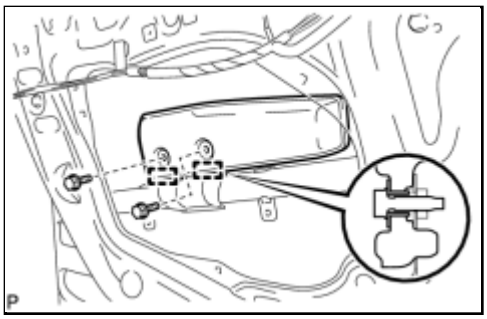

(a) Remove the 2 bolts.

(b) Disengage the 2 guides and remove the front door No. 2 stiffener cushion.

26. REMOVE FRONT DOOR GLASS RUN

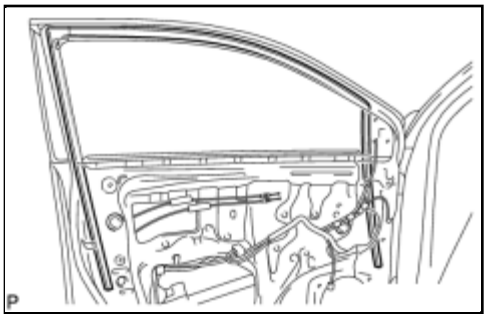

(a) Remove the front door glass run.

27. REMOVE DOOR FRAME GARNISH

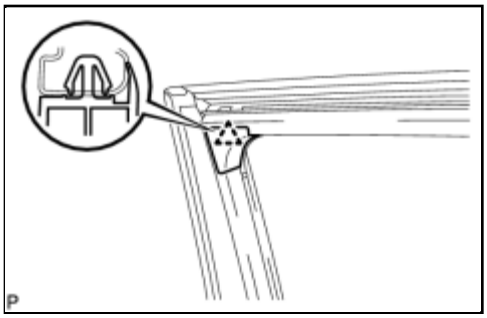

(a) Disengage the clip and remove the door frame garnish.

HINT:

This garnish needs to be replaced with a new one because the clip will break when removing the door frame garnish.

28. REMOVE FRONT DOOR REAR LOWER FRAME SUB-ASSEMBLY

(a) Remove the bolt and the front door rear lower frame sub-assembly as shown in the illustration.

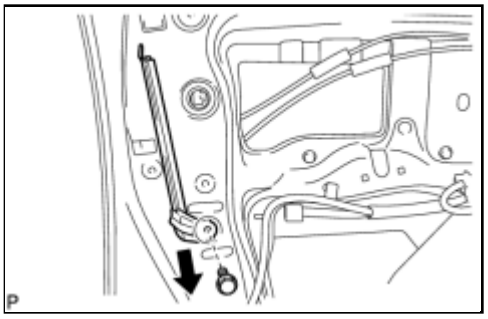

29. REMOVE FRONT DOOR OUTSIDE HANDLE COVER (for Driver Side)

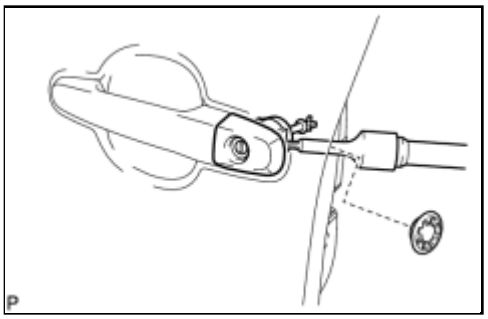

(a) Remove the hole plug.

(b) Using a "TORX" socket wrench (T30), loosen the screw and remove the front door outside handle cover and the door lock key cylinder as a unit.

HINT:

The screw cannot be removed because it is integrated into the front door outside handle frame sub-assembly.

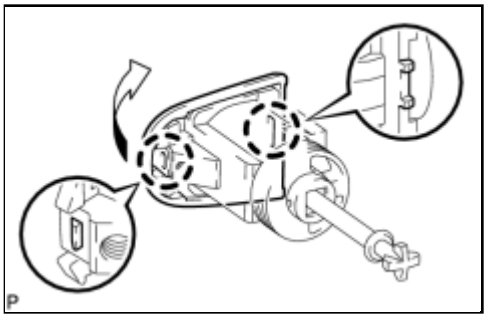

(c) Using a screwdriver, disengage the 2 claws and remove the front door outside handle cover.

30. REMOVE FRONT DOOR OUTSIDE HANDLE COVER (for Front Passenger Side)

(a) w/o Wireless door lock system:

HINT:

Use the same procedure for the front passenger side and the driver side.

(b) w/ Wireless door lock system:

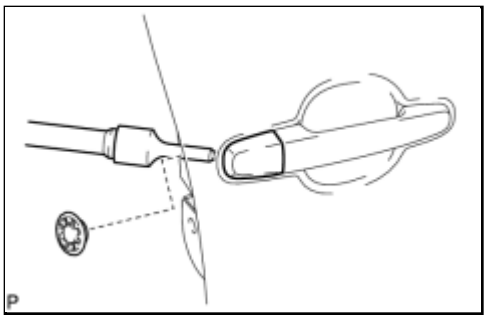

(1) Remove the hole plug.

(2) Using a "TORX" socket wrench (T30), loosen the screw and remove the front door outside handle cover.

HINT:

The screw cannot be removed because it is integrated into the front door outside handle frame sub-assembly.

31. REMOVE FRONT DOOR OUTSIDE HANDLE ASSEMBLY (w/o Smart Key System)

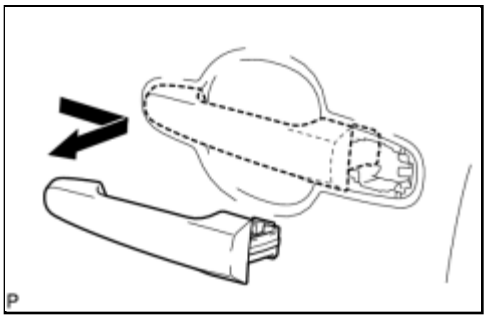

(a) Remove the front door outside handle assembly as shown in the illustration.

32. REMOVE FRONT DOOR OUTSIDE HANDLE ASSEMBLY (w/ Smart Key System)

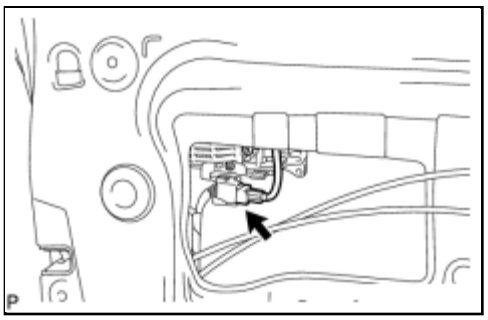

(a) Disconnect the connector.

(b) Remove the front door outside handle assembly as shown in the illustration.

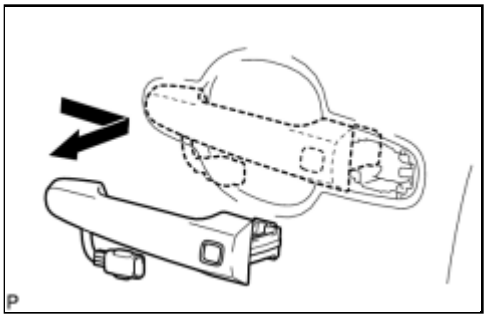

33. REMOVE FRONT DOOR FRONT OUTSIDE HANDLE PAD

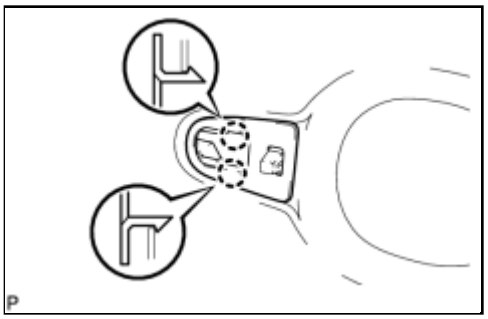

(a) Disengage the 2 claws and remove the front door front outside handle pad.

34. REMOVE FRONT DOOR REAR OUTSIDE HANDLE PAD

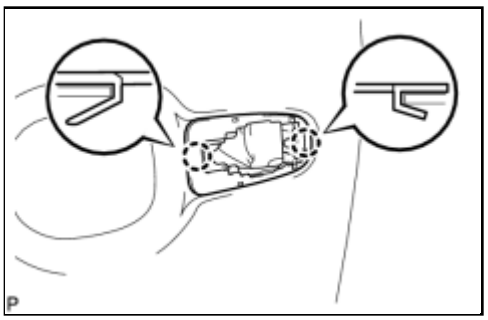

(a) Disengage the 2 claws and remove the front door rear outside handle pad.

35. REMOVE FRONT DOOR LOCK ASSEMBLY (w/o Power Door Lock)

(a) Using a "TORX" socket wrench (T30), remove the 3 screws.

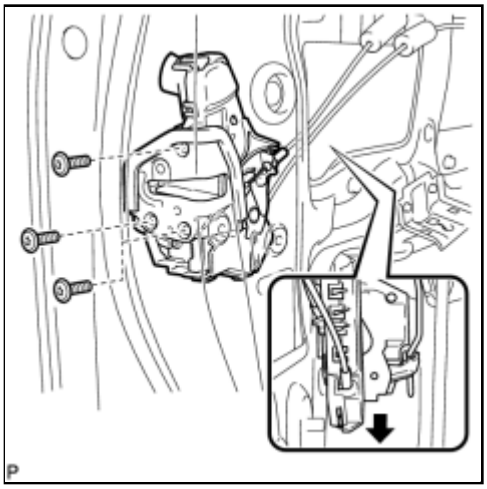

(b) Slide the front door lock assembly downward, and remove the front door lock assembly and cables as a unit.

36. REMOVE FRONT DOOR LOCK ASSEMBLY (w/ Power Door Lock)

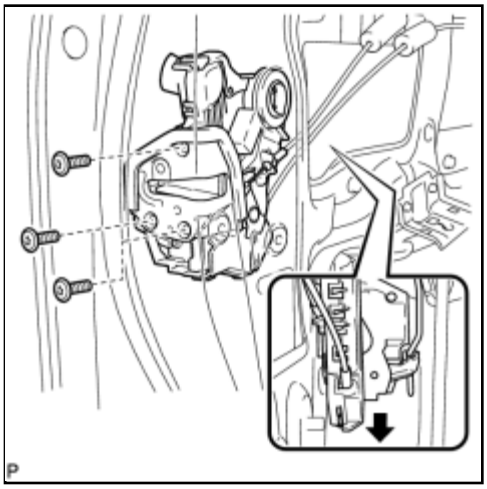

(a) Using a "TORX" socket wrench (T30), remove the 3 screws.

(b) Slide the front door lock assembly downward, and remove the front door lock assembly and cables as a unit.

(c) Remove the door lock wiring harness seal from the front door lock assembly.

37. REMOVE FRONT DOOR LOCK REMOTE CONTROL CABLE ASSEMBLY (w/o Power Door Lock)

(a) Remove the front door lock remote control cable assembly.

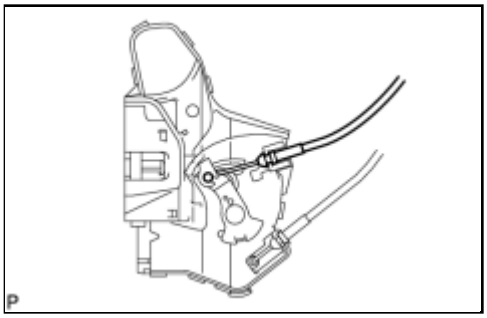

38. REMOVE FRONT DOOR LOCK REMOTE CONTROL CABLE ASSEMBLY (w/ Power Door Lock)

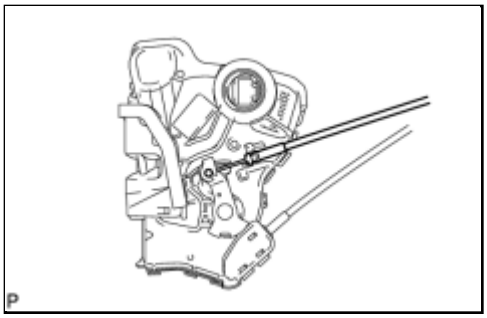

(a) Remove the front door lock remote control cable assembly.

39. REMOVE FRONT DOOR INSIDE LOCKING CABLE ASSEMBLY (w/o Power Door Lock)

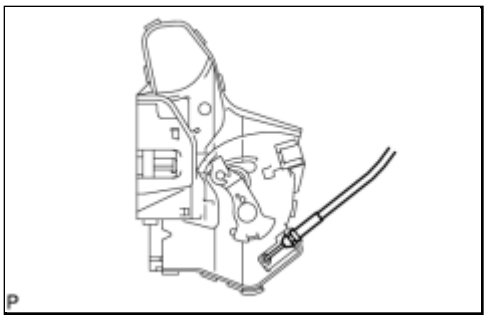

(a) Remove the front door inside locking cable assembly.

40. REMOVE FRONT DOOR INSIDE LOCKING CABLE ASSEMBLY (w/ Power Door Lock)

(a) Using a screwdriver, disengage the 3 claws.

HINT:

Tape the screwdriver tip before use.

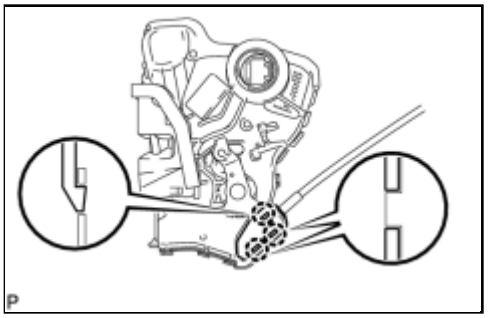

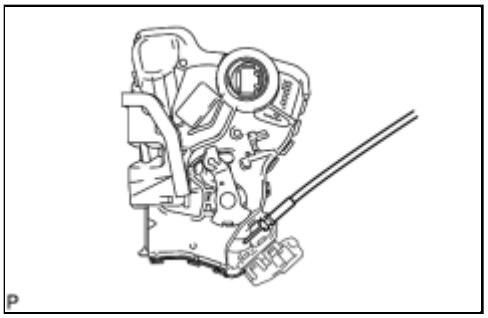

(b) Remove the front door inside locking cable assembly.

41. REMOVE FRONT DOOR OUTSIDE HANDLE FRAME SUB-ASSEMBLY (w/o Smart Key System)

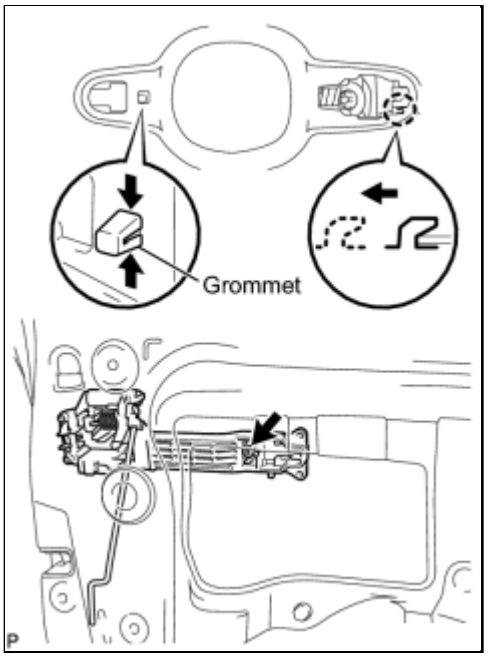

(a) Using a "TORX" socket wrench (T30), remove the screw.

(b) Using pliers, disengage the grommet as shown in the illustration.

(c) Disengage the claw and remove the front door outside handle frame sub-assembly.

42. REMOVE FRONT DOOR OUTSIDE HANDLE FRAME SUB-ASSEMBLY (w/ Smart Key

System)

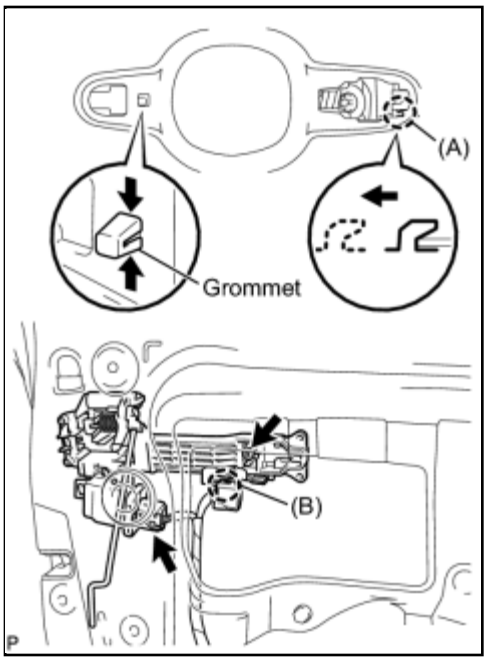

(a) Using a "TORX" socket wrench (T30), remove the screw.

(b) Disconnect the connector.

(c) Disengage the claw (B).

(d) Using pliers, disengage the grommet as shown in the illustration.

(e) Disengage the claw (A) and remove the front door outside handle frame sub-assembly.

43. REMOVE FRONT DOOR LOCK OPEN ROD

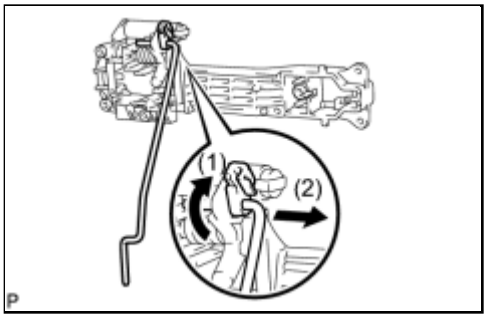

(a) Remove the front door lock open rod as shown in the illustration.

44. REMOVE DOOR ELECTRICAL KEY OSCILLATOR (w/ Smart Key System) INFO

45. REMOVE FRONT DOOR CHECK ASSEMBLY

(a) Remove the 3 bolts and the front door check assembly.

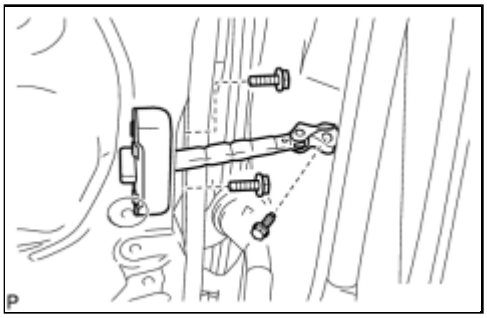

46. REMOVE FRONT DOOR WEATHERSTRIP

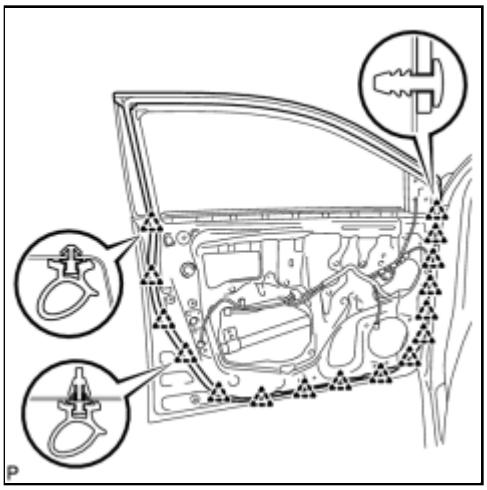

(a) Using a clip remover, disengage the 16 clips and remove the front door weatherstrip.

47. REMOVE FRONT DOOR BELT MOULDING ASSEMBLY INFO

48. REMOVE NO. 1 BLACK OUT TAPE (w/ Black Out Tape) INFO

Last Modified: 3-10-2010	6.4 A	**From:** 200901
Model Year: 2010	**Model:** Corolla	**Doc ID:** RM0000011QG02WX
Title: DOOR / HATCH: FRONT DOOR: REASSEMBLY (2010 Corolla)		

REASSEMBLY

1. REPAIR INSTRUCTION (w/ Black Out Tape) INFO

2. INSTALL NO. 1 BLACK OUT TAPE (w/ Black Out Tape) INFO

3. INSTALL FRONT DOOR BELT MOULDING ASSEMBLY INFO

4. INSTALL FRONT DOOR WEATHERSTRIP

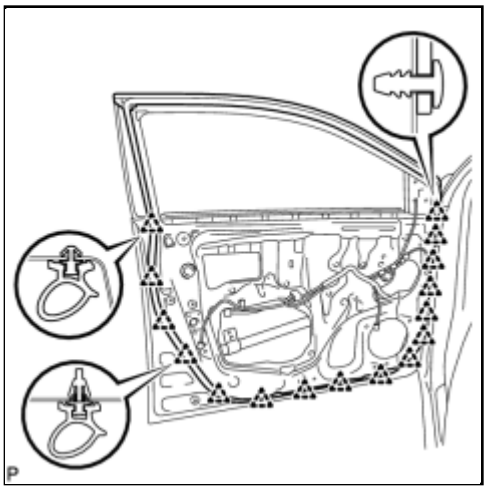

(a) Engage the 16 clips and install the front door weatherstrip.

5. INSTALL FRONT DOOR CHECK ASSEMBLY

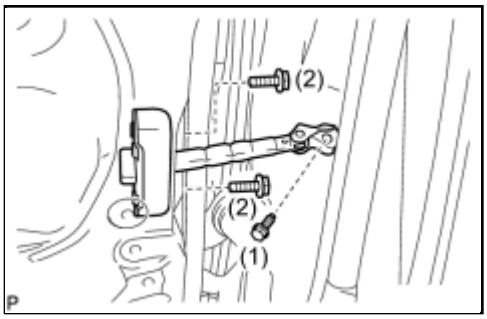

(a) Install the front door check assembly with the 3 bolts.

Bolt (1) - Torque: 30 N·m (306 kgf·cm, 22ft·lbf)
Bolt (2) - Torque: 5.5 N·m (56 kgf·cm, 49in·lbf)

6. INSTALL DOOR ELECTRICAL KEY OSCILLATOR (w/ Smart Key System) INFO

7. INSTALL FRONT DOOR LOCK OPEN ROD

(a) Install the front door lock open rod as shown in the

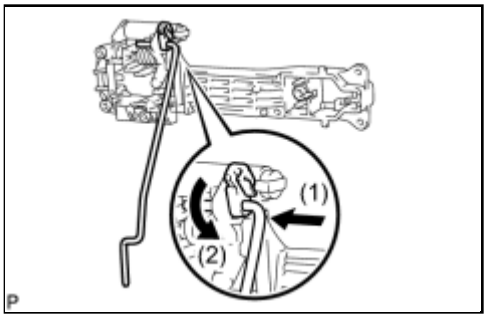

illustration.

8. INSTALL FRONT DOOR OUTSIDE HANDLE FRAME SUB-ASSEMBLY (w/o Smart Key System)

(a) Apply MP grease to the sliding parts of the front door outside handle frame sub-assembly.

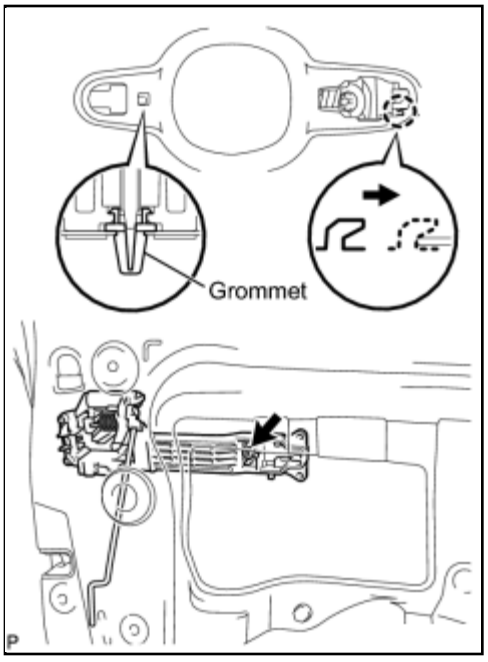

(b) Engage the claw and grommet.

(c) Using a "TORX" socket wrench (T30), install the front door outside handle frame sub-assembly with the screw.

Torque: 4.0 N·m (41 kgf·cm, 35in·lbf)

9. INSTALL FRONT DOOR OUTSIDE HANDLE FRAME SUB-ASSEMBLY (w/ Smart Key System)

(a) Apply MP grease to the sliding parts on the front door outside handle frame sub-assembly.

(b) Engage the claw (A) and grommet.

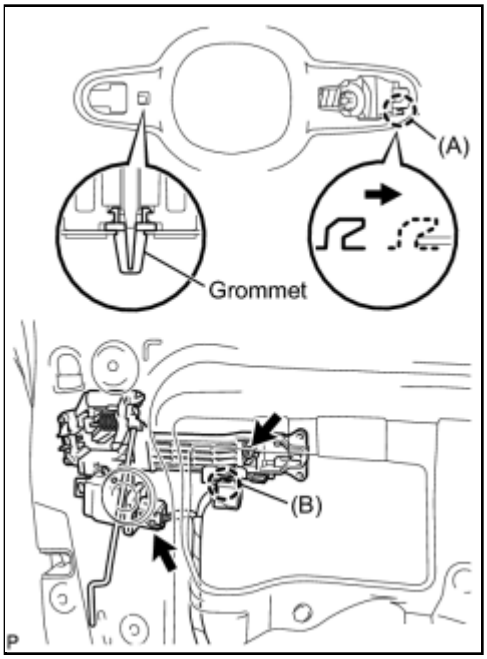

(c) Using a "TORX" socket wrench (T30), install the front door outside handle frame sub-assembly with the screw.

Torque: 4.0 N·m (41 kgf·cm, 35in·lbf)

(d) Engage the claw (B).

(e) Connect the connector.

10. INSTALL FRONT DOOR INSIDE LOCKING CABLE ASSEMBLY (w/o Power Door Lock)

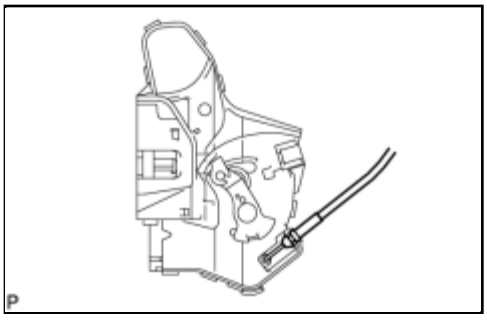

(a) Install the front door inside locking cable assembly.

11. INSTALL FRONT DOOR INSIDE LOCKING CABLE ASSEMBLY (w/ Power Door Lock)

(a) Install the front door inside locking cable assembly.

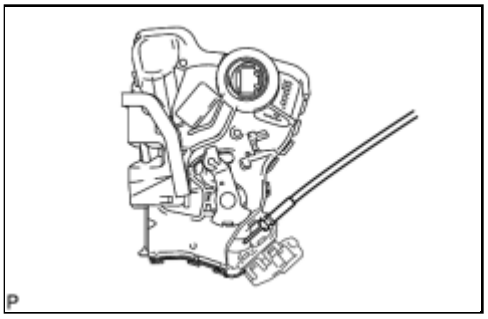

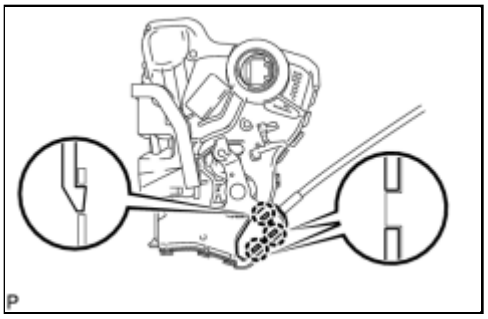

(b) Engage the 3 claws.

12. INSTALL FRONT DOOR LOCK REMOTE CONTROL CABLE ASSEMBLY (w/o Power Door Lock)

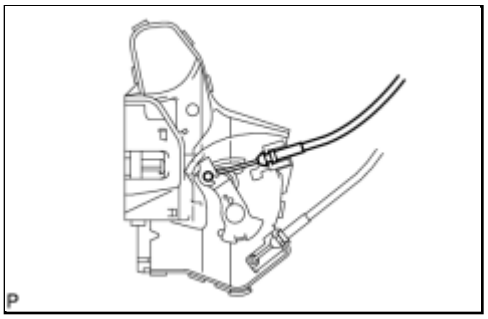

(a) Install the front door lock remote control cable assembly.

13. INSTALL FRONT DOOR LOCK REMOTE CONTROL CABLE ASSEMBLY (w/ Power Door Lock)

(a) Install the front door lock remote control cable assembly.

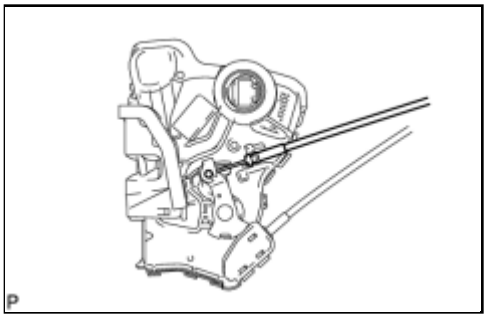

14. INSTALL FRONT DOOR LOCK ASSEMBLY (w/o Power Door Lock)

(a) Apply MP grease to the sliding parts of the front door lock assembly.

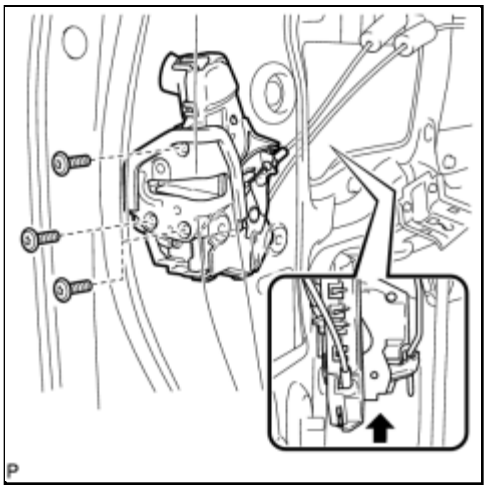

(b) Insert the front door lock open rod to the front door lock assembly.

(c) Make sure that the front door lock open rod is securely connected to the front door lock assembly.

(d) Using a "TORX" socket wrench (T30), install the front door lock assembly with the 3 screws.

Torque: 5.0 N·m (51 kgf·cm, 44in·lbf)

15. INSTALL FRONT DOOR LOCK ASSEMBLY (w/ Power Door Lock)

NOTICE:

- When reusing the removed front door lock assembly, replace the door lock wiring harness seal on the connector with a new one.
- Do not allow grease or dust to adhere to the door lock wiring harness seal surface of the connector.
- Reusing the door lock wiring harness seal or using a damaged door lock wiring harness seal may cause water intrusion. This may result in a malfunction of the front door lock assembly.

(a) Apply MP grease to the sliding parts of the front door lock assembly.

(b) Install a new door lock wiring harness seal to the front door lock assembly.

(c) Insert the front door lock open rod to the front door lock

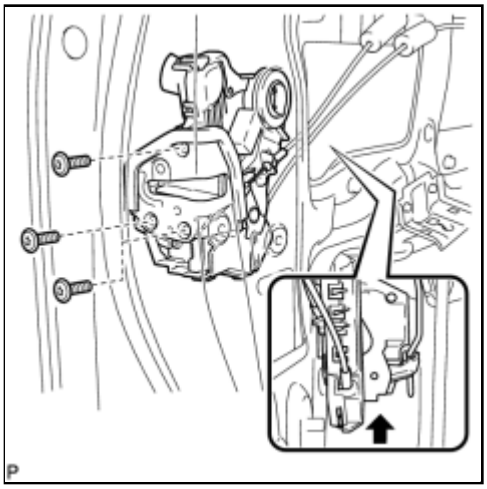

assembly.

(d) Make sure that the front door lock open rod is securely connected to the front door lock assembly.

(e) Using a "TORX" socket wrench (T30), install the front door lock assembly with the 3 screws.

Torque: 5.0 N·m (51 kgf·cm, 44in·lbf)

16. INSTALL FRONT DOOR REAR OUTSIDE HANDLE PAD

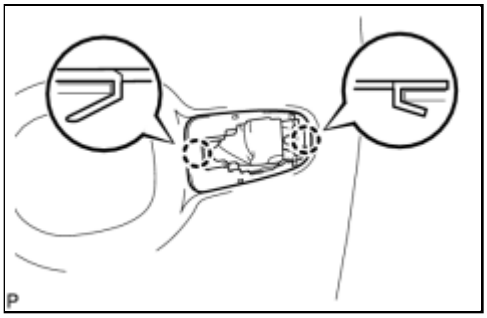

(a) Engage the 2 claws and install the front door rear outside handle pad.

17. INSTALL FRONT DOOR FRONT OUTSIDE HANDLE PAD

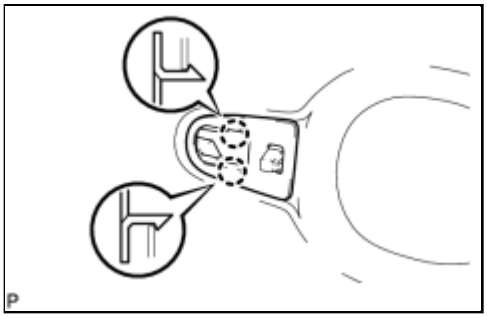

(a) Engage the 2 claws and install the front door front outside handle pad.

18. INSTALL FRONT DOOR OUTSIDE HANDLE ASSEMBLY (w/o Smart Key System)

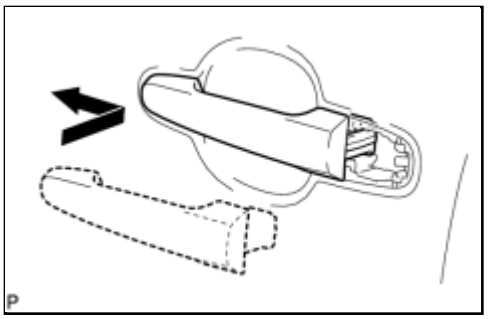

(a) Insert the front end of the front door outside handle assembly into the front door outside handle frame.

(b) Insert the rear end of the front door outside handle assembly into the front door outside handle frame then slide the front door outside handle assembly toward the front of the vehicle to install it.

19. INSTALL FRONT DOOR OUTSIDE HANDLE ASSEMBLY (w/ Smart Key System)

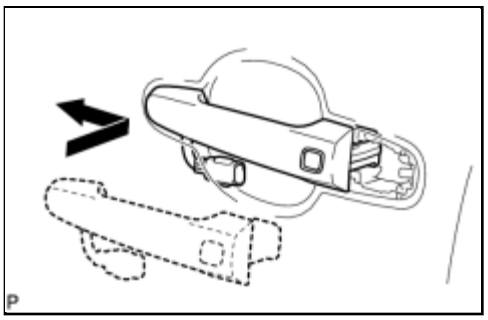

(a) Insert the front end of the front door outside handle assembly into the front door outside handle frame.

(b) Insert the rear end of the front door outside handle assembly into the front door outside handle frame then slide the front door outside handle assembly toward the front of the vehicle to install it.

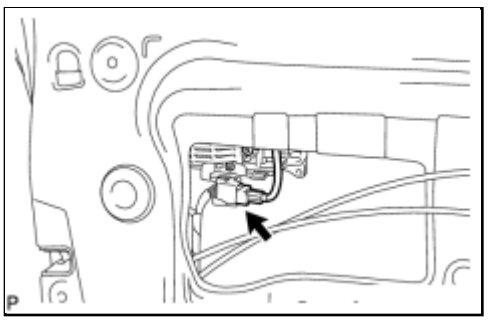

(c) Connect the connector.

20. INSTALL FRONT DOOR OUTSIDE HANDLE COVER (for Driver Side)

(a) Engage the 2 claws and install the front door outside handle cover to the front door lock cylinder.

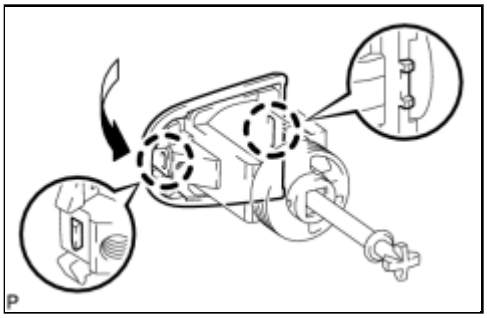

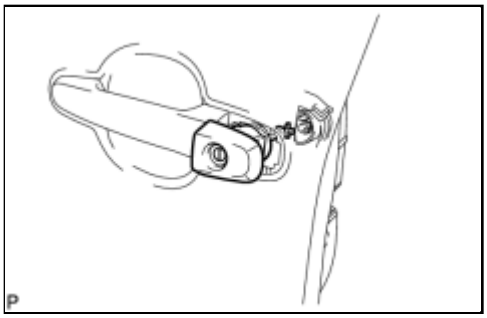

(b) Install the front door lock cylinder.

HINT:

Make sure that the front door lock cylinder rod is inserted into the front door lock assembly.

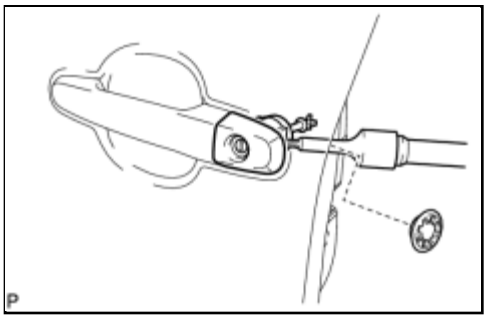

(c) Using a "TORX" socket wrench (T30), install the front door lock cylinder with the screw.

Torque: 4.0 N·m (41 kgf·cm, 35in·lbf)

(d) Install the hole plug.

21. INSTALL FRONT DOOR OUTSIDE HANDLE COVER (for Front Passenger Side)

(a) w/o Wireless door lock system:

HINT:

Use the same procedure for the front passenger side and the driver side.

(b) w/ Wireless door lock system:

(1) Using a "TORX" socket wrench (T30), install the front door lock cylinder with the screw.

Torque: 4.0 N·m (41 kgf·cm, 35in·lbf)

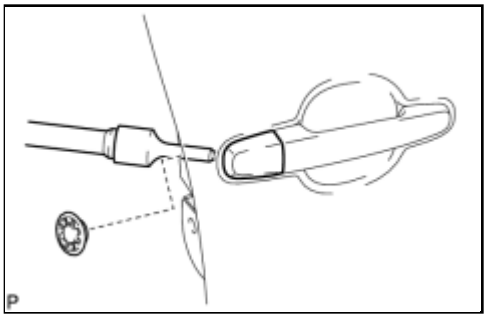

(2) Install the hole plug.

22. INSTALL FRONT DOOR REAR LOWER FRAME SUB-ASSEMBLY

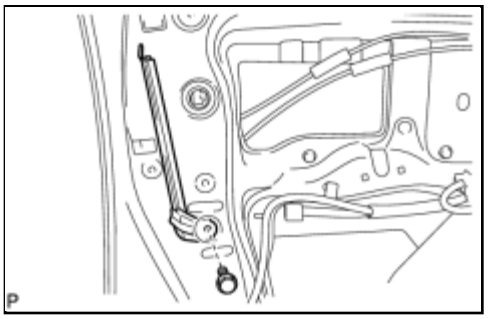

(a) Install the front door rear lower frame sub-assembly with the bolt.

Torque: 6.2 N·m (63 kgf·cm, 55in·lbf)

23. INSTALL DOOR FRAME GARNISH

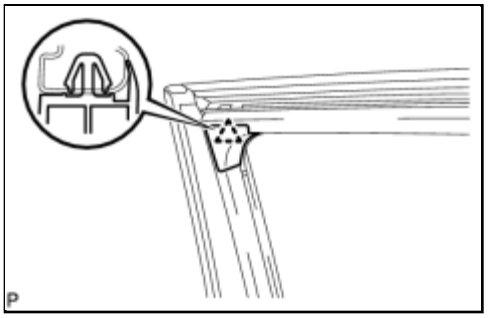

(a) Install a new door frame garnish with the clip.

24. INSTALL FRONT DOOR GLASS RUN

(a) Install the front door glass run.

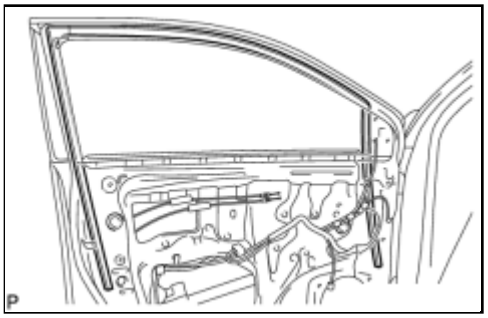

25. INSTALL FRONT DOOR NO. 2 STIFFENER CUSHION

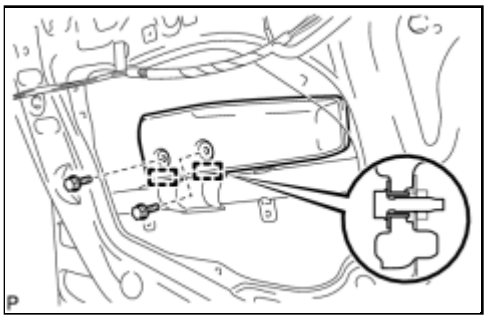

(a) Insert the 2 guides and install the front door No. 2 stiffener cushion with the 2 bolts.

Torque: 6.2 N·m (63 kgf·cm, 55in·lbf)

26. INSTALL FRONT POWER WINDOW REGULATOR MOTOR ASSEMBLY (w/ Power Window)

NOTICE:

The regulator arm must be below the intermediate position when installing the power window regulator motor.

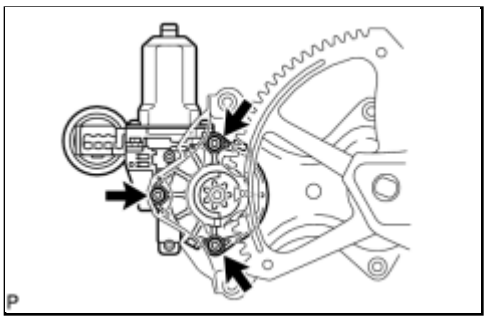

(a) Using a "TORX" socket wrench (T25), install the front power window regulator motor assembly with the 3 screws.

Torque: 5.4 N·m (55 kgf·cm, 48in·lbf)

HINT:

A new front window regulator uses self-tapping screws to thread new installation holes when the self-tapping screws are inserted.

27. INSTALL FRONT DOOR WINDOW REGULATOR ASSEMBLY (w/o Power Window)

(a) Apply MP grease to the sliding parts of the front door window regulator assembly.

(b) Install the front door window regulator assembly with the 5 bolts.

Torque: 8.0 N·m (82 kgf·cm, 71in·lbf)

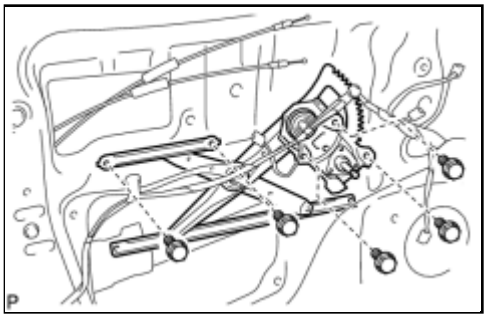

28. INSTALL FRONT DOOR WINDOW REGULATOR SUB-ASSEMBLY (w/ Power Window)

(a) Apply MP grease to the sliding parts of the front door window regulator sub-assembly.

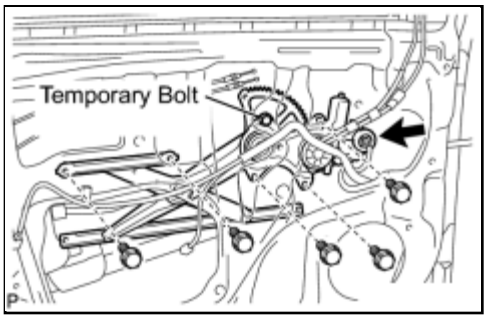

(b) Install the temporary bolt to the front door window regulator sub-assembly.

(c) Temporarily install the front door window regulator sub-assembly.

(d) Tighten the temporary bolt and 5 bolts to install the front door window regulator sub-assembly.

Torque: 8.0 N·m (82 kgf·cm, 71in·lbf)

(e) Connect the connector.

29. INSTALL FRONT DOOR GLASS SUB-ASSEMBLY

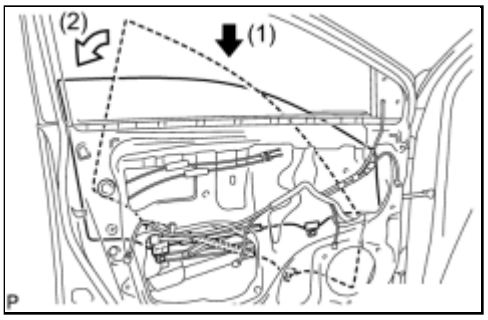

(a) Insert the front door glass sub-assembly into the front door panel along the front door glass run as shown in the illustration.

(b) Install the front door glass sub-assembly with the 2 bolts.

Torque: 8.0 N·m (82 kgf·cm, 71in·lbf)

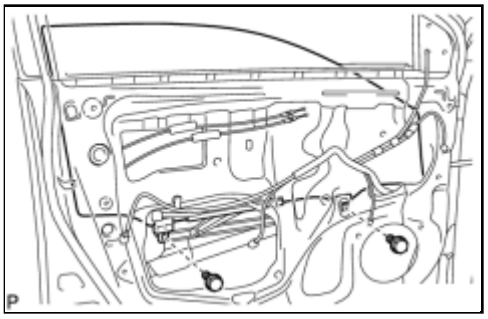

30. INSTALL OUTER REAR VIEW MIRROR ASSEMBLY WITH COVER INFO

31. INSTALL FRONT DOOR SERVICE HOLE COVER

(a) Apply butyl tape to the front door panel.

(b) Pass the front door lock remote control cable and rear door inside locking cable through a new front door service hole cover.

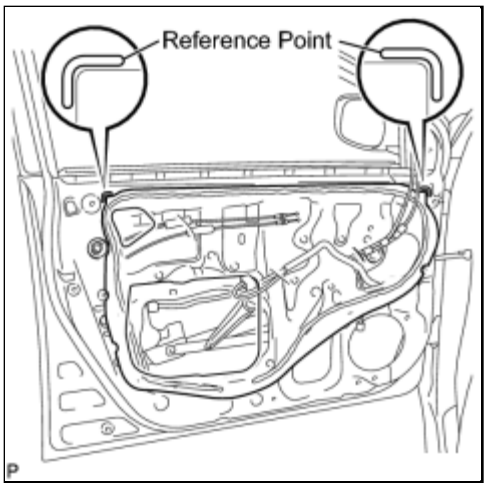

(c) Attach the front door service hole cover according to the reference points on the front door panel.

NOTICE:

Securely install the front door service hole cover preventing wrinkles and air bubbles.

(d) w/ Power door lock:

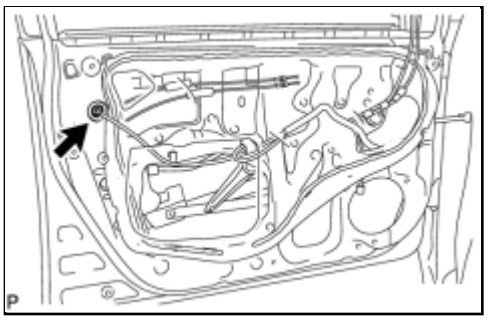

(1) Connect the connector.

32. INSTALL FRONT DOOR TRIM BRACKET

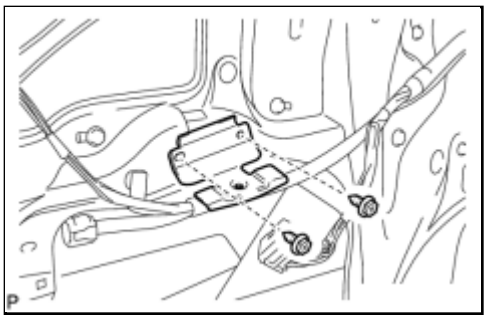

(a) Install the front door trim bracket with the 2 screws.

33. INSTALL FRONT NO. 1 SPEAKER ASSEMBLY INFO

34. INSTALL FRONT DOOR INNER GLASS WEATHERSTRIP

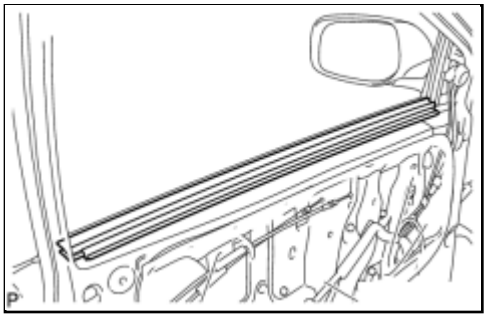

(a) Install the front door inner glass weatherstrip.

35. INSTALL FRONT NO. 3 SPEAKER ASSEMBLY (w/ Front No. 3 Speaker) INFO

36. INSTALL FRONT NO. 2 SPEAKER ASSEMBLY (w/ Front No. 2 Speaker) INFO

37. INSTALL FRONT DOOR LOWER FRAME BRACKET GARNISH (w/o Front No. 2 Speaker)

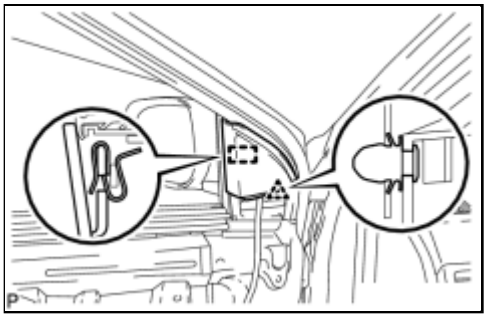

(a) Engage the clip and clamp, and install the front door lower frame bracket garnish.

38. INSTALL FRONT DOOR LOWER FRAME BRACKET GARNISH (w/ Front No. 2 Speaker)

(a) Connect the connector.

(b) Engage the clip and clamp, and install the front door lower

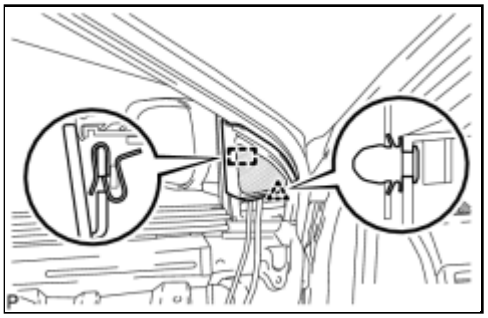

frame bracket garnish.

39. INSTALL FRONT DOOR INSIDE HANDLE SUB-ASSEMBLY

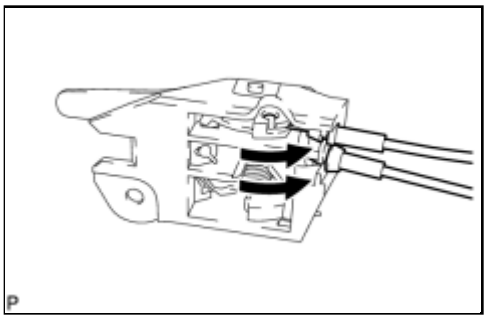

(a) Connect the front door lock remote control cable and front door inside locking cable to the front door inside handle sub-assembly.

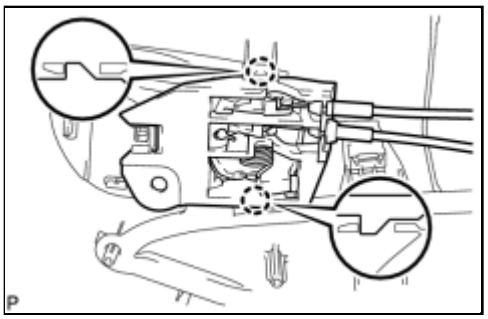

(b) Engage the 2 claws and install the front door inside handle sub-assembly to the front door trim board.

40. INSTALL FRONT DOOR TRIM BOARD SUB-ASSEMBLY

(a) Engage the front door trim board with the 5 claws on the front door inner glass weatherstrip.

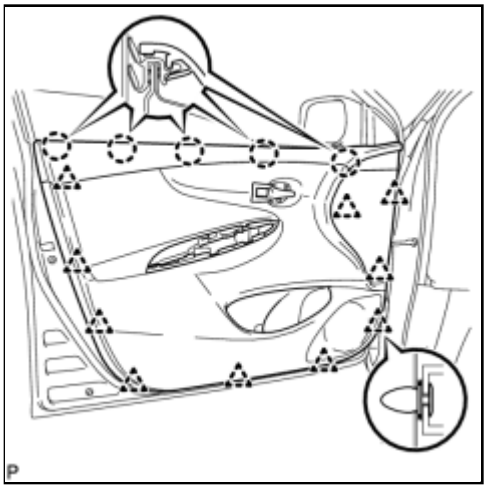

(b) Engage the 10 clips and install the front door trim board to the front door panel.

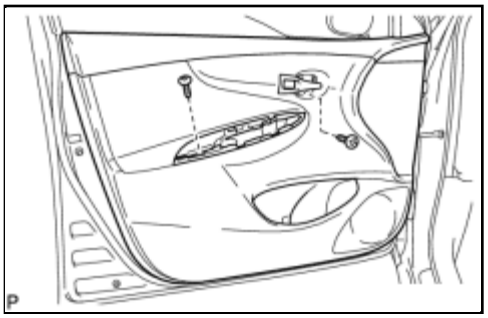

(c) Install the 2 screws.

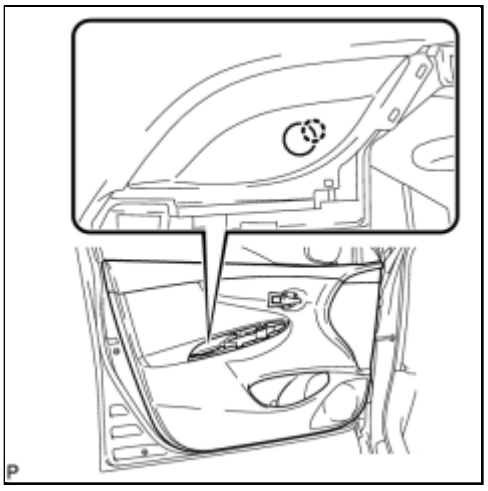

(d) Engage the claw to install the door armrest cap.

41. INSTALL DOOR CONTROL SWITCH ASSEMBLY (w/ Power Door Lock)

(a) Engage the 2 claws and install the door control switch assembly.

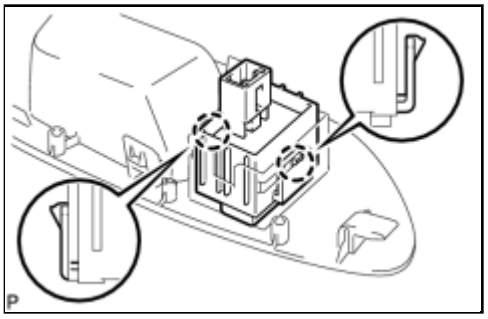

42. INSTALL POWER WINDOW REGULATOR MASTER SWITCH ASSEMBLY (for Driver Side with Power Window)

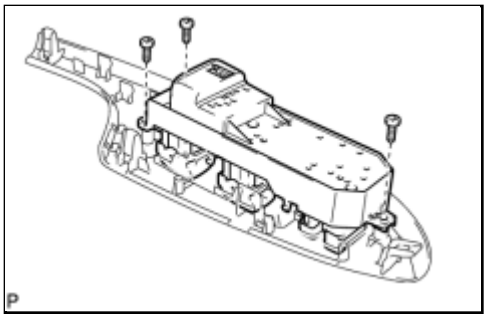

(a) Install the power window regulator master switch assembly with the 3 screws.

43. INSTALL POWER WINDOW REGULATOR SWITCH ASSEMBLY (for Front Passenger Side with Power Window)

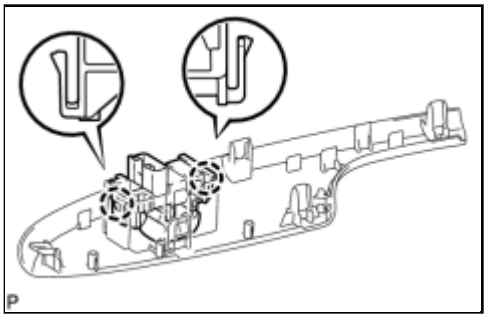

(a) Engage the 2 claws and install the power window regulator switch assembly.

44. INSTALL FRONT ARMREST UPPER BASE PANEL (w/o Power Window)

(a) Engage the 2 clips and 6 claws, and install the front armrest upper base panel.

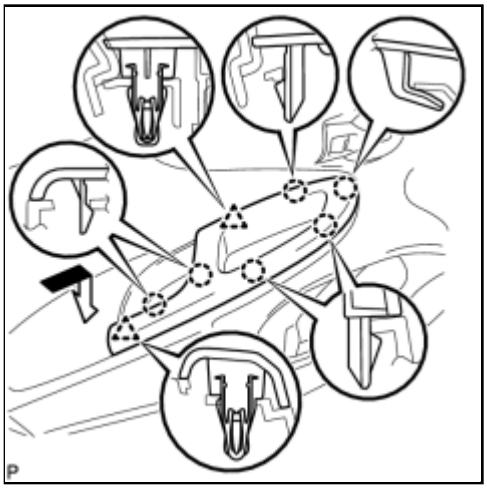

(b) w/ Power Door Lock:

(1) Connect the connector.

45. INSTALL FRONT ARMREST UPPER BASE PANEL (w/ Power Window)

(a) Connect the connector.

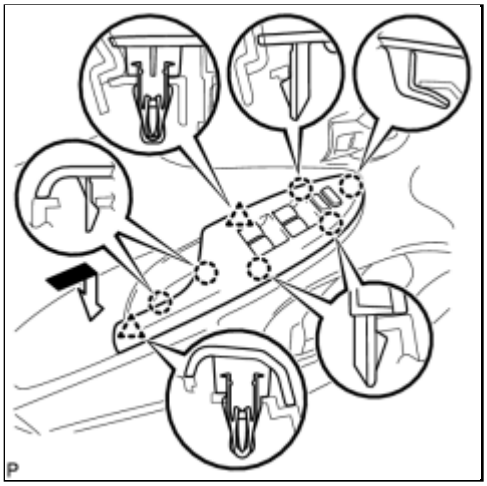

(b) Engage the 2 clips and 6 claws, and install the front armrest upper base panel.

46. INSTALL FRONT DOOR INSIDE HANDLE BEZEL

(a) Engage the 3 claws and install the front door inside handle bezel.

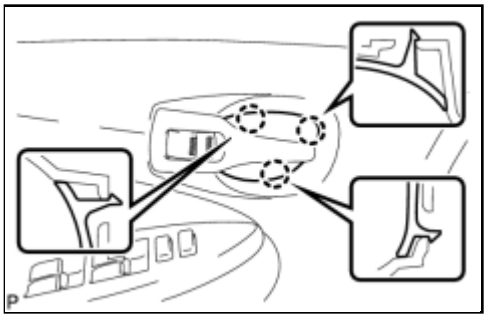

47. INSTALL FRONT DOOR WINDOW REGULATOR HANDLE ASSEMBLY (w/o Power Window)

(a) Temporarily install the front door window regulator handle assembly and fully close the window glass.

(b) Install the front door regulator inside handle plate.

(c) Install the snap ring to the front door window regulator handle assembly.

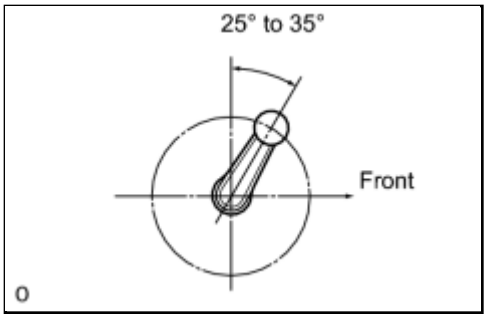

(d) Install the front door window regulator handle assembly as shown in the illustration.

48. CONNECT CABLE TO NEGATIVE BATTERY TERMINAL

Last Modified: 3-10-2010	6.4 K	**From:** 200901
Model Year: 2010	**Model:** Corolla	**Doc ID:** RM000000XBA02HX
Title: DOOR / HATCH: FRONT DOOR: COMPONENTS (2010 Corolla)		

COMPONENTS

ILLUSTRATION

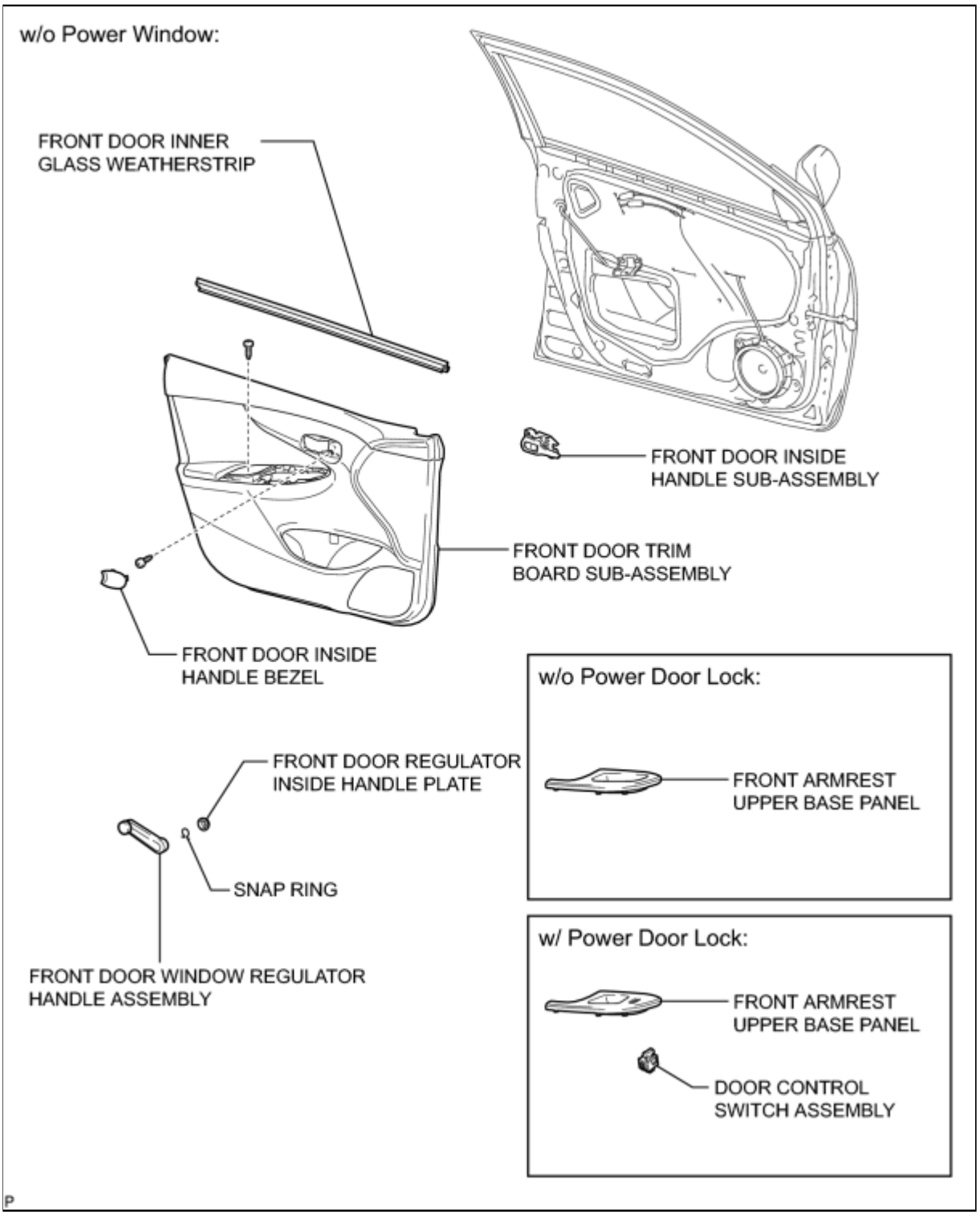

ILLUSTRATION

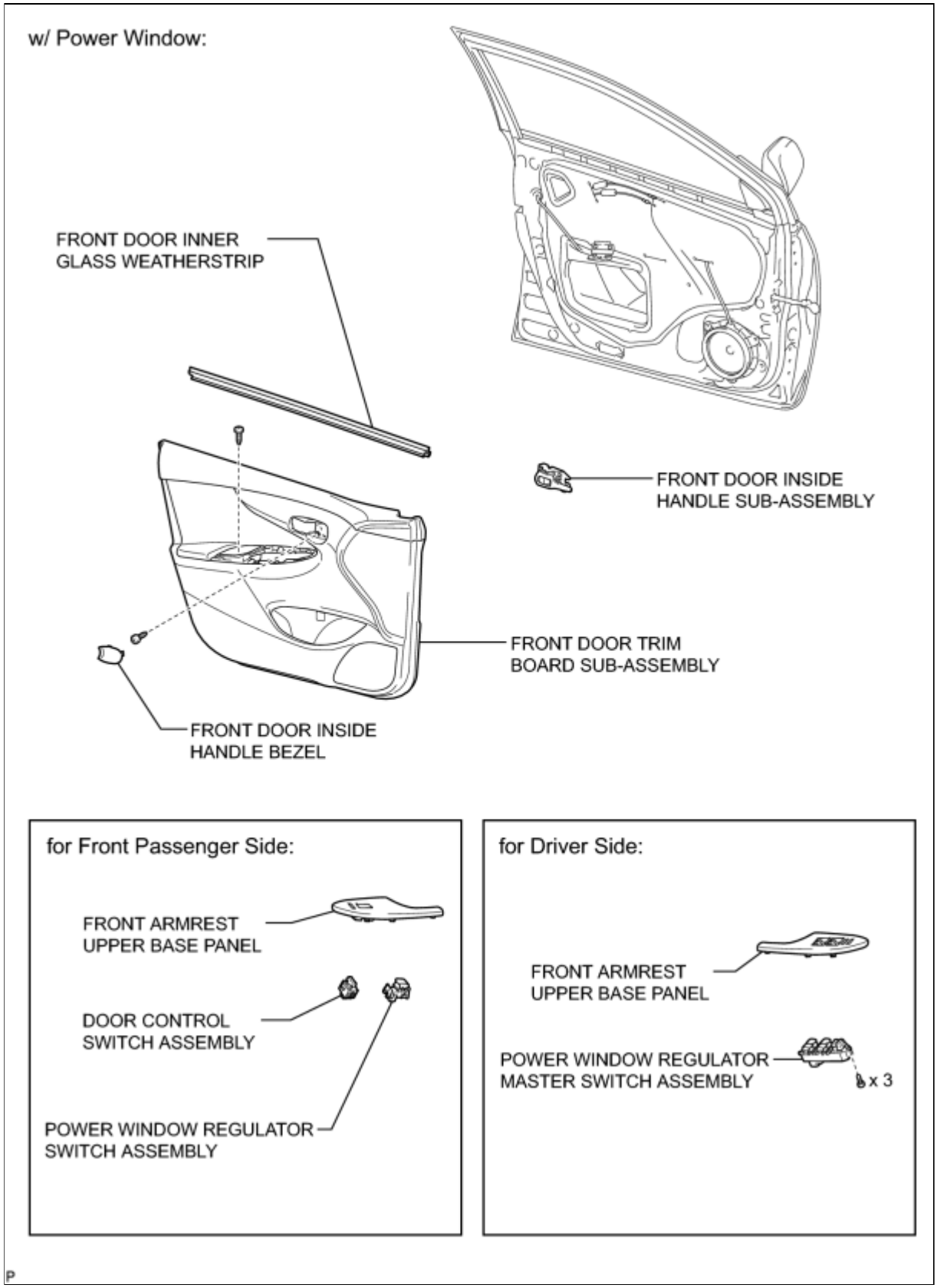

ILLUSTRATION

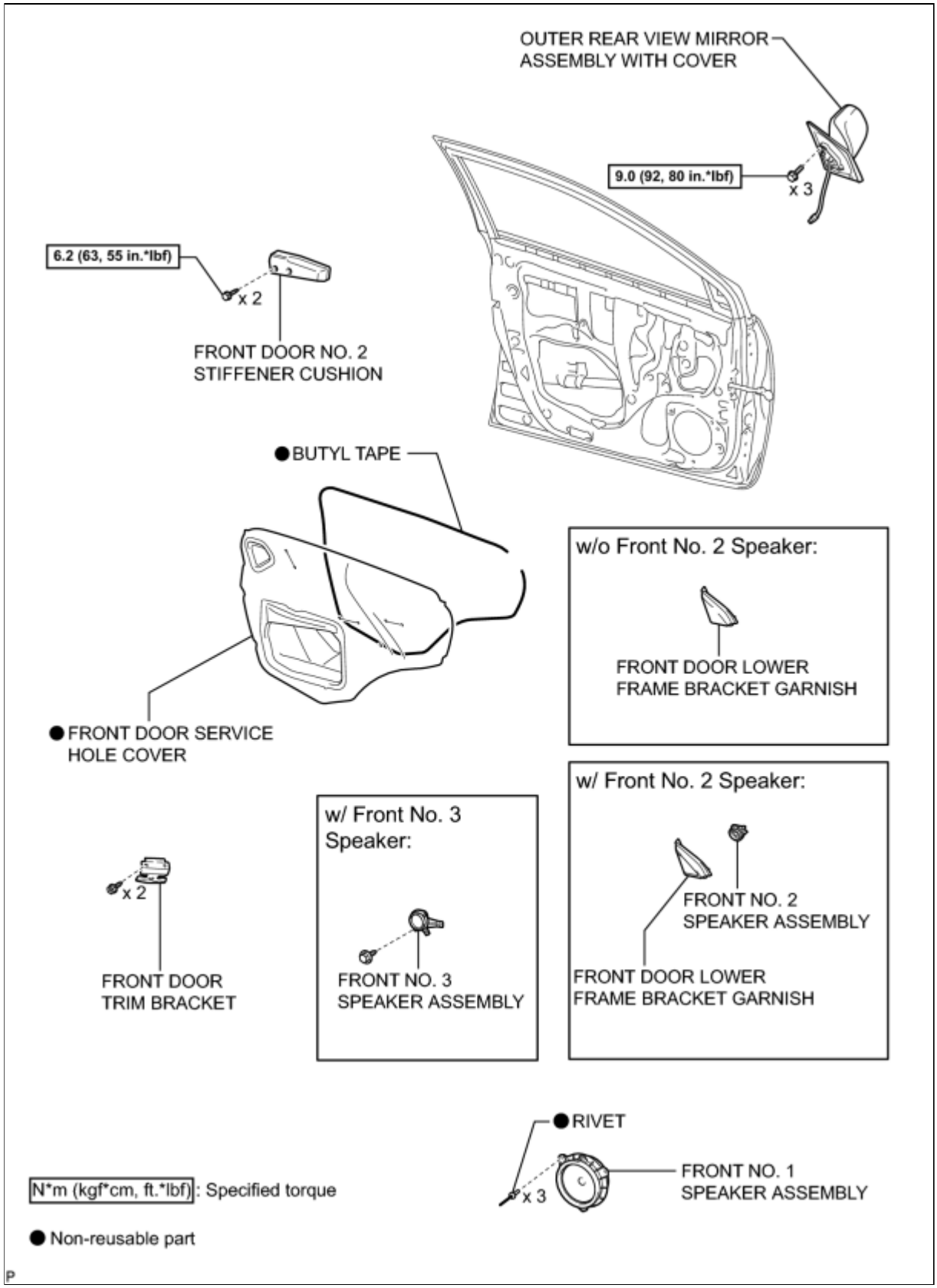

ILLUSTRATION

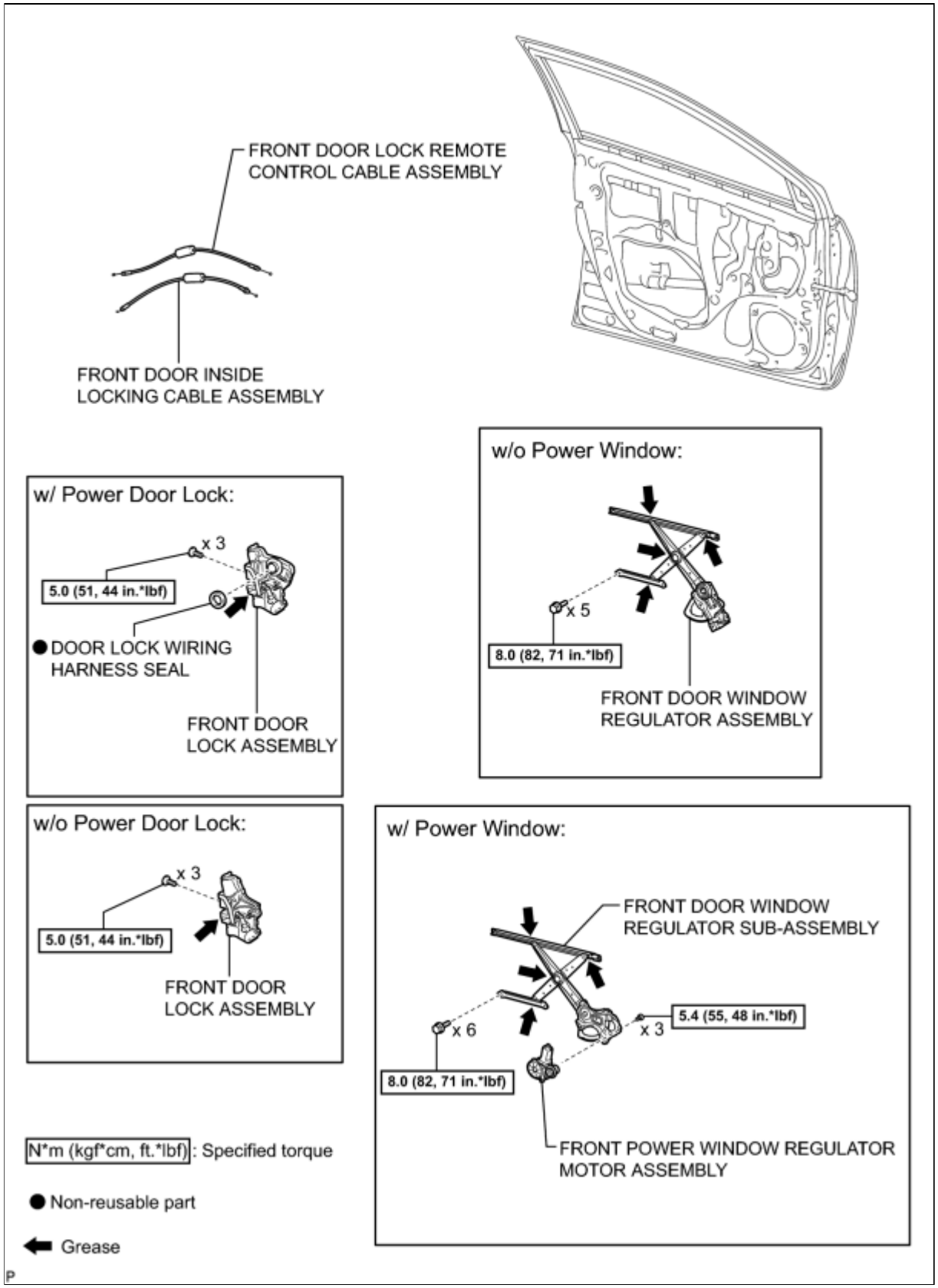

ILLUSTRATION

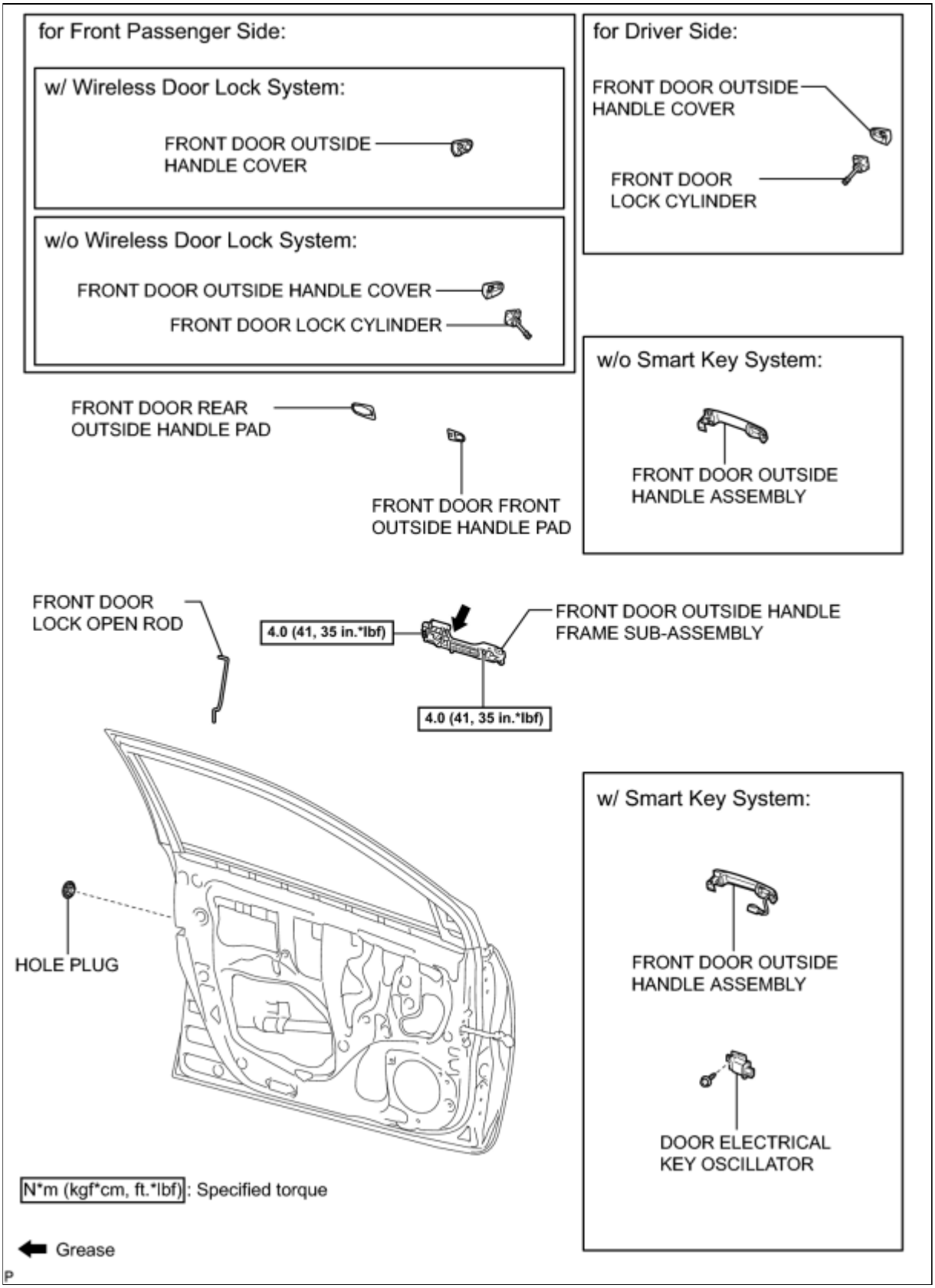

ILLUSTRATION

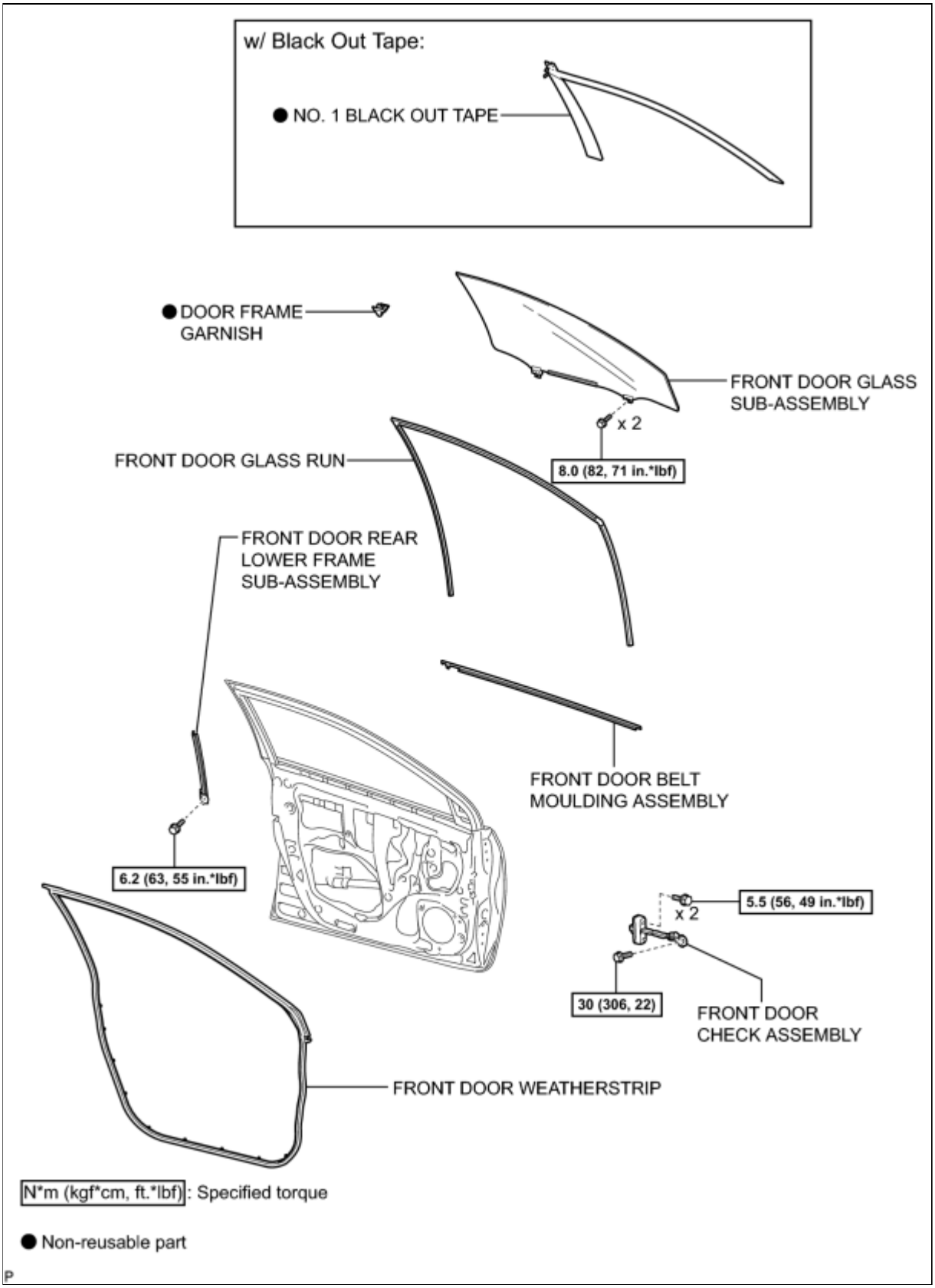

Last Modified: 3-10-2010	6.4 G	**From:** 200901
Model Year: 2010	**Model:** Corolla	**Doc ID:** RM000000XBC01ZX
Title: DOOR / HATCH: FRONT DOOR: ON-VEHICLE INSPECTION (2010 Corolla)		

ON-VEHICLE INSPECTION

1. INSPECT FRONT DOOR PANEL SUB-ASSEMBLY

(a) Check that the clearance measurements of areas A through I are within each standard range.

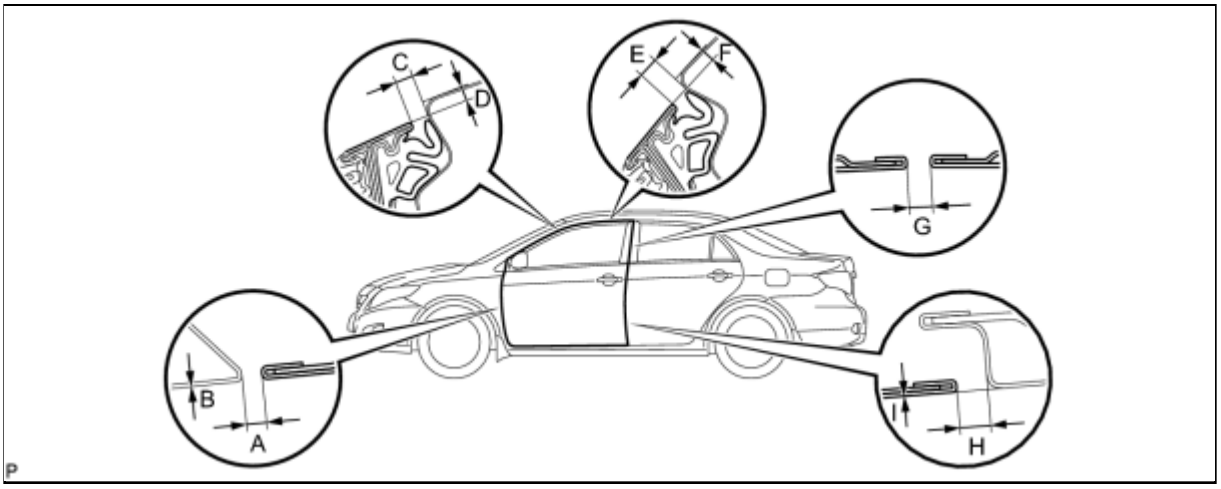

Standard Clearance:

AREA	MEASUREMENT	AREA	MEASUREMENT
A	2.5 to 5.5 mm (0.0984 to 0.217 in.)	F	3.3 to 6.3 mm (0.130 to 0.248 in.)
B	-1.5 to 1.5 mm (-0.0591 to 0.0591 in.)	G	3.0 to 6.0 mm (0.118 to 0.236 in.)
C	3.8 to 6.8 mm (0.150 to 0.268 in.)	H	3.0 to 6.0 mm (0.118 to 0.236 in.)
D	3.1 to 6.1 mm (0.122 to 0.240 in.)	I	-1.5 to 1.5 mm (-0.0591 to 0.0591 in.)
E	3.8 to 6.8 mm (0.150 to 0.268 in.)	-	-

Last Modified: 3-10-2010	6.4 K	**From:** 200901
Model Year: 2010	**Model:** Corolla	**Doc ID:** RM000002W9G00LX
Title: DOOR / HATCH: FUEL LID LOCK CONTROL CABLE ASSEMBLY: COMPONENTS (2010 Corolla)		

COMPONENTS

ILLUSTRATION

for Manual Seat:

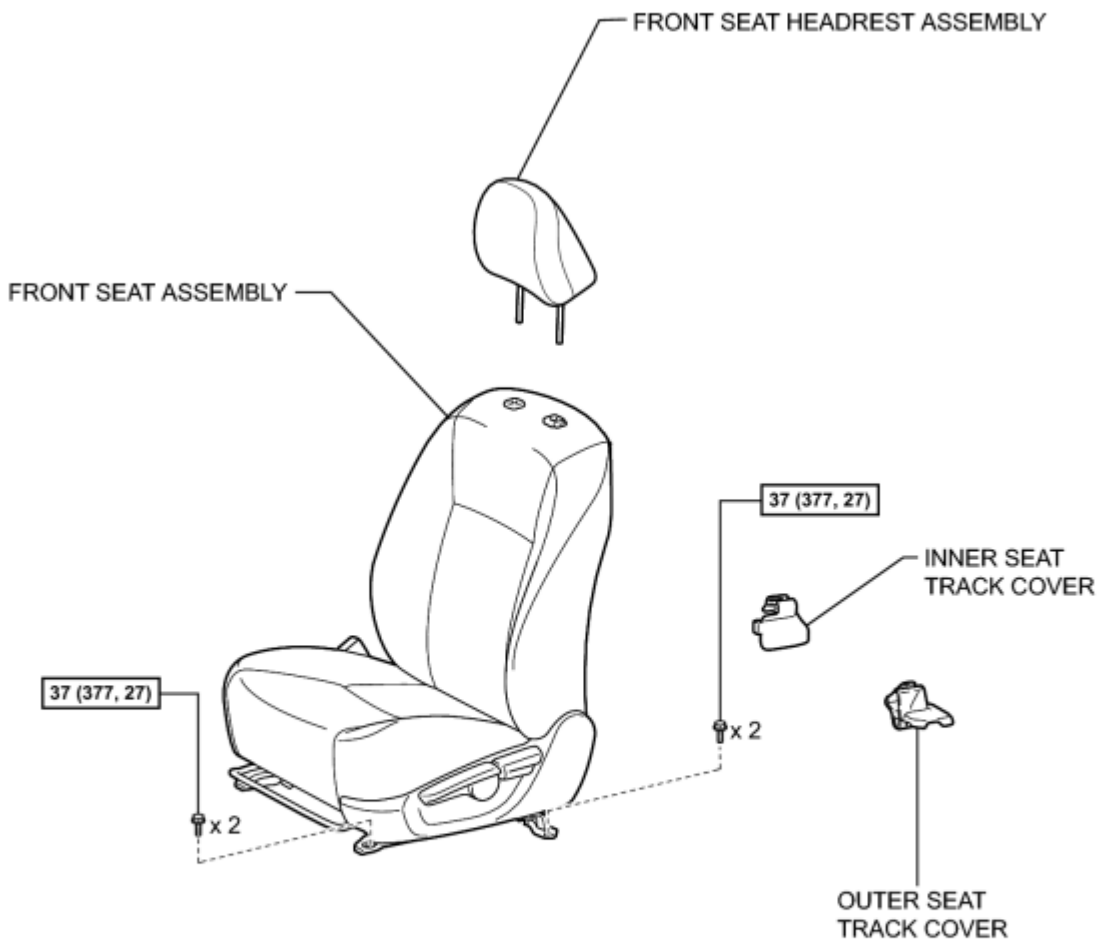

N*m (kgf*cm, ft.*lbf): Specified torque

P

ILLUSTRATION

for Power Seat:

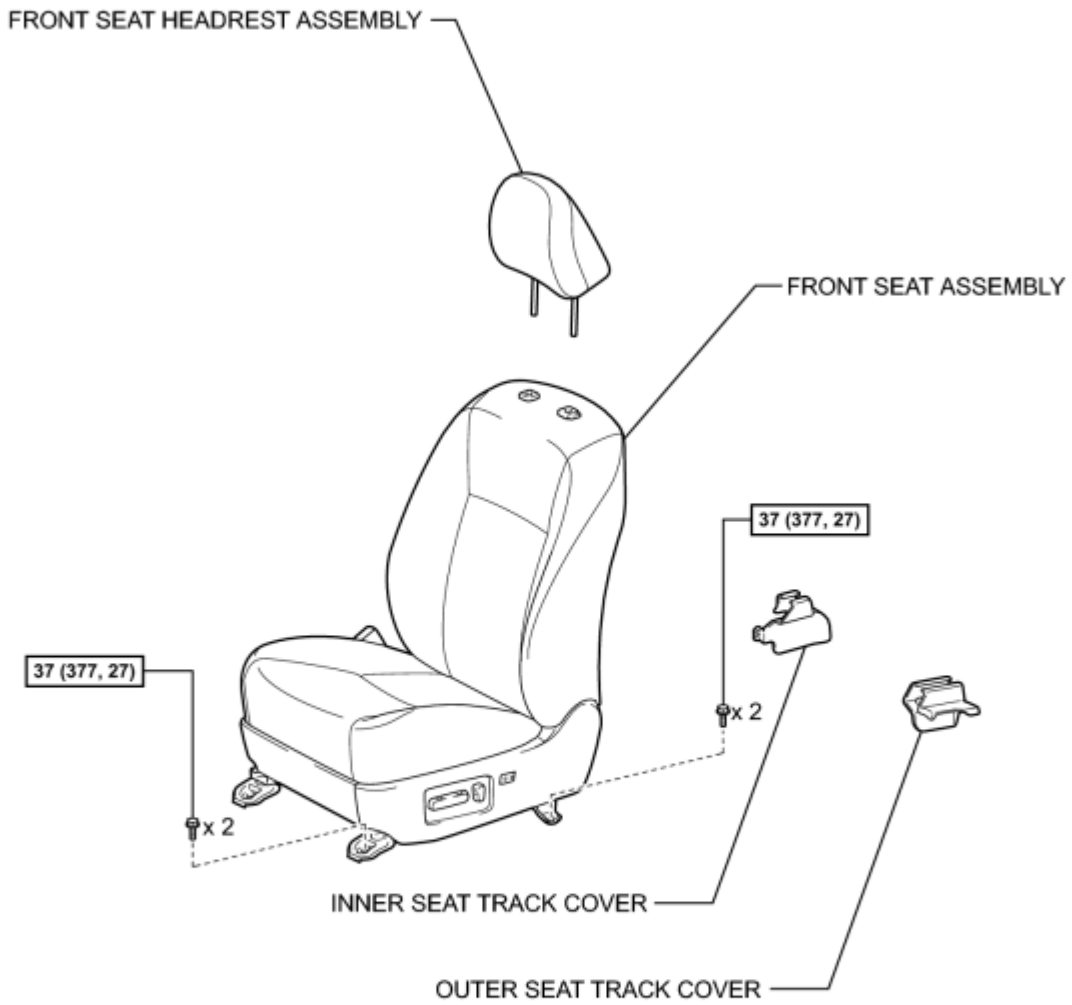

N*m (kgf*cm, ft.*lbf): Specified torque

P

ILLUSTRATION

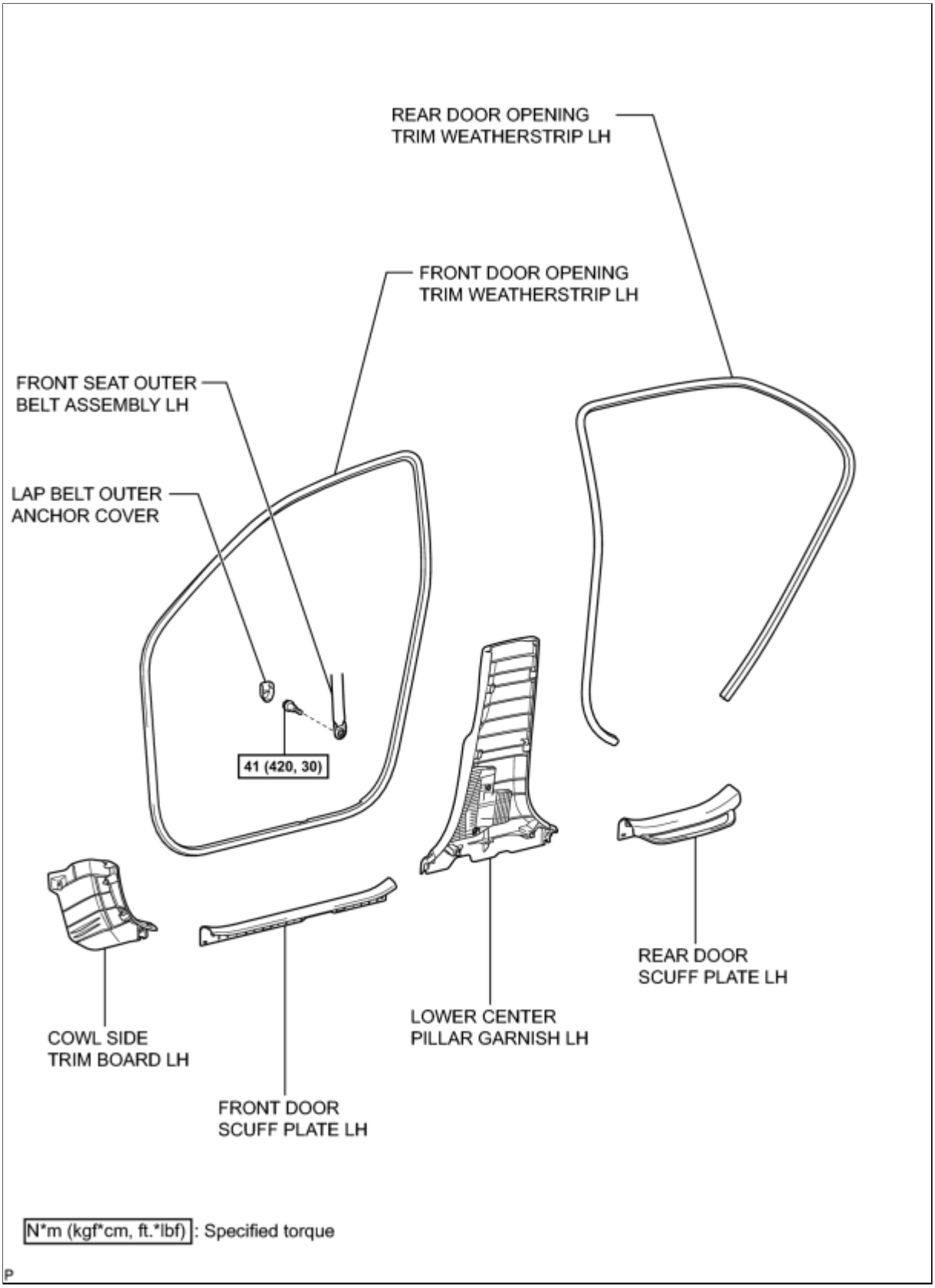

ILLUSTRATION

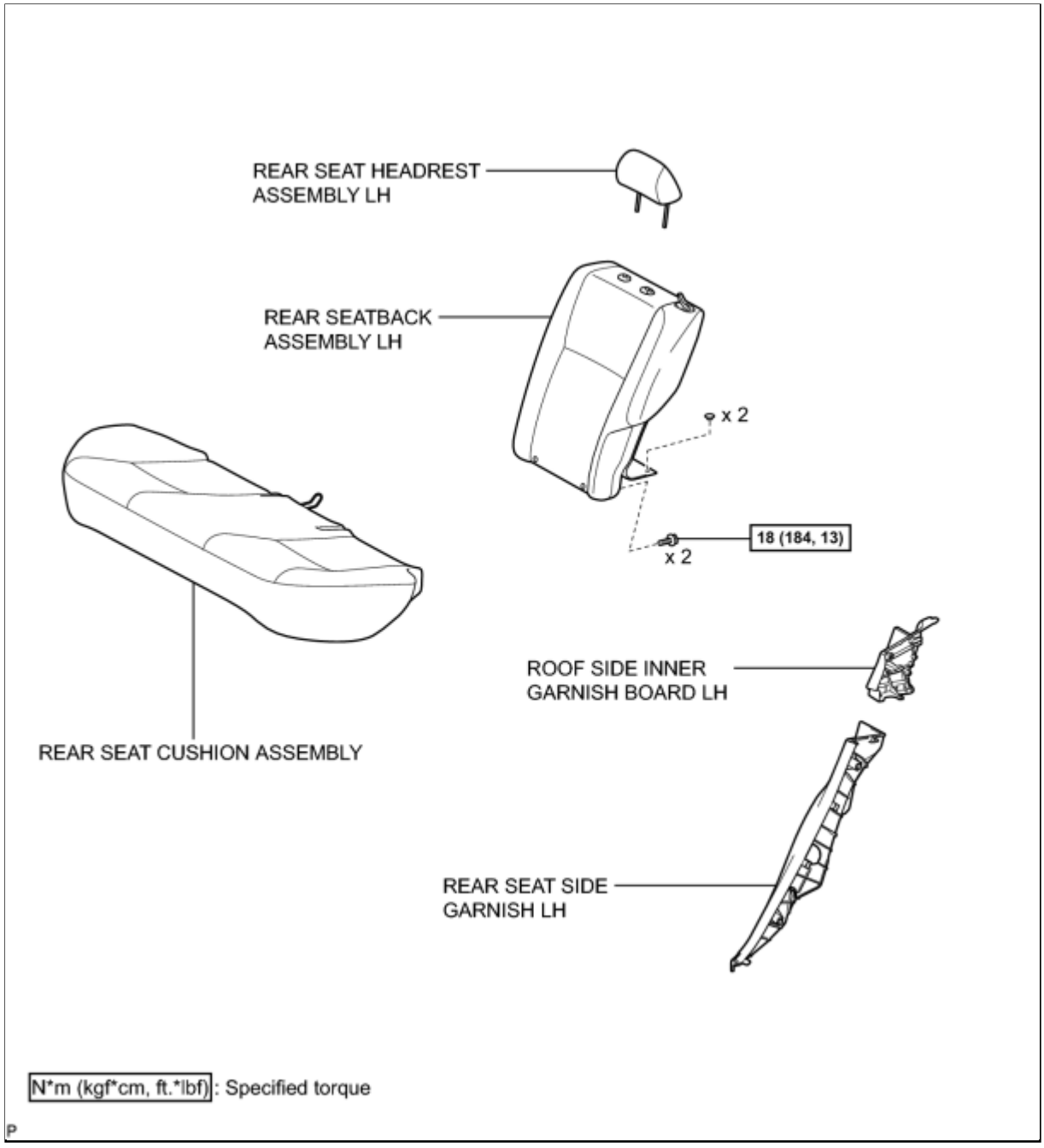

ILLUSTRATION

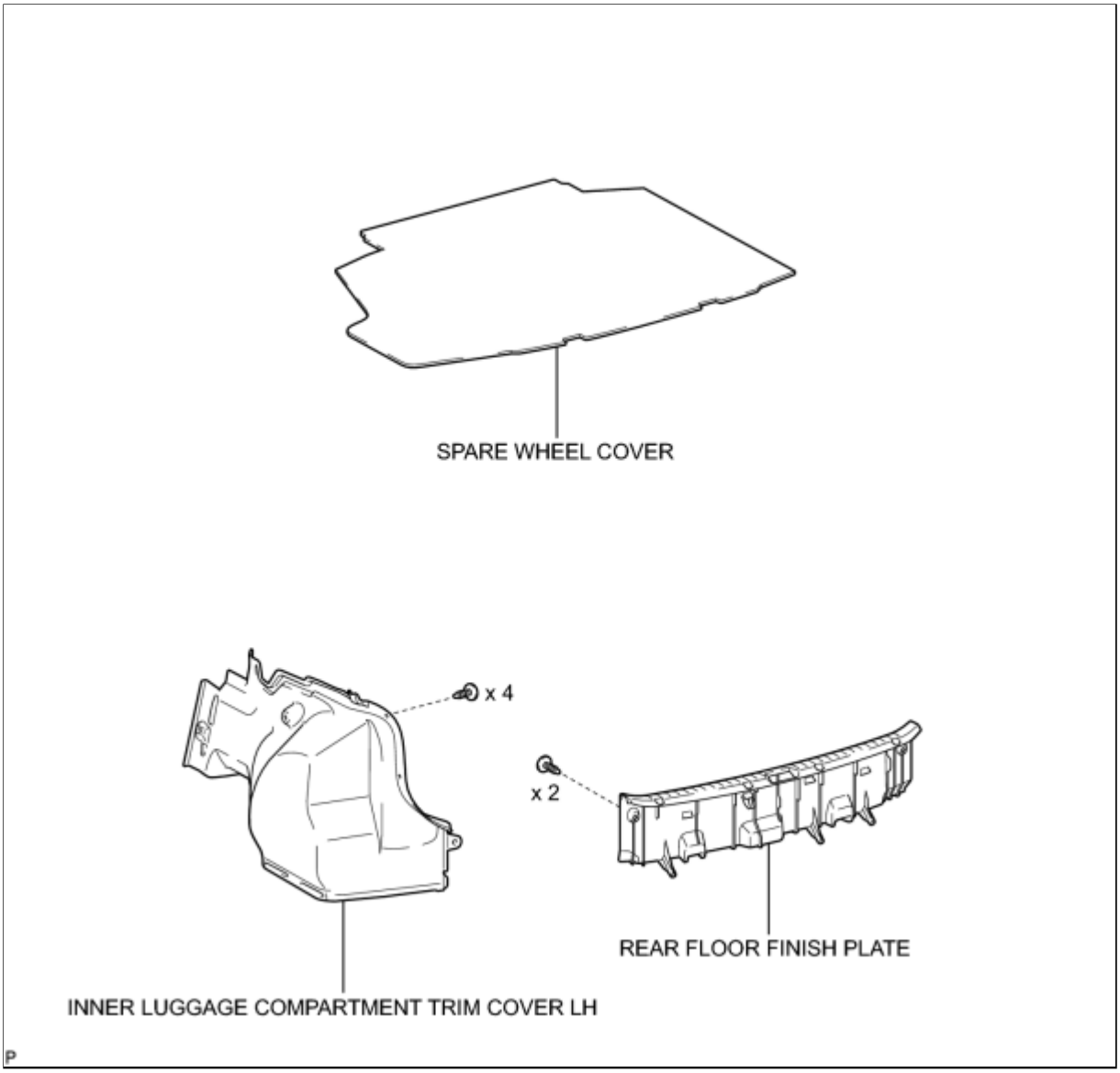

ILLUSTRATION

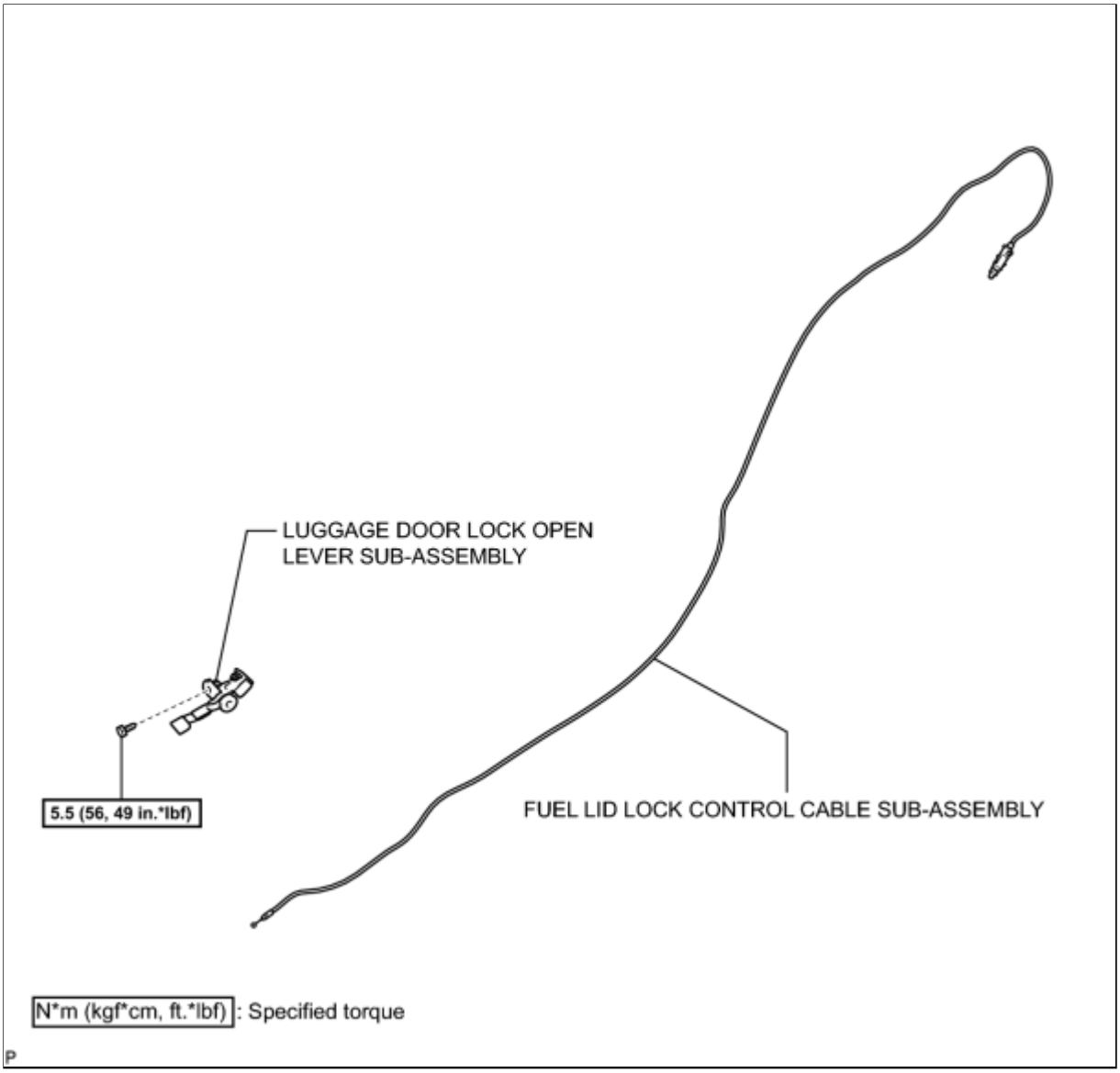
LUGGAGE DOOR LOCK OPEN
LEVER SUB-ASSEMBLY
5.5 (56, 49 in.*lbf)
FUEL LID LOCK CONTROL CABLE SUB-ASSEMBLY
N*m (kgf*cm, ft.*lbf) : Specified torque

P

Last Modified: 3-10-2010	6.4 N	**From:** 200901
Model Year: 2010	**Model:** Corolla	**Doc ID:** RM000000XB802KX
Title: DOOR / HATCH: FRONT DOOR: ADJUSTMENT (2010 Corolla)		

ADJUSTMENT

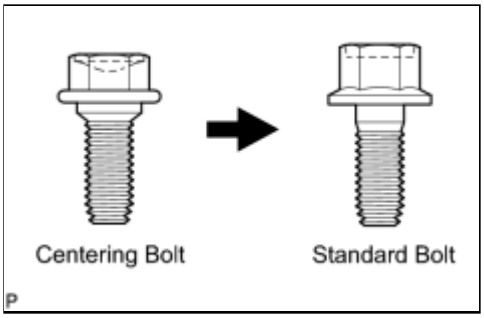

CAUTION:

Before adjusting the door positions of vehicles equipped with side and curtain shield airbags, be sure to disconnect the battery. After adjustment, check that the SRS warning light is operating normally and there are no SRS DTCs output.

HINT:

- Use the same procedure for the RH side and LH side.
- The procedure listed below is for the LH side.
- Centering bolts are used to mount the door hinge to the vehicle body and door. The door cannot be adjusted with the centering bolts installed on it. Substitute the centering bolts with standard bolts when making adjustments.
- Specified torque for standard bolts is shown in the standard bolt chart INFO .

1. DISCONNECT CABLE FROM NEGATIVE BATTERY TERMINAL

CAUTION:

Wait at least 90 seconds after disconnecting the cable from the negative (-) battery terminal to disable the SRS system INFO .

2. ADJUST FRONT DOOR

(a) Using SST, loosen the hinge bolts on the vehicle body and adjust the door position.

SST: 09812-00010

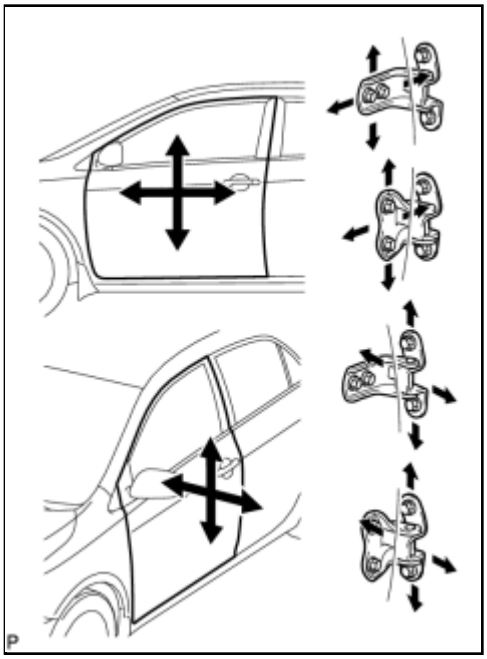

(b) Tighten the hinge bolts on the vehicle body after the adjustment.

Torque: 26 N·m (265 kgf·cm, 19ft·lbf)

(c) Loosen the hinge bolts on the door and adjust the door position.

(d) Tighten the hinge bolts on the door after the adjustment.

Unpainted door hinge installation surface (door panel side) - Torque: 26 N·m (265 kgf·cm, 19ft·lbf)

Painted door hinge installation surface (door panel side) - Torque: 34 N·m (347 kgf·cm, 25ft·lbf)

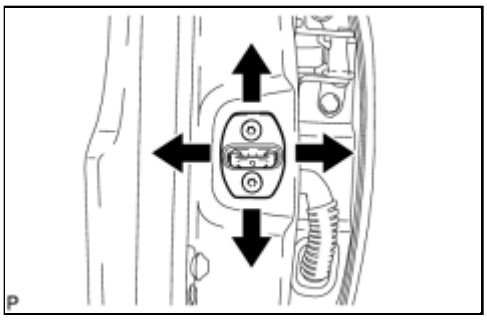

(e) Adjust the striker position by slightly loosening the striker mounting screws with a "TORX" socket wrench (T40) and hitting the striker with a plastic hammer.

(f) Using a "TORX" socket wrench (T40), tighten the striker mounting screws after the adjustment.

Torque: 23 N·m (235 kgf·cm, 17ft·lbf)

3. CONNECT CABLE TO NEGATIVE BATTERY TERMINAL

4. INSPECT SRS WARNING LIGHT

INFO

Last Modified: 3-10-2010	6.4 A	**From:** 200901
Model Year: 2010	**Model:** Corolla	**Doc ID:** RM000002W9H00PX
Title: DOOR / HATCH: FUEL LID LOCK CONTROL CABLE ASSEMBLY: REMOVAL (2010 Corolla)		

REMOVAL

1. DISCONNECT CABLE FROM NEGATIVE BATTERY TERMINAL (w/ Front Seat Side Airbag)

CAUTION:

Wait at least 90 seconds after disconnecting the cable from the negative (-) battery terminal to disable the SRS system INFO **.**

2. REMOVE FRONT SEAT HEADREST ASSEMBLY (for Manual Seat)

3. REMOVE OUTER SEAT TRACK COVER (for Manual Seat) INFO

4. REMOVE INNER SEAT TRACK COVER (for Manual Seat) INFO

5. REMOVE FRONT SEAT ASSEMBLY (for Manual Seat) INFO

6. REMOVE FRONT SEAT HEADREST ASSEMBLY (for Power Seat)

7. REMOVE OUTER SEAT TRACK COVER (for Power Seat) INFO

8. REMOVE INNER SEAT TRACK COVER (for Power Seat) INFO

9. REMOVE FRONT SEAT ASSEMBLY (for Power Seat) INFO

10. REMOVE FRONT DOOR SCUFF PLATE LH INFO

11. REMOVE COWL SIDE TRIM BOARD LH INFO

12. REMOVE FRONT DOOR OPENING TRIM WEATHERSTRIP LH INFO

13. REMOVE REAR DOOR SCUFF PLATE LH INFO

14. REMOVE REAR DOOR OPENING TRIM WEATHERSTRIP LH INFO

15. REMOVE LAP BELT OUTER ANCHOR COVER INFO

16. DISCONNECT FRONT SEAT OUTER BELT ASSEMBLY LH INFO

17. REMOVE LOWER CENTER PILLAR GARNISH LH INFO

18. REMOVE SPARE WHEEL COVER

(a) Remove the spare wheel cover.

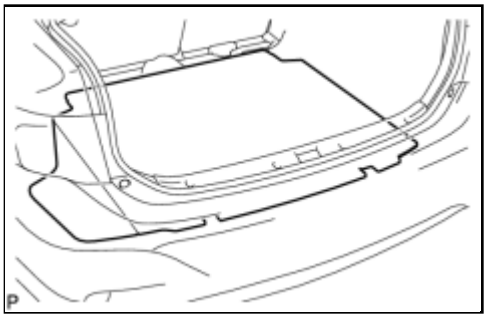

19. REMOVE REAR SEAT HEADREST ASSEMBLY LH

20. REMOVE REAR SEAT CUSHION ASSEMBLY INFO

21. REMOVE REAR SEATBACK ASSEMBLY LH INFO

22. REMOVE REAR SEAT SIDE GARNISH LH INFO

23. REMOVE ROOF SIDE INNER GARNISH BOARD LH INFO

24. REMOVE REAR FLOOR FINISH PLATE INFO

25. REMOVE INNER LUGGAGE COMPARTMENT TRIM COVER LH

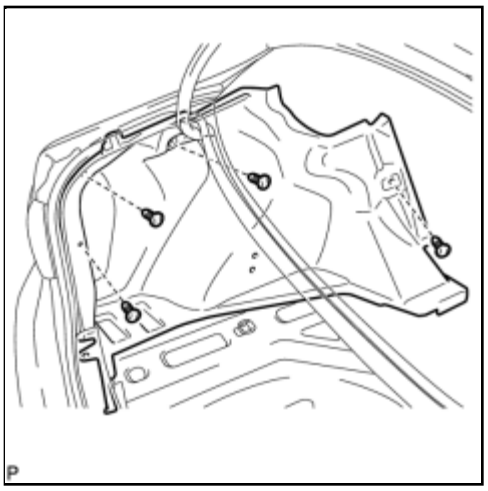

(a) Remove the 4 clips and inner luggage compartment trim cover LH.

26. DISCONNECT LUGGAGE DOOR LOCK OPEN LEVER SUB-ASSEMBLY

(a) Remove the bolt.

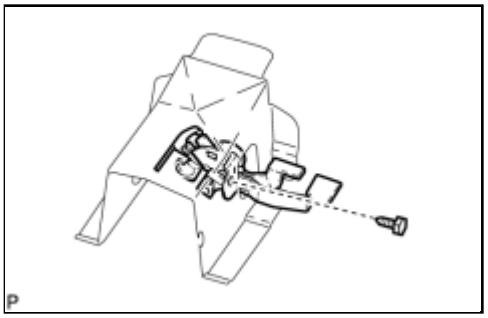

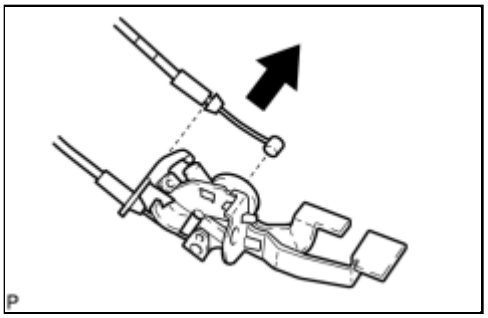

(b) Disconnect the fuel lid lock control cable sub-assembly and the luggage door lock open lever sub-assembly as shown in the illustration.

27. REMOVE FUEL LID LOCK CONTROL CABLE SUB-ASSEMBLY

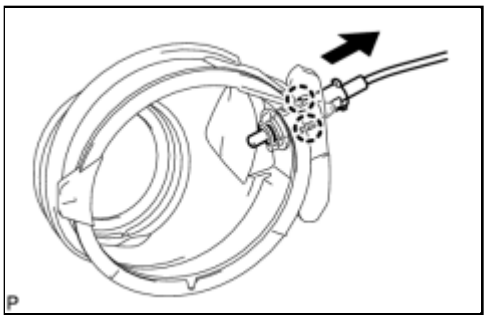

(a) Disengage the 2 claws and disconnect the fuel lid lock control cable sub-assembly.

(b) Disengage the 7 clamps and remove the fuel lid lock control cable sub-assembly.

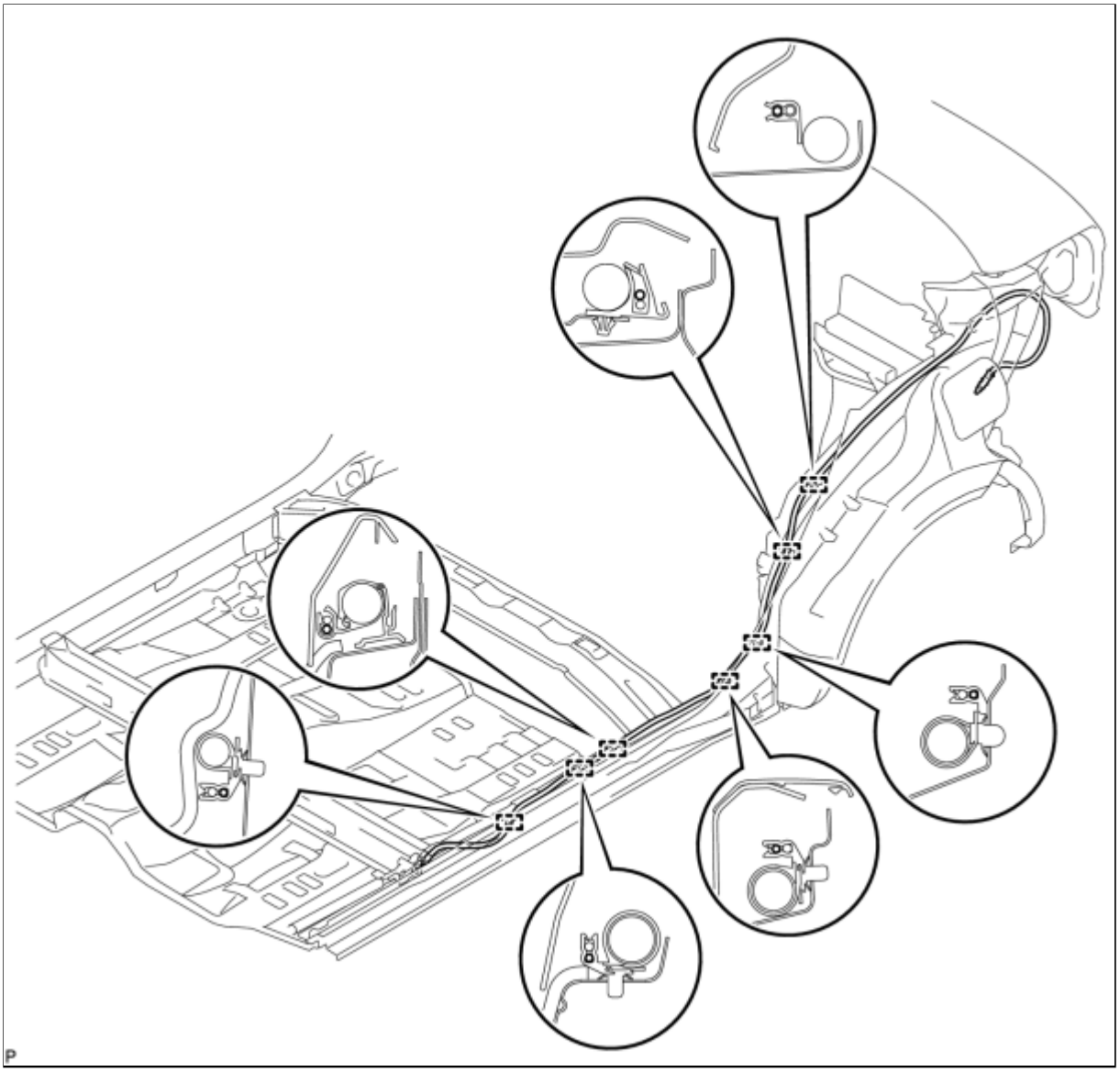
P

Last Modified: 3-10-2010	6.4 A	**From:** 200901
Model Year: 2010	**Model:** Corolla	**Doc ID:** RM000002W9F00PX
Title: DOOR / HATCH: FUEL LID LOCK CONTROL CABLE ASSEMBLY: INSTALLATION (2010 Corolla)		

INSTALLATION

1. INSTALL FUEL LID LOCK CONTROL CABLE SUB-ASSEMBLY

(a) Engage the 7 clamps.

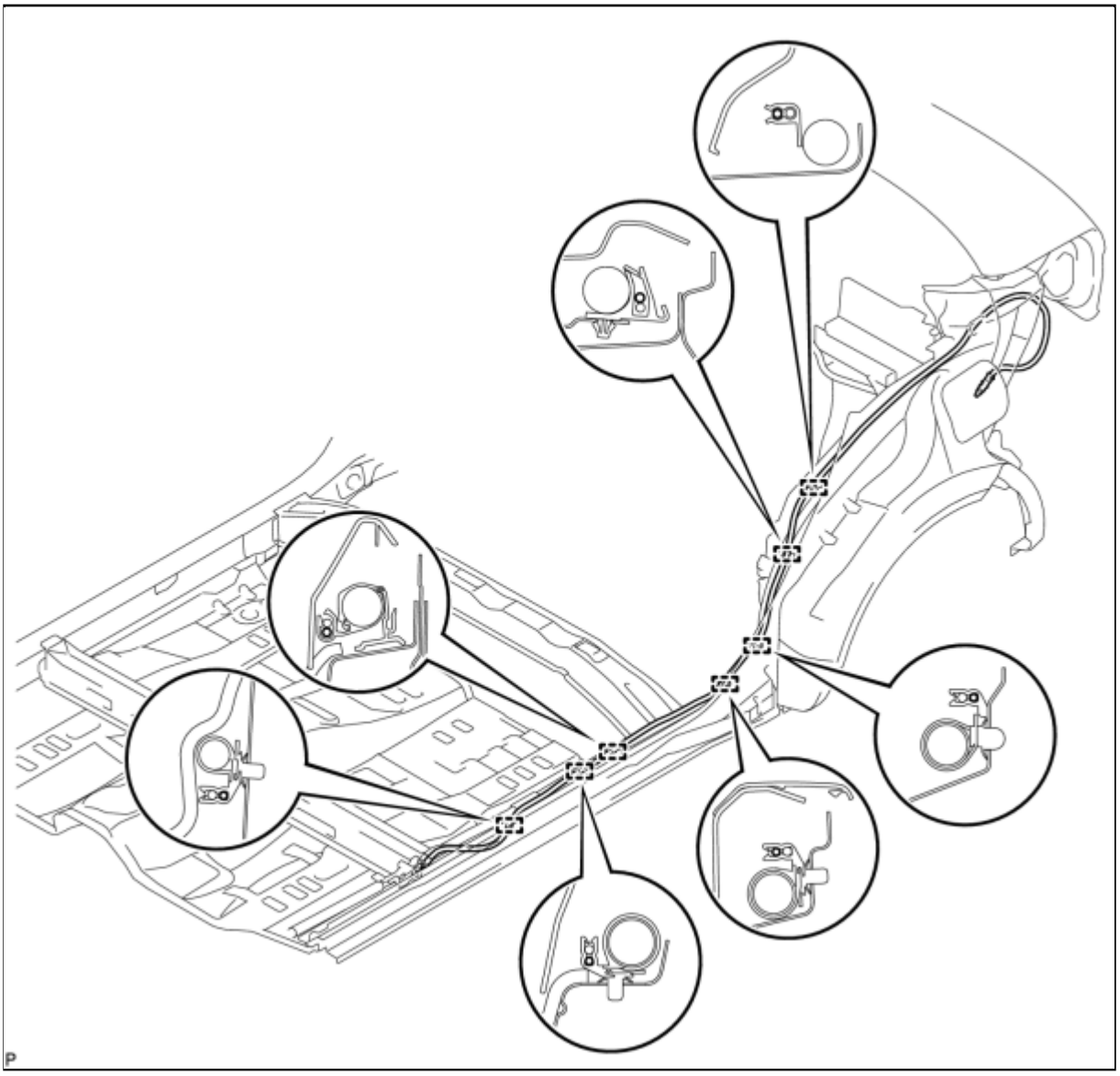

(b) Engage the 2 claws and connect the fuel lid lock control cable sub-assembly.

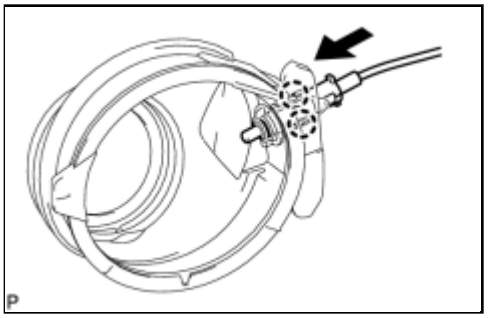

2. CONNECT LUGGAGE DOOR LOCK OPEN LEVER SUB-ASSEMBLY

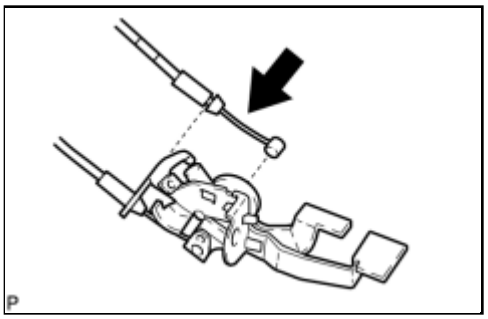

(a) Connect the fuel lid lock control cable sub-assembly.

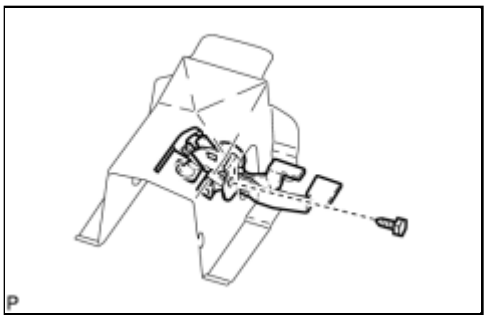

(b) Install the luggage door lock open lever sub-assembly with the bolt.

Torque: 5.5 N·m (56 kgf·cm, 49in·lbf)

3. INSTALL INNER LUGGAGE COMPARTMENT TRIM COVER LH

(a) Install the inner luggage compartment trim cover LH with the 4 clips.

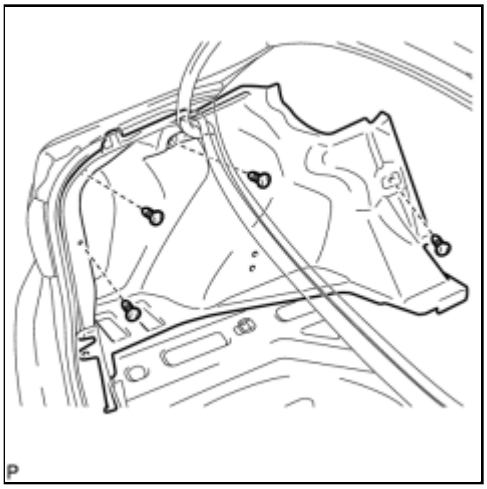

4. INSTALL REAR FLOOR FINISH PLATE INFO

5. INSTALL ROOF SIDE INNER GARNISH BOARD LH INFO

6. INSTALL REAR SEAT SIDE GARNISH LH INFO

7. INSTALL REAR SEATBACK ASSEMBLY LH INFO

8. INSTALL REAR SEAT CUSHION ASSEMBLY INFO

9. INSTALL REAR SEAT HEADREST ASSEMBLY LH

10. INSTALL SPARE WHEEL COVER

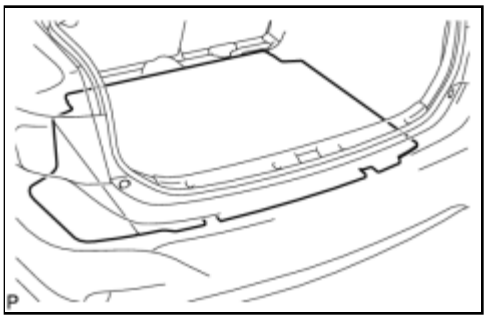

(a) Install the spare wheel cover.

11. INSTALL LOWER CENTER PILLAR GARNISH LH INFO

12. CONNECT FRONT SEAT OUTER BELT ASSEMBLY LH INFO

13. INSTALL LAP BELT OUTER ANCHOR COVER INFO

14. INSTALL REAR DOOR OPENING TRIM WEATHERSTRIP LH INFO

15. INSTALL REAR DOOR SCUFF PLATE LH INFO

16. INSTALL FRONT DOOR OPENING TRIM WEATHERSTRIP LH INFO

17. INSTALL COWL SIDE TRIM BOARD LH INFO

18. INSTALL FRONT DOOR SCUFF PLATE LH INFO

19. INSTALL FRONT SEAT ASSEMBLY (for Manual Seat) INFO

20. INSPECT FRONT SEAT SLIDE ADJUSTER LOCK (for Manual Seat) INFO

21. INSTALL INNER SEAT TRACK COVER (for Manual Seat) INFO

22. INSTALL OUTER SEAT TRACK COVER (for Manual Seat) INFO

23. INSTALL FRONT SEAT HEADREST ASSEMBLY (for Manual Seat)

24. INSTALL FRONT SEAT ASSEMBLY (for Power Seat) INFO

25. INSTALL INNER SEAT TRACK COVER (for Power Seat) INFO

26. INSTALL OUTER SEAT TRACK COVER (for Power Seat) INFO

27. INSTALL FRONT SEAT HEADREST ASSEMBLY (for Power Seat)

28. CONNECT CABLE TO NEGATIVE BATTERY TERMINAL (w/ Front Seat Side Airbag)

29. INSPECT SRS WARNING LIGHT (w/ Front Seat Side Airbag)

INFO

30. INSPECT FRONT SEAT ASSEMBLY (for Power Seat) INFO

Last Modified: 3-10-2010	6.4 K	**From:** 200901
Model Year: 2010	**Model:** Corolla	**Doc ID:** RM000002Y4O00DX
Title: DOOR / HATCH: HOOD: COMPONENTS (2010 Corolla)		

COMPONENTS

ILLUSTRATION

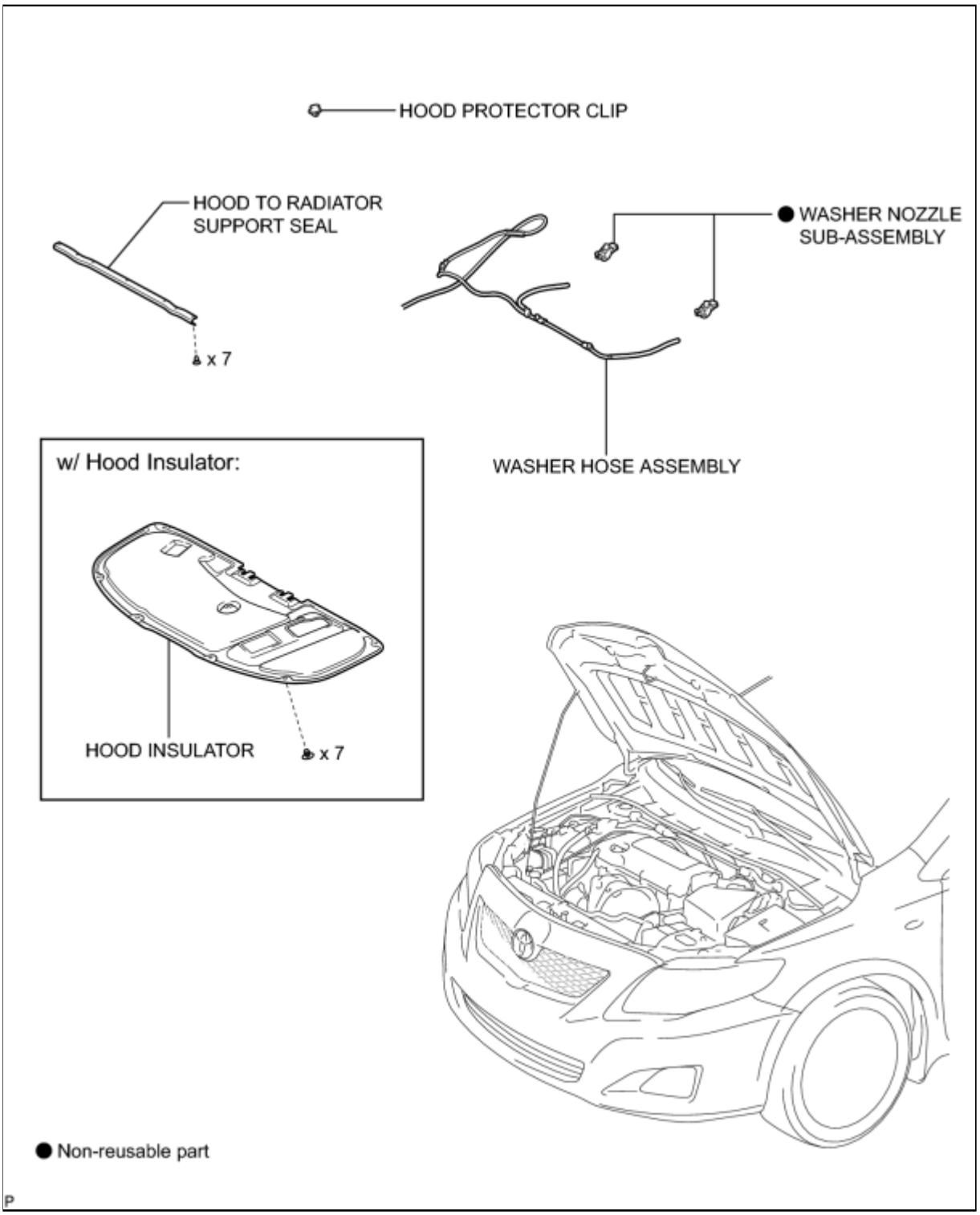

Last Modified: 3-10-2010	6.4 G	**From:** 200901
Model Year: 2010	**Model:** Corolla	**Doc ID:** RM000000XB7020X
Title: DOOR / HATCH: HOOD: ON-VEHICLE INSPECTION (2010 Corolla)		

ON-VEHICLE INSPECTION

1. INSPECT HOOD SUB-ASSEMBLY

(a) Check that the clearance measurements of areas A through E are within each standard range.

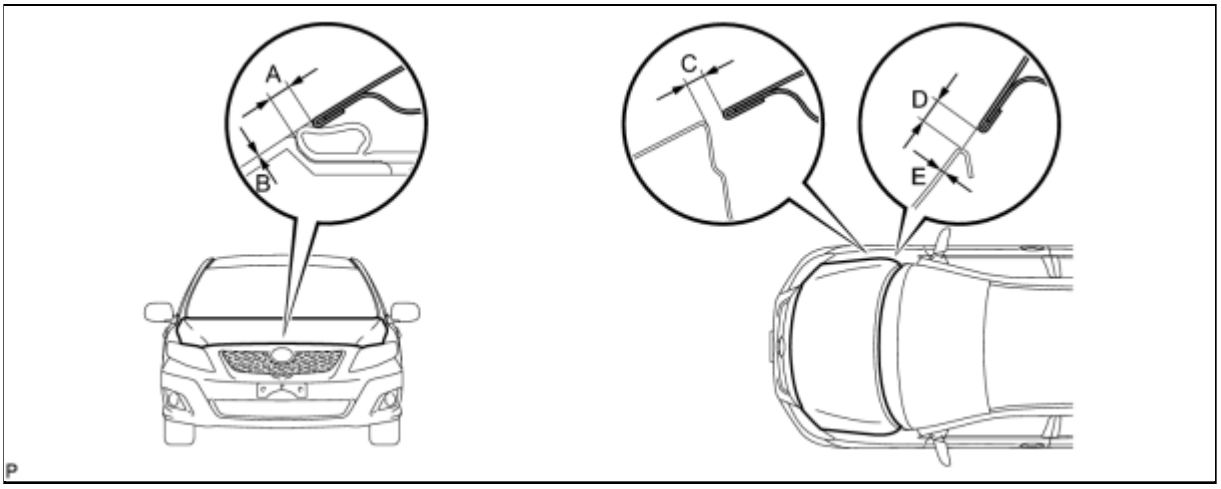

Standard Clearance:

AREA	MEASUREMENT	AREA	MEASUREMENT
A	3.1 to 6.1 mm (0.122 to 0.240 in.)	D	4.8 mm (0.189 in.)
B	-1.5 to 1.5 mm (-0.0591 to 0.0591 in.)	E	0.7 mm (0.0276 in.)
C	2.3 to 5.3 mm (0.0906 to 0.209 in.)	-	-

Last Modified: 3-10-2010	6.4 A	**From:** 200901
Model Year: 2010	**Model:** Corolla	**Doc ID:** RM000002Y4P00DX
Title: DOOR / HATCH: HOOD: DISASSEMBLY (2010 Corolla)		

DISASSEMBLY

1. REMOVE HOOD PROTECTOR CLIP

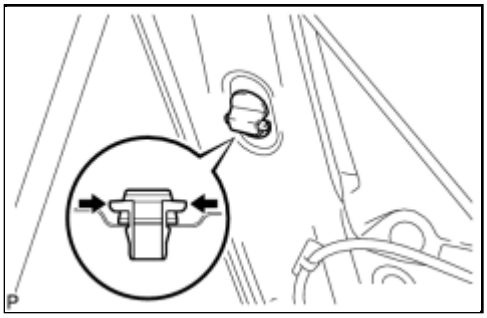

(a) Disengage the 2 claws and remove the hood protector clip as shown in the illustration.

2. REMOVE HOOD INSULATOR (w/ Hood Insulator)

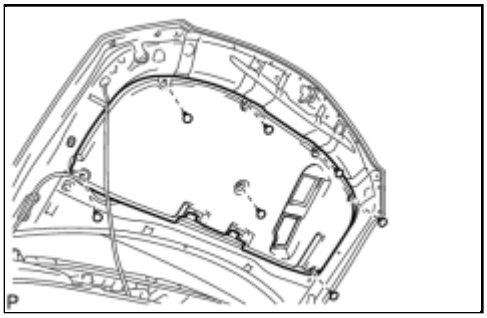

(a) Using a clip remover, remove the 7 clips and the hood insulator.

3. REMOVE HOOD TO RADIATOR SUPPORT SEAL

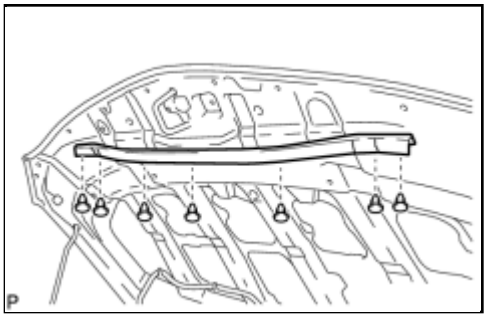

(a) Using a clip remover, remove the 7 clips and the hood to radiator support seal.

4. REMOVE WASHER NOZZLE SUB-ASSEMBLY INFO

5. DISCONNECT WASHER HOSE ASSEMBLY

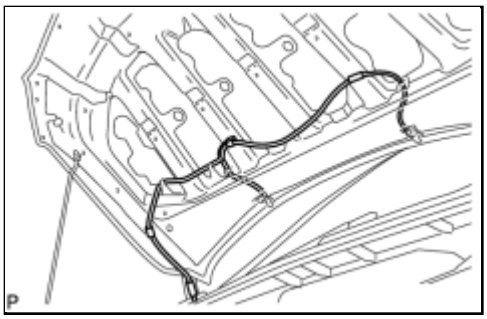

(a) Disconnect the washer hose assembly.

Last Modified: 3-10-2010	6.4 N	**From:** 200901
Model Year: 2010	**Model:** Corolla	**Doc ID:** RM000000XB502CX
Title: DOOR / HATCH: HOOD: ADJUSTMENT (2010 Corolla)		

ADJUSTMENT

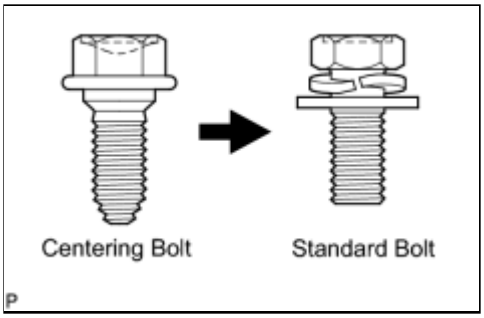

HINT:

- Centering bolts are used to mount the hood hinge and hood lock. The hood and hood lock cannot be adjusted with the centering bolts installed. Substitute the centering bolts with standard bolts (with washers) when making adjustments.
- Specified torque for standard bolts is shown in the standard bolt chart INFO .

1. ADJUST HOOD SUB-ASSEMBLY

(a) Horizontally and vertically adjust the hood.

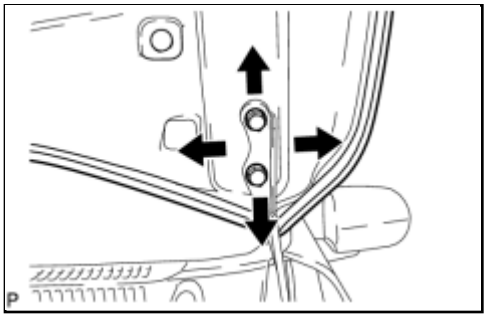

(1) Loosen the 4 hinge bolts of the hood.

(2) Adjust the clearance between the hood and front fender by moving the hood.

(3) Tighten the 4 hinge bolts after the adjustment.

Torque: 13 N·m (133 kgf·cm, 10ft·lbf)

(b) Adjust the height of the front end of the hood using the cushion rubber.

(1) Adjust the cushion rubber so that the heights of the hood and fender are aligned.

HINT:

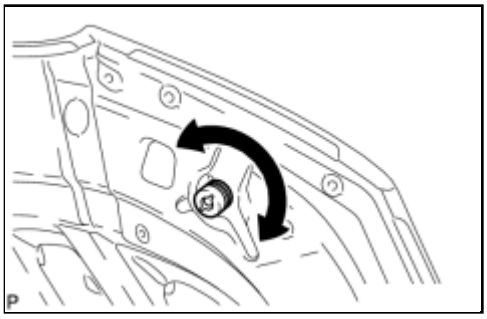

Raise or lower the front end of the hood by turning the cushion rubber.

(c) Adjust the hood lock.

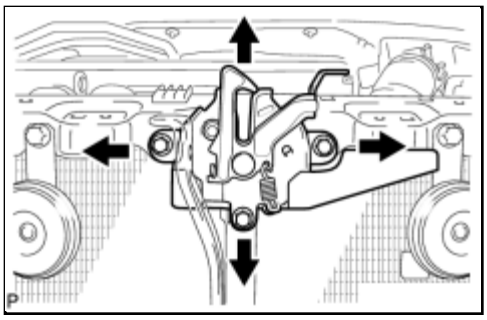

(1) Loosen the 3 bolts.

(2) Tighten the bolts after the adjustment.

Torque: 8.0 N·m (82 kgf·cm, 71in·lbf)

(3) Check that the striker engages the hood lock smoothly.

Last Modified: 3-10-2010	6.4 A	**From:** 200901
Model Year: 2010	**Model:** Corolla	**Doc ID:** RM000002Y4Q00DX
Title: DOOR / HATCH: HOOD: REASSEMBLY (2010 Corolla)		

REASSEMBLY

1. CONNECT WASHER HOSE ASSEMBLY

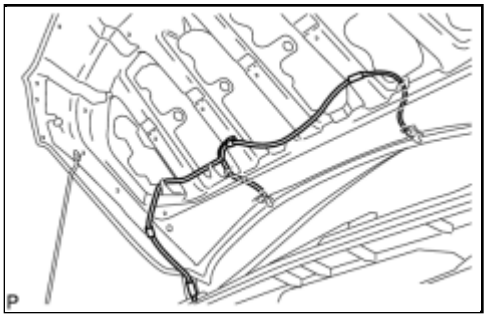

(a) Connect the washer hose assembly.

2. ADJUST WASHER NOZZLE SUB-ASSEMBLY INFO

3. INSTALL WASHER NOZZLE SUB-ASSEMBLY INFO

4. INSTALL HOOD TO RADIATOR SUPPORT SEAL

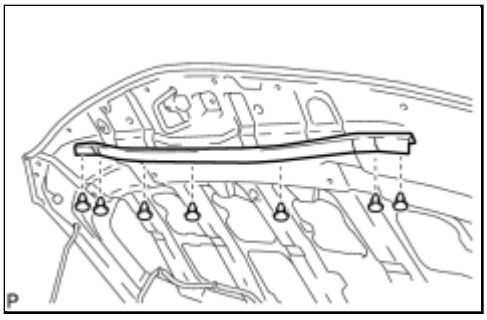

(a) Install the hood to radiator support seal with the 7 clips.

5. INSTALL HOOD INSULATOR (w/ Hood Insulator)

(a) Install the hood insulator with the 7 clips.

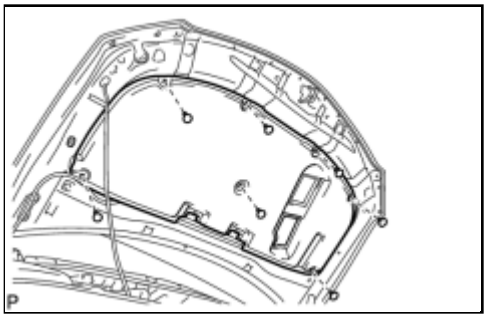

6. INSTALL HOOD PROTECTOR CLIP

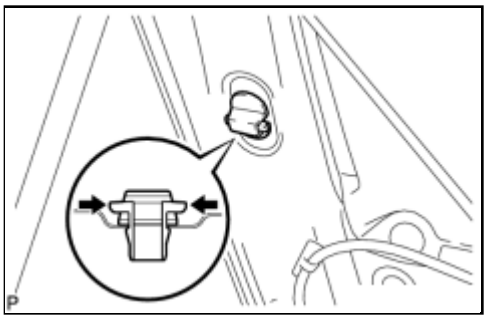

(a) Engage the 2 claws and install the hood protector clip.

7. INSPECT WASHER NOZZLE SUB-ASSEMBLY INFO

Last Modified: 3-10-2010	6.4 K	**From:** 200901
Model Year: 2010	**Model:** Corolla	**Doc ID:** RM000000Y5402DX
Title: DOOR / HATCH: HOOD LOCK CONTROL CABLE ASSEMBLY: COMPONENTS (2010 Corolla)		

COMPONENTS

ILLUSTRATION

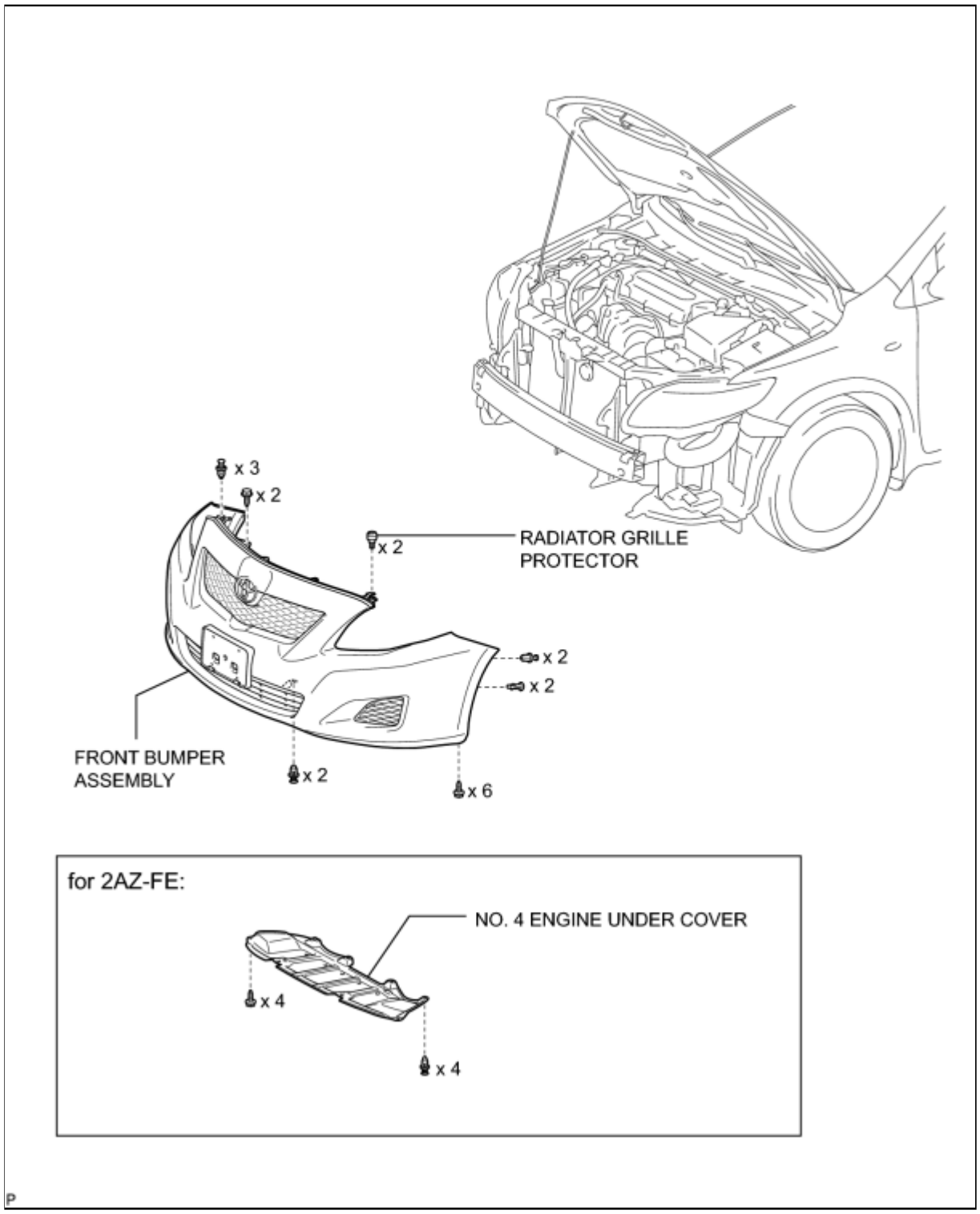

ILLUSTRATION

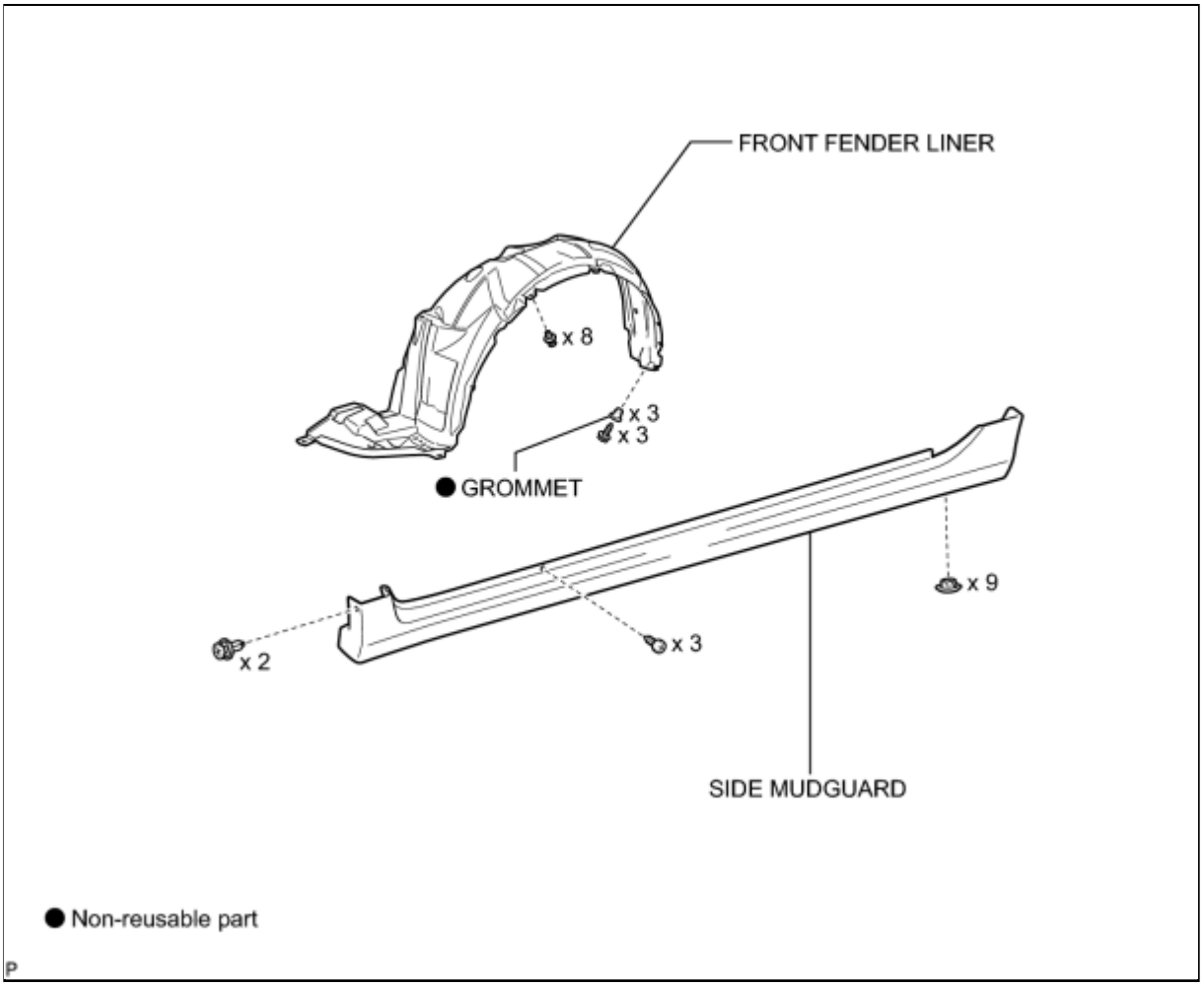

ILLUSTRATION

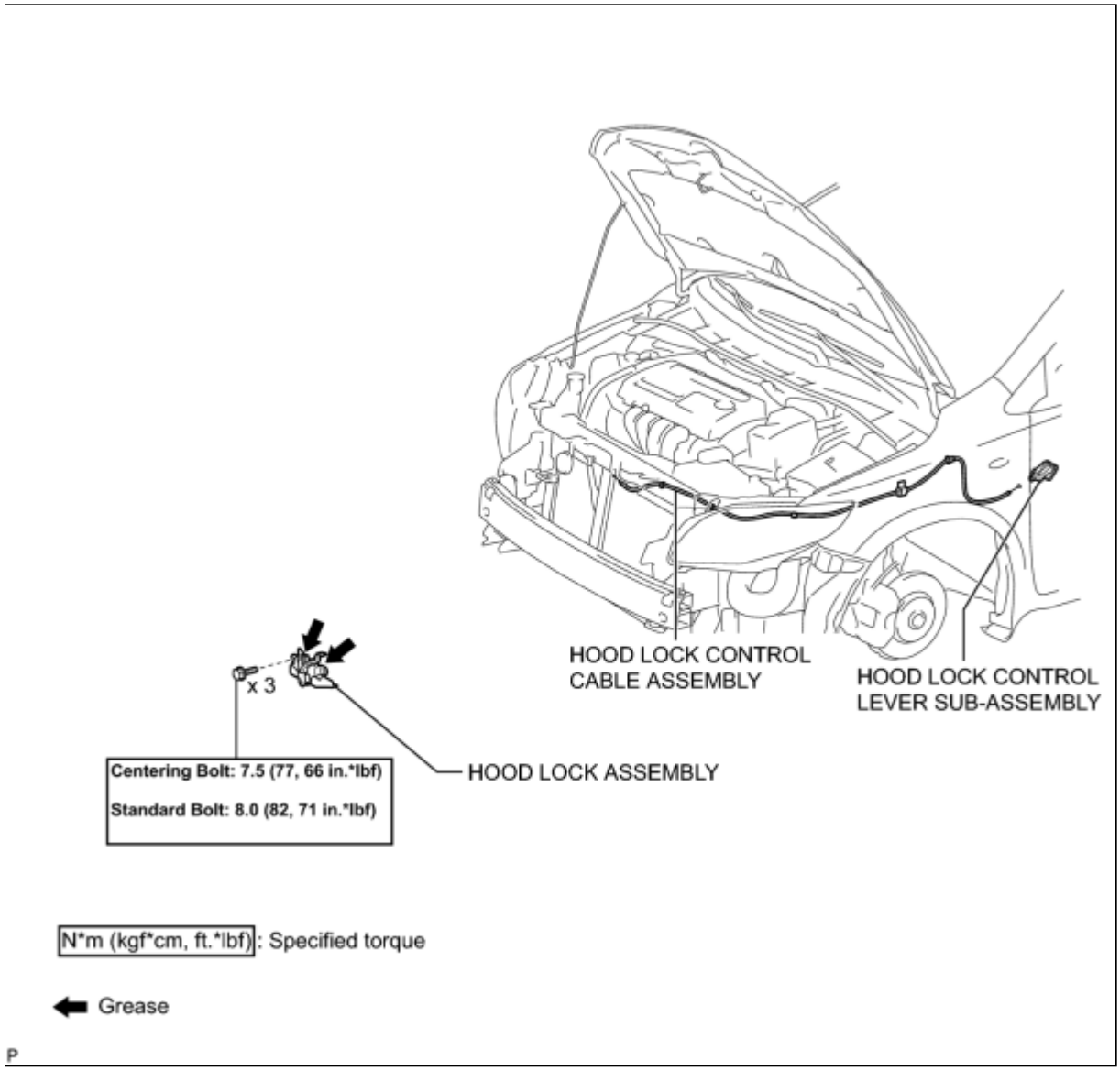
HOOD LOCK CONTROL
CABLE ASSEMBLY
HOOD LOCK CONTROL
LEVER SUB-ASSEMBLY
x 3
HOOD LOCK ASSEMBLY
Centering Bolt: 7.5 (77, 66 in.*lbf)
Standard Bolt: 8.0 (82, 71 in.*lbf)
N*m (kgf*cm, ft.*lbf): Specified torque
Grease

P

Last Modified: 3-10-2010	6.4 A	**From:** 200901
Model Year: 2010	**Model:** Corolla	**Doc ID:** RM000000Y53032X
Title: DOOR / HATCH: HOOD LOCK CONTROL CABLE ASSEMBLY: INSTALLATION (2010 Corolla)		

INSTALLATION

1. INSTALL HOOD LOCK CONTROL CABLE ASSEMBLY

(a) Pass the hood lock control cable assembly into the engine compartment.

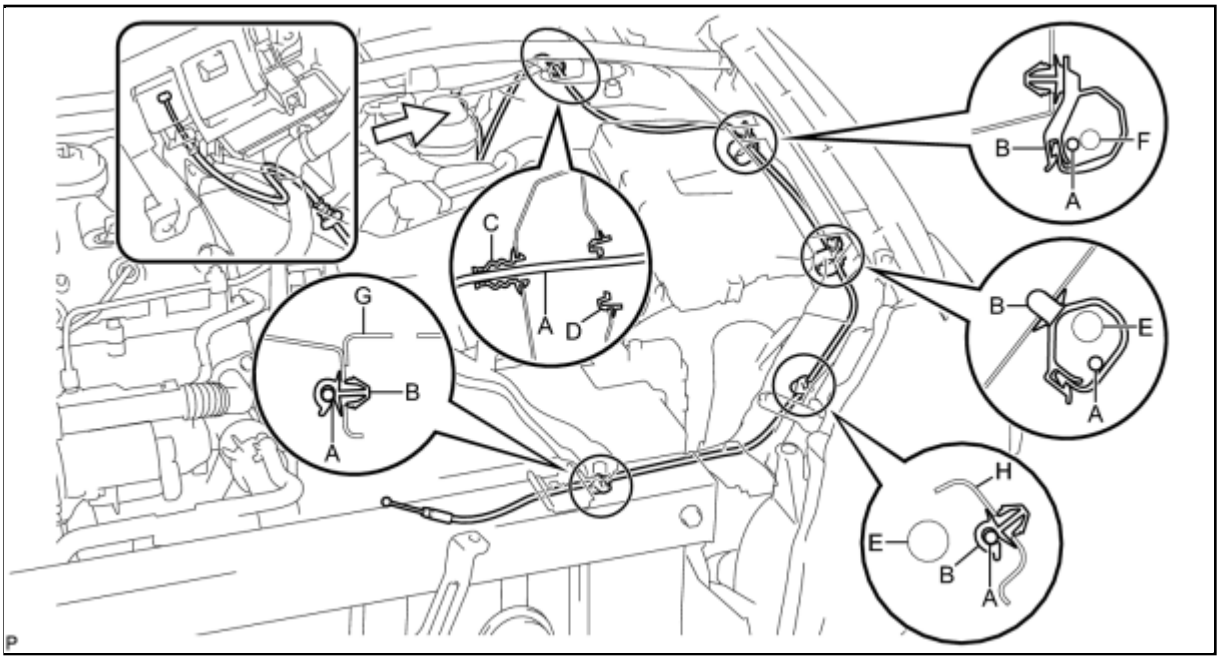

AREA	PART NAME	AREA	PART NAME
A	Hood lock control cable	E	Wire harness
B	Clamp	F	Front washer hose
C	Hood opener cable grommet	G	Radiator support
D	Wiring harness protector	H	Side radiator support

(b) Pass the cable through the upper radiator support.

(c) Connect the clamps as shown in the illustration.

2. INSTALL HOOD LOCK CONTROL LEVER SUB-ASSEMBLY

(a) Connect the hood lock control cable and install the hood lock control lever.

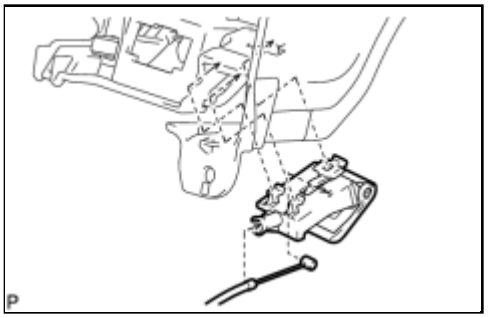

3. INSTALL HOOD LOCK ASSEMBLY

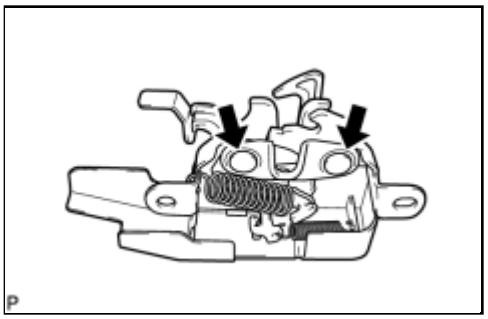

(a) Apply MP grease to the sliding areas of the lock.

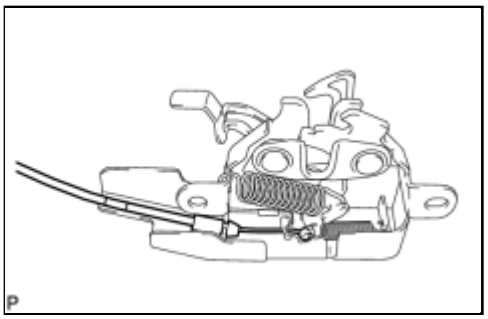

(b) Connect the hood lock control cable.

(c) Install the hood lock assembly with the 3 bolts.

Centering Bolt - Torque: 7.5 N·m (77 kgf·cm, 66in·lbf)
Standard Bolt - Torque: 8.0 N·m (82 kgf·cm, 71in·lbf)

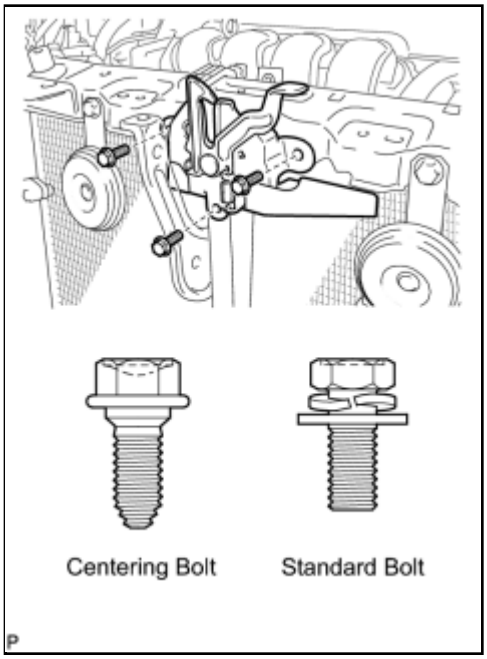

4. INSPECT HOOD SUB-ASSEMBLY INFO

5. ADJUST HOOD SUB-ASSEMBLY INFO

6. INSTALL FRONT FENDER LINER

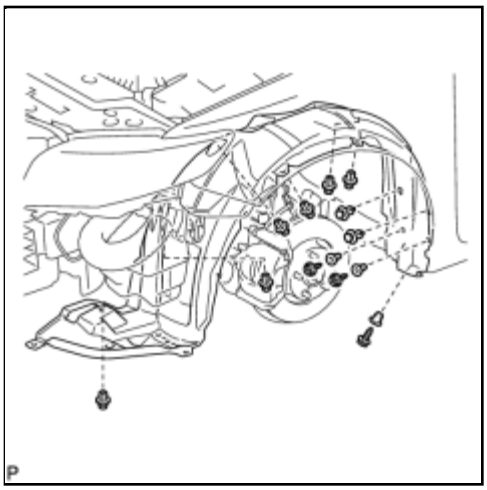

(a) Install the front fender liner with 3 new grommets and the 3 screws.

(b) Install the 8 clips.

7. INSTALL FRONT WHEEL INFO

8. INSTALL SIDE MUDGUARD INFO

9. INSTALL FRONT BUMPER ASSEMBLY INFO

10. INSTALL NO. 4 ENGINE UNDER COVER (for 2AZ-FE) INFO

11. INSTALL RADIATOR GRILLE PROTECTOR INFO

12. VEHICLE PREPARATION FOR FOG LIGHT AIMING ADJUSTMENT (w/ Fog Light) INFO

13. PREPARATION FOR FOG LIGHT AIMING (w/ Fog Light) INFO

14. INSPECT FOG LIGHT AIMING (w/ Fog Light) INFO

15. ADJUST FOG LIGHT AIMING (w/ Fog Light) INFO



Last Modified: 3-10-2010	6.4 A	**From:** 200901
Model Year: 2010	**Model:** Corolla	**Doc ID:** RM000000Y5502XX
Title: DOOR / HATCH: HOOD LOCK CONTROL CABLE ASSEMBLY: REMOVAL (2010 Corolla)		

REMOVAL

1. REMOVE RADIATOR GRILLE PROTECTOR INFO

2. REMOVE NO. 4 ENGINE UNDER COVER (for 2AZ-FE) INFO

3. REMOVE FRONT BUMPER ASSEMBLY INFO

4. REMOVE SIDE MUDGUARD INFO

5. REMOVE FRONT WHEEL

6. REMOVE FRONT FENDER LINER

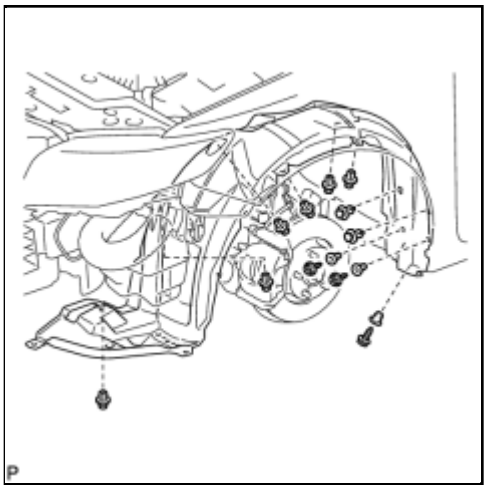

(a) Remove the 8 clips and 3 screws.

(b) Remove the 3 grommets and the front fender liner.

HINT:

The grommets need to be replaced with new ones because they will break when they are removed.

7. REMOVE HOOD LOCK ASSEMBLY

(a) Remove the 3 bolts from the hood lock assembly.

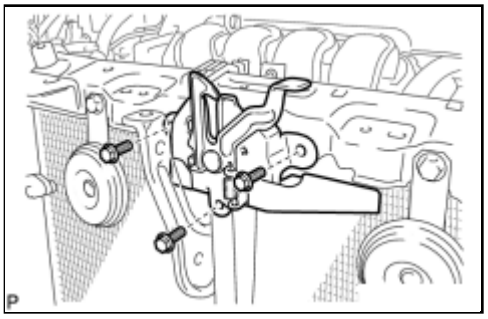

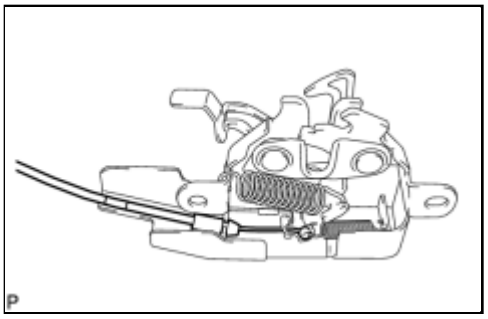

(b) Disconnect the hood lock control cable and remove the hood lock assembly.

8. REMOVE HOOD LOCK CONTROL LEVER SUB-ASSEMBLY

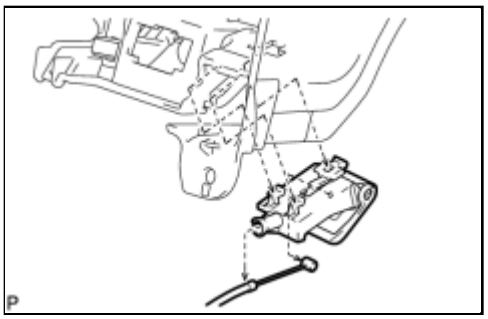

(a) Disconnect the hood lock control cable and remove the hood lock control lever.

9. REMOVE HOOD LOCK CONTROL CABLE ASSEMBLY

(a) Using a screwdriver, disconnect the clamps shown in the illustration.

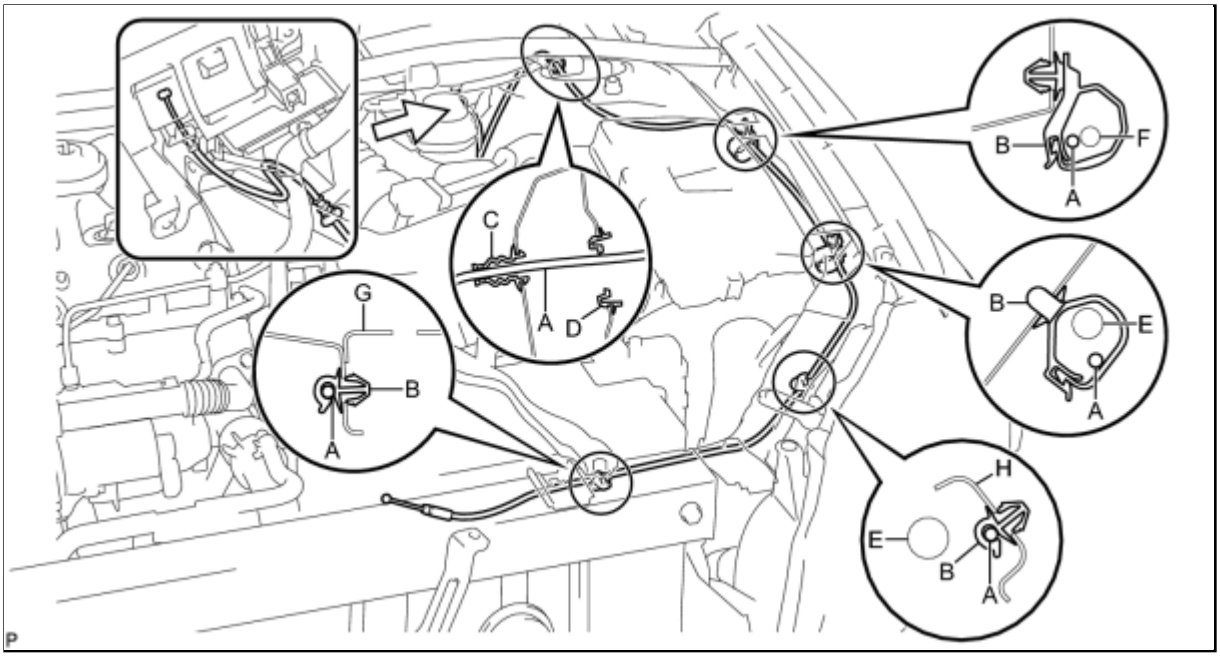

AREA	PART NAME	AREA	PART NAME
A	Hood lock control cable	E	Wire harness
B	Clamp	F	Front washer hose
C	Hood opener cable grommet	G	Radiator support
D	Wiring harness protector	H	Side radiator support

HINT:

Tape the screwdriver tip before use.

(b) Pull the cable from the engine compartment and remove it.

Last Modified: 3-10-2010	6.4 K	**From:** 200901
Model Year: 2010	**Model:** Corolla	**Doc ID:** RM000000XBZ01NX
Title: DOOR / HATCH: LUGGAGE COMPARTMENT DOOR: COMPONENTS (2010 Corolla)		

COMPONENTS

ILLUSTRATION

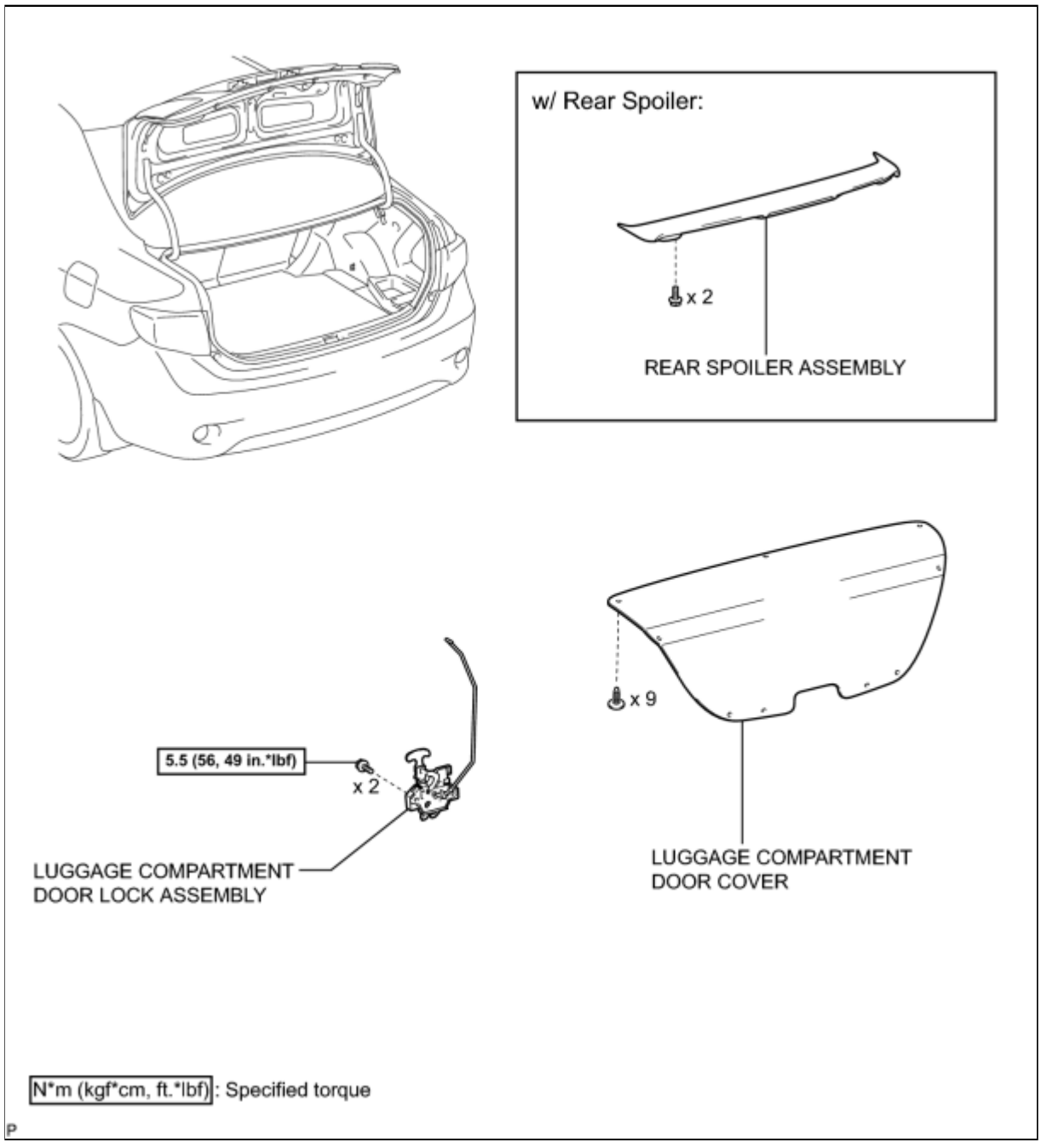

ILLUSTRATION

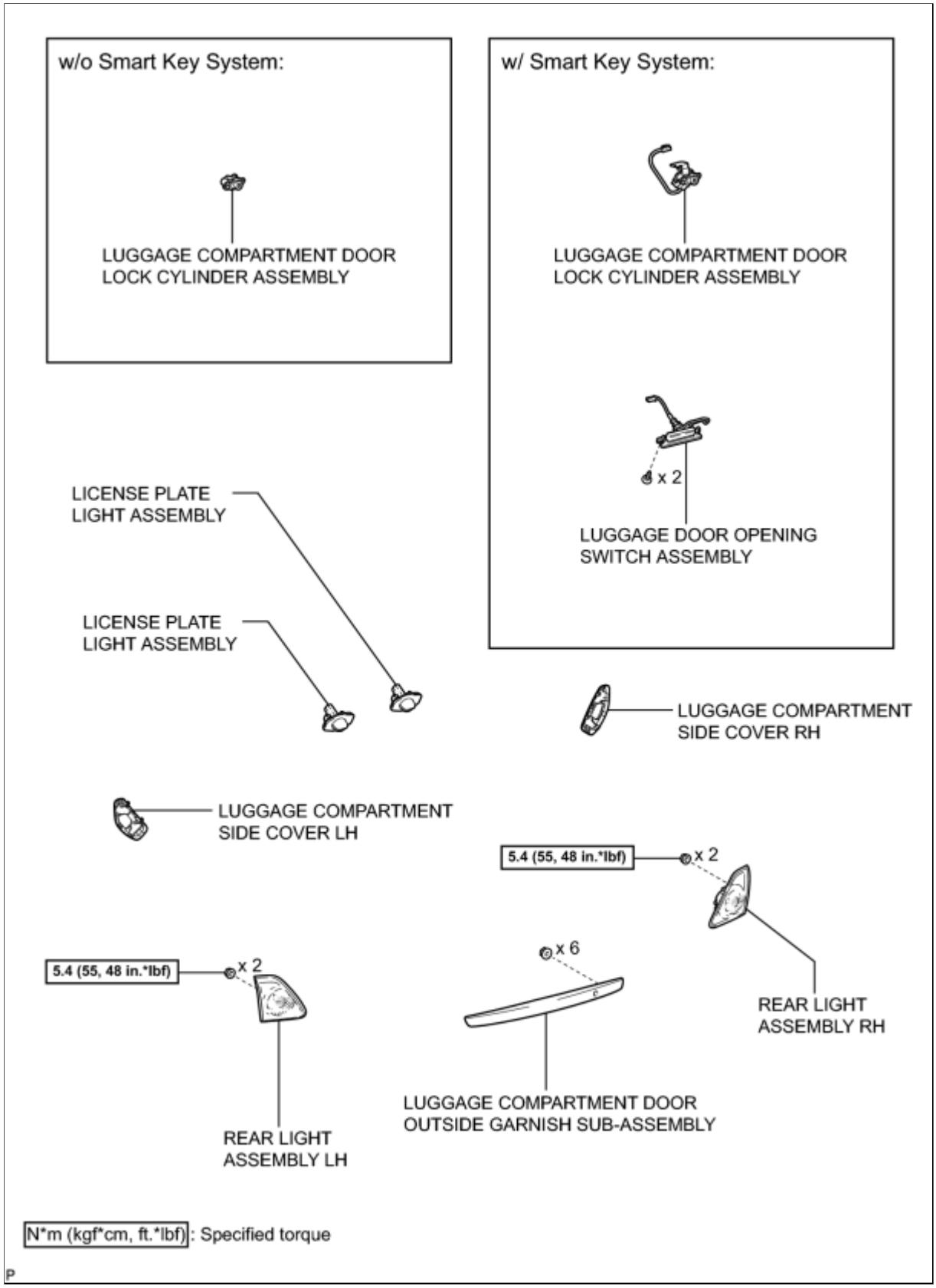
w/o Smart Key System:
LUGGAGE COMPARTMENT DOOR LOCK CYLINDER ASSEMBLY
w/ Smart Key System:
LUGGAGE COMPARTMENT DOOR LOCK CYLINDER ASSEMBLY
x 2
LUGGAGE DOOR OPENING SWITCH ASSEMBLY
LICENSE PLATE LIGHT ASSEMBLY
LICENSE PLATE LIGHT ASSEMBLY
LUGGAGE COMPARTMENT SIDE COVER RH
LUGGAGE COMPARTMENT SIDE COVER LH
5.4 (55, 48 in.*lbf)
x 2
5.4 (55, 48 in.*lbf)
x 2
x 6
REAR LIGHT ASSEMBLY RH
REAR LIGHT ASSEMBLY LH
LUGGAGE COMPARTMENT DOOR OUTSIDE GARNISH SUB-ASSEMBLY
N*m (kgf*cm, ft.*lbf): Specified torque

P

Last Modified: 3-10-2010	6.4 G	**From:** 200901
Model Year: 2010	**Model:** Corolla	**Doc ID:** RM000000XNV01KX
Title: DOOR / HATCH: LUGGAGE COMPARTMENT DOOR: ON-VEHICLE INSPECTION (2010 Corolla)		

ON-VEHICLE INSPECTION

1. INSPECT LUGGAGE COMPARTMENT DOOR PANEL SUB-ASSEMBLY

(a) Check that the clearance measurements of areas A through D are within each standard range.

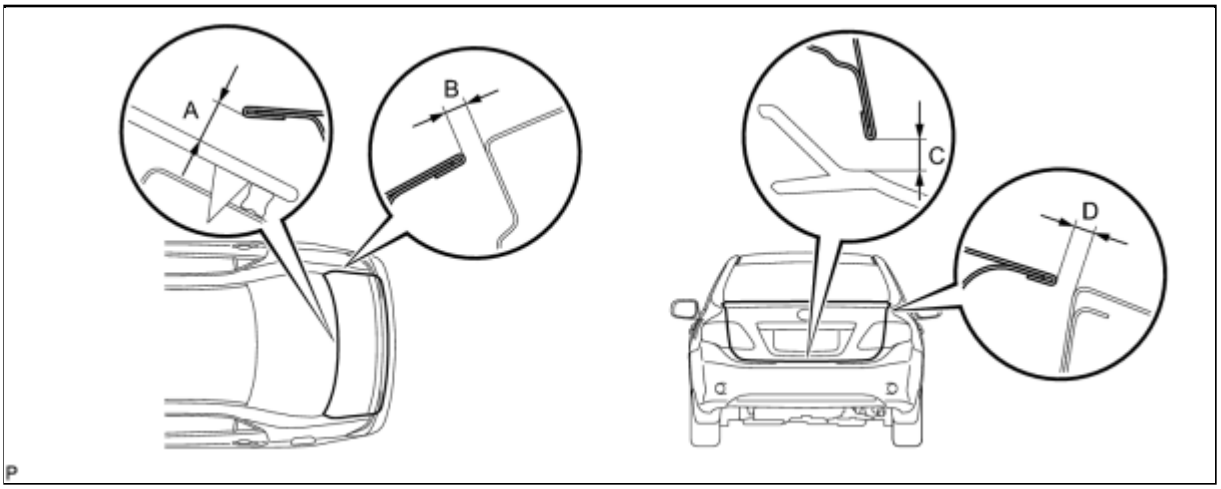

Standard Clearance:

AREA	MEASUREMENT	AREA	MEASUREMENT
A	9.0 mm (0.354 in.)	C	4.5 to 7.5 mm (0.177 to 0.295 in.)
B	2.5 to 5.5 mm (0.0984 to 0.217 in.)	D	2.5 to 5.5 mm (0.0984 to 0.217 in.)

Last Modified: 3-10-2010	6.4 A	**From:** 200901
Model Year: 2010	**Model:** Corolla	**Doc ID:** RM000001OIM01JX
Title: DOOR / HATCH: LUGGAGE COMPARTMENT DOOR: DISASSEMBLY (2010 Corolla)		

DISASSEMBLY

1. REMOVE LUGGAGE COMPARTMENT DOOR COVER INFO

2. REMOVE REAR SPOILER ASSEMBLY (w/ Rear Spoiler) INFO

3. REMOVE LUGGAGE COMPARTMENT DOOR LOCK ASSEMBLY (w/o Smart Key System) INFO

4. REMOVE LUGGAGE COMPARTMENT DOOR LOCK ASSEMBLY (w/ Smart Key System) INFO

5. REMOVE LUGGAGE COMPARTMENT DOOR LOCK CYLINDER ASSEMBLY (w/o Smart Key System)

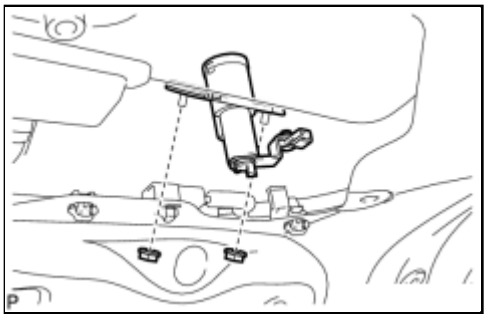

(a) Remove the 2 nuts and the luggage compartment door lock cylinder assembly.

6. REMOVE LUGGAGE COMPARTMENT DOOR LOCK CYLINDER ASSEMBLY (w/ Smart Key System)

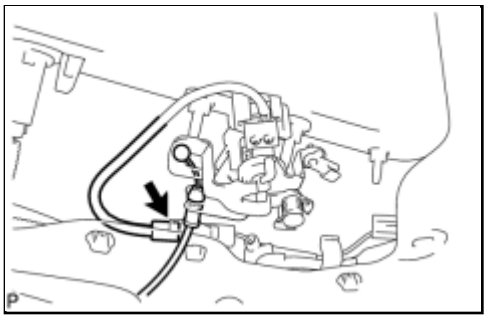

(a) Disconnect the luggage door lock control cable sub-assembly.

(b) Remove the 2 nuts and the luggage compartment door lock cylinder assembly.

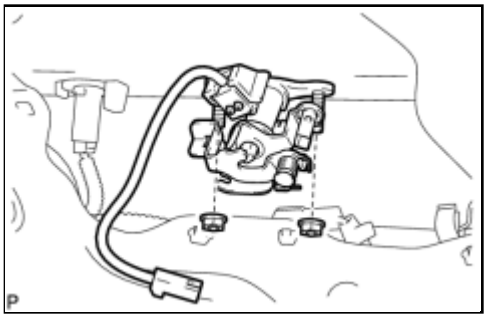

7. REMOVE LUGGAGE COMPARTMENT SIDE COVER LH INFO

8. REMOVE LUGGAGE COMPARTMENT SIDE COVER RH

HINT:

Use the same procedure for the RH side and LH side.

9. REMOVE REAR LIGHT ASSEMBLY LH INFO

10. REMOVE REAR LIGHT ASSEMBLY RH

HINT:

Use the same procedure for the RH side and LH side.

11. REMOVE LUGGAGE COMPARTMENT DOOR OUTSIDE GARNISH SUB-ASSEMBLY INFO

12. REMOVE LUGGAGE DOOR OPENING SWITCH ASSEMBLY (w/ Smart Key System) INFO

13. REMOVE LICENSE PLATE LIGHT ASSEMBLY INFO

Last Modified: 3-10-2010	6.4 N	**From:** 200901
Model Year: 2010	**Model:** Corolla	**Doc ID:** RM000000XBX01QX
Title: DOOR / HATCH: LUGGAGE COMPARTMENT DOOR: ADJUSTMENT (2010 Corolla)		

ADJUSTMENT

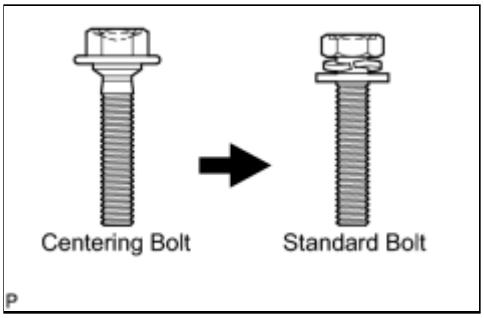

HINT:

- Centering bolts are used to mount the door hinge to the door. The door cannot be adjusted with the centering bolts installed. Substitute the centering bolts with standard bolts (with washers) when making adjustments.
- Specified torque for standard bolts is shown in the standard bolt chart INFO .

1. REMOVE SPARE WHEEL COVER

2. REMOVE REAR FLOOR FINISH PLATE

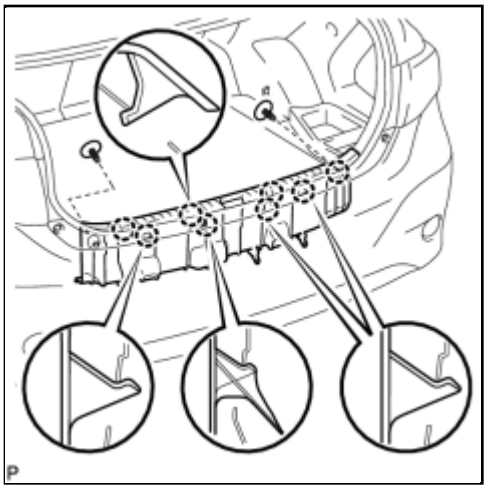

(a) Using a clip remover, remove the 2 clips.

(b) Disengage the 8 claws and remove the rear floor finish plate.

3. ADJUST LUGGAGE COMPARTMENT DOOR

(a) Horizontally and vertically adjust the door by loosening the door side hinge bolts.

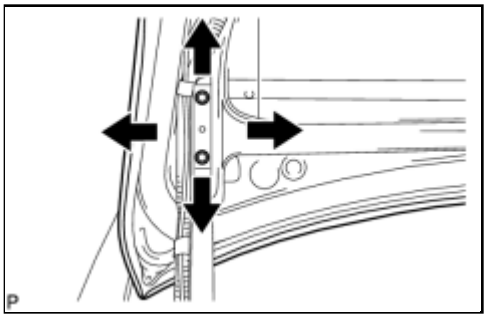

Torque: 7.5 N·m (77 kgf·cm, 66in·lbf)

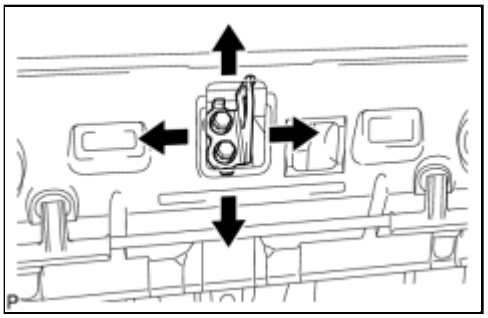

(b) Adjust the striker position by slightly loosening the striker mounting screws and hitting the striker with a plastic hammer.

(c) Tighten the striker mounting screws after the adjustment.

Torque: 5.5 N·m (56 kgf·cm, 49in·lbf)

4. INSTALL REAR FLOOR FINISH PLATE

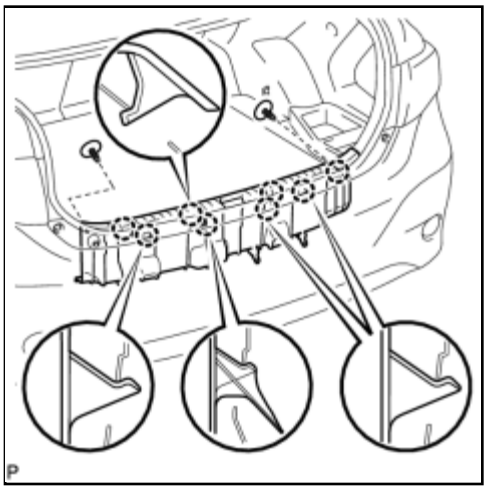

(a) Engage the 8 claws and install the rear floor finish plate.

(b) Install the 2 clips.

5. INSTALL SPARE WHEEL COVER

Last Modified: 3-10-2010	6.4 A	**From:** 200901
Model Year: 2010	**Model:** Corolla	**Doc ID:** RM000001OIN01JX
Title: DOOR / HATCH: LUGGAGE COMPARTMENT DOOR: REASSEMBLY (2010 Corolla)		

REASSEMBLY

1. **INSTALL LICENSE PLATE LIGHT ASSEMBLY** INFO

2. **INSTALL LUGGAGE DOOR OPENING SWITCH ASSEMBLY (w/ Smart Key System)** INFO

3. **INSTALL LUGGAGE COMPARTMENT DOOR OUTSIDE GARNISH SUB-ASSEMBLY** INFO

4. **INSTALL REAR LIGHT ASSEMBLY LH** INFO

5. **INSTALL REAR LIGHT ASSEMBLY RH**

HINT:

Use the same procedure for the RH side and the LH side.

6. **INSTALL LUGGAGE COMPARTMENT SIDE COVER LH** INFO

7. **INSTALL LUGGAGE COMPARTMENT SIDE COVER RH**

HINT:

Use the same procedure for the RH side and the LH side.

8. **INSTALL LUGGAGE COMPARTMENT DOOR LOCK CYLINDER ASSEMBLY (w/o Smart Key System)**

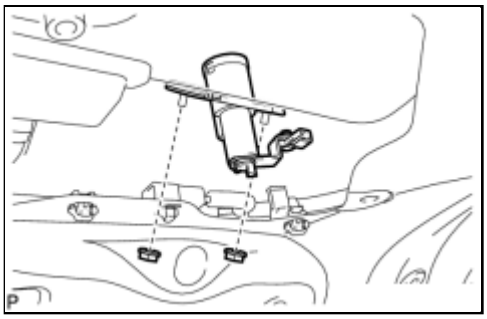

(a) Install the luggage compartment door lock cylinder with the 2 nuts.

9. **INSTALL LUGGAGE COMPARTMENT DOOR LOCK CYLINDER ASSEMBLY (w/ Smart Key System)**

(a) Install the luggage compartment door lock cylinder with the 2 nuts.

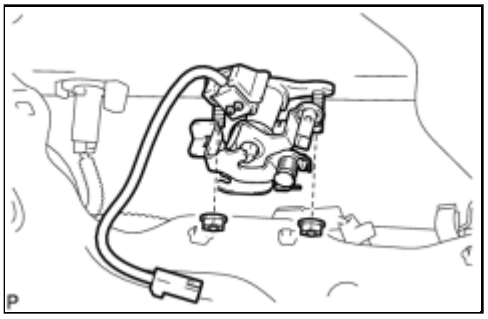

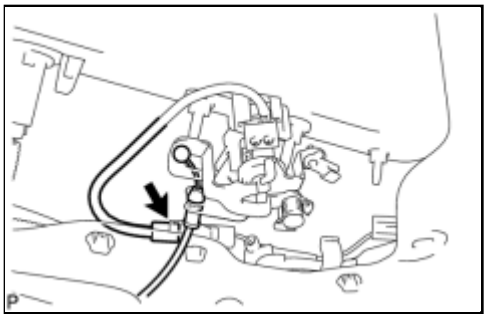

(b) Connect the luggage door lock control cable sub-assembly.

(c) Connect the connector.

10. INSTALL LUGGAGE COMPARTMENT DOOR LOCK ASSEMBLY (w/o Smart Key System) INFO

11. INSTALL LUGGAGE COMPARTMENT DOOR LOCK ASSEMBLY (w/ Smart Key System) INFO

12. INSTALL REAR SPOILER ASSEMBLY (w/ Rear Spoiler) INFO

13. INSTALL LUGGAGE COMPARTMENT DOOR COVER INFO

Last Modified: 3-10-2010	6.4 K	**From:** 200901
Model Year: 2010	**Model:** Corolla	**Doc ID:** RM000001OIV020X
Title: DOOR / HATCH: LUGGAGE COMPARTMENT DOOR OPENER OUTER SWITCH: COMPONENTS (2010 Corolla)		

COMPONENTS

ILLUSTRATION

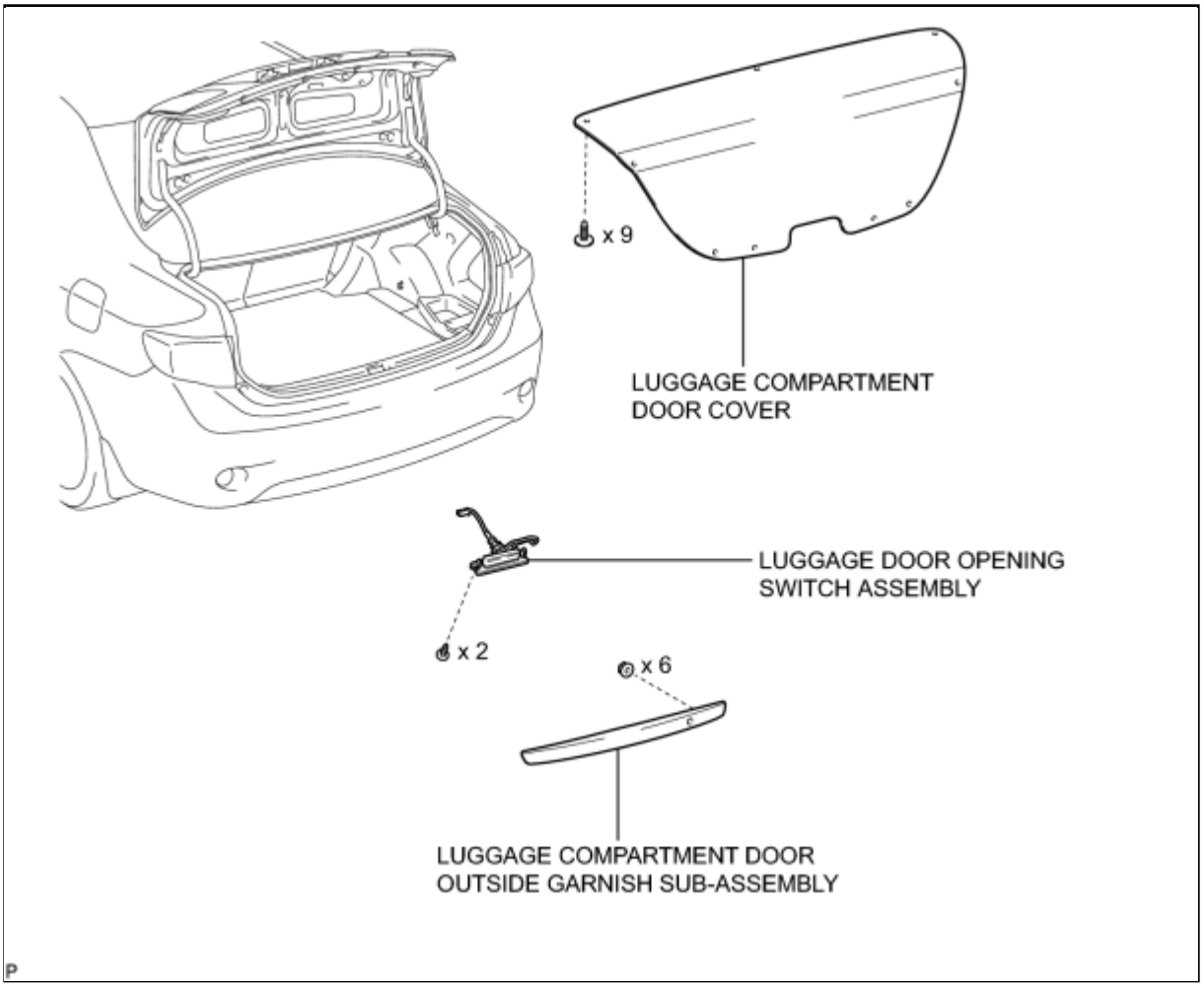

Last Modified: 3-10-2010	6.4 A	**From:** 200901
Model Year: 2010	**Model:** Corolla	**Doc ID:** RM000001OIW02HX
Title: DOOR / HATCH: LUGGAGE COMPARTMENT DOOR OPENER OUTER SWITCH: REMOVAL (2010 Corolla)		

REMOVAL

1. REMOVE LUGGAGE COMPARTMENT DOOR COVER INFO

2. REMOVE LUGGAGE COMPARTMENT DOOR OUTSIDE GARNISH SUB-ASSEMBLY INFO

3. REMOVE LUGGAGE DOOR OPENING SWITCH ASSEMBLY

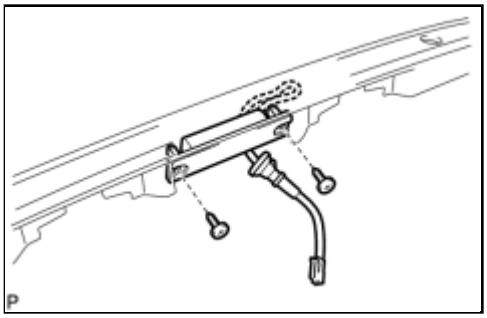

(a) Remove the 2 screws and the luggage door opening switch assembly.

Last Modified: 3-10-2010	6.4 G	**From:** 200901
Model Year: 2010	**Model:** Corolla	**Doc ID:** RM000001UM2013X
Title: DOOR / HATCH: LUGGAGE COMPARTMENT DOOR OPENER OUTER SWITCH: INSPECTION (2010 Corolla)		

INSPECTION

1. INSPECT LUGGAGE COMPARTMENT DOOR OPENER OUTER SWITCH

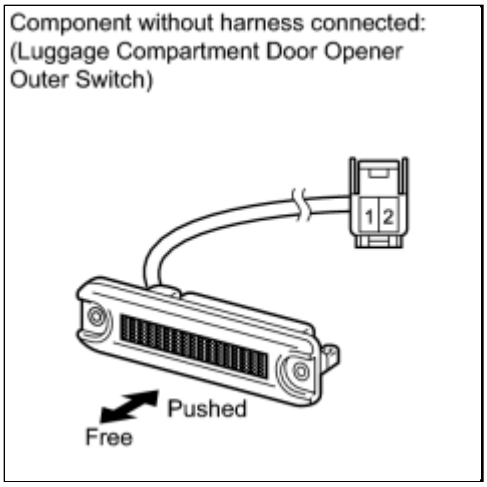

(a) Measure the resistance according to the value(s) in the table below.

Standard Resistance:

TESTER CONNECTION	SWITCH CONDITION	SPECIFIED CONDITION
1 - 2	Luggage compartment opener outer switch not pushed (OFF)	10 kΩ or higher
1 - 2	Luggage compartment opener outer switch pushed (ON)	Below 1 Ω

If the result is not specified, replace the luggage compartment door opener outer switch.

Last Modified: 3-10-2010	6.4 A	**From:** 200901
Model Year: 2010	**Model:** Corolla	**Doc ID:** RM000001OIU02GX
Title: DOOR / HATCH: LUGGAGE COMPARTMENT DOOR OPENER OUTER SWITCH: INSTALLATION (2010 Corolla)		

INSTALLATION

1. INSTALL LUGGAGE DOOR OPENING SWITCH ASSEMBLY

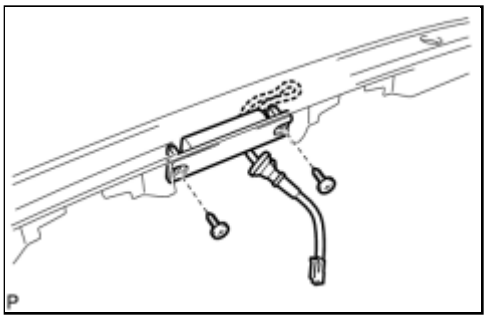

(a) Install the luggage door opening switch assembly with the 2 screws.

2. INSTALL LUGGAGE COMPARTMENT DOOR OUTSIDE GARNISH SUB-ASSEMBLY INFO

3. INSTALL LUGGAGE COMPARTMENT DOOR COVER INFO

Last Modified: 3-10-2010	6.4 A	**From:** 200901
Model Year: 2010	**Model:** Corolla	**Doc ID:** RM0000011RX01VX
Title: DOOR / HATCH: REAR DOOR: DISASSEMBLY (2010 Corolla)		

DISASSEMBLY

1. DISCONNECT CABLE FROM NEGATIVE BATTERY TERMINAL

2. REMOVE REAR DOOR WINDOW REGULATOR HANDLE ASSEMBLY (w/o Power Window)

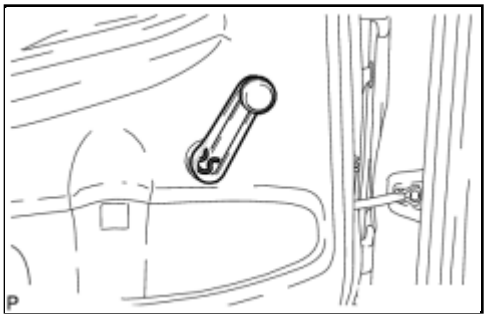

(a) Using a clip remover, remove the snap ring.

(b) Remove the rear door window regulator handle assembly and rear door regulator inside handle plate.

3. REMOVE REAR DOOR INSIDE HANDLE BEZEL

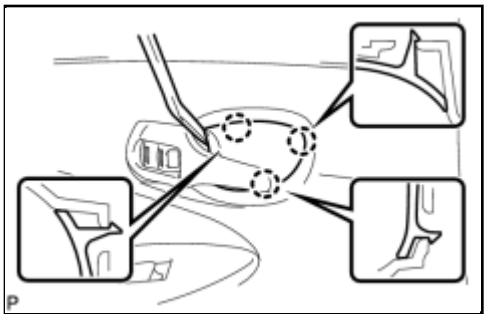

(a) Using a moulding remover, disengage the 3 claws and remove the rear door inside handle bezel.

4. REMOVE REAR DOOR ARMREST UPPER BASE PANEL (w/o Power Window)

(a) Using a moulding remover, disengage the 2 clips and 7 claws, and remove the rear door armrest upper base panel.

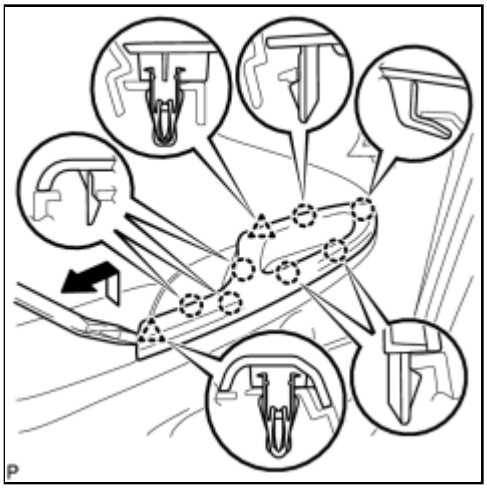

5. REMOVE REAR DOOR ARMREST UPPER BASE PANEL (w/ Power Window)

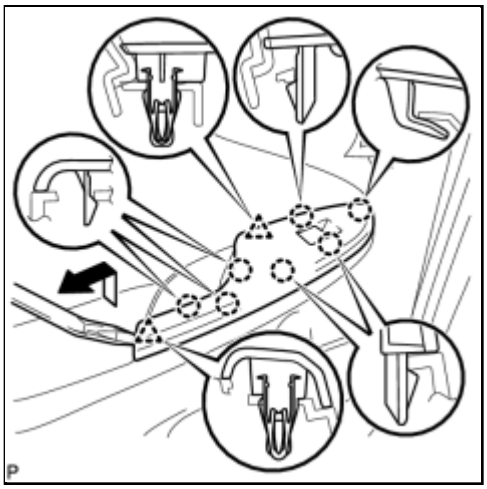

(a) Using a moulding remover, disengage the 2 clips and 7 claws.

(b) Disconnect the connector and remove the rear door armrest upper base panel.

6. REMOVE REAR POWER WINDOW REGULATOR SWITCH ASSEMBLY (w/ Power Window)

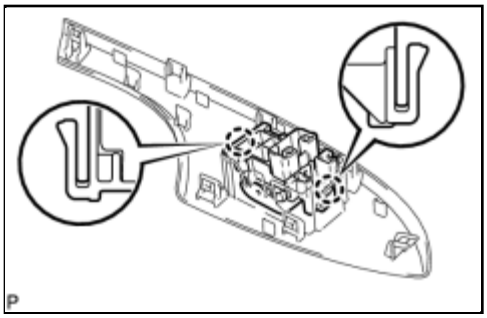

(a) Using a screwdriver with its tip wrapped with protective tape, disengage the 2 claws and remove the rear power window regulator switch assembly.

7. REMOVE REAR DOOR TRIM BOARD SUB-ASSEMBLY



(a) Using a screwdriver with its tip wrapped with protective tape, disengage the claw and disconnect the door armrest cap.

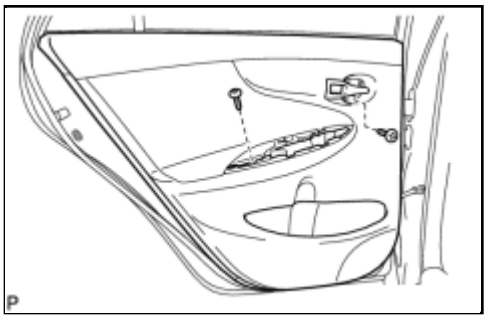

(b) Remove the 2 screws.

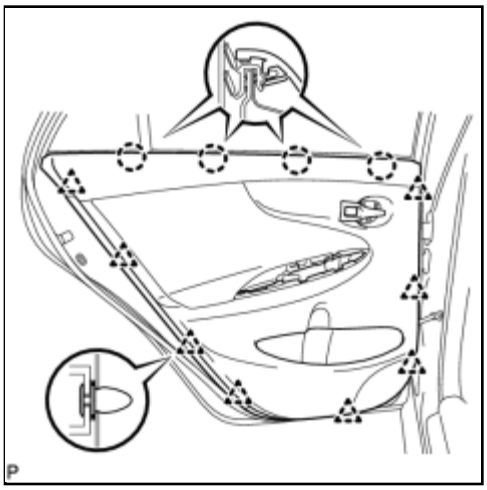

(c) Using a clip remover, disengage the 8 clips.

(d) Disengage the 4 claws and separate the rear door trim board sub-assembly from the rear door inner glass weatherstrip.

(e) Disengage the 2 claws and disconnect the rear door inside handle sub-assembly.

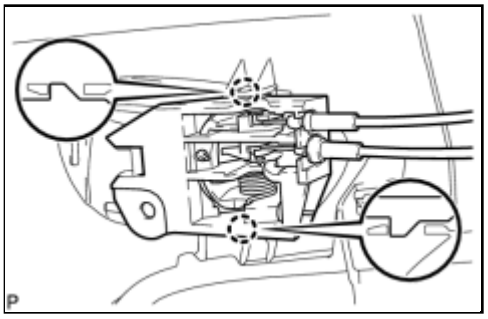

8. REMOVE REAR DOOR INSIDE HANDLE SUB-ASSEMBLY

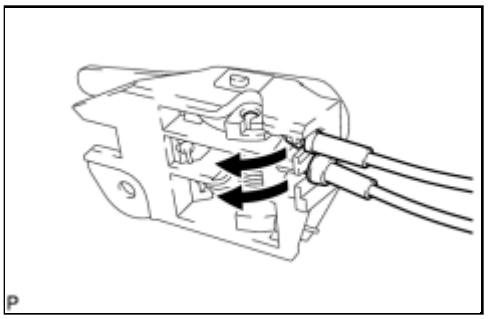

(a) Disconnect the rear door lock remote control cable and rear door inside locking cable, and remove the rear door inside handle sub-assembly.

9. REMOVE REAR DOOR INNER GLASS WEATHERSTRIP

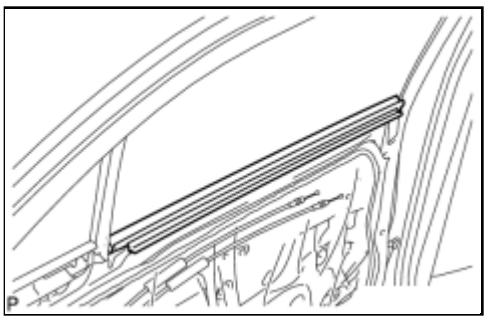

(a) Remove the rear door inner glass weatherstrip from the rear door panel.

10. REMOVE REAR DOOR TRIM BRACKET

(a) Remove the 2 screws and the rear door trim bracket.

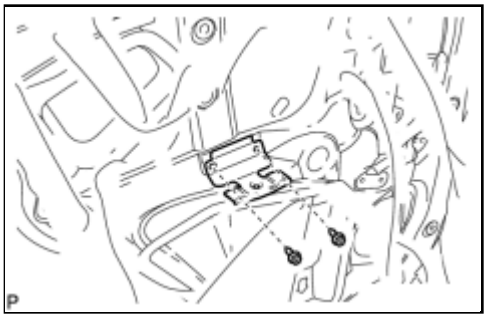

11. REMOVE REAR DOOR SERVICE HOLE COVER

(a) w/ Power door lock:

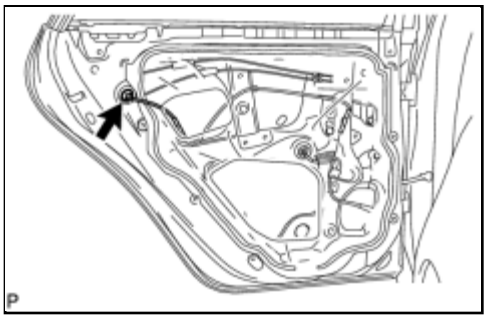

(1) Disconnect the connector.

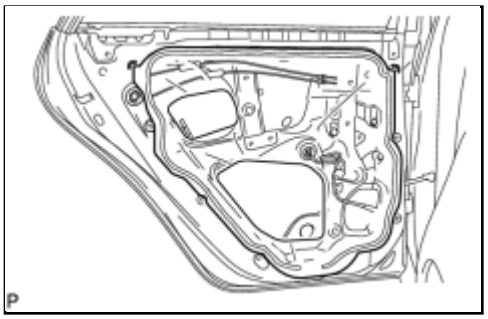

(b) Remove the rear door service hole cover.

HINT:

Remove any remaining butyl tape from the door.

12. REMOVE REAR DOOR CHECK ASSEMBLY

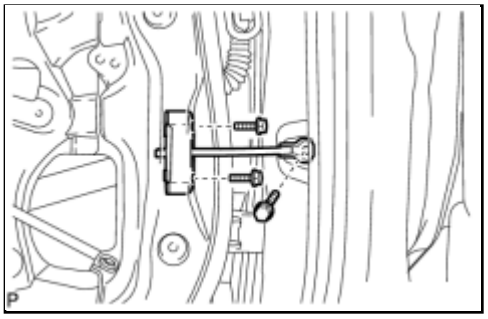

(a) Remove the 3 bolts and the rear door check assembly.

13. REMOVE REAR DOOR WEATHERSTRIP

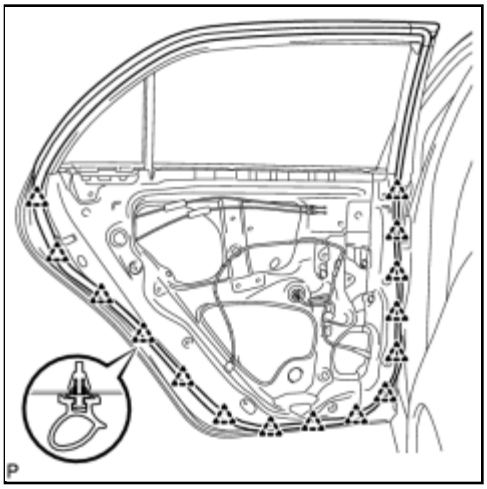

(a) Using a clip remover, disengage the 15 clips and remove the rear door weatherstrip.

14. REMOVE REAR DOOR GLASS RUN

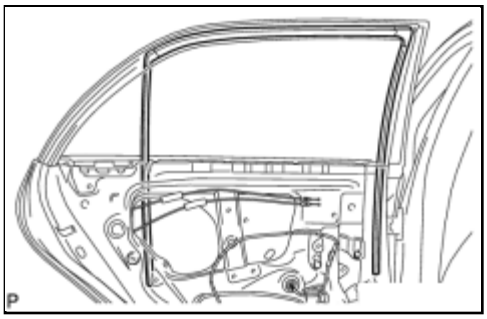

(a) Remove the rear door glass run.

15. REMOVE REAR DOOR FRAME GARNISH

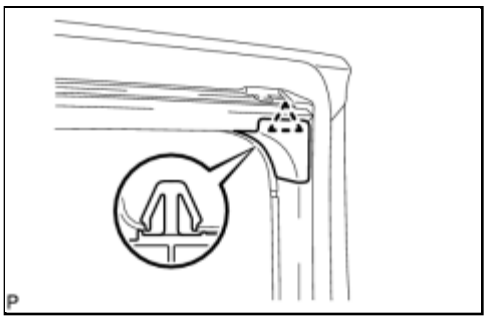

(a) Disengage the clip and remove the rear door frame garnish.

HINT:

This garnish needs to be replaced with a new one because the clip will break when removing the rear door frame garnish.

16. REMOVE REAR DOOR WINDOW DIVISION BAR SUB-ASSEMBLY

(a) Remove the 2 bolts, screw, and the rear door window

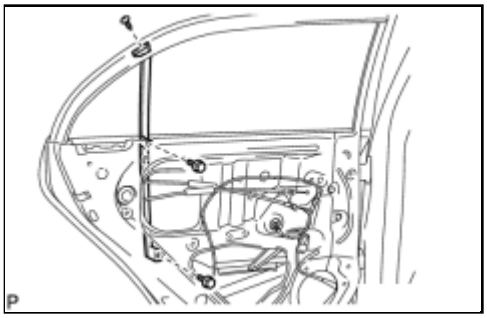

division bar sub-assembly.

17. REMOVE REAR DOOR QUARTER WINDOW GLASS

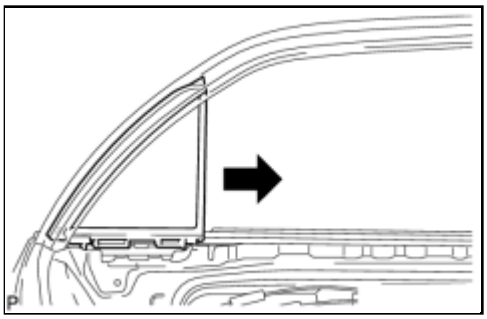

(a) Remove the rear door quarter window glass and the rear door quarter window weatherstrip as a unit as shown in the illustration.

(b) Remove the rear door quarter window glass from the rear door quarter window weatherstrip.

18. REMOVE REAR DOOR GLASS SUB-ASSEMBLY

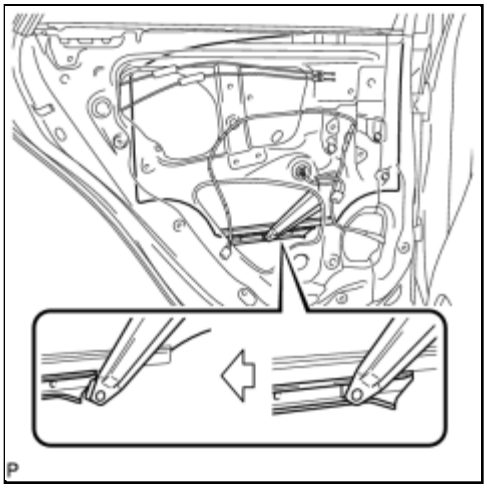

(a) Remove the rear door glass sub-assembly from the rear door window regulator sub-assembly as shown in the illustration.

NOTICE:

Do not damage the door glass.

19. REMOVE REAR DOOR WINDOW REGULATOR ASSEMBLY (w/o Power Window)

(a) Remove the 3 bolts and the rear door window regulator assembly.

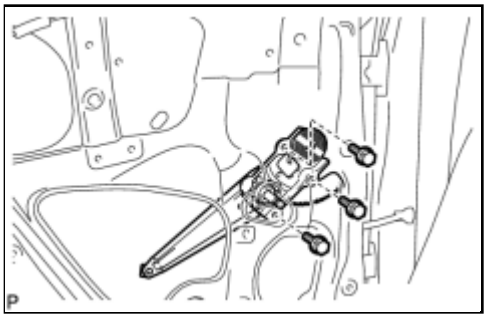

20. REMOVE REAR DOOR WINDOW REGULATOR SUB-ASSEMBLY (w/ Power Window)

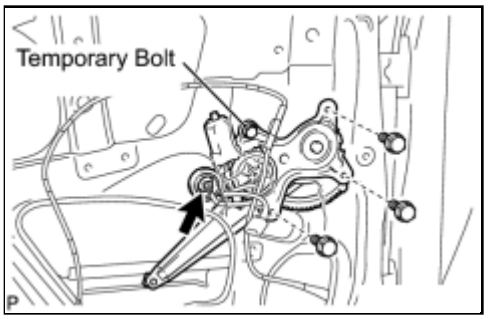

(a) Disconnect the connector.

(b) Loosen the temporary bolt.

NOTICE:

Do not remove the temporary bolt. If the temporary bolt is removed, the rear door window regulator may fall and cause damage.

(c) Remove the 3 bolts.

(d) Remove the rear door window regulator sub-assembly and the rear power window regulator motor assembly as a unit.

(e) Remove the temporary bolt from the rear door window regulator sub-assembly.

21. REMOVE REAR POWER WINDOW REGULATOR MOTOR ASSEMBLY (w/ Power Window)

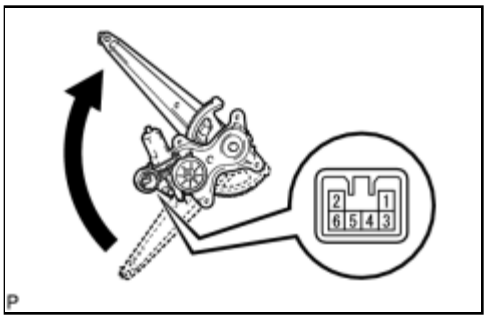

(a) Connect a positive (+) lead from the battery to terminal 1, and a negative (-) lead to terminal 2 of the rear power window regulator motor assembly to move the lift arm to the position shown in the illustration.

(b) Using a "TORX" socket wrench (T25), remove the 3

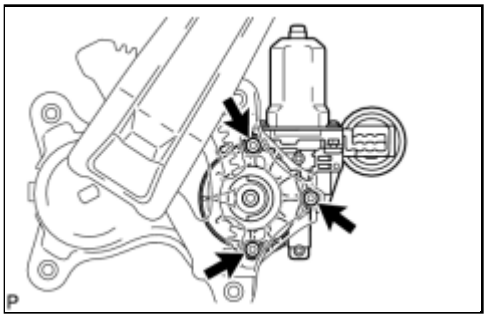

screws and the rear power window regulator motor assembly.

22. REMOVE SEPARATOR DOOR NO. 2 STIFFENER CUSHION

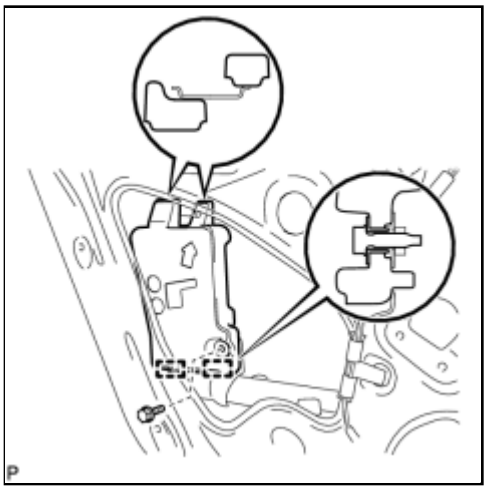

(a) Remove the bolt.

(b) Disengage the 2 guides and separator door No. 2 stiffener cushion.

23. REMOVE REAR DOOR LOCK ASSEMBLY (w/o Power Door Lock)

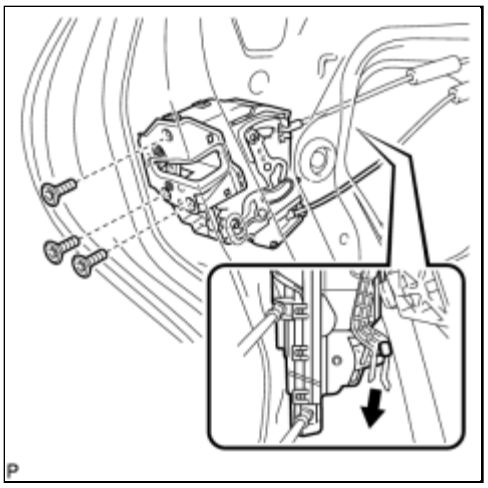

(a) Using a "TORX" socket wrench (T30), remove the 3 screws.

(b) Move the rear door lock assembly downward and pull the release plate out of the rear door outside handle frame.

24. REMOVE REAR DOOR LOCK ASSEMBLY (w/ Power Door Lock)

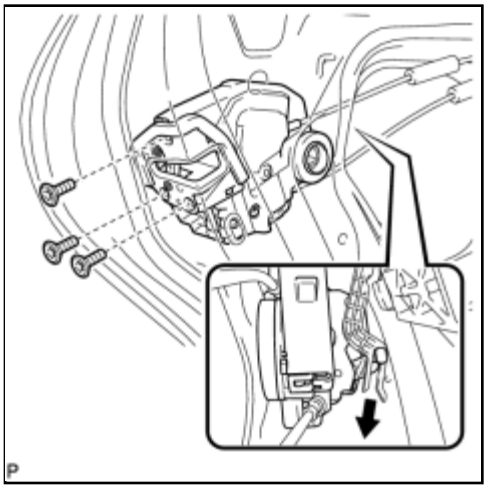

(a) Using a "TORX" socket wrench (T30), remove the 3 screws.

(b) Move the rear door lock assembly downward and pull the release plate out of the rear door outside handle frame.

(c) Remove the door lock wiring harness seal from the rear door lock assembly.

25. REMOVE REAR DOOR LOCK REMOTE CONTROL CABLE ASSEMBLY (w/o Power Door Lock)

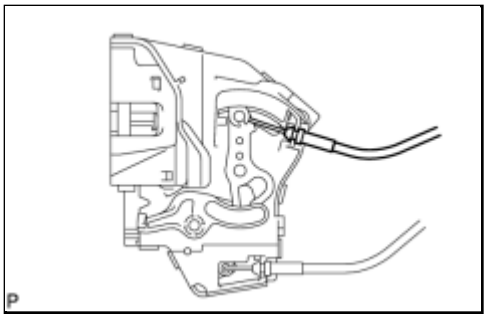

(a) Remove the rear door lock remote control cable assembly.

26. REMOVE REAR DOOR LOCK REMOTE CONTROL CABLE ASSEMBLY (w/ Power Door Lock)

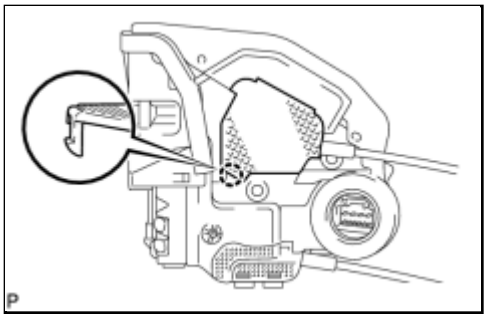

(a) Using a screwdriver, disengage the claw.

HINT:

Tape the screwdriver tip before use.

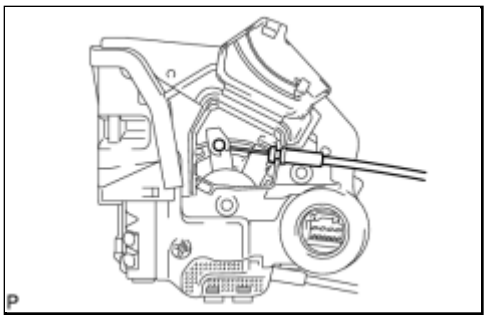

(b) Remove the rear door lock remote control cable assembly.

27. REMOVE REAR DOOR INSIDE LOCKING CABLE ASSEMBLY (w/o Power Door Lock)

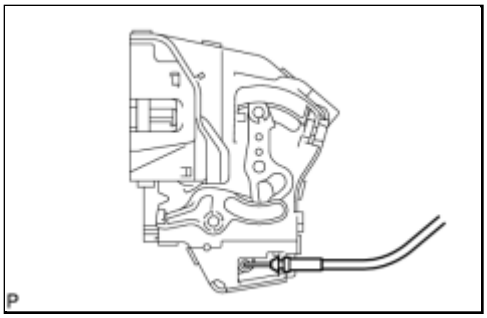

(a) Remove the rear door inside locking cable assembly.

28. REMOVE REAR DOOR INSIDE LOCKING CABLE ASSEMBLY (w/ Power Door Lock)

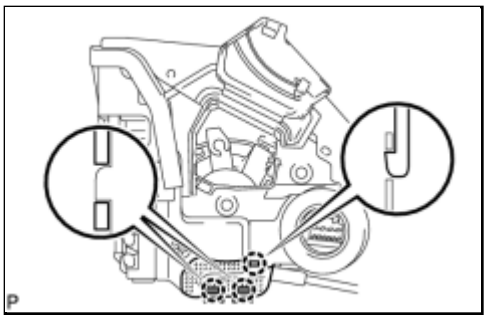

(a) Using a screwdriver, disengage the 3 claws.

HINT:

Tape the screwdriver tip before use.

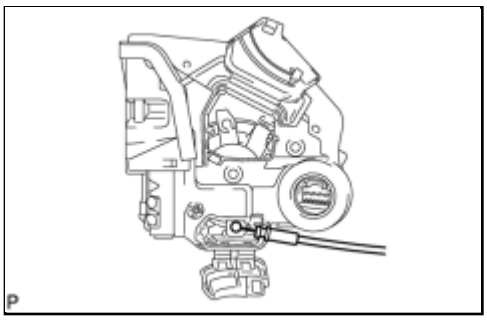

(b) Remove the rear door inside locking cable assembly.

29. REMOVE REAR DOOR OUTSIDE HANDLE COVER

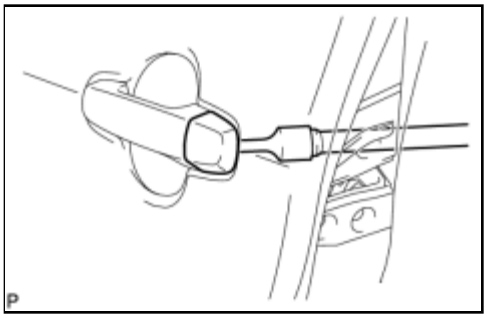

(a) Using a "TORX" socket wrench (T30), loosen the screw.

HINT:

The screw cannot be removed because it is integrated into the rear door outside handle frame sub-assembly.

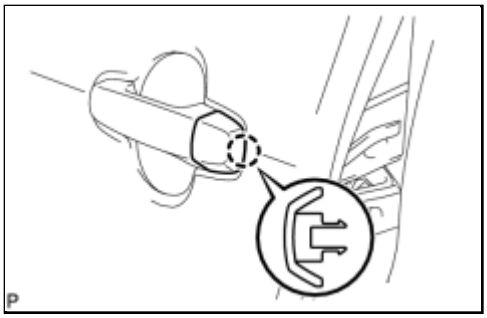

(b) Disengage the claw and remove the rear door outside handle cover.

30. REMOVE REAR DOOR OUTSIDE HANDLE ASSEMBLY

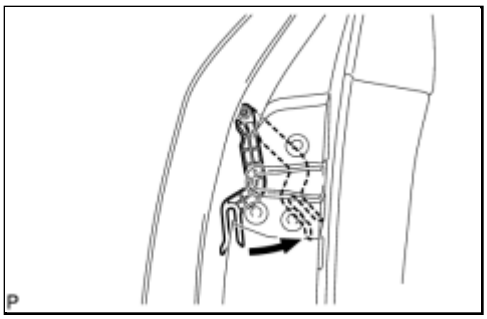

(a) Pull and hold the release plate of the rear door outside handle frame sub-assembly as shown in the illustration.

NOTICE:

The release plate may interfere with the rear door outside handle assembly and may be damaged when removing the rear door outside handle assembly, unless the release plate of the rear door outside handle frame sub-assembly is pulled and held.

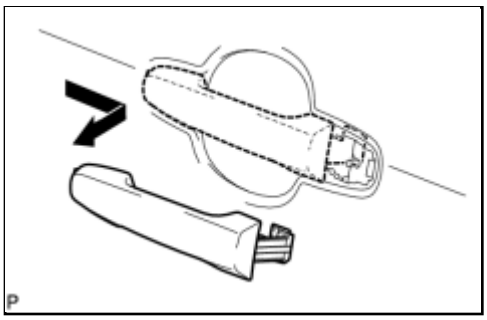

(b) Remove the rear door outside handle assembly as shown in the illustration.

31. REMOVE REAR DOOR FRONT OUTSIDE HANDLE PAD

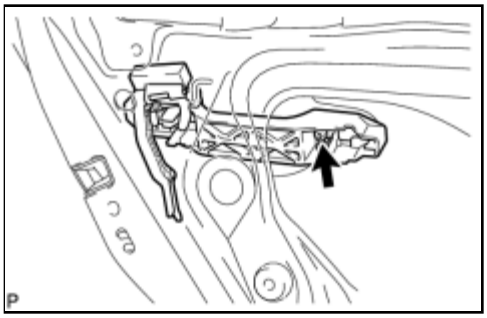

(a) Using a "TORX" socket wrench (T30), remove the screw.

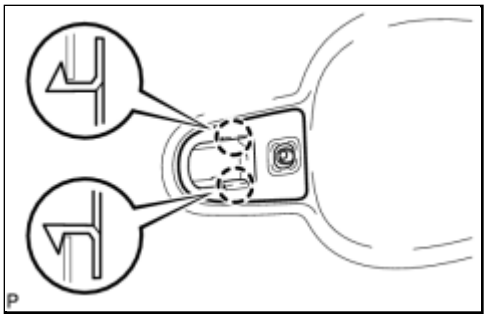

(b) Disengage the 2 claws and remove the rear door front outside handle pad.

32. REMOVE REAR DOOR REAR OUTSIDE HANDLE PAD

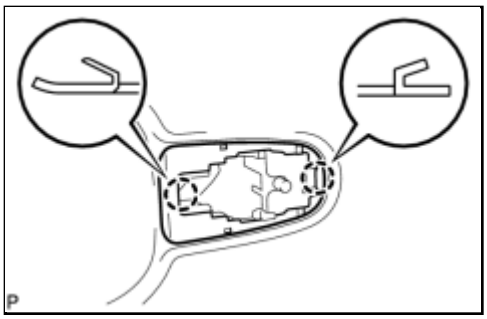

(a) Disengage the 2 claws and remove the rear door rear outside handle pad.

33. REMOVE REAR DOOR OUTSIDE HANDLE FRAME SUB-ASSEMBLY

(a) Disengage the 2 claws (B).

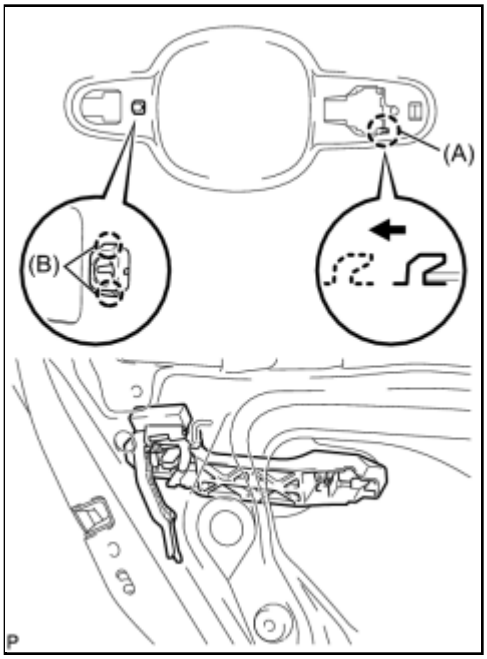

(b) Disengage the claw (A) and remove the rear door outside handle frame sub-assembly.

34. REMOVE REAR DOOR BELT MOULDING ASSEMBLY INFO

35. REMOVE NO. 2 BLACK OUT TAPE (w/ Black Out Tape) INFO

Last Modified: 3-10-2010	6.4 K	**From:** 200901
Model Year: 2010	**Model:** Corolla	**Doc ID:** RM000001CQ900YX
Title: DOOR / HATCH: LUGGAGE DOOR HINGE TORSION BAR: COMPONENTS (2010 Corolla)		

COMPONENTS

ILLUSTRATION

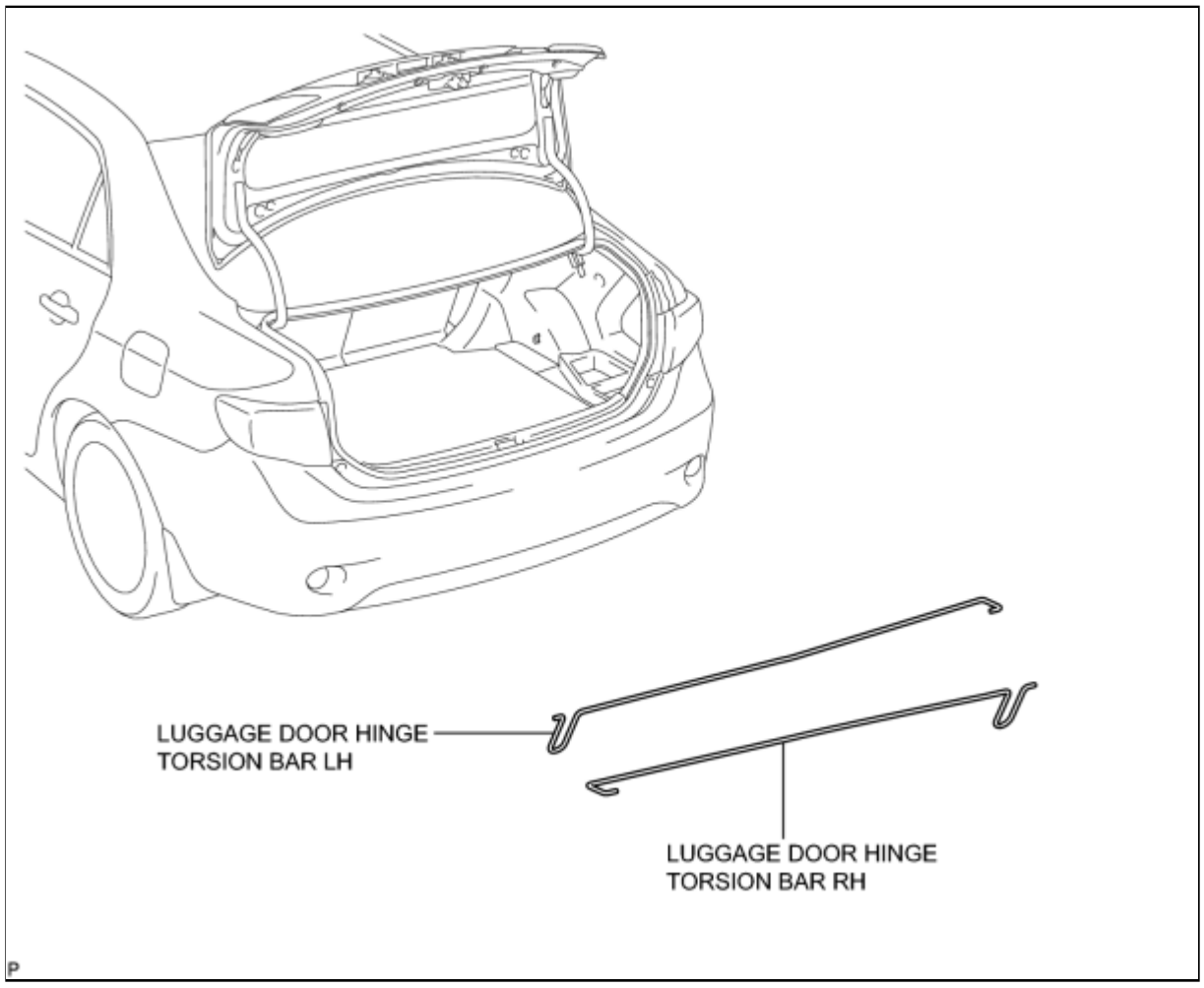

Last Modified: 3-10-2010	6.4 A	**From:** 200901
Model Year: 2010	**Model:** Corolla	**Doc ID:** RM00000194Z015X
Title: DOOR / HATCH: LUGGAGE DOOR HINGE TORSION BAR: REMOVAL (2010 Corolla)		

REMOVAL

1. REMOVE LUGGAGE DOOR HINGE TORSION BAR LH

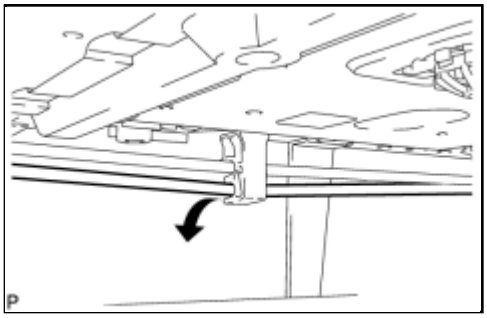

(a) Disconnect the luggage door hinge torsion bar LH from the luggage compartment door torsion bar support as shown in the illustration.

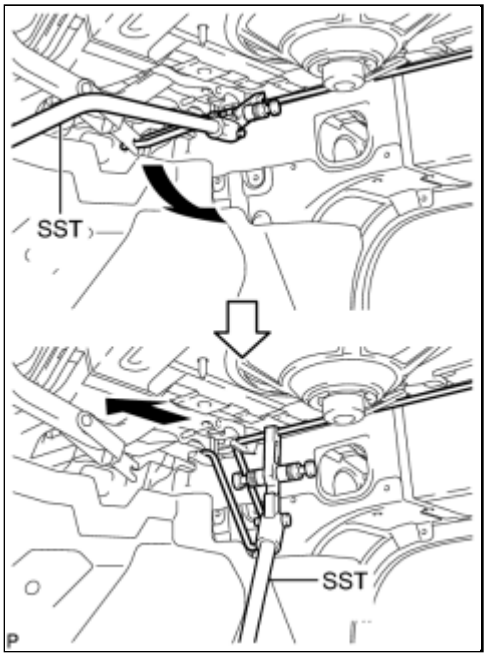

(b) Using SST, disconnect the left end of the luggage door hinge torsion bar LH from the luggage door hinge and the vehicle body as shown in the illustration.

SST: 09804-24010

(c) Disconnect the right end of the luggage door hinge torsion bar LH and remove it from the vehicle body as shown in the illustration.

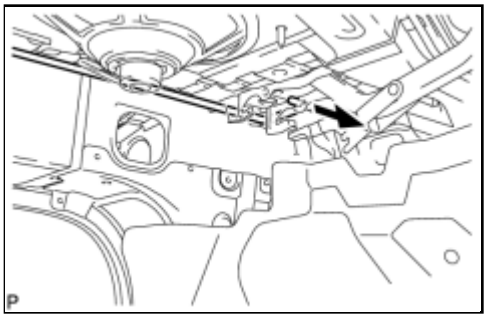

2. REMOVE LUGGAGE DOOR HINGE TORSION BAR RH

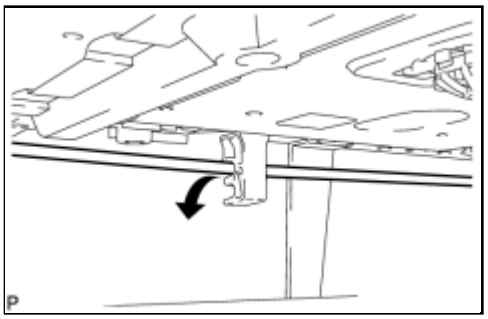

(a) Disconnect the luggage door hinge torsion bar RH from the luggage compartment door torsion bar support as shown in the illustration.

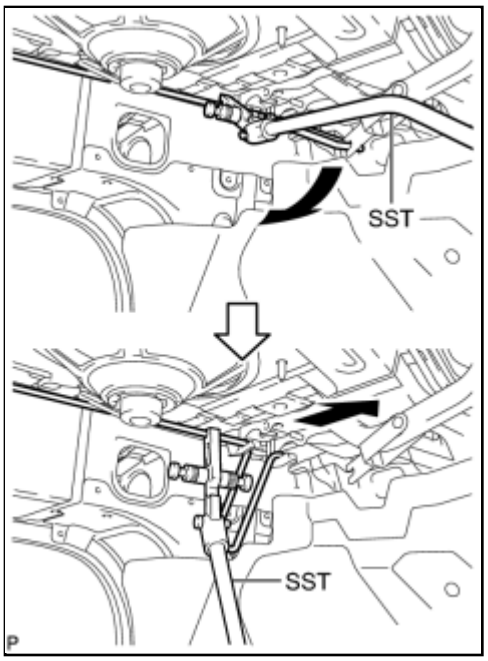

(b) Using SST, disconnect the right end of the luggage door hinge torsion bar RH from the luggage door hinge and the vehicle body as shown in the illustration.

SST: 09804-24010

(c) Disconnect the left end of the luggage door hinge torsion bar RH and remove it from the vehicle body as shown in the illustration.

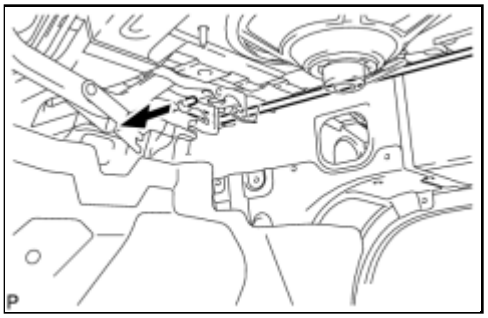
P

Last Modified: 3-10-2010	6.4 A	**From:** 200901
Model Year: 2010	**Model:** Corolla	**Doc ID:** RM00000194Y015X
Title: DOOR / HATCH: LUGGAGE DOOR HINGE TORSION BAR: INSTALLATION (2010 Corolla)		

INSTALLATION

HINT:

- Install the RH side first, then the LH side.
- After installing the torsion bar, use your hand to open and close the luggage door. Make sure that the luggage door can be opened and closed smoothly.

1. INSTALL LUGGAGE DOOR HINGE TORSION BAR RH

(a) Check the identification mark on the luggage door hinge torsion bar RH.

for TMC Made:
When replacing the luggage door hinge torsion bar RH with a new one:
Pink
When reusing the luggage door hinge torsion bar RH:
Red
for TMMC, NUMMI Made without Rear Spoiler:
Red
for TMMC, NUMMI Made with Rear Spoiler:
Yellow

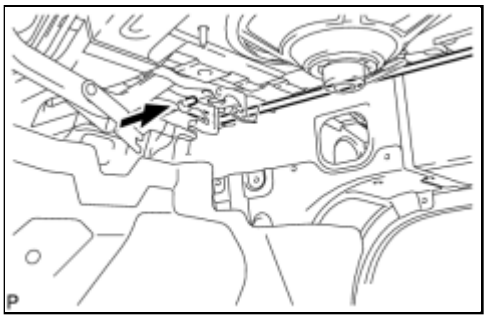

(b) Connect the left end of the luggage door hinge torsion bar RH to the vehicle body as shown in the illustration.

(c) Using SST, connect the right end of the luggage door hinge torsion bar RH to install it on the vehicle body as shown in the illustration.

SST: 09804-24010

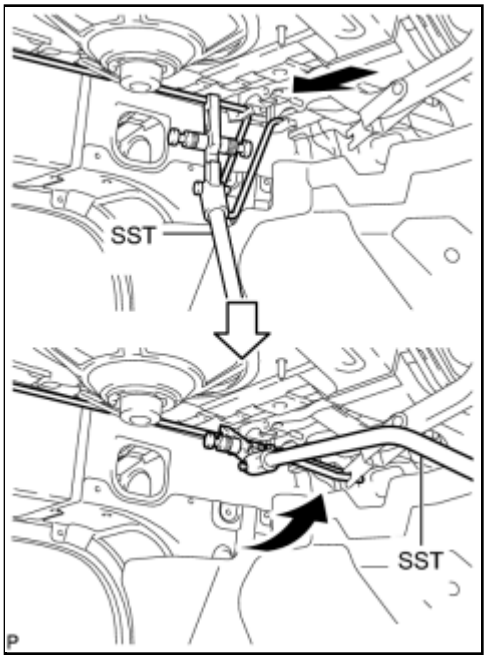

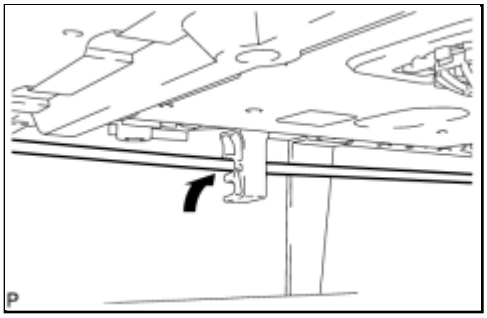

(d) Connect the luggage door hinge torsion bar RH to the luggage compartment door torsion bar support as shown in the illustration.

2. INSTALL LUGGAGE DOOR HINGE TORSION BAR LH

(a) Check the identification mark on the luggage door hinge torsion bar LH.

for TMC Made:
When replacing the luggage door hinge torsion bar LH with a new one:
Orange
When reusing the luggage door hinge torsion bar LH:
Light Blue
for TMMC, NUMMI Made without Rear Spoiler:
Light Blue
for TMMC, NUMMI Made with Rear Spoiler:
White

(b) Connect the right end of the luggage door hinge torsion bar LH to the vehicle body as shown in the illustration.

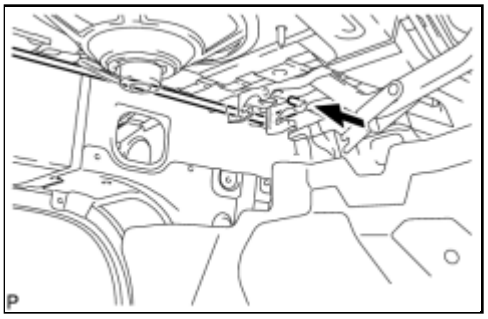

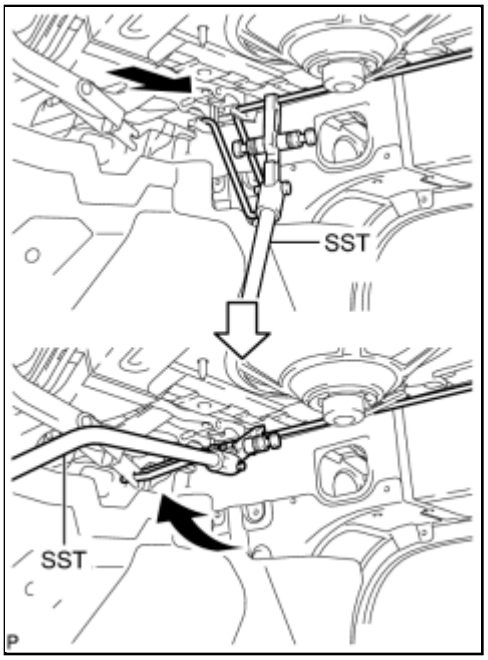

(c) Using SST, connect the left end of the luggage door hinge torsion bar LH to install it on the vehicle body as shown in the illustration.

SST: 09804-24010

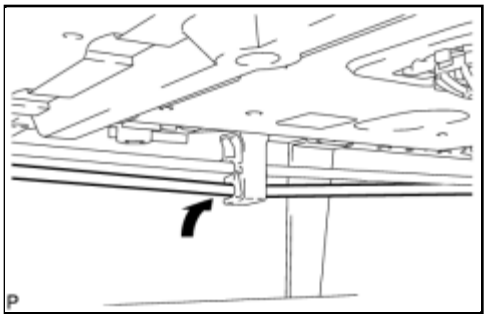

(d) Connect the luggage door hinge torsion bar LH to the luggage compartment door torsion bar support as shown in the illustration.

Last Modified: 3-10-2010	6.4 K	**From:** 200901
Model Year: 2010	**Model:** Corolla	**Doc ID:** RM000000XBE01QX
Title: DOOR / HATCH: REAR DOOR: COMPONENTS (2010 Corolla)		

COMPONENTS

ILLUSTRATION

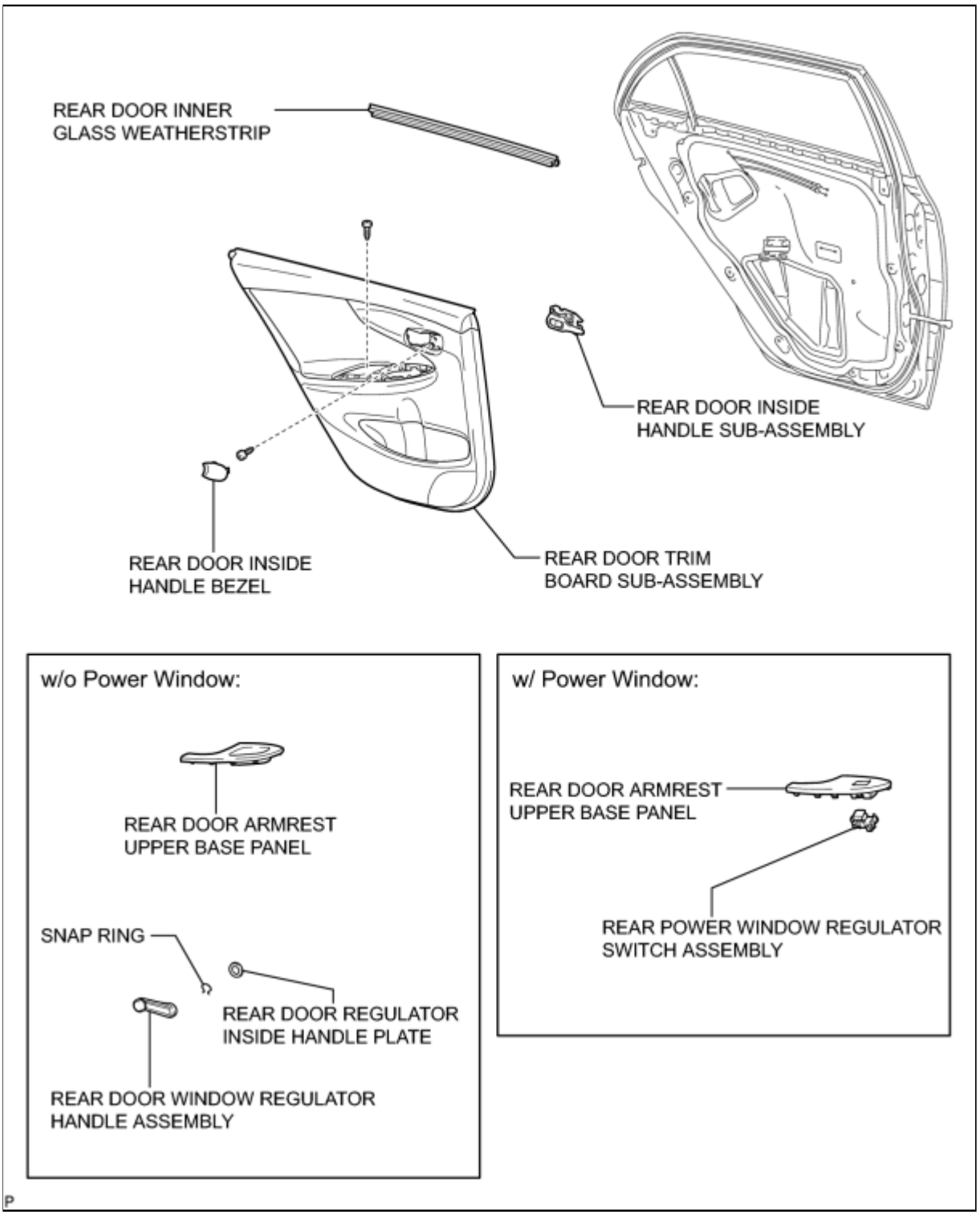

ILLUSTRATION

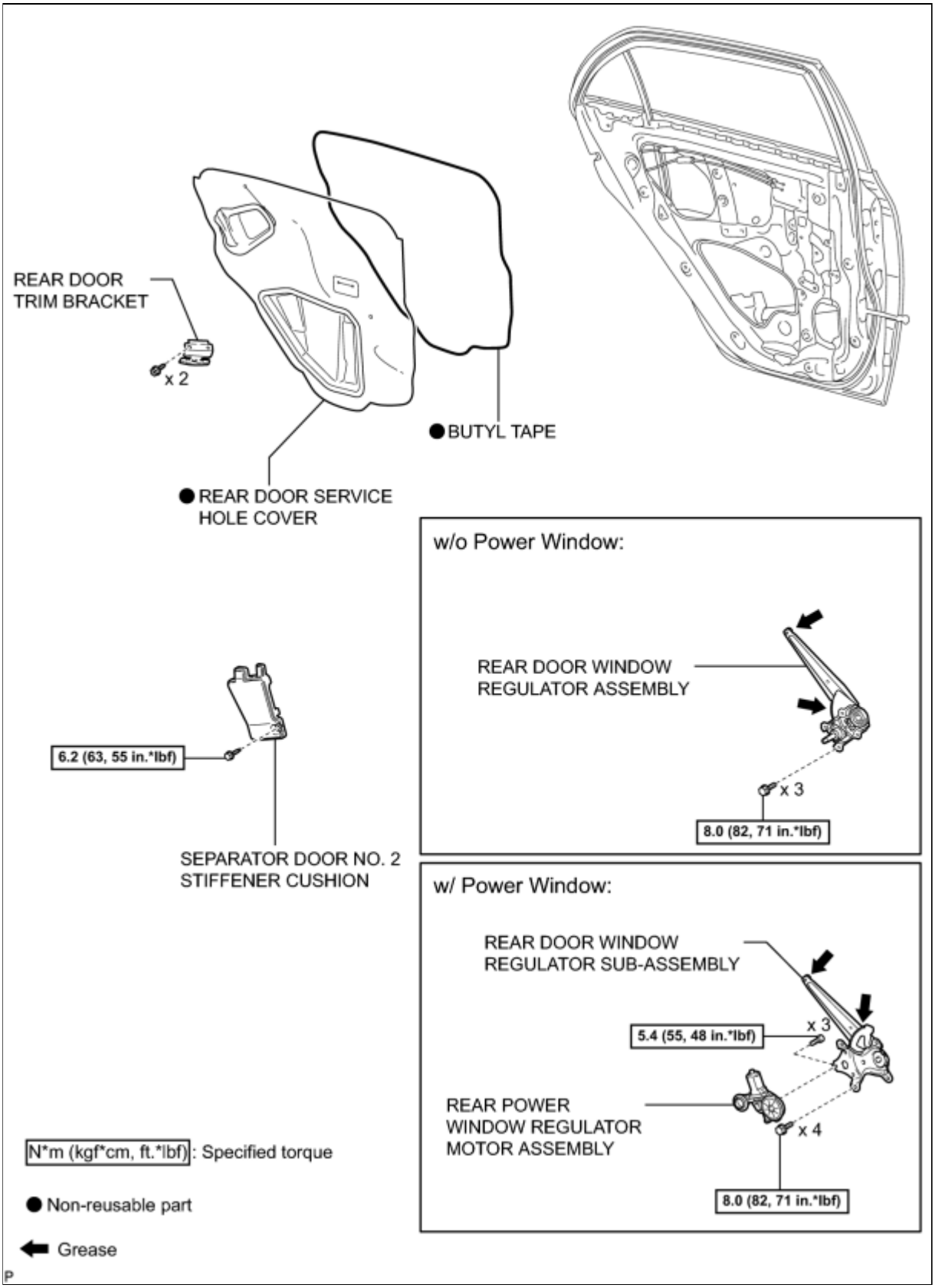

ILLUSTRATION

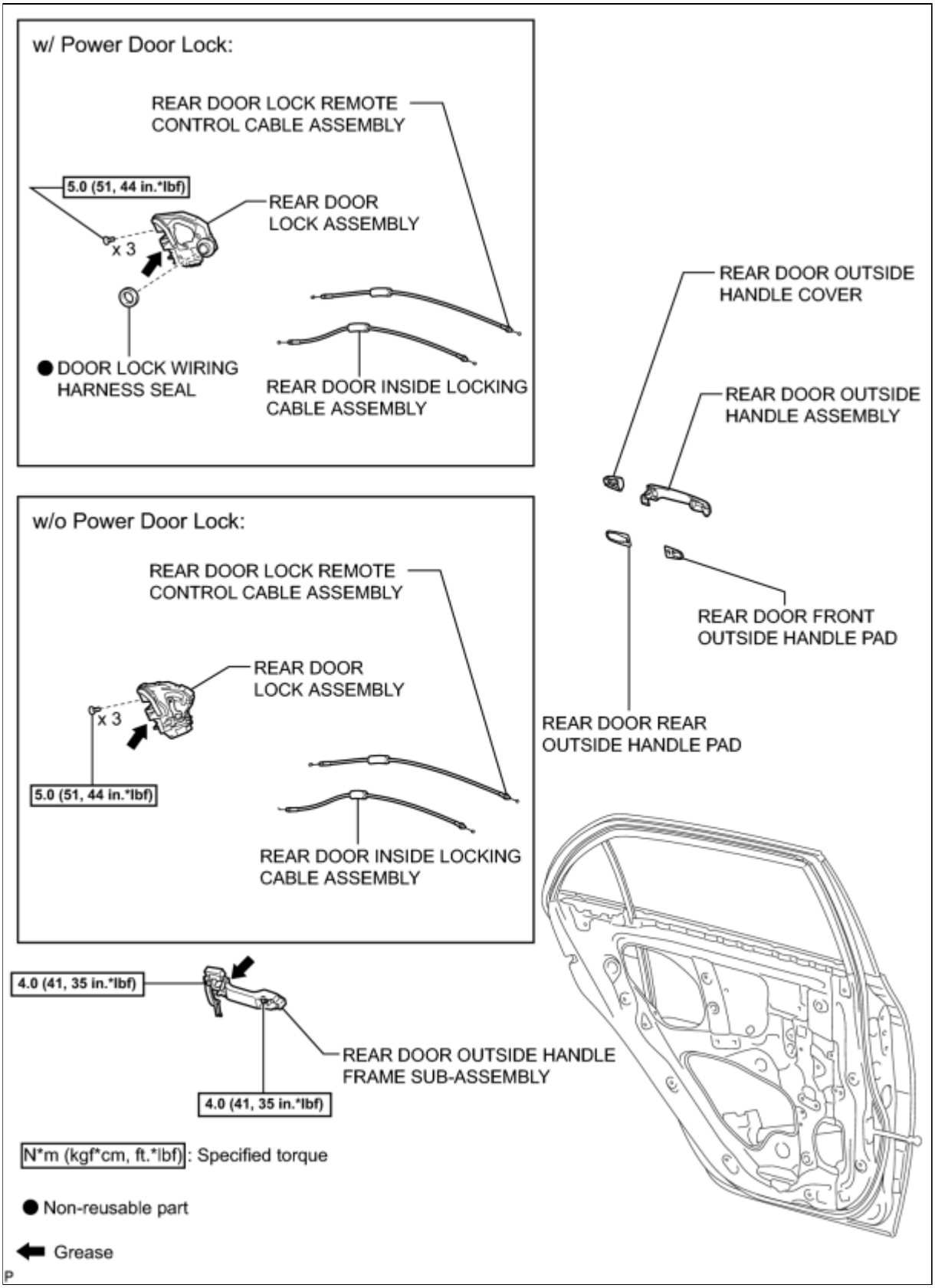

ILLUSTRATION

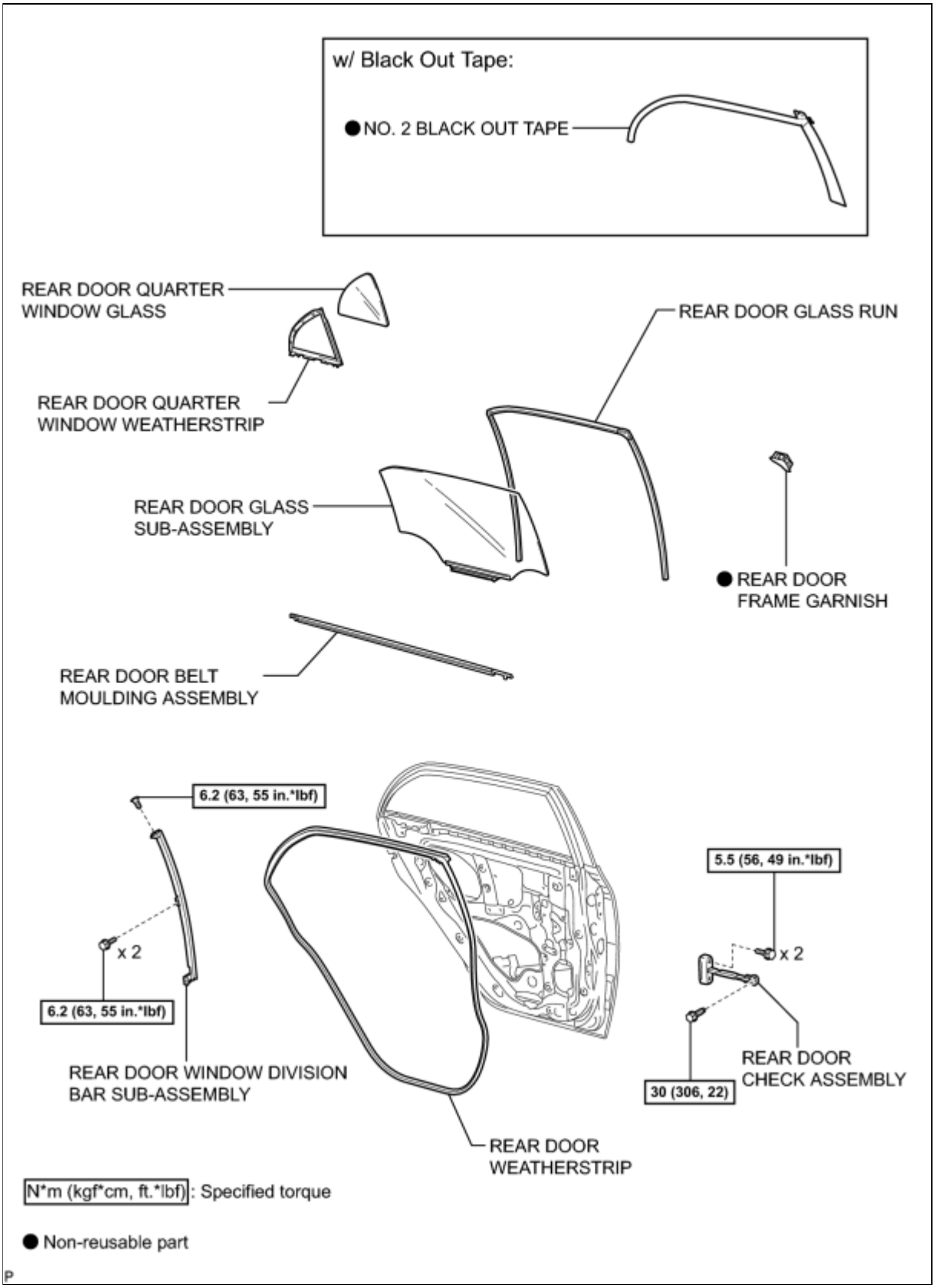

Last Modified: 3-10-2010	6.4 A	**From:** 200901
Model Year: 2010	**Model:** Corolla	**Doc ID:** RM0000011RY01VX
Title: DOOR / HATCH: REAR DOOR: REASSEMBLY (2010 Corolla)		

REASSEMBLY

1. REPAIR INSTRUCTION (w/ Black Out Tape) INFO

2. INSTALL NO. 2 BLACK OUT TAPE (w/ Black Out Tape) INFO

3. INSTALL REAR DOOR BELT MOULDING ASSEMBLY INFO

4. INSTALL REAR DOOR OUTSIDE HANDLE FRAME SUB-ASSEMBLY

(a) Apply MP grease to the sliding parts of the rear door outside handle frame sub-assembly.

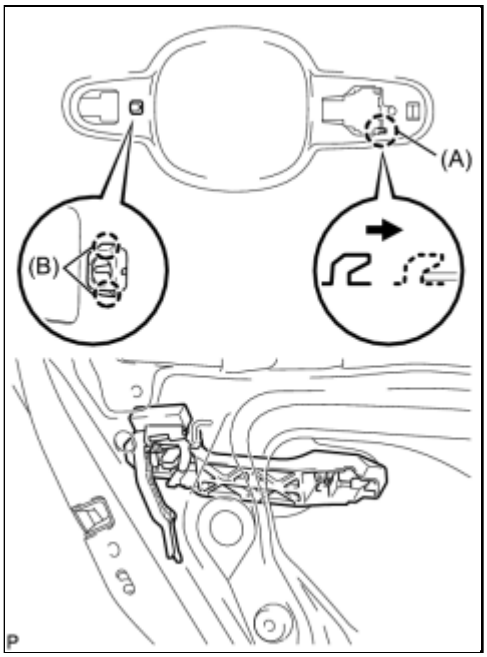

(b) Engage the claw (A) and install the rear door outside handle frame sub-assembly.

(c) Engage the 2 claws (B).

5. INSTALL REAR DOOR REAR OUTSIDE HANDLE PAD

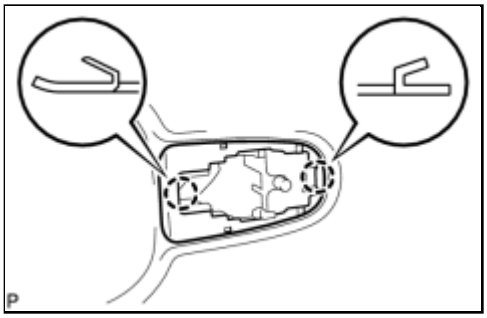

(a) Engage the 2 claws and install the rear door rear outside handle pad.

6. INSTALL REAR DOOR FRONT OUTSIDE HANDLE PAD

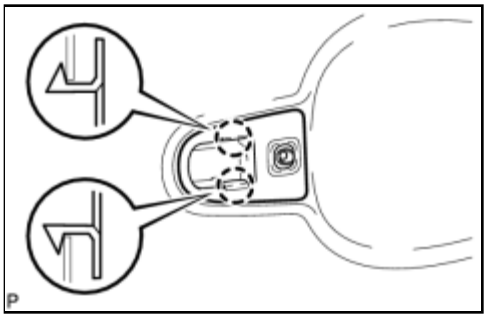

(a) Engage the 2 claws and install the rear door front outside handle pad.

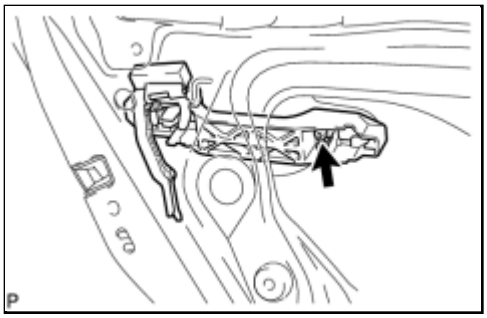

(b) Using a "TORX" socket wrench (T30), install the screw.

Torque: 4.0 N·m (41 kgf·cm, 35in·lbf)

7. INSTALL REAR DOOR OUTSIDE HANDLE ASSEMBLY

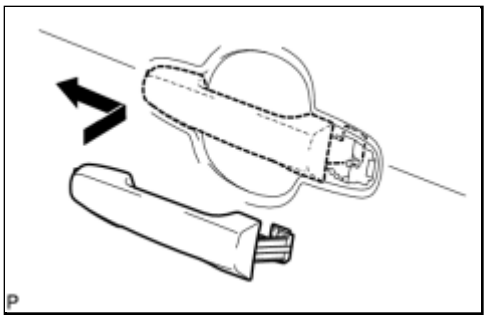

(a) Insert the front end of the rear door outside handle assembly into the rear door outside handle frame.

NOTICE:

If the bellcrank lever is not pulled and held when installing the outside handle, the bellcrank lever will interfere with the outside handle and the release plate will be damaged.

(b) Insert the rear end of the rear door outside handle assembly into the rear door outside handle frame. Next, slide the rear door outside handle assembly toward the front of the vehicle to install it.

8. INSTALL REAR DOOR OUTSIDE HANDLE COVER

(a) Engage the claw and install the rear door outside handle cover.

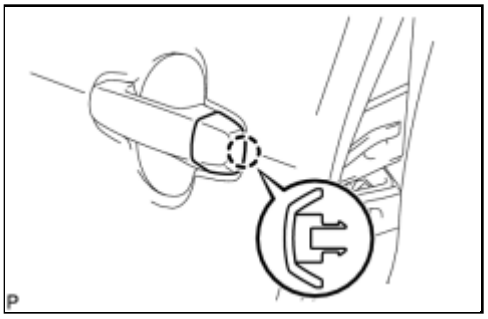

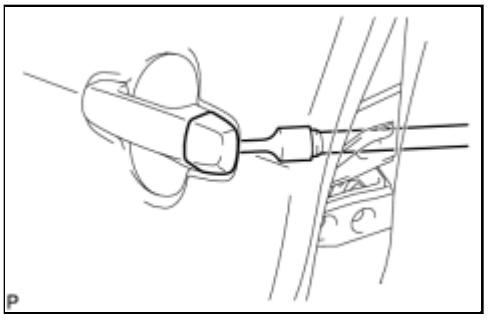

(b) Using a "TORX" socket wrench (T30), install the rear door outside handle cover with the screw.

Torque: 4.0 N·m (41 kgf·cm, 35in·lbf)

9. INSTALL REAR DOOR INSIDE LOCKING CABLE ASSEMBLY (w/o Power Door Lock)

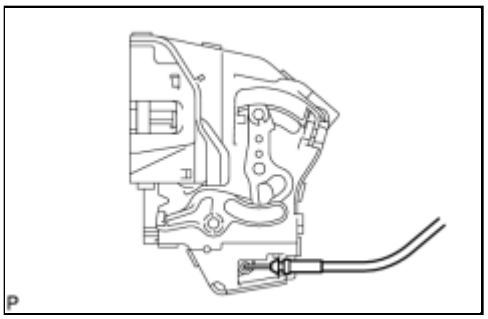

(a) Install the rear door inside locking cable assembly.

10. INSTALL REAR DOOR INSIDE LOCKING CABLE ASSEMBLY (w/ Power Door Lock)

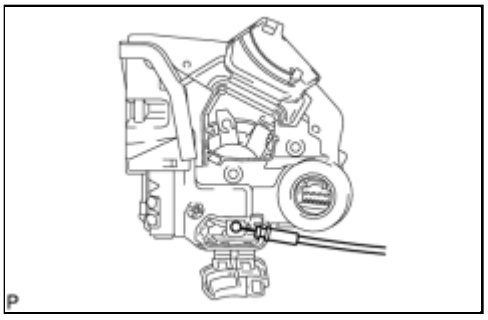

(a) Install the rear door inside locking cable assembly.

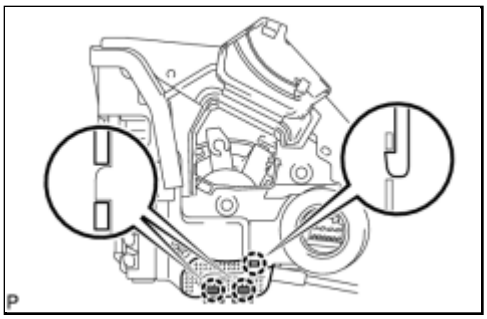

(b) Engage the 3 claws.

11. INSTALL REAR DOOR LOCK REMOTE CONTROL CABLE ASSEMBLY (w/o Power Door Lock)

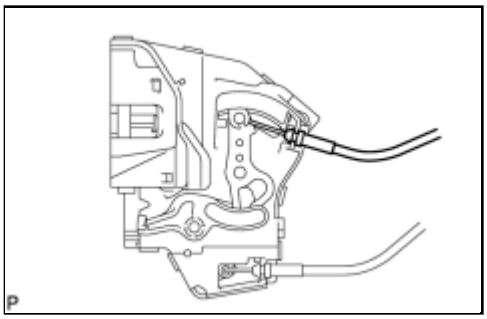

(a) Install the rear door lock remote control cable assembly.

12. INSTALL REAR DOOR LOCK REMOTE CONTROL CABLE ASSEMBLY (w/ Power Door Lock)

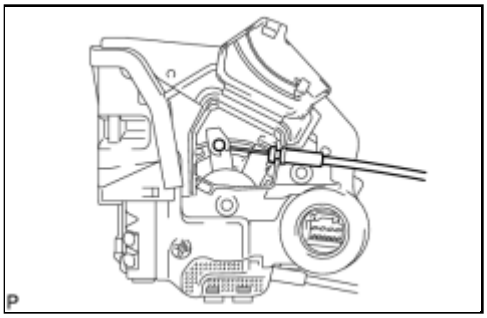

(a) Install the rear door lock remote control cable assembly.

(b) Engage the claw.

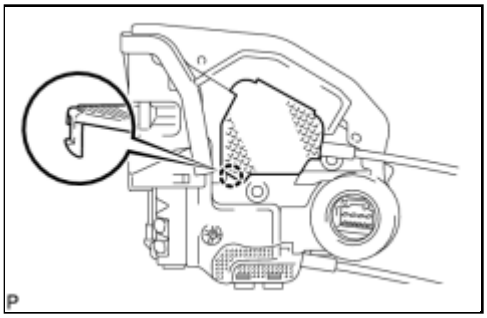

13. INSTALL REAR DOOR LOCK ASSEMBLY (w/o Power Door Lock)

(a) Apply MP grease to the sliding parts of the rear door lock assembly.

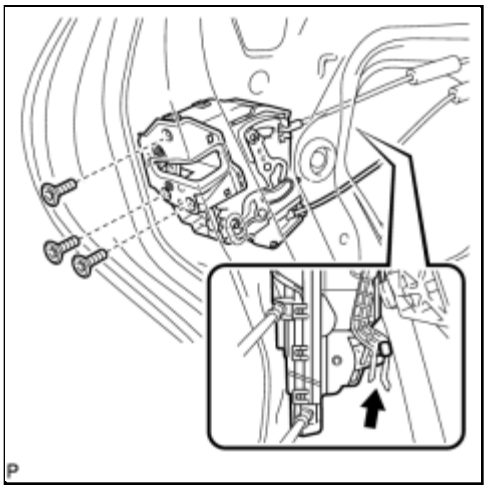

(b) Insert the rear door lock assembly to the rear door outside handle release plate, and set it to the rear door panel.

(c) Make sure that the rear door outside handle frame release plate is securely connected to the rear door lock assembly.

(d) Using a "TORX" socket wrench (T30), install the rear door lock assembly with the 3 screws.

Torque: 5.0 N·m (51 kgf·cm, 44in·lbf)

14. INSTALL REAR DOOR LOCK ASSEMBLY (w/ Power Door Lock)

NOTICE:

- When reusing the removed rear door lock assembly, replace the door lock wiring harness seal on the connector with a new one.
- Do not allow grease or dust to adhere to the door lock wiring harness seal surface of the connector.
- Reusing the door lock wiring harness seal or using a damaged door lock wiring harness seal may cause water intrusion. This may result in a malfunction of the rear door lock assembly.

(a) Apply MP grease to the sliding parts of the rear door lock assembly.

(b) Install a new door lock wiring harness seal to the rear door lock assembly.

(c) Insert the rear door lock assembly to the rear door outside

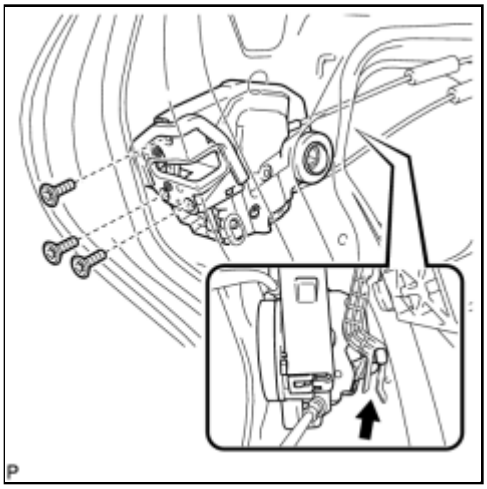

handle release plate, and set it to the rear door panel.

(d) Make sure that the rear door outside handle frame release plate is securely connected to the rear door lock assembly.

(e) Using a "TORX" socket wrench (T30), install the rear door lock assembly with the 3 screws.

Torque: 5.0 N·m (51 kgf·cm, 44in·lbf)

(f) Connect the connector.

15. INSTALL SEPARATOR DOOR NO. 2 STIFFENER CUSHION

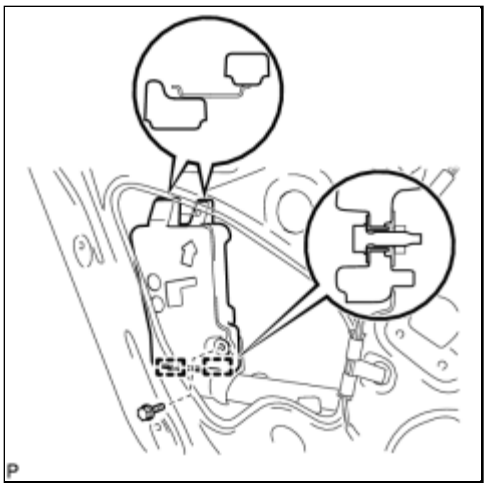

(a) Insert the 2 guides and install the separator door No. 2 stiffener cushion with the bolt as shown in the illustration.

16. INSTALL REAR POWER WINDOW REGULATOR MOTOR ASSEMBLY (w/ Power Window)

NOTICE:

The regulator arm must be below the intermediate position when installing the rear power window regulator motor assembly.

(a) Using a "TORX" socket wrench (T25), install the rear power window regulator motor assembly with the 3 screws.

Torque: 5.4 N·m (55 kgf·cm, 48in·lbf)

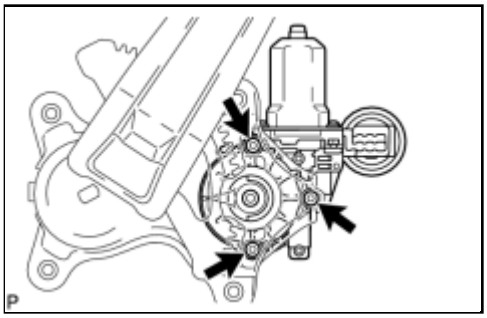

HINT:

A new rear window regulator uses self-tapping screws to thread new installation holes when the self-tapping screws are inserted.

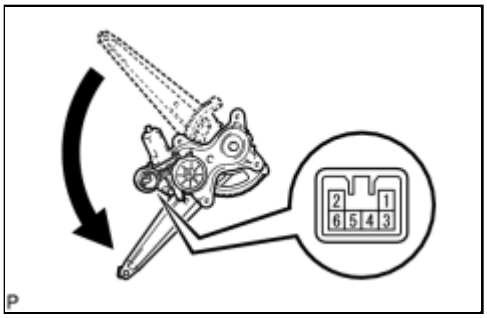

(b) Connect a positive (+) lead from the battery to terminal 2, and a negative (-) lead of the battery to terminal 1 of the rear power window regulator motor assembly to move the lift arm to the position shown in the illustration.

17. INSTALL REAR DOOR WINDOW REGULATOR ASSEMBLY (w/o Power Window)

(a) Apply MP grease to the sliding parts of the rear door window regulator assembly.

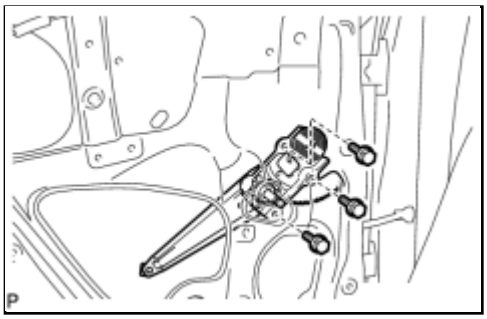

(b) Install the rear door window regulator assembly with the 3 bolts.

Torque: 8.0 N·m (82 kgf·cm, 71in·lbf)

18. INSTALL REAR DOOR WINDOW REGULATOR SUB-ASSEMBLY (w/ Power Window)

(a) Apply MP grease to the sliding parts of the rear door window regulator sub-assembly.

(b) Install the temporary bolt to the rear door window regulator sub-assembly.

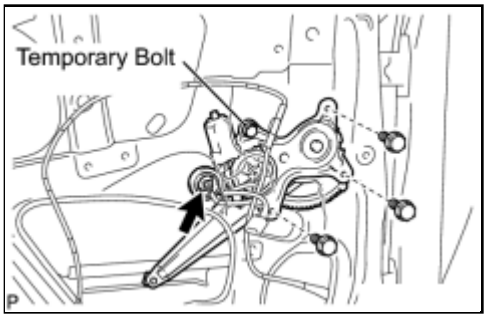

(c) Temporarily install the rear door window regulator sub-assembly.

(d) Tighten the temporary bolt and 3 bolts to install the rear door window regulator sub-assembly.

Torque: 8.0 N·m (82 kgf·cm, 71in·lbf)

(e) Connect the connector.

19. INSTALL REAR DOOR FRAME GARNISH

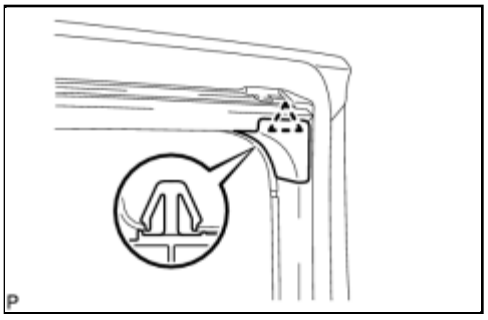

(a) Install a new rear door frame garnish with the clip.

20. INSTALL REAR DOOR GLASS RUN

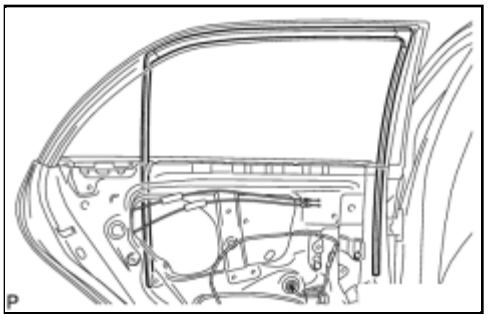

(a) Install the rear door glass run.

21. INSTALL REAR DOOR GLASS SUB-ASSEMBLY

(a) Slide the rear door glass sub-assembly to install it as shown in the illustration.

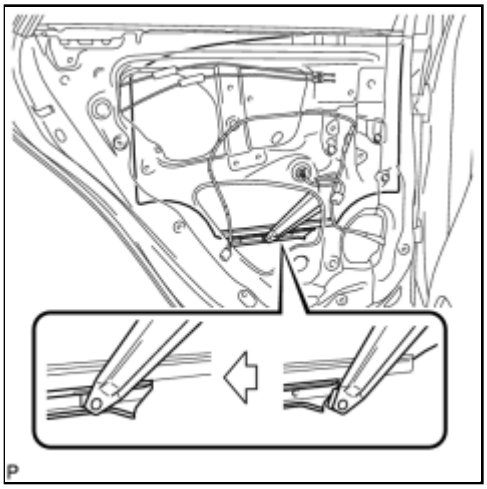

22. INSTALL REAR DOOR QUARTER WINDOW GLASS

(a) Install the rear door quarter window glass to the rear door quarter window weatherstrip.

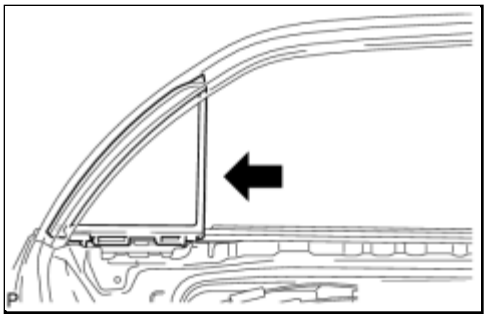

(b) Install the rear door quarter window glass together with the rear door quarter window weatherstrip in the direction indicated by the arrow in the illustration.

23. INSTALL REAR DOOR WINDOW DIVISION BAR SUB-ASSEMBLY

(a) Insert the rear door window division bar sub-assembly from above.

(b) Install the rear door glass run to the rear door window division bar sub-assembly.

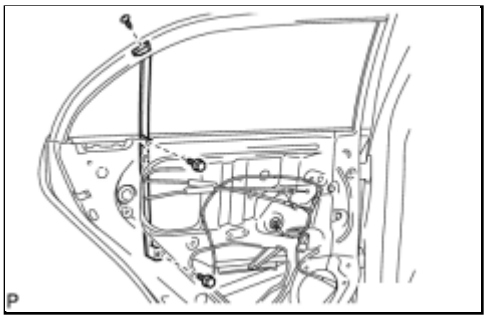

(c) Install the rear door window division bar sub-assembly with the 2 bolts and screw.

Torque: 6.2 N·m (63 kgf·cm, 55in·lbf)

24. INSTALL REAR DOOR WEATHERSTRIP

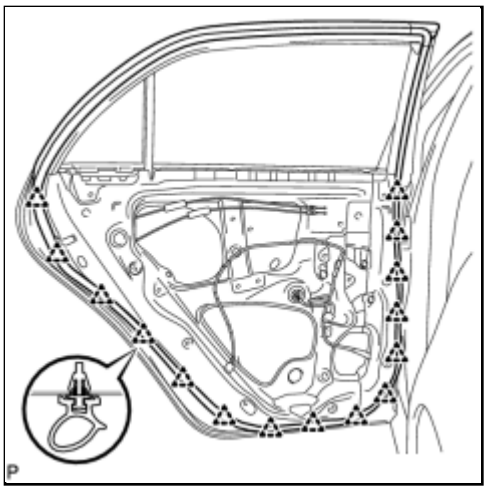

(a) Engage the 15 clips and install the rear door weatherstrip.

25. INSTALL REAR DOOR CHECK ASSEMBLY

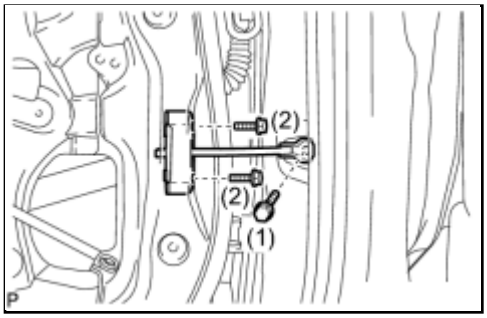

(a) Install the rear door check assembly with the 3 bolts.

Bolt (1) - Torque: 30 N·m (306 kgf·cm, 22ft·lbf)
Bolt (2) - Torque: 5.5 N·m (56 kgf·cm, 49in·lbf)

26. INSTALL REAR DOOR SERVICE HOLE COVER

(a) Apply butyl tape to the rear door panel.

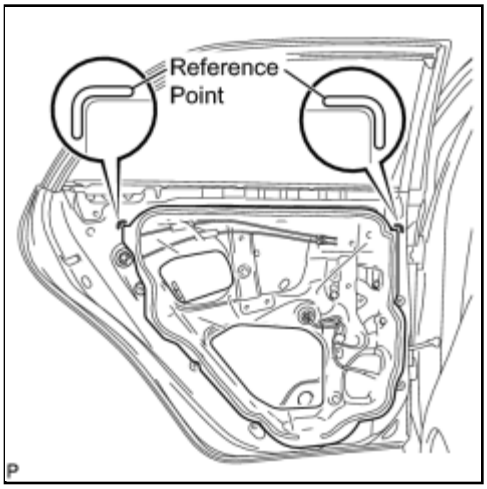

(b) Pass the rear door lock remote control cable, rear door inside locking cable and each connector through a new rear door service hole cover.

(c) Attach the rear door service hole cover according to the reference points on the rear door panel.

NOTICE:

Securely install the rear door service hole cover preventing wrinkles and air bubbles.

(d) w/ Power door lock:

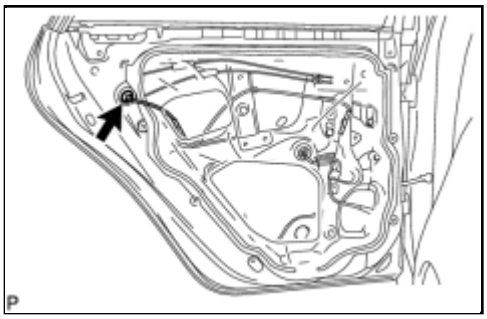

(1) Connect the connector.

27. INSTALL REAR DOOR TRIM BRACKET

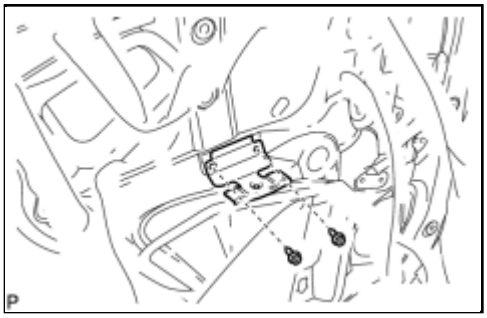

(a) Install the rear door trim bracket with the 2 screws.

28. INSTALL REAR DOOR INNER GLASS WEATHERSTRIP

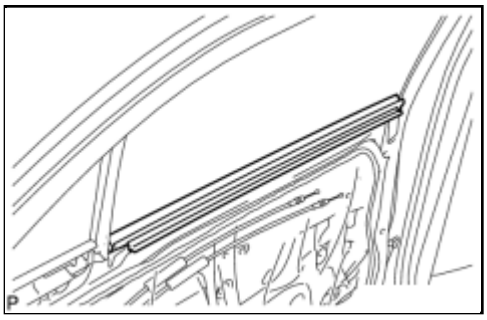

(a) Install the rear door inner glass weatherstrip.

29. INSTALL REAR DOOR INSIDE HANDLE SUB-ASSEMBLY

(a) Connect the rear door lock remote control cable and rear door inside locking cable to the rear door inside handle.

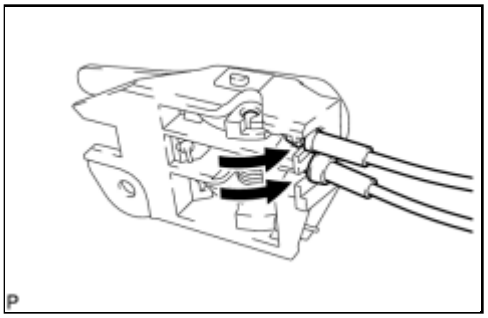

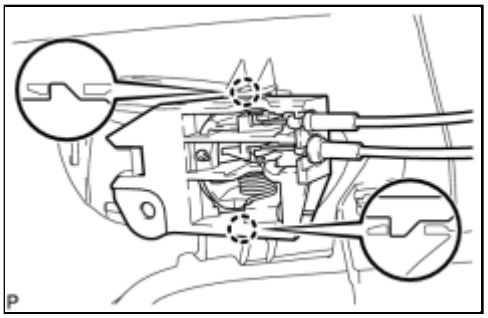

(b) Engage the 2 claws and install the rear door inside handle sub-assembly to the rear door trim board.

30. INSTALL REAR DOOR TRIM BOARD SUB-ASSEMBLY

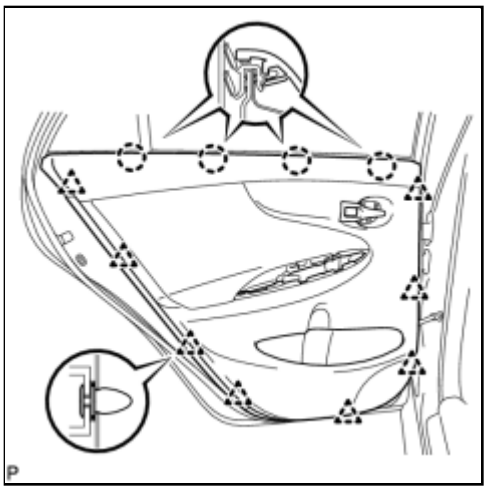

(a) Engage the rear door trim board with the 4 claws on the rear door inner glass weatherstrip.

(b) Engage the 8 clips to install the rear door trim board to the rear door panel.

(c) Install the 2 screws.

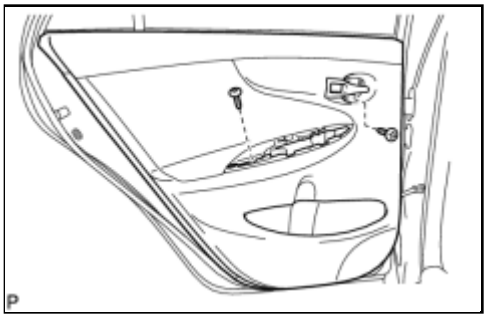

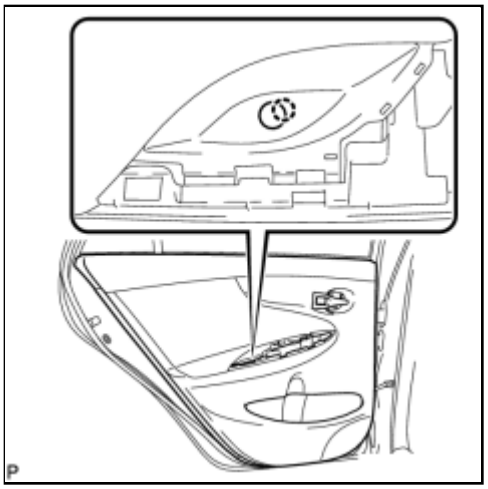

(d) Engage the claw to install the door armrest cap.

31. INSTALL REAR POWER WINDOW REGULATOR SWITCH ASSEMBLY (w/ Power Window)

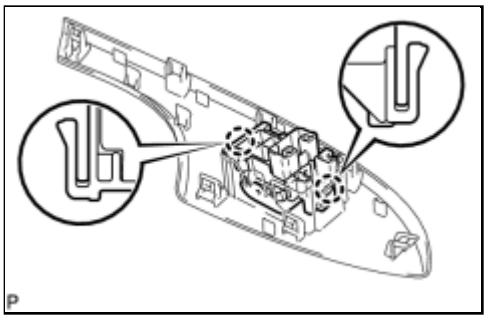

(a) Engage the 2 claws and install the rear power window regulator switch assembly.

32. INSTALL REAR DOOR ARMREST UPPER BASE PANEL (w/o Power Window)

(a) Engage the 2 clips and 7 claws, and install the rear door armrest upper base panel.

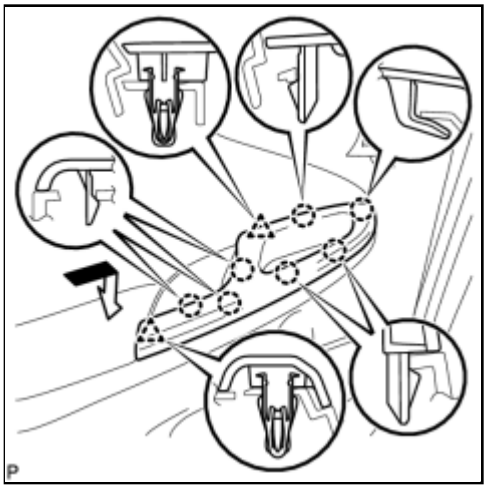

33. INSTALL REAR DOOR ARMREST UPPER BASE PANEL (w/ Power Window)

(a) Connect the connector.

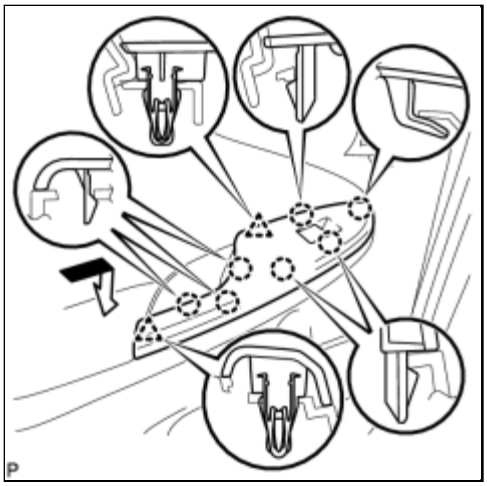

(b) Engage the 2 clips and 7 claws, and install the rear door armrest upper base panel.

34. INSTALL REAR DOOR INSIDE HANDLE BEZEL

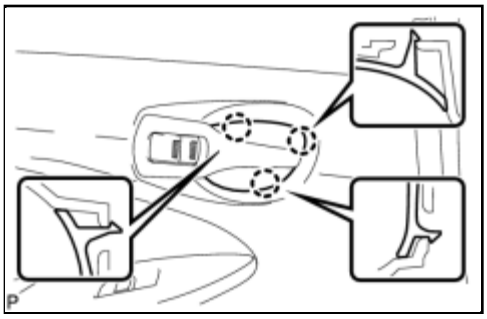

(a) Engage the 3 claws and install the rear door inside handle bezel.

35. INSTALL REAR DOOR WINDOW REGULATOR HANDLE ASSEMBLY (w/o Power Window)

(a) Temporarily install the rear door window regulator handle assembly and fully close the window glass.

(b) Install the rear door regulator inside handle plate.

(c) Install the snap ring to the rear door window regulator handle assembly.

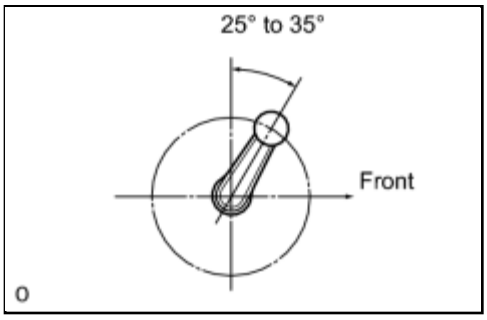

(d) Install the rear door window regulator handle assembly as shown in the illustration.

36. CONNECT CABLE TO NEGATIVE BATTERY TERMINAL

Last Modified: 3-10-2010	6.4 G	**From:** 200901
Model Year: 2010	**Model:** Corolla	**Doc ID:** RM000000XBL01WX
Title: DOOR / HATCH: REAR DOOR: ON-VEHICLE INSPECTION (2010 Corolla)		

ON-VEHICLE INSPECTION

1. INSPECT REAR DOOR PANEL SUB-ASSEMBLY

(a) Check that the clearance measurements of areas A through K are within each standard range.

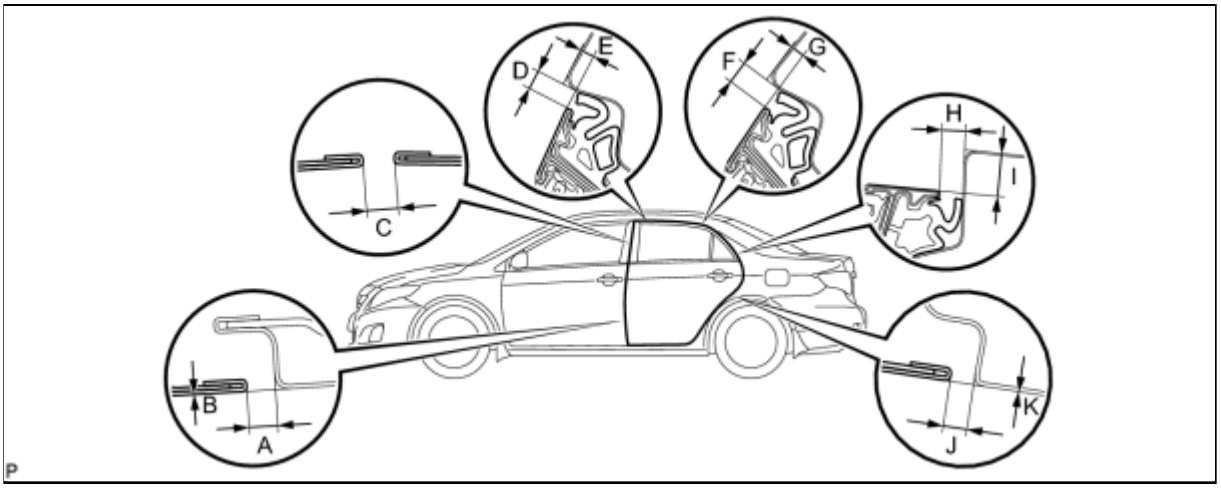

Standard Clearance:

AREA	MEASUREMENT	AREA	MEASUREMENT
A	3.0 to 6.0 mm (0.118 to 0.236 in.)	G	3.6 to 6.6 mm (0.142 to 0.260 in.)
B	-1.5 to 1.5 mm (-0.0591 to 0.0591 in.)	H	4.8 to 7.8 mm (0.189 to 0.307 in.)
C	3.0 to 6.0 mm (0.118 to 0.236 in.)	I	12.4 to 15.4 mm (0.488 to 0.606 in.)
D	3.8 to 6.8 mm (0.150 to 0.268 in.)	J	2.5 to 5.5 mm (0.0984 to 0.217 in.)
E	3.2 to 6.2 mm (0.126 to 0.244 in.)	K	-1.5 to 1.5 mm (-0.0591 to 0.0591 in.)
F	5.0 to 8.0 mm (0.197 to 0.315 in.)	-	-

Last Modified: 3-10-2010	6.4 N	**From:** 200901
Model Year: 2010	**Model:** Corolla	**Doc ID:** RM000000XBJ02HX
Title: DOOR / HATCH: REAR DOOR: ADJUSTMENT (2010 Corolla)		

ADJUSTMENT

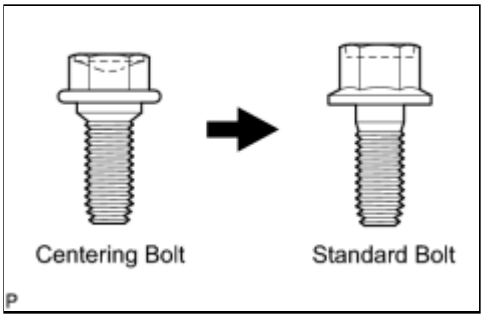

CAUTION:

Before adjusting the door positions of vehicles equipped with side and curtain shield airbags, be sure to disconnect the battery. After adjustment, check that the SRS warning light is operating normally and there are no SRS DTCs output.

HINT:

- Use the same procedure for the RH side and LH side.
- The procedure listed below is for the LH side.
- Centering bolts are used to mount the door hinge to the vehicle body and door. The door cannot be adjusted with the centering bolts installed on it. Substitute the centering bolts with standard bolts when making adjustments.
- Specified torque for standard bolts is shown in the standard bolt chart INFO .

1. DISCONNECT CABLE FROM NEGATIVE BATTERY TERMINAL

CAUTION:

Wait at least 90 seconds after disconnecting the cable from the negative (-) battery terminal to disable the SRS system INFO .

2. ADJUST REAR DOOR

(a) Using SST, loosen the hinge bolts on the vehicle body and adjust the door position.

SST: 09812-00010

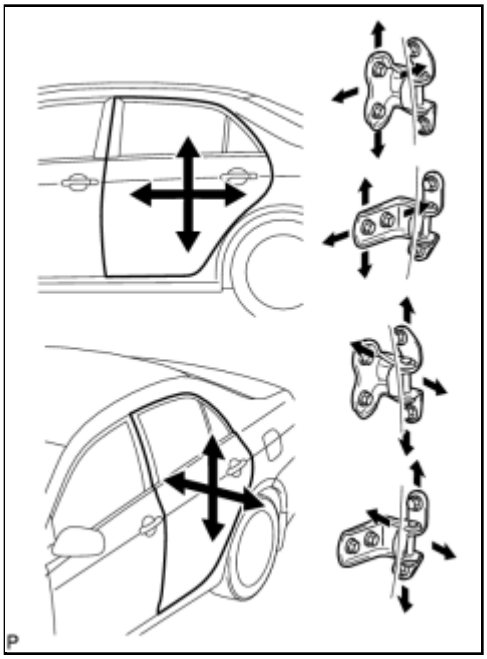

(b) Tighten the hinge bolts on the vehicle body after the adjustment.

Torque: 26 N·m (265 kgf·cm, 19ft·lbf)

(c) Loosen the hinge bolts on the door and adjust the door position.

(d) Tighten the hinge bolts on the door after the adjustment.

Unpainted door hinge installation surface (door panel side) - Torque: 26 N·m (265 kgf·cm, 19ft·lbf)

Painted door hinge installation surface (door panel side) - Torque: 29 N·m (296 kgf·cm, 21ft·lbf)

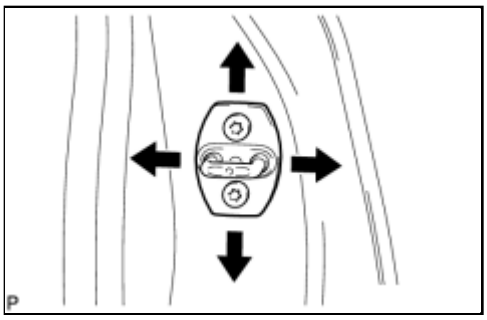

(e) Adjust the striker position by slightly loosening the striker mounting screws with a "TORX" socket wrench (T40) and hitting the striker with a plastic hammer.

(f) Using a "TORX" socket wrench (T40), tighten the striker mounting screws after the adjustment.

Torque: 23 N·m (235 kgf·cm, 17ft·lbf)

3. CONNECT CABLE TO NEGATIVE BATTERY TERMINAL

4. INSPECT SRS WARNING LIGHT

INFO

Last Modified: 3-10-2010	6.4 K	**From:** 200901
Model Year: 2010	**Model:** Corolla	**Doc ID:** RM000002IZ900RX
Title: EXTERIOR PANELS / TRIM: BLACK OUT TAPE (for Center Pillar): COMPONENTS (2010 Corolla)		

COMPONENTS

ILLUSTRATION

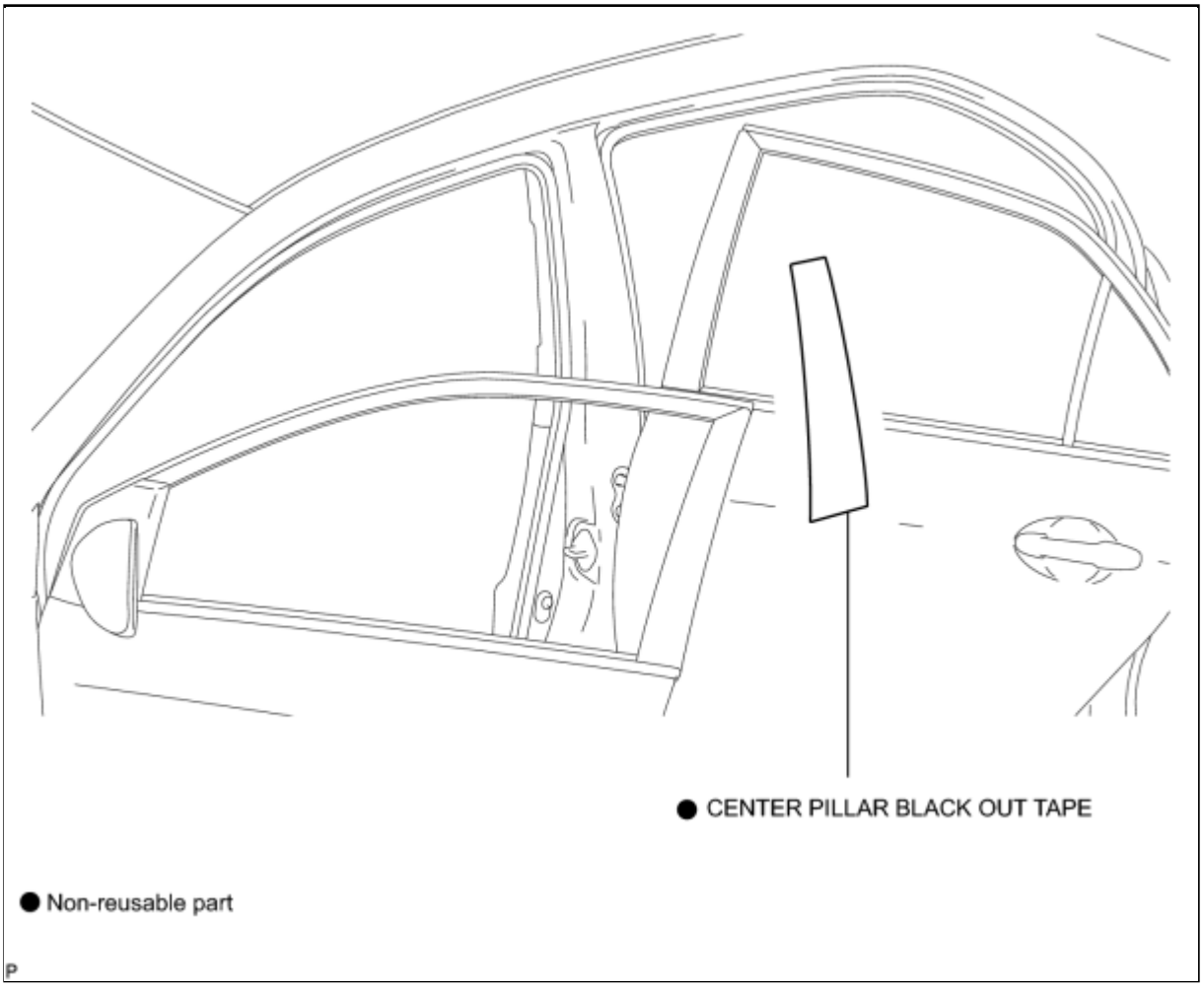

Last Modified: 3-10-2010	6.4 A	**From:** 200901
Model Year: 2010	**Model:** Corolla	**Doc ID:** RM000000O5L018X
Title: EXTERIOR PANELS / TRIM: BLACK OUT TAPE (for Center Pillar): REMOVAL (2010 Corolla)		

REMOVAL

HINT:

- Use the same procedure for the RH side and LH side.
- The procedure listed below is for the LH side.

1. REMOVE CENTER PILLAR BLACK OUT TAPE

(a) Using a heat light, heat the center pillar black out tape.

Heating Temperature:

ITEM	TEMPERATURE
Vehicle Body	40 to 60°C (104 to 140°F)

NOTICE:

Do not heat the vehicle body excessively.

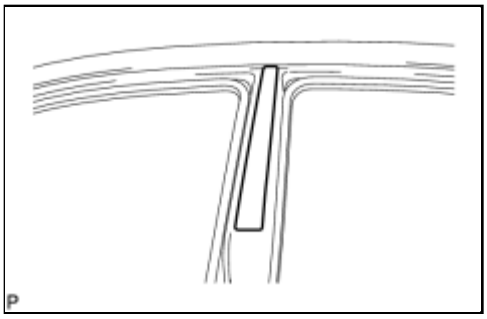

(b) Pull back an edge of the center pillar black out tape and pull it parallel to the vehicle body to pull it off.

Last Modified: 3-10-2010	6.4 A	**From:** 200901
Model Year: 2010	**Model:** Corolla	**Doc ID:** RM000000O5K01AX
Title: EXTERIOR PANELS / TRIM: BLACK OUT TAPE (for Center Pillar): INSTALLATION (2010 Corolla)		

INSTALLATION

HINT:

- Use the same procedure for the RH side and LH side.
- The procedure listed below is for the LH side.

1. REPAIR INSTRUCTION

(a) Clean the vehicle body surface.

(1) Using a heat light, heat the vehicle body surface.

Heating Temperature:

ITEM	TEMPERATURE
Vehicle Body	40 to 60°C (104 to 140°F)

NOTICE:

Do not heat the vehicle body excessively.

(2) Wipe off any tape adhesive residue with cleaner.

(b) Installation temperature

(1) When ambient temperature is below 15°C (59°F), perform the installation procedure after warming the vehicle body surface (installation surface of the door frame) and tape up to between 20 and 30°C (68 and 86°F) using a heat light. When ambient temperature is above 35°C (95°F), cool the vehicle body surface (installation surface of the door frame) and tape down to between 20 and 30°C (68 and 86°F) prior to installation.

HINT:

- The most appropriate temperature for installing the tape is 25°C (77°F).
- When the temperature is low, the tape turns stiff and falls off easily. When the temperature is high, the tape loses elasticity.

(c) Before installation

(1) Remove any coating roughness and dirt on and around the vehicle body surface where the tape will be installed (installation surface of the door frame). If any roughness or dirt remains when pressing the tape onto the surface, air will be trapped under the tape and result in a poor appearance.

HINT:

Spray water on the shop floor to settle any dust.

(d) Key points for handling the tape

(1) The tape bends and rolls up easily. Store the tape between flat pieces of cardboard or other similar objects and keep it dry and level.

NOTICE:

Do not bend the tape or leave it in high temperature places.

(e) Key points for installation of the tape (how to use a squeegee and installation procedure for flat surfaces)

NOTICE:

- Conduct positioning of the tape with a high level of accuracy to achieve a neat finish and to avoid peeling.
- The tape cannot be reused because it deforms and will not fit any more after being removed.

(1) To avoid air bubbles, slightly raise the part of the tape that is going to be applied so that its adhesive surface does not touch the vehicle body while applying the tape. Tilt the squeegee at 40 to 50° (for pressing forward) or 30 to 45° (for pulling) to the vehicle body surface and press the tape onto the vehicle body surface with a force of 20 to 30 N (2 to 3 kgf) at a constant slow speed of 3 to 7 cm (1.18 to 2.76 in.) per second.

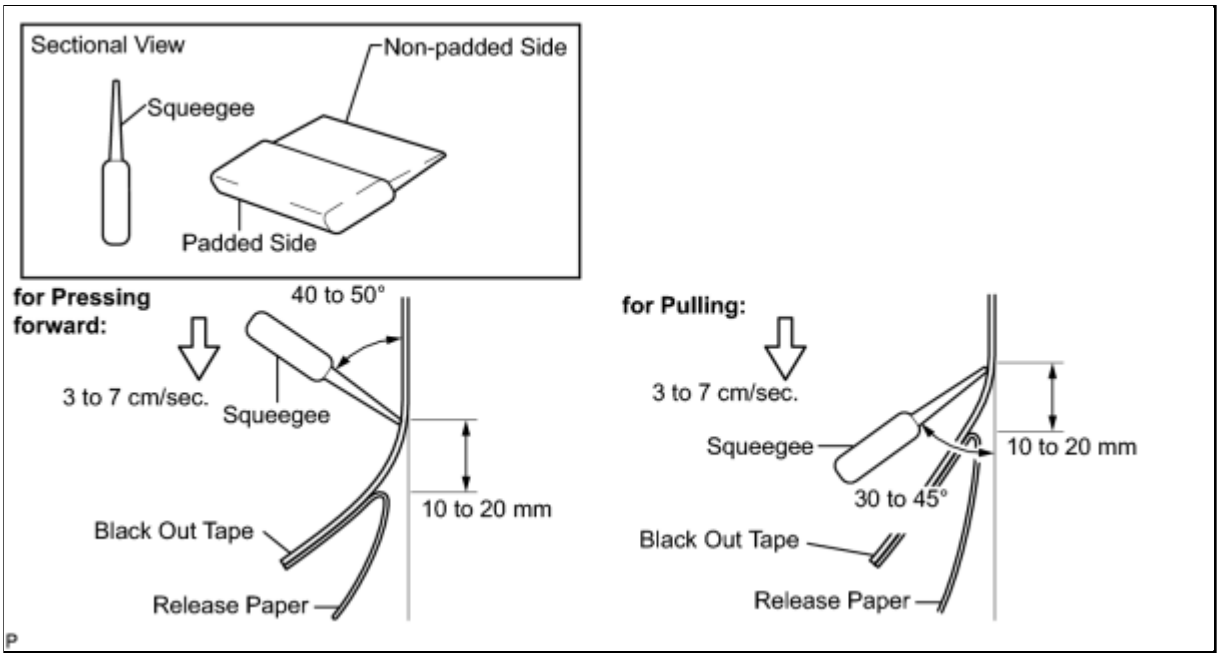

NOTICE:

Be sure to observe the specified pressing speed, force, and angle of the squeegee to avoid wrinkles or air bubbles.

HINT:

- Either angle of the squeegee (for pressing forward or for pulling) is acceptable.
- Be sure to apply the tape while removing the release paper 10 to 20 mm (0.393 to 0.787 in.) from the edge of the squeegee.

(f) Key points for installation of the tape (how to use a squeegee and installation procedure for hemmed surfaces)

(1) If it is difficult to press the tape, press it in several steps as shown in the illustration. Use your fingers or the padded surface of a squeegee to slowly apply the tape to the hem of the vehicle, especially for a small

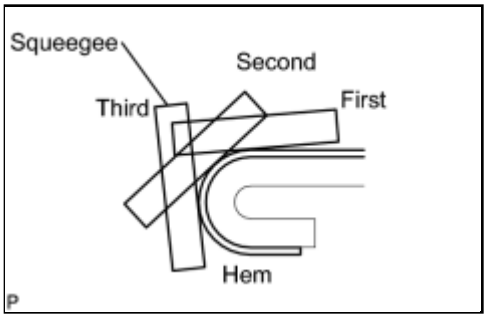

hem.

HINT:

When applying tape to the backside of a hem, remove the release paper and use your fingers or the padded surface of a squeegee.

(g) Key points for installation of the tape (how to use a squeegee and installation procedure for corners)

(1) Remove the release paper and apply the tape carefully with your fingers.

(2) Before applying the tape to each corner, heat the tape using a heat light and gradually apply it to avoid wrinkles on the tape and achieve a neat finish.

(h) Check after installation

(1) After completing the application, check if the tape is applied neatly. If the tape is not applied neatly, reapply new tape.

NOTICE:

Do not reuse the tape.

2. INSTALL CENTER PILLAR BLACK OUT TAPE

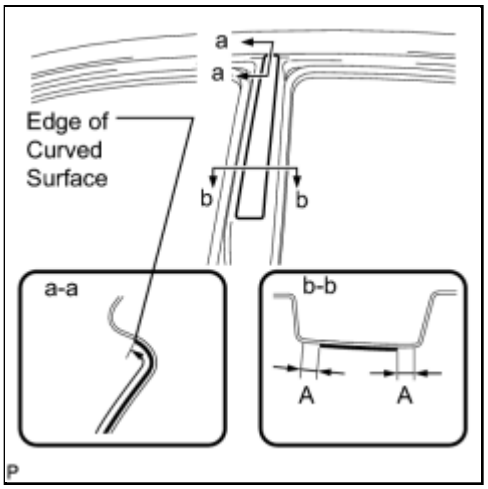

(a) Refer to the illustration to position the center pillar black out tape.

Reference Measurement:

AREA	MEASUREMENT
A	9.5 to 12.5 mm (0.374 to 0.492 in.)

(b) Remove the release paper and apply the tape.

Last Modified: 3-10-2010	6.4 K	**From:** 200901
Model Year: 2010	**Model:** Corolla	**Doc ID:** RM000002Y9I00CX
Title: EXTERIOR PANELS / TRIM: BLACK OUT TAPE (for Front Door): COMPONENTS (2010 Corolla)		

COMPONENTS

ILLUSTRATION

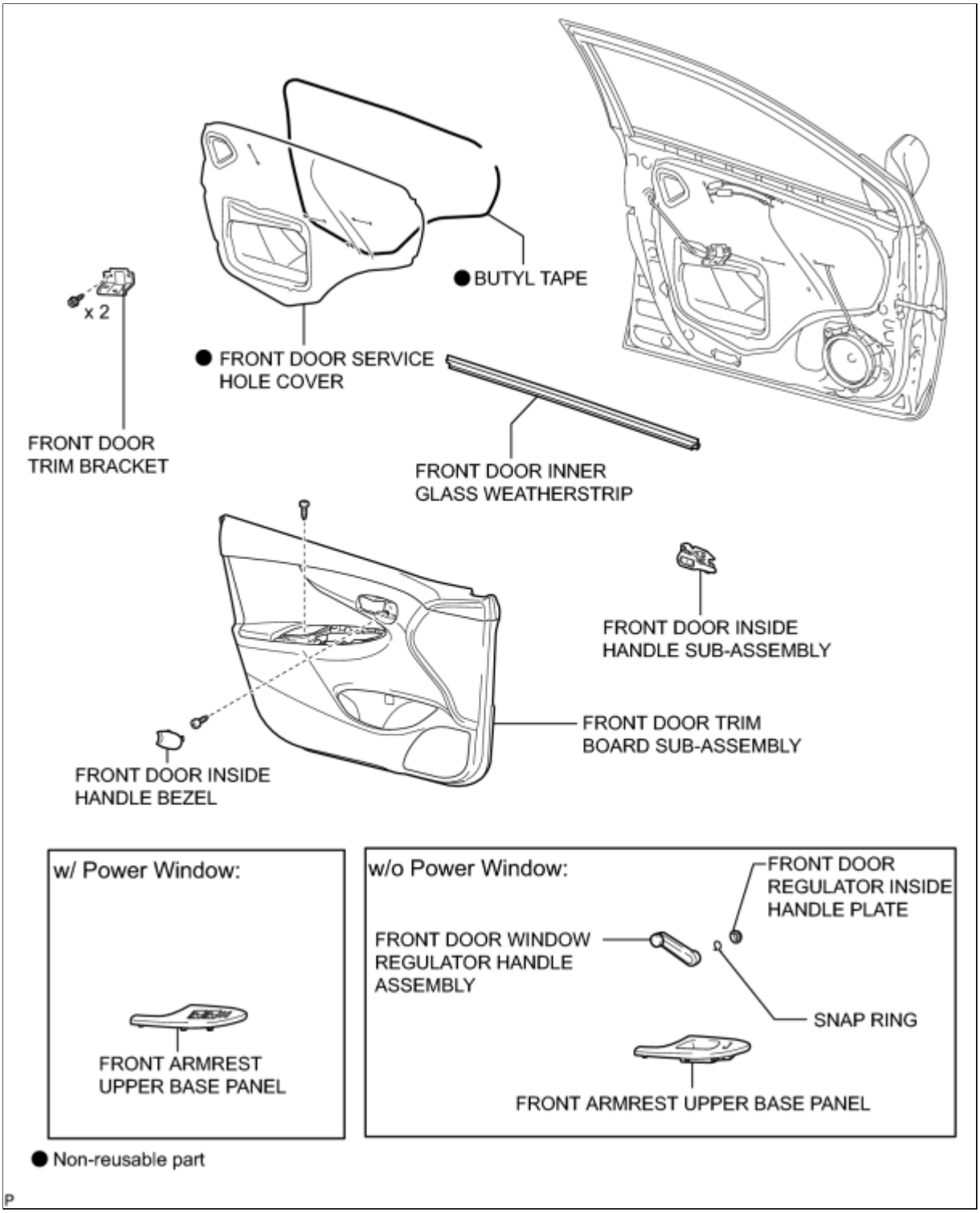

ILLUSTRATION

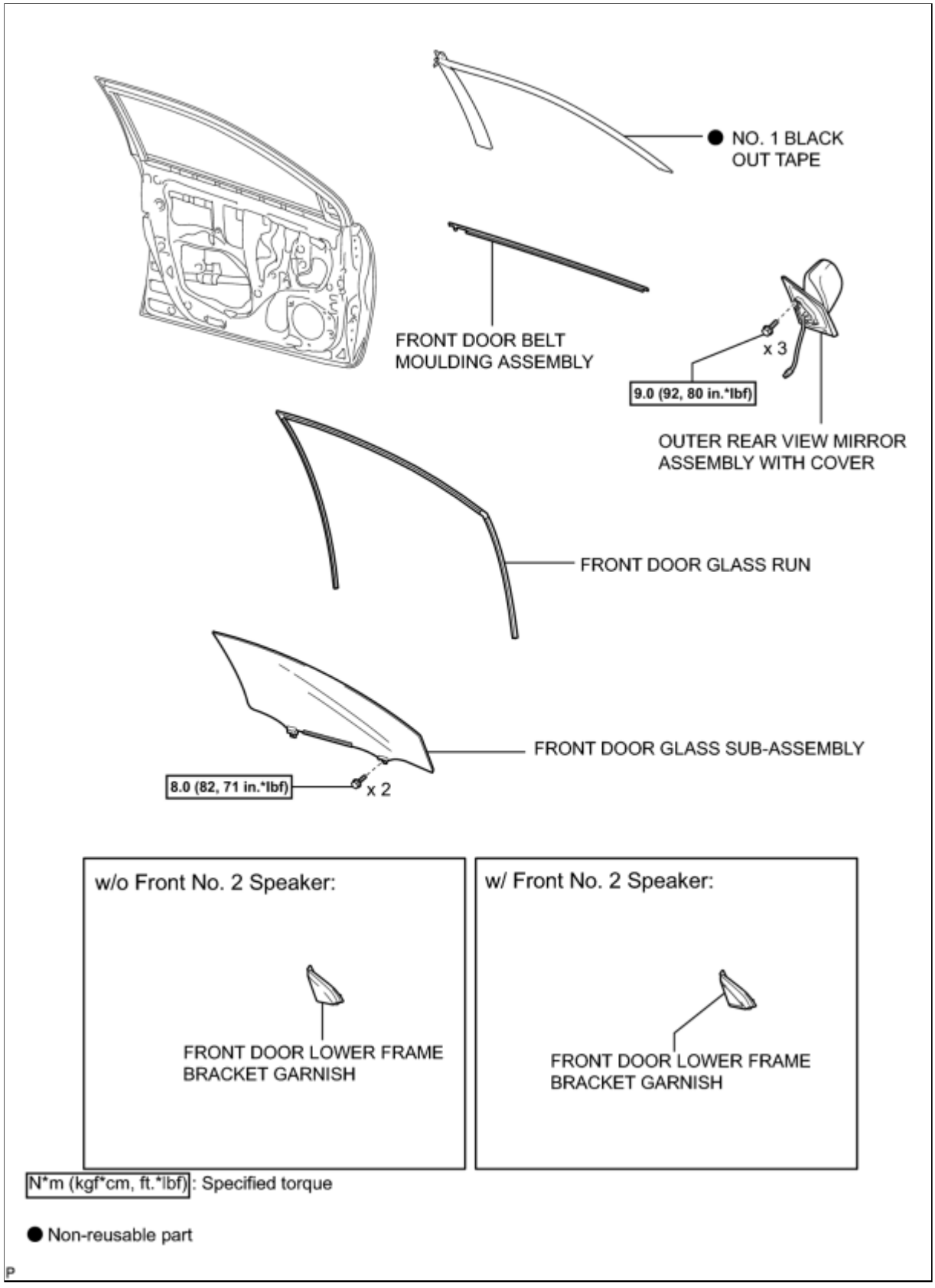

N*m (kgf*cm, ft.*lbf): Specified torque

● Non-reusable part

P

Last Modified: 3-10-2010	6.4 A	**From:** 200901
Model Year: 2010	**Model:** Corolla	**Doc ID:** RM000000O5J012X
Title: EXTERIOR PANELS / TRIM: BLACK OUT TAPE (for Front Door): REMOVAL (2010 Corolla)		

REMOVAL

HINT:

- Use the same procedure for the RH side and LH side.
- The procedure listed below is for the LH side.

1. REMOVE FRONT DOOR WINDOW REGULATOR HANDLE ASSEMBLY (w/o Power Window) INFO

2. REMOVE FRONT DOOR INSIDE HANDLE BEZEL INFO

3. REMOVE FRONT ARMREST UPPER BASE PANEL (w/o Power Window) INFO

4. REMOVE FRONT ARMREST UPPER BASE PANEL (w/ Power Window) INFO

5. REMOVE FRONT DOOR TRIM BOARD SUB-ASSEMBLY INFO

6. REMOVE FRONT DOOR INSIDE HANDLE SUB-ASSEMBLY INFO

7. REMOVE FRONT DOOR LOWER FRAME BRACKET GARNISH (w/o Front No. 2 Speaker) INFO

8. REMOVE FRONT DOOR LOWER FRAME BRACKET GARNISH (w/ Front No. 2 Speaker) INFO

9. REMOVE FRONT DOOR INNER GLASS WEATHERSTRIP INFO

10. REMOVE FRONT DOOR TRIM BRACKET INFO

11. REMOVE FRONT DOOR SERVICE HOLE COVER INFO

12. REMOVE OUTER REAR VIEW MIRROR ASSEMBLY WITH COVER INFO

13. REMOVE FRONT DOOR GLASS SUB-ASSEMBLY (w/o Power Window) INFO

14. REMOVE FRONT DOOR GLASS SUB-ASSEMBLY (w/ Power Window) INFO

15. REMOVE FRONT DOOR GLASS RUN INFO

16. REMOVE FRONT DOOR BELT MOULDING ASSEMBLY INFO

17. REMOVE FRONT DOOR WEATHERSTRIP

(a) Remove the upper part of the front door weatherstrip to the extent that allows removal of the black out tape.

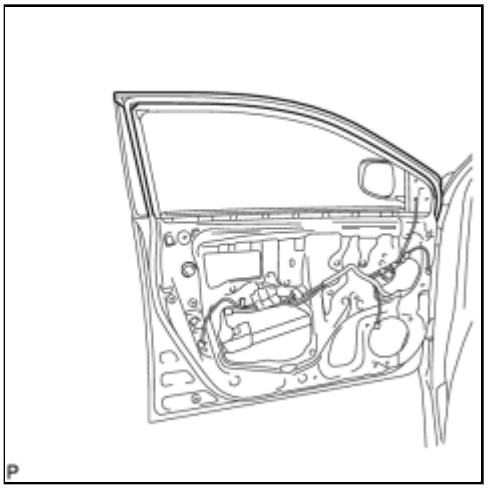

18. REMOVE NO. 1 BLACK OUT TAPE

(a) Using a heat light, heat the No. 1 black out tape.

Heating Temperature:

ITEM	TEMPERATURE
Vehicle Body	40 to 60°C (104 to 140°F)

NOTICE:

Do not heat the vehicle body excessively.

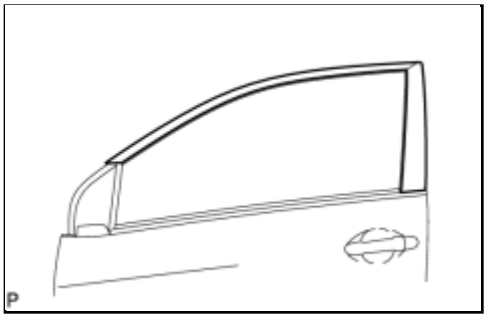

(b) Pull back an edge of the No. 1 black out tape and pull it parallel to the vehicle body to pull it off.

Last Modified: 3-10-2010	6.4 A	**From:** 200901
Model Year: 2010	**Model:** Corolla	**Doc ID:** RM000000O5I016X
Title: EXTERIOR PANELS / TRIM: BLACK OUT TAPE (for Front Door): INSTALLATION (2010 Corolla)		

INSTALLATION

HINT:

- Use the same procedure for the RH side and LH side.
- The procedure listed below is for the LH side.

1. REPAIR INSTRUCTION

(a) Clean the vehicle body surface.

(1) Using a heat light, heat the vehicle body surface.

Heating Temperature:

ITEM	TEMPERATURE
Vehicle Body	40 to 60°C (104 to 140°F)

NOTICE:

Do not heat the vehicle body excessively.

(2) Wipe off any tape adhesive residue with cleaner.

(b) Installation temperature

(1) When ambient temperature is below 15°C (59°F), perform the installation procedure after warming the vehicle body surface (installation surface of the door frame) and tape up to between 20 and 30°C (68 and 86°F) using a heat light. When ambient temperature is above 35°C (95°F), cool the vehicle body surface (installation surface of the door frame) and tape down to between 20 and 30°C (68 and 86°F) prior to installation.

HINT:

- The most appropriate temperature for installing the tape is 25°C (77°F).
- When the temperature is low, the tape turns stiff and falls off easily. When the temperature is high, the tape loses elasticity.

(c) Before installation

(1) Remove any coating roughness and dirt on and around the vehicle body surface where the tape will be installed (installation surface of the door frame). If any roughness or dirt remains when pressing the tape onto the surface, air will be trapped under the tape and result in a poor appearance.

HINT:

Spray water on the shop floor to settle any dust.

(d) Key points for handling the tape

(1) The tape bends and rolls up easily. Store the tape between flat pieces of cardboard or other similar objects and keep it dry and level.

NOTICE:

Do not bend the tape or leave it in high temperature places.

(e) Key points for installation of the tape (how to use a squeegee and installation procedure for flat surfaces)

NOTICE:

- Conduct positioning of the tape with a high level of accuracy to achieve a neat finish and to avoid peeling.
- The tape cannot be reused because it deforms and will not fit any more after being removed.

(1) To avoid air bubbles, slightly raise the part of the tape that is going to be applied so that its adhesive surface does not touch the vehicle body while applying the tape. Tilt the squeegee at 40 to 50° (for pressing forward) or 30 to 45° (for pulling) to the vehicle body surface and press the tape onto the vehicle body surface with a force of 20 to 30 N (2 to 3 kgf) at a constant slow speed of 3 to 7 cm (1.18 to 2.76 in.) per second.

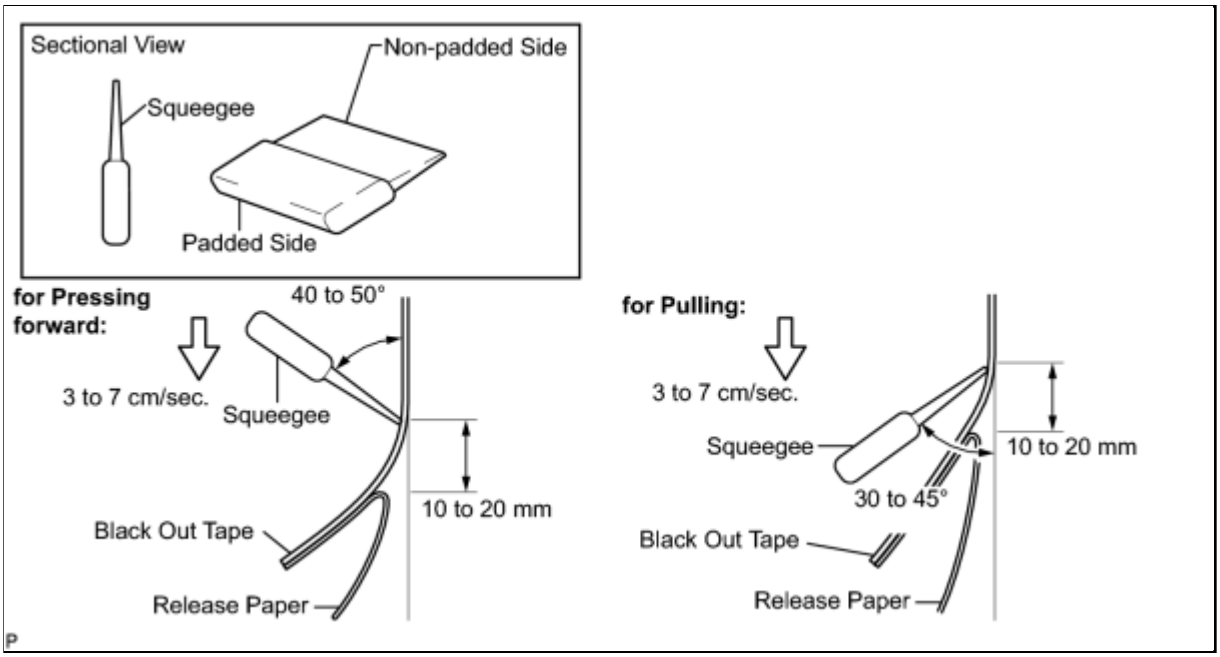

NOTICE:

Be sure to observe the specified pressing speed, force, and angle of the squeegee to avoid wrinkles or air bubbles.

HINT:

- Either angle of the squeegee (for pressing forward or for pulling) is acceptable.
- Be sure to apply the tape while removing the release paper 10 to 20 mm (0.394 to 0.787 in.) from the edge of the squeegee.

(f) Key points for installation of the tape (how to use a squeegee and installation procedure for hemmed surfaces)

(1) If it is difficult to press the tape, press it in several steps as shown in the illustration. Use your fingers or the padded surface of a squeegee to slowly apply the tape to the hem of the vehicle, especially for a small

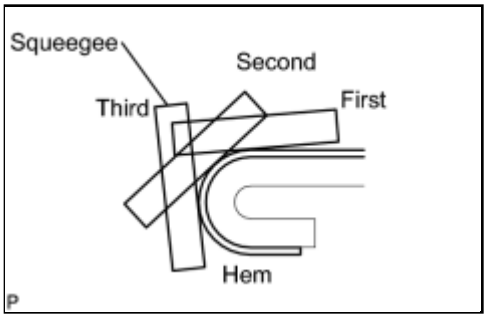

hem.

HINT:

When applying tape to the backside of a hem, remove the release paper and use your fingers or the padded surface of a squeegee.

(g) Key points for installation of the tape (how to use a squeegee and installation procedure for corners)

(1) Remove the release paper and apply the tape carefully with your fingers.

(2) Before applying the tape to each corner, heat the tape using a heat light and gradually apply it to avoid wrinkles on the tape and achieve a neat finish.

(h) Check after installation

(1) After completing the application, check if the tape is applied neatly. If the tape is not applied neatly, reapply new tape.

NOTICE:

Do not reuse the tape.

2. INSTALL NO. 1 BLACK OUT TAPE

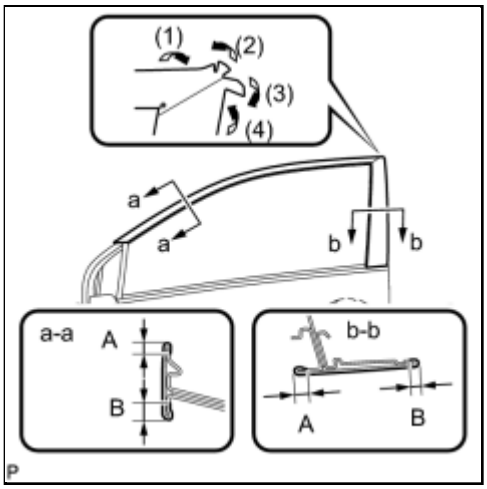

(a) Refer to the illustration to position the No. 1 black out tape.

Standard Dimension:

AREA	DIMENSION
A	2 to 4 mm (0.0787 to 0.158 in.)
B	5 mm (0.197 in.)

(b) Remove the release paper and apply the tape.

3. INSTALL FRONT DOOR WEATHERSTRIP

(a) Install the front door weatherstrip.

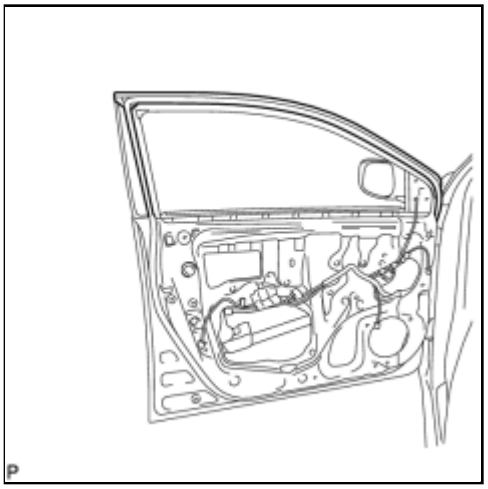

4. INSTALL FRONT DOOR BELT MOULDING ASSEMBLY INFO

5. INSTALL FRONT DOOR GLASS RUN INFO

6. INSTALL FRONT DOOR GLASS SUB-ASSEMBLY INFO

7. INSTALL OUTER REAR VIEW MIRROR ASSEMBLY WITH COVER INFO

8. INSTALL FRONT DOOR SERVICE HOLE COVER INFO

9. INSTALL FRONT DOOR TRIM BRACKET INFO

10. INSTALL FRONT DOOR INNER GLASS WEATHERSTRIP INFO

11. INSTALL FRONT DOOR LOWER FRAME BRACKET GARNISH (w/o Front No. 2 Speaker) INFO

12. INSTALL FRONT DOOR LOWER FRAME BRACKET GARNISH (w/ Front No. 2 Speaker) INFO

13. INSTALL FRONT DOOR INSIDE HANDLE SUB-ASSEMBLY INFO

14. INSTALL FRONT DOOR TRIM BOARD SUB-ASSEMBLY INFO

15. INSTALL FRONT ARMREST UPPER BASE PANEL (w/o Power Window) INFO

16. INSTALL FRONT ARMREST UPPER BASE PANEL (w/ Power Window) INFO

17. INSTALL FRONT DOOR INSIDE HANDLE BEZEL INFO

18. INSTALL FRONT DOOR WINDOW REGULATOR HANDLE ASSEMBLY (w/o Power Window) INFO

Last Modified: 3-10-2010	6.4 K	**From:** 200901
Model Year: 2010	**Model:** Corolla	**Doc ID:** RM000002IZ900QX
Title: EXTERIOR PANELS / TRIM: BLACK OUT TAPE (for Rear Door): COMPONENTS (2010 Corolla)		

COMPONENTS

ILLUSTRATION

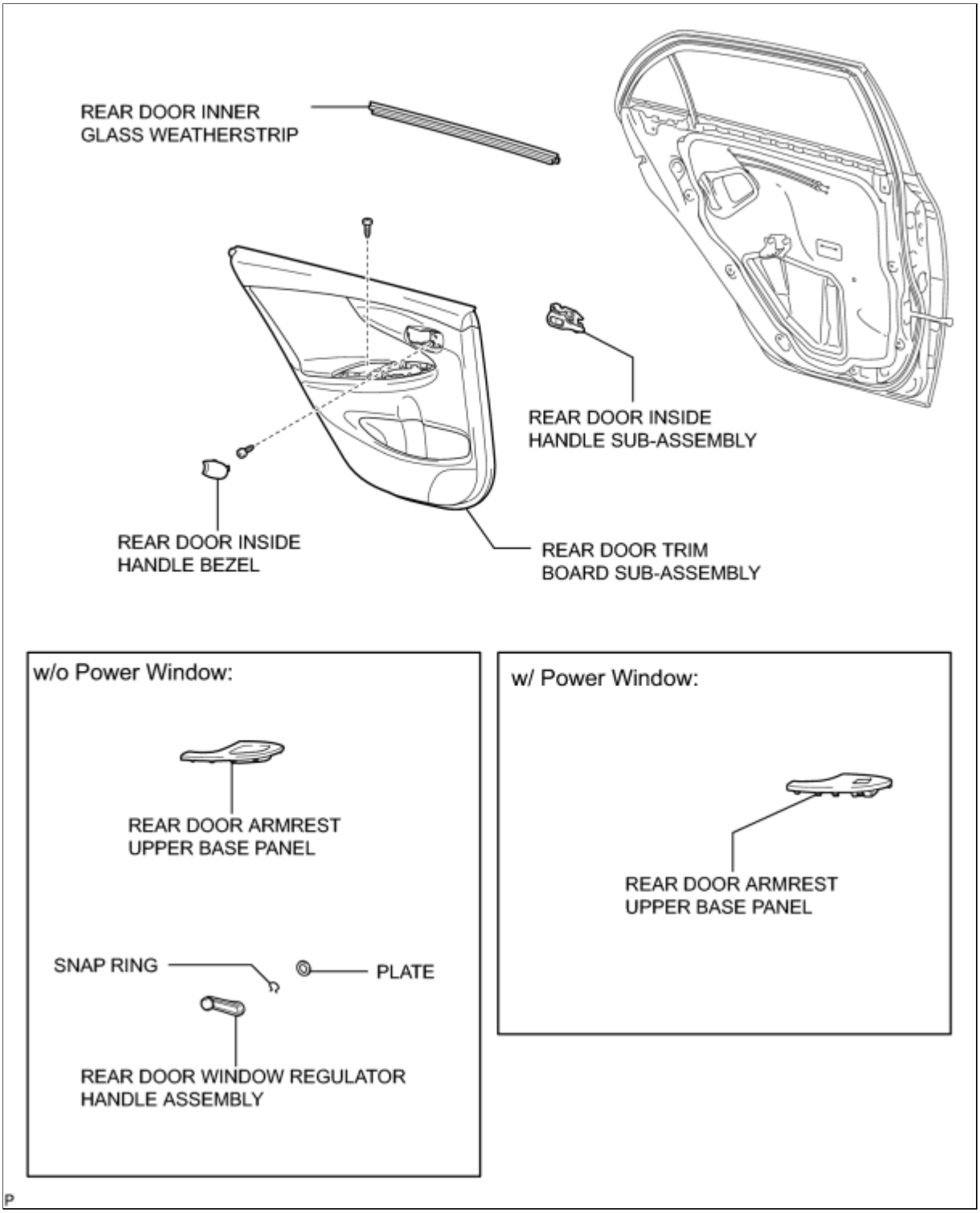

ILLUSTRATION

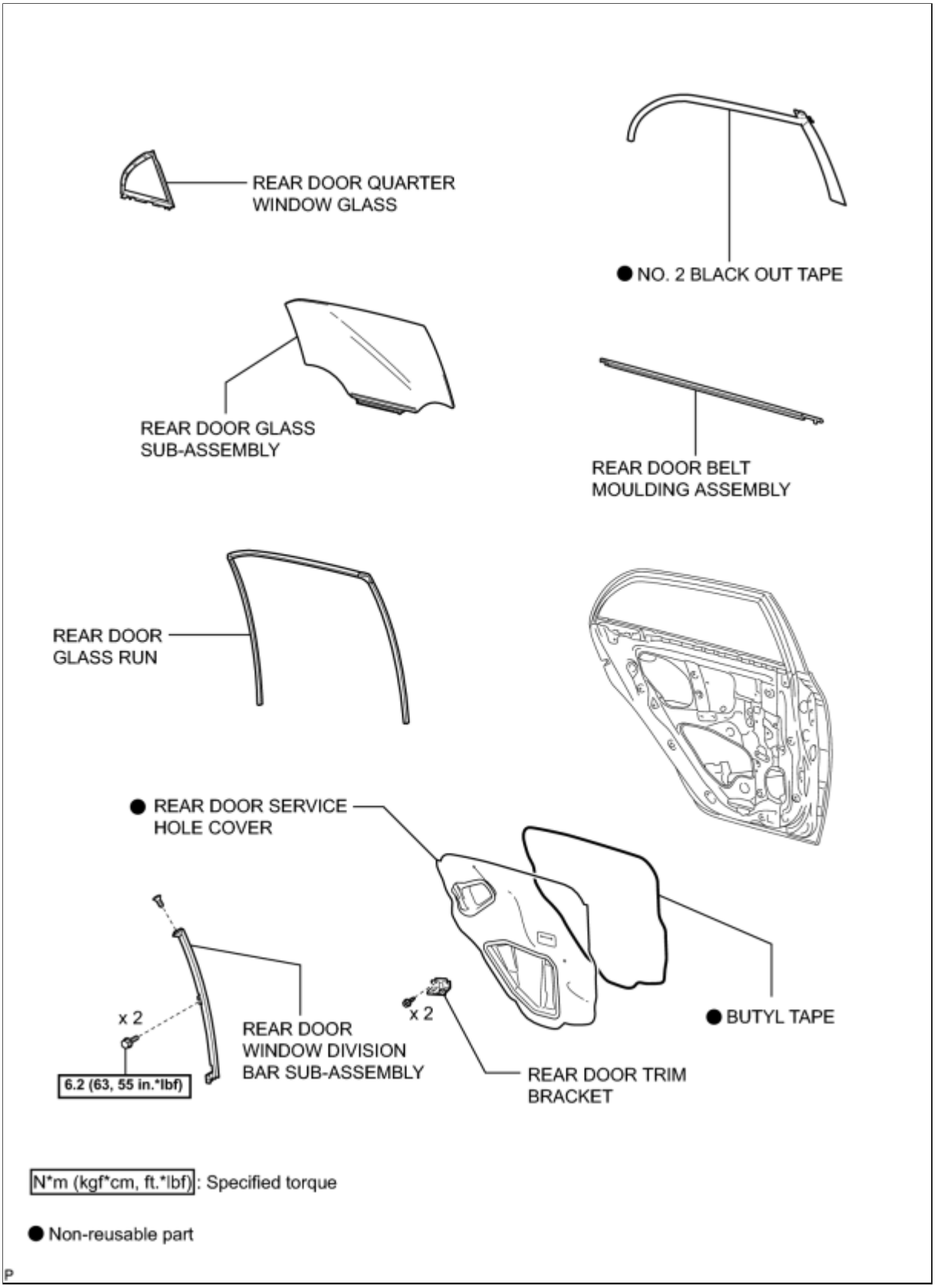

N*m (kgf*cm, ft.*lbf): Specified torque

● Non-reusable part

P

Last Modified: 3-10-2010	6.4 A	**From:** 200901
Model Year: 2010	**Model:** Corolla	**Doc ID:** RM000000O5L017X
Title: EXTERIOR PANELS / TRIM: BLACK OUT TAPE (for Rear Door): REMOVAL (2010 Corolla)		

REMOVAL

HINT:

- Use the same procedure for the RH side and LH side.
- The procedure listed below is for the LH side.

1. REMOVE REAR DOOR WINDOW REGULATOR HANDLE ASSEMBLY (w/o Power Window) INFO

2. REMOVE REAR DOOR INSIDE HANDLE BEZEL INFO

3. REMOVE REAR DOOR ARMREST UPPER BASE PANEL (w/o Power Window) INFO

4. REMOVE REAR DOOR ARMREST UPPER BASE PANEL (w/ Power Window) INFO

5. REMOVE REAR DOOR TRIM BOARD SUB-ASSEMBLY INFO

6. REMOVE REAR DOOR INSIDE HANDLE SUB-ASSEMBLY INFO

7. REMOVE REAR DOOR INNER GLASS WEATHERSTRIP INFO

8. REMOVE REAR DOOR TRIM BRACKET INFO

9. REMOVE REAR DOOR SERVICE HOLE COVER INFO

10. REMOVE REAR DOOR GLASS RUN INFO

11. REMOVE REAR DOOR WINDOW DIVISION BAR SUB-ASSEMBLY INFO

12. REMOVE REAR DOOR QUARTER WINDOW GLASS INFO

13. REMOVE REAR DOOR GLASS SUB-ASSEMBLY INFO

14. REMOVE REAR DOOR BELT MOULDING ASSEMBLY INFO

15. REMOVE REAR DOOR WEATHERSTRIP

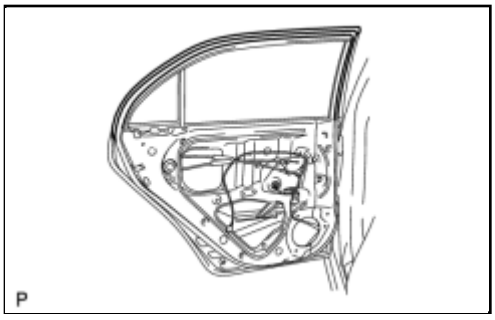

(a) Remove the upper part of the rear door weatherstrip to the extent that allows removal of the black out tape.

16. REMOVE NO. 2 BLACK OUT TAPE

HINT:

When removing the front door rear window frame moulding, heat the vehicle body and front door rear window frame moulding using a heat light.

Heating Temperature:

ITEM	TEMPERATURE
Vehicle Body	40 to 60°C (104 to 140°F)

NOTICE:

Do not heat the vehicle body excessively.

(a) Using a heat light, heat the No. 2 black out tape.

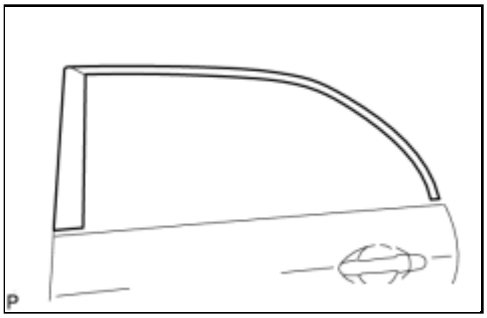

(b) Pull back an edge of the No. 2 black out tape and pull it parallel to the vehicle body to pull it off.

Last Modified: 3-10-2010	6.4 A	**From:** 200901
Model Year: 2010	**Model:** Corolla	**Doc ID:** RM000000O5K019X
Title: EXTERIOR PANELS / TRIM: BLACK OUT TAPE (for Rear Door): INSTALLATION (2010 Corolla)		

INSTALLATION

HINT:

- Use the same procedure for the RH side and LH side.
- The procedure listed below is for the LH side.

1. REPAIR INSTRUCTION

(a) Clean the vehicle body surface.

(1) Using a heat light, heat the vehicle body surface.

Heating Temperature:

ITEM	TEMPERATURE
Vehicle Body	40 to 60°C (104 to 140°F)

NOTICE:

Do not heat the vehicle body excessively.

(2) Wipe off any tape adhesive residue with cleaner.

(b) Installation temperature

(1) When ambient temperature is below 15°C (59°F), perform the installation procedure after warming the vehicle body surface (installation surface of the door frame) and tape up to between 20 and 30°C (68 and 86°F) using a heat light. When ambient temperature is above 35°C (95°F), cool the vehicle body surface (installation surface of the door frame) and tape down to between 20 and 30°C (68 and 86°F) prior to installation.

HINT:

- The most appropriate temperature for installing the tape is 25°C (77°F).
- When the temperature is low, the tape turns stiff and falls off easily. When the temperature is high, the tape loses elasticity.

(c) Before installation

(1) Remove any coating roughness and dirt on and around the vehicle body surface where the tape will be installed (installation surface of the door frame). If any roughness or dirt remains when pressing the tape onto the surface, air will be trapped under the tape and result in a poor appearance.

HINT:

Spray water on the shop floor to settle any dust.

(d) Key points for handling the tape

(1) The tape bends and rolls up easily. Store the tape between flat pieces of cardboard or other similar objects and keep it dry and level.

NOTICE:

Do not bend the tape or leave it in high temperature places.

(e) Key points for installation of the tape (how to use a squeegee and installation procedure for flat surfaces)

NOTICE:

- Conduct positioning of the tape with a high level of accuracy to achieve a neat finish and to avoid peeling.
- The tape cannot be reused because it deforms and will not fit any more after being removed.

(1) To avoid air bubbles, slightly raise the part of the tape that is going to be applied so that its adhesive surface does not touch the vehicle body while applying the tape. Tilt the squeegee at 40 to 50° (for pressing forward) or 30 to 45° (for pulling) to the vehicle body surface and press the tape onto the vehicle body surface with a force of 20 to 30 N (2 to 3 kgf) at a constant slow speed of 3 to 7 cm (1.18 to 2.76 in.) per second.

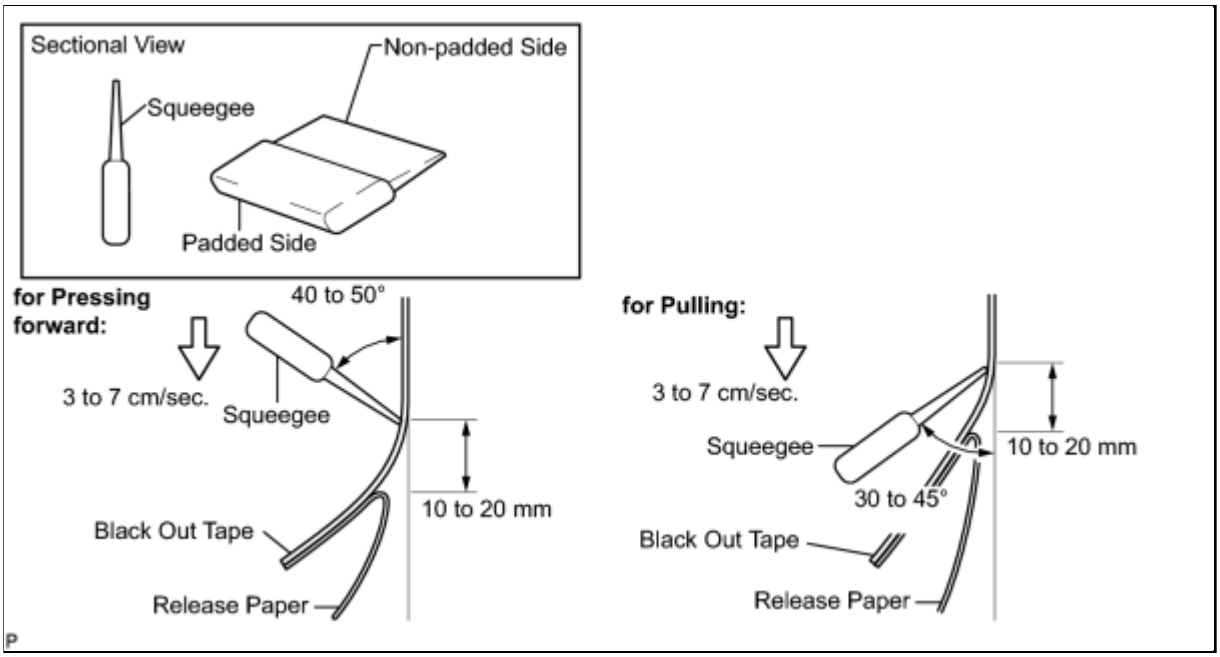

NOTICE:

Be sure to observe the specified pressing speed, force, and angle of the squeegee to avoid wrinkles or air bubbles.

HINT:

- Either angle of the squeegee (for pressing forward or for pulling) is acceptable.
- Be sure to apply the tape while removing the release paper 10 to 20 mm (0.393 to 0.787 in.) from the edge of the squeegee.

(f) Key points for installation of the tape (how to use a squeegee and installation procedure for hemmed surfaces)

(1) If it is difficult to press the tape, press it in several steps as shown in the illustration. Use your fingers or the padded surface of a squeegee to slowly apply the tape to the hem of the vehicle, especially for a small

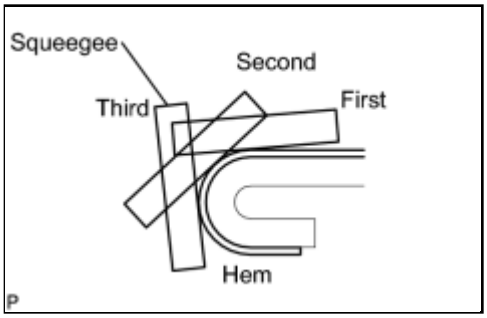

hem.

HINT:

When applying tape to the backside of a hem, remove the release paper and use your fingers or the padded surface of a squeegee.

(g) Key points for installation of the tape (how to use a squeegee and installation procedure for corners)

(1) Remove the release paper and apply the tape carefully with your fingers.

(2) Before applying the tape to each corner, heat the tape using a heat light and gradually apply it to avoid wrinkles on the tape and achieve a neat finish.

(h) Check after installation

(1) After completing the application, check if the tape is applied neatly. If the tape is not applied neatly, reapply new tape.

NOTICE:

Do not reuse the tape.

2. INSTALL NO. 2 BLACK OUT TAPE

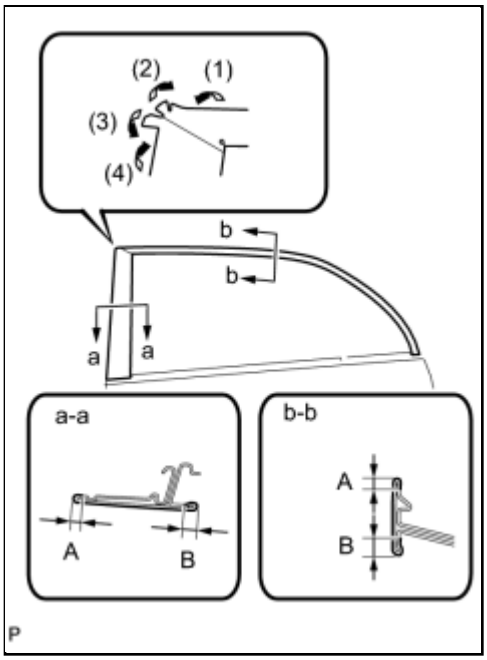

(a) Refer to the illustration to position the No. 2 black out tape.

Reference Measurement:

AREA	MEASUREMENT
A	2 to 4 mm (0.0787 to 0.158 in.)
B	5 mm (0.197 in.)

(b) Remove the release paper and apply the tape.

3. INSTALL REAR DOOR WEATHERSTRIP

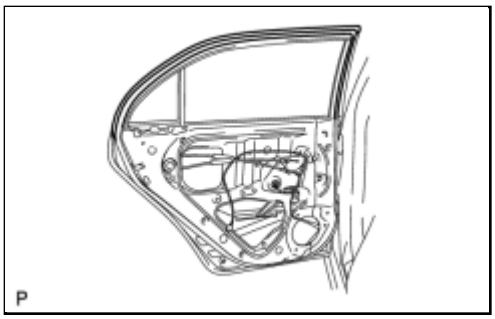

(a) Install the rear door weatherstrip.

4. INSTALL REAR DOOR BELT MOULDING ASSEMBLY INFO

5. INSTALL REAR DOOR GLASS RUN INFO

6. INSTALL REAR DOOR GLASS SUB-ASSEMBLY INFO

7. INSTALL REAR DOOR QUARTER WINDOW GLASS INFO

8. INSTALL REAR DOOR WINDOW DIVISION BAR SUB-ASSEMBLY INFO

9. INSTALL REAR DOOR SERVICE HOLE COVER INFO

10. INSTALL REAR DOOR TRIM BRACKET INFO

11. INSTALL REAR DOOR INNER GLASS WEATHERSTRIP INFO

12. INSTALL REAR DOOR INSIDE HANDLE SUB-ASSEMBLY INFO

13. INSTALL REAR DOOR TRIM BOARD SUB-ASSEMBLY INFO

14. INSTALL REAR DOOR ARMREST UPPER BASE PANEL (w/o Power Window) INFO

15. INSTALL REAR DOOR ARMREST UPPER BASE PANEL (w/ Power Window) INFO

16. INSTALL REAR DOOR INSIDE HANDLE BEZEL INFO

17. INSTALL REAR DOOR WINDOW REGULATOR HANDLE ASSEMBLY (w/o Power Window) INFO

Last Modified: 3-10-2010	6.4 K	**From:** 200901
Model Year: 2010	**Model:** Corolla	**Doc ID:** RM000002WCM00BX
Title: EXTERIOR PANELS / TRIM: FRONT BUMPER: COMPONENTS (2010 Corolla)		

COMPONENTS

ILLUSTRATION

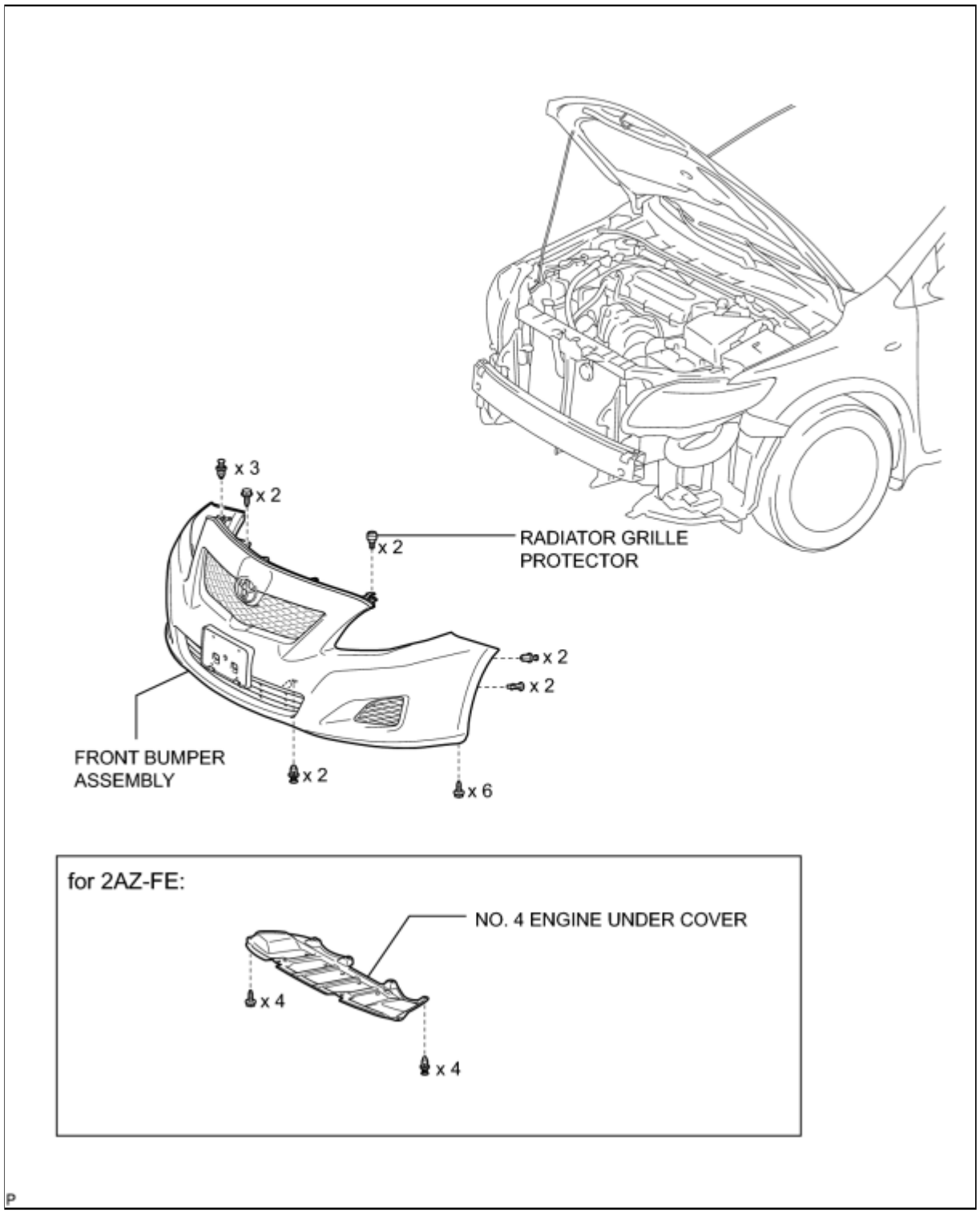

ILLUSTRATION

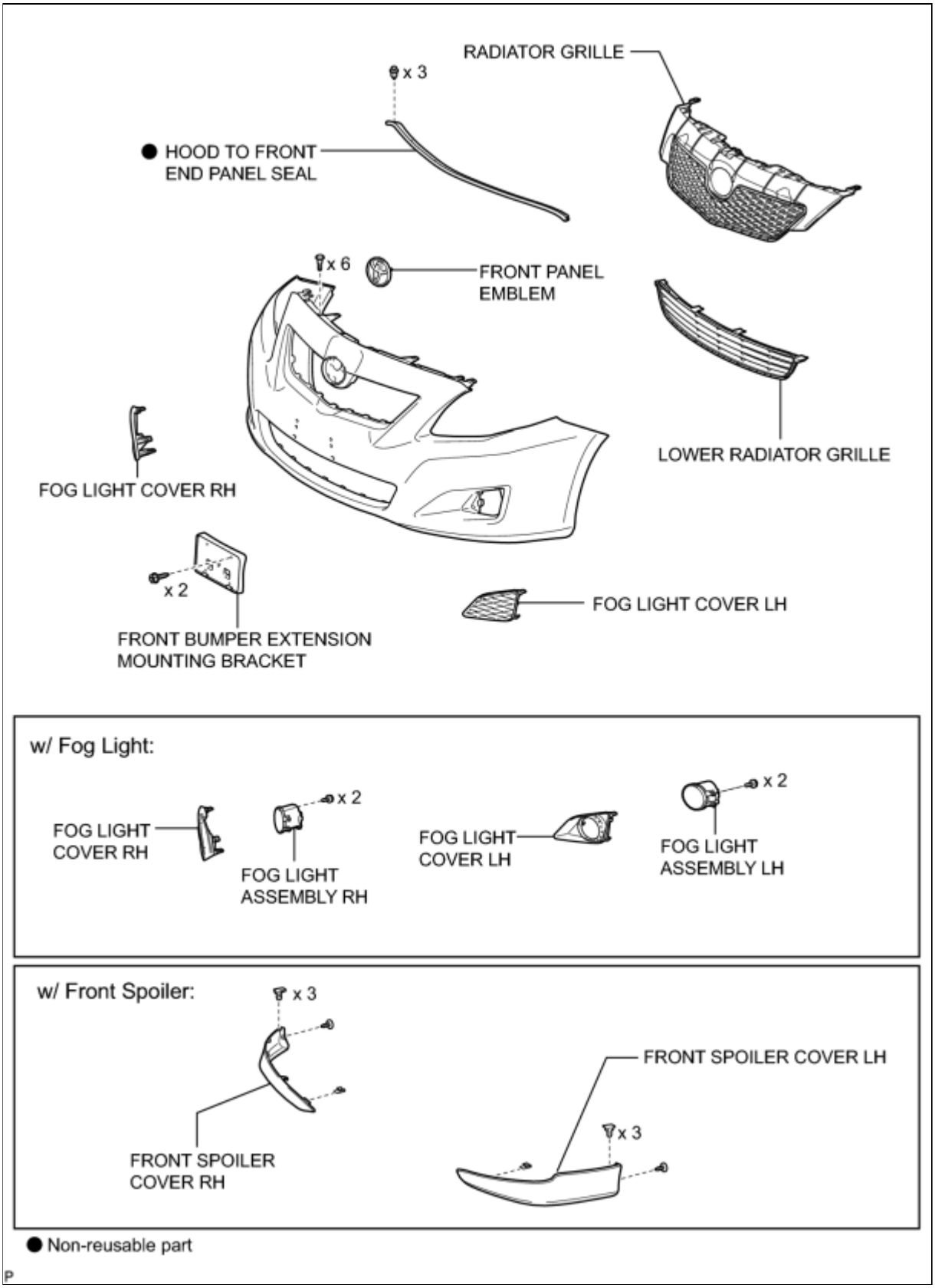

ILLUSTRATION

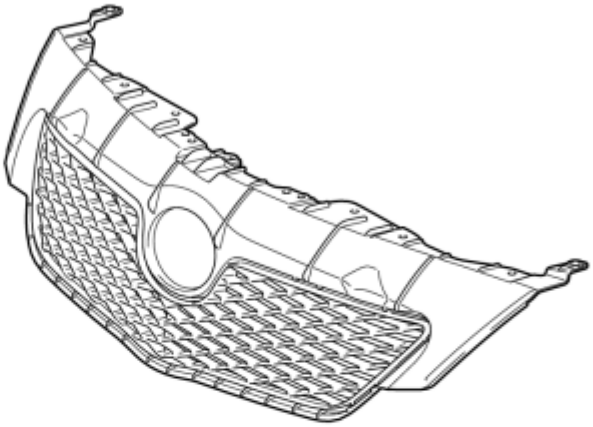

S Type:	XRS Type:
RADIATOR GRILLE NAME PLATE	RADIATOR GRILLE NAME PLATE

P

ILLUSTRATION

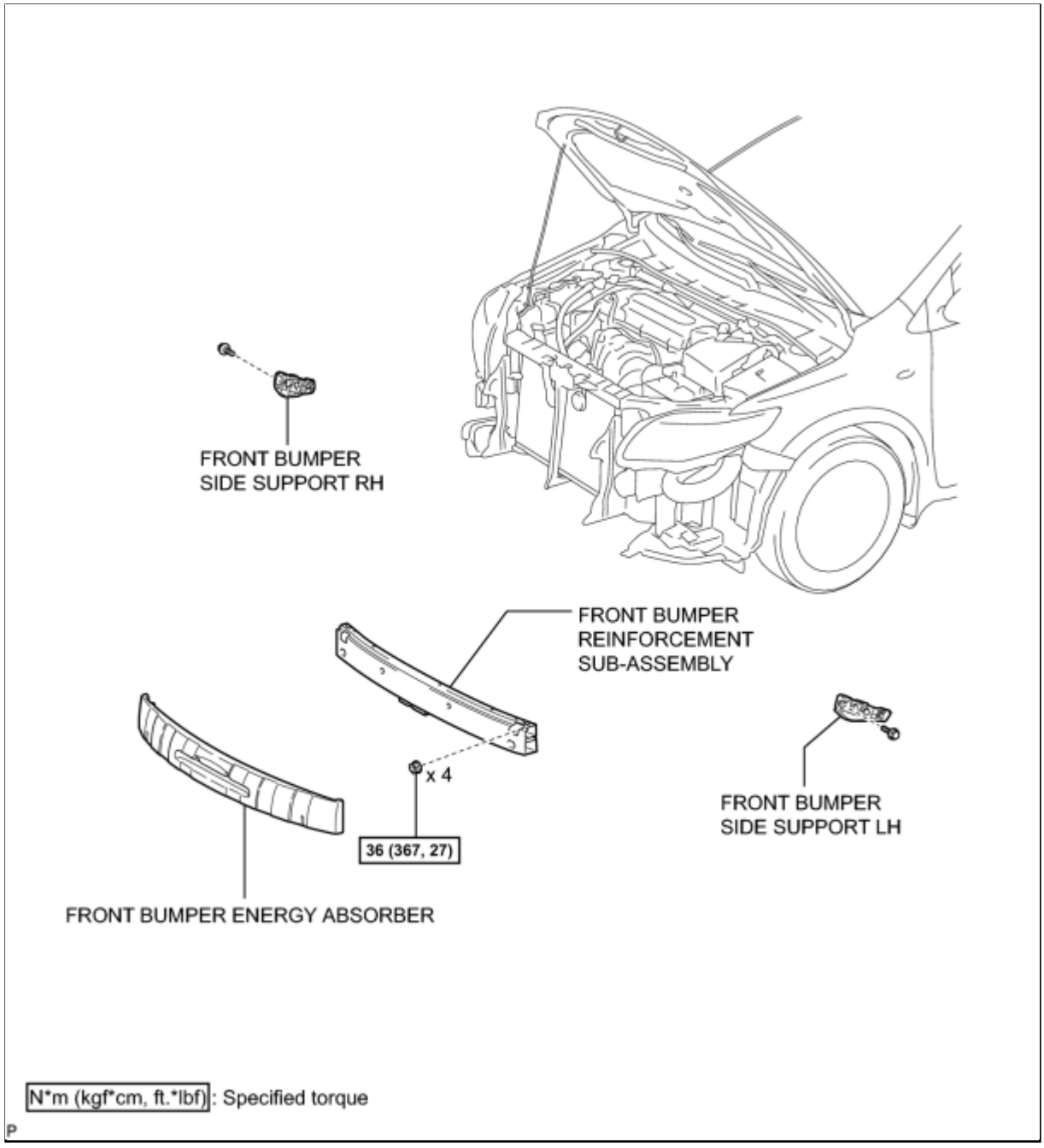

N*m (kgf*cm, ft.*lbf): Specified torque

P

Last Modified: 3-10-2010	6.4 A	**From:** 200901
Model Year: 2010	**Model:** Corolla	**Doc ID:** RM000002WCO00DX
Title: EXTERIOR PANELS / TRIM: FRONT BUMPER: DISASSEMBLY (2010 Corolla)		

DISASSEMBLY

1. REMOVE FRONT SPOILER COVER LH (w/ Front Spoiler)

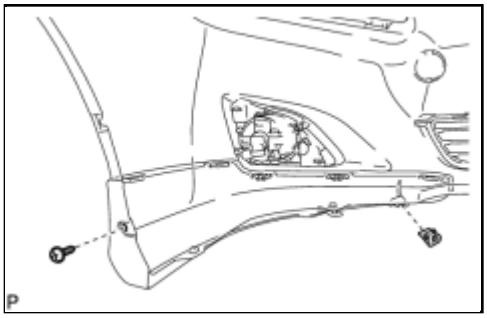

(a) Remove the screw and clip.

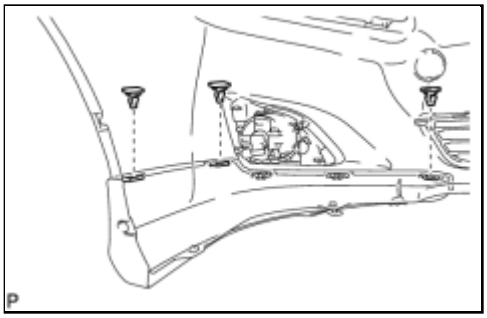

(b) Remove the 3 clips.

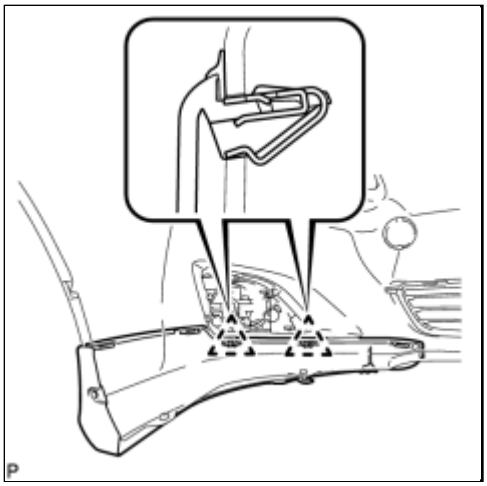

(c) Disengage the 2 claws and remove the front spoiler cover LH.

2. REMOVE FRONT SPOILER COVER RH (w/ Front Spoiler)

HINT:

Use the same procedure for the RH side and LH side.

3. REMOVE HOOD TO FRONT END PANEL SEAL

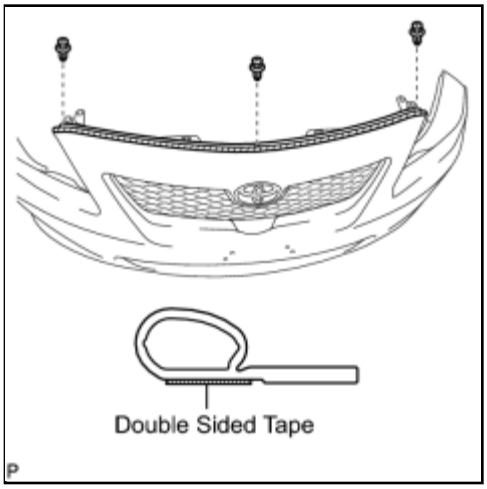

(a) Remove the 3 clips.

(b) Remove the hood to front end panel seal.

4. REMOVE FRONT BUMPER EXTENSION MOUNTING BRACKET

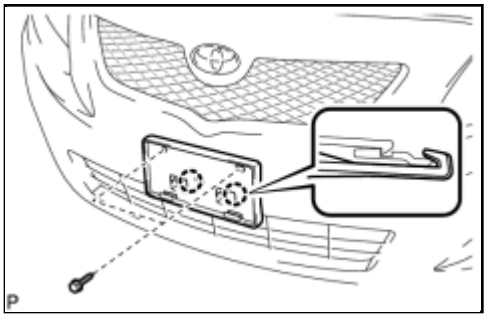

(a) Remove the 2 screws.

(b) Disengage the 2 claws and remove the front bumper extension mounting bracket.

5. REMOVE RADIATOR GRILLE

(a) Remove the 6 clips.

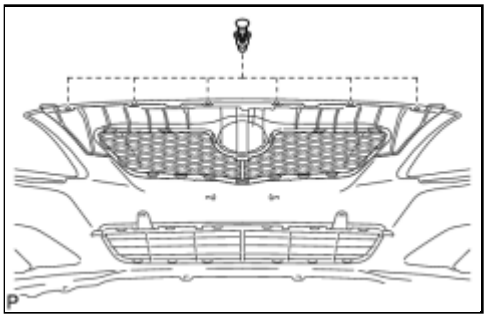

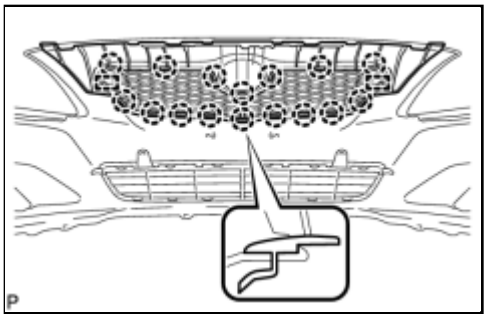

(b) Disengage the 16 claws and 2 guides, and remove the radiator grille.

6. REMOVE RADIATOR GRILLE NAME PLATE

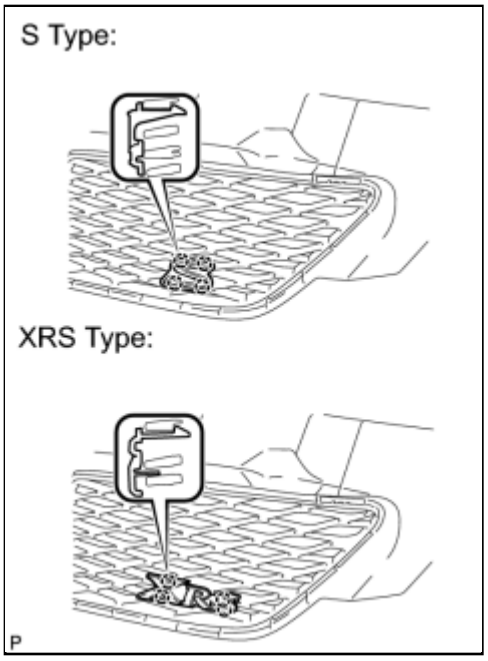

(a) Disengage the 4 claws and remove the radiator grille name plate.

7. REMOVE FRONT PANEL EMBLEM

(a) Disengage the 2 claws (A).

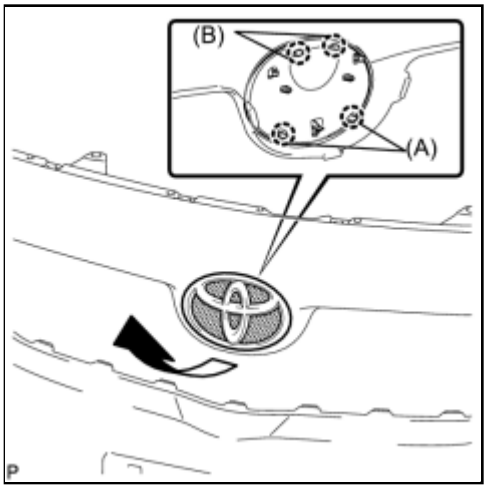

(b) Disengage the 2 claws (B) and remove the front panel emblem.

8. REMOVE LOWER RADIATOR GRILLE

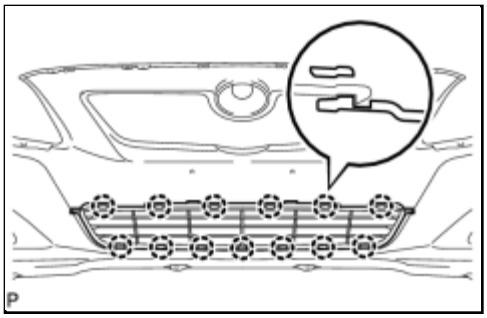

(a) Disengage the 13 claws and remove the lower radiator grille.

9. REMOVE FOG LIGHT ASSEMBLY LH (w/ Fog Light) INFO

10. REMOVE FOG LIGHT ASSEMBLY RH (w/ Fog Light)

HINT:

Use the same procedure for the RH side and LH side.

11. REMOVE FOG LIGHT COVER LH

(a) Disengage the 4 claws and remove the fog light cover LH.

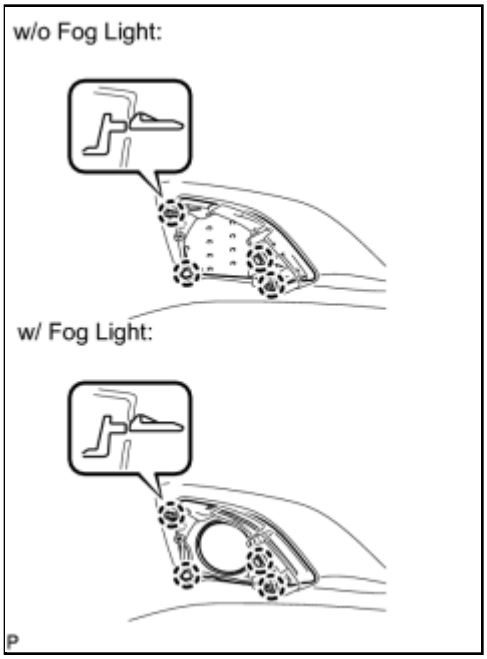

12. REMOVE FOG LIGHT COVER RH

HINT:

Use the same procedure for the RH side and LH side.

13. REMOVE FRONT BUMPER SIDE SUPPORT LH

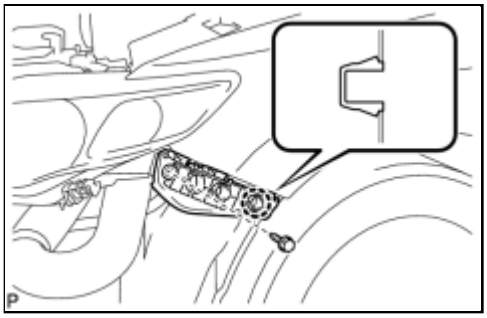

(a) Remove the bolt.

(b) Disengage the claw and remove the front bumper side support LH.

14. REMOVE FRONT BUMPER SIDE SUPPORT RH

HINT:

Use the same procedure for the RH side and LH side.

15. REMOVE FRONT BUMPER ENERGY ABSORBER

(a) Remove the front bumper energy absorber.

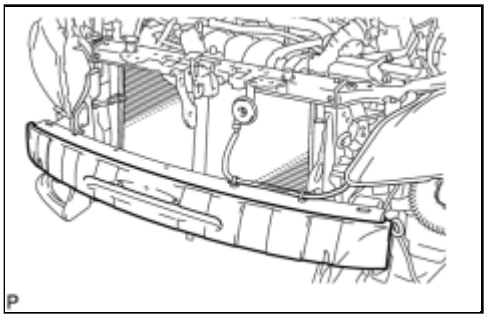

16. REMOVE FRONT BUMPER REINFORCEMENT SUB-ASSEMBLY

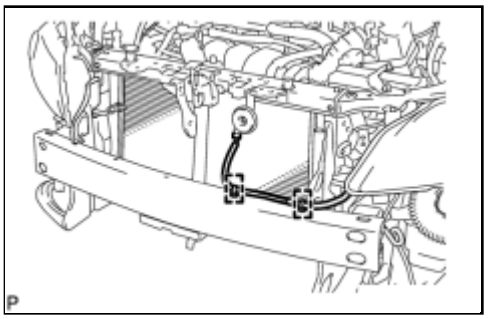

(a) Disengage each clamp.

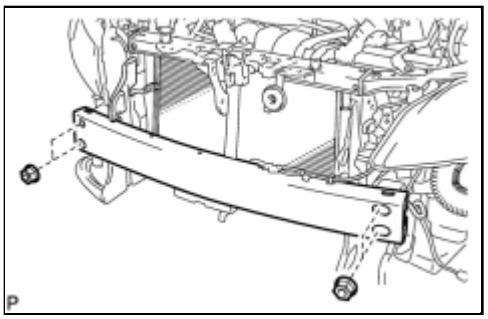

(b) Remove the 4 nuts and front bumper reinforcement sub-assembly.

Last Modified: 3-10-2010	6.4 A	**From:** 200901
Model Year: 2010	**Model:** Corolla	**Doc ID:** RM000002WCN00CX
Title: EXTERIOR PANELS / TRIM: FRONT BUMPER: REMOVAL (2010 Corolla)		

REMOVAL

1. REMOVE RADIATOR GRILLE PROTECTOR

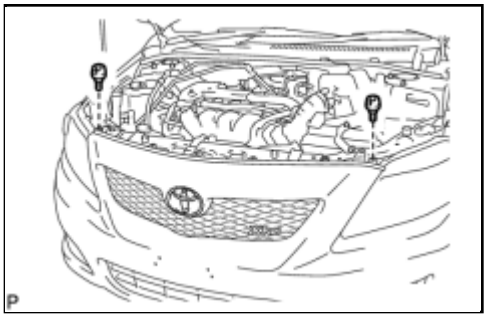

(a) Remove the 2 radiator grille protectors.

2. REMOVE NO. 4 ENGINE UNDER COVER (for 2AZ-FE)

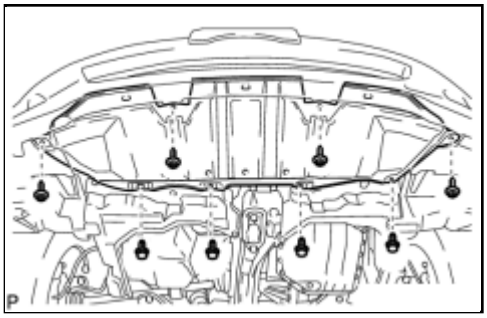

(a) Remove the 4 screws, 4 clips and engine under cover.

3. REMOVE FRONT BUMPER ASSEMBLY

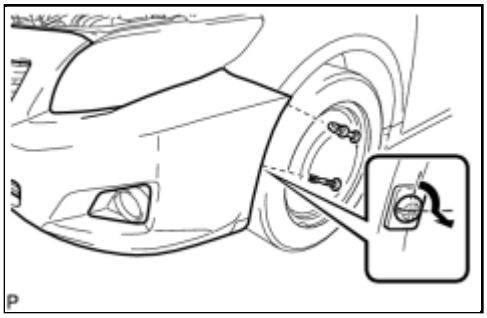

(a) Remove the clip.

HINT:

Use the same procedure for the RH side and LH side.

(b) Using a screwdriver, turn the pin 90 degrees and remove the pin hold clip.

HINT:

Use the same procedure for the RH side and LH side.

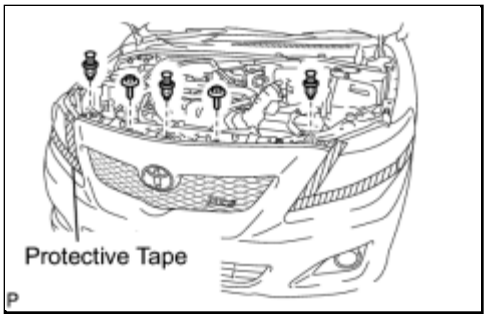

(c) Put protective tape around the front bumper assembly.

(d) Remove the 2 screws and 3 clips.

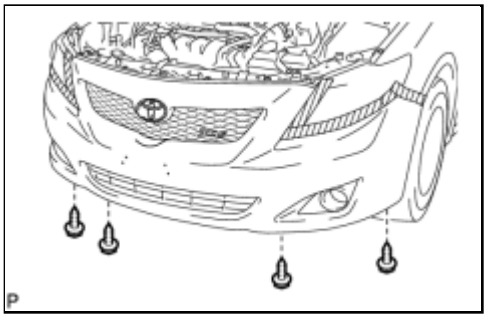

(e) Remove the 4 screws.

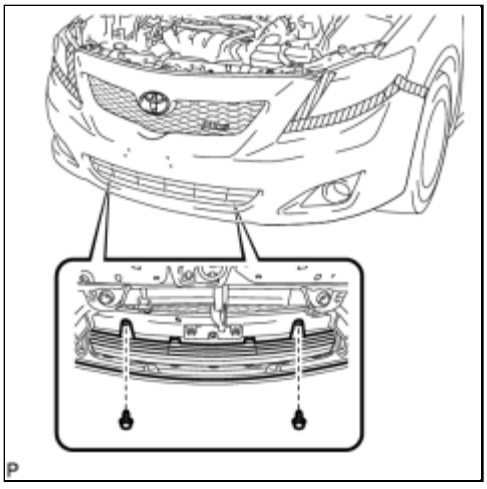

(f) Remove the 2 clips.

(g) Disengage the 6 claws and remove the front bumper assembly as shown in the illustration.

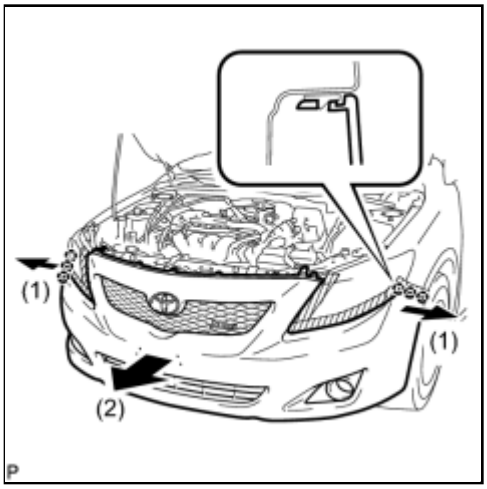

(h) Disconnect the fog light connector. (w/ Fog Light)

Last Modified: 3-10-2010	6.4 A	**From:** 200901
Model Year: 2010	**Model:** Corolla	**Doc ID:** RM000002WCP00DX
Title: EXTERIOR PANELS / TRIM: FRONT BUMPER: REASSEMBLY (2010 Corolla)		

REASSEMBLY

1. INSTALL FRONT BUMPER REINFORCEMENT SUB-ASSEMBLY

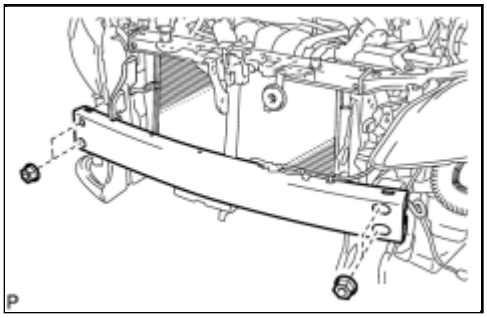

(a) Install the front bumper reinforcement sub-assembly with the 4 nuts.

Torque: 36 N·m (367 kgf·cm, 27ft·lbf)

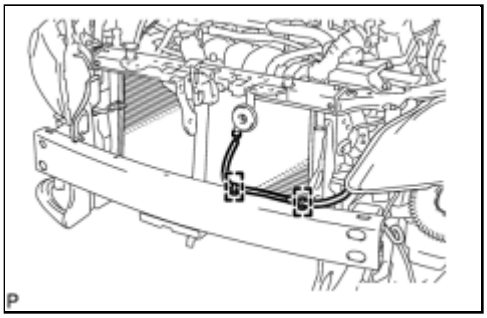

(b) Engage each clamp.

2. INSTALL FRONT BUMPER ENERGY ABSORBER

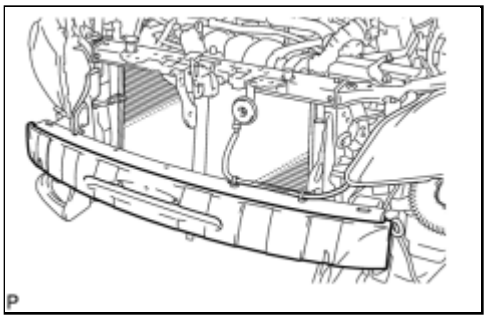

(a) Install the front bumper energy absorber.

3. INSTALL FRONT BUMPER SIDE SUPPORT LH

(a) Engage the claw and install the front bumper side support

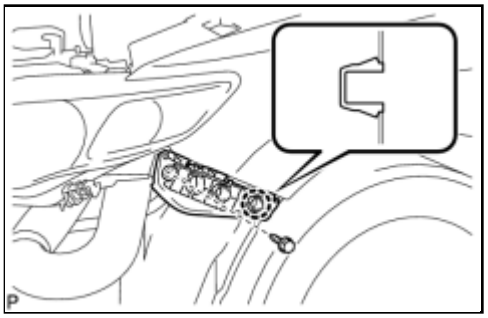

LH.

(b) Install the bolt.

4. INSTALL FRONT BUMPER SIDE SUPPORT RH

HINT:

Use the same procedure for the RH side and LH side.

5. INSTALL FRONT BUMPER EXTENSION MOUNTING BRACKET

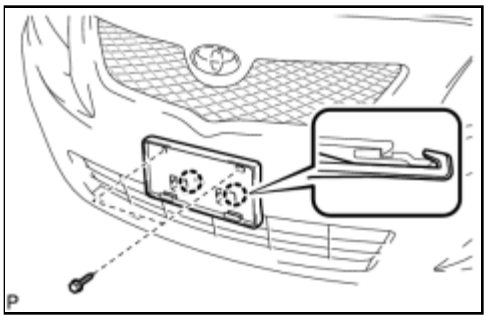

(a) Engage the 2 claws and install the front bumper extension mounting bracket.

(b) Install the 2 screws.

6. INSTALL FOG LIGHT COVER LH

(a) Engage the 4 claws and install the fog light cover LH.

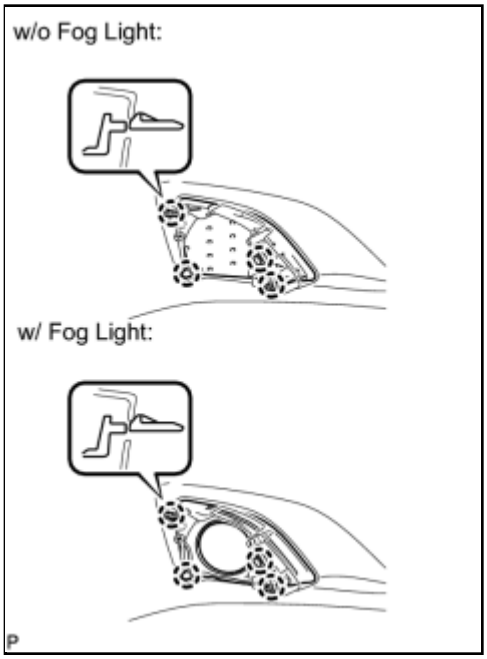

7. INSTALL FOG LIGHT COVER RH

HINT:

Use the same procedure for the RH side and LH side.

8. INSTALL FOG LIGHT ASSEMBLY LH (w/ Fog Light) INFO

9. INSTALL FOG LIGHT ASSEMBLY RH (w/ Fog Light)

HINT:

Use the same procedure for the RH side and LH side.

10. INSTALL LOWER RADIATOR GRILLE

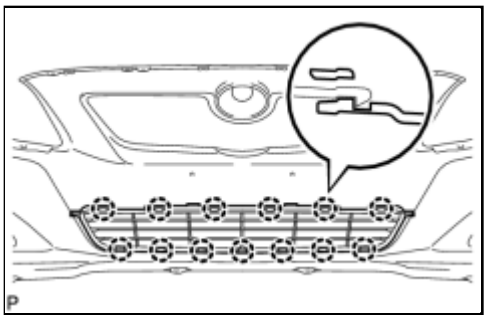

(a) Engage the 13 claws and install the lower radiator grille.

11. INSTALL FRONT PANEL EMBLEM

(a) Engage the 2 claws (A).

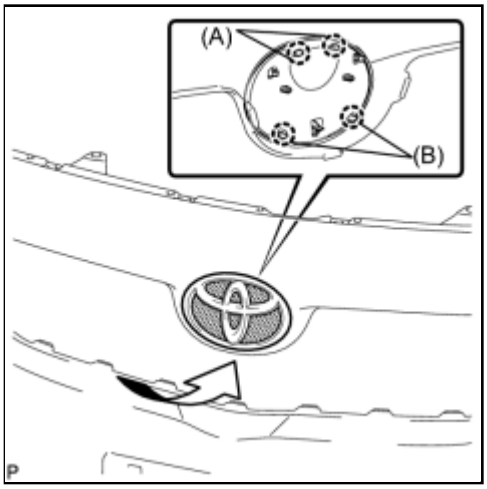

(b) Engage the 2 claws (B) and install the front panel emblem.

12. INSTALL RADIATOR GRILLE NAME PLATE

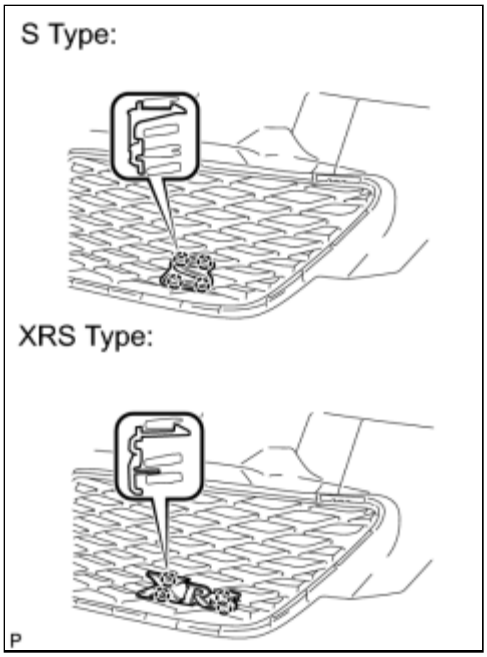

(a) Engage the 4 claws and install the radiator grille name plate.

13. INSTALL RADIATOR GRILLE

(a) Engage the 16 claws and 2 guides, and install the radiator grille.

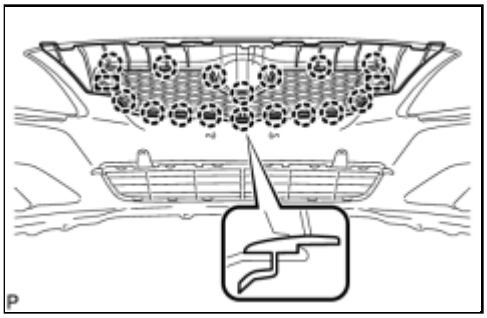

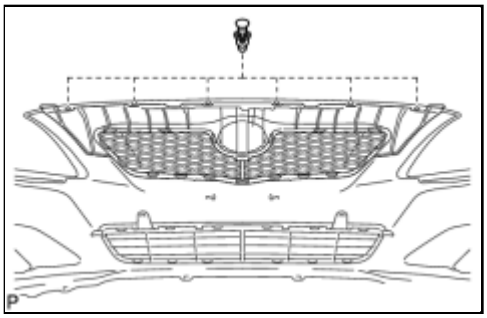

(b) Install the 6 clips.

14. INSTALL HOOD TO FRONT END PANEL SEAL

(a) Wipe off any tape adhesive residue with cleaner.

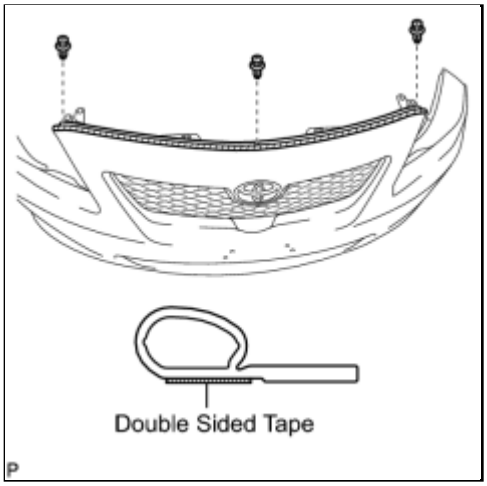

(b) Install a new hood to front end panel seal.

(c) Install the 3 clips.

15. INSTALL FRONT SPOILER COVER LH (w/ Front Spoiler)

(a) Engage the 2 claws and install the front spoiler cover LH.

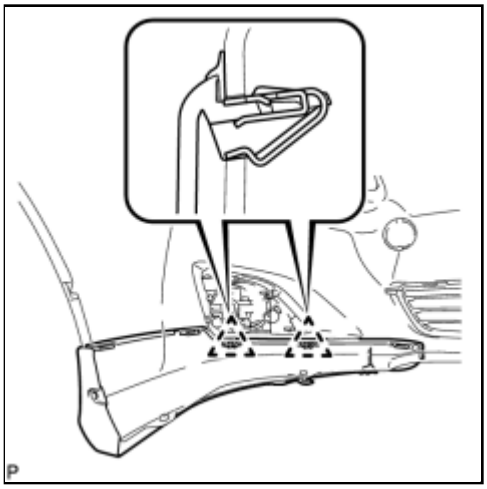

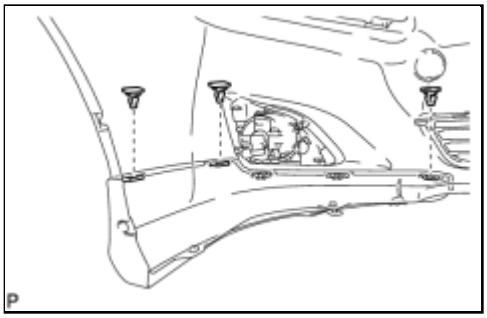

(b) Install the 3 clips.

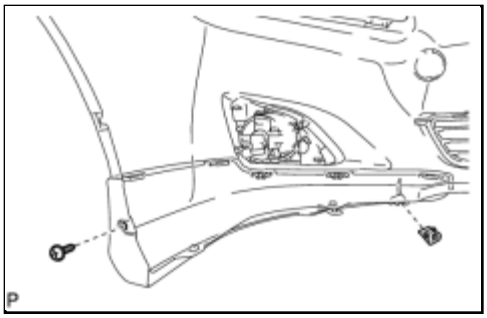

(c) Install the screw and clip.

16. INSTALL FRONT SPOILER COVER RH (w/ Front Spoiler)

HINT:

Use the same procedure for the RH side and LH side.

Last Modified: 3-10-2010	6.4 A	**From:** 200901
Model Year: 2010	**Model:** Corolla	**Doc ID:** RM000002WCL00CX
Title: EXTERIOR PANELS / TRIM: FRONT BUMPER: INSTALLATION (2010 Corolla)		

INSTALLATION

1. INSTALL FRONT BUMPER ASSEMBLY

(a) Connect the fog light connector. (w/ Fog Light)

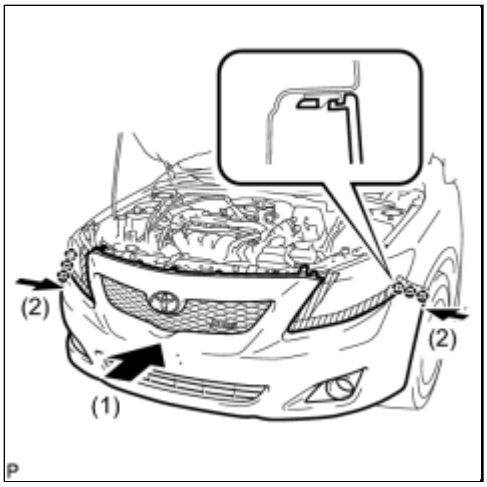

(b) Engage the 6 claws and install the front bumper assembly as shown in the illustration.

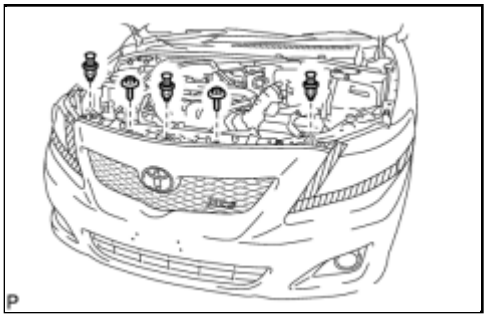

(c) Install the 2 screws and 3 clips.

(d) Install the 2 clips.

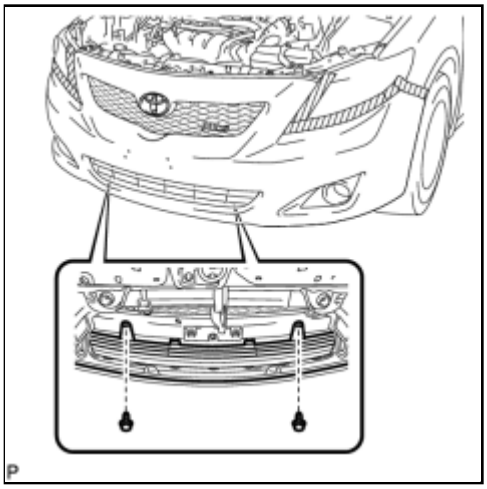

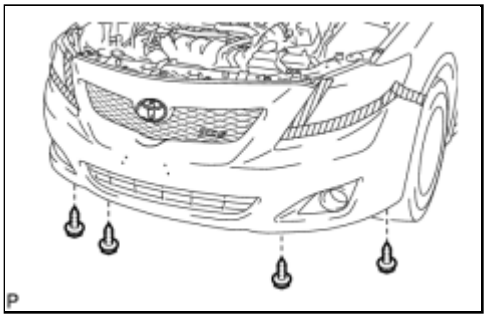

(e) Install the 4 screws.

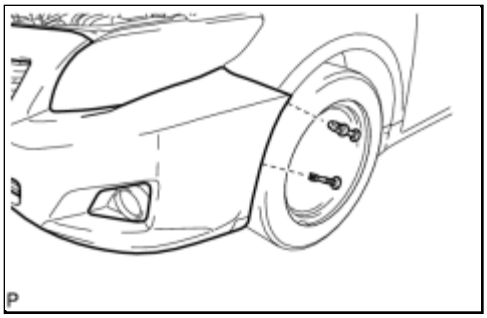

(f) Install the pin hold clip and clip.

HINT:

Use the same procedure for the RH side and LH side.

2. INSTALL NO. 4 ENGINE UNDER COVER

(a) Install the No. 4 engine under cover with the 4 screws and 4clips.

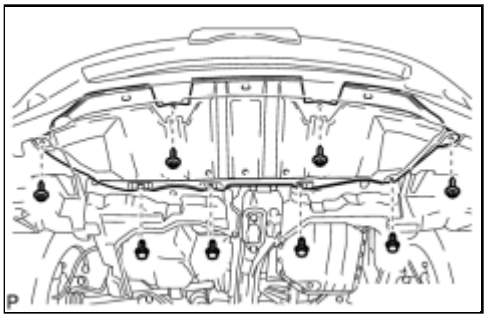

3. INSTALL RADIATOR GRILLE PROTECTOR

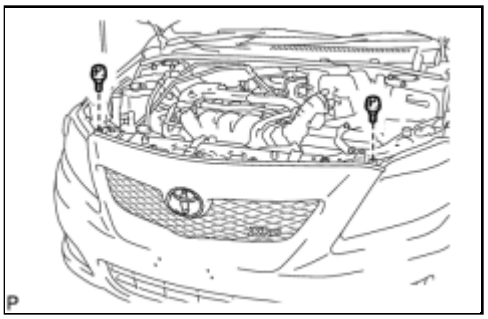

(a) Install the 2 radiator grille protectors.

4. VEHICLE PREPARATION FOR FOG LIGHT AIMING ADJUTMENT (w/ Fog Light) INFO

5. PREPARATION FOR FOG LIGHT AIMING (w/ Fog Light) INFO

6. INSPECT FOG LIGHT AIMING (w/ Fog Light) INFO

7. ADJUST FOG LIGHT AIMING (w/ Fog Light) INFO

Last Modified: 3-10-2010	6.4 K	**From:** 200901
Model Year: 2010	**Model:** Corolla	**Doc ID:** RM000002WIS00DX
Title: EXTERIOR PANELS / TRIM: FRONT DOOR BELT MOULDING: COMPONENTS (2010 Corolla)		

COMPONENTS

ILLUSTRATION

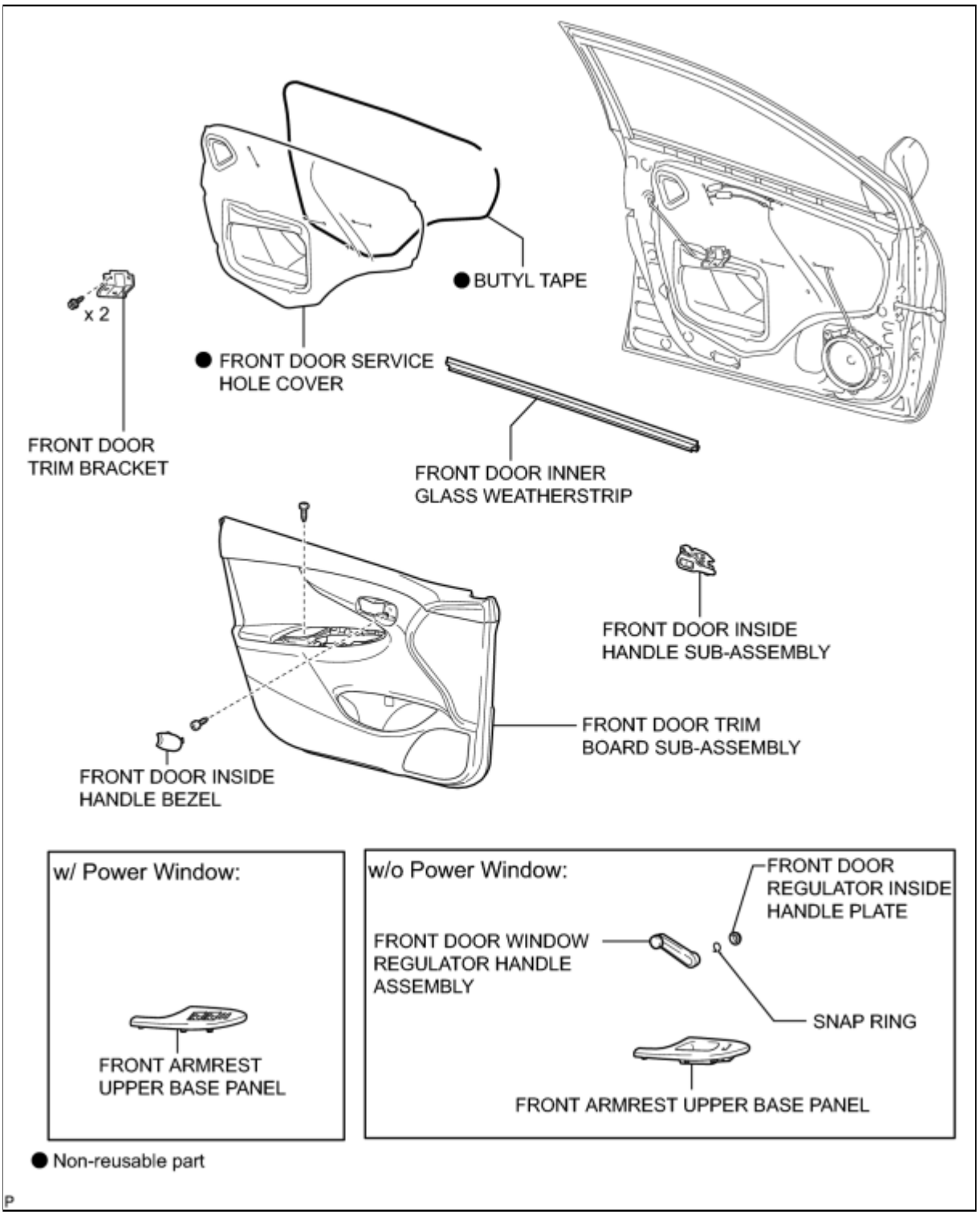

ILLUSTRATION

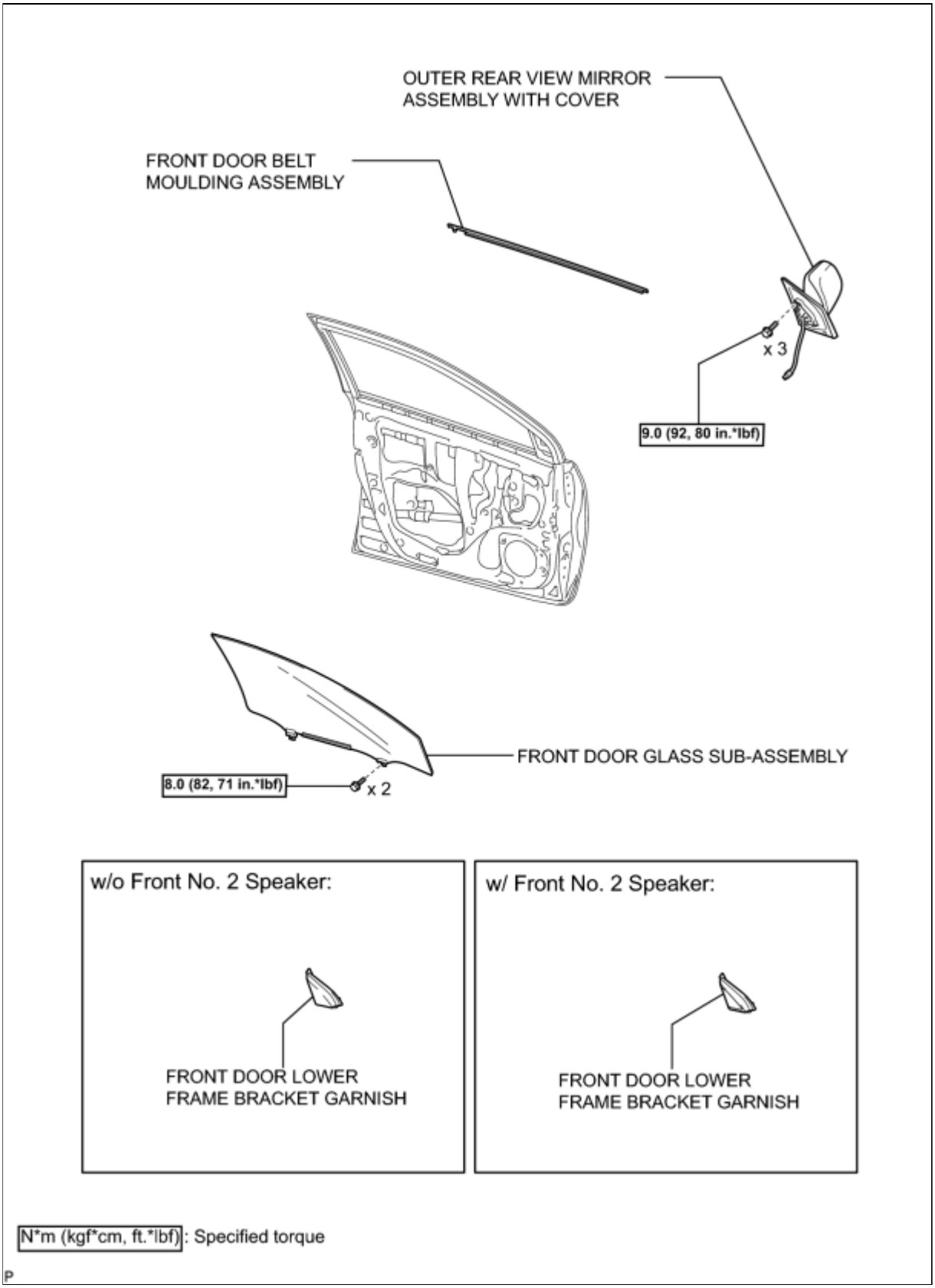

Last Modified: 3-10-2010	6.4 A	**From:** 200901
Model Year: 2010	**Model:** Corolla	**Doc ID:** RM000002RLT00IX
Title: EXTERIOR PANELS / TRIM: FRONT DOOR BELT MOULDING: INSTALLATION (2010 Corolla)		

INSTALLATION

HINT:

- Use the same procedure for the RH side and LH side.
- The procedure listed below is for the LH side.

1. INSTALL FRONT DOOR BELT MOULDING ASSEMBLY

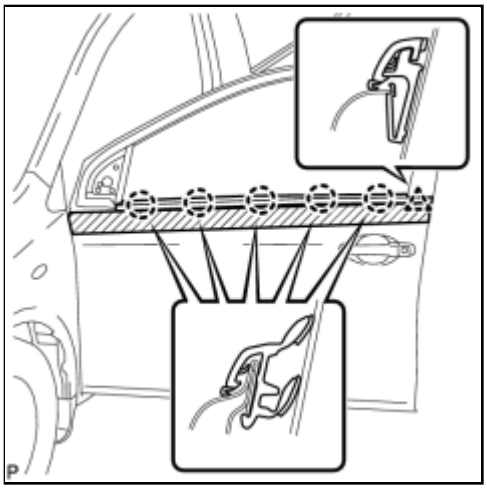

(a) Engage the 5 claws and clip, and install the front door belt moulding assembly.

2. INSTALL FRONT DOOR GLASS SUB-ASSEMBLY INFO

3. INSTALL OUTER REAR VIEW MIRROR ASSEMBLY WITH COVER (w/o Power Mirror Control System) INFO

4. INSTALL FRONT DOOR SERVICE HOLE COVER INFO

5. INSTALL FRONT DOOR TRIM BRACKET INFO

6. INSTALL FRONT DOOR INNER GLASS WEATHERSTRIP INFO

7. INSTALL FRONT DOOR LOWER FRAME BRACKET GARNISH (w/o Front No. 2 Speaker) INFO

8. INSTALL FRONT DOOR LOWER FRAME BRACKET GARNISH (w/ Front No. 2 Speaker) INFO

9. INSTALL FRONT DOOR INSIDE HANDLE SUB-ASSEMBLY INFO

10. INSTALL FRONT DOOR TRIM BOARD SUB-ASSEMBLY INFO

11. INSTALL FRONT ARMREST UPPER BASE PANEL (w/o Power Window) INFO

12. INSTALL FRONT ARMREST UPPER BASE PANEL (w/ Power Window) INFO

13. INSTALL FRONT DOOR INSIDE HANDLE BEZEL INFO

14. INSTALL FRONT DOOR WINDOW REGULATOR HANDLE ASSEMBLY (w/o Power Window) INFO

Last Modified: 3-10-2010	6.4 A	**From:** 200901
Model Year: 2010	**Model:** Corolla	**Doc ID:** RM000002RLV00IX
Title: EXTERIOR PANELS / TRIM: FRONT DOOR BELT MOULDING: REMOVAL (2010 Corolla)		

REMOVAL

HINT:

- Use the same procedure for the RH side and LH side.
- The procedure listed below is for the LH side.

1. REMOVE FRONT DOOR WINDOW REGULATOR HANDLE ASSEMBLY (w/o Power Window) INFO

2. REMOVE FRONT DOOR INSIDE HANDLE BEZEL INFO

3. REMOVE FRONT ARMREST UPPER BASE PANEL (w/o Power Window) INFO

4. REMOVE FRONT ARMREST UPPER BASE PANEL (w/ Power Window) INFO

5. REMOVE FRONT DOOR TRIM BOARD SUB-ASSEMBLY INFO

6. REMOVE FRONT DOOR INSIDE HANDLE SUB-ASSEMBLY INFO

7. REMOVE FRONT DOOR LOWER FRAME BRACKET GARNISH (w/o Front No. 2 Speaker) INFO

8. REMOVE FRONT DOOR LOWER FRAME BRACKET GARNISH (w/ Front No. 2 Speaker) INFO

9. REMOVE FRONT DOOR INNER GLASS WEATHERSTRIP INFO

10. REMOVE FRONT DOOR TRIM BRACKET INFO

11. REMOVE FRONT DOOR SERVICE HOLE COVER INFO

12. REMOVE OUTER REAR VIEW MIRROR ASSEMBLY WITH COVER INFO

13. REMOVE FRONT DOOR GLASS SUB-ASSEMBLY (w/o Power Window) INFO

14. REMOVE FRONT DOOR GLASS SUB-ASSEMBLY (w/ Power Window) INFO

15. REMOVE FRONT DOOR BELT MOULDING ASSEMBLY

(a) Put protective tape around the front door belt moulding assembly.

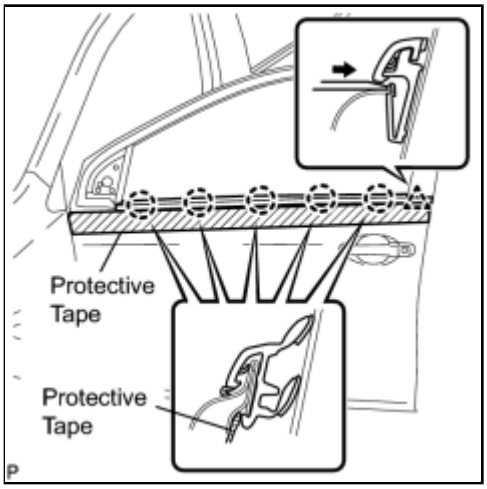

(b) Using a screwdriver with its tip taped, disengage the 5 claws from the inside of the door.

(c) Using a moulding remover, disengage the clip and remove the front door belt moulding assembly.

Last Modified: 3-10-2010	6.4 K	**From:** 200901
Model Year: 2010	**Model:** Corolla	**Doc ID:** RM000001XT900MX
Title: EXTERIOR PANELS / TRIM: FRONT PILLAR UPPER COVER: COMPONENTS (2010 Corolla)		

COMPONENTS

ILLUSTRATION

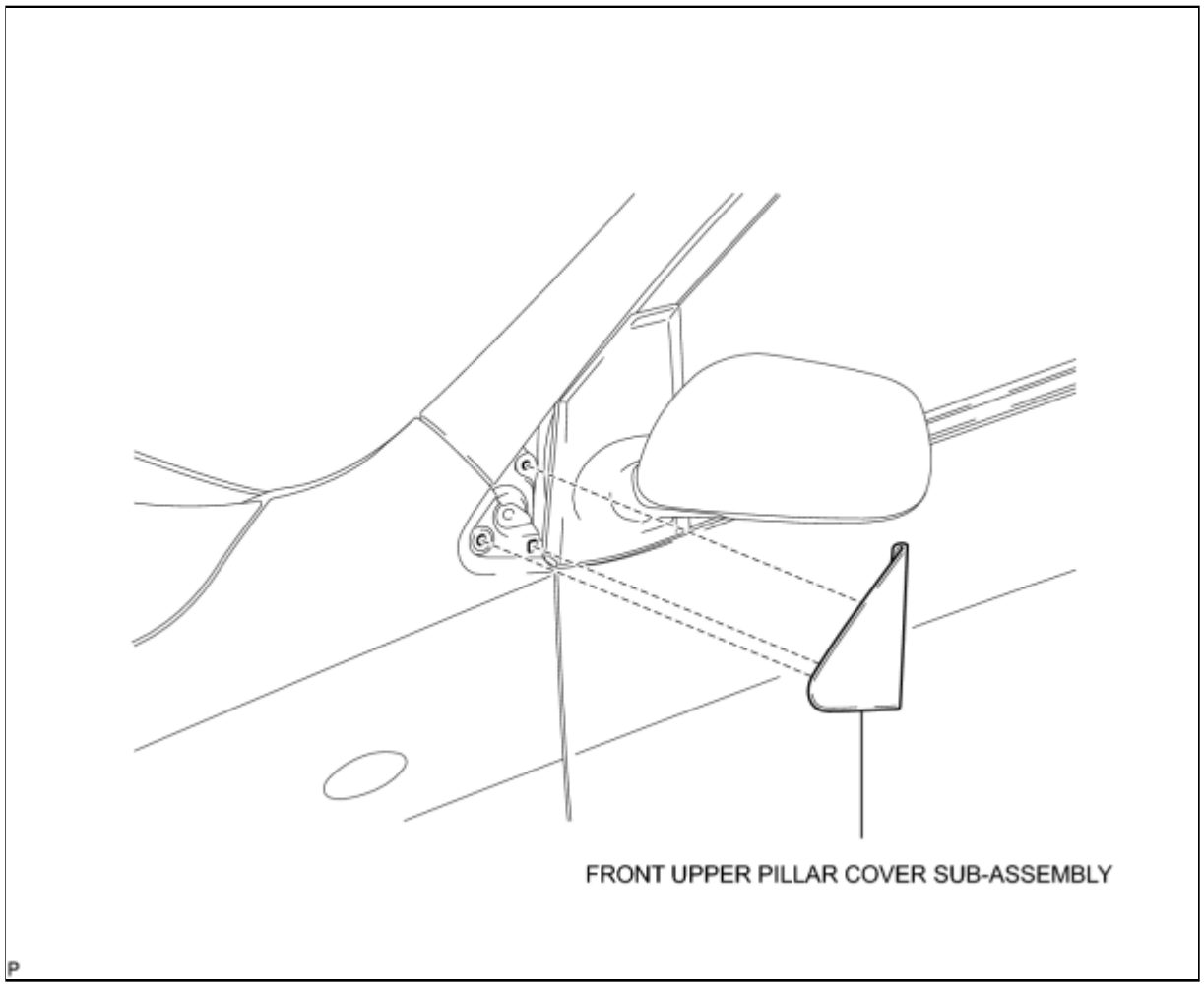

Last Modified: 3-10-2010	6.4 A	**From:** 200901
Model Year: 2010	**Model:** Corolla	**Doc ID:** RM0000015SE00QX
Title: EXTERIOR PANELS / TRIM: FRONT PILLAR UPPER COVER: REMOVAL (2010 Corolla)		

REMOVAL

HINT:

- Use the same procedure for the RH side and LH side.
- The procedure listed below is for the LH side.

1. REMOVE FRONT UPPER PILLAR COVER SUB-ASSEMBLY

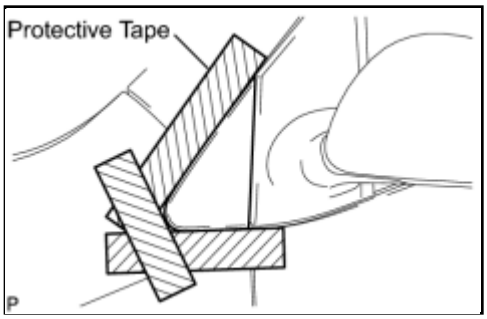

(a) Put protective tape around the front upper pillar cover sub-assembly.

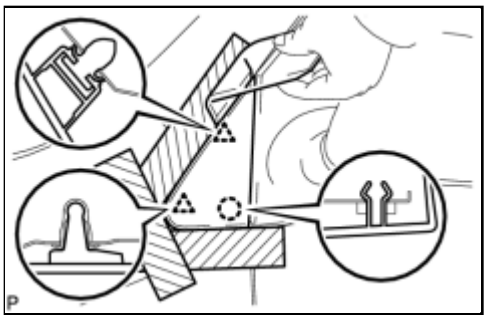

(b) Using a moulding remover, disengage the 2 clips and claw, and remove the front upper pillar cover sub-assembly.

Last Modified: 3-10-2010	6.4 A	**From:** 200901
Model Year: 2010	**Model:** Corolla	**Doc ID:** RM0000015SC00QX
Title: EXTERIOR PANELS / TRIM: FRONT PILLAR UPPER COVER: INSTALLATION (2010 Corolla)		

INSTALLATION

HINT:

- Use the same procedure for the RH side and LH side.
- The procedure listed below is for the LH side.

1. INSTALL FRONT UPPER PILLAR COVER SUB-ASSEMBLY

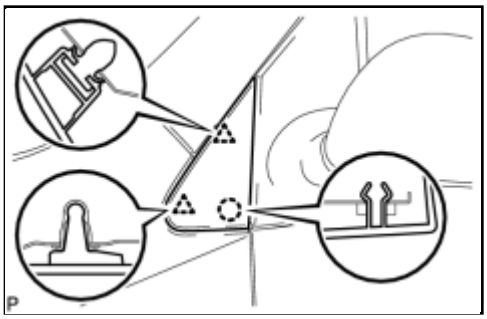

(a) Engage the 2 clips and claw, and install the front upper pillar cover sub-assembly.

Last Modified: 3-10-2010	6.4 K	**From:** 200901
Model Year: 2010	**Model:** Corolla	**Doc ID:** RM000002WKE00CX
Title: EXTERIOR PANELS / TRIM: LUGGAGE COMPARTMENT DOOR OUTSIDE GARNISH: COMPONENTS (2010 Corolla)		

COMPONENTS

ILLUSTRATION

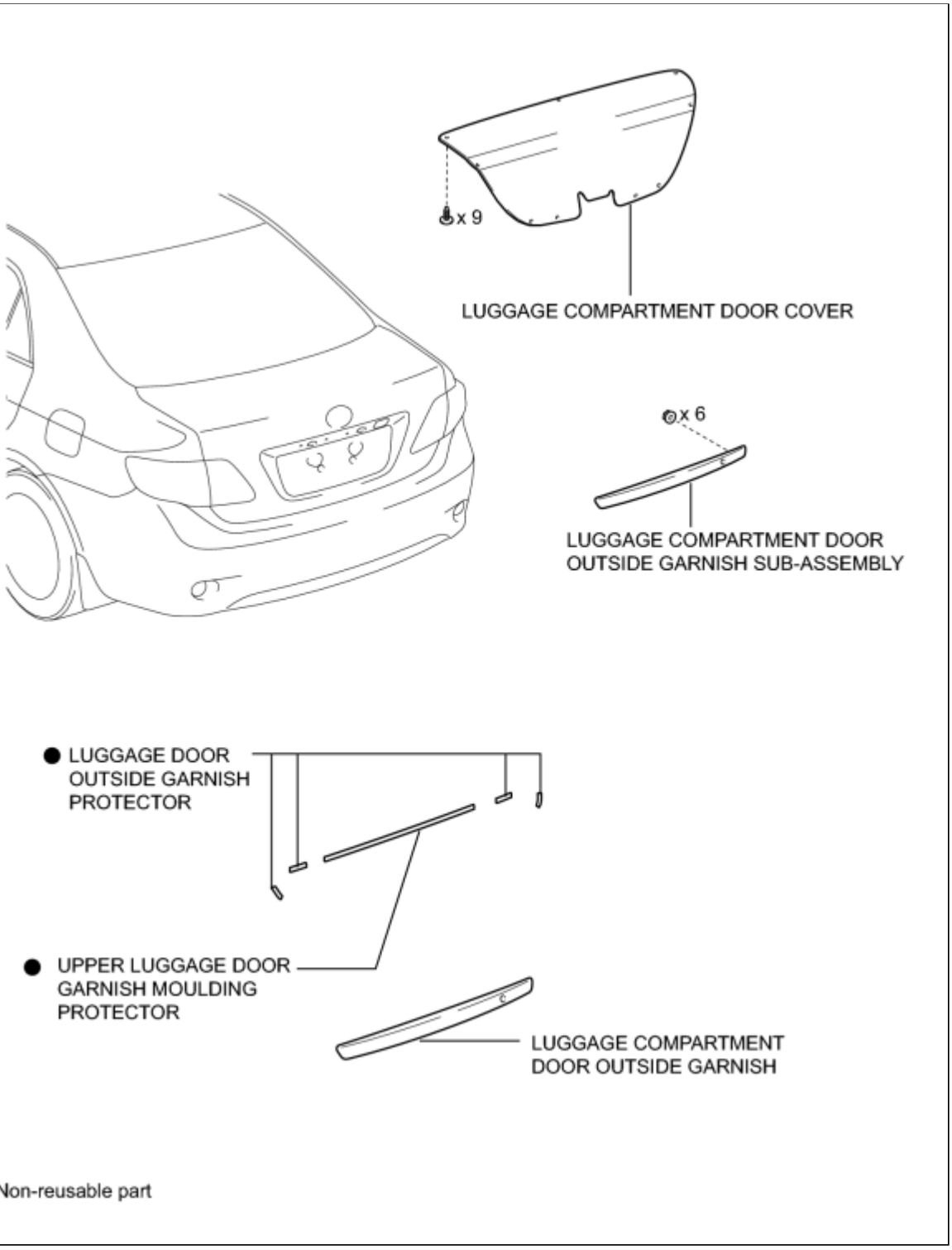

● Non-reusable part

P

Last Modified: 3-10-2010	6.4 A	**From:** 200901
Model Year: 2010	**Model:** Corolla	**Doc ID:** RM000002WKF00CX
Title: EXTERIOR PANELS / TRIM: LUGGAGE COMPARTMENT DOOR OUTSIDE GARNISH: REMOVAL (2010 Corolla)		

REMOVAL

1. REMOVE LUGGAGE COMPARTMENT DOOR COVER

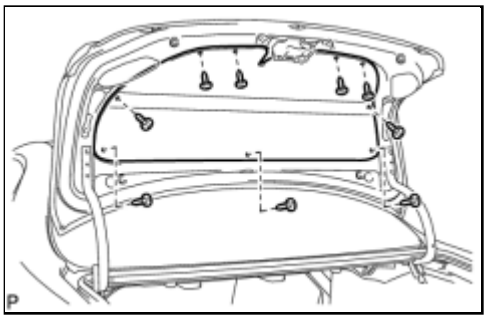

(a) Remove the 9 clips and luggage compartment door cover.

2. REMOVE LUGGAGE COMPARTMENT DOOR OUTSIDE GARNISH SUB-ASSEMBLY

(a) Disconnect the connector. (w/ smart key system)

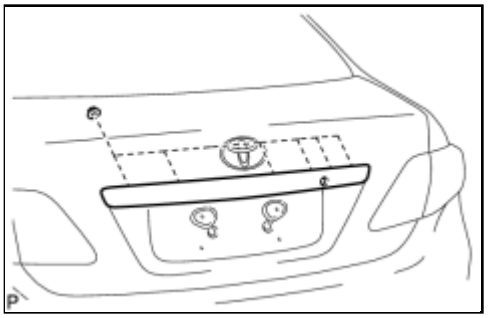

(b) Remove the 6 nuts.

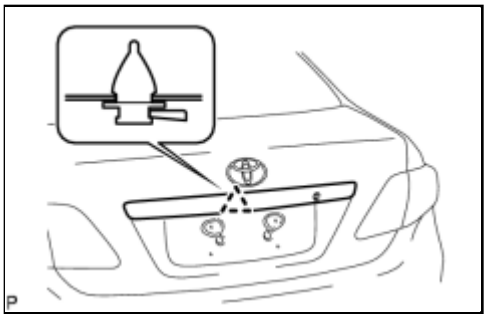

(c) Disengage the clip and remove the luggage compartment door outside garnish sub-assembly.

Last Modified: 3-10-2010	6.4 A	**From:** 200901
Model Year: 2010	**Model:** Corolla	**Doc ID:** RM000002WKG00CX
Title: EXTERIOR PANELS / TRIM: LUGGAGE COMPARTMENT DOOR OUTSIDE GARNISH: DISASSEMBLY (2010 Corolla)		

DISASSEMBLY

1. REMOVE LUGGAGE DOOR OUTSIDE GARNISH PROTECTOR

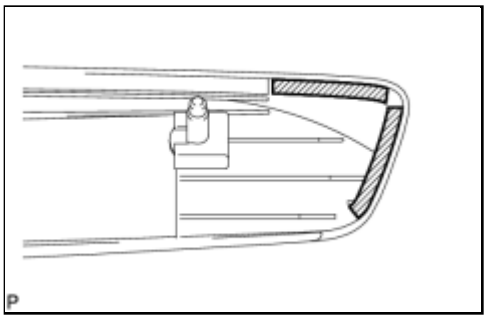

(a) Remove the 2 luggage door outside garnish protectors.

HINT:

Use the same procedure for the RH side and LH side.

2. REMOVE UPPER LUGGAGE DOOR GARNISH MOULDING PROTECTOR

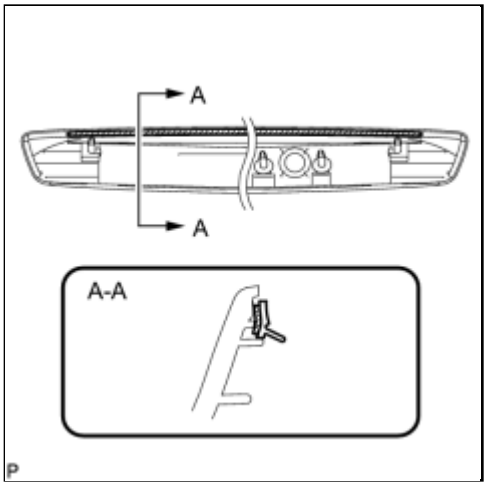

(a) Remove the upper luggage door garnish moulding protector.

Last Modified: 3-10-2010	6.4 A	**From:** 200901
Model Year: 2010	**Model:** Corolla	**Doc ID:** RM000002WKH00CX
Title: EXTERIOR PANELS / TRIM: LUGGAGE COMPARTMENT DOOR OUTSIDE GARNISH: REASSEMBLY (2010 Corolla)		

REASSEMBLY

1. INSTALL UPPER LUGGAGE DOOR GARNISH MOULDING PROTECTOR

(a) Wipe off any tape adhesive residue with cleaner.

(b) Remove the release paper from a new upper luggage door garnish moulding protector.

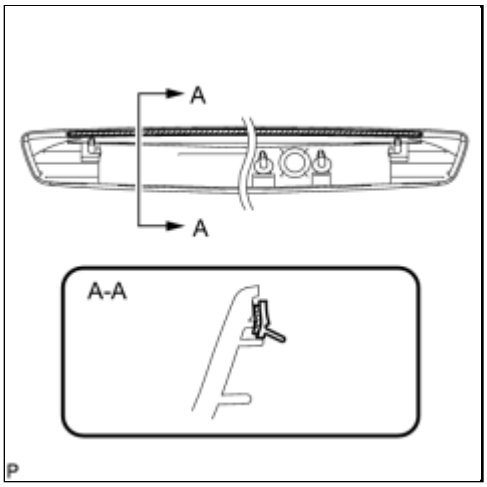

(c) Apply the upper luggage door garnish moulding protector to the luggage compartment door outside garnish.

2. INSTALL LUGGAGE DOOR OUTSIDE GARNISH PROTECTOR

(a) Wipe off any tape adhesive residue with cleaner.

(b) Remove the release paper from a new luggage door outside garnish protector.

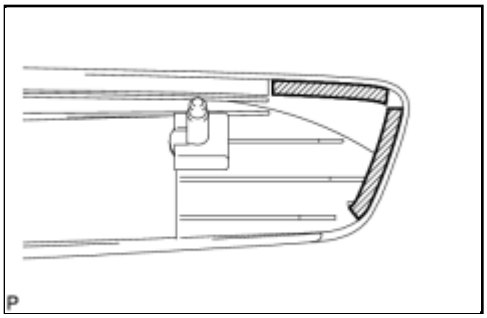

(c) Apply the 2 luggage door outside garnish protectors to the luggage compartment outside door garnish.

HINT:

Use the same procedure for the RH side and LH side.

Last Modified: 3-10-2010	6.4 A	**From:** 200901
Model Year: 2010	**Model:** Corolla	**Doc ID:** RM000002WKD00CX
Title: EXTERIOR PANELS / TRIM: LUGGAGE COMPARTMENT DOOR OUTSIDE GARNISH: INSTALLATION (2010 Corolla)		

INSTALLATION

1. INSTALL LUGGAGE COMPARTMENT DOOR OUTSIDE GARNISH SUB-ASSEMBLY

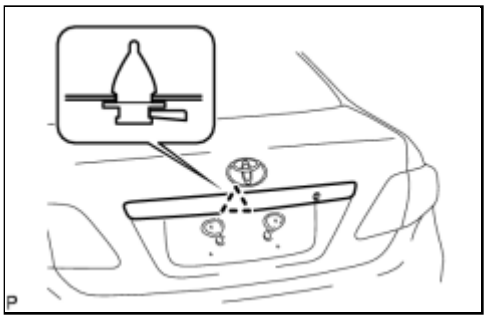

(a) Engage the clip and install the luggage compartment door outside garnish sub-assembly.

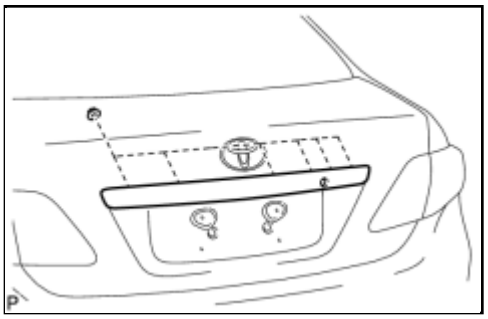

(b) Install the 6 nuts.

(c) Connect the connector. (w/ smart key system)

2. INSTALL LUGGAGE COMPARTMENT DOOR COVER

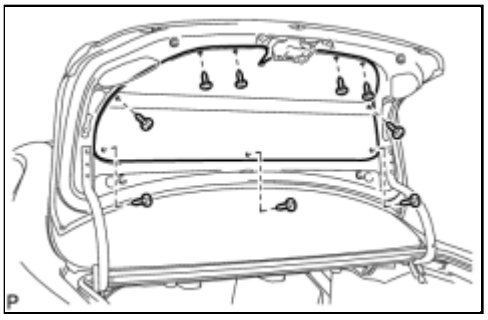

(a) Install the luggage compartment door cover with the 9 clips.

Last Modified: 3-10-2010	6.4 K	**From:** 200901
Model Year: 2010	**Model:** Corolla	**Doc ID:** RM000002WLA00HX
Title: EXTERIOR PANELS / TRIM: NAME PLATE: COMPONENTS (2010 Corolla)		

COMPONENTS

ILLUSTRATION

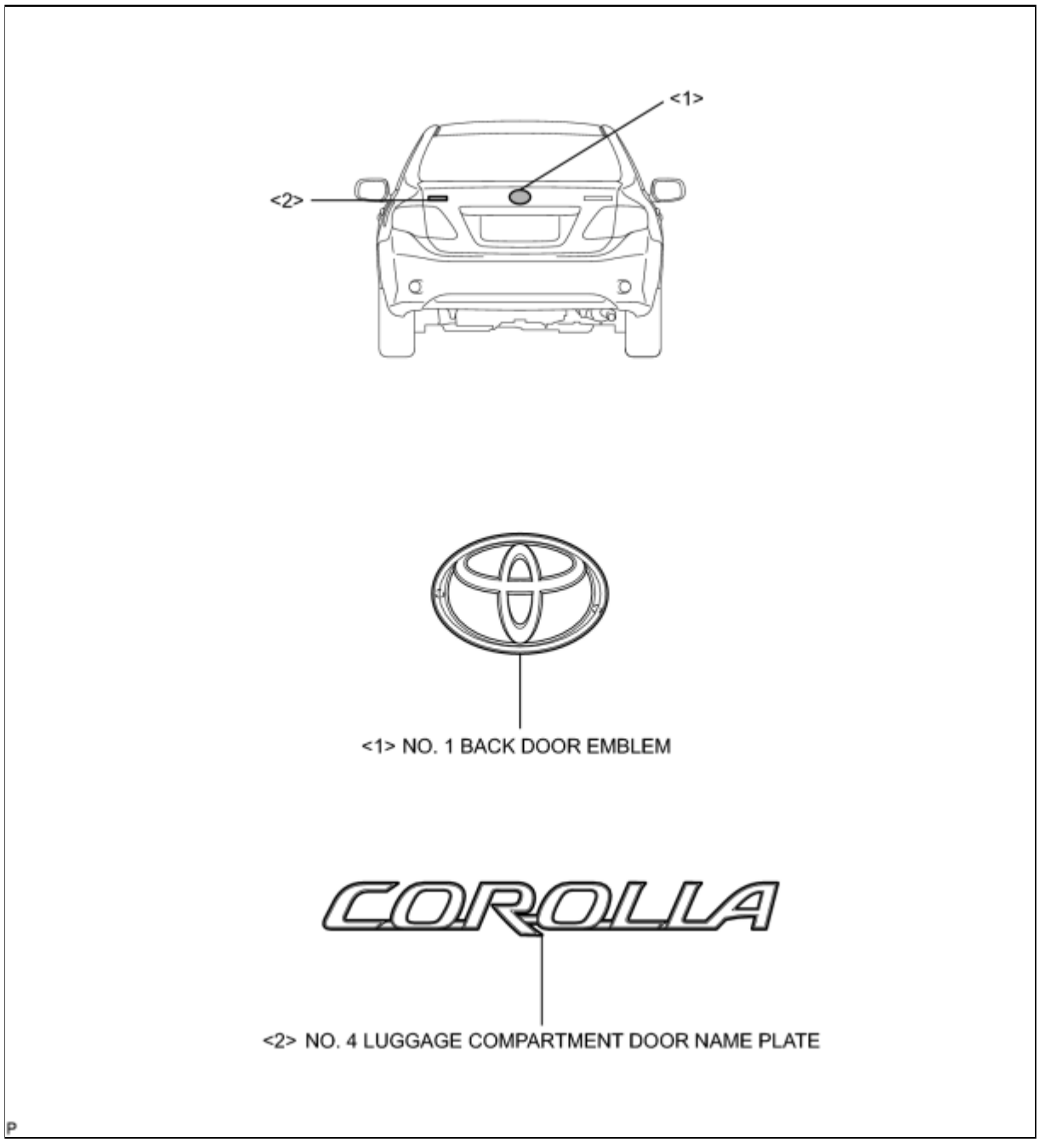

ILLUSTRATION

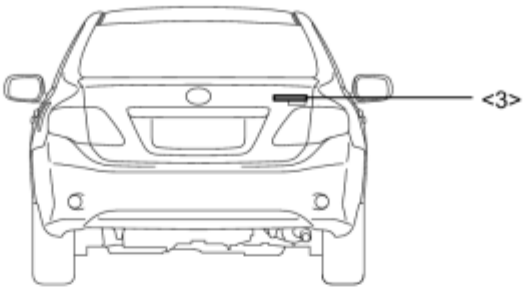

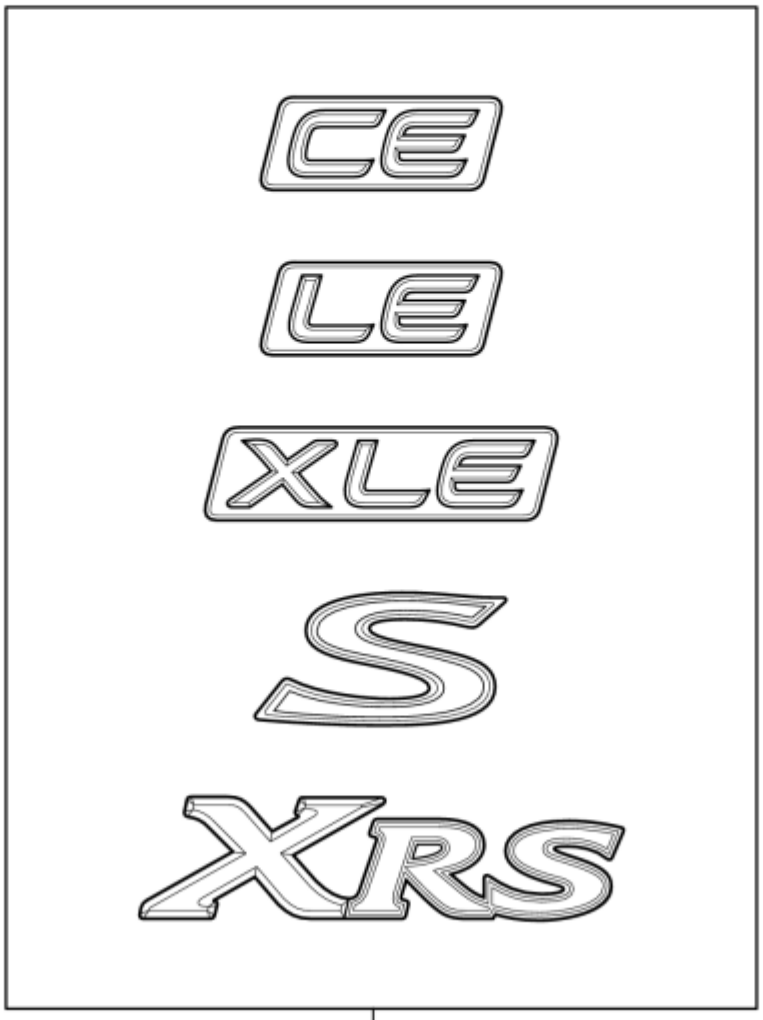

<3> NO. 1 LUGGAGE COMPARTMENT DOOR NAME PLATE

P

Last Modified: 3-10-2010	6.4 A	**From:** 200901
Model Year: 2010	**Model:** Corolla	**Doc ID:** RM000002WLB00IX
Title: EXTERIOR PANELS / TRIM: NAME PLATE: REMOVAL (2010 Corolla)		

REMOVAL

1. REMOVE NO. 1 BACK DOOR EMBLEM

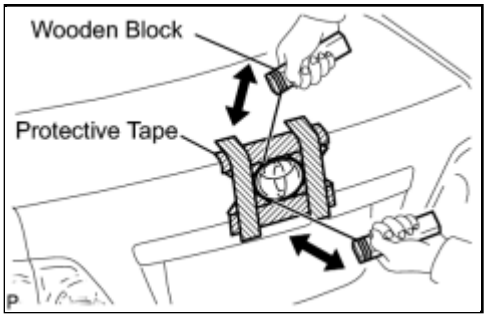

(a) Put protective tape around the emblem.

(b) Insert a piano wire between the vehicle body and emblem.

(c) Tie objects that can serve as handles (for example, wooden blocks) to both wire ends.

(d) Pull the piano wire and cut through the double-sided tape that holds the emblem to the vehicle body.

NOTICE:

- If reusing the emblem, take care not to damage the emblem.
- Be careful not to damage the vehicle body.

(e) Remove the emblem.

2. REMOVE NO. 4 LUGGAGE COMPARTMENT DOOR NAME PLATE

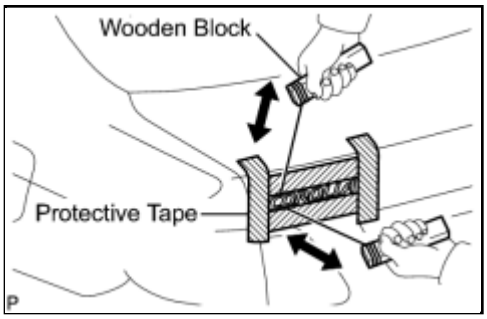

(a) Put protective tape around the name plate.

(b) Insert a piano wire between the vehicle body and name plate.

(c) Tie objects that can serve as handles (for example, wooden blocks) to both wire ends.

(d) Pull the piano wire and scrape off the double-sided tape that holds the name plate to the vehicle body.

NOTICE:

- If reusing the name plate, take care not to damage the name plate.
- Be careful not to damage the vehicle body.

(e) Remove the name plate.

3. REMOVE NO. 1 LUGGAGE COMPARTMENT DOOR NAME PLATE

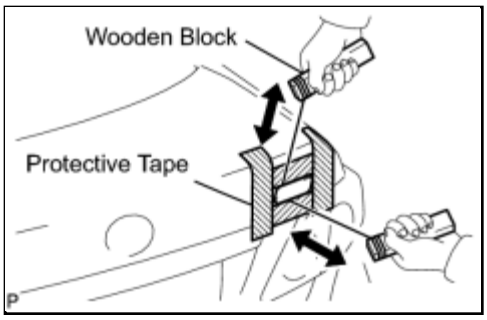

(a) Put protective tape around the name plate.

(b) Insert a piano wire between the vehicle body and name plate.

(c) Tie objects that can serve as handles (for example, wooden blocks) to both wire ends.

(d) Pull the piano wire and cut through the double-sided tape that holds the name plate to the vehicle body.

NOTICE:

- If reusing the name plate, take care not to damage the name plate.
- Be careful not to damage the vehicle body.

(e) Remove the name plate.

Last Modified: 3-10-2010	6.4 K	**From:** 200901
Model Year: 2010	**Model:** Corolla	**Doc ID:** RM000002WID00EX
Title: EXTERIOR PANELS / TRIM: REAR BUMPER: COMPONENTS (2010 Corolla)		

COMPONENTS

ILLUSTRATION

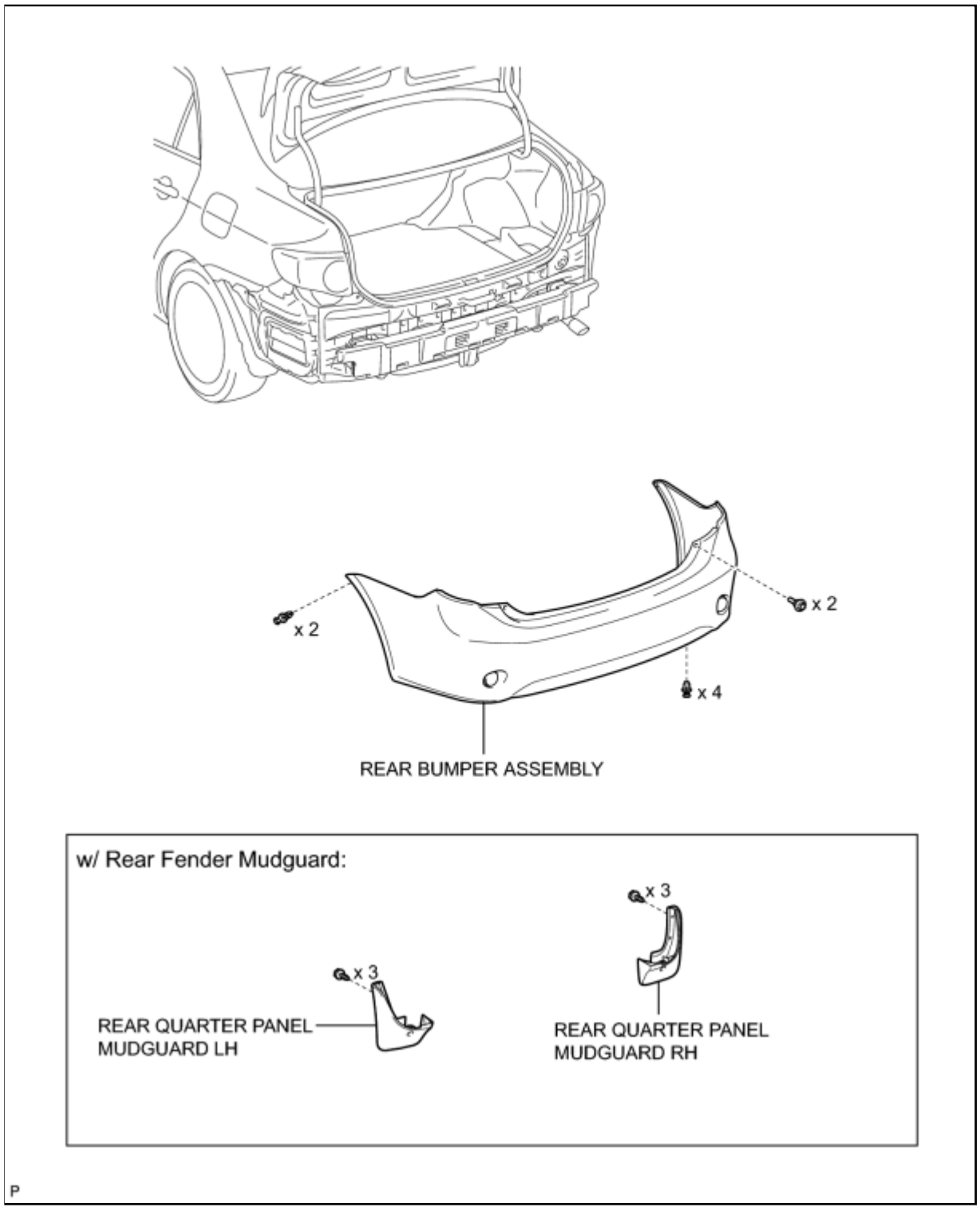

ILLUSTRATION

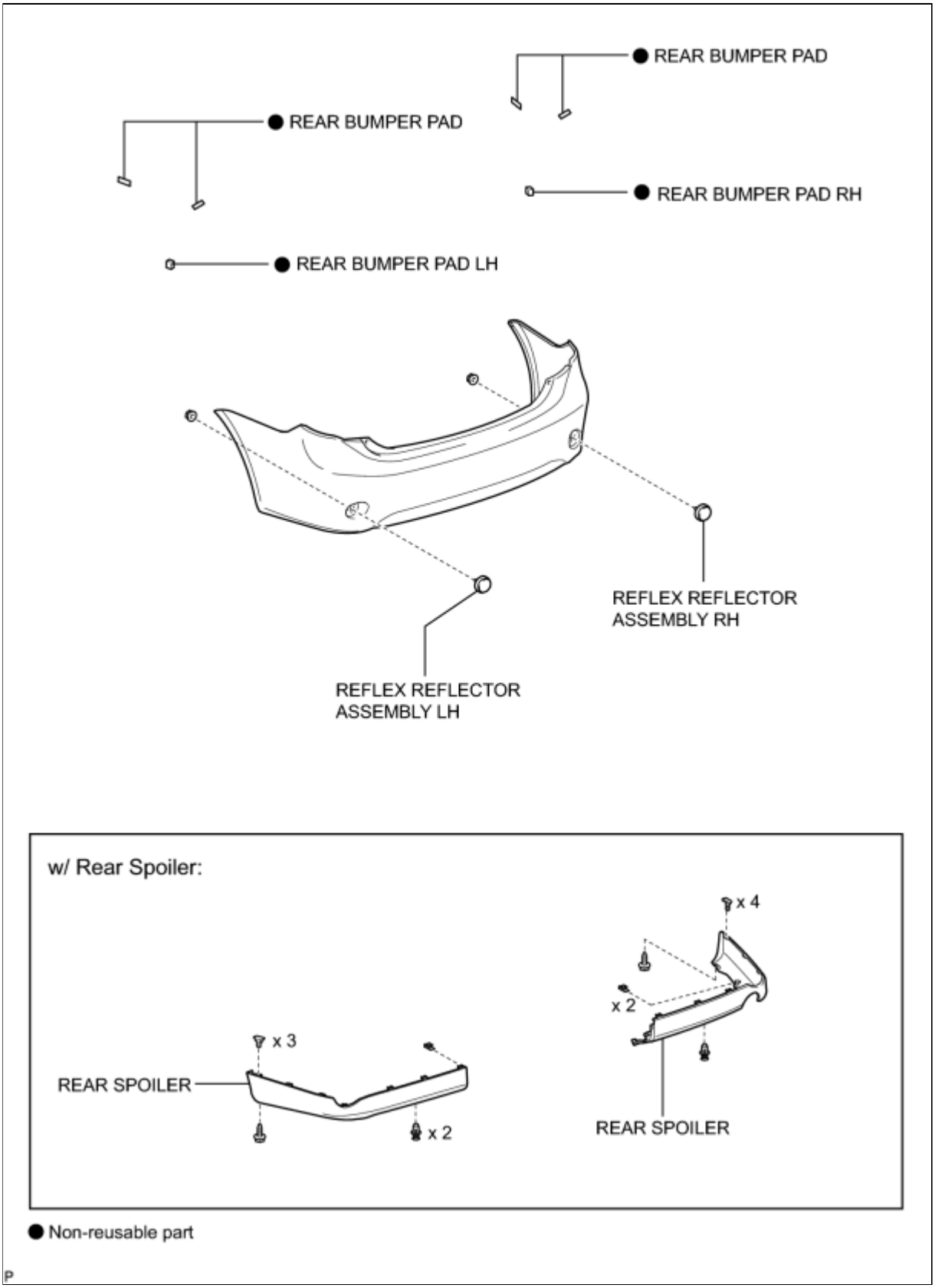

ILLUSTRATION

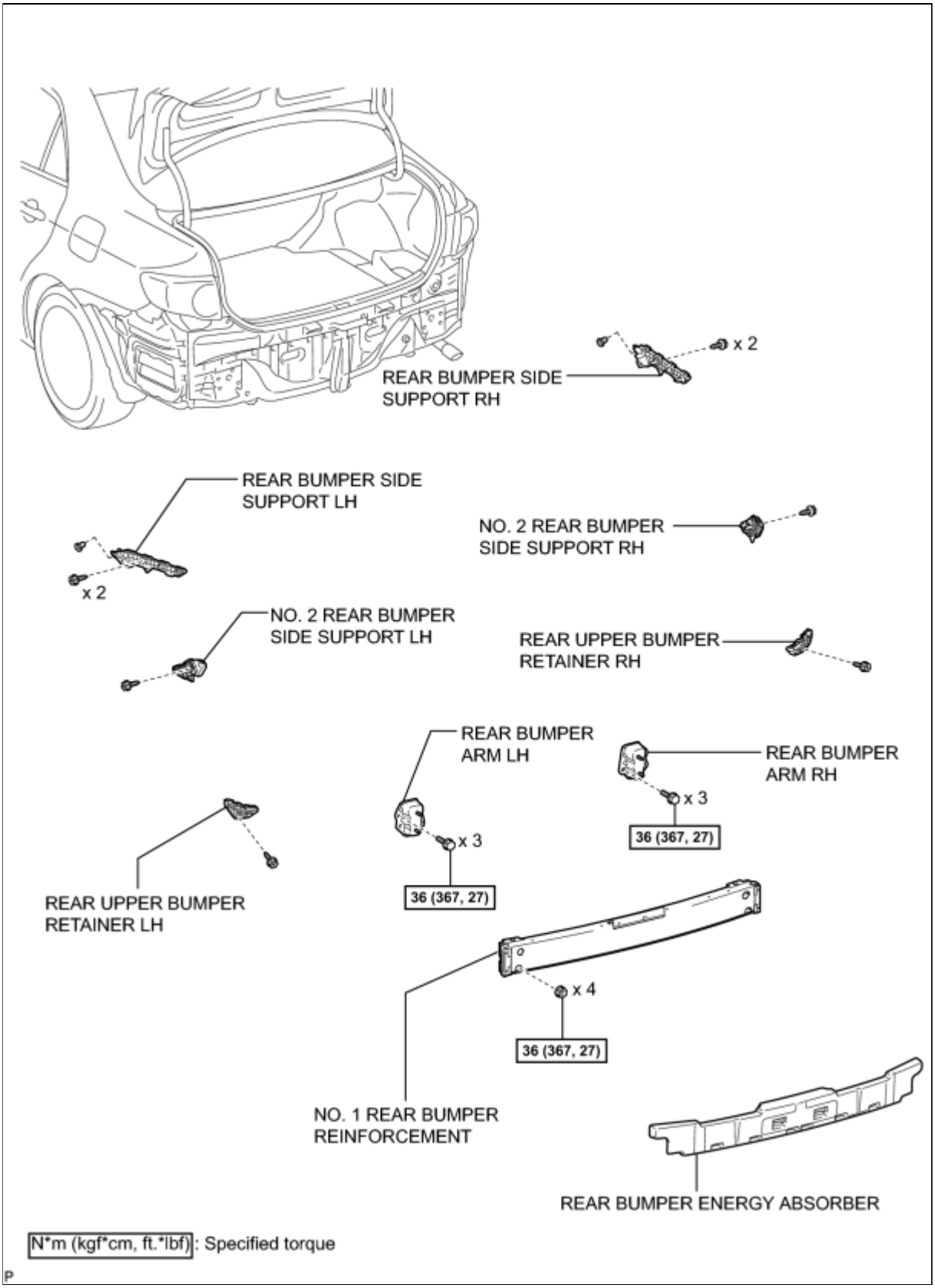

Last Modified: 3-10-2010	6.4 A	**From:** 200901
Model Year: 2010	**Model:** Corolla	**Doc ID:** RM000002WIF00GX
Title: EXTERIOR PANELS / TRIM: REAR BUMPER: DISASSEMBLY (2010 Corolla)		

DISASSEMBLY

1. REMOVE REAR SPOILER (w/ Rear Spoiler)

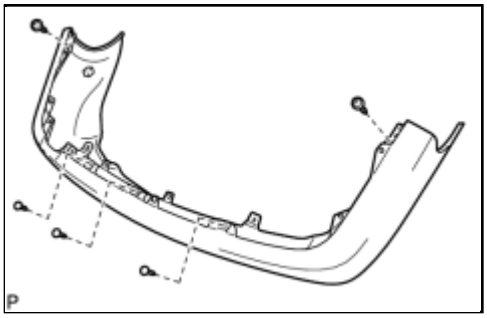

(a) Remove the 2 screws and 3 clips.

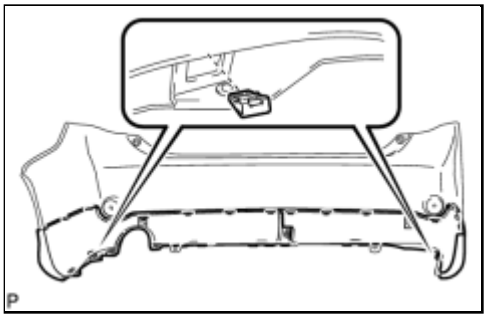

(b) Remove the 2 clips.

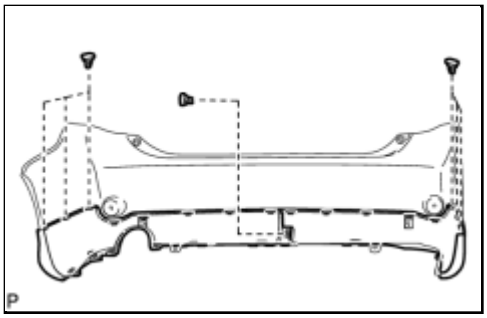

(c) Remove the 7 clips.

(d) Disengage the 10 clips and remove the rear spoiler.

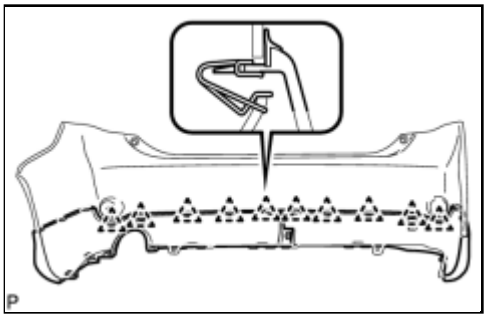

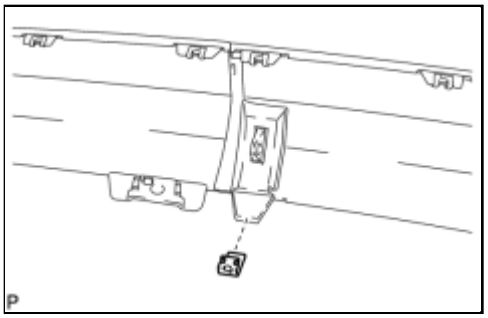

(e) Remove the clip.

2. REMOVE REFLEX REFLECTOR ASSEMBLY LH

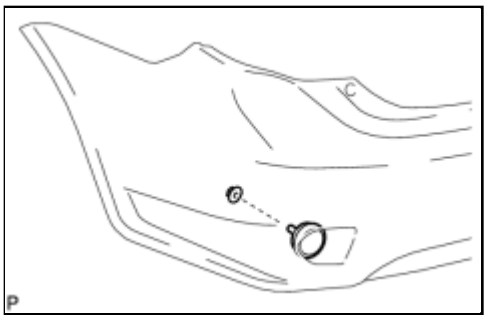

(a) Remove the nut and reflector assembly LH.

3. REMOVE REFLEX REFLECTOR ASSEMBLY RH

HINT:

Use the same procedure for the RH side and LH side.

4. REMOVE REAR BUMPER PAD

(a) Remove the 2 rear bumper pads.

HINT:

Use the same procedure for the RH side and LH side.

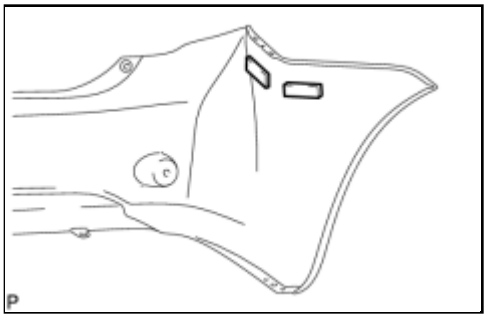

5. REMOVE REAR BUMPER PAD LH

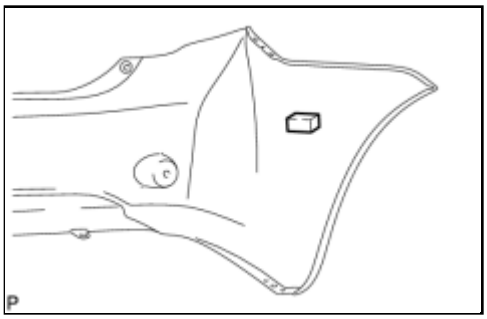

(a) Remove the rear bumper pad LH.

6. REMOVE REAR BUMPER PAD RH

HINT:

Use the same procedure for the RH side and LH side.

7. REMOVE REAR BUMPER SIDE SUPPORT LH

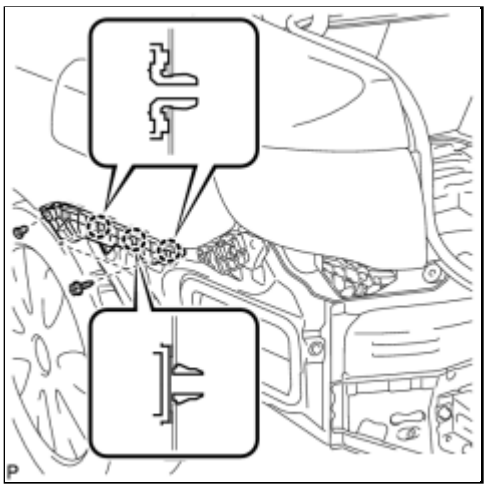

(a) Remove the 2 screws and clip.

(b) Disengage the 3 claws and remove the rear bumper side support LH.

8. REMOVE REAR BUMPER SIDE SUPPORT RH

HINT:

Use the same procedure for the RH side and LH side.

9. REMOVE NO. 2 REAR BUMPER SIDE SUPPORT LH

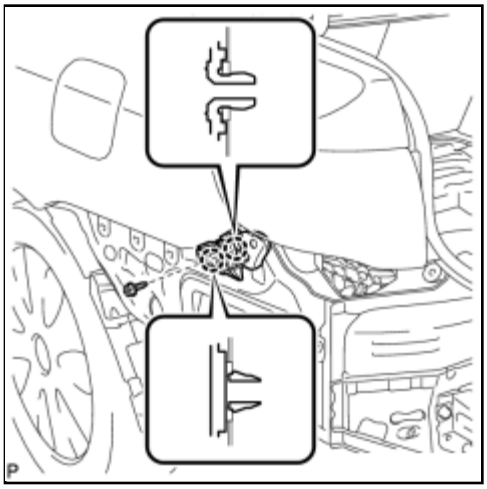

(a) Remove the screw.

(b) Disengage the 2 claws and remove the No. 2 rear bumper side support LH.

10. REMOVE NO. 2 REAR BUMPER SIDE SUPPORT RH

HINT:

Use the same procedure for the RH side and LH side.

11. REMOVE REAR UPPER BUMPER RETAINER LH

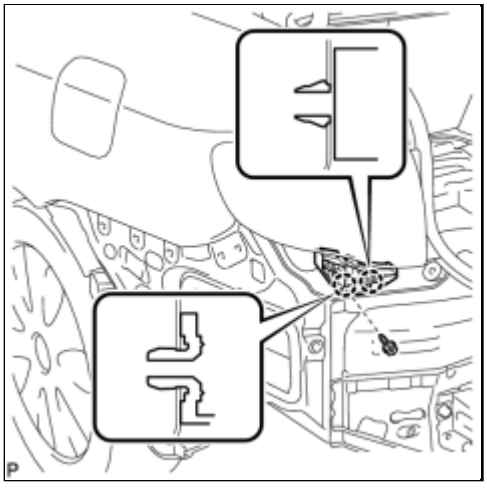

(a) Remove the screw.

(b) Disengage the 2 claws and remove the rear upper bumper retainer LH.

12. REMOVE REAR UPPER BUMPER RETAINER RH

HINT:

Use the same procedure for the RH side and LH side.

13. REMOVE REAR BUMPER ENERGY ABSORBER

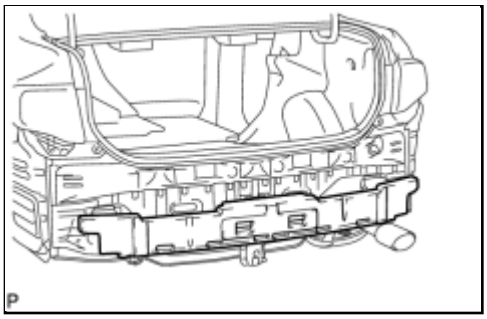

(a) Remove the rear bumper energy absorber.

14. REMOVE NO. 1 REAR BUMPER REINFORCEMENT

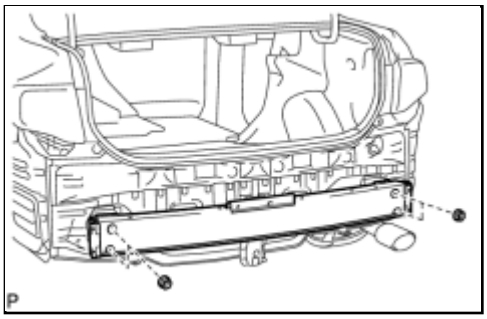

(a) Remove the 4 nuts and No. 1 rear bumper reinforcement.

15. REMOVE REAR BUMPER ARM LH

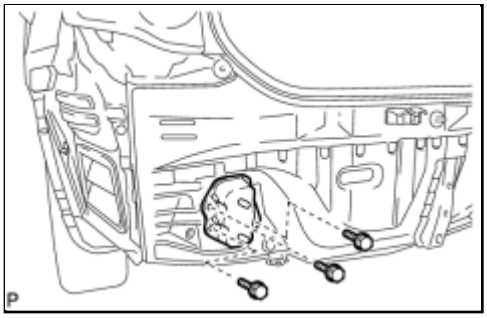

(a) Remove the 3 bolts and rear bumper arm LH.

16. REMOVE REAR BUMPER ARM RH

HINT:

Use the same procedure for the RH side and LH side.

Last Modified: 3-10-2010	6.4 A	**From:** 200901
Model Year: 2010	**Model:** Corolla	**Doc ID:** RM000002WIG00GX
Title: EXTERIOR PANELS / TRIM: REAR BUMPER: REASSEMBLY (2010 Corolla)		

REASSEMBLY

1. INSTALL REAR BUMPER ARM LH



(a) Install the rear bumper arm LH with the 3 bolts.

Torque: 36 N·m (367 kgf·cm, 27ft·lbf)

2. INSTALL REAR BUMPER ARM RH

HINT:

Use the same procedure for the RH side and LH side.

3. INSTALL NO. 1 REAR BUMPER REINFORCEMENT

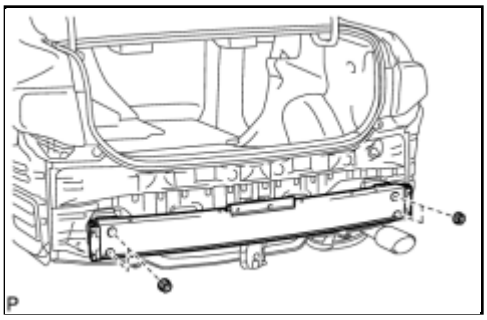

(a) Install the No. 1 rear bumper reinforcement with the 4 nuts.

Torque: 36 N·m (367 kgf·cm, 27ft·lbf)

4. INSTALL REAR BUMPER ENERGY ABSORBER

(a) Install the rear bumper energy absorber.

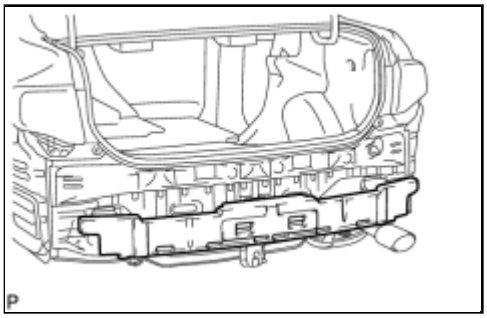

5. INSTALL REAR UPPER BUMPER RETAINER LH

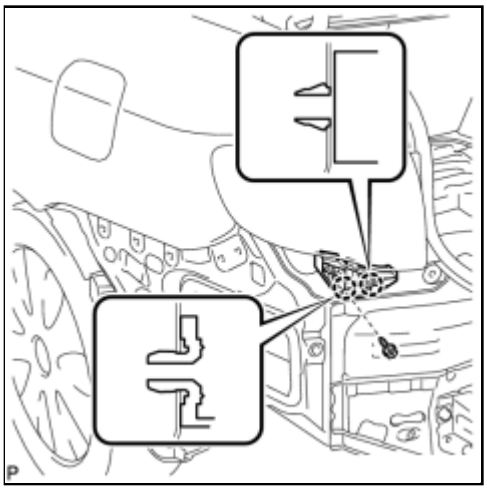

(a) Engage the 2 claws and install the rear upper bumper retainer LH.

(b) Install the screw.

6. INSTALL REAR UPPER BUMPER RETAINER RH

HINT:

Use the same procedure for the RH side and LH side.

7. INSTALL NO. 2 REAR BUMPER SIDE SUPPORT LH

(a) Engage the 2 claws and install the No. 2 rear bumper side support LH.

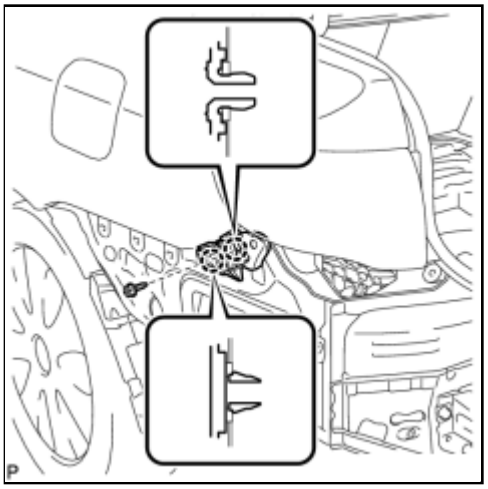

(b) Install the screw.

8. INSTALL NO. 2 REAR BUMPER SIDE SUPPORT RH

HINT:

Use the same procedure for the RH side and LH side.

9. INSTALL REAR BUMPER SIDE SUPPORT LH

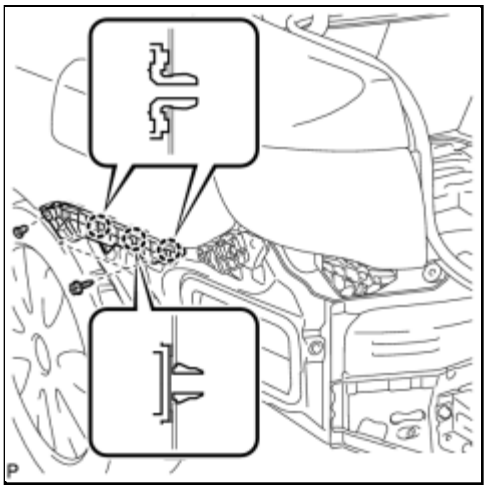

(a) Engage the 3 claws and install the rear bumper side support LH.

(b) Install the 2 screws and clip.

10. INSTALL REAR BUMPER SIDE SUPPORT RH

HINT:

Use the same procedure for the RH side and LH side.

11. INSTALL REAR BUMPER PAD LH

(a) Install a new rear bumper pad LH.

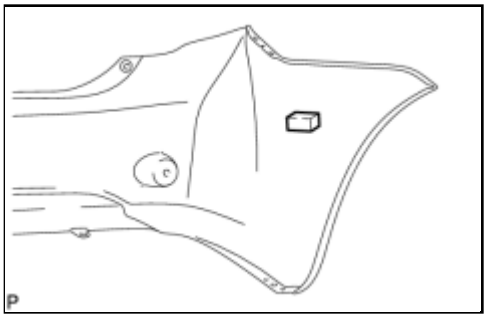

HINT:

Attach the new bumper pad on the line marked on the rear bumper assembly.

12. INSTALL REAR BUMPER PAD RH

HINT:

Use the same procedure for the RH side and LH side.

13. INSTALL REAR BUMPER PAD

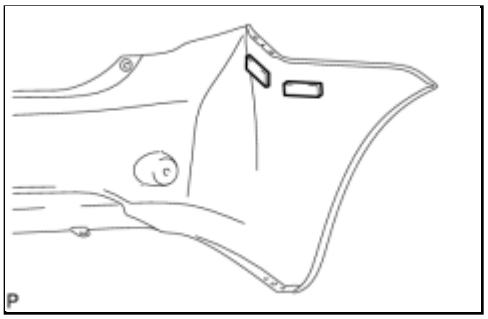

(a) Install 2 new rear bumper pads.

HINT:

- Attach the new bumper pads on the line marked on the rear bumper assembly.
- Use the same procedure for the RH side and LH side.

14. INSTALL REFLEX REFLECTOR ASSEMBLY LH

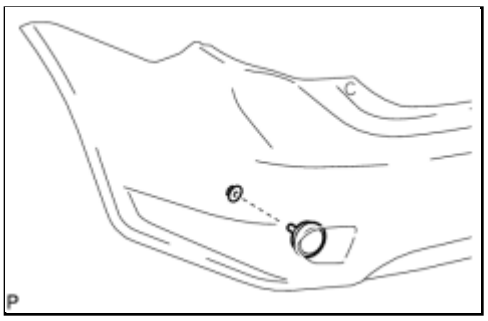

(a) Install the reflex reflector assembly with the nut.

15. INSTALL REFLEX REFLECTOR ASSEMBLY RH

HINT:

Use the same procedure for the RH side and LH side.

16. INSTALL REAR SPOILER (w/ Rear Spoiler)

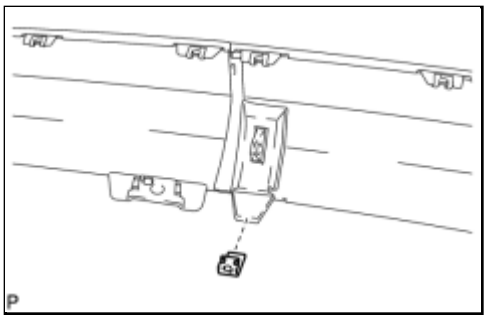

(a) Engage the clip.

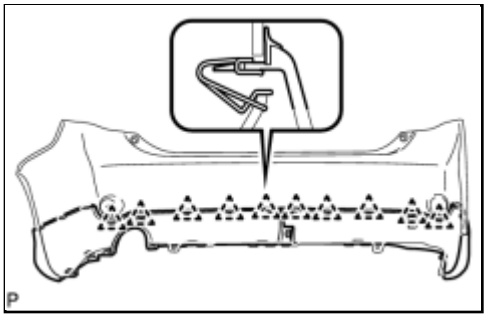

(b) Engage the 10 clips and install the rear side spoiler.

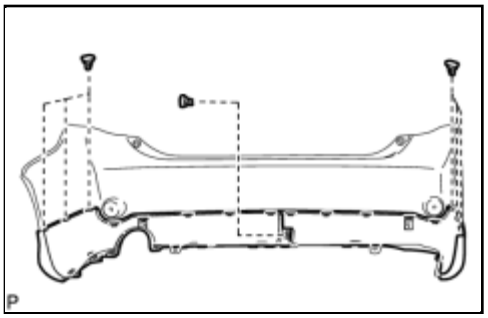

(c) Install the 7 clips.

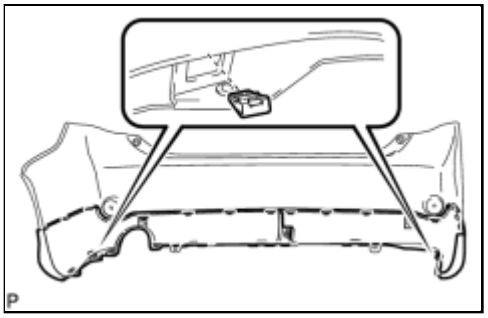

(d) Install the 2 clips.

(e) Install the 2 screws and 3 clips.

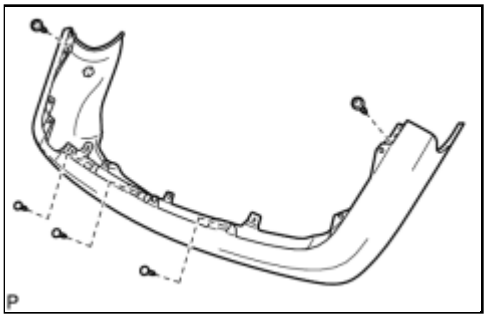
P

Last Modified: 3-10-2010	6.4 A	**From:** 200901
Model Year: 2010	**Model:** Corolla	**Doc ID:** RM000002WIE00EX
Title: EXTERIOR PANELS / TRIM: REAR BUMPER: REMOVAL (2010 Corolla)		

REMOVAL

1. REMOVE REAR QUARTER PANEL MUDGUARD LH (w/ Rear Fender Mudguard)

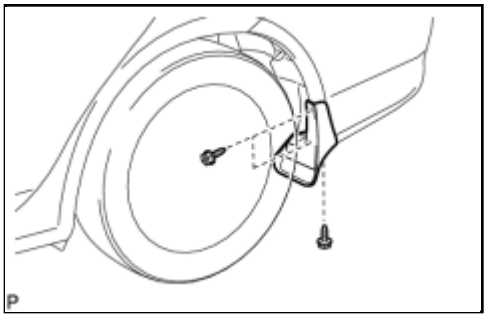

(a) Remove the 3 screws and rear quarter panel mudguard LH.

2. REMOVE REAR QUARTER PANEL MUDGUARD RH (w/ Rear Fender Mudguard)

HINT:

Use the same procedure for the RH side and LH side.

3. REMOVE REAR BUMPER ASSEMBLY

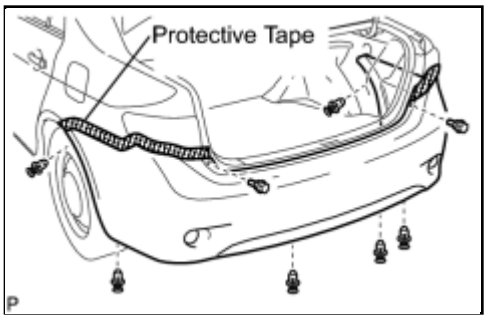

(a) Put protective tape around the rear bumper assembly.

(b) Remove the 6 clips and 2 bolts.

(c) Disengage the 16 claws and remove the rear bumper assembly.

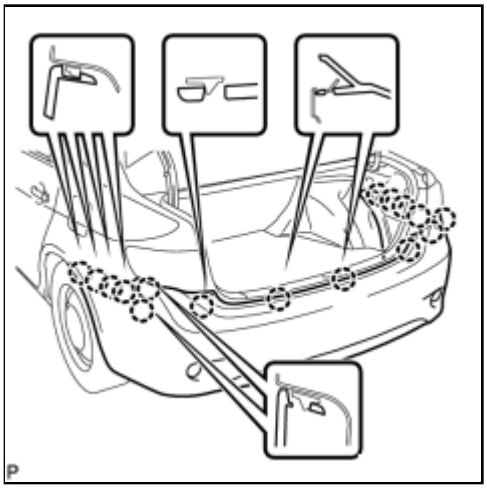
P

Last Modified: 3-10-2010	6.4 A	**From:** 200901
Model Year: 2010	**Model:** Corolla	**Doc ID:** RM000002WIC00EX
Title: EXTERIOR PANELS / TRIM: REAR BUMPER: INSTALLATION (2010 Corolla)		

INSTALLATION

1. INSTALL REAR BUMPER ASSEMBLY

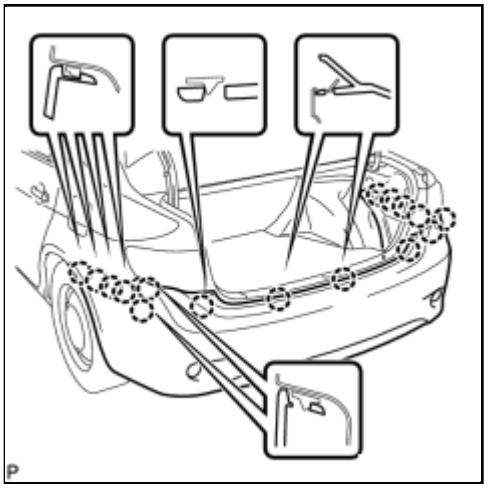

(a) Engage the 16 claws to install the rear bumper assembly.

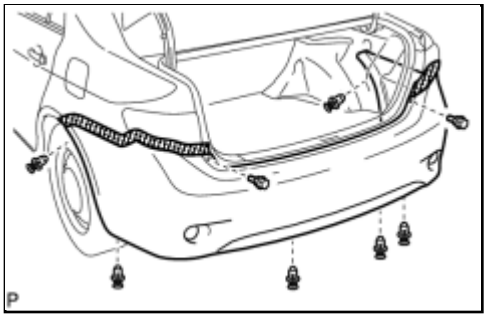

(b) Install the 2 bolts and 6 clips.

2. INSTALL REAR QUARTER PANEL MUDGUARD LH (w/ Rear Fender Mudguard)

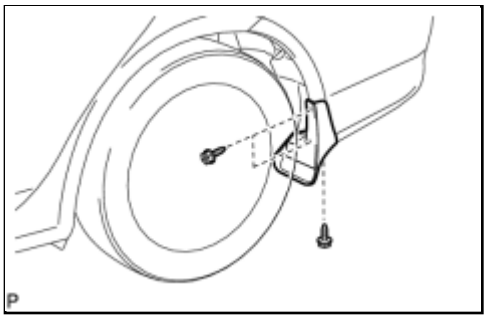

(a) Install the rear quarter panel mudguard LH with the 3 screws.

3. INSTALL REAR QUARTER PANEL MUDGUARD RH (w/ Rear Fender Mudguard)

HINT:

Use the same procedure for the RH side and LH side.

Last Modified: 3-10-2010	6.4 K	**From:** 200901
Model Year: 2010	**Model:** Corolla	**Doc ID:** RM000002WIV00DX
Title: EXTERIOR PANELS / TRIM: REAR DOOR BELT MOULDING: COMPONENTS (2010 Corolla)		

COMPONENTS

ILLUSTRATION

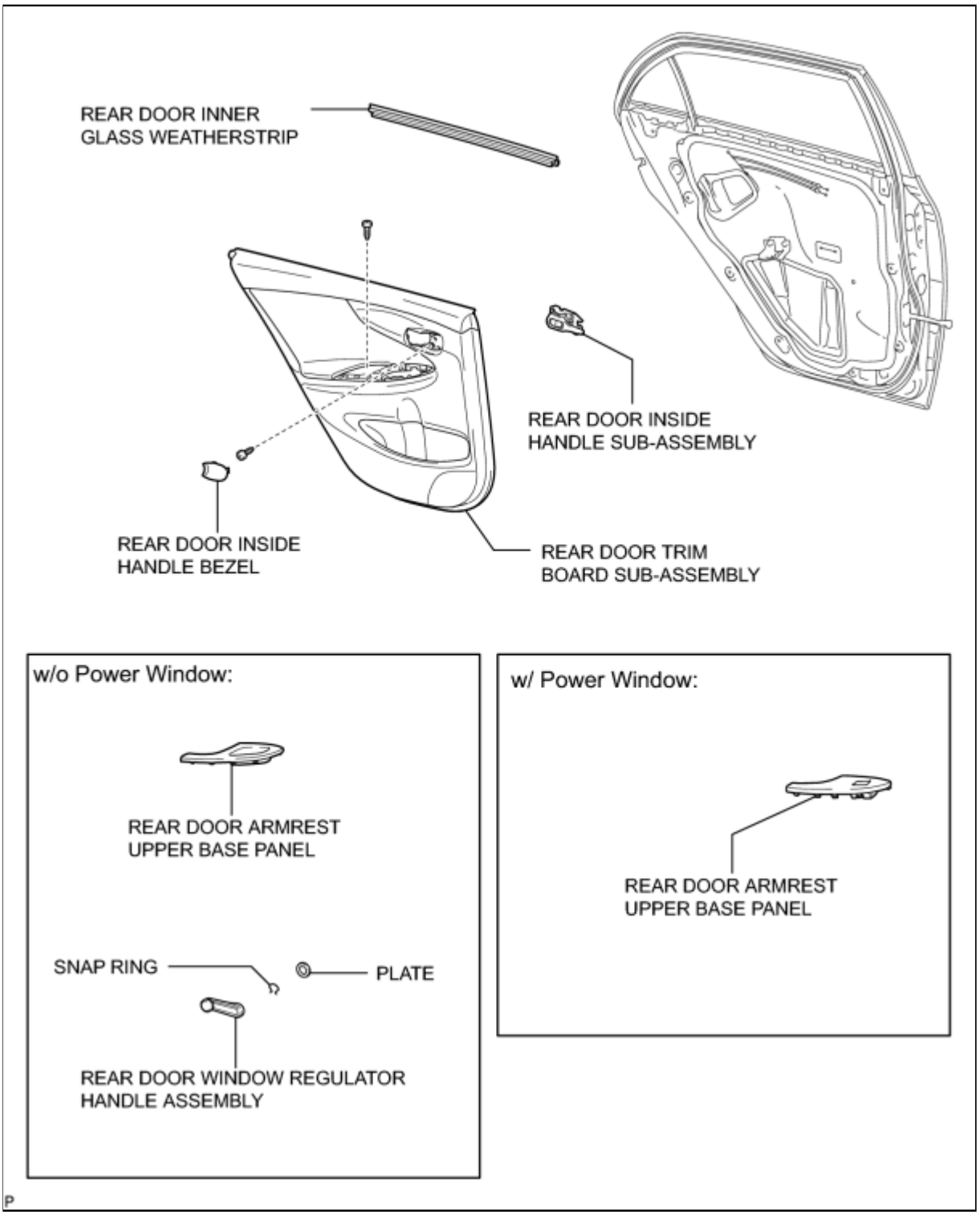

ILLUSTRATION

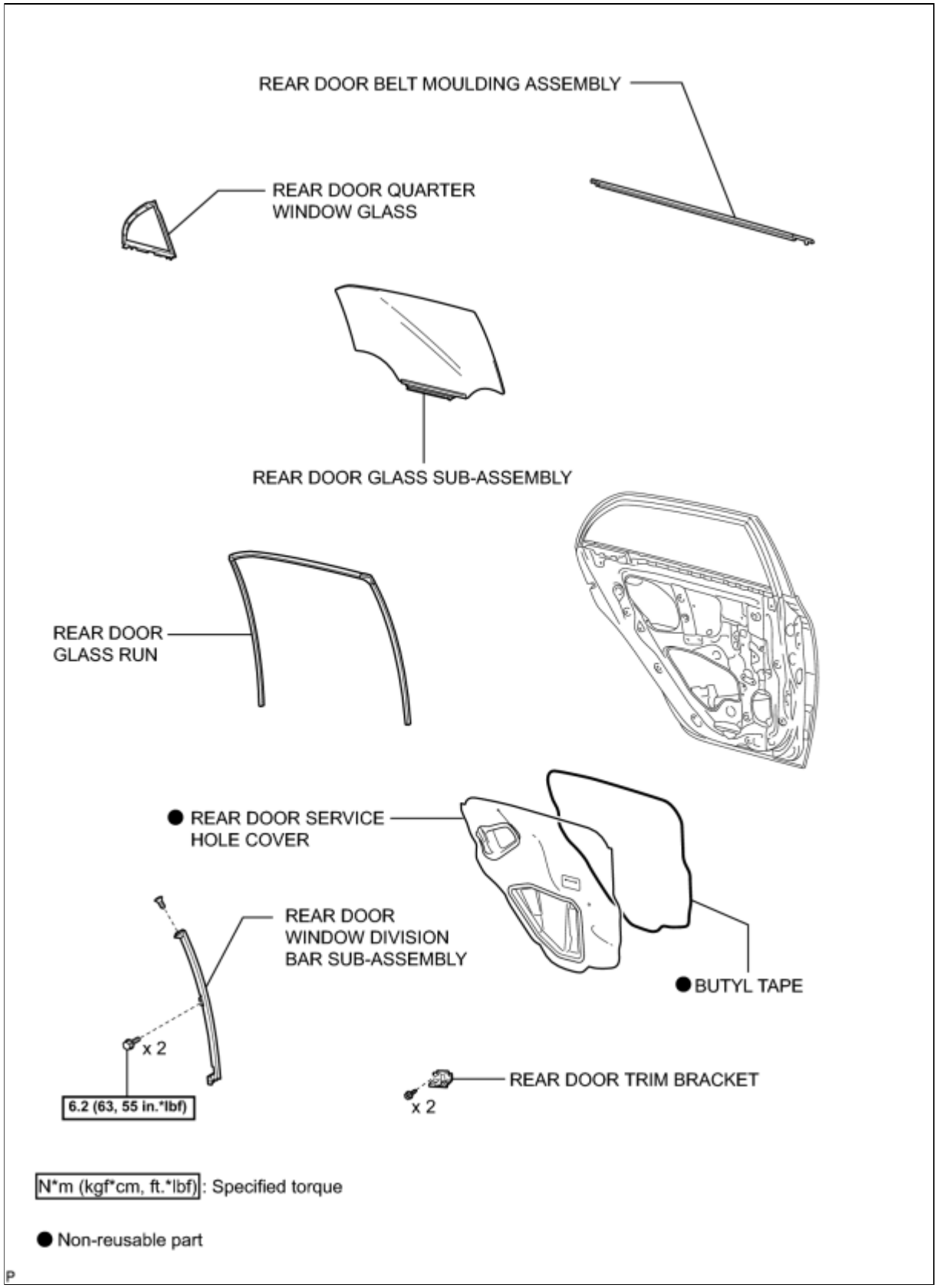

Last Modified: 3-10-2010	6.4 A	**From:** 200901
Model Year: 2010	**Model:** Corolla	**Doc ID:** RM000002RLY00IX
Title: EXTERIOR PANELS / TRIM: REAR DOOR BELT MOULDING: REMOVAL (2010 Corolla)		

REMOVAL

HINT:

- Use the same procedure for the RH side and LH side.
- The procedure listed below is for the LH side.

1. REMOVE REAR DOOR WINDOW REGULATOR HANDLE ASSEMBLY (w/o Power Window) INFO

2. REMOVE REAR DOOR INSIDE HANDLE BEZEL INFO

3. REMOVE REAR DOOR ARMREST UPPER BASE PANEL (w/o Power Window) INFO

4. REMOVE REAR DOOR ARMREST UPPER BASE PANEL (w/ Power Window) INFO

5. REMOVE REAR DOOR TRIM BOARD SUB-ASSEMBLY INFO

6. REMOVE REAR DOOR INSIDE HANDLE SUB-ASSEMBLY INFO

7. REMOVE REAR DOOR INNER GLASS WEATHERSTRIP INFO

8. REMOVE REAR DOOR TRIM BRACKET INFO

9. REMOVE REAR DOOR SERVICE HOLE COVER INFO

10. REMOVE REAR DOOR GLASS RUN INFO

11. REMOVE REAR DOOR WINDOW DIVISION BAR SUB-ASSEMBLY INFO

12. REMOVE REAR DOOR QUARTER WINDOW GLASS INFO

13. REMOVE REAR DOOR GLASS SUB-ASSEMBLY INFO

14. REMOVE REAR DOOR BELT MOULDING ASSEMBLY

(a) Put protective tape around the front door belt moulding assembly.

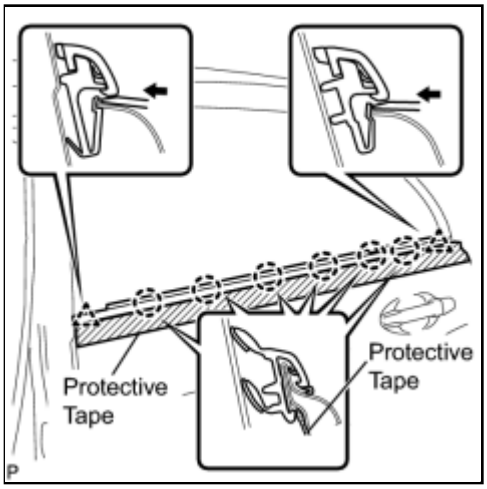

(b) Using a screwdriver with its tip taped, disengage the 6 claws from the inside of the rear door.

(c) Using a moulding remover, disengage the 2 clips and remove the rear door belt moulding assembly.

Search for a keyword or phrase… Search

Discover what's happening right now, anywhere in the world

Have an account? Sign in

Username or email tmaxxtim

Password ••••••••••••

Sign in Remember me

Forgot password?

Forgot username?

Already using Twitter on your phone?

New to Twitter?

Twitter is a rich source of instant information. Stay updated. Keep others updated. It's a whole thing.

Give it a try ›

Customize Twitter by choosing who to follow. Then see tweets from those folks as soon as they're posted.

Using Twitter for a business? Check out Twitter 101

- Trending topics
- Iron Man 2
- Labour
- Justin Bieber *The young Canadian R&B/pop singer has a lot of fans who like to tweet about him!*
- Lawrence Taylor
- RE Tweet
- ThankYou Jesus
- National Day
- Trending topics
- Dear Mom
- T R U S T
- Lady GaGa
- Tories
- Prayer
- Los Suns
- Happy Star Wars Day *May 4th is Star Wars Day. This is a pun of a quote from the movie: "May the force [4th] be with you."*
- Trending topics
- Times Square *Suspects in Saturday's bombing attempt in New York City have been arrested (May 4).*
- Mayweather
- Happy Cinco De Mayo *May 5th is a regional Mexican holiday, also celebrated in the US, to commemorate the defeat of the French at the Battle of Puebla in 1862.*
- Eenie Meenie *Justin Bieber and Sean Kingston's new music video is out.*
- Bustin Jieber
- RT if your single
- Gulf *People are tweeting news and commentary about the oil spill in the Gulf of Mexico.*
- Steve Jobs *The CEO of Apple has published his "Thoughts on Flash."*
- Nashville *The area got over 13 inches of rain in two days and is dealing with major flooding (May 3).*
- Trending topics
- Iron Man 2
- Labour
- Justin Bieber *The young Canadian R&B/pop singer has a lot of fans who like to tweet about him!*
- Lawrence Taylor
- RE Tweet
- ThankYou Jesus
- National Day
- Trending topics
- Dear Mom
- T R U S T
- Lady GaGa
- Tories
- Prayer
- Los Suns
- Happy Star Wars Day *May 4th is Star Wars Day. This is a pun of a quote from the movie: "May the force [4th] be with you."*
- Trending topics

- Times Square *Suspects in Saturday's bombing attempt in New York City have been arrested (May 4).*
- Mayweather
- Happy Cinco De Mayo *May 5th is a regional Mexican holiday, also celebrated in the US, to commemorate the defeat of the French at the Battle of Puebla in 1862.*
- Eenie Meenie *Justin Bieber and Sean Kingston's new music video is out.*
- Bustin Jieber
- RT if your single
- Gulf *People are tweeting news and commentary about the oil spill in the Gulf of Mexico.*
- Steve Jobs *The CEO of Apple has published his "Thoughts on Flash."*
- Nashville *The area got over 13 inches of rain in two days and is dealing with major flooding (May 3).*

- Skip past navigation
- On a mobile phone? Check out m.twitter.com!
- Skip to navigation
- Skip to sign in form

See who's here

- 

Danny Sullivan
@dannysullivan Orange County | in Technology
Recently tweeted:
dear steve jobs. @bbcnews doesn't seem to know they shouldn't use Flash. Then again, not like UK allowed iPad yet anyway
about 4 hours ago

- 

Frommer's
@FrommersTravel Around the world. | in Travel
Recently tweeted:
Behind the Guides: We already know that when you're planning a trip to a fabulous city, like Venice or Istanbul or... http://bit.ly/9Lx3CD
about 8 hours ago

- 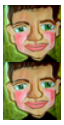

Fred Wilson
@fredwilson Hoboken | in Business
Recently tweeted:
Net Neutrality Is Pro-Business http://bit.ly/90Mn2S
about 13 hours ago

- 

Ryan Sheckler
@RyanSheckler San Clemente, CA | in Sports
Recently tweeted:
@dieselUSA thanks so much for the jeans!
9:16 AM May 4th

- 

Kiva
@Kiva ÜT: 37.805165,-122.292395 | in Charity
Recently tweeted:
Kiva is looking to hire a Product Marketing Manager - Plz RT! http://bit.ly/bFgnsZ
about 6 hours ago

- 



Tim Ferriss
@tferriss Global | in Business
Recently tweeted:
Is this accurate? Senator Dodd's will make start-up fundraising harder: http://ping.fm/srJ8I
about 12 hours ago

- 

NickBarnett
@NickBarnett iPhone: 44.421024,-88.077591 | in Sports
Recently tweeted:
RT @RyanGrant25: I Thank you RT @MPflugs: @RyanGrant25 My Mom died 6 months ago..so donated money 2 the USO so soldiers can call their m ...
about 2 hours ago

- 

BBC Click
@BBCClick London, England | in Technology
Recently tweeted:
If you're thinking of taking a snap of yourself at the voting booth & tweeting it, think again! http://bit.ly/cd0p9A Happy voting, UK!
about 15 hours ago

- 

JetBlue Airways
@JetBlue 11375 | in Travel
Recently tweeted:
@Feznando Look for deals at http://bit.ly/jbdeals and sign up for fare alerts: http://bit.ly/JBFareAlerts
about 12 hours ago

- 

Jeremy Piven
@jeremypiven Hollywood, CA | in Entertainment
Recently tweeted:
"Rather be a free man in my grave then living as a puppet or a slave" Jimmy Cliff
about 12 hours ago

- 

Barbara Walters
@BarbaraJWalters in News
Recently tweeted:
Tonight on my Sirius/XM radio show: Jillian Lauren-- who spent 18 months in a real Harem. 6pm East/3 West on Sirius 102 / XM 155
12:27 PM May 3rd

- 

ParentDish
@ParentDish in Family
Recently tweeted:
Feds looking into allegations about Pampers Dry Max claims. http://bit.ly/an41TG Do you think your child had an adverse reaction?
about 9 hours ago

- 



Andrew Weil, M.D.
@DrWeil Arizona | in Health
Recently tweeted:
Sneezing? Here's a new article on my site about allergies (hay fever, dust, pet, mold, etc) http://bit.ly/cVTWJQ
about 1 hour ago

- EAT ME DAILY

Eat Me Daily
@eatmedaily in Food & Drink
Recently tweeted:
Ooh, la la: Filioppo Ioco's Fun Foods at the World Erotic Art Museum [food art] http://bit.ly/ccWJpd
about 12 hours ago

- change .org

Change.org
@change in Charity
Recently tweeted:
Green #jobs delayed are #green jobs denied: http://bit.ly/bJsxSs
11 minutes ago

- NIH

NIH for Health
@NIHforHealth Bethesda, Maryland, USA | in Health
Recently tweeted:
News: NHGRI Researchers Use New Sequencing Strategies To Discover Rare Inherited Illness Rapidly http://bit.ly/9ChsfC
about 9 hours ago

- 

Alyssa Milano
@Alyssa_Milano Los Angeles | in Entertainment
Recently tweeted:
Adore you all for humoring me about the peacock.
3 minutes ago

- 

Amy Jane Gruber
@AmyJane Philadelphia | in Staff Picks
Recently tweeted:
You know you have a great best friend when you can text "YOU NEED TO EMAIL ME THIS PICTURE OF YOUR URINE" and she's totally cool with it.
about 4 hours ago

- Harvard Health Publications

Harvard Health
@HarvardHealth Boston, MA | in Health
Recently tweeted:
Is your chest pain a heart attack or something else? The Harvard Heart Letter discusses - http://bit.ly/a3iKh9
about 11 hours ago

- TRAVELZOO

Travelzoo
@Travelzoo New York | in Travel
Recently tweeted:
1-BR villa at award-winning @SCWinery for just $159/nt. Incl. brkfst, #wine & more. http://bit.ly/bqZDcS #travel
about 5 hours ago

Friends and industry peers you know. Celebrities you watch. Businesses you frequent. Find them all on Twitter.

Top tweets View all

Noteworthy tweets


TimMontgomerie ConservativeHome no longer believes a Tory majority is possible
27 minutes ago


rstevens Next time someone asks your ethnicity, you should say "adorable."
4 hours ago


cambioconnect We'll let you all know very soon when the site will launch. We're so excited about it!
4 hours ago


stuntmandrew Beginning to feel like Cleggmania is about as powerful as Henmania
4 hours ago


Kurt_Vonnegut I urge you to please notice when you are happy, and exclaim or murmur or think at some point, "If this isn't nice, I don't know what is."
4 hours ago

twitter Join the conversation

Footer

- Language:
- English ▼

1. Italian - Italiano
2. Spanish - Español
3. English
4. French - français
5. German - Deutsch
6. Japanese - 日本語

- © 2010 Twitter
- About Us
- Contact
- Blog
- Status
- Goodies
- API
- Business
- Help
- Jobs
- Terms
- Privacy

Trending right now:
Why? Source: What the Trend?

Last Modified: 3-10-2010	6.4 A	**From:** 200901
Model Year: 2010	**Model:** Corolla	**Doc ID:** RM000002RLW00IX
Title: EXTERIOR PANELS / TRIM: REAR DOOR BELT MOULDING: INSTALLATION (2010 Corolla)		

INSTALLATION

HINT:

- Use the same procedure for the RH side and LH side.
- The procedure listed below is for the LH side.

1. INSTALL REAR DOOR BELT MOULDING ASSEMBLY

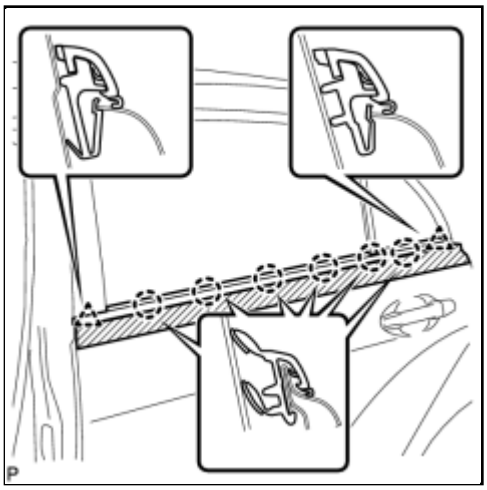

(a) Engage the 6 claws and 2 clips, and install the rear door belt moulding assembly.

2. INSTALL REAR DOOR GLASS RUN INFO

3. INSTALL REAR DOOR GLASS SUB-ASSEMBLY INFO

4. INSTALL REAR DOOR QUARTER WINDOW GLASS INFO

5. INSTALL REAR DOOR WINDOW DIVISION BAR SUB-ASSEMBLY INFO

6. INSTALL REAR DOOR SERVICE HOLE COVER INFO

7. INSTALL REAR DOOR TRIM BRACKET INFO

8. INSTALL REAR DOOR INNER GLASS WEATHERSTRIP INFO

9. INSTALL REAR DOOR INSIDE HANDLE SUB-ASSEMBLY INFO

10. INSTALL REAR DOOR TRIM BOARD SUB-ASSEMBLY INFO

11. INSTALL REAR DOOR ARMREST UPPER BASE PANEL (w/o Power Window) INFO

12. INSTALL REAR DOOR ARMREST UPPER BASE PANEL (w/ Power Window) INFO

13. INSTALL REAR DOOR INSIDE HANDLE BEZEL INFO

14. INSTALL REAR DOOR WINDOW REGULATOR HANDLE ASSEMBLY (w/o Power Window)

INFO



Last Modified: 3-10-2010	6.4 A	**From:** 200901
Model Year: 2010	**Model:** Corolla	**Doc ID:** RM000002WJ800AX
Title: EXTERIOR PANELS / TRIM: REAR SPOILER: REMOVAL (2010 Corolla)		

REMOVAL

1. REMOVE LUGGAGE COMPARTMENT DOOR COVER INFO

2. REMOVE REAR SPOILER ASSEMBLY

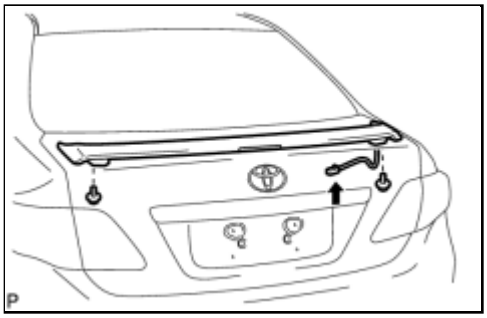

(a) Disconnect the connector.

(b) Remove the 2 bolts.

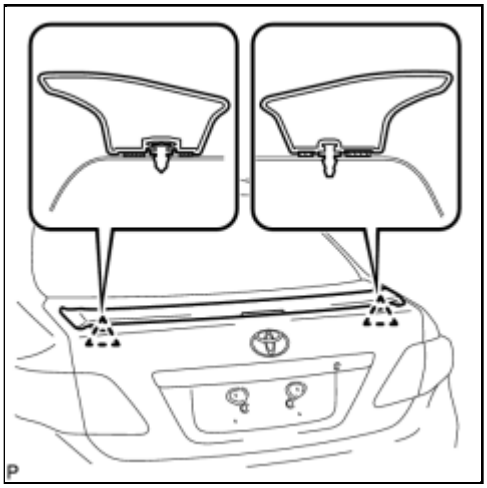

(c) Disengage the 2 clips and remove the rear spoiler assembly.

Last Modified: 3-10-2010	6.4 A	**From:** 200901
Model Year: 2010	**Model:** Corolla	**Doc ID:** RM000002WJ900AX
Title: EXTERIOR PANELS / TRIM: REAR SPOILER: DISASSEMBLY (2010 Corolla)		

DISASSEMBLY

1. REMOVE REAR SPOILER LOWER TAPE LH

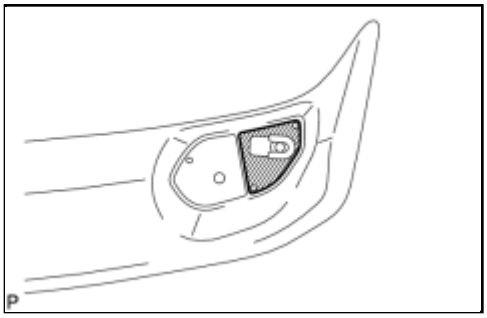

(a) Remove the rear spoiler lower tape.

2. REMOVE REAR SPOILER LOWER TAPE RH

HINT:

Use the same procedure for the RH side and LH side.

3. REMOVE REAR SPOILER SIDE PROTECTOR LH

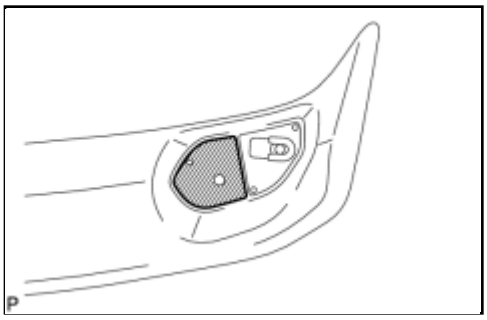

(a) Remove the rear spoiler side protector.

4. REMOVE REAR SPOILER SIDE PROTECTOR RH

HINT:

Use the same procedure for the RH side and LH side.

5. REMOVE CENTER STOP LIGHT ASSEMBLY INFO

6. REMOVE CENTER STOP LIGHT CORD ASSEMBLY

Last Modified: 3-10-2010	6.4 A	**From:** 200901
Model Year: 2010	**Model:** Corolla	**Doc ID:** RM000002WJ600AX
Title: EXTERIOR PANELS / TRIM: REAR SPOILER: INSTALLATION (2010 Corolla)		

INSTALLATION

1. INSTALL REAR SPOILER ASSEMBLY

HINT:

When installing the rear spoiler assembly, using a heat light and then heat the vehicle body and rear spoiler assembly.

Heating Temperature:

ITEM	TEMPERATURE
Vehicle Body	40 to 60°C (104 to 140°F)
Rear Spoiler	20 to 30°C (68 to 86°F)

NOTICE:

Do not heat the vehicle body and rear spoiler assembly excessively.

(a) Clean the vehicle body surface.

(1) Using a heat light, heat the vehicle body surface.

(2) Remove the double-sided tape from the vehicle body.

(3) Wipe off any tape adhesive residue with cleaner.

(b) Using a heat light, carefully heat the vehicle body and rear spoiler assembly.

(c) Remove the release paper from the face of the rear spoiler assembly.

HINT:

After removing the release paper, keep the exposed adhesive free from foreign matter.

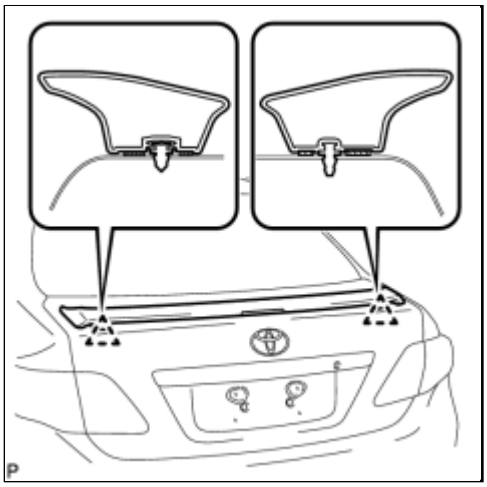

(d) Engage the 2 clips and install the rear spoiler assembly.

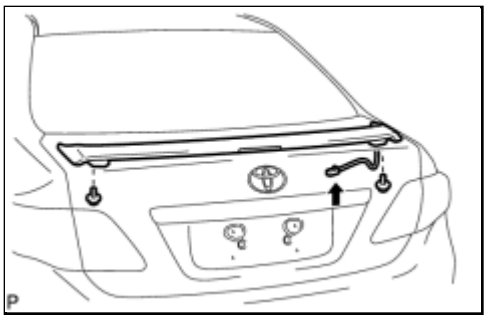

(e) Install the 2 bolts.

(f) Connect the connector.

2. INSTALL LUGGAGE COMPARTMENT DOOR COVER INFO

Last Modified: 3-10-2010	6.4 A	**From:** 200901
Model Year: 2010	**Model:** Corolla	**Doc ID:** RM000002WJA00AX
Title: EXTERIOR PANELS / TRIM: REAR SPOILER: REASSEMBLY (2010 Corolla)		

REASSEMBLY

HINT:

When installing the protector, heat the rear spoiler using a heat light.

Heating Temperature:

ITEM	TEMPERATURE
Rear Spoiler	20 to 30°C (68 to 86°F)

NOTICE:

Do not heat the rear spoiler excessively.

1. INSTALL CENTER STOP LIGHT CORD ASSEMBLY

2. INSTALL CENTER STOP LIGHT ASSEMBLY INFO

3. INSTALL REAR SPOILER SIDE PROTECTOR LH

(a) Clean the rear spoiler (if reusing the rear spoiler).

(1) Using a heat light, carefully heat the rear spoiler.

(2) Wipe off any tape adhesive residue with cleaner.

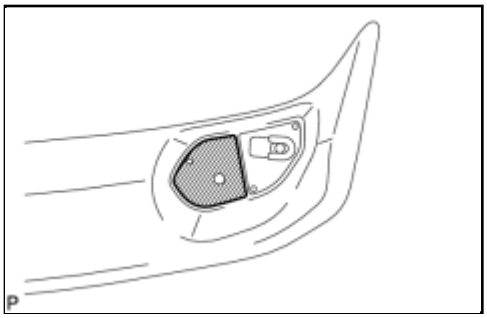

(3) Apply a new rear spoiler side protector to the rear spoiler.

4. INSTALL REAR SPOILER SIDE PROTECTOR RH

HINT:

Use the same procedure for the RH side and LH side.

5. INSTALL REAR SPOILER LOWER TAPE LH

(a) Clean the rear spoiler (if reusing the rear spoiler).

(1) Using a heat light, carefully heat the rear spoiler.

(2) Wipe off any tape adhesive residue with cleaner.

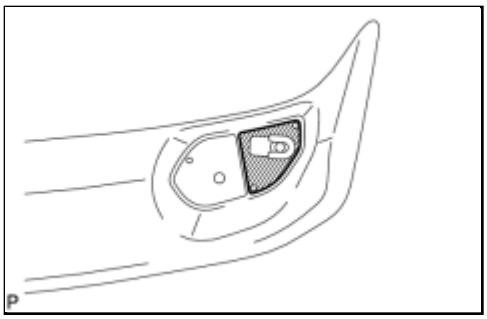

(3) Apply a new rear spoiler lower tape to the rear spoiler.

6. INSTALL REAR SPOILER LOWER TAPE RH

HINT:

Use the same procedure for the RH side and LH side.

Last Modified: 3-10-2010	6.4 K	**From:** 200901
Model Year: 2010	**Model:** Corolla	**Doc ID:** RM000002WIN00CX
Title: EXTERIOR PANELS / TRIM: ROOF DRIP SIDE FINISH MOULDING: COMPONENTS (2010 Corolla)		

COMPONENTS

ILLUSTRATION

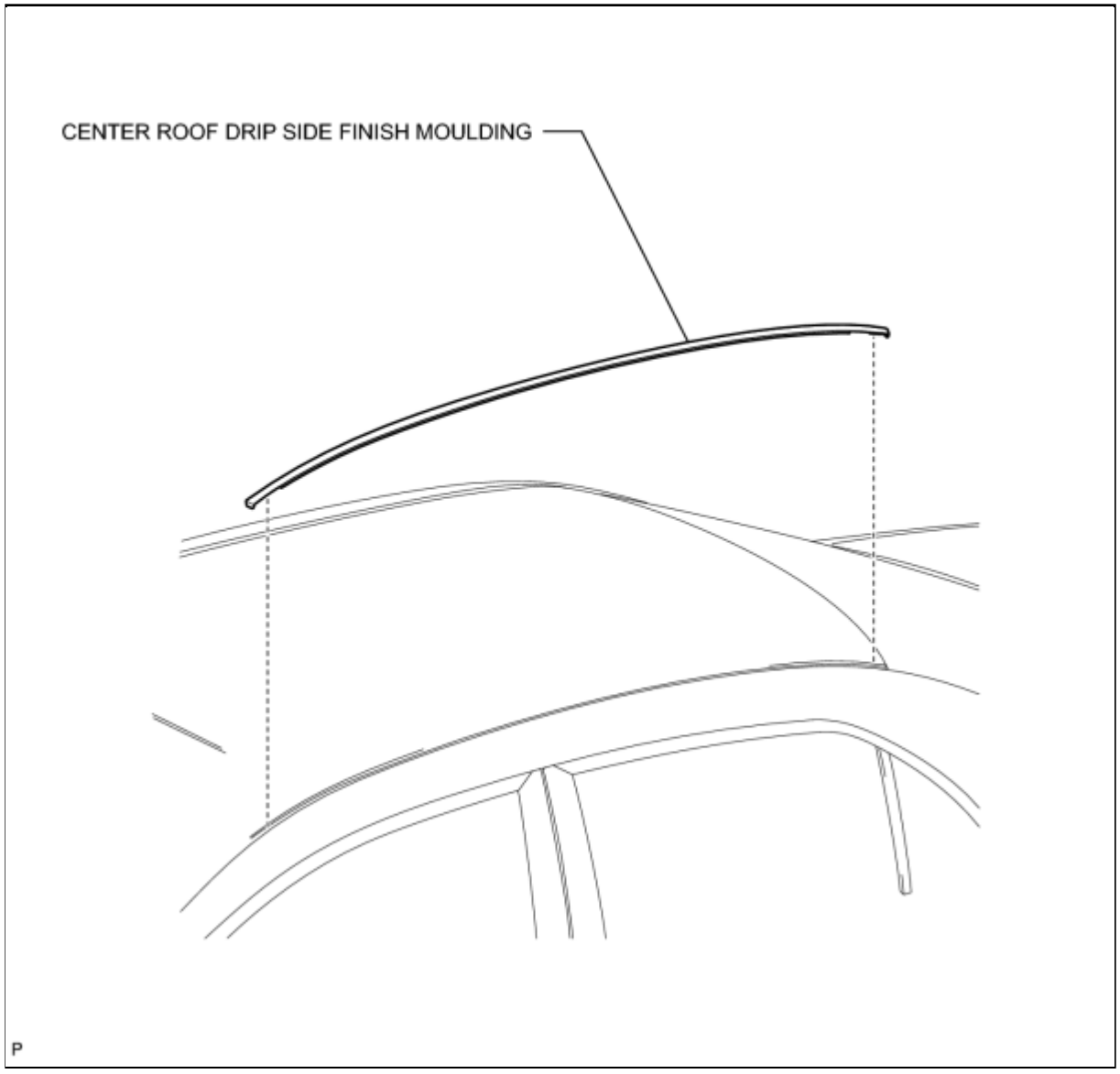

Last Modified: 3-10-2010	6.4 A	**From:** 200901
Model Year: 2010	**Model:** Corolla	**Doc ID:** RM000002WIO00CX
Title: EXTERIOR PANELS / TRIM: ROOF DRIP SIDE FINISH MOULDING: REMOVAL (2010 Corolla)		

REMOVAL

HINT:

- Use the same procedure for the RH side and LH side.
- The procedure listed below is for the LH side.

1. REMOVE CENTER ROOF DRIP SIDE FINISH MOULDING

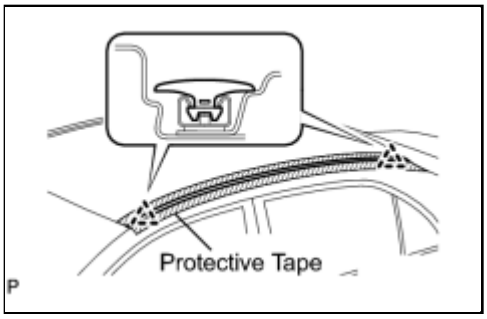

(a) Put protective tape around the center roof drip side finish moulding.

(b) Disengage the 2 clips and remove the center roof drip side finish moulding.

Last Modified: 3-10-2010	6.4 A	**From:** 200901
Model Year: 2010	**Model:** Corolla	**Doc ID:** RM000002WIM00CX
Title: EXTERIOR PANELS / TRIM: ROOF DRIP SIDE FINISH MOULDING: INSTALLATION (2010 Corolla)		

INSTALLATION

HINT:

- Use the same procedure for the RH side and LH side.
- The procedure listed below is for the LH side.

1. INSTALL CENTER ROOF DRIP SIDE FINISH MOULDING

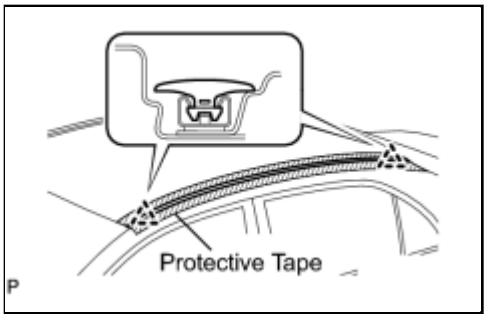

(a) Engage the 2 clips and install the center roof drip side finish moulding.

Last Modified: 3-10-2010	6.4 K	**From:** 200901
Model Year: 2010	**Model:** Corolla	**Doc ID:** RM000002WK900BX
Title: EXTERIOR PANELS / TRIM: SIDE MUDGUARD: COMPONENTS (2010 Corolla)		

COMPONENTS

ILLUSTRATION

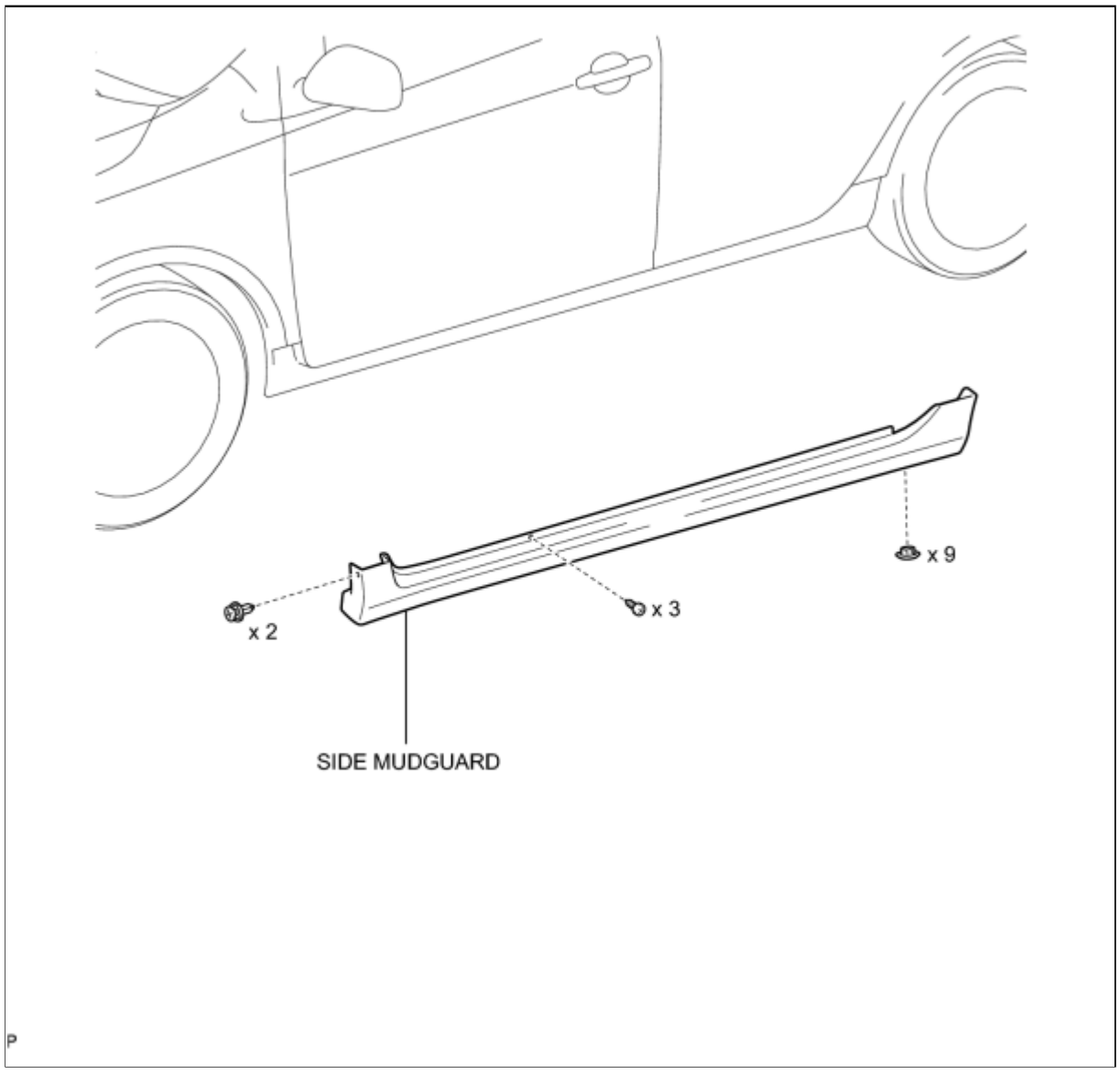

Last Modified: 3-10-2010	6.4 A	**From:** 200901
Model Year: 2010	**Model:** Corolla	**Doc ID:** RM000002WKA00BX
Title: EXTERIOR PANELS / TRIM: SIDE MUDGUARD: REMOVAL (2010 Corolla)		

REMOVAL

HINT:

- Use the same procedure for the RH side and LH side.
- The procedure listed below is for the LH side.

1. REMOVE SIDE MUDGUARD

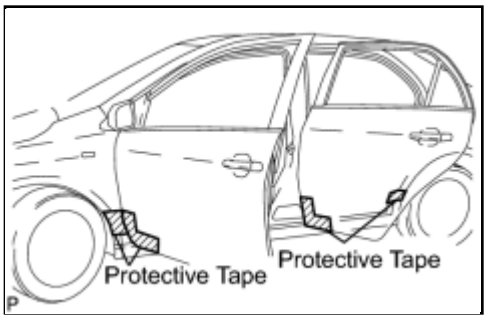

(a) Put protective tape around the side mudguard.

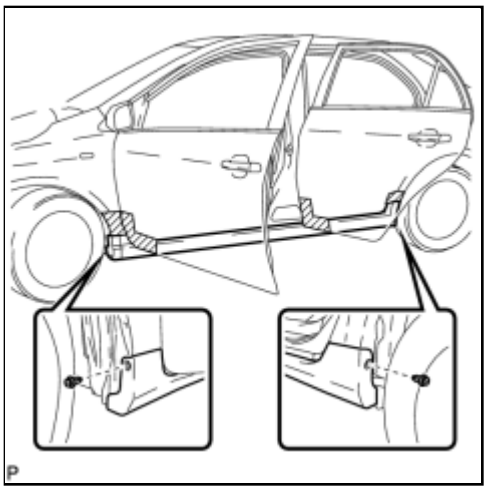

(b) Remove the 2 clips.

(c) Remove the 3 screws.

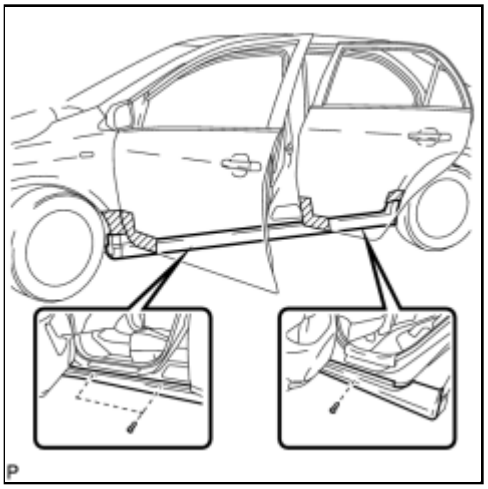

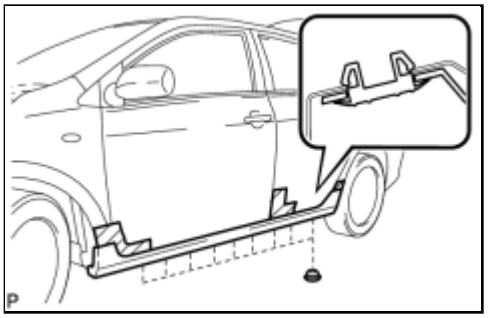

(d) Remove the 9 retainers.

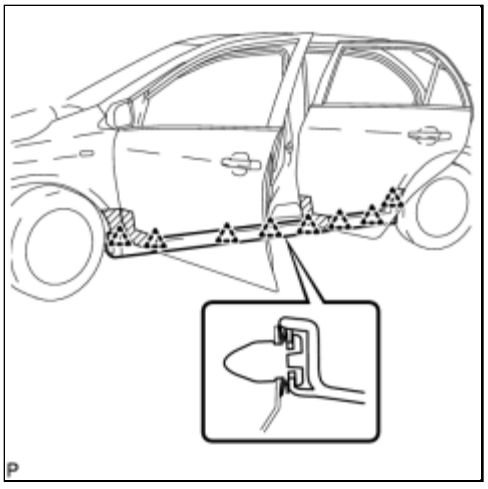

(e) Disengage the 8 clips and remove the side mudguard.

Last Modified: 3-10-2010	6.4 A	**From:** 200901
Model Year: 2010	**Model:** Corolla	**Doc ID:** RM000002WK800BX
Title: EXTERIOR PANELS / TRIM: SIDE MUDGUARD: INSTALLATION (2010 Corolla)		

INSTALLATION

HINT:

- Use the same procedure for the RH side and LH side.
- The procedure listed below is for the LH side.

1. INSTALL SIDE MUDGUARD

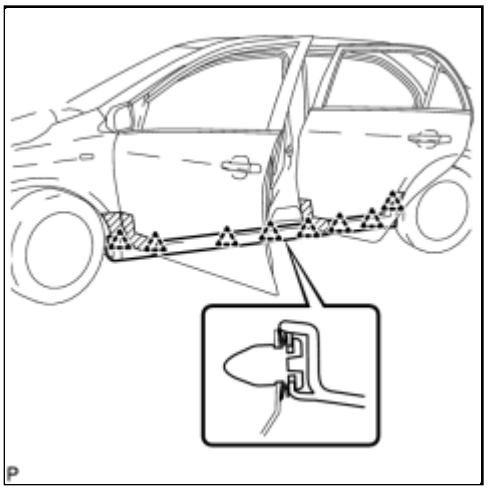

(a) Engage the 8 clips and install the side mudguard.

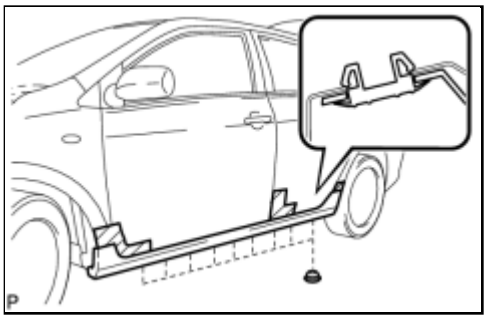

(b) Install the 9 retainers.

(c) Install the 3 screws.

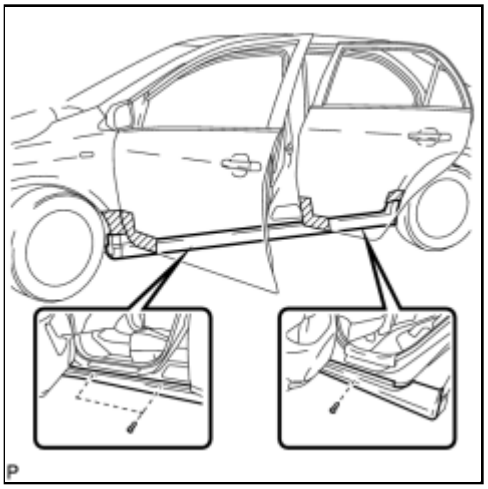

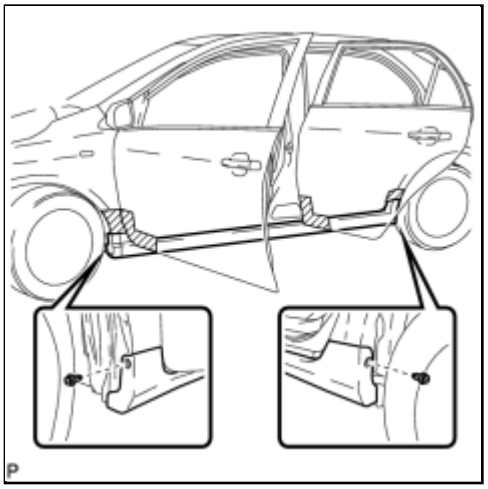

(d) Install the 2 clips.

Last Modified: 3-10-2010	6.4 R	**From:** 200901
Model Year: 2010	**Model:** Corolla	**Doc ID:** RM0000016F401UX
Title: HORN: HORN SYSTEM: PARTS LOCATION (2010 Corolla)		

PARTS LOCATION

ILLUSTRATION

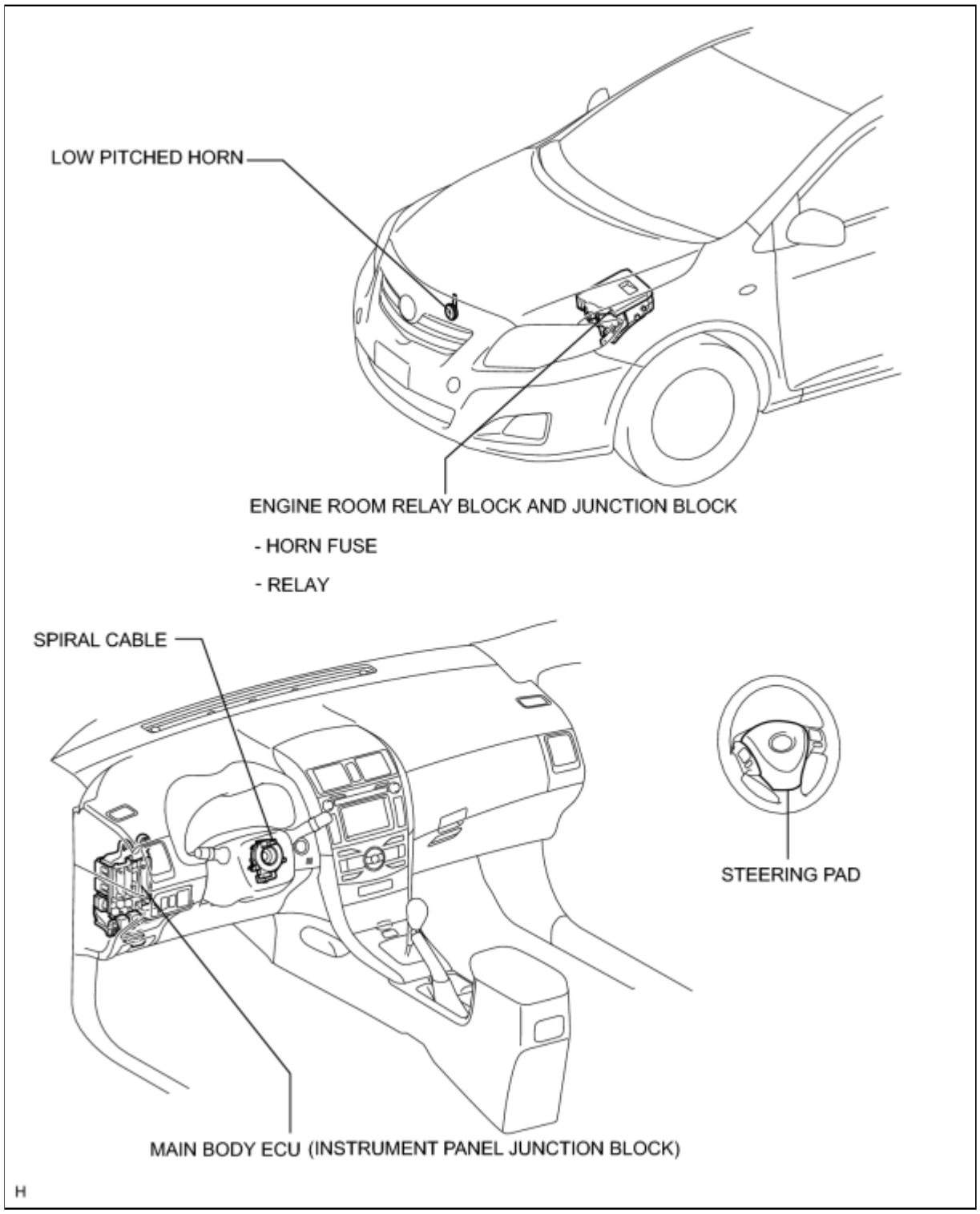

Last Modified: 3-10-2010	6.4 U	**From:** 200901
Model Year: 2010	**Model:** Corolla	**Doc ID:** RM0000016F601UX
Title: HORN: HORN SYSTEM: SYSTEM DIAGRAM (2010 Corolla)		

SYSTEM DIAGRAM

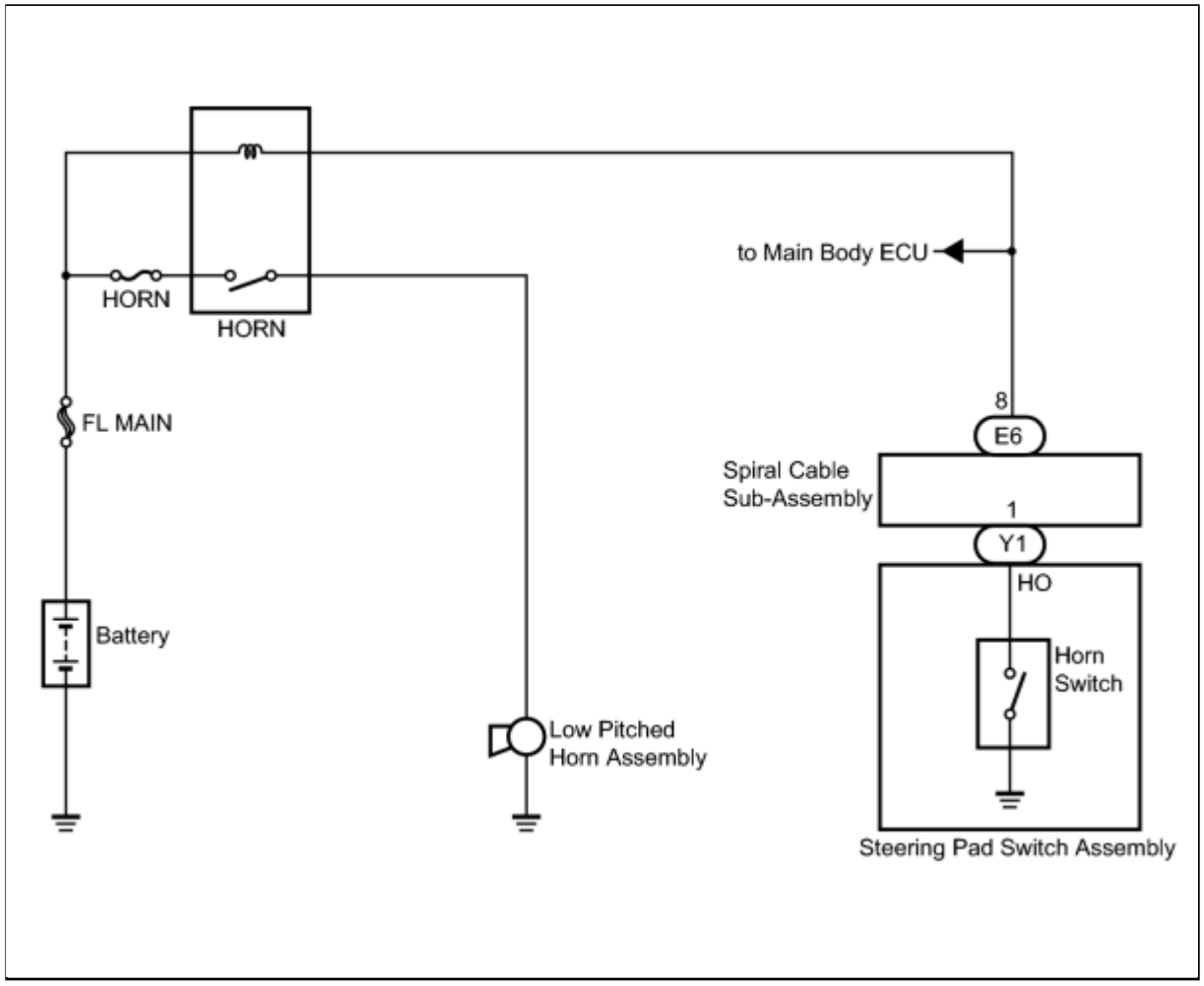

Last Modified: 3-10-2010	6.4 T	**From:** 200901
Model Year: 2010	**Model:** Corolla	**Doc ID:** RM0000016F502EX
Title: HORN: HORN SYSTEM: PROBLEM SYMPTOMS TABLE (2010 Corolla)		

PROBLEM SYMPTOMS TABLE

HINT:

Use the table below to help determine the cause of problem symptoms. If multiple suspected areas are listed, the potential causes of the symptoms are listed in order of probability in the "Suspected Area" column of the table. Check each symptom by checking the suspected areas in the order they are listed. Replace parts as necessary.

Horn System

SYMPTOM	SUSPECTED AREA	SEE PAGE
Horn does not sound	HORN fuse	-
	Low pitched horn assembly	INFO
	Horn relay (Integration relay)	INFO
	Horn switch (Steering pad assembly)	INFO
	Spiral cable sub-assembly	INFO
	Wire harness	-
Horn blows all the time	Horn relay (Integration relay)	INFO
	Horn switch (Steering pad assembly)	INFO
	Wire harness	-

Last Modified: 3-10-2010	6.4 K	**From:** 200901
Model Year: 2010	**Model:** Corolla	**Doc ID:** RM000003FW1001X
Title: HORN: LOW PITCHED HORN: COMPONENTS (2010 Corolla)		

COMPONENTS

ILLUSTRATION

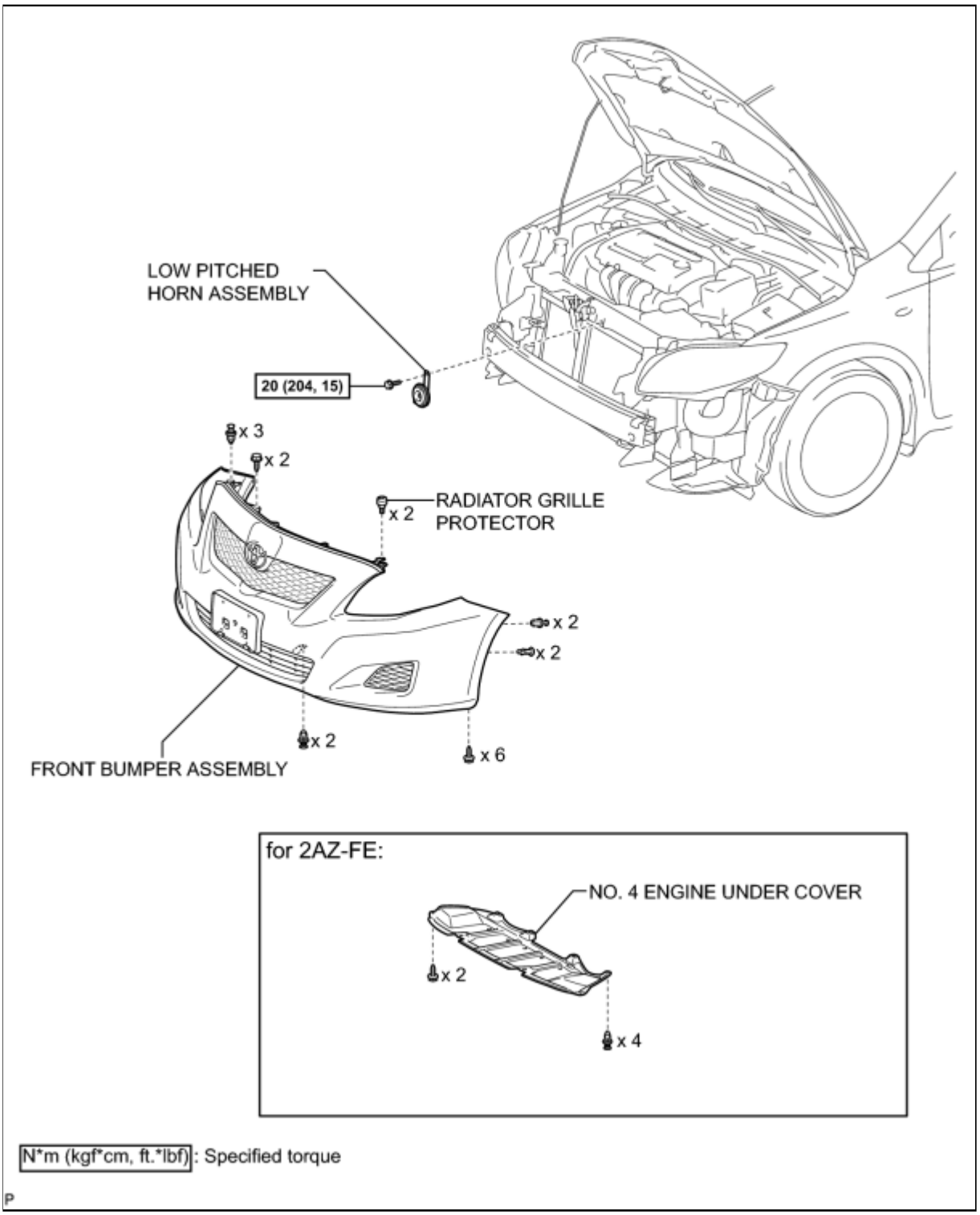

Last Modified: 3-10-2010	6.4 A	**From:** 200901
Model Year: 2010	**Model:** Corolla	**Doc ID:** RM000003AVJ003X
Title: HORN: LOW PITCHED HORN: REMOVAL (2010 Corolla)		

REMOVAL

1. REMOVE RADIATOR GRILLE PROTECTOR INFO

2. REMOVE NO. 4 ENGINE UNDER COVER (for 2AZ-FE) INFO

3. REMOVE FRONT BUMPER ASSEMBLY INFO

4. REMOVE LOW PITCHED HORN ASSEMBLY

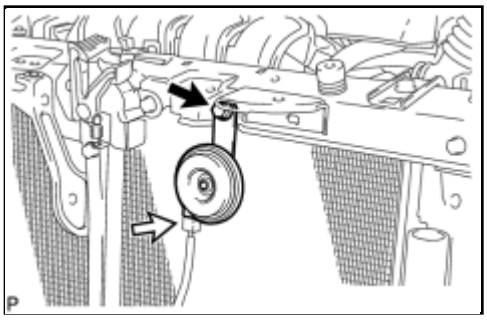

(a) Disconnect the connector.

(b) Remove the bolt and low pitched horn assembly.

Last Modified: 3-10-2010	6.4 G	**From:** 200901
Model Year: 2010	**Model:** Corolla	**Doc ID:** RM0000016IL02QX
Title: HORN: LOW PITCHED HORN: INSPECTION (2010 Corolla)		

INSPECTION

1. INSPECT LOW PITCHED HORN ASSEMBLY

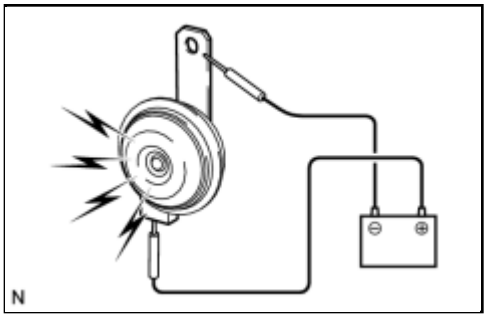

(a) Apply battery voltage and check operation of the horn, as shown in the table below.

Standard:

MEASUREMENT CONDITION	SPECIFIED CONDITION
Battery positive (+) → Terminal 1 Battery negative (-) → Body ground	Horn sounds

If the result is not as specified, replace the low pitched horn assembly.

Last Modified: 3-10-2010	6.4 A	**From:** 200901
Model Year: 2010	**Model:** Corolla	**Doc ID:** RM000003AVH003X
Title: HORN: LOW PITCHED HORN: INSTALLATION (2010 Corolla)		

INSTALLATION

1. INSTALL LOW PITCHED HORN ASSEMBLY

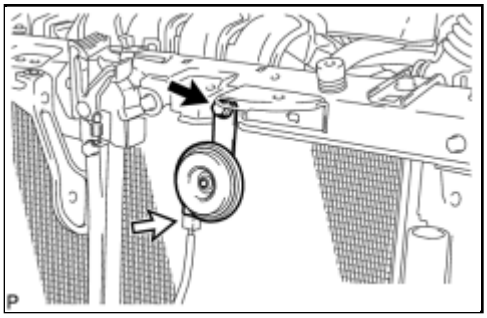

(a) Install the low pitched horn assembly with the bolt.

Torque: 20 N·m (204 kgf·cm, 15ft·lbf)

(b) Connect the connector.

2. INSTALL FRONT BUMPER ASSEMBLY INFO

3. INSTALL NO. 4 ENGINE UNDER COVER (for 2AZ-FE) INFO

4. INSTALL RADIATOR GRILLE PROTECTOR INFO

5. VEHICLE PREPARATION FOR FOG LIGHT AIMING ADJUSTMENT (w/ Fog Light) INFO

6. PREPARATION FOR FOG LIGHT AIMING (w/ Fog Light) INFO

7. FOG LIGHT AIMING INSPECTION (w/ Fog Light) INFO

8. FOG LIGHT AIMING ADJUSTMENT (w/ Fog Light) INFO

Last Modified: 3-10-2010	6.4 G	**From:** 200901
Model Year: 2010	**Model:** Corolla	**Doc ID:** RM0000016F701ZX
Title: HORN: RELAY: ON-VEHICLE INSPECTION (2010 Corolla)		

ON-VEHICLE INSPECTION

1. INSPECT INTEGRATION NO.1 RELAY

(a) Remove the integration relay from the engine room relay block.

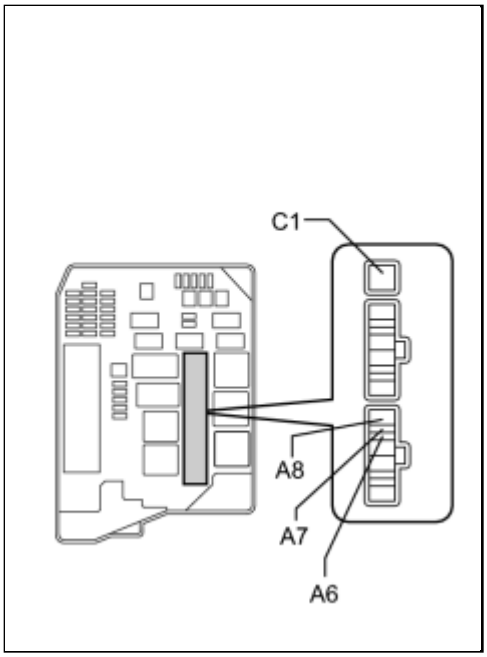

(b) Measure the resistance according to the value(s) in the table below.

Standard resistance:

TESTER CONNECTION	CONDITION	SPECIFIED CONDITION
C1 - A8	When battery voltage is not applied to terminals A6 and A7	10 kΩ or higher
C1 - A8	When battery voltage is applied to terminals A6 and A7	Below 1 Ω

If the result is not as specified, replace the integration relay.

Last Modified: 3-10-2010	6.4 K	**From:** 200901
Model Year: 2010	**Model:** Corolla	**Doc ID:** RM000002VR800DX
Title: LIGHTING (EXT): AUTOMATIC LIGHT CONTROL SENSOR: COMPONENTS (2010 Corolla)		

COMPONENTS

ILLUSTRATION

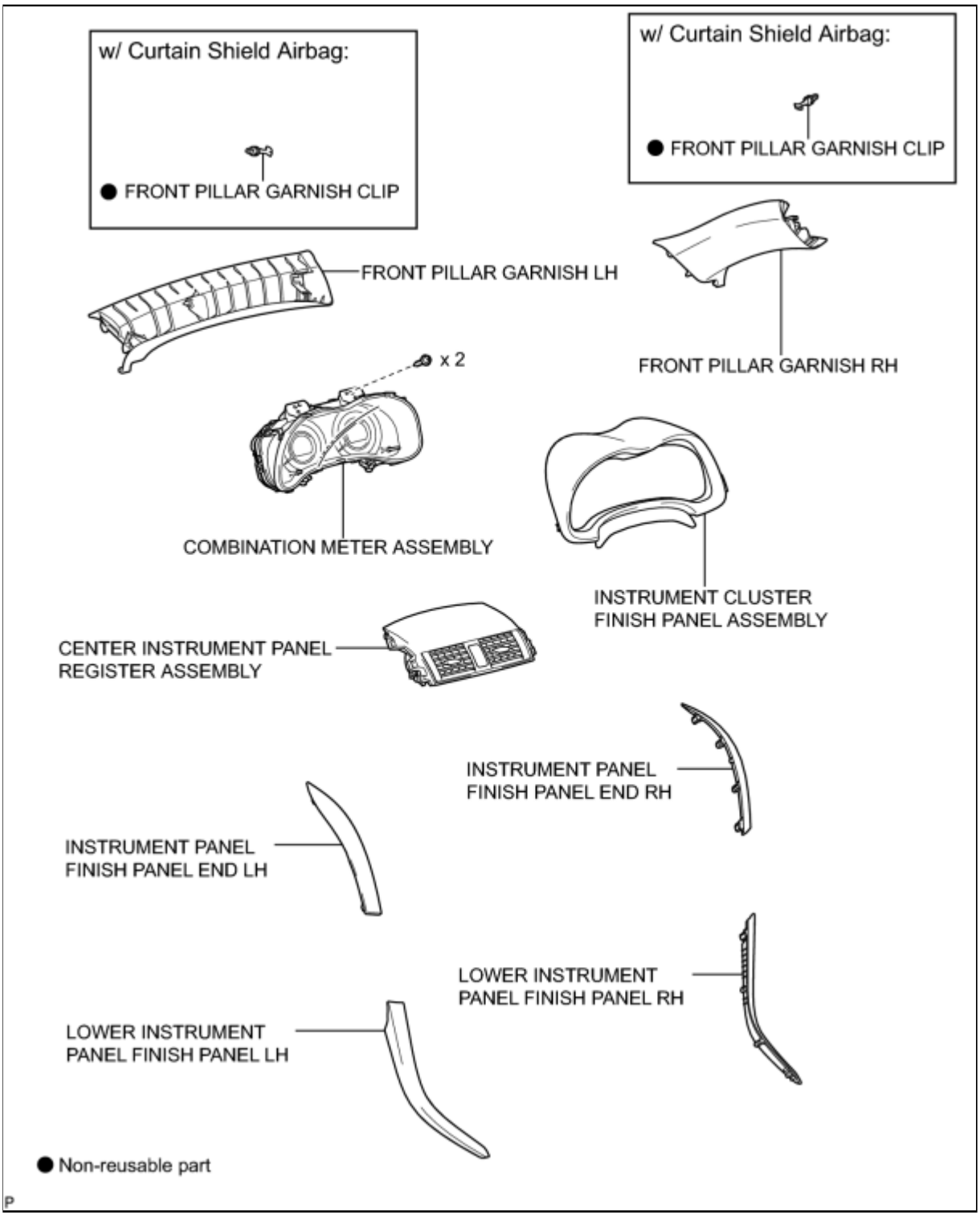

ILLUSTRATION

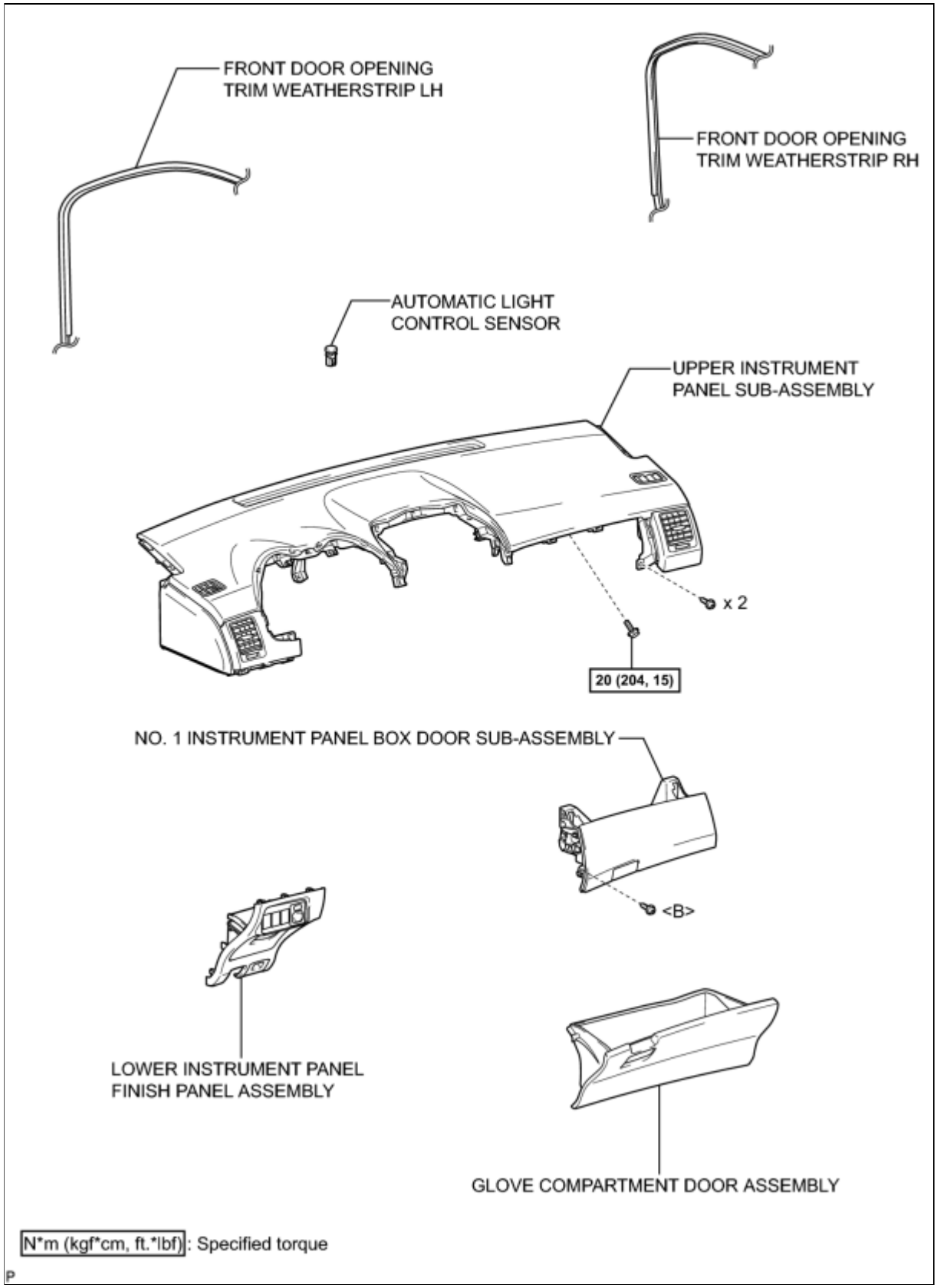

Last Modified: 3-10-2010	6.4 A	**From:** 200901
Model Year: 2010	**Model:** Corolla	**Doc ID:** RM000002VR900HX
Title: LIGHTING (EXT): AUTOMATIC LIGHT CONTROL SENSOR: REMOVAL (2010 Corolla)		

REMOVAL

1. PRECAUTION

INFO

2. DISCONNECT CABLE FROM NEGATIVE BATTERY TERMINAL

CAUTION:

Wait at least 90 seconds after disconnecting the cable from the negative (-) battery terminal to disable the SRS system INFO **.**

3. REMOVE LOWER INSTRUMENT PANEL FINISH PANEL LH INFO

4. REMOVE LOWER INSTRUMENT PANEL FINISH PANEL RH INFO

5. REMOVE INSTRUMENT PANEL FINISH PANEL END LH INFO

6. REMOVE INSTRUMENT PANEL FINISH PANEL END RH INFO

7. REMOVE CENTER INSTRUMENT PANEL REGISTER ASSEMBLY INFO

8. REMOVE INSTRUMENT CLUSTER FINISH PANEL ASSEMBLY INFO

9. REMOVE COMBINATION METER ASSEMBLY INFO

10. REMOVE FRONT PILLAR GARNISH LH (w/o Curtain Shield Airbag) INFO

11. REMOVE FRONT PILLAR GARNISH LH (w/ Curtain Shield Airbag) INFO

12. REMOVE FRONT PILLAR GARNISH RH (w/o Curtain Shield Airbag) INFO

13. REMOVE FRONT PILLAR GARNISH RH (w/ Curtain Shield Airbag) INFO

14. REMOVE LOWER INSTRUMENT PANEL FINISH PANEL ASSEMBLY INFO

15. DISCONNECT FRONT DOOR OPENING TRIM WEATHERSTRIP LH INFO

16. REMOVE GLOVE COMPARTMENT DOOR ASSEMBLY INFO

17. REMOVE NO. 1 INSTRUMENT PANEL BOX DOOR SUB-ASSEMBLY INFO

18. DISCONNECT FRONT DOOR OPENING TRIM WEATHERSTRIP RH INFO

19. DISCONNECT INSTRUMENT PANEL WIRE ASSEMBLY INFO

20. REMOVE UPPER INSTRUMENT PANEL SUB-ASSEMBLY INFO

21. REMOVE AUTOMATIC LIGHT CONTROL SENSOR

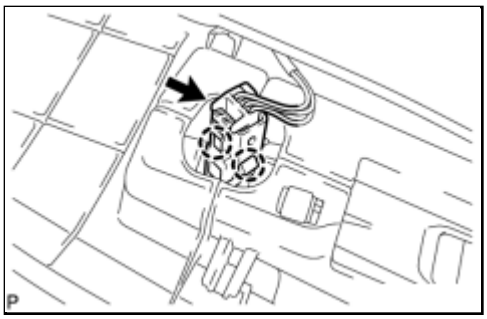

(a) Disconnect the connector.

(b) Disengage the 2 claws and remove the automatic light control sensor.

Last Modified: 3-10-2010	6.4 G	**From:** 200901
Model Year: 2010	**Model:** Corolla	**Doc ID:** RM0000017MH01OX
Title: LIGHTING (EXT): AUTOMATIC LIGHT CONTROL SENSOR: INSPECTION (2010 Corolla)		

INSPECTION

1. INSPECT AUTOMATIC LIGHT CONTROL SENSOR

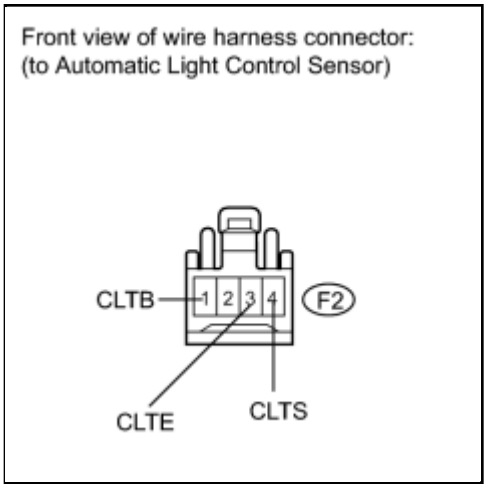

(a) Disconnect the automatic light control sensor connector.

(b) Measure the voltage according to the value(s) in the table below.

Standard Voltage:

TESTER CONNECTION	SWITCH CONDITION	SPECIFIED CONDITION
F2-1 (CLTB) - F2-3 (CLTE)	Ignition switch off	Below 1 V
	Ignition switch ON	11 to 14 V

If the result is not as specified, there is a malfunction on the wire harness side.

(c) Measure the resistance according to the value(s) in the table below.

Standard Resistance:

TESTER CONNECTION	CONDITION	SPECIFIED CONDITION
F2-3 (CLTE) - Body ground	Always	Below 1 Ω

If the result is not as specified, there is a malfunction on the wire harness side.

(d) Reconnect the automatic light control sensor connector.

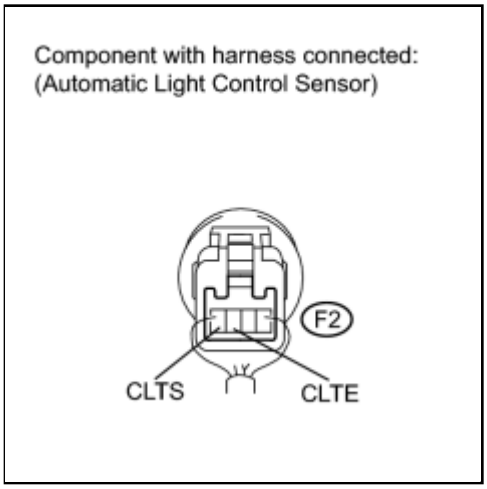

(e) Connect an oscilloscope to the automatic light control sensor connector.

(f) Check the waveform.

OK:

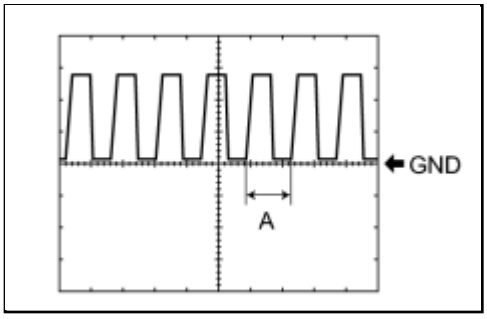

TESTER CONNECTION	TOOL SETTING	SWITCH CONDITION	SPECIFIED CONDITION
F2-3 (CLTE) - F2-4 (CLTS)	2 V/DIV., 5 ms./DIV	Ignition switch ON, light control switch off	Correct waveform is as shown

If the result is not as specified, replace the automatic light control sensor.

HINT:

If the ambient light becomes brighter, width A becomes narrower.

Last Modified: 3-10-2010	6.4 A	**From:** 200901
Model Year: 2010	**Model:** Corolla	**Doc ID:** RM000002VR700HX
Title: LIGHTING (EXT): AUTOMATIC LIGHT CONTROL SENSOR: INSTALLATION (2010 Corolla)		

INSTALLATION

1. INSTALL AUTOMATIC LIGHT CONTROL SENSOR

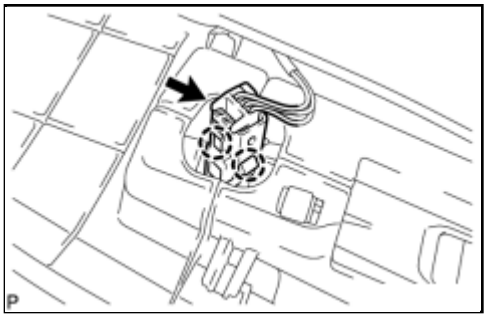

(a) Engage the 2 claws and install the automatic light control sensor.

(b) Connect the connector.

2. INSTALL UPPER INSTRUMENT PANEL SUB-ASSEMBLY INFO

3. CONNECT INSTRUMENT PANEL WIRE ASSEMBLY INFO

4. CONNECT FRONT DOOR OPENING TRIM WEATHERSTRIP LH INFO

5. INSTALL LOWER INSTRUMENT PANEL FINISH PANEL ASSEMBLY INFO

6. CONNECT FRONT DOOR OPENING TRIM WEATHERSTRIP RH INFO

7. INSTALL NO. 1 INSTRUMENT PANEL BOX DOOR SUB-ASSEMBLY INFO

8. INSTALL GLOVE COMPARTMENT DOOR ASSEMBLY INFO

9. INSTALL FRONT PILLAR GARNISH LH (w/o Curtain Shield Airbag) INFO

10. INSTALL FRONT PILLAR GARNISH LH (w/ Curtain Shield Airbag) INFO

11. INSTALL FRONT PILLAR GARNISH RH (w/o Curtain Shield Airbag) INFO

12. INSTALL FRONT PILLAR GARNISH RH (w/ Curtain Shield Airbag) INFO

13. INSTALL COMBINATION METER ASSEMBLY INFO

14. INSTALL INSTRUMENT CLUSTER FINISH PANEL ASSEMBLY INFO

15. INSTALL CENTER INSTRUMENT PANEL REGISTER ASSEMBLY INFO

16. INSTALL INSTRUMENT PANEL FINISH PANEL END LH INFO

17. INSTALL INSTRUMENT PANEL FINISH PANEL END RH INFO

18. INSTALL LOWER INSTRUMENT PANEL FINISH PANEL LH INFO

19. INSTALL LOWER INSTRUMENT PANEL FINISH PANEL RH INFO

20. CONNECT CABLE TO NEGATIVE BATTERY TERMINAL

21. INSPECT SRS WARNING LIGHT

INFO

Last Modified: 3-10-2010	6.4 K	**From:** 200901
Model Year: 2010	**Model:** Corolla	**Doc ID:** RM000003FYK001X
Title: LIGHTING (EXT): DAYTIME RUNNING LIGHT RELAY: COMPONENTS (2010 Corolla)		

COMPONENTS

ILLUSTRATION

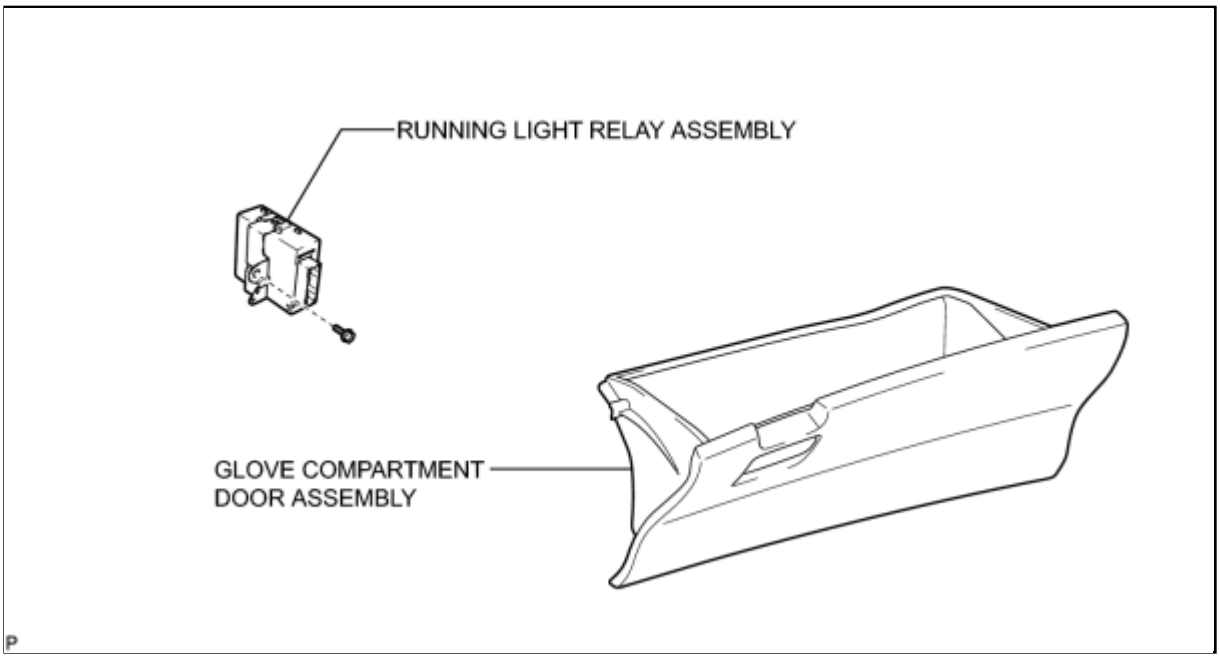

Last Modified: 3-10-2010	6.4 A	**From:** 200901
Model Year: 2010	**Model:** Corolla	**Doc ID:** RM000003FYL001X
Title: LIGHTING (EXT): DAYTIME RUNNING LIGHT RELAY: REMOVAL (2010 Corolla)		

REMOVAL

1. REMOVE GLOVE COMPARTMENT DOOR ASSEMBLY INFO

2. REMOVE RUNNING LIGHT RELAY ASSEMBLY

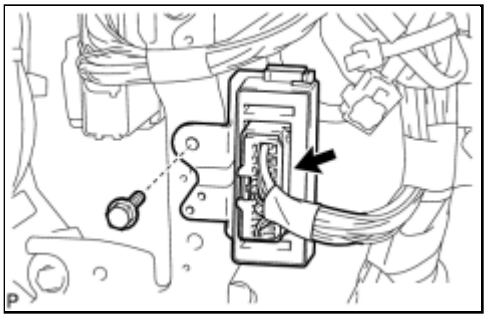

(a) Disconnect the connector.

(b) Remove the bolt and the running light relay assembly.

Last Modified: 3-10-2010	6.4 A	**From:** 200901
Model Year: 2010	**Model:** Corolla	**Doc ID:** RM000003FYJ001X
Title: LIGHTING (EXT): DAYTIME RUNNING LIGHT RELAY: INSTALLATION (2010 Corolla)		

INSTALLATION

1. INSTALL RUNNING LIGHT RELAY ASSEMBLY

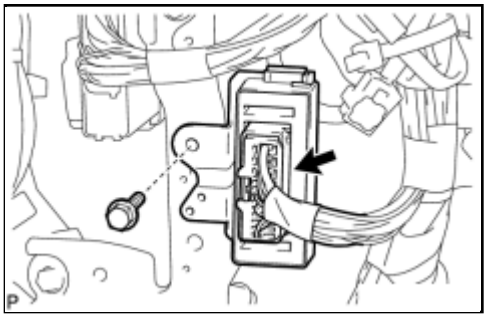

(a) Install the running light relay assembly with the bolt.

(b) Connect the connector.

2. INSTALL GLOVE COMPARTMENT DOOR ASSEMBLY INFO

Last Modified: 3-10-2010	6.4 K	**From:** 200901
Model Year: 2010	**Model:** Corolla	**Doc ID:** RM000002VNL00AX
Title: LIGHTING (EXT): FOG LIGHT ASSEMBLY: COMPONENTS (2010 Corolla)		

COMPONENTS

ILLUSTRATION

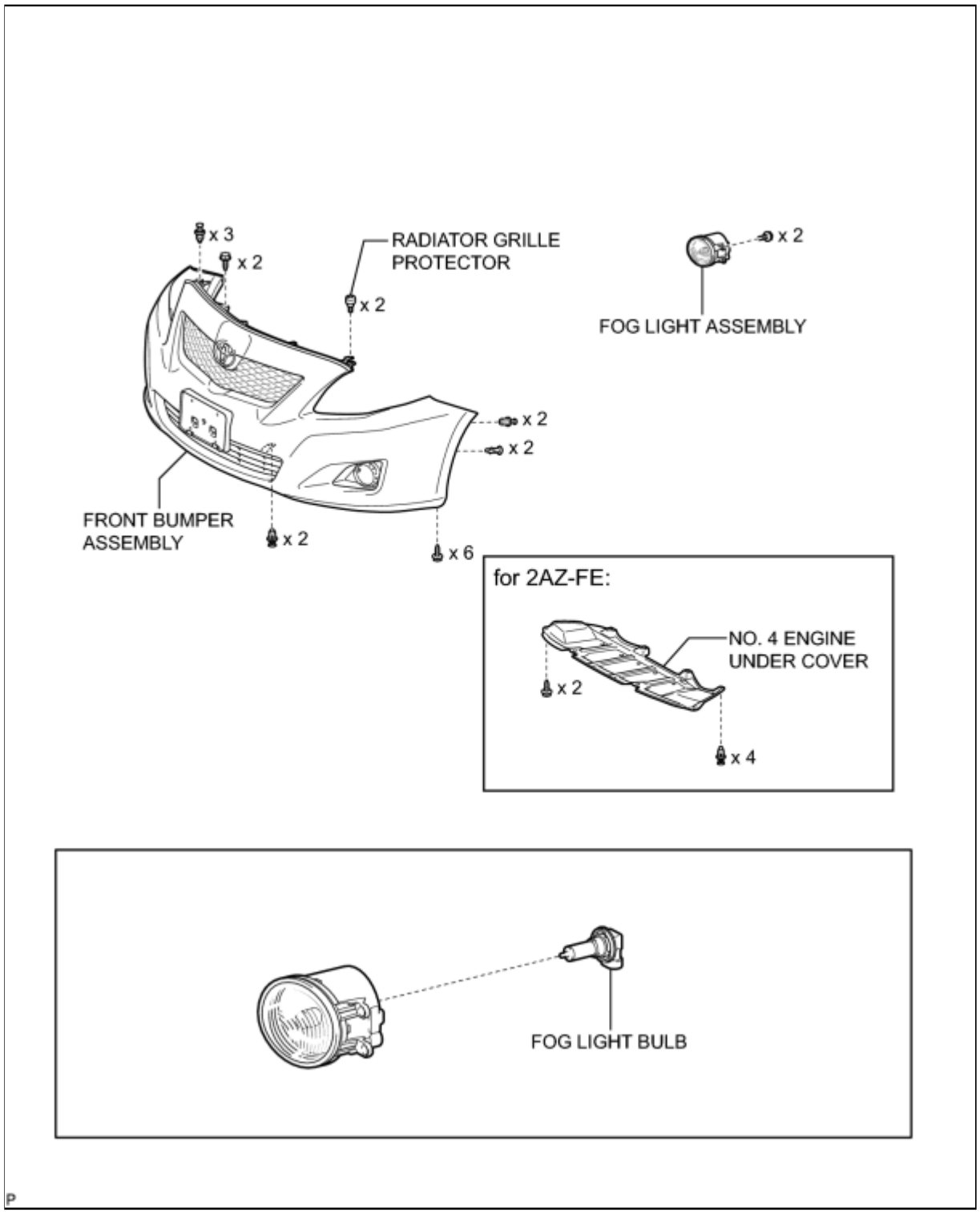

Last Modified: 3-10-2010	6.4 A	**From:** 200901
Model Year: 2010	**Model:** Corolla	**Doc ID:** RM000002LH600EX
Title: LIGHTING (EXT): FOG LIGHT ASSEMBLY: REMOVAL (2010 Corolla)		

REMOVAL

1. REMOVE RADIATOR GRILLE PROTECTOR INFO

2. REMOVE NO. 4 ENGINE UNDER COVER (for 2AZ-FE) INFO

3. REMOVE FRONT BUMPER ASSEMBLY INFO

4. REMOVE FOG LIGHT ASSEMBLY

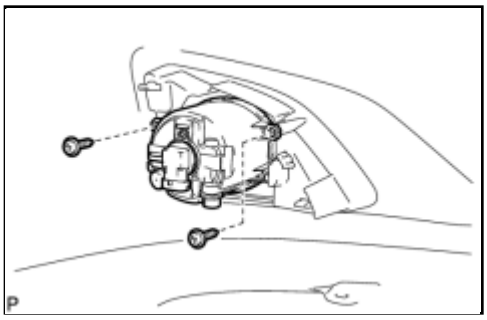

(a) Remove the 2 screws and the fog light assembly.

Last Modified: 3-10-2010	6.4 N	**From:** 200901
Model Year: 2010	**Model:** Corolla	**Doc ID:** RM000000ZC600AX
Title: LIGHTING (EXT): FOG LIGHT ASSEMBLY: ADJUSTMENT (2010 Corolla)		

ADJUSTMENT

HINT:

It is possible that a bulb is incorrectly installed, affecting fog light aim. Bulb installation should be checked prior to performing the adjustment procedure.

1. VEHICLE PREPARATION FOR FOG LIGHT AIMING ADJUSTMENT

(a) Prepare the vehicle:

- Ensure that there is no damage or deformation to the body around the fog lights.
- Fill the fuel tank.
- Make sure that the oil is filled to the specified level.
- Make sure that the coolant is filled to the specified level.
- Inflate the tires to the appropriate pressure.
- Unload the trunk and vehicle, ensuring that the spare tire, tools, and jack are in their original positions.
- Sit a person of average weight (68 kg, 150 lb) in the driver's seat.
- Vehicles with height adjustable suspension should set the vehicle height to the lowest setting prior to adjusting the fog light aim.

2. PREPARATION FOR FOG LIGHT AIMING

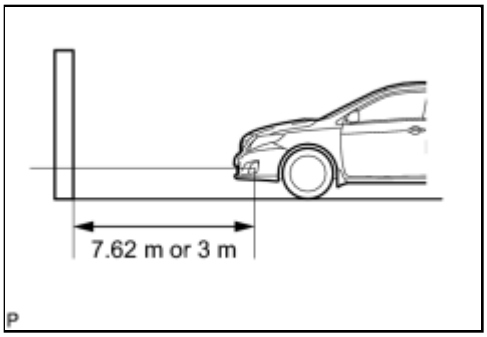

(a) Prepare the vehicle:

- Place the vehicle in a location that is dark enough to clearly observe the cutoff line. The cutoff line is a distinct line, below which light from the fog lights can be observed and above which it cannot.
- Place the vehicle at a 90° angle to the wall.
- Create a 7.62 m (25 ft.) distance between the vehicle (fog light bulb center) and the wall.
- Make sure that the vehicle is on a level surface.
- Bounce the vehicle up and down several times to settle the suspension.

NOTICE:

A distance of 7.62 m (25 ft.) between the vehicle (fog light bulb center) and the wall is necessary for proper aim adjustment. If sufficient space is not available, secure a distance of exactly 3 m (9.84 ft.) to allow for checking and adjustment of fog light aim. (The size of the target zone will change with the distance, so follow the instructions in the illustration.)

(b) Prepare a piece of thick white paper (approximately 2 m (6.6 ft.) (height) x 4 m (13.1 ft.) (width)) to use as a screen.

(c) Draw a vertical line down the center of the screen (V line).

(d) Set the screen as shown in the illustration.

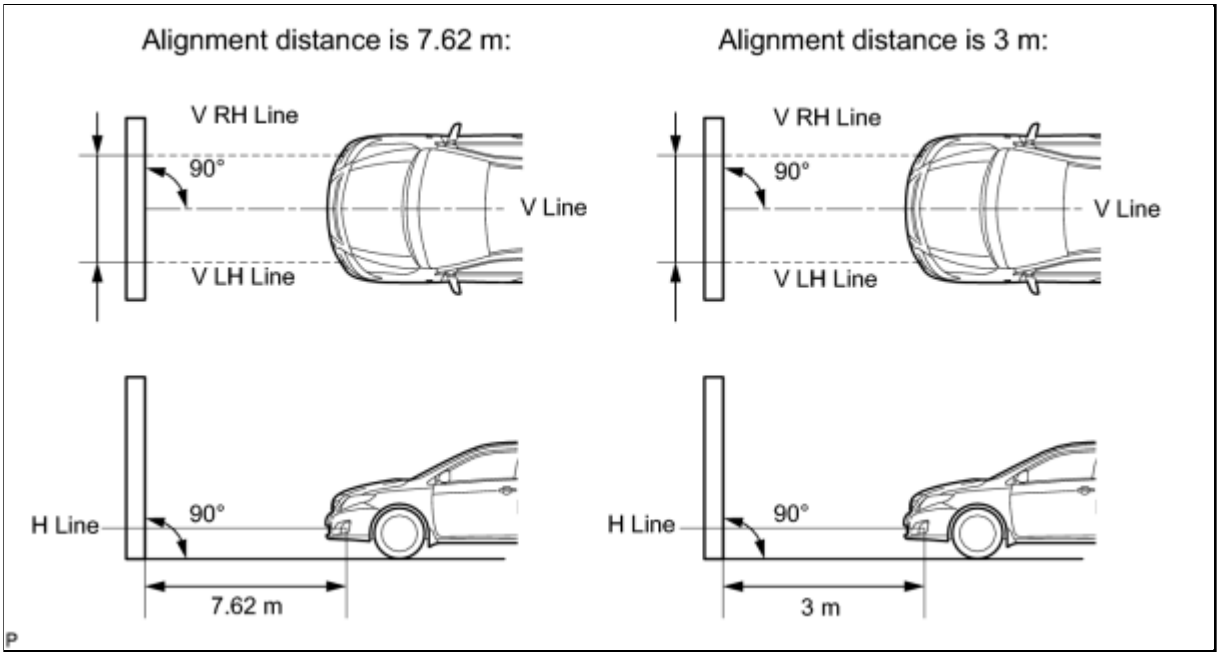

HINT:

- Stand the screen perpendicular to the ground.
- Align the V line on the screen with the center of the vehicle.

(e) Draw base lines (H, V LH, and V RH lines) on the screen as shown in the illustration.

HINT:

Mark the fog light bulb center marks on the screen. If the center mark cannot be observed on the fog light, use the center of the fog light bulb or the manufacturer's name marked on the fog light as the center mark.

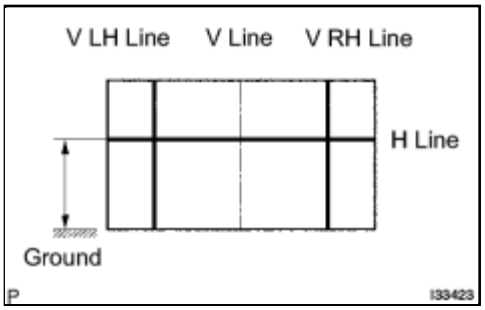

(1) H Line (Fog light height):

Draw a horizontal line across the screen so that it passes through the center marks. The H line should be at the same height as the fog light bulb center marks of the fog lights.

(2) V LH Line, V RH Line (Center mark position of left-hand (LH) and right-hand (RH) fog lights):

Draw two vertical lines so that they intersect the H line at each center mark aligned with the center of the fog light bulbs.

3. INSPECT FOG LIGHT AIMING

(a) Cover the fog light or disconnect the connector of the fog light on the opposite side to prevent light from the fog light that is not being inspected from affecting the fog light aiming inspection.

NOTICE:

Do not keep the fog light covered for more than 3 minutes. The fog light lens may melt or be damaged due to excessive heat.

(b) Start the engine.

(c) Turn on the fog light and check if the cutoff line falls within the specified area in the following illustration.

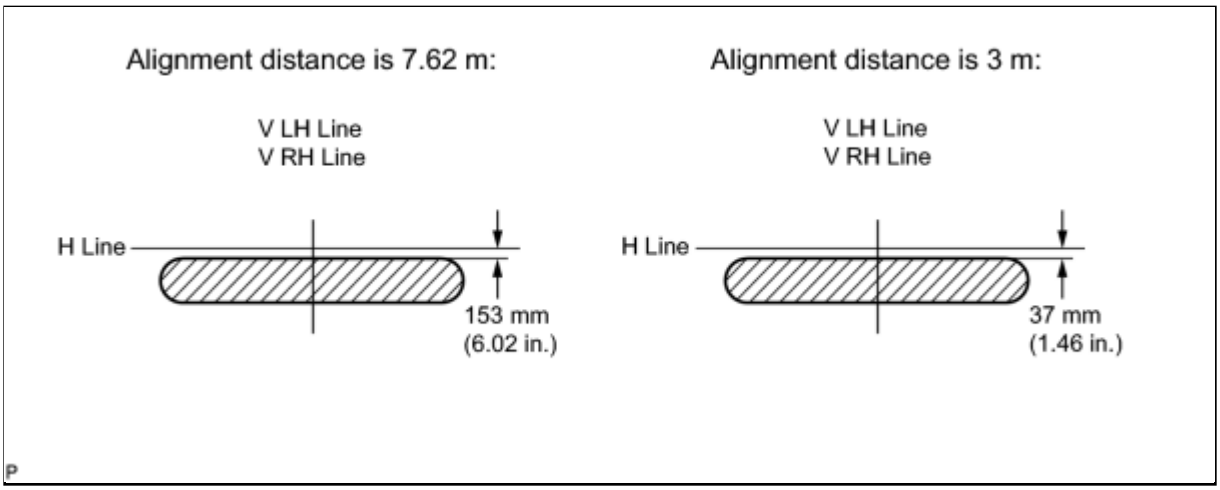

4. ADJUST FOG LIGHT AIMING

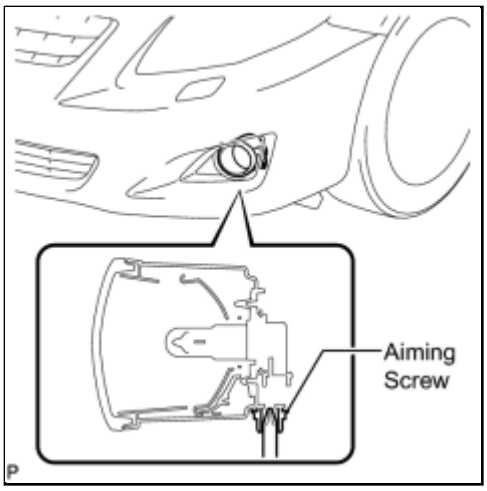

(a) Adjust the aim vertically:

Adjust the aim of each fog light to the specified range by turning each aiming screw with a screwdriver.

NOTICE:

The final turn of the aiming screw should be made in the clockwise direction. If the screw is tightened excessively, loosen it and then retighten it, so that the final turn of the screw is in the clockwise direction.

HINT:

If it is not possible to correctly adjust fog light aim, check bulb, fog light unit, and fog light unit reflector installation.

Last Modified: 3-10-2010	6.4 A	**From:** 200901
Model Year: 2010	**Model:** Corolla	**Doc ID:** RM000002LH700EX
Title: LIGHTING (EXT): FOG LIGHT ASSEMBLY: DISASSEMBLY (2010 Corolla)		

DISASSEMBLY

1. REMOVE FOG LIGHT BULB

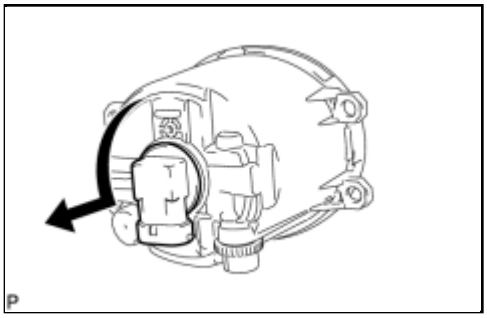

(a) Remove the fog light bulb as shown in the illustration.

NOTICE:

Do not touch the bulb glass.

Last Modified: 3-10-2010	6.4 A	**From:** 200901
Model Year: 2010	**Model:** Corolla	**Doc ID:** RM000002LH800EX
Title: LIGHTING (EXT): FOG LIGHT ASSEMBLY: REASSEMBLY (2010 Corolla)		

REASSEMBLY

1. INSTALL FOG LIGHT BULB

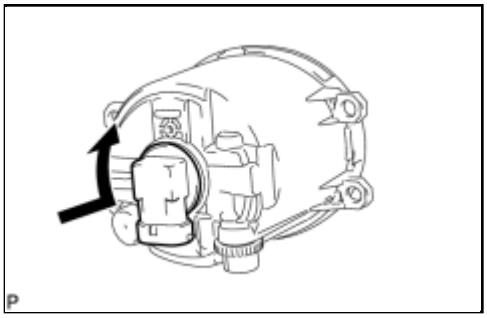

(a) Install the fog light bulb as shown in the illustration.

Last Modified: 3-10-2010	6.4 A	**From:** 200901
Model Year: 2010	**Model:** Corolla	**Doc ID:** RM000002LH400EX
Title: LIGHTING (EXT): FOG LIGHT ASSEMBLY: INSTALLATION (2010 Corolla)		

INSTALLATION

1. INSTALL FOG LIGHT ASSEMBLY

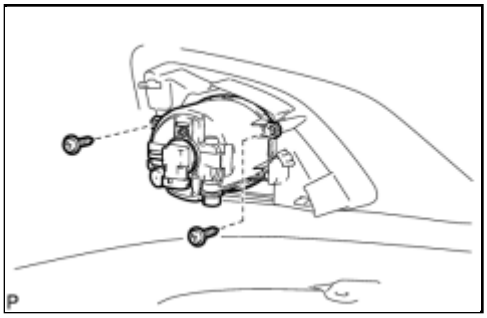

(a) Install the fog light assembly with the 2 screws.

2. INSTALL FRONT BUMPER ASSEMBLY INFO

3. INSTALL NO. 4 ENGINE UNDER COVER INFO

4. INSTALL RADIATOR GRILLE PROTECTOR INFO

5. VEHICLE PREPARATION FOR FOG LIGHT AIMING ADJUSTMENT INFO

6. PREPARATION FOR FOG LIGHT AIMING INFO

7. FOG LIGHT AIMING INSPECTION INFO

8. FOG LIGHT AIMING ADJUSTMENT INFO

Last Modified: 3-10-2010	6.4 K	**From:** 200901
Model Year: 2010	**Model:** Corolla	**Doc ID:** RM000002VQI00KX
Title: LIGHTING (EXT): HAZARD WARNING SWITCH: COMPONENTS (2010 Corolla)		

COMPONENTS

ILLUSTRATION

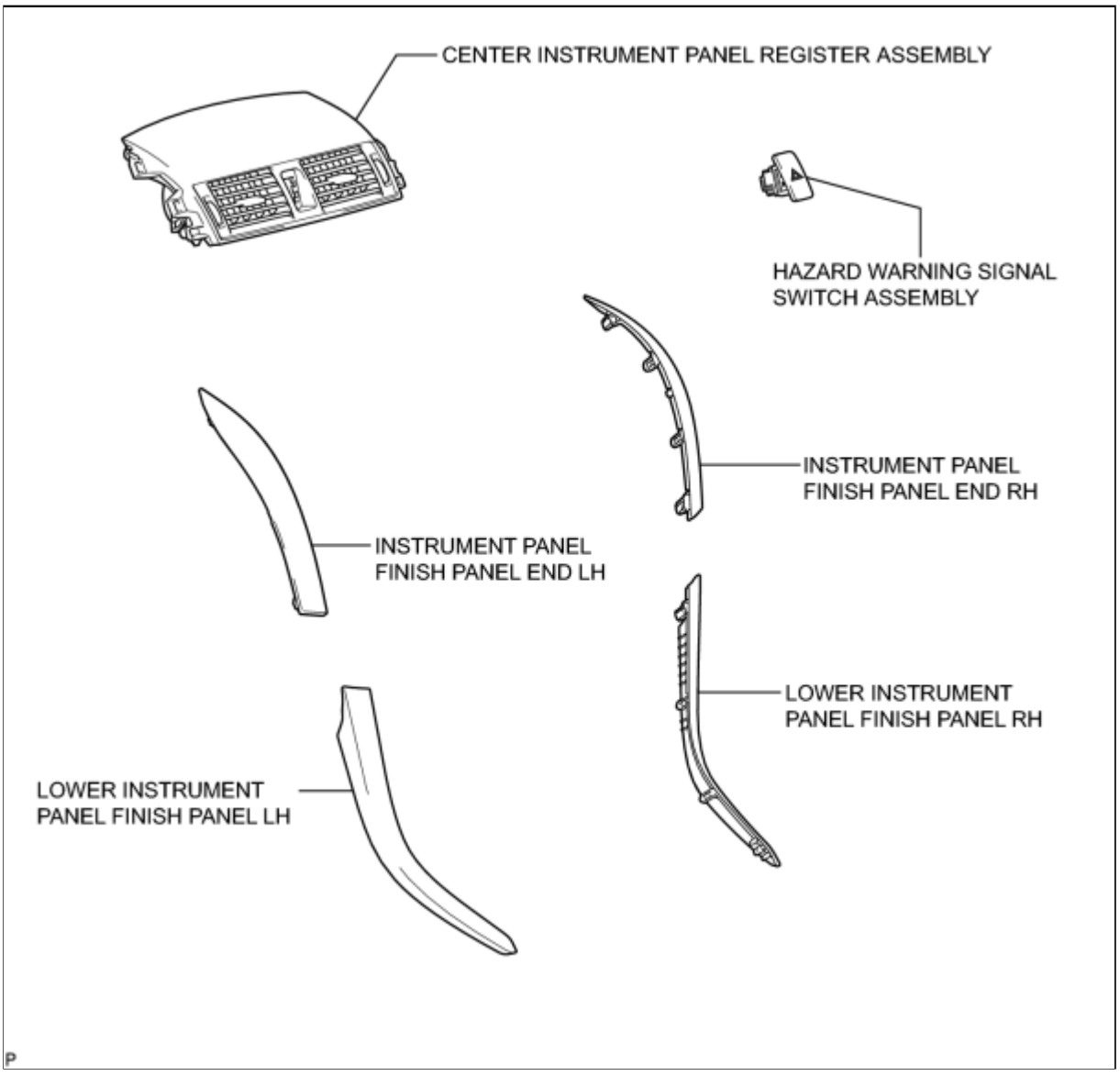

Last Modified: 3-10-2010	6.4 A	**From:** 200901
Model Year: 2010	**Model:** Corolla	**Doc ID:** RM000002VQJ00FX
Title: LIGHTING (EXT): HAZARD WARNING SWITCH: REMOVAL (2010 Corolla)		

REMOVAL

1. **REMOVE LOWER INSTRUMENT PANEL FINISH PANEL LH** INFO
2. **REMOVE LOWER INSTRUMENT PANEL FINISH PANEL RH** INFO
3. **REMOVE INSTRUMENT PANEL FINISH PANEL END LH** INFO
4. **REMOVE INSTRUMENT PANEL FINISH PANEL END RH** INFO
5. **REMOVE CENTER INSTRUMENT PANEL REGISTER ASSEMBLY** INFO
6. **REMOVE HAZARD WARNING SIGNAL SWITCH ASSEMBLY**

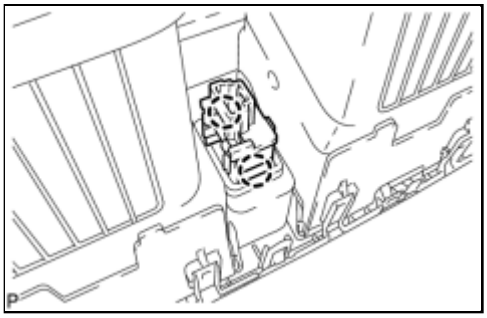

(a) Disengage the 2 claws and remove the hazard warning signal switch assembly.

Last Modified: 3-10-2010	6.4 G	**From:** 200901
Model Year: 2010	**Model:** Corolla	**Doc ID:** RM00000197T01NX
Title: LIGHTING (EXT): HAZARD WARNING SWITCH: INSPECTION (2010 Corolla)		

INSPECTION

1. INSPECT HAZARD WARNING SIGNAL SWITCH ASSEMBLY

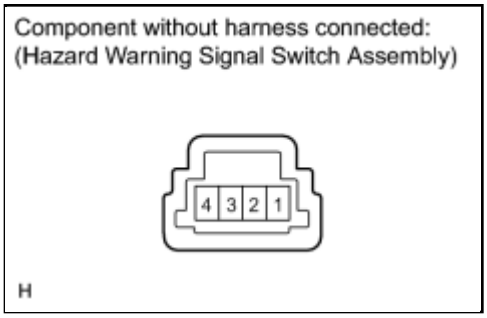

(a) Measure the resistance according to the value(s) in the table below.

Standard Resistance:

TESTER CONNECTION	SWITCH CONDITION	SPECIFIED CONDITION
1 - 4	ON	Below 1 Ω
	OFF	10 kΩ or higher

If the result is not as specified, replace the switch.

(b) Connect a positive (+) lead from the battery to terminal 3 and a negative (-) lead to terminal 2.

(c) Check that the illumination of the switch comes on.

OK:

The illumination comes on.

If the result is not as specified, replace the switch.

Last Modified: 3-10-2010	6.4 A	**From:** 200901
Model Year: 2010	**Model:** Corolla	**Doc ID:** RM000002VQH00FX
Title: LIGHTING (EXT): HAZARD WARNING SWITCH: INSTALLATION (2010 Corolla)		

INSTALLATION

1. INSTALL HAZARD WARNING SIGNAL SWITCH ASSEMBLY

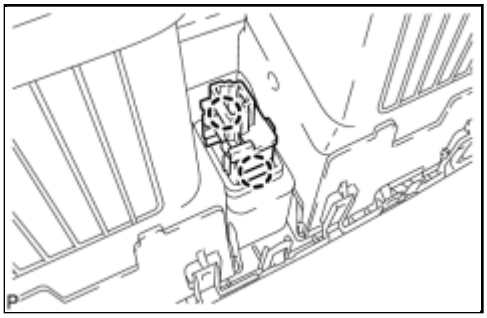

(a) Engage the 2 claws and install the hazard warning signal switch assembly.

NOTICE:

Do not use any dropped switches.

2. INSTALL CENTER INSTRUMENT PANEL REGISTER ASSEMBLY INFO

3. INSTALL INSTRUMENT PANEL FINISH PANEL END LH INFO

4. INSTALL INSTRUMENT PANEL FINISH PANEL END RH INFO

5. INSTALL LOWER INSTRUMENT PANEL FINISH PANEL LH INFO

6. INSTALL LOWER INSTRUMENT PANEL FINISH PANEL RH INFO

Last Modified: 3-10-2010	6.4 K	**From:** 200901
Model Year: 2010	**Model:** Corolla	**Doc ID:** RM000003FYE001X
Title: LIGHTING (EXT): HEADLIGHT ASSEMBLY: COMPONENTS (2010 Corolla)		

COMPONENTS

ILLUSTRATION

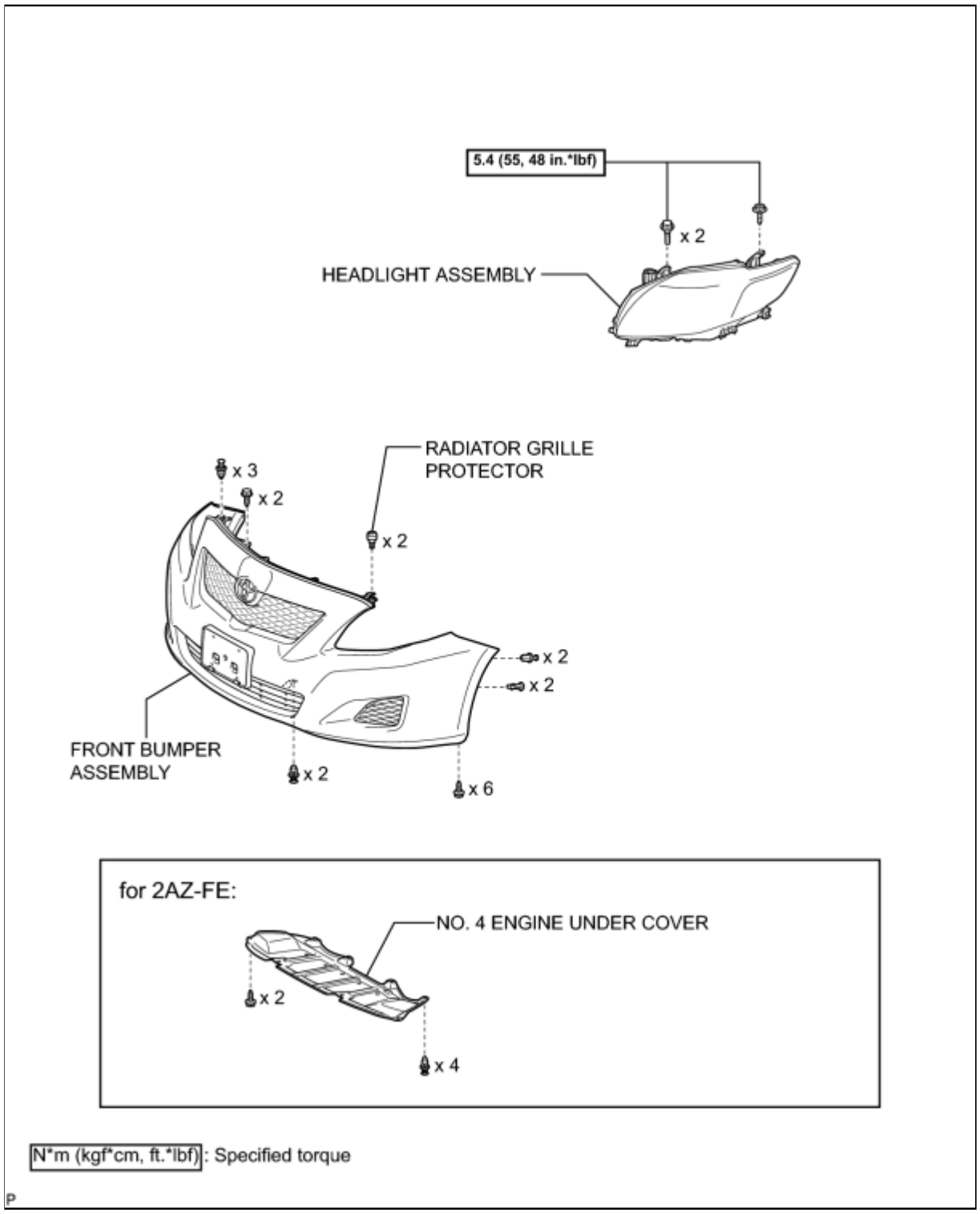

ILLUSTRATION

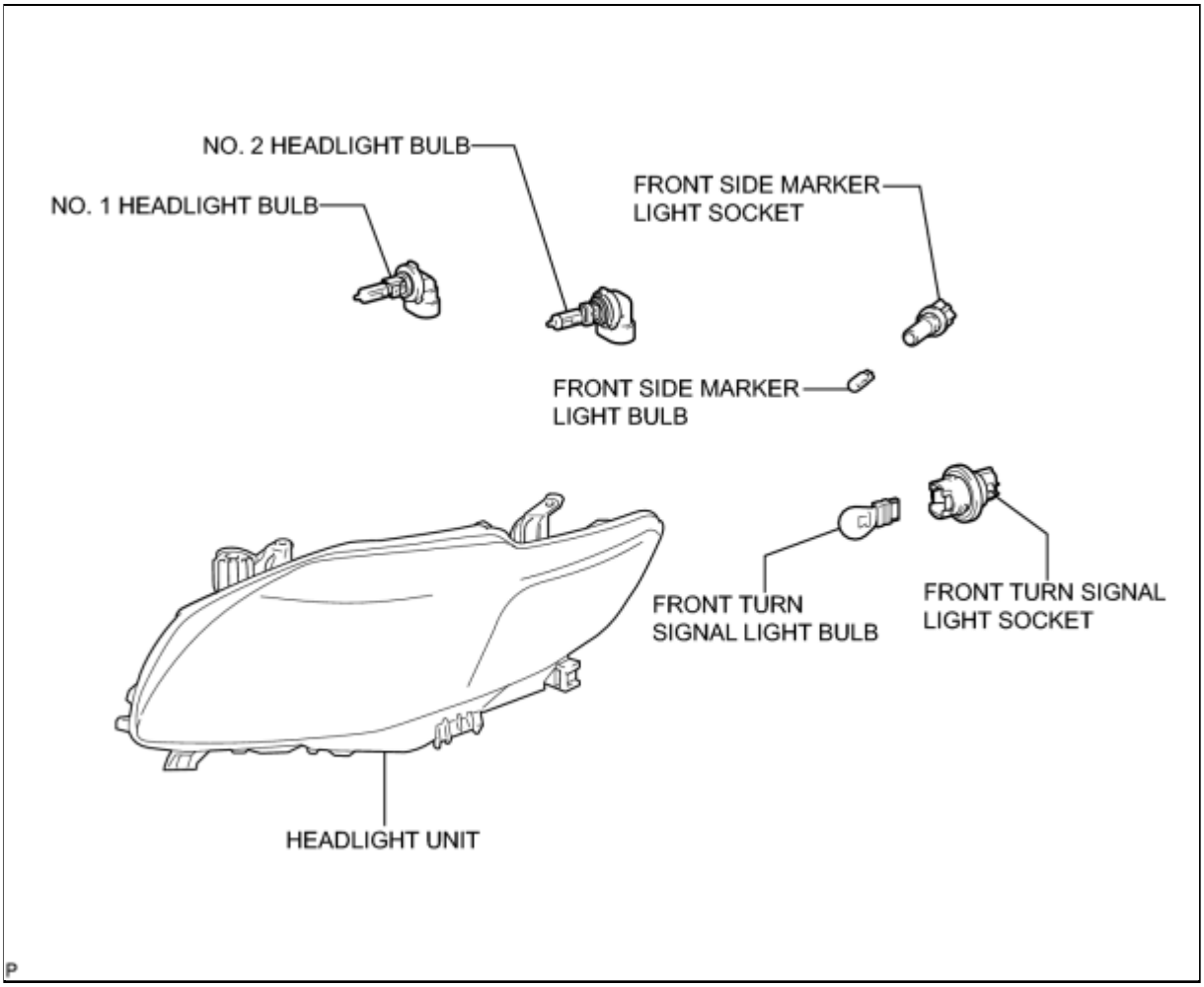

ILLUSTRATION

Bracket for Repair:

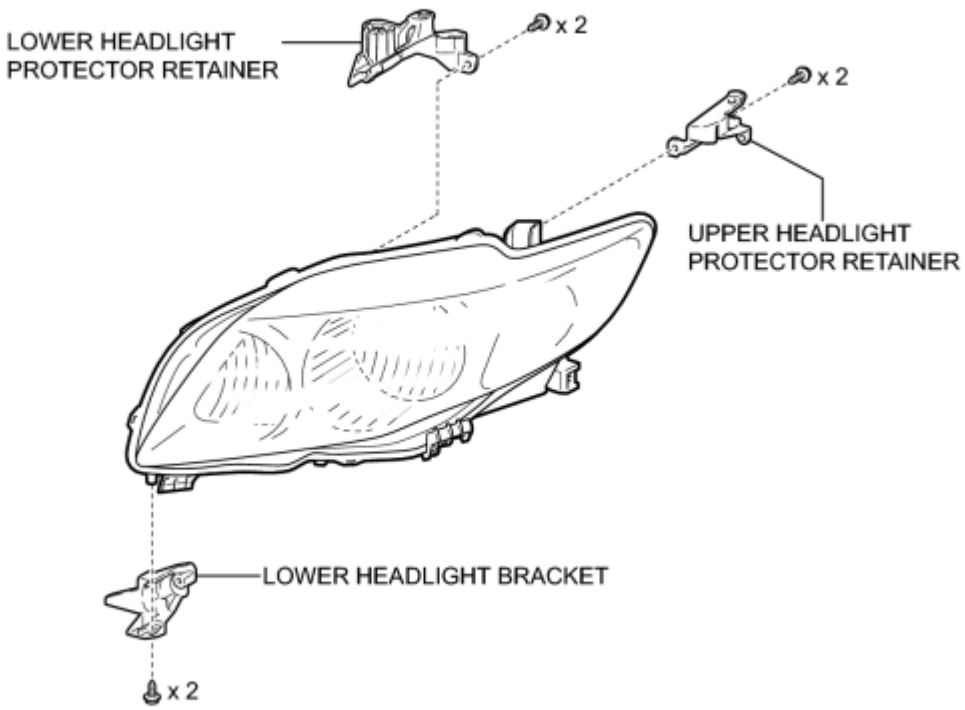

P

Last Modified: 3-10-2010	6.4 A	**From:** 200901
Model Year: 2010	**Model:** Corolla	**Doc ID:** RM000003FYF001X
Title: LIGHTING (EXT): HEADLIGHT ASSEMBLY: REMOVAL (2010 Corolla)		

REMOVAL

1. REMOVE RADIATOR GRILLE PROTECTOR INFO

2. REMOVE NO. 4 ENGINE UNDER COVER (for 2AZ-FE) INFO

3. REMOVE FRONT BUMPER ASSEMBLY INFO

4. REMOVE HEADLIGHT ASSEMBLY

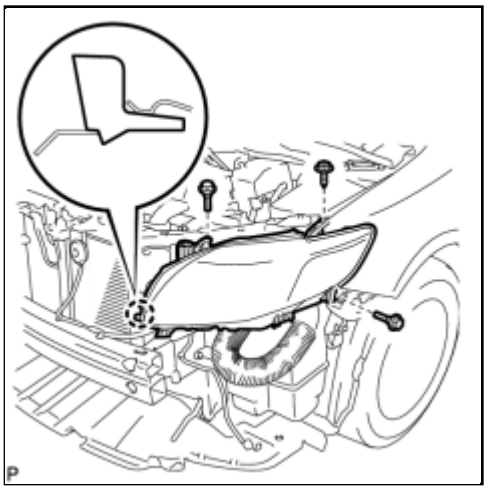

(a) Remove the 2 bolts and screw.

(b) Disengage the claw.

(c) Disconnect the connectors and remove the headlight assembly.

Last Modified: 3-10-2010	6.4 N	**From:** 200901
Model Year: 2010	**Model:** Corolla	**Doc ID:** RM000000ZC200BX
Title: LIGHTING (EXT): HEADLIGHT ASSEMBLY: ADJUSTMENT (2010 Corolla)		

ADJUSTMENT

HINT:

It is possible that a bulb is incorrectly installed, affecting headlight aim. Bulb installation should be considered prior to performing the adjustment procedure.

1. VEHICLE PREPARATION FOR HEADLIGHT AIMING ADJUSTMENT

(a) Prepare the vehicle:

- Ensure that there is no damage or deformation to the body around the headlights.
- Fill the fuel tank.
- Make sure that the oil is filled to the specified level.
- Make sure that the coolant is filled to the specified level.
- Inflate the tires to the appropriate pressure.
- Unload the trunk and vehicle, ensuring that the spare tire, tools, and jack are in their original positions.
- Sit a person of average weight (68 kg, 150 lb) in the driver's seat.
- Vehicles with height adjustable suspension should set the vehicle height to the lowest setting prior to adjusting the headlight aim.

2. PREPARATION FOR HEADLIGHT AIMING (Using a headlight aim test machine)

(a) Adjust the headlight aim in accordance with the headlight aim test machine instructions.

3. PREPARATION FOR HEADLIGHT AIMING (Using a Screen)

(a) Prepare the vehicle:

- Place the vehicle in a location that is dark enough to clearly observe the cutoff line. The cutoff line is a distinct line, below which light from the headlights can be observed and above which it cannot.
- Place the vehicle at a 90° angle to the wall.
- Create a 7.62 m (25 ft.) distance between the vehicle (headlight bulb center) and the wall.
- Make sure that the vehicle is on a level surface.
- Bounce the vehicle up and down several times to settle the suspension.

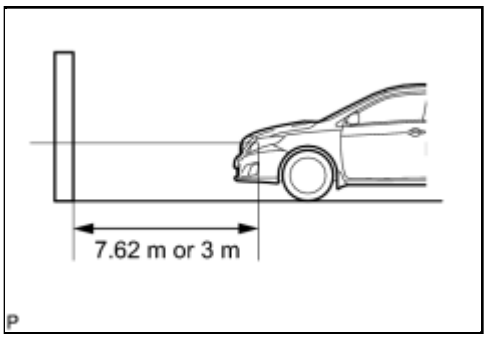

NOTICE:

A distance of 7.62 m (25 ft.) between the vehicle (headlight bulb center) and the wall is necessary for proper aim adjustment. If sufficient space is not available, secure a distance of exactly 3 m (9.84 ft.) to allow for checking and adjustment of headlight aim. (The size of the target zone will change with the distance, so follow the instructions in the illustration.)

(b) Prepare a piece of thick white paper (approximately 2 m (6.6 ft.) (height) x 4 m (13.1 ft.) (width))

to use as a screen.

(c) Draw a vertical line down the center of the screen (V line).

(d) Set the screen as shown in the illustration.

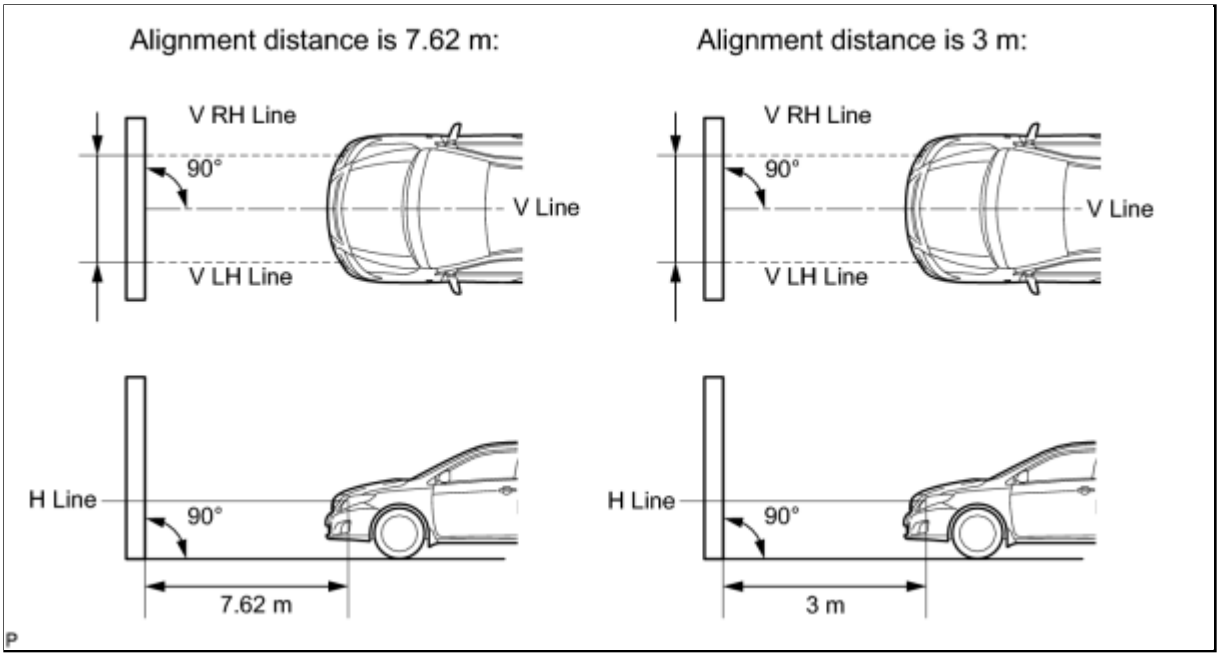

HINT:

- Stand the screen perpendicular to the ground.
- Align the V line on the screen with the center of the vehicle.

(e) Draw base lines (H, V LH, and V RH lines) on the screen as shown in the illustration.

HINT:

- The base lines differ for "low-beam inspection" and "high-beam inspection".
- Mark the headlight bulb center marks on the screen. If the center mark cannot be observed on the headlight, use the center of the headlight bulb or the manufacturer's name marked on the headlight as the center mark.

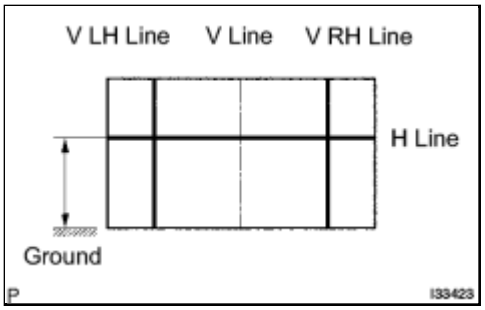

(1) H Line (Headlight height):

Draw a horizontal line across the screen so that it passes through the center marks. The H line should be at the same height as the headlight bulb center marks of the low-beam headlights.

(2) V LH Line, V RH Line (Center mark position of left-hand (LH) and right-hand (RH) headlights):

Draw two vertical lines so that they intersect the H line at each center mark (aligned with the center of the low-beam headlight bulbs).

4. INSPECT HEADLIGHT AIMING

(a) Cover the headlight or disconnect the connector of the headlight on the opposite side to prevent light from the headlight that is not being inspected from affecting the headlight aiming inspection.

NOTICE:

Do not keep the headlight covered for more than 3 minutes. The headlight lens is made of synthetic resin, which may melt or be damaged due to excessive heat.

(b) Start the engine.

(c) Turn on the headlight and check if the cutoff line matches the preferred cutoff line in the following illustration.

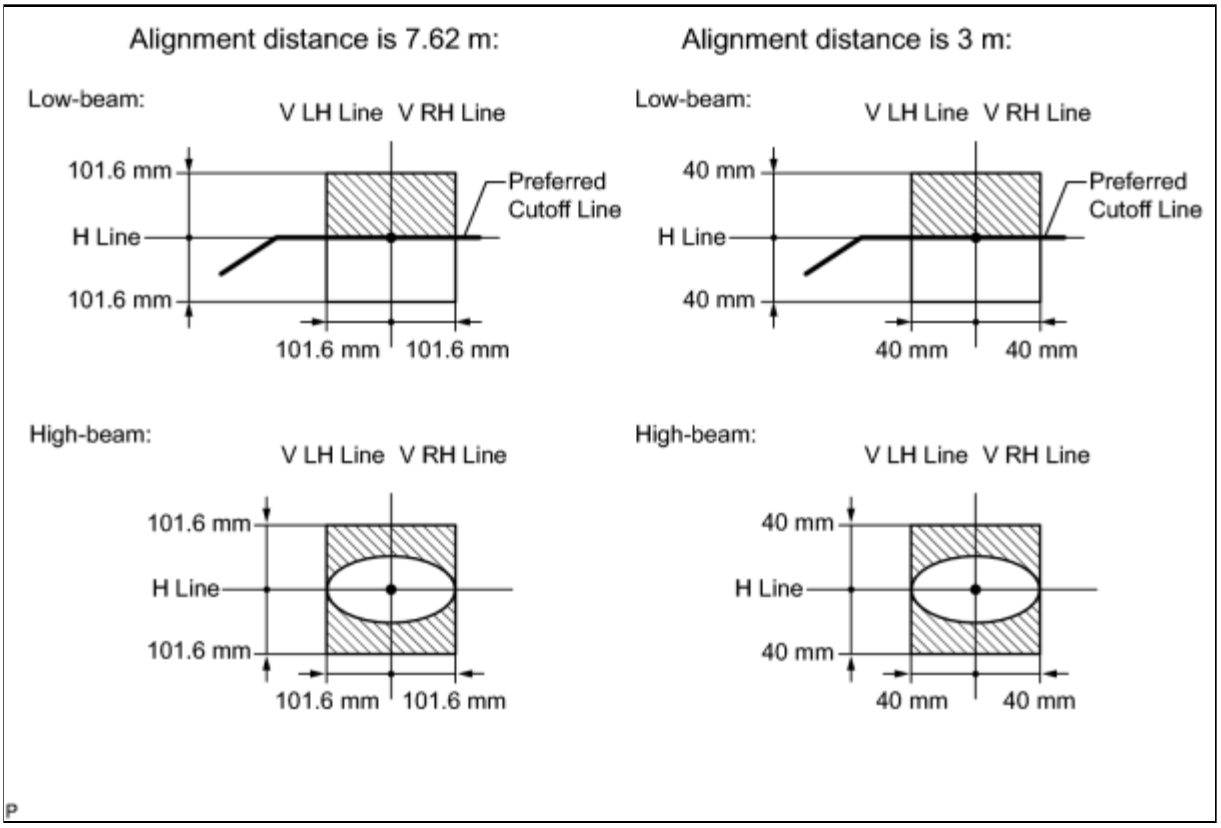

HINT:

- Since the low-beam light and the high-beam light are a unit, if the aim on the low-beam is correct, the high-beam should also be correct. However, check both beams to confirm.
- If the alignment distance is 7.62 m (25 ft.):

  The low-beam cutoff line should be within 101.6 mm (4.00 in.) above or below the H line as well as 101.6 mm (4.00 in.) left or right of the V line (SAE J599).
- If the alignment distance is 3 m (9.84 ft.):

  The low-beam cutoff line should be within 40 mm (1.57 in.) above or below the H line as well as 40 mm (1.57 in.) left or right of the V line (SAE J599).
- If the alignment distance is 7.62 m (25 ft.):

  The high-beam center of intensity should be within 101.6 mm (4.00 in.) above or below the H line as well as 101.6 mm (4.00 in.) left or right of the V line (SAE J599).
- If the alignment distance is 3 m (9.84 ft.):

The high-beam center of intensity should be within 40 mm (1.57 in.) above or below the H line as well as 40 mm (1.57 in.) left or right of the V line (SAE J599).

- The low-beam cutoff line should follow the preferred cutoff line target on the H line.

5. ADJUST HEADLIGHT AIMING

(a) Adjust the aim vertically:

Adjust the aim of each headlight to the specified range by turning each aiming screw with a screwdriver.

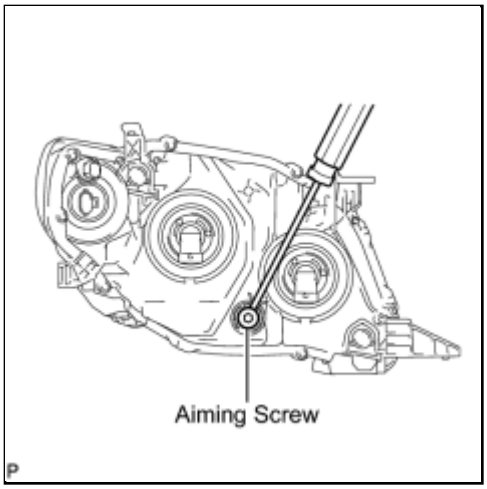

NOTICE:

The final turn of the aiming screw should be made in the clockwise direction. If the screw is tightened excessively, loosen it and then retighten it, so that the final turn of the screw is in the clockwise direction.

HINT:

- The low-beam light and the high-beam light are a unit. Adjusting the aim on the low-beam to the correct position should also result in the high-beam adjustment being correct.
- If it is not possible to correctly adjust headlight aim, check bulb, headlight unit, and headlight unit reflector installation.
- The headlight aim moves up when turning the aiming screw clockwise, and moves down when turning the aiming screw counterclockwise.

Last Modified: 3-10-2010	6.4 A	**From:** 200901
Model Year: 2010	**Model:** Corolla	**Doc ID:** RM000003FYG001X
Title: LIGHTING (EXT): HEADLIGHT ASSEMBLY: DISASSEMBLY (2010 Corolla)		

DISASSEMBLY

1. REMOVE NO. 1 HEADLIGHT BULB

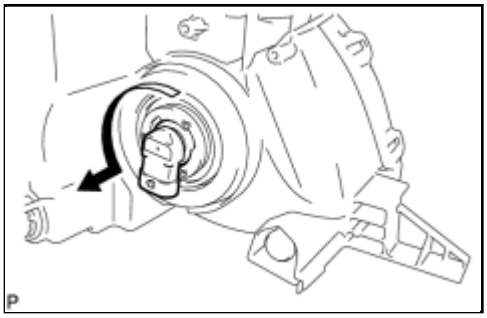

(a) Remove the No. 1 headlight bulb as shown in the illustration.

NOTICE:
Do not touch the bulb glass.

2. REMOVE NO. 2 HEADLIGHT BULB

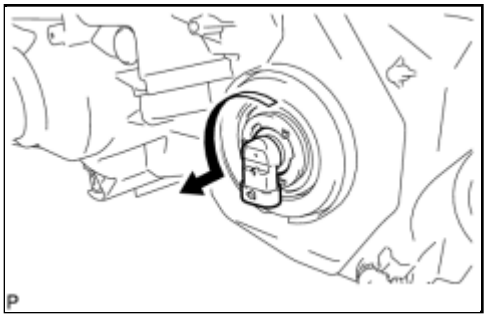

(a) Remove the No. 2 headlight bulb as shown in the illustration.

NOTICE:
Do not touch the bulb glass.

3. REMOVE FRONT TURN SIGNAL LIGHT BULB

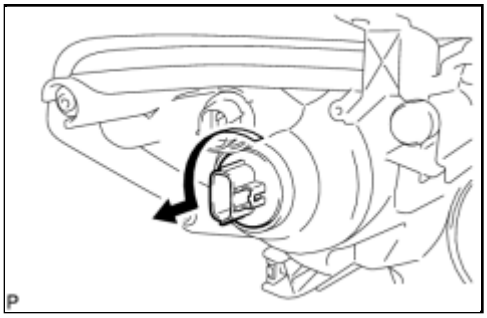

(a) Turn the front turn signal light bulb and the front turn signal light socket in the direction indicated by the arrow and remove them as a unit.

(b) Remove the front turn signal light bulb from the front turn signal light socket.

4. REMOVE FRONT SIDE MARKER LIGHT BULB

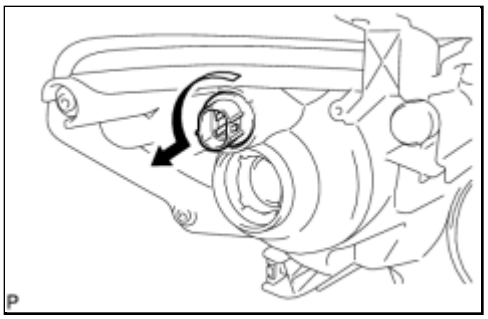

(a) Turn the front side marker light bulb and the front side marker light socket in the direction indicated by the arrow and remove them as a unit.

(b) Remove the front side marker light bulb from the front side marker light socket.

Last Modified: 3-10-2010	6.4 A	**From:** 200901
Model Year: 2010	**Model:** Corolla	**Doc ID:** RM000003FYH001X
Title: LIGHTING (EXT): HEADLIGHT ASSEMBLY: REASSEMBLY (2010 Corolla)		

REASSEMBLY

1. INSTALL FRONT SIDE MARKER LIGHT BULB

(a) Install the front side marker light bulb to the front side marker light socket.

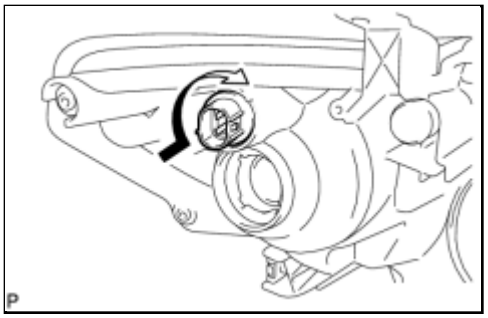

(b) Turn the front side marker light bulb and front side marker light socket in the direction indicated by the arrow and install them as a unit.

2. INSTALL FRONT TURN SIGNAL LIGHT BULB

(a) Install the front turn signal light bulb to the front turn signal light socket.

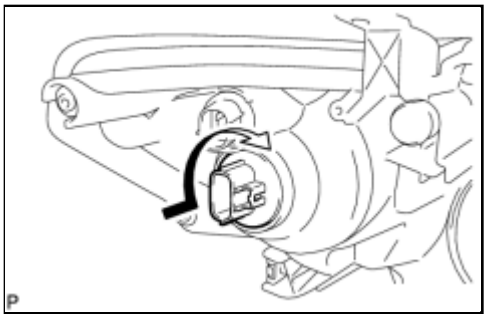

(b) Turn the front turn signal light bulb and front turn signal light socket in the direction indicated by the arrow and install them as a unit.

3. INSTALL NO. 2 HEADLIGHT BULB

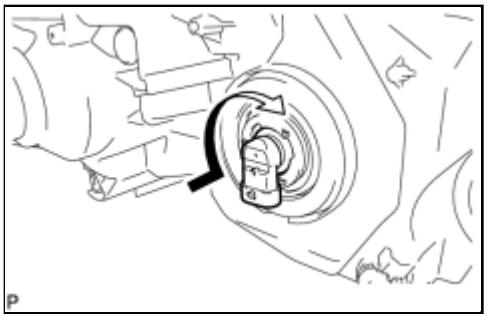

(a) Install the No. 2 headlight bulb as shown in the illustration.

4. INSTALL NO. 1 HEADLIGHT BULB

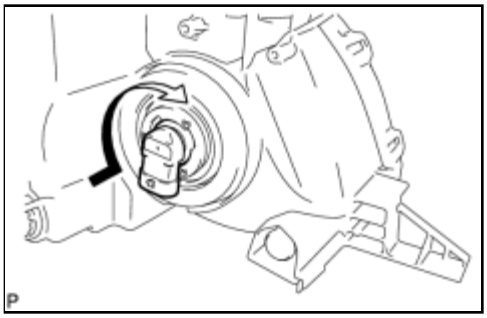

(a) Install the No. 1 headlight bulb as shown in the illustration.

Last Modified: 3-10-2010	6.4 A	**From:** 200901
Model Year: 2010	**Model:** Corolla	**Doc ID:** RM000003FYD001X
Title: LIGHTING (EXT): HEADLIGHT ASSEMBLY: INSTALLATION (2010 Corolla)		

INSTALLATION

1. INSTALL HEADLIGHT ASSEMBLY

(a) Connect the connectors.

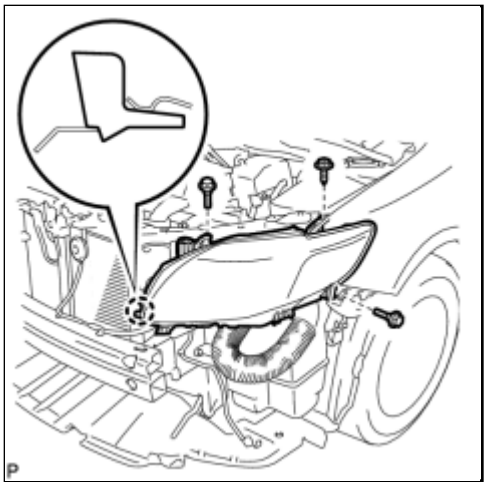

(b) Engage the claw.

(c) Install the headlight assembly with the 2 bolts and screw.

Torque: 5.4 N·m (55 kgf·cm, 48in·lbf)

2. INSTALL FRONT BUMPER ASSEMBLY INFO

3. INSTALL NO. 4 ENGINE UNDER COVER (for 2AZ-FE) INFO

4. INSTALL RADIATOR GRILLE PROTECTOR INFO

5. VEHICLE PREPARATION FOR HEADLIGHT AIMING ADJUSTMENT INFO

6. PREPARATION FOR HEADLIGHT AIMING (Using a headlight aim test machine) INFO

7. PREPARATION FOR HEADLIGHT AIMING (Using a Screen) INFO

8. INSPECT HEADLIGHT AIMING INFO

9. ADJUST HEADLIGHT AIMING INFO

10. VEHICLE PREPARATION FOR FOG LIGHT AIMING ADJUSTMENT (w/ Fog Light) INFO

11. PREPARATION FOR FOG LIGHT AIMING (w/ Fog Light) INFO

12. INSPECT FOG LIGHT AIMING (w/ Fog Light) INFO

13. ADJUST FOG LIGHT AIMING (w/ Fog Light) INFO

Last Modified: 3-10-2010	6.4 A	**From:** 200901
Model Year: 2010	**Model:** Corolla	**Doc ID:** RM000003FYI001X
Title: LIGHTING (EXT): HEADLIGHT ASSEMBLY: REPAIR (2010 Corolla)		

REPAIR

HINT:

- If the installation area of the headlight assembly is damaged, use the supply bracket for low-cost repair.
- Ensure that the headlight assembly is not damaged.

1. INSTALL UPPER HEADLIGHT PROTECTOR RETAINER

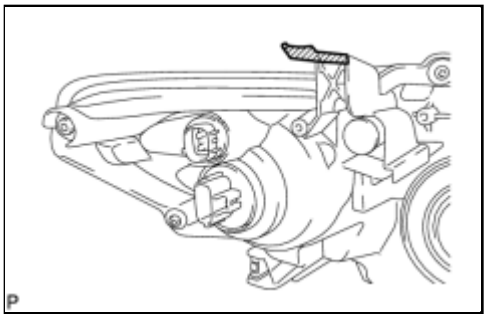

(a) Cut off the part shaded in the illustration and smooth with sandpaper.

NOTICE:

After cutting off the part, place the upper headlight protector retainer against the bosses and gradually file away the old bracket if it interferes with the installation of the supply bracket.

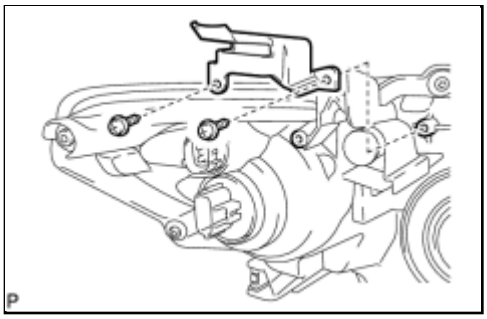

(b) Install the upper headlight protector retainer with the 2 screws.

2. INSTALL LOWER HEADLIGHT PROTECTOR RETAINER

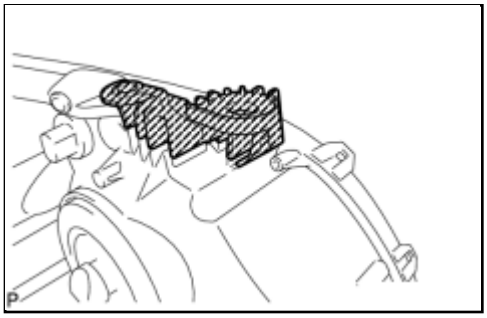

(a) Cut off the part shaded in the illustration and smooth with sandpaper.

NOTICE:

After cutting off the part, place the lower headlight protector retainer against the bosses and gradually file away the old bracket if it interferes with the installation of the supply bracket.

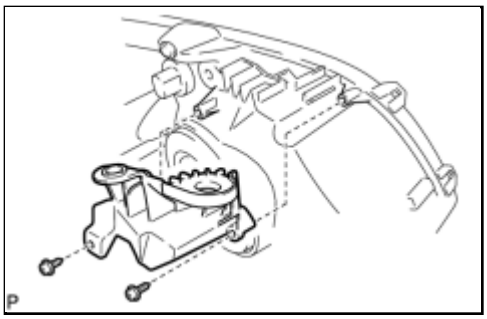

(b) Install the lower headlight protector retainer with the 2 screws.

3. INSTALL LOWER HEADLIGHT BRACKET

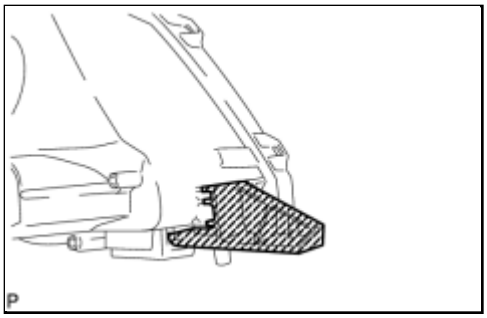

(a) Cut off the part shaded in the illustration and smooth with sandpaper.

NOTICE:

After cutting off the part, place the lower headlight bracket against the bosses and gradually file away the old bracket if it interferes with the installation of the supply bracket.

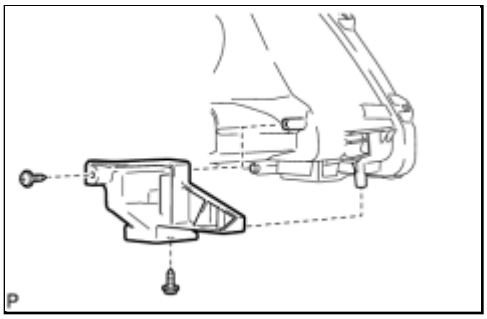

(b) Install the lower headlight bracket with the 2 screws.

Last Modified: 3-10-2010	6.4 K	**From:** 200901
Model Year: 2010	**Model:** Corolla	**Doc ID:** RM000002VQI00JX
Title: LIGHTING (EXT): HEADLIGHT DIMMER SWITCH: COMPONENTS (2010 Corolla)		

COMPONENTS

ILLUSTRATION

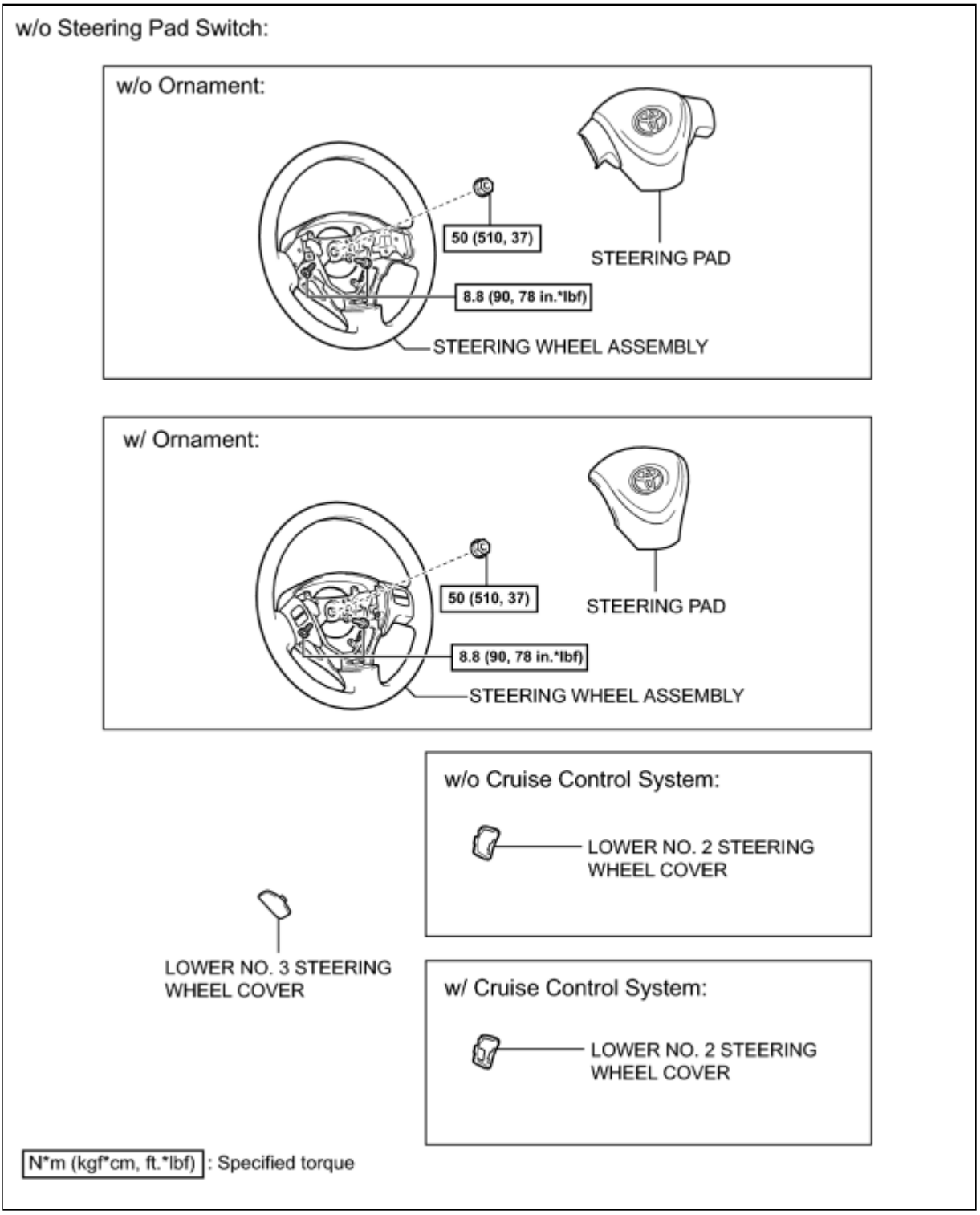

ILLUSTRATION

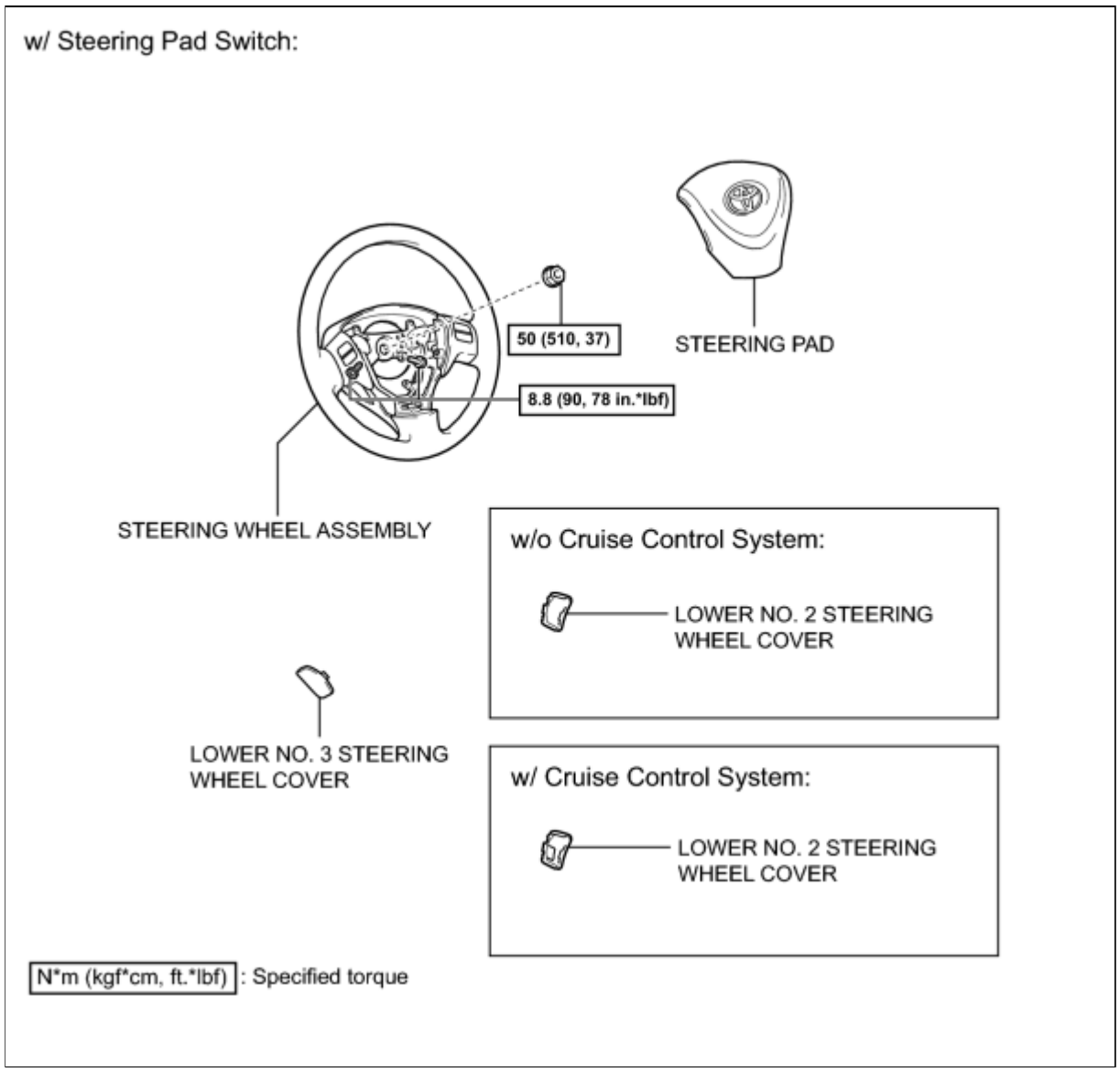

ILLUSTRATION

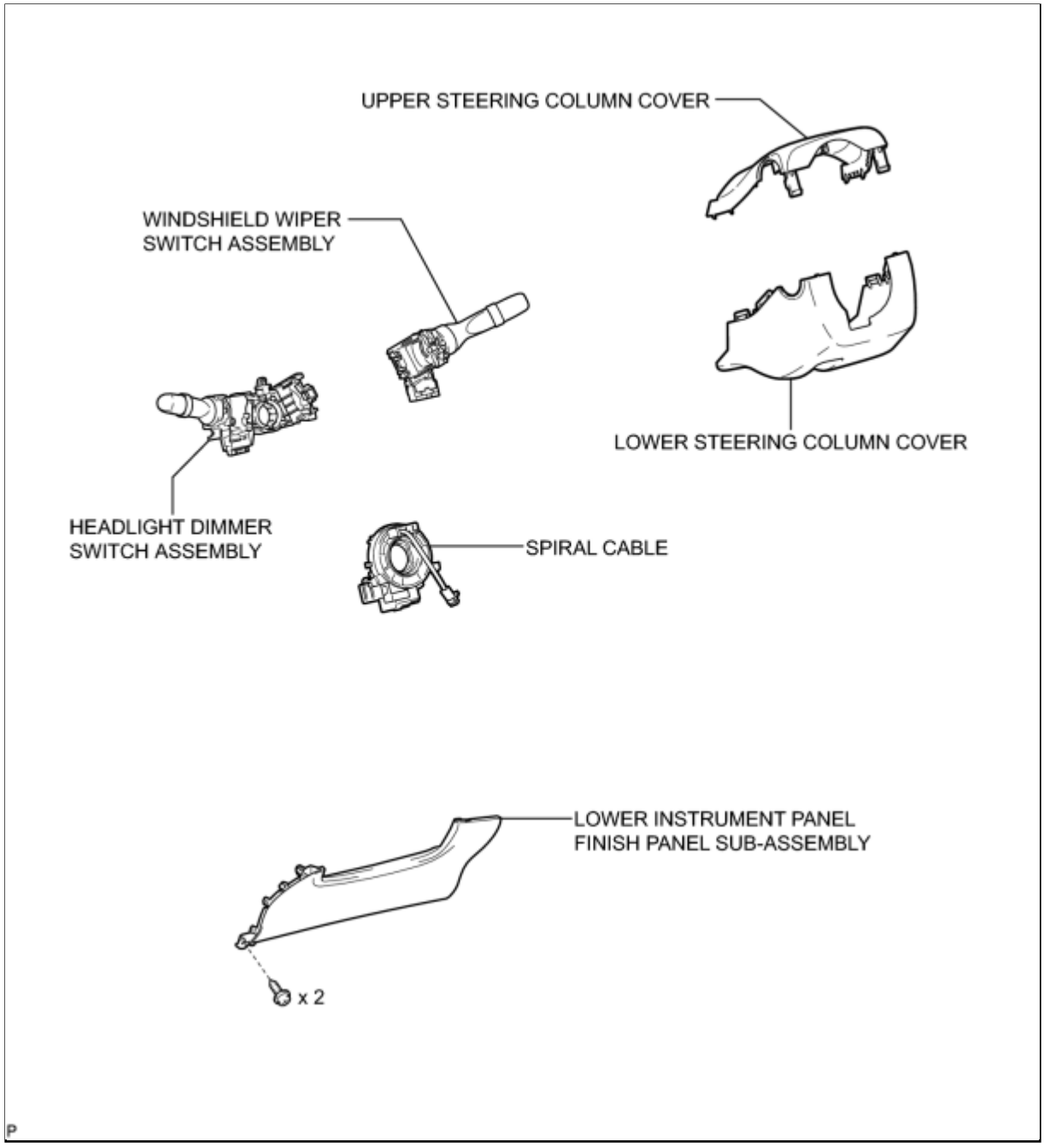
UPPER STEERING COLUMN COVER
WINDSHIELD WIPER SWITCH ASSEMBLY
LOWER STEERING COLUMN COVER
HEADLIGHT DIMMER SWITCH ASSEMBLY
SPIRAL CABLE
LOWER INSTRUMENT PANEL FINISH PANEL SUB-ASSEMBLY
x 2

P

Last Modified: 3-10-2010	6.4 A	**From:** 200901
Model Year: 2010	**Model:** Corolla	**Doc ID:** RM000002HKM00SX
Title: LIGHTING (EXT): HEADLIGHT DIMMER SWITCH: REMOVAL (2010 Corolla)		

REMOVAL

1. ALIGN FRONT WHEELS FACING STRAIGHT AHEAD

2. DISCONNECT CABLE FROM NEGATIVE BATTERY TERMINAL

CAUTION:

Wait at least 90 seconds after disconnecting the cable from the negative (-) battery terminal to disable the SRS system INFO **.**

3. REMOVE LOWER INSTRUMENT PANEL FINISH PANEL SUB-ASSEMBLY INFO

4. REMOVE LOWER NO. 3 STEERING WHEEL COVER INFO

5. REMOVE LOWER NO. 2 STEERING WHEEL COVER INFO

6. REMOVE STEERING PAD INFO

7. REMOVE STEERING WHEEL ASSEMBLY INFO

8. REMOVE LOWER STEERING COLUMN COVER INFO

9. REMOVE UPPER STEERING COLUMN COVER INFO

10. REMOVE SPIRAL CABLE (w/o VSC) INFO

11. REMOVE SPIRAL CABLE WITH STEERING ANGLE SENSOR (w/ VSC) INFO

12. REMOVE WINDSHIELD WIPER SWITCH ASSEMBLY INFO

13. REMOVE HEADLIGHT DIMMER SWITCH ASSEMBLY

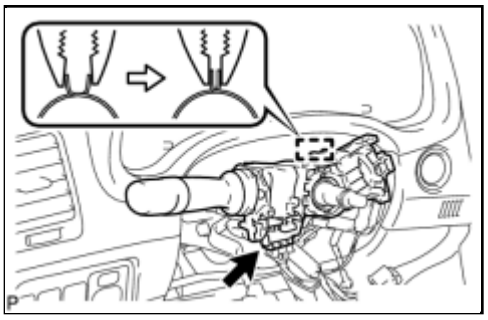

(a) Disconnect the connector.

(b) Disengage the clamp as shown in the illustration.

(c) Disengage the claw and remove the headlight dimmer switch assembly as shown in the illustration.

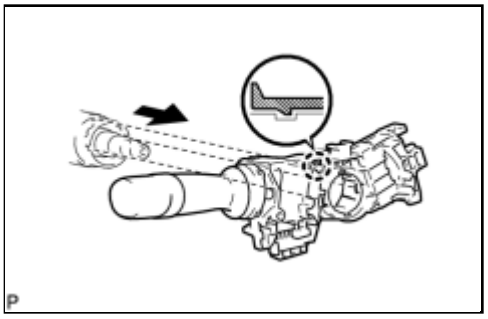
P

Last Modified: 3-10-2010	6.4 G	**From:** 200901
Model Year: 2010	**Model:** Corolla	**Doc ID:** RM0000014E301IX
Title: LIGHTING (EXT): HEADLIGHT DIMMER SWITCH: INSPECTION (2010 Corolla)		

INSPECTION

1. INSPECT HEADLIGHT DIMMER SWITCH ASSEMBLY

(a) Measure the resistance according to the value(s) in the table below.

Standard Resistance:

Light Control Switch

Dimmer Switch

Turn Signal Switch

Front Fog Light Switch

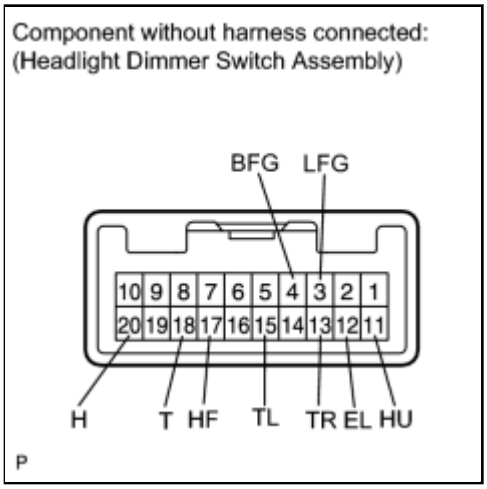

TESTER CONNECTION	SWITCH CONDITION	SPECIFIED CONDITION
12 (EL) - 18 (T)	OFF	10 kΩ or higher
12 (EL) - 20 (H)		
12 (EL) - 18 (T)	TAIL	Below 1 Ω
12 (EL) - 18 (T)	HEAD	Below 1 Ω
12 (EL) - 20 (H)		

TESTER CONNECTION	SWITCH CONDITION	SPECIFIED CONDITION
12 (EL) - 17 (HF)	HIGH FLASH	Below 1 Ω
12 (EL) - 11 (HU)		
12 (EL) - 11 (HU)	HIGH	Below 1 Ω

TESTER CONNECTION	SWITCH CONDITION	SPECIFIED CONDITION
12 (EL) - 13 (TR)	OFF	10 kΩ or higher
12 (EL) - 15 (TL)		
12 (EL) - 13 (TR)	RH	Below 1 Ω
12 (EL) - 15 (TL)	LH	Below 1 Ω

TESTER CONNECTION	SWITCH CONDITION	SPECIFIED CONDITION
3 (LFG) - 4 (BFG)	OFF	10 kΩ or higher
3 (LFG) - 4 (BFG)	ON	Below 1 Ω

If the result is not as specified, replace the switch assembly.

Last Modified: 3-10-2010	6.4 A	**From:** 200901
Model Year: 2010	**Model:** Corolla	**Doc ID:** RM000002HKK00SX
Title: LIGHTING (EXT): HEADLIGHT DIMMER SWITCH: INSTALLATION (2010 Corolla)		

INSTALLATION

1. INSTALL HEADLIGHT DIMMER SWITCH ASSEMBLY

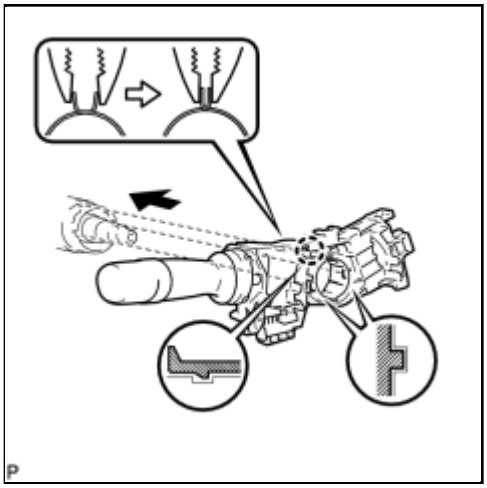

(a) Engage the claw while loosening the clamp as shown in the illustration.

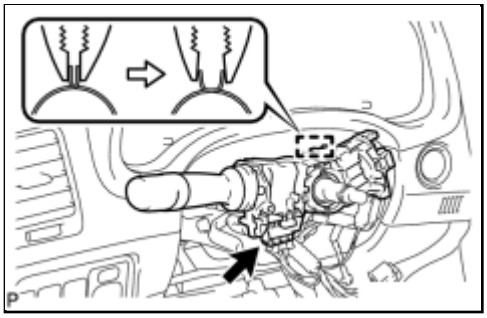

(b) Install the headlight dimmer switch assembly with the clamp.

(c) Connect the connector.

2. INSTALL WINDSHIELD WIPER SWITCH ASSEMBLY INFO

3. INSTALL SPIRAL CABLE (w/o VSC) INFO

4. INSTALL SPIRAL CABLE WITH STEERING ANGLE SENSOR (w/ VSC) INFO

5. INSTALL UPPER STEERING COLUMN COVER INFO

6. INSTALL LOWER STEERING COLUMN COVER INFO

7. ADJUST SPIRAL CABLE INFO

8. INSTALL STEERING WHEEL ASSEMBLY INFO

9. INSPECT STEERING WHEEL CENTER POINT

10. INSTALL STEERING PAD INFO

11. INSTALL LOWER NO. 3 STEERING WHEEL COVER INFO

12. INSTALL LOWER NO. 2 STEERING WHEEL COVER INFO

13. INSTALL LOWER INSTRUMENT PANEL FINISH PANEL SUB-ASSEMBLY INFO

14. CONNECT CABLE TO NEGATIVE BATTERY TERMINAL

15. INSPECT STEERING PAD INFO

16. INSPECT SRS WARNING LIGHT

INFO

Last Modified: 3-10-2010	6.4 K	**From:** 200901
Model Year: 2010	**Model:** Corolla	**Doc ID:** RM0000032TN007X
Title: LIGHTING (EXT): HIGH MOUNTED STOP LIGHT ASSEMBLY (w/ Rear Spoiler): COMPONENTS (2010 Corolla)		

COMPONENTS

ILLUSTRATION

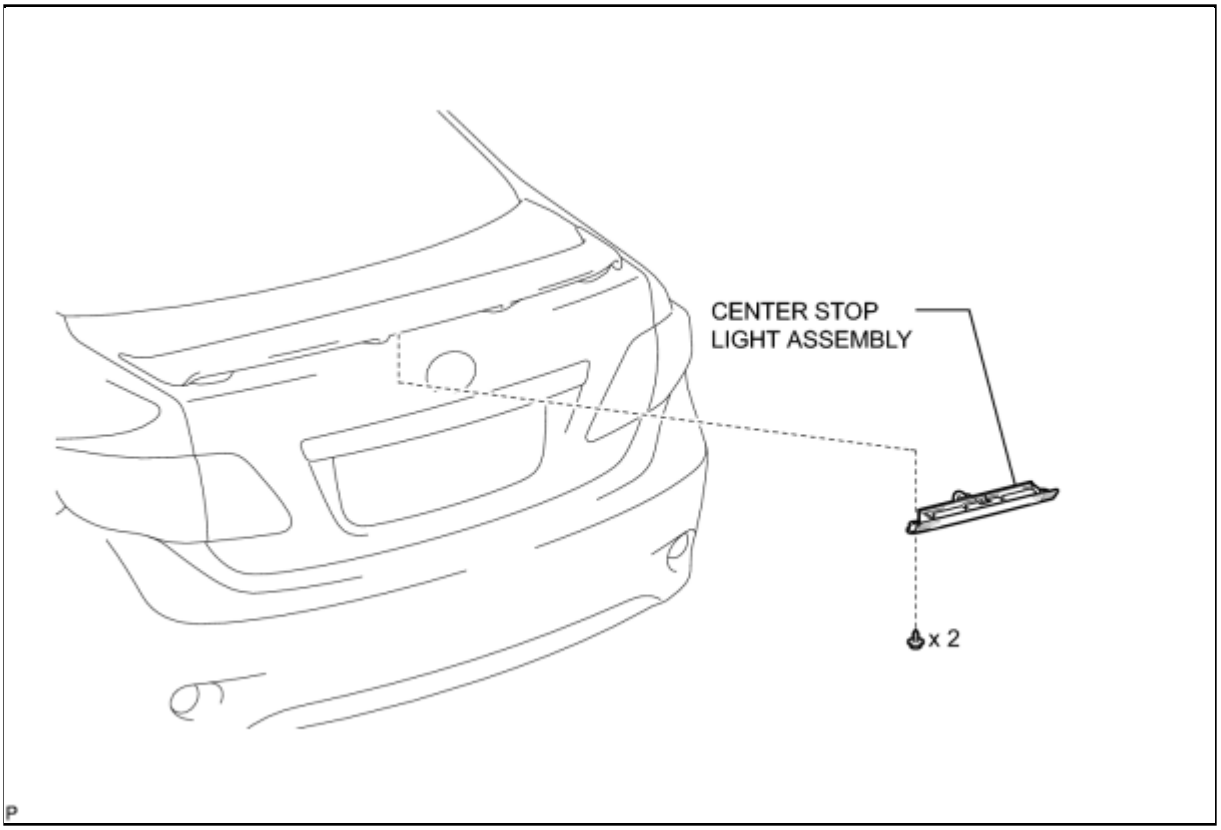

Last Modified: 3-10-2010	6.4 A	**From:** 200901
Model Year: 2010	**Model:** Corolla	**Doc ID:** RM0000032TO007X
Title: LIGHTING (EXT): HIGH MOUNTED STOP LIGHT ASSEMBLY (w/ Rear Spoiler): REMOVAL (2010 Corolla)		

REMOVAL

1. REMOVE CENTER STOP LIGHT ASSEMBLY

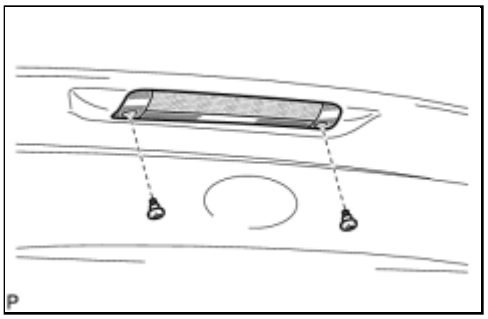

(a) Remove the 2 screws and disconnect the center stop light assembly.

(b) Disconnect the connector and remove the center stop light assembly.

Last Modified: 3-10-2010	6.4 G	**From:** 200901
Model Year: 2010	**Model:** Corolla	**Doc ID:** RM0000032U4008X
Title: LIGHTING (EXT): HIGH MOUNTED STOP LIGHT ASSEMBLY (w/ Rear Spoiler): INSPECTION (2010 Corolla)		

INSPECTION

1. INSPECT HIGH MOUNTED STOP LIGHT ASSEMBLY

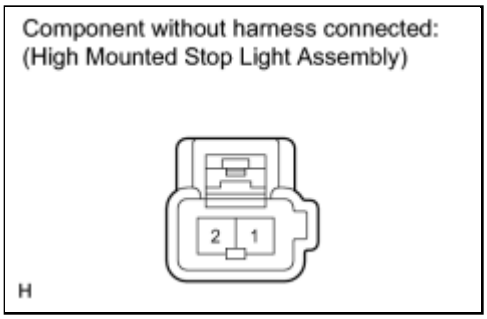

(a) Connect a positive (+) lead from the battery to terminal 2 and a negative (-) lead to terminal 1.

(b) Check that the high mounted stop light comes on.

OK:

The light comes on.

If the result is not as specified, replace the light assembly.

Last Modified: 3-10-2010	6.4 A	**From:** 200901
Model Year: 2010	**Model:** Corolla	**Doc ID:** RM0000032TM007X
Title: LIGHTING (EXT): HIGH MOUNTED STOP LIGHT ASSEMBLY (w/ Rear Spoiler): INSTALLATION (2010 Corolla)		

INSTALLATION

1. INSTALL CENTER STOP LIGHT ASSEMBLY

(a) Connect the connector.

(b) Connect the center stop light assembly to the rear spoiler assembly.

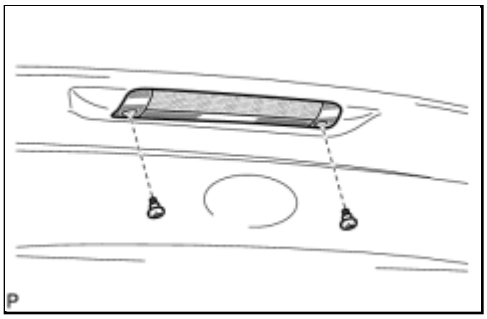

(c) Install the center stop light assembly with the 2 screws.

Last Modified: 3-10-2010	6.4 K	**From:** 200901
Model Year: 2010	**Model:** Corolla	**Doc ID:** RM000002VOB00BX
Title: LIGHTING (EXT): HIGH MOUNTED STOP LIGHT ASSEMBLY (w/o Rear Spoiler): COMPONENTS (2010 Corolla)		

COMPONENTS

ILLUSTRATION

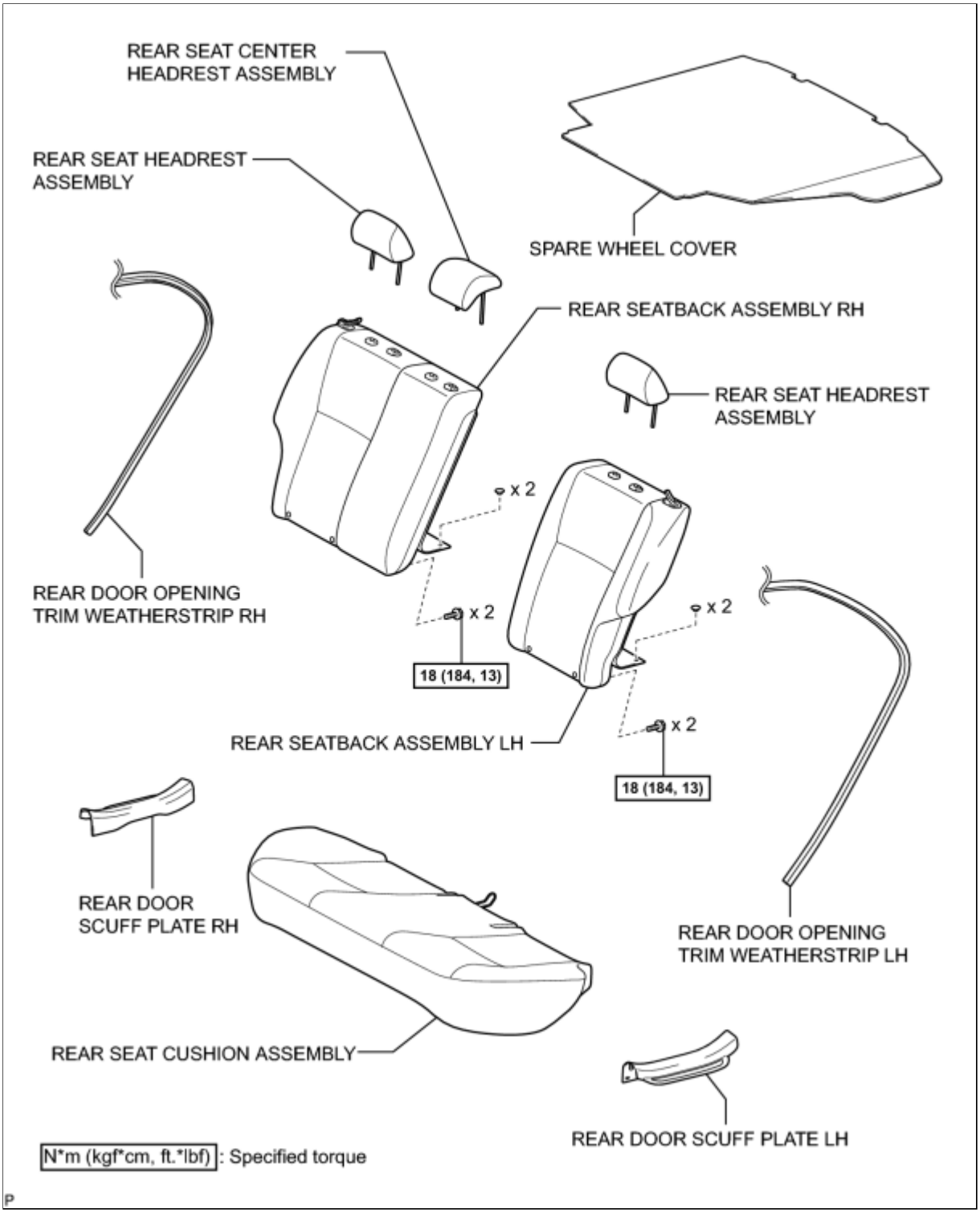

ILLUSTRATION

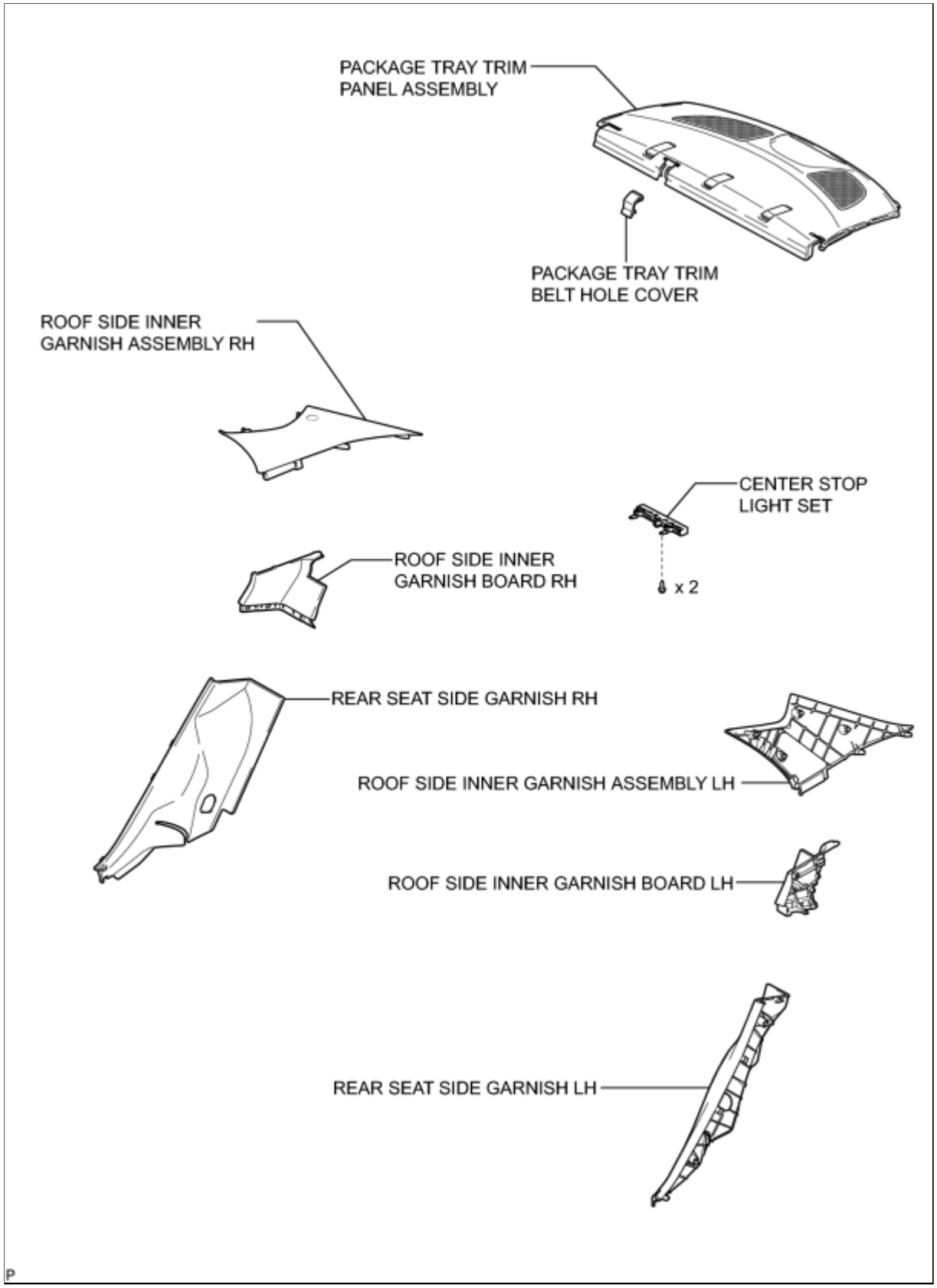
PACKAGE TRAY TRIM
PANEL ASSEMBLY
PACKAGE TRAY TRIM
BELT HOLE COVER
ROOF SIDE INNER
GARNISH ASSEMBLY RH
CENTER STOP
LIGHT SET
x 2
ROOF SIDE INNER
GARNISH BOARD RH
REAR SEAT SIDE GARNISH RH
ROOF SIDE INNER GARNISH ASSEMBLY LH
ROOF SIDE INNER GARNISH BOARD LH
REAR SEAT SIDE GARNISH LH
P

Last Modified: 3-10-2010	6.4 A	**From:** 200901
Model Year: 2010	**Model:** Corolla	**Doc ID:** RM000002VOC00EX
Title: LIGHTING (EXT): HIGH MOUNTED STOP LIGHT ASSEMBLY (w/o Rear Spoiler): REMOVAL (2010 Corolla)		

REMOVAL

1. REMOVE SPARE WHEEL COVER INFO

2. REMOVE REAR SEAT HEADREST ASSEMBLY

3. REMOVE REAR SEAT CENTER HEADREST ASSEMBLY

4. REMOVE REAR SEAT CUSHION ASSEMBLY INFO

5. REMOVE REAR SEATBACK ASSEMBLY LH INFO

6. REMOVE REAR SEATBACK ASSEMBLY RH INFO

7. REMOVE REAR DOOR SCUFF PLATE LH INFO

8. REMOVE REAR DOOR OPENING TRIM WEATHERSTRIP LH INFO

9. REMOVE REAR SEAT SIDE GARNISH LH INFO

10. REMOVE ROOF SIDE INNER GARNISH BOARD LH INFO

11. REMOVE ROOF SIDE INNER GARNISH ASSEMBLY LH INFO

12. REMOVE REAR DOOR SCUFF PLATE RH INFO

13. REMOVE REAR DOOR OPENING TRIM WEATHERSTRIP RH INFO

14. REMOVE REAR SEAT SIDE GARNISH RH INFO

15. REMOVE ROOF SIDE INNER GARNISH BOARD RH INFO

16. REMOVE ROOF SIDE INNER GARNISH ASSEMBLY RH INFO

17. REMOVE PACKAGE TRAY TRIM BELT HOLE COVER INFO

18. REMOVE PACKAGE TRAY TRIM PANEL ASSEMBLY INFO

19. REMOVE CENTER STOP LIGHT SET

(a) Remove the 2 screws.

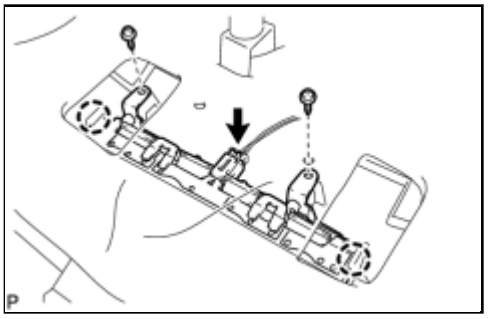

(b) Disconnect the connector.

(c) Disengage the 2 claws and remove the center stop light set.

Last Modified: 3-10-2010	6.4 G	**From:** 200901
Model Year: 2010	**Model:** Corolla	**Doc ID:** RM000001UX7013X
Title: LIGHTING (EXT): HIGH MOUNTED STOP LIGHT ASSEMBLY (w/o Rear Spoiler): INSPECTION (2010 Corolla)		

INSPECTION

1. INSPECT HIGH MOUNTED STOP LIGHT ASSEMBLY

Component without harness connected:
(High Mounted Stop Light Assembly)



(a) Connect a positive (+) lead from the battery to terminal 1 and a negative (-) lead to terminal 2.

(b) Check that the high mounted stop light comes on.

OK:

The light comes on.

If the result is not as specified, replace the light assembly.

Last Modified: 3-10-2010	6.4 A	**From:** 200901
Model Year: 2010	**Model:** Corolla	**Doc ID:** RM000002VOA00EX
Title: LIGHTING (EXT): HIGH MOUNTED STOP LIGHT ASSEMBLY (w/o Rear Spoiler): INSTALLATION (2010 Corolla)		

INSTALLATION

1. INSTALL CENTER STOP LIGHT SET

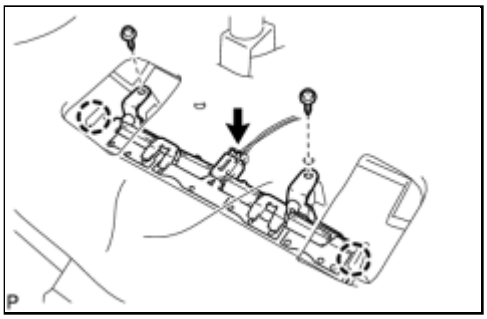

(a) Engage the 2 claws and install the center stop light set with the 2 screws.

(b) Connect the connector.

2. INSTALL PACKAGE TRAY TRIM PANEL ASSEMBLY INFO

3. INSTALL PACKAGE TRAY TRIM BELT HOLE COVER INFO

4. INSTALL ROOF SIDE INNER GARNISH ASSEMBLY LH INFO

5. INSTALL ROOF SIDE INNER GARNISH BOARD LH INFO

6. INSTALL REAR SEAT SIDE GARNISH LH INFO

7. INSTALL REAR DOOR OPENING TRIM WEATHERSTRIP LH INFO

8. INSTALL REAR DOOR SCUFF PLATE LH INFO

9. INSTALL ROOF SIDE INNER GARNISH ASSEMBLY RH INFO

10. INSTALL ROOF SIDE INNER GARNISH BOARD RH INFO

11. INSTALL REAR SEAT SIDE GARNISH RH INFO

12. INSTALL REAR DOOR OPENING TRIM WEATHERSTRIP RH INFO

13. INSTALL REAR DOOR SCUFF PLATE RH INFO

14. INSTALL REAR SEATBACK ASSEMBLY LH INFO

15. INSTALL REAR SEATBACK ASSEMBLY RH INFO

16. INSTALL REAR SEAT CUSHION ASSEMBLY INFO

17. INSTALL REAR SEAT CENTER HEADREST ASSEMBLY

18. INSTALL REAR SEAT HEADREST ASSEMBLY

19. INSTALL SPARE WHEEL COVER INFO

Last Modified: 3-10-2010	6.4 K	**From:** 200901
Model Year: 2010	**Model:** Corolla	**Doc ID:** RM000002VO100BX
Title: LIGHTING (EXT): LICENSE PLATE LIGHT ASSEMBLY: COMPONENTS (2010 Corolla)		

COMPONENTS

ILLUSTRATION

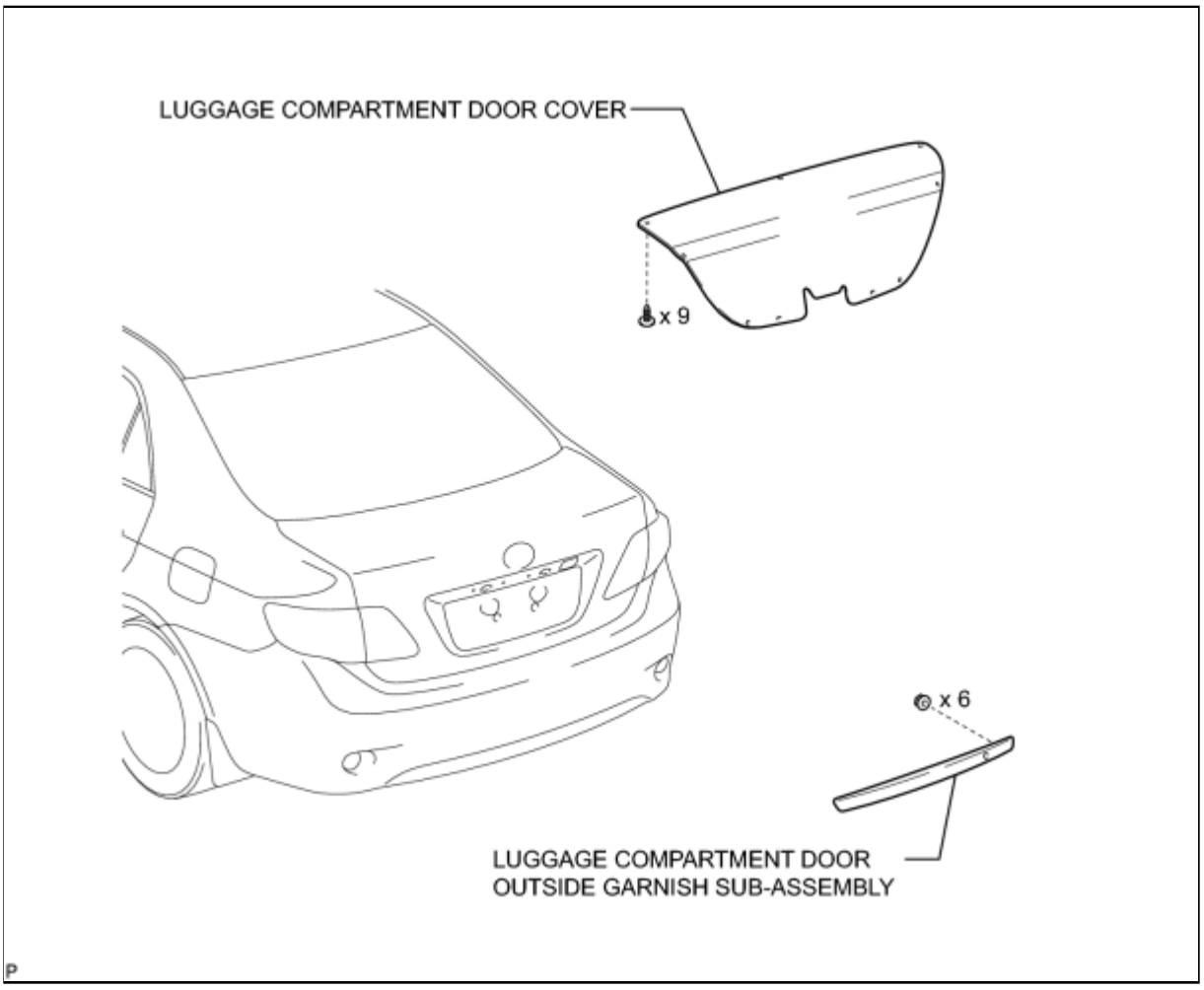

ILLUSTRATION


LICENSE PLATE LIGHT ASSEMBLY

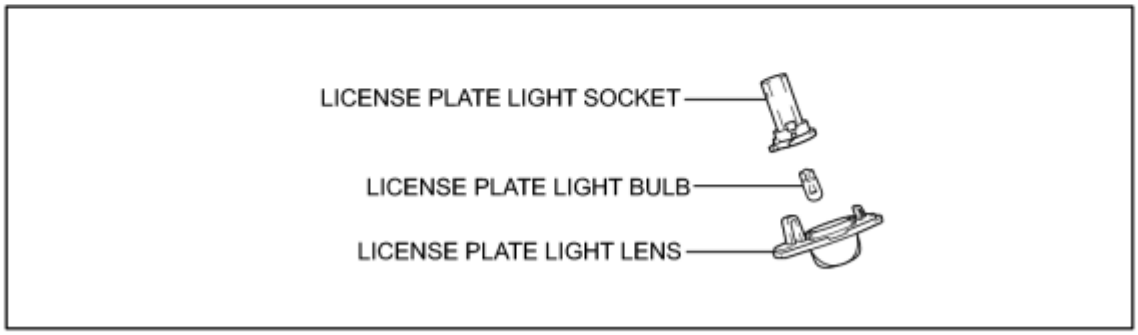
LICENSE PLATE LIGHT SOCKET
LICENSE PLATE LIGHT BULB
LICENSE PLATE LIGHT LENS

P

Last Modified: 3-10-2010	6.4 A	**From:** 200901
Model Year: 2010	**Model:** Corolla	**Doc ID:** RM000002VO200CX
Title: LIGHTING (EXT): LICENSE PLATE LIGHT ASSEMBLY: REMOVAL (2010 Corolla)		

REMOVAL

1. REMOVE LUGGAGE COMPARTMENT DOOR COVER INFO

2. REMOVE LUGGAGE COMPARTMENT DOOR OUTSIDE GARNISH SUB-ASSEMBLY INFO

3. REMOVE LICENSE PLATE LIGHT ASSEMBLY

(a) Disconnect the connector.

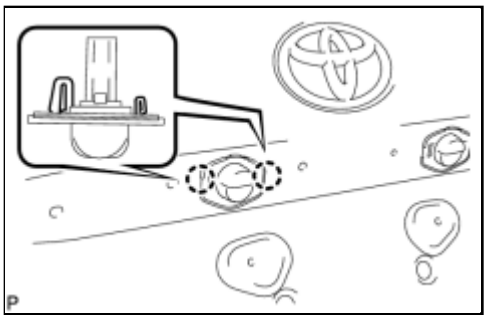

(b) Disengage the 2 claws and remove the license plate light assembly.

4. REMOVE LICENSE PLATE LIGHT BULB

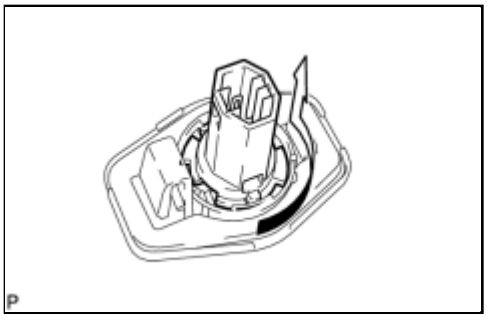

(a) Turn the license plate light bulb and the license plate light socket in the direction indicated by the arrow and remove them as a unit.

(b) Remove the license plate light bulb from the license plate light socket.

Last Modified: 3-10-2010	6.4 G	**From:** 200901
Model Year: 2010	**Model:** Corolla	**Doc ID:** RM000002XVR00JX
Title: LIGHTING (EXT): LICENSE PLATE LIGHT ASSEMBLY: INSPECTION (2010 Corolla)		

INSPECTION

1. INSPECT LICENSE PLATE LIGHT ASSEMBLY

Component without harness connected:
(License Plate Light Assembly)



(a) Connect a positive (+) lead from the battery to terminal 2 and a negative (-) lead to terminal 1.

(b) Check that the light comes on.

OK:

The light comes on.

If the result is not as specified, replace the bulb or light socket.

Last Modified: 3-10-2010	6.4 A	**From:** 200901
Model Year: 2010	**Model:** Corolla	**Doc ID:** RM000002VO000CX
Title: LIGHTING (EXT): LICENSE PLATE LIGHT ASSEMBLY: INSTALLATION (2010 Corolla)		

INSTALLATION

1. INSTALL LICENSE PLATE LIGHT BULB

(a) Install the license plate light blub to the license plate light socket.

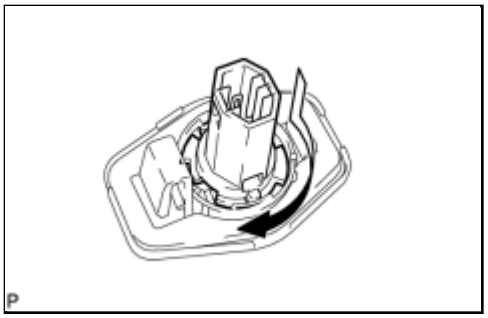

(b) Turn the license plate light blub and the license plate light socket in the direction indicated by the arrow and install them as a unit.

2. INSTALL LICENSE PLATE LIGHT ASSEMBLY

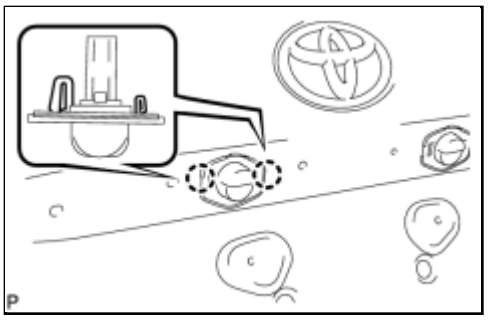

(a) Engage the 2 claws to install the license plate light assembly.

(b) Connect the connector.

3. INSTALL LUGGAGE COMPARTMENT DOOR OUTSIDE GARNISH SUB-ASSEMBLY INFO

4. INSTALL LUGGAGE COMPARTMENT DOOR COVER INFO

Last Modified: 3-10-2010	6.4 R	**From:** 200901
Model Year: 2010	**Model:** Corolla	**Doc ID:** RM000002CDX00PX
Title: LIGHTING (INT): LIGHTING SYSTEM: PARTS LOCATION (2010 Corolla)		

PARTS LOCATION

ILLUSTRATION

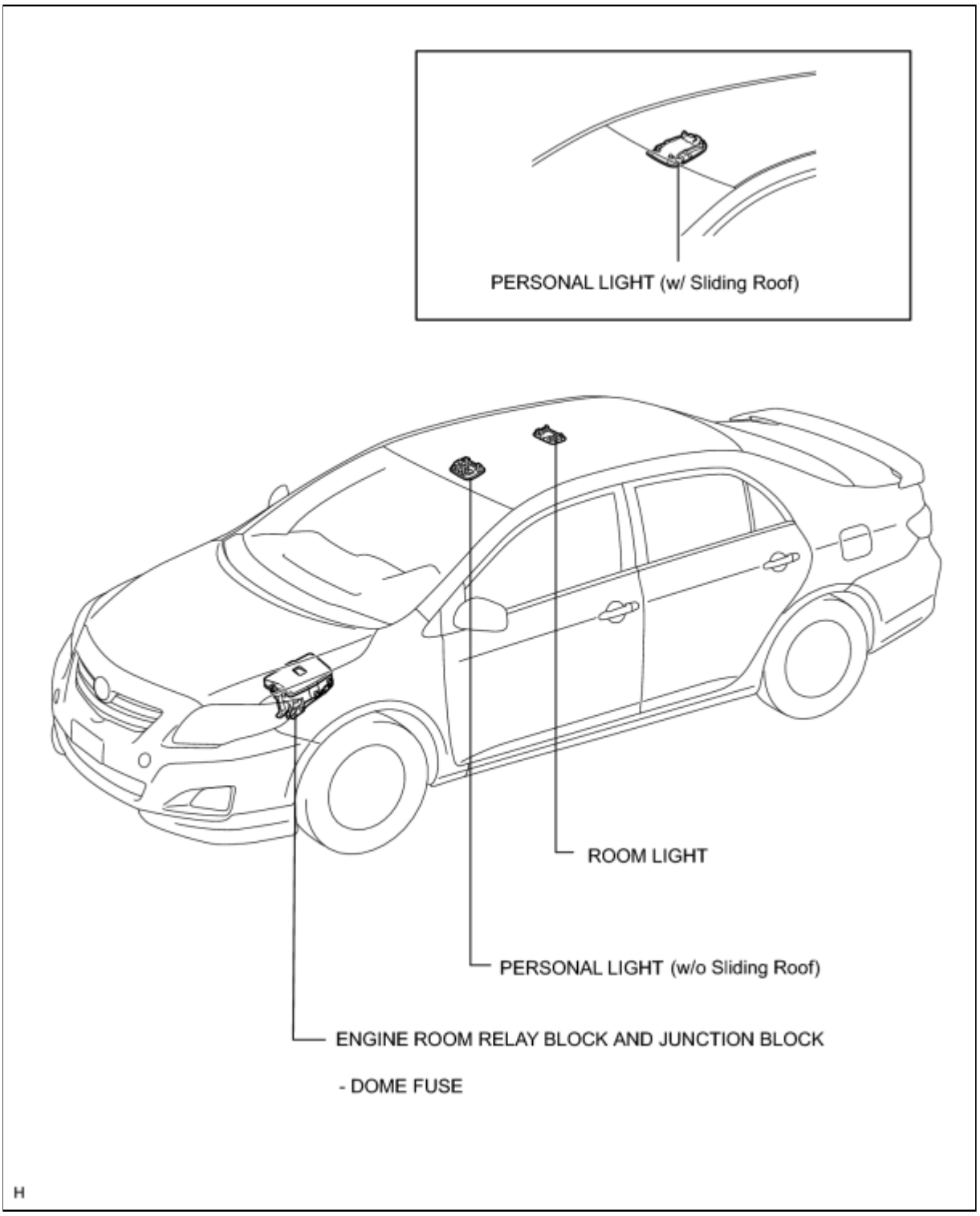

ILLUSTRATION

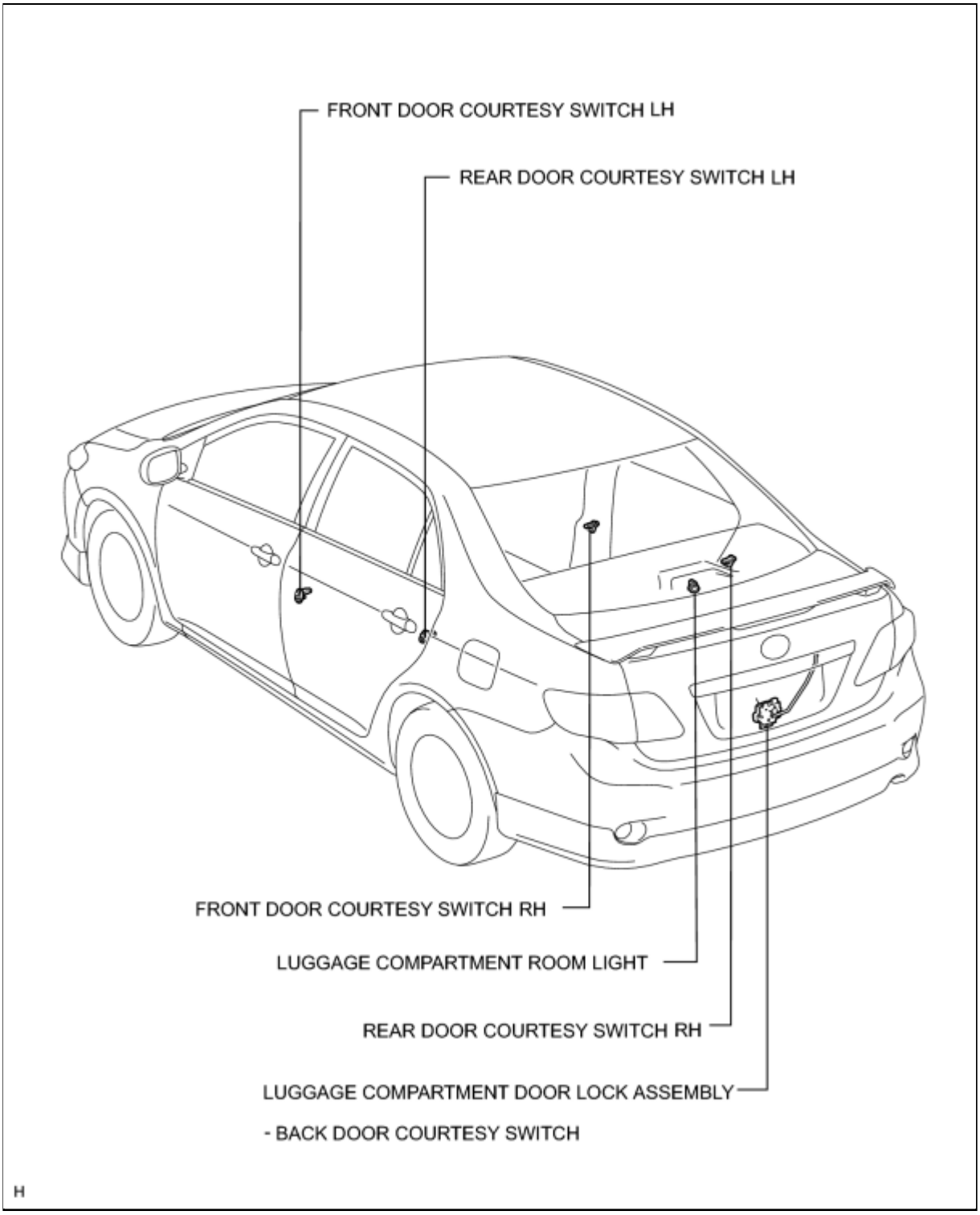

ILLUSTRATION

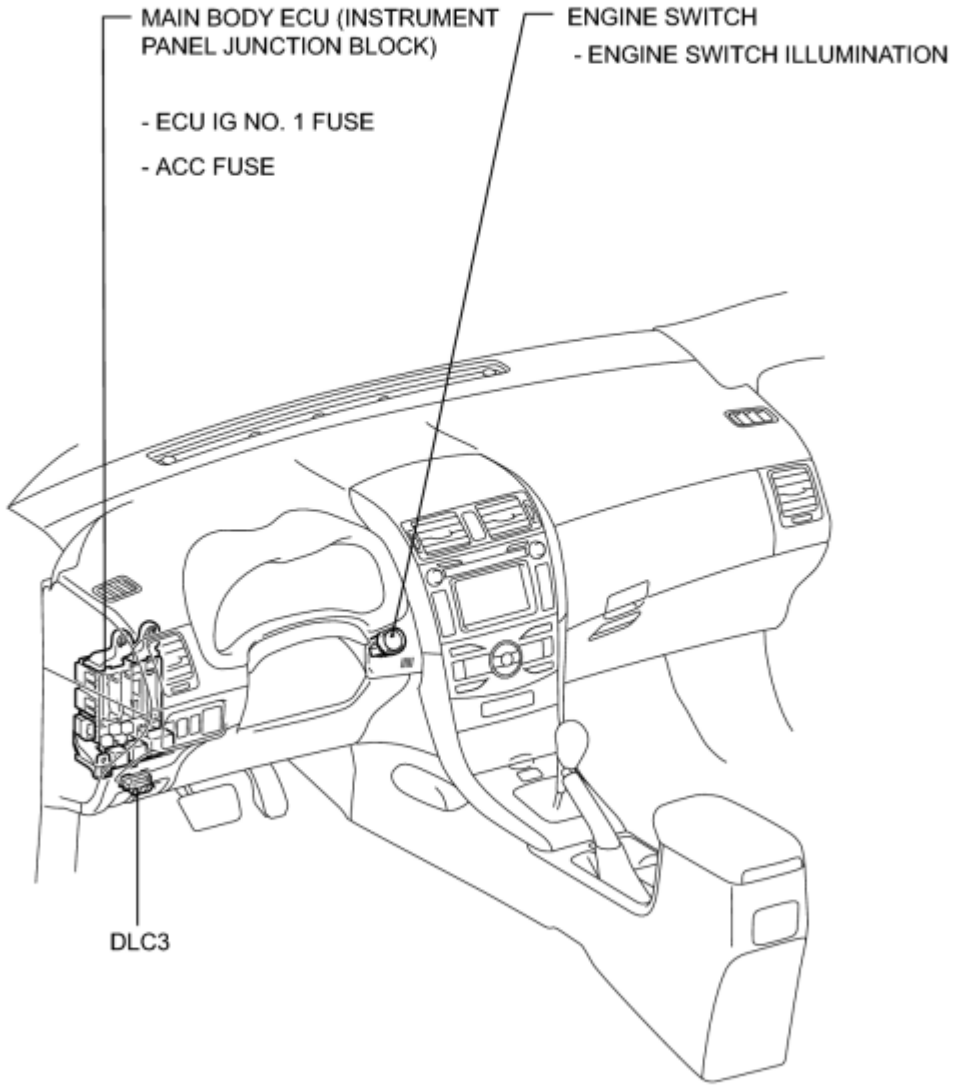
MAIN BODY ECU (INSTRUMENT PANEL JUNCTION BLOCK)
- ECU IG NO. 1 FUSE
- ACC FUSE
ENGINE SWITCH
- ENGINE SWITCH ILLUMINATION
DLC3

H

Last Modified: 3-10-2010	6.4 L	**From:** 200901
Model Year: 2010	**Model:** Corolla	**Doc ID:** RM0000012A4017X
Title: LIGHTING (INT): LIGHTING SYSTEM: PRECAUTION (2010 Corolla)		

PRECAUTION

1. EXPRESSIONS OF IGNITION SWITCH

(a) The type of ignition switch used on this model differs according to the specifications of the vehicle. The expressions listed in the table below are used in this section.

SWITCH TYPE		IGNITION SWITCH (POSITION)	ENGINE SWITCH (CONDITION)
Expression	Ignition switch off	LOCK	Off
	Ignition switch ON	ON	On (IG)
	Ignition switch ACC	ACC	On (ACC)
	Engine start	START	Start

Last Modified: 3-10-2010	6.4 U	**From:** 200901
Model Year: 2010	**Model:** Corolla	**Doc ID:** RM000002CDZ00VX
Title: LIGHTING (INT): LIGHTING SYSTEM: SYSTEM DIAGRAM (2010 Corolla)		

SYSTEM DIAGRAM

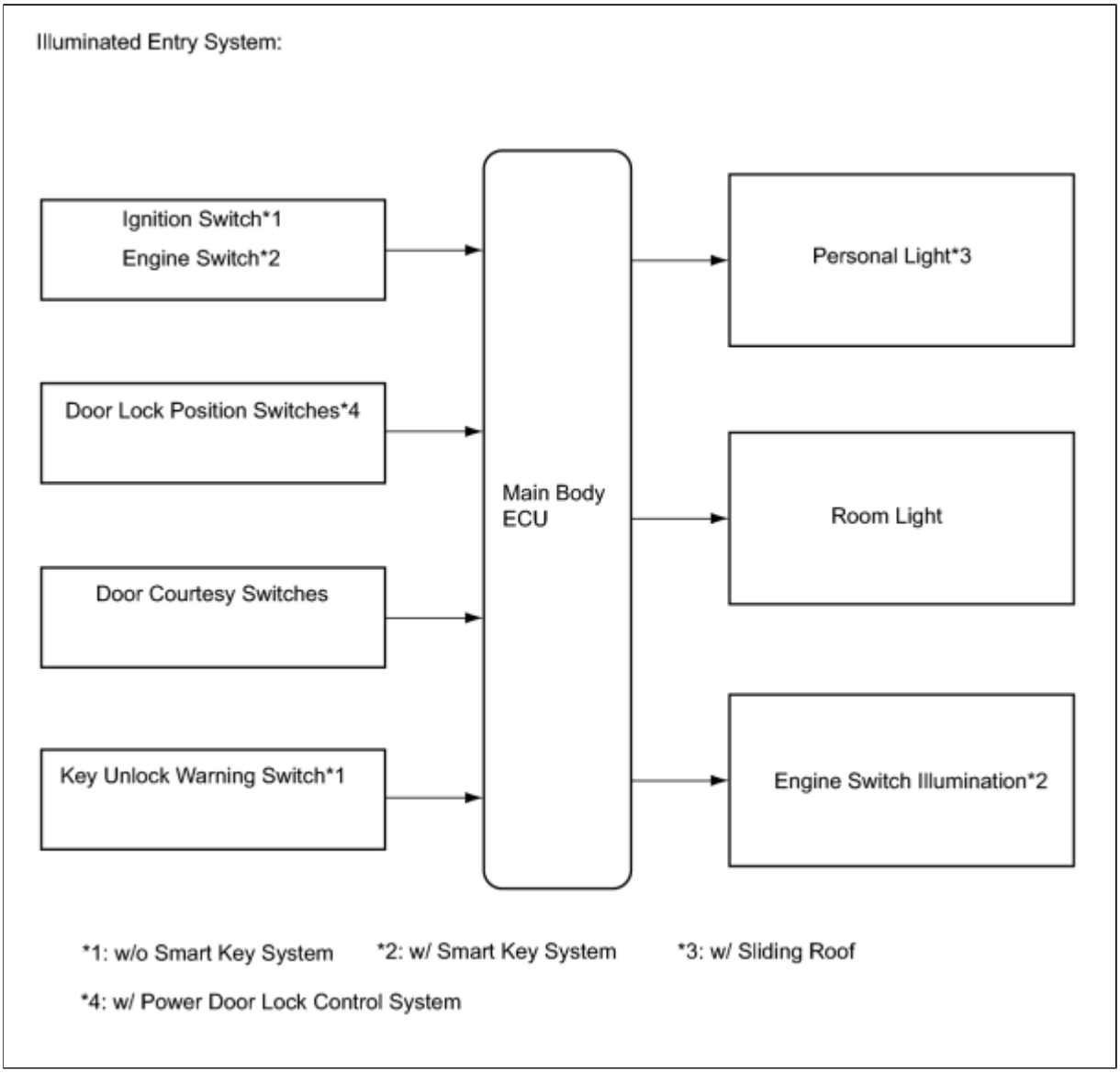

Last Modified: 3-10-2010	6.4 D	**From:** 200901
Model Year: 2010	**Model:** Corolla	**Doc ID:** RM000002CDY012X
Title: LIGHTING (INT): LIGHTING SYSTEM: SYSTEM DESCRIPTION (2010 Corolla)		

SYSTEM DESCRIPTION

1. ILLUMINATED ENTRY SYSTEM

- The illuminated entry system provides convenience when getting in or out of the vehicle at night.
- This function is controlled by the main body ECU. The operation and condition of this control are described below.

OPERATION	CONDITION
Fade in	When any of the following conditions is met, the personal light*1, room light and engine switch illumination*2 fade in. ○ A key enters any actuation area around the doors when the ignition switch is off and all doors are closed*2. ○ Any door is opened. ○ Any door is unlocked when the ignition switch is off and all doors are closed*4. ○ Ignition switch is turned from ACC to off when all doors are closed.
Fade out immediately	When either of the following conditions is met, the personal light*1, room light and engine switch illumination*2 fade out. ○ Ignition switch is turned from off to ACC or ON when all doors are closed. ○ All doors are locked when the ignition switch is off*4.
Illuminate for approximately 15 seconds, and then fade out	All doors are closed when the ignition switch is off.
Fade out (Battery saving control)	When all of the following conditions are met, the main body ECU turns off the lights. ○ A key is not inserted in the ignition key cylinder*3. ○ A key is not in the actuation area*2. ○ There is no change in the condition of the doors for 20 minutes. When any of the following conditions is met, the count of the battery save times will be cleared. ○ A key is inserted in the ignition key cylinder*3. ○ A key is in the actuation area*2.

OPERATION	CONDITION
	○ Any of the doors is opened.

HINT:

- ○ *1: w/ Sliding Roof
- ○ *2: w/ Smart Key System
- ○ *3: w/o Smart Key System
- ○ *4: w/ Power Door Lock Control System

Last Modified: 3-10-2010	6.4 D	**From:** 200901
Model Year: 2010	**Model:** Corolla	**Doc ID:** RM000000PKJ031X
Title: LIGHTING (INT): LIGHTING SYSTEM: HOW TO PROCEED WITH TROUBLESHOOTING (2010 Corolla)		

HOW TO PROCEED WITH TROUBLESHOOTING

HINT:

- Use the following procedure to troubleshoot the lighting system.
- *: Use the Techstream.

1.	**VEHICLE BROUGHT TO WORKSHOP**

NEXT

2.	**CUSTOMER PROBLEM ANALYSIS AND SYMPTOM CHECK**

NEXT

3.	**INSPECT BATTERY VOLTAGE**

Standard voltage:
11 to 14 V

If the voltage is below 11 V, recharge or replace the battery before proceeding to the next step.

NEXT

4.	**INSPECT CAN COMMUNICATION SYSTEM***

(a) Use the Techstream to check if the CAN communication system is functioning normally.

Result:

RESULT	PROCEED TO
CAN Communication System DTC is not output	A
CAN Communication System DTC is output	B

B ▶ **Go to CAN communication system**

A ▼

5.	PROBLEM SYMPTOMS TABLE

Result:

RESULT	PROCEED TO
Fault is not listed in problem symptoms table	A
Fault is listed in problem symptoms table	B

B ▶ **Go to step 7**

A ▼

6.	OVERALL ANALYSIS AND TROUBLESHOOTING*

(a) Data List/Active Test INFO

(b) Terminals of ECU INFO

NEXT ▼

7.	ADJUST, REPAIR OR REPLACE

NEXT

8.	CONFIRMATION TEST

NEXT END

Last Modified: 3-10-2010	6.4 U	**From:** 200901
Model Year: 2010	**Model:** Corolla	**Doc ID:** RM000002CE100XX
Title: LIGHTING (INT): LIGHTING SYSTEM: TERMINALS OF ECU (2010 Corolla)		

TERMINALS OF ECU

1. CHECK MAIN BODY ECU (w/o Smart Key System)

(a) Disconnect the 2B, 2E, 2F, and 2G instrument junction block connectors.

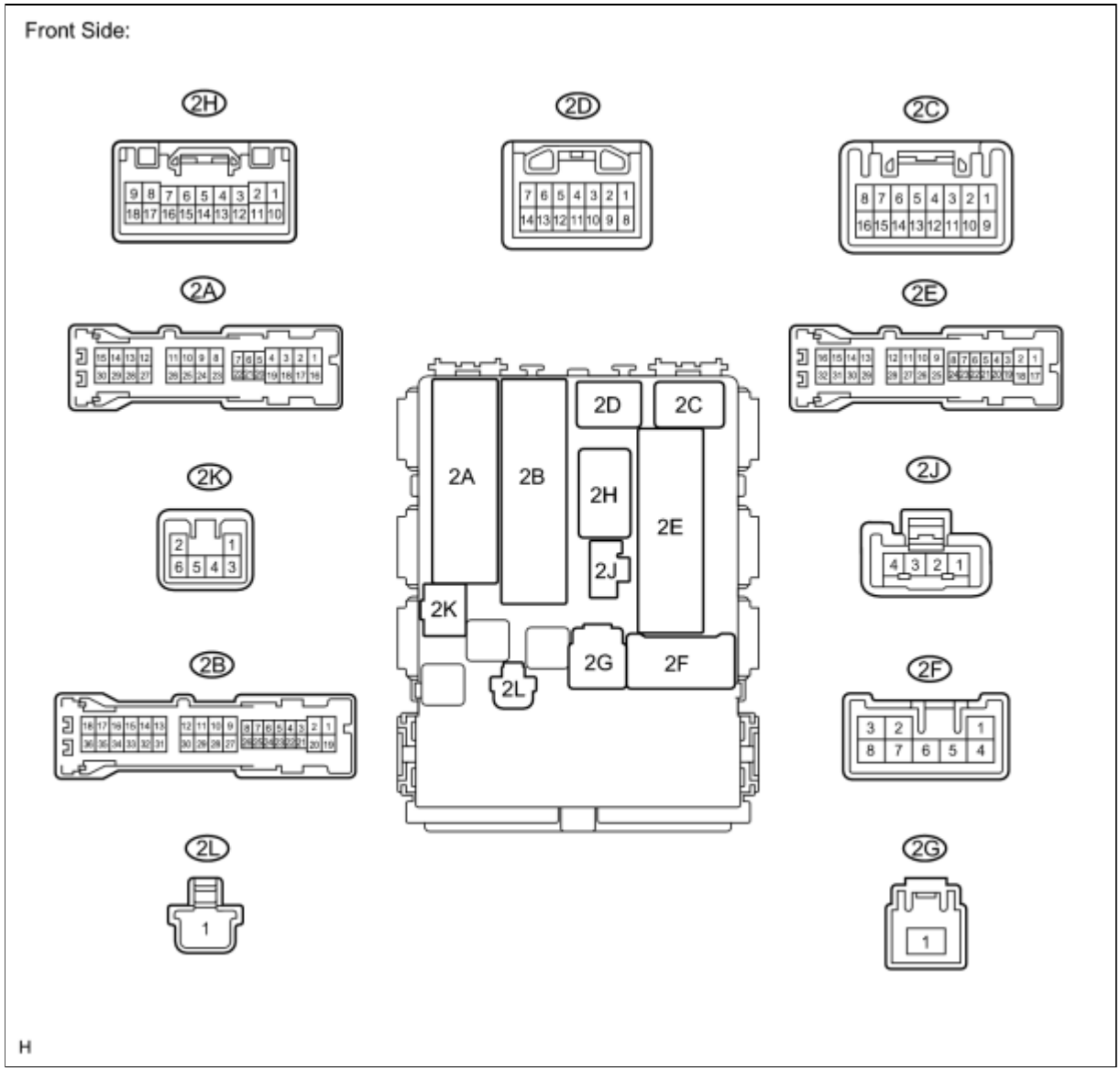

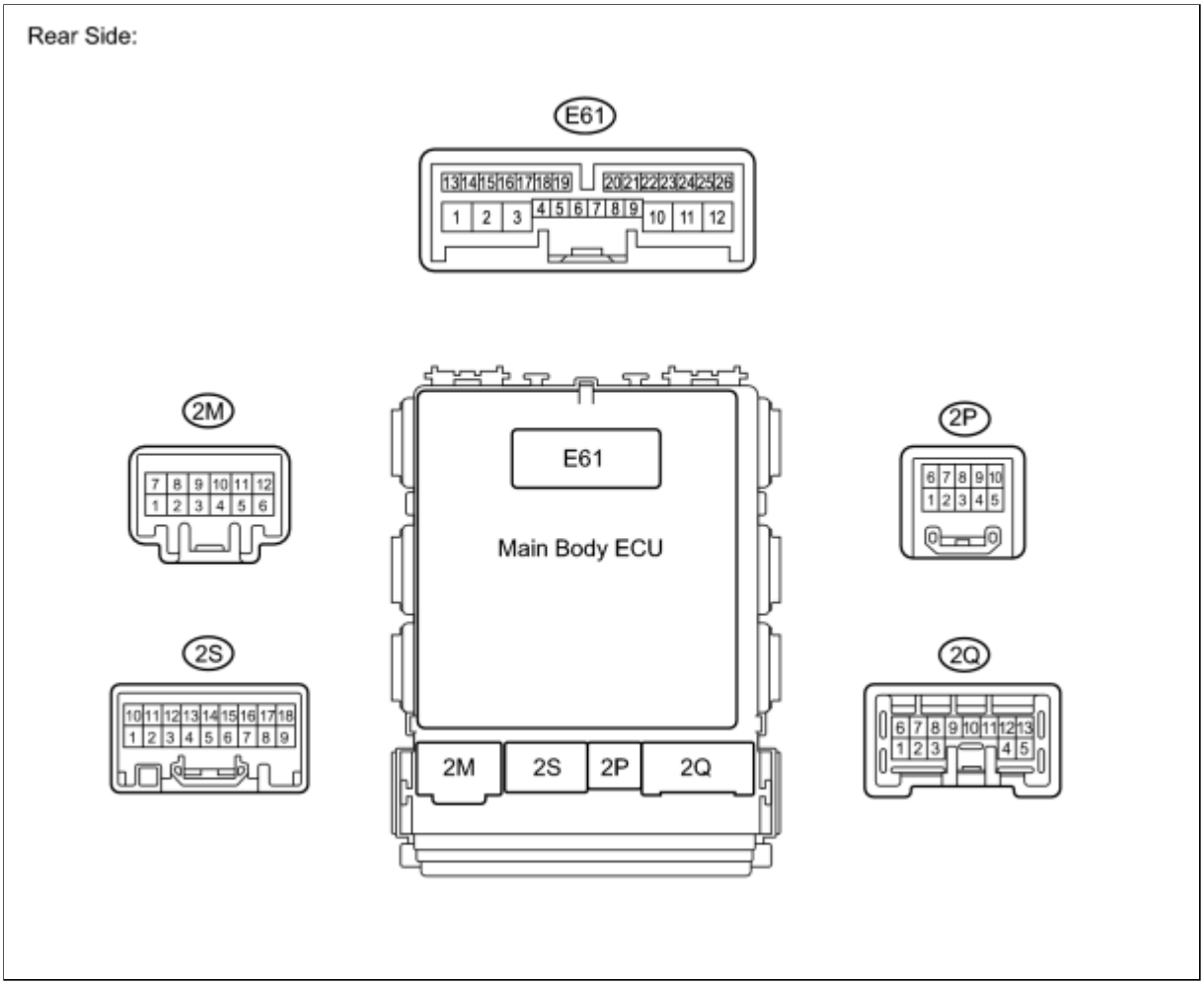

(b) Measure the voltage and resistance between the wire harness side connectors and body ground.

Standard Voltage:

TERMINAL NO. (SYMBOL)	WIRING COLOR	TERMINAL DESCRIPTION	CONDITION	SPECIFIED CONDITION
2B-30 (BECU) - Body ground	W - Body ground	Battery power supply	Always	11 to 14 V
2F-5 (ACC) - Body ground	W*1 - Body ground L*2 - Body ground	ACC power supply	Always	11 to 14 V
2G-1 - Body ground	W - Body ground	Battery power supply	Always	11 to 14 V

Standard Resistance:

TERMINAL NO. (SYMBOL)	WIRING COLOR	TERMINAL DESCRIPTION	CONDITION	SPECIFIED CONDITION
2E-17 (GND1) - Body ground	W-B - Body ground	Ground	Always	Below 1 Ω

If the result is not as specified, there may be a malfunction on the wire harness side.

HINT:

- *1: for TMC Made
- *2: except TMC Made

(c) Reconnect the 2B, 2E, 2F and 2G instrument panel junction block connectors.

(d) Measure the voltage according to the value(s) in the table below.

Standard Voltage:

TERMINAL NO. (SYMBOL)	WIRING COLOR	TERMINAL DESCRIPTION	CONDITION	SPECIFIED CONDITION
2A-7 (LGCY) - Body ground	LG - Body ground	Luggage compartment door courtesy switch input	Luggage compartment door open	Below 1 V
			Luggage compartment door closed	11 to 14 V
2A-21 (DCTY) - Body ground	W*1 - Body ground V*2 - Body ground	Driver side door courtesy switch input	Driver side door open	Below 1 V
			Driver side door closed	Pulse generation
2C-6 (DCTY) - Body ground	W*1 - Body ground R*2 - Body ground	Driver side door courtesy switch input	Driver side door open	Below 1 V
			Driver side door closed	Pulse generation
2E-19 (RCTY) - Body ground	LG*1 - Body ground Y*2 - Body ground	Rear door courtesy switch RH input	Rear door RH open	Below 1 V
			Rear door RH closed	Pulse generation
2E-20 (PCTY) - Body ground	BR*1 - Body ground BE*2 - Body ground	Front passenger side door courtesy switch input	Front passenger side door open	Below 1 V
			Front passenger side door closed	Pulse generation
2K-2 (ILE) - Body ground	W*1 - Body ground GR*2 - Body ground	Interior light drive output	Interior light switch in DOOR position and interior light ON	Below 1 V
			Interior light switch in DOOR position and interior light OFF	11 to 14 V
E61-5 (LSWP) - Body ground	B*1 - Body ground	Front passenger side door lock position switch	Front passenger door unlocked	Below 1 V

TERMINAL NO. (SYMBOL)	WIRING COLOR	TERMINAL DESCRIPTION	CONDITION	SPECIFIED CONDITION
	R*2 - Body ground	input	Front passenger door locked	Pulse generation
E61-13 (LCTY) - Body ground	SB*1 - Body ground B*2 - Body ground	Rear door courtesy switch LH input	Rear door LH open	Below 1 V
			Rear door LH closed	Pulse generation
E61-21 (LSWD) - Body ground	Y - Body ground	Driver side door lock position switch input	Driver side door unlocked	Below 1 V
			Driver side door locked	Pulse generation
E61-24 (LSR) - Body ground	Y*1 - Body ground G*2 - Body ground	Rear door lock position switch input	Rear door LH or RH unlocked	Below 1 V
			Rear door LH and RH locked	Pulse generation

If the result is not as specified, the main body ECU (Instrument panel junction block) may have a malfunction.

HINT:

- *1: for TMC Made
- *2: except TMC Made

2. CHECK MAIN BODY ECU (w/ Smart Key System)

(a) Disconnect the 2B, 2E, 2F, and 2G instrument junction block connectors.

Front Side:

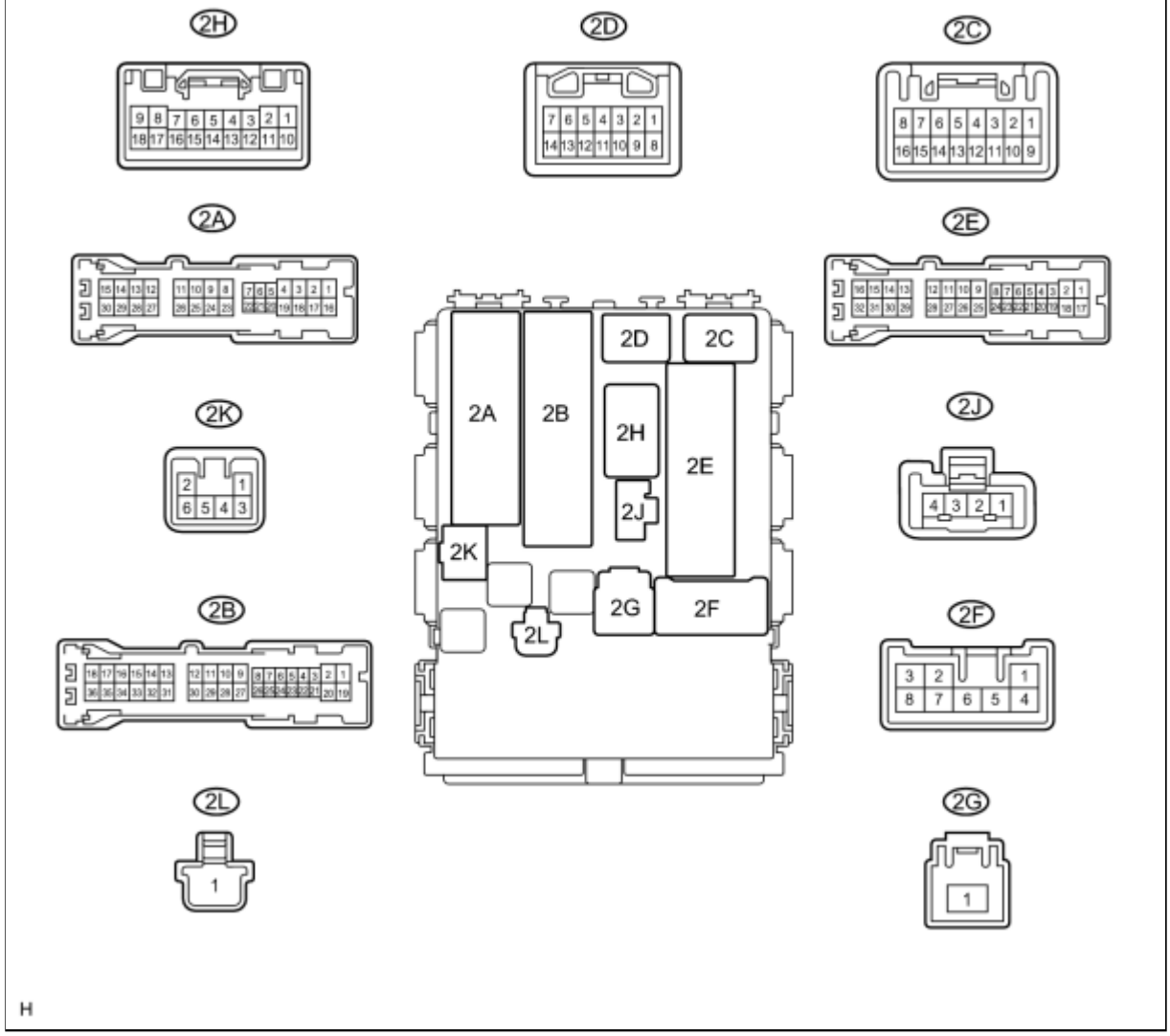

H

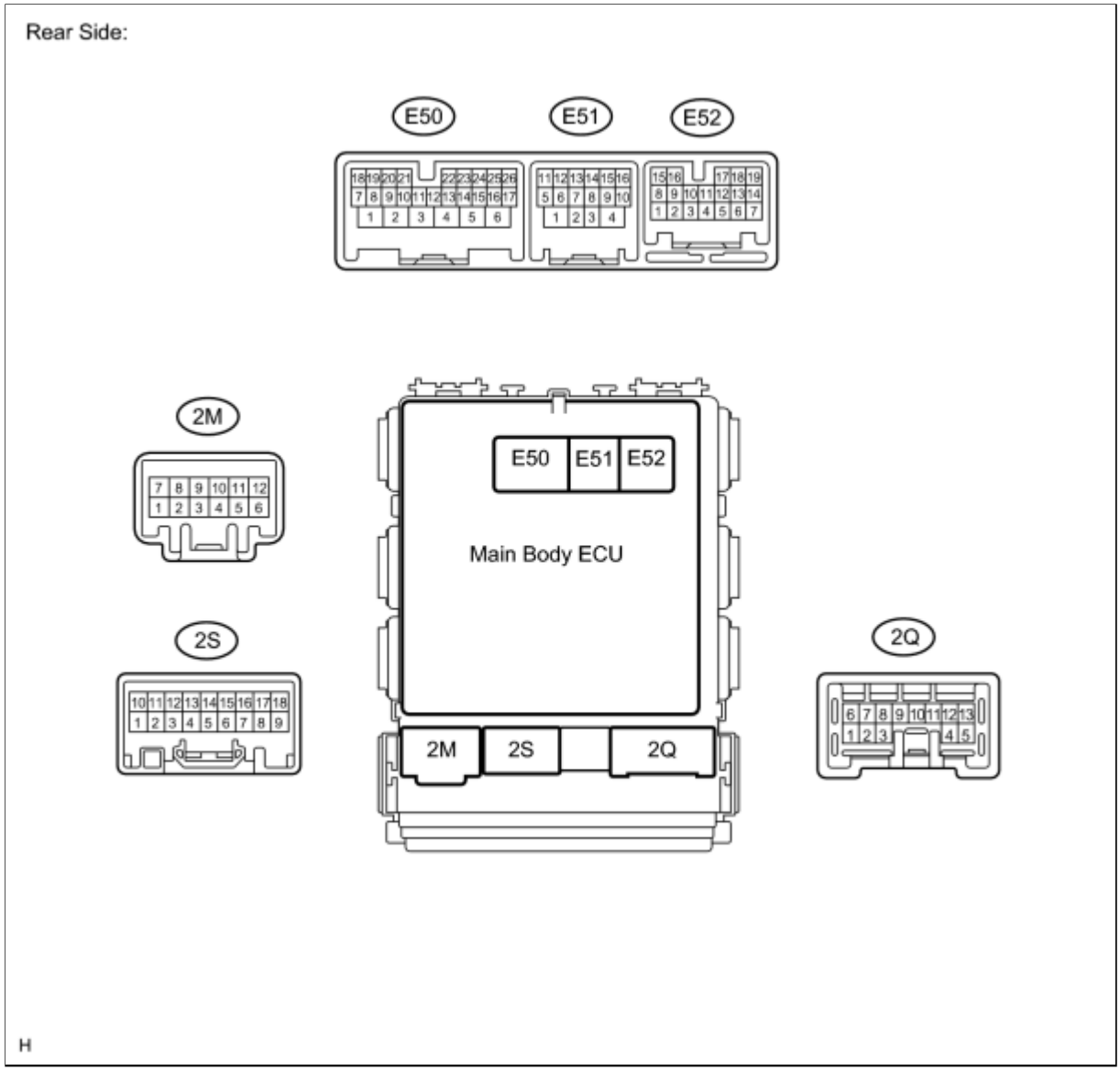

(b) Measure the voltage and resistance between the wire harness side connectors and body ground.

Standard Voltage:

TERMINAL NO. (SYMBOL)	WIRING COLOR	TERMINAL DESCRIPTION	CONDITION	SPECIFIED CONDITION
2B-30 (BECU)*3 - Body ground	W - Body ground	Battery power supply	Always	11 to 14 V
2F-5 (ACC) - Body ground	W*1 - Body ground L*2 - Body ground	ACC power supply	Always	11 to 14 V
2G-1 - Body ground	W - Body ground	Battery power supply	Always	11 to 14 V

Standard Resistance:

TERMINAL NO. (SYMBOL)	WIRING COLOR	TERMINAL DESCRIPTION	CONDITION	SPECIFIED CONDITION
2E-17 (GND1) - Body ground	W-B - Body ground	Ground	Always	Below 1 Ω

If the result is not as specified, there may be a malfunction on the wire harness side.

(c) Reconnect the 2B, 2E, 2F, 2G and E51 instrument panel junction block connectors.

(d) Measure the voltage according to the value(s) in the table below.

Standard Voltage:

TERMINAL NO. (SYMBOL)	WIRING COLOR	TERMINAL DESCRIPTION	CONDITION	SPECIFIED CONDITION
2A-7 (LGCY) - Body ground	LG - Body ground	Luggage compartment door courtesy switch input	Luggage compartment door open	Below 1 V
			Luggage compartment door closed	Pulse generation
2A-21 (DCTY) - Body ground	W*1 - Body ground V*2 - Body ground	Driver side door courtesy switch input	Driver side door open	Below 1 V
			Driver side door closed	Pulse generation
2E-19 (RCTY) - Body ground	LG*1 - Body ground Y*2 - Body ground	Rear door courtesy switch RH input	Rear door RH open	Below 1 V
			Rear door RH closed	Pulse generation
2E-20 (PCTY) - Body ground	BR*1 - Body ground BE*2 - Body ground	Front passenger side door courtesy switch input	Passenger side door open	Below 1 V
			Passenger side door closed	Pulse generation
2K-2 (ILE) - Body ground	W*1 - Body ground GR*2 - Body ground	Interior light driver output	Interior light switch in DOOR position and interior light ON	Below 1 V
			Interior light switch in DOOR position and interior light OFF	11 to 14 V
E50-8 (LCTY) - Body ground	SB*1 - Body ground B*2 - Body ground	Rear left door courtesy switch input	Rear door LH open	Below 1 V
			Rear door RH closed	Pulse generation

TERMINAL NO. (SYMBOL)	WIRING COLOR	TERMINAL DESCRIPTION	CONDITION	SPECIFIED CONDITION
E50-10 (LSWP) - Body ground	B*1 - Body ground R*2 - Body ground	Front passenger side door lock position switch input	Front passenger door unlocked	Below 1 V
			Front passenger door locked	Pulse generation
E50-25 (LSWD) - Body ground	Y - Body ground	Driver side door lock position switch input	Driver side door locked	Pulse generation
			Driver side door unlocked	Below 1 V
E52-10 (LSR) - Body ground	Y*1 - Body ground G*2 - Body ground	Rear door lock position switch input	Rear door LH or RH unlocked	Below 1 V
			Rear door LH and RH locked	Pulse generation

If the result is not as specified, the main body ECU (Instrument panel junction block assembly) may have a malfunction.

HINT:

- *1: for TMC Made
- *2: except TMC Made
- *3: w/o Smart Key System

Last Modified: 3-10-2010	6.4 D	**From:** 200901
Model Year: 2010	**Model:** Corolla	**Doc ID:** RM000003HLW002X
Title: LIGHTING (INT): LIGHTING SYSTEM: OPERATION CHECK (2010 Corolla)		

OPERATION CHECK

1. INSPECT ILLUMINATED ENTRY SYSTEM OPERATION

NOTICE:

Perform this inspection with the customize parameter at the initial setting.

HINT:

The illuminated entry system illuminates the lights below.

- Personal light*1
- Room light
- Engine switch illumination*2

(a) The operation and condition of this control are described below.

OPERATION	CONDITION
Fade in	When any of the following conditions is met, the personal light*1, room light and engine switch illumination*2 fade in. • A key enters any actuation area around the doors when the ignition switch is off and all doors are closed*2. • Any door is opened. • Any door is unlocked when the ignition switch is off and all doors are closed*4. • Ignition switch is turned from ACC to off when all doors are closed.
Fade out immediately	When either of the following conditions is met, the personal light*1, room light and engine switch illumination*2 fade out. • Ignition switch is turned from off to ACC or ON when all doors are closed. • All doors are locked when the ignition switch is off*4.
Illuminate for approximately 15 seconds, and then fade out	All doors are closed when the ignition switch is off.
Fade out (Battery saving control)	When all of the following conditions are met, the main body ECU turns off the lights. • A key is not inserted in the ignition key cylinder*3. • A key is not in the actuation area*2. • There is no change in the condition of the doors for 20 minutes. When any of the following conditions is met, the count of the battery save times will be cleared.

OPERATION	CONDITION
	• A key is inserted in the ignition key cylinder*3. • A key is in the actuation area*2. • Any of the doors is opened.

HINT:

- *1: w/ Sliding Roof
- *2: w/ Smart Key System
- *3: w/o Smart Key System
- *4: w/ Power Door Lock Control System

Last Modified: 3-10-2010	6.4 D	**From:** 200901
Model Year: 2010	**Model:** Corolla	**Doc ID:** RM000000TMF02SX
Title: LIGHTING (INT): LIGHTING SYSTEM: CUSTOMIZE PARAMETERS (2010 Corolla)		

CUSTOMIZE PARAMETERS

HINT:

The following items can be customized.

NOTICE:

- Before attempting to customize vehicle settings, confirm whether it is possible to make the change that the customer has requested.
- Be sure to record the current value before customizing.
- Before troubleshooting the lighting system, pay attention because there is a possibility that a function has been disabled by customizing. If the wireless operation does not function, check that the wireless operation has not been disabled by customizing, then perform troubleshooting.

Illuminated Entry

DISPLAY	DEFAULT	CONTENTS	SETTING
Lighting Time	15 s	Changes the lighting time of the personal light*1, room light and engine switch illumination*2 after closing all of the doors. (It will quickly fade out in case of turning the ignition switch to ON)	7.5 s / 15 s / 30 s
I/L when ACC OFF	ON	Lights up the personal light*1, room light and engine switch illumination*2 when the ignition switch is turned from ACC or ON to off.	ON / OFF
I/L ON W/Door Key Unlock*3	ON	Lights up the personal light*1, room light and engine switch illumination when the doors are unlocked using mechanical key or door control transmitter.	ON / OFF

HINT:

- *1: w/ Sliding Roof
- *2: w/ Smart Key System
- *2: w/ Power Door Lock Control System

Last Modified: 3-10-2010	6.4 T	**From:** 200901
Model Year: 2010	**Model:** Corolla	**Doc ID:** RM000002CE201BX
Title: LIGHTING (INT): LIGHTING SYSTEM: PROBLEM SYMPTOMS TABLE (2010 Corolla)		

PROBLEM SYMPTOMS TABLE

HINT:

Use the table below to help determine the cause of problem symptoms. If multiple suspected areas are listed, the potential causes of the symptoms are listed in order of probability in the "Suspected Area" column of the table. Check each symptom by checking the suspected areas in the order they are listed. Replace parts as necessary.

Illuminated Entry System

SYMPTOM	SUSPECTED AREA	SEE PAGE
Only personal light*1 does not illuminate.	Bulb	-
	Map light assembly	INFO
	Harness or connector	-
Only room light does not illuminate.	Bulb	-
	No. 1 room light assembly	INFO
	Harness or connector	-
Interior lights (personal light*1 and room light) controlled by illuminated entry system does not operate normally.	Door courtesy switch circuit	INFO
	Door lock position switch circuit	INFO
	IG signal circuit	INFO
	ACC signal circuit	INFO
	Interior light circuit	INFO
	Main body ECU (Instrument panel junction block)	-
Engine switch illumination*2 controlled by illuminated entry system does not operate normally. (Interior lights operate normally)	Engine switch illumination circuit	INFO
	Main body ECU (Instrument panel junction block)	-
Battery saving function does not operate.	Door courtesy switch circuit	INFO
	IG signal circuit	INFO
	Main body ECU (Instrument panel junction block)	-

Personal Light

SYMPTOM	SUSPECTED AREA	SEE PAGE
Personal light does not illuminate.	Bulb	-
	Map light assembly	INFO
	Harness or connector	-

Luggage Compartment Room Light

SYMPTOM	SUSPECTED AREA	SEE PAGE
Luggage compartment room light does not illuminate.	Bulb	-
	Luggage compartment light assembly	INFO
	Harness or connector	-

HINT:

- *1: w/ Sliding Roof
- *2: w/ Smart Key System

Last Modified: 3-10-2010	6.4 U	**From:** 200901
Model Year: 2010	**Model:** Corolla	**Doc ID:** RM000000PKV027X
Title: LIGHTING (INT): LIGHTING SYSTEM: DATA LIST / ACTIVE TEST (2010 Corolla)		

DATA LIST / ACTIVE TEST

1. READ DATA LIST

HINT:

Using the Techstream to read the Data List allows the values or states of switches, sensors, actuators and other items to be read without removing any parts. This non-intrusive inspection can be very useful because intermittent conditions or signals may be discovered before parts or wiring is disturbed. Reading the Data List information early in troubleshooting is one way to save diagnostic time.

CAUTION:

In the table below, the values listed under "Normal Condition" are reference values. Do not depend solely on these reference values when deciding whether a part is faulty or not.

(a) Connect the Techstream to the DLC3.

(b) Turn the ignition switch to ON.

(c) Turn the Techstream on.

(d) Enter the following menus: Body Electrical / Main Body / Data List.

(e) Read the Data List according to the display on the Techstream.

Main Body (Main Body ECU)

TESTER DISPLAY	MEASUREMENT ITEM/RANGE	NORMAL CONDITION	DIAGNOSTIC NOTE
ACC SW	Ignition switch ACC signal/ON or OFF	ON: Ignition switch ACC OFF: Ignition switch off	-
IG SW	Ignition switch IG signal/ON or OFF	ON: Ignition switch ON OFF: Ignition switch off	-
D Door Courtesy SW	Driver side door courtesy switch signal/ON or OFF	ON: Driver side door open OFF: Driver side door closed	-
P Door Courtesy SW	Front passenger side door courtesy switch signal/ON or OFF	ON: Front passenger side door open OFF: Front passenger side door closed	-
RR Door Courtesy SW	Rear door courtesy switch RH signal/ON or OFF	ON: Rear door RH open OFF: Rear door RH closed	-
RL Door Courtesy SW	Rear door courtesy switch LH signal/ON or OFF	ON: Rear door LH open OFF: Rear door LH closed	-

TESTER DISPLAY	MEASUREMENT ITEM/RANGE	NORMAL CONDITION	DIAGNOSTIC NOTE
D-Door Lock Pos SW	Driver side door lock position switch signal/ON or OFF	ON: Driver side door unlocked OFF: Driver side door locked	-
P-Door Lock Pos SW	Front passenger side door lock position switch signal/ON or OFF	ON: Front passenger side door unlocked OFF: Front passenger side door locked	-
RR-Door Lock Pos SW	Rear door lock position switch RH signal/ON or OFF	ON: Rear door LH or RH unlocked OFF: Rear door LH and RH locked	-
RL-Door Lock Pos SW	Rear door lock position switch LH signal/ON or OFF	ON: Rear door LH or RH unlocked OFF: Rear door LH and RH locked	-
Luggage Courtesy SW	Luggage compartment door courtesy switch signal/ON or OFF	ON: Luggage compartment door open OFF: Luggage compartment door closed	-

2. PERFORM ACTIVE TEST

HINT:

Using the Techstream to perform Active Tests allows relays, VSVs, actuators and other items to be operated without removing any parts. This non-intrusive functional inspection can be very useful because intermittent operation may be discovered before parts or wiring is disturbed. Performing Active Tests early in trouble shooting is one way to save diagnostic time. Data List information can be displayed while performing Active Tests.

(a) Connect the Techstream to the DLC3.

(b) Turn the ignition switch to ON.

(c) Turn the Techstream on.

(d) Enter the following menus: Body Electrical / Main Body / Active Test.

(e) Perform the Active Test according to the display on the Techstream.

Main Body (Main Body ECU)

TESTER DISPLAY	TEST PART	CONTROL RANGE	DIAGNOSTIC NOTE
Illuminated Entry System	Personal light*1, room light and engine switch illumination*2 (Personal switch OFF, interior light switch in DOOR position, and all doors closed.)	ON/OFF	-

TESTER DISPLAY	TEST PART	CONTROL RANGE	DIAGNOSTIC NOTE
Indicator for Lighting*2	Engine switch illumination (All doors are closed)	ON/OFF	-

HINT:

- *1: w/ Sliding Roof
- *2: w/ Smart Key System

TOYOTA

Last Modified: 3-10-2010	6.4 D	**From:** 200901
Model Year: 2010	**Model:** Corolla	**Doc ID:** RM000000PKS027X
Title: LIGHTING (INT): LIGHTING SYSTEM: DIAGNOSIS SYSTEM (2010 Corolla)		

DIAGNOSIS SYSTEM

1. DESCRIPTION

(a) Lighting system data can be read from the Data Link Connector 3 (DLC3) of the vehicle. When the system seems to be malfunctioning, use the Techstream to check for malfunctions and perform repairs.

2. CHECK DLC3

(a) Check the DLC3 INFO .

3. INSPECT BATTERY VOLTAGE

Standard voltage:
11 to 14 V

If the voltage is below 11 V, recharge or replace the battery before proceeding to the next step.

Last Modified: 3-10-2010	6.4 J	**From:** 200901
Model Year: 2010	**Model:** Corolla	**Doc ID:** RM0000011SQ01OX
Title: LIGHTING (INT): LIGHTING SYSTEM: IG Signal Circuit (2010 Corolla)		

IG Signal Circuit

DESCRIPTION

The main body ECU receives the IG signal to control the illuminated entry system.

WIRING DIAGRAM

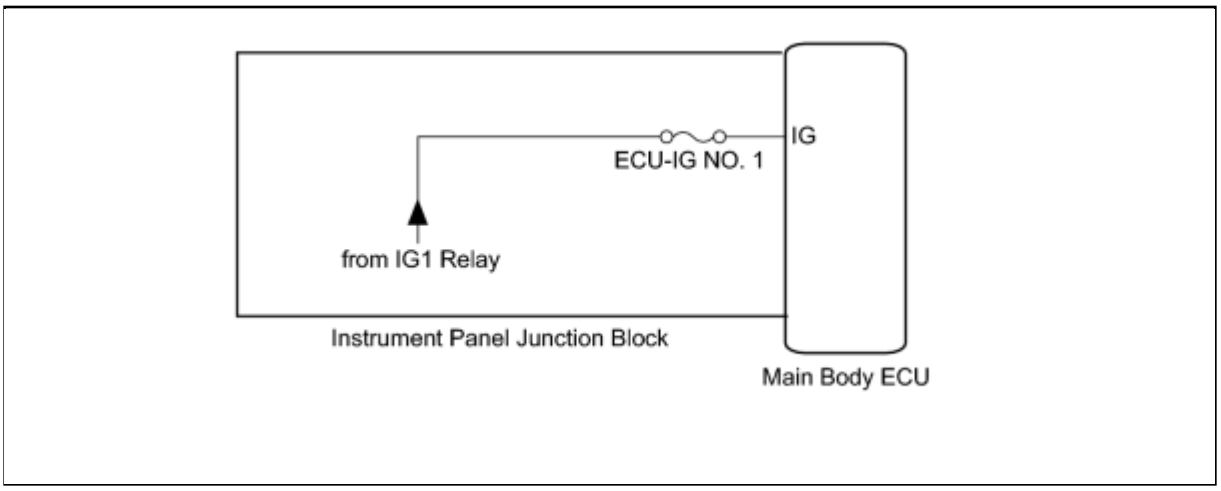

INSPECTION PROCEDURE

PROCEDURE

1.	**READ VALUE USING TECHSTREAM**

(a) Connect the Techstream to the DLC3.

(b) Turn the ignition switch to ON.

(c) Turn the Techstream on.

(d) Enter the following menus: Body Electrical / Main Body / Data List.

(e) Read the display on the Techstream.

Main Body (Main Body ECU)

TESTER DISPLAY	MEASUREMENT ITEM/RANGE	NORMAL CONDITION	DIAGNOSTIC NOTE
IG SW	Ignition switch IG signal/ON or OFF	ON: Ignition switch ON OFF: Ignition switch off	-

OK:
Normal conditions listed above are displayed.

NG ▶ **INSPECT FUSE (ECU-IG NO. 1)**

OK ▶ **PROCEED TO NEXT CIRCUIT INSPECTION SHOWN IN PROBLEM SYMPTOMS TABLE**

2.	**INSPECT FUSE (ECU-IG NO. 1)**

(a) Remove the ECU-IG No. 1 fuse from the instrument panel junction block.

(b) Measure the resistance according to the value(s) in the table below.

Standard Resistance:

TESTER CONNECTION	CONDITION	SPECIFIED CONDITION
ECU-IG No. 1 fuse	Always	Below 1 Ω

NG ▶ **REPLACE FUSE**

OK ▼

3.	**CHECK HARNESS AND CONNECTOR (IG POWER SOURCE CIRCUIT)**

(a) Measure the voltage between the loading slot of the fuse and body ground.

Standard Voltage:

TESTER CONNECTION	SWITCH CONDITION	SPECIFIED CONDITION

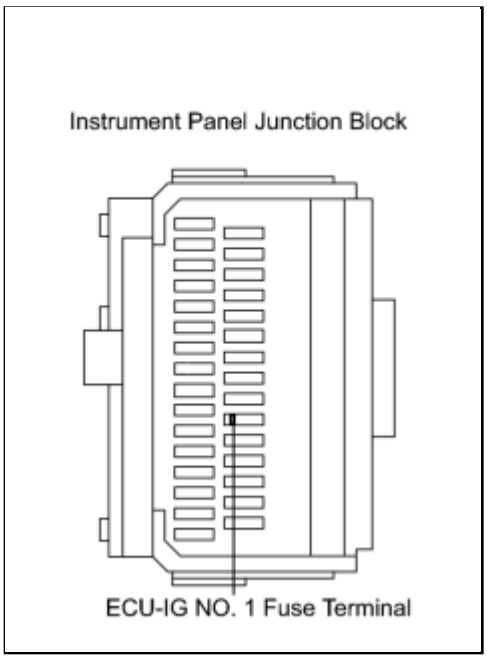

ECU-IG No. 1 fuse terminal - Body ground	Ignition switch off	Below 1 V
	Ignition switch ON	11 to 14 V

NG ▶ **REPAIR OR REPLACE HARNESS OR CONNECTOR**

OK ▶ **REPLACE MAIN BODY ECU (INSTRUMENT PANEL JUNCTION BLOCK)**

Last Modified: 3-10-2010	6.4 J	**From:** 200901
Model Year: 2010	**Model:** Corolla	**Doc ID:** RM000000W5T01WX
Title: LIGHTING (INT): LIGHTING SYSTEM: ACC Signal Circuit (2010 Corolla)		

ACC Signal Circuit

DESCRIPTION

The main body ECU receives the ACC signal to control the illuminated entry system.

WIRING DIAGRAM

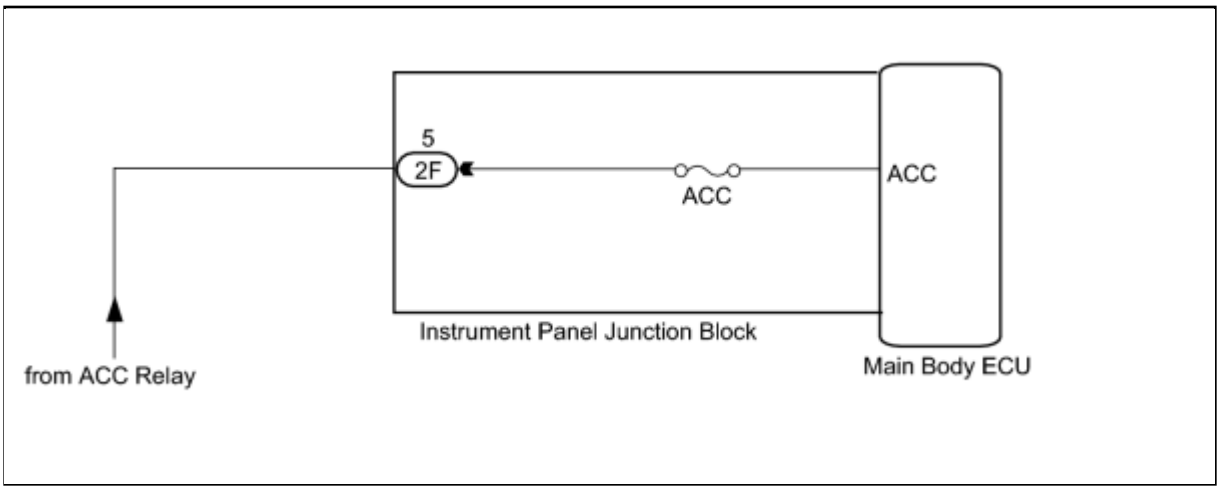

INSPECTION PROCEDURE

PROCEDURE

1.	**READ VALUE USING TECHSTREAM**

(a) Connect the Techstream to the DLC3.

(b) Turn the ignition switch to ON.

(c) Turn the Techstream on.

(d) Enter the following menus: Body Electrical / Main Body / Data List.

(e) Read the display on the Techstream.

Main Body (Main Body ECU)

TESTER DISPLAY	MEASUREMENT ITEM/RANGE	NORMAL CONDITION	DIAGNOSTIC NOTE
ACC SW	Ignition switch ACC signal/ON or OFF	ON: Ignition switch ACC OFF: Ignition switch off	-

OK:
Normal conditions listed above are displayed.

NG ▶ **INSPECT FUSE (ACC)**

OK ▶ **PROCEED TO NEXT CIRCUIT INSPECTION SHOWN IN PROBLEM SYMPTOMS TABLE**

2.	**INSPECT FUSE (ACC)**

(a) Remove the ACC fuse from the instrument panel junction block.

(b) Measure the resistance according to the value(s) in the table below.

Standard Resistance:

TESTER CONNECTION	CONDITION	SPECIFIED CONDITION
ACC fuse	Always	Below 1 Ω

NG ▶ **REPLACE FUSE**

OK ▼

3.	**CHECK HARNESS AND CONNECTOR (ACC POWER SOURCE CIRCUIT)**

(a) Measure the voltage between the loading slot of the fuse and body ground.

Standard Voltage:

TESTER CONNECTION	SWITCH CONDITION	SPECIFIED CONDITION
ACC fuse terminal -	Ignition switch	Below 1 V

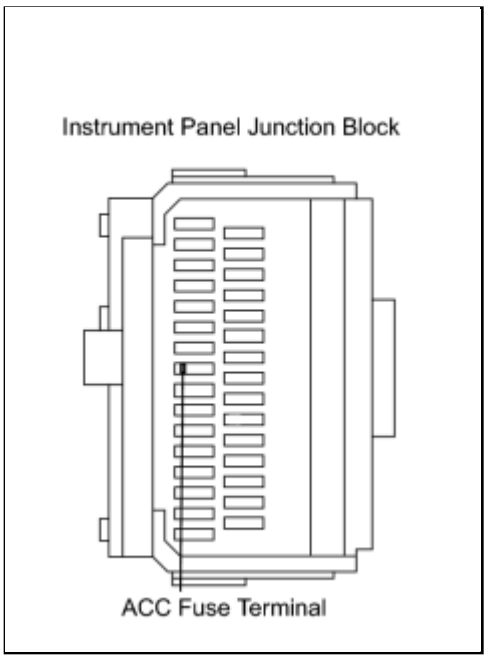

Body ground	off	
	Ignition switch ACC	11 to 14 V

NG ▶ **REPAIR OR REPLACE HARNESS OR CONNECTOR**

OK ▶ **REPLACE MAIN BODY ECU (INSTRUMENT PANEL JUNCTION BLOCK)**

TOYOTA

Last Modified: 3-10-2010	6.4 J	**From:** 200901
Model Year: 2010	**Model:** Corolla	**Doc ID:** RM0000011T301YX
Title: LIGHTING (INT): LIGHTING SYSTEM: Door Courtesy Switch Circuit (2010 Corolla)		

Door Courtesy Switch Circuit

DESCRIPTION

The main body ECU detects the condition of the door courtesy switches.

WIRING DIAGRAM

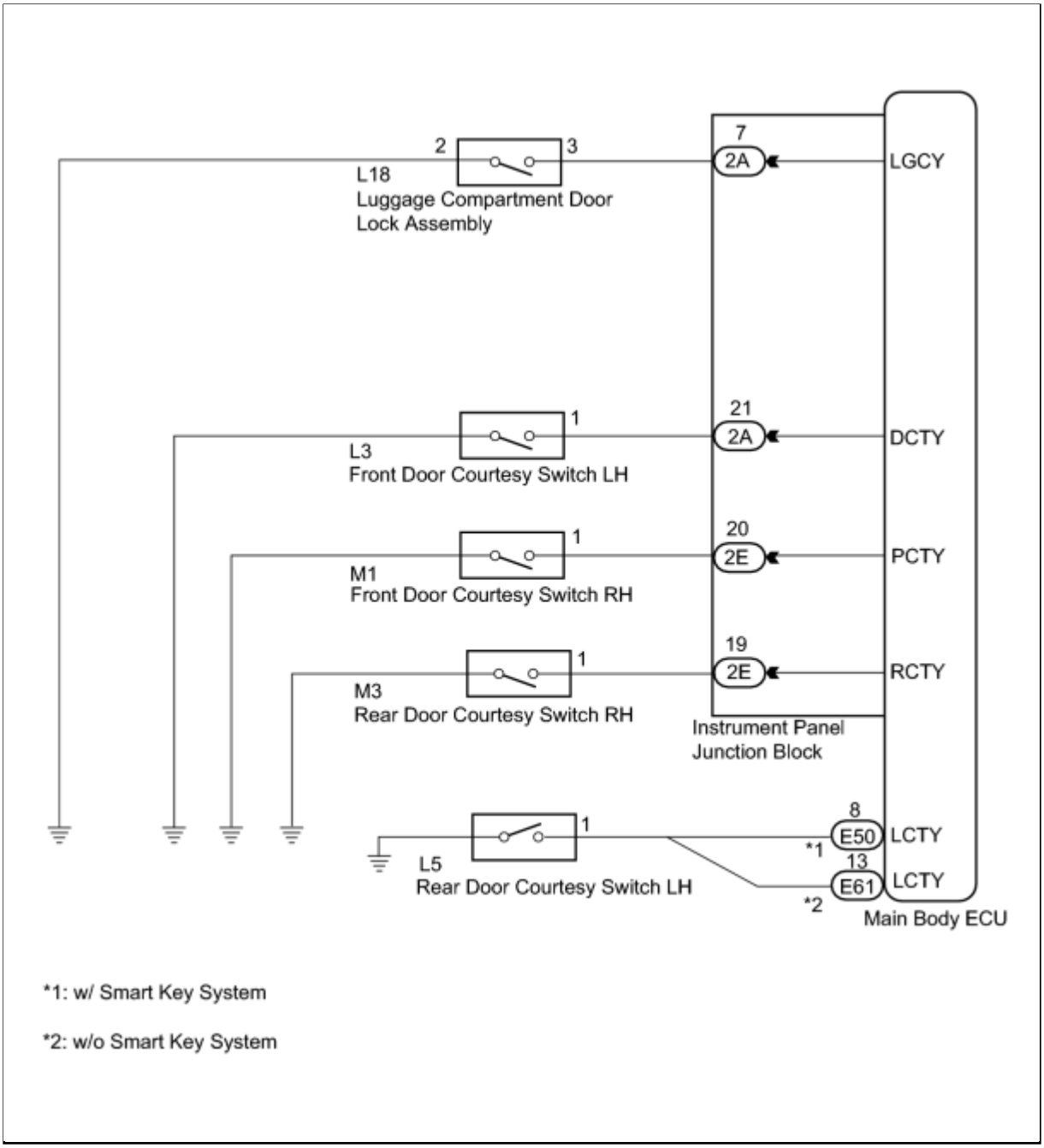

INSPECTION PROCEDURE

PROCEDURE

1.	**READ VALUE USING TECHSTREAM**

(a) Connect the Techstream to the DLC3.

(b) Turn the ignition switch to ON.

(c) Turn the Techstream on.

(d) Enter the following menus: Body Electrical / Main Body / Data List.

(e) Read the display on the Techstream.

Main Body (Main Body ECU)

TESTER DISPLAY	MEASUREMENT ITEM/RANGE	NORMAL CONDITION	DIAGNOSTIC NOTE
D Door Courtesy SW	Driver side door courtesy switch signal/ON or OFF	ON: Driver side door is open OFF: Driver side door is closed	-
P Door Courtesy SW	Front passenger side door courtesy switch signal/ON or OFF	ON: Front passenger side door is open OFF: Front passenger side door is closed	-
RR Door Courtesy SW	Rear door courtesy switch RH signal/ON or OFF	ON: Rear door RH is open OFF: Rear door RH is closed	-
RL Door Courtesy SW	Rear door courtesy switch LH signal/ON or OFF	ON: Rear door LH is open OFF: Rear door LH is closed	-
Luggage Courtesy SW	Luggage compartment door courtesy switch signal/ON or OFF	ON: Luggage compartment door is open OFF: Luggage compartment door is closed	-

OK:

Normal conditions listed above are displayed.

NG ▶ **INSPECT DOOR COURTESY SWITCH**

OK ▶ **PROCEED TO NEXT CIRCUIT INSPECTION SHOWN IN PROBLEM SYMPTOMS TABLE**

2.	**INSPECT DOOR COURTESY SWITCH**

(a) Inspect the front door courtesy switch INFO, rear door courtesy switch INFO, or luggage compartment door courtesy switch INFO.

OK:

Door courtesy switches are normal.

NG ▶ **REPLACE DOOR COURTESY SWITCH**

OK

3.	**CHECK HARNESS AND CONNECTOR (INSTRUMENT PANEL JUNCTION BLOCK - SWITCH)**

(a) Disconnect the E50*1 or E61*2 main body ECU connector.

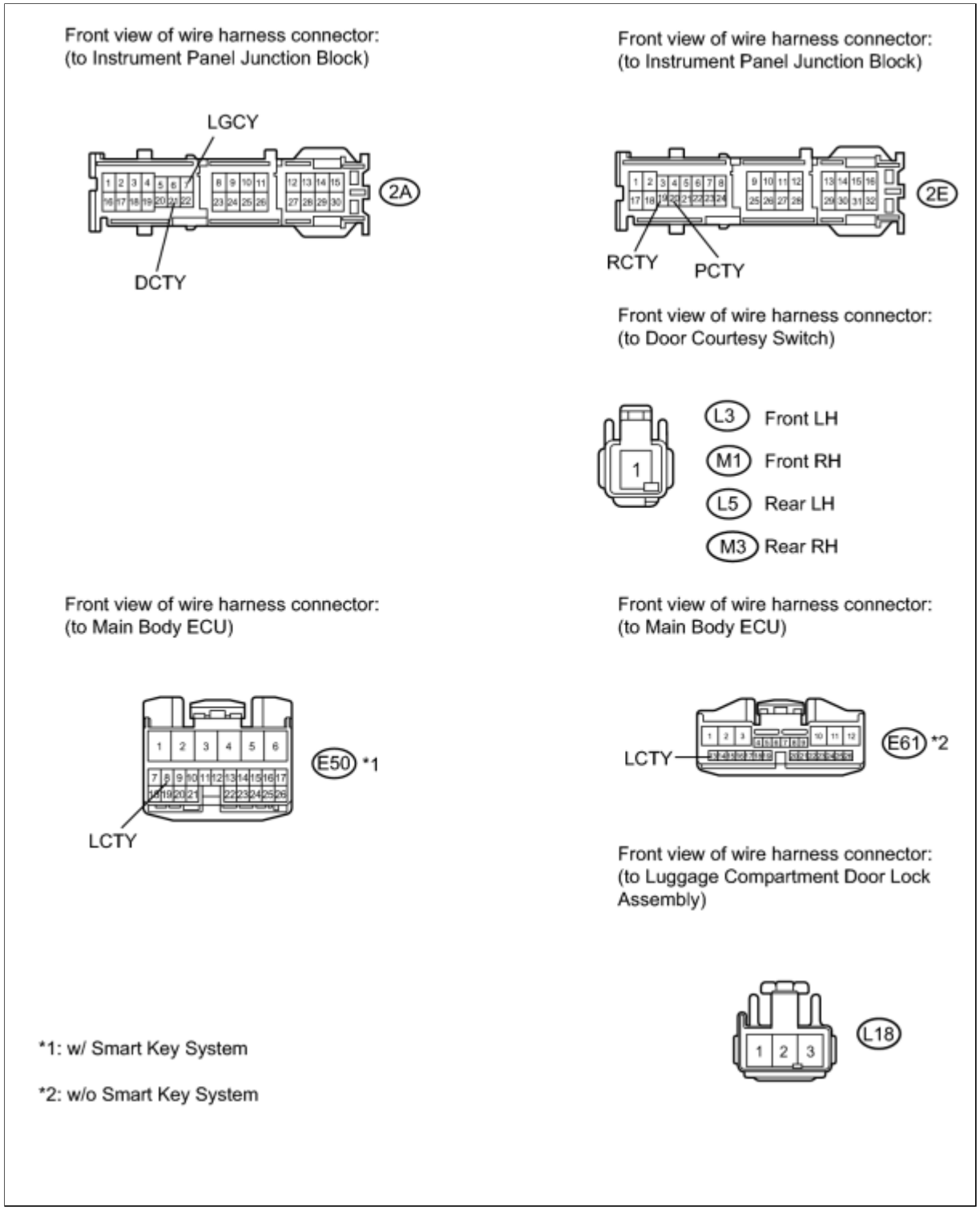

(b) Disconnect the 2A and 2E instrument panel junction block connectors.

(c) Disconnect the L18 door lock assembly connector.

(d) Disconnect each door courtesy switch connector.

(e) Measure the resistance according to the value(s) in the table below.

Standard Resistance:

Front LH

Front RH

Rear LH
Rear RH
Luggage Compartment Door

TESTER CONNECTION	CONDITION	SPECIFIED CONDITION
2A-21 (DCTY) - L3-1	Always	Below 1 Ω
L3-1 - Body ground	Always	10 kΩ or higher

TESTER CONNECTION	CONDITION	SPECIFIED CONDITION
2E-20 (PCTY) - M1-1	Always	Below 1 Ω
M1-1 - Body ground	Always	10 kΩ or higher

TESTER CONNECTION	CONDITION	SPECIFIED CONDITION
E50-8 (LCTY)*1 - L5-1 E61-13 (LCTY)*2 - L5-1	Always	Below 1 Ω
L5-1 - Body ground	Always	10 kΩ or higher

TESTER CONNECTION	CONDITION	SPECIFIED CONDITION
2E-19 (RCTY) - M3-1	Always	Below 1 Ω
M3-1 - Body ground	Always	10 kΩ or higher

TESTER CONNECTION	CONDITION	SPECIFIED CONDITION
2A-7 (LGCY) - L18-3	Always	Below 1 Ω
L18-3 - Body ground	Always	10 kΩ or higher
L18-2 - Body ground	Always	Below 1 Ω

HINT:

- *1: w/ Smart Key System
- *2: w/o Smart Key System

NG ▶ **REPAIR OR REPLACE HARNESS OR CONNECTOR**

OK ▶ **REPLACE MAIN BODY ECU (INSTRUMENT PANEL JUNCTION BLOCK)**

Last Modified: 3-10-2010	6.4 J	**From:** 200901
Model Year: 2010	**Model:** Corolla	**Doc ID:** RM0000011T8022X
Title: LIGHTING (INT): LIGHTING SYSTEM: Door LOCK Position Circuit (2010 Corolla)		

Door LOCK Position Circuit

DESCRIPTION

The main body ECU receives door lock position switch signals to control the illuminated entry system.

WIRING DIAGRAM

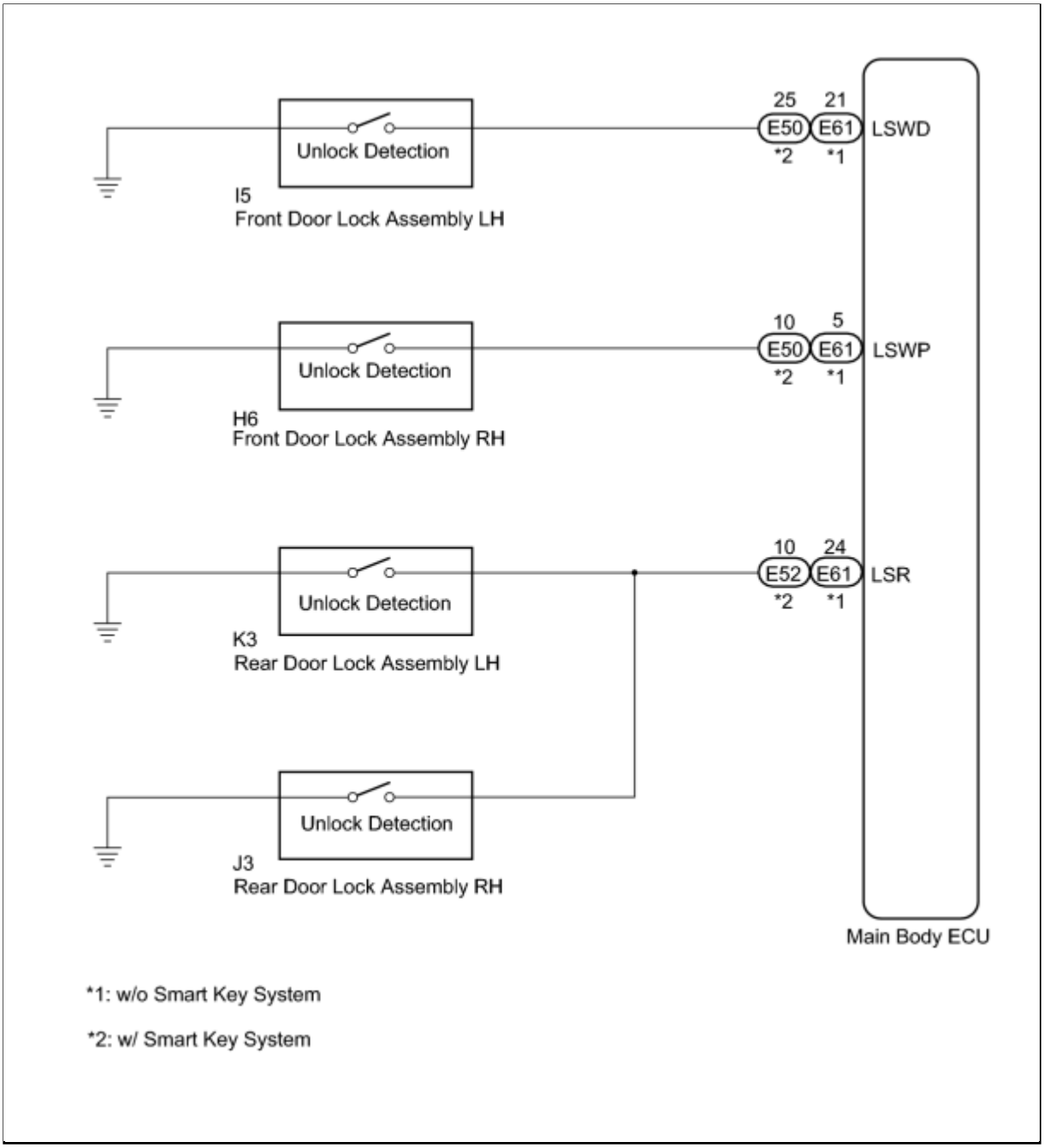

INSPECTION PROCEDURE

PROCEDURE

1.	**READ VALUE USING TECHSTREAM**

(a) Connect the Techstream to the DLC3.

(b) Turn the ignition switch to ON.

(c) Turn the Techstream on.

(d) Enter the following menus: Body Electrical / Main Body / Data List.

(e) Read the display on the Techstream.

Main Body (Main Body ECU)

TESTER DISPLAY	MEASUREMENT ITEM/RANGE	NORMAL CONDITION	DIAGNOSTIC NOTE
D-Door Lock Pos SW	Driver side door lock position switch signal/ON or OFF	ON: Driver side door unlocked OFF: Driver side door locked	-
P-Door Lock Pos SW	Front passenger side door lock position switch signal/ON or OFF	ON: Front passenger side door unlocked OFF: Front passenger side locked	-
RL-Door Lock Pos SW	Rear door lock position switch LH signal/ON or OFF	ON: Rear door LH or RH unlocked OFF: Rear door LH and RH locked	-
RR-Door Lock Pos SW	Rear door lock position switch RH signal/ON or OFF	ON: Rear door LH or RH unlocked OFF: Rear door LH and RH locked	-

OK:
Normal conditions listed above are displayed.

NG ▶ **GO TO POWER DOOR LOCK CONTROL SYSTEM**

OK ▶ **PROCEED TO NEXT CIRCUIT INSPECTION SHOWN IN PROBLEM SYMPTOMS TABLE**

Last Modified: 3-10-2010	6.4 J	**From:** 200901
Model Year: 2010	**Model:** Corolla	**Doc ID:** RM000001T9V01ZX
Title: LIGHTING (INT): LIGHTING SYSTEM: Interior Light Circuit (2010 Corolla)		

Interior Light Circuit

DESCRIPTION

The main body ECU controls the personal light*1 and room light according to the door courtesy switch, door lock position switch, and ignition switch conditions.

HINT:

***1: w/ Sliding Roof**

WIRING DIAGRAM

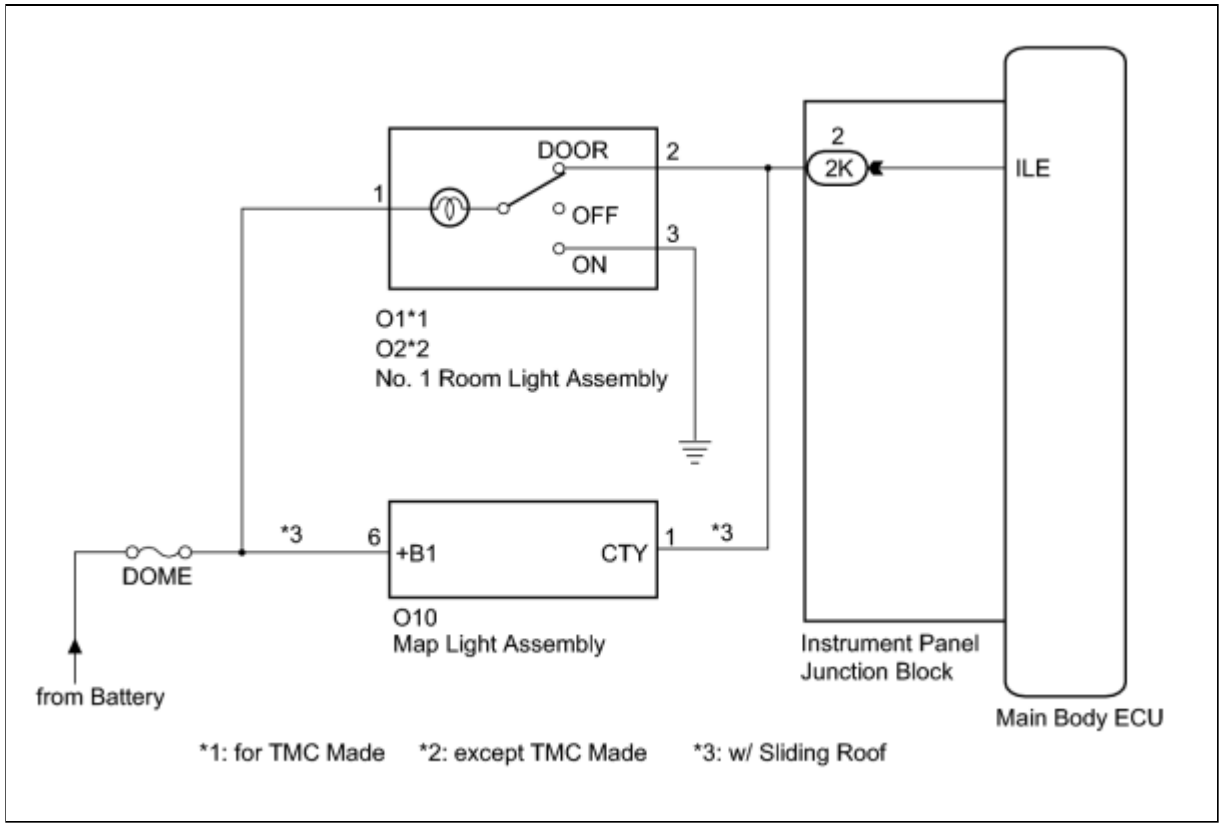

INSPECTION PROCEDURE

PROCEDURE

1.	PERFORM ACTIVE TEST USING TECHSTREAM

(a) Connect the Techstream to the DLC3.

(b) Turn the ignition switch to ON.

(c) Turn the Techstream on.

(d) Enter the following menus: Body Electrical / Main Body / Active Test.

(e) Check the operation.

Main Body (Main Body ECU)

TESTER DISPLAY	TEST PART	CONTROL RANGE	DIAGNOSTIC NOTE
Illuminated Entry System	Personal light*1 and room light (Personal switch OFF, Interior light switch is in DOOR position and all doors are closed)	ON/OFF	-

HINT:

***1: w/ Sliding Roof**

OK:
Each light fades in.

NG ▶ **INSPECT FUSE (DOME)**

OK ▶ **PROCEED TO NEXT CIRCUIT INSPECTION SHOWN IN PROBLEM SYMPTOMS TABLE**

2.	INSPECT FUSE (DOME)

(a) Remove the DOME fuse from the engine room relay block.

(b) Measure the resistance according to the value(s) in the table below.

Standard Resistance:

TESTER DISPLAY	CONDITION	SPECIFIED CONDITION
DOME fuse	Always	Below 1 Ω

NG ▶ **REPLACE FUSE**

OK

3.	**CHECK HARNESS AND CONNECTOR (BATTERY - INSTRUMENT PANEL JUNCTION BLOCK)**

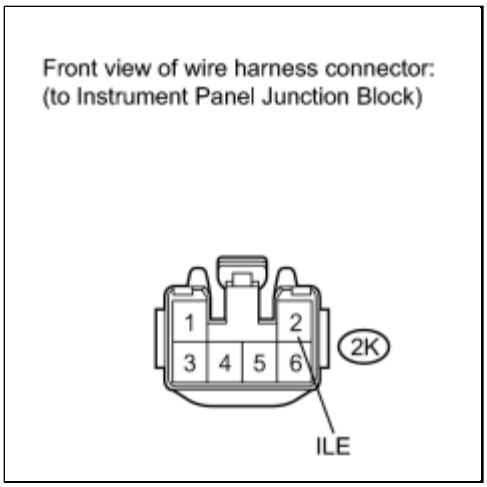

(a) Disconnect the 2K instrument panel junction block assembly connector.

(b) Measure the voltage according to the value(s) in the table below.

Standard Voltage:

TESTER CONNECTION	CONDITION	SPECIFIED CONDITION
2K-2 (ILE) - Body ground	Always	11 to 14 V

NG ▶ **REPAIR OR REPLACE HARNESS OR CONNECTOR**

OK ▶ **REPLACE MAIN BODY ECU (INSTRUMENT PANEL JUNCTION BLOCK)**

TOYOTA

Last Modified: 3-10-2010	6.4 J	**From:** 200901
Model Year: 2010	**Model:** Corolla	**Doc ID:** RM000002HUR019X
Title: LIGHTING (INT): LIGHTING SYSTEM: Engine Switch Illumination Circuit (2010 Corolla)		

Engine Switch Illumination Circuit

DESCRIPTION

When either of the following conditions is met, the engine switch illumination comes on.

- Light control switch is in TAIL position.
- Interior light is turned on by the illuminated entry system.

WIRING DIAGRAM

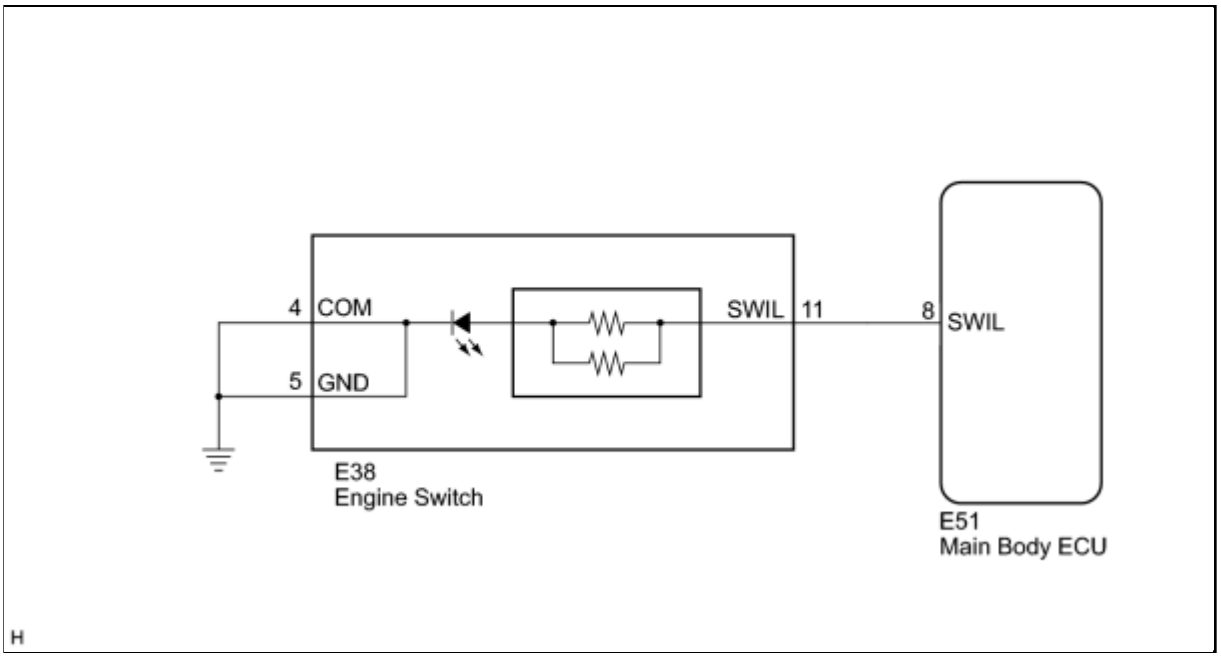

INSPECTION PROCEDURE

PROCEDURE

1.	**PERFORM ACTIVE TEST USING TECHSTREAM**

(a) Connect the Techstream to the DLC3.

(b) Turn the ignition switch to ON.

(c) Turn the Techstream on.

(d) Enter the following menus: Body Electrical / Main Body / Active Test.

(e) Check the operation.

Main Body (Main Body ECU)

TESTER DISPLAY	TEST PART	CONTROL RANGE	DIAGNOSTIC NOTE
Indicator for Lighting	Engine switch illumination (All doors are closed)	ON/OFF	-

OK:

Engine switch illumination comes on.

NG ▶ **INSPECT ENGINE SWITCH**

OK ▶ **PROCEED TO NEXT CIRCUIT INSPECTION SHOWN IN PROBLEM SYMPTOMS TABLE**

2.	**INSPECT ENGINE SWITCH**

(a) Remove the engine switch.

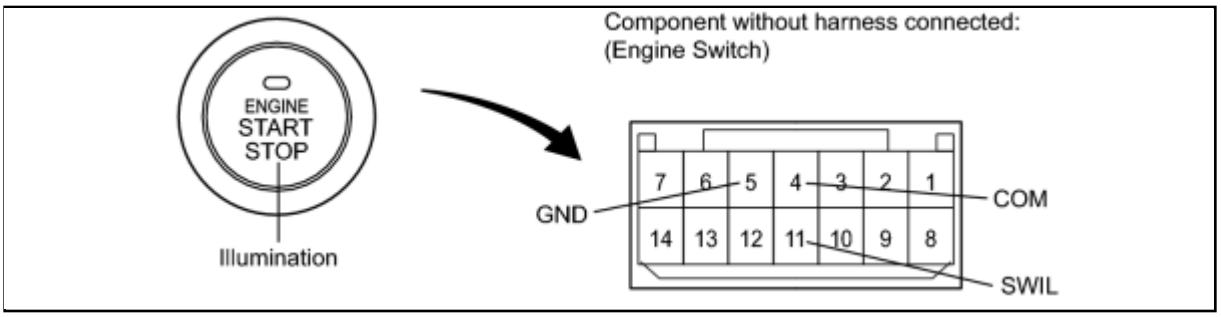

(b) Connect a (+) lead from the battery to terminal 11 and a (-) lead to terminal 4 or 5.

(c) Check that the illumination comes on.

OK:

Engine switch illumination comes on.

NG ▶ **REPLACE ENGINE SWITCH**

OK ▼

3.	**CHECK HARNESS OR CONNECTOR (ENGINE SWITCH - MAIN BODY ECU AND BODY GROUND)**

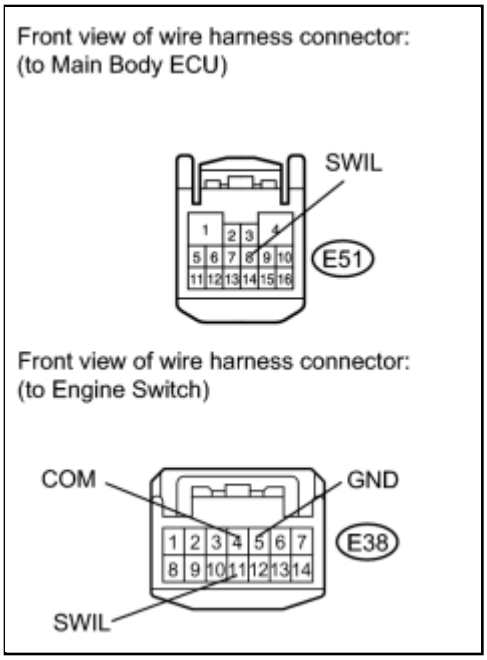

(a) Disconnect the E51 main body ECU connector.

(b) Disconnect the E38 engine switch connector.

(c) Measure the resistance according to the value(s) in the table below.

Standard Resistance:

TESTER CONNECTION	CONDITION	SPECIFIED CONDITION
E38-11 (SWIL) - E51-8 (SWIL)	Always	Below 1 Ω
E38-4 (COM) or E38-5 (GND) - Body ground	Always	Below 1 Ω
E51-8 (SWIL) - Body ground	Always	10 kΩ or higher

NG ▶ **REPAIR OR REPLACE HARNESS OR CONNECTOR**

OK ▶ **REPLACE MAIN BODY ECU (INSTRUMENT PANEL JUNCTION BLOCK)**

Last Modified: 3-10-2010	6.4 R	**From:** 200901
Model Year: 2010	**Model:** Corolla	**Doc ID:** RM00000232R009X
Title: LIGHTING (EXT): LIGHTING SYSTEM: PARTS LOCATION (2010 Corolla)		

PARTS LOCATION

ILLUSTRATION

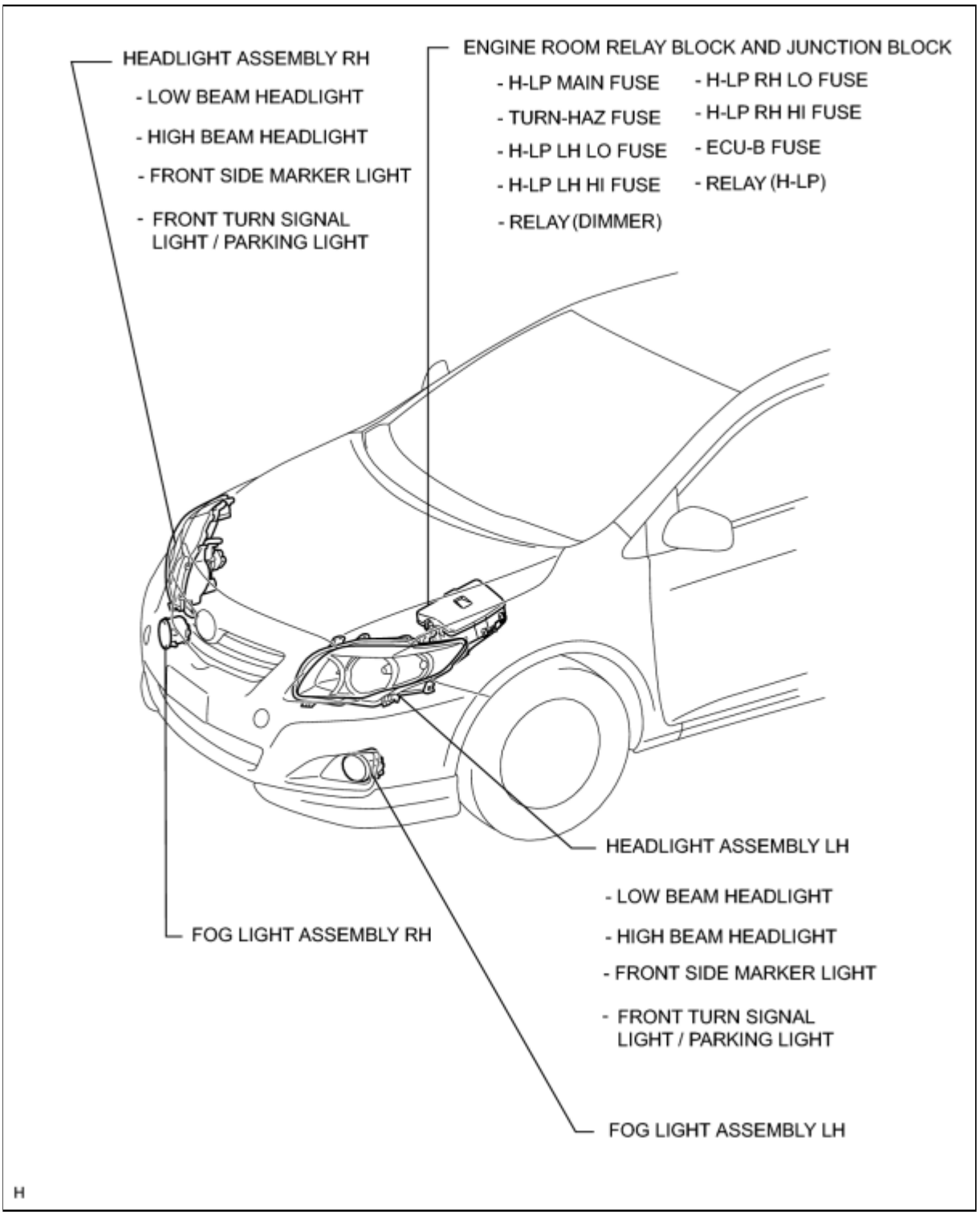

ILLUSTRATION

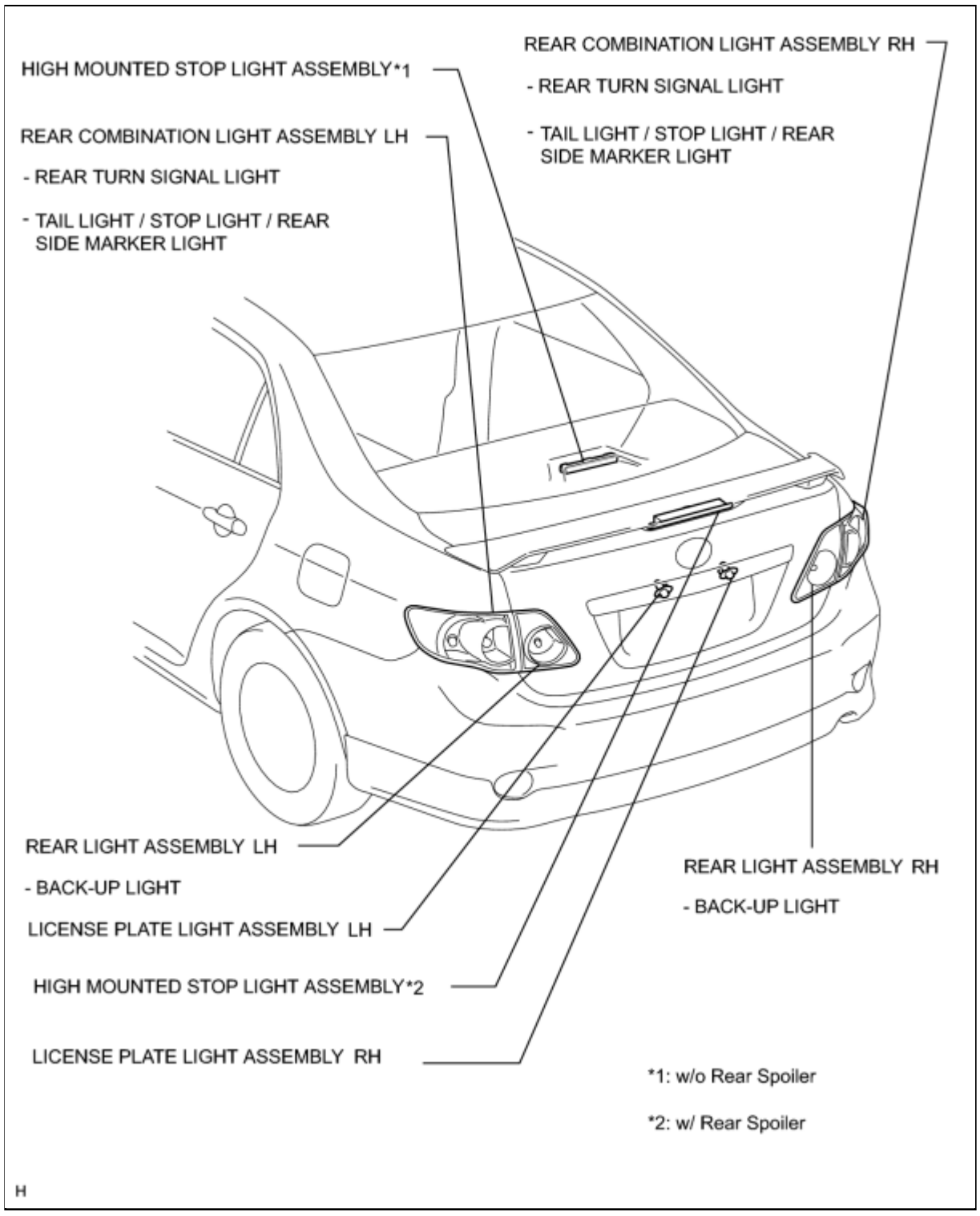

ILLUSTRATION

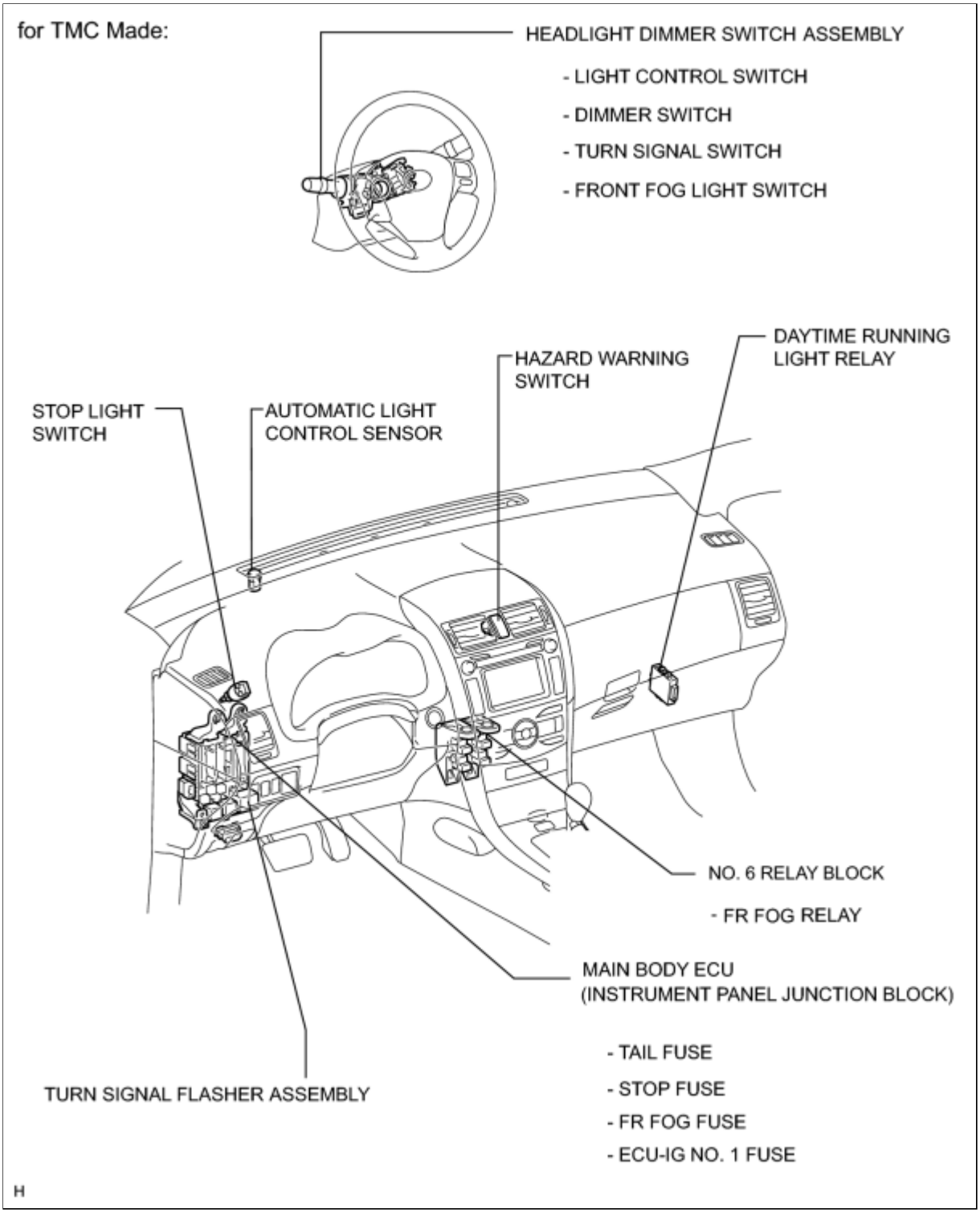

ILLUSTRATION

for NUMMI, TMMC Made:

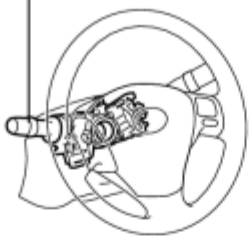

HEADLIGHT DIMMER SWITCH ASSEMBLY

- LIGHT CONTROL SWITCH
- DIMMER SWITCH
- TURN SIGNAL SWITCH
- FRONT FOG LIGHT SWITCH

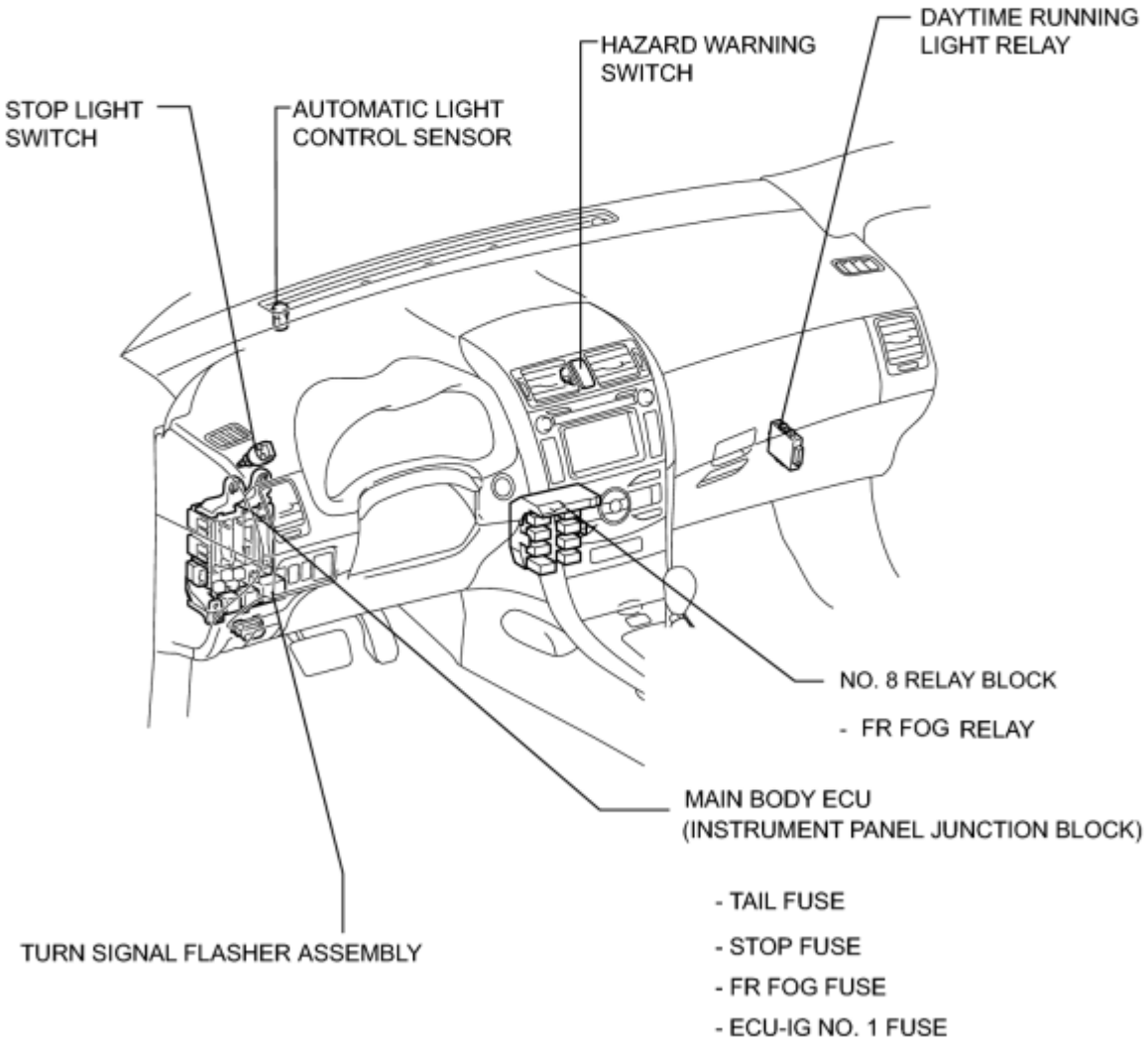

H

Last Modified: 3-10-2010	6.4 L	**From:** 200901
Model Year: 2010	**Model:** Corolla	**Doc ID:** RM000000YRX00CX
Title: LIGHTING (EXT): LIGHTING SYSTEM: PRECAUTION (2010 Corolla)		

PRECAUTION

1. PRECAUTION FOR HEADLIGHT BULB REPLACEMENT

(a) If even a thin film of oil is left on the surface of a halogen light, its service life will be shortened because the light will operate at a higher temperature.

(b) Handle each halogen light with care. Dropping, hitting or damaging the bulb in any way may result in it exploding and shattering because of the high internal pressure.

(c) Always prepare a new bulb for immediate replacement. While replacing the bulb, the lens may attract dust and moisture if removed from the vehicle for too long.

(d) Always use a bulb of the same wattage for replacement.

(e) Securely reinstall the socket after bulb replacement. The lens may become cloudy or the light cavity may fill with water through gaps around the socket if it is not installed correctly.

2. EXPRESSIONS OF IGNITION SWITCH

(a) The type of ignition switch used on this model differs according to the specifications of the vehicle. The expressions listed in the table below are used in this section.

SWITCH TYPE		IGNITION SWITCH (POSITION)	ENGINE SWITCH (CONDITION)
Expression	Ignition switch off	LOCK	Off
	Ignition switch ON	ON	On (IG)
	Ignition switch ACC	ACC	On (ACC)
	Engine start	START	Start

Last Modified: 3-10-2010	6.4 D	**From:** 200901
Model Year: 2010	**Model:** Corolla	**Doc ID:** RM000002CDY013X
Title: LIGHTING (EXT): LIGHTING SYSTEM: SYSTEM DESCRIPTION (2010 Corolla)		

SYSTEM DESCRIPTION

1. EXTERIOR LIGHT CONTROL SYSTEM

The exterior light control system has the following functions:

- Automatic Light Control
- Manual Light Control
- High Beam Control
- Passing Light Control
- Front Fog Light Control
- Daytime Running Light Control
- Low beam headlight Indicator Light Control
- High beam headlight Indicator Light Control

(a) Automatic Light Control

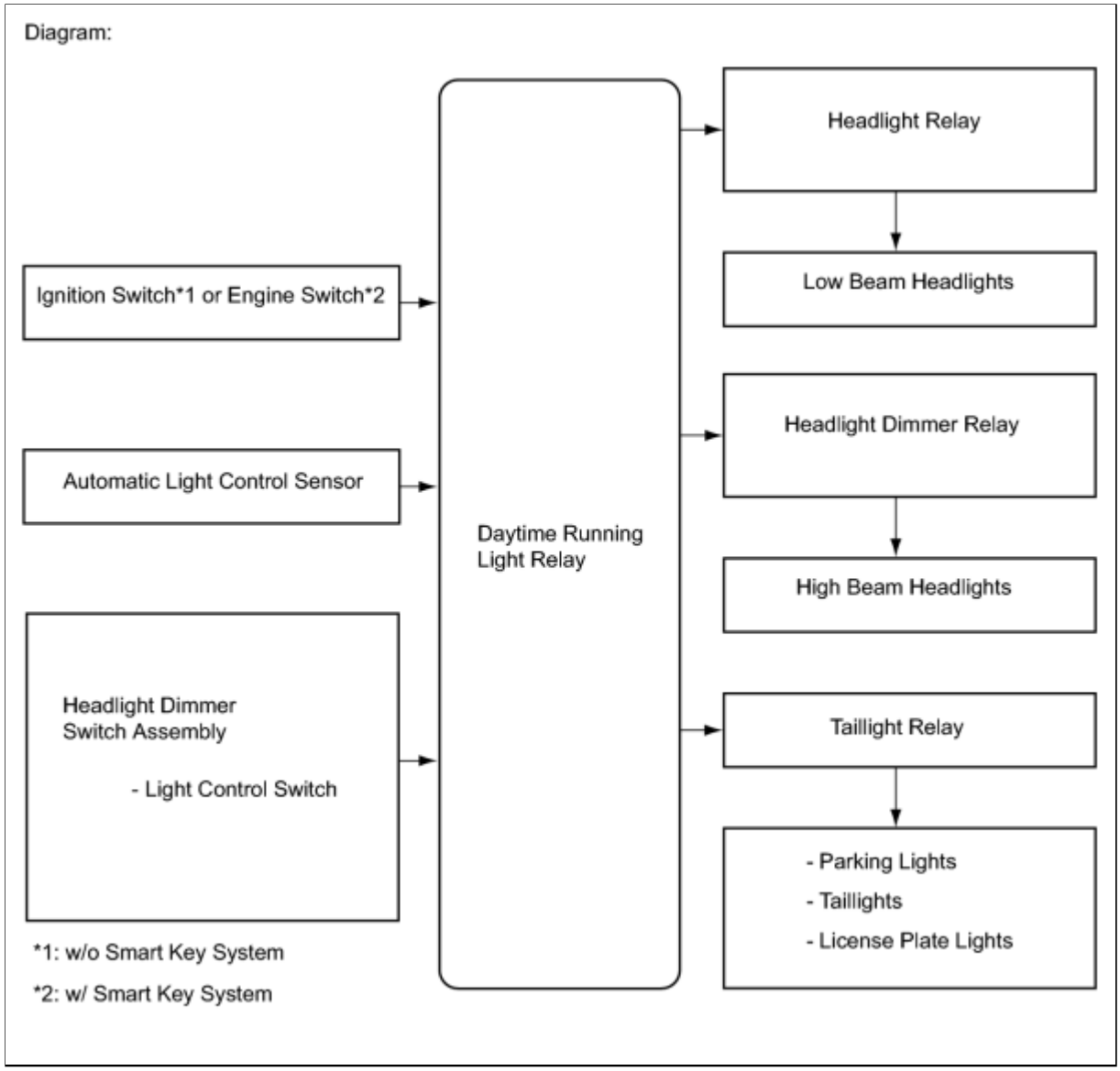

(1) General

The automatic light control sensor detects ambient light, converts it into an electrical signal, and sends the signal to the daytime running light relay. The daytime running light relay automatically turns the headlights and taillights on or off according to the signal. During the day, only the daytime running lights are turned on. At night, taillights (parking lights, taillights and license plate lights) and low beam headlights are turned on.

(2) Fail-Safe

If the daytime running light relay does not receive a signal due to a light control sensor malfunction or open circuit, either of the following conditions will occur.

- If the taillights (parking lights, taillights and license plate lights) and the low beam headlights are on, they will remain on.
- If the taillights (parking lights, taillights and license plate lights) and the low beam headlights are not on, they will remain off.

(b) Manual Light Control

- Manual light control illuminates the low beam headlights and taillights (parking lights, taillights and license plate lights) by manual operation of the light control switch.
- When the light control switch is turned to the TAIL position, the daytime running light

relay assembly turns the taillights on. When the light control switch is turned to the HEAD position, the daytime running light relay turns the low beam headlights and taillights on.

(c) High Beam Control

- High beam control illuminates farther ahead than normal.
- When both of the following conditions are met, the high beam headlights come on:
    - Low beam headlights are turned on by the automatic light control or manual light control.
    - Dimmer switch is in HIGH position.

(d) Passing Light Control

- Passing light control illuminates the high beam headlights in order to allow an oncoming vehicle to become aware of the vehicle's presence while driving with poor visibility.
- When the dimmer switch is turned to the HIGH FLASH position, the high beam headlights come on.

(e) Front Fog Light Control

- When both of the following conditions are met, the front fog lights come on:
    - The low beam headlights are turned on using either automatic light control or manual operation, and the high beam headlights are off.
    - Front fog light switch is on.

    HINT:

    The fog lights will turn on as long as the high beam headlights are off, even when the headlights are turned on via automatic light control.

- When either of the following conditions is met, the front fog lights turn off:
    - Front fog light switch is off.
    - Low beam headlight switch is off or high beam headlight switch is on.

(f) Daytime Running Light Control

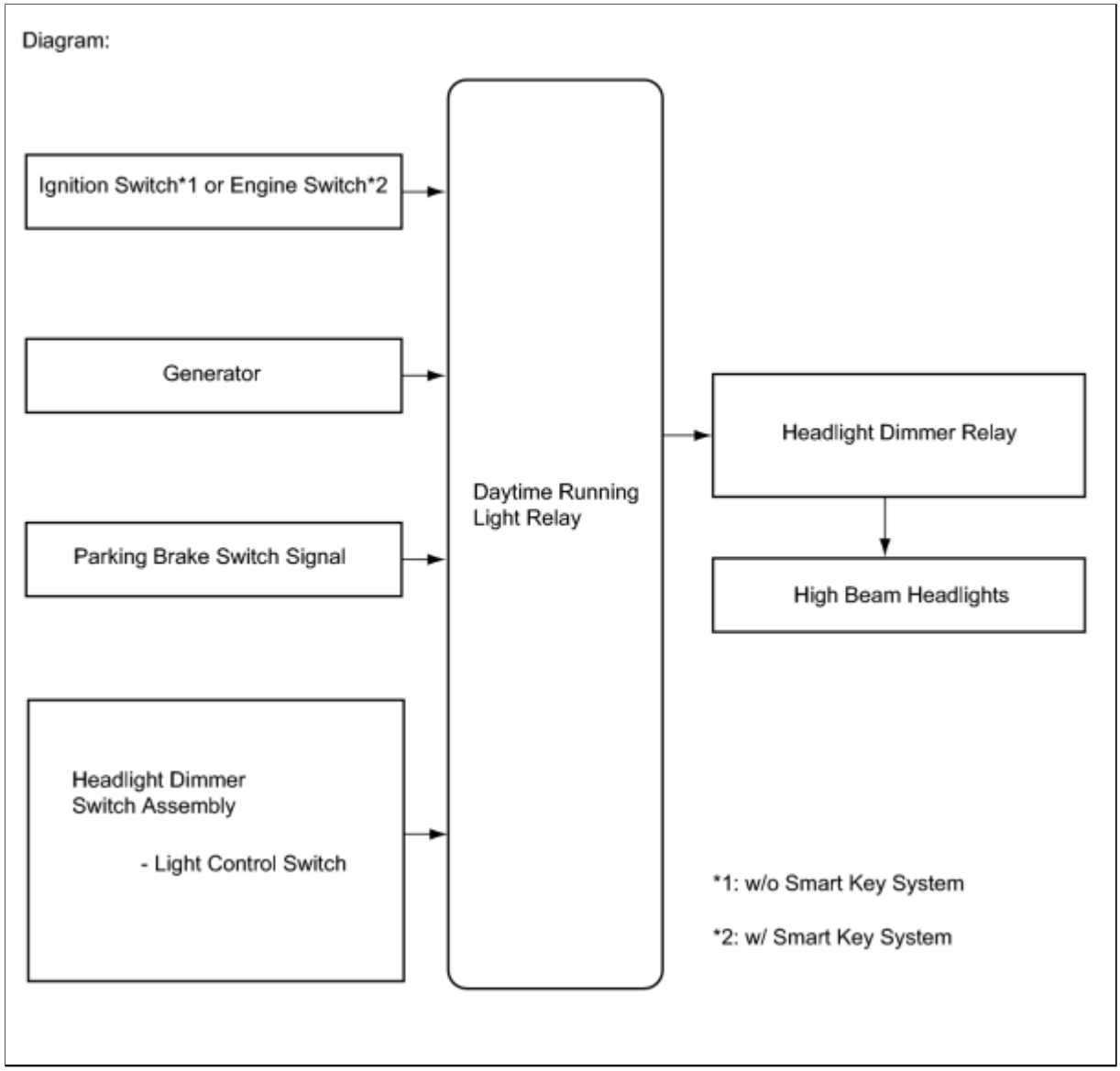

- The daytime running light control is designed to automatically turn on the high beam headlights during the day to make the vehicle more visible to other drivers and pedestrians. Daytime running light control is operated by the daytime running light relay.

  HINT:

  The daytime running light relay dims the high beam headlights when operating them as daytime running lights.

- The daytime running light control will begin operating when all of the following conditions are met:
  - Ignition switch is ON.
  - Engine is running.
  - Parking brake switch is off.
  - Light control switch is in OFF or TAIL.
- The daytime running light control will be cancelled if the light control switch is manually switched to the HEAD position during daytime running light control operation.

(g) Low beam headlight Indicator Light Control (for USA only)

- The low beam headlight indicator light is controlled by the daytime running light relay.
- The daytime running light relay will send a signal to the combination meter to illuminate the indicator when both of the following conditions are met:
    - Ignition switch is ON.
    - Low beam headlights are on.
- When either of the following conditions is met, the low beam headlight indicator turns off:
    - Ignition switch is off
    - Low beam headlights are off.

(h) High beam headlight Indicator Light Control

- The high beam headlight indicator light is controlled by the daytime running light relay.
- The daytime running light relay will send a signal to the combination meter to illuminate the indicator when both of the following conditions are met:
    - Ignition switch is ON.
    - High beam headlights are on.

HINT:

When the daytime running lights are operating, the high beam headlight indicator does not illuminate.

- When either of the following conditions is met, the high beam headlight indicator turns off:
    - Ignition switch is off.
    - High beam headlights are off.

Last Modified: 3-10-2010	6.4 U	**From:** 200901
Model Year: 2010	**Model:** Corolla	**Doc ID:** RM000002CDZ00WX
Title: LIGHTING (EXT): LIGHTING SYSTEM: SYSTEM DIAGRAM (2010 Corolla)		

SYSTEM DIAGRAM

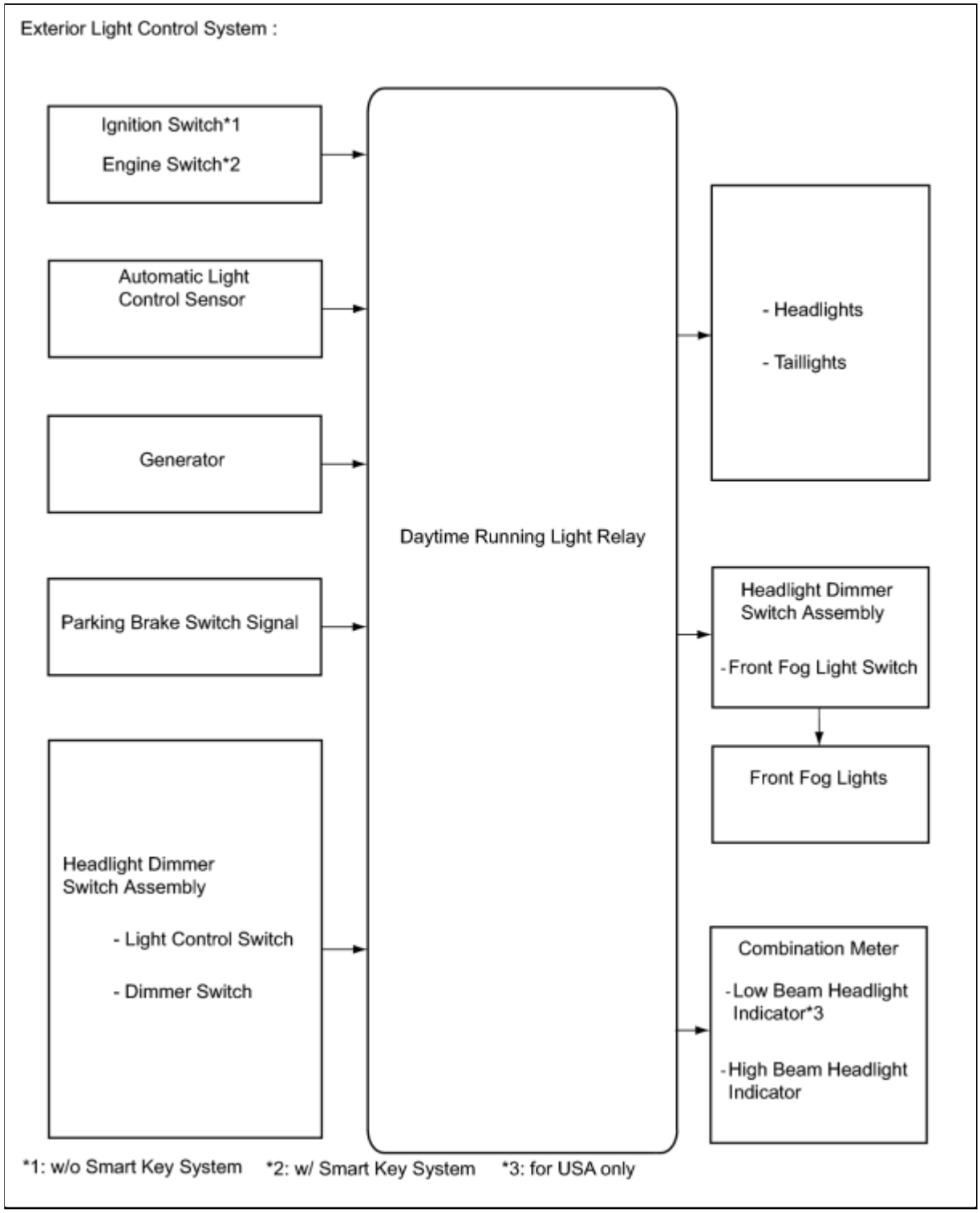

Last Modified: 3-10-2010	6.4 D	**From:** 200901
Model Year: 2010	**Model:** Corolla	**Doc ID:** RM000000PKJ032X
Title: LIGHTING (EXT): LIGHTING SYSTEM: HOW TO PROCEED WITH TROUBLESHOOTING (2010 Corolla)		

HOW TO PROCEED WITH TROUBLESHOOTING

HINT:

- Use the following procedure to troubleshoot the lighting system.

1.	**VEHICLE BROUGHT TO WORKSHOP**

NEXT

2.	**CUSTOMER PROBLEM ANALYSIS AND SYMPTOM CHECK**

NEXT

3.	**INSPECT BATTERY VOLTAGE**

Standard Voltage:
11 to 14 V

If the voltage is below 11 V, recharge or replace the battery before proceeding to the next step.

NEXT

4.	**PROBLEM SYMPTOMS TABLE**

Result:

RESULT	PROCEED TO
Fault is not listed in problem symptoms table	A
Fault is listed in problem symptoms table	B

B ▶ **Go to step 6**

A

▼

5.	OVERALL ANALYSIS AND TROUBLESHOOTING*

(a) Terminals of ECU INFO

NEXT

▼

6.	ADJUST, REPAIR OR REPLACE

NEXT

▼

7.	CONFIRMATION TEST

NEXT ▶ **END**

Last Modified: 3-10-2010	6.4 T	**From:** 200901
Model Year: 2010	**Model:** Corolla	**Doc ID:** RM000002CE201CX
Title: LIGHTING (EXT): LIGHTING SYSTEM: PROBLEM SYMPTOMS TABLE (2010 Corolla)		

PROBLEM SYMPTOMS TABLE

HINT:

Use the table below to help determine the cause of problem symptoms. If multiple suspected areas are listed, the potential causes of the symptoms are listed in order of probability in the "Suspected Area" column of the table. Check each symptom by checking the suspected areas in the order they are listed. Replace parts as necessary.

Headlight

SYMPTOM	SUSPECTED AREA	SEE PAGE
One LO-beam headlight does not illuminate.	H-LP LH LO fuse or H-LP RH LO fuse	-
	Bulb	-
	Harness or connector	-
Both left and right LO-beam headlights do not illuminate.	H-LP MAIN fuse	-
	Light control switch circuit	INFO
	Headlight relay circuit	INFO
	Daytime running light relay	INFO
One HI-beam headlight does not illuminate.	H-LP LH HI fuse or H-LP RH HI fuse	-
	Bulb	-
	Harness or connector	-
Both left and right HI-beam headlights do not illuminate.	Light control switch circuit	INFO
	Headlight (HI-BEAM) circuit	INFO
	Daytime running light relay	-
"High Flash" headlight does not illuminate (Passing function).	Light control switch circuit	INFO
	Daytime running light relay	INFO

Taillight

SYMPTOM	SUSPECTED AREA	SEE PAGE
One front parking light does not	Bulb	-

SYMPTOM	SUSPECTED AREA	SEE PAGE
illuminate.	Harness or connector	-
One rear taillight does not illuminate.	Bulb	-
	Harness or connector	-
One license plate light does not illuminate.	Bulb	-
	Harness or connector	-
All lights do not illuminate.	TAIL fuse	-
	Light control switch circuit	INFO
	Taillight relay circuit	INFO
	Daytime running light relay	INFO
	Main body ECU (Instrument panel junction block)	-

Daytime Running Light Control

SYMPTOM	SUSPECTED AREA	SEE PAGE
Daytime running light control does not operate (Headlight and taillight are normal).	Light control switch circuit	INFO
	Parking brake switch circuit	INFO
	Generator signal circuit	INFO
	Power source circuit	INFO
	Headlight (HI-BEAM) circuit	INFO
	Daytime running light relay	INFO

Stop Light

SYMPTOM	SUSPECTED AREA	SEE PAGE
One stop light does not illuminate.	Bulb	-
	Harness or connector	-
High-mounted stop light does not illuminate.	High-mounted stop light assembly (w/ Rear Spoiler)	INFO

SYMPTOM	SUSPECTED AREA	SEE PAGE
	High-mounted stop light assembly (w/o Rear Spoiler)	INFO
	Harness or connector	-
All lights do not operate.	STOP fuse	-
	Stop light switch	INFO
	Harness or connector	-

Front Fog Light

SYMPTOM	SUSPECTED AREA	SEE PAGE
One fog light does not illuminate.	Bulb	-
	Harness or connector	-
Both left and right fog lights do not illuminate (Headlight is normal).	FR FOG fuse	-
	Front fog light circuit	INFO
	Daytime running light relay	INFO

Turn Signal and Hazard Warning Light

SYMPTOM	SUSPECTED AREA	SEE PAGE
Hazard warning lights do not operate (Turn signal lights are normal).	TRN-HAZ fuse	-
	Hazard warning switch	INFO
	Turn signal flasher assembly	INFO
	Harness or connector	-
Turn signal lights do not operate (Hazard warning lights are normal).	ECU-IG2 fuse	-
	Headlight dimmer switch assembly	INFO
	Turn signal flasher assembly	INFO
	Harness or connector	-
Hazard warning lights and turn signal lights do not operate.	TRN-HAZ fuse and ECU-IG2 fuse	-
	Turn signal flasher assembly	INFO
	Harness or connector	-

SYMPTOM	SUSPECTED AREA	SEE PAGE
Turn signal lights do not operate in one direction.	Headlight dimmer switch assembly	INFO
	Turn signal flasher assembly	INFO
	Harness or connector	-
Only one bulb does not operate.	Bulb	-
	Harness or connector	-

Back-up Light

SYMPTOM	SUSPECTED AREA	SEE PAGE
One back-up light does not illuminate.	Bulb	-
	Harness or connector	-
Both left and right back-up lights do not illuminate.	Bulb	-
	Park/Neutral position switch (for U341E automatic transaxle)	INFO
	Park/Neutral position switch (for U250E automatic transaxle)	INFO
	Back-up light switch (for C59)	INFO
	Back-up light switch (for E351)	INFO
	Harness or connector	-

Headlight Indicator

SYMPTOM	SUSPECTED AREA	SEE PAGE
Low beam headlight indicator does not come on.	Indicator circuit	INFO
	Daytime running light relay	INFO
High beam headlight indicator does not come on.	Indicator circuit	INFO
	Daytime running light relay	INFO

Automatic Light Control

SYMPTOM	SUSPECTED AREA	SEE PAGE
Automatic light control does not operate normally (Manual Light control operates normally).	Automatic light control sensor circuit	INFO

SYMPTOM	SUSPECTED AREA	SEE PAGE
	Power source circuit	INFO
	Daytime running light relay	INFO

Last Modified: 3-10-2010	6.4 D	**From:** 200901
Model Year: 2010	**Model:** Corolla	**Doc ID:** RM000003HJ3002X
Title: LIGHTING (EXT): LIGHTING SYSTEM: OPERATION CHECK (2010 Corolla)		

OPERATION CHECK

1. DAYTIME RUNNING LIGHT OPERATION CHECK

(a) Turn the light control switch off.

(b) Start the engine.

(c) Release the parking brake.

(d) Check that the daytime running lights (dimmed high beam headlights) come on.

Last Modified: 3-10-2010	6.4 U	**From:** 200901
Model Year: 2010	**Model:** Corolla	**Doc ID:** RM000002CE100YX
Title: LIGHTING (EXT): LIGHTING SYSTEM: TERMINALS OF ECU (2010 Corolla)		

TERMINALS OF ECU

1. CHECK DAYTIME RUNNING LIGHT RELAY

(a) Disconnect the E91 relay connector.

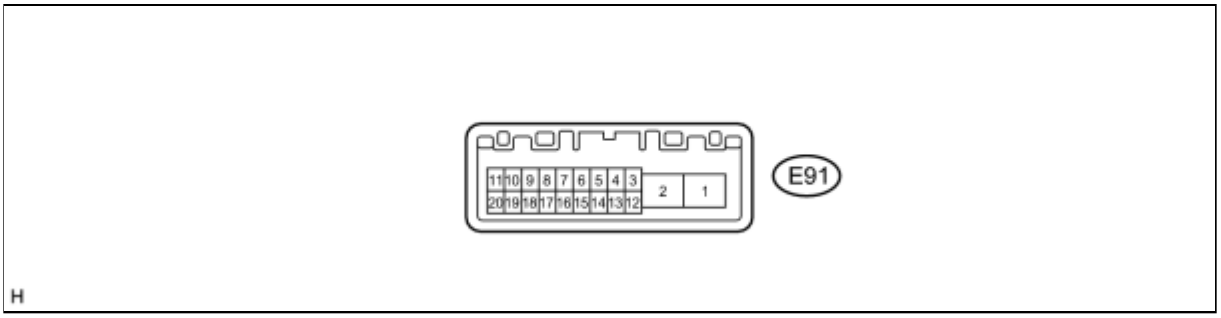

(b) Measure the voltage between the specified terminals of the wire harness side connectors and body ground.

Standard Voltage:

TERMINAL NO. (SYMBOL)	WIRING COLOR	TERMINAL DESCRIPTION	CONDITION	SPECIFIED CONDITION
E91-12 (IG) - Body ground	L - Body ground	IG power supply	Ignition switch off	Below 1 V
			Ignition switch ON	11 to 14 V
E91-3 (+B) - Body ground	R - Body ground	Battery power supply	Always	11 to 14 V

If the result is not as specified, there may be a malfunction on the wire harness side.

(c) Measure the resistance between the specified terminals of the wire harness side connectors and body ground.

Standard Resistance:

TERMINAL NO. (SYMBOL)	WIRING COLOR	TERMINAL DESCRIPTION	CONDITION	SPECIFIED CONDITION
E91-2 (E) - Body ground	W-B - Body ground	Ground	Always	Below 1 Ω

If the result is not as specified, there may be a malfunction on the wire harness side.

(d) Reconnect the E91 relay connector.

(e) Measure the resistance according to the value(s) in the table below.

Standard Resistance:

TERMINAL NO. (SYMBOL)	WIRING COLOR	TERMINAL DESCRIPTION	CONDITION	SPECIFIED CONDITION
E91-11 (PKB) - Body ground	O*1 - Body ground BE*2 - Body ground	Parking brake switch signal	Parking brake switch OFF	10 kΩ or higher
			Parking brake switch ON	Below 1 Ω
E91-18 (CSE) - Body ground	G - Body ground	Ground	Always	Below 1 Ω

If the result is not as specified, the ECU may have a malfunction.

HINT:

- *1: for TMC Made
- *2: except TMC Made

(f) Measure the voltage according to the value(s) in the table below.

Standard Voltage:

TERMINAL NO. (SYMBOL)	WIRING COLOR	TERMINAL DESCRIPTION	CONDITION	SPECIFIED CONDITION
E91-1 (DRL) - Body ground	R*1 - Body ground BR*2 - Body ground	Daytime running light drive output	Daytime running lights OFF	Below 1 V
			Daytime running lights ON	Pulse generation (See waveform 1)
E91-4 (FOG) - Body ground	W - Body ground	Front fog relay drive output	Front fog light switch ON and light control switch OFF	11 to 14 V
			Front fog light switch ON and light control switch in HEAD	Below 1 V
E91-5 (IND) - Body ground	GR - Body ground	Low beam headlight indicator drive output	Low beam headlight indicator ON	Below 1 V
			Low beam headlight indicator OFF	11 to 14 V
E91-6 (H-LP) - Body ground	B*1 - Body ground V*2 - Body ground	Low beam headlight relay drive output	Low beam headlights ON	Below 1 V
			Low beam headlights OFF	11 to 14 V
E91-7 (H) - Body ground	G - Body ground	Light control switch HEAD signal input	Light control switch in HEAD	Below 1 V

TERMINAL NO. (SYMBOL)	WIRING COLOR	TERMINAL DESCRIPTION	CONDITION	SPECIFIED CONDITION
			Light control switch not in HEAD	11 to 14 V
E91-8 (CHG-) - Body ground	Y - Body ground	Engine revolution signal input	Engine running	11 to 16 V
			Engine stopped	Below 1 V
E91-10 (HF) - Body ground	B - Body ground	Dimmer switch HIGH FLASH signal input	Dimmer switch in HIGH FLASH position	Below 1 V
			Dimmer switch not in HIGH FLASH position	11 to 14 V
E91-13 (DIM) - Body ground	P - Body ground	High beam headlight relay drive output	High beam headlights ON or daytime running lights ON	Below 1 V
			High beam headlights and daytime running lights OFF	11 to 14 V
E91-14 (TAIL) - Body ground	W*1 - Body ground SB*2 - Body ground	Taillight relay drive output	Taillights ON	Below 1 V
			Taillights OFF	11 to 14 V
E91-15 (T) - Body ground	W*1 - Body ground BR*2 - Body ground	Light control switch TAIL signal input	Light control switch in TAIL or HEAD	Below 1 V
			Light control switch in neither TAIL nor HEAD	11 to 14 V
E91-16 (HI) - Body ground	LG - Body ground	Dimmer switch HIGH signal input	Dimmer switch in HIGH	Below 1 V
			Dimmer switch in LOW	11 to 14 V
E91-17 (H-ON) - Body ground	L - Body ground	High beam headlight indicator drive output	High beam headlight indicator ON	Below 1 V
			High beam headlight indicator OFF	Below 1 V
E91-19 (CSO) - Body ground	SB - Body ground	Automatic light control sensor signal input	Ignition switch off	Below 1 V
			Ignition switch ON	Pulse generation (See waveform 2)
E91-20 (CSB) - Body ground	GR - Body ground	Automatic light control sensor power supply output	Ignition switch off	Below 1 V
			Ignition switch ON	11 to 14 V

If the result is not as specified, the ECU may have a malfunction.

HINT:

- *1: for TMC Made
- *2: except TMC Made

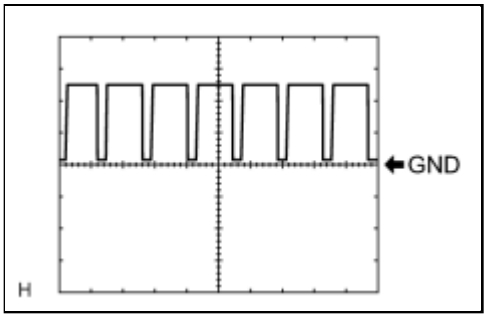

(1) Waveform 1

ITEM	CONTENT
Tool setting	5 V/DIV., 20 ms./DIV.

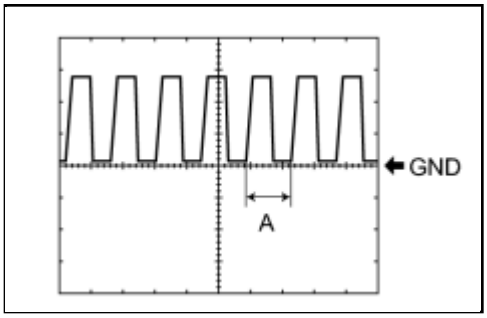

(2) Waveform 2

ITEM	CONTENT
Tool setting	2 V/DIV., 5 ms./DIV.

HINT:

If the ambient light becomes brighter, width A becomes narrower.

Last Modified: 3-10-2010	6.4 J	**From:** 200901
Model Year: 2010	**Model:** Corolla	**Doc ID:** RM000001OIZ00QX
Title: LIGHTING (EXT): LIGHTING SYSTEM: Front Fog Light Circuit (2010 Corolla)		

Front Fog Light Circuit

DESCRIPTION

- When both of the following conditions are met, the front fog lights come on:
  - The low beam headlights are turned on using either automatic light control or manual operation, and the high beam headlights are off.
  - Front fog light switch is on.

WIRING DIAGRAM

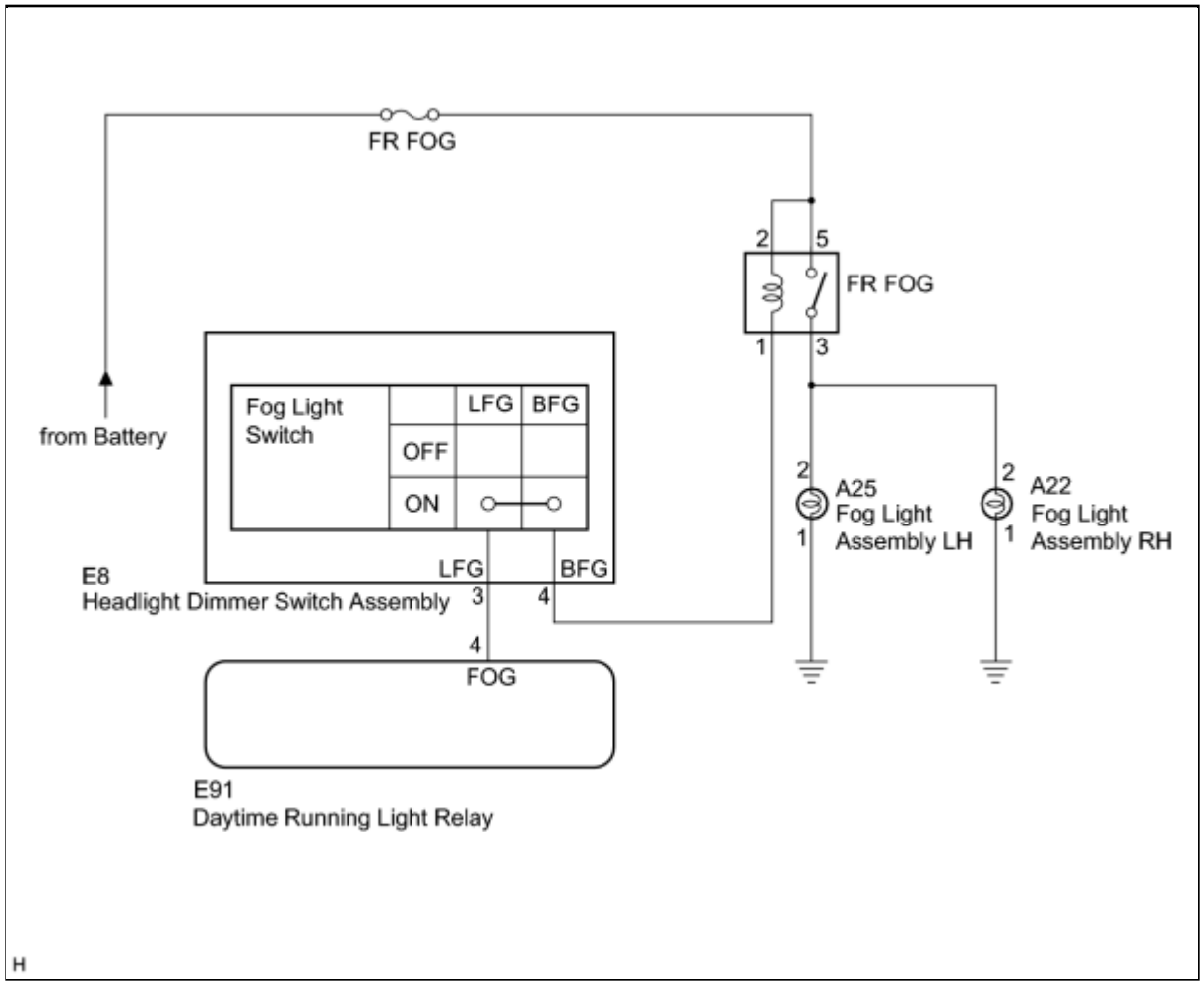

INSPECTION PROCEDURE

PROCEDURE

1.	**INSPECT FUSE (FR FOG)**

(a) Remove the FR FOG fuse from the instrument panel junction block.

(b) Measure the resistance according to the value(s) in the table below.

Standard Resistance:

TESTER CONNECTION	CONDITION	SPECIFIED CONDITION
FR FOG fuse	Always	Below 1 Ω

NG ▶ **REPLACE FUSE**

OK ▼

2.	**INSPECT FRONT FOG LIGHT RELAY**

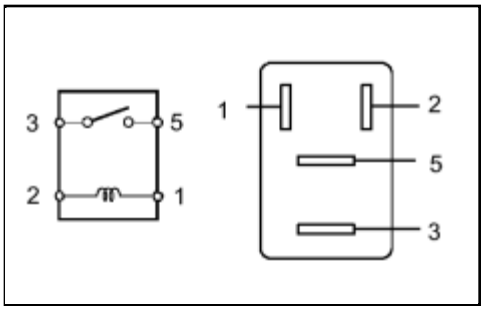

(a) Remove the front fog light relay.

(b) Measure the resistance according to the value(s) in the table below.

Standard Resistance:

TESTER CONNECTION	CONDITION	SPECIFIED CONDITION
3 - 5	Voltage is not applied between terminals 1 and 2	10 kΩ or higher
3 - 5	Voltage is applied between terminals 1 and 2	Below 1 Ω

NG ▶ **REPLACE FRONT FOG LIGHT RELAY**

OK

3.	**CHECK HARNESS AND CONNECTOR (BATTERY - FRONT FOG LIGHT RELAY)**

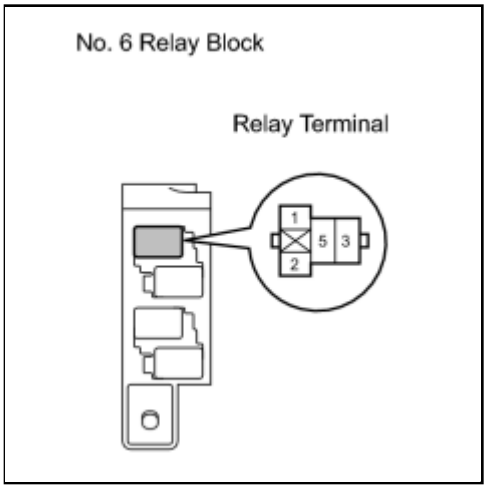

(a) for TMC Made

(1) Install the FR FOG fuse.

(2) Measure the voltage according to the value(s) in the table below.

Standard Voltage:

TESTER CONNECTION	CONDITION	SPECIFIED CONDITION
2 - Body ground	Always	11 to 14 V
5 - Body ground	Always	11 to 14 V

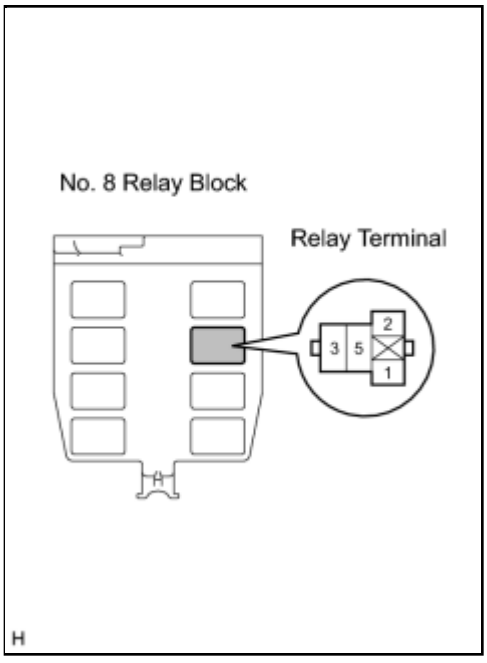

(b) except TMC Made

(1) Install the FR FOG fuse.

(2) Measure the voltage according to the value(s) in the table below.

Standard Voltage:

TESTER CONNECTION	CONDITION	SPECIFIED CONDITION
2 - Body ground	Always	11 to 14 V
5 - Body ground	Always	11 to 14 V

NG **REPAIR OR REPLACE HARNESS OR CONNECTOR**

OK

4.	**INSPECT HEADLIGHT DIMMER SWITCH ASSEMBLY**

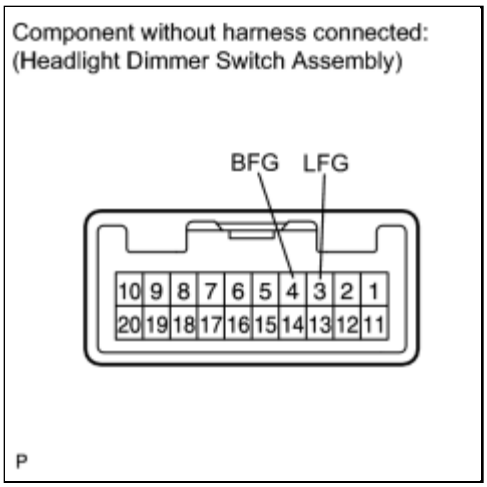

(a) Remove the headlight dimmer switch assembly.

(b) Measure the resistance according to the value(s) in the table below.

Standard Resistance:

TESTER CONNECTION	CONDITION	SPECIFIED CONDITION
3 (LFG) - 4 (BFG)	Fog light switch off	10 kΩ or higher
3 (LFG) - 4 (BFG)	Fog light switch on	Below 1 Ω

(c) Reinstall the headlight dimmer switch assembly.

NG ▶ **REPLACE HEADLIGHT DIMMER SWITCH ASSEMBLY**

OK

5.	**CHECK HARNESS AND CONNECTOR (FRONT FOG LIGHT RELAY - HEADLIGHT DIMMER SWITCH ASSEMBLY)**

(a) for TMC Made

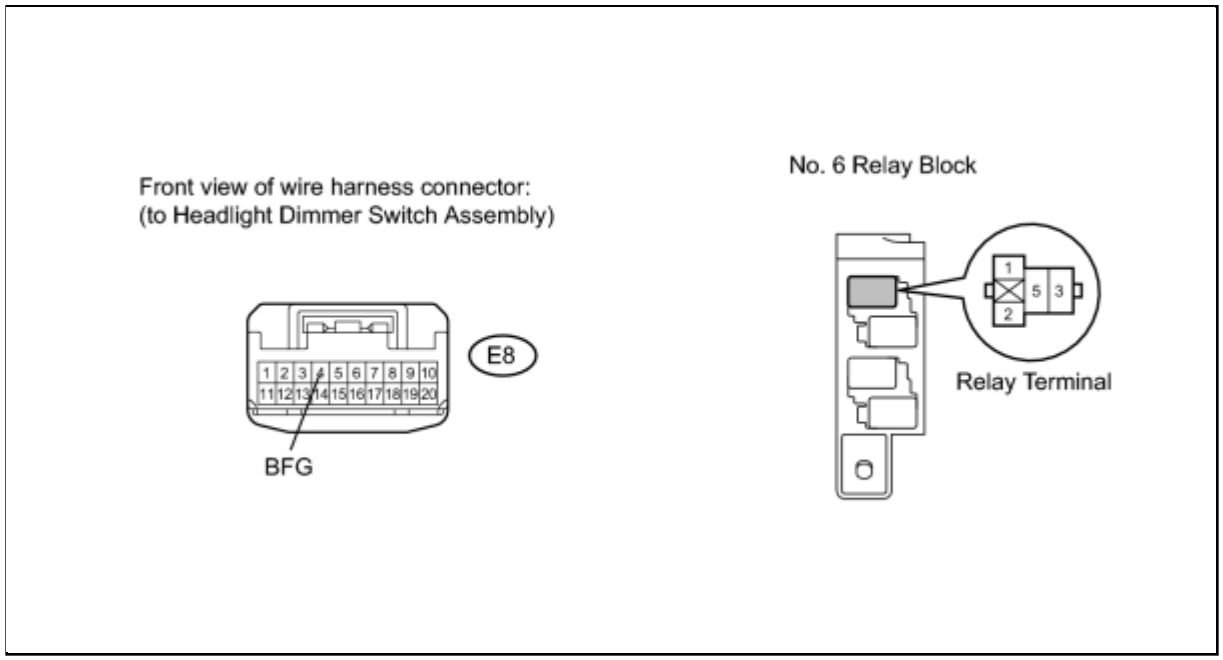

(1) Disconnect the E8 headlight dimmer switch assembly connector.

(2) Measure the resistance according to the value(s) in the table below.

Standard Resistance:

TESTER CONNECTION	CONDITION	SPECIFIED CONDITION
Front fog light relay terminal 1 - E8-4 (BFG)	Always	Below 1 Ω
Front fog light relay terminal 1 - Body ground	Always	10 kΩ or higher

(b) except TMC Made

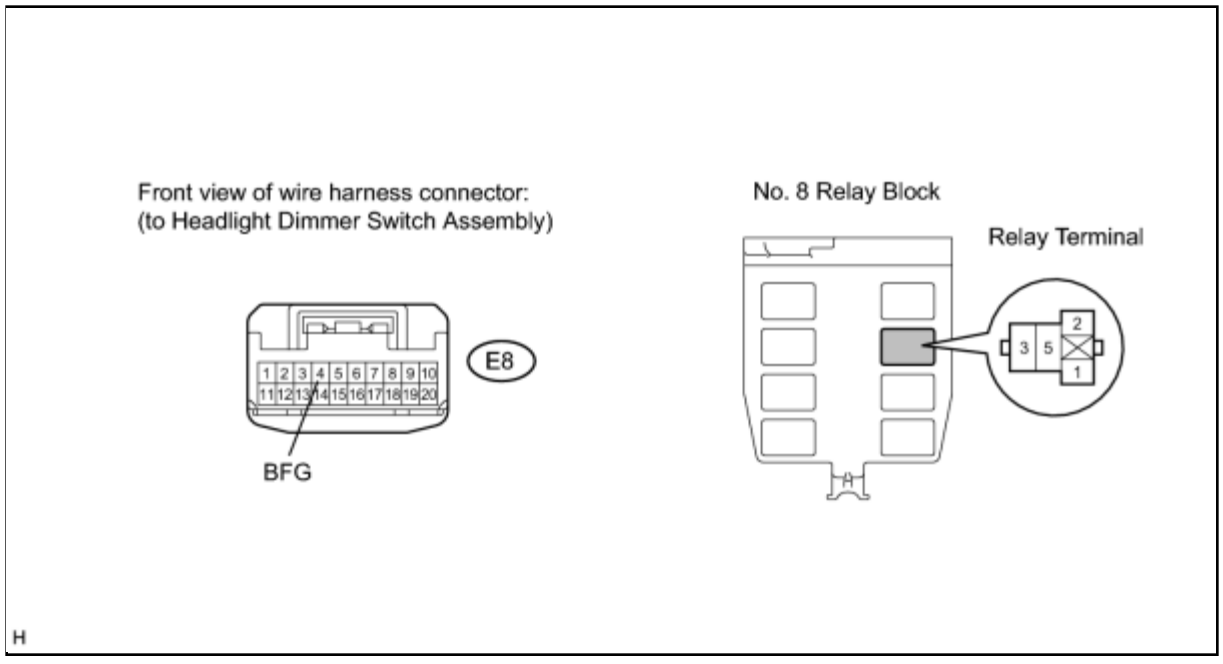

(1) Disconnect the E8 headlight dimmer switch assembly connector.

(2) Measure the resistance according to the value(s) in the table below.

Standard Resistance:

TESTER CONNECTION	CONDITION	SPECIFIED CONDITION
Front fog light relay terminal 1 - E8-4 (BFG)	Always	Below 1 Ω
Front fog light relay terminal 1 - Body ground	Always	10 kΩ or higher

NG ▶ **REPAIR OR REPLACE HARNESS OR CONNECTOR**

OK ▼

6.	**CHECK HARNESS AND CONNECTOR (HEADLIGHT DIMMER SWITCH ASSEMBLY - DAYTIME RUNNING LIGHT RELAY)**

(a) Disconnect the E91 daytime running light relay connector.

(b) Measure the resistance according to the value(s) in the table below.

Standard Resistance:

TESTER CONNECTION	CONDITION	SPECIFIED CONDITION
E8-3 (LFG) - E91-4 (FOG)	Always	Below 1 Ω
E8-3 (LFG) - Body ground	Always	10 kΩ or higher

NG ▶ **REPAIR OR REPLACE HARNESS OR CONNECTOR**

OK ▼

7.	**CHECK HARNESS AND CONNECTOR (FRONT FOG LIGHT RELAY - FOG LIGHT ASSEMBLY)**

(a) for TMC Made

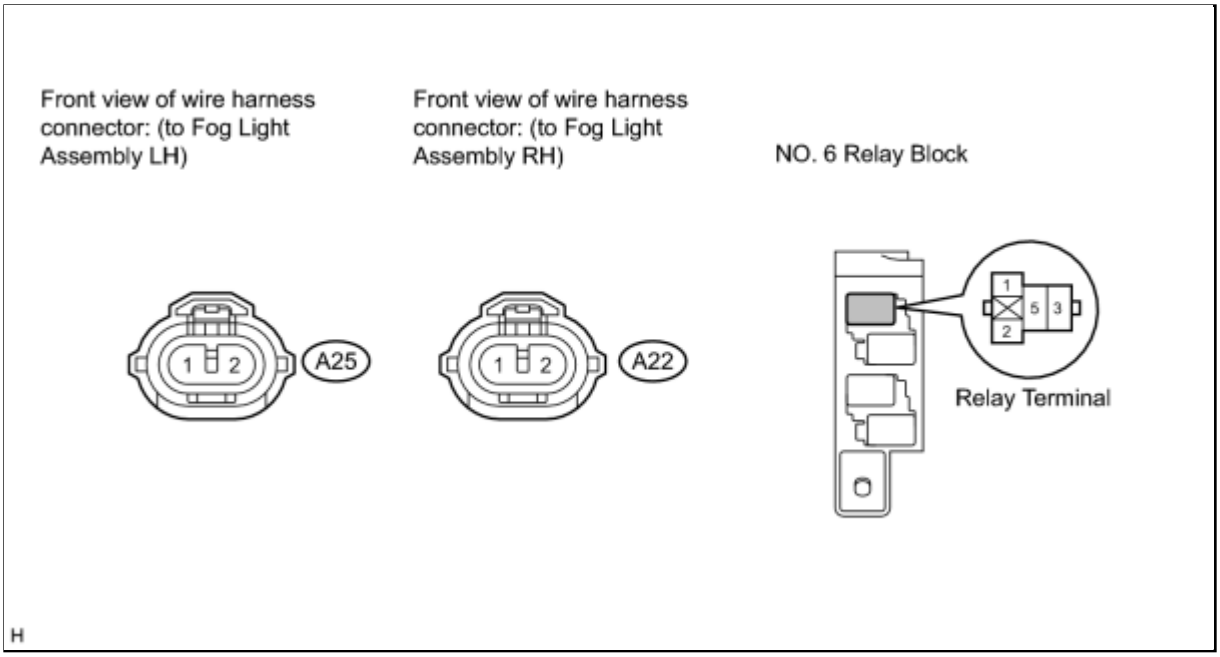

(1) Disconnect the A25 fog light assembly LH connector and the A22 fog light assembly RH connector.

(2) Measure the resistance according to the value(s) in the table below.

Standard Resistance:

TESTER CONNECTION	CONDITION	SPECIFIED CONDITION
Front fog light relay terminal 3 - A25-2	Always	Below 1 Ω
Front fog light relay terminal 3 - Body ground	Always	10 kΩ or higher
Front fog light relay terminal 3 - A22-2	Always	Below 1 Ω
Front fog light relay terminal 3 - Body ground	Always	10 kΩ or higher

(b) except TMC Made

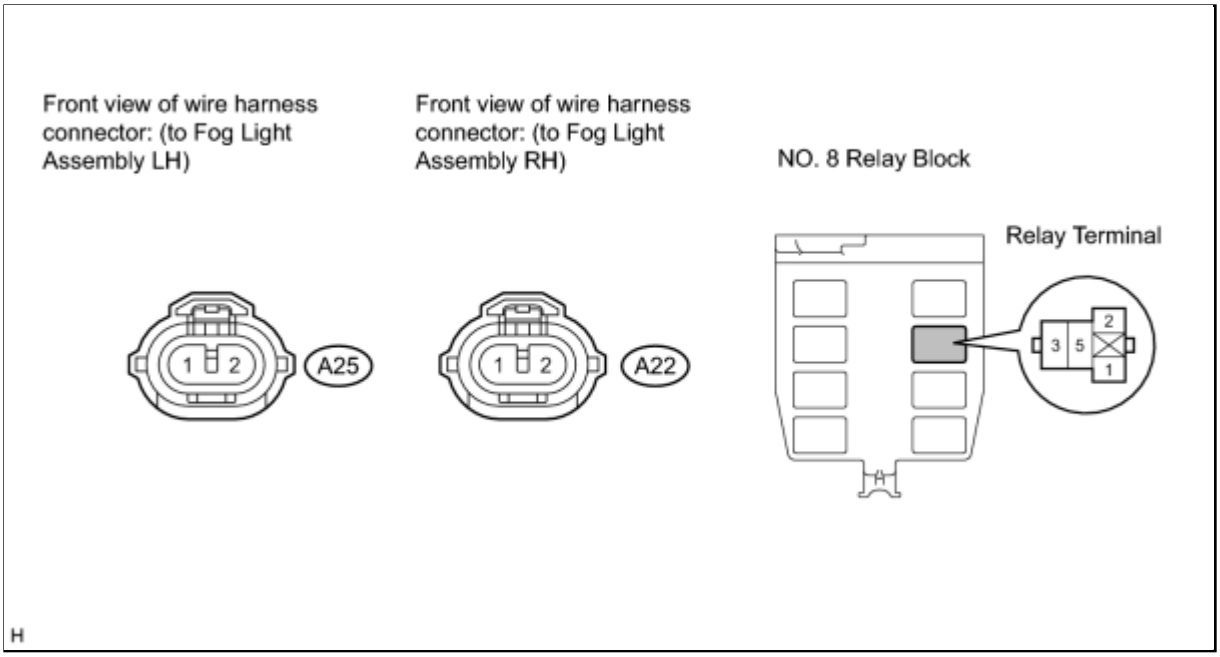

(1) Disconnect the A25 fog light assembly LH connector and the A22 fog light assembly RH connector.

(2) Measure the resistance according to the value(s) in the table below.

Standard Resistance:

TESTER CONNECTION	CONDITION	SPECIFIED CONDITION
Front fog light relay terminal 3 - A25-2	Always	Below 1 Ω
Front fog light relay terminal 3 - Body ground	Always	10 kΩ or higher
Front fog light relay terminal 3 - A22-2	Always	Below 1 Ω
Front fog light relay terminal 3 - Body ground	Always	10 kΩ or higher

NG ▶ **REPAIR OR REPLACE HARNESS OR CONNECTOR**

OK ▼

8.	**CHECK HARNESS AND CONNECTOR (FOG LIGHT ASSEMBLY - BODY GROUND)**

(a) Measure the resistance according to the value(s) in the table below.

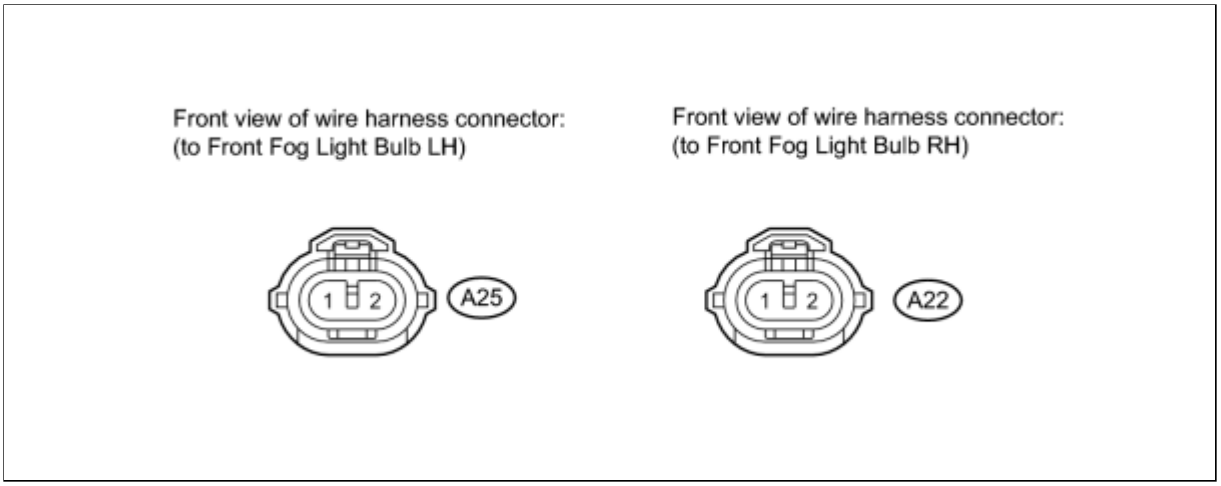

Standard Resistance:

TESTER CONNECTION	CONDITION	SPECIFIED CONDITION
A25-1 - Body ground	Always	Below 1 Ω
A22-1 - Body ground	Always	Below 1 Ω

NG ▶ **REPAIR OR REPLACE HARNESS OR CONNECTOR**

OK ▶ **PROCEED TO NEXT CIRCUIT INSPECTION SHOWN IN PROBLEM SYMPTOMS TABLE**

Last Modified: 3-10-2010	6.4 J	**From:** 200901
Model Year: 2010	**Model:** Corolla	**Doc ID:** RM000000ZBM01SX
Title: LIGHTING (EXT): LIGHTING SYSTEM: Headlight Relay Circuit (2010 Corolla)		

Headlight Relay Circuit

DESCRIPTION

- The daytime running light relay receives the light control switch HEAD signal and the ambient light level signal from the automatic light control sensor to control the headlight relay.

HINT:

- If only a low beam headlight bulb on one side does not illuminate, inspect the bulb, fuse, or wire harness related to the bulb.

WIRING DIAGRAM

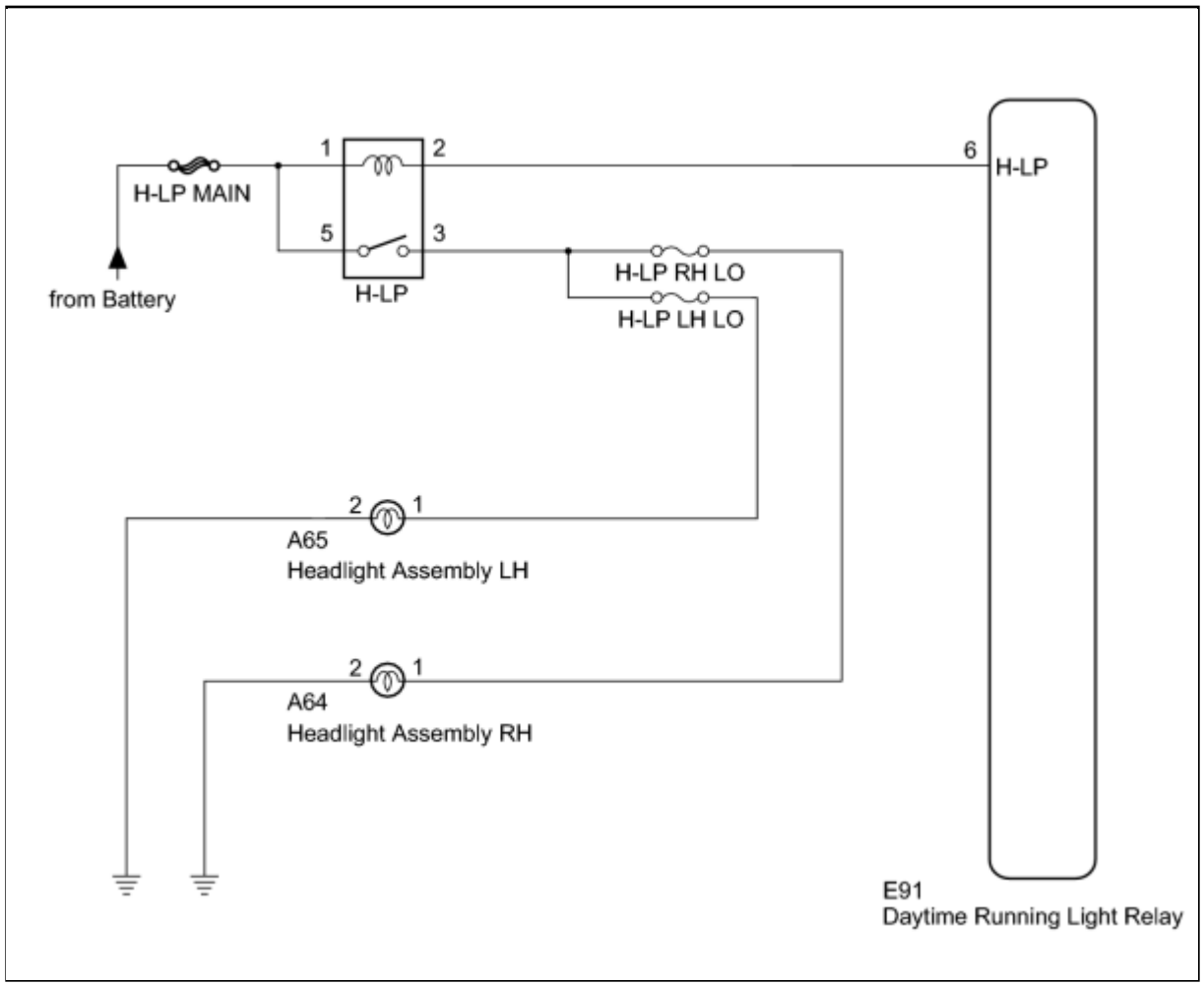

INSPECTION PROCEDURE

PROCEDURE

1.	**INSPECT FUSE (H-LP MAIN)**

(a) Remove the H-LP MAIN fuse from the engine room relay block.

(b) Measure the resistance according to the value(s) in the table below.

Standard Resistance:

TESTER CONNECTION	CONDITION	SPECIFIED CONDITION
H-LP MAIN fuse	Always	Below 1 Ω

NG ▶ **REPLACE FUSE**

OK ▼

2.	**INSPECT ENGINE ROOM RELAY BLOCK**

(a) Install the H-LP MAIN fuse to the engine room relay block.

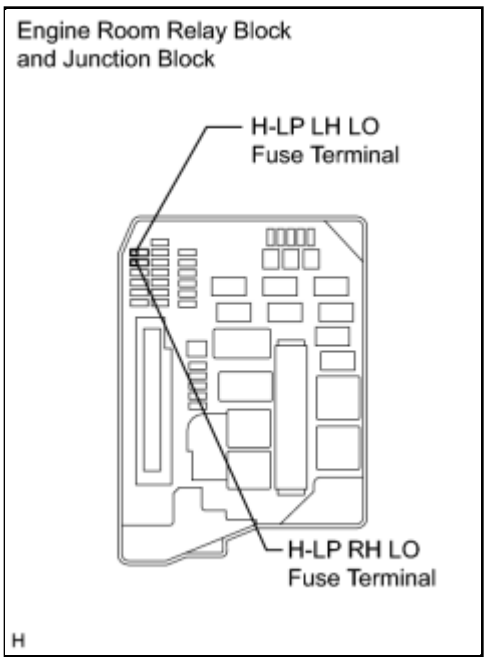

(b) Remove the H-LP LH LO fuse and H-LP RH LO fuse from the engine room relay block.

(c) Measure the voltage between the loading slot of each fuse and body ground.

Standard Voltage:

TESTER CONNECTION	SWITCH CONDITION	SPECIFIED CONDITION
H-LP LH LO fuse terminal - Body ground	Light control switch OFF → HEAD	Below 1 V → 11 to 14 V
H-LP RH LO fuse terminal - Body ground	Light control switch OFF → HEAD	Below 1 V → 11 to 14 V

NG ▶ **INSPECT HEADLIGHT RELAY (H-LP)**

OK ▶ **REPAIR OR REPLACE HARNESS OR CONNECTOR (FUSE - BODY GROUND)**

3.	**INSPECT HEADLIGHT RELAY (H-LP)**

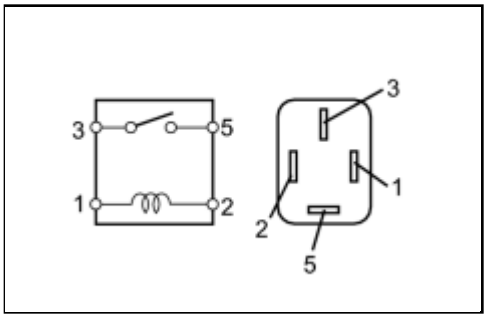

(a) Remove the headlight relay from the engine room relay block.

(b) Measure the resistance according to the value(s) in the table below.

Standard Resistance:

TESTER CONNECTION	CONDITION	SPECIFIED CONDITION
3 - 5	Voltage is not applied between terminals 1 and 2	10 kΩ or higher
3 - 5	Voltage is applied between terminals 1 and 2	Below 1 Ω

NG ▶ **REPLACE HEADLIGHT RELAY**

OK ▼

4.	CHECK HARNESS AND CONNECTOR (BATTERY - HEADLIGHT RELAY)

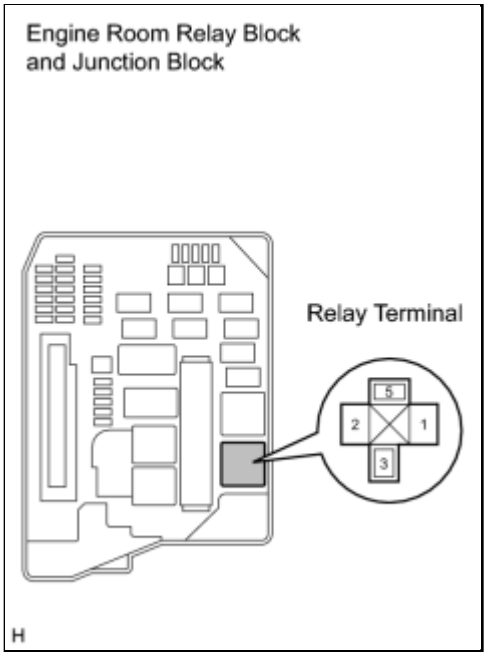

(a) Measure the voltage on the relay block side according to the value(s) in the table below.

Standard Voltage:

TESTER CONNECTION	CONDITION	SPECIFIED CONDITION
Headlight relay terminal 5 - Body ground	Always	11 to 14 V
Headlight relay terminal 1 - Body ground	Always	11 to 14 V

NG ▶ **REPAIR OR REPLACE HARNESS OR CONNECTOR**

OK ▼

5.	CHECK HARNESS AND CONNECTOR (HEADLIGHT RELAY - FUSE)

(a) Measure the resistance according to the value(s) in the table below.

Standard Resistance:

TESTER CONNECTION	CONDITION	SPECIFIED CONDITION
Headlight relay terminal 3 - H-LP LH LO fuse terminal	Always	Below 1 Ω
Headlight relay terminal 3 - H-LP RH LO fuse terminal	Always	Below 1 Ω

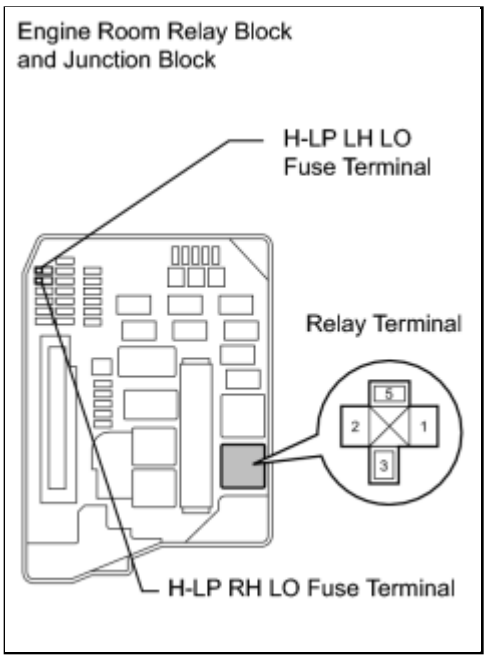

NG ▶ **REPAIR OR REPLACE HARNESS OR CONNECTOR**

OK ▼

6.	**CHECK HARNESS AND CONNECTOR (HEADLIGHT RELAY - DAYTIME RUNNING LIGHT RELAY)**

(a) Disconnect the E91 daytime running light relay connector.

(b) Measure the resistance according to the value(s) in the table below.

Standard Resistance:

TESTER CONNECTION	CONDITION	SPECIFIED CONDITION
Headlight relay terminal 2 - E91-6 (H-LP)	Always	Below 1 Ω
E91-6 (H-LP) - Body ground	Always	10 kΩ or higher

NG ▶ **REPAIR OR REPLACE HARNESS OR CONNECTOR**

OK ▶ **PROCEED TO NEXT CIRCUIT INSPECTION SHOWN IN PROBLEM SYMPTOMS TABLE**

Last Modified: 3-10-2010	6.4 U	**From:** 200901
Model Year: 2010	**Model:** Corolla	**Doc ID:** RM000002CE000XX
Title: LIGHTING (EXT): LIGHTING SYSTEM: FAIL-SAFE CHART (2010 Corolla)		

FAIL-SAFE CHART

1. AUTOMATIC LIGHT CONTROL FUNCTION

(a) If the daytime running light relay does not receive a signal due to a automatic light control sensor malfunction or open circuit, either of the following conditions will occur.

CONDITION	SPECIFIED CONDITION
Taillights and low beam headlights are on.	• If the taillights and the low beam headlights are on, they will remain on.
Taillights and low beam headlights are off.	• If the taillights and the low beam headlights are not on, they will remain off.

Last Modified: 3-10-2010	6.4 J	**From:** 200901
Model Year: 2010	**Model:** Corolla	**Doc ID:** RM000001A7L01MX
Title: LIGHTING (EXT): LIGHTING SYSTEM: Headlight (HI-BEAM) Circuit (2010 Corolla)		

Headlight (HI-BEAM) Circuit

DESCRIPTION

- When both of the following conditions are met, the high beam headlights will come on.
    - Low beam headlights are turned on by the automatic light control or manual light control.
    - Dimmer switch is in HIGH position.
- The daytime running light relay dims the high beam headlights when operating them as daytime running lights.
- When the dimmer switch is turned to the HIGH FLASH position, the high beam headlights will come on.

HINT:

- If only a high beam headlight on one side does not illuminate, inspect the fuse, bulb, or wire harness that is related to the bulb.
- Before performing troubleshooting of the high beam headlight control, check that the low beam headlight operates normally.

WIRING DIAGRAM

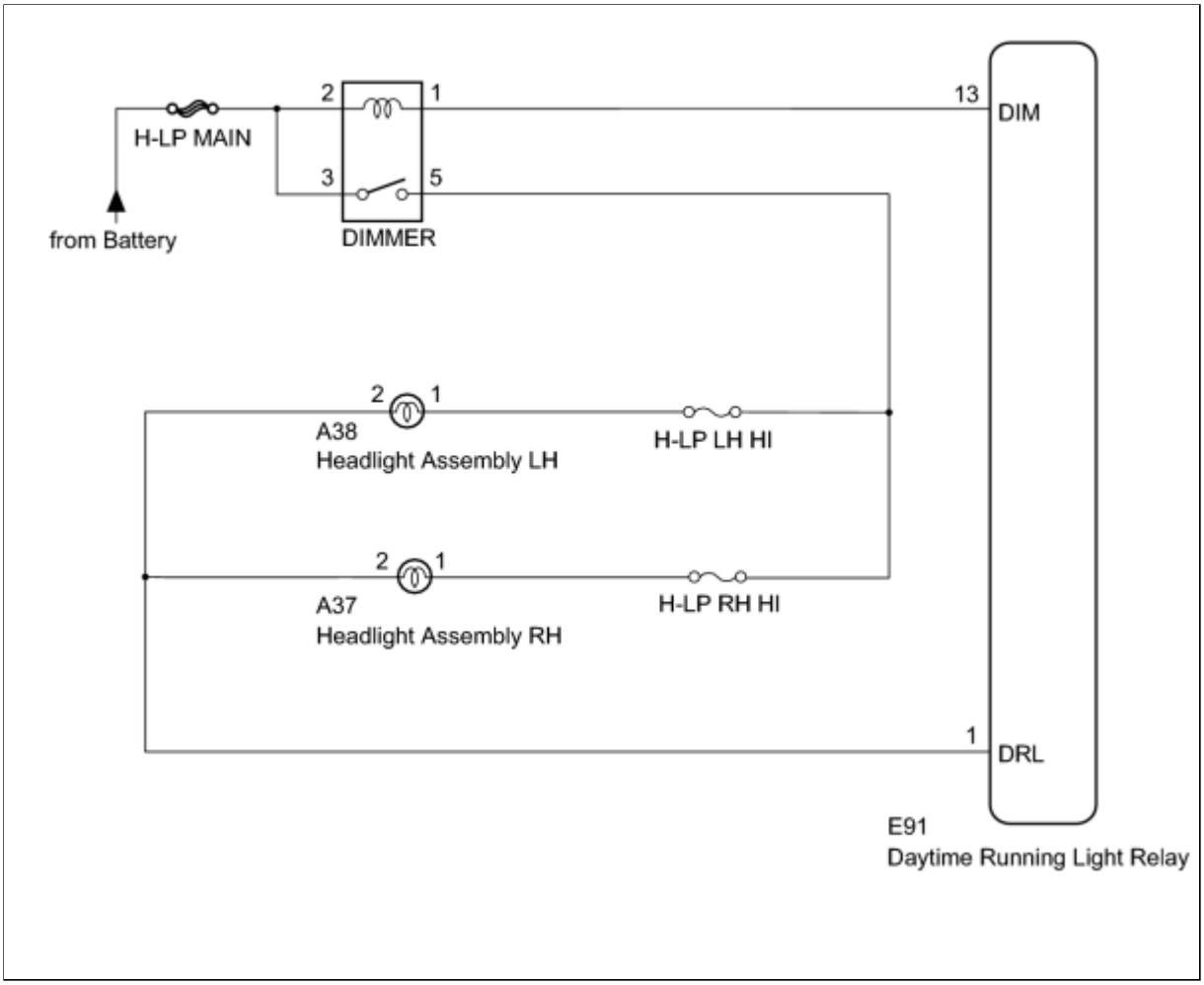

INSPECTION PROCEDURE

PROCEDURE

1.	**INSPECT HEADLIGHT DIMMER RELAY (DIM)**

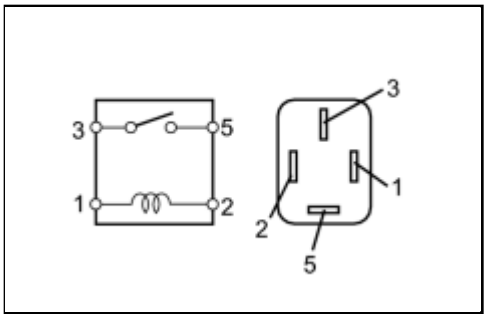

(a) Remove the headlight dimmer relay from the engine room relay block.

(b) Measure the resistance according to the value(s) in the table below.

Standard Resistance:

TESTER CONNECTION	CONDITION	SPECIFIED CONDITION
3 - 5	Voltage is not applied between terminals 1 and 2	10 kΩ or higher
3 - 5	Voltage is applied between terminals 1 and 2	Below 1 Ω

NG ▶ **REPLACE HEADLIGHT DIMMER RELAY**

OK ▼

2.	**CHECK HARNESS AND CONNECTOR (BATTERY - HEADLIGHT DIMMER RELAY)**

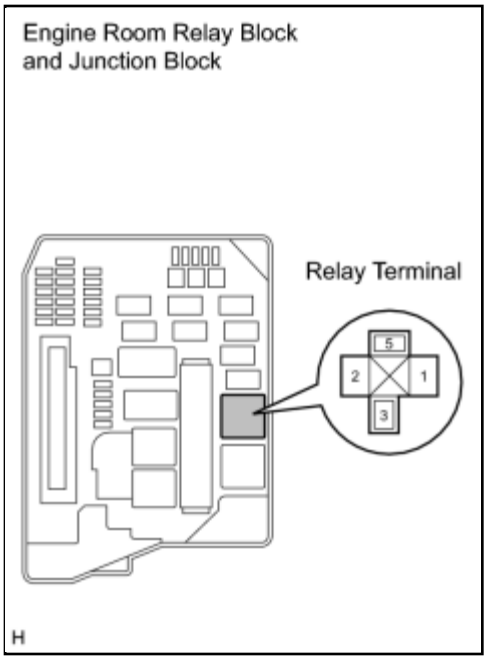

(a) Measure the voltage according to the value(s) in the table below.

Standard Voltage:

TESTER CONNECTION	CONDITION	SPECIFIED CONDITION
Headlight dimmer relay terminal 2 - Body ground	Always	11 to 14 V
Headlight dimmer relay terminal 3 - Body ground	Always	11 to 14 V

NG ▶ **REPAIR OR REPLACE HARNESS OR CONNECTOR**

OK ▼

3.	**CHECK HARNESS AND CONNECTOR (HEADLIGHT DIMMER RELAY - DAYTIME RUNNING LIGHT RELAY)**

(a) Disconnect the E91 daytime running light relay connector.

(b) Measure the resistance according to the value(s) in the table below.

Standard Resistance:

TESTER CONNECTION	CONDITION	SPECIFIED CONDITION
Headlight dimmer relay terminal 1 - E91-13 (DIM)	Always	Below 1 Ω
E91-13 (DIM) - Body ground	Always	10 kΩ or higher

NG ▶ **REPAIR OR REPLACE HARNESS OR CONNECTOR**

OK ▼

4.	**CHECK HARNESS AND CONNECTOR (HEADLIGHT DIMMER RELAY - HEADLIGHT ASSEMBLY)**

(a) Disconnect the A38 headlight assembly LH and A37 headlight assembly RH connector.

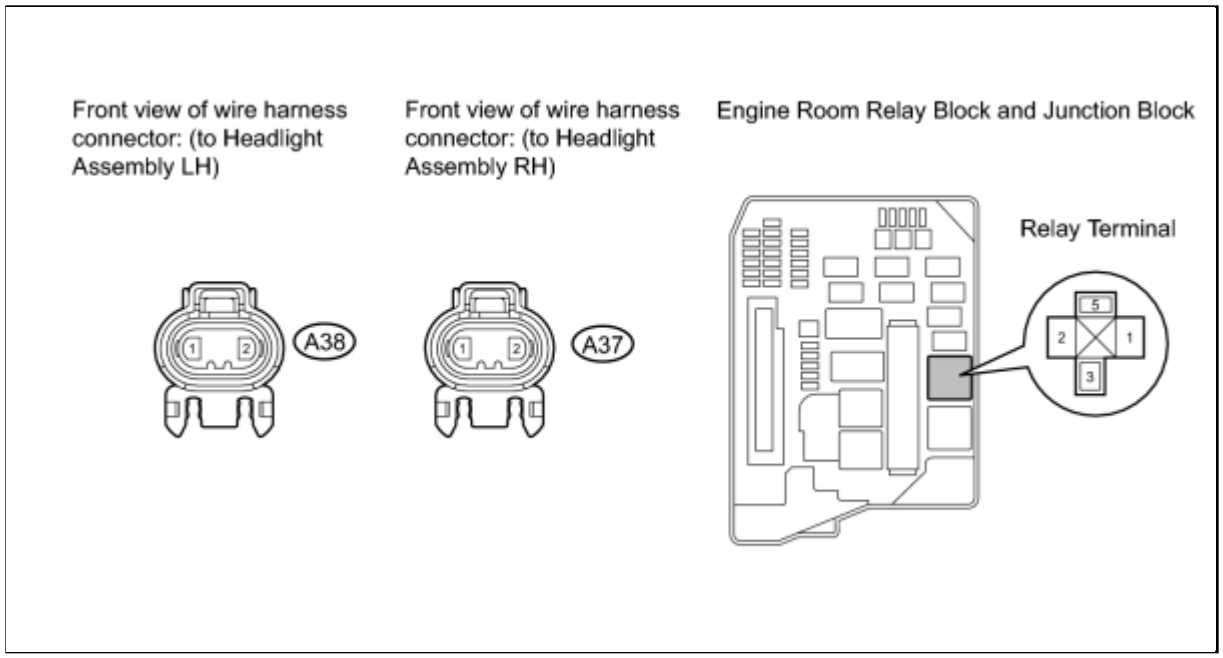

(b) Measure the resistance according to the value(s) in the table below.

Standard Resistance:

TESTER CONNECTION	CONDITION	SPECIFIED CONDITION
Headlight dimmer relay terminal 5 - A38-1	Always	Below 1 Ω

TESTER CONNECTION	CONDITION	SPECIFIED CONDITION
Headlight dimmer relay terminal 5 - Body ground	Always	10 kΩ or higher
Headlight dimmer relay terminal 5 - A37-1	Always	Below 1 Ω
Headlight dimmer relay terminal 5 - Body ground	Always	10 kΩ or higher

NG ▶ **REPAIR OR REPLACE HARNESS OR CONNECTOR**

OK ▼

5.	**CHECK HARNESS AND CONNECTOR (HEADLIGHT ASSEMBLY - DAYTIME RUNNING LIGHT RELAY)**

(a) Disconnect the E91 daytime running light relay connector.

(b) Measure the resistance according to the value(s) in the table below.

Standard Resistance:

TESTER CONNECTION	CONDITION	SPECIFIED CONDITION
A38-2 - E91-1 (DRL)	Always	Below 1 Ω
A38-2 - Body ground	Always	10 kΩ or higher
A37-2 - E91-1 (DRL)	Always	Below 1 Ω
A37-2 - Body ground	Always	10 kΩ or higher

NG ▶ **REPAIR OR REPLACE HARNESS OR CONNECTOR**

OK ▶ **PROCEED TO NEXT CIRCUIT INSPECTION SHOWN IN PROBLEM SYMPTOMS TABLE**

Last Modified: 3-10-2010	6.4 J	**From:** 200901
Model Year: 2010	**Model:** Corolla	**Doc ID:** RM0000011M301ZX
Title: LIGHTING (EXT): LIGHTING SYSTEM: Light Control Switch Circuit (2010 Corolla)		

Light Control Switch Circuit

DESCRIPTION

- The daytime running light relay receives the following signals:
  - Light control switch TAIL or HEAD signal
  - Dimmer switch HIGH or HIGH FLASH (PASS) signal

WIRING DIAGRAM

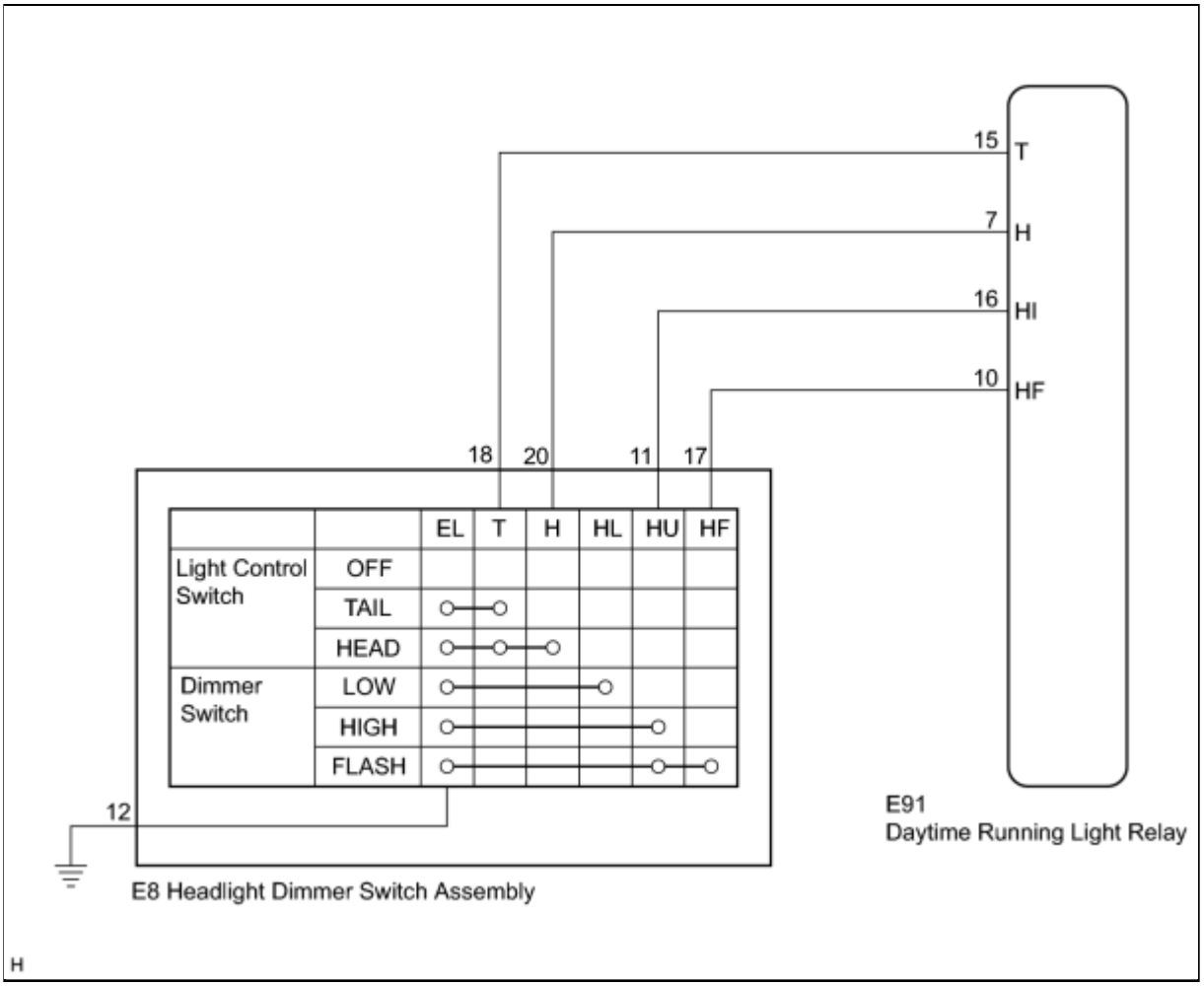

INSPECTION PROCEDURE

PROCEDURE

1.	INSPECT HEADLIGHT DIMMER SWITCH ASSEMBLY

(a) Inspect the headlight dimmer switch assembly INFO .

OK:

Headlight dimmer switch assembly is normal.

NG ▶ REPLACE HEADLIGHT DIMMER SWITCH ASSEMBLY

OK ▼

2.	CHECK HARNESS AND CONNECTOR (SWITCH - DAYTIME RUNNING LIGHT RELAY)

(a) Disconnect the E8 headlight dimmer switch assembly connector.

(b) Disconnect the E91 daytime running light relay connectors.

(c) Measure the resistance according to the value(s) in the table below.

Standard Resistance:

TESTER CONNECTION	CONDITION	SPECIFIED CONDITION
E8-11 (HU) - E91-16 (HI)	Always	Below 1 Ω
E8-17 (HF) - E91-10 (HF)	Always	Below 1 Ω
E8-18 (T) - E91-15 (T)	Always	Below 1 Ω
E8-20 (H) - E91-7 (H)	Always	Below 1 Ω
E8-11 (HU) - Body ground	Always	10 kΩ or higher
E8-17 (HF) - Body ground	Always	10 kΩ or higher
E8-18 (T) - Body ground	Always	10 kΩ or higher
E8-20 (H) - Body ground	Always	10 kΩ or higher
E8-12 (EL) - Body ground	Always	Below 1 Ω

NG ▶ REPAIR OR REPLACE HARNESS OR CONNECTOR

OK ▶ PROCEED TO NEXT CIRCUIT INSPECTION SHOWN IN PROBLEM SYMPTOMS TABLE

Last Modified: 3-10-2010	6.4 J	**From:** 200901
Model Year: 2010	**Model:** Corolla	**Doc ID:** RM0000011TB00DX
Title: LIGHTING (EXT): LIGHTING SYSTEM: Automatic Light Control Sensor Circuit (2010 Corolla)		

Automatic Light Control Sensor Circuit

DESCRIPTION

The daytime running light relay receives a signal from the automatic light control sensor.

WIRING DIAGRAM

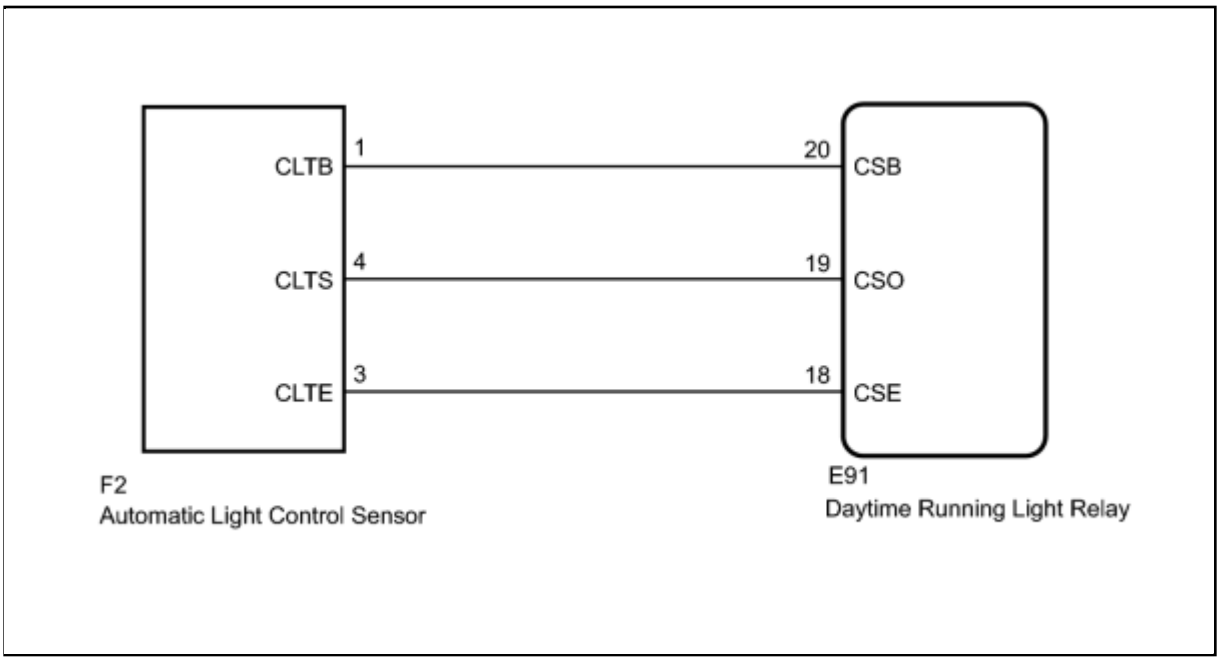

INSPECTION PROCEDURE

PROCEDURE

1.	**CHECK HARNESS AND CONNECTOR (DAYTIME RUNNING LIGHT RELAY - AUTOMATIC LIGHT CONTROL SENSOR)**

(a) Disconnect the F2 automatic light control sensor connector and E91 daytime running light relay connector.

(b) Measure the resistance according to the value(s) in the table below.

Standard Resistance:

TESTER CONNECTION	CONDITION	SPECIFIED CONDITION
F2-1 (CLTB) - E91-20 (CSB)	Always	Below 1 Ω
F2-3 (CLTE) - E91-18 (CSE)	Always	Below 1 Ω
F2-4 (CLTS) - E91-19 (CSO)	Always	Below 1 Ω
F2-1 (CLTB) - Body ground	Always	10 kΩ or higher
F2-3 (CLTE) - Body ground	Always	10 kΩ or higher
F2-4 (CLTS) - Body ground	Always	10 kΩ or higher

NG ▶ **REPAIR OR REPLACE HARNESS OR CONNECTOR**

OK ▼

2.	**INSPECT DAYTIME RUNNING LIGHT RELAY**

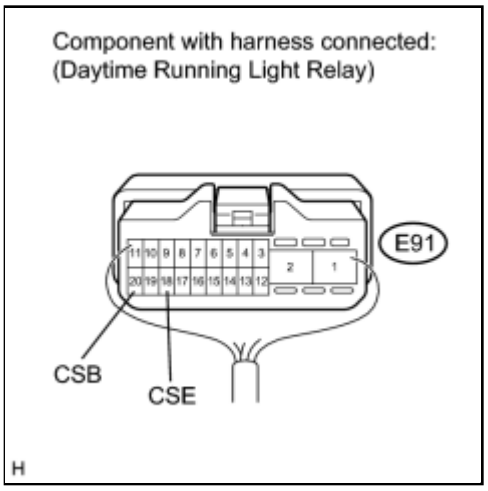

(a) Reconnect the E91 daytime running light relay connector.

(b) Measure the voltage according to the value(s) in the table below.

Standard Voltage:

TESTER CONNECTION	SWITCH CONDITION	SPECIFIED VOLTAGE
E91-20 (CSB) - E91-18 (CSE)	Ignition switch off → ON	Below 1 V → 11 to 14 V

NG ▶ **REPLACE DAYTIME RUNNING LIGHT RELAY**

OK

3.	**INSPECT AUTOMATIC LIGHT CONTROL SENSOR**

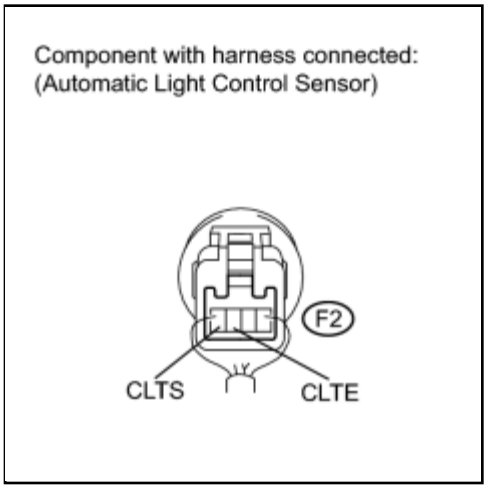

(a) Reconnect the F2 automatic light control sensor connector.

(b) Connect an oscilloscope to the automatic light control sensor connector.

(c) Check the waveform.

OK:

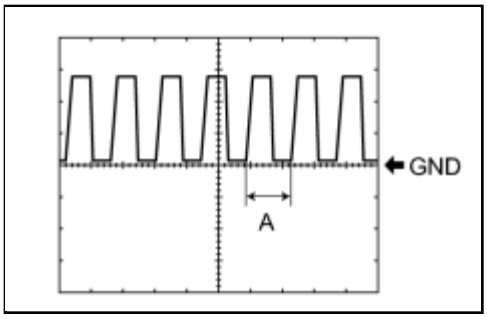

TESTER CONNECTION	TOOL SETTING	SWITCH CONDITION	SPECIFIED CONDITION
F2-3 (CLTE) - F2-4 (CLTS)	2 V/DIV., 5 ms./DIV.	Ignition switch ON, light control switch in off	Correct waveform is as shown

HINT:

If the ambient light becomes brighter, width A becomes narrower.

NG ▶ **REPLACE AUTOMATIC LIGHT CONTROL SENSOR**

OK ▶ **PROCEED TO NEXT CIRCUIT INSPECTION SHOWN IN PROBLEM SYMPTOMS TABLE**

Last Modified: 3-10-2010	6.4 J	**From:** 200901
Model Year: 2010	**Model:** Corolla	**Doc ID:** RM000000ZBR006X
Title: LIGHTING (EXT): LIGHTING SYSTEM: Generator Signal Circuit (2010 Corolla)		

Generator Signal Circuit

DESCRIPTION

The daytime running light relay receives an engine condition signal via the generator.

WIRING DIAGRAM

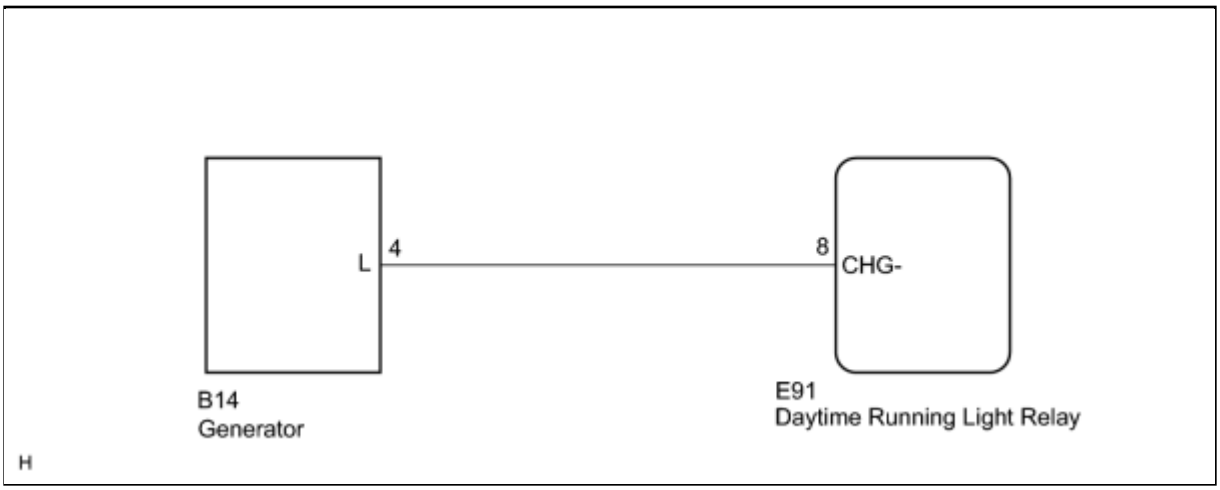

INSPECTION PROCEDURE

PROCEDURE

1.	**CHECK DAYTIME RUNNING LIGHT RELAY**

(a) Measure the voltage according to the value(s) in the table below.

Standard Voltage:

TESTER CONNECTION	CONDITION	SPECIFIED CONDITION
E91-8 (CHG-) - Body ground	Engine running	11 to 14 V

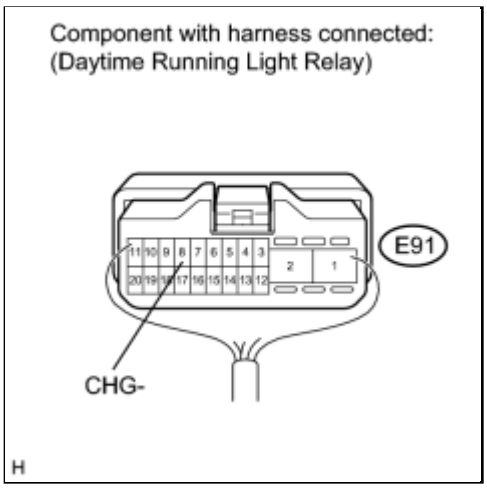

NG ▶ **INSPECT GENERATOR ASSEMBLY**

OK ▶ **PROCEED TO NEXT CIRCUIT INSPECTION SHOWN IN PROBLEM SYMPTOMS TABLE**

2.	**INSPECT GENERATOR ASSEMBLY**

(a) Inspect generator assembly INFO for 2ZR-FE, INFO for 2AZ-FE).

Result:

RESULT	PROCEED TO
OK	A
NG (for 2ZR-FE)	B
NG (for 2AZ-FE)	C

C ▶ **REPLACE GENERATOR ASSEMBLY**

B ▶ **REPLACE GENERATOR ASSEMBLY**

A ▶ **REPAIR OR REPLACE HARNESS OR CONNECTOR (GENERATOR ASSEMBLY - DAYTIME RUNNING LIGHT RELAY)**

Last Modified: 3-10-2010	6.4 J	**From:** 200901
Model Year: 2010	**Model:** Corolla	**Doc ID:** RM000001MEH01TX
Title: LIGHTING (EXT): LIGHTING SYSTEM: Taillight Relay Circuit (2010 Corolla)		

Taillight Relay Circuit

DESCRIPTION

- The daytime running light relay receives the light control switch TAIL signal to control the taillight relay.

HINT:

- If only one taillight does not illuminate, check the bulb or wire harness related to the bulb.
- The taillight relay is installed in the instrument panel junction block, so unlike conventional relays, it can not be removed for inspection.

WIRING DIAGRAM

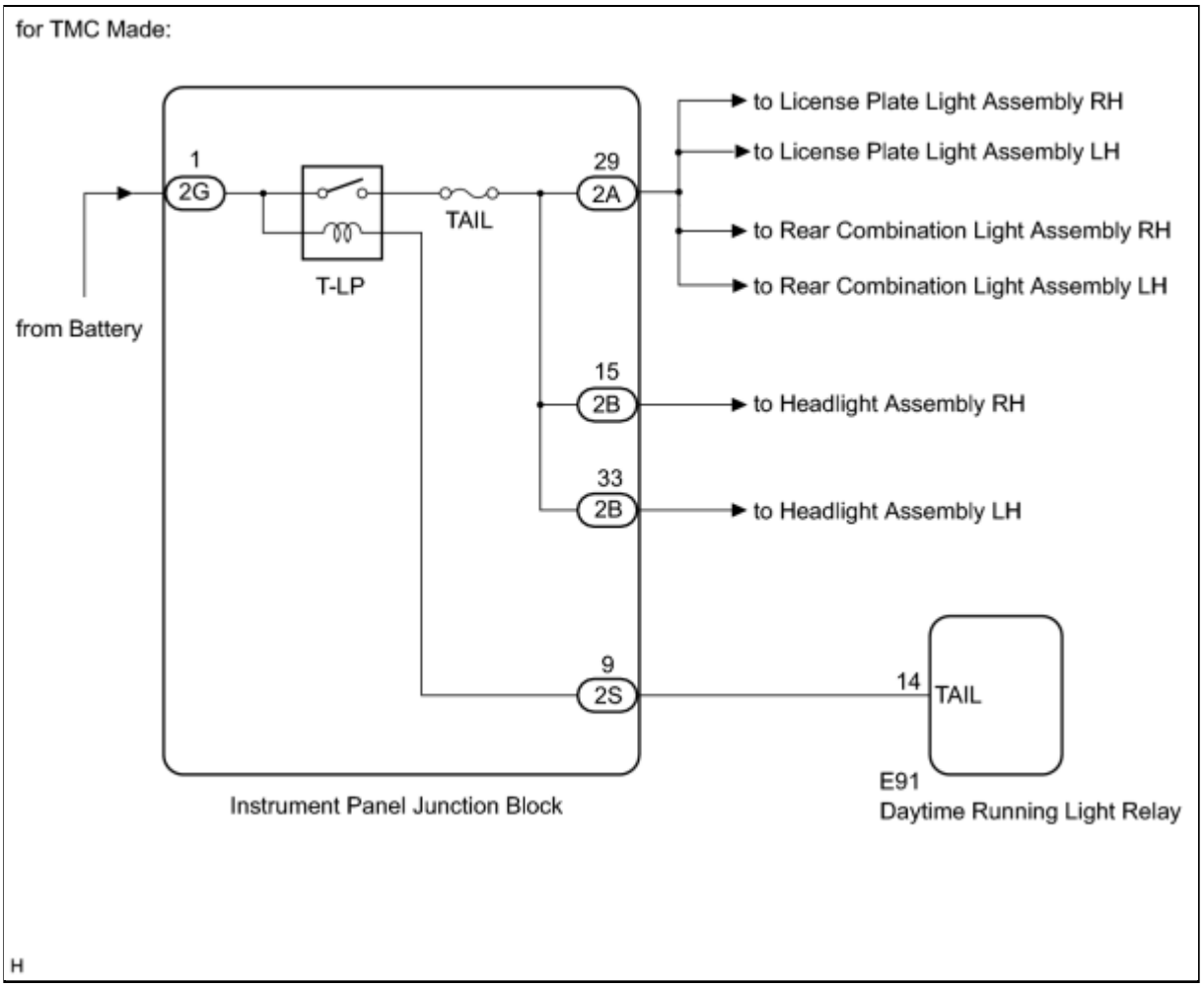

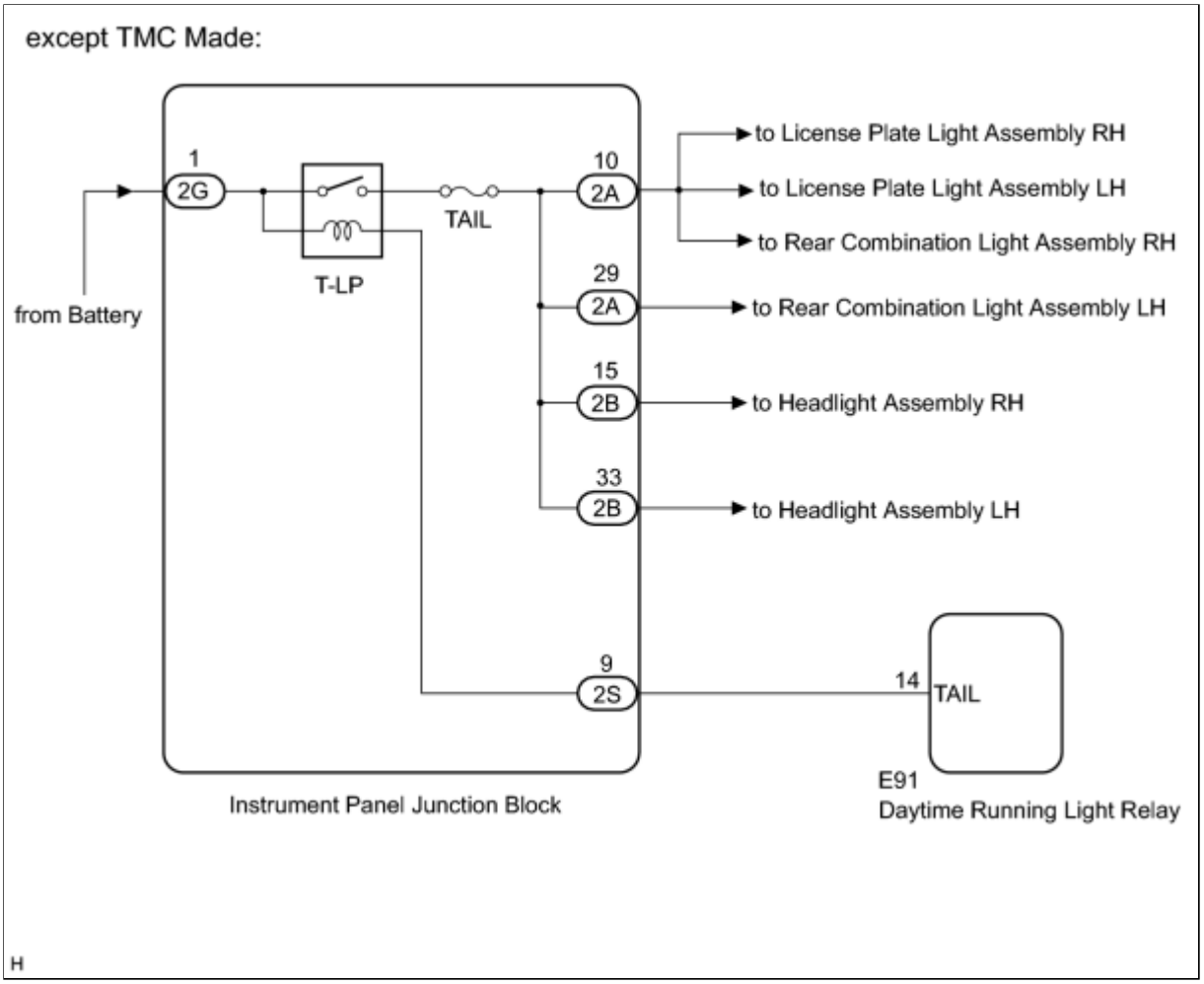

INSPECTION PROCEDURE

PROCEDURE

1.	**INSPECT FUSE (TAIL)**

(a) Remove the TAIL fuse from the instrument panel junction block.

(b) Measure the resistance according to the value(s) in the table below.

Standard Resistance:

TESTER CONNECTION	CONDITION	SPECIFIED CONDITION
TAIL fuse	Always	Below 1 Ω

NG ▶ **REPLACE FUSE**

OK

2.	**INSPECT INSTRUMENT PANEL JUNCTION BLOCK**

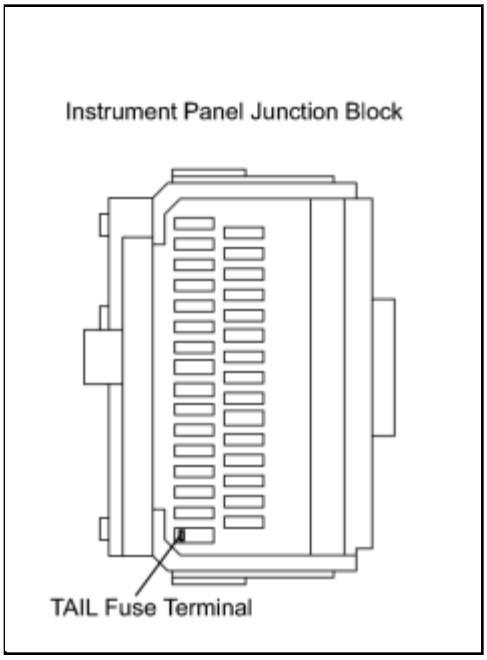

(a) Measure the voltage between the loading slot of the TAIL fuse and body ground.

Standard Voltage:

TESTER CONNECTION	CONDITION	SPECIFIED CONDITION
TAIL fuse terminal - Body ground	Light control switch OFF → TAIL	Below 1 V → 11 to 14 V

NG ▶ **CHECK HARNESS AND CONNECTOR (BATTERY - DAYTIME RUNNING LIGHT CONTROL RELAY)**

OK ▶ **REPAIR OR REPLACE HARNESS OR CONNECTOR (FUSE - EACH BULB)**

3.	**CHECK HARNESS AND CONNECTOR (BATTERY - DAYTIME RUNNING LIGHT CONTROL RELAY)**

(a) Disconnect the E91 daytime running light relay connector.

(b) Measure the voltage according to the value(s) in the table below.

Standard Voltage:

TESTER CONNECTION	CONDITION	SPECIFIED CONDITION
E91-14 (TAIL) - Body ground	Always	11 to 14 V

NG ▶ **REPAIR OR REPLACE HARNESS OR CONNECTOR**

OK ▼

4.	**INSPECT DAYTIME RUNNING LIGHT RELAY**

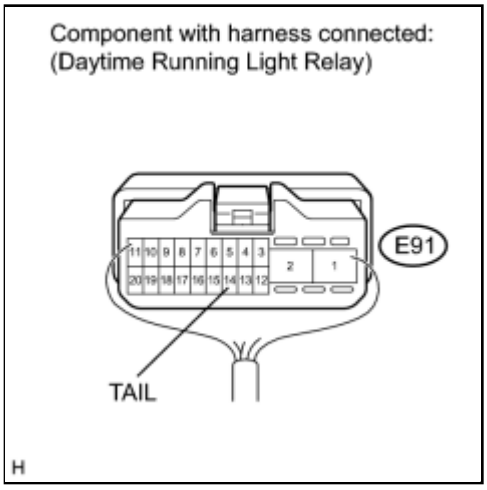

(a) Reconnect the E91 daytime running light relay connector.

(b) Measure the voltage according to the value(s) in the table below.

Standard Voltage:

TESTER CONNECTION	CONDITION	SPECIFIED CONDITION
E91-14 (TAIL) - Body ground	Light control switch OFF → TAIL	11 to 14 V → Below 1 V

NG ▶ **PROCEED TO NEXT CIRCUIT INSPECTION SHOWN IN PROBLEM SYMPTOMS TABLE**

OK ▶ **REPLACE MAIN BODY ECU (INSTRUMENT PANEL JUNCTION BLOCK)**

Last Modified: 3-10-2010	6.4 J	**From:** 200901
Model Year: 2010	**Model:** Corolla	**Doc ID:** RM000000ZBT007X
Title: LIGHTING (EXT): LIGHTING SYSTEM: Parking Brake Switch Circuit (2010 Corolla)		

Parking Brake Switch Circuit

DESCRIPTION

The daytime running light relay receives the parking brake switch signal.

WIRING DIAGRAM

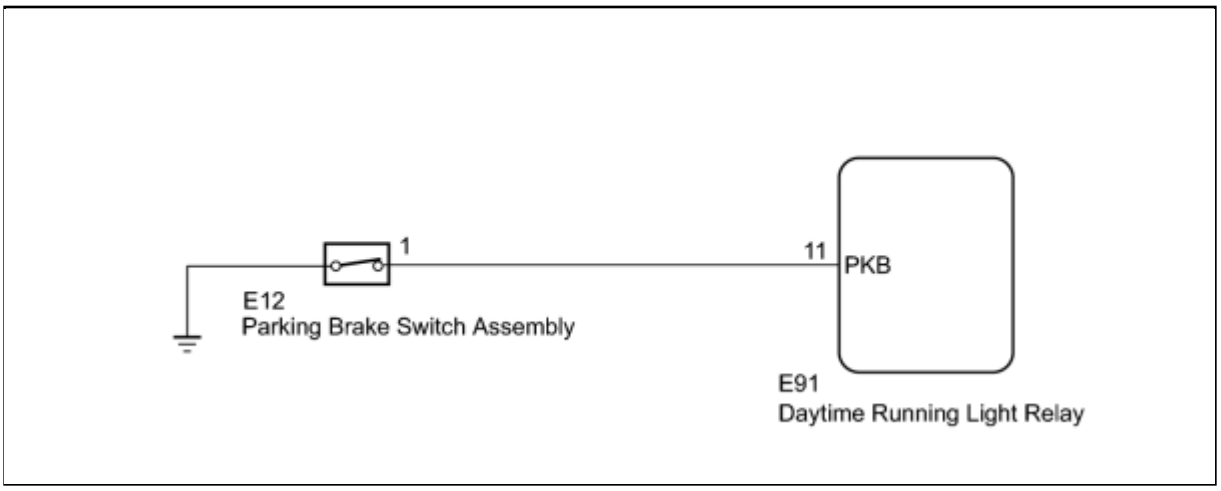

INSPECTION PROCEDURE

PROCEDURE

1.	**CHECK HARNESS AND CONNECTOR (DAYTIME RUNNING LIGHT RELAY - BODY GROUND)**

(a) Disconnect the E91 daytime running light relay connector.

(b) Measure the resistance according to the value(s) in the table below.

Standard Resistance:

TESTER CONNECTION	CONDITION	SPECIFIED CONDITION
E91-11 (PKB) - Body ground	Parking brake is released	10 kΩ or higher
E91-11 (PKB) - Body ground	Parking brake is applied	Below 1 Ω

NG ▶ **INSPECT PARKING BRAKE SWITCH ASSEMBLY**

OK ▶ **PROCEED TO NEXT CIRCUIT INSPECTION SHOWN IN PROBLEM SYMPTOMS TABLE**

2.	**INSPECT PARKING BRAKE SWITCH ASSEMBLY**

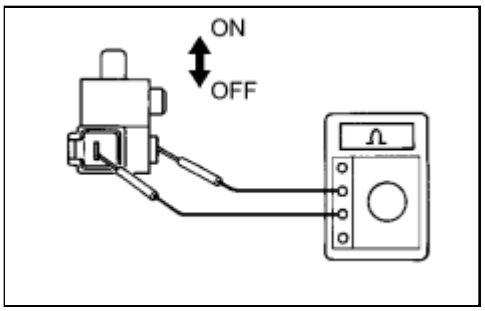

(a) Remove the parking brake switch assembly.

(b) Measure the resistance according to the value(s) in the table below.

Standard Resistance:

TESTER CONNECTION	CONDITION	SPECIFIED RESISTANCE
1 - Switch body	OFF (When shaft is pressed)	10 kΩ or higher
1 - Switch body	ON (When shaft is not pressed)	Below 1 Ω

NG ▶ **REPLACE PARKING BRAKE SWITCH ASSEMBLY**

OK ▶ **REPAIR OR REPLACE HARNESS OR CONNECTOR (PARKING BRAKE SWITCH CIRCUIT)**

Last Modified: 3-10-2010	6.4 J	**From:** 200901
Model Year: 2010	**Model:** Corolla	**Doc ID:** RM000003G1Q003X
Title: LIGHTING (EXT): LIGHTING SYSTEM: Indicator Circuit (2010 Corolla)		

Indicator Circuit

DESCRIPTION

The daytime running light relay receives headlight dimmer switch assembly information to control low beam and high beam headlight indicators.

WIRING DIAGRAM

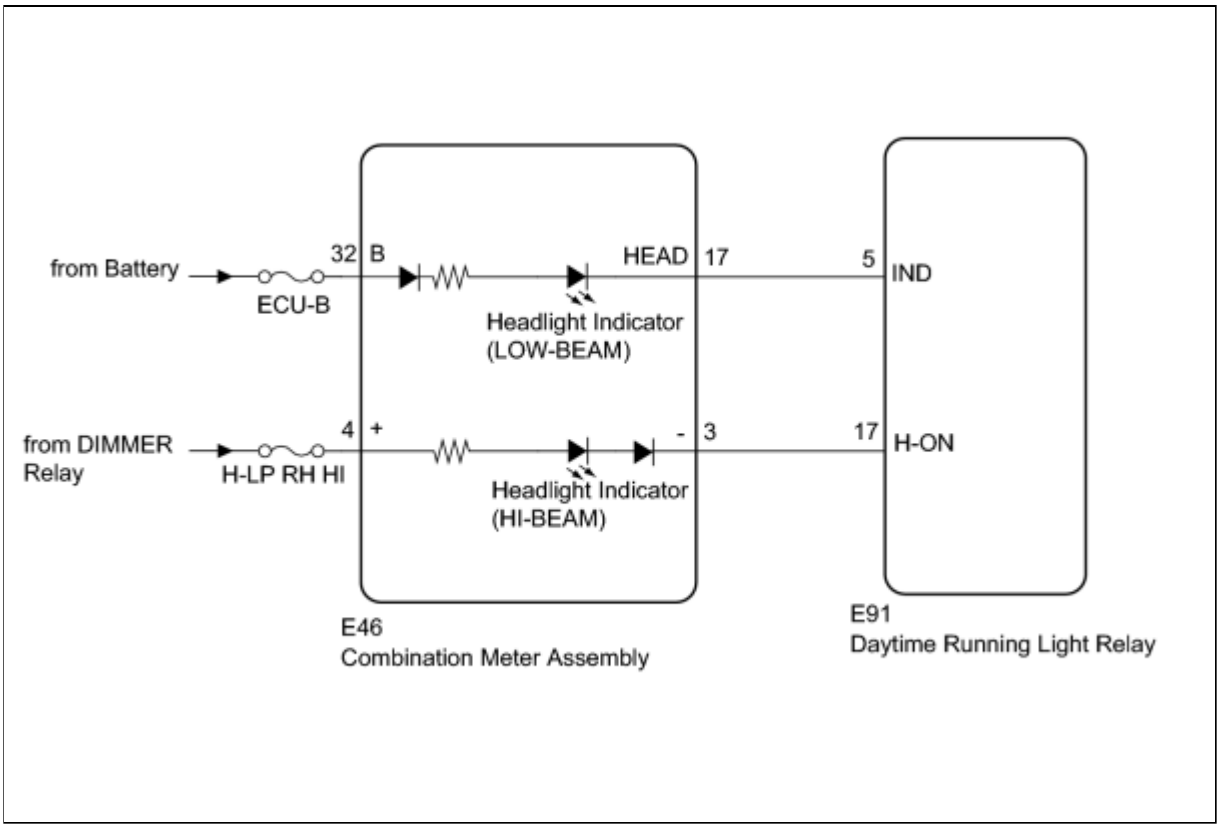

INSPECTION PROCEDURE

PROCEDURE

1.	**INSPECT FUSE**

(a) Remove the ECU-B fuse and H-LP RH HI fuse from the engine room relay block and

junction block.

(b) Measure the resistance according to the value(s) in the table below.

Standard Resistance:

TESTER CONNECTION	CONDITION	SPECIFIED CONDITION
H-LP RH HI	Always	Below 1 Ω
ECU-B fuse	Always	Below 1 Ω

NG ▶ **REPLACE FUSE**

OK ▼

2.	CHECK HARNESS AND CONNECTOR (FUSE - COMBINATION METER ASSEMBLY)

(a) Install the ECU-B fuse and H-LP RH HI fuse to the engine room relay block and junction block.

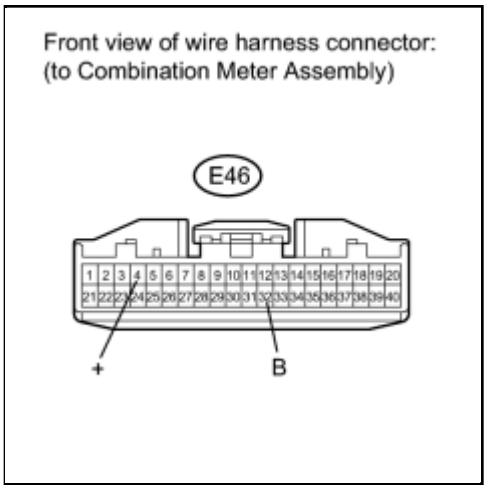

(b) Disconnect the E46 combination meter assembly connector.

(c) Measure the voltage according to the value(s) in the table below.

Standard Voltage:

TESTER CONNECTION	CONDITION	SPECIFIED CONDITION
E46-32 (B) - Body ground	Always	11 to 14 V
E46-4 (+) - Body ground	High beam headlight ON	11 to 14 V

NG ▶ **REPAIR OR REPLACE HARNESS OR CONNECTOR**

OK

3.	**CHECK HARNESS AND CONNECTOR (COMBINATION METER ASSEMBLY - DAYTIME RUNNING LIGHT RELAY)**

(a) Disconnect the E91 daytime running light relay connector.

(b) Measure the resistance according to the value(s) in the table below.

Standard Resistance:

TESTER CONNECTION	CONDITION	SPECIFIED CONDITION
E46-17 (HEAD) - E91-5 (IND)	Always	Below 1 Ω
E46-17 (HEAD) - Body ground	Always	10 kΩ or higher
E46-3 (-) - E91-17 (H-ON)	Always	Below 1 Ω
E46-3 (-) - Body ground	Always	10 kΩ or higher

NG **REPAIR OR REPLACE HARNESS OR CONNECTOR**

OK

4.	**INSPECT COMBINATION METER ASSEMBLY**

(a) Reconnect the E46 combination meter assembly connector.

(b) Measure the voltage according to the value(s) in the table below.

Standard Voltage:

TESTER CONNECTION	CONDITION	SPECIFIED CONDITION
E46-17 (HEAD) - Body ground	Light control switch OFF	11 to 14 V

Component with harness connected:
(Combination Meter Assembly)

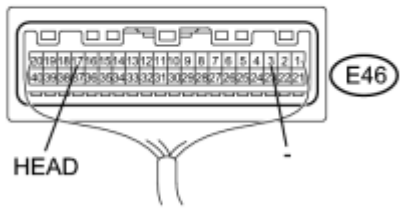

E46-17 (HEAD) - Body ground	Light control switch in HEAD	Below 1 V
E46-3 (-) - Body ground	Dimmer switch OFF	11 to 14 V
E46-3 (-) - Body ground	Light control switch in HEAD and dimmer switch in HIGH	11 to 14 V

NG ▶ **REPLACE COMBINATION METER ASSEMBLY**

OK ▶ **PROCEED TO NEXT CIRCUIT INSPECTION SHOWN IN PROBLEM SYMPTOMS TABLE**

Last Modified: 3-10-2010	6.4 J	**From:** 200901
Model Year: 2010	**Model:** Corolla	**Doc ID:** RM0000011TZ017X
Title: LIGHTING (EXT): LIGHTING SYSTEM: Power Source Circuit (2010 Corolla)		

Power Source Circuit

DESCRIPTION

This circuit detects the state of the ignition switch, and sends it to the daytime running light relay.

WIRING DIAGRAM

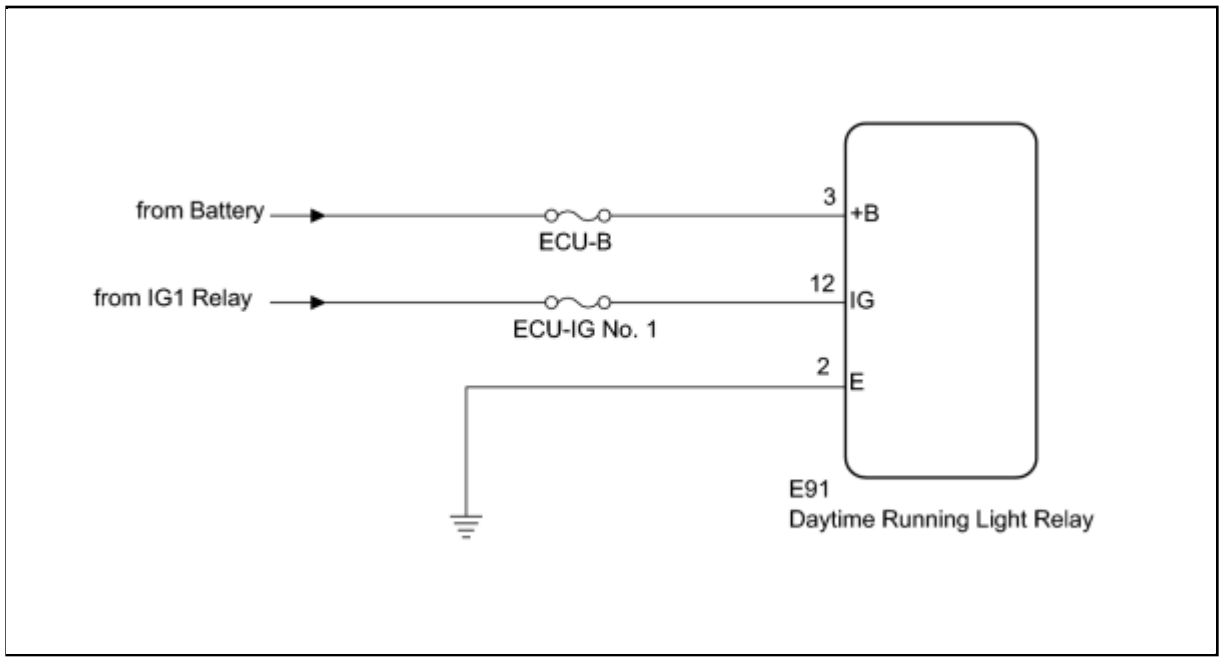

INSPECTION PROCEDURE

PROCEDURE

1.	**INSPECT FUSE (ECU-IG NO. 1, ECU-B)**

(a) Remove the ECU-IG No. 1 fuse from the instrument panel junction block assembly.

(b) Remove the ECU-B fuse from the engine room relay block and junction block.

(c) Measure the resistance according to the value(s) in the table below.

Standard Resistance:

TESTER CONNECTION	CONDITION	SPECIFIED CONDITION
ECU-IG No. 1 fuse	Always	Below 1 Ω
ECU-B fuse	Always	Below 1 Ω

NG ▶ **REPLACE FUSE**

OK ▼

2.	**CHECK HARNESS AND CONNECTOR (BATTERY - DAYTIME RUNNING LIGHT RELAY)**

(a) Disconnect the E91 daytime running light relay connector.

(b) Measure the voltage according to the value(s) in the table below.

Standard Voltage:

TESTER CONNECTION	CONDITION	SPECIFIED CONDITION
E91-3 (+B) - Body ground	Always	11 to 14 V
E91-12 (IG) - Body ground	Ignition switch ON	11 to 14 V

NG ▶ **REPAIR OR REPLACE HARNESS OR CONNECTOR**

OK ▼

3.	**CHECK HARNESS AND CONNECTOR (DAYTIME RUNNING LIGHT RELAY - BODY GROUND)**

(a) Measure the resistance according to the value(s) in the table below.

Standard Resistance:

TESTER CONNECTION	CONDITION	SPECIFIED CONDITION
E91-2 (E) - Body ground	Always	Below 1 Ω

NG ▶ **REPAIR OR REPLACE HARNESS OR CONNECTOR**

OK	PROCEED TO NEXT CIRCUIT INSPECTION SHOWN IN PROBLEM SYMPTOMS TABLE

Last Modified: 3-10-2010	6.4 K	**From:** 200901
Model Year: 2010	**Model:** Corolla	**Doc ID:** RM00000340T009X
Title: LIGHTING (INT): LUGGAGE COMPARTMENT ROOM LIGHT: COMPONENTS (2010 Corolla)		

COMPONENTS

ILLUSTRATION

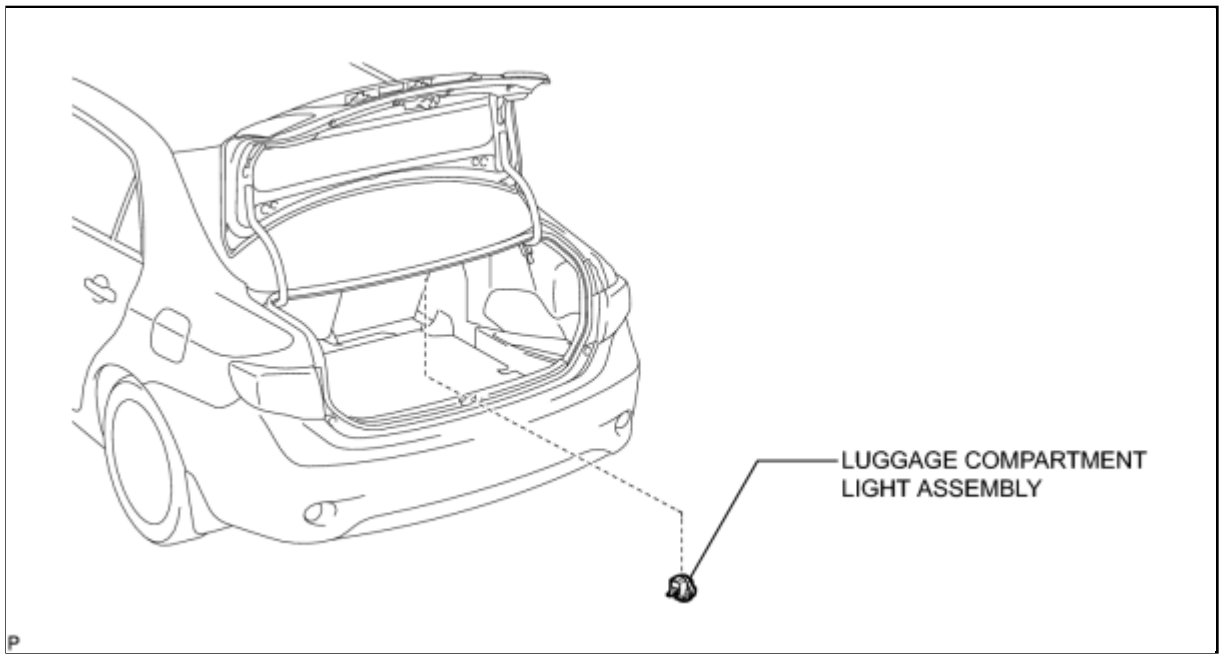

Last Modified: 3-10-2010	6.4 A	**From:** 200901
Model Year: 2010	**Model:** Corolla	**Doc ID:** RM00000340U009X
Title: LIGHTING (INT): LUGGAGE COMPARTMENT ROOM LIGHT: REMOVAL (2010 Corolla)		

REMOVAL

1. REMOVE LUGGAGE COMPARTMENT LIGHT ASSEMBLY

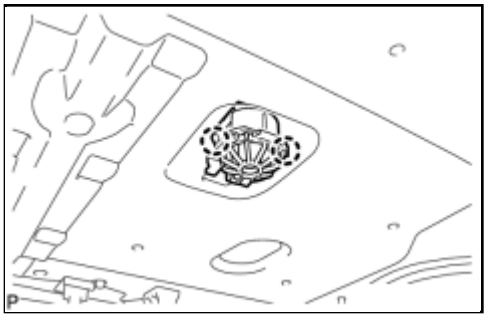

(a) Disengage the 2 claws and disconnect the luggage compartment light assembly.

(b) Disconnect the connector and remove the luggage compartment light assembly.

Last Modified: 3-10-2010	6.4 G	**From:** 200901
Model Year: 2010	**Model:** Corolla	**Doc ID:** RM000001983024X
Title: LIGHTING (INT): LUGGAGE COMPARTMENT ROOM LIGHT: INSPECTION (2010 Corolla)		

INSPECTION

1. INSPECT LUGGAGE COMPARTMENT LIGHT ASSEMBLY

Component without harness connected:
(Light Assembly)



(a) Connect a (+) lead from the battery to terminal 1 and a (-) lead to terminal 2.

(b) Check that the light comes on.

OK:

The light comes on.

If the result is not as specified, replace the bulb or light assembly.

Last Modified: 3-10-2010	6.4 A	**From:** 200901
Model Year: 2010	**Model:** Corolla	**Doc ID:** RM00000340S009X
Title: LIGHTING (INT): LUGGAGE COMPARTMENT ROOM LIGHT: INSTALLATION (2010 Corolla)		

INSTALLATION

1. INSTALL LUGGAGE COMPARTMENT LIGHT ASSEMBLY

(a) Connect the connector.

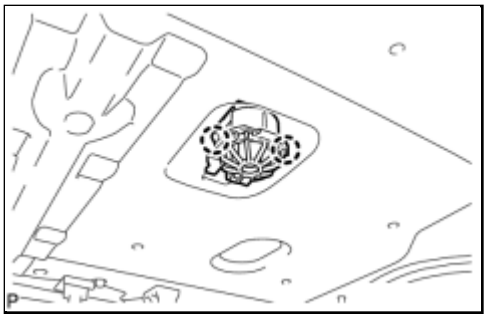

(b) Engage the 2 claws and install the luggage compartment light assembly.

Last Modified: 3-10-2010	6.4 K	**From:** 200901
Model Year: 2010	**Model:** Corolla	**Doc ID:** RM000002VNR00CX
Title: LIGHTING (EXT): REAR COMBINATION LIGHT ASSEMBLY: COMPONENTS (2010 Corolla)		

COMPONENTS

ILLUSTRATION

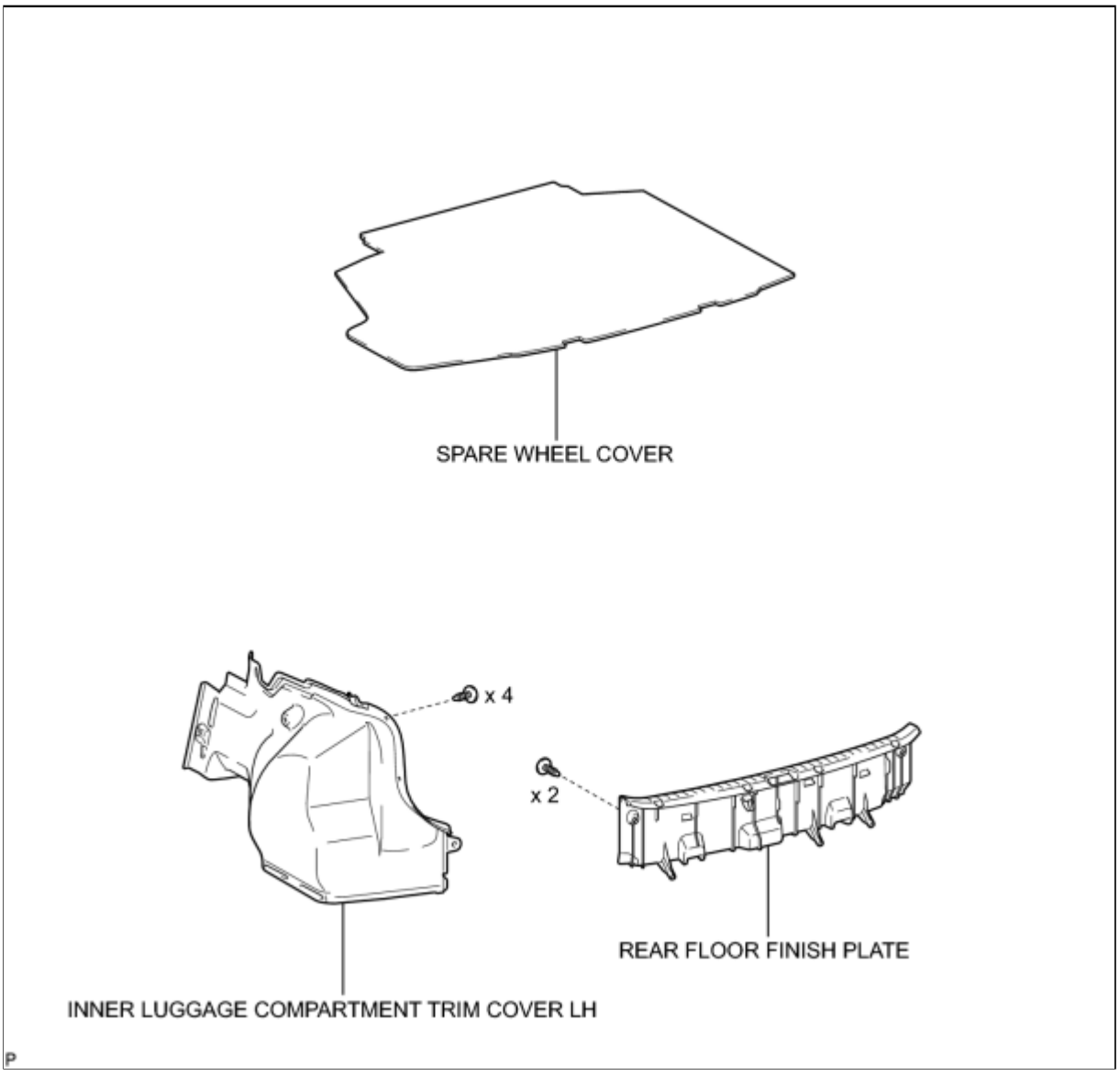

ILLUSTRATION

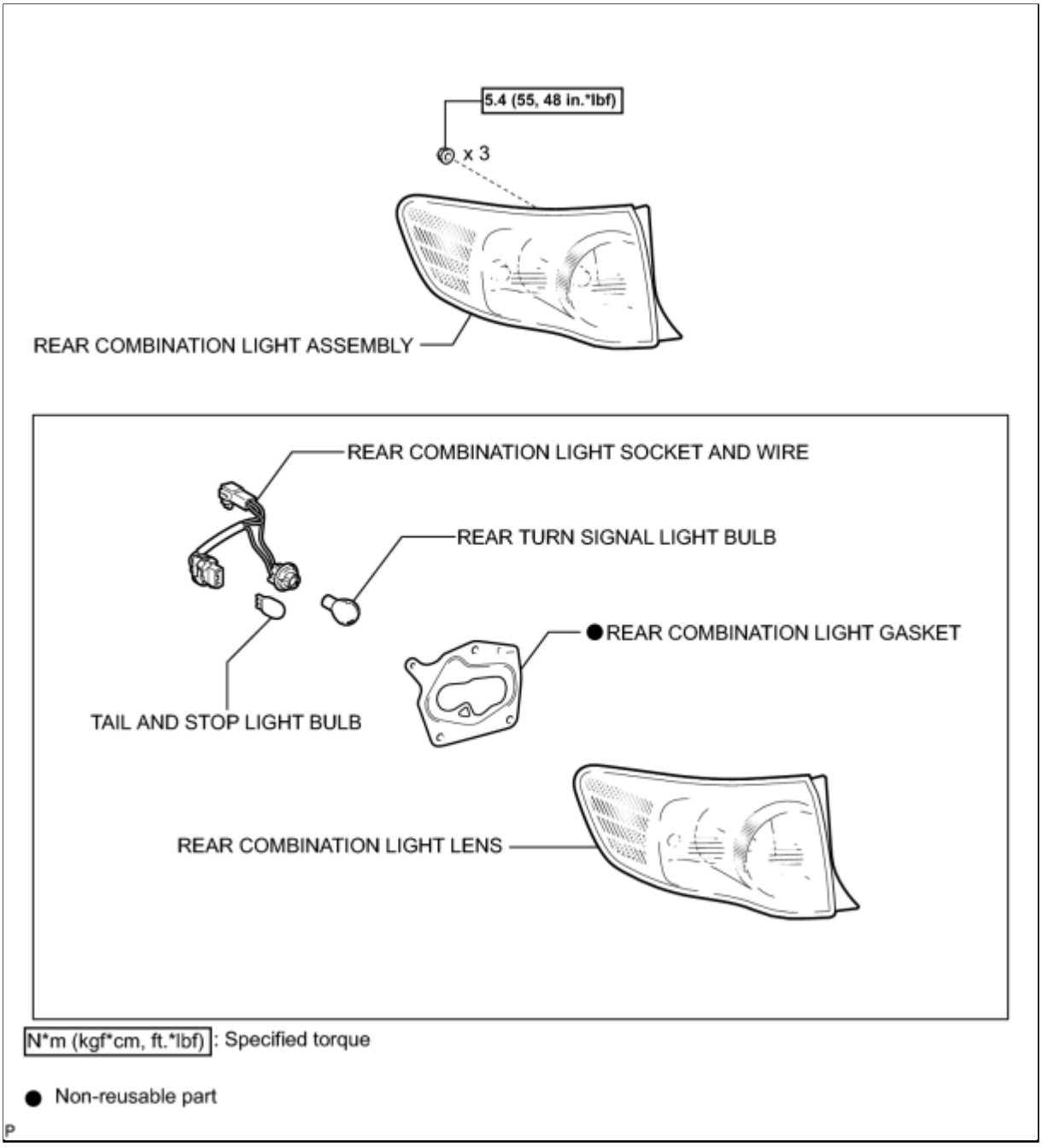

N*m (kgf*cm, ft.*lbf) : Specified torque

● Non-reusable part

P

Last Modified: 3-10-2010	6.4 G	**From:** 200901
Model Year: 2010	**Model:** Corolla	**Doc ID:** RM00000202E01HX
Title: LIGHTING (EXT): REAR COMBINATION LIGHT ASSEMBLY: ON-VEHICLE INSPECTION (2010 Corolla)		

ON-VEHICLE INSPECTION

1. INSPECT REAR COMBINATION LIGHT ASSEMBLY

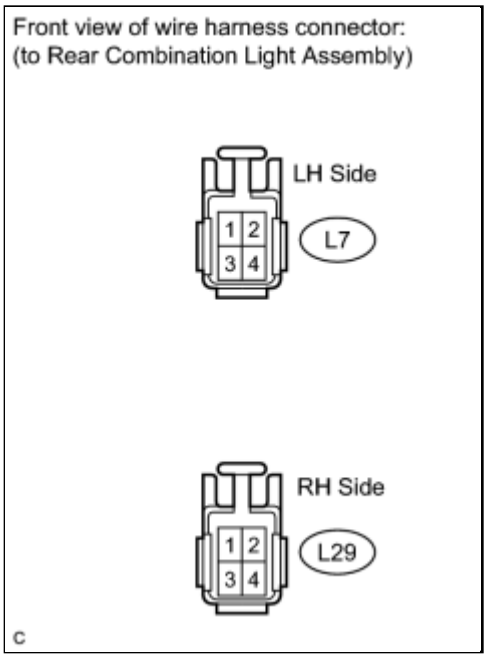

(a) Disconnect the connector from the rear combination light assembly.

(b) Measure the voltage according to the value(s) in the table below.

Standard Voltage:

LH Side

RH Side

TESTER CONNECTION	CONDITION	SPECIFIED CONDITION
L7-1 - L7-4	Light control switch OFF	Below 1 V
	Light control switch in TAIL	11 to 14 V
L7-2 - L7-4	Brake pedal released	Below 1 V
	Brake pedal depressed	11 to 14 V
L7-3 - L7-4	Turn signal switch OFF	Below 1 V
	Ignition switch ON and Turn signal switch in LH	11 to 14 V (60 to 120 times per minute)

TESTER CONNECTION	CONDITION	SPECIFIED CONDITION
L29-1 - L29-4	Light control switch OFF	Below 1 V
	Light control switch in TAIL	11 to 14 V
L29-2 - L29-4	Brake pedal released	Below 1 V
	Brake pedal depressed	11 to 14 V
L29-3 - L29-4	Turn signal switch OFF	Below 1 V
	Ignition switch ON and Turn signal switch in RH	11 to 14 V (60 to 120 times per minute)

If the result is not as specified, there is a malfunction on the wire harness side.

Last Modified: 3-10-2010	6.4 A	**From:** 200901
Model Year: 2010	**Model:** Corolla	**Doc ID:** RM000002VNS00DX
Title: LIGHTING (EXT): REAR COMBINATION LIGHT ASSEMBLY: REMOVAL (2010 Corolla)		

REMOVAL

1. REMOVE SPARE WHEEL COVER INFO

2. REMOVE REAR FLOOR FINISH PLATE INFO

3. REMOVE INNER LUGGAGE COMPARTMENT TRIM COVER LH INFO

4. REMOVE REAR COMBINATION LIGHT ASSEMBLY

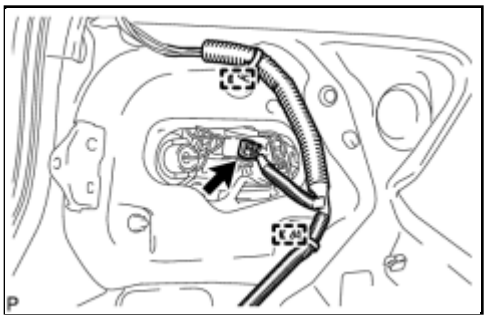

(a) Disconnect the connector and disengage the 2 clamps.

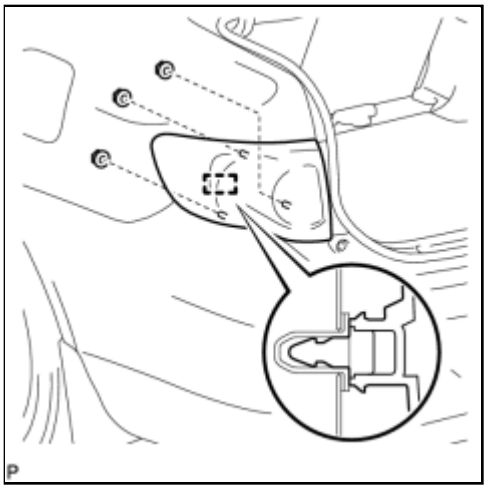

(b) Remove the 3 nuts.

(c) Disengage the pin and remove the rear combination light assembly.

Last Modified: 3-10-2010	6.4 A	**From:** 200901
Model Year: 2010	**Model:** Corolla	**Doc ID:** RM000002VNT00DX
Title: LIGHTING (EXT): REAR COMBINATION LIGHT ASSEMBLY: DISASSEMBLY (2010 Corolla)		

DISASSEMBLY

1. REMOVE TAIL AND STOP LIGHT BULB

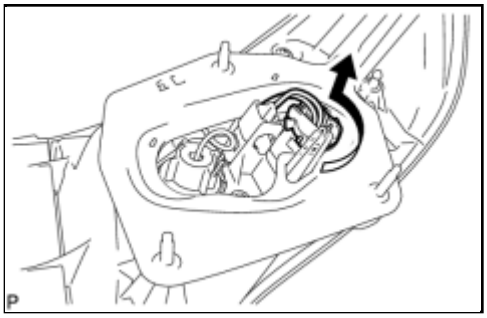

(a) Turn the tail and stop light bulb and the rear combination light socket and wire in the direction indicated by the arrow and disconnect them as a unit.

(b) Remove the tail and stop light bulb from the rear combination light socket and wire.

2. REMOVE REAR TURN SIGNAL LIGHT BULB

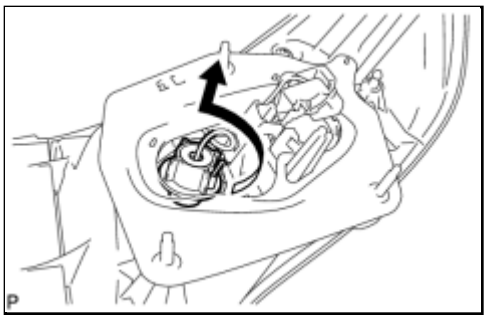

(a) Turn the rear turn signal light bulb and the rear combination light socket and wire in the direction indicated by the arrow and disconnect them as a unit.

(b) Remove the rear turn signal light bulb from the rear combination light socket and wire.

3. REMOVE REAR COMBINATION LIGHT SOCKET AND WIRE

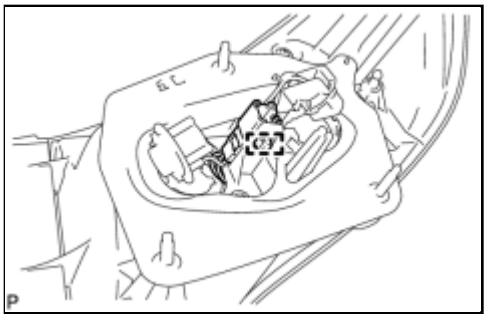

(a) Disengage the clamp and remove the rear combination light socket and wire.

4. REMOVE REAR COMBINATION LIGHT GASKET

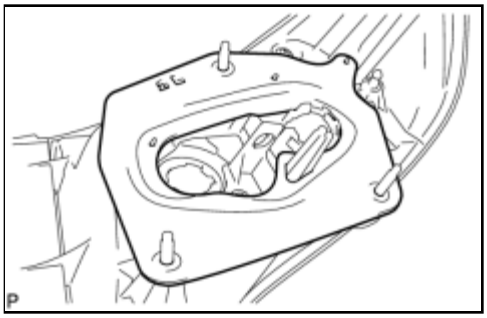

(a) Remove the rear combination light gasket.

NOTICE:

- Be sure to remove all traces of the old gasket from the body.
- Do not reuse the removed gasket. Be sure to install a new rear combination light gasket to prevent water ingress.

Last Modified: 3-10-2010	6.4 A	**From:** 200901
Model Year: 2010	**Model:** Corolla	**Doc ID:** RM000002VNU00DX
Title: LIGHTING (EXT): REAR COMBINATION LIGHT ASSEMBLY: REASSEMBLY (2010 Corolla)		

REASSEMBLY

1. INSTALL REAR COMBINATION LIGHT GASKET

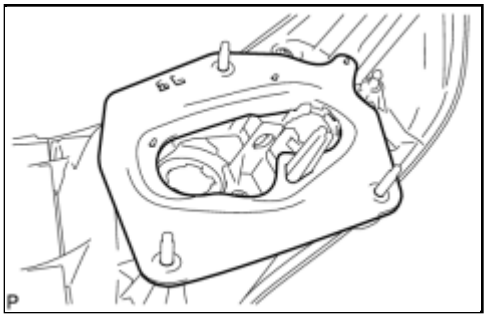

(a) Install a new rear combination light gasket.

2. INSTALL REAR COMBINATION LIGHT SOCKET AND WIRE

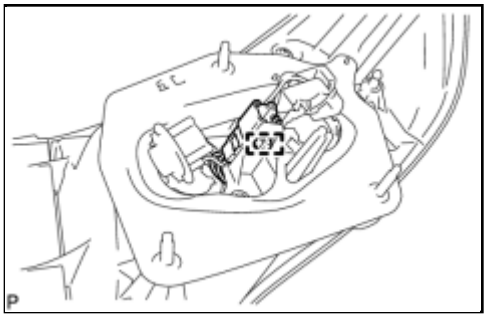

(a) Connect the clamp and install the rear combination light socket and wire.

3. INSTALL REAR TURN SIGNAL LIGHT BULB

(a) Install the rear turn signal light bulb to the rear combination light socket and wire.

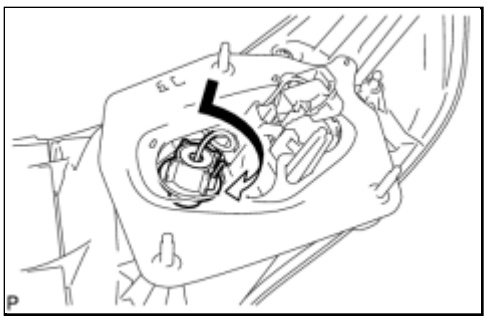

(b) Turn the rear turn signal light bulb and rear combination light socket and wire in the direction indicated by the arrow and install them as a unit.

4. INSTALL TAIL AND STOP LIGHT BULB

(a) Install the tail and stop light bulb to the rear combination light socket and wire.

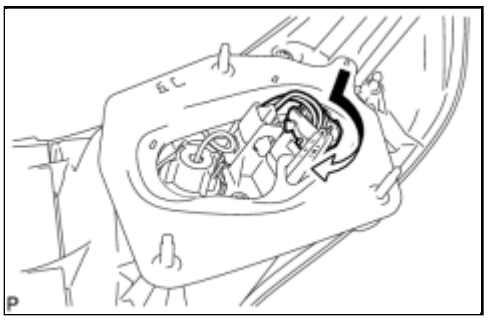

(b) Turn the tail and stop light bulb and rear combination light socket and wire in the direction indicated by the arrow and install them as a unit.

Last Modified: 3-10-2010	6.4 A	**From:** 200901
Model Year: 2010	**Model:** Corolla	**Doc ID:** RM000002VNQ00DX
Title: LIGHTING (EXT): REAR COMBINATION LIGHT ASSEMBLY: INSTALLATION (2010 Corolla)		

INSTALLATION

1. INSTALL REAR COMBINATION LIGHT ASSEMBLY

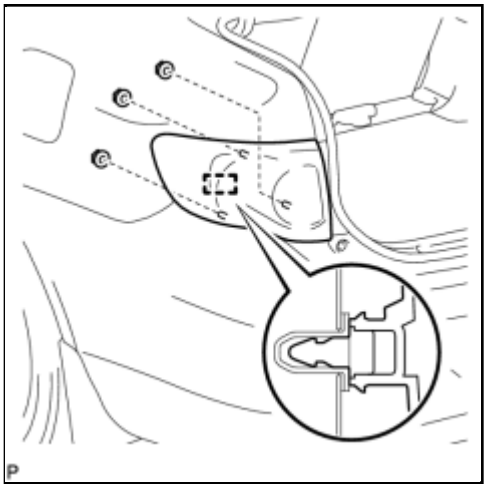

(a) Engage the pin.

(b) Install the rear combination light assembly with the 3 nuts.

Torque: 5.4 N·m (55 kgf·cm, 48in·lbf)

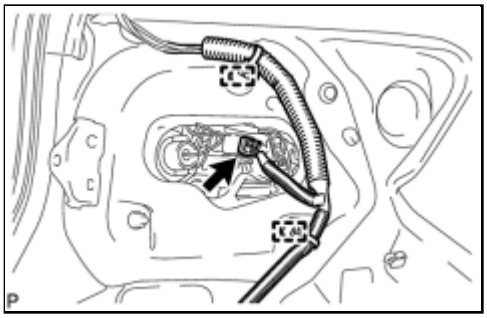

(c) Connect the connector and engage the 2 clamps.

2. INSTALL INNER LUGGAGE COMPARTMENT TRIM COVER LH INFO

3. INSTALL REAR FLOOR FINISH PLATE INFO

4. INSTALL SPARE WHEEL COVER INFO

Last Modified: 3-10-2010	6.4 K	**From:** 200901
Model Year: 2010	**Model:** Corolla	**Doc ID:** RM000002VNR00DX
Title: LIGHTING (EXT): REAR LIGHT ASSEMBLY: COMPONENTS (2010 Corolla)		

COMPONENTS

ILLUSTRATION

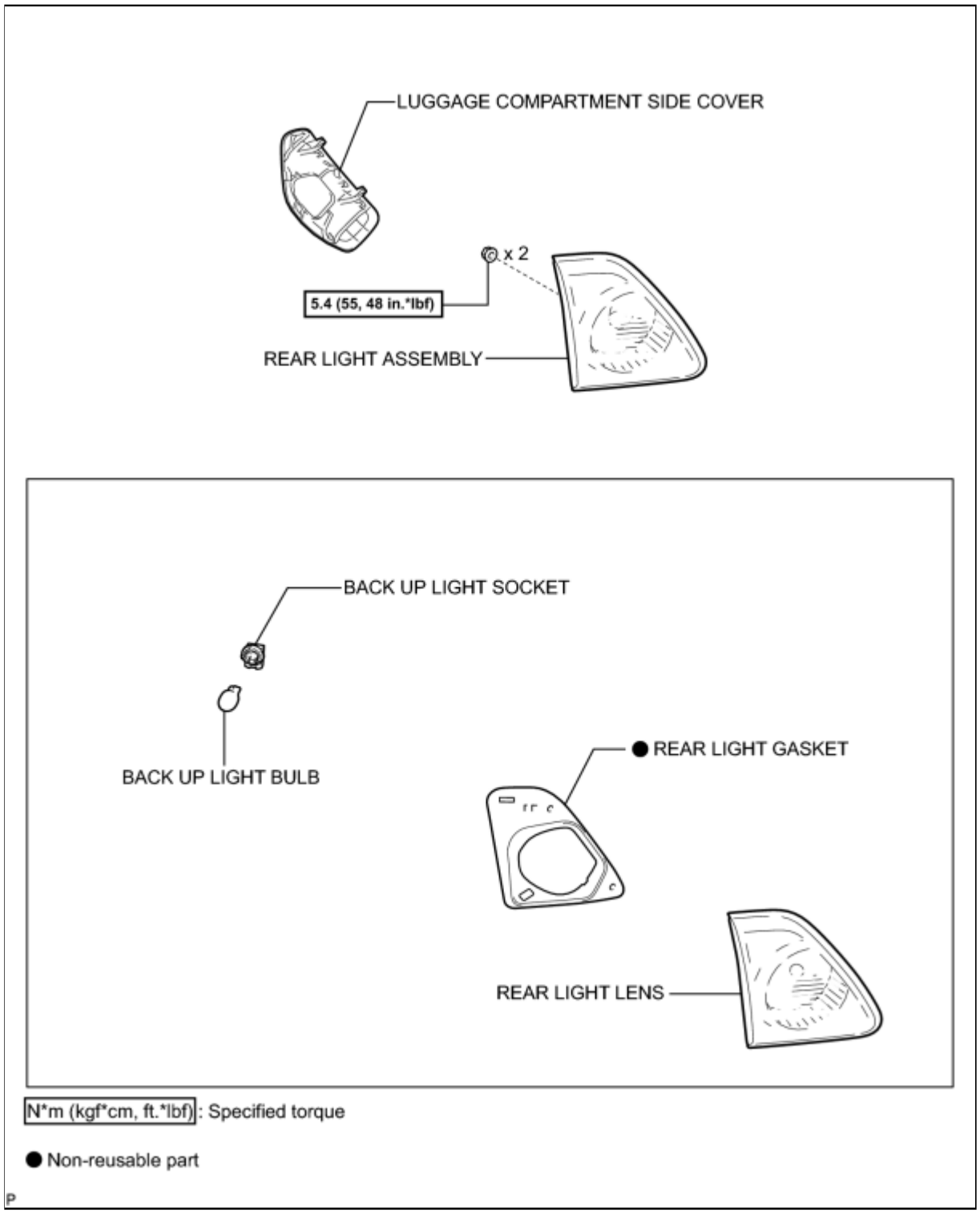

Last Modified: 3-10-2010	6.4 G	**From:** 200901
Model Year: 2010	**Model:** Corolla	**Doc ID:** RM00000202E01IX
Title: LIGHTING (EXT): REAR LIGHT ASSEMBLY: ON-VEHICLE INSPECTION (2010 Corolla)		

ON-VEHICLE INSPECTION

1. INSPECT REAR LIGHT ASSEMBLY

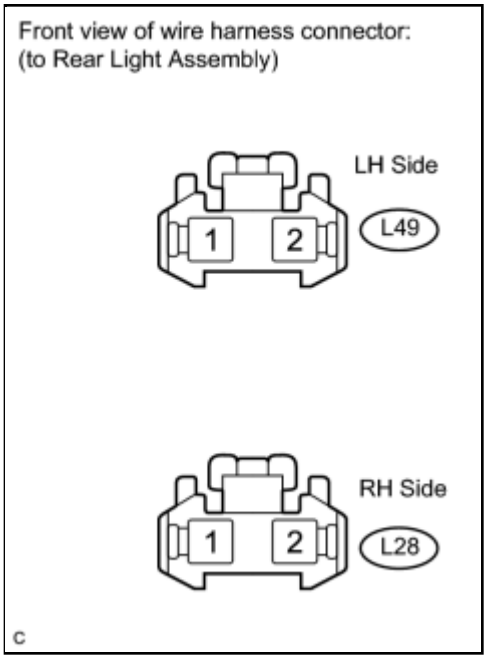

(a) Disconnect the connector from the rear light assembly.

(b) Measure the voltage according to the value(s) in the table below.

Standard Voltage:

LH Side

RH Side

TESTER CONNECTION	CONDITION	SPECIFIED CONDITION
L49-1 - L49-2	Shift lever not in R	Below 1 V
	Shift lever in R	11 to 14 V

TESTER CONNECTION	CONDITION	SPECIFIED CONDITION
L28-1 - L28-2	Shift lever not in R	Below 1 V
	Shift lever in R	11 to 14 V

If the result is not as specified, there is a malfunction on the wire harness side.

Last Modified: 3-10-2010	6.4 A	**From:** 200901
Model Year: 2010	**Model:** Corolla	**Doc ID:** RM000002VNS00EX
Title: LIGHTING (EXT): REAR LIGHT ASSEMBLY: REMOVAL (2010 Corolla)		

REMOVAL

1. REMOVE LUGGAGE COMPARTMENT SIDE COVER

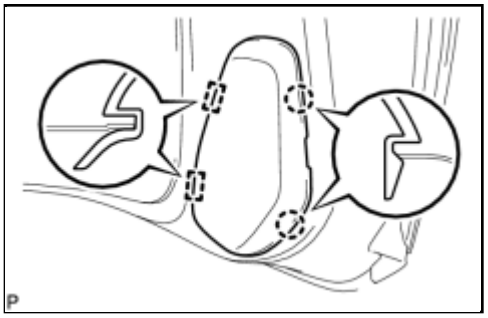

(a) Disengage the 2 claws.

(b) Disengage the 2 guides and remove the luggage compartment side cover.

2. REMOVE REAR LIGHT ASSEMBLY

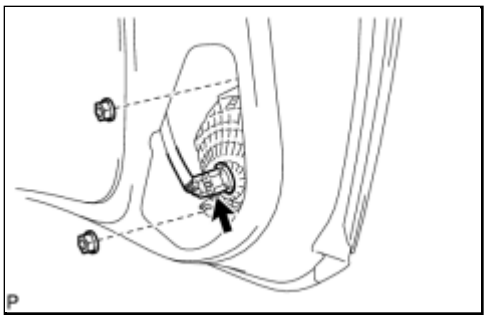

(a) Disconnect the connector and remove the 2 nuts.

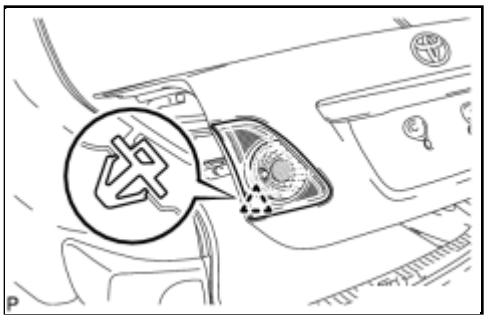

(b) Disengage the clip and remove the rear light assembly.

Last Modified: 3-10-2010	6.4 A	**From:** 200901
Model Year: 2010	**Model:** Corolla	**Doc ID:** RM000002VNT00EX
Title: LIGHTING (EXT): REAR LIGHT ASSEMBLY: DISASSEMBLY (2010 Corolla)		

DISASSEMBLY

1. REMOVE BACK UP LIGHT BULB

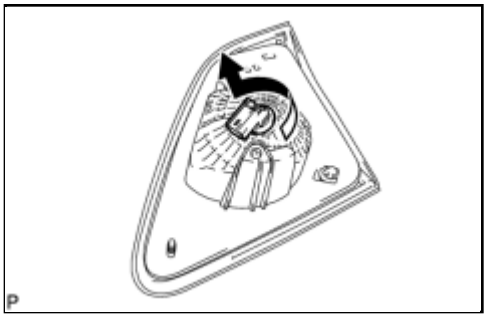

(a) Turn the back up light bulb and the back up light socket in the direction indicated by the arrow and disconnect them as a unit.

(b) Remove the back up light bulb from the back up light socket.

2. REMOVE REAR LIGHT GASKET

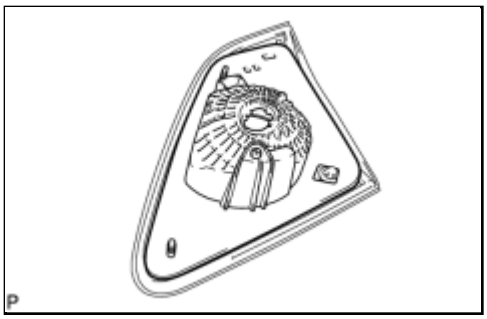

(a) Remove the rear light gasket.

NOTICE:

- Be sure to remove all traces of the old gasket from the body.
- Do not reuse the removed gasket. Be sure to install a new rear light gasket to prevent water ingress.

Last Modified: 3-10-2010	6.4 A	**From:** 200901
Model Year: 2010	**Model:** Corolla	**Doc ID:** RM000002VNU00EX
Title: LIGHTING (EXT): REAR LIGHT ASSEMBLY: REASSEMBLY (2010 Corolla)		

REASSEMBLY

1. INSTALL REAR LIGHT GASKET

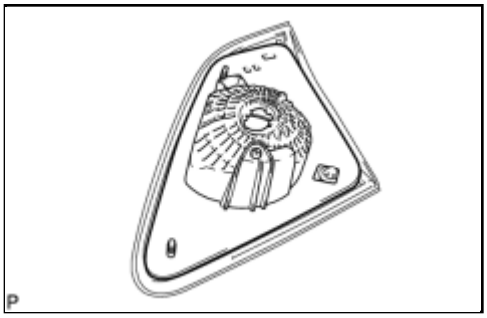

(a) Install a new rear light gasket.

2. INSTALL BACK UP LIGHT BULB

(a) Install the back up light bulb to the back up light socket.

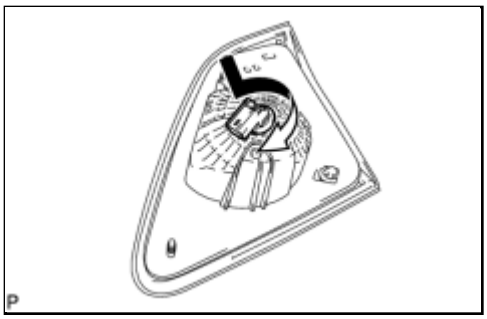

(b) Turn the back up light bulb and the back up light socket in the direction indicated by the arrow and install them as a unit.

Last Modified: 3-10-2010	6.4 A	**From:** 200901
Model Year: 2010	**Model:** Corolla	**Doc ID:** RM000002VNQ00EX
Title: LIGHTING (EXT): REAR LIGHT ASSEMBLY: INSTALLATION (2010 Corolla)		

INSTALLATION

1. INSTALL REAR LIGHT ASSEMBLY

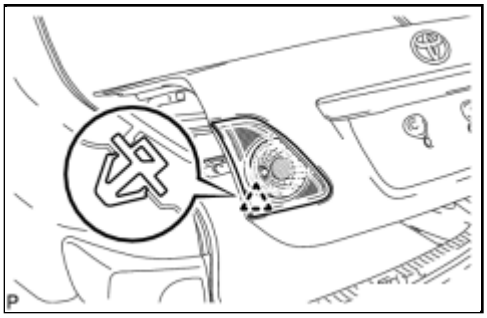

(a) Engage the clip.

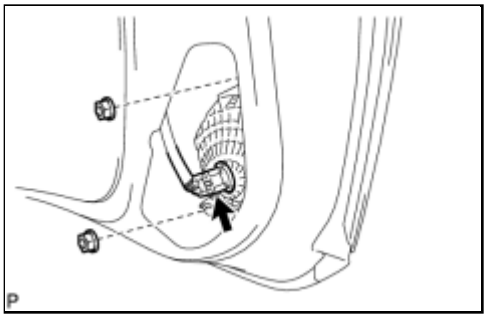

(b) Install the rear light assembly with the 2 nuts.

Torque: 5.4 N·m (55 kgf·cm, 48in·lbf)

(c) Connect the connector.

2. INSTALL LUGGAGE COMPARTMENT SIDE COVER

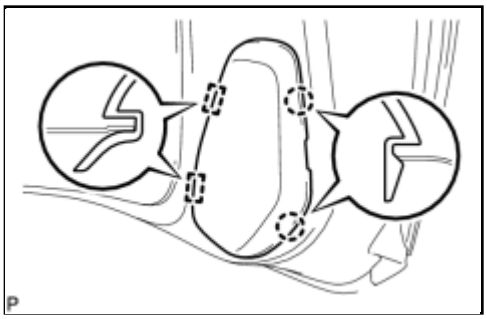

(a) Engage the 2 guides.

(b) Engage the 2 claws and install the luggage compartment side cover.

Last Modified: 3-10-2010	6.4 G	**From:** 200901
Model Year: 2010	**Model:** Corolla	**Doc ID:** RM000001UPP01CX
Title: LIGHTING (EXT): RELAY: ON-VEHICLE INSPECTION (2010 Corolla)		

ON-VEHICLE INSPECTION

1. INSPECT HEADLIGHT RELAY (H-LP)

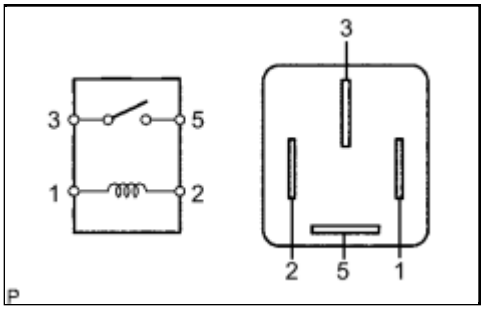

(a) Remove the headlight relay from the engine room relay block.

(b) Measure the resistance according to the value(s) in the table below.

Standard Resistance:

TESTER CONNECTION	CONDITION	SPECIFIED CONDITION
3 - 5	Voltage is not applied between terminals 1 and 2	10 kΩ or higher
3 - 5	Voltage is applied between terminals 1 and 2	Below 1 Ω

If the result is not as specified, replace the relay.

2. INSPECT HEADLIGHT DIMMER RELAY (DIMMER)

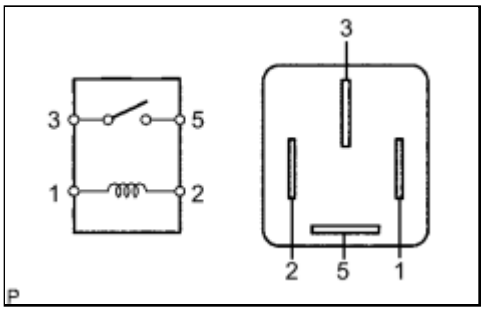

(a) Remove the headlight dimmer relay from the engine room relay block.

(b) Measure the resistance according to the value(s) in the table below.

Standard Resistance:

TESTER CONNECTION	CONDITION	SPECIFIED CONDITION
3 - 5	Voltage is not applied between terminals 1 and 2	10 kΩ or higher
3 - 5	Voltage is applied between terminals 1 and 2	Below 1 Ω

If the result is not as specified, replace the relay.

3. INSPECT FOG LIGHT RELAY (FR FOG)

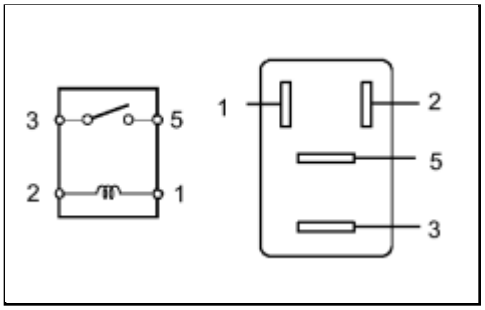

(a) Remove the front fog light relay from the relay block.

(b) Measure the resistance according to the value(s) in the table below.

Standard Resistance:

TESTER CONNECTION	CONDITION	SPECIFIED CONDITION
3 - 5	Voltage is not applied between terminals 1 and 2	10 kΩ or higher
3 - 5	Voltage is applied between terminals 1 and 2	Below 1 Ω

If the result is not as specified, replace the relay.

Last Modified: 3-10-2010	6.4 K	**From:** 200901
Model Year: 2010	**Model:** Corolla	**Doc ID:** RM0000033ZK009X
Title: LIGHTING (EXT): STOP LIGHT SWITCH: COMPONENTS (2010 Corolla)		

COMPONENTS

ILLUSTRATION

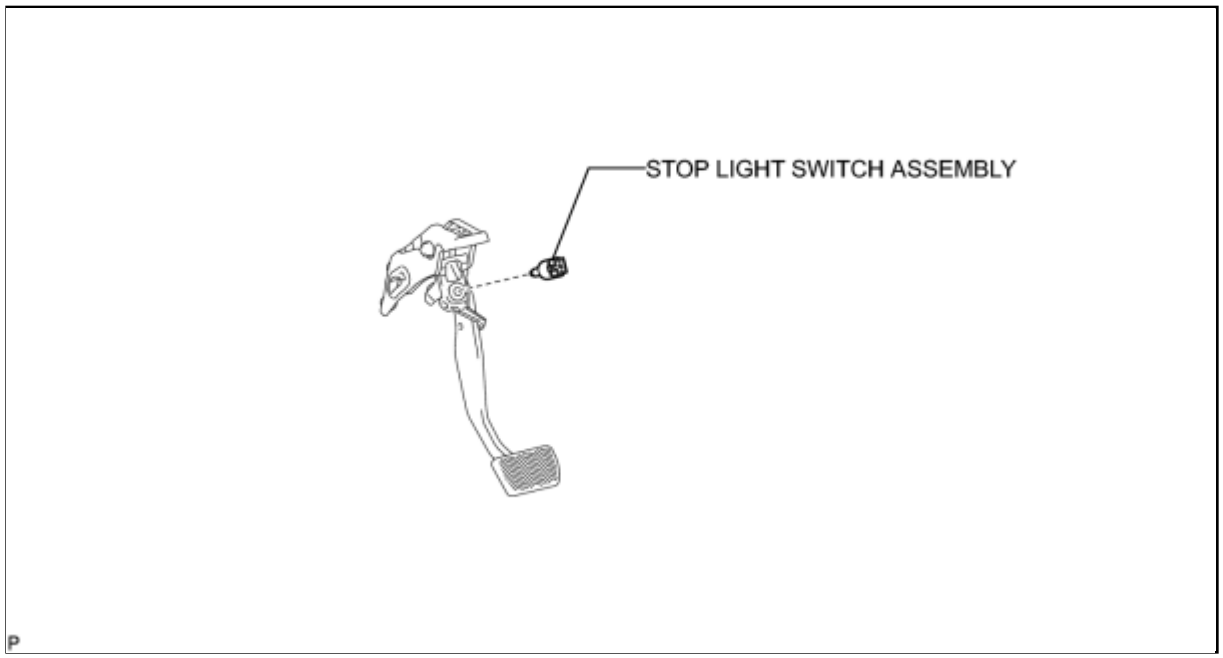

Last Modified: 3-10-2010	6.4 A	**From:** 200901
Model Year: 2010	**Model:** Corolla	**Doc ID:** RM000002VPP00DX
Title: LIGHTING (EXT): STOP LIGHT SWITCH: REMOVAL (2010 Corolla)		

REMOVAL

1. REMOVE STOP LIGHT SWITCH ASSEMBLY

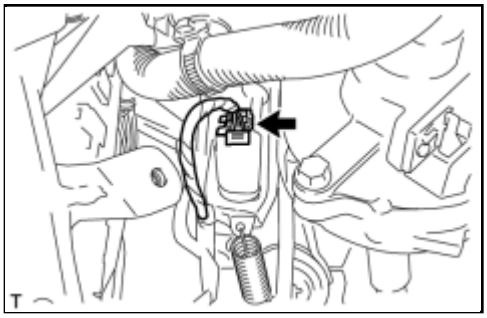

(a) Disconnect the connector.

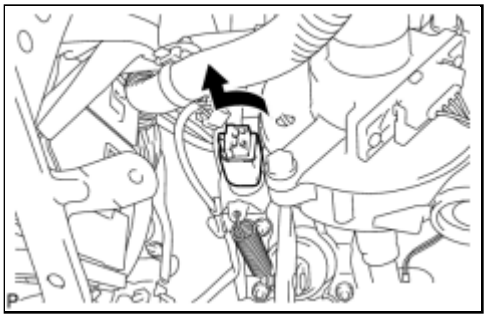

(b) Turn the stop light switch assembly counterclockwise and remove the stop light switch assembly.

Last Modified: 3-10-2010	6.4 G	**From:** 200901
Model Year: 2010	**Model:** Corolla	**Doc ID:** RM0000014D901AX
Title: LIGHTING (EXT): STOP LIGHT SWITCH: INSPECTION (2010 Corolla)		

INSPECTION

1. INSPECT STOP LIGHT SWITCH ASSEMBLY

(a) Measure the resistance according to the value(s) in the table below.

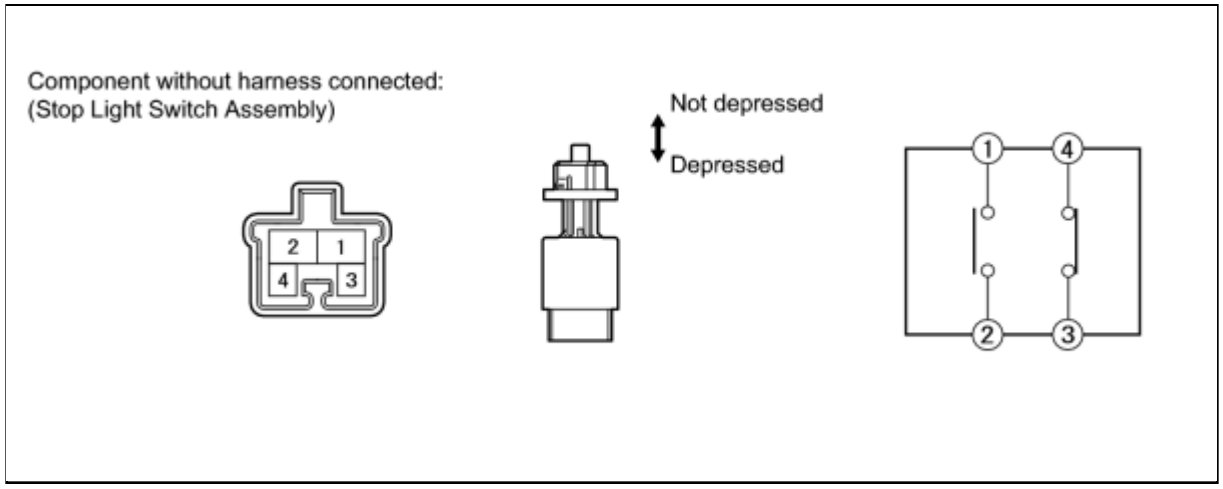

Standard Resistance:

TESTER CONNECTION	CONDITION	SPECIFIED CONDITION
1 - 2	Depressed	10 kΩ or higher
	Not depressed	Below 1 Ω
3 - 4	Depressed	Below 1 Ω
	Not depressed	10 kΩ or higher

If the result is not as specified, replace the stop light switch assembly.

Last Modified: 3-10-2010	6.4 A	**From:** 200901
Model Year: 2010	**Model:** Corolla	**Doc ID:** RM000002VPN00DX
Title: LIGHTING (EXT): STOP LIGHT SWITCH: INSTALLATION (2010 Corolla)		

INSTALLATION

1. INSTALL STOP LIGHT SWITCH ASSEMBLY

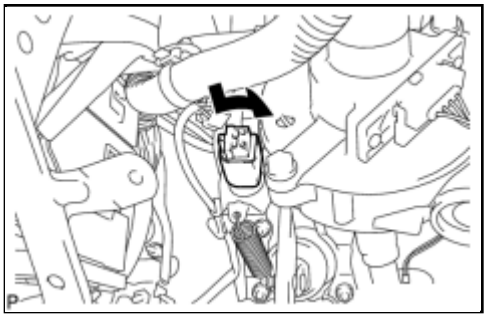

(a) Insert the stop light switch assembly until the rod hits the cushion.

NOTICE:

When inserting the stop light switch assembly, support the pedal from behind so that the pedal is not pushed in.

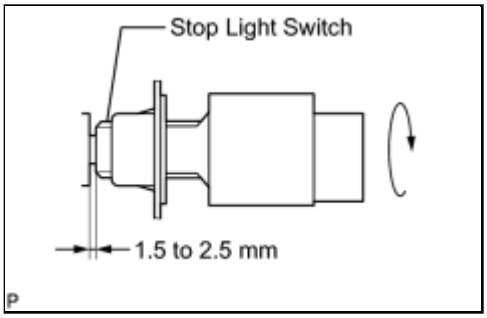

(b) Make a quarter turn clockwise to install the stop light switch assembly.

Torque: 1.5 N·m (15 kgf·cm, 13in·lbf) or less

NOTICE:

When inserting the stop light switch assembly, support the pedal from behind so that the pedal is not pushed in.

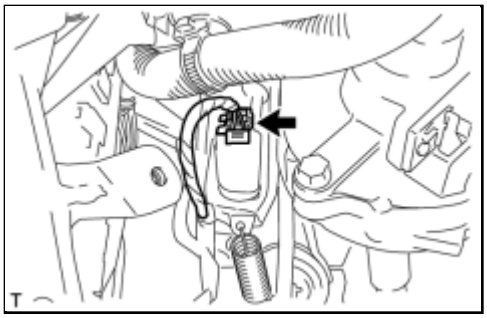

(c) Connect the connector.

(d) Check the protrusion of the rod.

Protrusion of the rod:
1.5 to 2.5 mm (0.059 to 0.098 in.)

If the protrusion is not within the specified range, adjust it.

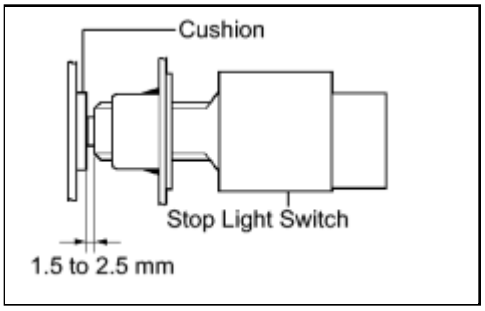

NOTICE:

Do not depress the brake pedal.

Last Modified: 3-10-2010	6.4 K	**From:** 200901
Model Year: 2010	**Model:** Corolla	**Doc ID:** RM000002VQZ009X
Title: LIGHTING (EXT): TURN SIGNAL FLASHER ASSEMBLY: COMPONENTS (2010 Corolla)		

COMPONENTS

ILLUSTRATION

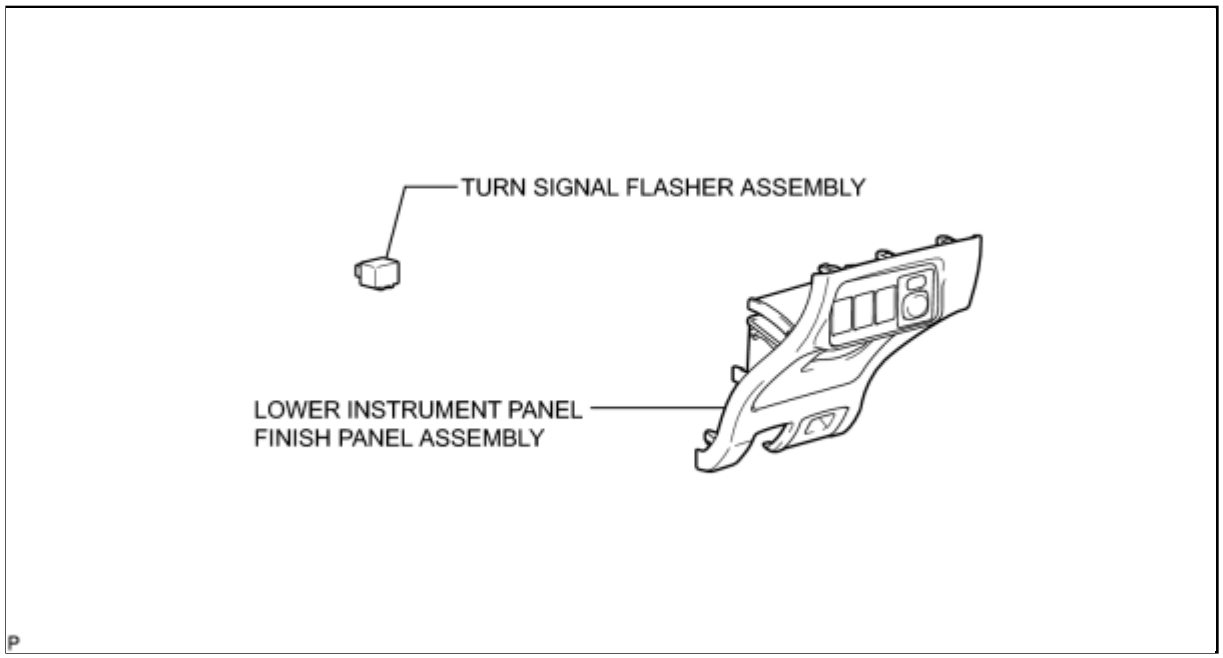

TOYOTA

Last Modified: 3-10-2010	6.4 G	**From:** 200901
Model Year: 2010	**Model:** Corolla	**Doc ID:** RM000002WM400BX
Title: LIGHTING (EXT): TURN SIGNAL FLASHER ASSEMBLY: INSPECTION (2010 Corolla)		

INSPECTION

1. INSPECT TURN SIGNAL FLASHER ASSEMBLY

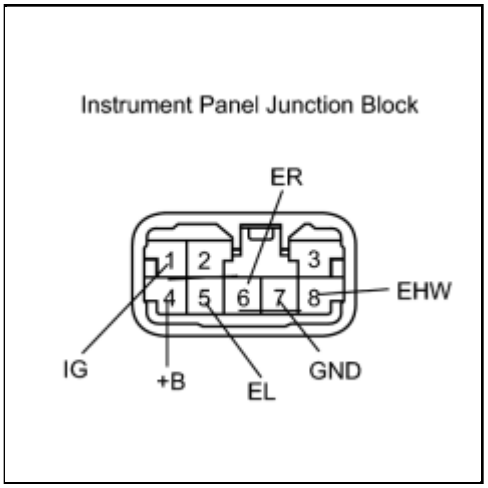

(a) Remove the turn signal flasher assembly from the instrument panel junction block.

(b) Measure the voltage according to the value(s) in the table below.

Standard Voltage:

TESTER CONNECTION	CONDITION	SPECIFIED CONDITION
4 (+B) - Body ground	Always	11 to 14 V
1 (IG) - Body ground	Ignition switch off	Below 1 V
	Ignition switch ON	11 to 14 V

If the result is not as specified, there is a malfunction on the wire harness side.

(c) Measure the resistance according to the value(s) in the table below.

Standard Resistance:

TESTER CONNECTION	CONDITION	SPECIFIED CONDITION
5 (EL) - Body ground	Turn signal switch OFF	10 kΩ or higher
	Turn signal switch in LH	Below 1 Ω
6 (ER) - Body ground	Turn signal switch OFF	10 kΩ or higher
	Turn signal switch in RH	Below 1 Ω
7 (GND) - Body ground	Always	Below 1 Ω
8 (EHW) - Body ground	Hazard warning switch OFF	10 kΩ or higher

TESTER CONNECTION	CONDITION	SPECIFIED CONDITION
	Hazard warning switch ON	Below 1 Ω

If the result is not as specified, there is a malfunction on the wire harness side.

(d) Install the turn signal flasher assembly to the instrument panel junction block.

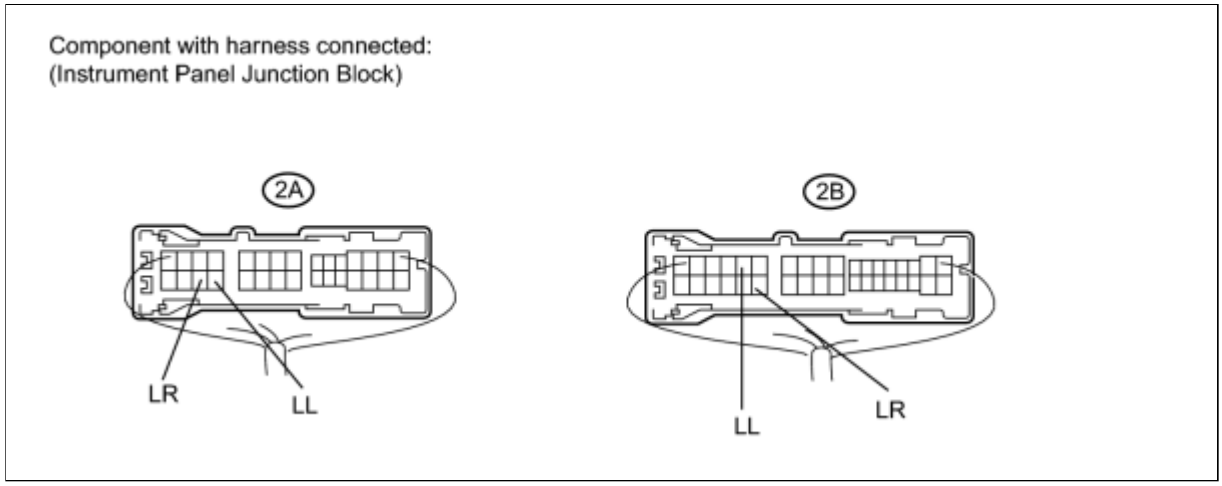

(e) Measure the voltage according to the value(s) in the table below.

Standard Voltage:

TESTER CONNECTION	SWITCH CONDITION	SPECIFIED CONDITION
2A-27 (LL) - Body ground	Turn signal switch OFF	Below 1 V
	Turn signal switch in LH	11 to 14 V (60 to 120 times per minute)
	Hazard warning switch OFF	Below 1 V
	Hazard warning switch ON	11 to 14 V (60 to 120 times per minute)
2A-28 (LR) - Body ground	Turn signal switch OFF	Below 1 V
	Turn signal switch in RH	11 to 14 V (60 to 120 times per minute)
	Hazard warning switch OFF	Below 1 V
	Hazard warning switch ON	11 to 14 V (60 to 120 times per minute)
2B-14 (LL) - Body ground	Turn signal switch OFF	Below 1 V
	Turn signal switch in LH	11 to 14 V (60 to 120 times per minute)
	Hazard warning switch OFF	Below 1 V
	Hazard warning switch ON	11 to 14 V (60 to 120 times per minute)
2B-31 (LR) - Body ground	Turn signal switch OFF	Below 1 V
	Turn signal switch in RH	11 to 14 V (60 to 120 times per minute)
	Hazard warning switch OFF	Below 1 V

TESTER CONNECTION	SWITCH CONDITION	SPECIFIED CONDITION
	Hazard warning switch ON	11 to 14 V (60 to 120 times per minute)

If the result is not as specified, replace the turn signal flasher assembly.

Last Modified: 3-10-2010	6.4 A	**From:** 200901
Model Year: 2010	**Model:** Corolla	**Doc ID:** RM000002VR000CX
Title: LIGHTING (EXT): TURN SIGNAL FLASHER ASSEMBLY: REMOVAL (2010 Corolla)		

REMOVAL

1. REMOVE LOWER INSTRUMENT PANEL FINISH PANEL ASSEMBLY INFO

2. REMOVE TURN SIGNAL FLASHER ASSEMBLY

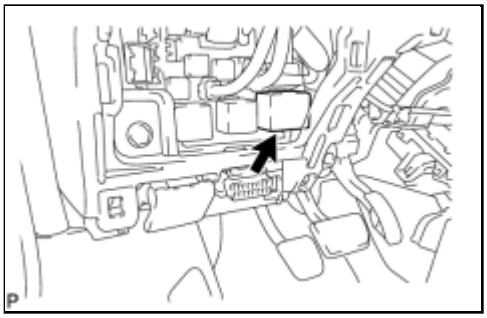

(a) Remove the turn signal flasher assembly from the junction block.

Last Modified: 3-10-2010	6.4 A	**From:** 200901
Model Year: 2010	**Model:** Corolla	**Doc ID:** RM000002VQY00CX
Title: LIGHTING (EXT): TURN SIGNAL FLASHER ASSEMBLY: INSTALLATION (2010 Corolla)		

INSTALLATION

1. INSTALL TURN SIGNAL FLASHER ASSEMBLY

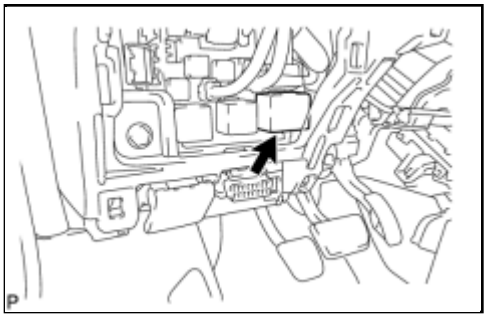

(a) Install the turn signal flasher assembly to the junction block.

2. INSTALL LOWER INSTRUMENT PANEL FINISH PANEL ASSEMBLY INFO

Last Modified: 3-10-2010	6.4 K	**From:** 200901
Model Year: 2010	**Model:** Corolla	**Doc ID:** RM000002WC300MX
Title: MIRROR (EXT): OUTER MIRROR SWITCH: COMPONENTS (2010 Corolla)		

COMPONENTS

ILLUSTRATION

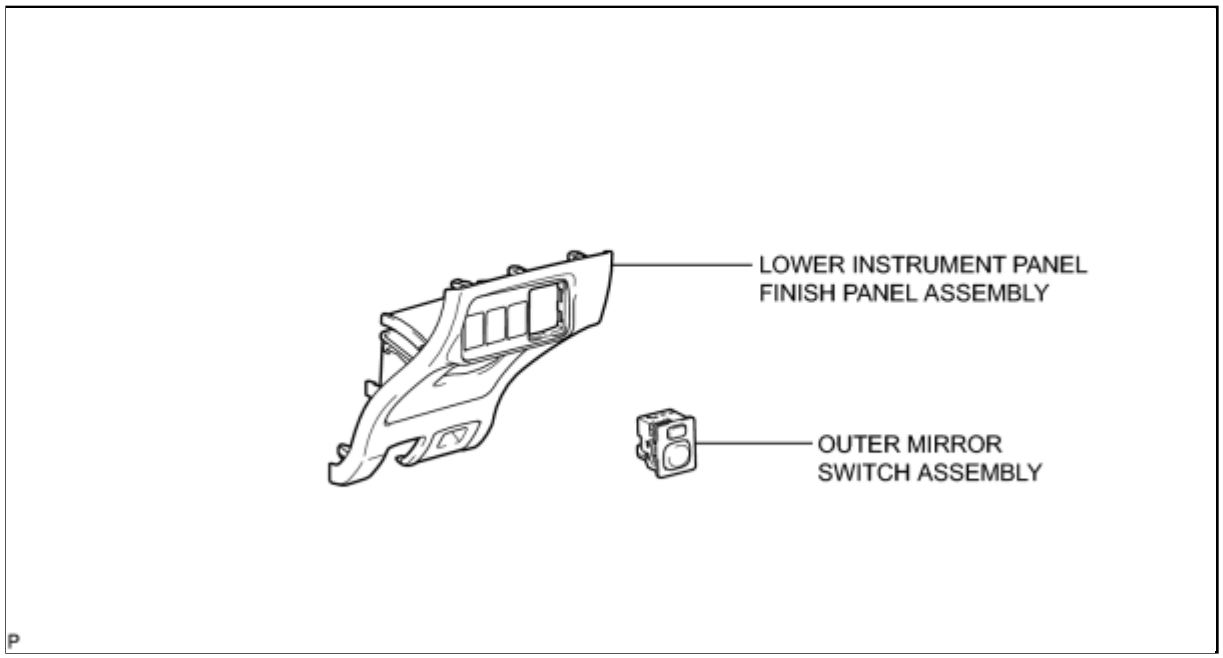

Last Modified: 3-10-2010	6.4 A	**From:** 200901
Model Year: 2010	**Model:** Corolla	**Doc ID:** RM000002WC400QX
Title: MIRROR (EXT): OUTER MIRROR SWITCH: REMOVAL (2010 Corolla)		

REMOVAL

1. REMOVE LOWER INSTRUMENT PANEL FINISH PANEL ASSEMBLY INFO

2. REMOVE OUTER MIRROR SWITCH ASSEMBLY

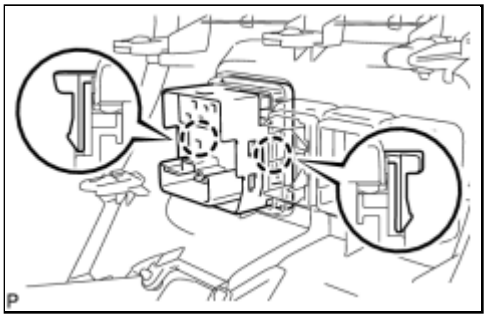

(a) Disengage the 2 claws and remove the outer mirror switch assembly.

Last Modified: 3-10-2010	6.4 G	**From:** 200901
Model Year: 2010	**Model:** Corolla	**Doc ID:** RM000003H3X001X
Title: MIRROR (EXT): OUTER MIRROR SWITCH: INSPECTION (2010 Corolla)		

INSPECTION

1. INSPECT OUTER MIRROR SWITCH ASSEMBLY

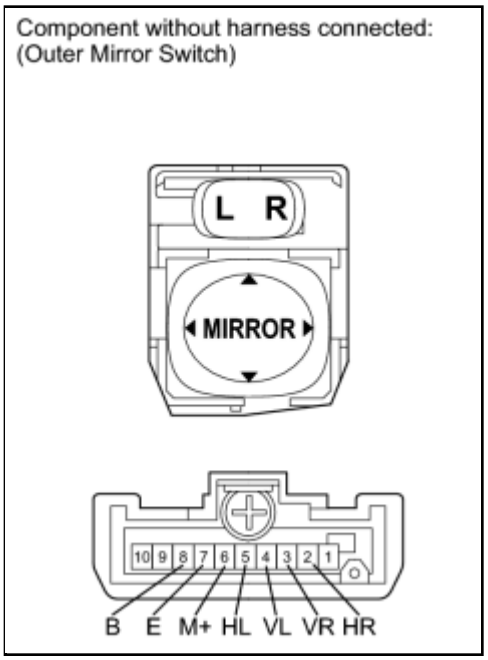

(a) Inspect the L position of the left/right adjustment switch.

(1) Measure the resistance according to the value(s) in the table below.

Standard Resistance (for Left Side):

TESTER CONNECTION	SWITCH CONDITION	SPECIFIED CONDITION
4 (VL) - 8 (B) 6 (M+) - 7 (E)	UP	Below 1 Ω
	OFF	10 kΩ or higher
4 (VL) - 7 (E) 6 (M+) - 8 (B)	DOWN	Below 1 Ω
	OFF	10 kΩ or higher
5 (HL) - 8 (B) 6 (M+) - 7 (E)	LEFT	Below 1 Ω
	OFF	10 kΩ or higher
5 (HL) - 7 (E) 6 (M+) - 8 (B)	RIGHT	Below 1 Ω
	OFF	10 kΩ or higher

If the result is not as specified, replace the switch assembly.

(b) Inspect the R position of the left/right adjustment switch.

(1) Measure the resistance according to the value(s) in the table below.

Standard Resistance (for Right Side):

TESTER CONNECTION	SWITCH CONDITION	SPECIFIED CONDITION
3 (VR) - 8 (B) 6 (M+) - 7 (E)	UP	Below 1 Ω
	OFF	10 kΩ or higher
3 (VR) - 7 (E) 6 (M+) - 8 (B)	DOWN	Below 1 Ω
	OFF	10 kΩ or higher
2 (HR) - 8 (B) 6 (M+) - 7 (E)	LEFT	Below 1 Ω
	OFF	10 kΩ or higher

TESTER CONNECTION	SWITCH CONDITION	SPECIFIED CONDITION
2 (HR) - 7 (E) 6 (M+) - 8 (B)	RIGHT	Below 1 Ω
	OFF	10 kΩ or higher

If the result is not as specified, replace the switch assembly.

Last Modified: 3-10-2010	6.4 A	**From:** 200901
Model Year: 2010	**Model:** Corolla	**Doc ID:** RM000002WC200QX
Title: MIRROR (EXT): OUTER MIRROR SWITCH: INSTALLATION (2010 Corolla)		

INSTALLATION

1. INSTALL OUTER MIRROR SWITCH ASSEMBLY

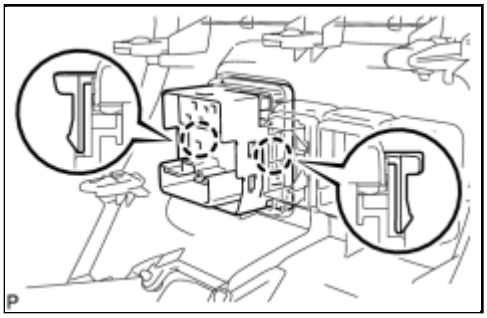

(a) Engage the 2 claws to install the outer mirror switch assembly.

2. INSTALL LOWER INSTRUMENT PANEL FINISH PANEL ASSEMBLY INFO

Last Modified: 3-10-2010	6.4 K	**From:** 200901
Model Year: 2010	**Model:** Corolla	**Doc ID:** RM000001PGQ01YX
Title: MIRROR (EXT): OUTER REAR VIEW MIRROR: COMPONENTS (2010 Corolla)		

COMPONENTS

ILLUSTRATION

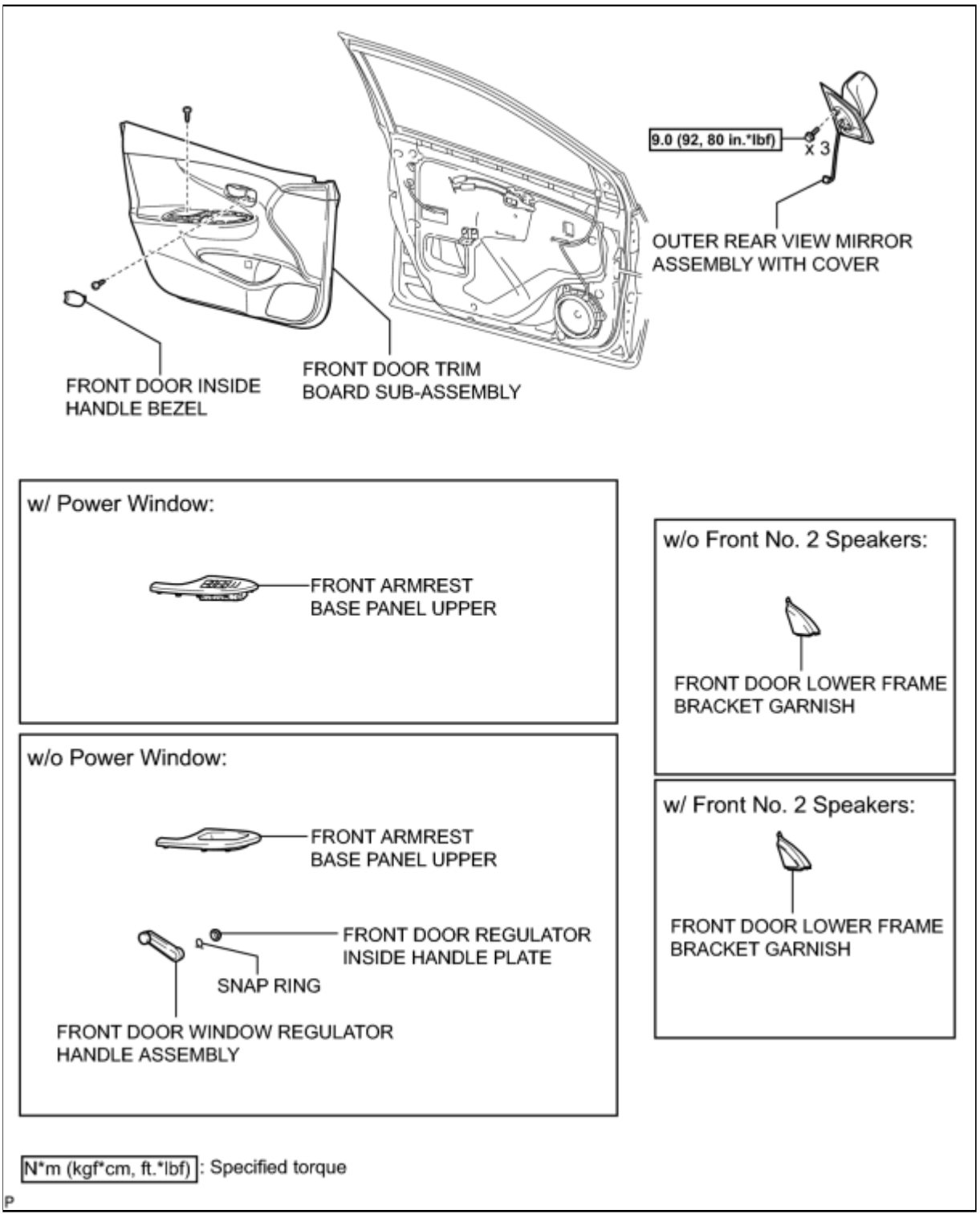

ILLUSTRATION

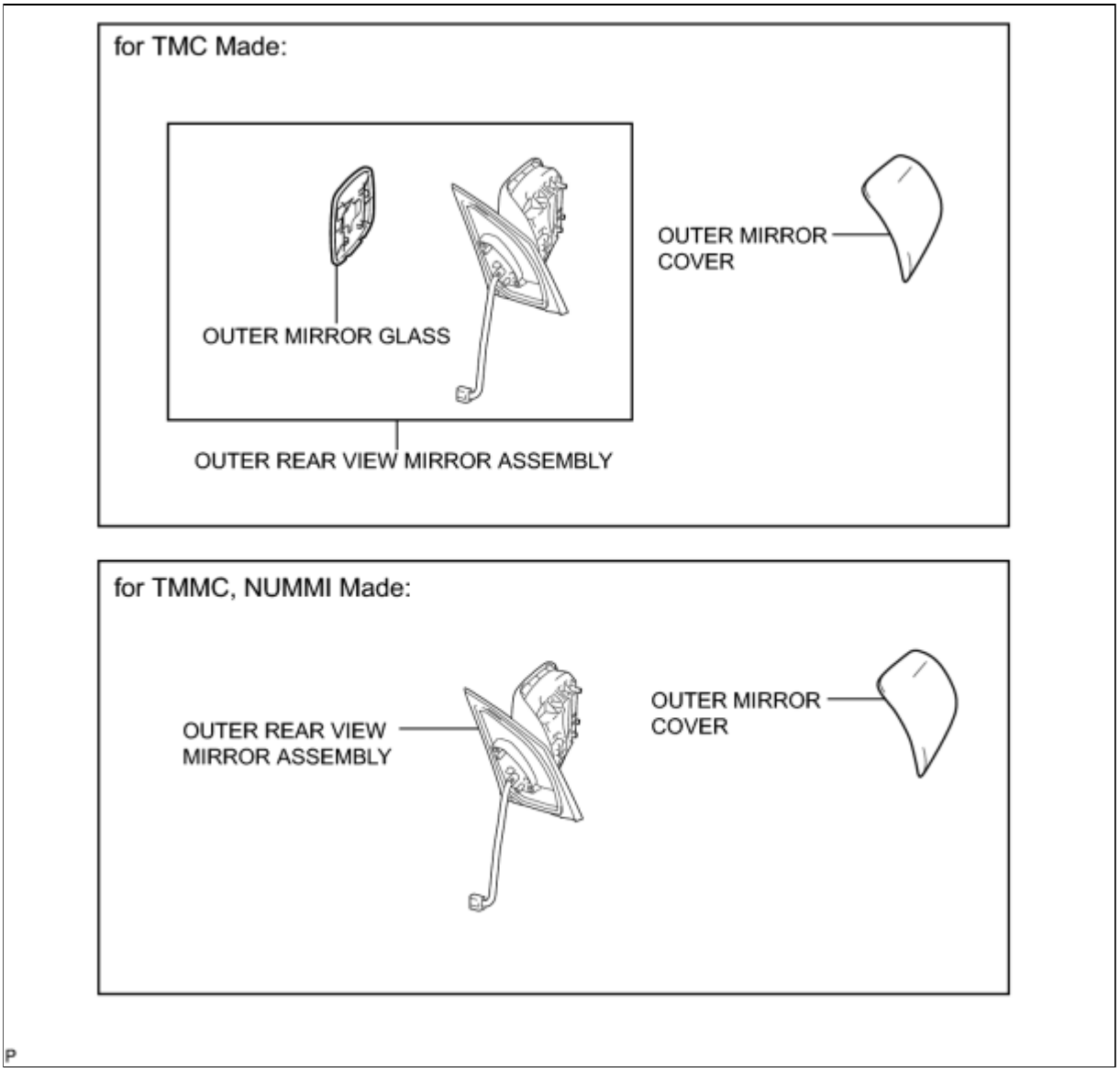

Last Modified: 3-10-2010	6.4 A	**From:** 200901
Model Year: 2010	**Model:** Corolla	**Doc ID:** RM000001PGR02HX
Title: MIRROR (EXT): OUTER REAR VIEW MIRROR: REMOVAL (2010 Corolla)		

REMOVAL

1. REMOVE FRONT DOOR WINDOW REGULATOR HANDLE ASSEMBLY (w/o Power Window) INFO

2. REMOVE FRONT DOOR INSIDE HANDLE BEZEL INFO

3. REMOVE FRONT ARMREST BASE PANEL UPPER (w/o Power Window) INFO

4. REMOVE FRONT ARMREST BASE PANEL UPPER (w/ Power Window) INFO

5. REMOVE FRONT DOOR TRIM BOARD SUB-ASSEMBLY INFO

6. REMOVE FRONT DOOR LOWER FRAME BRACKET GARNISH (w/o Front No. 2 Speaker) INFO

7. REMOVE FRONT DOOR LOWER FRAME BRACKET GARNISH (w/ Front No. 2 Speaker) INFO

8. REMOVE OUTER REAR VIEW MIRROR ASSEMBLY WITH COVER

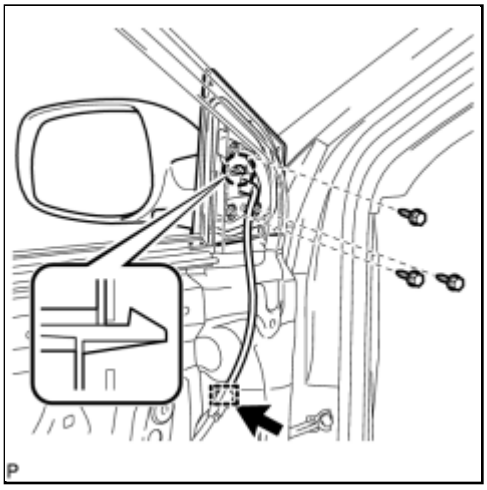

(a) Disconnect the clamp and connector.

(b) Remove the 3 bolts.

(c) Disengage the claw and remove the outer rear view mirror assembly with cover.

9. REMOVE OUTER MIRROR GLASS (for TMC Made)

(a) Apply protective tape to the bottom of the visor of the door mirror.

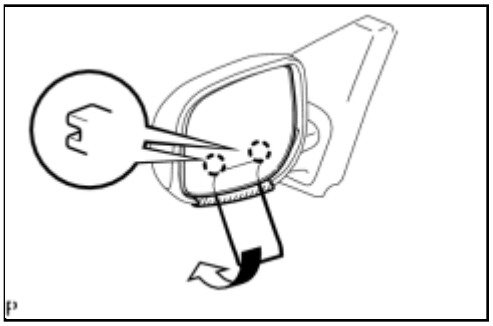

(b) Push the upper part of the mirror surface and tilt it.

(c) Using a moulding remover, disengage the 2 claws.

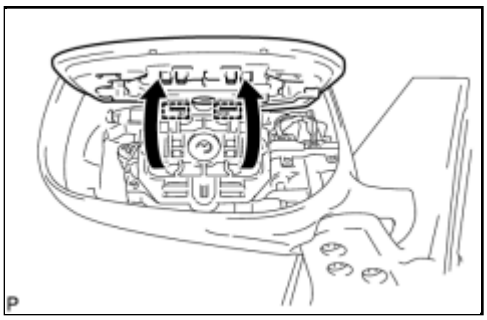

(d) Disengage the 2 guides at the upper part of the outer mirror as shown in the illustration.

(e) w/ Heater:

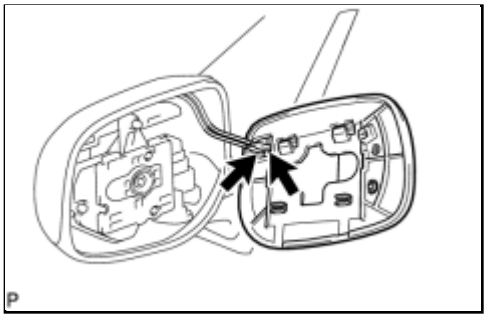

(1) Disconnect the connectors.

(f) Remove the outer mirror glass.

10. REMOVE OUTER MIRROR COVER (for TMC Made)

(a) Disengage the 7 claws and remove the outer mirror cover from the outer rear view mirror assembly with cover.

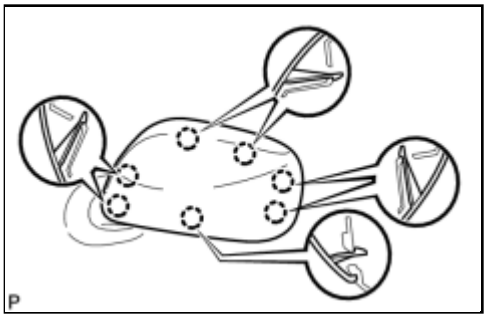

11. REMOVE OUTER MIRROR COVER (for TMMC, NUMMI Made)



(a) Put protective tape around the outer mirror cover.

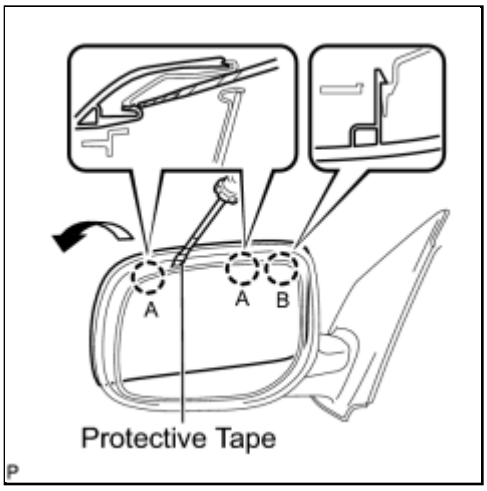

(b) Push the lower part of the mirror surface and tilt it.

(c) Using a screwdriver with the tip wrapped with protective tape, disengage the 2 claws B, from the clearance between the outer mirror glass and visor.

(d) Disengage the claw A.

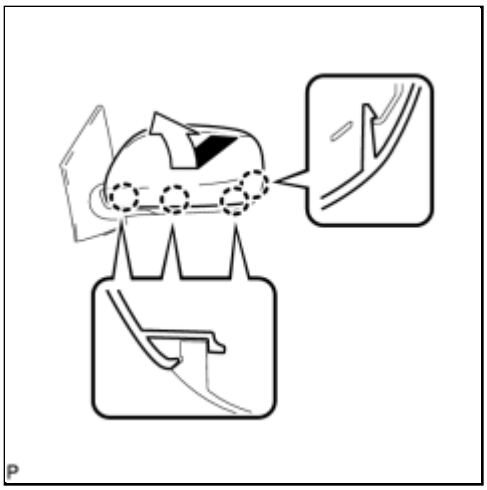

(e) Disengage the 4 claws and remove the outer mirror cover.

Last Modified: 3-10-2010	6.4 G	**From:** 200901
Model Year: 2010	**Model:** Corolla	**Doc ID:** RM000003H3W001X
Title: MIRROR (EXT): OUTER REAR VIEW MIRROR: INSPECTION (2010 Corolla)		

INSPECTION

1. INSPECT OUTER REAR VIEW MIRROR ASSEMBLY RH

(a) Inspect outer mirror motor operation.

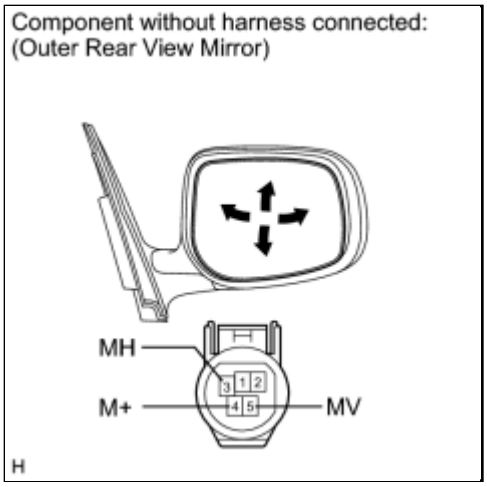

(1) Disconnect the mirror connector.

(2) Apply battery voltage and check the operation of the mirror.

OK:

MEASUREMENT CONDITION	SPECIFIED CONDITION
Battery positive (+) → Terminal 5 (MV) Battery negative (-) → Terminal 4 (M+)	Turns upward
Battery positive (+) → Terminal 4 (M+) Battery negative (-) → Terminal 5 (MV)	Turns downward
Battery positive (+) → Terminal 3 (MH) Battery negative (-) → Terminal 4 (M+)	Turns left
Battery positive (+) → Terminal 4 (M+) Battery negative (-) → Terminal 3 (MH)	Turns right

If the result is not as specified, replace the mirror assembly.

(b) Inspect outer mirror heater operation.

(1) Apply battery voltage and check operation of the mirror face, as shown in the table below.

OK:

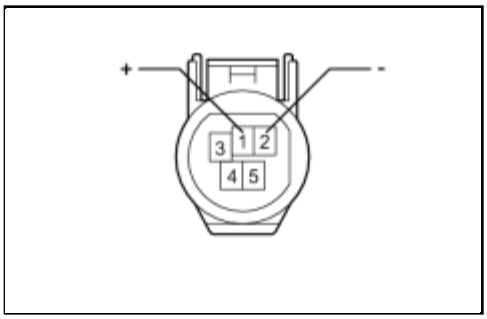

MEASUREMENT CONDITION	SPECIFIED CONDITION
Battery positive (+) → Terminal 1 (+) Battery negative (-) → Terminal 2 (-)	Mirror surface temperature becomes higher

If the result is not as specified, replace the mirror assembly.

2. INSPECT OUTER REAR VIEW MIRROR ASSEMBLY LH

(a) Inspect outer mirror motor operation.

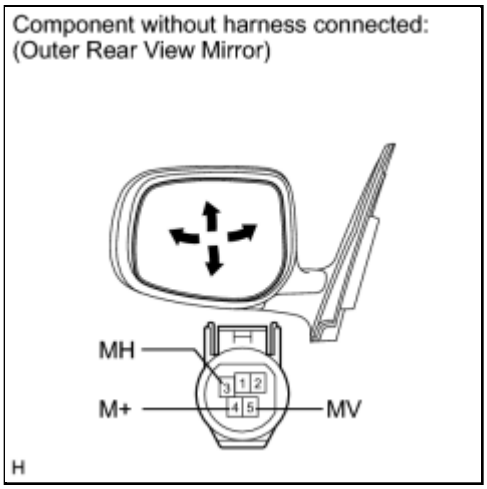

(1) Disconnect the mirror connector.

(2) Apply battery voltage and check the operation of the mirror.

OK:

MEASUREMENT CONDITION	SPECIFIED CONDITION
Battery positive (+) → Terminal 5 (MV) Battery negative (-) → Terminal 4 (M+)	Turns upward
Battery positive (+) → Terminal 4 (M+) Battery negative (-) → Terminal 5 (MV)	Turns downward
Battery positive (+) → Terminal 3 (MH) Battery negative (-) → Terminal 4 (M+)	Turns left
Battery positive (+) → Terminal 4 (M+) Battery negative (-) → Terminal 3 (MH)	Turns right

If the result is not as specified, replace the mirror assembly.

(b) Inspect outer mirror heater operation.

(1) Apply battery voltage and check operation of the mirror face, as shown in the table below.

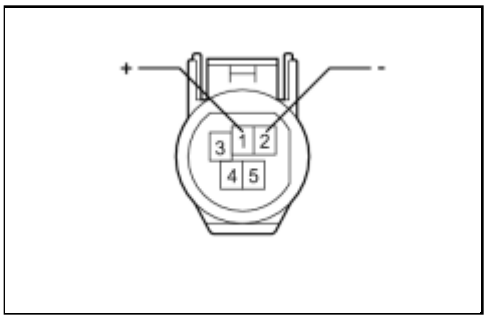

OK:

MEASUREMENT CONDITION	SPECIFIED CONDITION
Battery positive (+) → Terminal 1 (+) Battery negative (-) → Terminal 2 (-)	Mirror surface temperature becomes higher

If the result is not as specified, replace the mirror assembly.

Last Modified: 3-10-2010	6.4 A	**From:** 200901
Model Year: 2010	**Model:** Corolla	**Doc ID:** RM000001PGP02HX
Title: MIRROR (EXT): OUTER REAR VIEW MIRROR: INSTALLATION (2010 Corolla)		

INSTALLATION

1. INSTALL OUTER MIRROR GLASS (for TMC Made)

(a) w/ Heater:

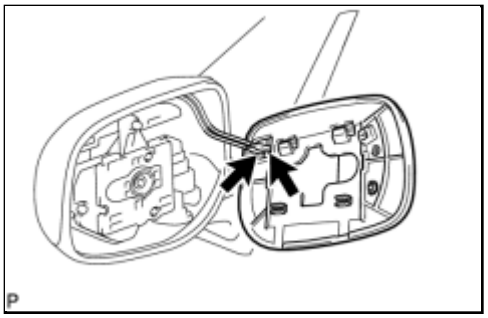

(1) Connect the connectors.

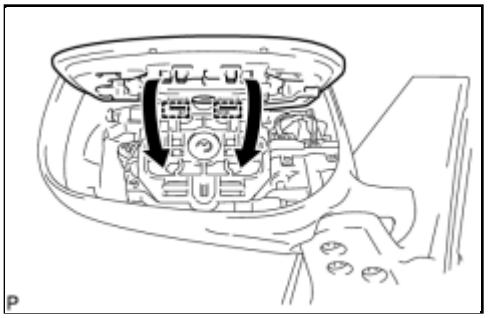

(b) Engage the 2 guides on the upper part of the outer mirror glass to the outer mirror as shown in the illustration.

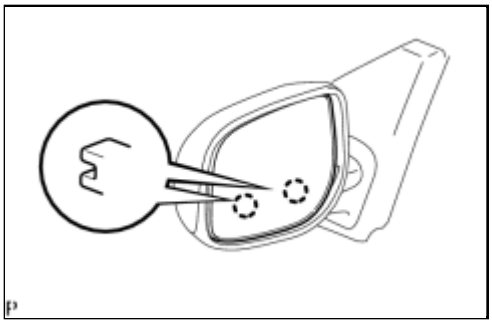

(c) Engage the 2 claws on the lower part of the outer mirror glass to the outer mirror as shown in the illustration.

2. INSTALL OUTER MIRROR COVER (for TMC Made)

(a) Engage the 7 claws to install the outer mirror cover to the

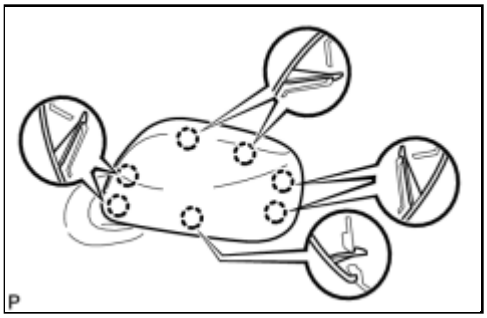

outer rear view mirror assembly with cover.

NOTICE:

If there is a gap between the cover and the mirror body, it may cause noise during driving.

3. INSTALL OUTER MIRROR COVER (for TMMC, NUMMI Made)

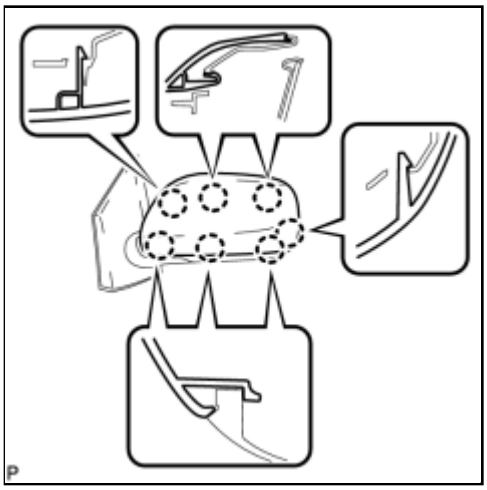

(a) Engage the 7 claws to install the outer mirror cover.

4. INSTALL OUTER REAR VIEW MIRROR ASSEMBLY WITH COVER

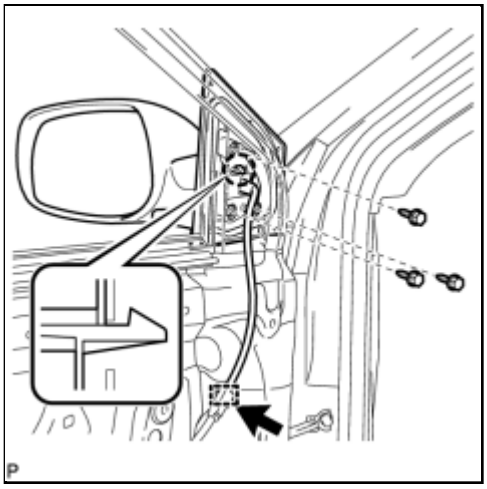

(a) Engage the claw, and temporarily install the outer rear view mirror assembly with cover.

(b) Install the 3 bolts.

Torque: 9.0 N·m (92 kgf·cm, 80in·lbf)

(c) Engage the clamp and connect the connector.

5. INSTALL FRONT DOOR LOWER FRAME BRACKET GARNISH (w/o Front No. 2 Speaker) INFO

6. INSTALL FRONT DOOR LOWER FRAME BRACKET GARNISH (w/ Front No. 2 Speaker) INFO

7. INSTALL FRONT DOOR TRIM BOARD SUB-ASSEMBLY INFO

8. INSTALL FRONT ARMREST BASE PANEL UPPER (w/o Power Window) INFO

9. INSTALL FRONT ARMREST BASE PANEL UPPER (w/ Power Window) INFO

10. INSTALL FRONT DOOR INSIDE HANDLE BEZEL INFO

11. INSTALL FRONT DOOR WINDOW REGULATOR HANDLE ASSEMBLY (w/o Power Window) INFO

Last Modified: 3-10-2010	6.4 L	**From:** 200901
Model Year: 2010	**Model:** Corolla	**Doc ID:** RM000003INO001X
Title: MIRROR (EXT): POWER MIRROR CONTROL SYSTEM: PRECAUTION (2010 Corolla)		

PRECAUTION

1. EXPRESSIONS OF IGNITION SWITCH

(a) The type of ignition switch used on this model differs according to the specifications of the vehicle.

The expressions listed in the table below are used in this section.

EXPRESSION	SWITCH TYPE	
	IGNITION SWITCH (POSITION)	ENGINE SWITCH (CONDITION)
Ignition Switch off	LOCK	Off
Ignition Switch ON	ON	On (IG)
Ignition Switch ACC	ACC	On (ACC)
Engine Start	START	Start

Last Modified: 3-10-2010	6.4 R	**From:** 200901
Model Year: 2010	**Model:** Corolla	**Doc ID:** RM00000209M00VX
Title: MIRROR (EXT): POWER MIRROR CONTROL SYSTEM: PARTS LOCATION (2010 Corolla)		

PARTS LOCATION

ILLUSTRATION

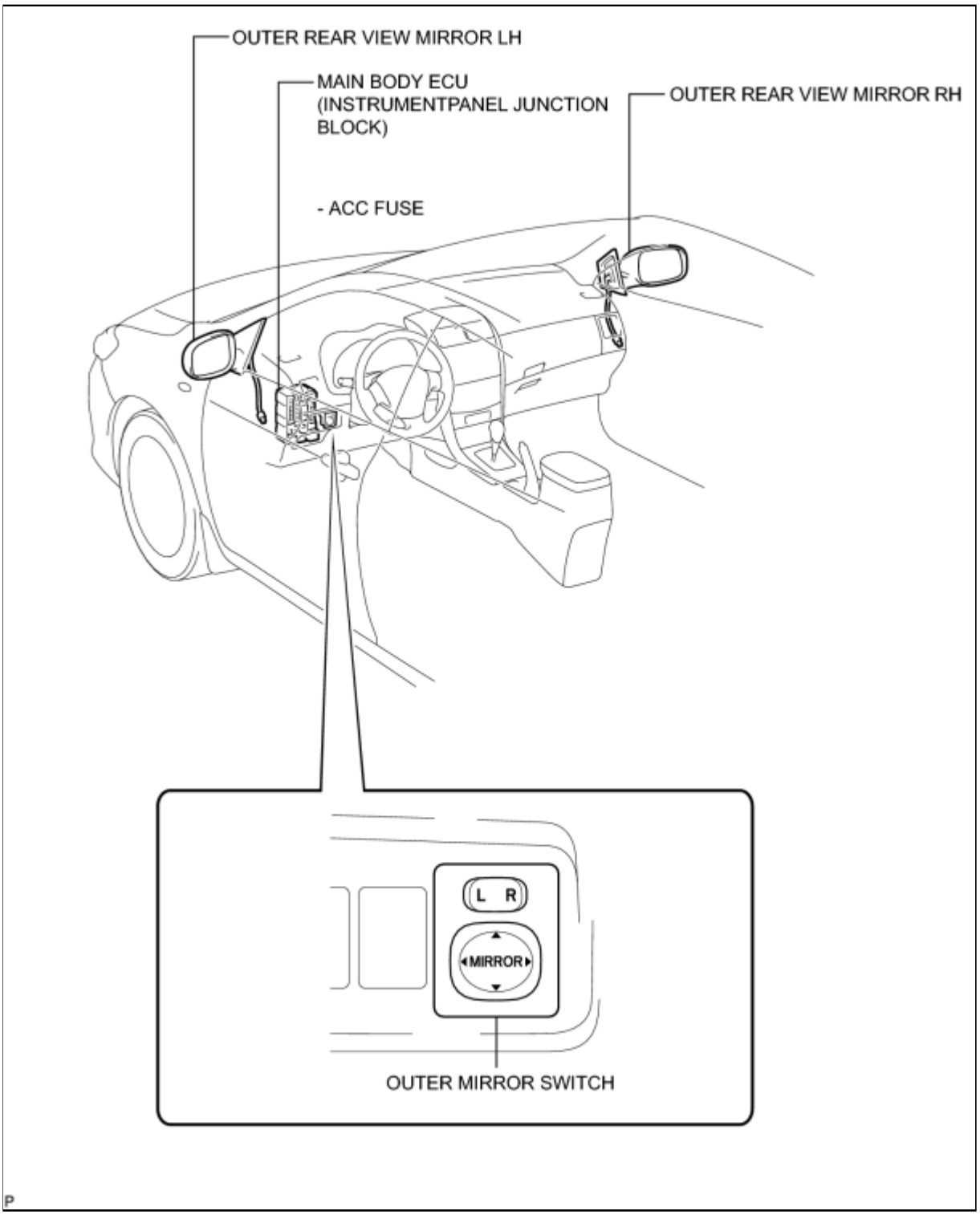

Last Modified: 3-10-2010	6.4 T	**From:** 200901
Model Year: 2010	**Model:** Corolla	**Doc ID:** RM0000020HQ013X
Title: MIRROR (EXT): POWER MIRROR CONTROL SYSTEM: PROBLEM SYMPTOMS TABLE (2010 Corolla)		

PROBLEM SYMPTOMS TABLE

HINT:

- Use the table below to help determine the cause of problem symptoms. If multiple suspected areas are listed, the potential causes of the symptoms are listed in order of probability in the "Suspected Area" column of the table. Check each symptom by checking the suspected areas in the order they are listed. Replace parts as necessary.
- Inspect the fuses and relays related to this system before inspecting the suspected areas below.

Power Mirror Control System

SYMPTOM	SUSPECTED AREA	SEE PAGE
Mirror does not operate	ACC fuse	-
	Outer mirror switch	INFO
	Outer rear view mirror	INFO
	Wire harness or connector	-
Mirror heater does not operate	ACC fuse	-
	MIR HTR fuse	-
	Outer rear view mirror	INFO
	Wire harness	-
	Window defogger system (for Manual Air Conditioning System)	INFO
	Window defogger system (for Automatic Air Conditioning System)	INFO

Last Modified: 3-10-2010	6.4 K	**From:** 200901
Model Year: 2010	**Model:** Corolla	**Doc ID:** RM0000033TV007X
Title: SLIDING ROOF / CONVERTIBLE: SLIDING ROOF HOUSING: COMPONENTS (2010 Corolla)		

COMPONENTS

ILLUSTRATION

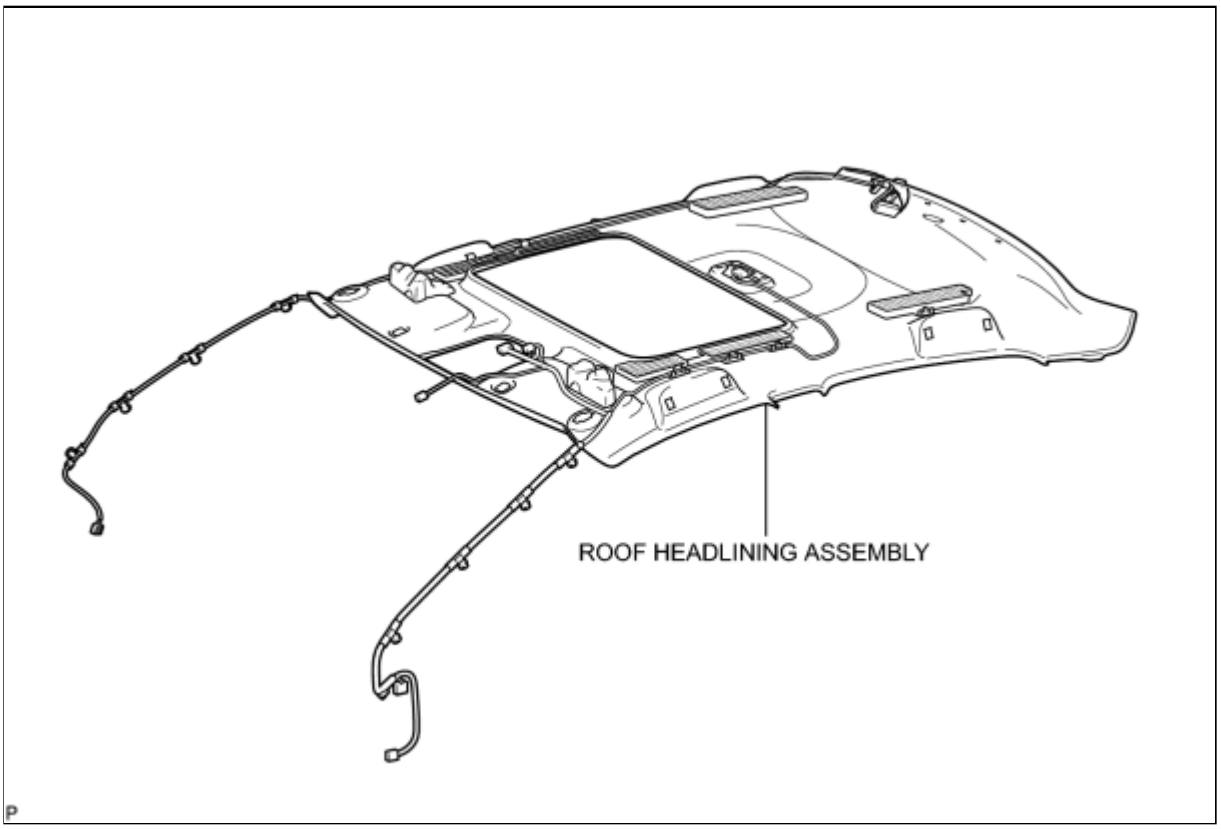

ILLUSTRATION

w/o Curtain Shield Airbag:

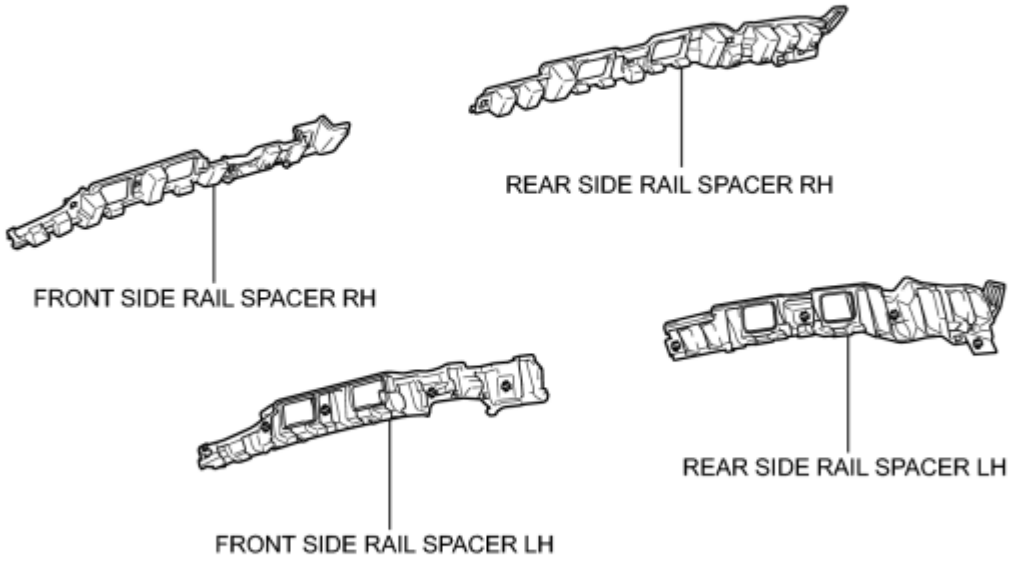

P

ILLUSTRATION

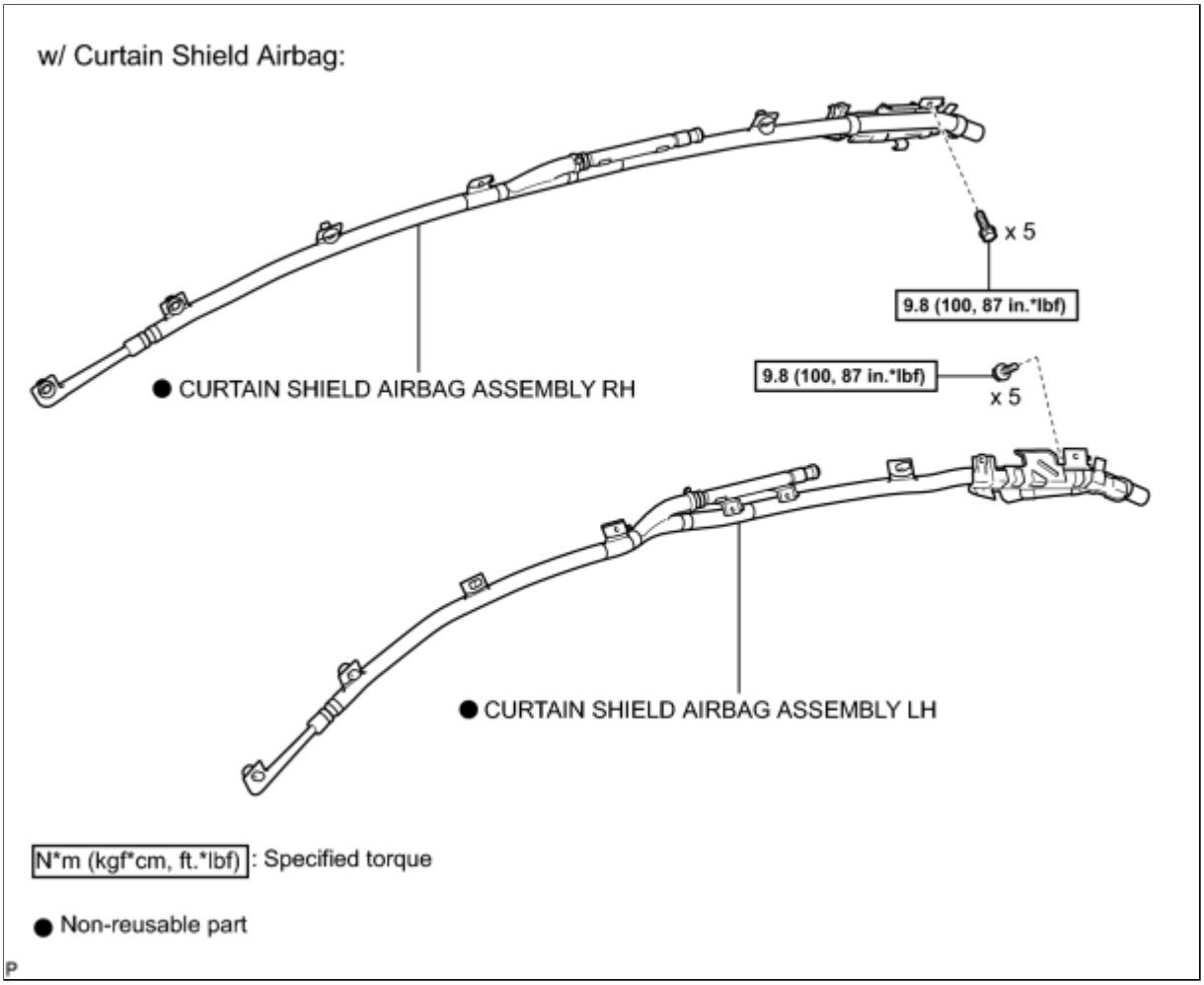

ILLUSTRATION

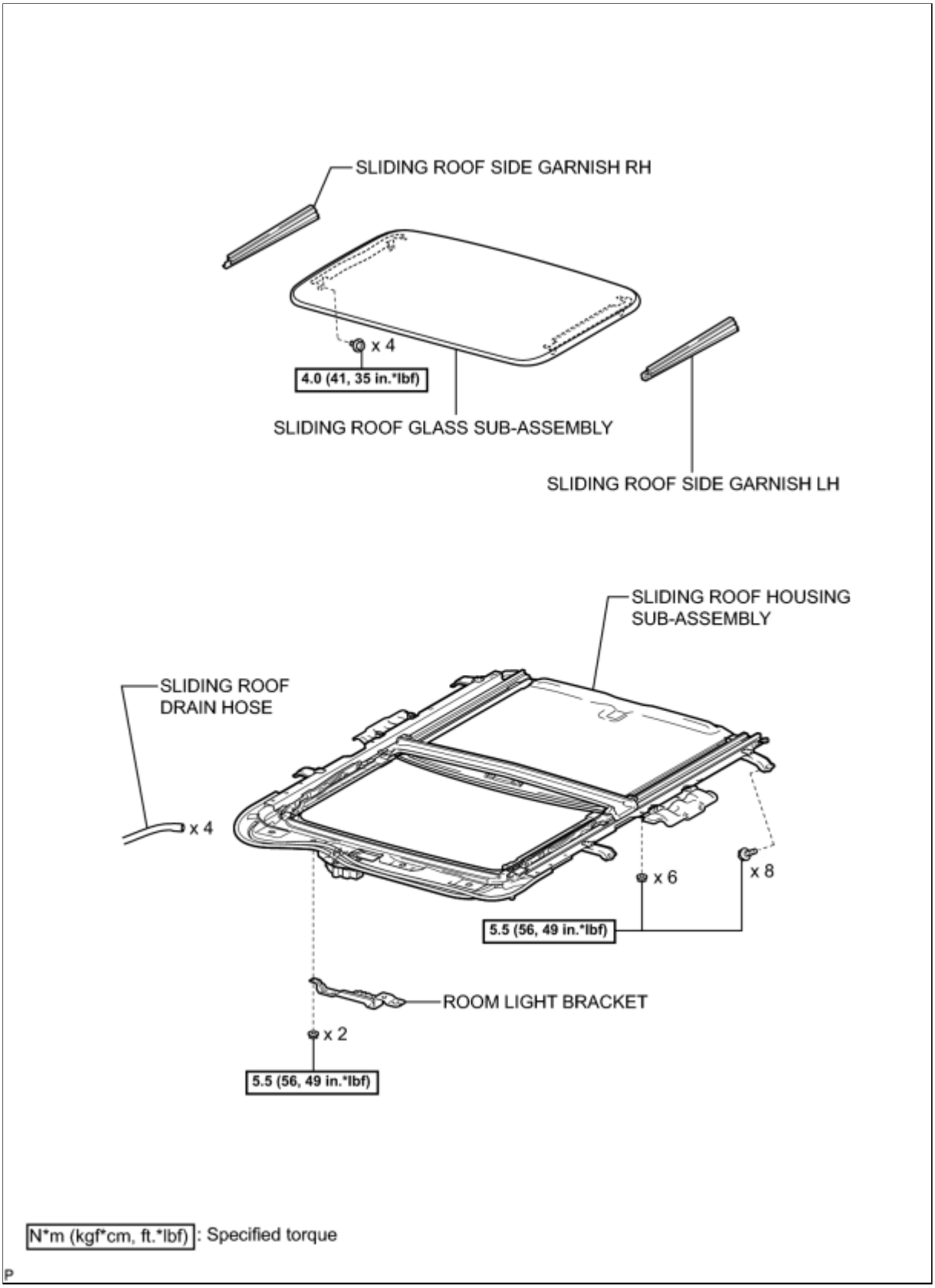

ILLUSTRATION

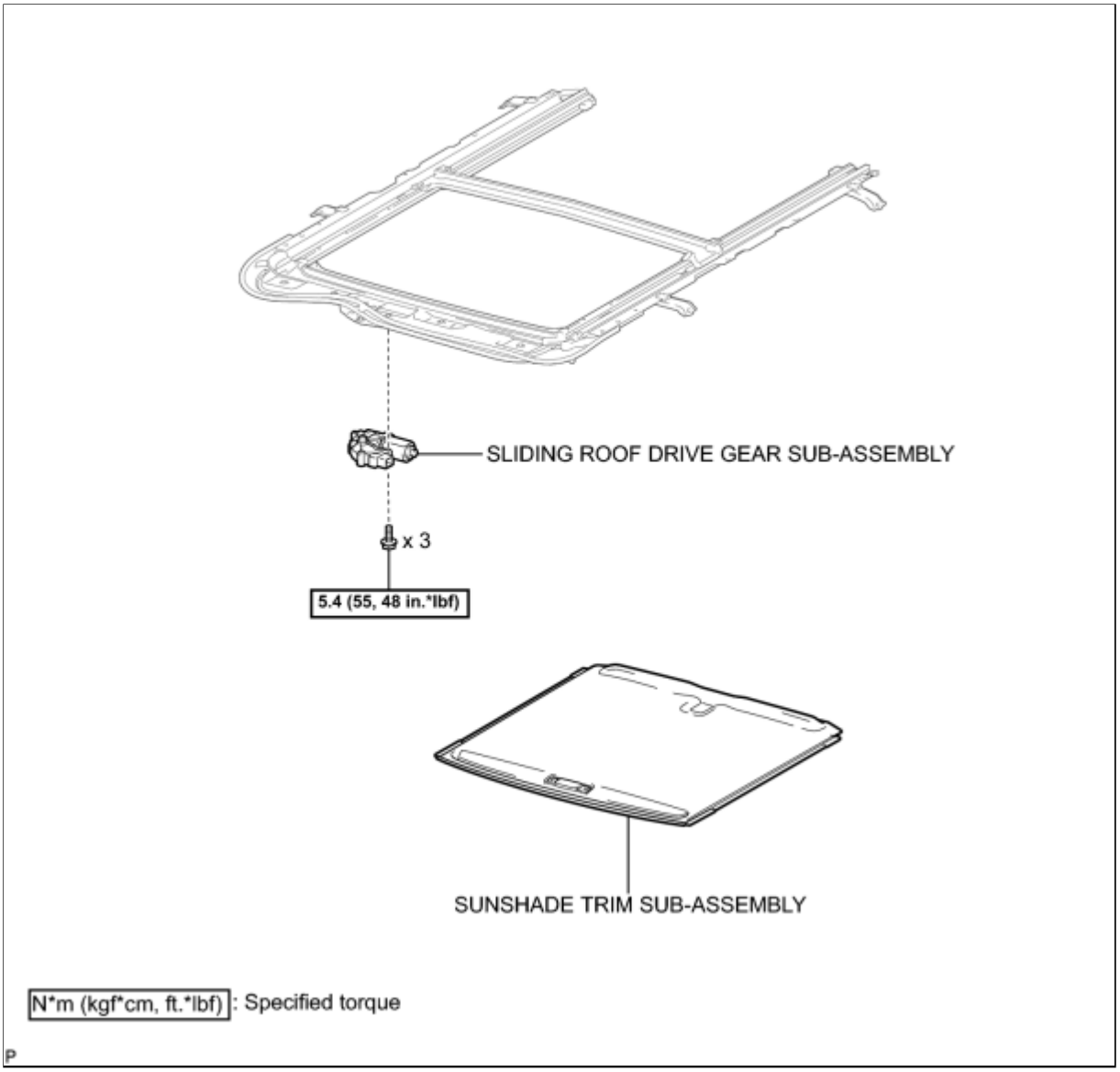

N*m (kgf*cm, ft.*lbf) : Specified torque

P

Last Modified: 3-10-2010	6.4 A	**From:** 200901
Model Year: 2010	**Model:** Corolla	**Doc ID:** RM000002W9B00NX
Title: SLIDING ROOF / CONVERTIBLE: SLIDING ROOF HOUSING: REMOVAL (2010 Corolla)		

REMOVAL

1. REMOVE ROOF HEADLINING ASSEMBLY

(a) Remove the roof headlining assembly INFO .

2. REMOVE FRONT SIDE RAIL SPACER LH (w/o Curtain Shield Airbag)

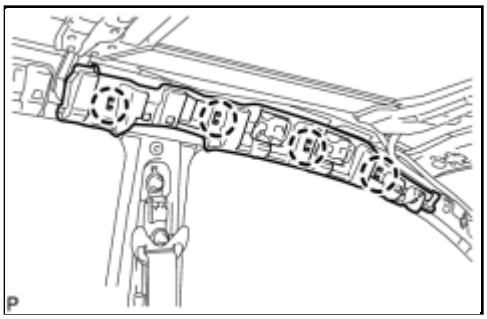

(a) Disengage the 4 claws and remove the front side rail spacer LH.

3. REMOVE FRONT SIDE RAIL SPACER RH (w/o Curtain Shield Airbag)

HINT:

Use the same procedure for the RH side and LH side.

4. REMOVE REAR SIDE RAIL SPACER LH (w/o Curtain Shield Airbag)

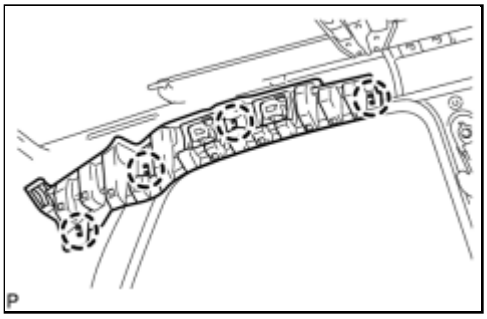

(a) Disengage the 4 claws and remove the rear side rail spacer LH.

5. REMOVE REAR SIDE RAIL SPACER RH (w/o Curtain Shield Airbag)

HINT:

Use the same procedure for the RH side and LH side.

6. REMOVE CURTAIN SHIELD AIRBAG ASSEMBLY LH (w/ Curtain Shield Airbag) INFO

7. REMOVE CURTAIN SHIELD AIRBAG ASSEMBLY RH (w/ Curtain Shield Airbag)

HINT:

Use the same procedure for the RH side and LH side INFO .

8. REMOVE SLIDING ROOF SIDE GARNISH LH

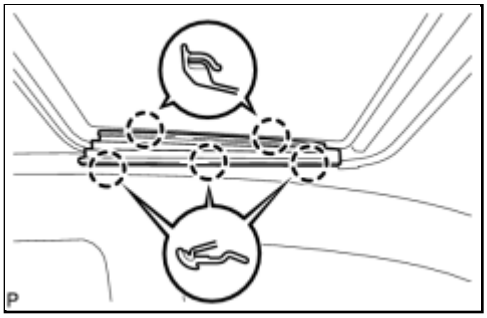

(a) Disengage the 5 claws and remove the sliding roof side garnish LH.

9. REMOVE SLIDING ROOF SIDE GARNISH RH

HINT:

Use the same procedure for the RH side and LH side.

10. REMOVE SLIDING ROOF GLASS SUB-ASSEMBLY

(a) Using a T25 "TORX" socket wrench, remove the 4 screws and sliding roof glass sub-assembly.

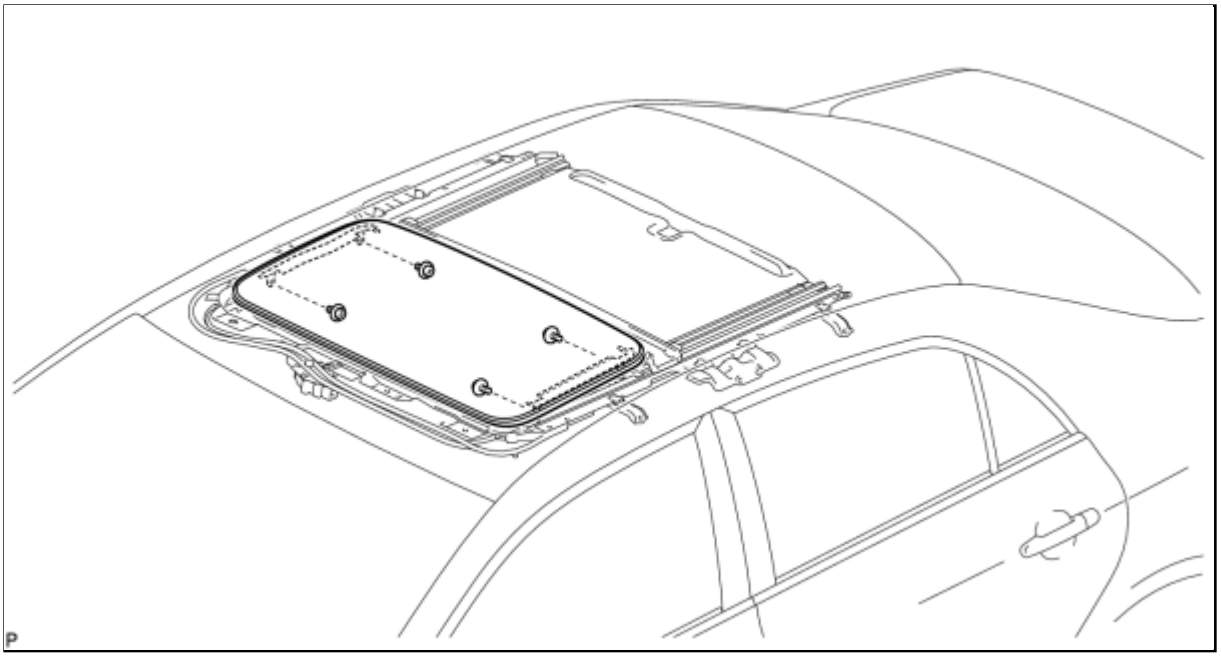

11. REMOVE SLIDING ROOF HOUSING SUB-ASSEMBLY

(a) Remove the 2 nuts and room light bracket.

(b) Disconnect the 4 sliding roof drain hoses.

(c) Remove the 8 bolts, 6 nuts, and sliding roof housing sub-assembly.

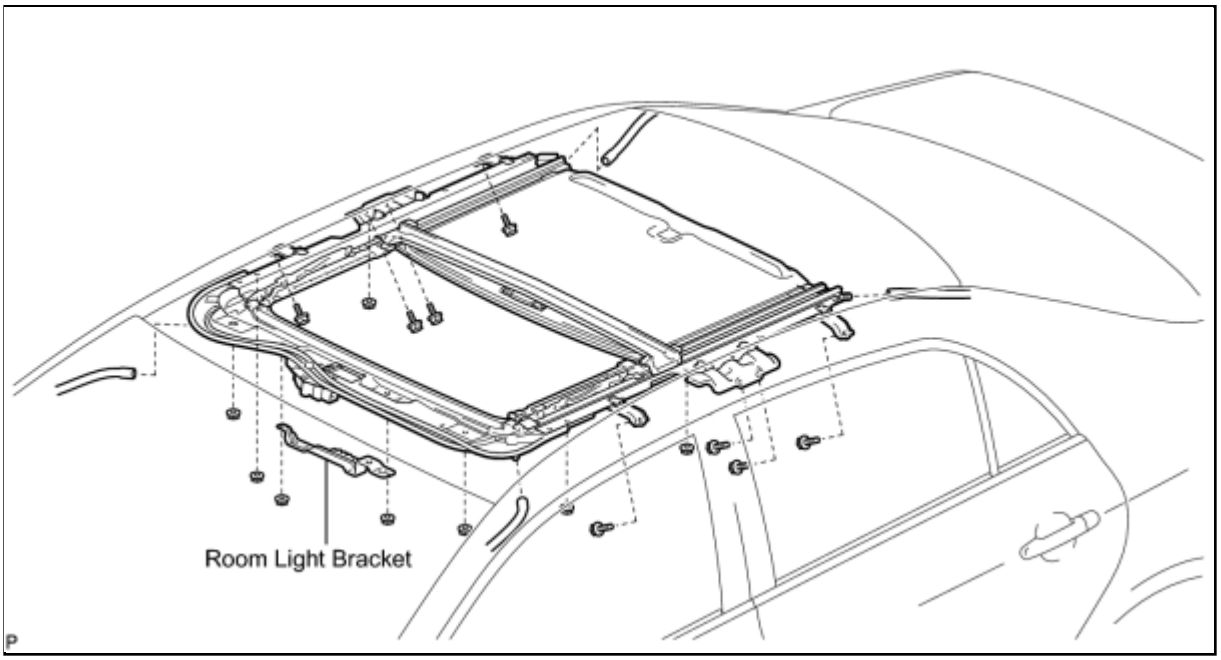
Room Light Bracket

Last Modified: 3-10-2010	6.4 A	**From:** 200901
Model Year: 2010	**Model:** Corolla	**Doc ID:** RM000001F2D01NX
Title: SLIDING ROOF / CONVERTIBLE: SLIDING ROOF HOUSING: DISASSEMBLY (2010 Corolla)		

DISASSEMBLY

1. REMOVE SLIDING ROOF DRIVE GEAR SUB-ASSEMBLY

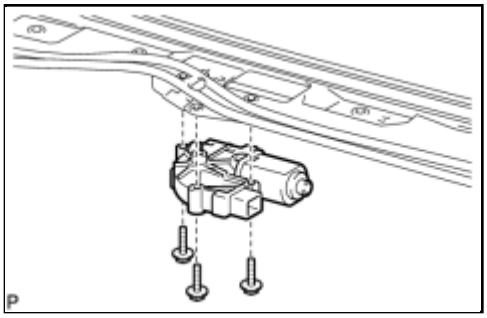

(a) Remove the 3 bolts and sliding roof drive gear sub-assembly.

2. REMOVE SUNSHADE TRIM SUB-ASSEMBLY

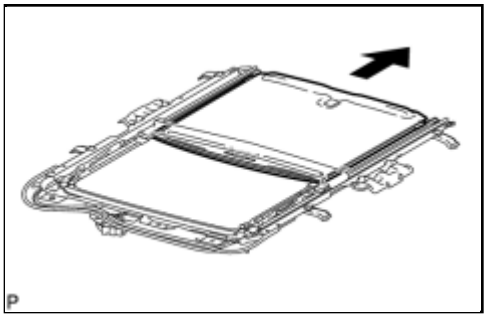

(a) Slide and remove the sunshade trim sub-assembly.

Last Modified: 3-10-2010	6.4 A	**From:** 200901
Model Year: 2010	**Model:** Corolla	**Doc ID:** RM000002X9U00NX
Title: SLIDING ROOF / CONVERTIBLE: SLIDING ROOF HOUSING: INSTALLATION (2010 Corolla)		

INSTALLATION

1. INSTALL SLIDING ROOF HOUSING SUB-ASSEMBLY

(a) Install the sliding roof housing sub-assembly with the 8 bolts and 6 nuts.

Torque: 5.5 N·m (56 kgf·cm, 49in·lbf)

(b) Install the room light bracket with the 2 nuts.

Torque: 5.5 N·m (56 kgf·cm, 49in·lbf)

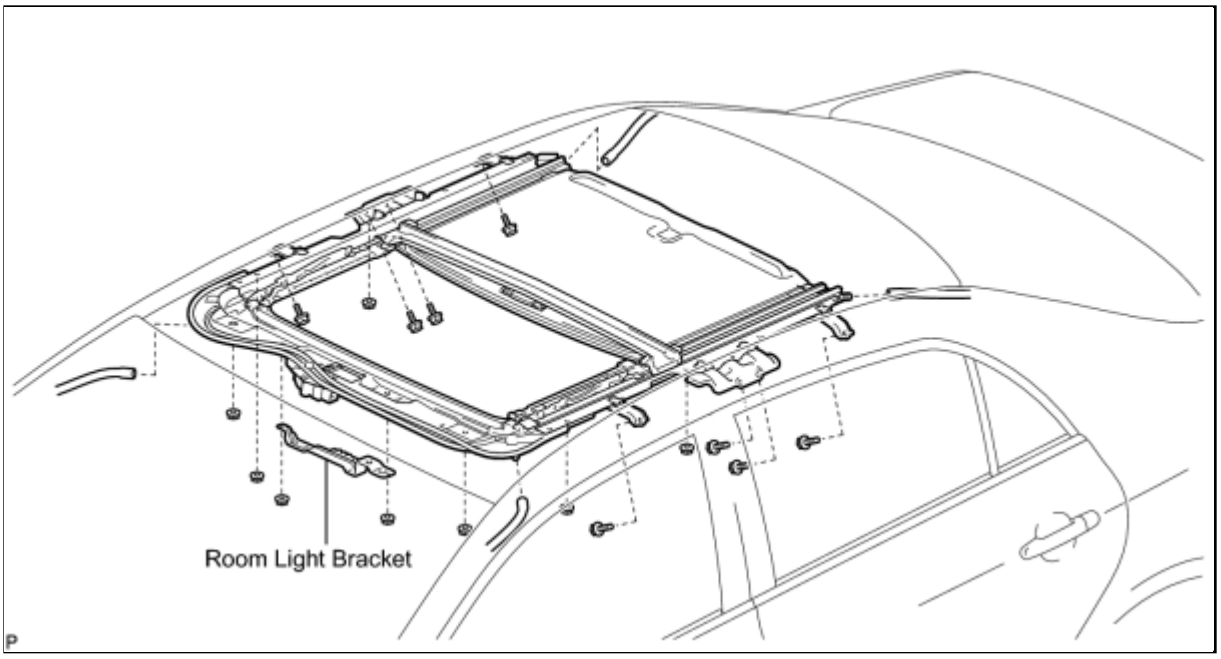

(c) Connect the 4 sliding roof drain hoses so that each mark faces downward.

NOTICE:

Be sure to install the drain hoses properly to prevent entry of water.

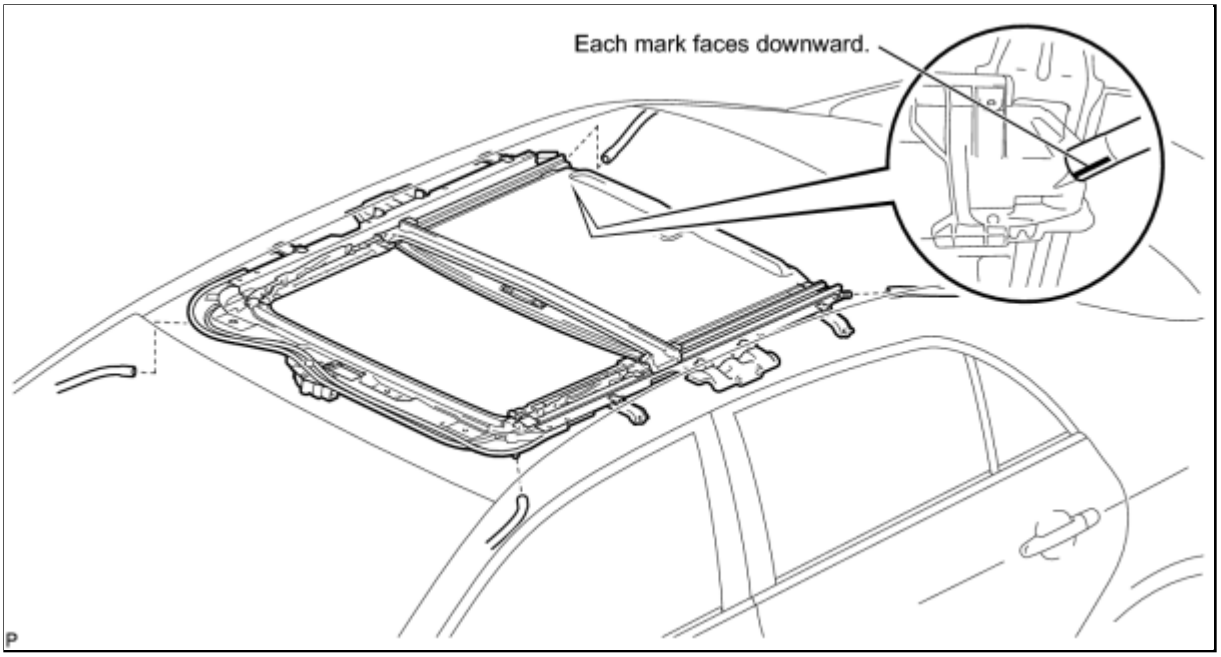

2. INSTALL SLIDING ROOF GLASS SUB-ASSEMBLY

(a) Using a T25 "TORX" driver, temporarily install the sliding roof glass sub-assembly with the 4 screws.

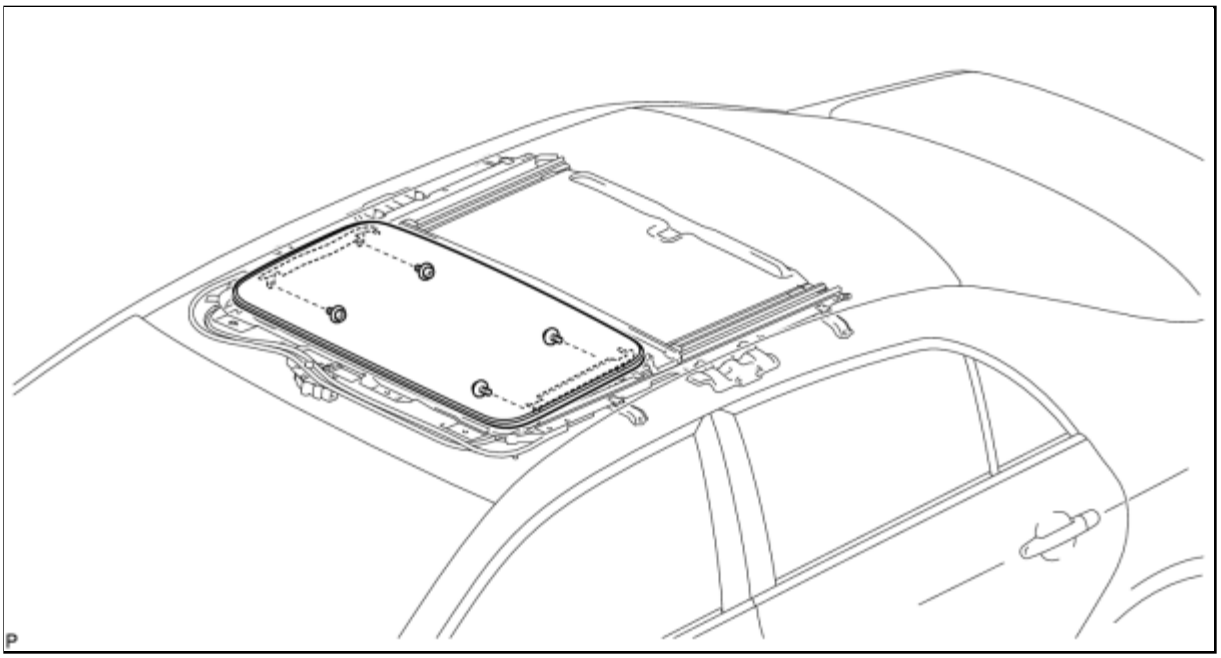

(b) Perform a level check.

(1) Check the difference in level "a" between the roof panel and the upper surface of the weatherstrip when the sliding roof glass is fully closed.

Standard

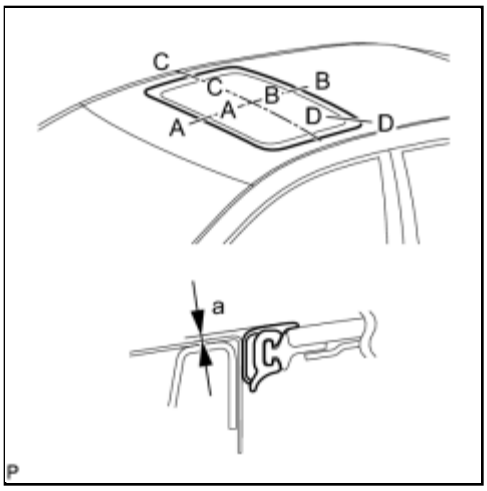

AREA	MEASUREMENT
A - A	0 + 1.0 mm (0 + 0.0393 in.) 0 - 2.0 mm (0 - 0.0784 in.)
B - B	0 + 2.0 mm (0 + 0.0784 in.) 0 - 1.0 mm (0 - 0.0393 in.)
C - C	0 + 1.5 mm (0 + 0.0590 in.) 0 - 1.5 mm (0 - 0.0590 in.)
D - D	0 + 1.5 mm (0 + 0.0590 in.) 0 - 1.0 mm (0 - 0.0393 in.)

HINT:

"+" represents the condition that the glass is above the panel level.
"-" represents the condition that the glass is below the panel level.

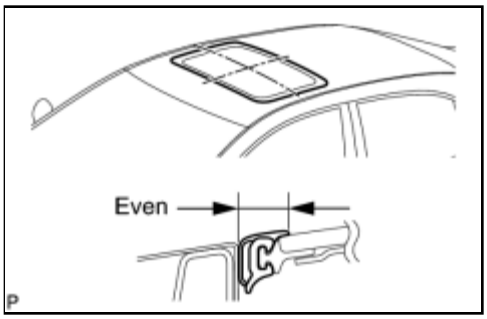

(c) Perform a gap check.

(1) Check the gap between the roof panel and roof glass.

NOTICE:

The gap must be even all around.

(d) After adjusting the sliding roof glass, using a T25 "TORX" socket wrench, install the sliding roof glass sub-assembly with the 4 screws.

Torque: 4.0 N·m (41 kgf·cm, 35in·lbf)

3. INSPECT FOR WATER LEAK

(a) After adjusting the sliding roof glass sub-assembly, inspect for water leaks.

(b) If there are any leaks, readjust the sliding roof glass sub-assembly.

4. INSTALL SLIDING ROOF SIDE GARNISH LH

(a) Engage the 5 claws and install the sliding roof side garnish LH.

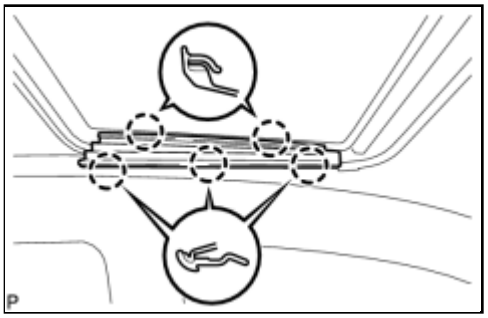

5. INSTALL SLIDING ROOF SIDE GARNISH RH

HINT:

Use the same procedure for the RH side and LH side.

6. INSTALL CURTAIN SHIELD AIRBAG ASSEMBLY LH (w/ Curtain Shield Airbag) INFO

7. INSTALL CURTAIN SHIELD AIRBAG ASSEMBLY RH (w/ Curtain Shield Airbag)

HINT:

Use the same procedure for the RH side and LH side INFO .

8. INSTALL REAR SIDE RAIL SPACER LH (w/o Curtain Shield Airbag)

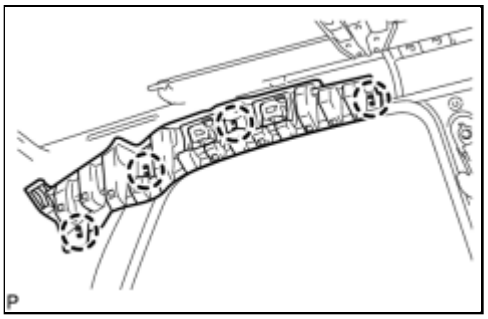

(a) Engage the 4 claws and install the rear side rail spacer LH.

9. INSTALL REAR SIDE RAIL SPACER RH (w/o Curtain Shield Airbag)

HINT:

Use the same procedure for the RH side and LH side.

10. INSTALL FRONT SIDE RAIL SPACER LH (w/o Curtain Shield Airbag)

(a) Engage the 4 claws and install the front side rail spacer LH.

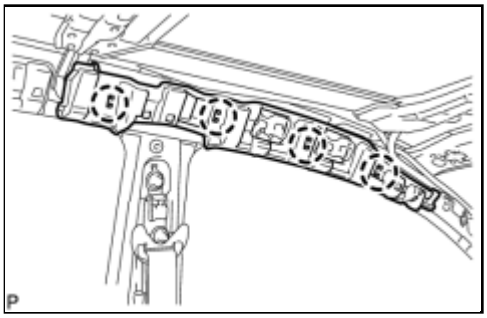

11. INSTALL FRONT SIDE RAIL SPACER RH (w/o Curtain Shield Airbag)

HINT:

Use the same procedure for the RH side and LH side.

12. INSTALL ROOF HEADLINING ASSEMBLY

(a) Install the roof headlining assembly INFO .

13. RESET SLIDING ROOF DRIVE GEAR SUB-ASSEMBLY

INFO

14. INSPECT SLIDING ROOF SYSTEM

INFO

Last Modified: 3-10-2010	6.4 A	**From:** 200901
Model Year: 2010	**Model:** Corolla	**Doc ID:** RM000001F2E01NX
Title: SLIDING ROOF / CONVERTIBLE: SLIDING ROOF HOUSING: REASSEMBLY (2010 Corolla)		

REASSEMBLY

1. INSTALL SUNSHADE TRIM SUB-ASSEMBLY

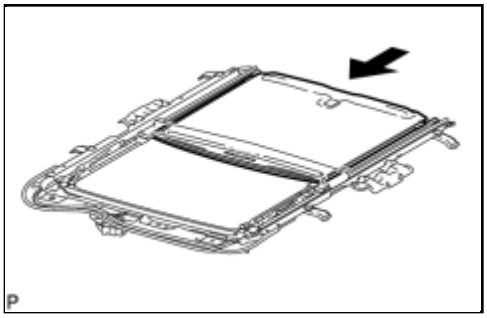

(a) Insert the sunshade trim into the sliding roof housing sub-assembly.

2. INSTALL SLIDING ROOF DRIVE GEAR SUB-ASSEMBLY

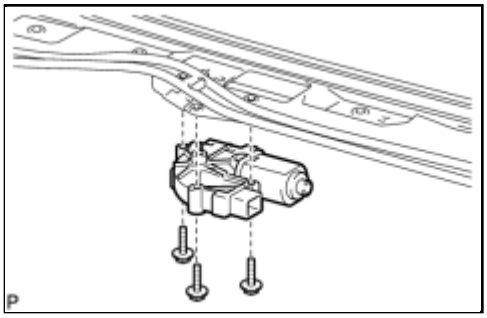

(a) Install the sliding roof drive gear sub-assembly with the 3 bolts.

Torque: 5.4 N·m (55 kgf·cm, 48in·lbf)

Last Modified: 3-10-2010	6.4 K	**From:** 200901
Model Year: 2010	**Model:** Corolla	**Doc ID:** RM0000030W200EX
Title: SLIDING ROOF / CONVERTIBLE: SLIDING ROOF SWITCH ASSEMBLY: COMPONENTS (2010 Corolla)		

COMPONENTS

ILLUSTRATION

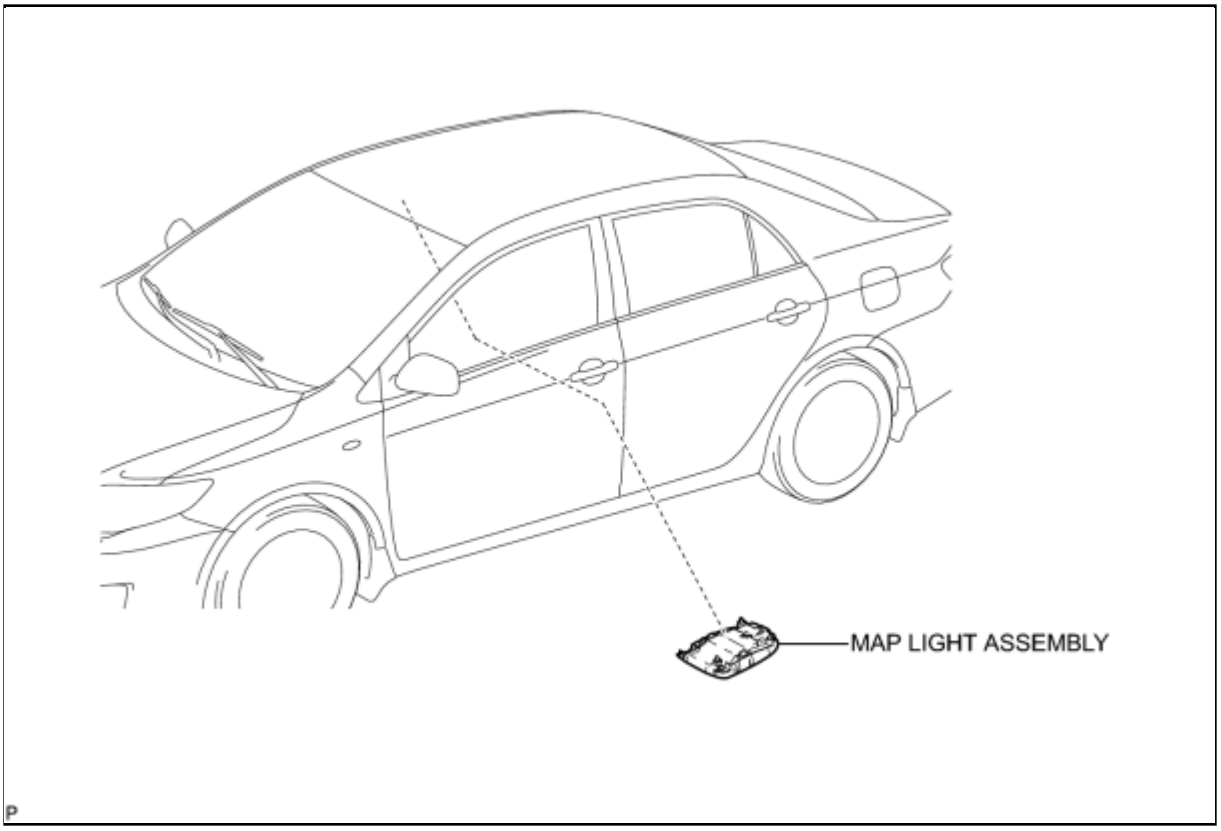

Last Modified: 3-10-2010	6.4 A	**From:** 200901
Model Year: 2010	**Model:** Corolla	**Doc ID:** RM000001I06010X
Title: SLIDING ROOF / CONVERTIBLE: SLIDING ROOF SWITCH ASSEMBLY: REMOVAL (2010 Corolla)		

REMOVAL

1. REMOVE MAP LIGHT ASSEMBLY INFO

Last Modified: 3-10-2010	6.4 G	**From:** 200901
Model Year: 2010	**Model:** Corolla	**Doc ID:** RM000001I0400VX
Title: SLIDING ROOF / CONVERTIBLE: SLIDING ROOF SWITCH ASSEMBLY: INSPECTION (2010 Corolla)		

INSPECTION

1. INSPECT MAP LIGHT ASSEMBLY

(a) Measure the resistance according to the value(s) in the table below.

Standard Resistance:

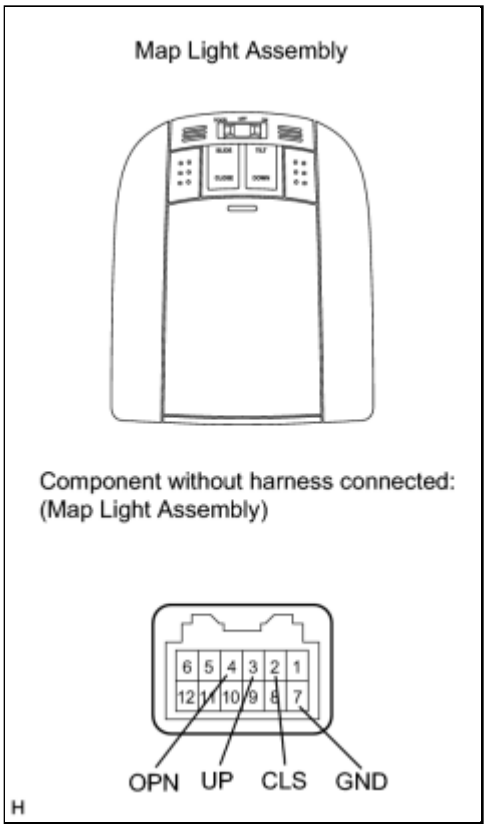

TESTER CONNECTION	SWITCH CONDITION	SPECIFIED CONDITION
4 (OPN) - 7 (GND)	SLIDE OPEN switch pushed	Below 1 Ω
4 (OPN) - 7 (GND)	SLIDE OPEN switch not pushed	1 MΩ or higher
2 (CLS) - 7 (GND)	SLIDE CLOSE switch pushed	Below 1 Ω
2 (CLS) - 7 (GND)	SLIDE CLOSE switch not pushed	1 MΩ or higher
3 (UP) - 7 (GND)	TILT UP switch pushed	Below 1 Ω
3 (UP) - 7 (GND)	TILT UP switch not pushed	1 MΩ or higher
4 (OPN) - 7 (GND)	TILT DOWN switch not pushed	1 MΩ or higher
2 (CLS) - 7 (GND)	TILT DOWN switch not pushed	1 MΩ or higher

If the result is not as specified, replace the map light assembly.

(b) Measure the voltage using diode test mode.

Standard Voltage:

TESTER CONNECTION	SWITCH CONDITION	SPECIFIED CONDITION
Positive lead → 2 (CLS)	TILT DOWN switch pushed	0.4 to 1.2 V

Negative lead → 7 (GND)		
Positive lead → 4 (OPN) Negative lead → 7 (GND)	TILT DOWN switch pushed	0.4 to 1.2 V
Positive lead → 7 (GND) Negative lead → 2 (CLS)	TILT DOWN switch pushed	2.5 to 3.3 V
Positive lead → 7 (GND) Negative lead → 4 (OPN)	TILT DOWN switch pushed	2.5 to 3.3 V

NOTICE:

This procedure is for using a digital tester which has diode test mode such as a TOYOTA electrical tester. If a tester which does not have diode test mode is used, the diode may break.

Last Modified: 3-10-2010	6.4 A	**From:** 200901
Model Year: 2010	**Model:** Corolla	**Doc ID:** RM000001I03010X
Title: SLIDING ROOF / CONVERTIBLE: SLIDING ROOF SWITCH ASSEMBLY: INSTALLATION (2010 Corolla)		

INSTALLATION

1. INSTALL MAP LIGHT ASSEMBLY INFO

Last Modified: 3-10-2010	6.4 L	**From:** 200901
Model Year: 2010	**Model:** Corolla	**Doc ID:** RM000002VRL00YX
Title: SLIDING ROOF / CONVERTIBLE: SLIDING ROOF SYSTEM: PRECAUTION (2010 Corolla)		

PRECAUTION

1. EXPRESSIONS OF IGNITION SWITCH

(a) The type of ignition switch used on this model differs according to the specifications of the vehicle. The expressions listed in the table below are used in this section.

SWITCH TYPE		IGNITION SWITCH (POSITION)	ENGINE SWITCH (CONDITION)
Expression	Ignition Switch off	LOCK	Off
	Ignition Switch ON	ON	On (IG)
	Ignition Switch ACC	ACC	On (ACC)
	Engine Start	START	Start

Last Modified: 3-10-2010	6.4 R	**From:** 200901
Model Year: 2010	**Model:** Corolla	**Doc ID:** RM000001VJK00TX
Title: SLIDING ROOF / CONVERTIBLE: SLIDING ROOF SYSTEM: PARTS LOCATION (2010 Corolla)		

PARTS LOCATION

ILLUSTRATION

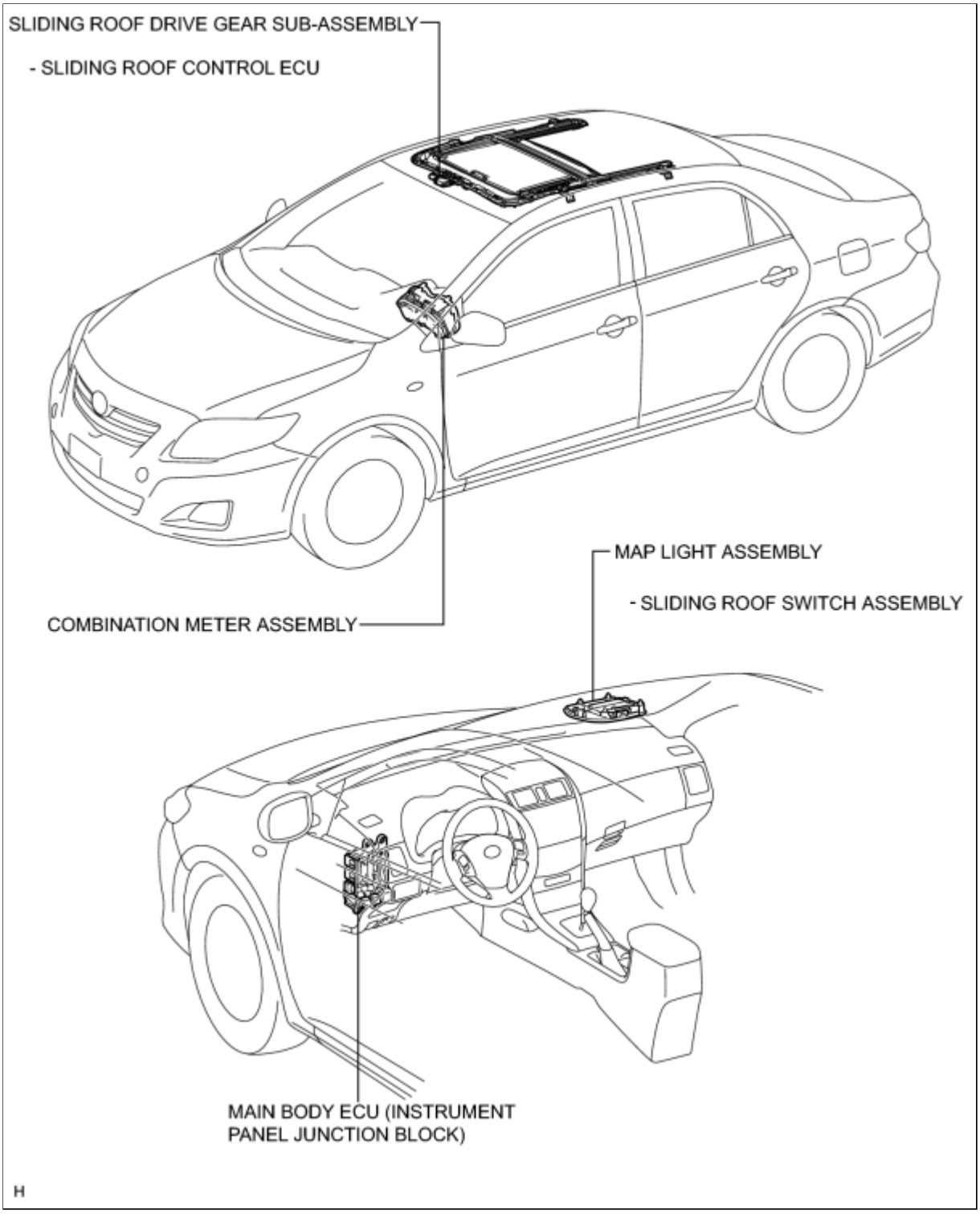
SLIDING ROOF DRIVE GEAR SUB-ASSEMBLY
- SLIDING ROOF CONTROL ECU
MAP LIGHT ASSEMBLY
- SLIDING ROOF SWITCH ASSEMBLY
COMBINATION METER ASSEMBLY
MAIN BODY ECU (INSTRUMENT PANEL JUNCTION BLOCK)
H

Last Modified: 3-10-2010	6.4 U	**From:** 200901
Model Year: 2010	**Model:** Corolla	**Doc ID:** RM000001VJP01TX
Title: SLIDING ROOF / CONVERTIBLE: SLIDING ROOF SYSTEM: SYSTEM DIAGRAM (2010 Corolla)		

SYSTEM DIAGRAM

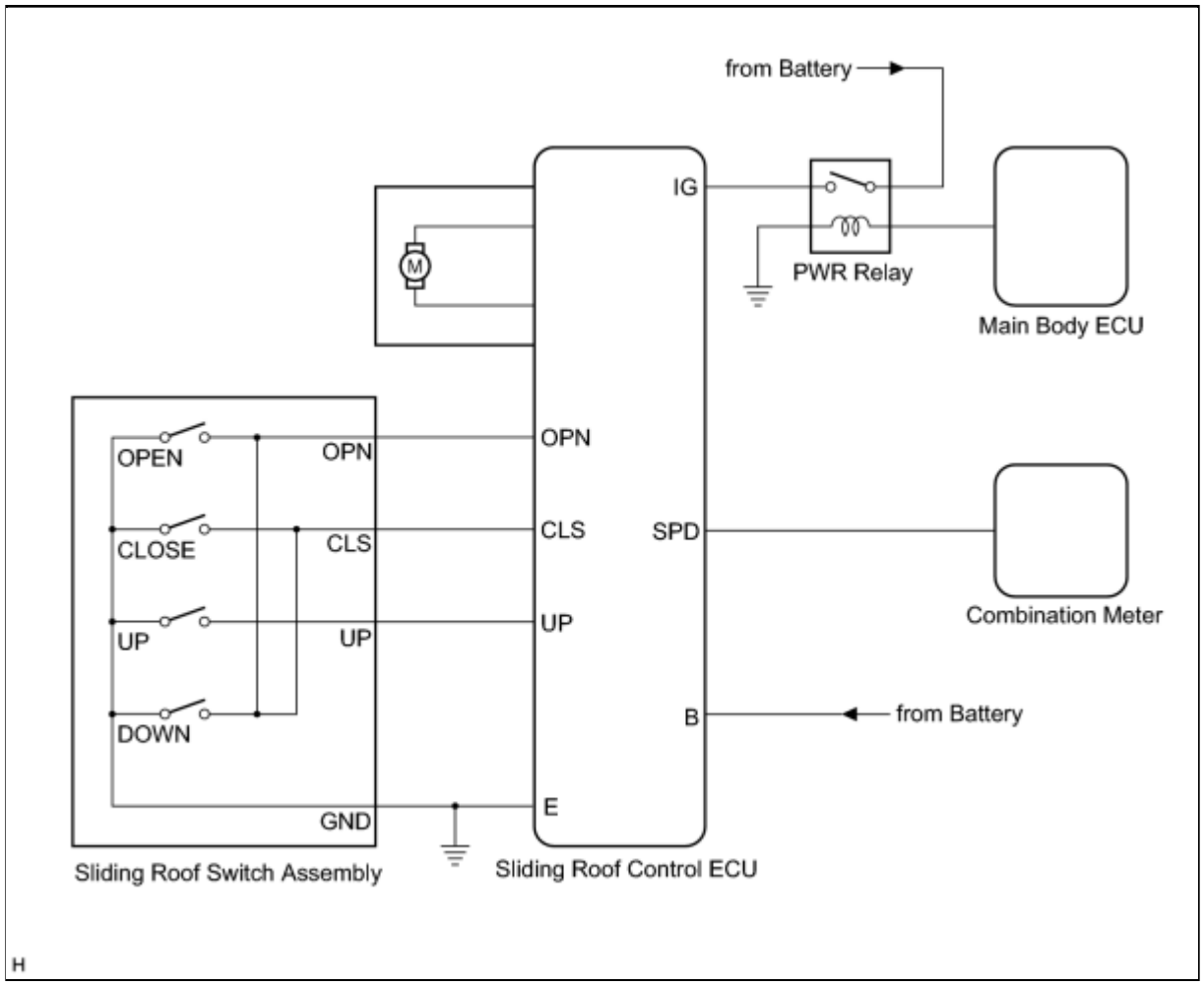

Last Modified: 3-10-2010	6.4 D	**From:** 200901
Model Year: 2010	**Model:** Corolla	**Doc ID:** RM000001VJJ00YX
Title: SLIDING ROOF / CONVERTIBLE: SLIDING ROOF SYSTEM: HOW TO PROCEED WITH TROUBLESHOOTING (2010 Corolla)		

HOW TO PROCEED WITH TROUBLESHOOTING

HINT:

Use the following procedure to troubleshoot the sliding roof system.

1.	**VEHICLE BROUGHT TO WORKSHOP**

NEXT

2.	**CUSTOMER PROBLEM ANALYSIS**

HINT:

- In troubleshooting, confirm that the problem symptoms have been accurately identified. Preconceptions should be discarded in order to make an accurate judgment. To clearly understand what the problem symptoms are, it is extremely important to ask the customer about the problem and the conditions at the time the malfunction occurred.
- Gather as much information as possible for reference. Past problems that seem unrelated may also help in some cases.
- The following 5 items are important points in the problem analysis:

What	Vehicle model, system name
When	Date, time, occurrence frequency
Where	Road conditions
Under what conditions?	Driving conditions, weather conditions
How did it happen?	Problem symptoms

NEXT

3.	INSPECT BATTERY VOLTAGE

(a) Measure the battery voltage.

Standard Voltage:
11 to 14 V

If the voltage is below 11 V, recharge or replace the battery before proceeding to the next step.

NEXT

4.	PROBLEM SYMPTOMS TABLE

(a) Refer to Problem Symptoms Table INFO .

Result:

RESULT	PROCEED TO
Fault is not listed in problem symptoms table	A
Fault is listed in problem symptoms table	B

B **Go to step 6**

A

5.	OVERALL ANALYSIS AND TROUBLESHOOTING

(a) Terminals of ECU INFO

(b) Operation Check INFO

NEXT

6.	REPAIR OR REPLACE

NEXT

7.	CONFIRMATION TEST

NEXT END

Last Modified: 3-10-2010	6.4 D	**From:** 200901
Model Year: 2010	**Model:** Corolla	**Doc ID:** RM000001VJN013X
Title: SLIDING ROOF / CONVERTIBLE: SLIDING ROOF SYSTEM: SYSTEM DESCRIPTION (2010 Corolla)		

SYSTEM DESCRIPTION

1. GENERAL

This system has the following functions: manual slide open and close, auto slide open and close, manual tilt up and down, auto tilt up and down, jam protection, and key off operation.

2. FUNCTION OF MAIN COMPONENT

COMPONENT	FUNCTION
Sliding roof drive gear sub-assembly (Sliding roof control ECU)	The sliding roof control ECU operates the sliding roof motor forward and backward, which tilts or slides the sliding roof glass. The sliding roof control ECU is built into the sliding roof drive gear sub-assembly.
Map light assembly (Sliding roof switch assembly)	The sliding roof switch assembly outputs operational signals to the sliding roof control ECU. The sliding roof switch is built into the map light assembly.

3. SYSTEM OPERATION

The sliding roof has the following features.

FUNCTION	OUTLINE
Manual slide open and close	This function causes the sliding roof to open (or close) when the SLIDE OPEN switch (or SLIDE CLOSE switch) is pressed for a maximum of 0.3 seconds. The sliding roof stops as soon as the switch is released.
Auto slide open and close	This function causes the sliding roof to fully open (or close) when the SLIDE OPEN switch (or SLIDE CLOSE switch) is pressed for a minimum of 0.3 seconds.
Manual tilt up and down	This function causes the sliding roof to tilt up (or tilt down) when the TILT UP switch (or TILT DOWN switch) is pressed for a maximum of 0.3 seconds.
Auto tilt up and down	This function enables the sliding roof to tilt up (or down) when the TILT UP switch (or TILT DOWN switch) is pressed for a minimum of 0.3 seconds.
Jam protection function	The jam protection function automatically stops the sliding roof, or stops the sliding roof and opens it halfway (or fully tilts it upward) if a foreign object gets jammed in the sliding roof during closing operation (or tilt down operation).
Key off operation	This function makes it possible to operate the sliding roof for approximately 43 seconds after the ignition switch is turned off if the front doors are not opened.
Comfort stop function	This function stops the sliding roof in a position that reduces wind noise when fully opened.

FUNCTION	OUTLINE
Sliding roof open warning	When the ignition switch is turned from on to off and the driver door is opened with the sliding roof open, the multi buzzer in the combination meter sounds once.

Last Modified: 3-10-2010	6.4 D	**From:** 200901
Model Year: 2010	**Model:** Corolla	**Doc ID:** RM000002RO800BX
Title: SLIDING ROOF / CONVERTIBLE: SLIDING ROOF SYSTEM: OPERATION CHECK (2010 Corolla)		

OPERATION CHECK

1. CHECK AUTO OPERATION

(a) Turn the ignition switch to ON.

(b) When the roof glass is fully closed, press the SLIDE OPEN switch for 0.3 seconds or more. Check that the roof glass automatically slides until comfort stop position. Press the SLIDE OPEN switch for 0.3 seconds or more again. Check that the roof glass automatically slides until it is fully opened.

(c) When the roof glass is fully open, press the SLIDE CLOSE switch for 0.3 seconds or more. Check that the roof glass automatically slides until it is fully closed.

(d) When the roof glass is fully closed, press the TILT UP switch for 0.3 seconds or more. Check that the roof glass automatically tilts until it is fully tilted upward.

(e) When the roof glass is fully open, press the TILT DOWN switch for 0.3 seconds or more. Check that the roof glass automatically tilts until it is fully tilted downward.

(f) When the AUTO function is operating, check that pressing any sliding roof switch stops the roof glass operation.

HINT:

When pressing the switch for 0.3 seconds or less, the roof glass moves but the AUTO function does not operate.

2. CHECK SLIDING ROOF OPERATION AFTER IGNITION SWITCH IS TURNED OFF

(a) Turn the ignition switch from on to off, and check that the sliding roof operates. Then open and close the driver side door once, and check that the sliding roof does not operate.

(b) Turn the ignition switch from on to off and wait for approximately 45 seconds. Check that the sliding roof does not operate.

(c) Operate the AUTO (SLIDE OPEN/CLOSE or TILT UP/DOWN) function. While the roof glass is in motion, turn the ignition switch from on to off. Check that the AUTO function continues until the roof glass opens or closes fully.

3. CHECK JAM PROTECTION FUNCTION

CAUTION:

- Do not use a part of your body, for example, your hand, to check the jam protection.
- Do not allow anything to become caught in the sliding roof by accident in this procedure.
- Perform the inspection from the inside of the vehicle.

NOTICE:

- Do not use hard objects such as a hammer, to avoid damaging the roof.
- If the jam protection does not operate, reset the sliding roof drive gear (motor).

(a) When the sliding roof auto function is operating and a foreign object is caught between the vehicle body and

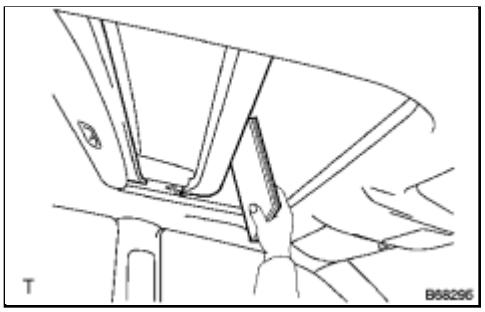

glass, check that the roof glass opens a distance of 189 mm (7.44 in.) from the point of contact with the object, or opens fully if an opening distance of 189 mm (7.44 in.) is not available.

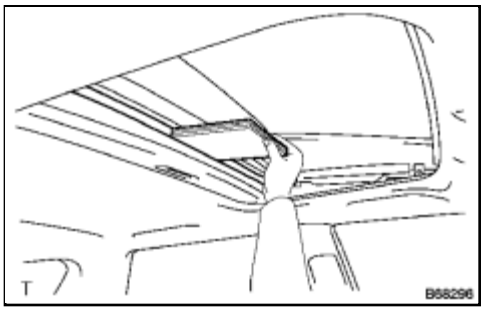

(b) When the TILT UP/DOWN function is operating, and a foreign object is caught between the vehicle body and the roof glass, check that the sliding roof tilts up fully.

Last Modified: 3-10-2010	6.4 D	**From:** 200901
Model Year: 2010	**Model:** Corolla	**Doc ID:** RM000001VJR01ZX
Title: SLIDING ROOF / CONVERTIBLE: SLIDING ROOF SYSTEM: INITIALIZATION (2010 Corolla)		

INITIALIZATION

1. INITIALIZE SLIDING ROOF DRIVE GEAR SUB-ASSEMBLY

NOTICE:

When removing the sliding roof drive gear sub-assembly, the sliding roof drive gear sub-assembly (sliding roof control ECU) requires initialization. If a reset is not executed, the following functions do not operate: auto operation, key off operation and jam protection function.

(a) Turn the ignition switch to ON.

(b) Make sure that the sliding roof is fully closed.

(c) Press the TILT UP switch until the sliding roof stops at the fully tilt up position. Then release the switch.

(d) Press and hold the TILT UP switch until the following movement finishes and then release the switch: approximately 10 seconds → tilt up (approximately 5 mm) → tilt down (approximately 5 mm).

(e) Within 5 seconds after finishing the previous step, press and hold the TILT UP switch until the following movement finishes and then release the switch: approximately 5 seconds → tilt down → fully closed → slide open → fully open → slide close → fully closed.

(f) Finish the initialization.

(g) Check that the AUTO operation works normally.

NOTICE:

If the following conditions occur during initialization procedure, initialization will fail:

- One of the following electric loads is given to the vehicle during the initialization: Cranking the engine, Power window operation, Rear defogger operation, Blower operation, Power seat operation, Power door lock operation or Headlight illumination.
- The ignition switch is turned off.
- Another switch is turned on during initialization.
- The vehicle experiences a strong vibration during initialization, such as slamming of a door.

HINT:

- If the sliding roof cannot be fully closed or its position has become misaligned, perform initialization again.
- If the roof glass stops moving or starts moving in the opposite direction while the CLOSE/UP switch is held down, continue to hold the switch for another 10 seconds or more to return the sliding roof control ECU to an uninitialized condition. Then perform the initialization procedure again.
- If the AUTO operation function and jam protection function do not operate after the drive gear has been reset, replace the sliding roof drive gear sub-assembly (sliding roof control ECU).

Last Modified: 3-10-2010	6.4 T	**From:** 200901
Model Year: 2010	**Model:** Corolla	**Doc ID:** RM000001VJM01UX
Title: SLIDING ROOF / CONVERTIBLE: SLIDING ROOF SYSTEM: PROBLEM SYMPTOMS TABLE (2010 Corolla)		

PROBLEM SYMPTOMS TABLE

HINT:

- Use the table below to help determine the cause of problem symptoms. If multiple suspected areas are listed, the potential causes of the symptoms are listed in order of probability in the "Suspected Area" column of the table. Check each symptom by checking the suspected areas in the order they are listed. Replace parts as necessary.
- Inspect the fuses and relays related to this system before inspecting the suspected areas below.

Sliding Roof System

SYMPTOM	SUSPECTED AREA	SEE PAGE
Sliding function and tilt function do not operate	Sliding roof ECU power source circuit	INFO
	Sliding roof control switch circuit	INFO
Either sliding function or tilt function does not operate	Sliding roof control switch circuit	INFO

Last Modified: 3-10-2010	6.4 U	**From:** 200901
Model Year: 2010	**Model:** Corolla	**Doc ID:** RM000001VJL014X
Title: SLIDING ROOF / CONVERTIBLE: SLIDING ROOF SYSTEM: TERMINALS OF ECU (2010 Corolla)		

TERMINALS OF ECU

1. CHECK SLIDING ROOF DRIVE GEAR SUB-ASSEMBLY (SLIDING ROOF CONTROL ECU)

(a) Disconnect the O11 ECU connector.

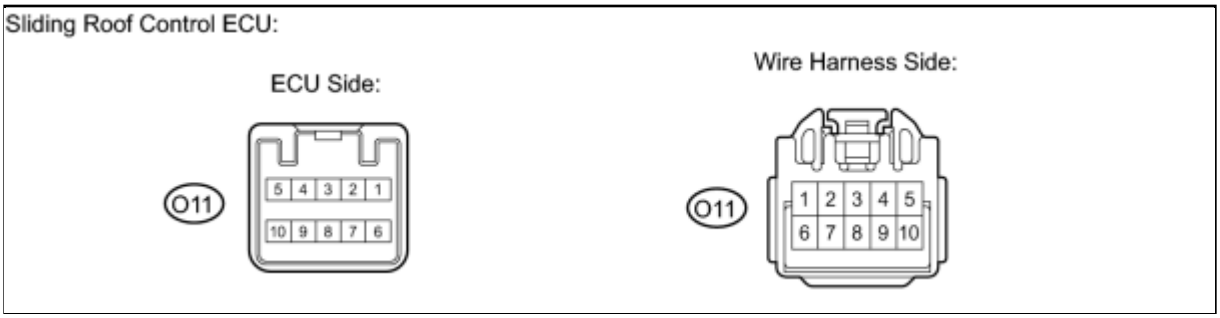

(b) Measure the resistance and voltage on the wire harness side according to the value(s) in the table below.

TESTER CONNECTION	WIRING COLOR	TERMINAL DESCRIPTION	CONDITION	SPECIFIED CONDITION
O11-10 (B) - O11-5 (E)	BE - W-B	+B power supply	Always	11 to 14 V
O11-3 (IG) - O11-5 (E)	Y - W-B	Power supply	Ignition switch off	Below 1 V
O11-3 (IG) - O11-5 (E)	Y - W-B	Power supply	Ignition switch ON	11 to 14 V
O11-1 (OPN) - O11-5 (E)	G - W-B	Sliding roof motor open	SLIDE OPEN switch OFF	10 kΩ or higher
O11-1 (OPN) - O11-5 (E)	G - W-B	Sliding roof motor open	SLIDE OPEN switch ON	Below 1 Ω
O11-2 (CLS) - O11-5 (E)	L - W-B	Sliding roof motor close	SLIDE CLOSE switch OFF	10 kΩ or higher
O11-2 (CLS) - O11-5 (E)	L - W-B	Sliding roof motor close	SLIDE CLOSE switch ON	Below 1 Ω
O11-6 (UP) - O11-5 (E)	R - W-B	Sliding roof motor up	TILT UP switch OFF	10 kΩ or higher
O11-6 (UP) - O11-5 (E)	R - W-B	Sliding roof motor up	TILT UP switch ON	Below 1 Ω

TESTER CONNECTION	WIRING COLOR	TERMINAL DESCRIPTION	CONDITION	SPECIFIED CONDITION
O11-5 (E) - Body ground	W-B - Body ground	Ground	Always	Below 1 Ω

If the result is not as specified, there may be a malfunction on the wire harness side.

(c) Reconnect the O11 ECU connector.

(d) Measure the voltage according to the value(s) in the table below.

TESTER CONNECTION	WIRING COLOR	TERMINAL DESCRIPTION	CONDITION	SPECIFIED CONDITION
O11-1 (OPN) - O11-5 (E)	G - W-B	Sliding roof motor open	Ignition switch ON, sliding roof closed, SLIDE OPEN switch OFF	11 to 14 V
O11-1 (OPN) - O11-5 (E)	G - W-B	Sliding roof motor open	Ignition switch ON, sliding roof closed, SLIDE OPEN switch ON	Below 1 V
O11-2 (CLS) - O11-5 (E)	L - W-B	Sliding roof motor close	Ignition switch ON, sliding roof open, SLIDE CLOSE switch OFF	11 to 14 V
O11-2 (CLS) - O11-5 (E)	L - W-B	Sliding roof motor close	Ignition switch ON, sliding roof open, SLIDE CLOSE switch ON	Below 1 V
O11-6 (UP) - O11-5 (E)	R - W-B	Sliding roof motor up	Ignition switch ON, sliding roof closed, TILT UP switch OFF	11 to 14 V
O11-6 (UP) - O11-5 (E)	R - W-B	Sliding roof motor up	Ignition switch ON, sliding roof closed, TILT UP switch ON	Below 1 V

If the result is not as specified, the ECU may have a malfunction.

2. CHECK MAP LIGHT ASSEMBLY (SLIDING ROOF SWITCH ASSEMBLY)

(a) Disconnect the O10 switch connector.

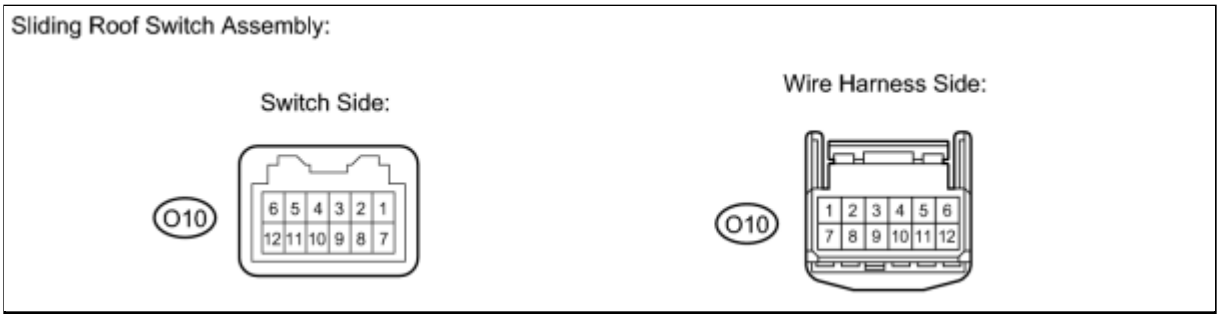

(b) Measure the resistance on the wire harness side according to the value(s) in the table below.

TESTER CONNECTION	WIRING COLOR	TERMINAL DESCRIPTION	CONDITION	SPECIFIED CONDITION
O10-7 (GND) - Body ground	W-B - Body ground	Ground	Always	Below 1 Ω
O10-2 (CLS) - O10-7 (GND)	L - W-B	Sliding roof close switch signal	SLIDE CLOSE switch OFF	10 kΩ or higher
O10-2 (CLS) - O10-7 (GND)	L - W-B	Sliding roof close switch signal	SLIDE CLOSE switch ON	Below 1 Ω
O10-3 (UP) - O10-7 (GND)	R - W-B	Sliding roof up switch signal	TILT UP switch OFF	10 kΩ or higher
O10-3 (UP) - O10-7 (GND)	R - W-B	Sliding roof up switch signal	TILT UP switch ON	Below 1 Ω
O10-4 (OPN) - O10-7 (GND)	G - W-B	Sliding roof open switch signal	SLIDE OPEN switch OFF	10 kΩ or higher
O10-4 (OPN) - O10-7 (GND)	G - W-B	Sliding roof open switch signal	SLIDE OPEN switch ON	Below 1 Ω

If the result is not as specified, there may be a malfunction on the wire harness side.

(c) Reconnect the O10 switch connector.

(d) Measure the voltage according to the value(s) in the table below.

TESTER CONNECTION	WIRING COLOR	TERMINAL DESCRIPTION	CONDITION	SPECIFIED CONDITION
O10-2 (CLS) - O10-7 (GND)	L - W-B	Sliding roof close switch signal	Ignition switch ON, sliding roof open, SLIDE CLOSE switch OFF	11 to 14 V
O10-2 (CLS) - O10-7 (GND)	L - W-B	Sliding roof close switch signal	Ignition switch ON, sliding roof open, SLIDE CLOSE switch ON	Below 1 V
O10-3 (UP) - O10-7 (GND)	R - W-B	Sliding roof up switch signal	Ignition switch ON, sliding roof closed, TILT UP switch OFF	11 to 14 V
O10-3 (UP) - O10-7 (GND)	R - W-B	Sliding roof up switch signal	Ignition switch ON, sliding roof closed, TILT UP switch ON	Below 1 V
O10-4 (OPN) - O10-7 (GND)	G - W-B	Sliding roof open switch signal	Ignition switch ON, sliding roof closed, SLIDE OPEN switch OFF	11 to 14 V
O10-4 (OPN) - O10-7 (GND)	G - W-B	Sliding roof open switch signal	Ignition switch ON, sliding roof closed, SLIDE OPEN	Below 1 V

TESTER CONNECTION	WIRING COLOR	TERMINAL DESCRIPTION	CONDITION	SPECIFIED CONDITION
			switch ON	

If the result is not as specified, the switch may have a malfunction.

Last Modified: 3-10-2010	6.4 U	**From:** 200901
Model Year: 2010	**Model:** Corolla	**Doc ID:** RM000000X8Z03LX
Title: SLIDING ROOF / CONVERTIBLE: SLIDING ROOF SYSTEM: FAIL-SAFE CHART (2010 Corolla)		

FAIL-SAFE CHART

1. SLIDING ROOF OPERATION IN FAIL-SAFE MODE

(a) Operation switch is shorted to ground

- If a SLIDE OPEN/CLOSE or TILT UP/DOWN switch signal remains on for more than 30 seconds, the signal will be ignored after this 30 second time period elapses.

(b) Failure of one hall sensor

- When the ECU recognizes a failure of one hall sensor, the AUTO function will be prohibited.

(c) Failure of two hall sensors

- The ECU cannot recognize whether the hall sensors are malfunctioning or the motor is stalled. If the motor is operating, the ECU will stop the motor immediately. After stopping motor operation, the ECU will operate normally the next time a switch is pressed.

(d) Simultaneous input

- When both TILT UP and SLIDE OPEN/CLOSE signals are sent, the ECU will ignore the signals and stop operating the sliding roof.

(e) Sliding roof position problem

- If the ECU recognizes a problem with the position of the sliding roof, the ECU will stop the motor (if initialization is being performed, the motor will be allowed to operate). After stopping the motor, the ECU will clear its stored position data. As a result of clearing the stored position data, initialization will be required. Refer to Initialization for details.

(f) Exceeding maximum allowable motor runtime

- The ECU monitors the motor operation time to protect the motor. If the total motor operation time exceeds 120 seconds during SLIDE OPEN or TILT UP operation, the ECU will stop the motor. After the motor is stopped, the motor operation will be prohibited until 100 seconds have passed.

(g) Relay error

- If the ECU recognizes this error, the ECU will stop the motor immediately.

(h) Failure in EEPROM parameters

- If the ECU recognizes this failure, the ECU will stop the motor immediately. After the motor is stopped, all functions will be prohibited.

(i) Supply voltage out of range (9 to 15 V)

- If the ECU recognizes that the supply voltage is not within the specified range, the ECU will stop the motor. However, while a jam protection reverse operation is being performed, the motor will not be stopped until the reverse operation is completed. After the motor is stopped, all functions will be prohibited until the supply voltage returns to normal.

(j) Strong voltage spike (load dump detected*)

- When the ECU recognizes a strong voltage spike (load dump detected), the ECU will stop the

motor. After the motor is stopped, all functions are prohibited during the voltage spike.

HINT:

***: A load dump occurs when a large electrical load has been removed from the charging system, causing system voltage to spike.**



Last Modified: 3-10-2010	6.4 J	**From:** 200901
Model Year: 2010	**Model:** Corolla	**Doc ID:** RM000001VJU00OX
Title: SLIDING ROOF / CONVERTIBLE: SLIDING ROOF SYSTEM: Sliding Roof Control Switch Circuit (2010 Corolla)		

Sliding Roof Control Switch Circuit

DESCRIPTION

If either the sliding function or tilt function does not operate, there may be a malfunction in the sliding roof switch assembly circuit.

WIRING DIAGRAM

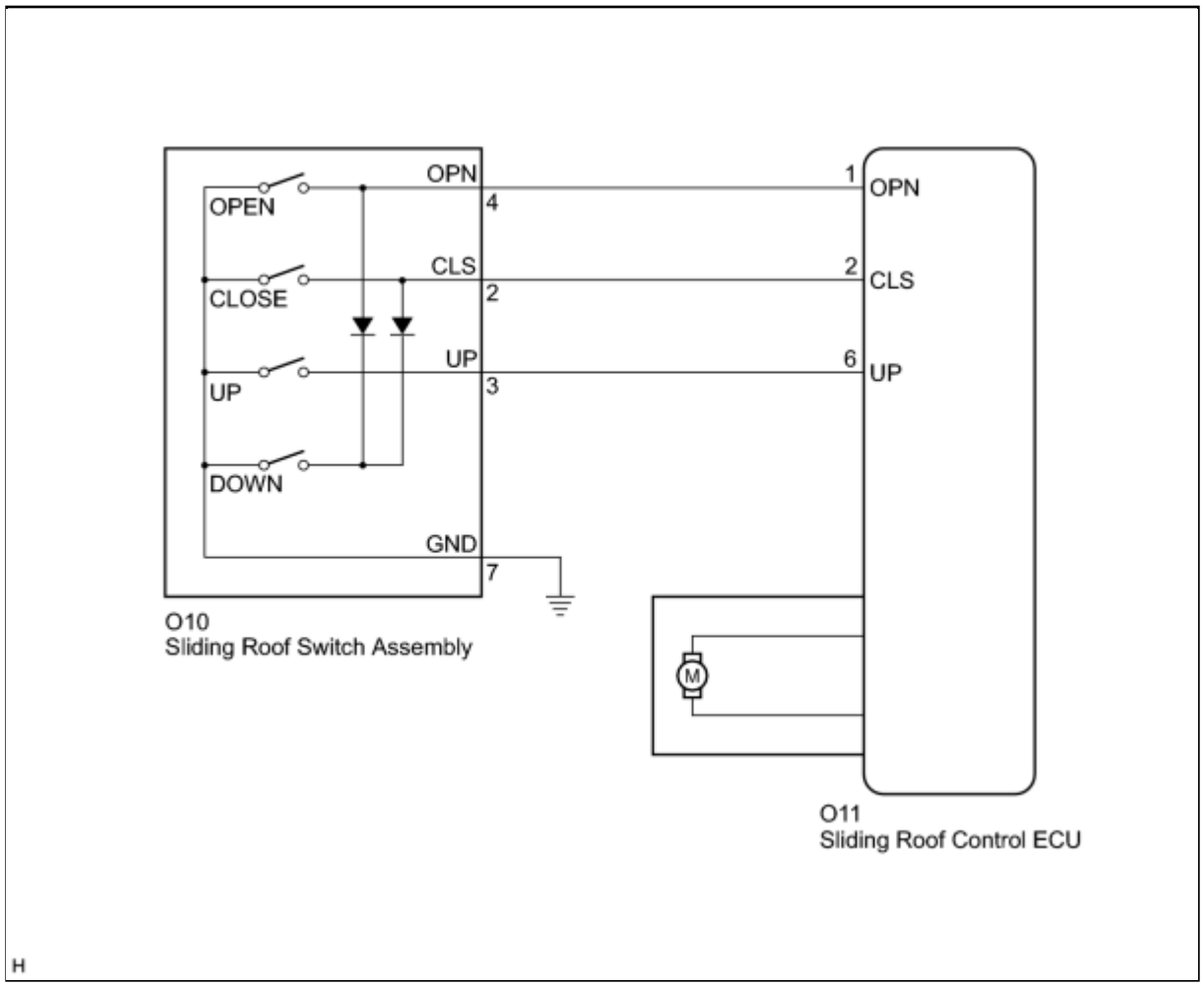

INSPECTION PROCEDURE

NOTICE:

When the sliding roof drive gear sub-assembly is reinstalled or replaced, the sliding roof drive gear sub-assembly must be initialized INFO **.**

PROCEDURE

1.	**INSPECT MAP LIGHT ASSEMBLY (SLIDING ROOF SWITCH ASSEMBLY)**

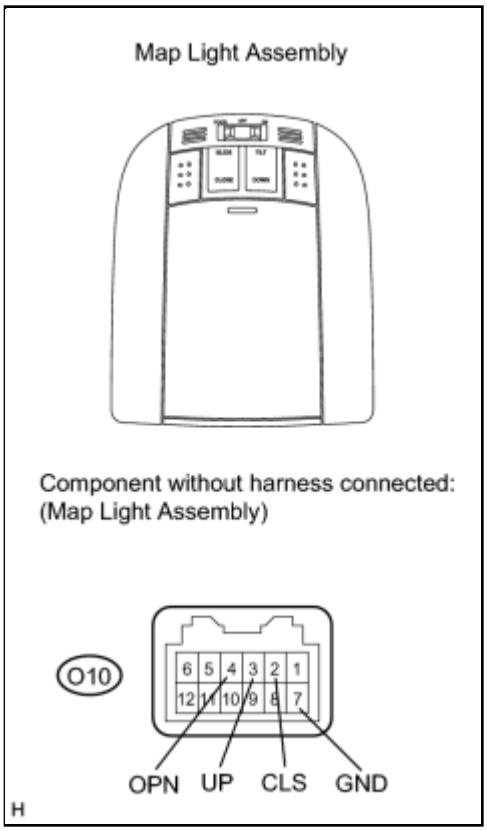

(a) Remove the map light assembly INFO .

(b) Measure the resistance according to the value(s) in the table below.

Standard Resistance:

TESTER CONNECTION	SWITCH CONDITION	SPECIFIED CONDITION
O10-4 (OPN) - O10-7 (GND)	SLIDE OPEN switch pushed	Below 1 Ω
O10-4 (OPN) - O10-7 (GND)	SLIDE OPEN switch not pushed	1 MΩ or higher
O10-2 (CLS) - O10-7 (GND)	SLIDE CLOSE switch pushed	Below 1 Ω
O10-2 (CLS) - O10-7 (GND)	SLIDE CLOSE switch not pushed	1 MΩ or higher
O10-3 (UP) - O10-7 (GND)	TILT UP switch pushed	Below 1 Ω
O10-3 (UP) - O10-7 (GND)	TILT UP switch not pushed	1 MΩ or higher
O10-4 (OPN) - O10-7 (GND)	TILT DOWN switch not pushed	1 MΩ or higher
O10-2 (CLS) - O10-7 (GND)	TILT DOWN switch not pushed	1 MΩ or higher

(c) Measure the voltage using diode test mode.

Standard Voltage:

TESTER CONNECTION	SWITCH CONDITION	SPECIFIED CONDITION
Positive lead → O10-2 (CLS) Negative lead → O10-7 (GND)	TILT DOWN switch pushed	0.4 to 1.2 V
Positive lead → O10-4 (OPN) Negative lead → O10-7 (GND)	TILT DOWN switch pushed	0.4 to 1.2 V
Positive lead → O10-7 (GND) Negative lead → O10-2 (CLS)	TILT DOWN switch pushed	2.5 to 3.3 V
Positive lead → O10-7 (GND) Negative lead → O10-4 (OPN)	TILT DOWN switch pushed	2.5 to 3.3 V

NOTICE:

This procedure is for using a digital tester which has diode test mode such as a TOYOTA electrical tester. If a tester which does not have diode test mode is used, the diode may break.

NG ▶ **REPLACE MAP LIGHT ASSEMBLY (SLIDING ROOF SWITCH ASSEMBLY)**

OK ▼

2.	**CHECK HARNESS AND CONNECTOR (MAP LIGHT ASSEMBLY - SLIDING ROOF DRIVE GEAR AND BODY GROUND)**

(a) Disconnect the O11 ECU connector.

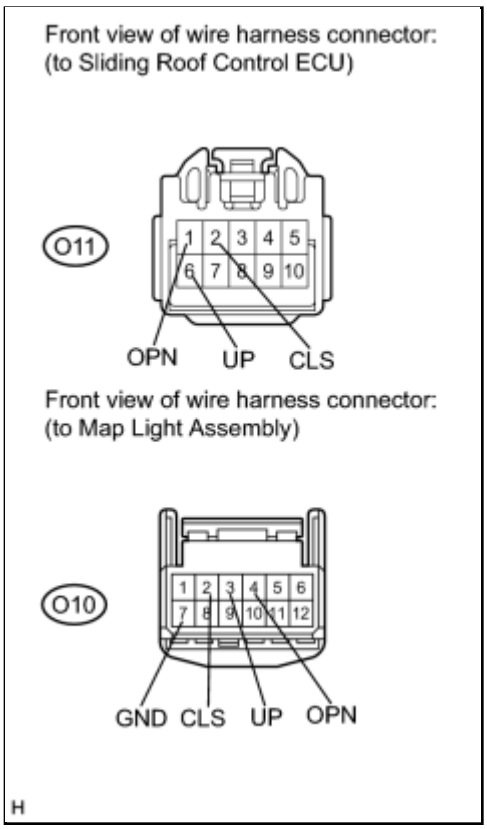

(b) Measure the resistance according to the value(s) in the table below.

Standard Resistance:

TESTER CONNECTION	CONDITION	SPECIFIED CONDITION
O11-1 (OPN) - O10-4 (OPN)	Always	Below 1 Ω
O11-2 (CLS) - O10-2 (CLS)	Always	Below 1 Ω
O11-6 (UP) - O10-3 (UP)	Always	Below 1 Ω
O11-1 (OPN) - Body ground	Always	10 kΩ or higher
O11-2 (CLS) - Body ground	Always	10 kΩ or higher
O11-6 (UP) - Body ground	Always	10 kΩ or higher
O10-7 (GND) - Body ground	Always	Below 1 Ω

NG ▶ **REPAIR OR REPLACE HARNESS OR CONNECTOR**

OK ▶ **REPLACE SLIDING ROOF DRIVE GEAR SUB-ASSEMBLY (SLIDING ROOF CONTROL ECU)**

Last Modified: 3-10-2010	6.4 J	**From:** 200901
Model Year: 2010	**Model:** Corolla	**Doc ID:** RM000001VJT015X
Title: SLIDING ROOF / CONVERTIBLE: SLIDING ROOF SYSTEM: Sliding Roof ECU Power Source Circuit (2010 Corolla)		

Sliding Roof ECU Power Source Circuit

DESCRIPTION

If either the sliding function or tilt function does not operate, there may be a malfunction in the sliding roof control ECU power source circuit.

WIRING DIAGRAM

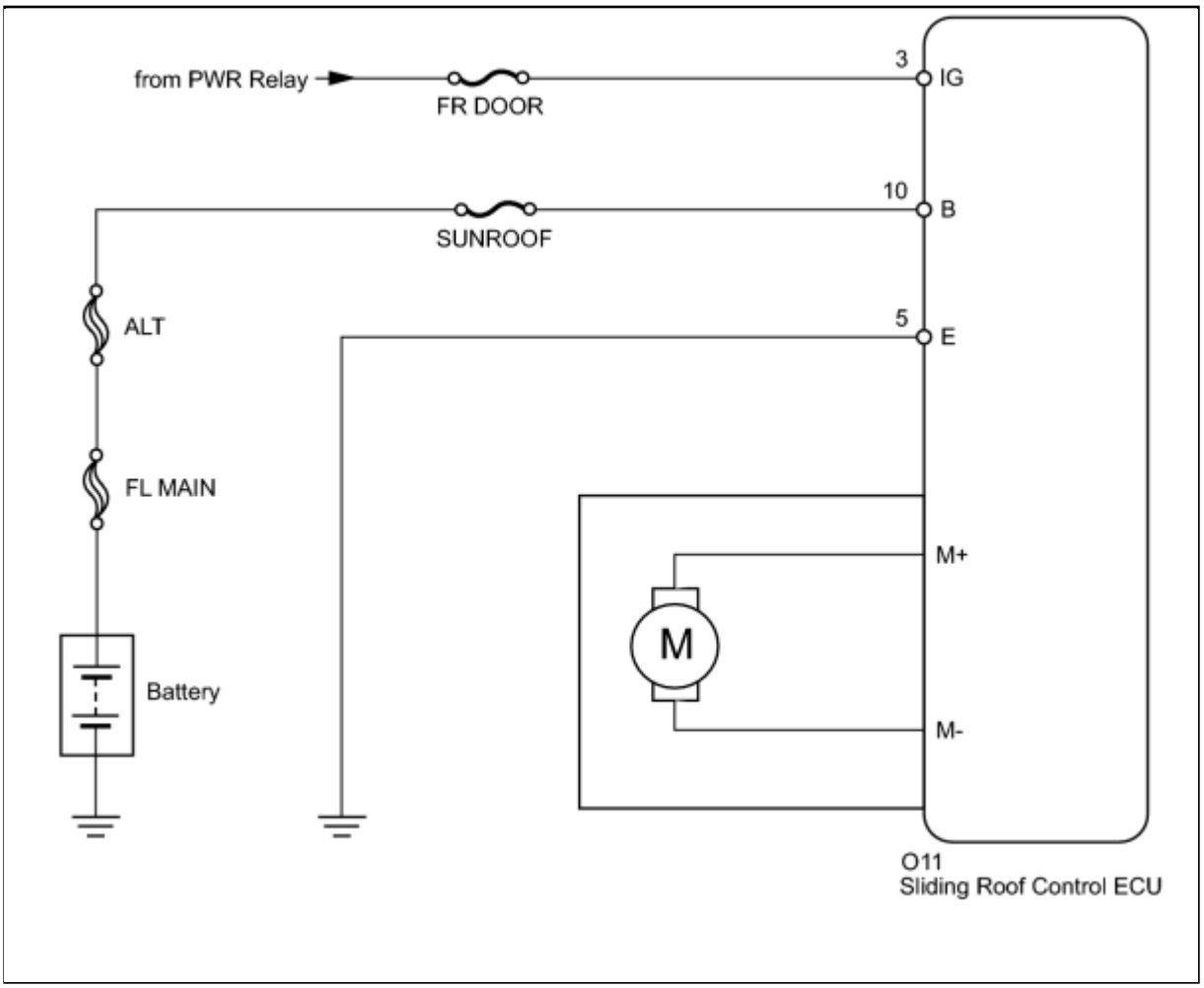

INSPECTION PROCEDURE

PROCEDURE

1.	**INSPECT FUSE (SUNROOF, FR DOOR)**

(a) Remove the SUNROOF and FR DOOR fuses from the instrument panel junction block.

(b) Measure the resistance according to the value(s) in the table below.

Standard Resistance:

TESTER CONNECTION	CONDITION	SPECIFIED CONDITION
SUNROOF fuse	Always	Below 1 Ω
FR DOOR fuse	Always	Below 1 Ω

NG ▶ **REPLACE FUSE**

OK ▼

2.	**CHECK HARNESS AND CONNECTOR (SLIDING ROOF DRIVE GEAR - BATTERY, BODY GROUND)**

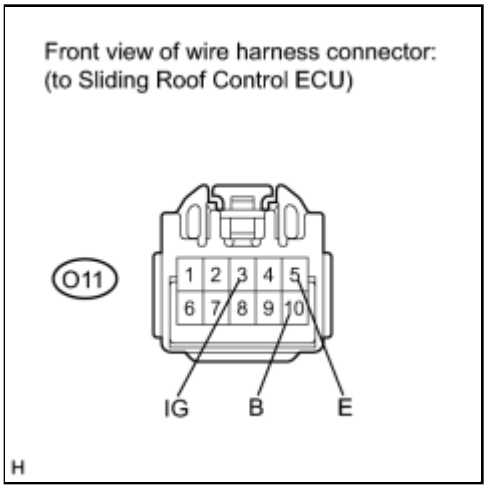

(a) Disconnect the O11 ECU connector.

(b) Measure the voltage and resistance according to the value(s) in the table below.

Standard Voltage:

TESTER CONNECTION	CONDITION	SPECIFIED CONDITION
O11-10 (B) - Body ground	Always	11 to 14 V

TESTER CONNECTION	CONDITION	SPECIFIED CONDITION
O11-3 (IG) - Body ground	Ignition switch off	Below 1 V
O11-3 (IG) - Body ground	Ignition switch ON	11 to 14 V

Standard Resistance:

TESTER CONNECTION	CONDITION	SPECIFIED CONDITION
O11-5 (E) - Body ground	Always	Below 1 Ω

NG ▶ **REPAIR OR REPLACE HARNESS OR CONNECTOR**

OK ▶ **PROCEED TO NEXT CIRCUIT INSPECTION SHOWN IN PROBLEM SYMPTOMS TABLE**

Last Modified: 3-10-2010	6.4 A	**From:** 200901
Model Year: 2010	**Model:** Corolla	**Doc ID:** RM000000MKT021X
Title: WINDOW / GLASS: BACK WINDOW GLASS: INSTALLATION (2010 Corolla)		

INSTALLATION

1. INSTALL NO. 2 BACK WINDOW GLASS STOPPER (for 2-piece Type)

(a) Using a brush or sponge, coat the application area of the 2 No. 2 back window glass stoppers with Primer G.

NOTICE:

- Do not apply too much primer.
- Allow the primer coating to dry for 3 minutes or more.
- Throw away any leftover Primer G.

HINT:

If an area other than that specified is coated by accident, apply a non-residue solvent to a clean cloth and wipe off the excess primer.

(b) Install 2 new No. 2 back window glass stoppers onto the back window glass as shown in the illustration.

HINT:

Only 2-piece type No. 2 back window glass stoppers are supplied. Use the 2-piece type stoppers even if a 1-piece type was used.

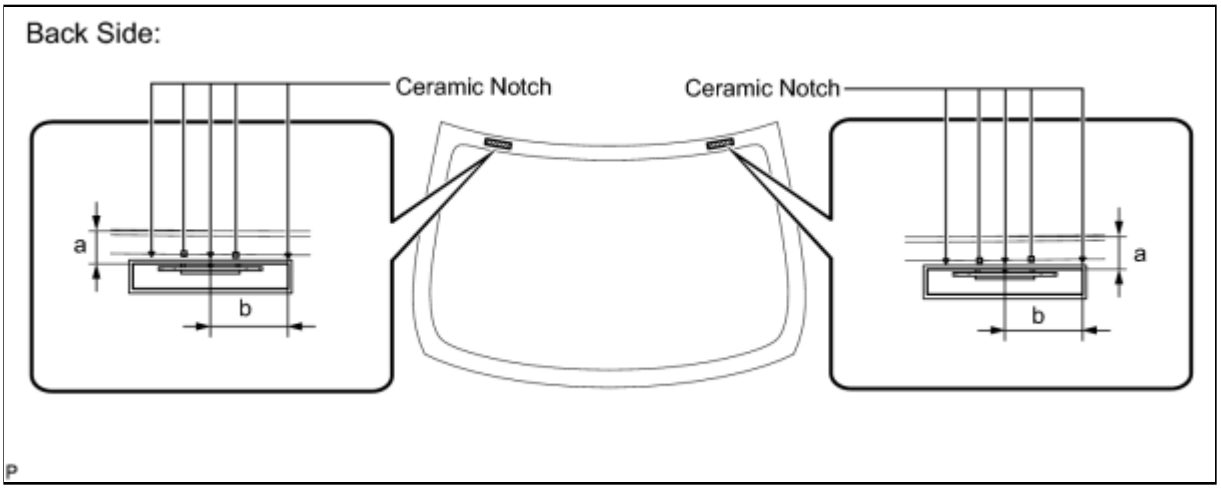

Standard Dimension:

AREA	DIMENSION
a	14.1 mm (0.555 in.)
b	40.0 mm (1.57 in.)

2. INSTALL NO. 1 BACK WINDOW GLASS STOPPER (for 2-piece Type)

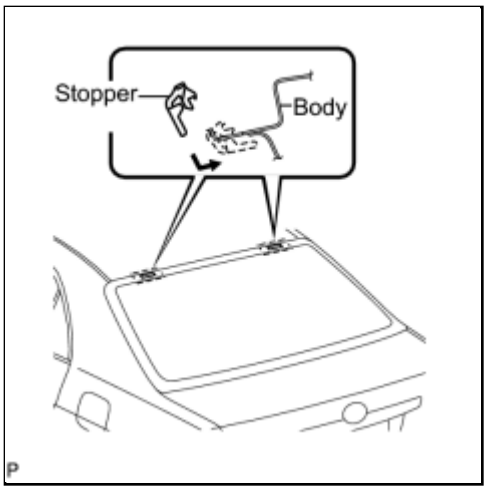

(a) Install 2 new No. 1 back window glass stoppers to the vehicle body as shown in the illustration.

HINT:

Only 2-piece type No. 1 back window glass stoppers are supplied. Use the 2-piece type stoppers even if a 1-piece type was used.

3. INSTALL BACK WINDOW GLASS ADHESIVE DAM

(a) Using a brush or sponge, coat the application area of the back window glass adhesive dam with Primer G.

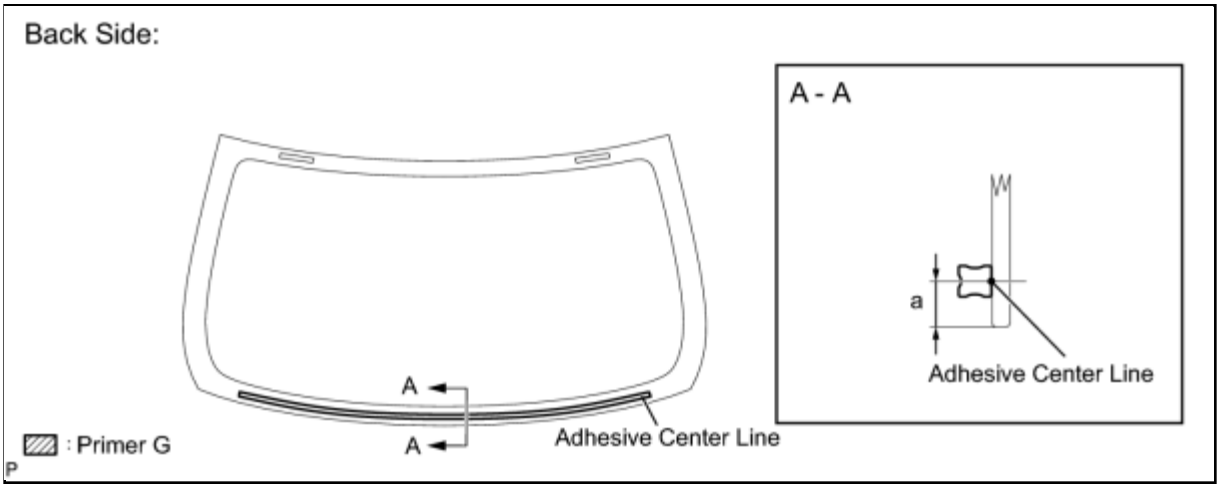

Standard Dimension:

AREA	DIMENSION
a	6.1 mm (0.240 in.)

NOTICE:

- Do not apply too much primer.
- Allow the primer coating to dry for 3 minutes or more.
- Throw away any leftover Primer G.

HINT:

If an area other than that specified is coated by accident, apply a non-residue solvent to a clean cloth and wipe off the excess primer.

4. INSTALL NO. 1 BACK WINDOW MOULDING

(a) Using a brush or sponge, coat the application area of the No. 1 back window moulding with Primer G.

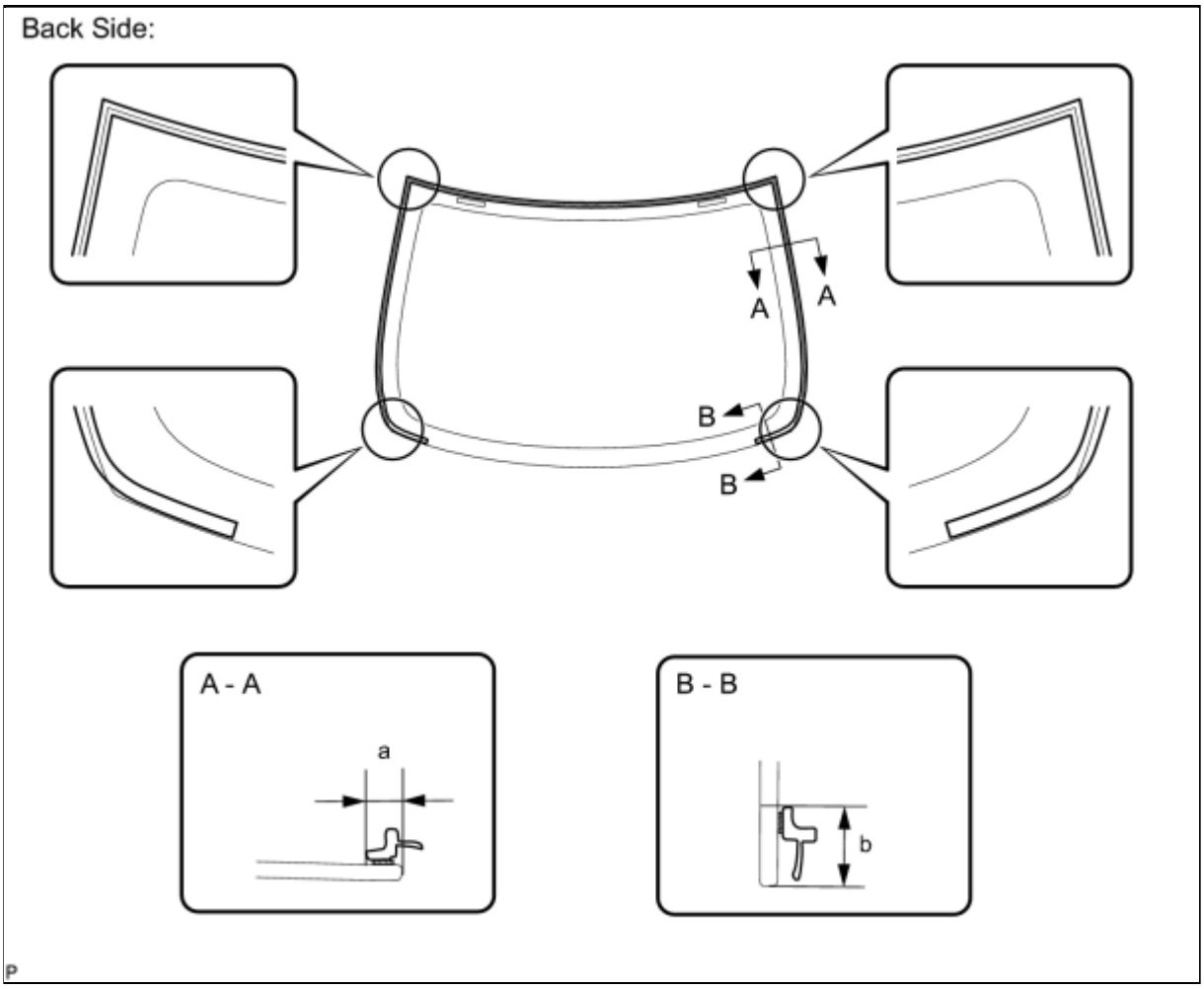

Standard Dimension:

AREA	DIMENSION
a	7.4 mm (0.291 in.)
b	15.5 mm (0.610 in.)

NOTICE:

- Do not apply too much primer.
- Allow the primer coating to dry for 3 minutes or more.
- Throw away any leftover Primer G.

HINT:

If an area other than that specified is coated by accident, apply a non-residue solvent to a clean cloth and wipe off the excess primer.

(b) Install a new No. 1 back window moulding onto the back window glass.

5. INSTALL BACK WINDOW GLASS

(a) Position the back window glass assembly.

(1) Using suction cups, place the back window glass assembly in the correct position.

(2) Check that the entire contact surface of the back window glass rim is perfectly even.

(3) Place the matchmarks on the back window glass and vehicle body on the locations indicated in the illustration.

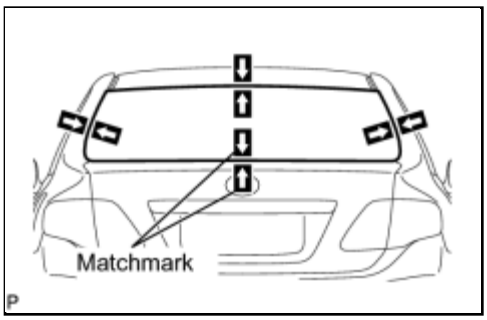

HINT:

- Placing matchmarks is necessary only when installing a new glass. If it is the reused glass, matchmarks should already be present.
- When reusing the glass, check and correct the matchmark positions.

NOTICE:

Check that the stoppers are attached to the vehicle body correctly.

(4) Using suction cups, remove the back window glass assembly.

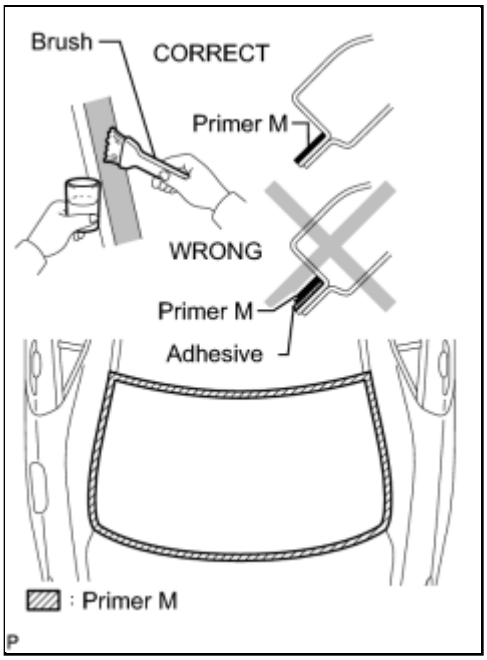

(b) Using a brush, coat the installation surface on the vehicle body with Primer M.

NOTICE:

- Do not coat the adhesive with Primer M.
- Do not apply too much primer.
- Allow the primer coating to dry for 3 minutes or more.
- Throw away any leftover Primer G.

HINT:

If an area other than that specified is coated by accident, apply a non-residue solvent to a clean cloth and wipe off the excess primer.

(c) Using a brush or sponge, coat the application area of adhesive with Primer G.

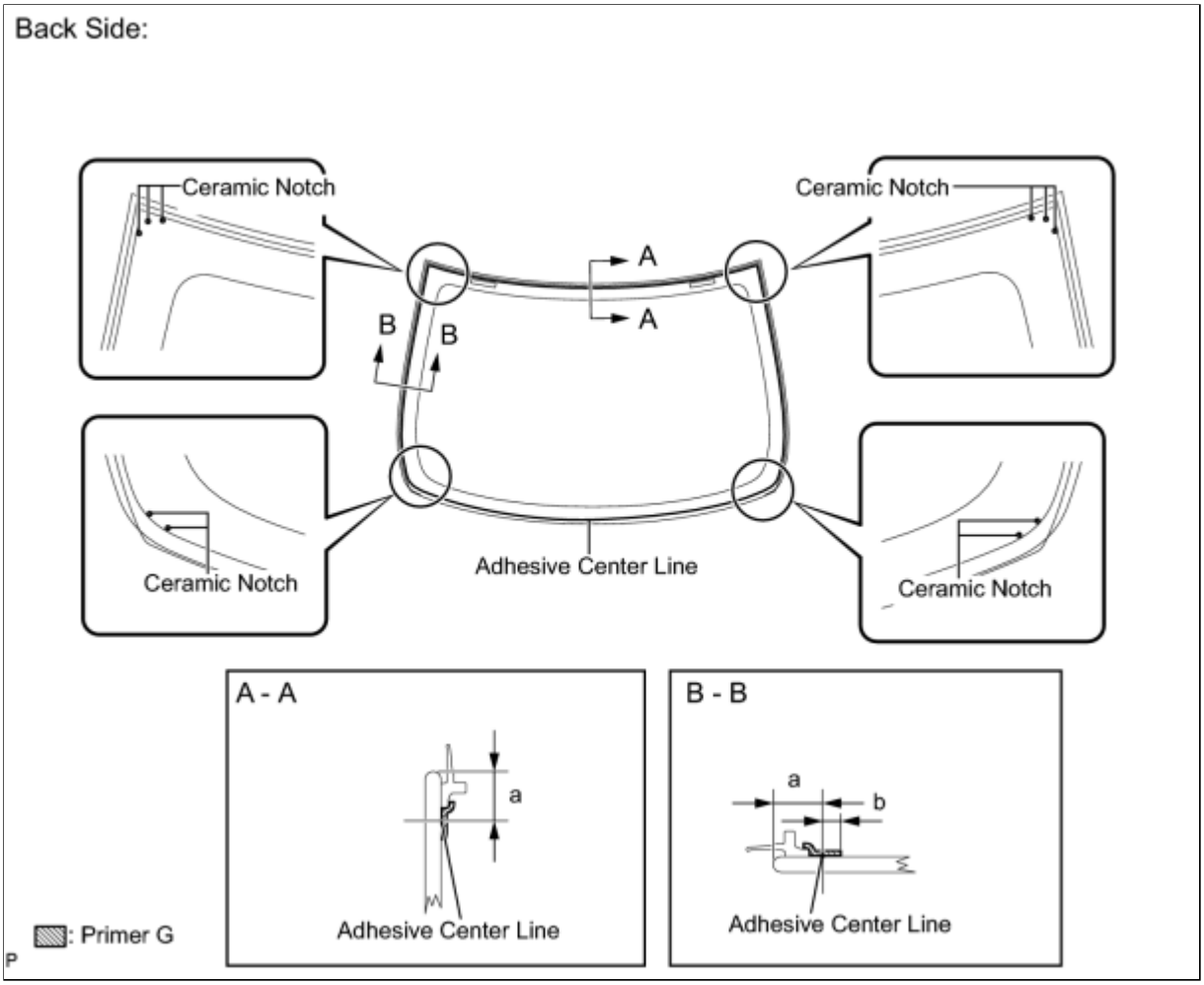

Standard Dimension:

AREA	DIMENSION
a	9.5 mm (0.374 in.)
b	10.0 mm (0.394 in.)

NOTICE:

- Do not apply too much primer.
- Allow the primer coating to dry for 3 minutes or more.
- Throw away any leftover Primer G.

HINT:

If an area other than that specified is coated by accident, apply a non-residue solvent to a clean cloth and wipe off the excess primer.

(d) Apply adhesive to the glass.

Adhesive:
Toyota Genuine Windshield Glass Adhesive or equivalent

(1) Cut off the tip of the cartridge nozzle as shown in the illustration.

HINT:

After cutting off the tip, use all adhesive within the time described in the table below.

Usage Time Frame:

TEMPERATURE	TACK-FREE TIME
35°C (95°F)	15 minutes
20°C (68°F)	1 hour and 40 minutes
5°C (41°F)	8 hours

(2) Load the sealer gun with a cartridge.

(3) Apply adhesive to the back window glass as shown in the illustration.

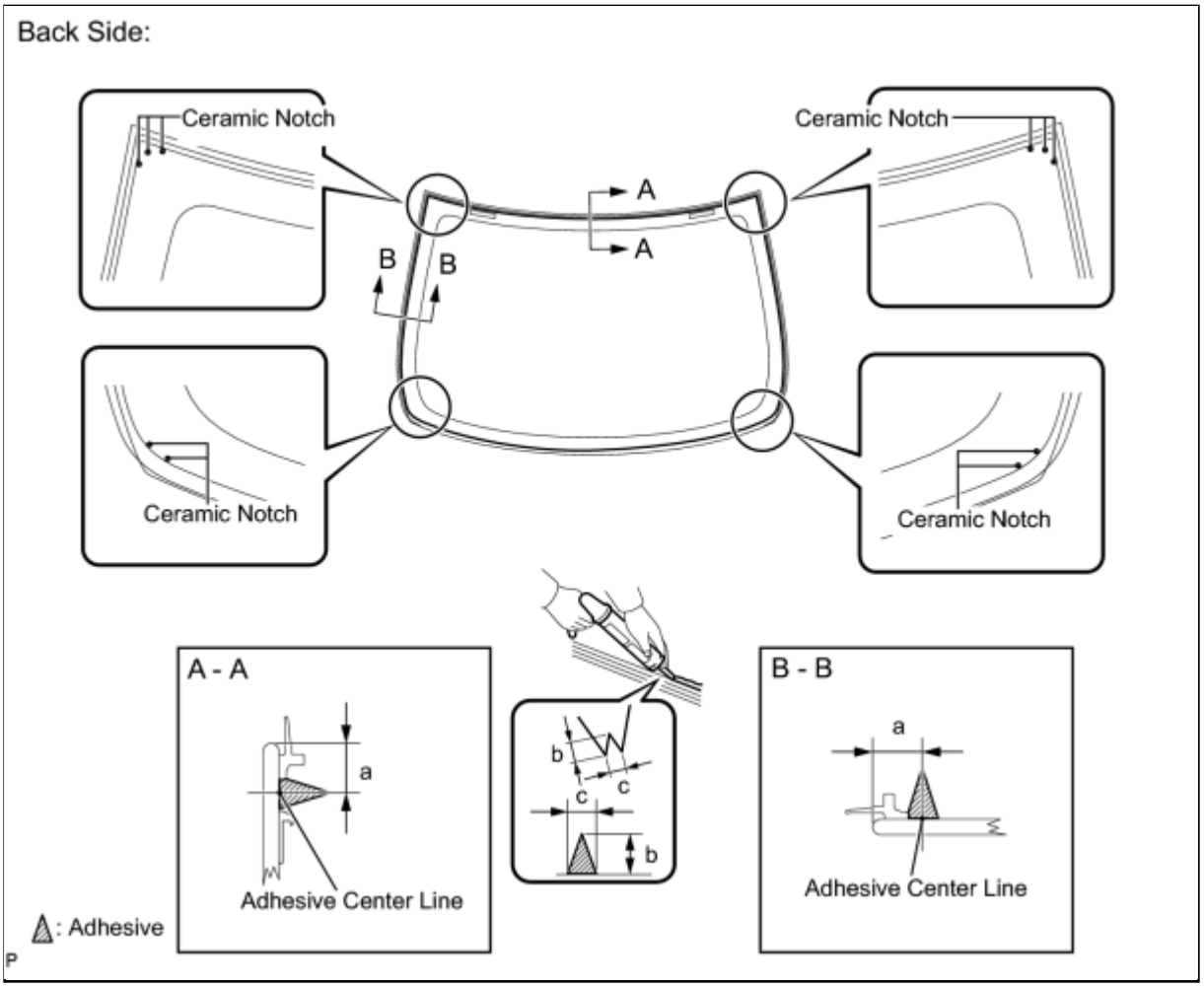

Standard Dimension:

AREA	DIMENSION
a	9.5 mm (0.374 in.)
b	12.0 mm (0.472 in.)
c	8.0 mm (0.315 in.)

HINT:

Apply adhesive onto the ceramic notches.

(e) Install the back window glass assembly.

(1) Using suction cups, position the back window glass so that the matchmarks are aligned, and press it in gently along the rim.

(2) Lightly press the outer surface of the back window glass to ensure that it is securely attached to the vehicle body.

NOTICE:

- Check that the back window glass stoppers are attached to the vehicle body correctly.
- Check the clearance between the vehicle body and back window glass.

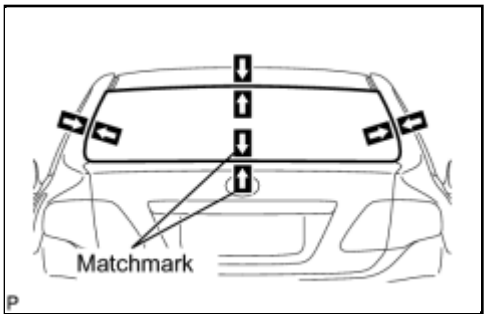

HINT:

Press the glass with a force of 98 N (10 kgf, 22 lbf) or more.

(3) Hold the back window glass using protective tape until applied adhesive becomes hard.

NOTICE:

Do not drive the vehicle for the amount of time described in the table below.

Minimum Time:

TEMPERATURE	MINIMUM TIME PRIOR TO DRIVING VEHICLE
35°C (95°F)	1 hour and 30 minutes
20°C (68°F)	5 hours
5°C (41°F)	24 hours

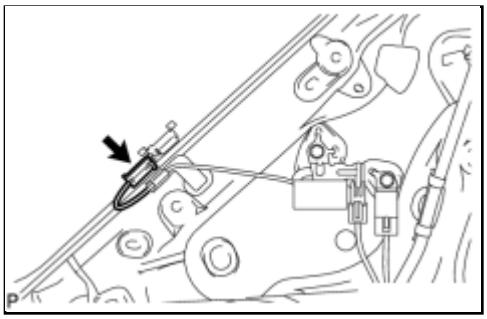

(f) Connect the connector to the rear pillar LH.

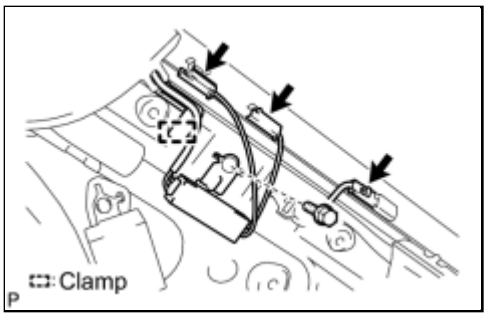

(g) Install the amplifier antenna assembly to the rear pillar RH with the bolt.

Torque: 8.4 N·m (86 kgf·cm, 74in·lbf)

(h) Engage the clamp.

(i) Connect the connectors.

6. INSPECT FOR LEAK AND REPAIR

(a) After the adhesive has hardened, apply water from the outside of the vehicle. Check that no water leaks into the cabin.

(b) If water leaks into the cabin, allow the water to dry and add adhesive.

(c) Remove the protective tape.

7. INSTALL PACKAGE TRAY TRIM PANEL ASSEMBLY (w/o Rear Spoiler) INFO

8. INSTALL PACKAGE TRAY TRIM PANEL ASSEMBLY (w/ Rear Spoiler) INFO

9. INSTALL PACKAGE TRAY TRIM BELT HOLE COVER INFO

10. INSTALL ROOF HEADLINING ASSEMBLY

Return the rear section of the roof headlining assembly to the original position.

11. INSTALL SUN ROOF OPENING TRIM MOULDING (w/ Sliding Roof) INFO

12. INSTALL NO. 1 ROOM LIGHT ASSEMBLY INFO

13. INSTALL REAR ASSIST GRIP SUB-ASSEMBLY INFO

14. INSTALL ROOF SIDE INNER GARNISH ASSEMBLY LH INFO

15. INSTALL ROOF SIDE INNER GARNISH BOARD LH INFO

16. INSTALL REAR SEAT SIDE GARNISH LH INFO

17. INSTALL ROOF SIDE INNER GARNISH ASSEMBLY RH INFO

18. INSTALL ROOF SIDE INNER GARNISH BOARD RH INFO

19. INSTALL REAR SEAT SIDE GARNISH RH INFO

20. INSTALL REAR SEATBACK ASSEMBLY RH INFO

21. INSTALL REAR SEATBACK ASSEMBLY LH INFO

22. INSTALL REAR SEAT CUSHION ASSEMBLY INFO

23. INSTALL REAR SEAT CENTER HEADREST ASSEMBLY

24. INSTALL REAR SEAT HEADREST ASSEMBLY RH

25. INSTALL REAR SEAT HEADREST ASSEMBLY LH

26. INSTALL SPARE WHEEL COVER

27. INSTALL REAR DOOR OPENING TRIM WEATHERSTRIP LH INFO

28. INSTALL REAR DOOR SCUFF PLATE LH INFO

29. INSTALL REAR DOOR OPENING TRIM WEATHERSTRIP RH INFO

30. INSTALL REAR DOOR SCUFF PLATE RH INFO

Last Modified: 3-10-2010	6.4 K	**From:** 200901
Model Year: 2010	**Model:** Corolla	**Doc ID:** RM000002GAI00JX
Title: WINDOW / GLASS: BACK WINDOW GLASS: COMPONENTS (2010 Corolla)		

COMPONENTS

ILLUSTRATION

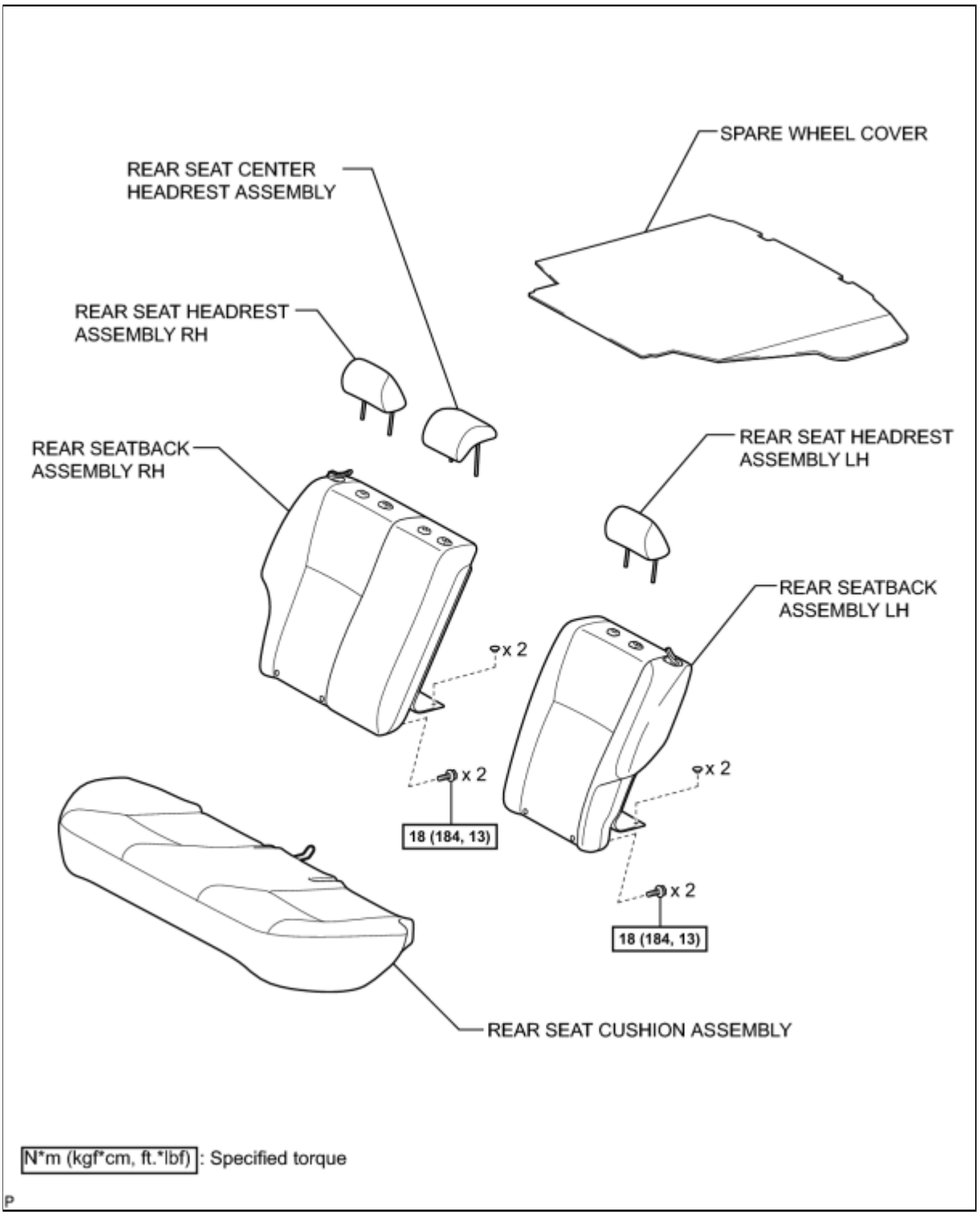

ILLUSTRATION

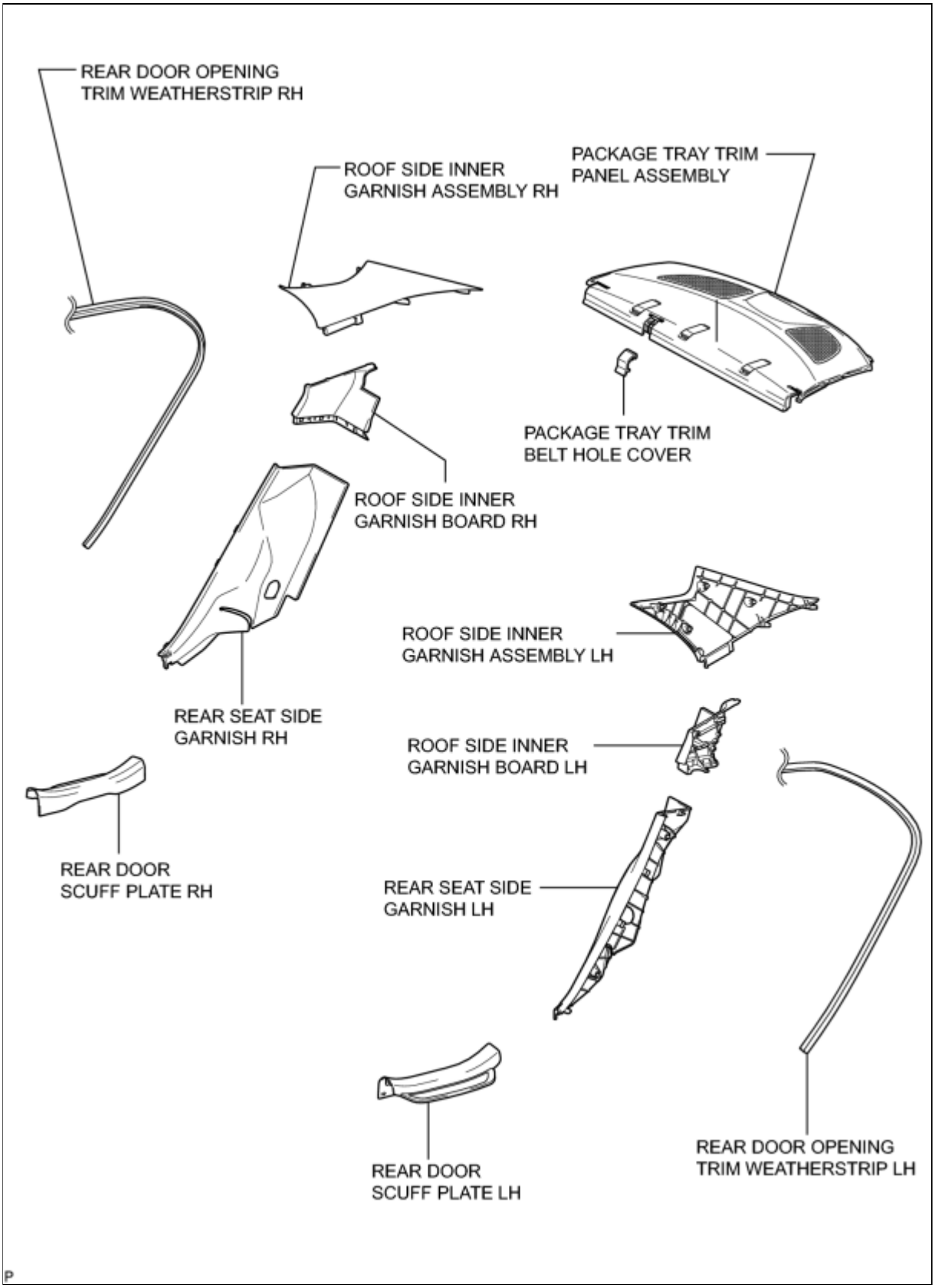

ILLUSTRATION

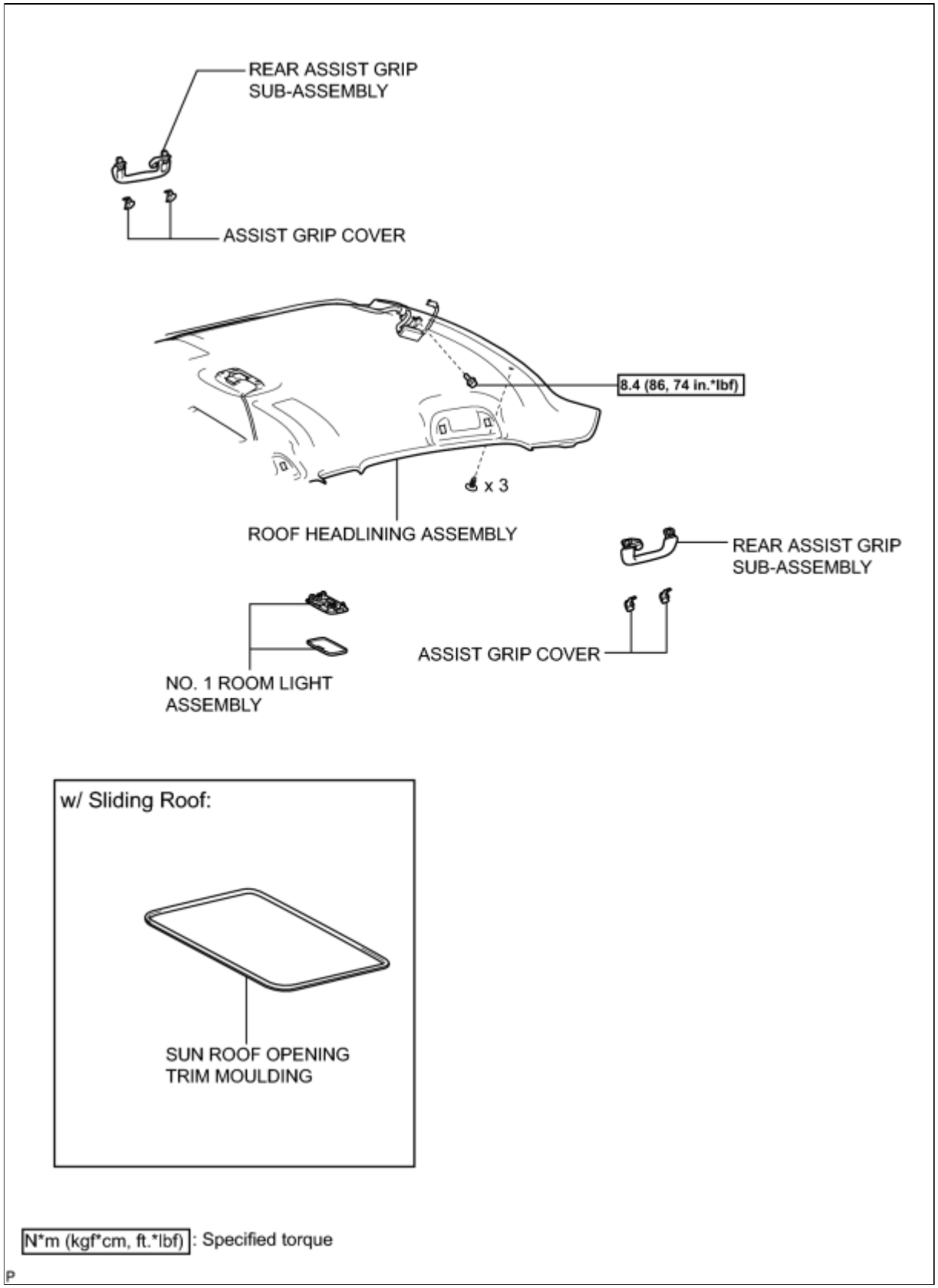

ILLUSTRATION

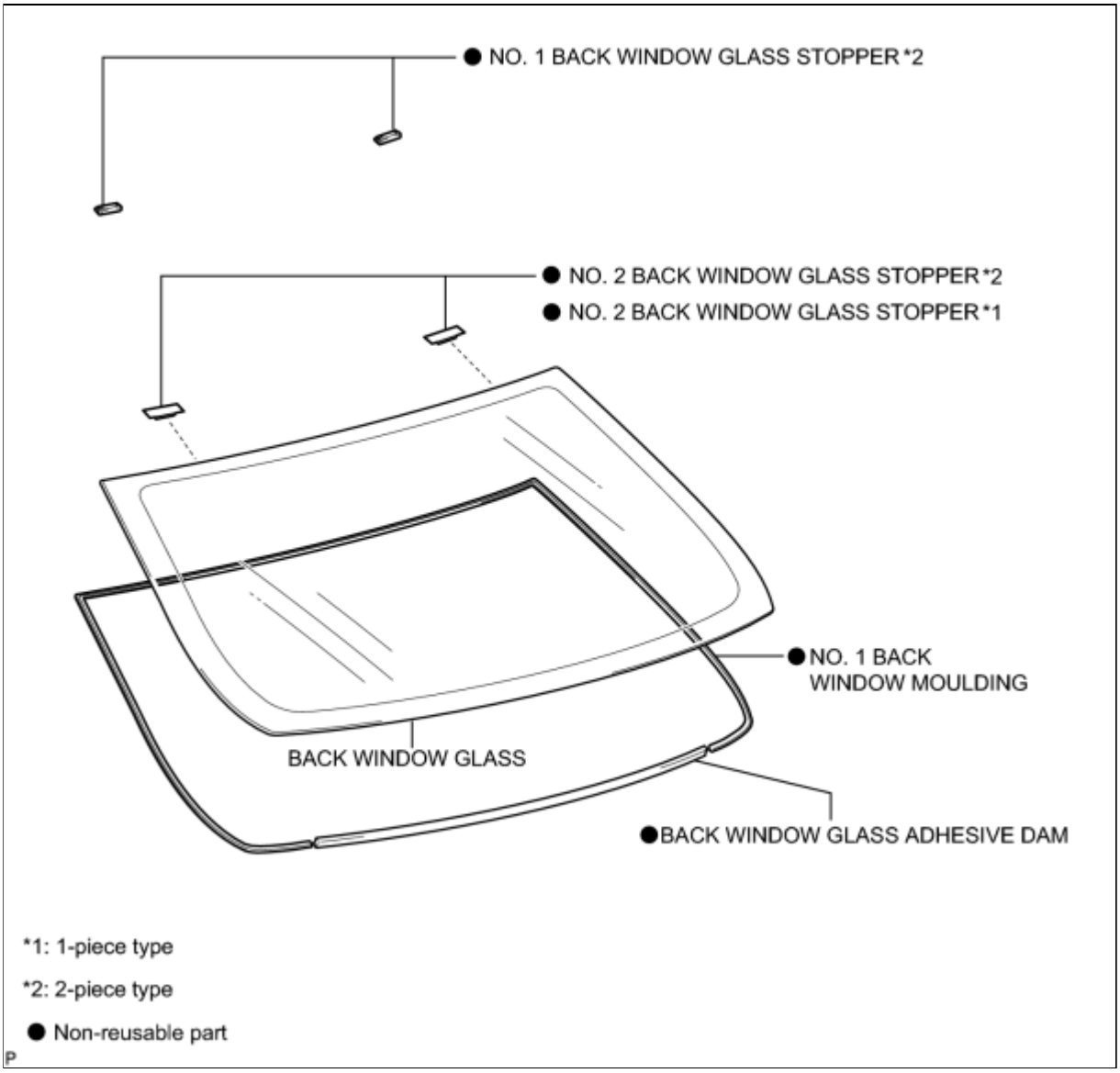

*1: 1-piece type

*2: 2-piece type

● Non-reusable part

P

Last Modified: 3-10-2010	6.4 A	**From:** 200901
Model Year: 2010	**Model:** Corolla	**Doc ID:** RM000000MKV021X
Title: WINDOW / GLASS: BACK WINDOW GLASS: REMOVAL (2010 Corolla)		

REMOVAL

1. **REMOVE REAR DOOR SCUFF PLATE LH** INFO
2. **REMOVE REAR DOOR OPENING TRIM WEATHERSTRIP LH** INFO
3. **REMOVE REAR DOOR SCUFF PLATE RH** INFO
4. **REMOVE REAR DOOR OPENING TRIM WEATHERSTRIP RH** INFO
5. **REMOVE SPARE WHEEL COVER**
6. **REMOVE REAR SEAT HEADREST ASSEMBLY LH**
7. **REMOVE REAR SEAT HEADREST ASSEMBLY RH**
8. **REMOVE REAR SEAT CENTER HEADREST ASSEMBLY**
9. **REMOVE REAR SEAT CUSHION ASSEMBLY** INFO
10. **REMOVE REAR SEATBACK ASSEMBLY LH** INFO
11. **REMOVE REAR SEATBACK ASSEMBLY RH** INFO
12. **REMOVE REAR SEAT SIDE GARNISH LH** INFO
13. **REMOVE ROOF SIDE INNER GARNISH BOARD LH** INFO
14. **REMOVE ROOF SIDE INNER GARNISH ASSEMBLY LH** INFO
15. **REMOVE REAR SEAT SIDE GARNISH RH** INFO
16. **REMOVE ROOF SIDE INNER GARNISH BOARD RH** INFO
17. **REMOVE ROOF SIDE INNER GARNISH ASSEMBLY RH** INFO
18. **REMOVE REAR ASSIST GRIP SUB-ASSEMBLY** INFO
19. **REMOVE NO. 1 ROOM LIGHT ASSEMBLY** INFO
20. **REMOVE PACKAGE TRAY TRIM BELT HOLE COVER** INFO
21. **REMOVE PACKAGE TRAY TRIM PANEL ASSEMBLY (w/o Rear Spoiler)** INFO
22. **REMOVE PACKAGE TRAY TRIM PANEL ASSEMBLY (w/ Rear Spoiler)** INFO
23. **REMOVE SUN ROOF OPENING TRIM MOULDING (w/ Sliding Roof)** INFO
24. **REMOVE ROOF HEADLINING ASSEMBLY (w/o Sliding Roof)**

It is not necessary to completely remove the roof headlining assembly. Slightly lower the rear section of the roof headlining assembly so that the back window glass can be removed.

25. REMOVE NO. 1 BACK WINDOW MOULDING

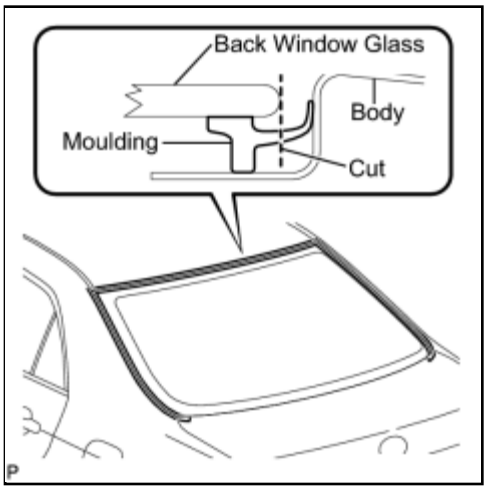

(a) Using a knife, cut off the moulding as shown in the illustration.

CAUTION:

- Do not damage the vehicle body with the knife.
- If the vehicle body is damaged, repair the damaged portion by applying an anti-rust coating after removing the back window glass.

(b) Remove the remaining moulding from the back window glass.

HINT:

When removing the moulding, make a partial cut, then pull and remove it by hand.

26. REMOVE BACK WINDOW GLASS

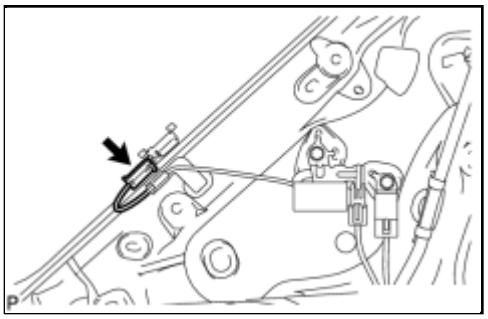

(a) Disconnect the connector from the rear pillar LH.

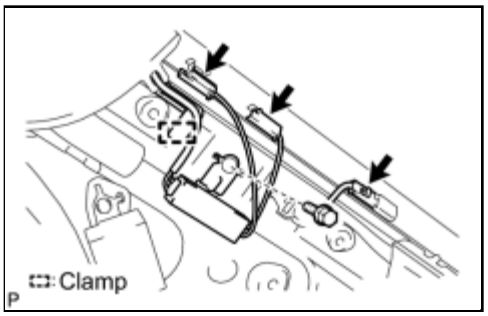

(b) Disconnect the connectors.

(c) Disengage the clamp.

(d) Remove the bolt and disconnect the amplifier antenna assembly from the rear pillar RH.

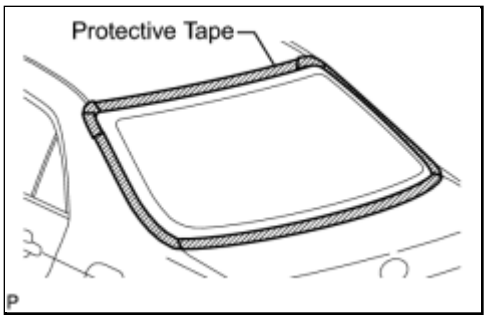

(e) Apply protective tape to the installation position of the back window glass assembly on the vehicle body.

HINT:

Apply protective tape to the installation surface to prevent it from being scratched.

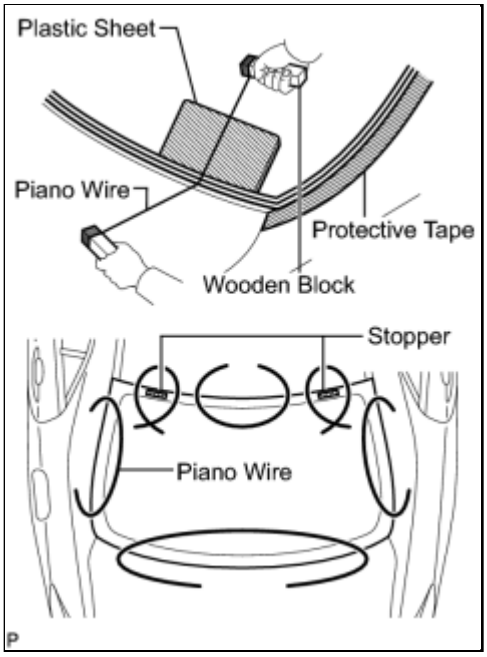

(f) Pass a piano wire between the vehicle body and back window glass assembly from the interior.

(g) Tie both wire ends to wooden blocks or similar objects.

(h) Cut off the adhesive by pulling the piano wire around the back window glass assembly.

NOTICE:

- When separating the back window glass assembly from the vehicle, be careful not to damage the vehicle's paint or the interior exterior ornaments.
- To prevent the package tray from being scratched when removing the back window glass assembly, place a plastic sheet between the piano wire and package tray.
- There are stoppers on the back window glass assembly as shown in the illustration. Be careful not to damage the back window glass when cutting off the adhesive.

(i) Place matchmarks on the back window glass assembly and vehicle body on the locations indicated in the illustration.

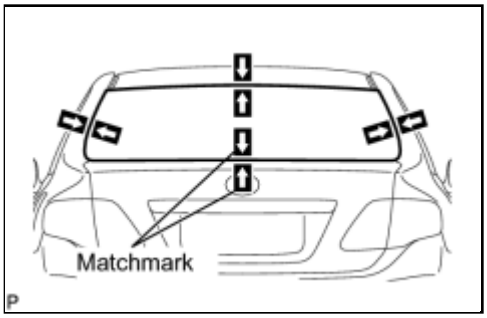

HINT:

Matchmarks do not need if the back window glass assembly is not going to be reused.

(j) Disconnect the back window glass stoppers.

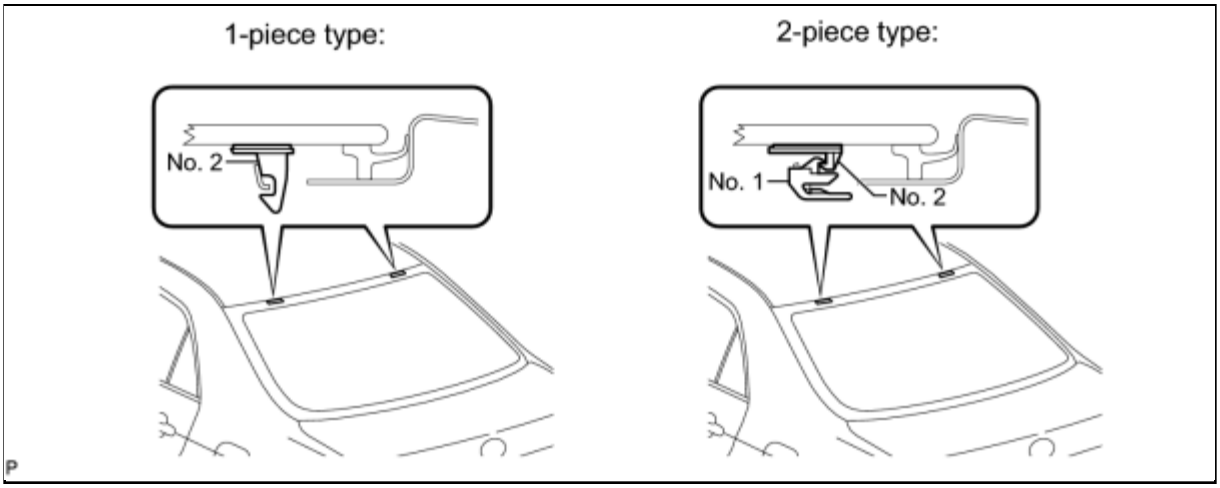

NOTICE:

To prevent the back window glass assembly from dropping when performing this operation, be sure to hold the back window glass assembly using suction cups.

HINT:

Depending on vehicles, a 1-piece or 2-piece type stopper is used.

(k) Using a suction cup, remove the back window glass assembly.

NOTICE:

- Be careful not to drop the back window glass assembly.
- Leave as much adhesive on the vehicle body as possible when removing the back window glass assembly.

27. REMOVE BACK WINDOW GLASS ADHESIVE DAM

(a) Using a scraper, remove the back window glass adhesive dam.

NOTICE:

- Be careful not to damage the back window glass.
- Be sure to replace the back window glass adhesive dam with a new one.

28. REMOVE NO. 2 BACK WINDOW GLASS STOPPER

(a) Using a scraper, remove the 2 No. 2 back window glass stoppers.

NOTICE:

- Be careful not to damage the back window glass.
- Be sure to replace the 2 No. 2 back window glass stoppers with new ones.

29. REMOVE NO. 1 BACK WINDOW GLASS STOPPER (for 2-piece Type)

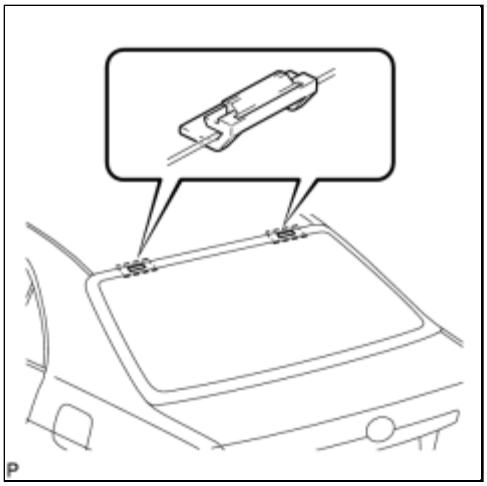

(a) Remove the 2 No. 1 back window glass stoppers.

NOTICE:

Be sure to replace the 2 No. 1 back window glass stoppers with new ones.

30. CLEAN BACK WINDOW GLASS

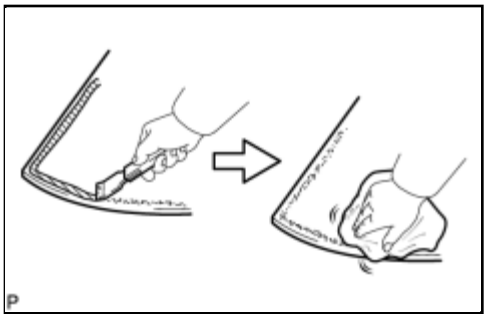

(a) Using a scraper, remove the adhesive tape and adhesive sticking to the back window glass.

NOTICE:

Be careful not to damage the back window glass.

(b) Clean the outer circumference of the back window glass with a non-residue solvent.

NOTICE:

- Do not touch it surface after cleaning it.
- Even if using a new back window glass, clean the back window glass with a non-residue solvent.

31. CLEAN VEHICLE BODY

(a) Clean and shape the contact surface of the vehicle body.

(1) On the contact surface of the vehicle body, use a knife to cut away excess adhesive as shown in the illustration.

NOTICE:

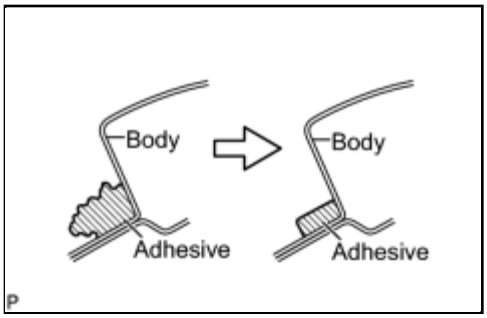

Be careful not to damage the vehicle body.

HINT:

Leave as much adhesive on the vehicle body as possible.

(2) Clean the contact surface of the vehicle body with cleaner.

HINT:

Even if all the adhesive has been removed, clean the vehicle body.

Last Modified: 3-10-2010	6.4 K	**From:** 200901
Model Year: 2010	**Model:** Corolla	**Doc ID:** RM000002YA500DX
Title: WINDOW / GLASS: FRONT PASSENGER SIDE POWER WINDOW SWITCH: COMPONENTS (2010 Corolla)		

COMPONENTS

ILLUSTRATION

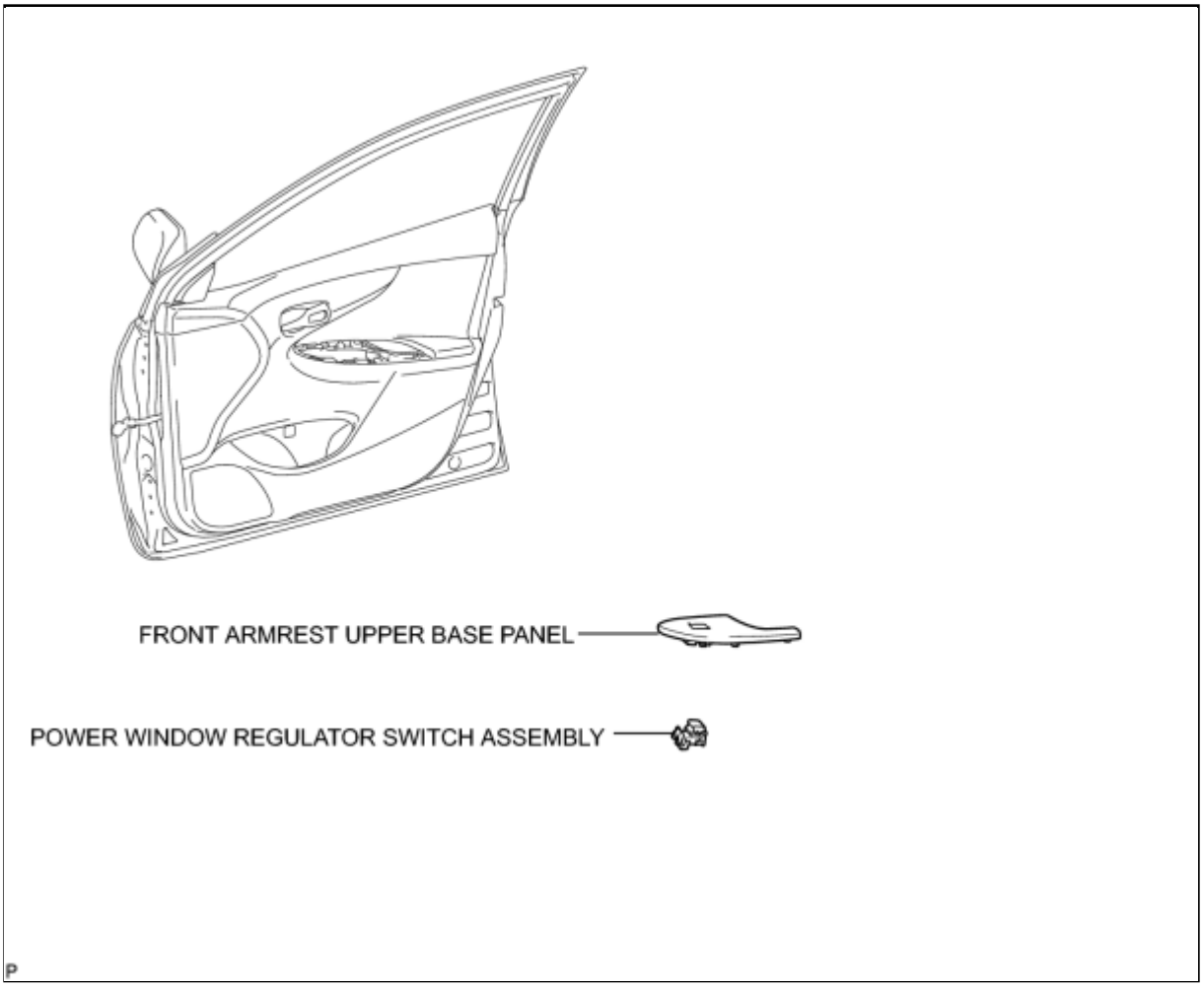

Last Modified: 3-10-2010	6.4 A	**From:** 200901
Model Year: 2010	**Model:** Corolla	**Doc ID:** RM000002YA600DX
Title: WINDOW / GLASS: FRONT PASSENGER SIDE POWER WINDOW SWITCH: REMOVAL (2010 Corolla)		

REMOVAL

1. REMOVE FRONT ARMREST UPPER BASE PANEL INFO

2. REMOVE POWER WINDOW REGULATOR SWITCH ASSEMBLY INFO

Last Modified: 3-10-2010	6.4 G	**From:** 200901
Model Year: 2010	**Model:** Corolla	**Doc ID:** RM0000013O5028X
Title: WINDOW / GLASS: FRONT PASSENGER SIDE POWER WINDOW SWITCH: INSPECTION (2010 Corolla)		

INSPECTION

1. INSPECT POWER WINDOW SWITCH ASSEMBLY (for Front Passenger Side)

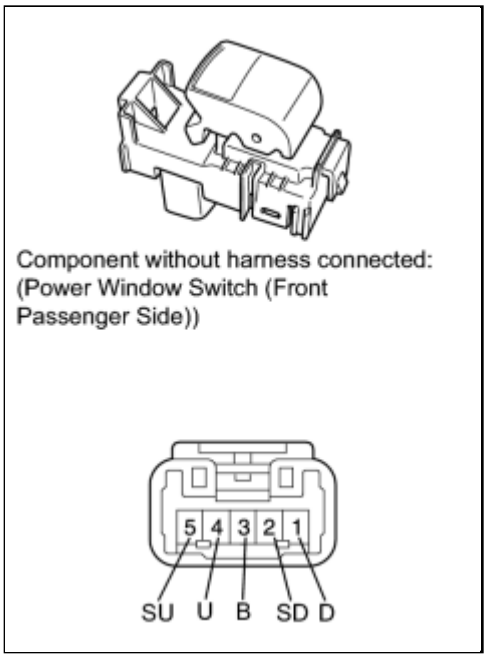

(a) Measure the resistance according to the value(s) in the table below.

Standard Resistance:

TESTER CONNECTION	SWITCH CONDITION	SPECIFIED CONDITION
1 (D) - 2 (SD) 3 (B) - 4 (U)	UP	Below 1 Ω
1 (D) - 2 (SD) 4 (U) - 5 (SU)	OFF	Below 1 Ω
1 (D) - 3 (B) 4 (U) - 5 (SU)	DOWN	Below 1 Ω

If the result is not specified, replace the power window switch assembly.

Last Modified: 3-10-2010	6.4 A	**From:** 200901
Model Year: 2010	**Model:** Corolla	**Doc ID:** RM000002YA400DX
Title: WINDOW / GLASS: FRONT PASSENGER SIDE POWER WINDOW SWITCH: INSTALLATION (2010 Corolla)		

INSTALLATION

1. INSTALL POWER WINDOW REGULATOR SWITCH ASSEMBLY INFO

2. INSTALL FRONT ARMREST UPPER BASE PANEL INFO

Last Modified: 3-10-2010	6.4 L	**From:** 200901
Model Year: 2010	**Model:** Corolla	**Doc ID:** RM000002YLT00BX
Title: WINDOW / GLASS: POWER WINDOW CONTROL SYSTEM: PRECAUTION (2010 Corolla)		

PRECAUTION

1. EXPRESSIONS OF IGNITION SWITCH

(a) The type of ignition switch used on this model differs according to the specifications of the vehicle. The expressions listed in the table below are used in this section.

SWITCH TYPE		IGNITION SWITCH (POSITION)	ENGINE SWITCH (CONDITION)
Expression	Ignition switch off	LOCK	Off
	Ignition switch ON	ON	On (IG)
	Ignition switch ACC	ACC	On (ACC)
	Engine Start	START	Start

Last Modified: 3-10-2010	6.4 R	**From:** 200901
Model Year: 2010	**Model:** Corolla	**Doc ID:** RM0000010ZB01DX
Title: WINDOW / GLASS: POWER WINDOW CONTROL SYSTEM: PARTS LOCATION (2010 Corolla)		

PARTS LOCATION

ILLUSTRATION

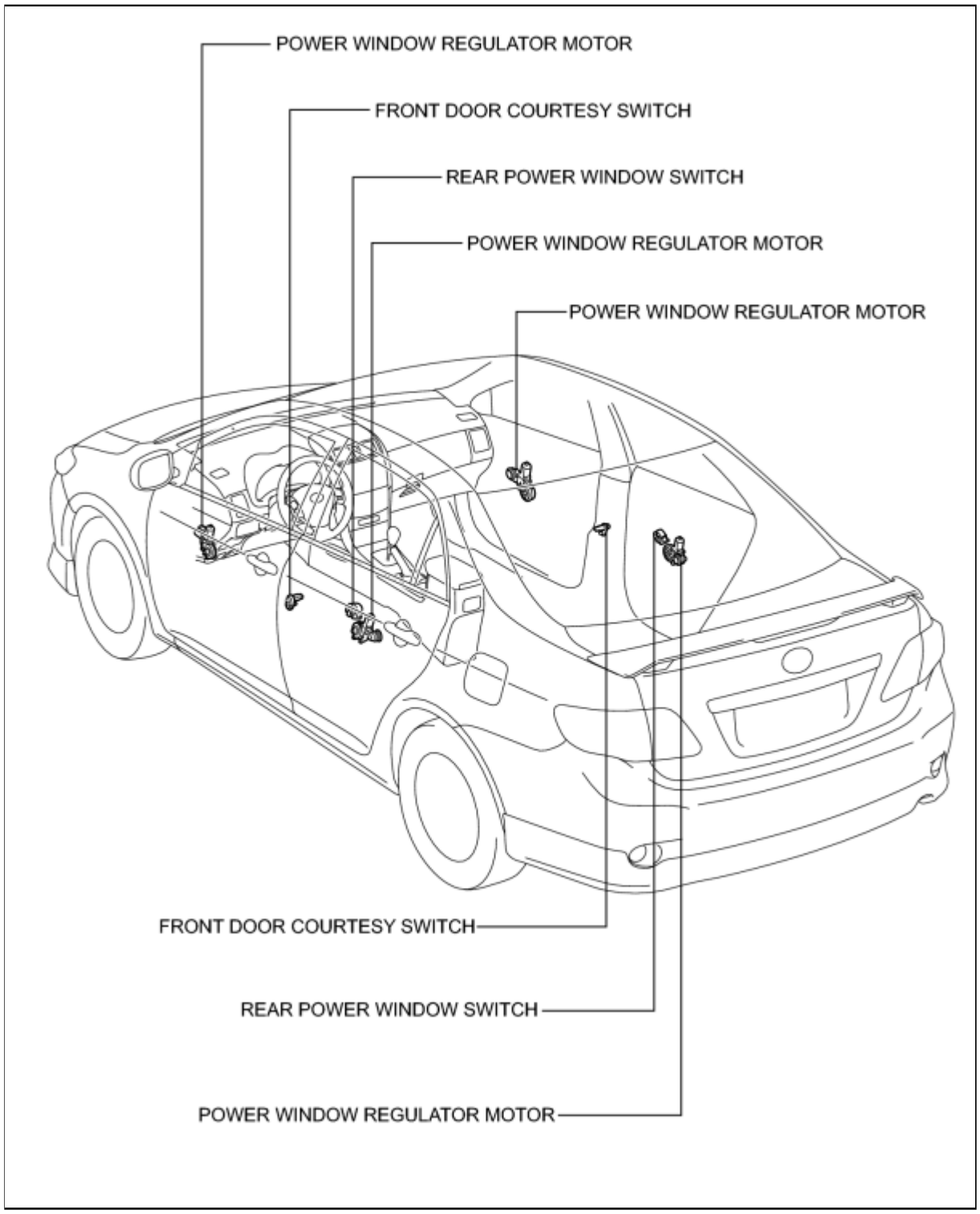

ILLUSTRATION

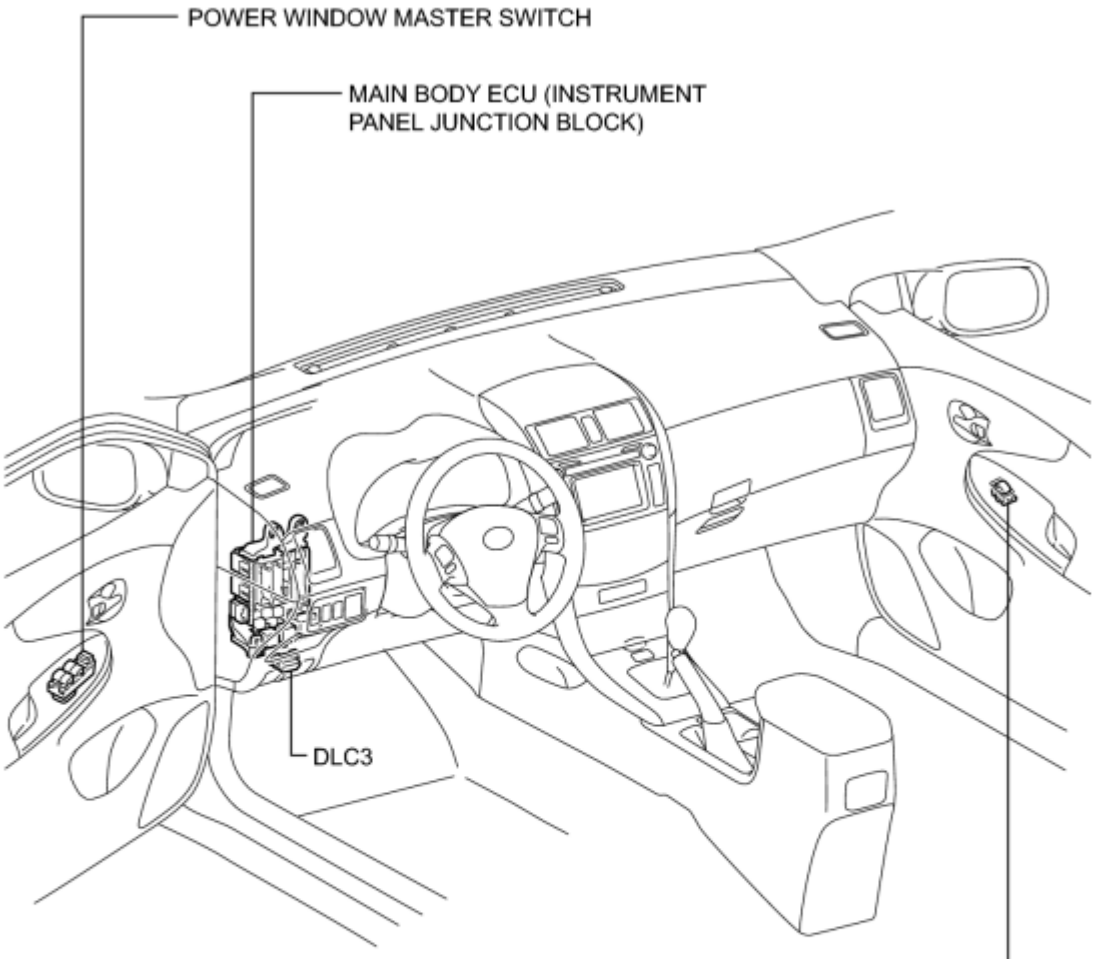

Last Modified: 3-10-2010	6.4 U	**From:** 200901
Model Year: 2010	**Model:** Corolla	**Doc ID:** RM0000010ZF01LX
Title: WINDOW / GLASS: POWER WINDOW CONTROL SYSTEM: SYSTEM DIAGRAM (2010 Corolla)		

SYSTEM DIAGRAM

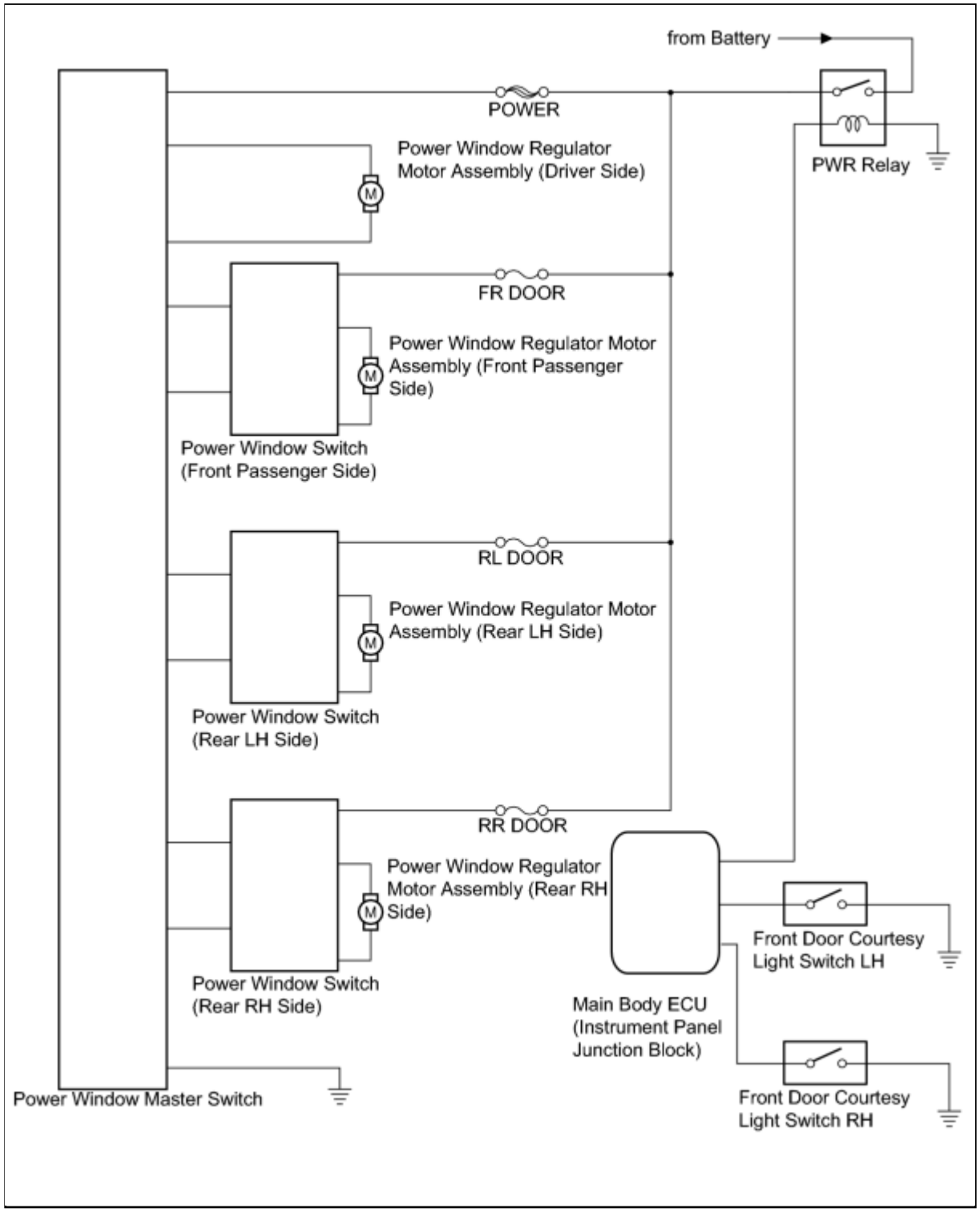

Last Modified: 3-10-2010	6.4 D	**From:** 200901
Model Year: 2010	**Model:** Corolla	**Doc ID:** RM0000011UW03TX
Title: WINDOW / GLASS: POWER WINDOW CONTROL SYSTEM: HOW TO PROCEED WITH TROUBLESHOOTING (2010 Corolla)		

HOW TO PROCEED WITH TROUBLESHOOTING

HINT:

- Use the following procedure to troubleshoot the power window control system.
- *: Using the Techstream.

1.	**VEHICLE BROUGHT TO WORKSHOP**

NEXT

2.	**CUSTOMER PROBLEM ANALYSIS**

- In troubleshooting, confirm that the problem symptoms have been accurately identified. Preconceptions should be discarded in order to make an accurate judgment. To clearly understand what the problem symptoms are, it is extremely important to ask the customer about the problem and the conditions at the time the malfunction occurred.
- Gather as much information as possible for reference. Past problems that seem unrelated may also help in some cases.
- The following 5 items are important points in the problem analysis:

What	Vehicle model, system name
When	Date, time, occurrence frequency
Where	Road conditions
Under what conditions?	Driving conditions, weather conditions
How did it happen?	Problem symptoms

NEXT

3.	INSPECT BATTERY VOLTAGE

(a) Measure the battery voltage.

Standard Voltage:
11 to 14 V

If the voltage is below 11 V, recharge or replace the battery before proceeding to the next step.

NEXT

4.	PROBLEM SYMPTOMS TABLE

(a) Refer to Problem Symptoms Table INFO .

Result:

RESULT	PROCEED TO
Fault is not listed in problem symptoms table	A
Fault is listed in problem symptoms table	B

B **Go to step 6**

A

5.	OVERALL ANALYSIS AND TROUBLESHOOTING*

(a) Data List/Active Test INFO

(b) Operation Check INFO

(c) Terminals of ECU INFO

NEXT

6.	REPAIR OR REPLACE

NEXT

7.	CONFIRMATION TEST

NEXT END

Last Modified: 3-10-2010	6.4 D	**From:** 200901
Model Year: 2010	**Model:** Corolla	**Doc ID:** RM0000010ZE01DX
Title: WINDOW / GLASS: POWER WINDOW CONTROL SYSTEM: SYSTEM DESCRIPTION (2010 Corolla)		

SYSTEM DESCRIPTION

1. POWER WINDOW CONTROL SYSTEM DESCRIPTION

The power window control system controls the power window UP and DOWN function using the regulator motors.

The main controls of this system are: the power window master switch which is built into the driver side door, and the power window switches which are built into the front passenger side door and rear doors. Pressing the switch or any of the switches on the master switch transmits an UP or DOWN signal to the corresponding power window regulator motor.

2. FUNCTION OF MAIN COMPONENTS

COMPONENT	OUTLINE
Power Window Master Switch	• Controls window operations for all windows • When window lock switch is set to lock position, window operation is only possible with master switch
Power Window Switch	• Located on passenger side door and rear doors • Each regulator switch controls window operations for its respective window
Power Window Regulator Motor Assembly	Receives switch signals and changes signals into motor activation to change window position
Main Body ECU (Instrument Panel Junction Block)	Main body ECU (instrument panel junction block) controls the PWR relay (operation)

3. SYSTEM FUNCTION

The power window control system has the following functions.

FUNCTION	OUTLINE
Manual UP and DOWN function	• Driver side power window: Function that raises window while power window switch is pulled up, and lowers window while pushed halfway down (window stops as soon as switch is released) • Other power windows: Function that raises window while power window switch is pulled up, and lowers window while pushed down (window stops as soon as switch is released)
AUTO DOWN	Function that enables window of driver side door to be fully opened by one full

Last Modified: 3-10-2010	6.4 D	**From:** 200901
Model Year: 2010	**Model:** Corolla	**Doc ID:** RM000003EK8003X
Title: WINDOW / GLASS: POWER WINDOW CONTROL SYSTEM: OPERATION CHECK (2010 Corolla)		

OPERATION CHECK

1. CHECK POWER WINDOW MASTER SWITCH (WINDOW LOCK SWITCH)

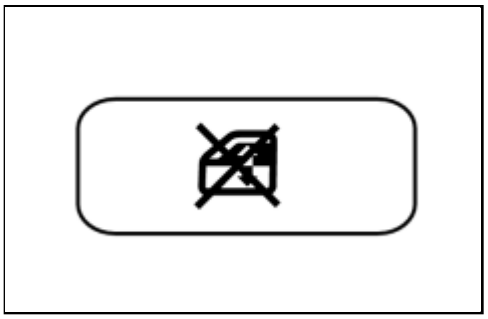

(a) Check that the passenger side power window and rear windows cannot be operated when the window lock switch of the power window master switch is pressed.

(b) Check that the passenger side power window and rear windows can be operated when the window lock switch is pressed again.

2. CHECK MANUAL UP / DOWN FUNCTION

(a) Check that the driver side power window operates as follows:

OK

CONDITION	MASTER SWITCH	SWITCH OPERATION	POWER WINDOW
Ignition switch ON	Driver side	Pulled up	UP (closes)
Ignition switch ON	Driver side	Pushed halfway down	DOWN (opens)

(b) Check that the passenger side power window operates as follows:

OK

CONDITION	REGULATOR SWITCH	SWITCH OPERATION	POWER WINDOW
• Ignition switch ON • Window lock switch OFF	Passenger side	Pulled up	UP (closes)
• Ignition switch ON • Window lock switch OFF	Passenger side	Pushed down	DOWN (opens)

(c) Check that the rear LH power window operates as follows:

OK

CONDITION	REGULATOR SWITCH	SWITCH OPERATION	POWER WINDOW
• Ignition switch ON • Window lock switch OFF	Rear LH	Pulled up	UP (closes)
• Ignition switch ON • Window lock switch OFF	Rear LH	Pushed down	DOWN (opens)

(d) Check that the rear RH power window operates as follows:

OK

CONDITION	REGULATOR SWITCH	SWITCH OPERATION	POWER WINDOW
• Ignition switch ON • Window lock switch OFF	Rear RH	Pulled up	UP (closes)
• Ignition switch ON • Window lock switch OFF	Rear RH	Pushed down	DOWN (opens)

3. CHECK AUTO DOWN FUNCTION

(a) Check that the driver side power window operates as follows:

OK

CONDITION	MASTER SWITCH	SWITCH OPERATION	POWER WINDOW
Ignition switch ON	Driver side	Fully pushed down	AUTO DOWN (fully opens)

4. CHECK REMOTE UP / DOWN FUNCTION

(a) Check that the passenger side power window operates as follows:

OK

CONDITION	MASTER SWITCH	SWITCH OPERATION	POWER WINDOW
• Ignition switch ON • Window lock switch OFF	Passenger side	Pulled up	UP (closes)
• Ignition switch ON • Window lock switch OFF	Passenger side	Pushed down	DOWN (opens)

(b) Check that the rear LH power window operates as follows:

OK

CONDITION	MASTER SWITCH	SWITCH OPERATION	POWER WINDOW
• Ignition switch ON • Window lock switch OFF	Rear LH	Pulled up	UP (closes)
• Ignition switch ON • Window lock switch OFF	Rear LH	Pushed down	DOWN (opens)

(c) Check that the rear RH power window operates as follows:

OK

CONDITION	MASTER SWITCH	SWITCH OPERATION	POWER WINDOW
• Ignition switch ON • Window lock switch OFF	Rear RH	Pulled up	UP (closes)
• Ignition switch ON • Window lock switch OFF	Rear RH	Pushed down	DOWN (opens)

5. CHECK POWER WINDOW OPERATION FUNCTION AFTER IGNITION SWITCH IS TURNED OFF

(a) Check that all the power windows can be operated with the power window master switch after the ignition switch is turned off.

(b) Check that the key-off operation function does not operate after the driver or passenger side door is opened.

(c) Check that all the power windows cannot be operated after more than approximately 45 seconds elapse after the ignition switch is turned off.

6. CHECK PTC OPERATION

HINT:

PTC operation is a function that prevents overloading of the power window regulator by stopping the motor.
PTC operation activates when the power window switch is operated for a predetermined amount of time.

(a) Pull up and hold the power window switch for more than 90 seconds. Then release the switch.

(b) Check that pressing the switch does not move the window.

(c) Wait until 60 seconds have passed since the switch was released in the first step. Check that pressing the switch results in normal window movement.

Last Modified: 3-10-2010	6.4 U	**From:** 200901
Model Year: 2010	**Model:** Corolla	**Doc ID:** RM0000010ZC01OX
Title: WINDOW / GLASS: POWER WINDOW CONTROL SYSTEM: TERMINALS OF ECU (2010 Corolla)		

TERMINALS OF ECU

1. CHECK POWER WINDOW MASTER SWITCH

(a) Measure the voltage and resistance according to the value(s) in the table below.

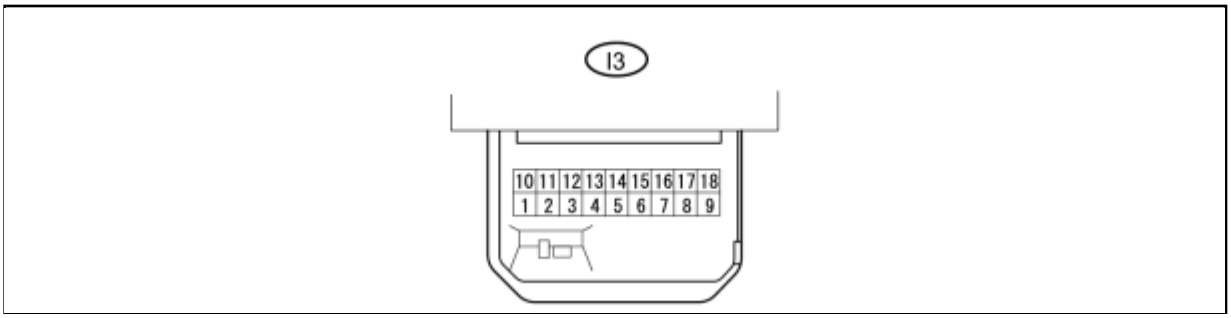

TESTER CONNECTION	WIRING COLOR	TERMINAL DESCRIPTION	SWITCH CONDITION	SPECIFIED CONDITION
I3-1 (E) - Body ground	W-B - Body ground	Ground	Always	Below 1 Ω
I3-3 (U) - I3-1 (E)	P - W-B*1 G - W-B*2	Power window motor UP output (driver side)	Ignition switch ON, driver side power window switch OFF	Below 1 V
I3-3 (U) - I3-1 (E)	P - W-B*1 G - W-B*2	Power window motor UP output (driver side)	Ignition switch ON, driver side power window switch UP (manual operation)	11 to 14 V
I3-4 (D) - I3-1 (E)	W - W-B*1 Y - W-B*2	Power window motor DOWN output (driver side)	Ignition switch ON, driver side power window switch OFF	Below 1 V
I3-4 (D) - I3-1 (E)	W - W-B*1 Y - W-B*2	Power window motor DOWN output (driver side)	Ignition switch ON, driver side power window switch DOWN (manual operation)	11 to 14 V
I3-4 (D) - I3-1 (E)	W - W-B*1 Y - W-B*2	Power window motor DOWN output (driver side)	Ignition switch ON, driver side power window switch OFF	Below 1 V
I3-4 (D) - I3-1 (E)	W - W-B*1 Y - W-B*2	Power window motor DOWN output (driver side)	Ignition switch ON, driver side power window switch fully DOWN (AUTO operation)	11 to 14 V
I3-6 (B) - Body ground	L - Body ground*1	Ignition power supply	Ignition switch off	Below 1 V

TESTER CONNECTION	WIRING COLOR	TERMINAL DESCRIPTION	SWITCH CONDITION	SPECIFIED CONDITION
	W - Body ground*2			
I3-6 (B) - Body ground	L - Body ground*1 W - Body ground*2	Ignition power supply	Ignition switch ON	11 to 14 V
I3-10 (U) - I3-1 (E)	G - W-B*1 B - W-B*2	Power window motor UP output (rear RH)	Ignition switch ON, rear RH side power window switch OFF	Below 1 V
I3-10 (U) - I3-1 (E)	G - W-B*1 B - W-B*2	Power window motor UP output (rear RH)	Ignition switch ON, rear RH side power window switch UP	11 to 14 V
I3-12 (U) - I3-1 (E)	R - W-B	Power window motor UP output (rear LH)	Ignition switch ON, rear LH side power window switch OFF	Below 1 V
I3-12 (U) - I3-1 (E)	R - W-B	Power window motor UP output (rear LH)	Ignition switch ON, rear LH side power window switch UP	11 to 14 V
I3-13 (D) - I3-1 (E)	L - W-B	Power window motor DOWN output (rear LH)	Ignition switch ON, rear LH side power window switch OFF	Below 1 V
I3-13 (D) - I3-1 (E)	L - W-B	Power window motor DOWN output (rear LH)	Ignition switch ON, rear LH side power window switch DOWN	11 to 14 V
I3-15 (D) - I3-1 (E)	BR - W-B	Power window motor DOWN output (passenger side)	Ignition switch ON, passenger side power window switch OFF	Below 1 V
I3-15 (D) - I3-1 (E)	BR - W-B	Power window motor DOWN output (passenger side)	Ignition switch ON, passenger side power window switch DOWN	11 to 14 V
I3-16 (U) - I3-1 (E)	G - W-B	Power window motor UP output (passenger side)	Ignition switch ON, passenger side power window switch OFF	Below 1 V
I3-16 (U) - I3-1 (E)	G - W-B	Power window motor UP output (passenger side)	Ignition switch ON, passenger side power window switch UP	11 to 14 V
I3-18 (D) - I3-1 (E)	BR - W-B*1 Y - W-B*2	Power window motor DOWN output (rear RH)	Ignition switch ON, rear RH side power window switch OFF	Below 1 V

TESTER CONNECTION	WIRING COLOR	TERMINAL DESCRIPTION	SWITCH CONDITION	SPECIFIED CONDITION
I3-18 (D) - I3-1 (E)	BR - W-B*1 Y - W-B*2	Power window motor DOWN output (rear RH)	Ignition switch ON, rear RH side power window switch DOWN	11 to 14 V

- *1: for TMC Made
- *2: Except for TMC made

If the result is not as specified, the master switch or wire harness may have a malfunction.

2. CHECK POWER WINDOW SWITCH (PASSENGER SIDE)

(a) Measure the voltage according to the value(s) in the table below.

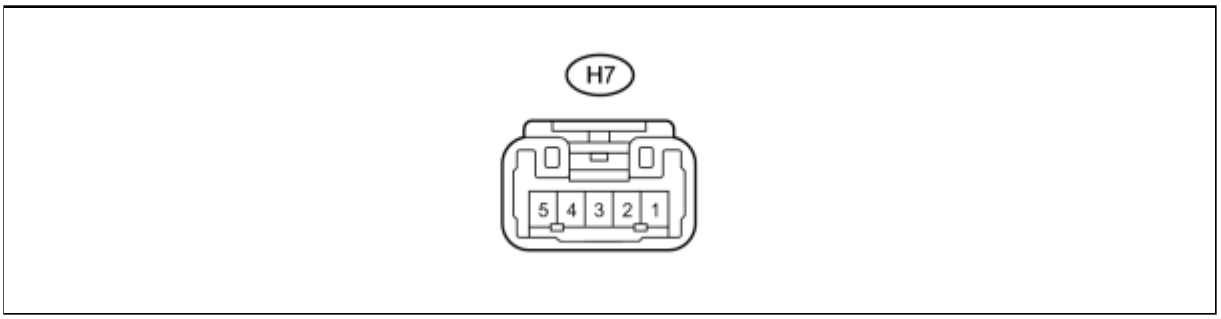

TESTER CONNECTION	WIRING COLOR	TERMINAL DESCRIPTION	SWITCH CONDITION	SPECIFIED CONDITION
H7-1 (D) - Body ground	B - Body ground	Power window motor DOWN output	Ignition switch ON, power window switch OFF	Below 1 V
H7-1 (D) - Body ground	B - Body ground	Power window motor DOWN output	Ignition switch ON, power window switch DOWN	11 to 14 V
H7-2 (SD) - Body ground	BR - Body ground	Power window motor DOWN input (Remote)	Ignition switch ON, power window master switch OFF	Below 1 V
H7-3 (B) - Body ground	L - Body ground*1 Y - Body ground*2	Ignition power supply	Ignition switch OFF	Below 1 V
H7-3 (B) - Body ground	L - Body ground*1 Y - Body ground*2	Ignition power supply	Ignition switch ON	11 to 14 V
H7-2 (SD) - Body ground	BR - Body ground	Power window motor DOWN input (Remote)	Ignition switch ON, power window master switch DOWN (Remote)	11 to 14 V

TESTER CONNECTION	WIRING COLOR	TERMINAL DESCRIPTION	SWITCH CONDITION	SPECIFIED CONDITION
H7-4 (U) - Body ground	Y - Body ground*1 L - Body ground*2	Power window motor UP output	Ignition switch ON, power window switch OFF	Below 1 V
H7-4 (U) - Body ground	Y - Body ground*1 L - Body ground*2	Power window motor UP output	Ignition switch ON, power window switch UP	11 to 14 V
H7-5 (SU) - Body ground	G - Body ground	Power window motor UP input (Remote)	Ignition switch ON, power window master switch OFF	Below 1 V
H7-5 (SU) - Body ground	G - Body ground	Power window motor UP input (Remote)	Ignition switch ON, power window master switch UP (Remote)	11 to 14 V

- *1: for TMC Made
- *2: Except for TMC made

If the result is not as specified, the switch or wire harness may have a malfunction.

3. CHECK POWER WINDOW SWITCH (REAR LH SIDE)

(a) Measure the voltage according to the value(s) in the table below.

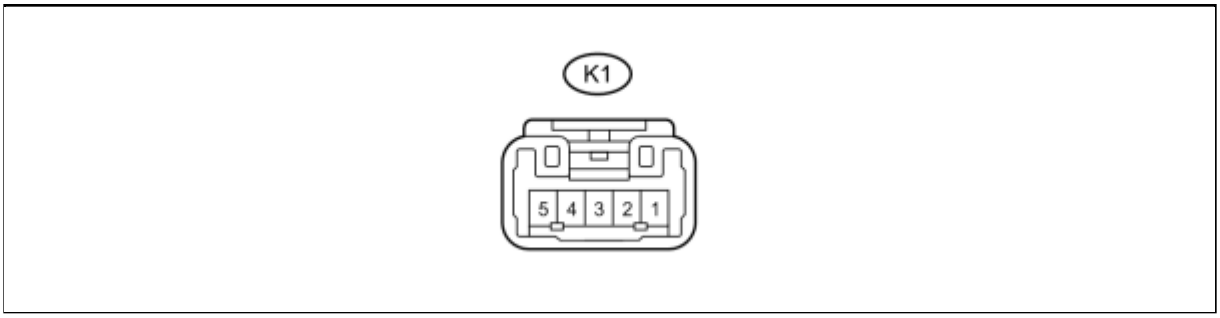

TESTER CONNECTION	WIRING COLOR	TERMINAL DESCRIPTION	SWITCH CONDITION	SPECIFIED CONDITION
K1-1 (D) - Body ground	Y - Body ground	Power window motor DOWN output	Ignition switch ON, power window switch OFF	Below 1 V
K1-1 (D) - Body ground	Y - Body ground	Power window motor DOWN output	Ignition switch ON, power window switch DOWN	11 to 14 V
K1-2 (SD) - Body ground	L - Body ground	Power window motor DOWN input (Remote)	Ignition switch ON, power window master switch OFF	Below 1 V
K1-2 (SD) - Body ground	L - Body ground	Power window motor DOWN input (Remote)	Ignition switch ON, power window master switch DOWN (Remote)	11 to 14 V

TESTER CONNECTION	WIRING COLOR	TERMINAL DESCRIPTION	SWITCH CONDITION	SPECIFIED CONDITION
K1-3 (B) - Body ground	P - Body ground	Ignition power supply	Ignition switch off	Below 1 V
K1-3 (B) - Body ground	P - Body ground	Ignition power supply	Ignition switch ON	11 to 14 V
K1-4 (U) - Body ground	G - Body ground	Power window motor UP output	Ignition switch ON, power window switch OFF	Below 1 V
K1-4 (U) - Body ground	G - Body ground	Power window motor UP output	Ignition switch ON, power window switch UP	11 to 14 V
K1-5 (SU) - Body ground	R - Body ground	Power window motor UP input (Remote)	Ignition switch ON, power window master switch OFF	Below 1 V
K1-5 (SU) - Body ground	R - Body ground	Power window motor UP input (Remote)	Ignition switch ON, power window master switch UP (Remote)	11 to 14 V

If the result is not as specified, the switch or wire harness may have a malfunction.

4. CHECK POWER WINDOW SWITCH (REAR RH SIDE)

(a) Measure the voltage according to the value(s) in the table below.

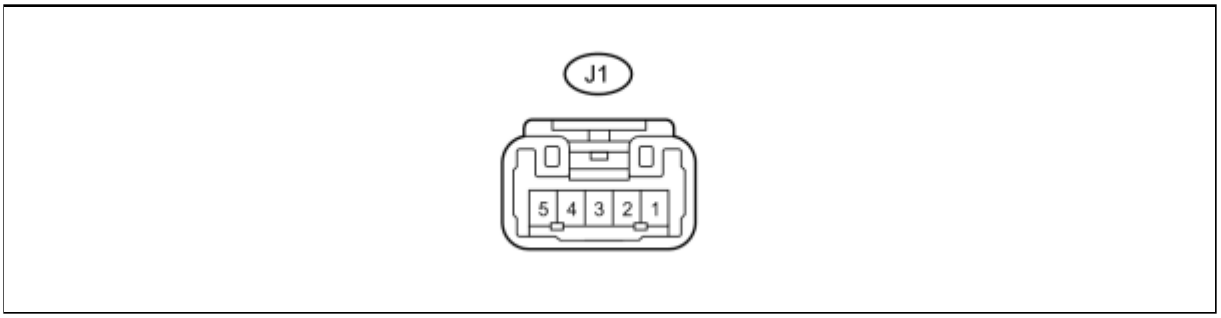

TESTER CONNECTION	WIRING COLOR	TERMINAL DESCRIPTION	SWITCH CONDITION	SPECIFIED CONDITION
J1-1 (D) - Body ground	G - Body ground	Power window motor DOWN output	Ignition switch ON, power window switch OFF	Below 1 V
J1-1 (D) - Body ground	G - Body ground	Power window motor DOWN output	Ignition switch ON, power window switch DOWN	11 to 14 V
J1-2 (SD) - Body ground	BR - Body ground*1 Y - Body ground*2	Power window motor DOWN input (Remote)	Ignition switch ON, power window master switch OFF	Below 1 V
J1-2 (SD) - Body ground	BR - Body ground*1 Y - Body	Power window motor DOWN input (Remote)	Ignition switch ON, power window master switch DOWN (Remote)	11 to 14 V

TESTER CONNECTION	WIRING COLOR	TERMINAL DESCRIPTION	SWITCH CONDITION	SPECIFIED CONDITION
	ground*2			
J1-3 (B) - Body ground	L - Body ground*1 BE - Body ground*2	Ignition power supply	Ignition switch off	Below 1 V
J1-3 (B) - Body ground	L - Body ground*1 BE - Body ground*2	Ignition power supply	Ignition switch ON	11 to 14 V
J1-4 (U) - Body ground	R - Body ground	Power window motor UP output	Ignition switch ON, power window switch OFF	Below 1 V
J1-4 (U) - Body ground	R - Body ground	Power window motor UP output	Ignition switch ON, power window switch UP	11 to 14 V
J1-5 (SU) - Body ground	G - Body ground*1 B - Body ground*2	Power window motor UP input (Remote)	Ignition switch ON, power window master switch OFF	Below 1 V
J1-5 (SU) - Body ground	G - Body ground*1 B - Body ground*2	Power window motor UP input (Remote)	Ignition switch ON, power window master switch UP (Remote)	11 to 14 V
J1-2 (SD) - Body ground	BR - Body ground*1 Y - Body ground*2	Power window motor DOWN input (Remote)	Ignition switch ON, power window master switch OFF	Below 1 V

- *1: for TMC Made
- *2: Except for TMC made

If the result is not as specified, the switch or wire harness may have a malfunction.

Last Modified: 3-10-2010	6.4 T	**From:** 200901
Model Year: 2010	**Model:** Corolla	**Doc ID:** RM0000010ZD01DX
Title: WINDOW / GLASS: POWER WINDOW CONTROL SYSTEM: PROBLEM SYMPTOMS TABLE (2010 Corolla)		

PROBLEM SYMPTOMS TABLE

HINT:

- Use the table below to help determine the cause of problem symptoms. If multiple suspected areas are listed, the potential causes of the symptoms are listed in order of probability in the "Suspected Area" column of the table. Check each symptom by checking the suspected areas in the order they are listed. Replace parts as necessary.
- Inspect the fuses and relays related to this system before inspecting the suspected areas below.

Power Window Control System

SYMPTOM	SUSPECTED AREA	SEE PAGE
Remote Up / Down Function does not Operate	Power window master switch	INFO
	Power window switch (applicable location)	-
	Wire harness or connector	-
Driver Side Power Window does not Operate with Power Window Master Switch	Power window master switch	INFO
	Power window regulator motor assembly (driver side)	-
	Wire harness or connector	-
Front Passenger Side Power Window does not Operate with Front Passenger Side Power Window Switch	Power window switch (passenger side)	INFO
	Power window regulator motor assembly (passenger side)	-
	Power window master switch	-
	Wire harness or connector	-
Rear Power Window LH does not Operate with Rear Power Window Switch LH	Power window switch (rear LH)	INFO
	Power window regulator motor assembly (rear LH)	-
	Power window master switch	-
	Wire harness or connector	-
Rear Power Window RH does not Operate with Rear Power Window Switch RH	Power window switch (rear RH)	INFO
	Power window regulator motor assembly (rear RH)	-

SYMPTOM	SUSPECTED AREA	SEE PAGE
	Power window master switch	-
	Wire harness or connector	-
Power Windows do not Operate at All	Main body ECU (instrument panel junction block)	INFO
	Power window master switch	-
	Wire harness or connector	-
Key-off Operation Function Operates even if Operating Conditions are not Satisfied	Main body ECU (instrument panel junction block)	INFO
	Lighting system	-

Last Modified: 3-10-2010	6.4 J	**From:** 200901
Model Year: 2010	**Model:** Corolla	**Doc ID:** RM0000010ZI01WX
Title: WINDOW / GLASS: POWER WINDOW CONTROL SYSTEM: Remote Up / Down Function does not Operate (2010 Corolla)		

Remote Up / Down Function does not Operate

DESCRIPTION

With the ignition switch ON, the power window master switch transmits remote switch signals to the switches of the front passenger door power window and rear door power windows. Then, each regulator switch drives its respective power window regulator motor.

WIRING DIAGRAM

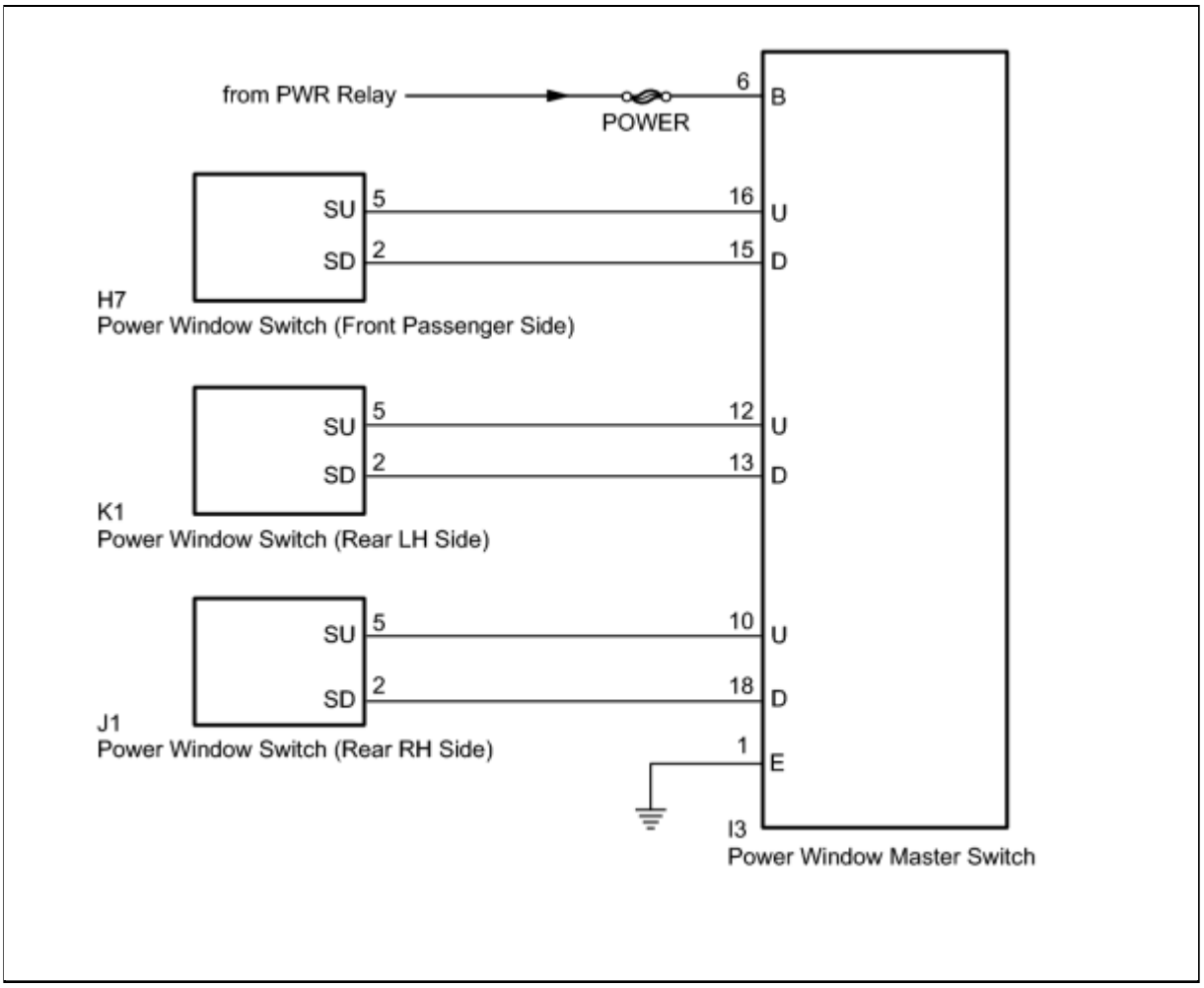

INSPECTION PROCEDURE

PROCEDURE

1.	**CHECK POWER WINDOW MASTER SWITCH**

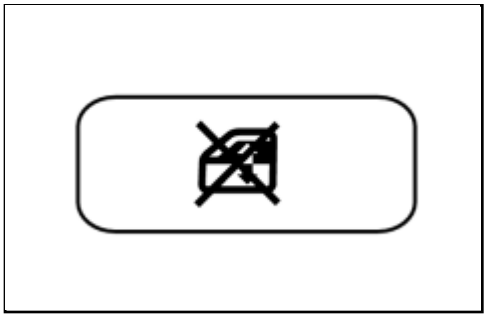

(a) Turn the window lock switch OFF and operate the switches on the master switch. Check that the remote UP and DOWN function operates normally.

OK:

Remote UP and DOWN function operates normally.

NG ▶ **CHECK MANUAL UP / DOWN FUNCTION**

OK ▶ **END**

2.	**CHECK MANUAL UP / DOWN FUNCTION**

(a) Check that the passenger door power window and rear door power window manual UP and DOWN function operates normally.

OK:

Manual UP and DOWN function operates normally.

NG ▶ **CHECK HARNESS AND CONNECTOR (POWER WINDOW MASTER SWITCH - BATTERY)**

OK ▶ **REPLACE POWER WINDOW MASTER SWITCH**

3.	**CHECK HARNESS AND CONNECTOR (POWER WINDOW MASTER SWITCH - BATTERY)**

(a) Disconnect the power window master switch connector.

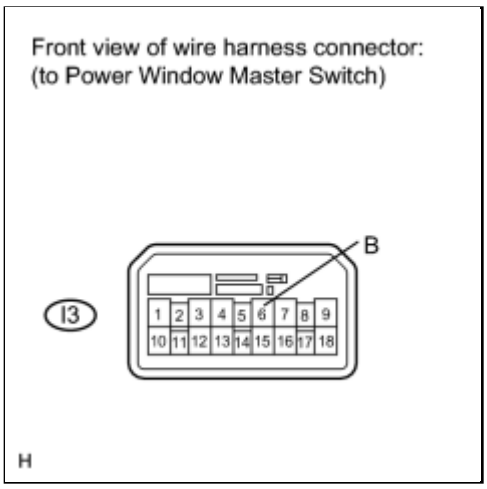

(b) Measure the voltage according to the value(s) in the table below.

Standard Voltage:

TESTER CONNECTION	SWITCH CONDITION	SPECIFIED CONDITION
I3-6 (B) - Body ground	Ignition switch ON	11 to 14 V

NG ▶ **REPAIR OR REPLACE HARNESS OR CONNECTOR**

OK ▼

4.	**INSPECT POWER WINDOW MASTER SWITCH**

(a) Measure the resistance according to the value(s) in the table below.

Standard Resistance:

TESTER CONNECTION	SWITCH CONDITION	SPECIFIED CONDITION
6 (B) - 16 (U) 15 (D) - 1 (E)	UP (Passenger side)	Below 1 Ω
6 (B) - 15 (D) 16 (U) - 1 (E)	DOWN (Passenger side)	Below 1 Ω
6 (B) - 12 (U) 13 (D) - 1 (E)	UP (Rear LH)	Below 1 Ω

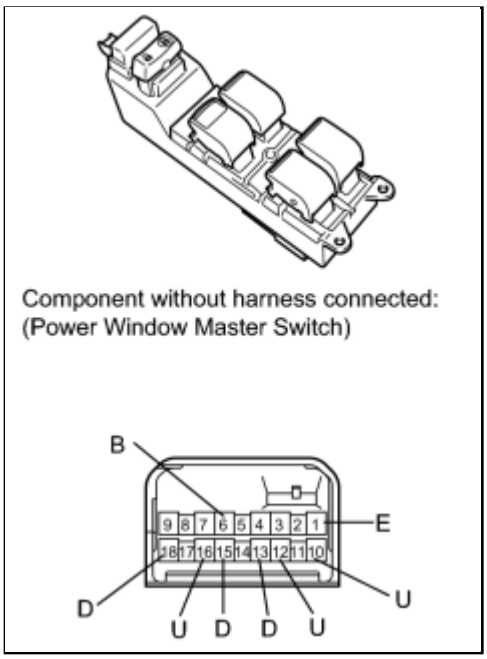

6 (B) - 13 (D) 12 (U) - 1 (E)	DOWN (Rear LH)	Below 1 Ω
6 (B) - 10 (U) 18 (D) - 1 (E)	UP (Rear RH)	Below 1 Ω
6 (B) - 18 (D) 10 (U) - 1 (E)	DOWN (Rear RH)	Below 1 Ω

NG ▶ **REPLACE POWER WINDOW MASTER SWITCH**

OK
▼

5.	**CHECK HARNESS AND CONNECTOR (MASTER SWITCH - FRONT PASSENGER, REAR LH/RH SWITCH)**

(a) Front passenger side:

(1) Disconnect the power window switch (passenger side) connector.

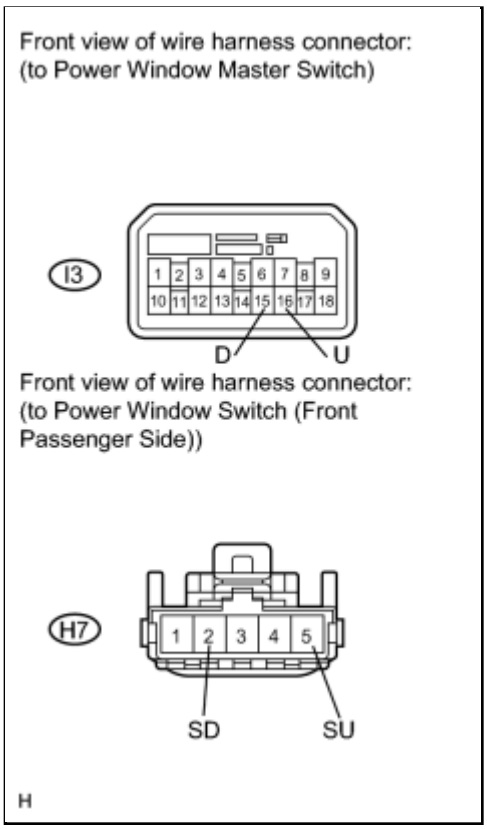

(2) Measure the resistance according to the value(s) in the table below.

Standard Resistance:

TESTER CONNECTION	CONDITION	SPECIFIED CONDITION
I3-16 (U) - H7-5 (SU)	Always	Below 1 Ω
I3-15 (D) - H7-2 (SD)	Always	Below 1 Ω
I3-16 (U) - Body ground	Always	10 kΩ or higher
I3-15 (D) - Body ground	Always	10 kΩ or higher

(b) Rear LH side:

(1) Disconnect the power window switch (rear LH side) connector.

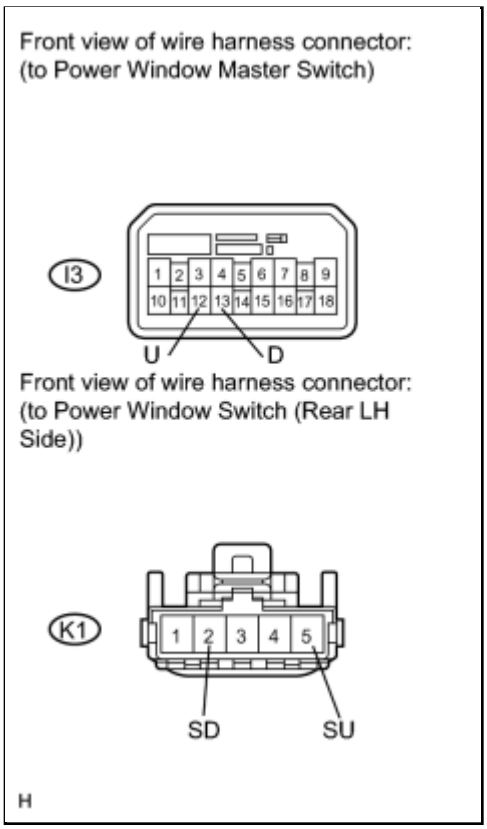

(2) Measure the resistance according to the value(s) in the table below.

Standard Resistance:

TESTER CONNECTION	CONDITION	SPECIFIED CONDITION
I3-12 (U) - K1-5 (SU)	Always	Below 1 Ω
I3-13 (D) - K1-2 (SD)	Always	Below 1 Ω
I3-12 (U) - Body ground	Always	10 kΩ or higher
I3-13 (D) - Body ground	Always	10 kΩ or higher

(c) Rear RH side:

(1) Disconnect the power window switch (rear RH side) connector.

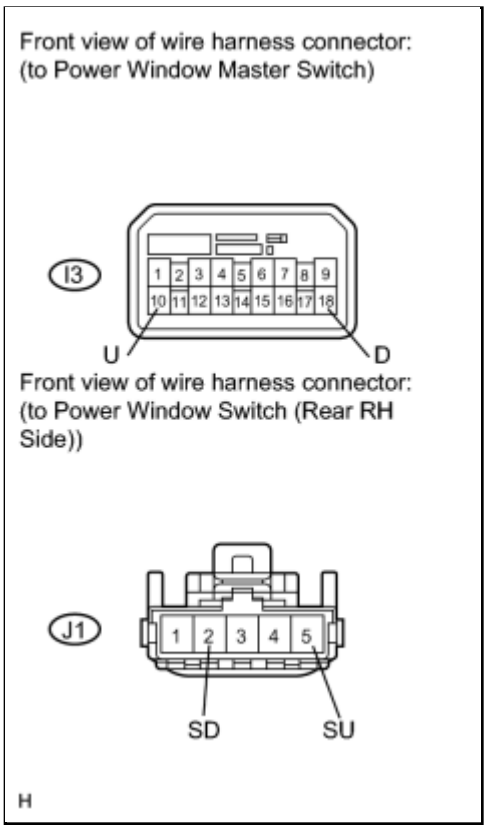

(2) Measure the resistance according to the value(s) in the table below.

Standard Resistance:

TESTER CONNECTION	CONDITION	SPECIFIED CONDITION
I3-10 (U) - J1-5 (SU)	Always	Below 1 Ω
I3-18 (D) - J1-2 (SD)	Always	Below 1 Ω
I3-10 (U) - Body ground	Always	10 kΩ or higher
I3-18 (D) - Body ground	Always	10 kΩ or higher

Result:

RESULT	PROCEED TO
NG	A
OK (Front passenger side)	B
OK (Rear LH side)	C
OK (Rear RH side)	D

D ▶ **REPLACE POWER WINDOW SWITCH (REAR RH SIDE)**

C ▶ **REPLACE POWER WINDOW SWITCH (REAR LH SIDE)**

B ▶ REPLACE POWER WINDOW SWITCH (FRONT PASSENGER SIDE)

A ▶ REPAIR OR REPLACE HARNESS OR CONNECTOR

Last Modified: 3-10-2010	6.4 D	**From:** 200901
Model Year: 2010	**Model:** Corolla	**Doc ID:** RM0000012GX04LX
Title: WINDOW / GLASS: POWER WINDOW CONTROL SYSTEM: DIAGNOSIS SYSTEM (2010 Corolla)		

DIAGNOSIS SYSTEM

1. CHECK DLC3

(a) Check the DLC3 INFO .

2. INSPECT BATTERY VOLTAGE

(a) Measure the battery voltage.

Standard Voltage:
11 to 14 V

If the voltage is below 11 V, recharge or replace the battery before proceeding to the next step.

Last Modified: 3-10-2010	6.4 U	**From:** 200901
Model Year: 2010	**Model:** Corolla	**Doc ID:** RM0000011V1030X
Title: WINDOW / GLASS: POWER WINDOW CONTROL SYSTEM: DATA LIST / ACTIVE TEST (2010 Corolla)		

DATA LIST / ACTIVE TEST

1. DATA LIST

HINT:

Using the Techstream to read the Data List allows the values or states of switches, sensors, actuators and other items to be read without removing any parts. This non-intrusive inspection can be very useful because intermittent conditions or signals may be discovered before parts or wiring is disturbed. Reading the Data List information early in troubleshooting is one way to save diagnostic time.

NOTICE:

In the table below, the values listed under "Normal Condition" are reference values. Do not depend solely on these reference values when deciding whether a part is faulty or not.

(a) Connect the Techstream to the DLC3.

(b) Turn the ignition switch to ON.

(c) Turn the Techstream on.

(d) Enter the following menu: Body Electrical / Main Body / Data List.

(e) Read the Data List according to the display on the Techstream.

Main Body

TESTER DISPLAY	MEASUREMENT ITEM/RANGE	NORMAL CONDITION	DIAGNOSTIC NOTE
D Door Courtesy SW	Driver side door courtesy switch signal/ON or OFF	ON: Driver side door is open OFF: Driver side door is closed	-

2. ACTIVE TEST

HINT:

Using the Techstream to perform Active Tests allows relays, VSVs, actuators and other items to be operated without removing any parts. This non-intrusive functional inspection can be very useful because intermittent operation may be discovered before parts or wiring is disturbed. Performing Active Tests early in troubleshooting is one way to save diagnostic time. Data List information can be displayed while performing Active Tests.

(a) Connect the Techstream to the DLC3.

(b) Turn the ignition switch to ON.

(c) Turn the Techstream on.

(d) Enter the following menu: Body Electrical / Main Body / Active Test.

(e) Perform the Active Test according to the display on the Techstream.

Main Body

TESTER DISPLAY	TEST PART	CONTROL RANGE	DIAGNOSTIC NOTE
IG OFF P/W Control Permission Output	Power window	ON or OFF (After ignition switch is turned off)	-

Last Modified: 3-10-2010	6.4 J	**From:** 200901
Model Year: 2010	**Model:** Corolla	**Doc ID:** RM0000010ZK016X
Title: WINDOW / GLASS: POWER WINDOW CONTROL SYSTEM: Driver Side Power Window does not Operate with Power Window Master Switch (2010 Corolla)		

Driver Side Power Window does not Operate with Power Window Master Switch

DESCRIPTION

If the manual UP or DOWN and AUTO DOWN functions do not operate, a malfunction may exist in the power window master switch, power window regulator motor or wire harness.

WIRING DIAGRAM

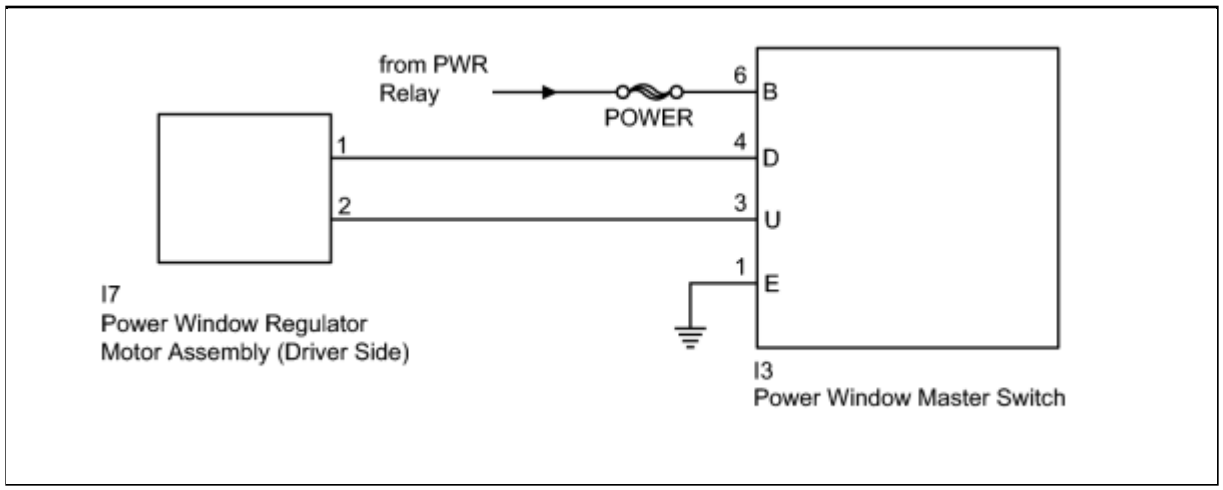

INSPECTION PROCEDURE

PROCEDURE

1.	**INSPECT POWER WINDOW MASTER SWITCH (DRIVER SWITCH)**

(a) Remove the power window master switch INFO .

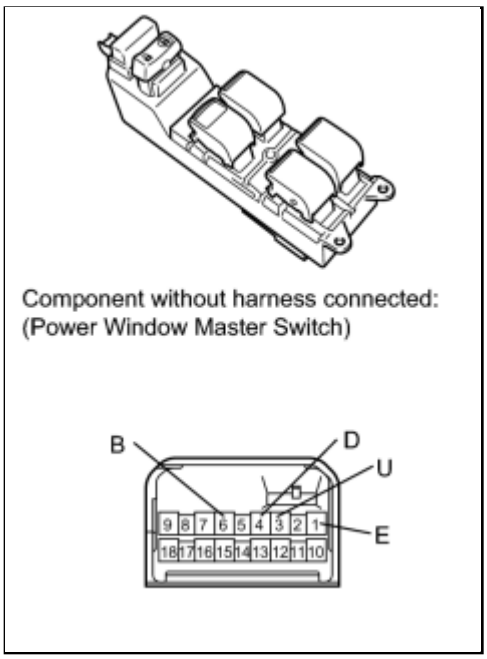

(b) Measure the resistance according to the value(s) in the table below.

Standard Resistance:

TESTER CONNECTION	SWITCH CONDITION	SPECIFIED CONDITION
1 (E) - 4 (D) 3 (U) - 6 (B)	UP	Below 1 Ω
1 (E) - 3 (U) 1 (E) - 4 (D)	OFF	Below 1 Ω
1 (E) - 3 (U) 6 (B) - 4 (D)	DOWN	Below 1 Ω
1 (E) - 3 (U) 6 (B) - 4 (D)	AUTO DOWN	Below 1 Ω

NG ▶ **REPLACE POWER WINDOW MASTER SWITCH**

OK ▼

2.	**CHECK HARNESS AND CONNECTOR (MASTER SWITCH - MOTOR (DRIVER SIDE))**

(a) Disconnect the power window regulator motor assembly (driver side) motor connector.

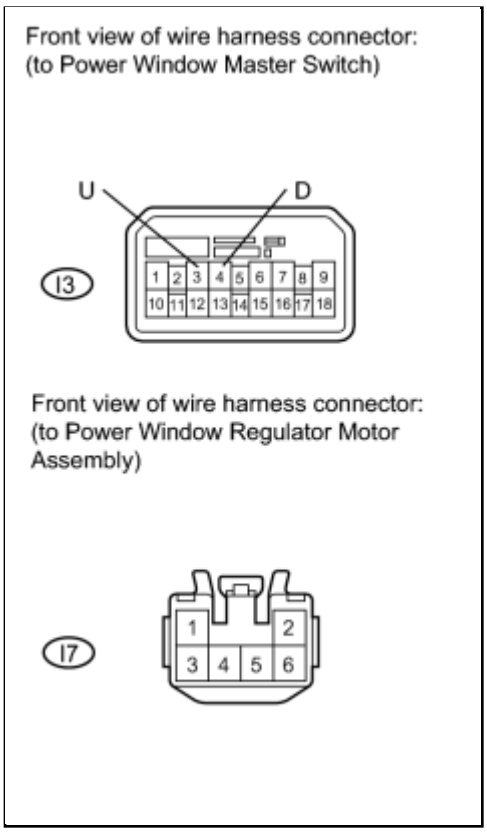

(b) Measure the resistance according to the value(s) in the table below.

Standard Resistance:

TESTER CONNECTION	CONDITION	SPECIFIED CONDITION
I3-4 (D) - I7-1	Always	Below 1 Ω
I3-3 (U) - I7-2	Always	Below 1 Ω
I3-4 (D) - Body ground	Always	10 kΩ or higher
I3-3 (U) - Body ground	Always	10 kΩ or higher

NG ▶ **REPAIR OR REPLACE HARNESS OR CONNECTOR**

OK ▼

3.	**INSPECT POWER WINDOW REGULATOR MOTOR ASSEMBLY (DRIVER SIDE)**

(a) Remove the power window regulator motor assembly INFO .

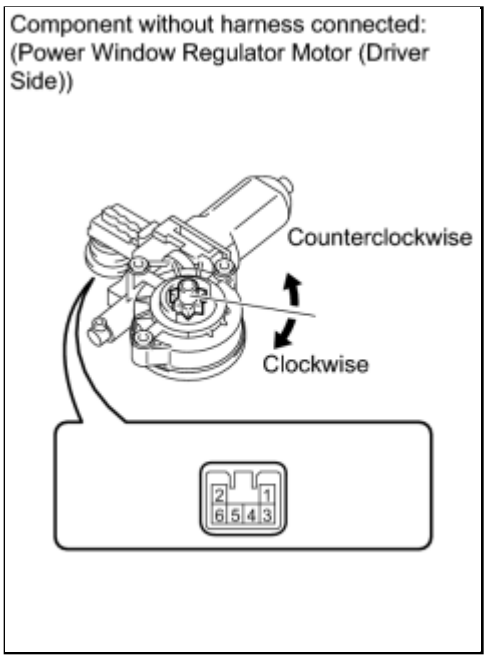

(b) Check power window regulator motor operation:

(1) Apply battery voltage to connector terminals 1 and 2.

NOTICE:

Do not apply battery voltage to any terminals except terminals 1 and 2.

(2) Check that the motor gear rotates smoothly as follows.

OK:

MEASUREMENT CONDITION	SPECIFIED CONDITION
Battery positive (+) → 1 Battery negative (-) → 2	Motor gear rotates counterclockwise
Battery positive (+) → 2 Battery negative (-) → 1	Motor gear rotates clockwise

(c) Check PTC operation:

NOTICE:

This check must be performed with the power window regulator and door glass installed on the vehicle.

(1) Install the power window regulator motor INFO .

(2) Connect an electrical tester DC 400 A probe to the wire harness of terminal 2.

NOTICE:

Match the arrow mark of the probe with the direction of the current flow.

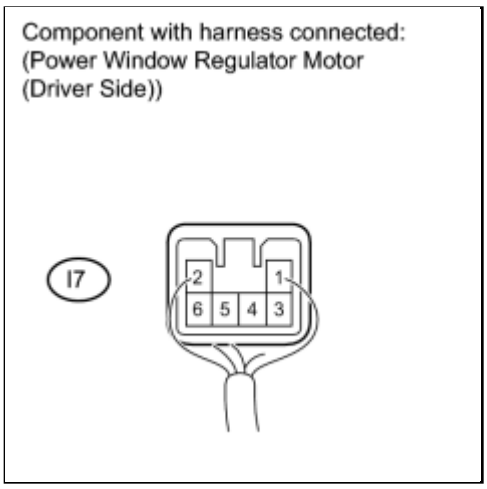

(3) Fully close the door glass by pulling up the power window switch. Wait for approximately 60 seconds.

(4) Continue to pull up the power window switch and measure how long it takes for the electrical current to change from a range of 16 to 28 A to approximately 1 A (current shut-off inspection).

Standard:

4 to 90 seconds

(5) Wait for 60 seconds after the previous step, and then push down press the power window switch (driver side).

OK:

The driver side window goes down.

NG ▶ **REPLACE POWER WINDOW REGULATOR MOTOR ASSEMBLY (DRIVER SIDE)**

OK ▶ **REPLACE POWER WINDOW MASTER SWITCH**

Last Modified: 3-10-2010	6.4 J	**From:** 200901
Model Year: 2010	**Model:** Corolla	**Doc ID:** RM0000010ZL01RX
Title: WINDOW / GLASS: POWER WINDOW CONTROL SYSTEM: Front Passenger Side Power Window does not Operate with Front Passenger Side Power Window Switch (2010 Corolla)		

Front Passenger Side Power Window does not Operate with Front Passenger Side Power Window Switch

DESCRIPTION

If the passenger side manual UP or DOWN function does not operate, a malfunction may exist in the power window regulator motor, power window switch, power window master switch or wire harness.

WIRING DIAGRAM

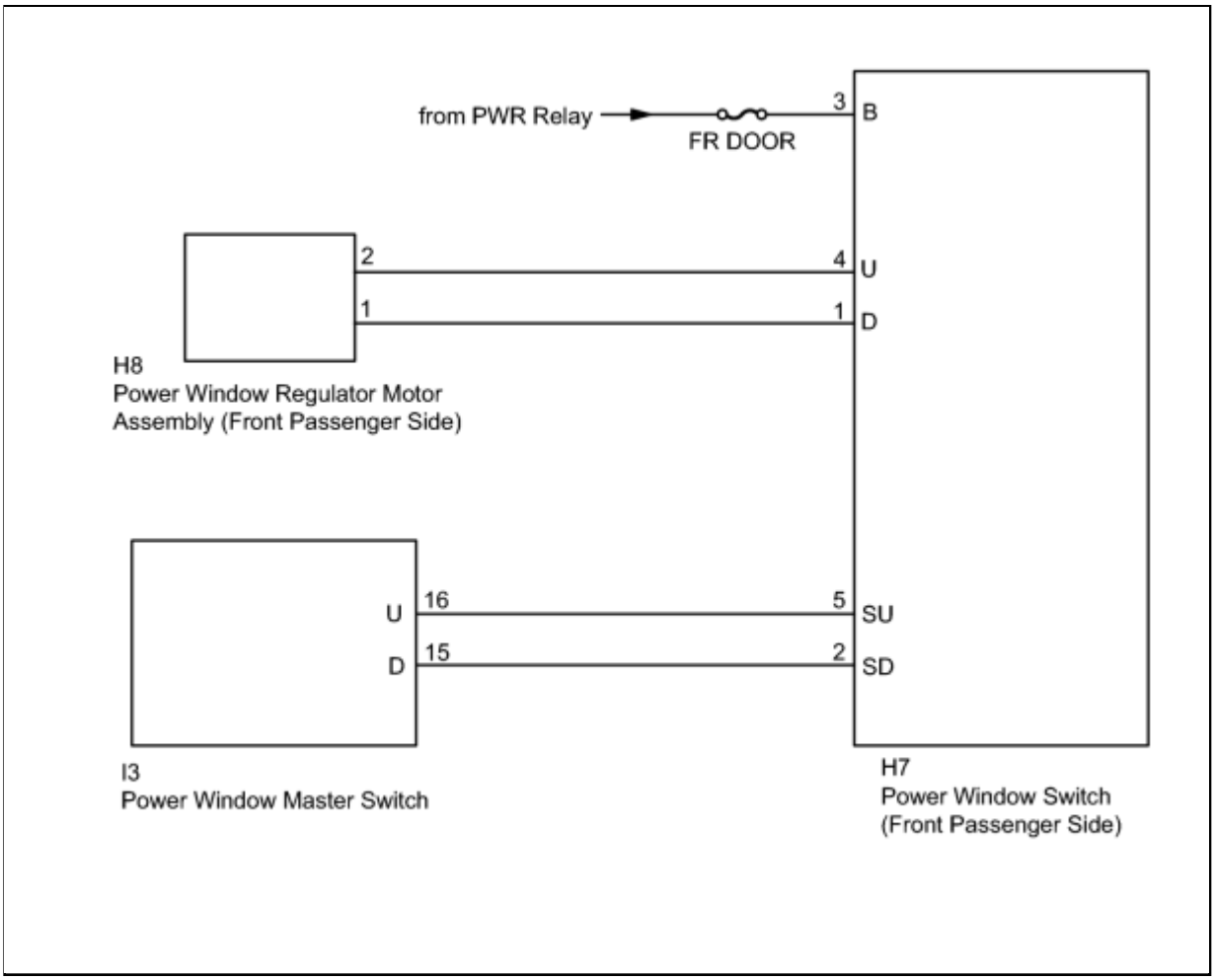

INSPECTION PROCEDURE

PROCEDURE

1.	**CHECK HARNESS AND CONNECTOR (POWER SOURCE)**

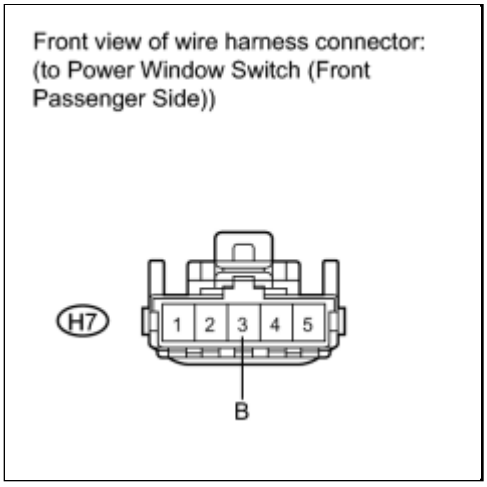

(a) Disconnect the power window switch (front passenger side) connector.

(b) Measure the voltage according to the value(s) in the table below.

Standard Voltage:

TESTER CONNECTION	SWITCH CONDITION	SPECIFIED CONDITION
H7-3 (B) - Body ground	Ignition switch ON	11 to 14 V

NG ▶ **REPAIR OR REPLACE HARNESS OR CONNECTOR**

OK ▼

2.	**INSPECT POWER WINDOW SWITCH (FRONT PASSENGER SIDE)**

(a) Remove the power window switch INFO .

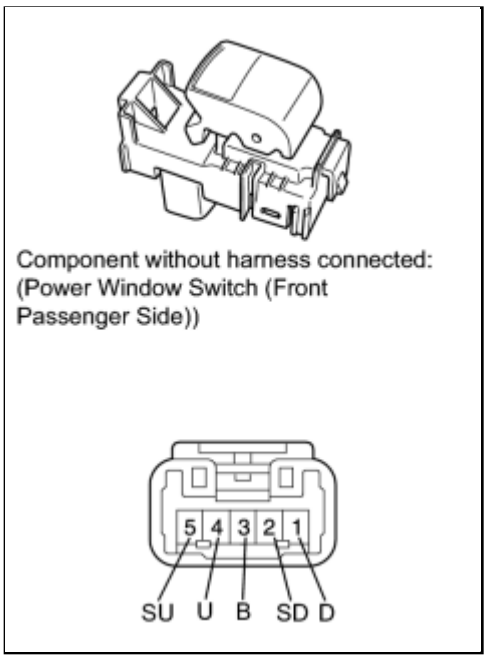

(b) Measure the resistance according to the value(s) in the table below.

Standard Resistance:

TESTER CONNECTION	SWITCH CONDITION	SPECIFIED CONDITION
3 (B) - 4 (U) 2 (SD) - 1 (D)	UP	Below 1 Ω
5 (SU) - 4 (U) 2 (SD) - 1 (D)	OFF	Below 1 Ω
5 (SU) - 4 (U) 3 (B) - 1 (D)	DOWN	Below 1 Ω

NG ▶ **REPLACE POWER WINDOW SWITCH (FRONT PASSENGER SIDE)**

OK ▼

3.	**CHECK HARNESS AND CONNECTOR (SWITCH (PASSENGER SIDE) - MOTOR (PASSENGER SIDE))**

(a) Disconnect the power window regulator motor assembly (front passenger side) connector.

Front view of wire harness connector:
(to Power Window Switch (Front Passenger Side))

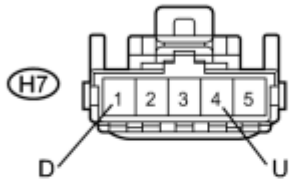

Front view of wire harness connector:
(to Power Window Regulator Motor Assembly (Front Passenger Side))

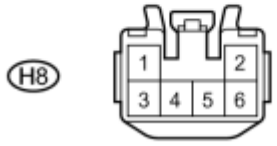

(b) Measure the resistance according to the value(s) in the table below.

Standard Resistance:

TESTER CONNECTION	CONDITION	SPECIFIED CONDITION
H7-1 (D) - H8-1	Always	Below 1 Ω
H7-4 (U) - H8-2	Always	Below 1 Ω
H7-1 (D) - Body ground	Always	10 kΩ or higher
H7-4 (U) - Body ground	Always	10 kΩ or higher

NG ▶ **REPAIR OR REPLACE HARNESS OR CONNECTOR**

OK ▼

4.	**INSPECT POWER WINDOW REGULATOR MOTOR ASSEMBLY (FRONT PASSENGER SIDE)**

(a) Remove the power window regulator motor assembly INFO .

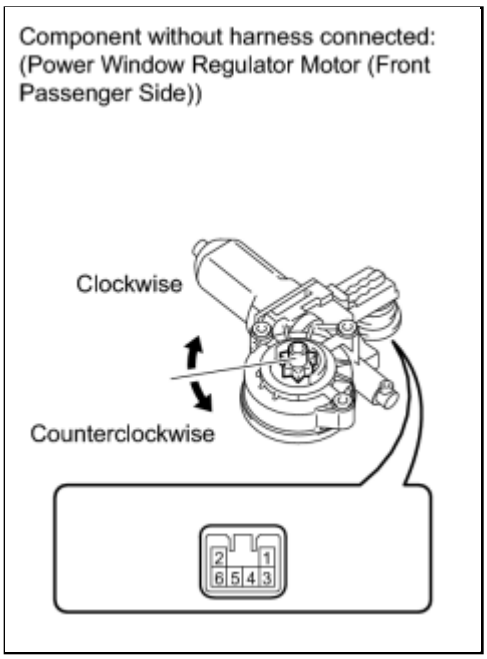

(b) Check power window regulator motor operation:

(1) Apply battery voltage to connector terminals 1 and 2.

NOTICE:

Do not apply battery voltage to any terminals except terminals 1 and 2.

(2) Check that the motor gear rotates smoothly as follows.

OK:

MEASUREMENT CONDITION	SPECIFIED CONDITION
Battery positive (+) → 1 Battery negative (-) → 2	Motor gear rotates clockwise
Battery positive (+) → 2 Battery negative (-) → 1	Motor gear rotates counterclockwise

(c) Check PTC operation:

NOTICE:

This check must be performed with the power window regulator and door glass installed on the vehicle.

(1) Install the power window regulator motor INFO .

(2) Connect an electrical tester DC 400 A probe to the wire harness of terminal 2.

NOTICE:

Match the arrow mark of the probe with the direction of the current flow.

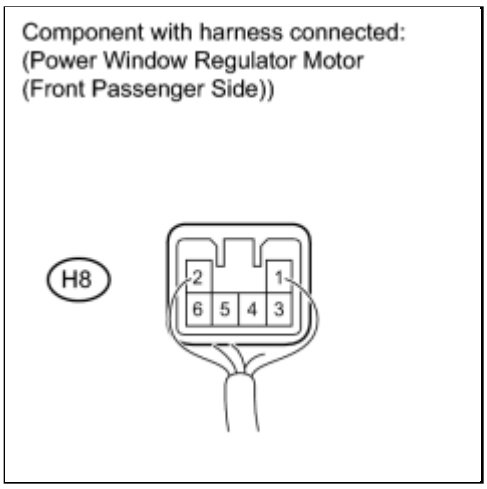

(3) Fully close the door glass by pulling up the power window switch. Wait for approximately 60 seconds.

(4) Continue to pull up the power window switch and measure how long it takes for the electrical current to change from a range of 16 to 28 A to approximately 1 A (current shut-off inspection).

Standard:

4 to 90 seconds

(5) Wait for 60 seconds after the previous step, and then push down the power window switch (passenger side).

OK:

The passenger side window goes down.

NG ▶ **REPLACE POWER WINDOW REGULATOR MOTOR ASSEMBLY (FRONT PASSENGER SIDE)**

OK ▼

5.	**CHECK HARNESS AND CONNECTOR (MASTER SWITCH - SWITCH (FRONT PASSENGER SIDE))**

(a) Disconnect the power window master switch connector.

(b) Disconnect the power window switch (front passenger side) connector.

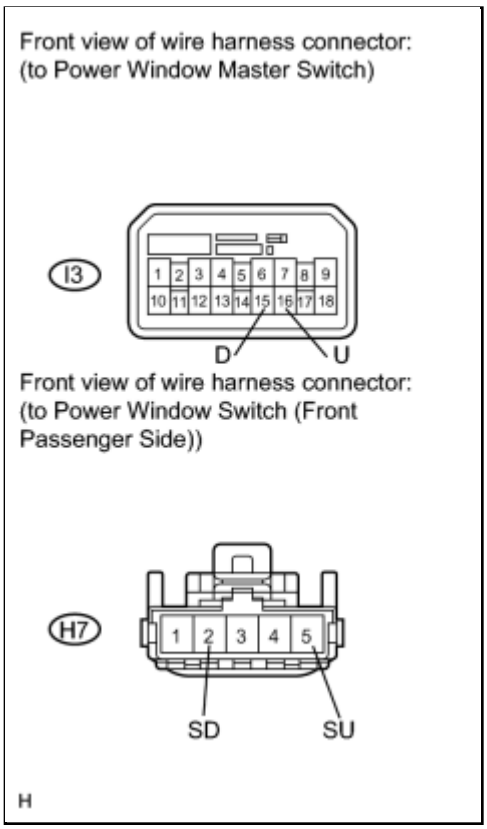

(c) Measure the resistance according to the value(s) in the table below.

Standard Resistance:

TESTER CONNECTION	CONDITION	SPECIFIED CONDITION
I3-16 (U) - H7-5 (SU)	Always	Below 1 Ω
I3-15 (D) - H7-2 (SD)	Always	Below 1 Ω
I3-16 (U) - Body ground	Always	10 kΩ or higher
I3-15 (D) - Body ground	Always	10 kΩ or higher

NG ▶ **REPAIR OR REPLACE HARNESS OR CONNECTOR**

OK ▶ **REPLACE POWER WINDOW MASTER SWITCH**

Last Modified: 3-10-2010	6.4 J	**From:** 200901
Model Year: 2010	**Model:** Corolla	**Doc ID:** RM0000010ZM025X
Title: WINDOW / GLASS: POWER WINDOW CONTROL SYSTEM: Rear Power Window LH does not Operate with Rear Power Window Switch LH (2010 Corolla)		

Rear Power Window LH does not Operate with Rear Power Window Switch LH

DESCRIPTION

If the rear LH side manual UP or DOWN function does not operate, a malfunction may exist in the power window regulator motor, power window switch, power window master switch or wire harness.

WIRING DIAGRAM

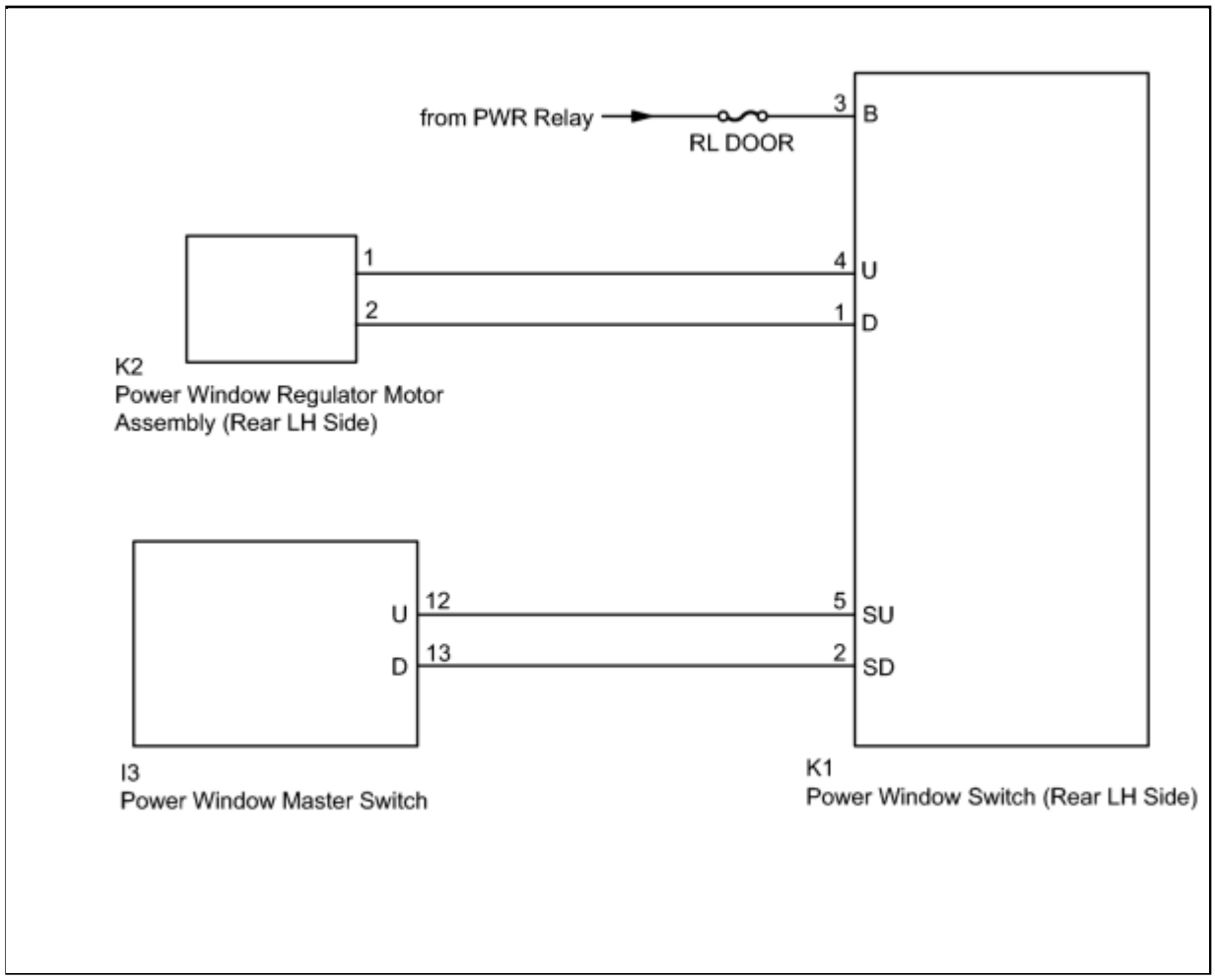

INSPECTION PROCEDURE

PROCEDURE

1.	CHECK HARNESS AND CONNECTOR (POWER SOURCE)

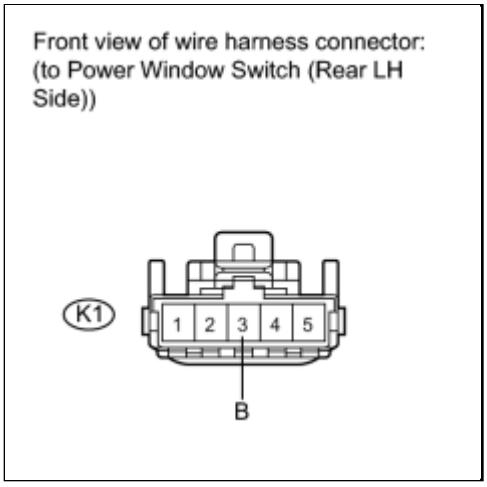

(a) Disconnect the power window switch (rear LH side) connector.

(b) Measure the voltage according to the value(s) in the table below.

Standard Voltage:

TESTER CONNECTION	SWITCH CONDITION	SPECIFIED CONDITION
K1-3 (B) - Body ground	Ignition switch ON	11 to 14 V

NG ▶ **REPAIR OR REPLACE HARNESS OR CONNECTOR**

OK ▼

2.	INSPECT POWER WINDOW SWITCH (REAR LH SIDE)

(a) Remove the power window switch INFO .

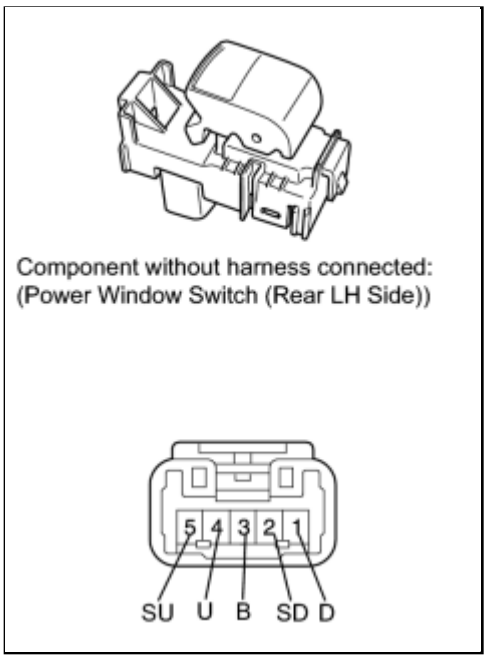

(b) Measure the resistance according to the value(s) in the table below.

Standard Resistance:

TESTER CONNECTION	SWITCH CONDITION	SPECIFIED CONDITION
1 (D) - 2 (SD) 3 (B) - 4 (U)	UP	Below 1 Ω
4 (U) - 5 (SU) 1 (D) - 2 (SD)	OFF	Below 1 Ω
2 (SD) - 3 (B) 4 (U) - 5 (SU)	DOWN	Below 1 Ω

NG ▶ **REPLACE POWER WINDOW SWITCH (REAR LH SIDE)**

OK ▼

3.	**CHECK HARNESS AND CONNECTOR (SWITCH (REAR LH SIDE) - MOTOR (REAR LH SIDE))**

(a) Disconnect the power window regulator motor assembly (rear LH side) connector.

Front view of wire harness connector:
(to Power Window Switch (Rear LH Side))

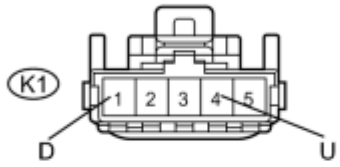

Front view of wire harness connector:
(to Power Window Regulator Motor Assembly (Rear LH Side))

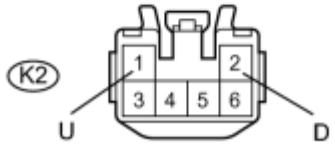

(b) Measure the resistance according to the value(s) in the table below.

Standard Resistance:

TESTER CONNECTION	CONDITION	SPECIFIED CONDITION
K1-4 (U) - K2-1 (U)	Always	Below 1 Ω
K1-1 (D) - K2-2 (D)	Always	Below 1 Ω
K1-4 (U) - Body ground	Always	10 kΩ or higher
K1-1 (D) - Body ground	Always	10 kΩ or higher

NG ▶ **REPAIR OR REPLACE HARNESS OR CONNECTOR**

OK ▼

4.	**INSPECT POWER WINDOW REGULATOR MOTOR ASSEMBLY (REAR LH SIDE)**

(a) Remove the power window regulator motor assembly INFO .

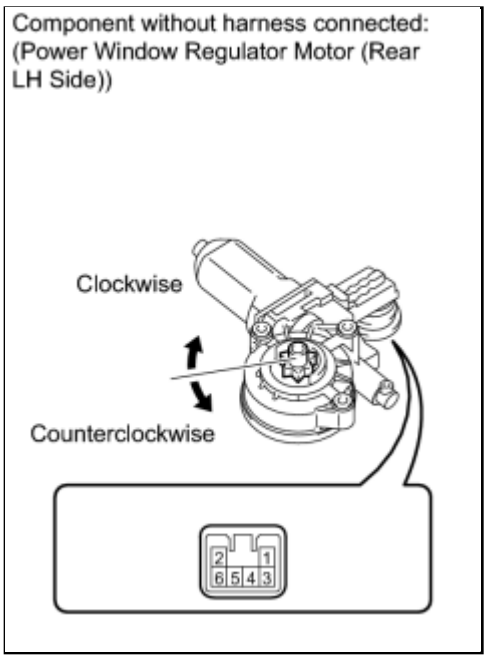

(b) Check power window regulator motor operation:

(1) Apply battery voltage to connector terminals 1 and 2.

NOTICE:

Do not apply battery voltage to any terminals except terminals 1 and 2.

(2) Check that the motor gear rotates smoothly as follows.

OK:

MEASUREMENT CONDITION	SPECIFIED CONDITION
Battery positive (+) → 1 Battery negative (-) → 2	Motor gear rotates clockwise
Battery positive (+) → 2 Battery negative (-) → 1	Motor gear rotates counterclockwise

(c) Check PTC operation:

NOTICE:

This check must be performed with the power window regulator and door glass installed on the vehicle.

(1) Install the power window regulator motor INFO .

(2) Connect an electrical tester DC 400 A probe to the wire harness of terminal 1.

NOTICE:

Match the arrow mark of the probe with the direction of the current flow.

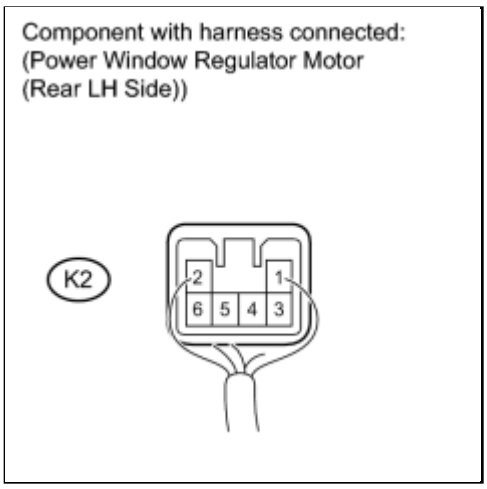

(3) Fully close the door glass by pulling up the power window switch. Wait for approximately 60 seconds.

(4) Continue to pull up the power window switch and measure how long it takes for the electrical current to change from a range of 16 to 28 A to approximately 1 A (current shut-off inspection).

Standard:
4 to 90 seconds

(5) Wait for 60 seconds after the previous step, and then push down the power window switch (rear LH side).

OK:
The rear LH side window goes down.

NG ▶ **REPLACE POWER WINDOW REGULATOR MOTOR ASSEMBLY (REAR LH)**

OK ▼

5.	**CHECK HARNESS AND CONNECTOR (MASTER SWITCH - SWITCH (REAR LH SIDE))**

(a) Disconnect the power window master switch connector.

(b) Disconnect the power window switch (rear LH side) connector.

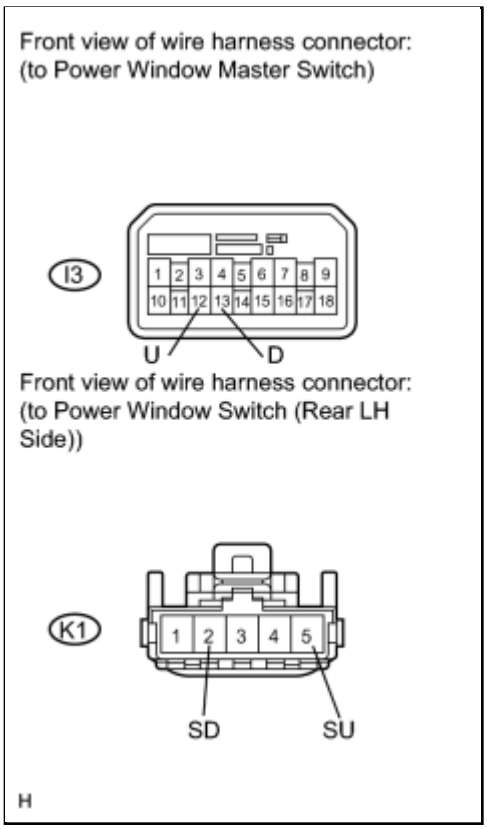

(c) Measure the resistance according to the value(s) in the table below.

Standard Resistance:

TESTER CONNECTION	CONDITION	SPECIFIED CONDITION
I3-12 (U) - K1-5 (SU)	Always	Below 1 Ω
I3-13 (D) - K1-2 (SD)	Always	Below 1 Ω
I3-12 (U) - Body ground	Always	10 kΩ or higher
I3-13 (D) - Body ground	Always	10 kΩ or higher

NG ▶ **REPAIR OR REPLACE HARNESS OR CONNECTOR**

OK ▶ **REPLACE POWER WINDOW MASTER SWITCH**

Last Modified: 3-10-2010	6.4 J	**From:** 200901
Model Year: 2010	**Model:** Corolla	**Doc ID:** RM0000010ZH022X
Title: WINDOW / GLASS: POWER WINDOW CONTROL SYSTEM: Rear Power Window RH does not Operate with Rear Power Window Switch RH (2010 Corolla)		

Rear Power Window RH does not Operate with Rear Power Window Switch RH

DESCRIPTION

If the rear RH side manual UP or DOWN function does not operate, a malfunction may exist in the power window regulator motor, power window switch, power window master switch or wire harness.

WIRING DIAGRAM

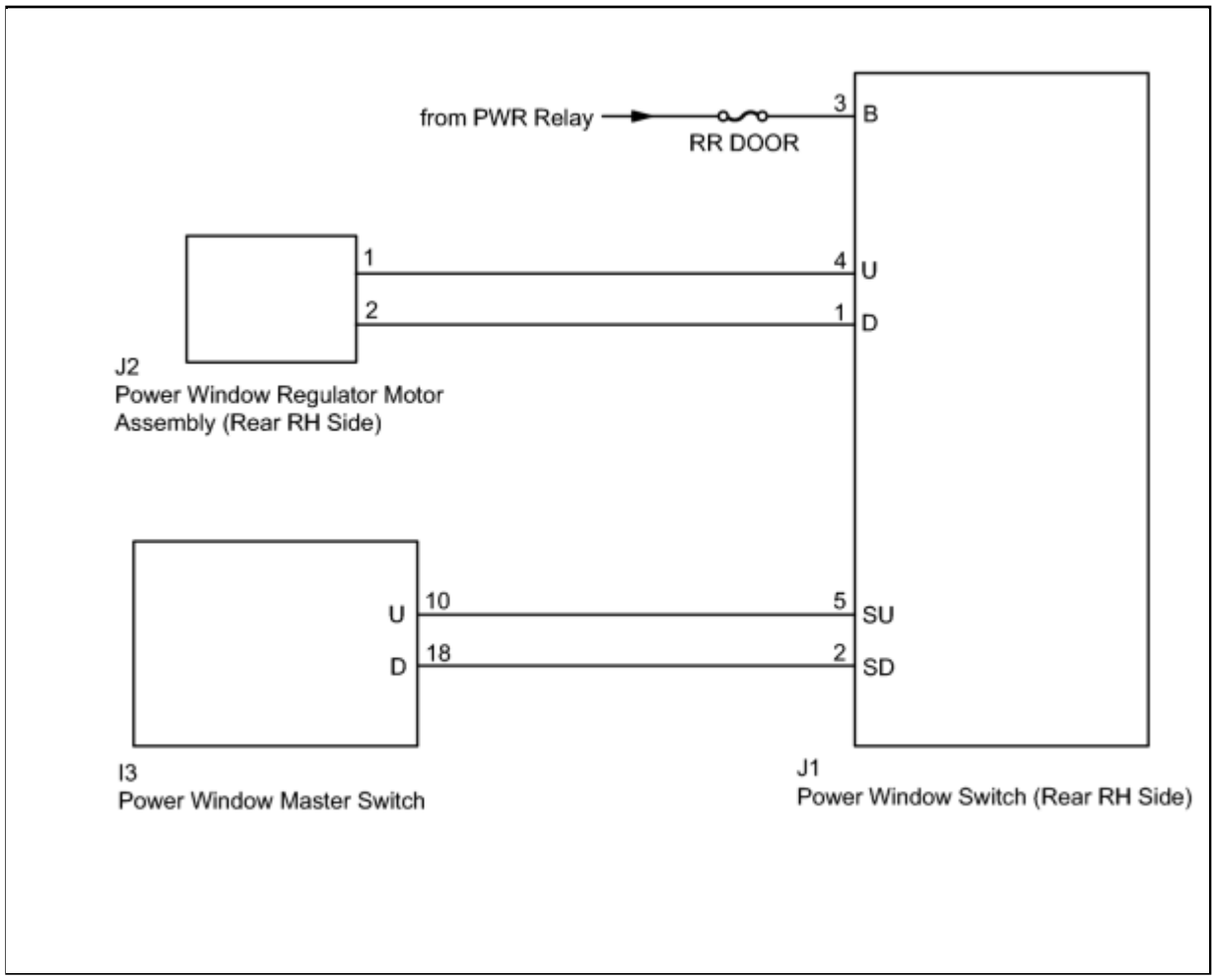

INSPECTION PROCEDURE

PROCEDURE

1.	**CHECK HARNESS AND CONNECTOR (POWER SOURCE)**

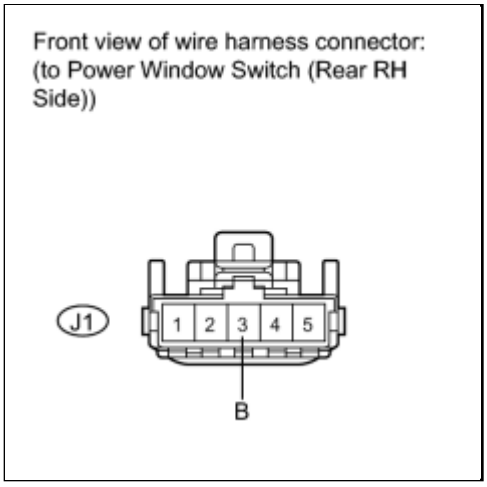

(a) Disconnect the power window switch (rear RH side) connector.

(b) Measure the voltage according to the value(s) in the table below.

Standard Voltage:

TESTER CONNECTION	SWITCH CONDITION	SPECIFIED CONDITION
J1-3 (B) - Body ground	Ignition switch ON	11 to 14 V

NG ▶ **REPAIR OR REPLACE HARNESS OR CONNECTOR**

OK ▼

2.	**INSPECT POWER WINDOW SWITCH (REAR RH SIDE)**

(a) Remove the power window switch INFO .

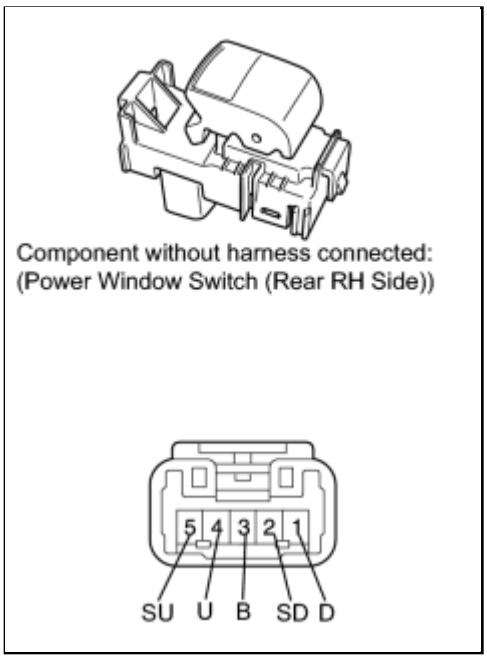

(b) Measure the resistance according to the value(s) in the table below.

Standard Resistance:

TESTER CONNECTION	SWITCH CONDITION	SPECIFIED CONDITION
1 (D) - 2 (SD) 3 (B) - 4 (U)	UP	Below 1 Ω
1 (D) - 2 (SD) 4 (U) - 5 (SU)	OFF	Below 1 Ω
2 (SD) - 3 (B) 4 (U) - 5 (SU)	DOWN	Below 1 Ω

NG ▶ **REPLACE POWER WINDOW SWITCH (REAR RH SIDE)**

OK ▼

3.	**CHECK HARNESS AND CONNECTOR (SWITCH (REAR RH SIDE) - MOTOR (REAR RH SIDE))**

(a) Disconnect the power window regulator motor assembly (rear RH side) connector.

Front view of wire harness connector:
(to Power Window Switch (Rear RH Side))

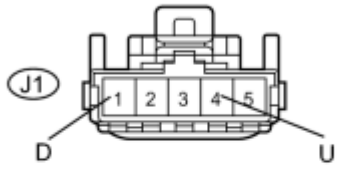

Front view of wire harness connector:
(to Power Window Regulator Motor Assembly (Rear RH Side))

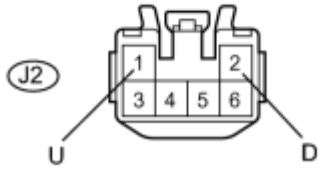

(b) Measure the resistance according to the value(s) in the table below.

Standard Resistance:

TESTER CONNECTION	CONDITION	SPECIFIED CONDITION
J1-4 (U) - J2-1 (U)	Always	Below 1 Ω
J1-1 (D) - J2-2 (D)	Always	Below 1 Ω
J1-4 (U) - Body ground	Always	10 kΩ or higher
J1-1 (D) - Body ground	Always	10 kΩ or higher

NG ▶ **REPAIR OR REPLACE HARNESS OR CONNECTOR**

OK ▼

4.	**INSPECT POWER WINDOW REGULATOR MOTOR ASSEMBLY (REAR RH SIDE)**

(a) Remove the power window regulator motor assembly INFO .

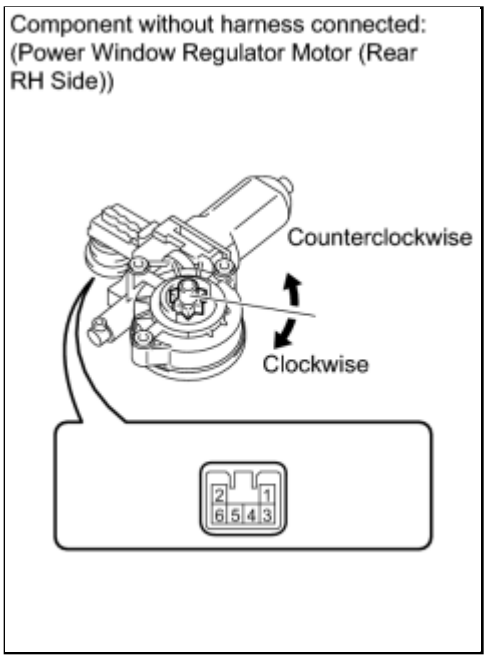

(b) Check power window regulator motor operation:

(1) Apply battery voltage to connector terminals 1 and 2.

NOTICE:

Do not apply battery voltage to any terminals except terminals 1 and 2.

(2) Check that the motor gear rotates smoothly as follows.

OK:

MEASUREMENT CONDITION	SPECIFIED CONDITION
Battery positive (+) → 1 Battery negative (-) → 2	Motor gear rotates counterclockwise
Battery positive (+) → 2 Battery negative (-) → 1	Motor gear rotates clockwise

(c) Check PTC operation:

NOTICE:

This check must be performed with the power window regulator and door glass installed on the vehicle.

(1) Install the power window regulator motor INFO .

(2) Connect an electrical tester DC 400 A probe to the wire harness of terminal 1.

NOTICE:

Match the arrow mark of the probe with the direction of the current flow.

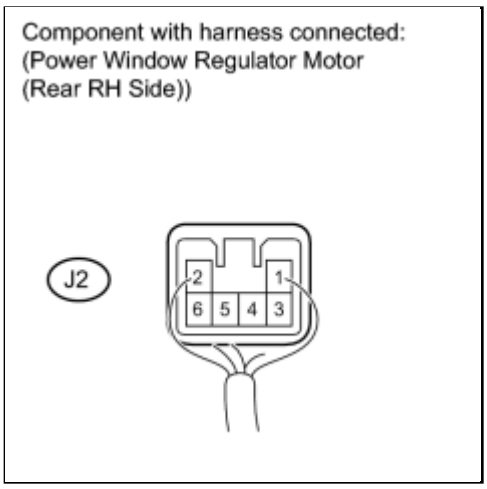

(3) Fully close the door glass by pulling up the power window switch. Wait for approximately 60 seconds.

(4) Continue to pull up the power window switch and measure how long it takes for the electrical current to change from a range of 16 to 28 A to approximately 1 A (current shut-off inspection).

Standard:
4 to 90 seconds

(5) Wait for 60 seconds after the previous step, and then push down the power window switch (rear RH side).

OK:
The rear RH side window goes down.

NG ▶ **REPLACE POWER WINDOW REGULATOR MOTOR ASSEMBLY (REAR RH)**

OK ▼

5.	**CHECK HARNESS AND CONNECTOR (MASTER SWITCH - SWITCH (REAR RH SIDE))**

(a) Disconnect the power window master switch connector.

(b) Disconnect the power window switch (rear RH side) connector.

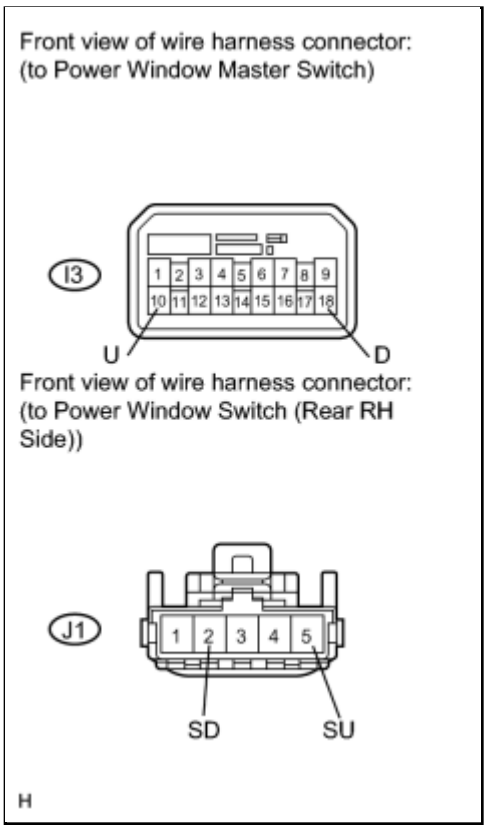

(c) Measure the resistance according to the value(s) in the table below.

Standard Resistance:

TESTER CONNECTION	CONDITION	SPECIFIED CONDITION
I3-10 (U) - J1-5 (SU)	Always	Below 1 Ω
I3-18 (D) - J1-2 (SD)	Always	Below 1 Ω
I3-10 (U) - Body ground	Always	10 kΩ or higher
I3-18 (D) - Body ground	Always	10 kΩ or higher

NG ▶ **REPAIR OR REPLACE HARNESS OR CONNECTOR**

OK ▶ **REPLACE POWER WINDOW MASTER SWITCH**

Last Modified: 3-10-2010	6.4 J	**From:** 200901
Model Year: 2010	**Model:** Corolla	**Doc ID:** RM0000010ZJ022X
Title: WINDOW / GLASS: POWER WINDOW CONTROL SYSTEM: Power Windows do not Operate at All (2010 Corolla)		

Power Windows do not Operate at All

DESCRIPTION

If none of the power windows operate, a malfunction may exist in the power window master switch, main body ECU (instrument panel junction block) or wire harness.

WIRING DIAGRAM

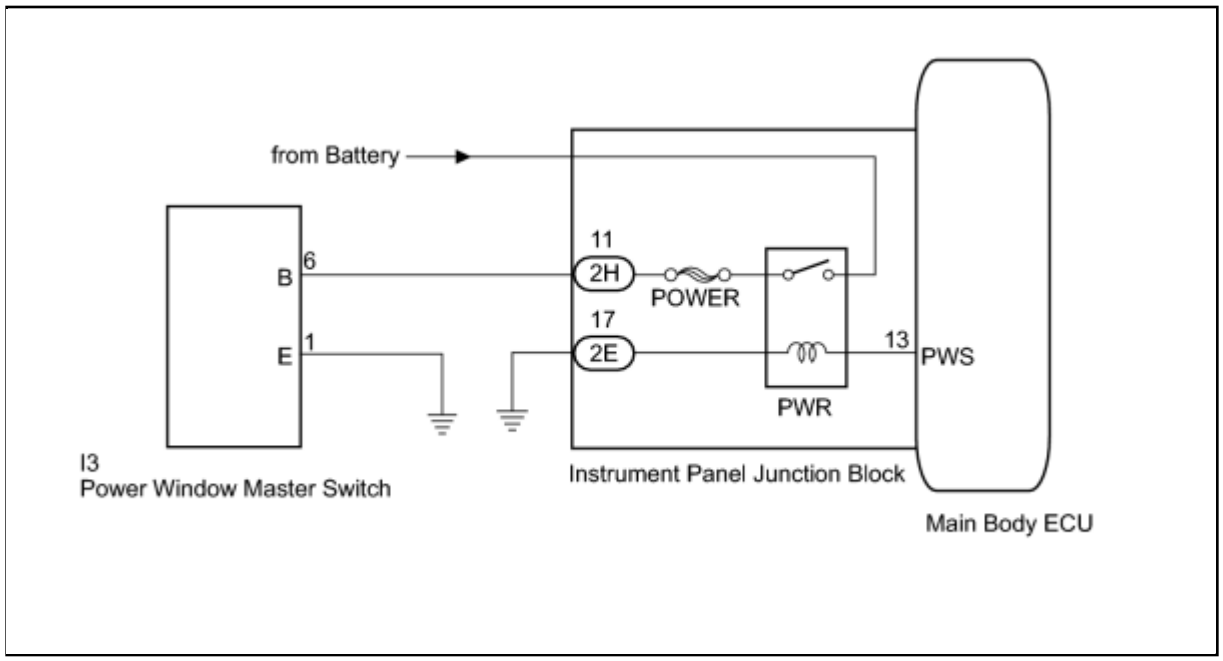

INSPECTION PROCEDURE

PROCEDURE

1.	**CHECK HARNESS AND CONNECTOR (POWER WINDOW POWER SOURCE)**

(a) Disconnect the power window master switch connector.

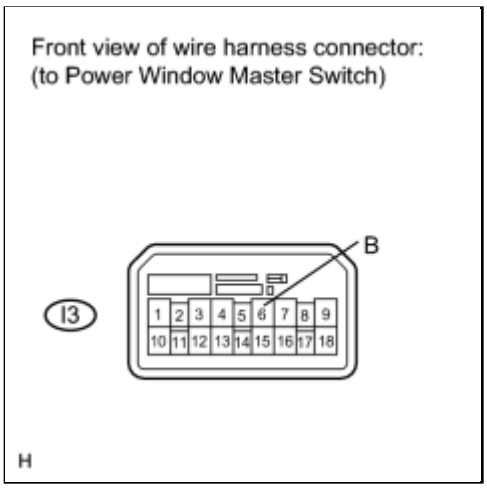

(b) Measure the voltage according to the value(s) table below.

Standard Voltage:

TESTER CONNECTION	SWITCH CONDITION	SPECIFIED CONDITION
I3-6 (B) - Body ground	Ignition switch ON	11 to 14 V

NG ▶ **CHECK HARNESS AND CONNECTOR (MAIN BODY ECU - BODY GROUND)**

OK ▼

2.	**CHECK HARNESS AND CONNECTOR (POWER WINDOW MASTER SWITCH - BODY GROUND)**

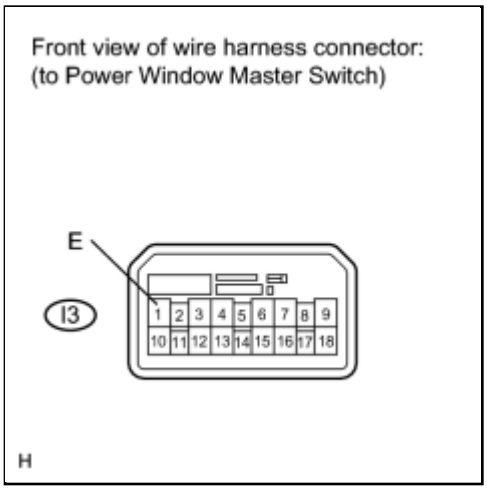

(a) Measure the resistance according to the value(s) in the table below.

Standard Resistance:

TESTER CONNECTION	CONDITION	SPECIFIED CONDITION
I3-1 (E) - Body ground	Always	Below 1 Ω

NG ▶ **REPAIR OR REPLACE HARNESS OR CONNECTOR**

OK ▶ **REPLACE POWER WINDOW MASTER SWITCH**

3.	**CHECK HARNESS AND CONNECTOR (MAIN BODY ECU - BODY GROUND)**

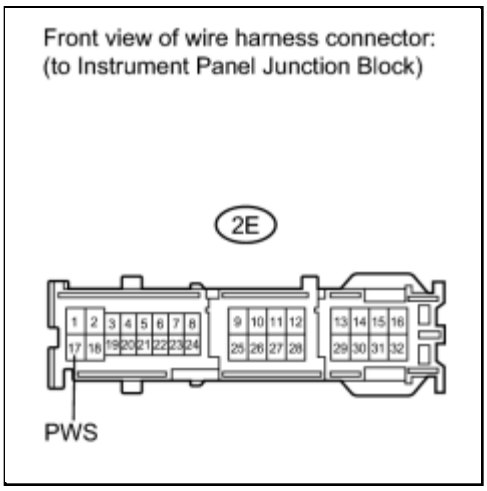

(a) Disconnect the instrument panel junction block connector.

(b) Measure the resistance according to the value(s) in the table below.

Standard Resistance:

TESTER CONNECTION	CONDITION	SPECIFIED CONDITION
2E-17 (PWS) - Body ground	Always	Below 1 Ω

NG ▶ **REPAIR OR REPLACE HARNESS OR CONNECTOR**

OK ▶ **REPLACE MAIN BODY ECU (INSTRUMENT PANEL JUNCTION BLOCK)**

Last Modified: 3-10-2010	6.4 J	**From:** 200901
Model Year: 2010	**Model:** Corolla	**Doc ID:** RM0000014PG01QX
Title: WINDOW / GLASS: POWER WINDOW CONTROL SYSTEM: Key-off Operation Function Operates even if Operating Conditions are not Satisfied (2010 Corolla)		

Key-off Operation Function Operates even if Operating Conditions are not Satisfied

DESCRIPTION

When the driver door has not been opened and closed, each door power window regulator motor can control its power window operation for approximately 45 seconds after the ignition switch is turned from ON to off (the key is removed) by receiving operation permission signals from the main body ECU. However, when approximately 45 seconds have elapsed, or the driver door or front passenger side door is opened within approximately 45 seconds of the ignition switch being turned off (the key is removed), the power window regulator motor stops operating.

INSPECTION PROCEDURE

PROCEDURE

1.	**CHECK OPERATION FUNCTION AFTER IGNITION SWITCH IS TURNED OFF**

(a) Check the power window operation function after the ignition switch is turned off.

Result

STATUS	PROCEED TO
When power window can still be operated even after approximately 45 seconds have elapsed after ignition switch is turned off	A
When power window can still be operated even after opening driver door or front passenger door within approximately 45 seconds of ignition switch being turned off	B

A ▶ **REPLACE MAIN BODY ECU (INSTRUMENT PANEL JUNCTION BLOCK)**

B ▼

2.	**CHECK LIGHTING SYSTEM (ILLUMINATED ENTRY SYSTEM)**

(a) Check the lighting system (illuminated entry system) operates normally.

HINT:

The illuminated entry system provides convenience when getting in or out of the vehicle at night. This system controls the interior light.

Both the key off operation function and lighting system (illuminated entry system) use same door courtesy switch signal.

OK:
Illuminated entry system function operates normally.

NG ▶ **GO TO LIGHTING SYSTEM (Door Courtesy Switch Circuit)**

OK ▶ **REPLACE MAIN BODY ECU (INSTRUMENT PANEL JUNCTION BLOCK)**

Last Modified: 3-10-2010	6.4 K	**From:** 200901
Model Year: 2010	**Model:** Corolla	**Doc ID:** RM000002I2P00WX
Title: WINDOW / GLASS: POWER WINDOW MASTER SWITCH: COMPONENTS (2010 Corolla)		

COMPONENTS

ILLUSTRATION

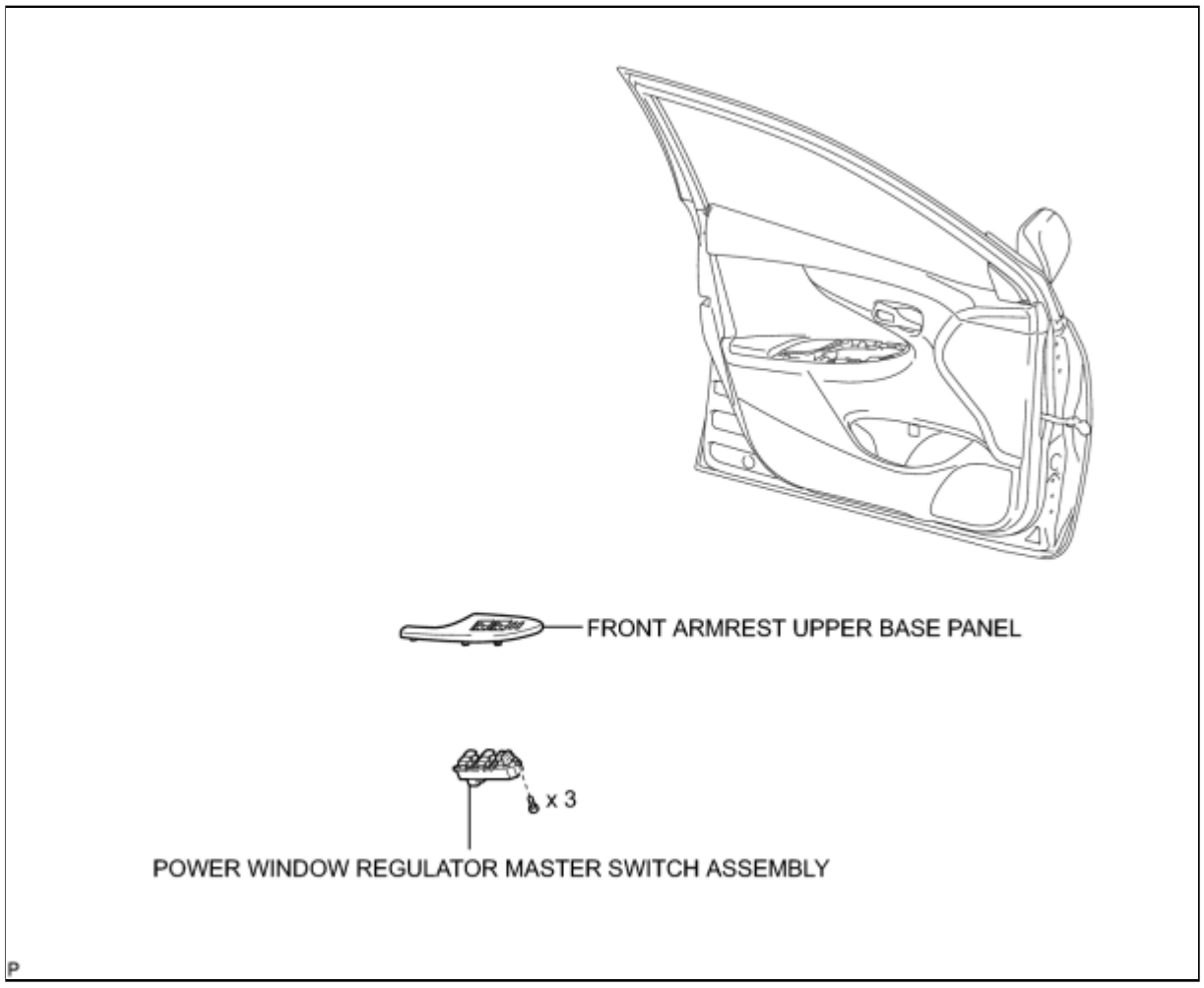

Last Modified: 3-10-2010	6.4 A	**From:** 200901
Model Year: 2010	**Model:** Corolla	**Doc ID:** RM000002AC903RX
Title: WINDOW / GLASS: POWER WINDOW MASTER SWITCH: REMOVAL (2010 Corolla)		

REMOVAL

1. REMOVE FRONT ARMREST UPPER BASE PANEL INFO

2. REMOVE POWER WINDOW REGULATOR MASTER SWITCH ASSEMBLY INFO

Last Modified: 3-10-2010	6.4 G	**From:** 200901
Model Year: 2010	**Model:** Corolla	**Doc ID:** RM000000WSX016X
Title: WINDOW / GLASS: POWER WINDOW MASTER SWITCH: INSPECTION (2010 Corolla)		

INSPECTION

1. INSPECT POWER WINDOW MASTER SWITCH ASSEMBLY

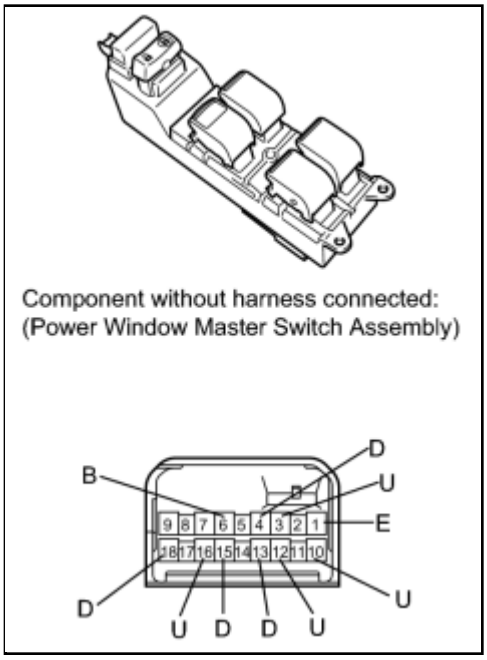

(a) Measure the resistance according to the value(s) in the table below.

Standard Resistance:

TESTER CONNECTION	SWITCH CONDITION	SPECIFIED CONDITION
1 (E) - 4 (D) 3 (U) - 6 (B)	UP (Driver side)	Below 1 Ω
1 (E) - 3 (U) 6 (B) - 4 (D)	DOWN (Driver side)	Below 1 Ω
1 (E) - 3 (U) 6 (B) - 4 (D)	AUTO DOWN (Driver side)	Below 1 Ω
6 (B) - 16 (U) 15 (D) - 1 (E)	UP (Passenger side)	Below 1 Ω
6 (B) - 15 (D) 16 (U) - 1 (E)	DOWN (Passenger side)	Below 1 Ω
6 (B) - 12 (U) 13 (D) - 1 (E)	UP (Rear LH)	Below 1 Ω
6 (B) - 13 (D) 12 (U) - 1 (E)	DOWN (Rear LH)	Below 1 Ω
6 (B) - 10 (U) 18 (D) - 1 (E)	UP (Rear RH)	Below 1 Ω
6 (B) - 18 (D) 10 (U) - 1 (E)	DOWN (Rear RH)	Below 1 Ω

If the result is not as specified, replace the power window master switch assembly.

Last Modified: 3-10-2010	6.4 A	**From:** 200901
Model Year: 2010	**Model:** Corolla	**Doc ID:** RM000002AC803RX
Title: WINDOW / GLASS: POWER WINDOW MASTER SWITCH: INSTALLATION (2010 Corolla)		

INSTALLATION

1. **INSTALL POWER WINDOW REGULATOR MASTER SWITCH ASSEMBLY** INFO

2. **INSTALL FRONT ARMREST UPPER BASE PANEL** INFO

Last Modified: 3-10-2010	6.4 K	**From:** 200901
Model Year: 2010	**Model:** Corolla	**Doc ID:** RM000002YF100RX
Title: WINDOW / GLASS: POWER WINDOW REGULATOR MOTOR (for Front Door): COMPONENTS (2010 Corolla)		

COMPONENTS

ILLUSTRATION

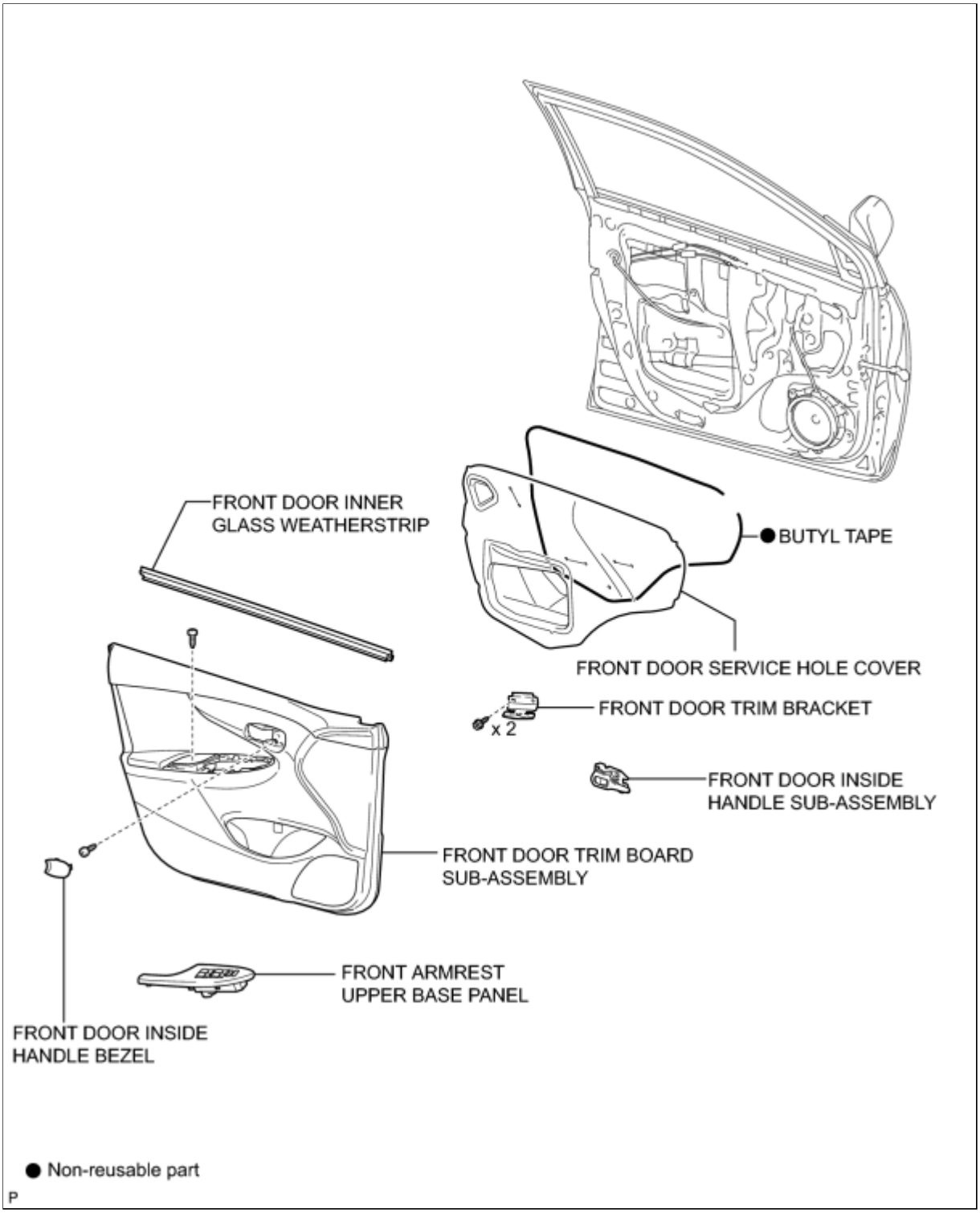

ILLUSTRATION

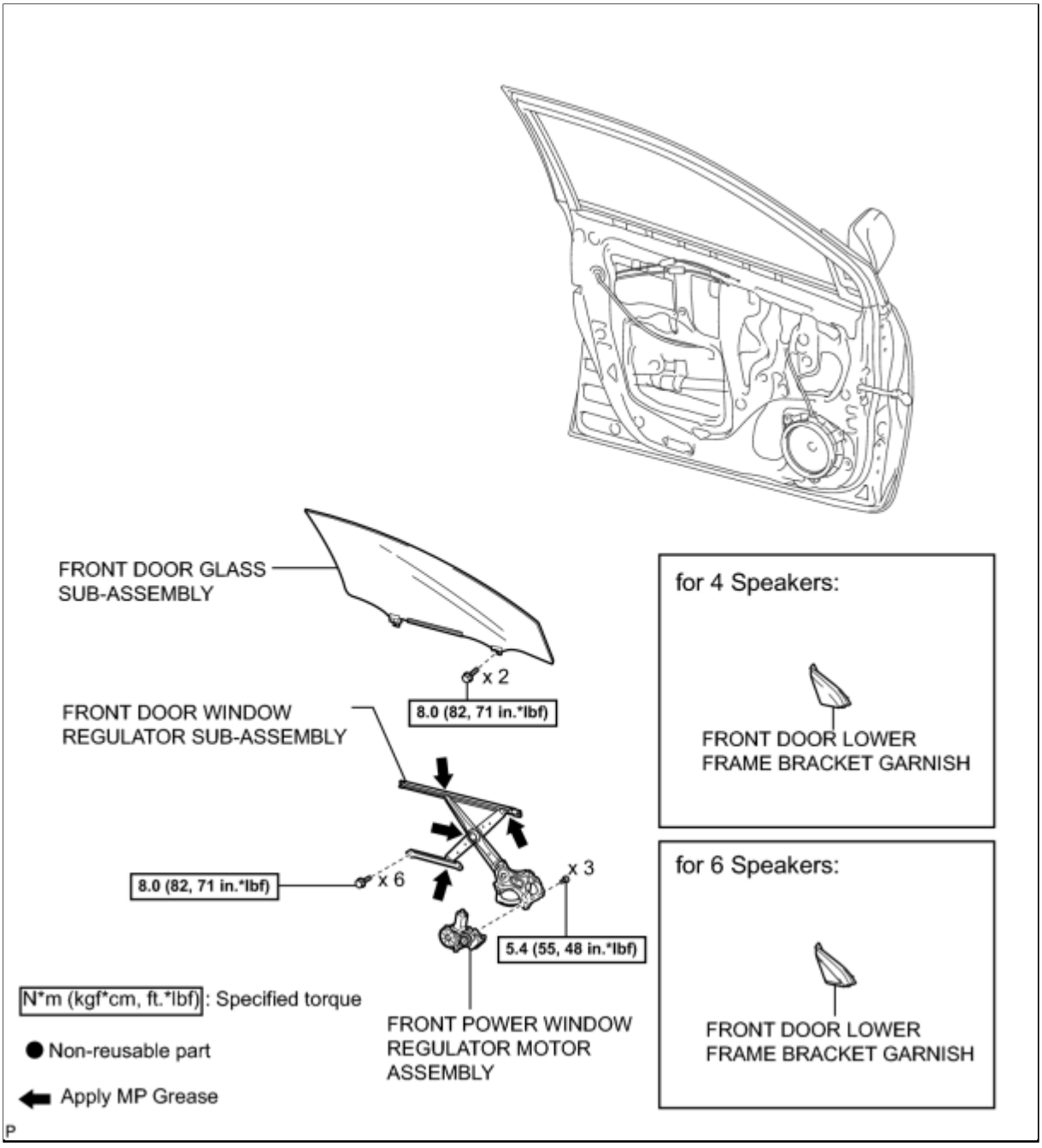
FRONT DOOR GLASS SUB-ASSEMBLY
x 2
8.0 (82, 71 in.*lbf)
FRONT DOOR WINDOW REGULATOR SUB-ASSEMBLY
8.0 (82, 71 in.*lbf)
x 6
x 3
5.4 (55, 48 in.*lbf)
FRONT POWER WINDOW REGULATOR MOTOR ASSEMBLY
for 4 Speakers:
FRONT DOOR LOWER FRAME BRACKET GARNISH
for 6 Speakers:
FRONT DOOR LOWER FRAME BRACKET GARNISH
N*m (kgf*cm, ft.*lbf): Specified torque
Non-reusable part
Apply MP Grease
P

Last Modified: 3-10-2010	6.4 G	**From:** 200901
Model Year: 2010	**Model:** Corolla	**Doc ID:** RM000001HZC02CX
Title: WINDOW / GLASS: POWER WINDOW REGULATOR MOTOR (for Front Door): ON-VEHICLE INSPECTION (2010 Corolla)		

ON-VEHICLE INSPECTION

1. INSPECT FRONT POWER WINDOW REGULATOR MOTOR ASSEMBLY LH

(a) Inspect the operation of the PTC inside the power window regulator motor.

NOTICE:

This check must be performed with the power window regulator and door glass installed on the vehicle.

(1) Connect an electrical tester DC 400 A probe to the wire harness of terminal 2.

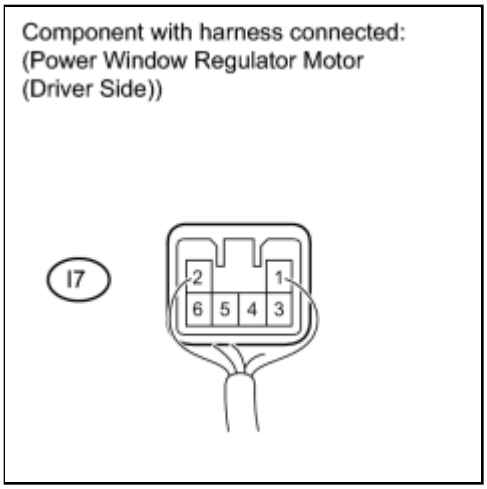

NOTICE:

Match the arrow mark of the probe with the direction of the current flow.

(2) Fully close the door glass by pulling up the power window switch. Wait for approximately 60 seconds.

(3) Continue to pull up the power window switch and measure how long it takes for the electrical current to change from a range of 16 to 28 A to approximately 1 A (current shut-off inspection).

Standard:

4 to 90 seconds

If the result is not as specified, replace the front power window regulator motor assembly LH.

(4) Wait for 60 seconds after the previous step, and then push down press the power window switch (driver side).

OK:

The driver side window goes down.

If the result is not as specified, replace the front power window regulator motor assembly LH.

2. INSPECT FRONT POWER WINDOW REGULATOR MOTOR ASSEMBLY RH

(a) Inspect the operation of the PTC inside the power window regulator motor.

NOTICE:

This check must be performed with the power window regulator and door glass installed on the vehicle.

(1) Connect an electrical tester DC 400 A probe to the wire harness of terminal 2.

NOTICE:

Match the arrow mark of the probe with the direction of the current flow.

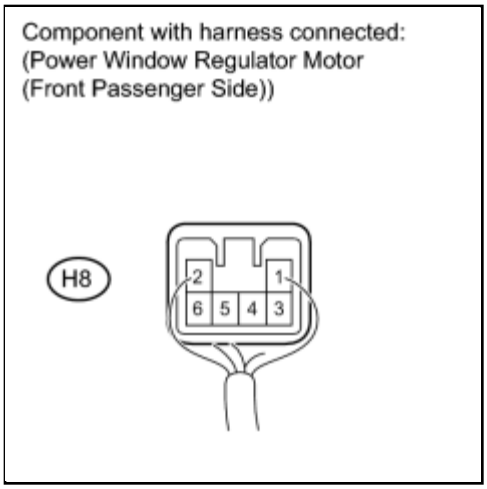

(2) Fully close the door glass by pulling up the power window switch. Wait for approximately 60 seconds.

(3) Continue to pull up the power window switch and measure how long it takes for the electrical current to change from a range of 16 to 28 A to approximately 1 A (current shut-off inspection).

Standard:

4 to 90 seconds

If the result is not as specified, replace the front power window regulator motor assembly RH.

(4) Wait for 60 seconds after the previous step, and then push down the power window switch (front passenger side).

OK:

The front passenger side window goes down.

If the result is not as specified, replace the front power window regulator motor assembly RH.

Last Modified: 3-10-2010	6.4 A	**From:** 200901
Model Year: 2010	**Model:** Corolla	**Doc ID:** RM000002YF200RX
Title: WINDOW / GLASS: POWER WINDOW REGULATOR MOTOR (for Front Door): REMOVAL (2010 Corolla)		

REMOVAL

1. **DISCONNECT CABLE FROM NEGATIVE BATTERY TERMINAL**
2. **REMOVE FRONT DOOR INSIDE HANDLE BEZEL** INFO
3. **REMOVE FRONT ARMREST UPPER BASE PANEL** INFO
4. **REMOVE FRONT DOOR TRIM BOARD SUB-ASSEMBLY** INFO
5. **REMOVE FRONT DOOR INSIDE HANDLE SUB-ASSEMBLY** INFO
6. **REMOVE FRONT DOOR LOWER FRAME BRACKET GARNISH (w/o Front No. 2 Speaker)** INFO
7. **REMOVE FRONT DOOR LOWER FRAME BRACKET GARNISH (w/ Front No. 2 Speaker)** INFO
8. **REMOVE FRONT DOOR INNER GLASS WEATHERSTRIP** INFO
9. **REMOVE FRONT DOOR TRIM BRACKET** INFO
10. **REMOVE FRONT DOOR SERVICE HOLE COVER** INFO
11. **REMOVE FRONT DOOR GLASS SUB-ASSEMBLY** INFO
12. **REMOVE FRONT DOOR WINDOW REGULATOR SUB-ASSEMBLY** INFO
13. **REMOVE FRONT POWER WINDOW REGULATOR MOTOR ASSEMBLY** INFO

Last Modified: 3-10-2010	6.4 G	**From:** 200901
Model Year: 2010	**Model:** Corolla	**Doc ID:** RM0000014 5I02VX
Title: WINDOW / GLASS: POWER WINDOW REGULATOR MOTOR (for Front Door): INSPECTION (2010 Corolla)		

INSPECTION

1. INSPECT FRONT POWER WINDOW REGULATOR MOTOR ASSEMBLY LH

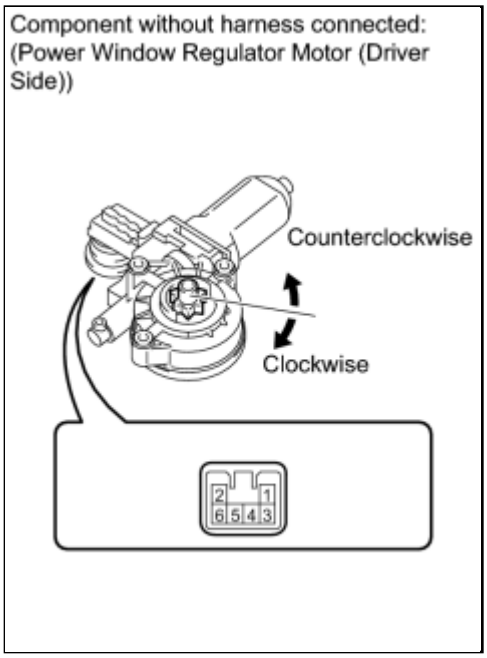

(a) Apply battery voltage to connector terminals 1 and 2.

NOTICE:

Do not apply battery voltage to any terminals except terminals 1 and 2.

(b) Check that the motor gear rotates smoothly as follows.

OK:

MEASUREMENT CONDITION	SPECIFIED CONDITION
Battery positive (+) → Terminal 1 Battery negative (-) → Terminal 2	Motor gear rotates counterclockwise
Battery positive (+) → Terminal 2 Battery negative (-) → Terminal 1	Motor gear rotates clockwise

If the result is not specified, replace the front power window regulator motor assembly LH.

2. INSPECT FRONT POWER WINDOW REGULATOR MOTOR ASSEMBLY RH

(a) Apply battery voltage to connector terminals 1 and 2.

NOTICE:

Do not apply battery voltage to any terminals except terminals 1 and 2.

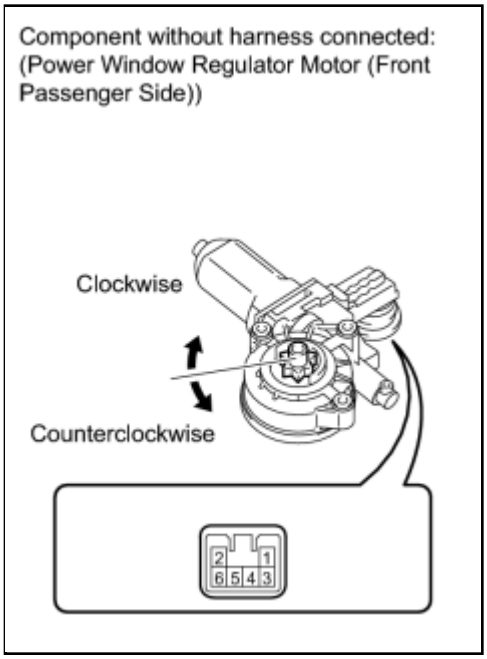

(b) Check that the motor gear rotates smoothly as follows.

OK:

MEASUREMENT CONDITION	SPECIFIED CONDITION
Battery positive (+) → Terminal 1 Battery negative (-) → Terminal 2	Motor gear rotates counterclockwise
Battery positive (+) → Terminal 2 Battery negative (-) → Terminal 1	Motor gear rotates clockwise

If the result is not specified, replace the front power window regulator motor assembly RH.

Last Modified: 3-10-2010	6.4 A	**From:** 200901
Model Year: 2010	**Model:** Corolla	**Doc ID:** RM000002YF000RX
Title: WINDOW / GLASS: POWER WINDOW REGULATOR MOTOR (for Front Door): INSTALLATION (2010 Corolla)		

INSTALLATION

1. INSTALL FRONT POWER WINDOW REGULATOR MOTOR ASSEMBLY INFO

2. INSTALL FRONT DOOR WINDOW REGULATOR SUB-ASSEMBLY INFO

3. INSTALL FRONT DOOR GLASS SUB-ASSEMBLY INFO

4. INSTALL FRONT DOOR SERVICE HOLE COVER INFO

5. INSTALL FRONT DOOR TRIM BRACKET INFO

6. INSTALL FRONT DOOR INNER GLASS WEATHERSTRIP INFO

7. INSTALL FRONT DOOR LOWER FRAME BRACKET GARNISH (w/o Front No. 2 Speaker) INFO

8. INSTALL FRONT DOOR LOWER FRAME BRACKET GARNISH (w/ Front No. 2 Speaker) INFO

9. INSTALL FRONT DOOR INSIDE HANDLE SUB-ASSEMBLY INFO

10. INSTALL FRONT DOOR TRIM BOARD SUB-ASSEMBLY INFO

11. INSTALL FRONT ARMREST UPPER BASE PANEL INFO

12. INSTALL FRONT DOOR INSIDE HANDLE BEZEL INFO

13. CONNECT CABLE TO NEGATIVE BATTERY TERMINAL

Last Modified: 3-10-2010	6.4 K	**From:** 200901
Model Year: 2010	**Model:** Corolla	**Doc ID:** RM000002YF100SX
Title: WINDOW / GLASS: POWER WINDOW REGULATOR MOTOR (for Rear Door): COMPONENTS (2010 Corolla)		

COMPONENTS

ILLUSTRATION

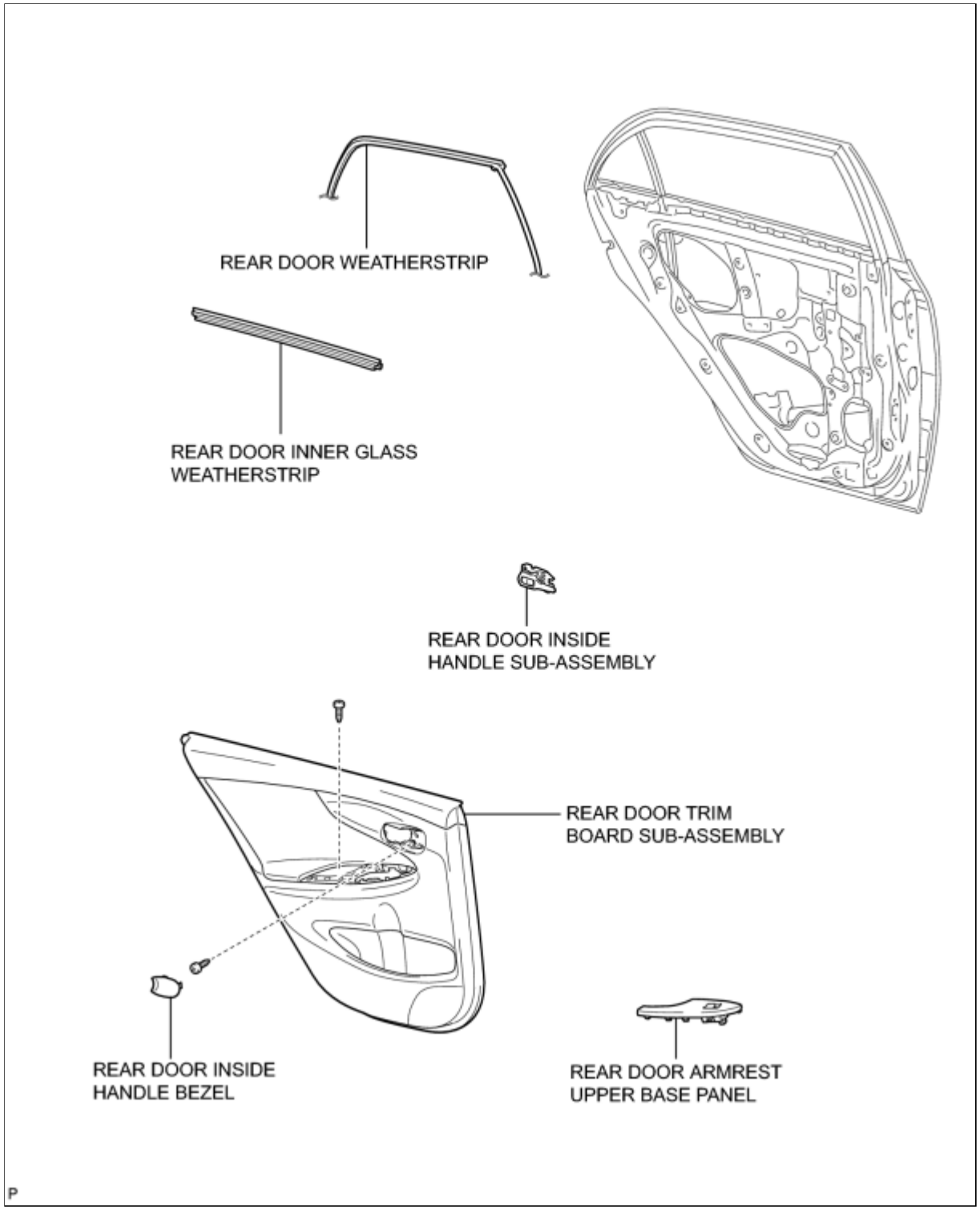

ILLUSTRATION

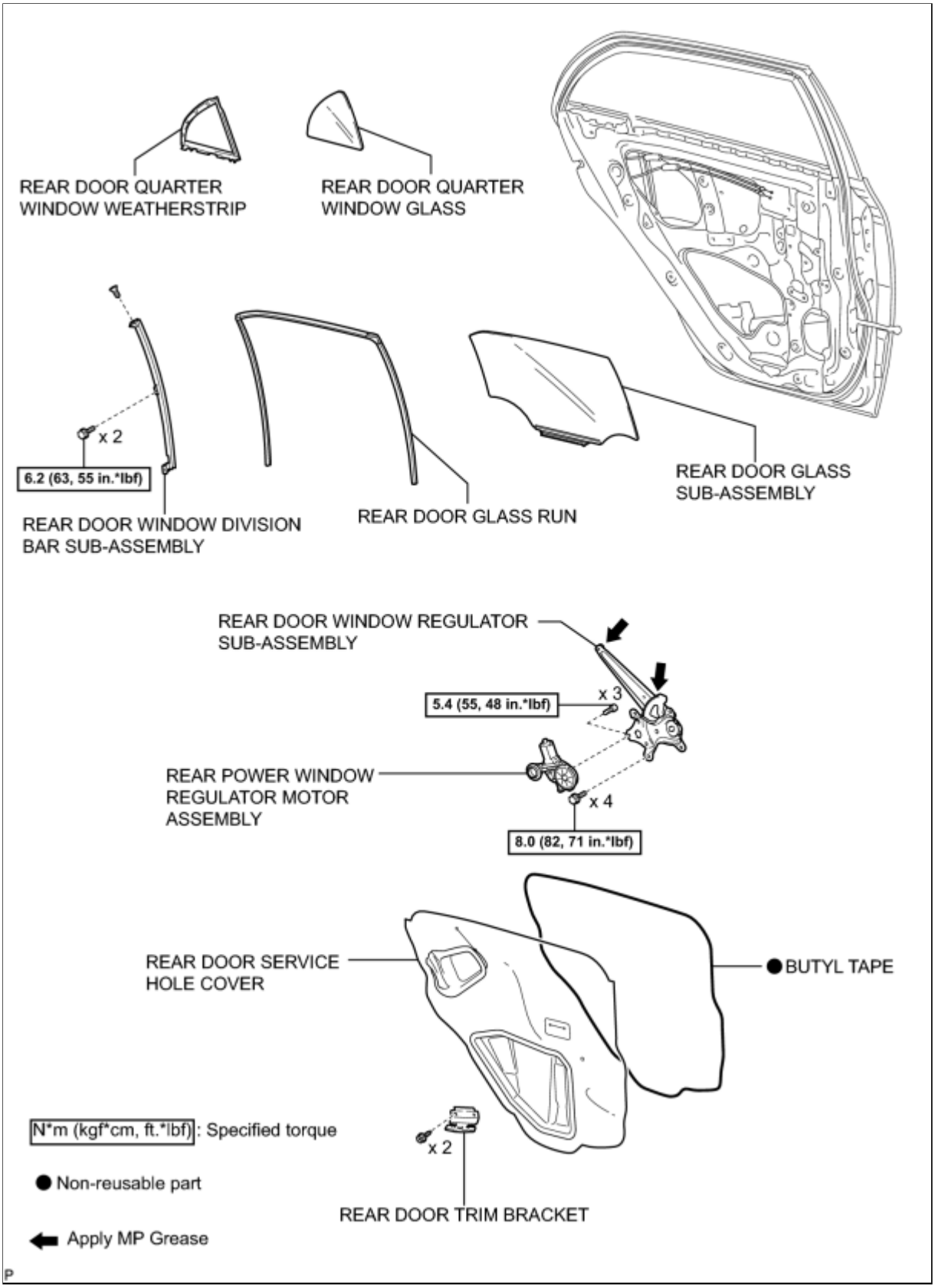
REAR DOOR QUARTER WINDOW WEATHERSTRIP
REAR DOOR QUARTER WINDOW GLASS
x 2
6.2 (63, 55 in.*lbf)
REAR DOOR WINDOW DIVISION BAR SUB-ASSEMBLY
REAR DOOR GLASS RUN
REAR DOOR GLASS SUB-ASSEMBLY
REAR DOOR WINDOW REGULATOR SUB-ASSEMBLY
5.4 (55, 48 in.*lbf)
x 3
REAR POWER WINDOW REGULATOR MOTOR ASSEMBLY
x 4
8.0 (82, 71 in.*lbf)
REAR DOOR SERVICE HOLE COVER
BUTYL TAPE
x 2
REAR DOOR TRIM BRACKET
N*m (kgf*cm, ft.*lbf): Specified torque
Non-reusable part
Apply MP Grease

Last Modified: 3-10-2010	6.4 G	**From:** 200901
Model Year: 2010	**Model:** Corolla	**Doc ID:** RM000001HZC02DX
Title: WINDOW / GLASS: POWER WINDOW REGULATOR MOTOR (for Rear Door): ON-VEHICLE INSPECTION (2010 Corolla)		

ON-VEHICLE INSPECTION

1. INSPECT REAR POWER WINDOW REGULATOR MOTOR ASSEMBLY LH

(a) Inspect the operation of the PTC inside the power window regulator motor.

NOTICE:

The work must be performed with the power window regulator and door glass installed on the vehicle.

(1) Connect an electrical tester DC 400 A probe to the wire harness of terminal 1.

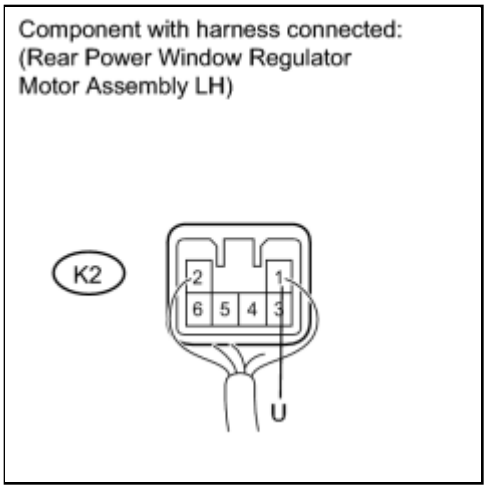

NOTICE:

Match the arrow mark of the probe with the direction of the current flow.

(2) Fully close the door glass by pressing the power window UP switch. Wait for approximately 60 seconds.

(3) Continue to press the power window UP switch and measure how long it takes for the electrical current to change from a range of 16 to 28 A to approximately 1 A (Inspection of current shut-off).

Standard:

4 to 90 seconds

If the result is not as specified, replace the rear power window regulator motor assembly LH.

(4) 60 seconds after the previous step, press the power window DOWN switch (rear LH side).

OK:

The rear LH side window goes down.

If the result is not as specified, replace the rear power window regulator motor assembly LH.

2. INSPECT REAR POWER WINDOW REGULATOR MOTOR ASSEMBLY RH

(a) Inspect the operation of the PTC inside the power window regulator motor.

NOTICE:

The work must be performed with the power window regulator and door glass installed on the vehicle.

(1) Connect an electrical tester DC 400 A probe to the wire harness of terminal 1.

NOTICE:

Match the arrow mark of the probe with the direction of the current flow.

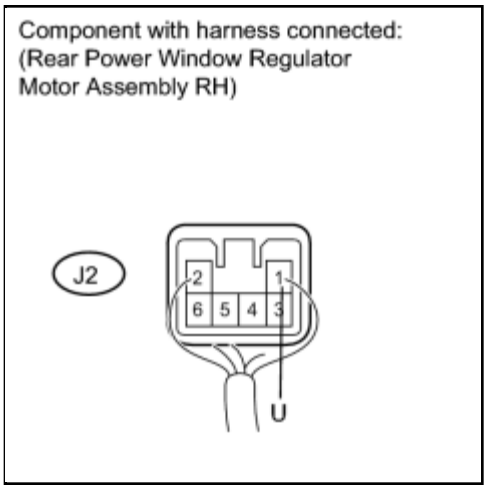

(2) Fully close the door glass by pressing the power window UP switch. Wait for approximately 60 seconds.

(3) Continue to press the power window UP switch and measure how long it takes for the electrical current to change from a range of 16 to 28 A to approximately 1 A (Inspection of current shut-off).

Standard:

4 to 90 seconds

If the result is not as specified, replace the rear power window regulator motor assembly RH.

(4) 60 seconds after the previous step, press the power window DOWN switch (rear RH side).

OK:

The rear RH side window goes down.

If the result is not as specified, replace the rear power window regulator motor assembly RH.

Last Modified: 3-10-2010	6.4 A	**From:** 200901
Model Year: 2010	**Model:** Corolla	**Doc ID:** RM000002YF200SX
Title: WINDOW / GLASS: POWER WINDOW REGULATOR MOTOR (for Rear Door): REMOVAL (2010 Corolla)		

REMOVAL

1. DISCONNECT CABLE FROM NEGATIVE BATTERY TERMINAL

2. REMOVE REAR DOOR INSIDE HANDLE BEZEL INFO

3. REMOVE REAR DOOR ARMREST UPPER BASE PANEL INFO

4. REMOVE REAR DOOR TRIM BOARD SUB-ASSEMBLY INFO

5. REMOVE REAR DOOR INSIDE HANDLE SUB-ASSEMBLY INFO

6. REMOVE REAR DOOR INNER GLASS WEATHERSTRIP INFO

7. REMOVE REAR DOOR TRIM BRACKET INFO

8. REMOVE REAR DOOR SERVICE HOLE COVER INFO

9. REMOVE REAR DOOR WEATHERSTRIP

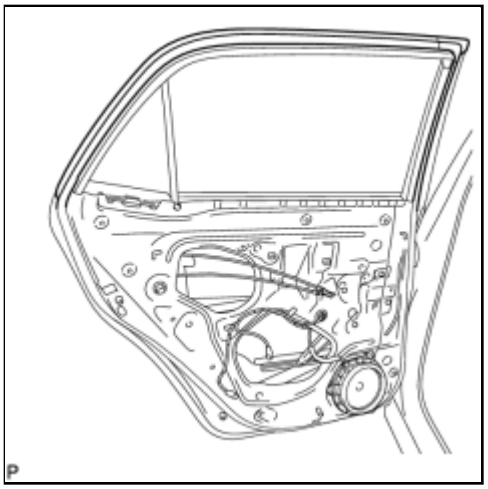

(a) Remove the upper part of the rear door weatherstrip to the extent that allows.

10. REMOVE REAR DOOR GLASS RUN INFO

11. REMOVE REAR DOOR WINDOW DIVISION BAR SUB-ASSEMBLY INFO

12. REMOVE REAR DOOR QUARTER WINDOW GLASS INFO

13. REMOVE REAR DOOR GLASS SUB-ASSEMBLY INFO

14. REMOVE REAR DOOR WINDOW REGULATOR SUB-ASSEMBLY INFO

15. REMOVE REAR POWER WINDOW REGULATOR MOTOR ASSEMBLY INFO

Last Modified: 3-10-2010	6.4 G	**From:** 200901
Model Year: 2010	**Model:** Corolla	**Doc ID:** RM0000014 5I02WX
Title: WINDOW / GLASS: POWER WINDOW REGULATOR MOTOR (for Rear Door): INSPECTION (2010 Corolla)		

INSPECTION

1. INSPECT REAR POWER WINDOW REGULATOR MOTOR ASSEMBLY LH

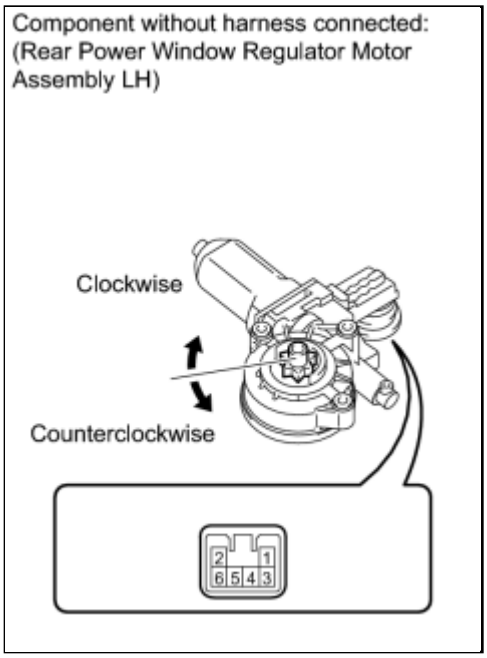

(a) Apply battery voltage to connector terminals 1 and 2.

NOTICE:

Do not apply battery voltage to any terminals except terminals 1 and 2.

(b) Check that the motor gear rotates smoothly as follows.

OK:

MEASUREMENT CONDITION	SPECIFIED CONDITION
Battery negative (+) → Terminal 1 Battery positive (-) → Terminal 2	Motor gear rotates clockwise
Battery negative (+) → Terminal 2 Battery positive (-) → Terminal 1	Motor gear rotates counterclockwise

If the result is not specified, replace the rear power window regulator motor assembly LH.

2. INSPECT REAR POWER WINDOW REGULATOR MOTOR ASSEMBLY RH

(a) Apply battery voltage to connector terminals 1 and 2.

NOTICE:

Do not apply battery voltage to any terminals except terminals 1 and 2.

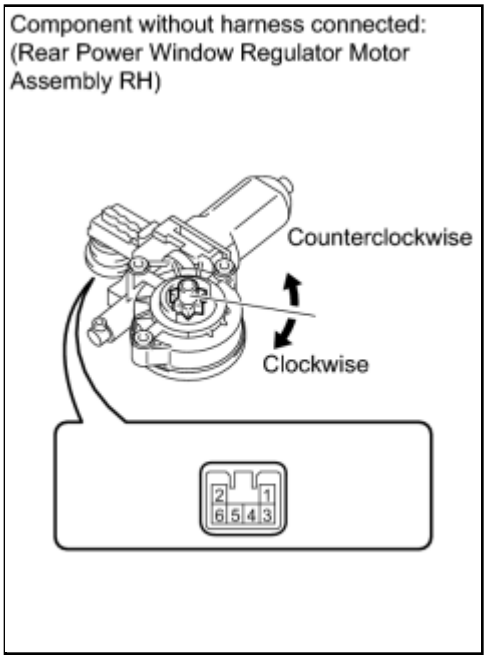

(b) Check that the motor gear rotates smoothly as follows.

OK:

MEASUREMENT CONDITION	SPECIFIED CONDITION
Battery negative (+) → Terminal 1 Battery positive (-) → Terminal 2	Motor gear rotates counterclockwise
Battery negative (+) → Terminal 2 Battery positive (-) → Terminal 1	Motor gear rotates clockwise

If the result is not specified, replace the rear power window regulator motor assembly RH.

Last Modified: 3-10-2010	6.4 A	**From:** 200901
Model Year: 2010	**Model:** Corolla	**Doc ID:** RM000002YF000SX
Title: WINDOW / GLASS: POWER WINDOW REGULATOR MOTOR (for Rear Door): INSTALLATION (2010 Corolla)		

INSTALLATION

1. INSTALL REAR POWER WINDOW REGULATOR MOTOR ASSEMBLY INFO

2. INSTALL REAR DOOR WINDOW REGULATOR SUB-ASSEMBLY INFO

3. INSTALL REAR DOOR GLASS RUN INFO

4. INSTALL REAR DOOR GLASS SUB-ASSEMBLY INFO

5. INSTALL REAR DOOR QUARTER WINDOW GLASS INFO

6. INSTALL REAR DOOR WINDOW DIVISION BAR SUB-ASSEMBLY INFO

7. INSTALL REAR DOOR WEATHERSTRIP

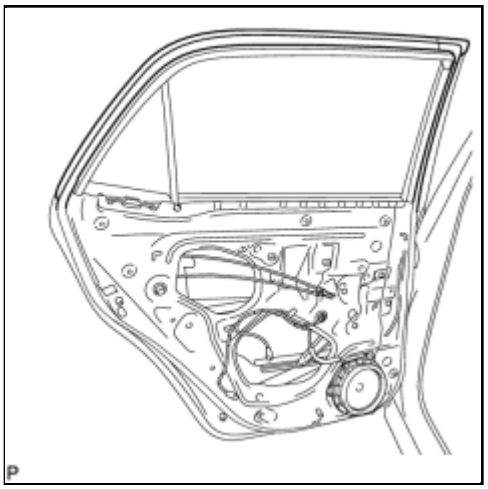

(a) Install the rear door weatherstrip.

8. INSTALL REAR DOOR SERVICE HOLE COVER INFO

9. INSTALL REAR DOOR TRIM BRACKET INFO

10. INSTALL REAR DOOR INNER GLASS WEATHERSTRIP INFO

11. INSTALL REAR DOOR INSIDE HANDLE SUB-ASSEMBLY INFO

12. INSTALL REAR DOOR TRIM BOARD SUB-ASSEMBLY INFO

13. INSTALL REAR DOOR ARMREST UPPER BASE PANEL INFO

14. INSTALL REAR DOOR INSIDE HANDLE BEZEL INFO

15. CONNECT CABLE TO NEGATIVE BATTERY TERMINAL



Last Modified: 3-10-2010	6.4 K	**From:** 200901
Model Year: 2010	**Model:** Corolla	**Doc ID:** RM000002XXC00DX
Title: WINDOW / GLASS: REAR POWER WINDOW SWITCH: COMPONENTS (2010 Corolla)		

COMPONENTS

ILLUSTRATION

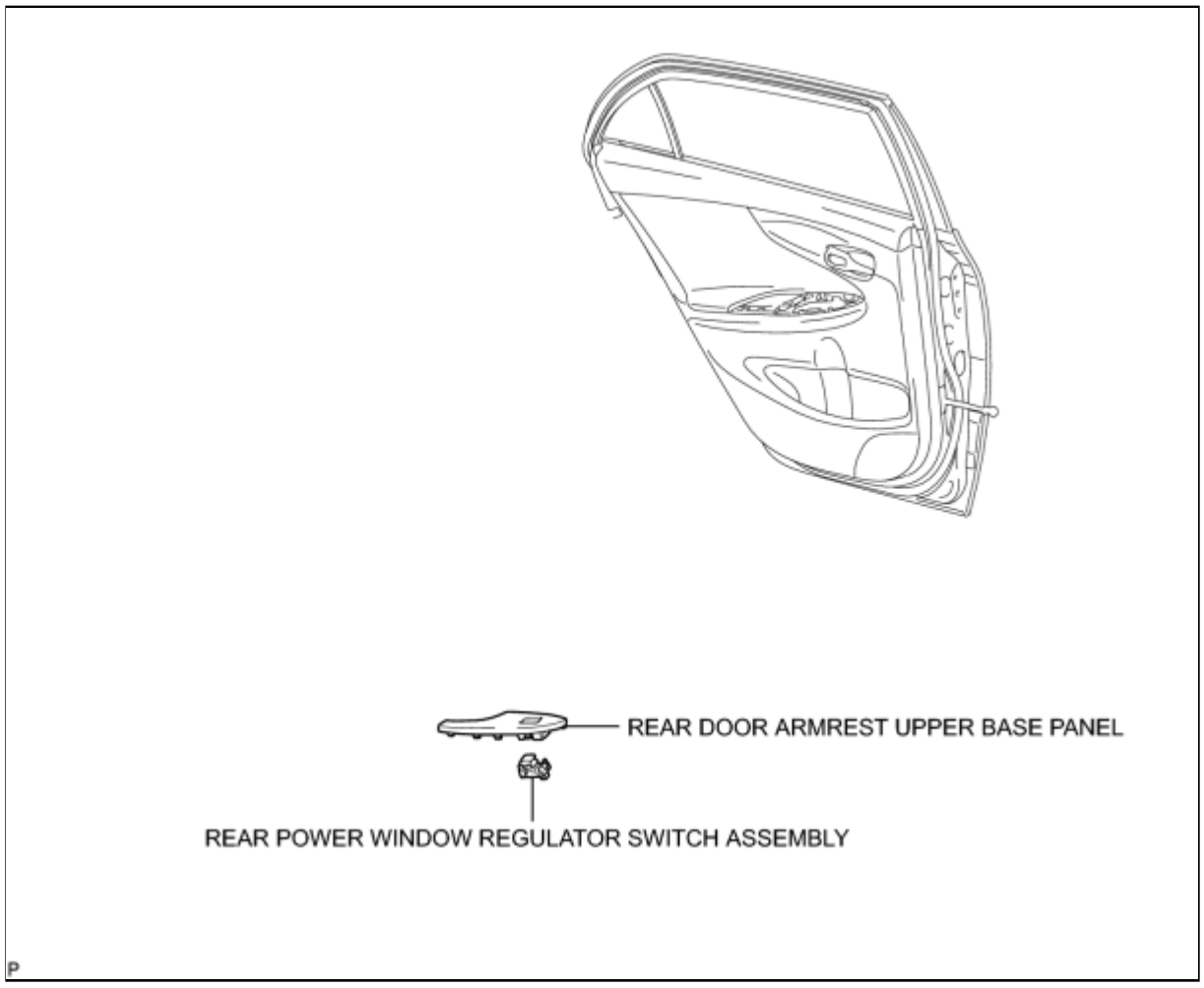

Last Modified: 3-10-2010	6.4 G	**From:** 200901
Model Year: 2010	**Model:** Corolla	**Doc ID:** RM0000013O5029X
Title: WINDOW / GLASS: REAR POWER WINDOW SWITCH: INSPECTION (2010 Corolla)		

INSPECTION

1. INSPECT REAR POWER WINDOW SWITCH ASSEMBLY

(a) for Rear LH Side:

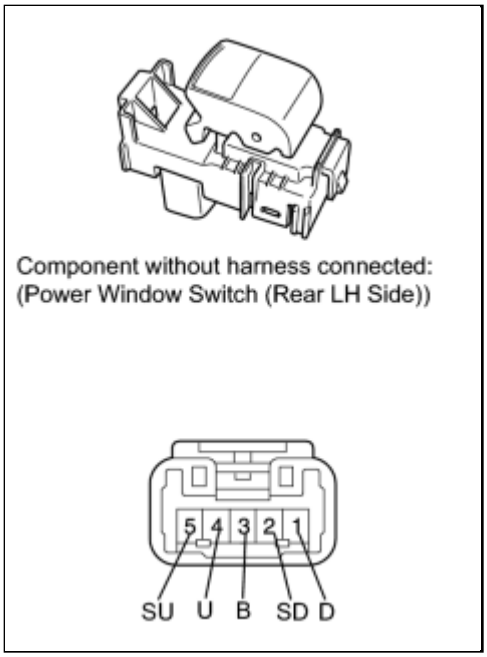

(1) Measure the resistance when the switch is operated according to the value(s) in the table below.

Standard Resistance:

TESTER CONNECTION	SWITCH CONDITION	SPECIFIED CONDITION
1 (D) - 2 (SD) 3 (B) - 4 (U)	UP	Below 1 Ω
1 (D) - 2 (SD) 4 (U) - 5 (SU)	OFF	Below 1 Ω
2 (SD) - 3 (B) 4 (U) - 5 (SU)	DOWN	Below 1 Ω

If the result is not specified, replace the rear power window switch assembly.

(b) for Rear RH Side:

(1) Measure the resistance when the switch is operated according to the value(s) in the table below.

Standard Resistance:

TESTER CONNECTION	SWITCH CONDITION	SPECIFIED CONDITION
1 (D) - 2 (SD) 3 (B) - 4 (U)	UP	Below 1 Ω
1 (D) - 2 (SD) 4 (U) - 5 (SU)	OFF	Below 1 Ω
2 (SD) - 3 (B) 4 (U) - 5 (SU)	DOWN	Below 1 Ω

If the result is not specified, replace the rear power



Component without harness connected:
(Power Window Switch (Rear RH Side))

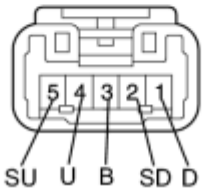

window switch assembly.

Last Modified: 3-10-2010	6.4 A	**From:** 200901
Model Year: 2010	**Model:** Corolla	**Doc ID:** RM000002XXD00DX
Title: WINDOW / GLASS: REAR POWER WINDOW SWITCH: REMOVAL (2010 Corolla)		

REMOVAL

1. REMOVE REAR DOOR ARMREST UPPER BASE PANEL INFO

2. REMOVE REAR POWER WINDOW REGULATOR SWITCH ASSEMBLY INFO

Last Modified: 3-10-2010	6.4 A	**From:** 200901
Model Year: 2010	**Model:** Corolla	**Doc ID:** RM000002XXB00DX
Title: WINDOW / GLASS: REAR POWER WINDOW SWITCH: INSTALLATION (2010 Corolla)		

INSTALLATION

1. INSTALL REAR POWER WINDOW REGULATOR SWITCH ASSEMBLY INFO

2. INSTALL REAR DOOR ARMREST UPPER BASE PANEL INFO

Last Modified: 3-10-2010	6.4 L	**From:** 200901
Model Year: 2010	**Model:** Corolla	**Doc ID:** RM000002VRL00WX
Title: WINDOW / GLASS: WINDOW DEFOGGER SYSTEM (for Automatic Air Conditioning System): PRECAUTION (2010 Corolla)		

PRECAUTION

1. EXPRESSIONS OF IGNITION SWITCH

(a) The type of ignition switch used on this model differs according to the specifications of the vehicle.

The expressions listed in the table below are used in this section.

SWITCH TYPE		IGNITION SWITCH (POSITION)	ENGINE SWITCH (CONDITION)
Expression	Ignition switch off	LOCK	Off
	Ignition switch ON	ON	On (IG)
	Ignition switch ACC	ACC	On (ACC)
	Engine start	START	Start

Last Modified: 3-10-2010	6.4 R	**From:** 200901
Model Year: 2010	**Model:** Corolla	**Doc ID:** RM000000U8R038X
Title: WINDOW / GLASS: WINDOW DEFOGGER SYSTEM (for Automatic Air Conditioning System): PARTS LOCATION (2010 Corolla)		

PARTS LOCATION

ILLUSTRATION

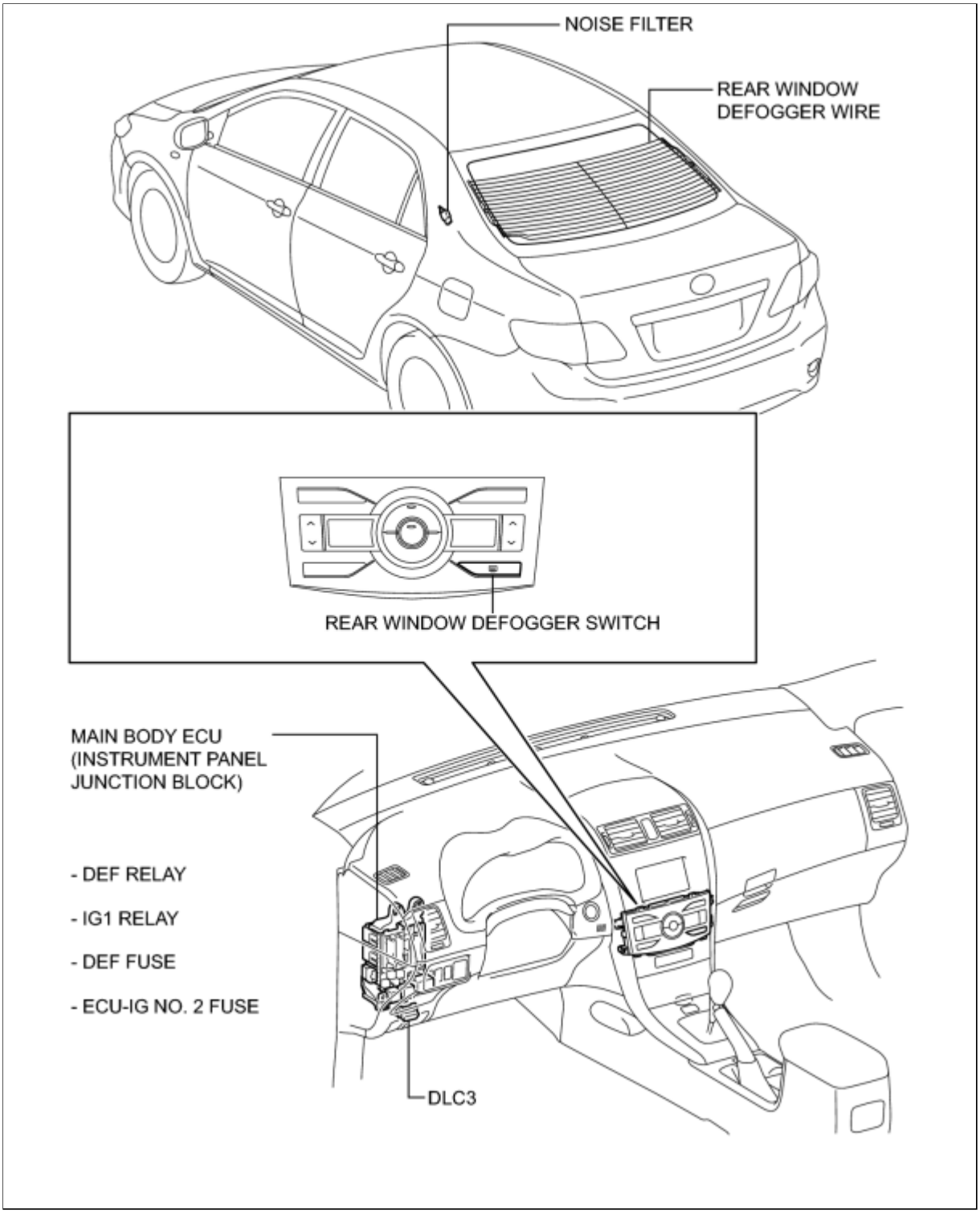
NOISE FILTER
REAR WINDOW DEFOGGER WIRE
REAR WINDOW DEFOGGER SWITCH
MAIN BODY ECU (INSTRUMENT PANEL JUNCTION BLOCK)
- DEF RELAY
- IG1 RELAY
- DEF FUSE
- ECU-IG NO. 2 FUSE
DLC3

Last Modified: 3-10-2010	6.4 U	**From:** 200901
Model Year: 2010	**Model:** Corolla	**Doc ID:** RM000000U8U036X
Title: WINDOW / GLASS: WINDOW DEFOGGER SYSTEM (for Automatic Air Conditioning System): SYSTEM DIAGRAM (2010 Corolla)		

SYSTEM DIAGRAM

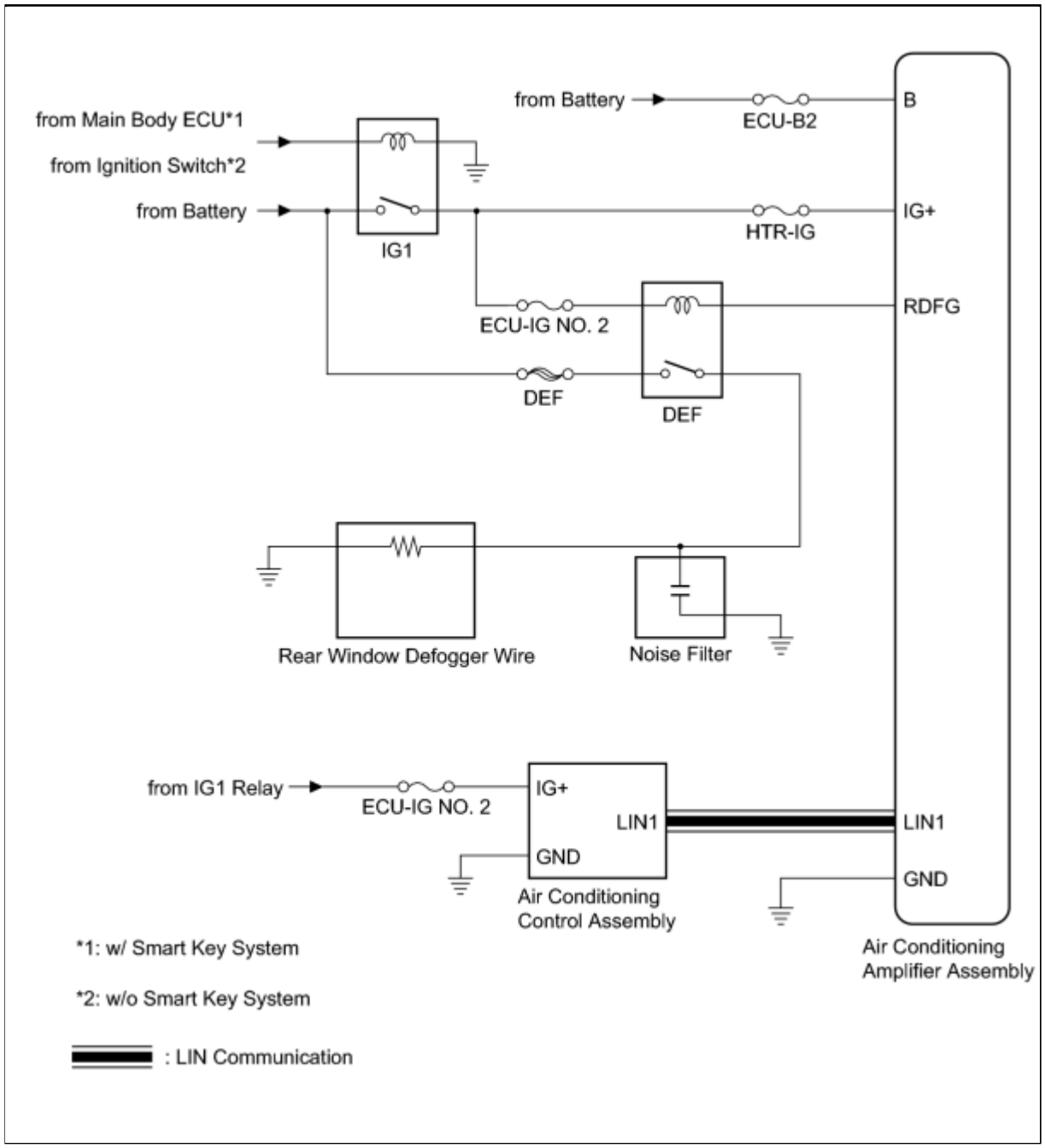

Last Modified: 3-10-2010	6.4 D	**From:** 200901
Model Year: 2010	**Model:** Corolla	**Doc ID:** RM000000XSC03MX
Title: WINDOW / GLASS: WINDOW DEFOGGER SYSTEM (for Automatic Air Conditioning System): HOW TO PROCEED WITH TROUBLESHOOTING (2010 Corolla)		

HOW TO PROCEED WITH TROUBLESHOOTING

HINT:

- Use the following procedure to troubleshoot the defogger system.
- The Techstream should be used in step 5.

1.	**VEHICLE BROUGHT TO WORKSHOP**

NEXT

2.	**CUSTOMER PROBLEM ANALYSIS**

HINT:

- In troubleshooting, confirm that the problem symptoms have been accurately identified. Preconceptions should be discarded in order to make an accurate judgment. To clearly understand what the problem symptoms are, it is extremely important to ask the customer about the problem and the conditions at the time the malfunction occurred.
- Gather as much information as possible for reference. Past problems that seem unrelated may also help in some cases.
- The following 5 items are important points in the problem analysis:

What	Vehicle model, system name
When	Date, time, occurrence frequency
Where	Road conditions
Under what conditions?	Driving conditions, weather conditions
How did it happen?	Problem symptoms

NEXT

3.	INSPECT BATTERY VOLTAGE

(a) Measure the battery voltage.

Standard Voltage:
11 to 14 V

If the voltage is below 11 V, recharge or replace the battery before proceeding to the next step.

NEXT

4.	PROBLEM SYMPTOMS TABLE

Result:

RESULT	PROCEED TO
Fault is not listed in problem symptoms table	A
Fault is listed in problem symptoms table	B

B **GO TO STEP 6**

A

5.	OVERALL ANALYSIS AND TROUBLESHOOTING

(a) Terminals of ECU INFO

(b) Data List / Active Test INFO

(c) On-vehicle Inspection INFO

NEXT

6.	REPAIR OR REPLACE

NEXT

7.	CONFIRMATION TEST

NEXT END

Last Modified: 3-10-2010	6.4 D	**From:** 200901
Model Year: 2010	**Model:** Corolla	**Doc ID:** RM000000WPT03KX
Title: WINDOW / GLASS: WINDOW DEFOGGER SYSTEM (for Automatic Air Conditioning System): SYSTEM DESCRIPTION (2010 Corolla)		

SYSTEM DESCRIPTION

1. GENERAL

The defogger system thin heater wires are attached to the inside of the rear window and defog the window surface quickly. The indicator light illuminates while the system is operating. The system automatically turns off after approximately 15 minutes.

HINT:

The rear window defogger is linked with the mirror defogger (w/ mirror defogger).

2. FUNCTION OF MAIN COMPONENT

COMPONENT	OUTLINE
DEF Relay	Receives rear defogger activation request signals from the air conditioning amplifier assembly and supplies power to the rear window defogger.
Rear Window Defogger	Receives power from the DEF relay and heats the defogger wire.

3. DESCRIPTION

FUNCTION	OUTLINE
Defogs the rear window surface	• Receives rear defogger activation request signals from the air conditioning amplifier assembly and supplies power to the rear window defogger. • Receives power from the DEF relay and heats the defogger wire.

Last Modified: 3-10-2010	6.4 T	**From:** 200901
Model Year: 2010	**Model:** Corolla	**Doc ID:** RM000000U8S03PX
Title: WINDOW / GLASS: WINDOW DEFOGGER SYSTEM (for Automatic Air Conditioning System): PROBLEM SYMPTOMS TABLE (2010 Corolla)		

PROBLEM SYMPTOMS TABLE

HINT:

Use the table below to help determine the cause of problem symptoms. If multiple suspected areas are listed, the potential causes of the symptoms are listed in order of probability in the "Suspected Area" column of the table. Check each symptom by checking the suspected areas in the order they are listed. Replace parts as necessary.

Window Defogger System

SYMPTOM	SUSPECTED AREA	SEE PAGE
Rear window defogger does not operate	IG power source circuit (air conditioning amplifier)	INFO
	Back-up power source circuit (air conditioning amplifier)	INFO
	Heater control panel power source circuit	INFO
	ECU-IG No. 2 and DEF fuses	INFO
	DEF and IG1 relays	INFO
	Wire harness	INFO
	Rear window defogger wire	INFO
	Air conditioning control assembly	INFO
	Air conditioning amplifier assembly	INFO
	Main body ECU (instrument panel junction block)	-

Last Modified: 3-10-2010	6.4 U	**From:** 200901
Model Year: 2010	**Model:** Corolla	**Doc ID:** RM000000WPS03FX
Title: WINDOW / GLASS: WINDOW DEFOGGER SYSTEM (for Automatic Air Conditioning System): TERMINALS OF ECU (2010 Corolla)		

TERMINALS OF ECU

1. CHECK AIR CONDITIONING AMPLIFIER ASSEMBLY

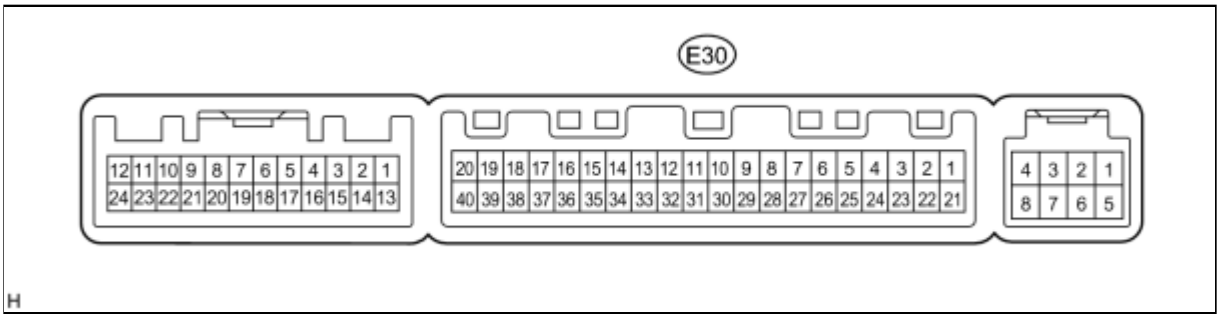

(a) Disconnect the E30 air conditioning amplifier connector.

(b) Measure the voltage according to the value(s) in the table below.

Standard Voltage:

TESTER CONNECTION	WIRING COLOR	TERMINAL DESCRIPTION	CONDITION	SPECIFIED CONDITION
E30-38 (RDFG) - E30-14 (GND)	B - BR*1 BE - W-B*2	Rear defogger signal	Ignition switch ON, Rear window defogger switch OFF	11 to 14 V
E30-38 (RDFG) - E30-14 (GND)	B - BR*1 BE - W-B*2	Rear defogger signal	Ignition switch ON, Rear window defogger switch ON	Below 1 V
E30-1 (IG+) - E30-14 (GND)	Y - BR*1 R - W-B*2	Power source (IG)	Ignition switch ON	11 to 14 V
E30-1 (IG+) - E30-14 (GND)	Y - BR*1 R - W-B*2	Power source (IG)	Ignition switch off	Below 1 V
E30-21 (B) - E30-14 (GND)	W - BR*1 BR - W-B*2	Power source (Back-up)	Always	11 to 14 V

- *1: for TMC Made
- *2: Except for TMC made

If the result is not as specified, there may be a malfunction in the wire harness.

(c) Measure the resistance according to the value(s) in the table below.

Standard Resistance:

TESTER CONNECTION	WIRING COLOR	TERMINAL DESCRIPTION	CONDITION	SPECIFIED CONDITION
E30-14 (GND) - Body ground	BR - Body ground*1 W-B - Body ground*2	Ground	Always	Below 1 Ω

- *1: for TMC Made
- *2: Except for TMC made

If the result is not as specified, there may be a malfunction in the wire harness.

2. CHECK AIR CONDITIONING CONTROL ASSEMBLY

(a) Disconnect the E16 air conditioning control connector.

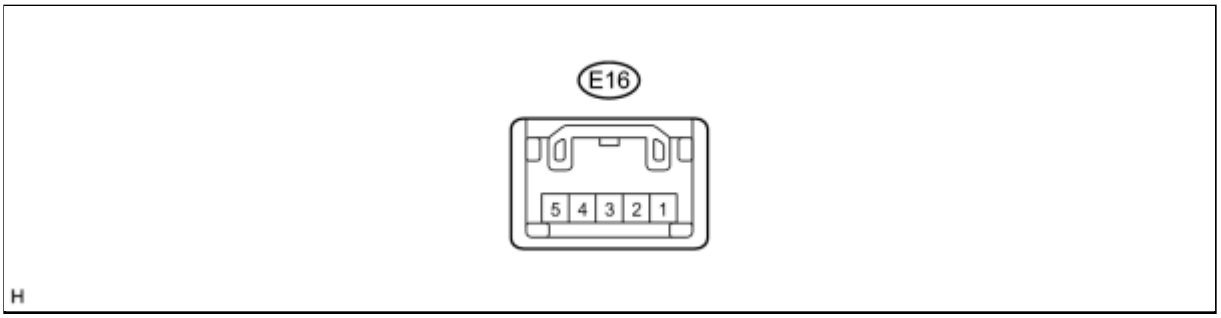

(b) Measure the voltage according to the value(s) in the table below.

Standard Voltage:

TESTER CONNECTION	WIRING COLOR	TERMINAL DESCRIPTION	CONDITION	SPECIFIED CONDITION
E16-5 (IG+) - E16-2 (GND)	B - W-B*1 V - W-B*2	Power source (IG)	Ignition switch ON	11 to 14 V
E16-5 (IG+) - E16-2 (GND)	B - W-B*1 V - W-B*2	Power source (IG)	Ignition switch off	Below 1 V

- *1: for TMC Made
- *2: Except for TMC made

If the result is not as specified, there may be a malfunction in the wire harness.

(c) Measure the resistance according to the value(s) in the table below.

Standard Resistance:

TESTER CONNECTION	WIRING COLOR	TERMINAL DESCRIPTION	CONDITION	SPECIFIED CONDITION
E16-2 (GND) - Body ground	W-B - Body ground	Ground	Always	Below 1 Ω

If the result is not as specified, there may be a malfunction in the wire harness.

3. CHECK MAIN BODY ECU (INSTRUMENT PANEL JUNCTION BLOCK)

(a) Disconnect the 2G, 2F and 2Q instrument panel junction block connector.

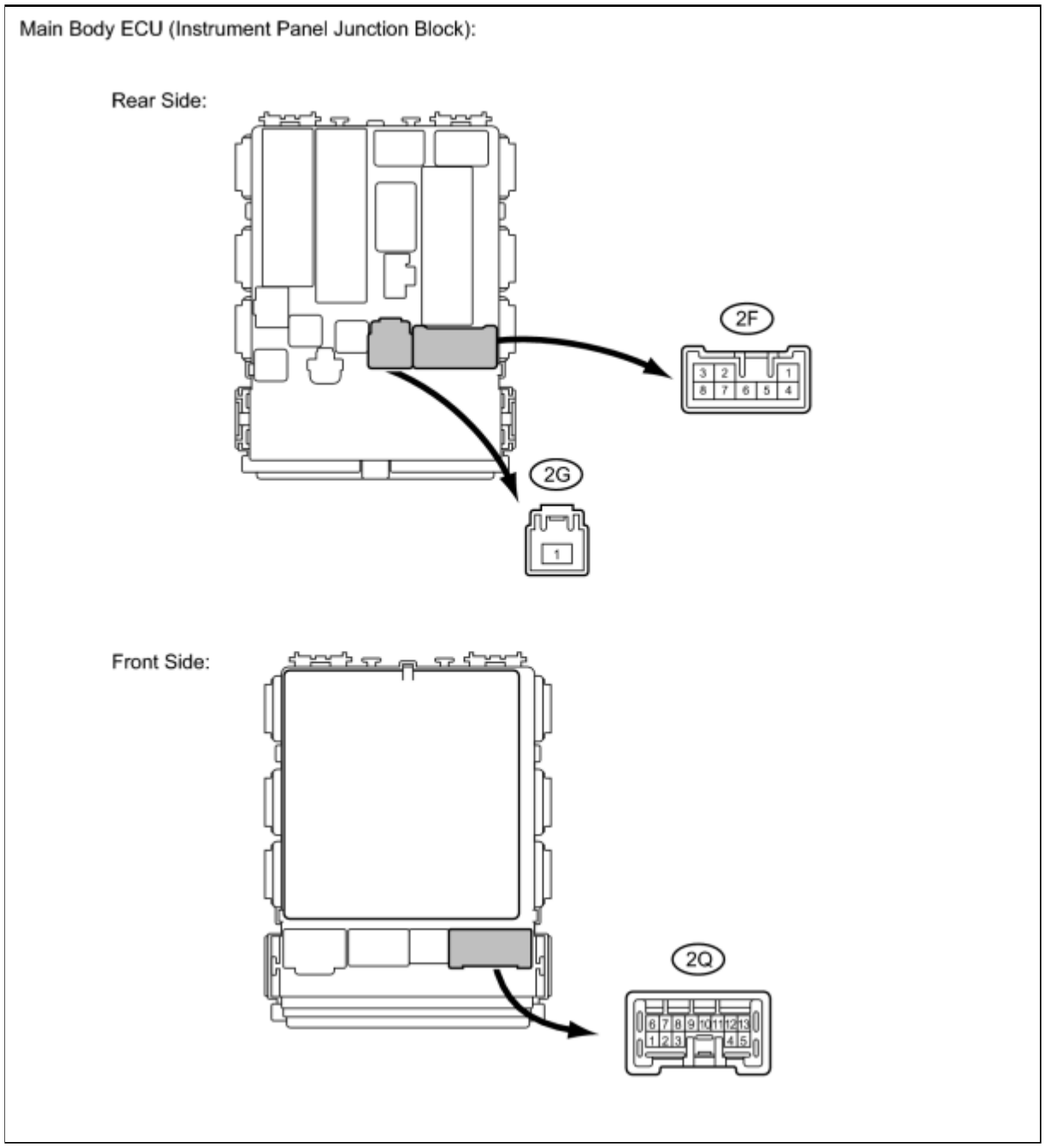

(b) Measure the voltage according to the value(s) in the table below.

Standard Voltage:

TESTER CONNECTION	WIRING COLOR	TERMINAL DESCRIPTION	CONDITION	SPECIFIED CONDITION
2G-1 - Body ground	W - Body ground	Power source	Always	11 to 14 V
	B - Body			

- *1: for TMC Made

- *2: Except for TMC made

If the result is not as specified, there may be a malfunction in the wire harness.



Last Modified: 3-10-2010	6.4 J	**From:** 200901
Model Year: 2010	**Model:** Corolla	**Doc ID:** RM0000020LP02RX
Title: WINDOW / GLASS: WINDOW DEFOGGER SYSTEM (for Automatic Air Conditioning System): Rear Window Defogger System does not Operate (2010 Corolla)		

Rear Window Defogger System does not Operate

DESCRIPTION

When the rear window defogger switch, which is built into the air conditioning control assembly, is operated, the operation signals are transmitted to the air conditioning amplifier assembly through LIN. When the air conditioning amplifier assembly receives the signals, it turns on the DEF relay to operate the rear window defogger.

WIRING DIAGRAM

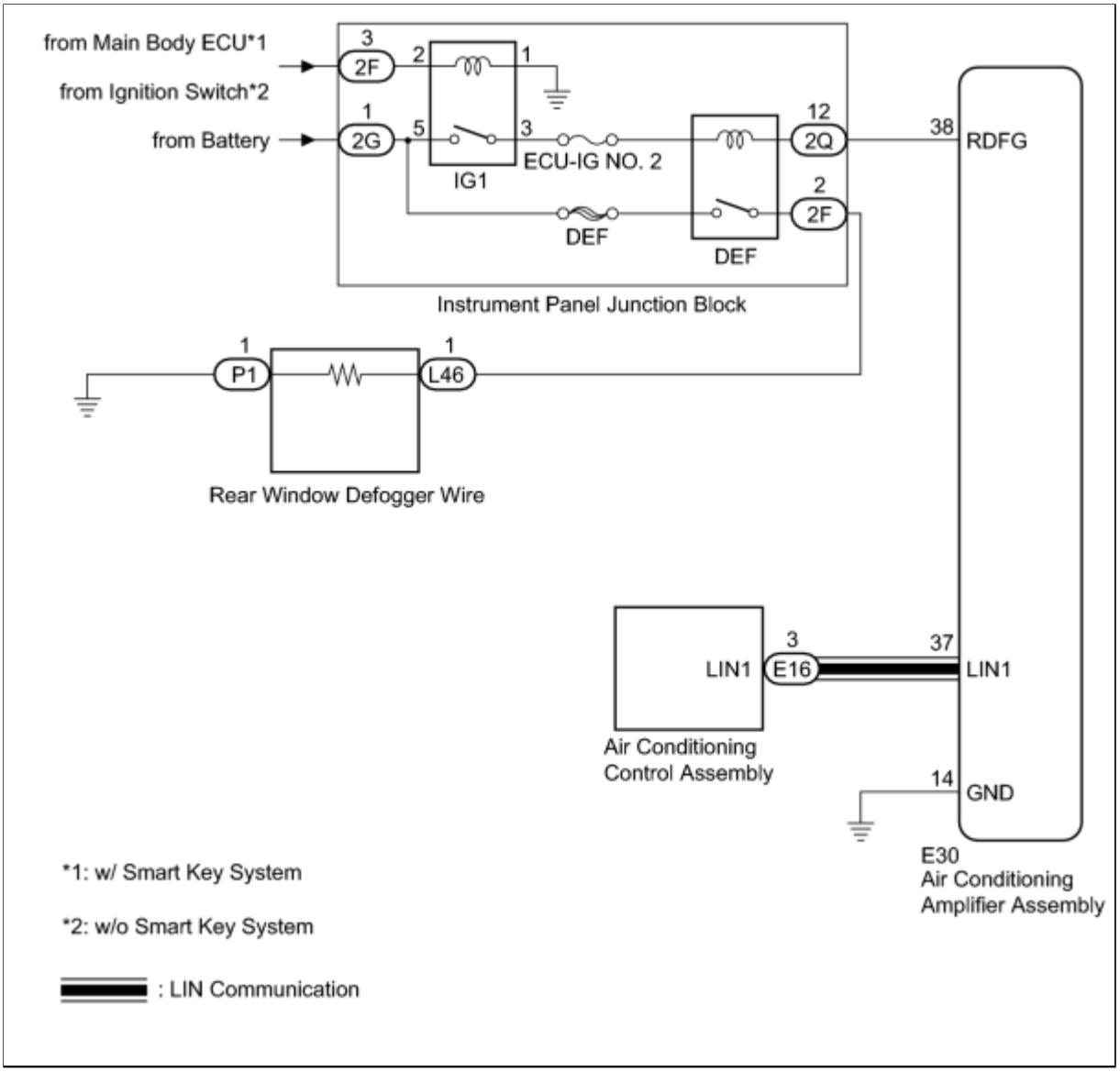

INSPECTION PROCEDURE

PROCEDURE

1.	**PERFORM ACTIVE TEST USING TECHSTREAM**

(a) Connect the Techstream to the DLC3.

(b) Turn the ignition switch to ON.

(c) Turn the Techstream on.

(d) Enter the following menus: Body Electrical / Air Conditioner / Active Test.

(e) Select the Active Test, use the Techstream to issue a control command, and then check the window defogger operation.

Air Conditioner

TESTER DISPLAY	TEST PART	CONTROL RANGE	DIAGNOSTIC NOTE
Defogger Relay	Turns rear window defogger	OFF/ON	-

(f) Check that operation sound of the DEF relay is heard.

Result:

RESULT	PROCEED TO
The window defogger system operates normally when operating it through the Techstream.	A
The window defogger system does not operate normally when operating it through the Techstream and relay operating sound is not heard.	B
The window defogger system does not operate normally when operating it through the Techstream and relay operating sound is heard.	C

C ▶ **CHECK HARNESS AND CONNECTOR (REAR WINDOW DEFOGGER WIRE - INSTRUMENT PANEL JUNCTION BLOCK)**

B ▶ **CHECK FUSES (DEF, ECU-IG NO. 2)**

A ▼

2.	**CHECK HARNESS AND CONNECTOR (LIN COMMUNICATION LINE)**

(a) Disconnect the E30 air conditioning amplifier and E16 air conditioning control connectors.

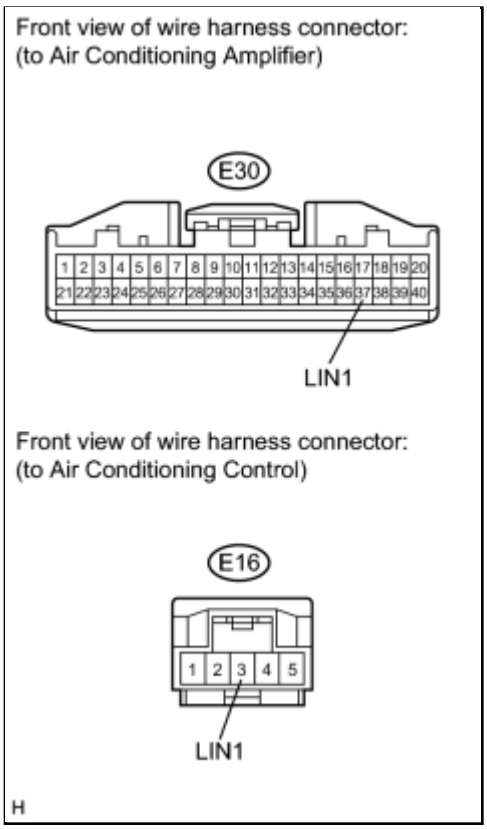

(b) Measure the resistance according to the value(s) in the table below.

Standard Resistance:

TESTER CONNECTION	CONDITION	SPECIFIED CONDITION
E30-37 (LIN1) - E16-3 (LIN1)	Always	Below 1 Ω
E30-37 (LIN1) - Body ground	Always	10 kΩ or higher

NG ▶ **REPAIR OR REPLACE HARNESS OR CONNECTOR**

OK ▼

3.	**REPLACE AIR CONDITIONING CONTROL ASSEMBLY**

(a) Replace the air conditioning control assembly INFO .

NEXT

4.	CONFIRM REAR WINDOW DEFOGGER OPERATION

(a) Turn the ignition switch to ON, press the defogger switch, and check that the window defogger operates.

OK:

Window defogger system operates normally

NG ▶ **REPLACE AIR CONDITIONING AMPLIFIER ASSEMBLY**

OK ▶ **END**

5.	CHECK FUSES (DEF, ECU-IG NO. 2)

(a) Remove the DEF and ECU-IG No. 2 fuses from the instrument panel junction block.

(b) Measure the resistance of the fuses.

Standard Resistance:

ITEM	CONDITION	SPECIFIED CONDITION
DEF fuse	Always	Below 1 Ω
ECU-IG No. 2 fuse	Always	Below 1 Ω

NG ▶ **REPLACE FUSES**

OK ▼

6.	CHECK HARNESS AND CONNECTOR (IG1 RELAY POWER SOURCE)

(a) Disconnect the 2F instrument panel junction block connector.

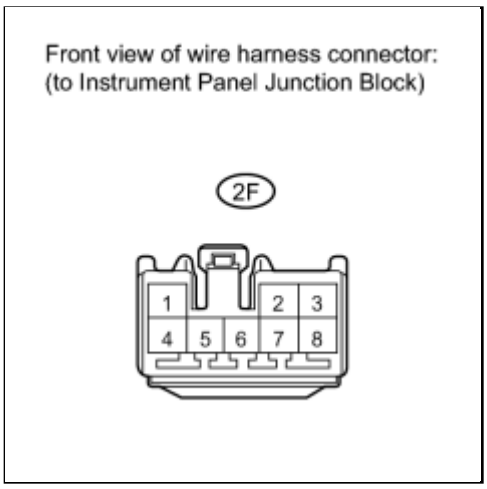

(b) Measure the voltage according to the value(s) in the table below.

Standard Voltage:

TESTER CONNECTION	CONDITION	SPECIFIED CONDITION
2F-3 - Body ground	Ignition switch ON	11 to 14 V

Result:

RESULT	PROCEED TO
OK	A
NG (w/ Smart Key System)	B
NG (w/o Smart Key System)	C

C ▶ **REPAIR OR REPLACE HARNESS OR CONNECTOR**

B ▶ **GO TO SMART KEY SYSTEM**

A ▼

7.	**CHECK HARNESS AND CONNECTOR (REAR WINDOW DEFOGGER SYSTEM POWER SOURCE)**

(a) Disconnect the 2G instrument panel junction block connector.

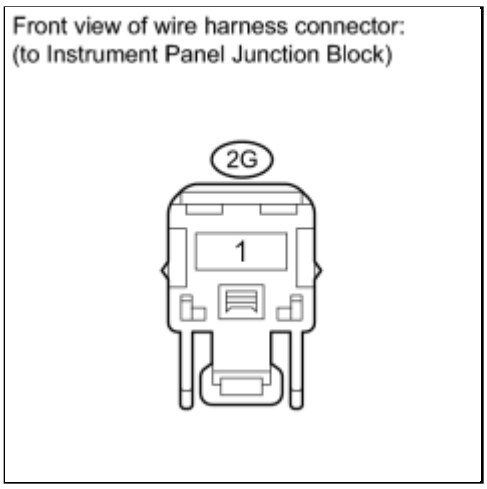

(b) Measure the voltage according to the value(s) in the table below.

Standard Voltage:

TESTER CONNECTION	CONDITION	SPECIFIED CONDITION
2G-1 - Body ground	Ignition switch ON	11 to 14 V

NG ▶ **REPAIR OR REPLACE HARNESS OR CONNECTOR**

OK ▼

8.	**CHECK HARNESS AND CONNECTOR (A/C AMPLIFIER ASSEMBLY - INSTRUMENT PANEL JUNCTION BLOCK)**

(a) Disconnect the E30 air conditioning amplifier and 2Q instrument panel junction block connectors.

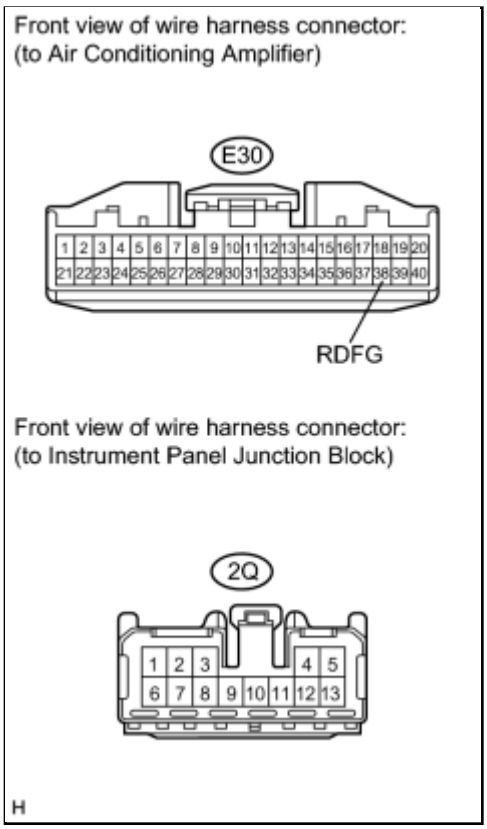

(b) Measure the resistance according to the value(s) in the table below.

Standard Resistance:

TESTER CONNECTION	CONDITION	SPECIFIED CONDITION
E30-38 (RDFG) - 2Q-12	Always	Below 1 Ω
E30-38 (RDFG) - Body ground	Always	10 kΩ or higher

NG ▶ **REPAIR OR REPLACE HARNESS OR CONNECTOR**

OK ▼

9.	**CHECK HARNESS AND CONNECTOR (A/C AMPLIFIER ASSEMBLY - BATTERY)**

(a) Reconnect the 2Q instrument panel junction block connector.

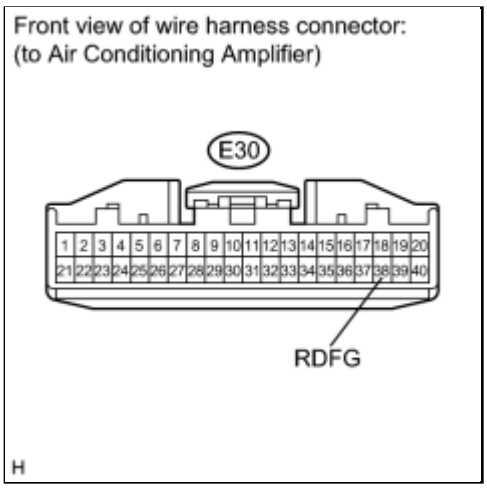

(b) Measure the voltage according to the value(s) in the table below.

Standard Voltage:

TESTER CONNECTION	CONDITION	SPECIFIED CONDITION
E30-38 (RDFG) - Body ground	Ignition switch ON	11 to 14 V

NG ▶ **PROCEED TO NEXT CIRCUIT INSPECTION SHOWN IN PROBLEM SYMPTOMS TABLE**

OK ▶ **REPLACE AIR CONDITIONING AMPLIFIER ASSEMBLY**

10.	**CHECK HARNESS AND CONNECTOR (REAR WINDOW DEFOGGER WIRE - INSTRUMENT PANEL JUNCTION BLOCK)**

(a) Disconnect the 2F instrument panel junction block and L46 rear window defogger wire connectors.

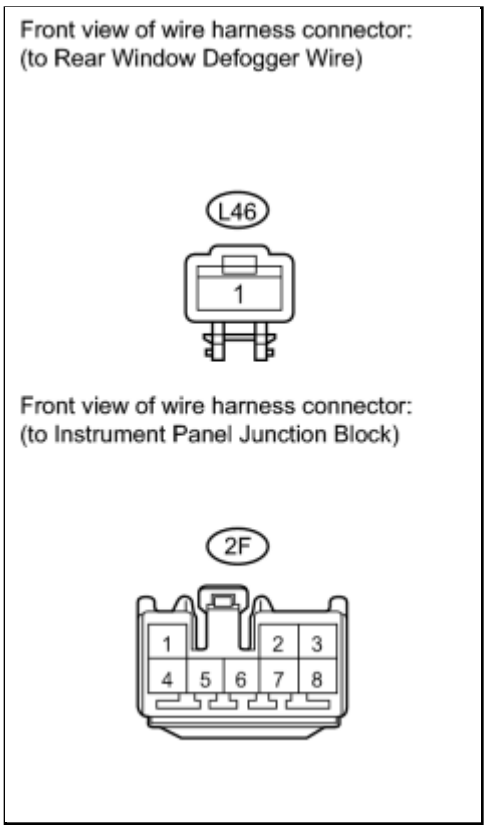

(b) Measure the resistance according to the value(s) in the table below.

Standard Resistance:

TESTER CONNECTION	CONDITION	SPECIFIED CONDITION
L46-1 - 2F-2	Always	Below 1 Ω
L46-1 - Body ground	Always	10 kΩ or higher

NG ▶ **REPAIR OR REPLACE HARNESS OR CONNECTOR**

OK ▼

11.	**CHECK HARNESS AND CONNECTOR (REAR WINDOW DEFOGGER WIRE - BATTERY)**

(a) Reconnect the 2F instrument panel junction block connector.

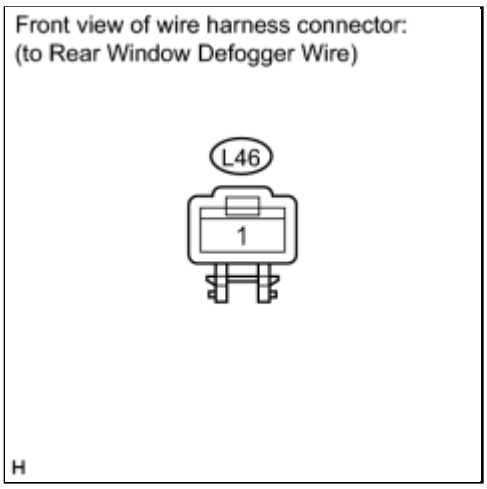

(b) Measure the voltage according to the value(s) in the table below.

Standard Voltage:

TESTER CONNECTION	CONDITION	SPECIFIED CONDITION
L46-1 - Body ground	Ignition switch ON, Rear window defogger switch on	11 to 14 V

NG ▶ **PROCEED TO NEXT CIRCUIT INSPECTION SHOWN IN PROBLEM SYMPTOMS TABLE**

OK ▼

12.	**CHECK HARNESS AND CONNECTOR (REAR WINDOW DEFOGGER WIRE - BODY GROUND)**

(a) Disconnect the P1 rear window defogger wire connector.

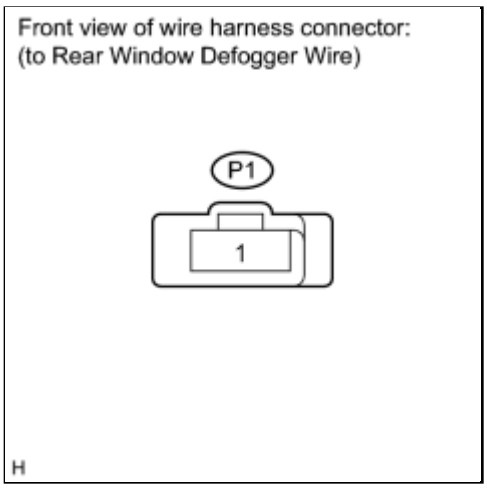

(b) Measure the resistance according to the value(s) in the table below.

Standard Resistance:

TESTER CONNECTION	CONDITION	SPECIFIED CONDITION
P1-1 - Body ground	Always	Below 1 Ω

NG ▶ **REPAIR OR REPLACE HARNESS OR CONNECTOR**

OK ▶ **REPAIR OR REPLACE REAR WINDOW DEFOGGER WIRE**

Last Modified: 3-10-2010	6.4 D	**From:** 200901
Model Year: 2010	**Model:** Corolla	**Doc ID:** RM000000WPU02DX
Title: WINDOW / GLASS: WINDOW DEFOGGER SYSTEM (for Automatic Air Conditioning System): DIAGNOSIS SYSTEM (2010 Corolla)		

DIAGNOSIS SYSTEM

1. CHECK DLC3

(a) Check the DLC3 INFO .

2. INSPECT BATTERY VOLTAGE

(a) Measure the battery voltage.

Standard Voltage:
11 to 14 V

If the voltage is below 11 V, recharge or replace the battery before proceeding to the next step.

Last Modified: 3-10-2010	6.4 U	**From:** 200901
Model Year: 2010	**Model:** Corolla	**Doc ID:** RM000000WPV02HX
Title: WINDOW / GLASS: WINDOW DEFOGGER SYSTEM (for Automatic Air Conditioning System): DATA LIST / ACTIVE TEST (2010 Corolla)		

DATA LIST / ACTIVE TEST

1. PERFORM ACTIVE TEST

HINT:

Using the Techstream to perform Active Tests allows relays, VSVs, actuators and other items to be operated without removing any parts. This non-intrusive functional inspection can be very useful because intermittent operation may be discovered before parts or wiring is disturbed. Performing Active Tests early in trouble shooting is one way to save diagnostic time. Data List information can be displayed while performing Active Tests.

(a) Connect the Techstream to the DLC3.

(b) Turn the ignition switch ON.

(c) Turn the Techstream on.

(d) Enter the following menus: Body Electrical / Air Conditioner / Active Test.

(e) Perform the Active Test according to the display on the Techstream.

Air Conditioner

TESTER DISPLAY	TEST PART	CONTROL RANGE	DIAGNOSTIC NOTE
Defogger Relay	Turns rear window defogger	OFF/ON	-

Last Modified: 3-10-2010	6.4 G	**From:** 200901
Model Year: 2010	**Model:** Corolla	**Doc ID:** RM000000U8V030X
Title: WINDOW / GLASS: WINDOW DEFOGGER SYSTEM (for Automatic Air Conditioning System): ON-VEHICLE INSPECTION (2010 Corolla)		

ON-VEHICLE INSPECTION

1. CHECK REAR WINDOW DEFOGGER SYSTEM OPERATION

(a) When the ignition switch is turned to ON and the defogger switch is pressed, check that the rear window defogger operates.

HINT:

After 15 minutes, check that the defogger automatically turns off.

2. INSPECT BACK WINDOW (DEFOGGER WIRE)

NOTICE:

- When cleaning the glass, wipe the glass along the wire using a soft and dry cloth. Take care not to damage the wires.
- Do not use detergents or glass cleaners that have abrasive ingredients.
- When measuring voltage, wrap a piece of tin foil around the tip of the negative tester probe and press the foil against the wire with your finger, as shown in the illustration.

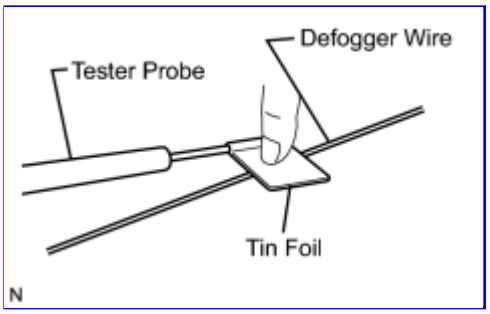

(a) Turn the ignition switch to ON.

(b) Turn the defogger switch on.

(c) Check the voltage at the center of each defogger wire, as shown in the illustration.

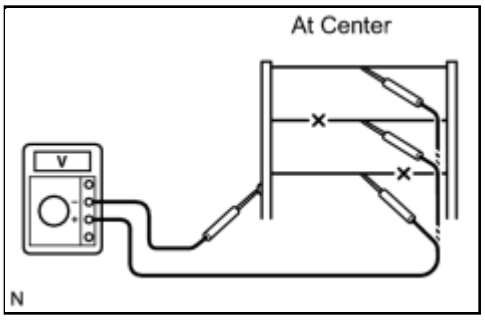

Standard Voltage:

VOLTAGE	CRITERIA
Approx. 5 V	Wire is not broken
Approx. 10 or 0 V	Wire is broken

HINT:

If there is approximately 10 V, the wire may be faulty between the center of the wire and the wire end on the battery side. If there is no

voltage, the wire may be faulty between the center of the wire and the wire end on the ground side.

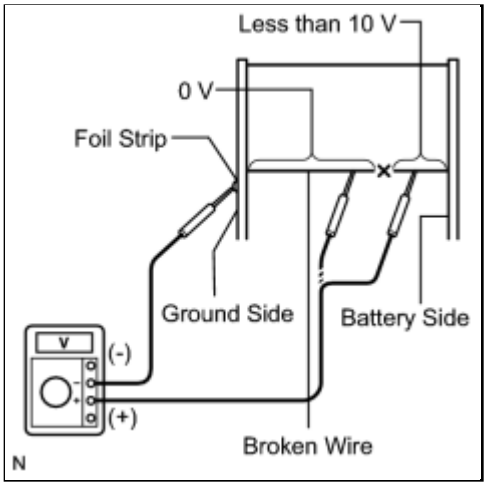

(d) Place a voltmeter positive (+) lead against the defogger wire on the battery side.

(e) Place a voltmeter negative (-) lead with the foil strip against the wire on the ground side.

(f) Slide the positive (+) lead from the battery side to the ground side.

(g) The point where the voltage drops from approximately 10 V to 0 V is the place where the defogger wire is broken.

HINT:

If the defogger wire is not broken, the voltmeter should indicate 0 V at the positive (+) end of the defogger wire but gradually increase to approximately 12 V as the meter probe moves to the other end.

Last Modified: 3-10-2010	6.4 A	**From:** 200901
Model Year: 2010	**Model:** Corolla	**Doc ID:** RM000000WYG02TX
Title: WINDOW / GLASS: WINDOW DEFOGGER SYSTEM (for Automatic Air Conditioning System): REPAIR (2010 Corolla)		

REPAIR

1. REPAIR WINDOW DEFOGGER WIRE

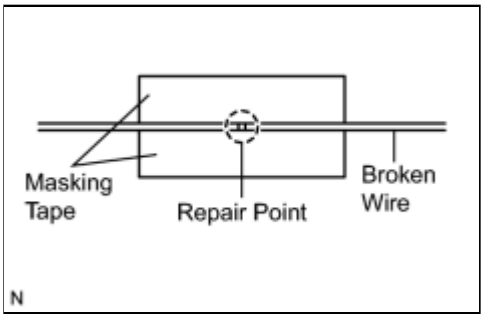

(a) Clean the broken wire tips with a grease, wax and silicone remover.

(b) Place the masking tape along both sides of the wire.

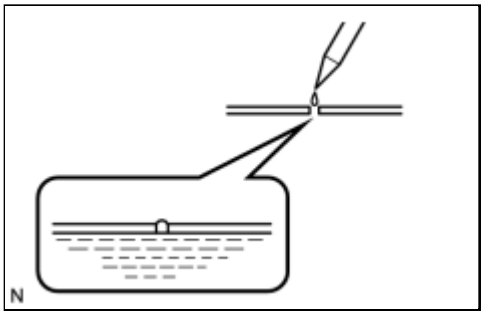

(c) Thoroughly mix the repair agent (Dupont paste No. 4817 or equivalent).

(d) Using a fine tip brush, apply a small amount of the agent to the wire.

(e) After a few minutes, remove the masking tape.

NOTICE:

Do not repair the defogger wire again for at least 24 hours.

Last Modified: 3-10-2010	6.4 R	**From:** 200901
Model Year: 2010	**Model:** Corolla	**Doc ID:** RM000000U8R039X
Title: WINDOW / GLASS: WINDOW DEFOGGER SYSTEM (for Manual Air Conditioning System): PARTS LOCATION (2010 Corolla)		

PARTS LOCATION

ILLUSTRATION

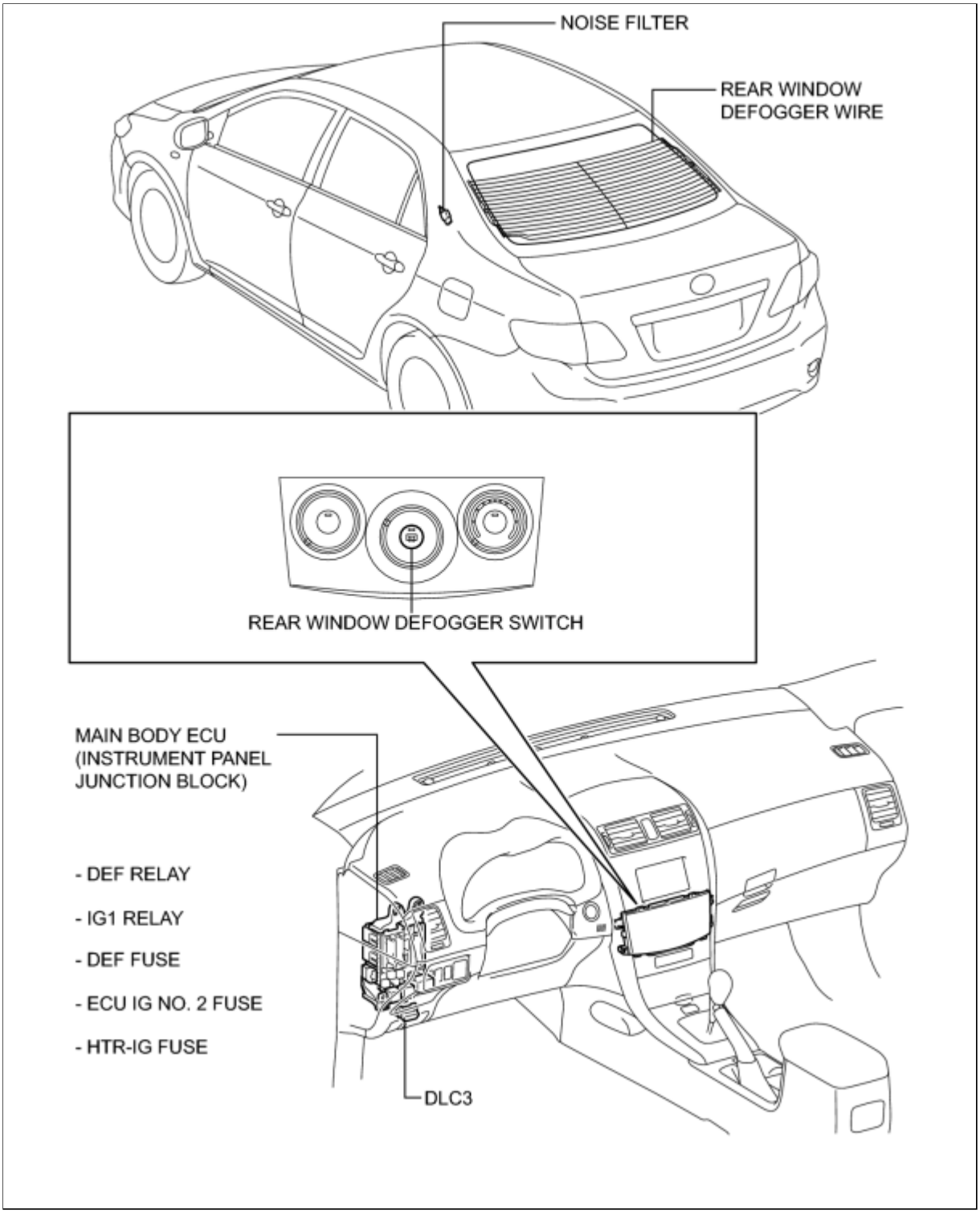
NOISE FILTER
REAR WINDOW DEFOGGER WIRE
REAR WINDOW DEFOGGER SWITCH
MAIN BODY ECU (INSTRUMENT PANEL JUNCTION BLOCK)
- DEF RELAY
- IG1 RELAY
- DEF FUSE
- ECU IG NO. 2 FUSE
- HTR-IG FUSE
DLC3

Last Modified: 3-10-2010	6.4 L	**From:** 200901
Model Year: 2010	**Model:** Corolla	**Doc ID:** RM000002VRL00XX
Title: WINDOW / GLASS: WINDOW DEFOGGER SYSTEM (for Manual Air Conditioning System): PRECAUTION (2010 Corolla)		

PRECAUTION

1. EXPRESSIONS OF IGNITION SWITCH

(a) The type of ignition switch used on this model differs according to the specifications of the vehicle.

The expressions listed in the table below are used in this section.

SWITCH TYPE		IGNITION SWITCH (POSITION)	ENGINE SWITCH (CONDITION)
Expression	Ignition switch off	LOCK	Off
	Ignition switch ON	ON	On (IG)
	Ignition switch ACC	ACC	On (ACC)
	Engine start	START	Start

Last Modified: 3-10-2010	6.4 U	**From:** 200901
Model Year: 2010	**Model:** Corolla	**Doc ID:** RM000000U8U037X
Title: WINDOW / GLASS: WINDOW DEFOGGER SYSTEM (for Manual Air Conditioning System): SYSTEM DIAGRAM (2010 Corolla)		

SYSTEM DIAGRAM

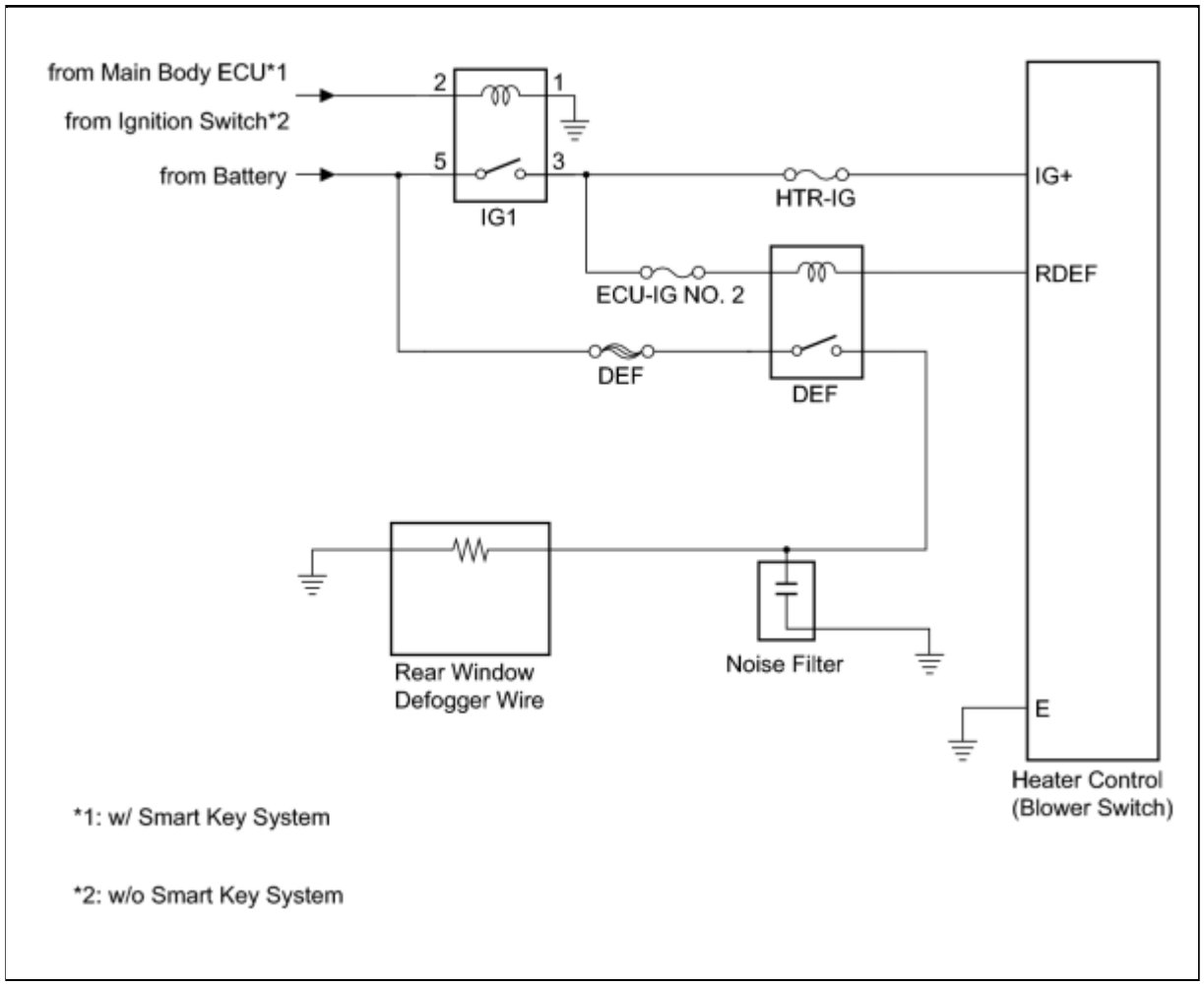

Last Modified: 3-10-2010	6.4 D	**From:** 200901
Model Year: 2010	**Model:** Corolla	**Doc ID:** RM000000XSC03NX
Title: WINDOW / GLASS: WINDOW DEFOGGER SYSTEM (for Manual Air Conditioning System): HOW TO PROCEED WITH TROUBLESHOOTING (2010 Corolla)		

HOW TO PROCEED WITH TROUBLESHOOTING

HINT:

Use the following procedure to troubleshoot the defogger system.

1.	**VEHICLE BROUGHT TO WORKSHOP**

NEXT

2.	**CUSTOMER PROBLEM ANALYSIS**

HINT:

- In troubleshooting, confirm that the problem symptoms have been accurately identified. Preconceptions should be discarded in order to make an accurate judgment. To clearly understand what the problem symptoms are, it is extremely important to ask the customer about the problem and the conditions at the time the malfunction occurred.
- Gather as much information as possible for reference. Past problems that seem unrelated may also help in some cases.
- The following 5 items are important points in the problem analysis:

What	Vehicle model, system name
When	Date, time, occurrence frequency
Where	Road conditions
Under what conditions?	Driving conditions, weather conditions
How did it happen?	Problem symptoms

NEXT

3.	INSPECT BATTERY VOLTAGE

(a) Measure the battery voltage.

Standard Voltage:
11 to 14 V

If the voltage is below 11 V, recharge or replace the battery before proceeding to the next step.

NEXT

4.	PROBLEM SYMPTOMS TABLE

Result:

RESULT	PROCEED TO
Fault is not listed in problem symptoms table	A
Fault is listed in problem symptoms table	B

B **GO TO STEP 6**

A

5.	OVERALL ANALYSIS AND TROUBLESHOOTING

(a) Terminals of ECU INFO

(b) On-vehicle Inspection INFO

NEXT

6.	REPAIR OR REPLACE

NEXT

7.	CONFIRMATION TEST

NEXT END

Last Modified: 3-10-2010	6.4 D	**From:** 200901
Model Year: 2010	**Model:** Corolla	**Doc ID:** RM000000WPT03LX
Title: WINDOW / GLASS: WINDOW DEFOGGER SYSTEM (for Manual Air Conditioning System): SYSTEM DESCRIPTION (2010 Corolla)		

SYSTEM DESCRIPTION

1. GENERAL

The defogger system thin heater wires are attached to the inside of the rear window and defog the window surface quickly. The indicator light illuminates while the system is operating. The system automatically turns off after approximately 15 minutes.

HINT:

The rear window defogger is linked with the mirror defogger (w/ mirror defogger).

2. FUNCTION OF MAIN COMPONENT

COMPONENT	OUTLINE
DEF Relay	Receives rear defogger activation request signals from the heater control (blower switch) and supplies power to the rear window defogger.
Rear Window Defogger	Receives power from the DEF relay and heats the defogger wire.

Last Modified: 3-10-2010	6.4 T	**From:** 200901
Model Year: 2010	**Model:** Corolla	**Doc ID:** RM000000U8S03QX
Title: WINDOW / GLASS: WINDOW DEFOGGER SYSTEM (for Manual Air Conditioning System): PROBLEM SYMPTOMS TABLE (2010 Corolla)		

PROBLEM SYMPTOMS TABLE

HINT:

Use the table below to help determine the cause of problem symptoms. If multiple suspected areas are listed, the potential causes of the symptoms are listed in order of probability in the "Suspected Area" column of the table. Check each symptom by checking the suspected areas in the order they are listed. Replace parts as necessary.

Window Defogger System

SYMPTOM	SUSPECTED AREA	SEE PAGE
Rear window defogger does not operate	ECU-IG No. 2, DEF and HTR-IG fuses	INFO
	DEF and IG1 relays	INFO
	Wire harness	INFO
	Rear window defogger wire	INFO
	Heater control (Blower switch)	INFO
	Main body ECU (instrument panel junction block)	-

Last Modified: 3-10-2010	6.4 U	**From:** 200901
Model Year: 2010	**Model:** Corolla	**Doc ID:** RM000000WPS03GX
Title: WINDOW / GLASS: WINDOW DEFOGGER SYSTEM (for Manual Air Conditioning System): TERMINALS OF ECU (2010 Corolla)		

TERMINALS OF ECU

1. CHECK HEATER CONTROL (BLOWER SWITCH)

(a) Disconnect the E70 heater control (blower switch) connector.

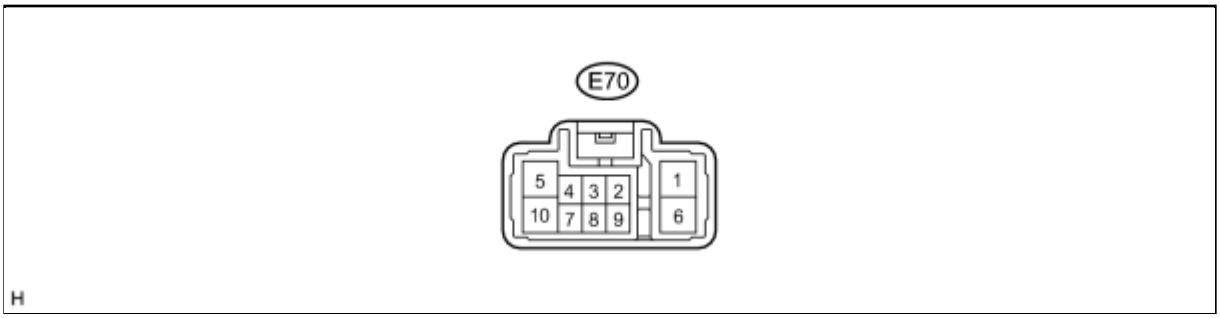

(1) Measure the voltage according to the value(s) in the table below.

Standard Voltage:

TESTER CONNECTION	WIRING COLOR	TERMINAL DESCRIPTION	CONDITION	SPECIFIED CONDITION
E70-2 (RDEF) - E70-5 (E)	B - W-B*1 BE - W-B*2	Rear defogger signal	Ignition switch ON, Rear window defogger switch OFF	11 to 14 V
			Ignition switch ON, Rear window defogger switch ON	Below 1 V
E70-3 (IG+) - E70-5 (E)	Y - W-B*1 R - W-B*2	Power source (IG)	Ignition switch ON	11 to 14 V
			Ignition switch off	Below 1 V

- *1: for TMC Made
- *2: Except for TMC made

If the result is not as specified, there may be a malfunction in the wire harness.

(b) Measure the resistance according to the value(s) in the table below.

Standard Resistance:

TESTER CONNECTION	WIRING COLOR	TERMINAL DESCRIPTION	CONDITION	SPECIFIED CONDITION
E70-5 (E) - Body ground	W-B - Body ground	Ground	Always	Below 1 Ω

If the result is not as specified, there may be a malfunction in the wire harness.

2. CHECK MAIN BODY ECU (INSTRUMENT PANEL JUNCTION BLOCK)

(a) Disconnect the 2F, 2G and 2Q instrument panel junction block connectors.

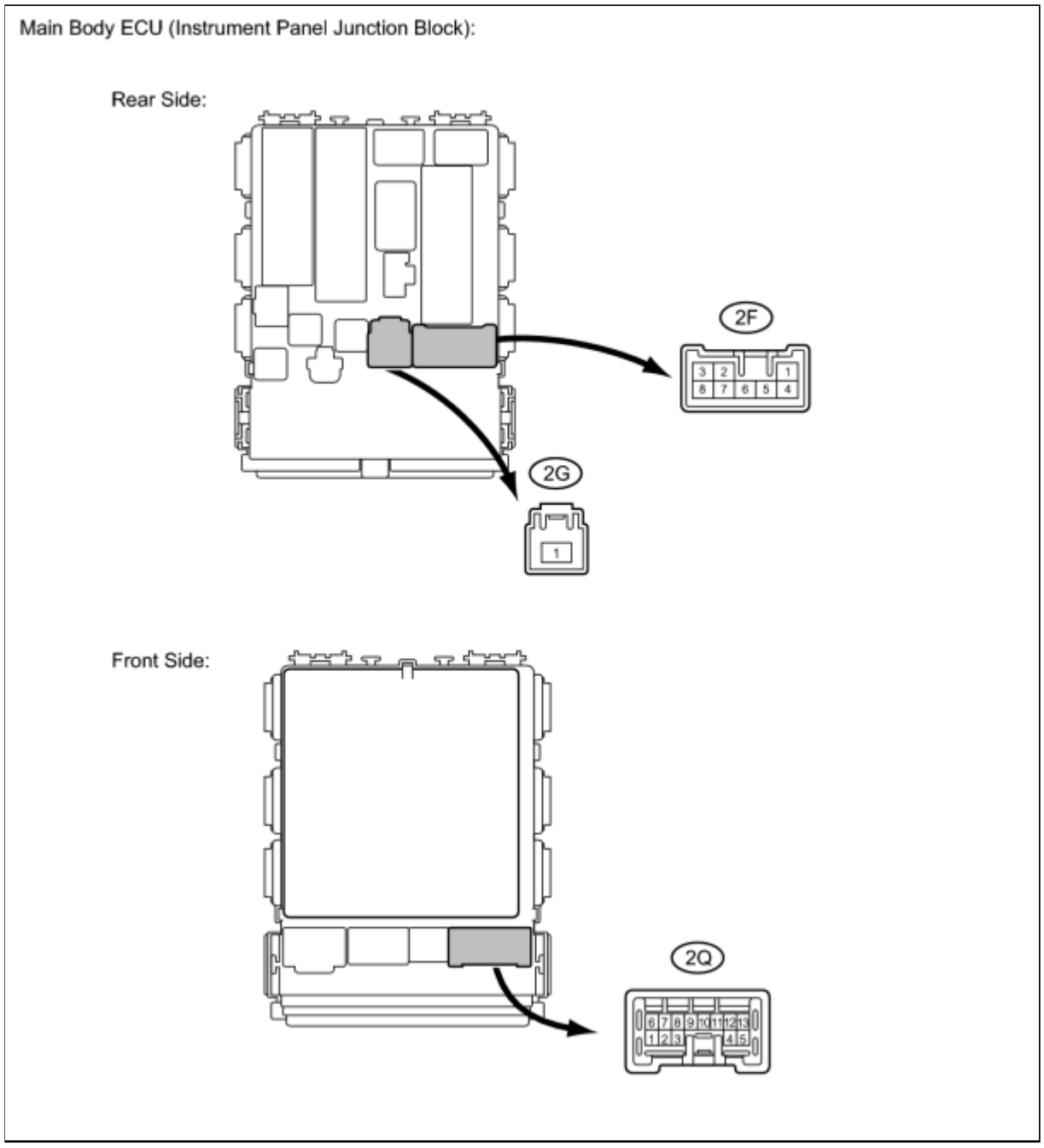

(b) Measure the voltage according to the value(s) in the table below.

Standard Voltage:

TESTER CONNECTION	WIRING COLOR	TERMINAL DESCRIPTION	CONDITION	SPECIFIED CONDITION
2G-1 - Body ground	W - Body ground	Power source	Always	11 to 14 V

TESTER CONNECTION	WIRING COLOR	TERMINAL DESCRIPTION	CONDITION	SPECIFIED CONDITION
2Q-12 - Body ground	B - Body ground*1 BE - Body ground*2	DEF Relay operation signal	Ignition switch ON, Rear window defogger switch OFF	11 to 14 V
			Ignition switch ON, Rear window defogger switch ON	Below 1 V
2F-2 - Body ground	B - Body ground	Defogger wire operation signal	Ignition switch ON, Rear window defogger switch OFF	Below 1 V
			Ignition switch ON, Rear window defogger switch ON	11 to 14 V

- *1: for TMC Made
- *2: Except for TMC made

If the result is not as specified, there may be a malfunction in the wire harness or main body ECU (instrument panel junction block).

Last Modified: 3-10-2010	6.4 G	**From:** 200901
Model Year: 2010	**Model:** Corolla	**Doc ID:** RM000000U8V031X
Title: WINDOW / GLASS: WINDOW DEFOGGER SYSTEM (for Manual Air Conditioning System): ON-VEHICLE INSPECTION (2010 Corolla)		

ON-VEHICLE INSPECTION

1. CHECK REAR WINDOW DEFOGGER SYSTEM OPERATION

(a) When the ignition switch is turned to ON and the defogger switch is pressed, check that the rear window defogger operates.

HINT:

After 15 minutes, check that the defogger automatically turns off.

2. INSPECT BACK WINDOW (DEFOGGER WIRE)

NOTICE:

- When cleaning the glass, wipe the glass along the wire using a soft and dry cloth. Take care not to damage the wires.
- Do not use detergents or glass cleaners that have abrasive ingredients.
- When measuring voltage, wrap a piece of tin foil around the tip of the negative tester probe and press the foil against the wire with your finger, as shown in the illustration.

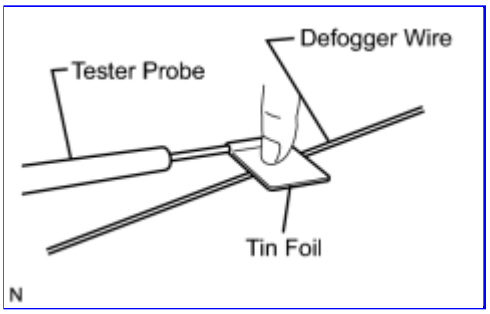

(a) Turn the ignition switch to ON.

(b) Turn the defogger switch on.

(c) Check the voltage at the center of each defogger wire, as shown in the illustration.

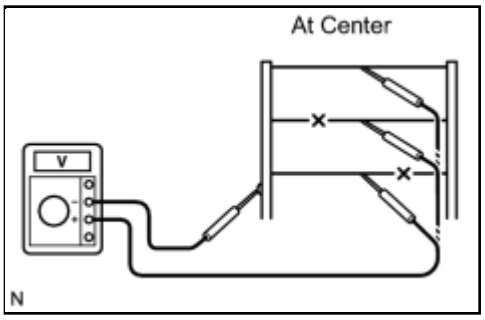

Standard Voltage:

VOLTAGE	CRITERIA
Approx. 5 V	Wire is not broken
Approx. 10 or 0 V	Wire is broken

HINT:

If there is approximately 10 V, the wire may be faulty between the center of the wire and the wire end on the battery side. If there is no

voltage, the wire may be faulty between the center of the wire and the wire end on the ground side.

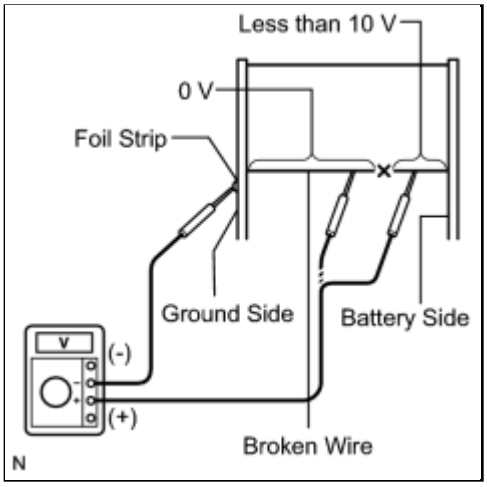

(d) Place a voltmeter positive (+) lead against the defogger wire on the battery side.

(e) Place a voltmeter negative (-) lead with the foil strip against the wire on the ground side.

(f) Slide the positive (+) lead from the battery side to the ground side.

(g) The point where the voltage drops from approximately 10 V to 0 V is the place where the defogger wire is broken.

HINT:

If the defogger wire is not broken, the voltmeter should indicate 0 V at the positive (+) end of the defogger wire but gradually increase to approximately 12 V as the meter probe moves to the other end.

Last Modified: 3-10-2010	6.4 J	**From:** 200901
Model Year: 2010	**Model:** Corolla	**Doc ID:** RM0000020LP02SX
Title: WINDOW / GLASS: WINDOW DEFOGGER SYSTEM (for Manual Air Conditioning System): Rear Window Defogger System does not Operate (2010 Corolla)		

Rear Window Defogger System does not Operate

DESCRIPTION

When the rear window defogger switch, which is built into the heater control (blower switch), is operated, the operation signals are transmitted to the DEF relay (coil side). When the DEF relay (coil side) receives the signals, it turns on the DEF relay (switch side) to operate the rear window defogger.

WIRING DIAGRAM

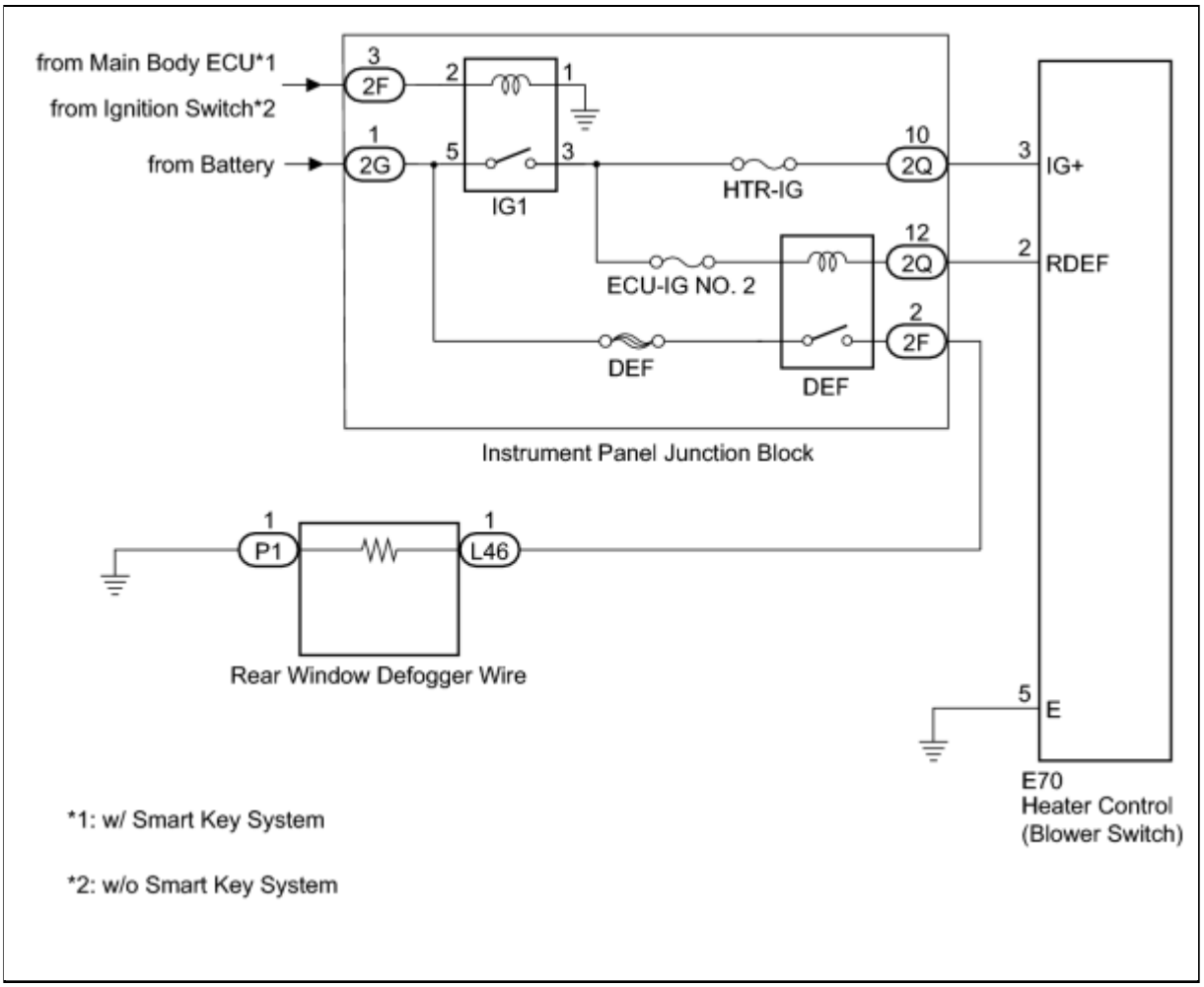

INSPECTION PROCEDURE

PROCEDURE

1.	**CHECK REAR WINDOW DEFOGGER SYSTEM**

(a) Turn the window defogger switch on.

(b) Check that operation sound of the DEF relay is heard.

OK:

Relay operating sound is heard

NG ▶ **INSPECT FUSES (DEF, ECU-IG NO. 2, HTR-IG)**

OK ▼

2.	**CHECK HARNESS AND CONNECTOR (REAR WINDOW DEFOGGER WIRE - INSTRUMENT PANEL JUNCTION BLOCK)**

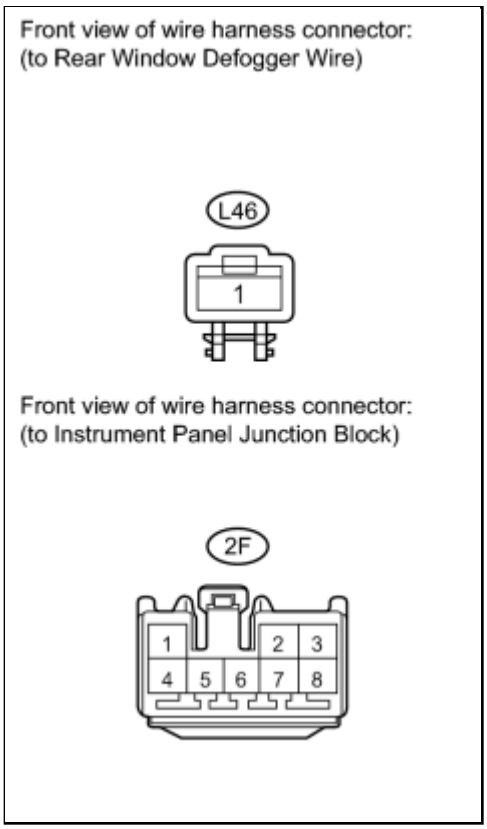

(a) Disconnect the 2F instrument panel junction block and L46 rear window defogger wire connectors.

(b) Measure the resistance according to the value(s) in the table below.

Standard Resistance:

TESTER CONNECTION	CONDITION	SPECIFIED CONDITION
L46-1 - 2F-2	Always	Below 1 Ω
L46-1 - Body ground	Always	10 kΩ or higher

NG ▶ **REPAIR OR REPLACE HARNESS OR CONNECTOR**

OK ▼

3.	CHECK HARNESS AND CONNECTOR (REAR WINDOW DEFOGGER WIRE - BATTERY)

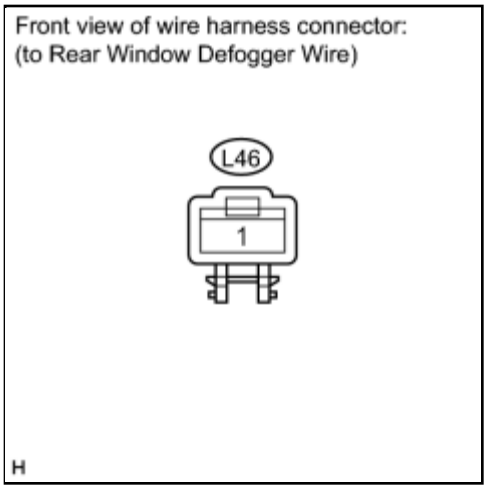

(a) Reconnect the 2F instrument panel junction block connector.

(b) Measure the voltage according to the value(s) in the table below.

Standard Voltage:

TESTER CONNECTION	CONDITION	SPECIFIED CONDITION
L46-1 - Body ground	Ignition switch ON, Rear window defogger switch ON	11 to 14 V

NG ▶ **PROCEED TO NEXT CIRCUIT INSPECTION SHOWN IN PROBLEM SYMPTOMS TABLE**

OK

4.	**CHECK HARNESS AND CONNECTOR (REAR WINDOW DEFOGGER WIRE - BODY GROUND)**

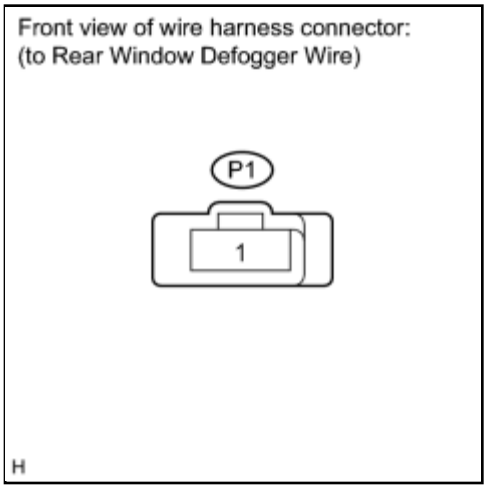

(a) Disconnect the P1 rear window defogger wire connector.

(b) Measure the resistance according to the value(s) in the table below.

Standard Resistance:

TESTER CONNECTION	CONDITION	SPECIFIED CONDITION
P1-1 - Body ground	Always	Below 1 Ω

NG ▶ **REPAIR OR REPLACE HARNESS OR CONNECTOR**

OK ▶ **REPAIR OR REPLACE REAR WINDOW DEFOGGER WIRE**

5.	**INSPECT FUSES (DEF, ECU-IG NO. 2, HTR-IG)**

(a) Remove the DEF, ECU-IG No. 2 and HTR-IG fuses from the instrument panel junction block.

(b) Measure the resistance according to the value(s) in the table below.

Standard Resistance:

ITEM	CONDITION	SPECIFIED CONDITION

ITEM	CONDITION	SPECIFIED CONDITION
DEF fuse	Always	Below 1 Ω
ECU-IG No. 2 fuse	Always	Below 1 Ω
HTR-IG fuse	Always	Below 1 Ω

NG ▶ **REPLACE FUSES**

OK ▼

6.	CHECK HARNESS AND CONNECTOR (IG1 RELAY POWER SOURCE)

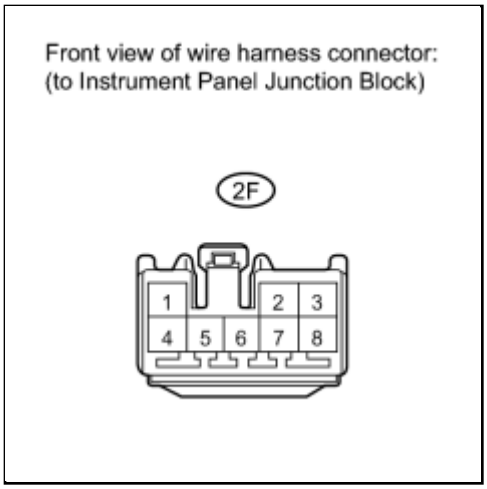

(a) Disconnect the 2F instrument panel junction block connector.

(b) Measure the voltage according to the value(s) in the table below.

Standard Voltage:

TESTER CONNECTION	CONDITION	SPECIFIED CONDITION
2F-3 - Body Ground	Ignition switch ON	11 to 14 V

Result:

RESULT	PROCEED TO
OK	A
NG (w/ Smart Key System)	B
NG (w/o Smart Key System)	C

C ▶ **REPAIR OR REPLACE HARNESS OR CONNECTOR**

B ▶ **GO TO SMART KEY SYSTEM**

A

▼

7.	**CHECK HARNESS AND CONNECTOR (INSTRUMENT PANEL JUNCTION BLOCK - BATTERY)**

Front view of wire harness connector:
(to Instrument Panel Junction Block)

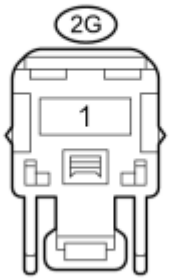

(a) Disconnect the 2G instrument panel junction block connector.

(b) Measure the voltage according to the value(s) in the table below.

Standard Voltage:

TESTER CONNECTION	CONDITION	SPECIFIED CONDITION
2G-1 - Body ground	Ignition switch ON	11 to 14 V

NG ▶ **REPAIR OR REPLACE HARNESS OR CONNECTOR**

OK

▼

8.	**CHECK HARNESS AND CONNECTOR (HEATER CONTROL (BLOWER SWITCH) - INSTRUMENT PANEL J/B)**

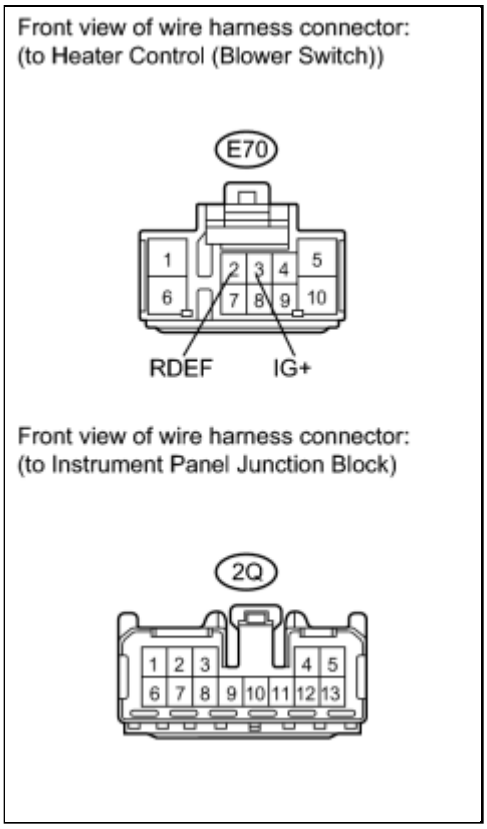

(a) Disconnect the E70 heater control (blower switch) and 2Q instrument panel junction block connectors.

(b) Measure the resistance according to the value(s) in the table below.

Standard Resistance:

TESTER CONNECTION	CONDITION	SPECIFIED CONDITION
E70-2 (RDEF) - 2Q-12	Always	Below 1 Ω
E70-3 (IG+) - 2Q-10	Always	Below 1 Ω
E70-2 (RDEF) - Body ground	Always	10 kΩ or higher
E70-3 (IG+) - Body ground	Always	10 kΩ or higher

NG ▶ **REPAIR OR REPLACE HARNESS OR CONNECTOR**

OK ▼

9.	**CHECK HARNESS AND CONNECTOR (HEATER CONTROL (BLOWER SWITCH) - BATTERY)**

(a) Reconnect the 2Q instrument panel junction block

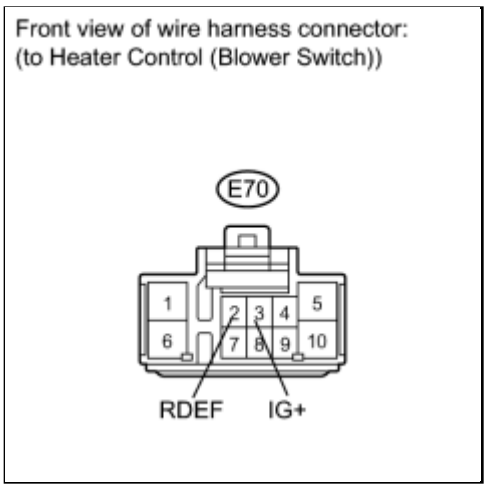

connector.

(b) Measure the voltage according to the value(s) in the table below.

Standard Voltage:

TESTER CONNECTION	CONDITION	SPECIFIED CONDITION
E70-2 (RDEF) - Body ground	Ignition switch ON	11 to 14 V
E70-3 (IG+) - Body ground	Ignition switch ON	11 to 14 V

NG ▶ **PROCEED TO NEXT CIRCUIT INSPECTION SHOWN IN PROBLEM SYMPTOMS TABLE**

OK ▼

10.	**CHECK HARNESS AND CONNECTOR (HEATER CONTROL (BLOWER SWITCH) - BODY GROUND)**

(a) Measure the resistance according to the value(s) in the table below.

Standard Resistance:

TESTER CONNECTION	CONDITION	SPECIFIED CONDITION
E70-5 (E) - Body ground	Always	Below 1 Ω

Front view of wire harness connector:
(to Heater Control (Blower Switch))

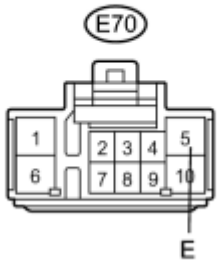

NG ▶ **REPAIR OR REPLACE HARNESS OR CONNECTOR**

OK ▶ **REPLACE HEATER CONTROL (BLOWER SWITCH)**

Last Modified: 3-10-2010	6.4 A	**From:** 200901
Model Year: 2010	**Model:** Corolla	**Doc ID:** RM000000WYG02UX
Title: WINDOW / GLASS: WINDOW DEFOGGER SYSTEM (for Manual Air Conditioning System): REPAIR (2010 Corolla)		

REPAIR

1. REPAIR WINDOW DEFOGGER WIRE

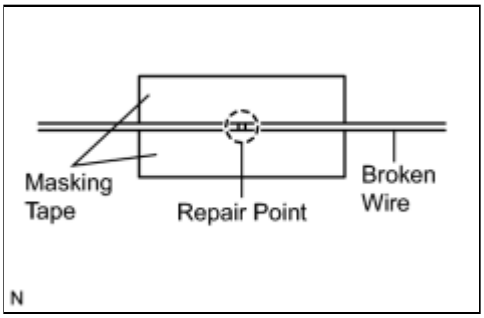

(a) Clean the broken wire tips with a grease, wax and silicone remover.

(b) Place the masking tape along both sides of the wire.

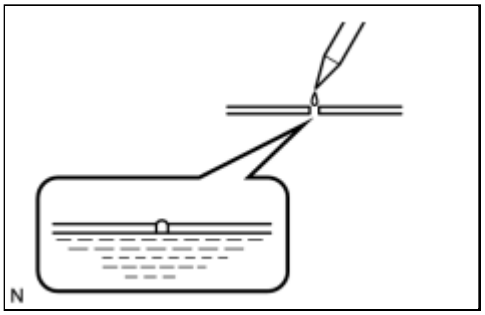

(c) Thoroughly mix the repair agent (Dupont paste No. 4817 or equivalent).

(d) Using a fine tip brush, apply a small amount of the agent to the wire.

(e) After a few minutes, remove the masking tape.

NOTICE:

Do not repair the defogger wire again for at least 24 hours.

Last Modified: 3-10-2010	6.4 K	**From:** 200901
Model Year: 2010	**Model:** Corolla	**Doc ID:** RM000001YRK00XX
Title: WINDOW / GLASS: WINDSHIELD GLASS: COMPONENTS (2010 Corolla)		

COMPONENTS

ILLUSTRATION

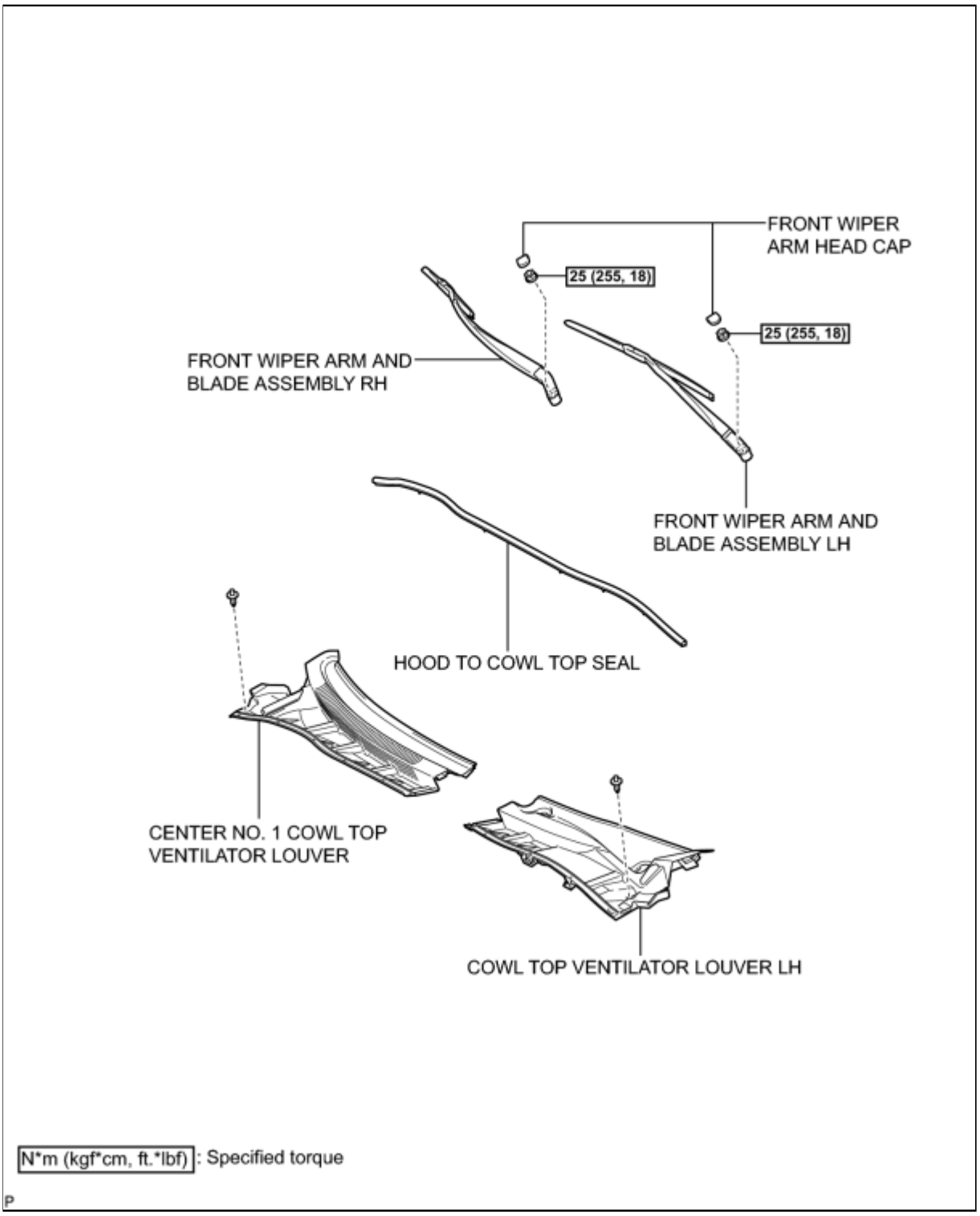

ILLUSTRATION

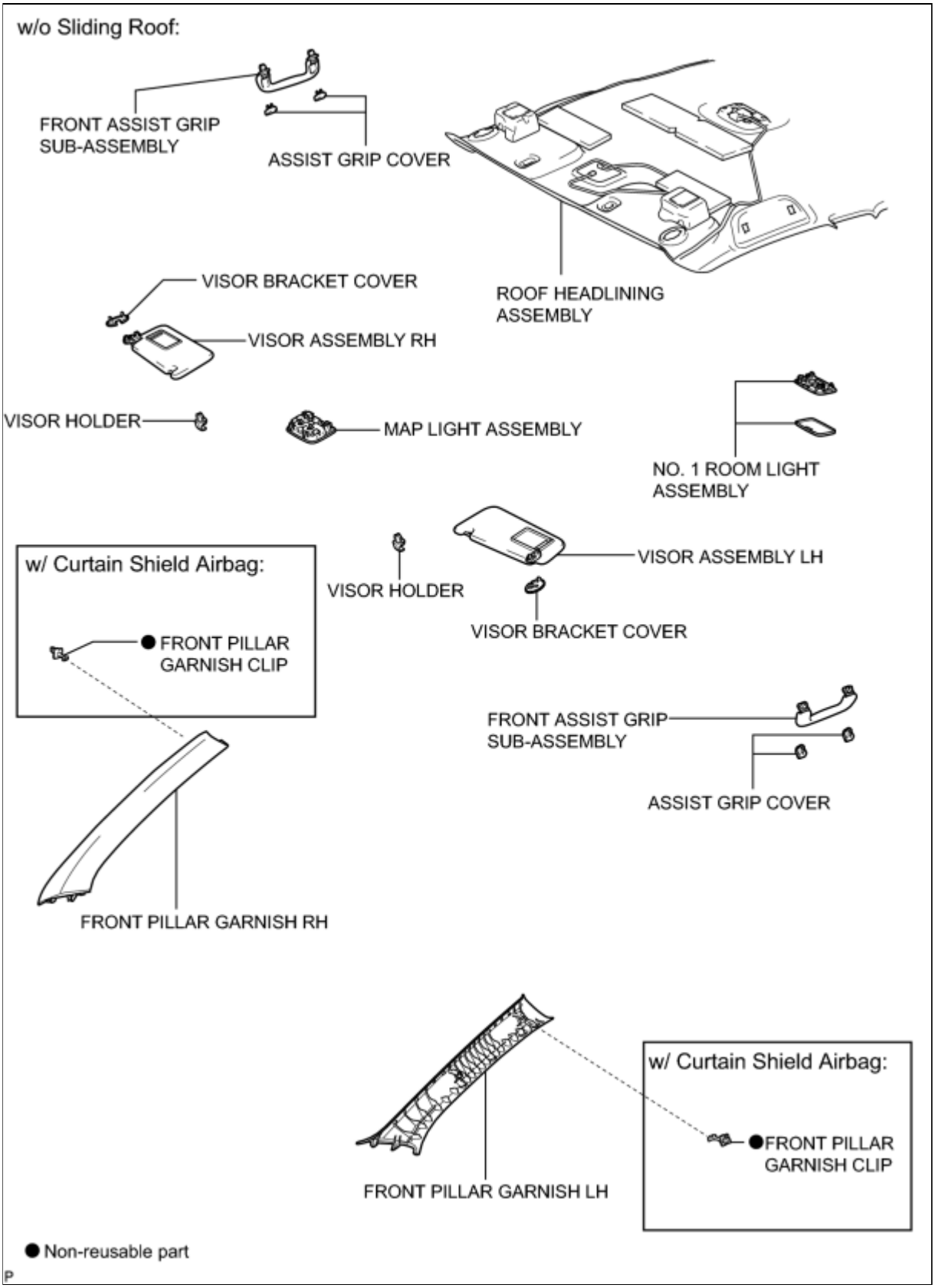

ILLUSTRATION

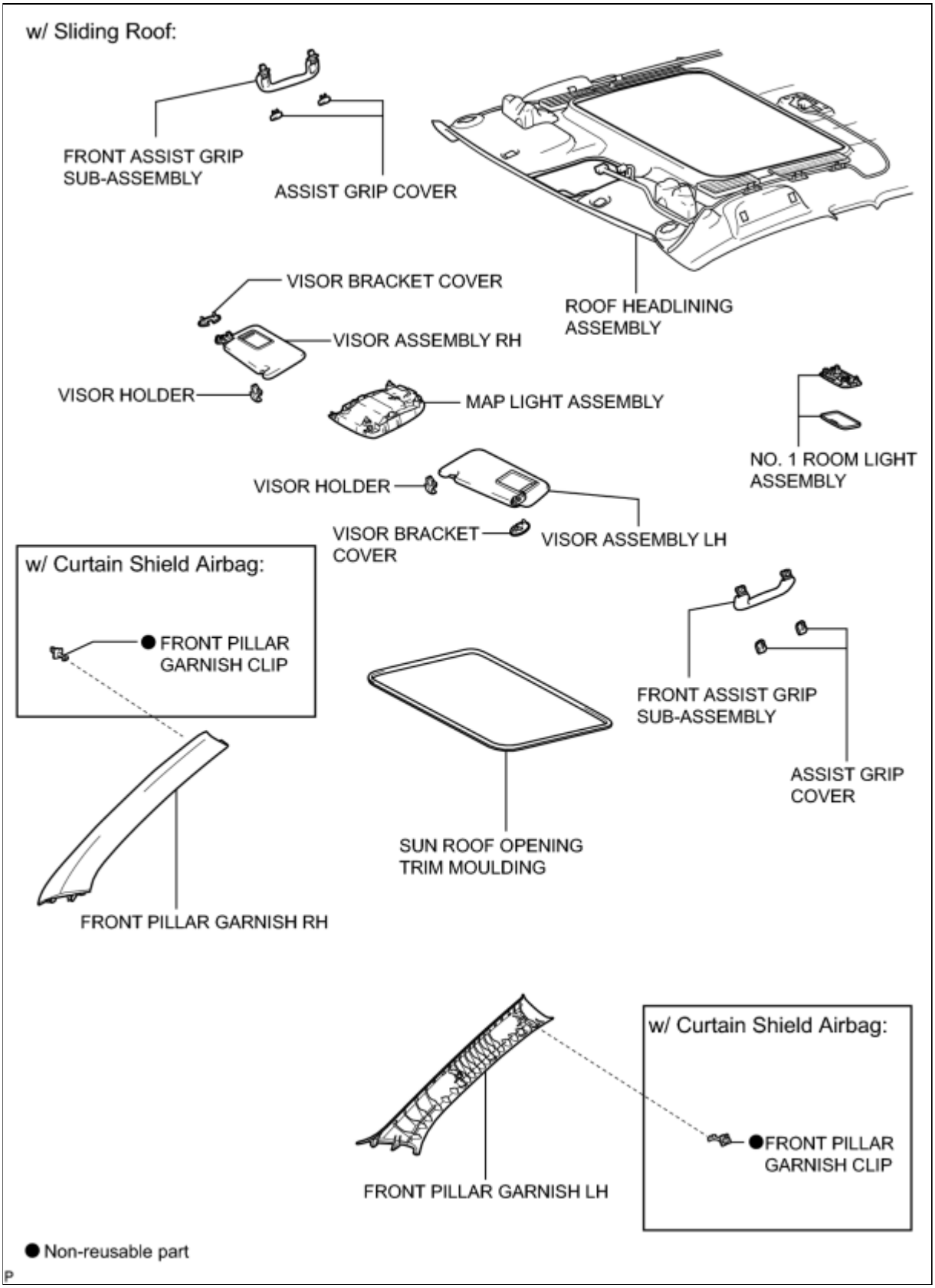

ILLUSTRATION

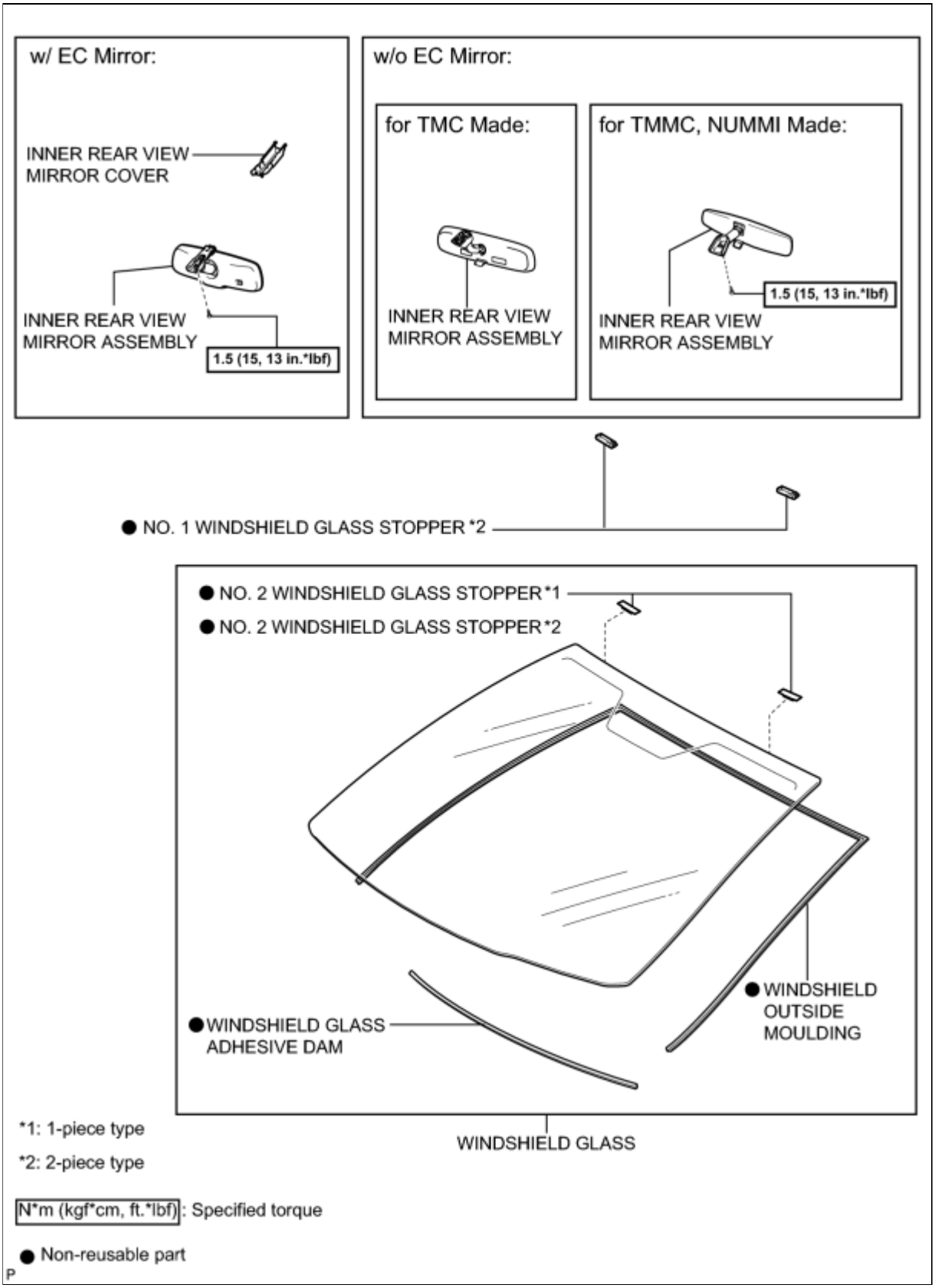

Last Modified: 3-10-2010	6.4 A	**From:** 200901
Model Year: 2010	**Model:** Corolla	**Doc ID:** RM0000013KE022X
Title: WINDOW / GLASS: WINDSHIELD GLASS: INSTALLATION (2010 Corolla)		

INSTALLATION

1. INSTALL NO. 2 WINDSHIELD GLASS STOPPER

(a) Using a brush or sponge, coat the application area of the 2 No. 2 windshield glass stoppers with Primer G.

NOTICE:

- Do not apply too much primer.
- Allow the primer coating to dry for 3 minutes or more.
- Throw away any leftover Primer G.

HINT:

If an area other than that specified is coated by accident, apply a non-reusable part solvent to a clean cloth and wipe off the primer.

(b) Install 2 new No. 2 windshield glass stoppers onto the windshield glass as shown in the illustration.

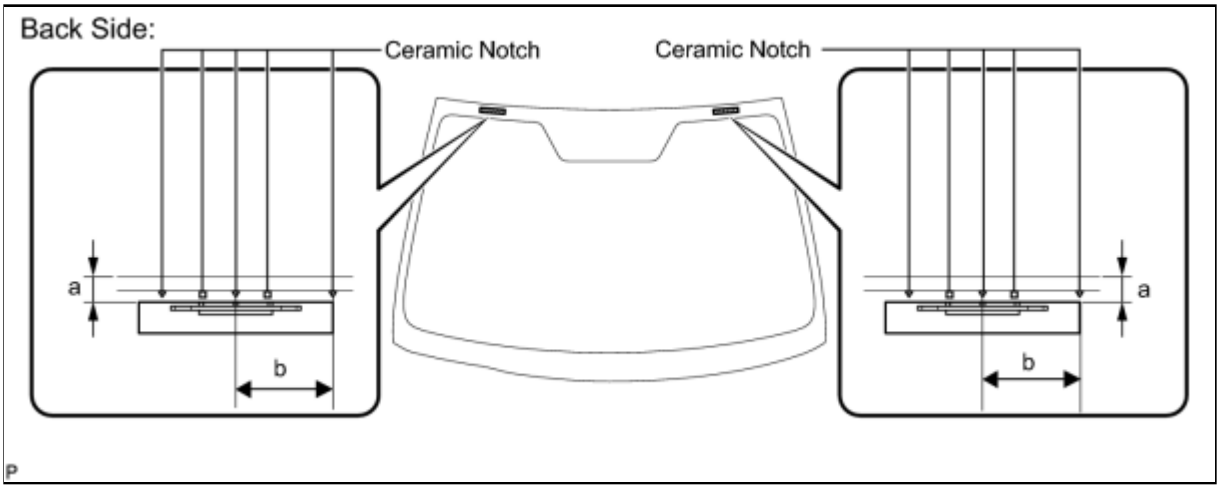

HINT:

Only 2-piece type No. 2 windshield glass stoppers are supplied. Use the 2-piece type stoppers even if a 1-piece type was used.

Standard Dimension:

AREA	DIMENSION
a	13.6 mm (0.535 in.)
b	40.0 mm (1.57 in.)

2. INSTALL NO. 1 WINDSHIELD GLASS STOPPER (for 2-piece Type)

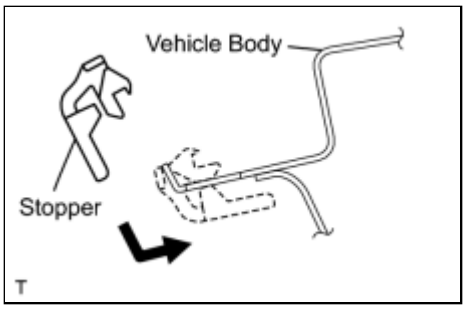

(a) Install 2 new No. 1 windshield glass stoppers to the vehicle body as shown in the illustration.

HINT:

Only 2-piece type No. 1 windshield glass stoppers are supplied. Use the 2-piece type stoppers even if a 1-piece type was used.

3. INSTALL WINDSHIELD OUTSIDE MOULDING

(a) Using a brush or sponge, coat the application area of the windshield outside moulding with Primer G.

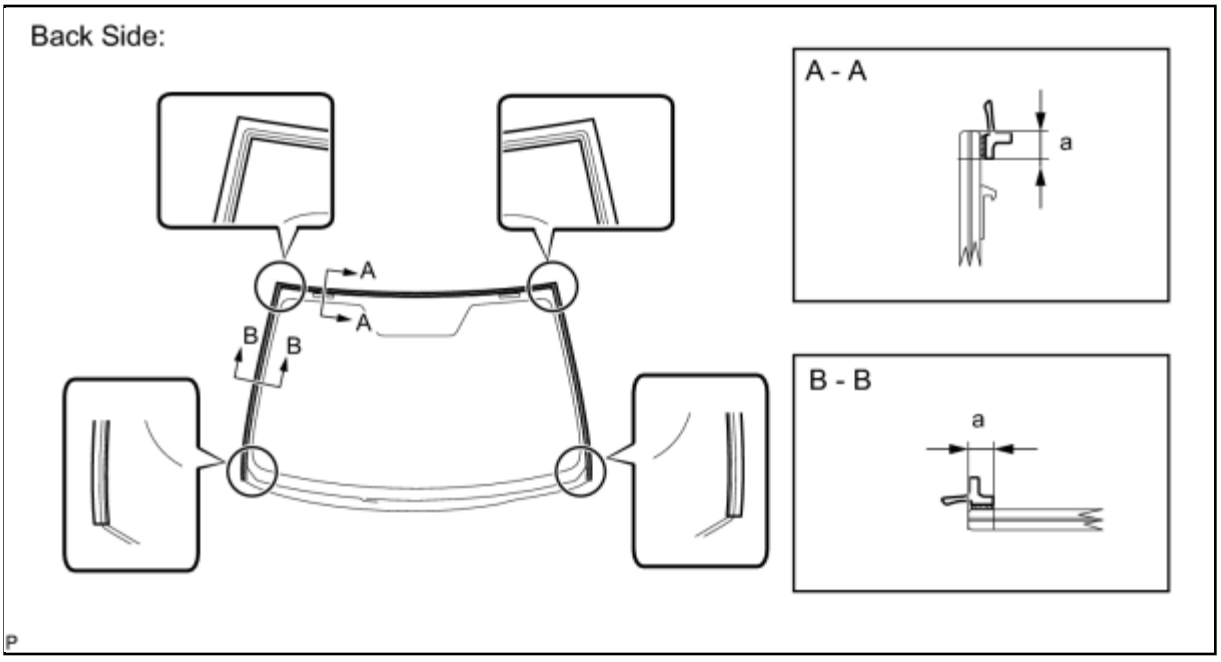

Standard Dimension:

AREA	DIMENSION
a	7.0 mm (0.276 in.)

NOTICE:

- Do not apply too much primer.
- Allow the primer coating to dry for 3 minutes or more.
- Throw away any leftover Primer G.

HINT:

If an area other than that specified is coated by accident, apply a non-residue solvent to a clean cloth and wipe off the excess primer.

(b) Install a new windshield outside moulding onto the windshield glass as shown in the illustration.

4. INSTALL WINDSHIELD GLASS ADHESIVE DAM

(a) Using a brush or sponge, coat the application area of the windshield glass adhesive dam with Primer G.

NOTICE:

- Do not apply too much primer.
- Allow the primer coating to dry for 3 minutes or more.
- Throw away any leftover Primer G.

HINT:

If the primer is applied to an area that specified is coated by accident, apply a non-residue solvent to a clean cloth and wipe off the excess primer.

(b) Install a new windshield glass adhesive dam onto the windshield glass as shown in the illustration.

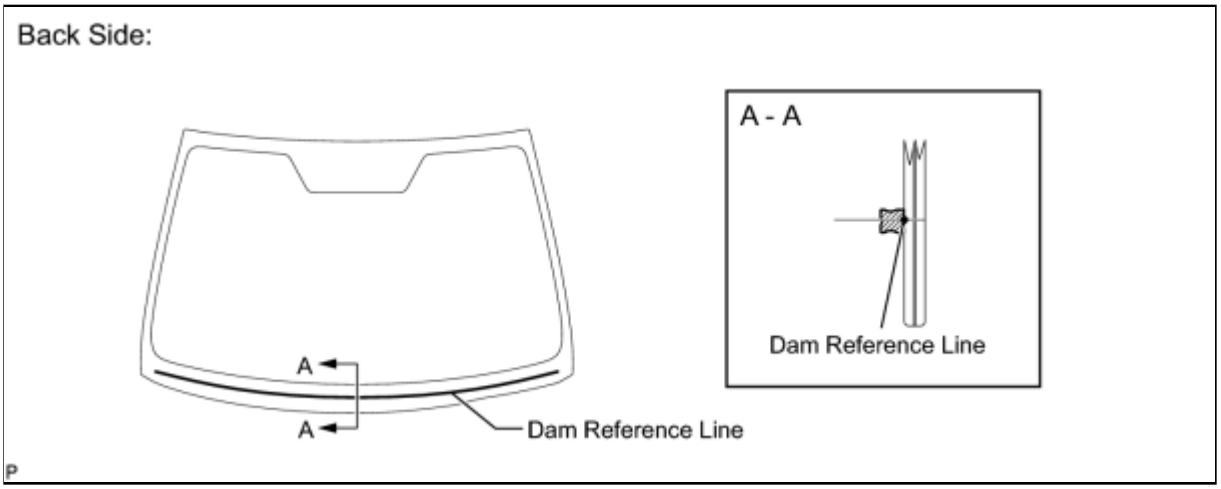

NOTICE:

Install the a adhesive dam along the dam reference line.

5. INSTALL WINDSHIELD GLASS

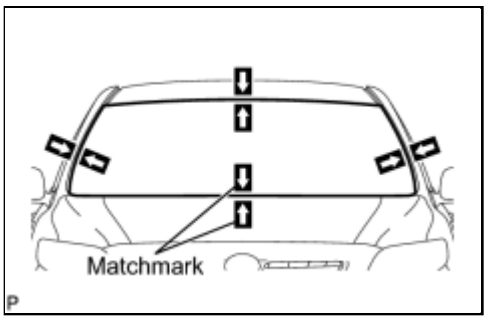

(a) Position the windshield glass assembly.

(1) Using suction cups, place the windshield glass assembly in the correct position.

(2) Check that the entire contact surface of the windshield glass rim is perfectly even.

(3) Place matchmarks on the windshield glass and vehicle body on the locations indicated in the illustration.

HINT:

- Placing matchmarks is necessary only when installing a new glass. If it is the reused glass, matchmarks should already be present.
- When reusing the glass, check and correct the matchmark

positions.

NOTICE:

Check that the stoppers are attached to the vehicle body correctly.

(4) Using suction cups, remove the windshield glass assembly.

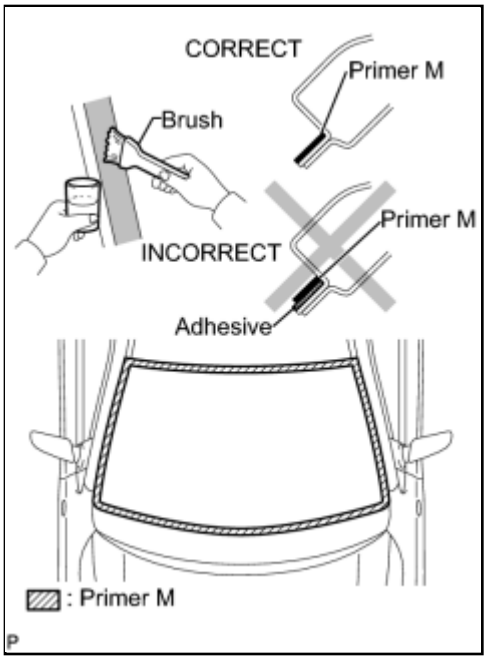

(b) Using a brush, coat the installation surface on the vehicle body with Primer M.

NOTICE:

- Do not coat the adhesive with Primer M.
- Allow the primer to dry for 3 minutes or more.
- Throw away any leftover Primer G.

HINT:

If an area other than that specified is coated by accident, apply a non-residue solvent to a clean cloth and wipe off the excess primer.

(c) Using a brush or sponge, coat the application area of adhesive with Primer G.

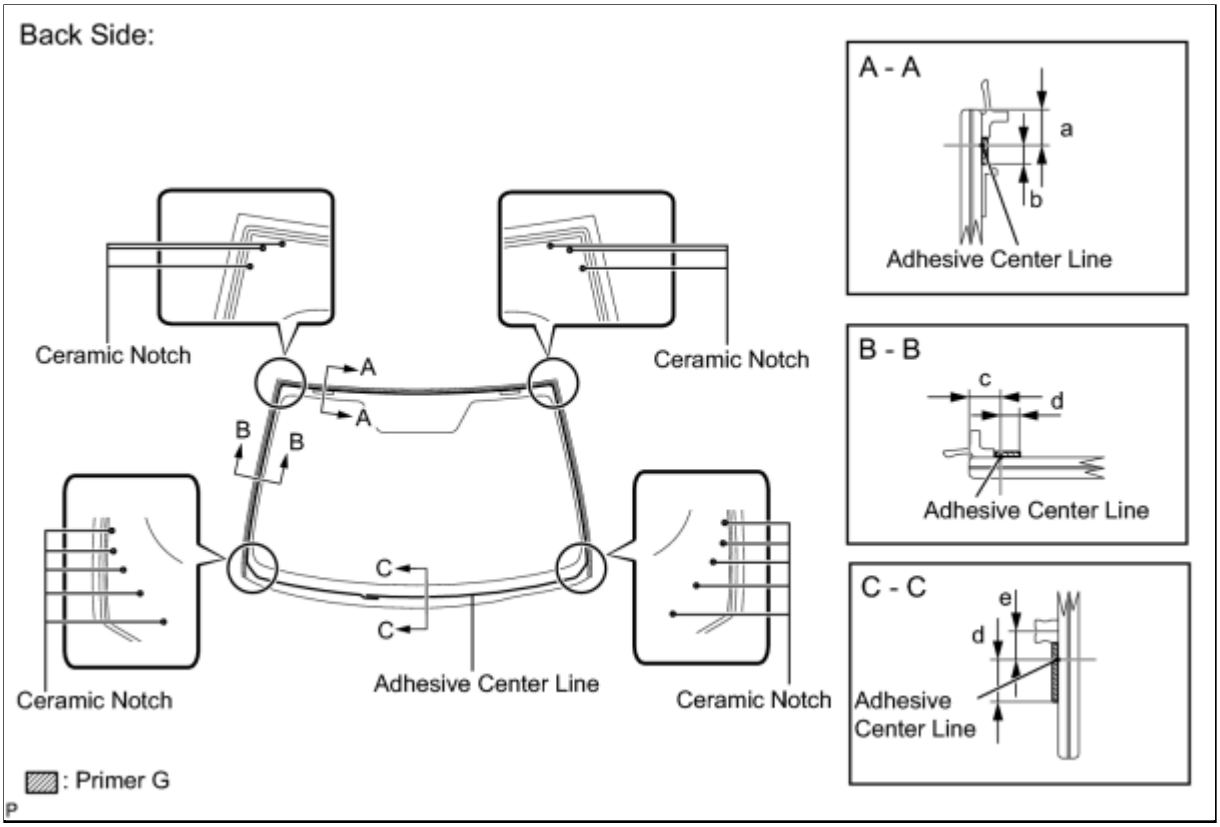

Standard Dimension:

AREA	DIMENSION
a	9.5 mm (0.374 in.)
b	4.6 mm (0.181 in.)
c	9.5 mm (0.374 in.)
d	7.0 mm (0.276 in.)
e	7.5 mm (0.295 in.)

NOTICE:

- Do not apply too much primer.
- Allow the primer to dry for 3 minutes or more.
- Throw away any leftover Primer G.

HINT:

If an area other than that specified is coated by accident, apply a non-residue solvent to a clean cloth and wipe off the excess primer.

(1) Apply adhesive to the glass.

Adhesive:
Toyota Genuine Windshield Glass Adhesive or equivalent

(2) Cut off the tip of the cartridge nozzle, as shown in the illustration.

HINT:

After cutting off the tip, use all adhesive within the time described in the table below.

Tack-Free Time:

TEMPERATURE	TACK-FREE TIME
35°C (95°F)	15 minutes
20°C (68°F)	1 hour and 40 minutes
5°C (41°F)	8 hours

(3) Load the sealer gun with the cartridge.

(4) Apply adhesive to the windshield glass as shown in the illustration.

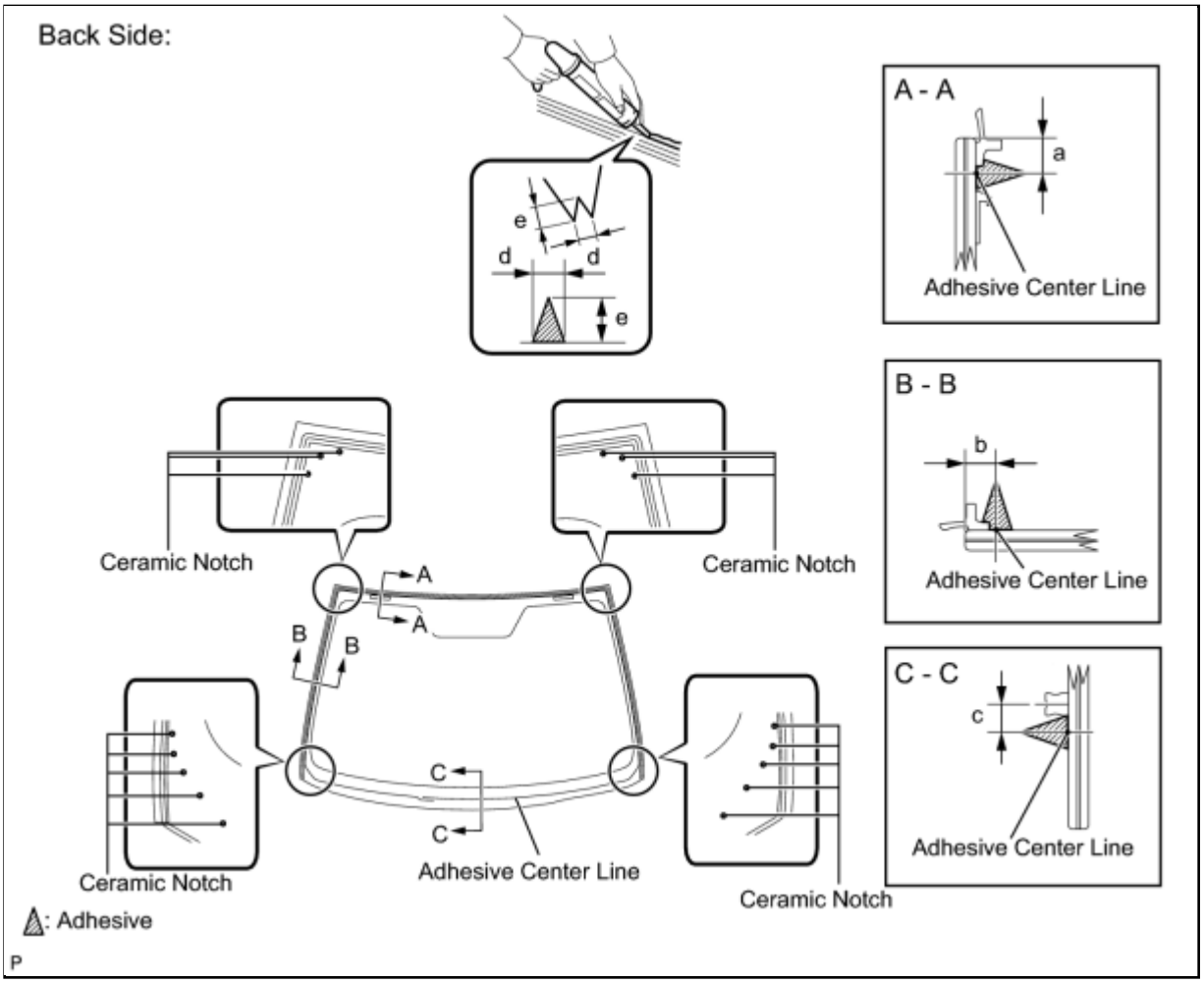

Standard Dimension:

AREA	DIMENSION
a	9.5 mm (0.374 in.)
b	9.5 mm (0.374 in.)
c	7.5 mm (0.295 in.)

AREA	DIMENSION
d	8.0 mm (0.315 in.)
e	12.0 mm (0.472 in.)

HINT:

Apply adhesive onto the ceramic notches.

(d) Install the windshield glass assembly.

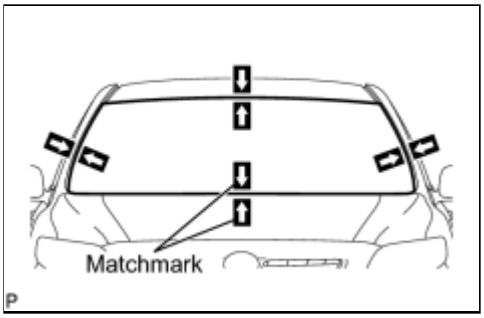

(1) Using suction cups, position the glass so that the matchmarks are aligned and press it in gently along the rim.

(2) Lightly press the outer surface of the windshield glass to ensure that it is securely attached to the vehicle body.

NOTICE:

- Check that the windshield glass stoppers are attached to the vehicle body correctly.
- Check the clearance between the vehicle body and windshield glass.

HINT:

Press the glass with force of 98 N (10 kgf, 22 lbf) or more.

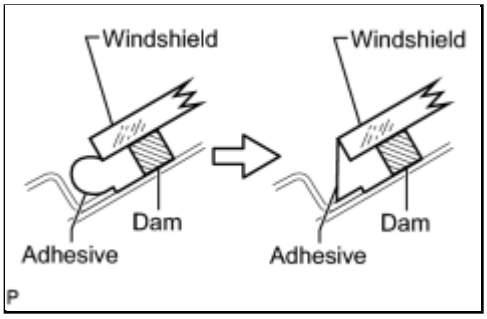

(3) If necessary, use a scraper to correct the level or position of adhesive that has been applied.

NOTICE:

Apply adhesive onto the windshield glass rim.

(4) Hold the windshield glass using protective tape until applied adhesive becomes hard.

NOTICE:

Do not drive the vehicle for the amount of time described in the table below.

Minimum Time:

TEMPERATURE	MINIMUM TIME PRIOR TO DRIVING VEHICLE
35°C (95°F)	1 hour and 30 minutes
20°C (68°F)	5 hours
5°C (41°F)	24 hours

6. INSPECT FOR LEAK AND REPAIR

(a) After the adhesive has hardened, apply water from the outside of the vehicle. Check that no water leaks into the cabin.

(b) If water leaks into the cabin, allow the water to dry and add adhesive.

(c) Remove the protective tape.

7. INSTALL ROOF HEADLINING ASSEMBLY

Return the front section of the roof headlining assembly to the original position.

8. INSTALL SUN ROOF OPENING TRIM MOULDING (w/ Sliding Roof) INFO

9. INSTALL INNER REAR VIEW MIRROR ASSEMBLY (w/o EC Mirror)

for TMC Made: INFO

for TMMC, NUMMI Made: INFO

10. INSTALL INNER REAR VIEW MIRROR ASSEMBLY (w/ EC Mirror) INFO

11. INSTALL INNER REAR VIEW MIRROR COVER (w/ EC Mirror) INFO

12. INSTALL VISOR HOLDER INFO

13. INSTALL NO. 1 ROOM LIGHT ASSEMBLY INFO

14. INSTALL FRONT ASSIST GRIP SUB-ASSEMBLY INFO

15. INSTALL VISOR ASSEMBLY LH INFO

16. INSTALL VISOR ASSEMBLY RH INFO

17. INSTALL MAP LIGHT ASSEMBLY (w/o Sliding Roof) INFO

18. INSTALL MAP LIGHT ASSEMBLY (w/ Sliding Roof) INFO

19. INSTALL FRONT PILLAR GARNISH LH (w/o Curtain Shield Airbag) INFO

20. INSTALL FRONT PILLAR GARNISH LH (w/ Curtain Shield Airbag) INFO

21. INSTALL FRONT PILLAR GARNISH RH (w/o Curtain Shield Airbag) INFO

22. INSTALL FRONT PILLAR GARNISH RH (w/ Curtain Shield Airbag) INFO

23. INSTALL COWL TOP VENTILATOR LOUVER LH INFO

24. INSTALL CENTER NO. 1 COWL TOP VENTILATOR LOUVER INFO

25. INSTALL HOOD TO COWL TOP SEAL INFO

26. INSTALL FRONT WIPER ARM AND BLADE ASSEMBLY RH INFO

27. INSTALL FRONT WIPER ARM AND BLADE ASSEMBLY LH INFO

28. INSTALL FRONT WIPER ARM HEAD CAP INFO

29. CONNECT CABLE TO NEGATIVE BATTERY TERMINAL

Last Modified: 3-10-2010	6.4 A	**From:** 200901
Model Year: 2010	**Model:** Corolla	**Doc ID:** RM0000013KG021X
Title: WINDOW / GLASS: WINDSHIELD GLASS: REMOVAL (2010 Corolla)		

REMOVAL

1. DISCONNECT CABLE FROM NEGATIVE BATTERY TERMINAL

CAUTION:

Wait at least 90 seconds after disconnecting the cable from the negative (-) battery terminal to disable the SRS system.

2. REMOVE FRONT WIPER ARM HEAD CAP INFO

3. REMOVE FRONT WIPER ARM AND BLADE ASSEMBLY LH INFO

4. REMOVE FRONT WIPER ARM AND BLADE ASSEMBLY RH INFO

5. REMOVE HOOD TO COWL TOP SEAL INFO

6. REMOVE CENTER NO. 1 COWL TOP VENTILATOR LOUVER INFO

7. REMOVE COWL TOP VENTILATOR LOUVER LH INFO

8. REMOVE FRONT PILLAR GARNISH LH (w/o Curtain Shield Airbag) INFO

9. REMOVE FRONT PILLAR GARNISH LH (w/ Curtain Shield Airbag) INFO

10. REMOVE FRONT PILLAR GARNISH RH (w/o Curtain Shield Airbag) INFO

11. INSTALL FRONT PILLAR GARNISH RH (w/ Curtain Shield Airbag) INFO

12. REMOVE MAP LIGHT ASSEMBLY (w/o Sliding Roof) INFO

13. REMOVE MAP LIGHT ASSEMBLY (w/ Sliding Roof) INFO

14. REMOVE VISOR ASSEMBLY LH INFO

15. REMOVE VISOR ASSEMBLY RH INFO

16. REMOVE FRONT ASSIST GRIP SUB-ASSEMBLY INFO

17. REMOVE NO. 1 ROOM LIGHT ASSEMBLY INFO

18. REMOVE VISOR HOLDER INFO

19. REMOVE INNER REAR VIEW MIRROR COVER (w/ EC Mirror) INFO

20. REMOVE INNER REAR VIEW MIRROR ASSEMBLY (w/o EC Mirror)

for TMC Made: INFO

for TMMC, NUMMI Made: INFO

21. REMOVE INNER REAR VIEW MIRROR ASSEMBLY (w/ EC Mirror) INFO

22. REMOVE SUN ROOF OPENING TRIM MOULDING (w/ Sliding Roof) INFO

23. REMOVE ROOF HEADLINING ASSEMBLY

It is not necessary to completely remove the roof headlining assembly. Slightly lower the front section of the roof headlining assembly so that the windshield glass can be removed.

24. REMOVE WINDSHIELD GLASS

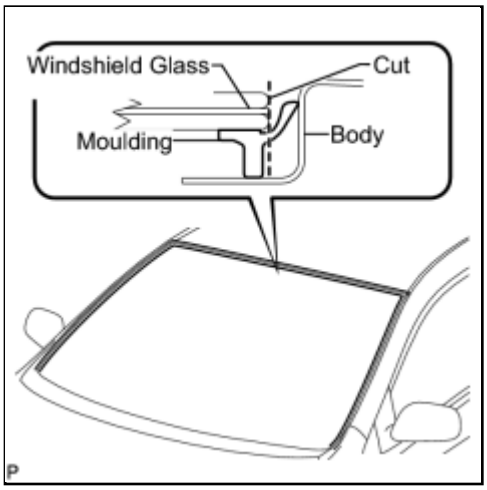

(a) Using a knife, cut off the upper windshield outside moulding as shown in the illustration.

NOTICE:

Be careful not to damage the vehicle body.

(b) Remove the remaining windshield outside moulding.

HINT:

Make a partial cut in the windshield outside moulding, then pull and remove it by hand.

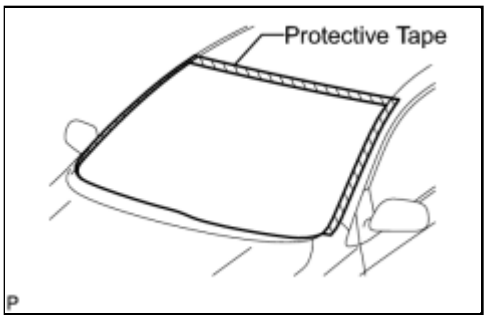

(c) Apply protective tape to the installation position of the windshield glass sub-assembly on the vehicle body.

NOTICE:

Apply protective tape to the installation surface to prevent it from being scratched.

(d) Pass a piano wire between the vehicle body and windshield glass sub-assembly from the interior.

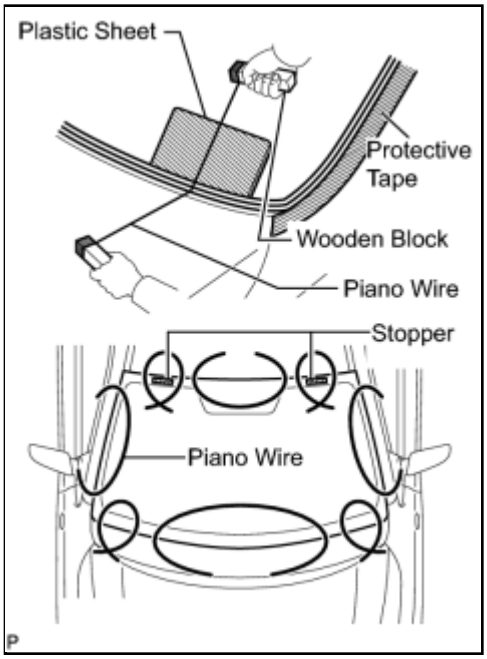

(e) Tie both wire ends to wooden blocks or similar objects.

(f) Cut off the adhesive by pulling the piano wire around the windshield glass sub-assembly.

NOTICE:

- When separating the windshield glass sub-assembly from the vehicle, be careful not to damage the vehicle's paint or interior/exterior ornaments.
- To prevent the instrument panel from being scratched when removing the windshield glass sub-assembly, place a plastic sheet between the piano wire and instrument panel.

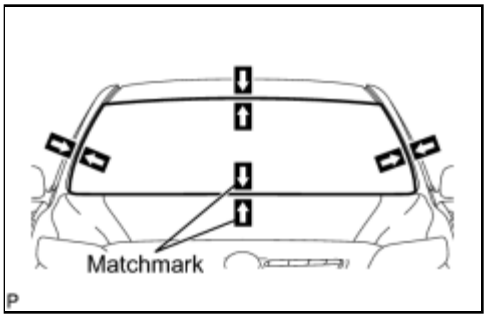

(g) Place matchmarks on the windshield glass sub-assembly and vehicle body on the locations indicated in the illustration.

HINT:

Matchmarks do not need if the windshield glass sub-assembly is not going to be reused.

(h) Disconnect the windshield glass stoppers.

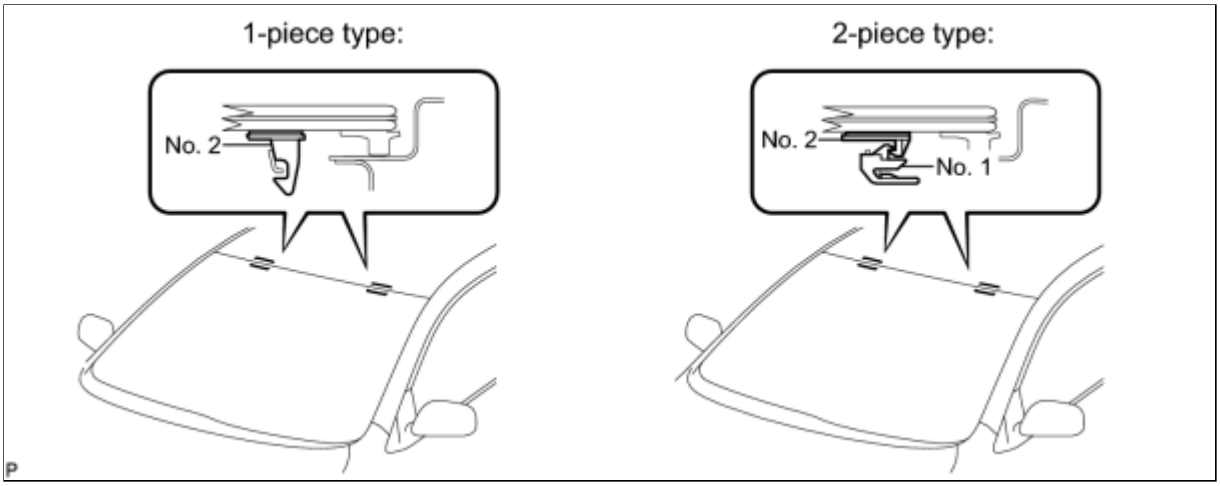

NOTICE:

- There are the No. 1 and No. 2 stoppers on the windshield glass sub-assembly as shown in the illustration. Be careful not to damage the windshield glass when cutting off the adhesive.
- To prevent the windshield glass sub-assembly from dropping when performing this operation, be sure to hold the windshield glass sub-assembly using suction cups.

HINT:

Depending on vehicles, a 1-piece or 2-piece type stopper is used.

(i) Using suction cups, remove the windshield glass sub-assembly.

NOTICE:

- Be careful not to drop the windshield glass sub-assembly.
- Leave as much adhesive on the vehicle body as possible when removing the windshield glass sub-assembly.

25. REMOVE WINDSHIELD OUTSIDE MOULDING

(a) Using a scraper, remove the windshield outside moulding.

NOTICE:

- Be careful not to damage the windshield glass.
- Be sure to replace the outside moulding with a new one.

26. REMOVE WINDSHIELD GLASS ADHESIVE DAM

(a) Using a scraper, remove the windshield glass adhesive dam.

NOTICE:

- Be careful not to damage the windshield glass.
- Be sure to replace the adhesive dam with a new one.

27. REMOVE NO. 2 WINDSHIELD GLASS STOPPER

(a) Using a scraper, remove the 2 No. 2 windshield glass stoppers.

NOTICE:

- Be careful not to damage the windshield glass.
- Be sure to replace the 2 No. 2 windshield glass stoppers with new ones.

28. REMOVE NO. 1 WINDSHIELD GLASS STOPPER (for 2-piece Type)

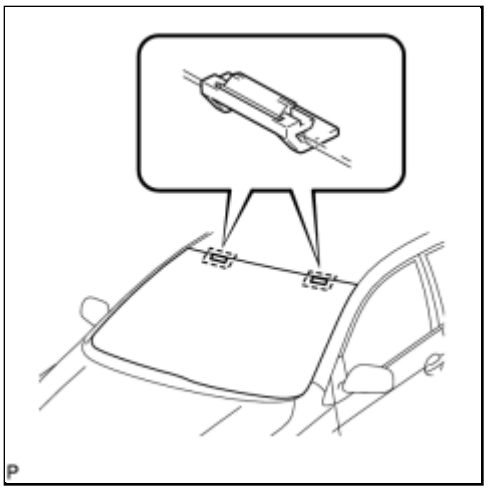

(a) Remove the 2 No. 1 windshield glass stoppers.

NOTICE:

Be sure to replace the 2 No. 1 windshield glass stoppers with new ones.

29. CLEAN WINDSHIELD GLASS

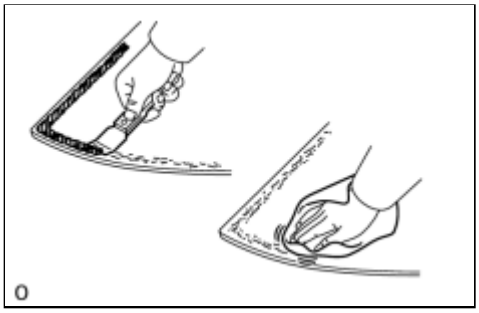

(a) Using a scraper, remove the damaged stoppers, dams and adhesive sticking to the windshield glass.

(b) Clean the outer edges of the glass with a non-residue solvent.

- Do not touch the glass surface after cleaning it.
- Even if using a new windshield glass, clean it with a non-residue solvent.

30. CLEAN VEHICLE BODY

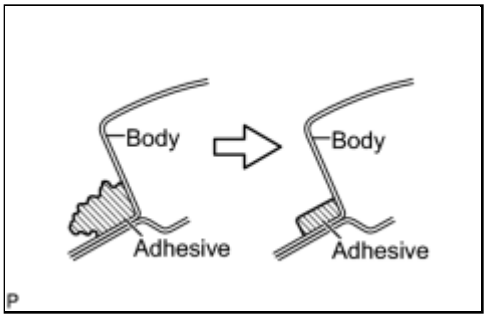

(a) Clean and shape the contact surface of the vehicle body.

(1) On the contact surface of the vehicle body, use a knife to cut away excess adhesive as shown in the illustration.

NOTICE:

Be careful not to damage the vehicle body.

HINT:

Leave as much adhesive on the vehicle body as possible.

(b) Clean the contact surface of the vehicle body with cleaner.

HINT:

Even if all the adhesive has been removed, clean the vehicle body.



Last Modified: 3-10-2010	6.4 K	**From:** 200901
Model Year: 2010	**Model:** Corolla	**Doc ID:** RM000002XJ400GX
Title: WIPER / WASHER: FRONT WIPER MOTOR: COMPONENTS (2010 Corolla)		

COMPONENTS

ILLUSTRATION

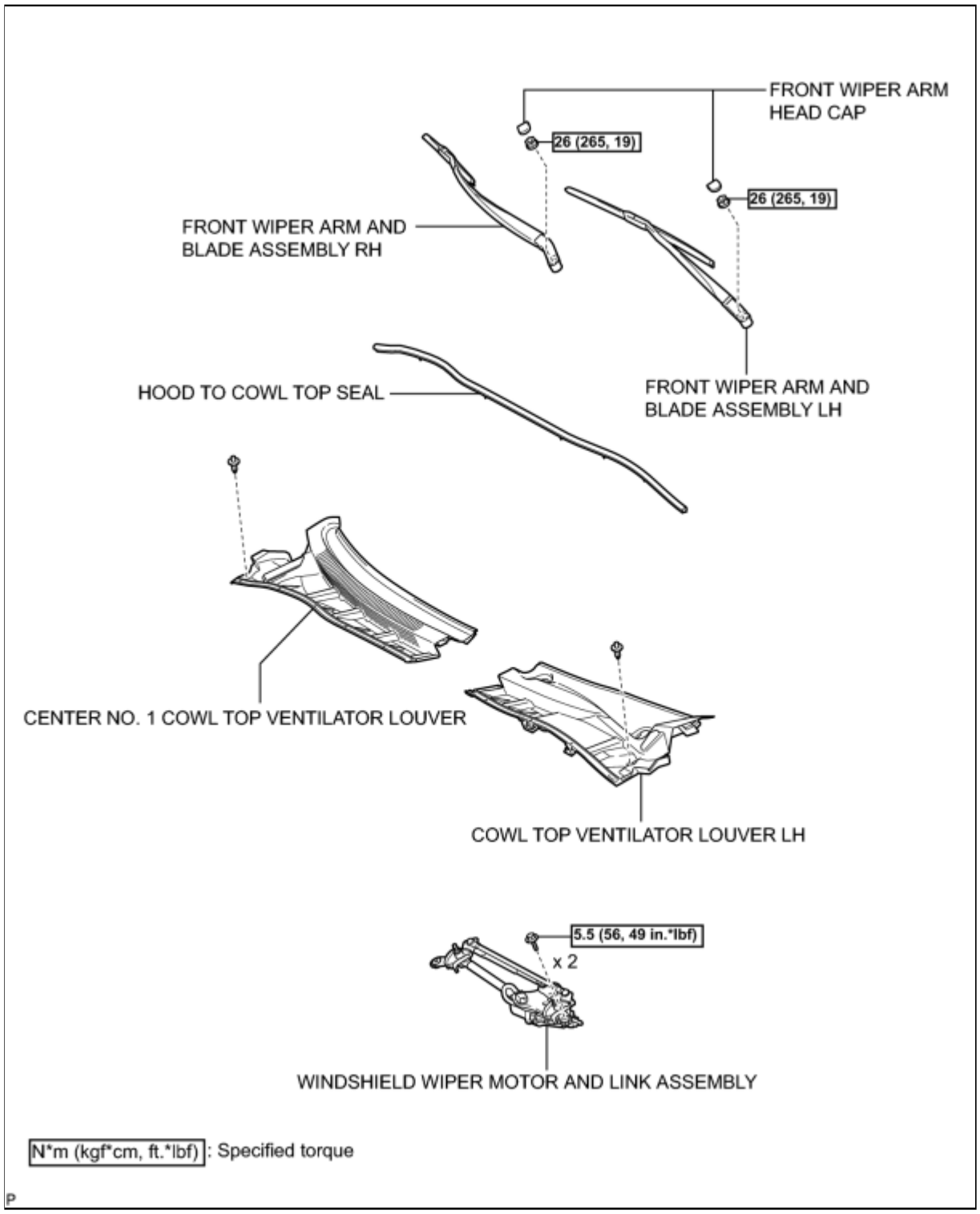

ILLUSTRATION

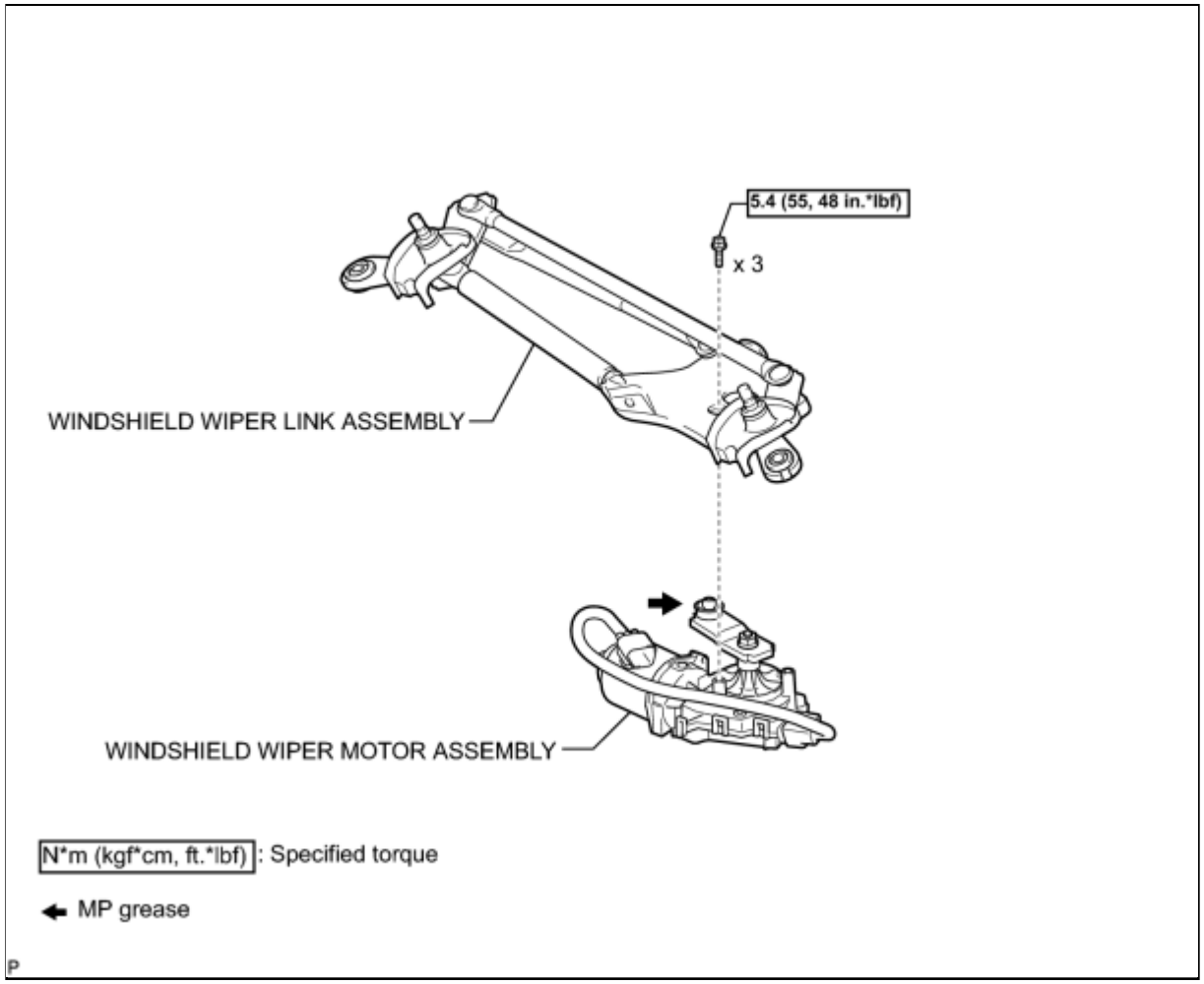

Last Modified: 3-10-2010	6.4 G	**From:** 200901
Model Year: 2010	**Model:** Corolla	**Doc ID:** RM000003H6Q004X
Title: WIPER / WASHER: FRONT WIPER MOTOR: ON-VEHICLE INSPECTION (2010 Corolla)		

ON-VEHICLE INSPECTION

1. INSPECT WINDSHIELD WIPER MOTOR ASSEMBLY

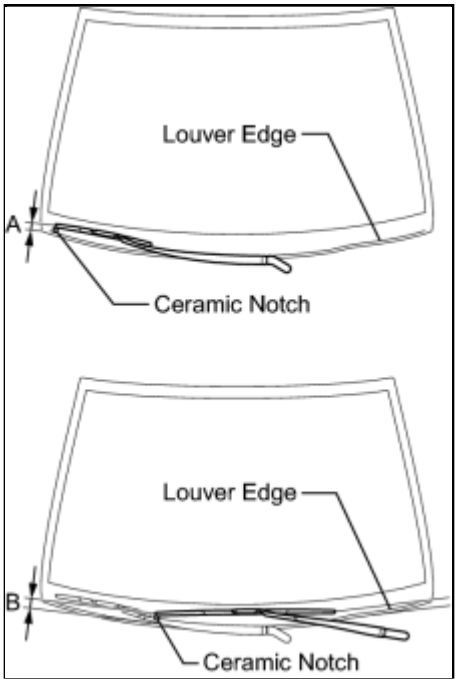

(a) Operate the windshield wiper motor.

(b) Stop the windshield wiper motor operation.

(c) Check the automatic stop position.

OK:

The windshield wipers stop at the positions shown in the illustration.

If the result is not as specified, the windshield wiper motor may have a malfunction.

AREA	MEASUREMENT
A	27.5 to 42.5 mm (1.08 to 1.67 in.)
B	22.5 to 37.5 mm (0.886 to 1.48 in.)

Last Modified: 3-10-2010	6.4 A	**From:** 200901
Model Year: 2010	**Model:** Corolla	**Doc ID:** RM000002XJ500GX
Title: WIPER / WASHER: FRONT WIPER MOTOR: REMOVAL (2010 Corolla)		

REMOVAL

1. REMOVE FRONT WIPER ARM HEAD CAP

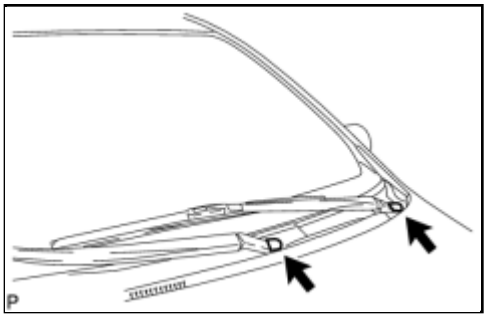

(a) Remove the 2 windshield wiper arm covers.

2. REMOVE FRONT WIPER ARM AND BLADE ASSEMBLY LH

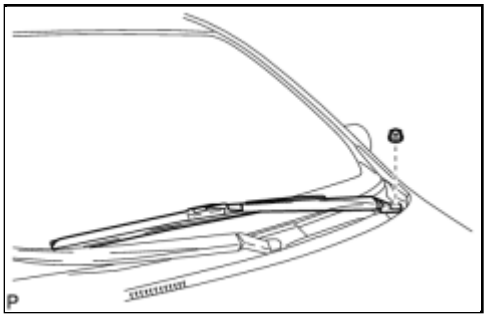

(a) Remove the nut and the front wiper arm and blade assembly LH.

3. REMOVE FRONT WIPER ARM AND BLADE ASSEMBLY RH

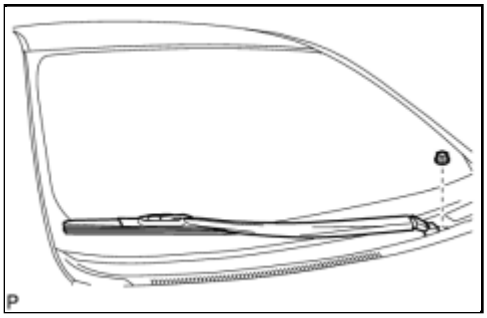

(a) Remove the nut and the front wiper arm and blade assembly RH.

4. REMOVE HOOD TO COWL TOP SEAL

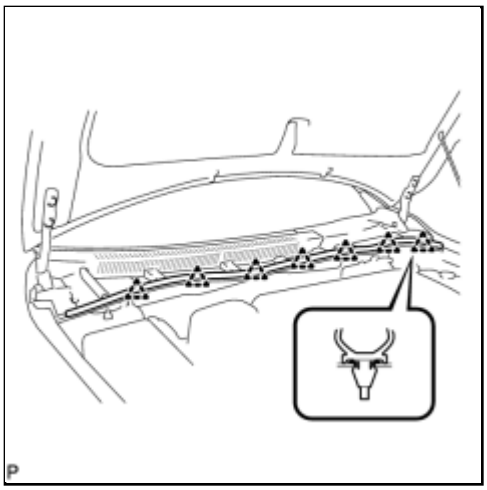

(a) Disengage the 7 clips and remove the hood to cowl top seal.

5. REMOVE CENTER NO. 1 COWL TOP VENTILATOR LOUVER

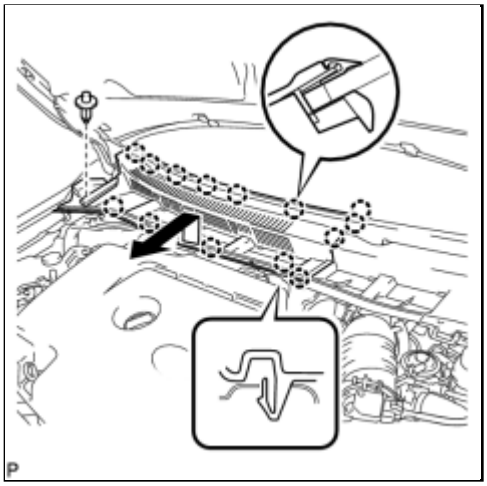

(a) Disengage the clip and 14 claws, and remove the center No. 1 cowl top ventilator louver.

6. REMOVE COWL TOP VENTILATOR LOUVER LH

(a) Disengage the clip and 8 claws, and remove the cowl top ventilator louver LH.

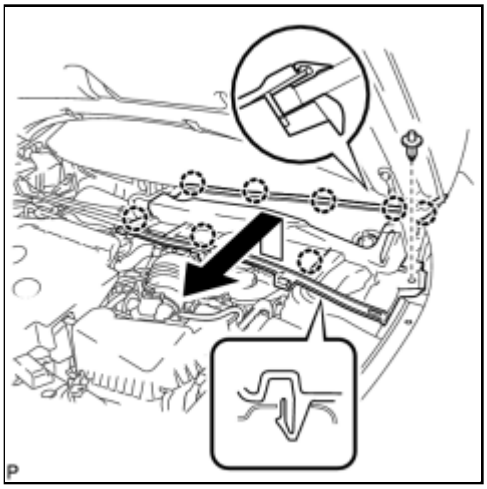

7. REMOVE WINDSHIELD WIPER MOTOR AND LINK ASSEMBLY

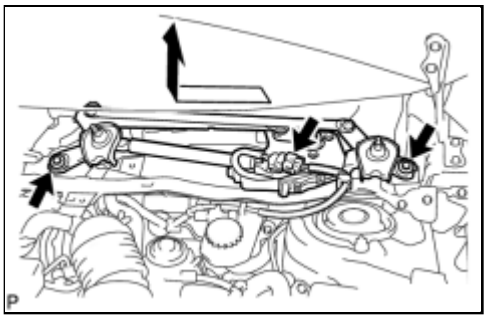

(a) Disconnect the connector.

(b) Remove the 2 bolts and the windshield wiper motor and link assembly.

8. REMOVE WINDSHIELD WIPER MOTOR ASSEMBLY

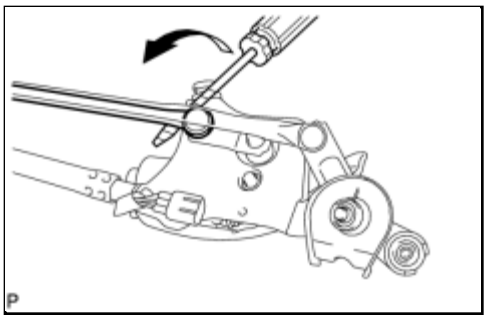

(a) Using a screwdriver with its tip taped, disconnect the rod of the windshield wiper link assembly from the crank arm pivot of the windshield wiper motor assembly as shown in the illustration.

(b) Remove the electrical tape from the wire harness so that the connector can be disconnected.

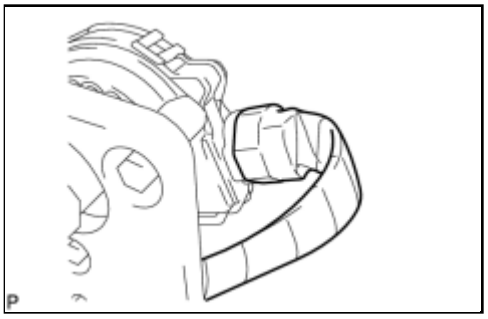

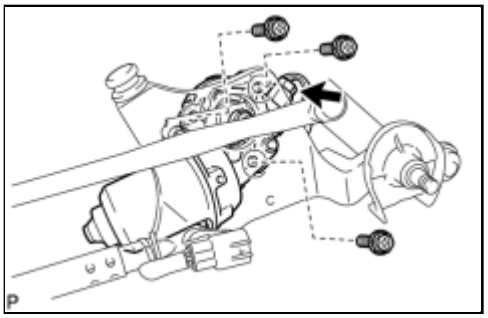

(c) Disconnect the connector.

(d) Remove the 3 bolts and the windshield wiper motor assembly .

HINT:

If the windshield wiper motor assembly cannot be removed from the windshield wiper link assembly, turn the crank arm so that the windshield wiper motor assembly can be removed.

Last Modified: 3-10-2010	6.4 A	**From:** 200901
Model Year: 2010	**Model:** Corolla	**Doc ID:** RM000002XJ300GX
Title: WIPER / WASHER: FRONT WIPER MOTOR: INSTALLATION (2010 Corolla)		

INSTALLATION

1. INSTALL WINDSHIELD WIPER MOTOR ASSEMBLY

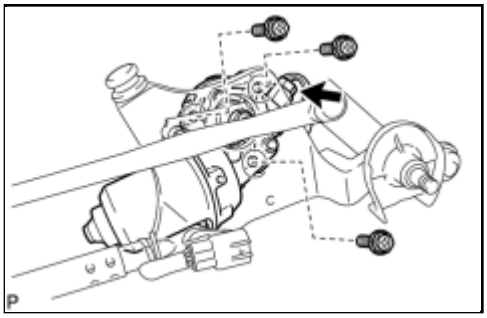

(a) Install the windshield wiper motor assembly with the 3 bolts.

Torque: 5.4 N·m (55 kgf·cm, 48in·lbf)

(b) Connect the connector.

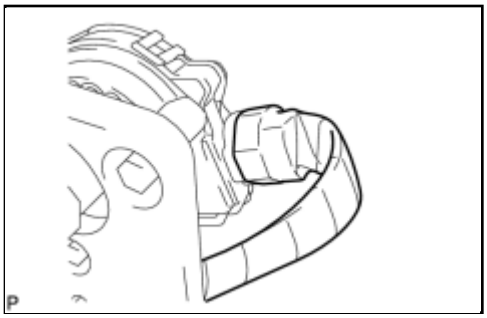

(c) Apply new electrical tape to the wire harness.

HINT:

For the area where the electrical tape was removed, apply new electrical tape so that the wire harness is firmly attached to the board.

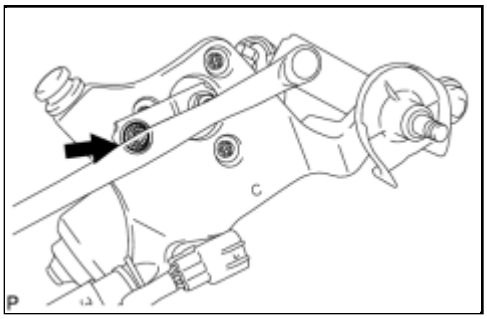

(d) Apply MP grease to the crank arm pivot of the windshield wiper motor assembly.

(e) Connect the rod of the windshield wiper link assembly to the crank arm pivot of the windshield wiper motor assembly.

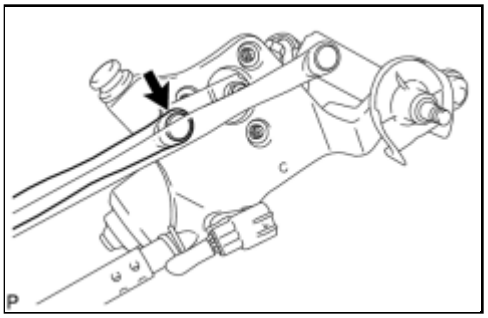

2. INSTALL WINDSHIELD WIPER MOTOR AND LINK ASSEMBLY

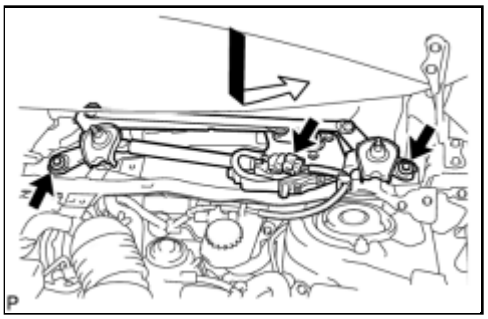

(a) Install the windshield wiper motor and link assembly with the 2 bolts.

Torque: 5.5 N·m (56 kgf·cm, 49in·lbf)

(b) Connect the connector.

3. INSTALL COWL TOP VENTILATOR LOUVER LH

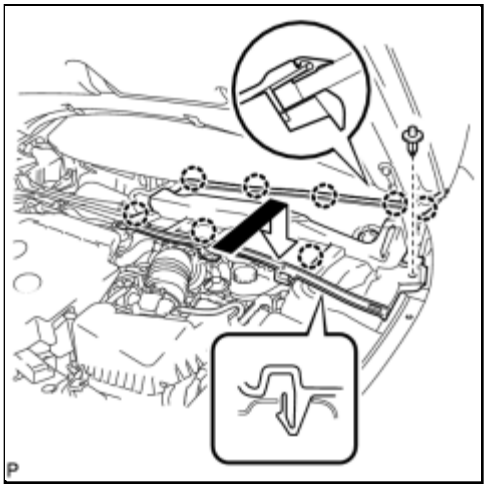

(a) Engage the clip and 8 claws, to install the cowl top ventilator louver LH.

4. INSTALL CENTER NO. 1 COWL TOP VENTILATOR LOUVER

(a) Engage the clip and 14 claws, to install the center No. 1 cowl top ventilator louver.

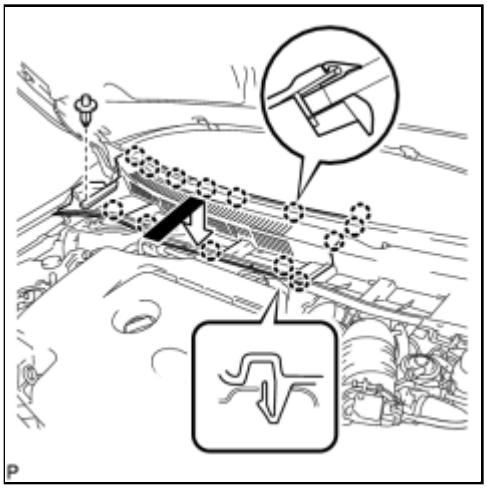

5. INSTALL HOOD TO COWL TOP SEAL

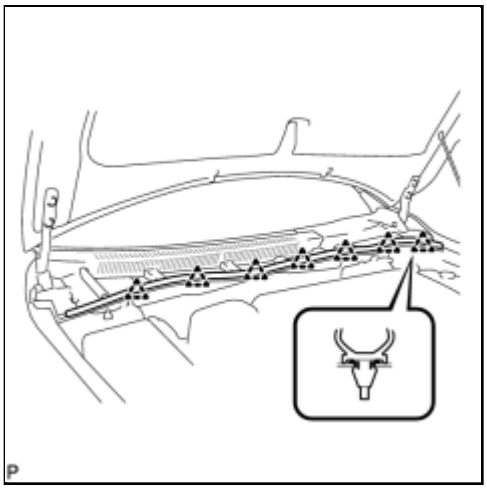

(a) Engage the 7 clips to install the hood to cowl top seal.

6. INSTALL FRONT WIPER ARM AND BLADE ASSEMBLY RH

(a) Operate the wiper and stop the windshield wiper motor at the automatic stop position.

(b) Clean the wiper arm serrations.

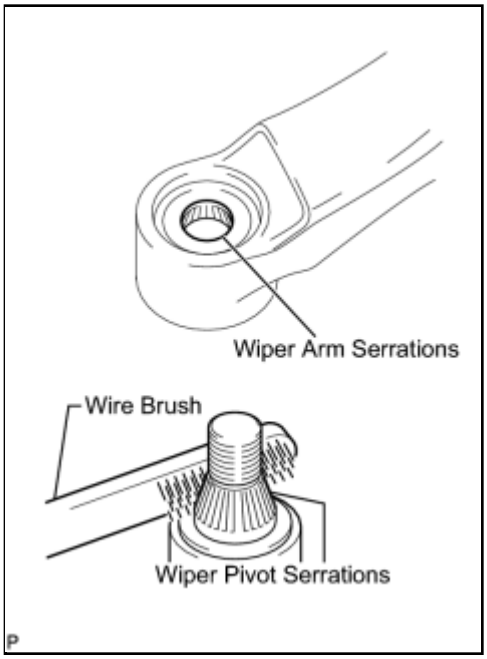

(c) When reinstalling:

(1) Clean the wiper pivot serrations with a wire brush.

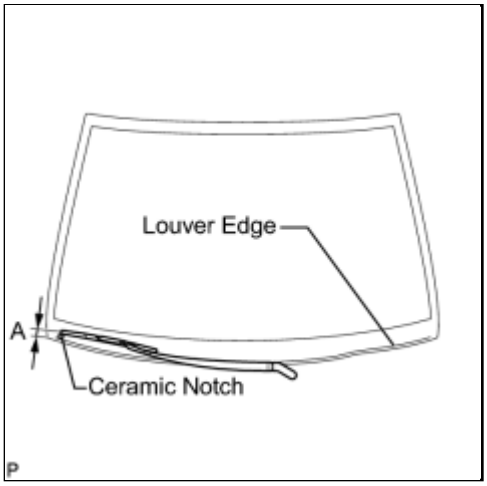

(d) Install the front wiper arm and blade assembly RH with the nut to the position shown in the illustration.

Torque: 26 N·m (265 kgf·cm, 19ft·lbf)

HINT:

Hold the arm hinge by hand to fasten the nut.

AREA	MEASUREMENT
A	27.5 to 42.5 mm (1.08 to 1.67 in.)

7. INSTALL FRONT WIPER ARM AND BLADE ASSEMBLY LH

(a) Operate the wiper and stop the windshield wiper motor at the automatic stop position.

(b) Clean the wiper arm serrations.

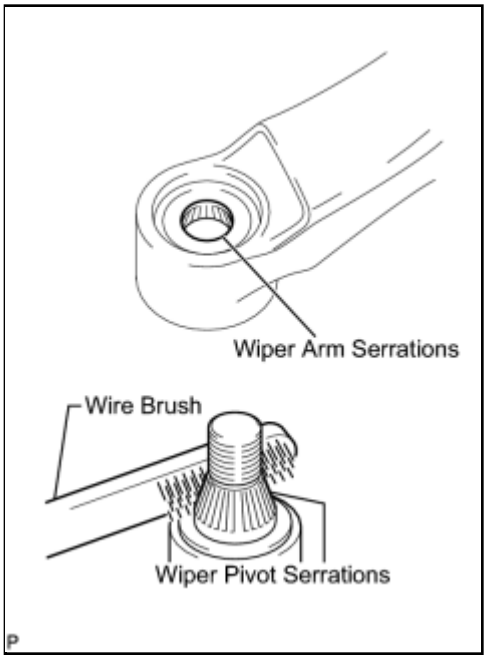

(c) When reinstalling:

(1) Clean the wiper pivot serrations with a wire brush.

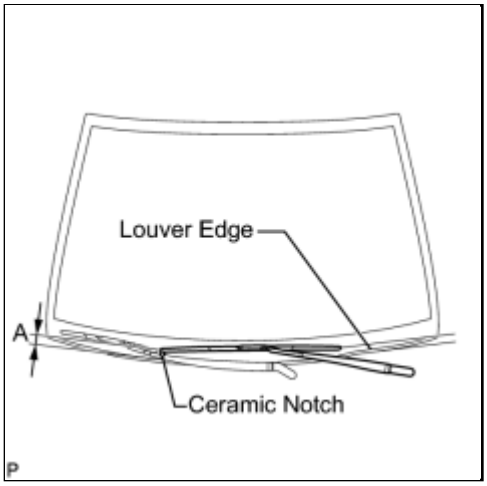

(d) Install the front wiper arm and blade assembly LH with the nut to the position shown in the illustration.

Torque: 26 N·m (265 kgf·cm, 19ft·lbf)

HINT:

Hold the arm hinge by hand to fasten the nut.

AREA	MEASUREMENT
A	22.5 to 37.5 mm (0.886 to 1.48 in.)

(e) Operate the front wipers while spraying washer fluid on the windshield glass. Make sure that the front wipers function properly and the wipers do not come into contact with the vehicle body.

8. INSTALL FRONT WIPER ARM HEAD CAP

(a) Install the 2 caps.

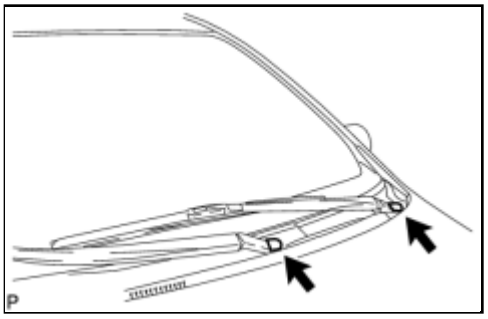
D
D
P

Last Modified: 3-10-2010	6.4 G	**From:** 200901
Model Year: 2010	**Model:** Corolla	**Doc ID:** RM000002XJR00OX
Title: WIPER / WASHER: FRONT WIPER MOTOR: INSPECTION (2010 Corolla)		

INSPECTION

1. INSPECT WINDSHIELD WIPER MOTOR ASSEMBLY

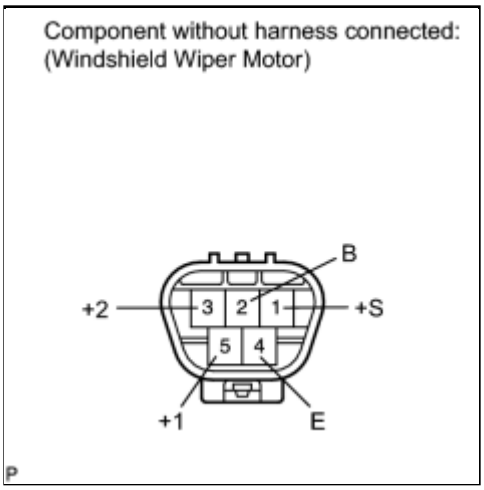

(a) Check LO operation.

(1) Connect a battery positive (+) lead to terminal 5 (+1) and a negative (-) lead to terminal 4 (E), and check that the motor operates at low speed (LO).

OK:

Motor operates at low speed (LO).

(b) Check HI operation.

(1) Connect a battery positive (+) lead to terminal 3 (+2) and a negative (-) lead to terminal 4 (E), and check that the motor operates at high speed (HI).

OK:

Motor operates at high speed (HI).

(c) Check automatic stop operation.

(1) Connect a battery positive (+) lead to terminal 5 (+1) and a negative (-) lead to terminal 4 (E). With the motor rotating at low speed (LO), disconnect terminal 5 (+1) to stop the wiper motor operation at any position other than the automatic stop position.

(2) Using SST, connect terminals 1 (+S) and 5 (+1). Then connect a battery positive (+) lead to terminal 2 (B) and a negative (-) lead to terminal 4 (E) to restart the motor operation at low speed (LO).

SST: 09843-18040

(3) Check that the motor stops automatically at the automatic stop position.

OK:

Motor stops automatically at the automatic stop position.

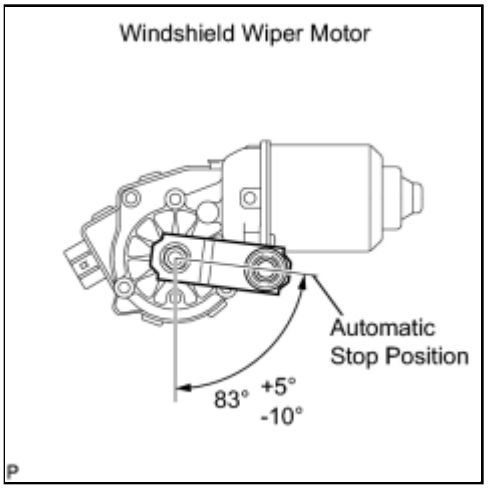

If the result is not as specified, replace the motor assembly.

Last Modified: 3-10-2010	6.4 K	**From:** 200901
Model Year: 2010	**Model:** Corolla	**Doc ID:** RM000002XJT00KX
Title: WIPER / WASHER: FRONT WIPER RUBBER: COMPONENTS (2010 Corolla)		

COMPONENTS

ILLUSTRATION

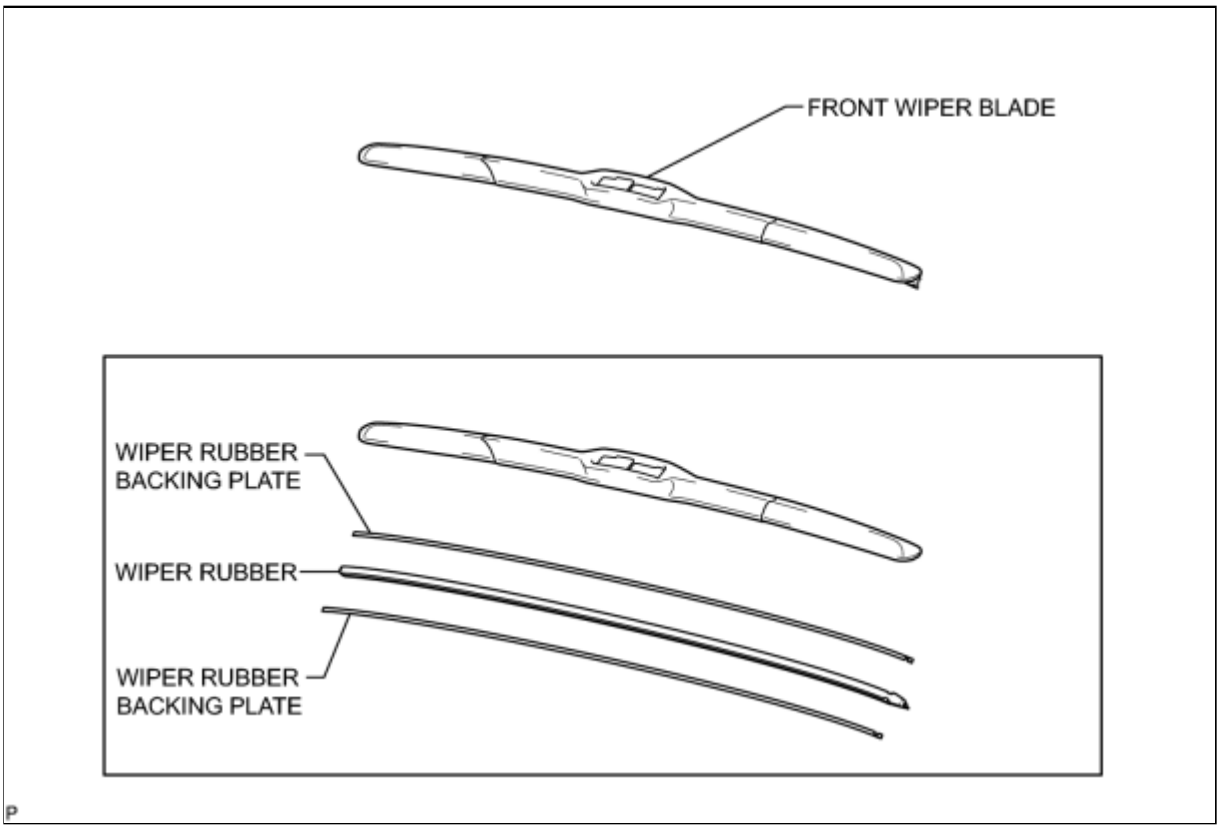

Last Modified: 3-10-2010	6.4 A	**From:** 200901
Model Year: 2010	**Model:** Corolla	**Doc ID:** RM000002XJU00JX
Title: WIPER / WASHER: FRONT WIPER RUBBER: REMOVAL (2010 Corolla)		

REMOVAL

1. REMOVE FRONT WIPER BLADE

(a) Disengage the holder of the front wiper blade.

(b) Remove the front wiper blade from the front wiper arm as shown in the illustration.

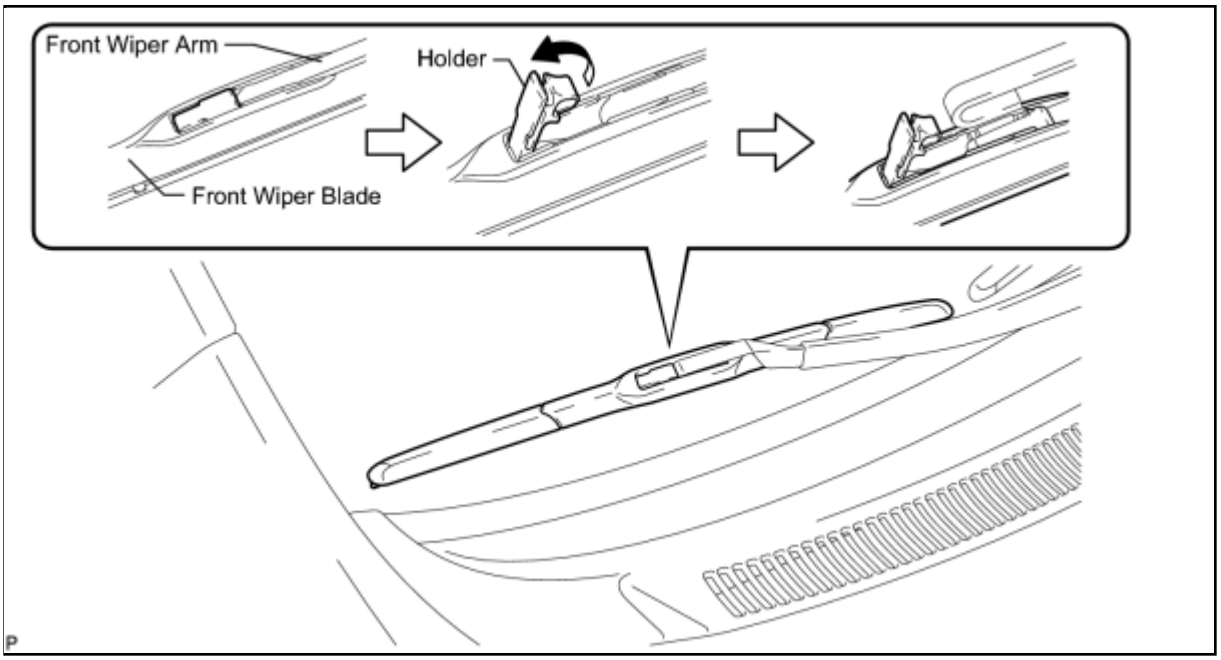

NOTICE:

Do not bend the front wiper arm with the front wiper blade removed because the arm tip could damage the windshield surface.

2. REMOVE WIPER RUBBER

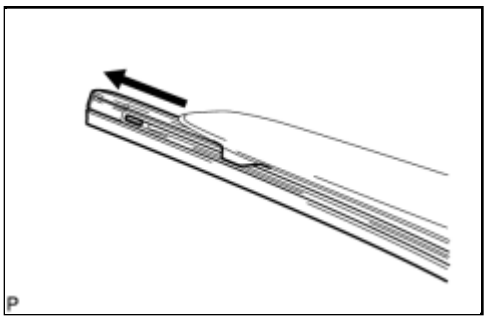

(a) Remove the wiper rubber and the wiper rubber backing plates from the front wiper blade.

(b) Remove the 2 wiper rubber backing plates from the wiper rubber.

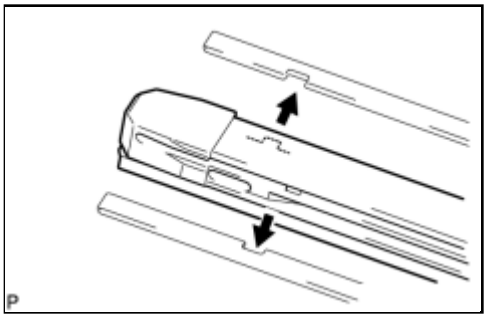
P

Last Modified: 3-10-2010	6.4 A	**From:** 200901
Model Year: 2010	**Model:** Corolla	**Doc ID:** RM000002XJS00JX
Title: WIPER / WASHER: FRONT WIPER RUBBER: INSTALLATION (2010 Corolla)		

INSTALLATION

1. INSTALL WIPER RUBBER

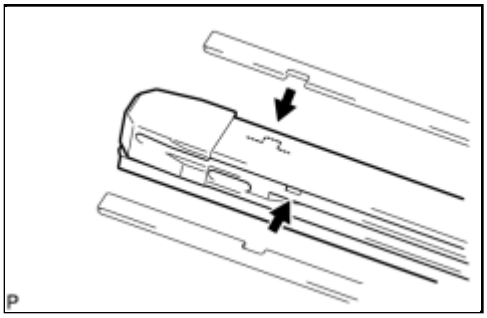

(a) Install the 2 wiper rubber backing plates to the wiper rubber.

NOTICE:

- Align the protrusions on the wiper rubber with the notches in the backing plates.
- Align the curves of the backing plates with the curve of the glass.

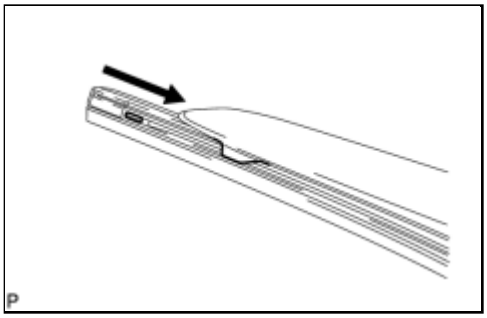

(b) Install the wiper rubber to the front wiper blade with the tip of the rubber (curved end) facing the axis of the wiper arm.

HINT:

Firmly push the wiper rubber into the wiper blade to securely engage them.

2. INSTALL FRONT WIPER BLADE

(a) Install the front wiper blade as shown in the illustration.

(b) Engage the holder of the front wiper blade.

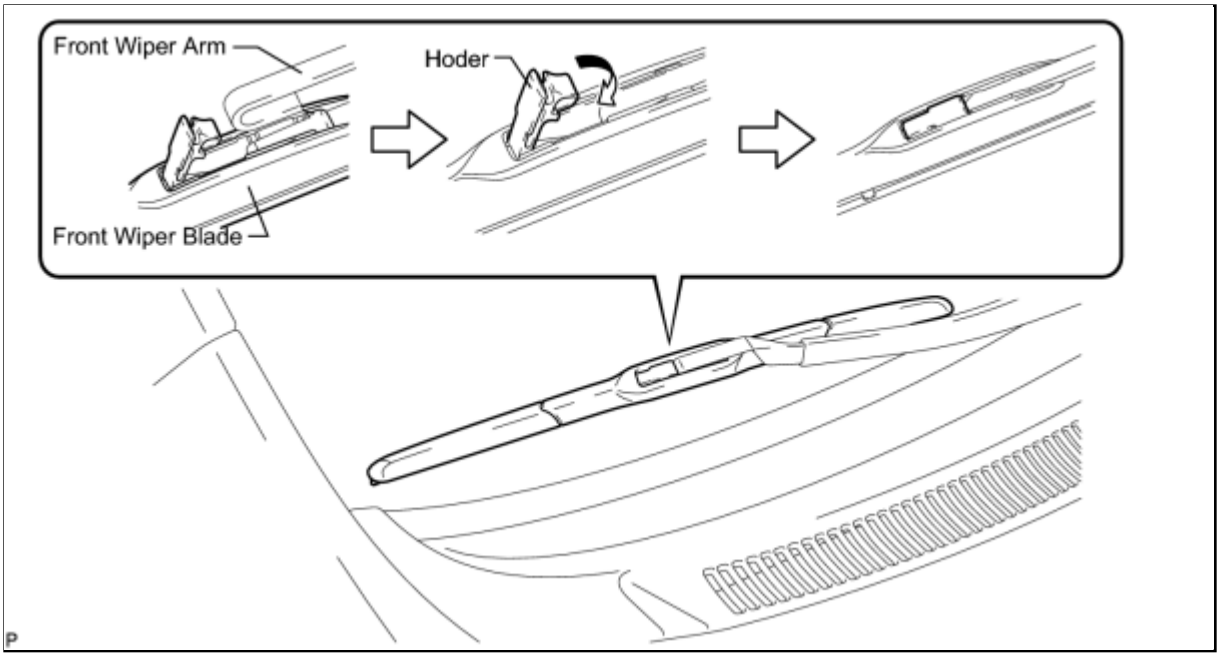
Front Wiper Arm
Hoder
Front Wiper Blade
P

Last Modified: 3-10-2010	6.4 K	**From:** 200901
Model Year: 2010	**Model:** Corolla	**Doc ID:** RM000003FU9001X
Title: WIPER / WASHER: WASHER LEVEL WARNING SWITCH: COMPONENTS (2010 Corolla)		

COMPONENTS

ILLUSTRATION

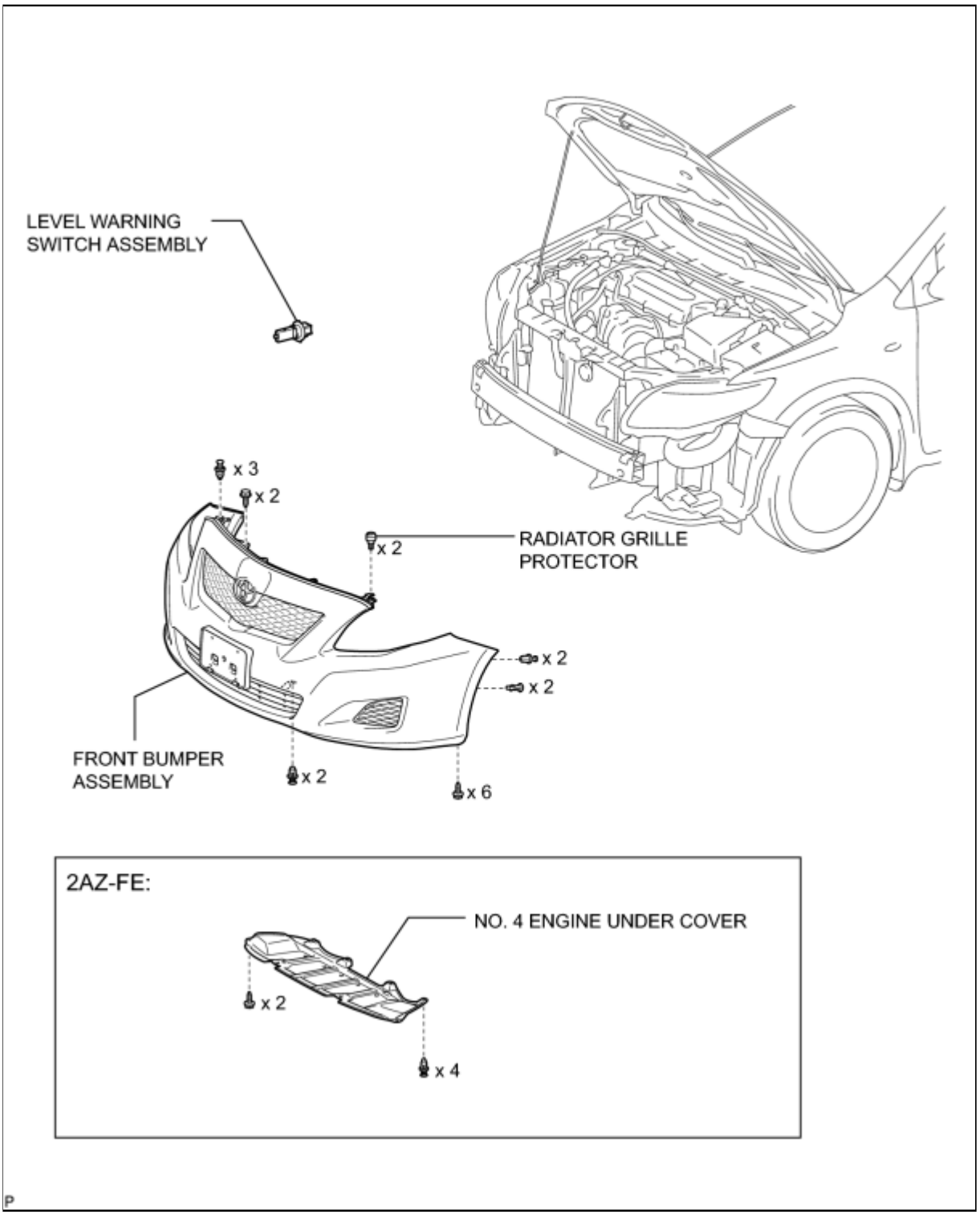

Last Modified: 3-10-2010	6.4 A	**From:** 200901
Model Year: 2010	**Model:** Corolla	**Doc ID:** RM000003FUA001X
Title: WIPER / WASHER: WASHER LEVEL WARNING SWITCH: REMOVAL (2010 Corolla)		

REMOVAL

1. REMOVE RADIATOR GRILLE PROTECTOR INFO

2. REMOVE NO. 4 ENGINE UNDER COVER (for 2AZ-FE) INFO

3. REMOVE FRONT BUMPER ASSEMBLY INFO

4. DRAIN WASHER FLUID INFO

5. REMOVE LEVEL WARNING SWITCH ASSEMBLY

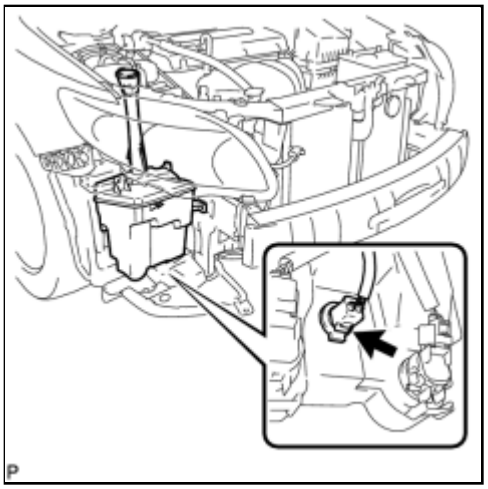

(a) Disconnect the connector.

(b) Remove the level warning switch assembly.

Last Modified: 3-10-2010	6.4 G	**From:** 200901
Model Year: 2010	**Model:** Corolla	**Doc ID:** RM0000035M7008X
Title: WIPER / WASHER: WASHER LEVEL WARNING SWITCH: INSPECTION (2010 Corolla)		

INSPECTION

1. INSPECT LEVEL WARNING SWITCH ASSEMBLY

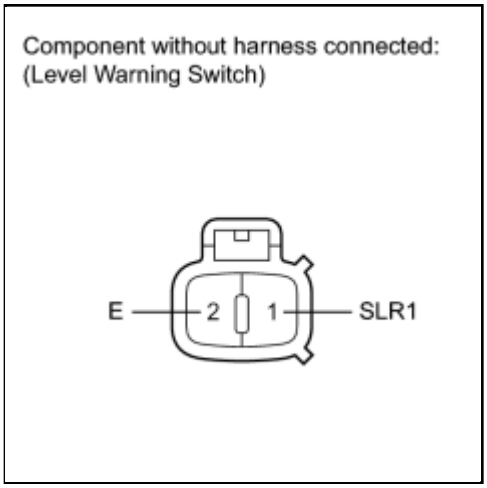

(a) Remove the washer jar.

(b) Disconnect the level warning switch connector.

HINT:

The check should be performed with the level warning switch assembly installed to the washer jar.

(c) Measure the resistance according to the value(s) in the table below.

Standard Resistance:

TESTER CONNECTION	CONDITION	SPECIFIED CONDITION
1 (SLR1) - 2 (E)	Washer jar is full	10 kΩ or higher
1 (SLR1) - 2 (E)	Washer jar is empty	Below 1 Ω

If the result is not as specified, replace the level warning switch assembly.

Last Modified: 3-10-2010	6.4 A	**From:** 200901
Model Year: 2010	**Model:** Corolla	**Doc ID:** RM000003FU8001X
Title: WIPER / WASHER: WASHER LEVEL WARNING SWITCH: INSTALLATION (2010 Corolla)		

INSTALLATION

1. INSTALL LEVEL WARNING SWITCH ASSEMBLY

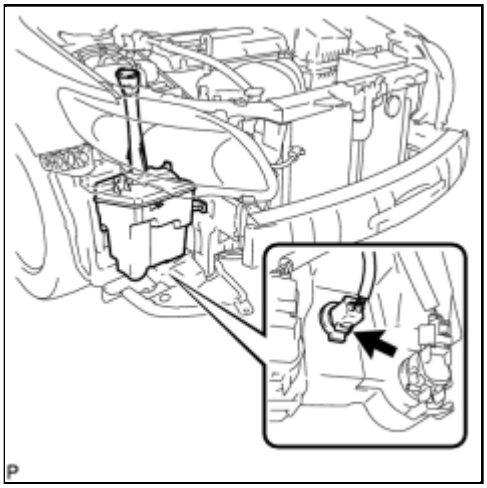

(a) Install the level warning switch assembly.

(b) Connect the connector.

2. FILL WASHER JAR WITH WASHER FLUID INFO

3. INSTALL FRONT BUMPER ASSEMBLY INFO

4. INSTALL NO. 4 ENGINE UNDER COVER (for 2AZ-FE) INFO

5. INSTALL RADIATOR GRILLE PROTECTOR INFO

6. VEHICLE PREPARATION FOR FOG LIGHT AIMING (w/ Fog Light) INFO

7. PREPARATION FOR FOG LIGHT AIMING (w/ Fog Light) INFO

8. INSPECT FOG LIGHT AIMING (w/ Fog Light) INFO

9. ADJUST FOG LIGHT AIMING (w/ Fog Light) INFO

Last Modified: 3-10-2010	6.4 K	**From:** 200901
Model Year: 2010	**Model:** Corolla	**Doc ID:** RM000002XK400IX
Title: WIPER / WASHER: WASHER MOTOR: COMPONENTS (2010 Corolla)		

COMPONENTS

ILLUSTRATION

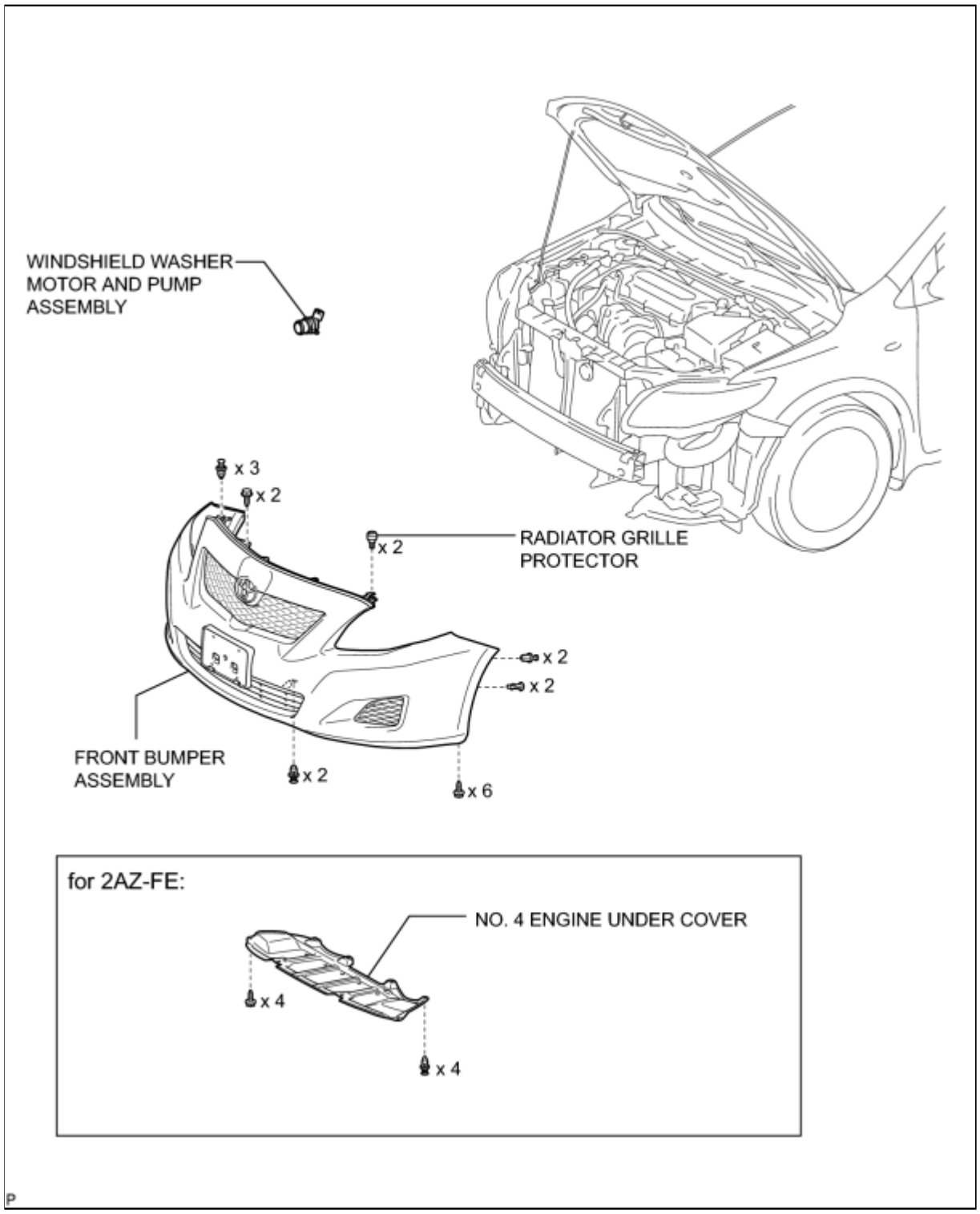

Last Modified: 3-10-2010	6.4 A	**From:** 200901
Model Year: 2010	**Model:** Corolla	**Doc ID:** RM000002XK500IX
Title: WIPER / WASHER: WASHER MOTOR: REMOVAL (2010 Corolla)		

REMOVAL

1. REMOVE RADIATOR GRILLE PROTECTOR INFO

2. REMOVE NO. 4 ENGINE UNDER COVER (for 2AZ-FE) INFO

3. REMOVE FRONT BUMPER ASSEMBLY INFO

4. DRAIN WASHER FLUID

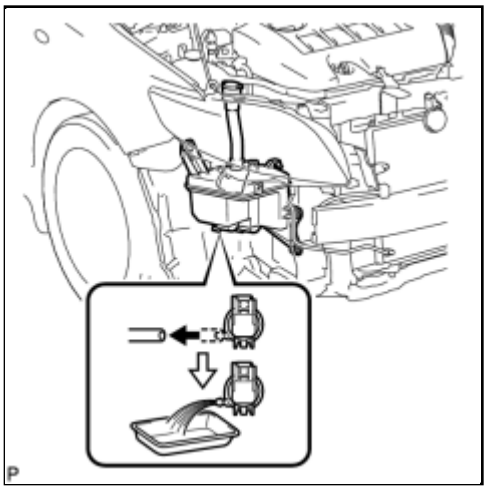

(a) Disconnect the washer hose from the windshield washer motor and pump assembly, and drain the washer fluid.

5. REMOVE WINDSHIELD WASHER MOTOR AND PUMP ASSEMBLY

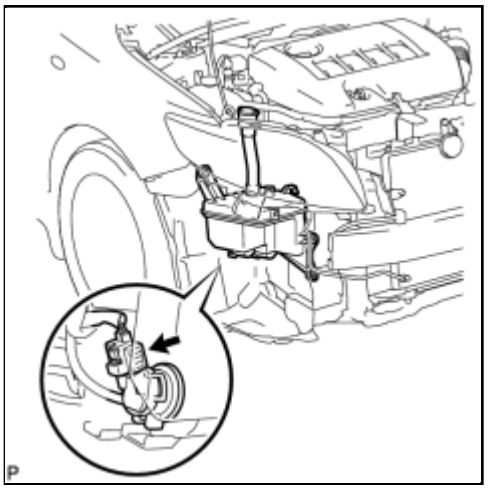

(a) Disconnect the connector.

(b) Remove the windshield washer motor and pump assembly.

Last Modified: 3-10-2010	6.4 G	**From:** 200901
Model Year: 2010	**Model:** Corolla	**Doc ID:** RM000002XK300UX
Title: WIPER / WASHER: WASHER MOTOR: INSPECTION (2010 Corolla)		

INSPECTION

1. INSPECT WINDSHIELD WASHER MOTOR AND PUMP ASSEMBLY

(a) Remove the washer jar.

(b) Disconnect the windshield washer motor and pump connector.

HINT:

The check should be performed with the windshield washer motor and pump installed on the washer jar.

(c) Fill the washer jar with washer fluid.

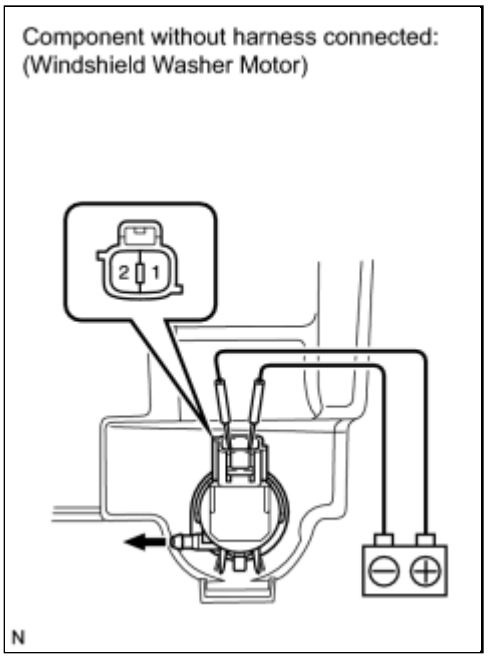

(d) Connect a battery positive (+) lead to terminal 1 of the windshield washer motor and pump, and a negative (-) lead to terminal 2.

(e) Check that washer fluid flows from the washer jar.

OK:

Washer fluid flows from the washer jar.

If the result is not as specified, replace the windshield washer motor and pump assembly.

Last Modified: 3-10-2010	6.4 A	**From:** 200901
Model Year: 2010	**Model:** Corolla	**Doc ID:** RM000002XK200IX
Title: WIPER / WASHER: WASHER MOTOR: INSTALLATION (2010 Corolla)		

INSTALLATION

1. INSTALL WINDSHIELD WASHER MOTOR AND PUMP ASSEMBLY

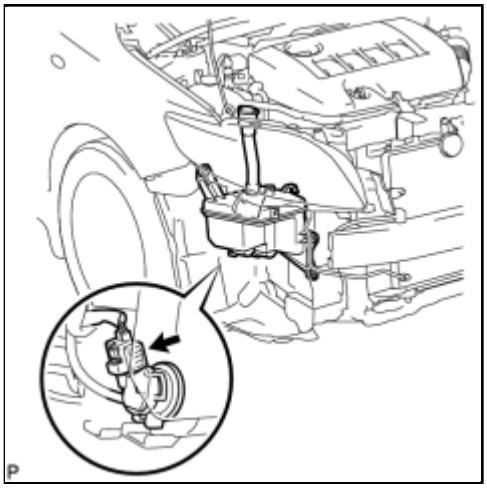

(a) Install the windshield washer motor and pump assembly.

(b) Connect the connector.

2. FILL WASHER JAR WITH WASHER FLUID

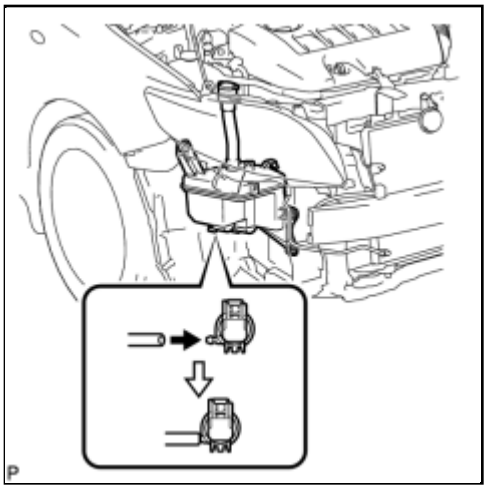

(a) Connect the washer hose to the windshield washer motor and pump assembly and fill the washer jar with washer fluid.

3. INSTALL FRONT BUMPER ASSEMBLY INFO

4. INSTALL NO. 4 ENGINE UNDER COVER (for 2AZ-FE) INFO

5. INSTALL RADIATOR GRILLE PROTECTOR INFO

6. VEHICLE PREPARATION FOR FOG LIGHT AIMING (w/ Fog Light) INFO

7. PREPARATION FOR FOG LIGHT AIMING (w/ Fog Light) INFO

8. FOG LIGHT AIMING INSPECTION (w/ Fog Light) INFO

9. FOG LIGHT AIMING ADJUSTMENT (w/ Fog Light) INFO



Last Modified: 3-10-2010	6.4 K	**From:** 200901
Model Year: 2010	**Model:** Corolla	**Doc ID:** RM000003F89004X
Title: WIPER / WASHER: WASHER NOZZLE: COMPONENTS (2010 Corolla)		

COMPONENTS

ILLUSTRATION

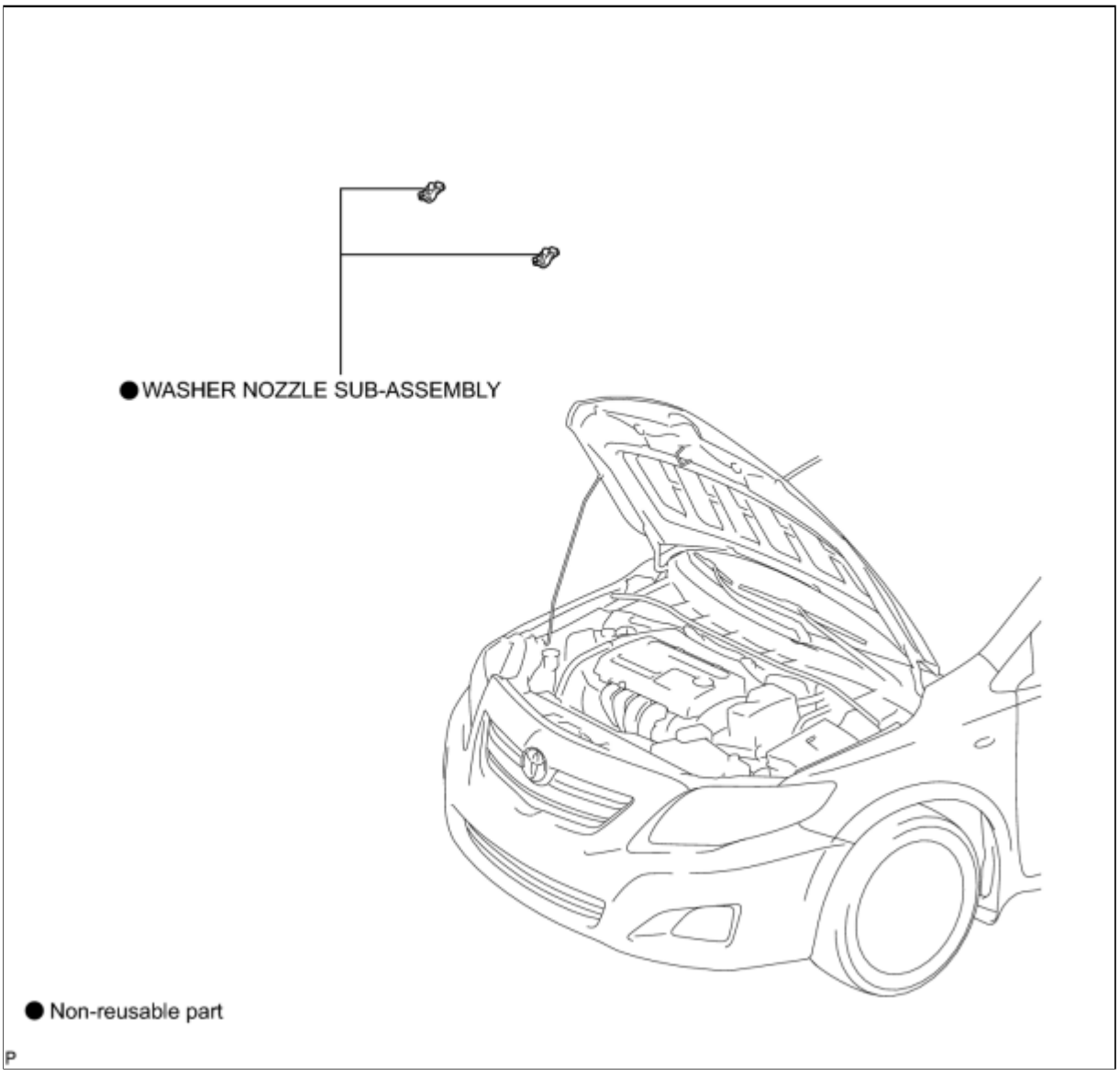

Last Modified: 3-10-2010	6.4 G	**From:** 200901
Model Year: 2010	**Model:** Corolla	**Doc ID:** RM000002XKB00EX
Title: WIPER / WASHER: WASHER NOZZLE: ON-VEHICLE INSPECTION (2010 Corolla)		

ON-VEHICLE INSPECTION

1. INSPECT WASHER NOZZLE SUB-ASSEMBLY

(a) With the engine running, check the position that the washer fluid hits the windshield.

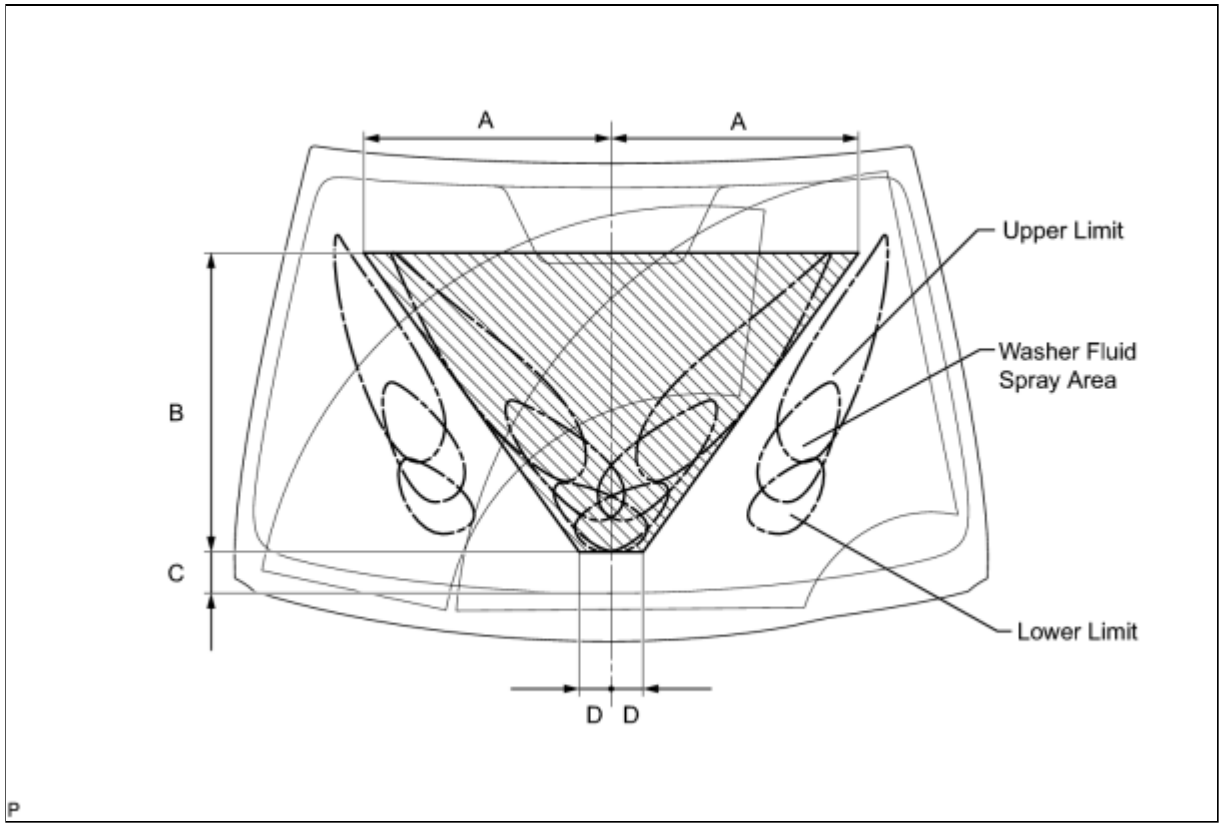

PART	LENGTH	
A	396 mm	15.59 in.
B	511 mm	20.12 in.
C	72 mm	2.83 in.
D	75 mm	2.95 in.

OK:

Washer fluid hits the windshield in the areas shown in the illustration.

HINT:

If the result is not as specified, replace the washer nozzle.

Last Modified: 3-10-2010	6.4 A	**From:** 200901
Model Year: 2010	**Model:** Corolla	**Doc ID:** RM00000332V00FX
Title: WIPER / WASHER: WASHER NOZZLE: REMOVAL (2010 Corolla)		

REMOVAL

1. REMOVE WASHER NOZZLE SUB-ASSEMBLY

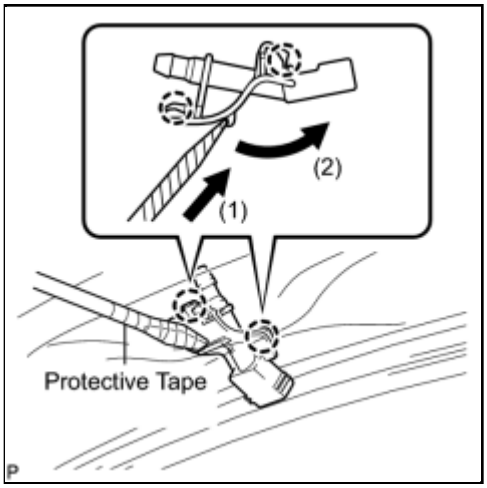

(a) Using a screwdriver, disengage the 2 claws and separate the washer nozzle sub-assembly as shown in the illustration.

NOTICE:

Be careful not to damage the windshield.

HINT:

Tape the screwdriver tip before use.

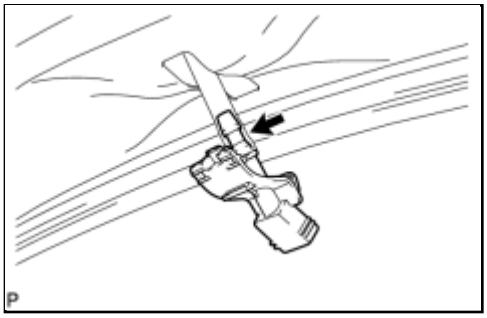

(b) Disconnect the washer nozzle sub-assembly from the washer hose.

NOTICE:

Washer nozzles cannot be reused.

Last Modified: 3-10-2010	6.4 N	**From:** 200901
Model Year: 2010	**Model:** Corolla	**Doc ID:** RM000002XKA00FX
Title: WIPER / WASHER: WASHER NOZZLE: ADJUSTMENT (2010 Corolla)		

ADJUSTMENT

1. ADJUST WASHER NOZZLE SUB-ASSEMBLY

(a) Select a washer nozzle sub-assembly so that the washer fluid spray area is as specitied.

for TMC Made:

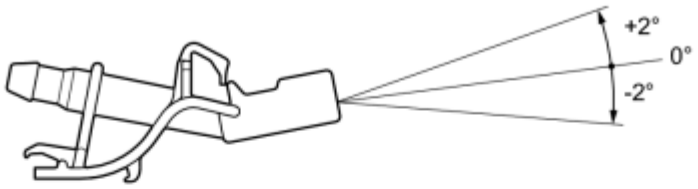

Washer Fluid Spray Angle	 -2°	 0°	 +2°
Part Number	85380-12220	85380-12210	85380-12230

for NUMMI, TMMC Made:

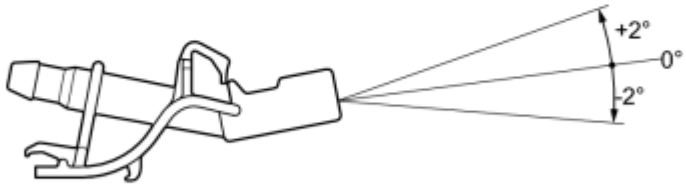

Washer Fluid Spray Angle	 -2°	 0°	 +2°
Part Number	85380-02140	85380-02130	85380-02150

P

Last Modified: 3-10-2010	6.4 A	**From:** 200901
Model Year: 2010	**Model:** Corolla	**Doc ID:** RM00000332U00FX
Title: WIPER / WASHER: WASHER NOZZLE: INSTALLATION (2010 Corolla)		

INSTALLATION

1. INSTALL WASHER NOZZLE SUB-ASSEMBLY

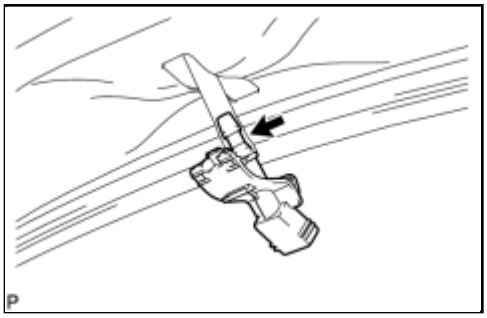

(a) Connect a new washer nozzle sub-assembly to the washer hose.

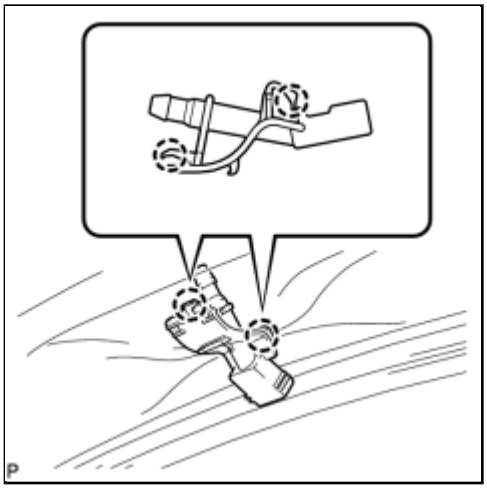

(b) Engage the 2 claws to install the washer nozzle sub-assembly.

Last Modified: 3-10-2010	6.4 L	**From:** 200901
Model Year: 2010	**Model:** Corolla	**Doc ID:** RM000001VPW00ZX
Title: WIPER / WASHER: WIPER AND WASHER SYSTEM: PRECAUTION (2010 Corolla)		

PRECAUTION

1. PRECAUTION OF WASHER NOZZLE ADJUSTMENT

(a) Do not clean or adjust the washer nozzle with a safety pin, etc. because:

(1) the washer nozzle tip is made of resin and could be damaged.

(2) adjustment is not necessary for this spray type washer nozzle. If it is necessary to change the nozzle angle, replace the washer nozzle with one that has a different nozzle angle INFO .

(b) If the washer nozzle is clogged with wax, etc., remove it and clean the nozzle hole with a soft resin brush or other cleaning tool.

Last Modified: 3-10-2010	6.4 R	**From:** 200901
Model Year: 2010	**Model:** Corolla	**Doc ID:** RM0000035M8008X
Title: WIPER / WASHER: WIPER AND WASHER SYSTEM: PARTS LOCATION (2010 Corolla)		

PARTS LOCATION

ILLUSTRATION

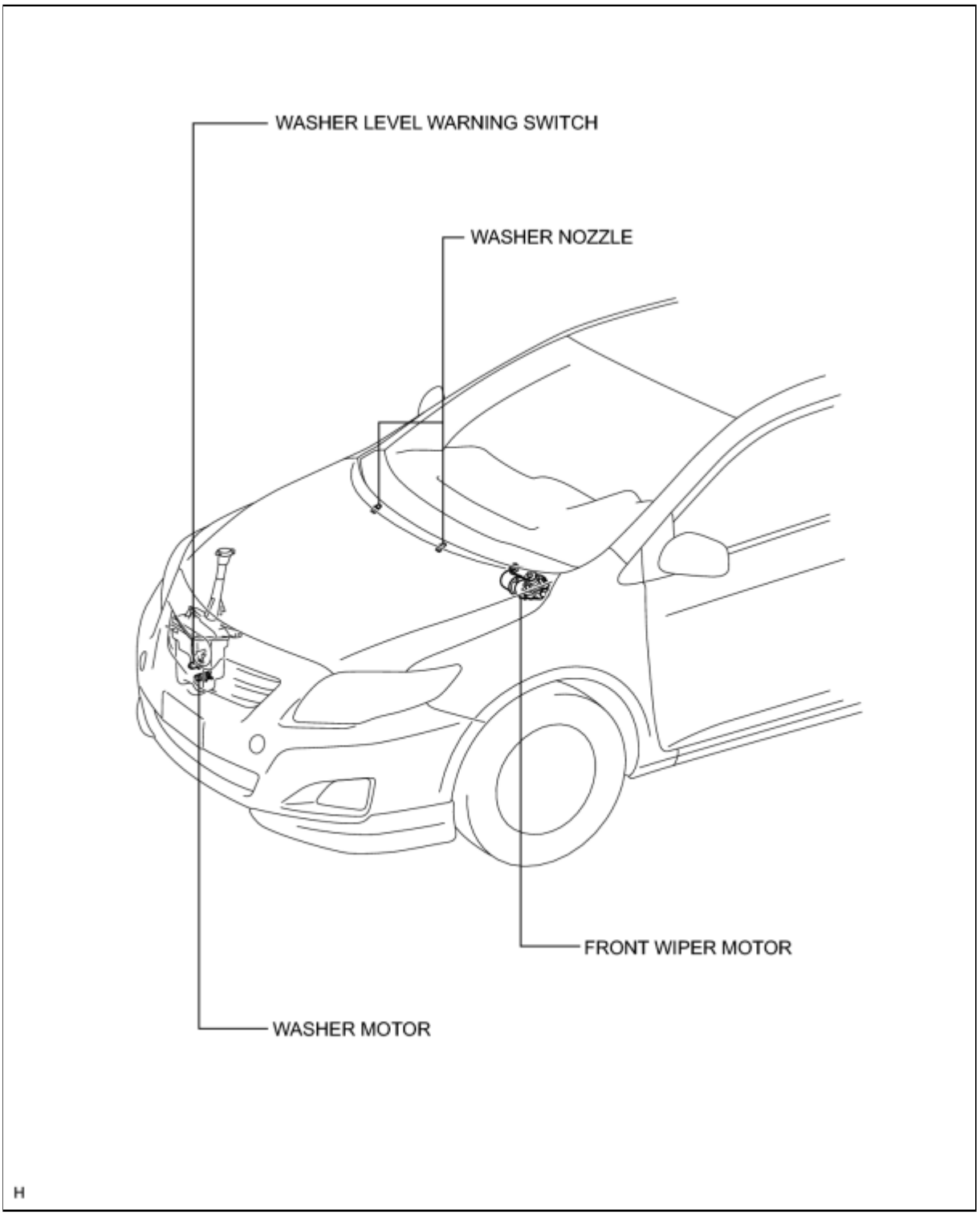

ILLUSTRATION

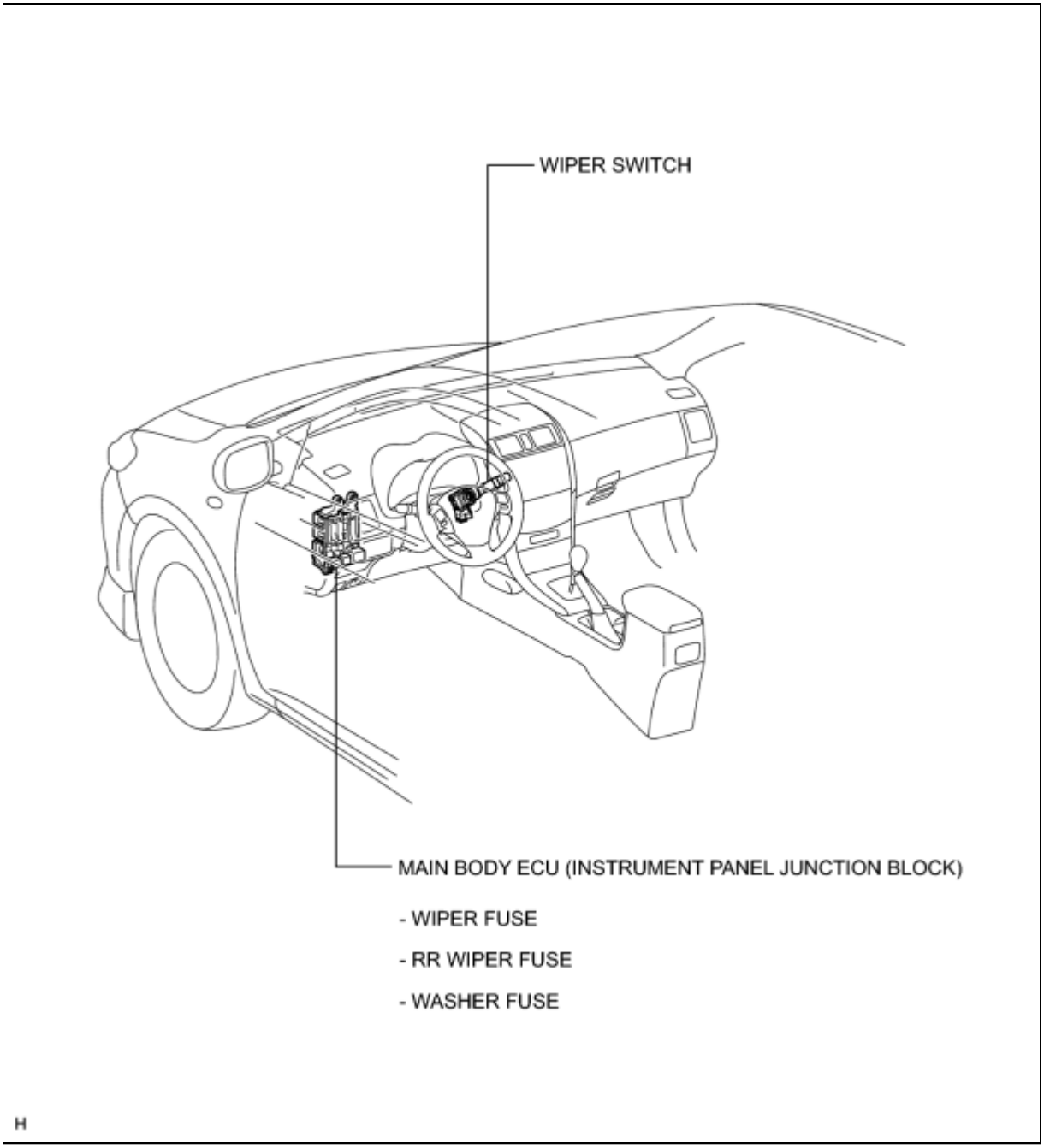

Last Modified: 3-10-2010	6.4 U	**From:** 200901
Model Year: 2010	**Model:** Corolla	**Doc ID:** RM0000024I500CX
Title: WIPER / WASHER: WIPER AND WASHER SYSTEM: SYSTEM DIAGRAM (2010 Corolla)		

SYSTEM DIAGRAM

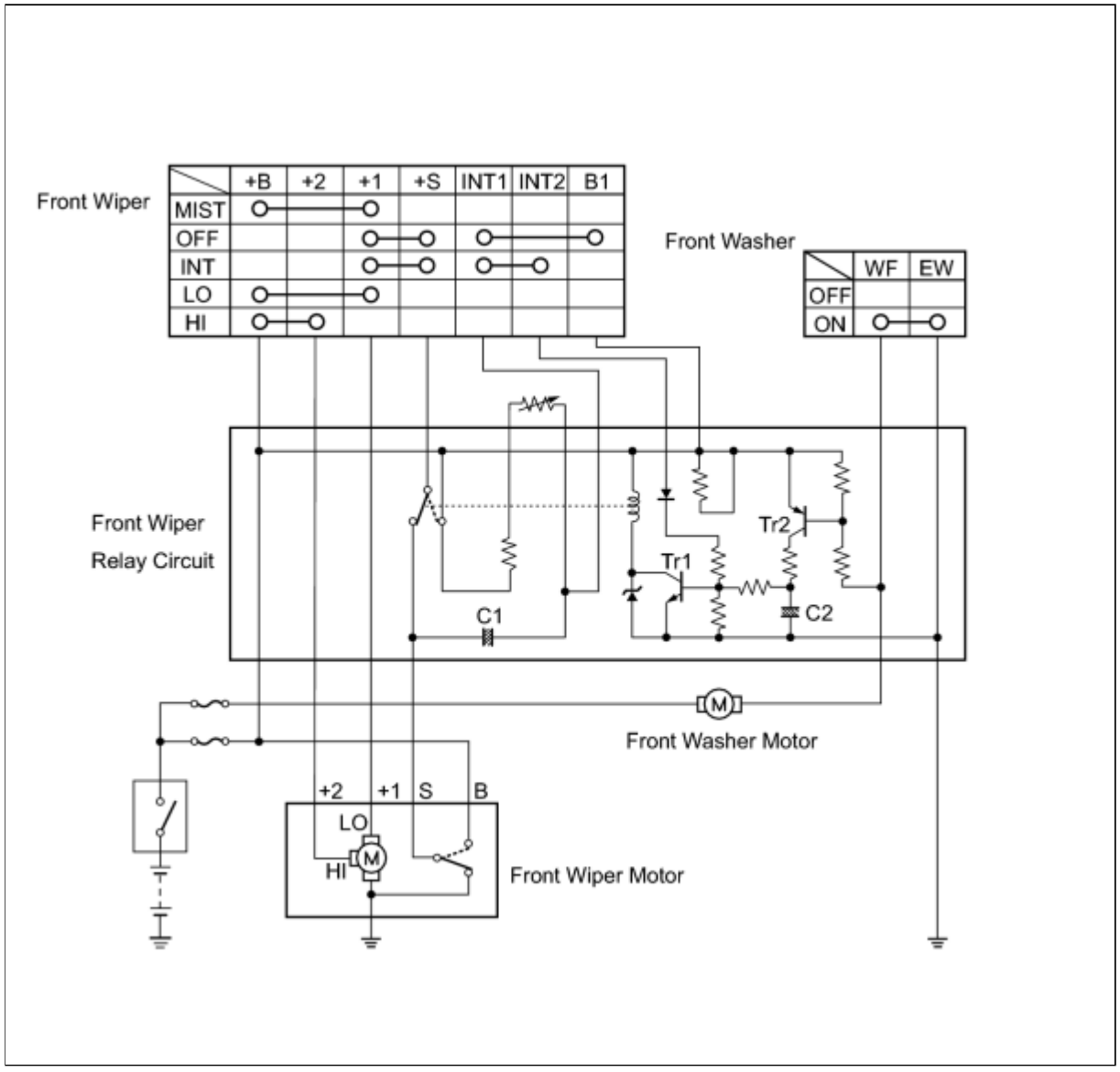

Last Modified: 3-10-2010	6.4 D	**From:** 200901
Model Year: 2010	**Model:** Corolla	**Doc ID:** RM0000024I400CX
Title: WIPER / WASHER: WIPER AND WASHER SYSTEM: SYSTEM DESCRIPTION (2010 Corolla)		

SYSTEM DESCRIPTION

1. WASHER LINKED OPERATION

(a) This system operates the front wipers at low speed immediately after a jet of washer fluid when the front washer switch is turned on for 0.3 seconds or more. The system operates the front wipers at low speed for approximately 2.2 seconds and then stops operation when the washer switch is turned on for 1.5 seconds or more.

2. INTERMITTENT OPERATION

(a) The system operates the front wipers once in approximately 1.6 to 10.7 seconds when the front wiper switch is turned to the INT position. The intermittent time can be adjusted from 1.6 to 10.7 seconds by using the intermittent time adjust dial.

(b) If the front wiper switch is turned to the INT position, current flows from the already charged capacitor C1 through terminals INT1 and INT2 of the front wiper switch to Tr1 (transistor). When Tr1 turns on, current flows from terminal +S of the front wiper switch to terminal +1 of the front wiper switch, to terminal +1 of the wiper motor, to the wiper motor and finally to ground, causing the wiper motor to operate. At the same time, current flows from capacitor C1 to terminal INT1 and INT2 of the front wiper switch. When the current flows from capacitor C1 ends, Tr1 shuts off the relay to stop the wiper motor.

When the relay contact point turns off, capacitor C1 begins to charge again and Tr1 remains off until charging has been completed. This period corresponds to the intermittent time. When capacitor C1 is fully charged, Tr1 turns on and then the relay contact point turns on, causing the motor to operate again. This cycle is the intermittent operation.

The intermittent time can be adjusted by using the intermittent time adjust dial (variable resistor) to change the charge time of capacitor C1.

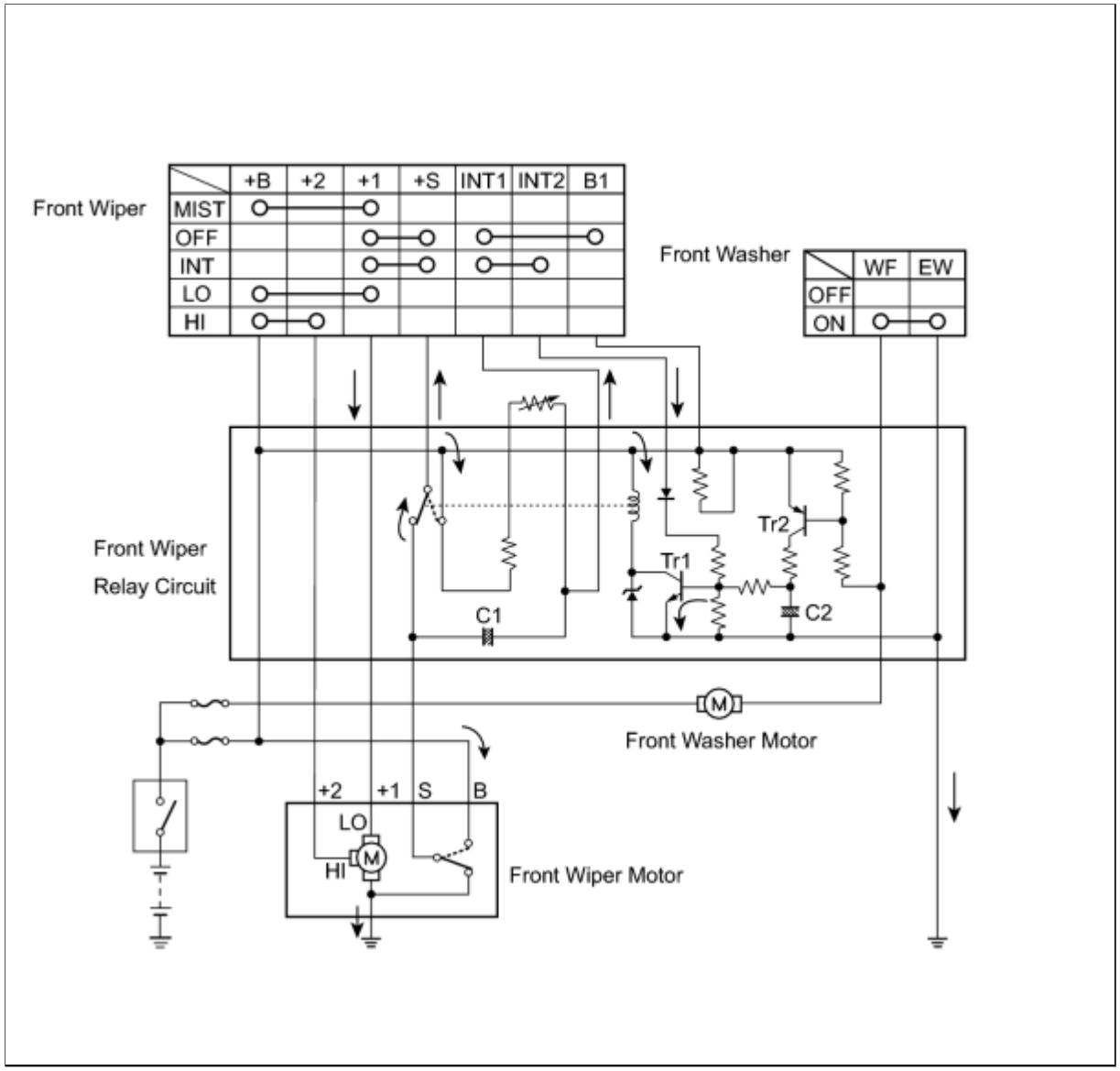
Front Wiper
+B
+2
+1
+S
INT1
INT2
B1
MIST
OFF
INT
LO
HI
Front Washer
WF
EW
OFF
ON
Front Wiper
Relay Circuit
Tr2
Tr1
C1
C2
M
Front Washer Motor
+2
+1
S
B
LO
HI
M
Front Wiper Motor

Last Modified: 3-10-2010	6.4 T	**From:** 200901
Model Year: 2010	**Model:** Corolla	**Doc ID:** RM0000229U00RX
Title: WIPER / WASHER: WIPER AND WASHER SYSTEM: PROBLEM SYMPTOMS TABLE (2010 Corolla)		

PROBLEM SYMPTOMS TABLE

HINT:

Use the table below to help determine the cause of problem symptoms. If multiple suspected areas are listed, the potential causes of the symptoms are listed in order of probability in the "Suspected Area" column of the table. Check each symptom by checking the suspected areas in the order they are listed. Replace parts as necessary.

Wiper and Washer System

SYMPTOM	SUSPECTED AREA	SEE PAGE
Front wiper and washer system do not operate.	Windshield wiper switch	INFO
	Wire harness	-
Front wiper system does not operate in LO or HI.	WIPER fuse	-
	Windshield wiper switch	INFO
	Front wiper motor	INFO
	Wire harness	-
Front wiper system does not operate in INT.	WIPER fuse	-
	Windshield wiper switch	INFO
	Front wiper motor	INFO
	Wire harness	-
Front washer system does not operate.	WASHER fuse	-
	Windshield wiper switch	INFO
	Front washer motor	INFO
	Wire harness	-
Front wiper arms do not return to their original positions when wiper switch is turned off.	Front wiper motor	INFO
	Wire harness	-
Washer fluid level warning does not operate.	Washer level warning switch	INFO
	Combination meter	INFO
	Wire harness	-

Last Modified: 3-10-2010	6.4 K	**From:** 200901
Model Year: 2010	**Model:** Corolla	**Doc ID:** RM000002XKE00IX
Title: WIPER / WASHER: WIPER SWITCH: COMPONENTS (2010 Corolla)		

COMPONENTS

ILLUSTRATION

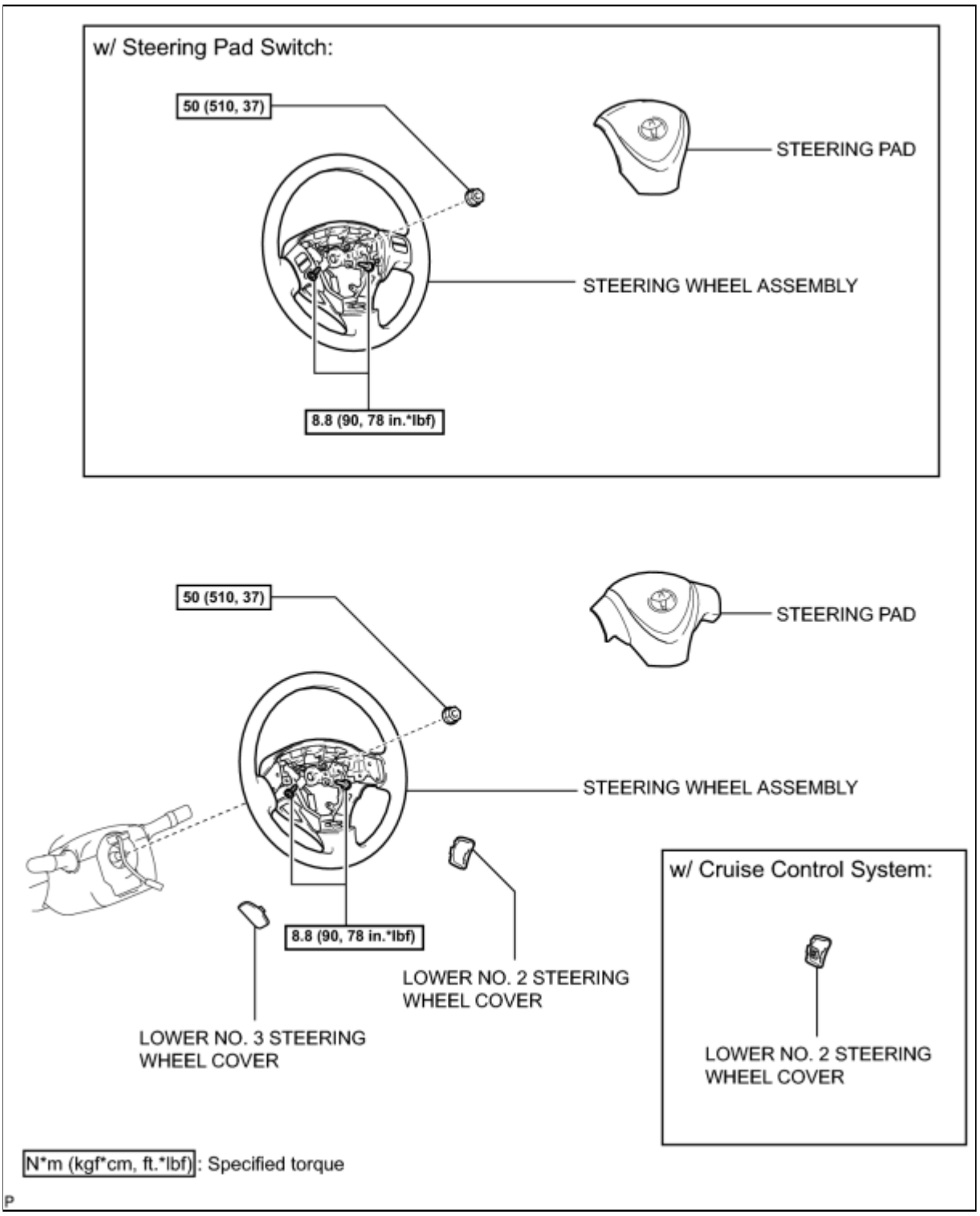

ILLUSTRATION

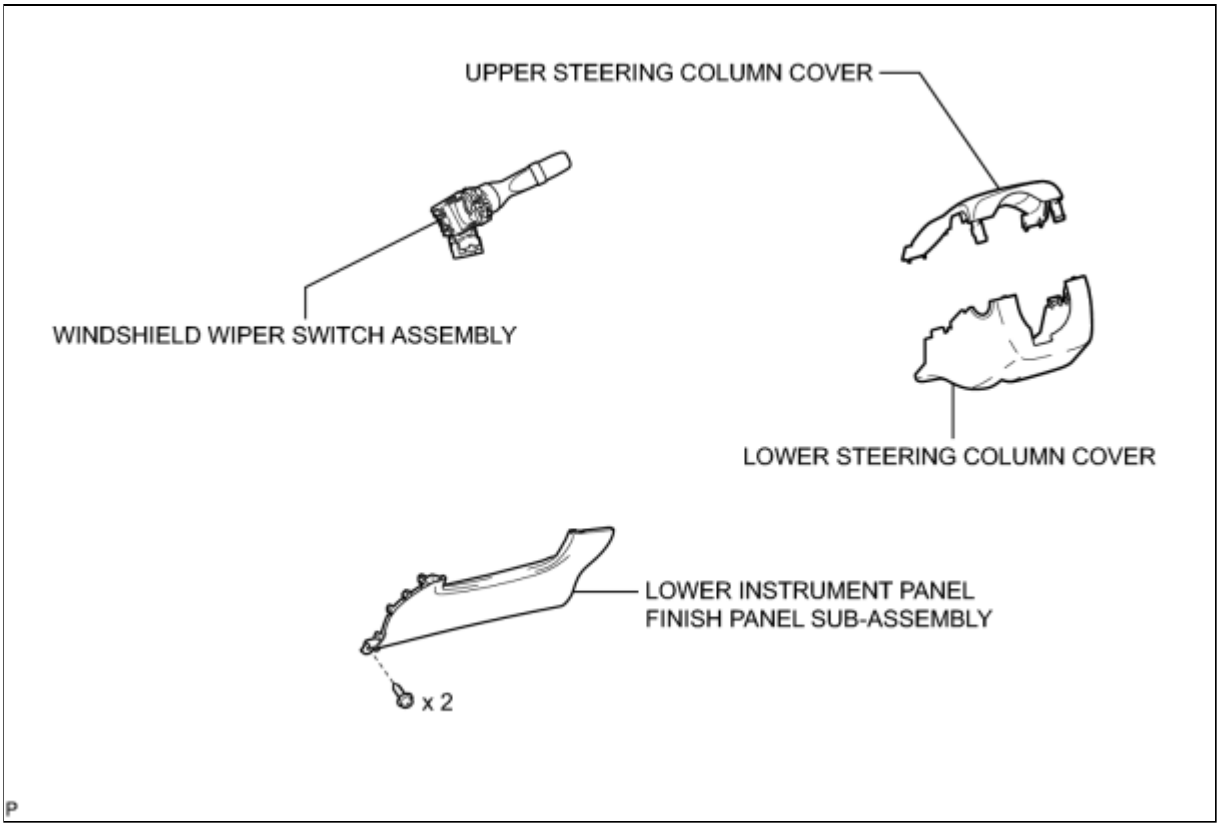

Last Modified: 3-10-2010	6.4 G	**From:** 200901
Model Year: 2010	**Model:** Corolla	**Doc ID:** RM000002XKD00QX
Title: WIPER / WASHER: WIPER SWITCH: INSPECTION (2010 Corolla)		

INSPECTION

1. INSPECT WINDSHIELD WIPER SWITCH ASSEMBLY

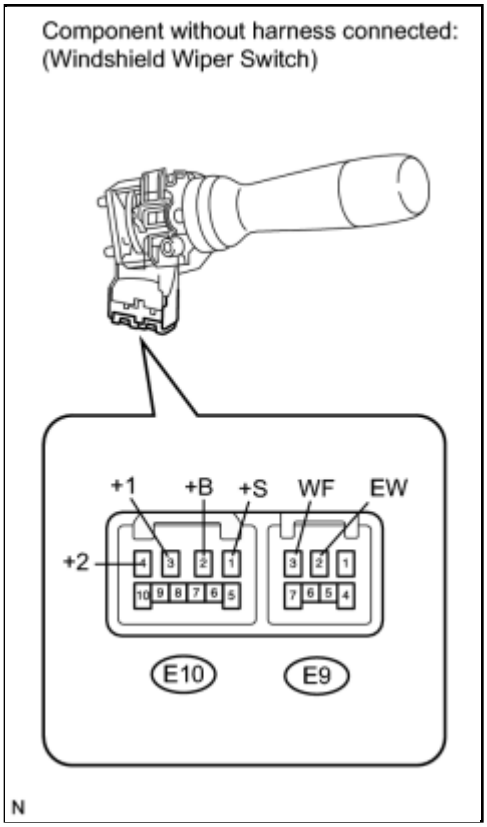

(a) Check the front wiper switch.

(1) Measure the resistance according to the value(s) in the table below.

Standard Resistance:

TESTER CONNECTION	SWITCH CONDITION	SPECIFIED CONDITION
E10-1 (+S) - E10-3 (+1)	INT	Below 1 Ω
	OFF	
E10-2 (+B) - E10-3 (+1)	MIST	
	LO	
E10-2 (+B) - E10-4 (+2)	HI	

If the result is not as specified, replace the switch assembly.

(b) Check the front washer switch.

(1) Measure the resistance according to the value(s) in the table below.

Standard Resistance:

TESTER CONNECTION	SWITCH CONDITION	SPECIFIED CONDITION
E9-2 (EW) - E9-3 (WF)	ON	Below 1 Ω
	OFF	10 kΩ or higher

If the result is not as specified, replace the switch assembly.

(c) Check intermittent operation (w/o Intermittent timing adjustment).

(1) Connect a voltmeter positive (+) lead to terminal E10-3 (+1) and a negative (-) lead to terminal E9-2 (EW).

(2) Connect a battery positive (+) lead to terminal E10-2 (+B) and a negative (-) lead to

terminals E9-2 (EW) and E10-1 (+S).

(3) Turn the front wiper switch to the INT position.

(4) Connect a battery positive (+) lead to terminal E10-1 (+S) for 5 seconds.

(5) Connect a battery negative (-) lead to terminal E10-1 (+S). Operate the intermittent wiper relay and check the voltage between terminals E10-3 (+1) and E9-2 (EW).

OK:

Voltage changes as shown in the following illustration.

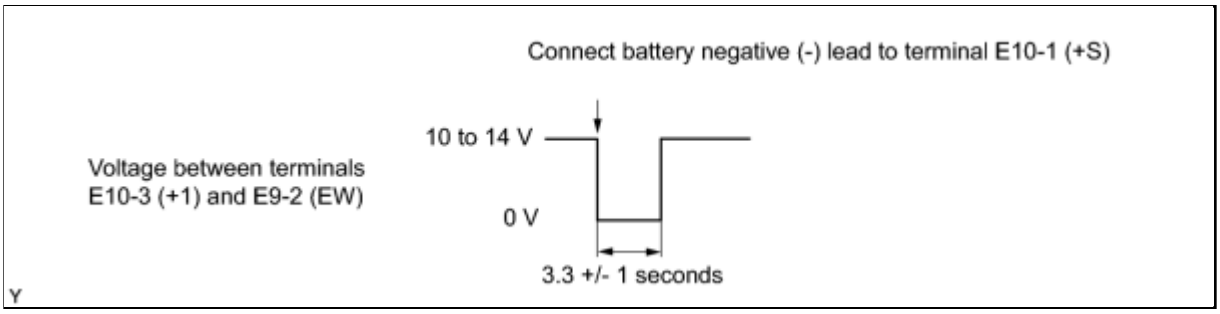

If the result is not as specified, replace the switch assembly.

(d) Check intermittent operation (w/ Intermittent timing adjustment).

(1) Connect a voltmeter positive (+) lead to terminal E10-3 (+1) and a negative (-) lead to terminal E9-2 (EW).

(2) Connect a battery positive (+) lead to terminal E10-2 (+B) and a negative (-) lead to terminals E9-2 (EW) and E10-1 (+S).

(3) Turn the front wiper switch to the INT position.

(4) Connect a battery positive (+) lead to terminal E10-1 (+S) for 5 seconds.

(5) Connect a battery negative (-) lead to terminal E10-1 (+S). Operate the intermittent wiper relay and check the voltage between terminals E10-3 (+1) and E9-2 (EW).

OK:

Voltage changes as shown in the illustration below.

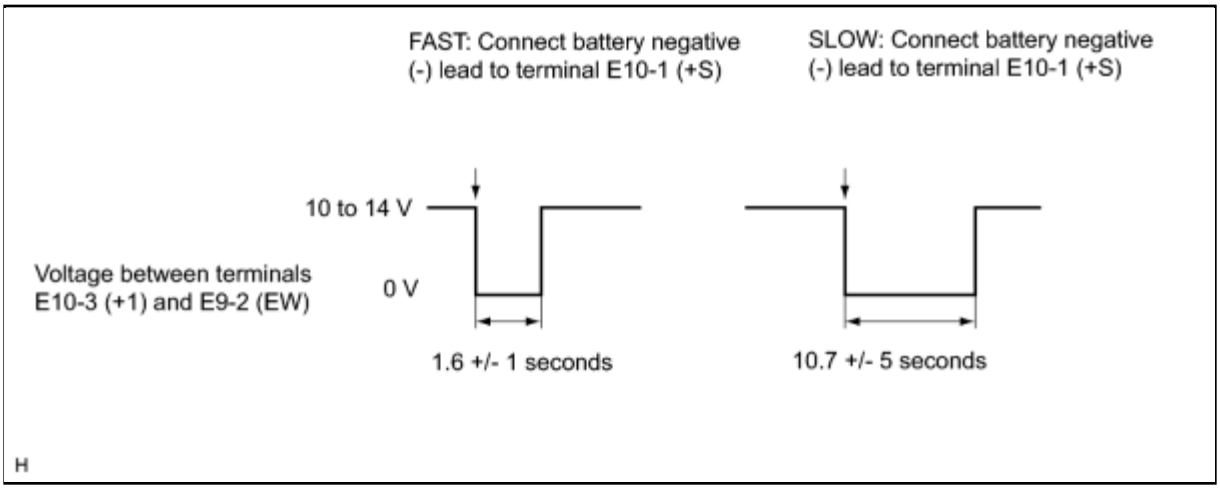

If the result is not as specified, replace the switch assembly.

(e) Check front washer operation.

(1) Turn the front washer switch OFF.

(2) Connect a battery positive (+) lead to terminal E10-2 (+B) and a negative (-) lead to terminals E10-1 (+S) and E9-2 (EW).

(3) Connect a voltmeter positive (+) lead to E10-3 (+1) and a negative (-) lead to terminal E9-2 (EW).

(4) Turn the front washer switch ON and OFF, and check the voltage between terminals E10-3 (+1) and E9-2 (EW).

OK:

Voltage changes as shown in the following illustration.

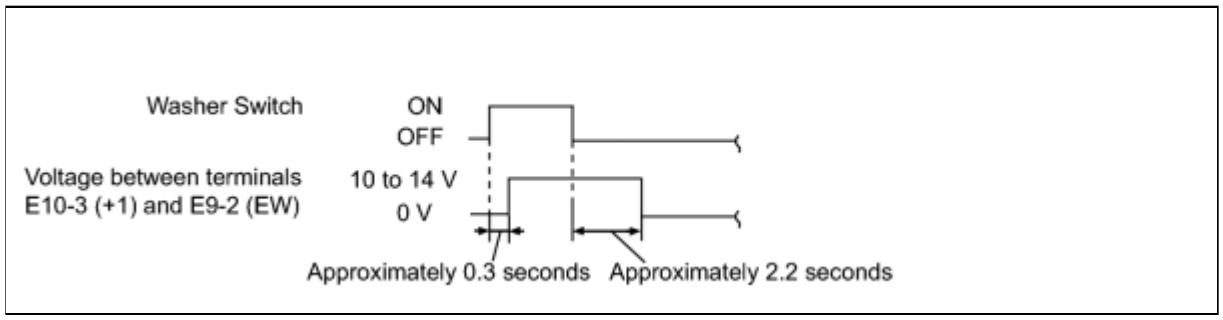

If the result is not as specified, replace the switch assembly.

Last Modified: 3-10-2010	6.4 A	**From:** 200901
Model Year: 2010	**Model:** Corolla	**Doc ID:** RM000002XKF00LX
Title: WIPER / WASHER: WIPER SWITCH: REMOVAL (2010 Corolla)		

REMOVAL

1. ALIGN FRONT WHEELS FACING STRAIGHT AHEAD

2. DISCONNECT CABLE FROM NEGATIVE BATTERY TERMINAL

CAUTION:

Wait for 90 seconds after disconnecting the cable to prevent airbag deployment INFO .

3. REMOVE LOWER NO.3 STEERING WHEEL COVER INFO

4. REMOVE LOWER NO.2 STEERING WHEEL COVER INFO

5. REMOVE STEERING PAD INFO

6. REMOVE STEERING WHEEL ASSEMBLY INFO

7. REMOVE LOWER INSTRUMENT PANEL FINISH PANEL SUB-ASSEMBLY INFO

8. REMOVE LOWER STEERING COLUMN COVER INFO

9. REMOVE UPPER STEERING COLUMN COVER INFO

10. REMOVE WINDSHIELD WIPER SWITCH ASSEMBLY

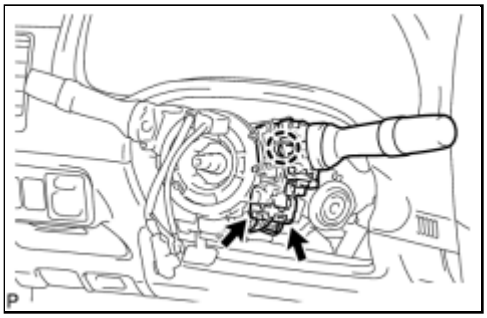

(a) Disconnect the 2 connectors.

(b) Disengage the claw and remove the windshield wiper switch assembly as shown in the illustration.

NOTICE:

If the claw is pushed with excessive force, it may break.

Last Modified: 3-10-2010	6.4 A	**From:** 200901
Model Year: 2010	**Model:** Corolla	**Doc ID:** RM000002XKC00LX
Title: WIPER / WASHER: WIPER SWITCH: INSTALLATION (2010 Corolla)		

INSTALLATION

1. INSTALL WINDSHIELD WIPER SWITCH ASSEMBLY

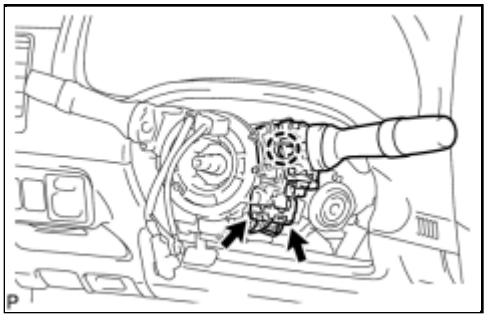

(a) Engage the claw and install the windshield wiper switch assembly as shown in the illustration.

(b) Connect the 2 connectors.

2. INSTALL UPPER STEERING COLUMN COVER INFO

3. INSTALL LOWER STEERING COLUMN COVER INFO

4. INSTALL LOWER INSTRUMENT PANEL FINISH PANEL SUB-ASSEMBLY INFO

5. TURN FRONT WHEELS TO FACE STRAIGHT AHEAD

6. ADJUST SPIRAL CABLE INFO

7. INSTALL STEERING WHEEL ASSEMBLY INFO

8. INSTALL STEERING PAD INFO

9. INSTALL LOWER NO.3 STEERING WHEEL COVER INFO

10. INSTALL LOWER NO.2 STEERING WHEEL COVER INFO

11. INSPECT STEERING WHEEL CENTER POINT

12. CONNECT CABLE TO NEGATIVE BATTERY TERMINAL

13. INSPECT STEERING PAD INFO

14. INSPECT SRS WARNING LIGHT

INFO

Last Modified: 3-10-2010	6.4 K	**From:** 200901
Model Year: 2010	**Model:** Corolla	**Doc ID:** RM0000030UL00GX
Title: DOOR LOCK: DOOR CONTROL RECEIVER: COMPONENTS (2010 Corolla)		

COMPONENTS

ILLUSTRATION

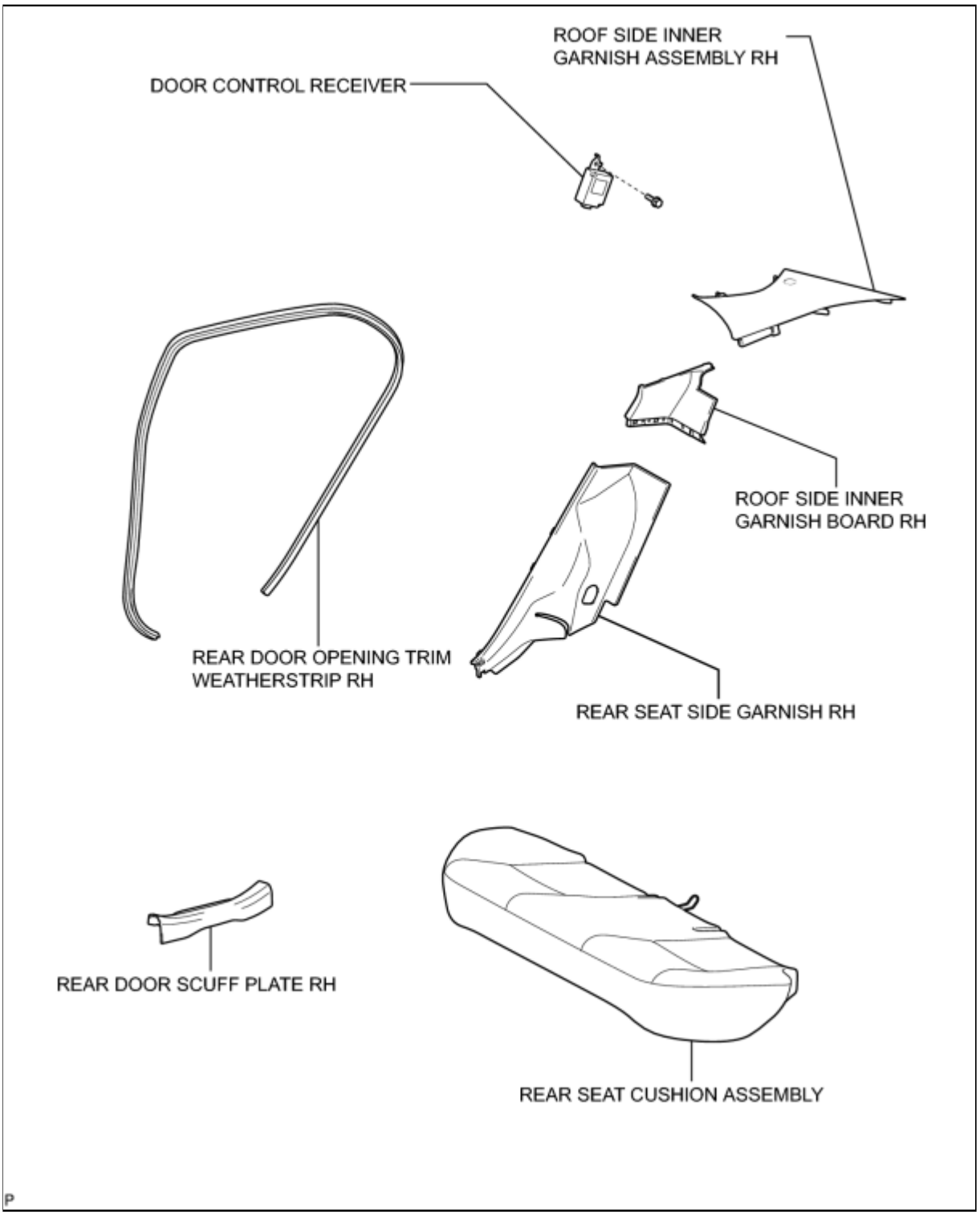

Last Modified: 3-10-2010	6.4 A	**From:** 200901
Model Year: 2010	**Model:** Corolla	**Doc ID:** RM0000030UM00IX
Title: DOOR LOCK: DOOR CONTROL RECEIVER: REMOVAL (2010 Corolla)		

REMOVAL

1. REMOVE REAR DOOR SCUFF PLATE RH

HINT:

Use the same procedure for the RH side and the LH side INFO .

2. REMOVE REAR DOOR OPENING TRIM WEATHERSTRIP RH

HINT:

Use the same procedure for the RH side and the LH side INFO .

3. REMOVE REAR SEAT CUSHION ASSEMBLY INFO

4. REMOVE REAR SEAT SIDE GARNISH RH

HINT:

Use the same procedure for the RH side and the LH side INFO .

5. REMOVE ROOF SIDE INNER GARNISH BOARD RH

HINT:

Use the same procedure for the RH side and the LH side INFO .

6. REMOVE ROOF SIDE INNER GARNISH ASSEMBLY RH

HINT:

Use the same procedure for the RH side and the LH side INFO .

7. REMOVE DOOR CONTROL RECEIVER

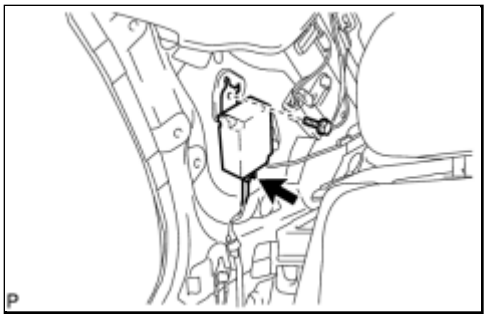

(a) Disconnect the connector.

(b) Remove the bolt and the door control receiver.

Last Modified: 3-10-2010	6.4 A	**From:** 200901
Model Year: 2010	**Model:** Corolla	**Doc ID:** RM0000030UJ00IX
Title: DOOR LOCK: DOOR CONTROL RECEIVER: INSTALLATION (2010 Corolla)		

INSTALLATION

1. INSTALL DOOR CONTROL RECEIVER

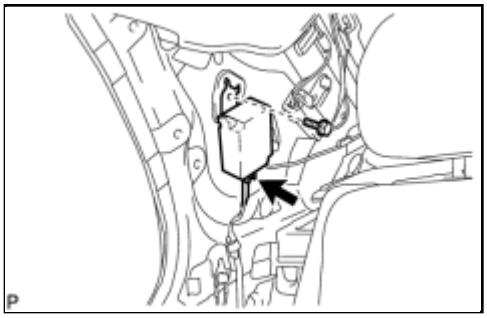

(a) Install the door control receiver with the bolt.

(b) Connect the connector.

2. INSTALL ROOF SIDE INNER GARNISH ASSEMBLY RH

HINT:

Use the same procedure for the RH side and the LH side INFO **.**

3. INSTALL ROOF SIDE INNER GARNISH BOARD RH

HINT:

Use the same procedure for the RH side and the LH side INFO **.**

4. INSTALL REAR SEAT SIDE GARNISH RH

HINT:

Use the same procedure for the RH side and the LH side INFO **.**

5. INSTALL REAR SEAT CUSHION ASSEMBLY INFO

6. INSTALL REAR DOOR OPENING TRIM WEATHERSTRIP RH INFO

7. INSTALL REAR DOOR SCUFF PLATE RH

HINT:

Use the same procedure for the RH side and the LH side INFO **.**

Last Modified: 3-10-2010	6.4 K	**From:** 200901
Model Year: 2010	**Model:** Corolla	**Doc ID:** RM000001P7W01EX
Title: DOOR LOCK: DOOR CONTROL SWITCH: COMPONENTS (2010 Corolla)		

COMPONENTS

ILLUSTRATION

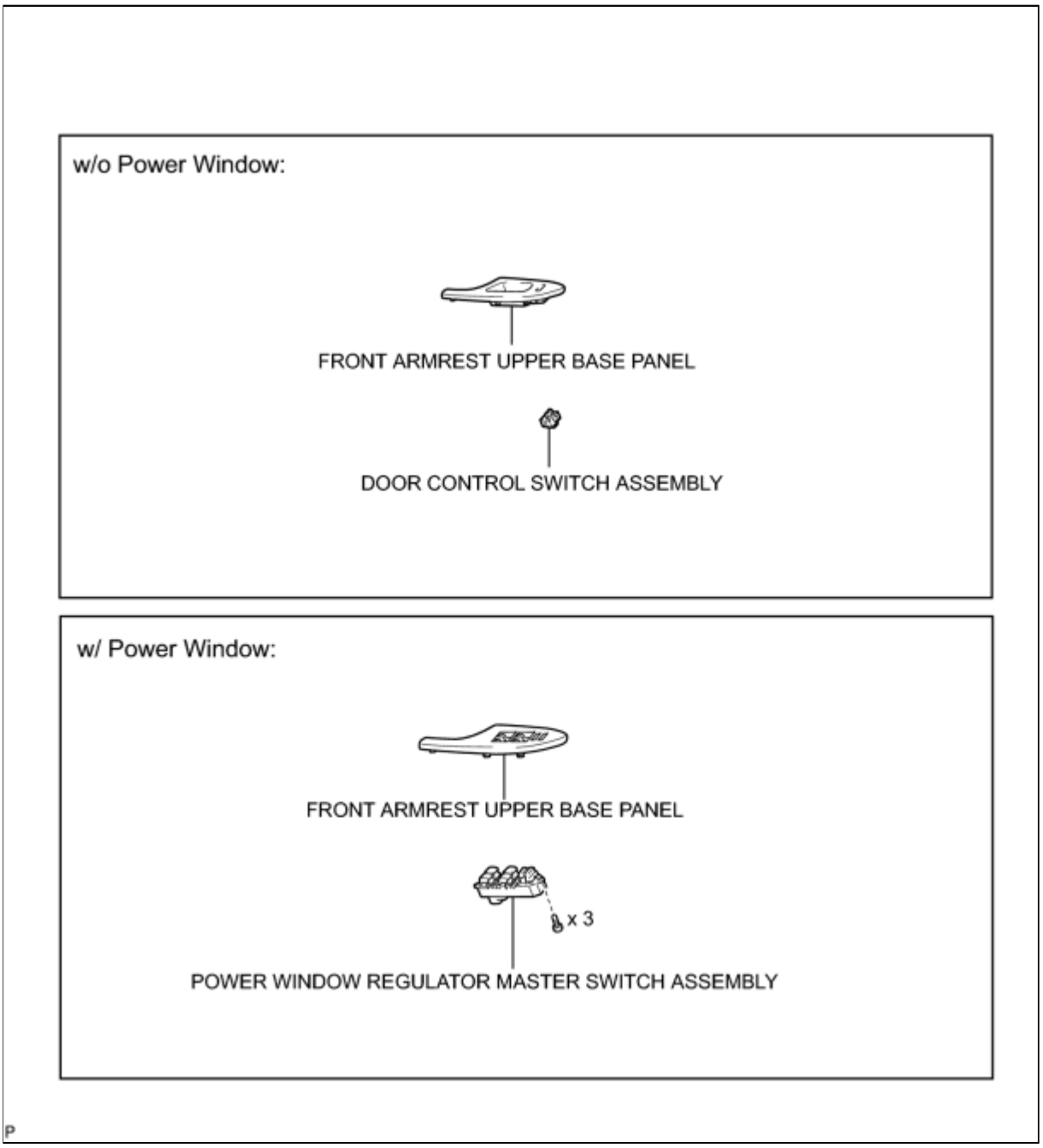

Last Modified: 3-10-2010	6.4 A	**From:** 200901
Model Year: 2010	**Model:** Corolla	**Doc ID:** RM000001P7X01QX
Title: DOOR LOCK: DOOR CONTROL SWITCH: REMOVAL (2010 Corolla)		

REMOVAL

1. REMOVE FRONT ARMREST UPPER BASE PANEL (w/o Power Window) INFO

2. REMOVE FRONT ARMREST UPPER BASE PANEL (w/ Power Window) INFO

3. REMOVE DOOR CONTROL SWITCH ASSEMBLY (w/o Power Window)

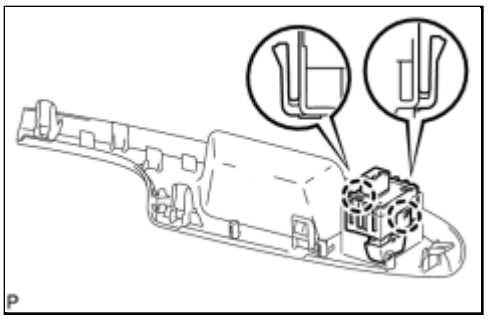

(a) Using a screwdriver with the tip wrapped with protective tape, disengage the 2 claws and remove the door control switch assembly.

4. REMOVE POWER WINDOW REGULATOR MASTER SWITCH ASSEMBLY (w/ Power Window)

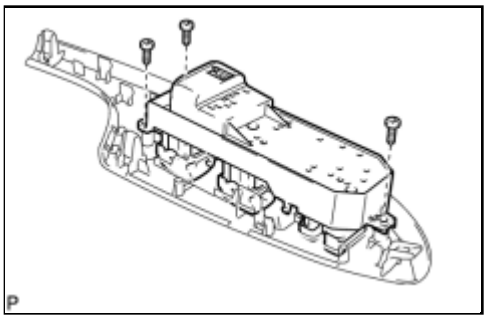

(a) Remove the 3 screws and the power window regulator master switch assembly.

Last Modified: 3-10-2010	6.4 G	**From:** 200901
Model Year: 2010	**Model:** Corolla	**Doc ID:** RM000002XUB009X
Title: DOOR LOCK: DOOR CONTROL SWITCH: INSPECTION (2010 Corolla)		

INSPECTION

1. INSPECT POWER WINDOW MASTER SWITCH (for Driver Side with Power Window)

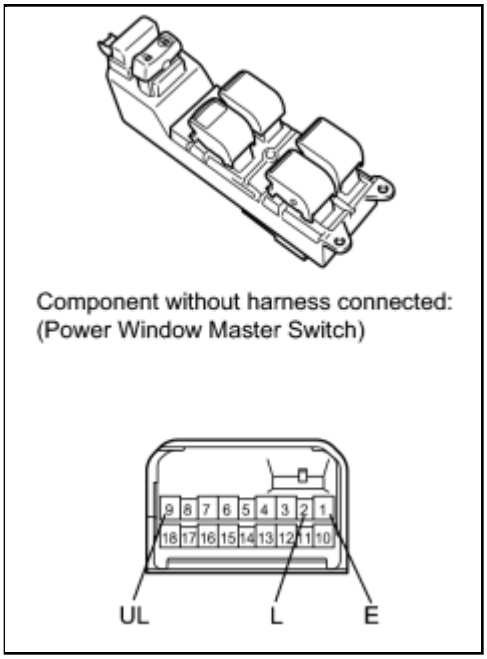

(a) Measure the resistance according to the value(s) in the table below.

Standard resistance:

TESTER CONNECTION	CONDITION	SPECIFIED CONDITION
1 (E) - 2 (L)	Lock	Below 1 Ω
1 (E) - 2 (L) 1 (E) - 9 (UL)	OFF (Free)	10 kΩ or higher
1 (E) - 9 (UL)	Unlock	Below 1 Ω

If the result is not specified, replace power window master switch.

2. INSPECT DOOR CONTROL SWITCH ASSEMBLY (for Driver Side without Power Window)

(a) Measure the resistance according to the value(s) in the table below.

Standard resistance:

TESTER CONNECTION	CONDITION	SPECIFIED CONDITION
3 (E) - 4 (L)	Lock	Below 1 Ω
3 (E) - 4 (L) 2 (UL) - 3 (E)	OFF (Free)	10 kΩ or higher
2 (UL) - 3 (E)	Unlock	Below 1 Ω

If the result is not specified, replace door control switch.

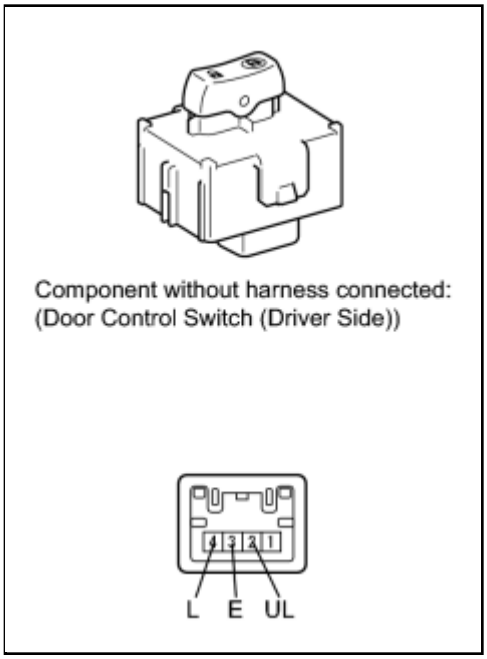

3. INSPECT DOOR CONTROL SWITCH ASSEMBLY (for Front Passenger Side)

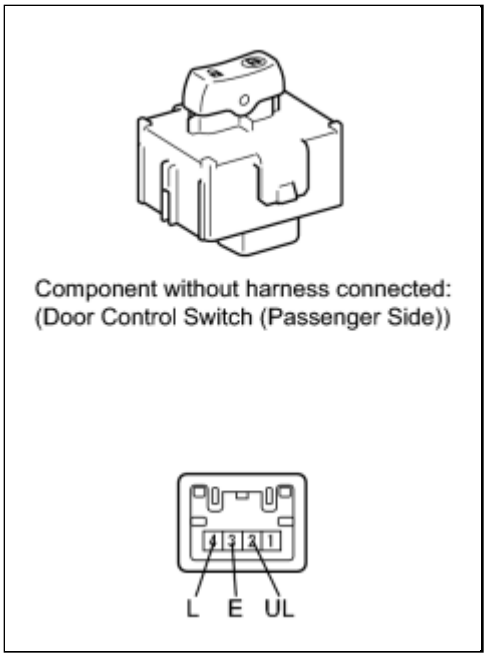

(a) Measure the resistance according to the value(s) in the table below.

Standard resistance:

TESTER CONNECTION	CONDITION	SPECIFIED CONDITION
3 (E) - 4 (L)	Lock	Below 1 Ω
3 (E) - 4 (L) 2 (UL) - 3 (E)	OFF (Free)	10 kΩ or higher
2 (UL) - 3 (E)	Unlock	Below 1 Ω

If the result is not specified, replace door control switch.

Last Modified: 3-10-2010	6.4 A	**From:** 200901
Model Year: 2010	**Model:** Corolla	**Doc ID:** RM000001P7U01QX
Title: DOOR LOCK: DOOR CONTROL SWITCH: INSTALLATION (2010 Corolla)		

INSTALLATION

1. INSTALL DOOR CONTROL SWITCH ASSEMBLY (w/o Power Window)

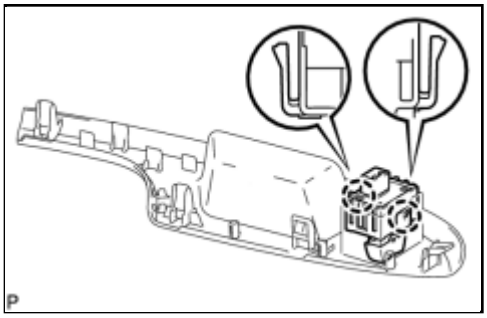

(a) Engage the 2 claws and install the door control switch assembly.

2. INSTALL POWER WINDOW REGULATOR MASTER SWITCH ASSEMBLY (w/ Power Window)

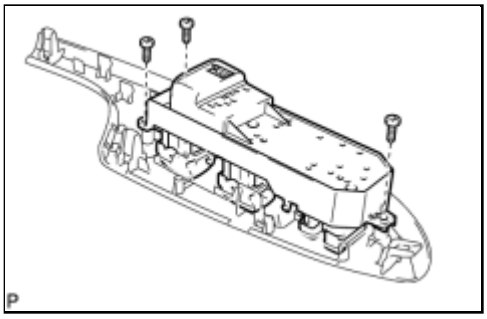

(a) Install the power window regulator master switch assembly with the 3 screws.

3. INSTALL FRONT ARMREST UPPER BASE PANEL (w/o Power Window) INFO

4. INSTALL FRONT ARMREST UPPER BASE PANEL (w/ Power Window) INFO

Last Modified: 3-10-2010	6.4 K	**From:** 200901
Model Year: 2010	**Model:** Corolla	**Doc ID:** RM000001P7Q01MX
Title: DOOR LOCK: DOOR CONTROL TRANSMITTER (w/ Smart Key System): COMPONENTS (2010 Corolla)		

COMPONENTS

ILLUSTRATION

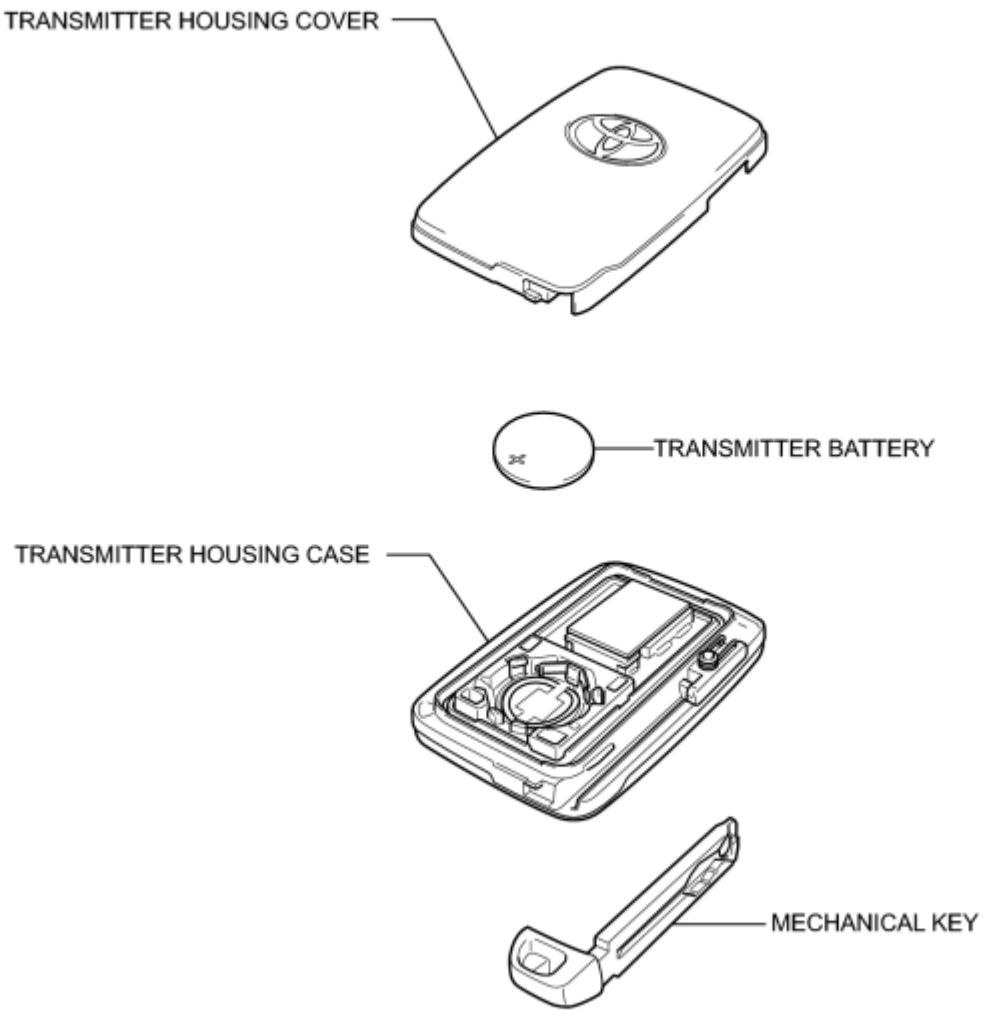
TRANSMITTER HOUSING COVER
TRANSMITTER BATTERY
TRANSMITTER HOUSING CASE
MECHANICAL KEY

P

Last Modified: 3-10-2010	6.4 A	**From:** 200901
Model Year: 2010	**Model:** Corolla	**Doc ID:** RM000001P7R01PX
Title: DOOR LOCK: DOOR CONTROL TRANSMITTER (w/ Smart Key System): REMOVAL (2010 Corolla)		

REMOVAL

1. REMOVE TRANSMITTER BATTERY

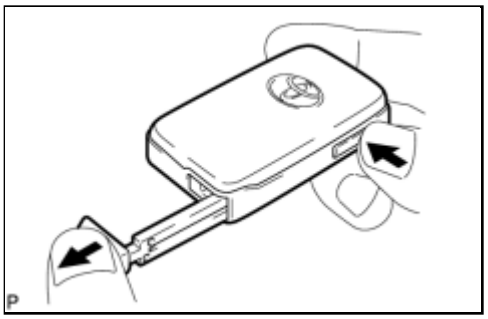

(a) Remove the mechanical key.

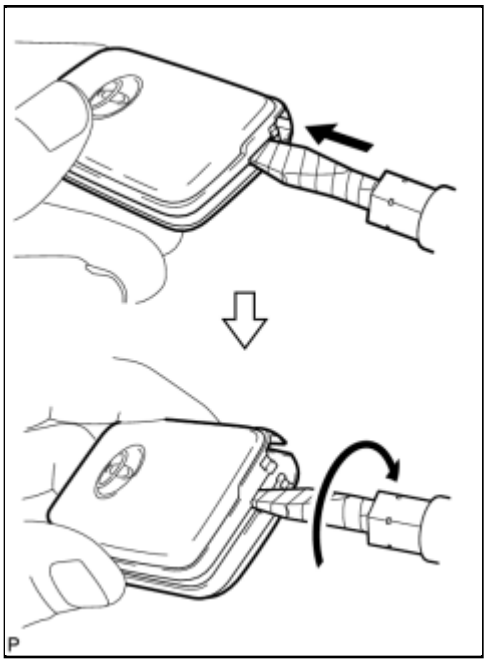

(b) Insert a screwdriver into the gap, and turn the screwdriver to detach the cover.

HINT:

Tape the screwdriver tip before use.

(c) Insert a screwdriver into the gap and gently remove the battery (lithium battery).

NOTICE:

- Do not push the terminals with your finger.
- Do not forcibly pry up the battery (lithium battery) because doing so will deform the terminals.

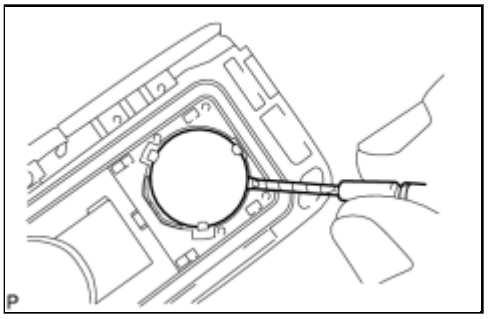

- Do not touch the battery with wet hands. Water may result in corrosion.
- Do not touch or move any components inside the transmitter because handling the components may interfere with proper operation of the transmitter.

Last Modified: 3-10-2010	6.4 G	**From:** 200901
Model Year: 2010	**Model:** Corolla	**Doc ID:** RM000001L9A02BX
Title: DOOR LOCK: DOOR CONTROL TRANSMITTER (w/ Smart Key System): INSPECTION (2010 Corolla)		

INSPECTION

1. INSPECT DOOR CONTROL TRANSMITTER

(a) Inspect operation of the transmitter.

(1) Remove the battery (lithium battery) from the transmitter INFO .

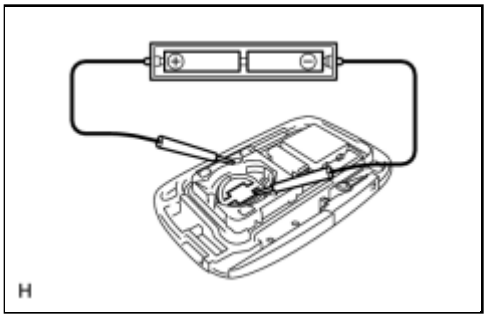

(2) Install a new or normal battery (lithium battery).

HINT:

If a new or normal battery is not available, first connect 2 new 1.5 V batteries in series. Then connect leads to the batteries and apply 3 V to the transmitter, as shown in the illustration.

(3) From outside the vehicle, approximately 1 m (3.28 ft.) away from the driver side outside door handle, test the transmitter by pointing its key plate at the vehicle and pressing a transmitter switch.

OK:

The door lock can be operated via the transmitter.

The LED comes on more than once.

- The operational area differs depending on the user, the way the transmitter is held, and the location.
- The transmitter's faint electric waves may be affected if the area has strong electric waves or noise. The transmitter's operation area may be shortened or the transmitter may not function.

(b) Inspect the battery capacity.

(1) Remove the battery from the electrical key transmitter that does not operate. Attach a lead wire (0.6 mm (0.0236 in.) in diameter or less including wire sheath) with tape or equivalent to the negative terminal INFO .

NOTICE:

Do not wrap the lead wire around a terminal, wedge it between the terminals, or solder it. A terminal may be deformed or damaged, and the battery will not be able to be installed correctly.

(2) Carefully pull the lead wire out from the position shown in the illustration and install the previously removed transmitter battery.

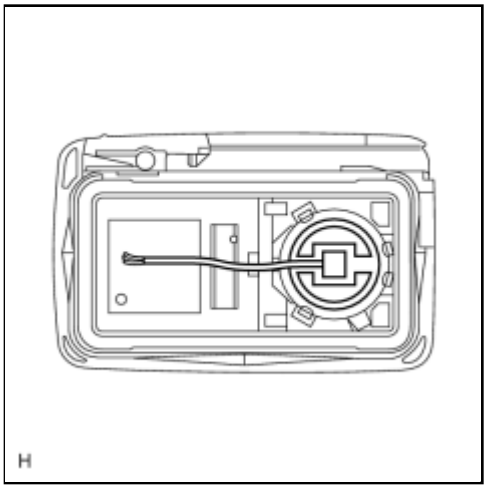

(3) Using an oscilloscope, check the transmitter battery voltage waveform.

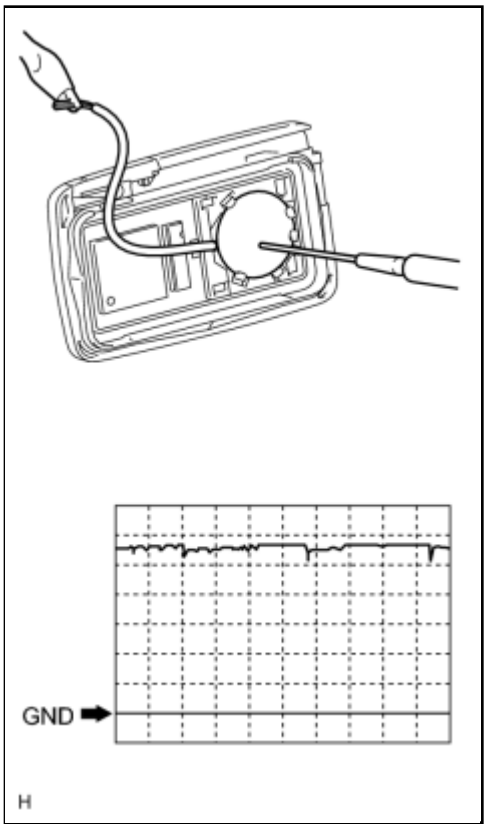

HINT:

When measuring the battery voltage, while operating the lock switch of a door handle, bring the electrical key transmitter within the entry operating range to perform the measurement. For the entry operating range, refer to SYSTEM DESCRIPTION INFO **.**

Standard voltage:

ITEM	CONTENT
Tester Connection	Battery positive (+) - Battery negative (-)
Tool Setting	0.5 V/DIV., 100 ms/DIV.
Condition	Engine switch OFF, all doors closed and lock switch pushed
Specified Condition	2.2 to 3.2 V (Refer to the waveform)

If the result is not as specified, replace the transmitter battery.

Last Modified: 3-10-2010	6.4 A	**From:** 200901
Model Year: 2010	**Model:** Corolla	**Doc ID:** RM000001P7P01MX
Title: DOOR LOCK: DOOR CONTROL TRANSMITTER (w/ Smart Key System): INSTALLATION (2010 Corolla)		

INSTALLATION

1. INSTALL TRANSMITTER BATTERY

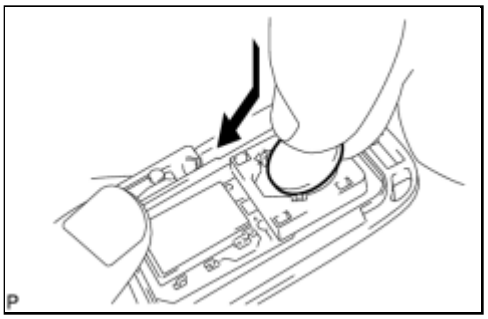

(a) Install a new battery (lithium battery) with the positive (+) side up as shown in the illustration.

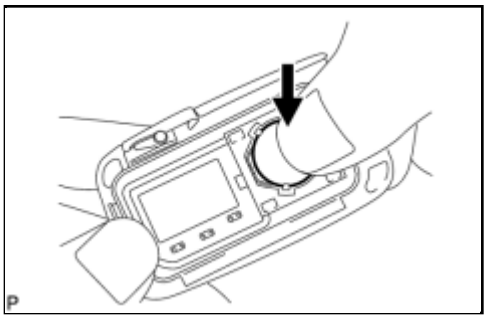

(b) Press down gently on the battery to set it in place.

NOTICE:

- Be sure that the positive and negative sides of the transmitter battery are positioned correctly.
- Be careful not to bend the terminals of the transmitter battery during installation.
- Keep the interior of the transmitter case free of dust, water, and oil.

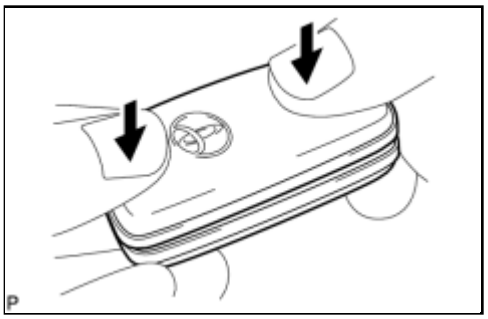

(c) Install the cover by pressing it as shown in the illustration.

(d) Install the mechanical key.

HINT:

After the installation, press one of the transmitter switches and check

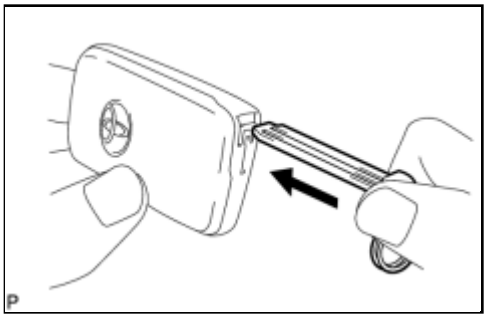

that the LED illuminates.

Last Modified: 3-10-2010	6.4 K	**From:** 200901
Model Year: 2010	**Model:** Corolla	**Doc ID:** RM000001J7L01SX
Title: DOOR LOCK: DOOR CONTROL TRANSMITTER (w/o Smart Key System): COMPONENTS (2010 Corolla)		

COMPONENTS

ILLUSTRATION

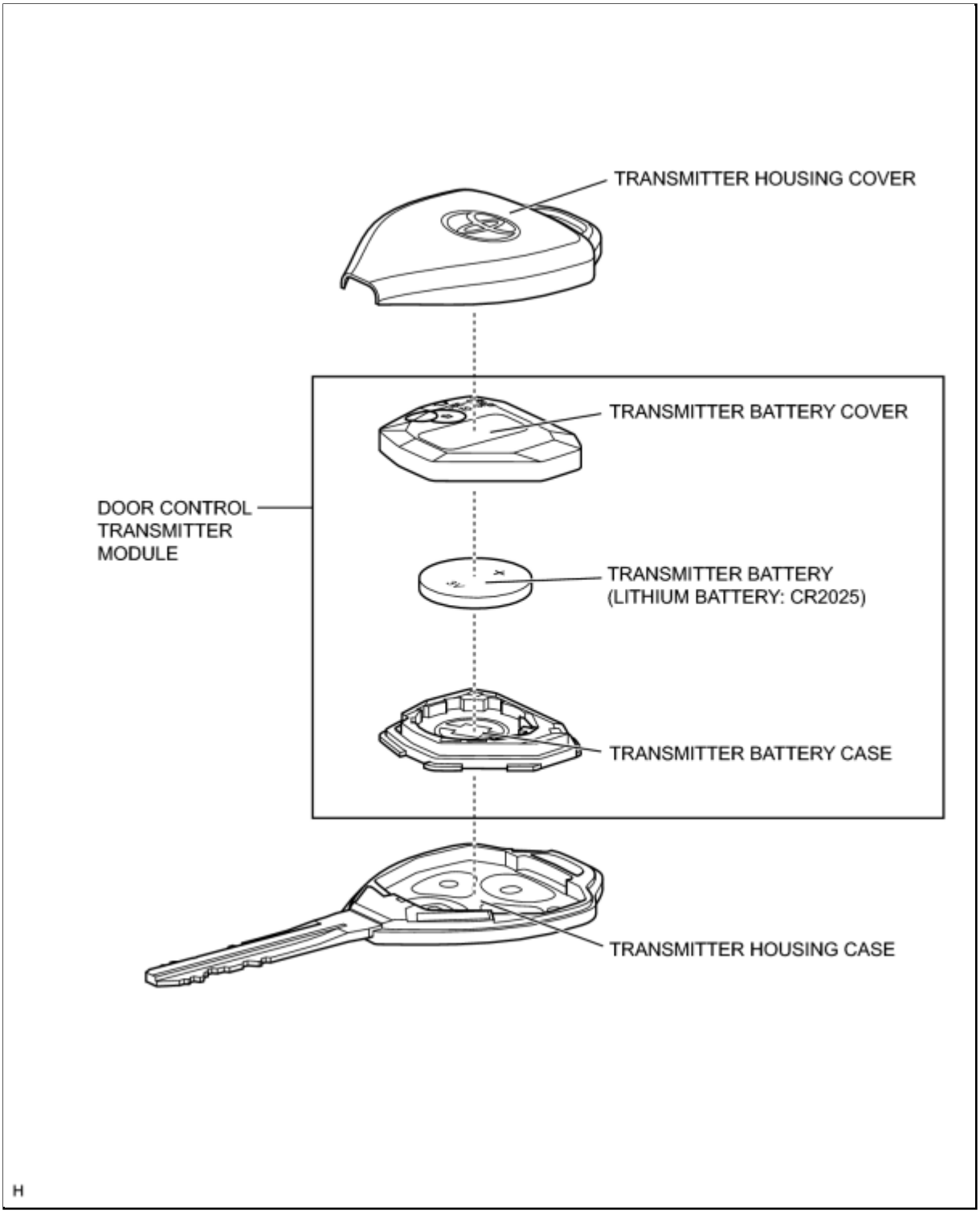
TRANSMITTER HOUSING COVER
TRANSMITTER BATTERY COVER
DOOR CONTROL
TRANSMITTER
MODULE
TRANSMITTER BATTERY
(LITHIUM BATTERY: CR2025)
TRANSMITTER BATTERY CASE
TRANSMITTER HOUSING CASE
H

Last Modified: 3-10-2010	6.4 A	**From:** 200901
Model Year: 2010	**Model:** Corolla	**Doc ID:** RM000001J7M01KX
Title: DOOR LOCK: DOOR CONTROL TRANSMITTER (w/o Smart Key System): REMOVAL (2010 Corolla)		

REMOVAL

1. REMOVE TRANSMITTER HOUSING COVER

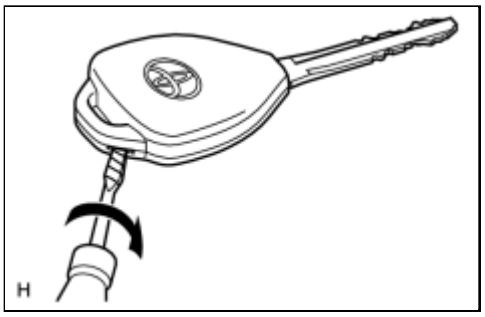

(a) Using a screwdriver with its tip wrapped in protective tape, pry open the transmitter housing cover.

NOTICE:

Do not forcibly pry the cover.

2. REMOVE DOOR CONTROL TRANSMITTER MODULE

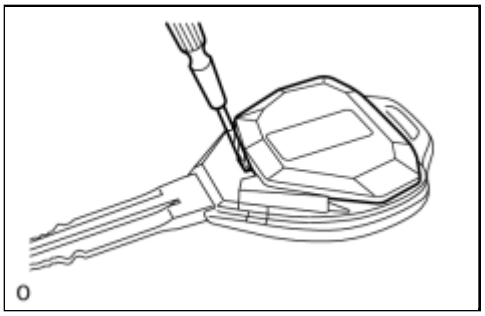

(a) Using a screwdriver with its tip wrapped in protective tape, remove the door control transmitter module from the transmitter housing case.

NOTICE:

Handle each part with care as they are delicate electrical parts.

3. REMOVE TRANSMITTER BATTERY

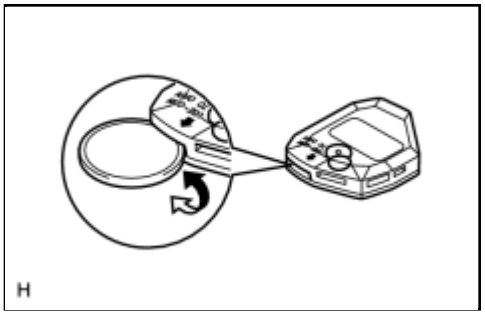

(a) Twist the coin in the direction of the arrow mark in the illustration, and remove the transmitter battery cover.

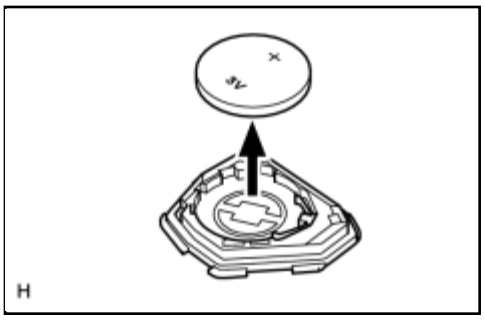

(b) Remove the battery (lithium battery: CR2025).

NOTICE:

- Do not push the terminals with your finger.
- Do not forcibly pry up the battery. The terminals may become damaged.
- Do not touch the battery with wet hands. Water may cause rust.
- Do not touch or move any components inside the transmitter. It may cease to work.

Last Modified: 3-10-2010	6.4 G	**From:** 200901
Model Year: 2010	**Model:** Corolla	**Doc ID:** RM000001L9A02CX
Title: DOOR LOCK: DOOR CONTROL TRANSMITTER (w/o Smart Key System): INSPECTION (2010 Corolla)		

INSPECTION

1. INSPECT DOOR CONTROL TRANSMITTER

(a) Inspect operation of the transmitter.

(1) Remove the battery (lithium battery) from the transmitter INFO .

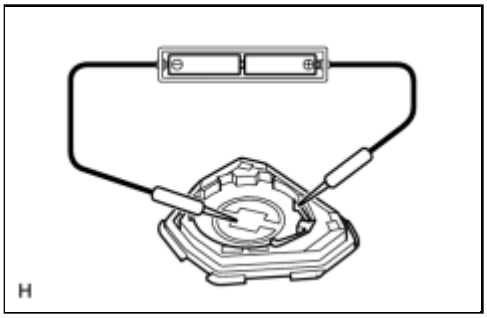

(2) Install a new or non-depleted battery (lithium battery).

HINT:

When a new or non-depleted battery is not available, first connect 2 new 1.5 batteries in series. Then connect leads to the batteries and apply 3 V to the transmitter, as shown in the illustration.

(3) From outside the vehicle, approximately 1 m (3.28 ft) from the driver side outside door handle, test the transmitter by pointing its key plate at the vehicle and pressing a transmitter switch.

OK:

The door lock can be operated via the transmitter.

The LED comes on more than once.

- The operational area differs depending on the user, the way the transmitter is held and the location.
- The transmitter's faint electric waves may be affected if the area has strong electric waves or noise. The transmitter's operation area may be shortened or the transmitter may not function.

(b) Inspect the battery capacity.

(1) Remove the battery from the electrical key transmitter that does not operate. Attach a lead wire (0.6 mm (0.0236 in.) in diameter or less including wire sheath) with tape or equivalent to the negative terminal INFO .

NOTICE:

Do not wrap the lead wire around a terminal, wedge it between the terminals, or solder it. A terminal may be deformed or damaged, and the battery will not be able to be installed correctly.

(2) Carefully pull the lead wire out from the position shown in the illustration and install the previously removed transmitter battery.

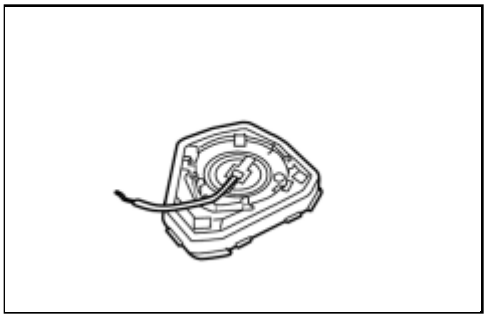

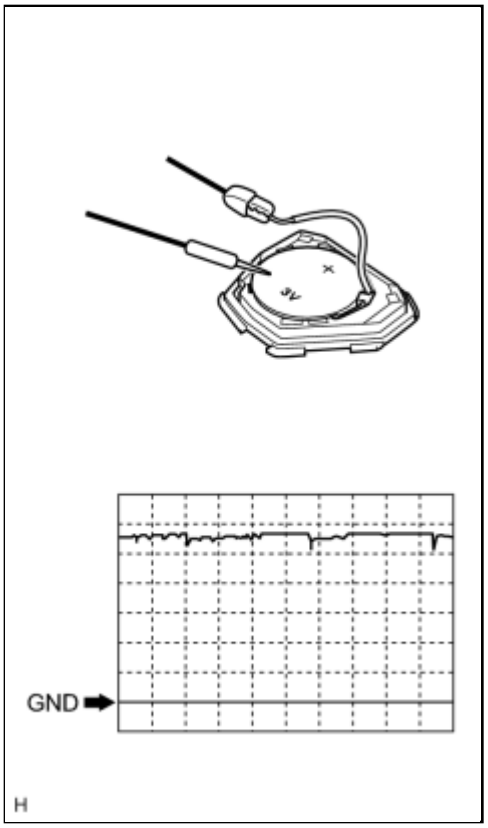

(3) Using an oscilloscope, check the transmitter battery voltage waveform.

HINT:

Measure the transmitter battery voltage while pressing the LOCK or UNLOCK switch on the transmitter.

Standard voltage:

ITEM	CONTENT
Tester Connection	Battery positive (+) - Battery negative (-)
Tool Setting	0.5 V/DIV., 100 ms/DIV.
Condition	Engine switch OFF, all doors closed and lock switch pushed
Specified Condition	2.2 to 3.2 V (Refer to the waveform)

If the result is not as specified, replace the transmitter battery.

Last Modified: 3-10-2010	6.4 A	**From:** 200901
Model Year: 2010	**Model:** Corolla	**Doc ID:** RM000001J7J01HX
Title: DOOR LOCK: DOOR CONTROL TRANSMITTER (w/o Smart Key System): INSTALLATION (2010 Corolla)		

INSTALLATION

1. INSTALL TRANSMITTER BATTERY

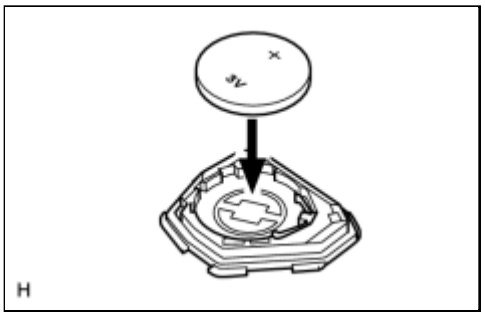

(a) Install a battery (lithium battery: CR2025) with the positive (+) side facing upward, as shown in the illustration.

NOTICE:

- Be careful not to bend the transmitter battery electrode during insertion.
- Keep the transmitter cover interior free of dust and oil.

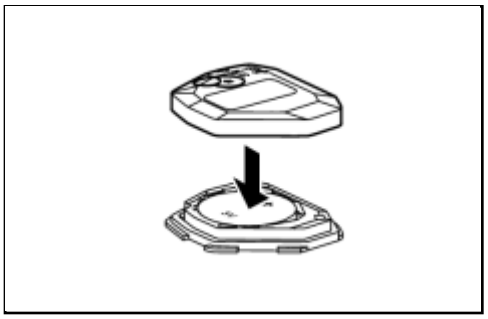

(b) Install the cover.

2. INSTALL DOOR CONTROL TRANSMITTER MODULE

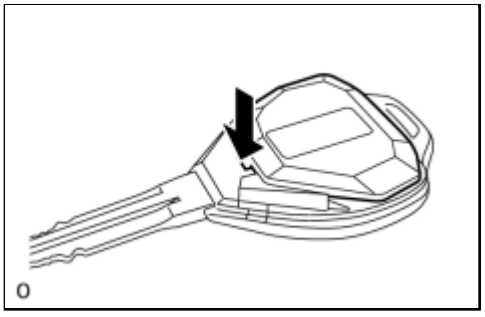

(a) Install the door control transmitter module into the transmitter housing case, and install the transmitter housing cover securely onto the transmitter housing case.

3. INSTALL TRANSMITTER HOUSING COVER

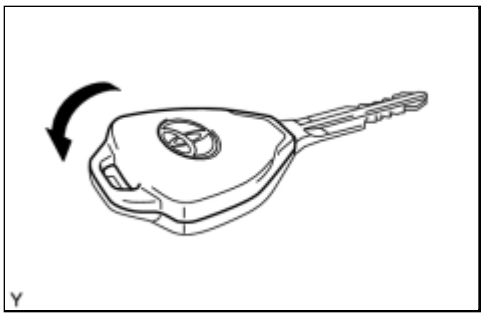

(a) Install the transmitter housing cover to the transmitter housing case.

(b) Check that the transmitter LED illuminates when the switch is pressed.

OK:

Transmitter LED illuminates when switch is pressed.

Last Modified: 3-10-2010	6.4 K	**From:** 200901
Model Year: 2010	**Model:** Corolla	**Doc ID:** RM000000XBA02GX
Title: DOOR LOCK: FRONT DOOR LOCK: COMPONENTS (2010 Corolla)		

COMPONENTS

ILLUSTRATION

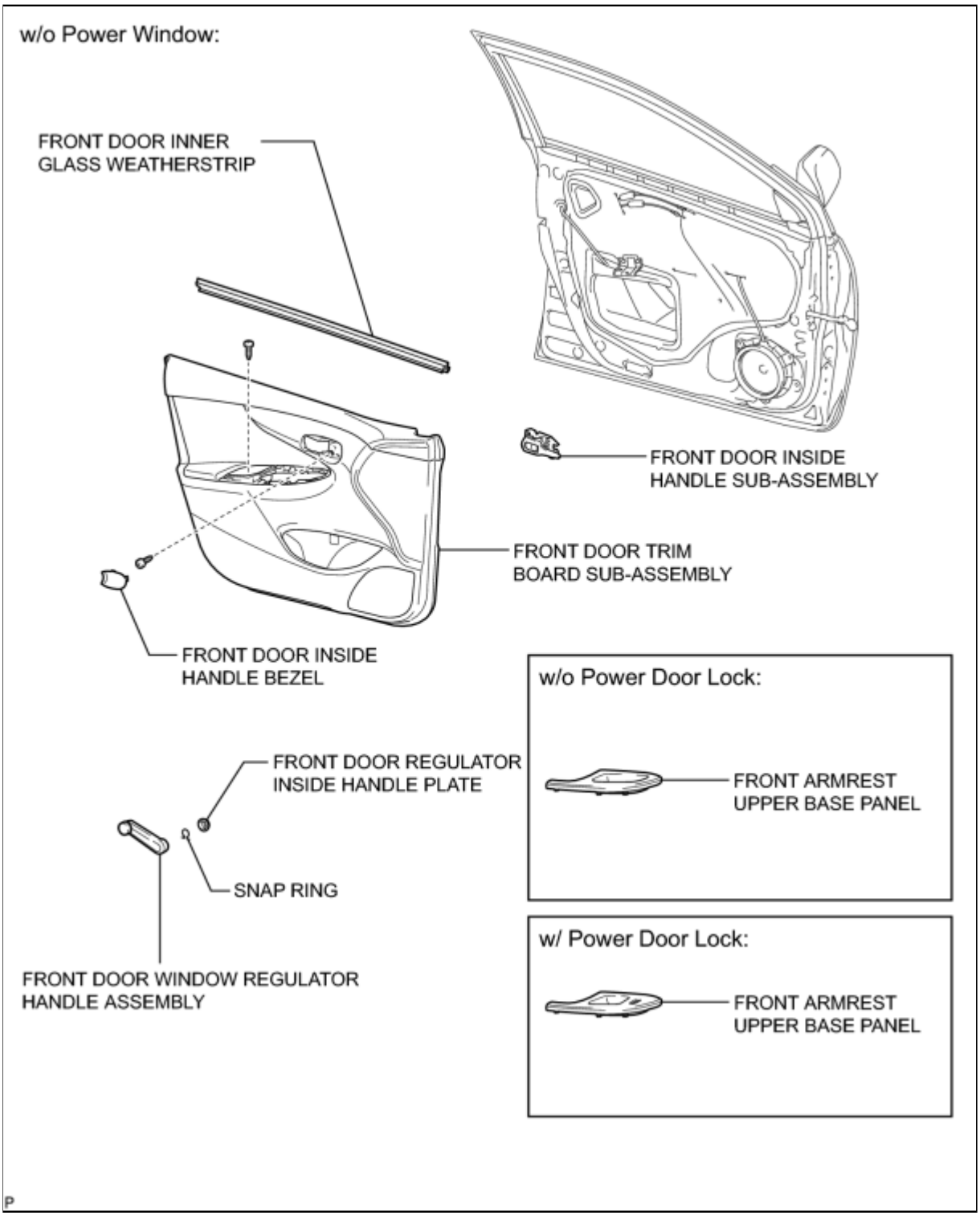

ILLUSTRATION

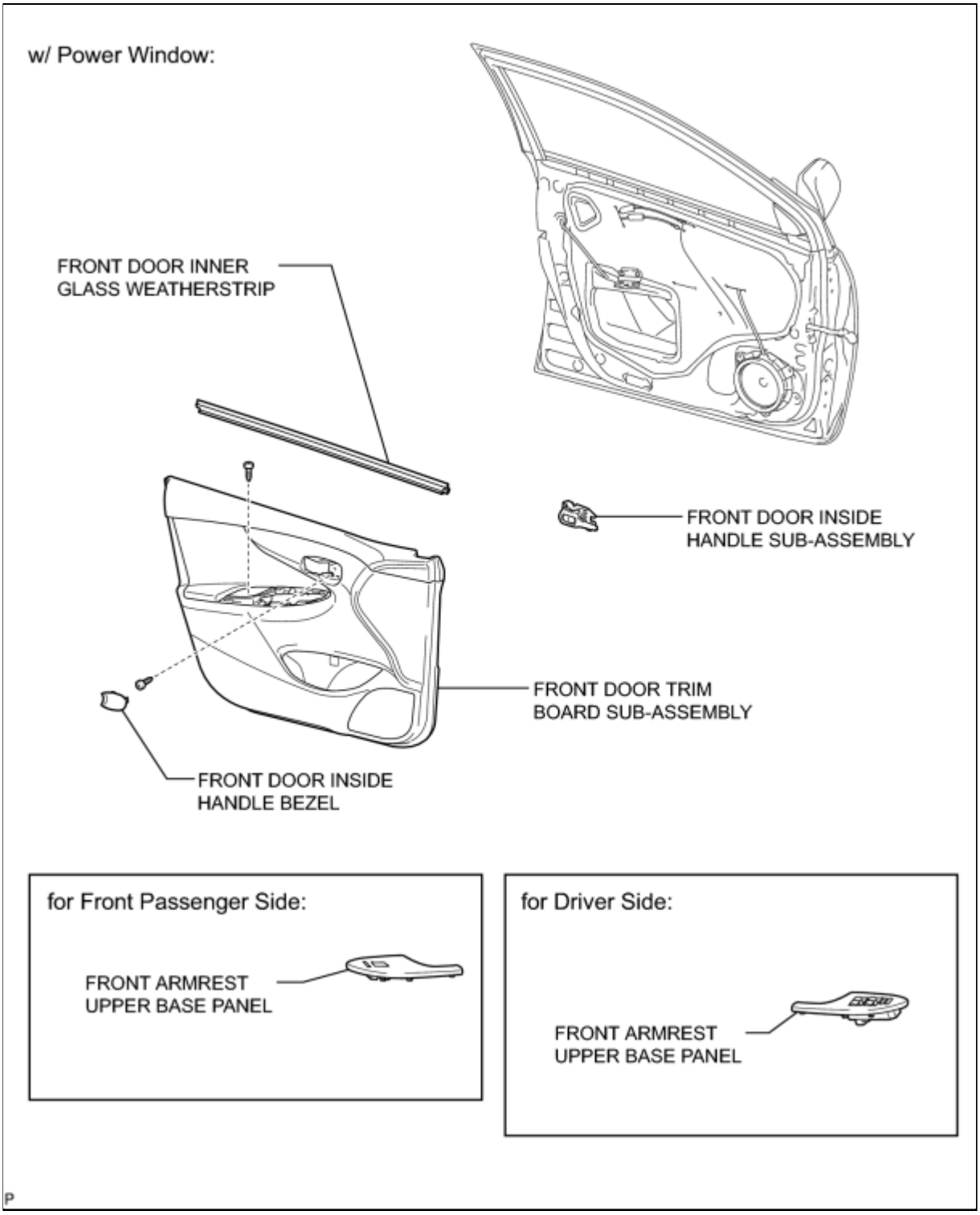

ILLUSTRATION

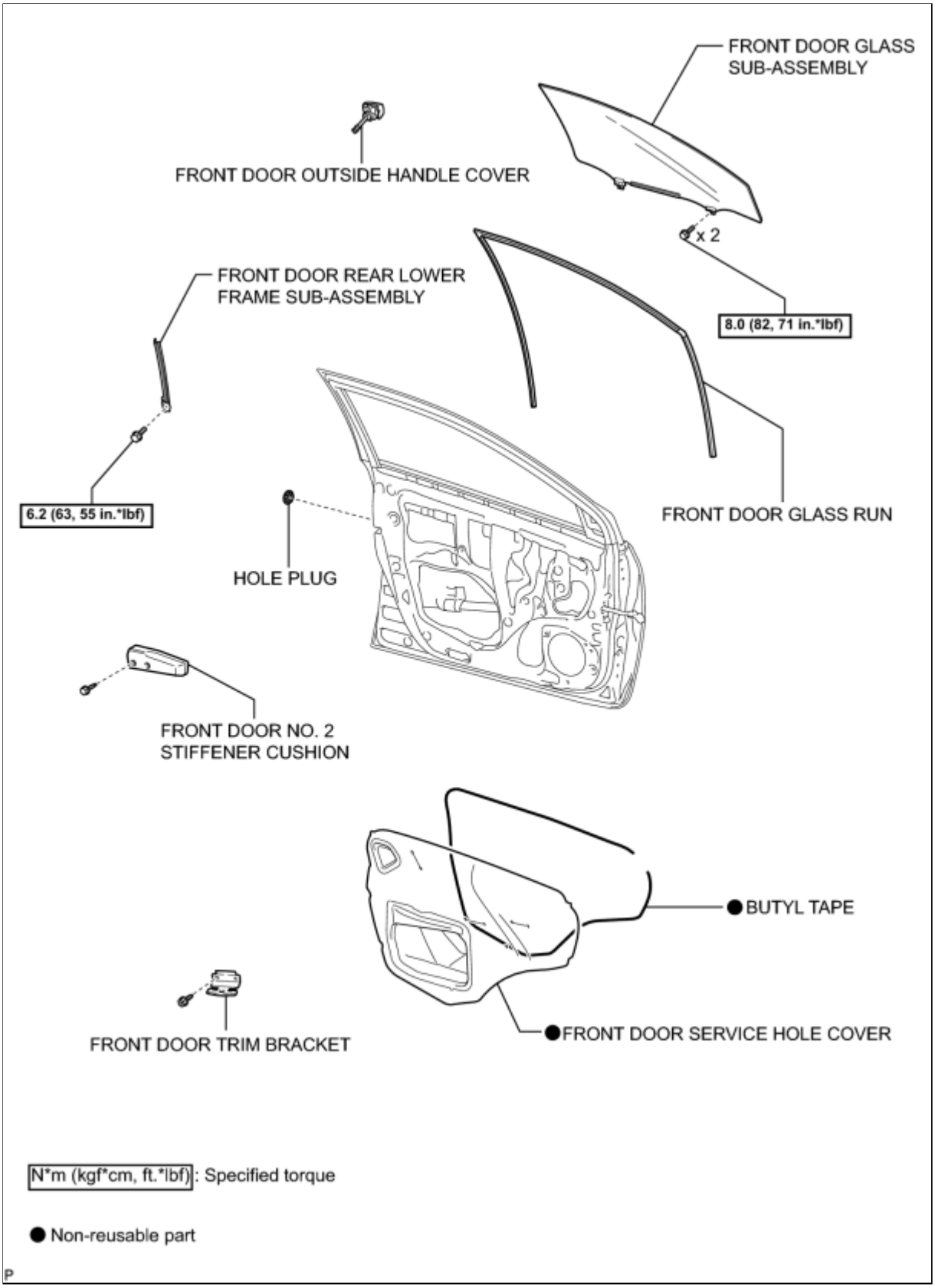

ILLUSTRATION

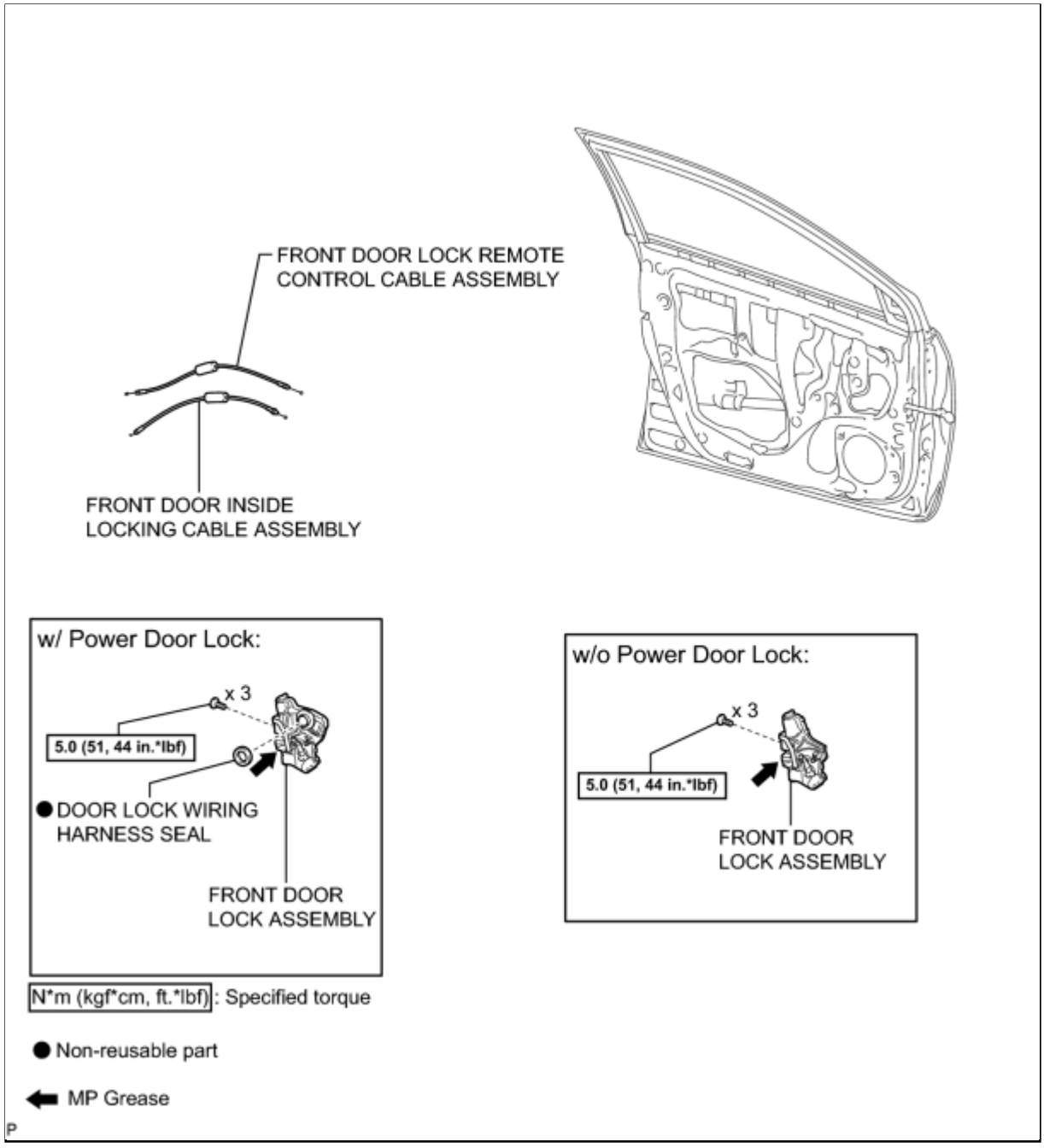
FRONT DOOR LOCK REMOTE CONTROL CABLE ASSEMBLY
FRONT DOOR INSIDE LOCKING CABLE ASSEMBLY
w/ Power Door Lock:
x 3
5.0 (51, 44 in.*lbf)
● DOOR LOCK WIRING HARNESS SEAL
FRONT DOOR LOCK ASSEMBLY
w/o Power Door Lock:
x 3
5.0 (51, 44 in.*lbf)
FRONT DOOR LOCK ASSEMBLY
N*m (kgf*cm, ft.*lbf): Specified torque
● Non-reusable part
MP Grease

P

Last Modified: 3-10-2010	6.4 A	**From:** 200901
Model Year: 2010	**Model:** Corolla	**Doc ID:** RM0000011QF02UX
Title: DOOR LOCK: FRONT DOOR LOCK: REMOVAL (2010 Corolla)		

REMOVAL

1. REMOVE FRONT DOOR WINDOW REGULATOR HANDLE ASSEMBLY (w/o Power Window) INFO

2. REMOVE FRONT DOOR INSIDE HANDLE BEZEL INFO

3. REMOVE FRONT ARMREST UPPER BASE PANEL (w/o Power Window) INFO

4. REMOVE FRONT ARMREST UPPER BASE PANEL (w/ Power Window) INFO

5. REMOVE FRONT DOOR TRIM BOARD SUB-ASSEMBLY INFO

6. REMOVE FRONT DOOR INSIDE HANDLE SUB-ASSEMBLY INFO

7. REMOVE FRONT DOOR INNER GLASS WEATHERSTRIP INFO

8. REMOVE FRONT DOOR TRIM BRACKET INFO

9. REMOVE FRONT DOOR SERVICE HOLE COVER INFO

10. REMOVE FRONT DOOR GLASS SUB-ASSEMBLY INFO

11. REMOVE FRONT DOOR NO. 2 STIFFENER CUSHION INFO

12. REMOVE FRONT DOOR GLASS RUN INFO

13. REMOVE FRONT DOOR REAR LOWER FRAME SUB-ASSEMBLY INFO

14. REMOVE FRONT DOOR OUTSIDE HANDLE COVER INFO

15. REMOVE FRONT DOOR LOCK ASSEMBLY (w/o Power Door Lock)

(a) Using a "TORX" socket wrench (T30), remove the 3 screws.

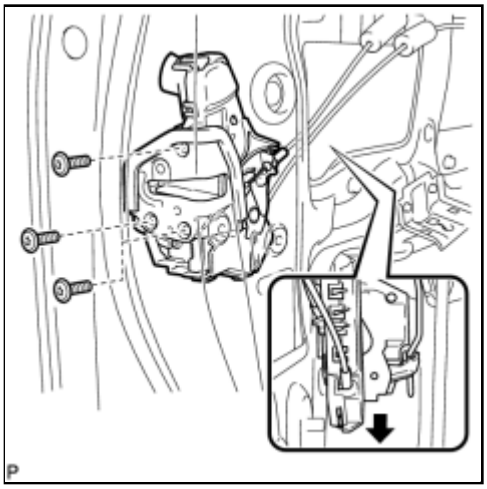

(b) Slide the front door lock assembly downward, and remove the front door lock assembly and cables as a unit.

16. REMOVE FRONT DOOR LOCK ASSEMBLY (w/ Power Door Lock)

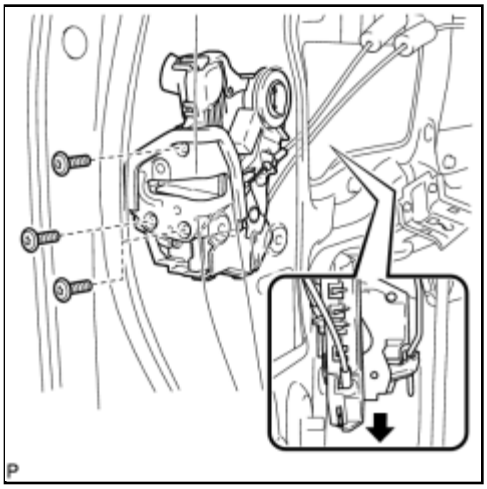

(a) Using a "TORX" socket wrench (T30), remove the 3 screws.

(b) Slide the front door lock assembly downward, and remove the front door lock assembly and cables as a unit.

(c) Remove the door lock wiring harness seal from the front door lock assembly.

17. REMOVE FRONT DOOR LOCK REMOTE CONTROL CABLE ASSEMBLY (w/o Power Door Lock)

(a) Remove the front door lock remote control cable assembly.

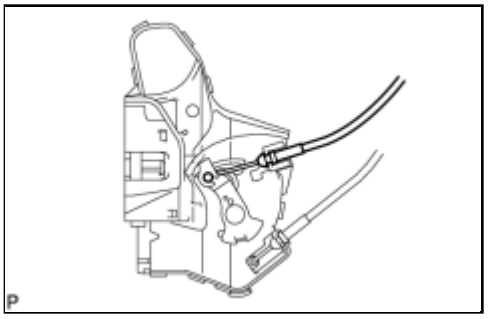

18. REMOVE FRONT DOOR LOCK REMOTE CONTROL CABLE ASSEMBLY (w/ Power Door Lock)

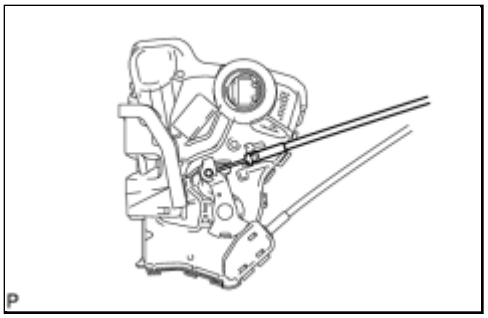

(a) Remove the front door lock remote control cable assembly.

19. REMOVE FRONT DOOR INSIDE LOCKING CABLE ASSEMBLY (w/o Power Door Lock)

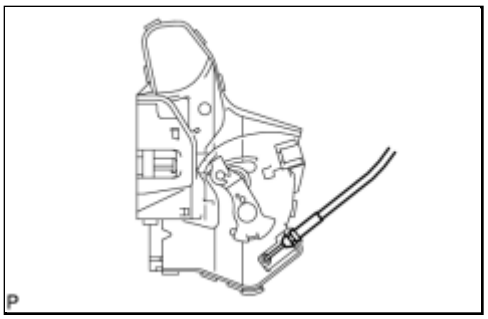

(a) Remove the front door inside locking cable assembly.

20. REMOVE FRONT DOOR INSIDE LOCKING CABLE ASSEMBLY (w/ Power Door Lock)

(a) Using a screwdriver, disengage the 3 claws.

HINT:

Tape the screwdriver tip before use.

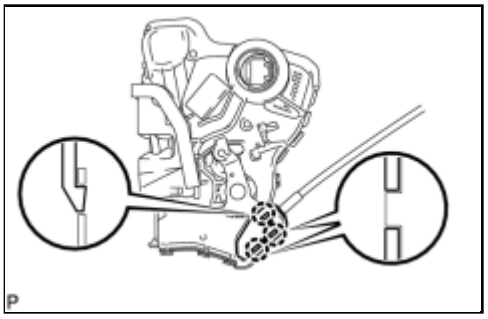

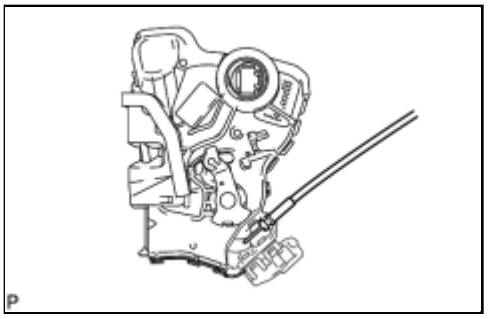

(b) Remove the front door inside locking cable assembly.

Last Modified: 3-10-2010	6.4 G	**From:** 200901
Model Year: 2010	**Model:** Corolla	**Doc ID:** RM000002XWS009X
Title: DOOR LOCK: FRONT DOOR LOCK: INSPECTION (2010 Corolla)		

INSPECTION

1. INSPECT FRONT DOOR LOCK ASSEMBLY (for Driver Side)

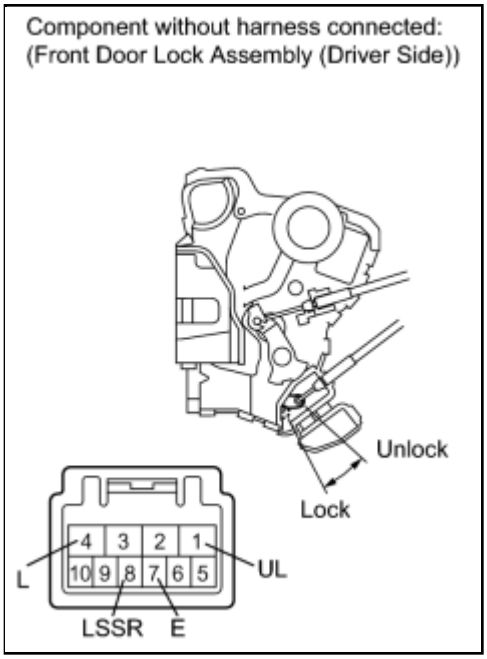

(a) Apply battery voltage to the motor terminals and check the operation of the door lock motor.

OK:

MEASUREMENT CONDITION	SPECIFIED CONDITION
Battery positive (+) → 4 (L) Battery negative (-) → 1 (UL)	Lock
Battery positive (+) → 1 (UL) Battery negative (-) → 4 (L)	Unlock

If the result is not as specified, replace the door lock assembly.

(b) Measure the resistance of the door lock position switch.

Standard resistance:

TESTER CONNECTION	MEASUREMENT CONDITION	DOOR LOCK CONDITION	SPECIFIED CONDITION
7 (E) - 8 (LSSR)	Battery positive (+) → Terminal 4 (L) Battery negative (-) → Terminal 1 (UL)	Lock	10 kΩ or higher
7 (E) - 8 (LSSR)	Battery positive (+) → Terminal 1 (UL) Battery negative (-) → Terminal 4 (L)	Unlock	Below 1 Ω

If the result is not as specified, replace the door lock assembly.

(c) Measure the resistance of the door key lock and unlock switch.

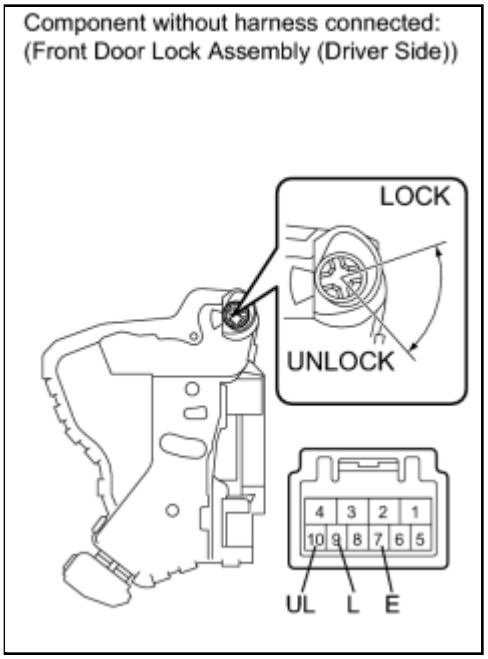

Standard resistance:

TESTER CONNECTION	SWITCH CONDITION	SPECIFIED CONDITION
9 (L) - 7 (E)	ON (Door lock set to LOCK)	Below 1 Ω
9 (L) - 7 (E) 10 (UL) - 7 (E)	OFF (Free)	10 kΩ or higher
10 (UL) - 7 (E)	ON (Door lock set to UNLOCK)	Below 1 Ω

If the result is not as specified, replace the door lock assembly.

2. INSPECT FRONT DOOR LOCK ASSEMBLY (for Front Passenger Side)

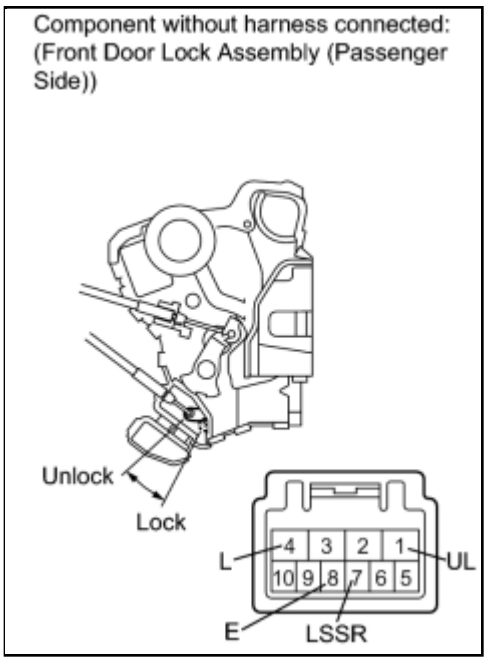

(a) Apply battery voltage to the motor terminals and check the operation of the door lock motor.

OK:

MEASUREMENT CONDITION	SPECIFIED CONDITION
Battery positive (+) → Terminal 4 (L) Battery negative (-) → Terminal 1 (UL)	Lock
Battery positive (+) → Terminal 1 (UL) Battery negative (-) → Terminal 4 (L)	Unlock

If the result is not as specified, replace the door lock assembly.

(b) Measure the resistance of the door lock position switch. (w/ Wireless Door Lock System)

Standard resistance:

TESTER CONNECTION	MEASUREMENT CONDITION	DOOR LOCK CONDITION	SPECIFIED CONDITION

TESTER CONNECTION	MEASUREMENT CONDITION	DOOR LOCK CONDITION	SPECIFIED CONDITION
7 (LSSR) - 8 (E)	Battery positive (+) → Terminal 4 (L) Battery negative (-) → Terminal 1 (UL)	LOCK	10 kΩ or higher
7 (LSSR) - 8 (E)	Battery positive (+) → Terminal 1 (UL) Battery negative (-) → Terminal 4 (L)	UNLOCK	Below 1 Ω

If the result is not as specified, replace the door lock assembly.

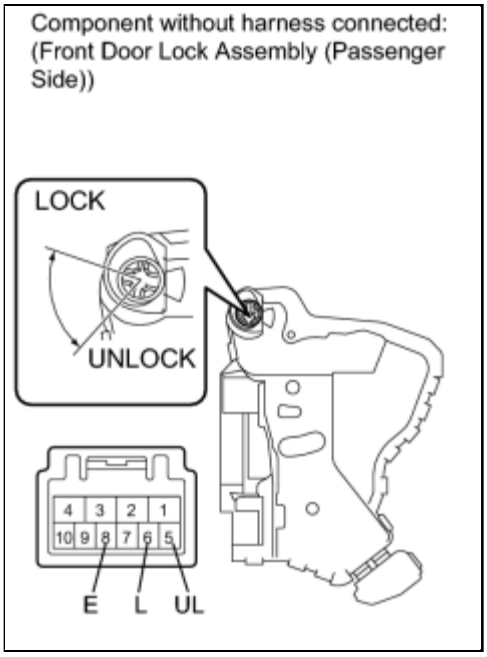

(c) Measure the resistance of the door key lock and unlock switch. (w/o Wireless Door Lock System)

Standard resistance:

TESTER CONNECTION	SWITCH CONDITION	SPECIFIED CONDITION
6 (L) - 8 (E)	ON (Door lock set to LOCK)	Below 1 Ω
6 (L) - 8 (E) 5 (UL) - 8 (E)	OFF (Free)	10 kΩ or higher
5 (UL) - 8 (E)	ON (Door lock set to UNLOCK)	Below 1 Ω

If the result is not as specified, replace the door lock assembly.

Last Modified: 3-10-2010	6.4 A	**From:** 200901
Model Year: 2010	**Model:** Corolla	**Doc ID:** RM0000011QG02UX
Title: DOOR LOCK: FRONT DOOR LOCK: INSTALLATION (2010 Corolla)		

INSTALLATION

1. INSTALL FRONT DOOR INSIDE LOCKING CABLE ASSEMBLY (w/o Power Door Lock)

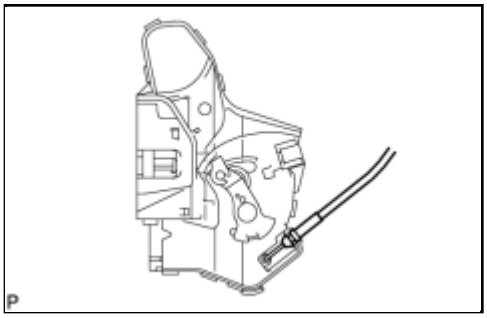

(a) Install the front door inside locking cable assembly.

2. INSTALL FRONT DOOR INSIDE LOCKING CABLE ASSEMBLY (w/ Power Door Lock)

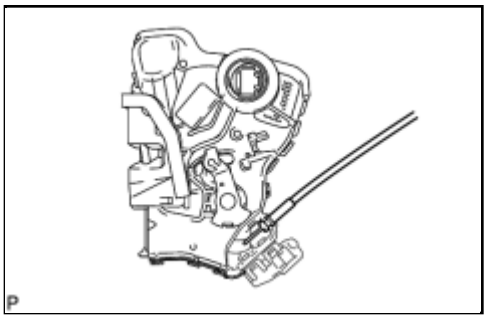

(a) Install the front door inside locking cable assembly.

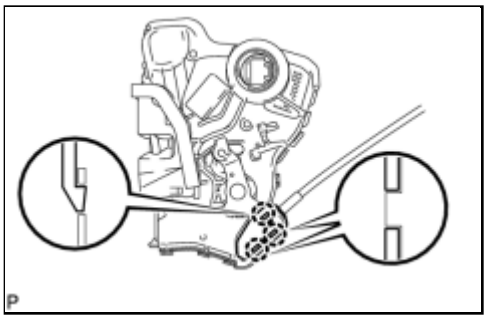

(b) Engage the 3 claws.

3. INSTALL FRONT DOOR LOCK REMOTE CONTROL CABLE ASSEMBLY (w/o Power Door Lock)

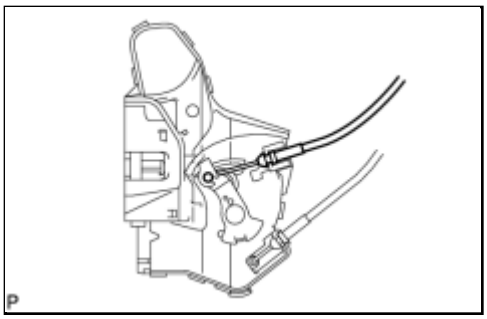

(a) Install the front door lock remote control cable assembly.

4. INSTALL FRONT DOOR LOCK REMOTE CONTROL CABLE ASSEMBLY (w/ Power Door Lock)

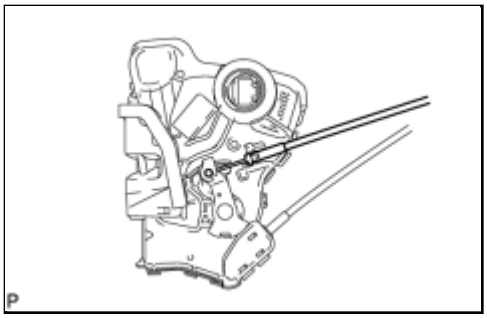

(a) Install the front door lock remote control cable assembly.

5. INSTALL FRONT DOOR LOCK ASSEMBLY (w/o Power Door Lock)

(a) Apply MP grease to the sliding parts of the front door lock assembly.

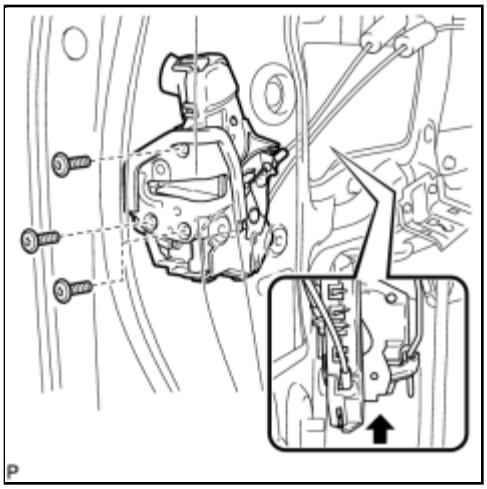

(b) Insert the front door lock open rod to the front door lock assembly.

(c) Make sure that the front door lock open rod is securely connected to the front door lock assembly.

(d) Using a "TORX" socket wrench (T30), install the front door lock assembly with the 3 screws.

Torque: 5.0 N·m (51 kgf·cm, 44in·lbf)

6. INSTALL FRONT DOOR LOCK ASSEMBLY (w/ Power Door Lock)

NOTICE:

- When reusing the removed front door lock assembly, replace the door lock wiring harness seal on the connector with a new one.
- Do not allow grease or dust to adhere to the door lock wiring harness seal surface of the connector.
- Reusing the door lock wiring harness seal or using a damaged door lock wiring harness seal may cause water intrusion. This may result in a malfunction of the front door lock assembly.

(a) Apply MP grease to the sliding parts of the front door lock assembly.

(b) Install a new door lock wiring harness seal to the front door lock assembly.

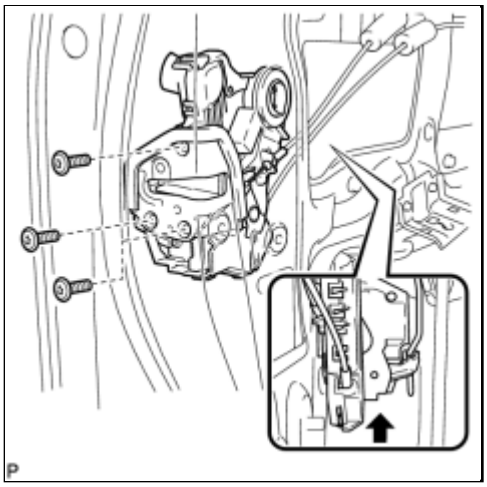

(c) Insert the front door lock open rod to the front door lock assembly.

(d) Make sure that the front door lock open rod is securely connected to the front door lock assembly.

(e) Using a "TORX" socket wrench (T30), install the front door lock assembly with the 3 screws.

Torque: 5.0 N·m (51 kgf·cm, 44in·lbf)

7. INSTALL FRONT DOOR OUTSIDE HANDLE COVER INFO

8. INSTALL FRONT DOOR REAR LOWER FRAME SUB-ASSEMBLY INFO

9. INSTALL FRONT DOOR GLASS RUN INFO

10. INSTALL FRONT DOOR NO. 2 STIFFENER CUSHION INFO

11. INSTALL FRONT DOOR GLASS SUB-ASSEMBLY INFO

12. INSTALL FRONT DOOR SERVICE HOLE COVER INFO

13. INSTALL FRONT DOOR TRIM BRACKET INFO

14. INSTALL FRONT DOOR INNER GLASS WEATHERSTRIP INFO

15. INSTALL FRONT DOOR INSIDE HANDLE SUB-ASSEMBLY INFO

16. INSTALL FRONT DOOR TRIM BOARD SUB-ASSEMBLY INFO

17. INSTALL FRONT ARMREST UPPER BASE PANEL (w/o Power Window) INFO

18. INSTALL FRONT ARMREST UPPER BASE PANEL (w/ Power Window) INFO

19. INSTALL FRONT DOOR INSIDE HANDLE BEZEL INFO

20. INSTALL FRONT DOOR WINDOW REGULATOR HANDLE ASSEMBLY (w/o Power Window) INFO



Last Modified: 3-10-2010	6.4 L	**From:** 200901
Model Year: 2010	**Model:** Corolla	**Doc ID:** RM000001WGA011X
Title: DOOR LOCK: KEY REMINDER WARNING SYSTEM: PRECAUTION (2010 Corolla)		

PRECAUTION

1. PRECAUTION FOR KEY REMINDER WARNING SYSTEM

(a) For the inspection procedure of the key reminder warning system for models equipped with the smart key system, refer to the Smart Key System INFO .

2. PRECAUTIONS WHEN USING TECHSTREAM

(a) When using the Techstream to troubleshoot: Connect the Techstream to the vehicle while the ignition switch is off, and turn a courtesy light switch on and off at 1.5-second intervals until communication between the Techstream and the vehicle begins.

(b) After all DTCs are cleared, check if the trouble occurs again 6 seconds after the ignition switch is turned to ON.

Last Modified: 3-10-2010	6.4 R	**From:** 200901
Model Year: 2010	**Model:** Corolla	**Doc ID:** RM0000028WF00SX
Title: DOOR LOCK: KEY REMINDER WARNING SYSTEM: PARTS LOCATION (2010 Corolla)		

PARTS LOCATION

ILLUSTRATION

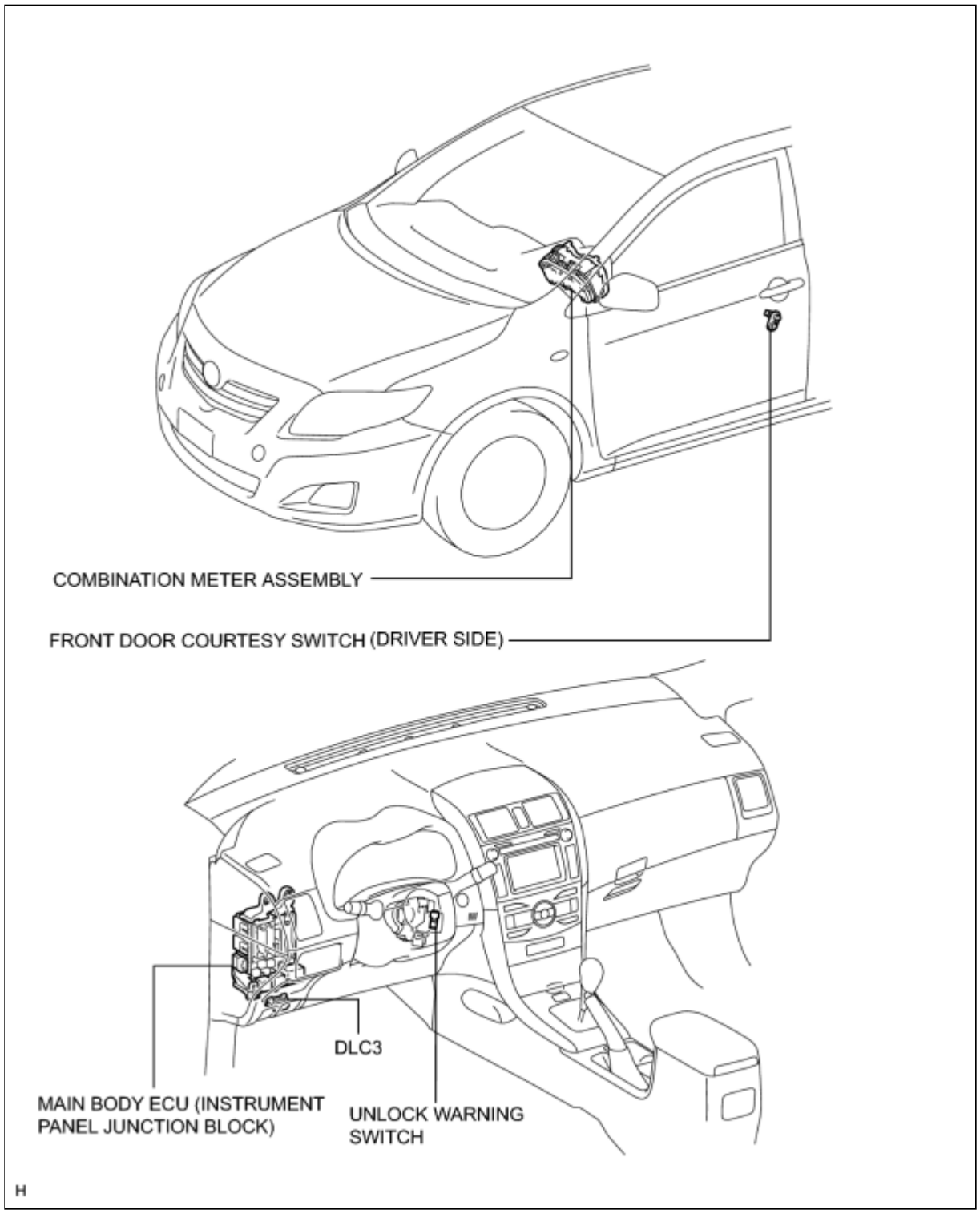

Last Modified: 3-10-2010	6.4 U	**From:** 200901
Model Year: 2010	**Model:** Corolla	**Doc ID:** RM0000013P0020X
Title: DOOR LOCK: KEY REMINDER WARNING SYSTEM: SYSTEM DIAGRAM (2010 Corolla)		

SYSTEM DIAGRAM

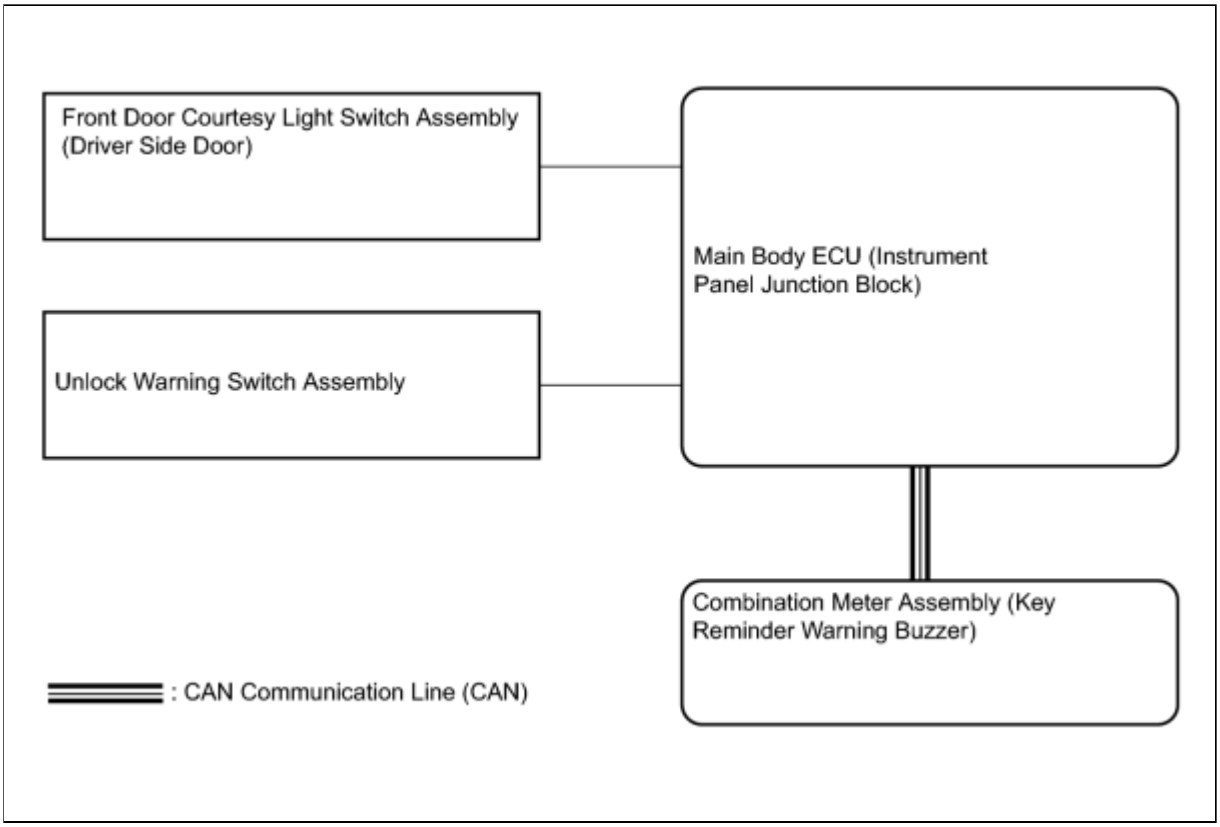

Main Body ECU

TRANSMITTING ECU	RECEIVING ECU	SIGNAL	COMMUNICATION METHOD
Main Body ECU (Instrument Panel Junction Block)	Combination Meter Assembly	Driver side door courtesy light switch signal	CAN
Main Body ECU (Instrument Panel Junction Block)	Combination Meter Assembly	Unlock warning switch signal	CAN

Last Modified: 3-10-2010	6.4 D	**From:** 200901
Model Year: 2010	**Model:** Corolla	**Doc ID:** RM0000011G202KX
Title: DOOR LOCK: KEY REMINDER WARNING SYSTEM: HOW TO PROCEED WITH TROUBLESHOOTING (2010 Corolla)		

HOW TO PROCEED WITH TROUBLESHOOTING

HINT:

- Use the following procedure to troubleshoot the key reminder warning system.
- *: Use the Techstream.

1.	**VEHICLE BROUGHT TO WORKSHOP**

NEXT

2.	**CUSTOMER PROBLEM ANALYSIS**

HINT:

- In troubleshooting, confirm that the problem symptoms have been accurately identified. Preconceptions should be discarded in order to make an accurate judgment. To clearly understand what the problem symptoms are, it is extremely important to ask the customer about the problem and the conditions at the time the malfunction occurred.
- Gather as much information as possible for reference. Past problems that seem unrelated may also help in some cases.
  - The following 5 items are important points in the problem analysis:

What	Vehicle model, system name
When	Date, time, occurrence frequency
Where	Road conditions
Under what conditions?	Driving conditions, weather conditions
How did it happen?	Problem symptoms

NEXT

3.	**INSPECT BATTERY VOLTAGE**

(a) Measure the battery voltage.

Standard Voltage:
11 to 14 V

If the voltage is below 11 V, recharge or replace the battery before proceeding to the next step.

NEXT

4.	**INSPECT FUNCTION OF CAN COMMUNICATION SYSTEM***

(a) Using the Techstream, inspect the CAN communication function to ensure that there are no malfunctions in the communication system.

Result:

RESULT	PROCEED TO
DTC is not output.	A
DTC is output.	B

B INFO **GO TO CAN COMMUNICATION SYSTEM**

A

5.	**PROBLEM SYMPTOMS TABLE**

(a) Refer to Problem Symptoms Table INFO.

Result:

RESULT	PROCEED TO
Fault is not listed in problem symptoms table.	A
Fault is listed in problem symptoms table.	B

B ▶ **Go to step 7**

A

▼

6.	OVERALL ANALYSIS AND TROUBLESHOOTING*

(a) Data List / Active Test INFO

(b) Terminals of ECU INFO

(c) Operation Check INFO

NEXT

▼

7.	REPAIR OR REPLACE

NEXT

▼

8.	CONFIRMATION TEST

NEXT ▶ **END**

Last Modified: 3-10-2010	6.4 D	**From:** 200901
Model Year: 2010	**Model:** Corolla	**Doc ID:** RM0000011G6025X
Title: DOOR LOCK: KEY REMINDER WARNING SYSTEM: SYSTEM DESCRIPTION (2010 Corolla)		

SYSTEM DESCRIPTION

1. KEY REMINDER WARNING SYSTEM DESCRIPTION

(a) When the driver side door is opened with the ignition key in ACC or LOCK, this system causes a buzzer to sound in order to warn the driver that the ignition key has not been removed.

Last Modified: 3-10-2010	6.4 D	**From:** 200901
Model Year: 2010	**Model:** Corolla	**Doc ID:** RM00000133202FX
Title: DOOR LOCK: KEY REMINDER WARNING SYSTEM: OPERATION CHECK (2010 Corolla)		

OPERATION CHECK

1. CHECK FUNCTION

(a) Check that the key reminder warning buzzer sounds.

(1) With the driver side door closed, insert the key into the ignition key cylinder and then make sure that the key is in LOCK or ACC.

(2) Check that the buzzer sounds intermittently if the driver side door is opened.

(b) Check that the key reminder warning buzzer stops.

(1) Check that the buzzer stops sounding if any of the following operations is performed while the buzzer is sounding:

- Close the driver side door (front door courtesy light switch is off).
- Turn the ignition switch to ON.
- Pull out the key from the ignition key cylinder.

Last Modified: 3-10-2010	6.4 T	**From:** 200901
Model Year: 2010	**Model:** Corolla	**Doc ID:** RM0000027RB012X
Title: DOOR LOCK: KEY REMINDER WARNING SYSTEM: PROBLEM SYMPTOMS TABLE (2010 Corolla)		

PROBLEM SYMPTOMS TABLE

HINT:

- Use the table below to help determine the cause of problem symptoms. If multiple suspected areas are listed, the potential causes of the symptoms are listed in order of probability in the "Suspected Area" column of the table. Check each symptom by checking the suspected areas in the order they are listed. Replace parts as necessary.
- Inspect the fuses and relays related to this system before inspecting the suspected areas below.

Key Reminder Warning System

SYMPTOM	SUSPECTED AREA	SEE PAGE
Key Reminder Buzzer does not Sound.	Combination meter assembly	INFO
	Main body ECU (instrument panel junction block)	-
	Front door courtesy light switch assembly (driver side)	-
	Unlock warning switch assembly	-
	Wire harness or connector	-

Last Modified: 3-10-2010	6.4 U	**From:** 200901
Model Year: 2010	**Model:** Corolla	**Doc ID:** RM0000011G402FX
Title: DOOR LOCK: KEY REMINDER WARNING SYSTEM: TERMINALS OF ECU (2010 Corolla)		

TERMINALS OF ECU

1. CHECK MAIN BODY ECU (INSTRUMENT PANEL JUNCTION BLOCK)

(a) Disconnect the 2A, 2B and 2E junction block connectors.

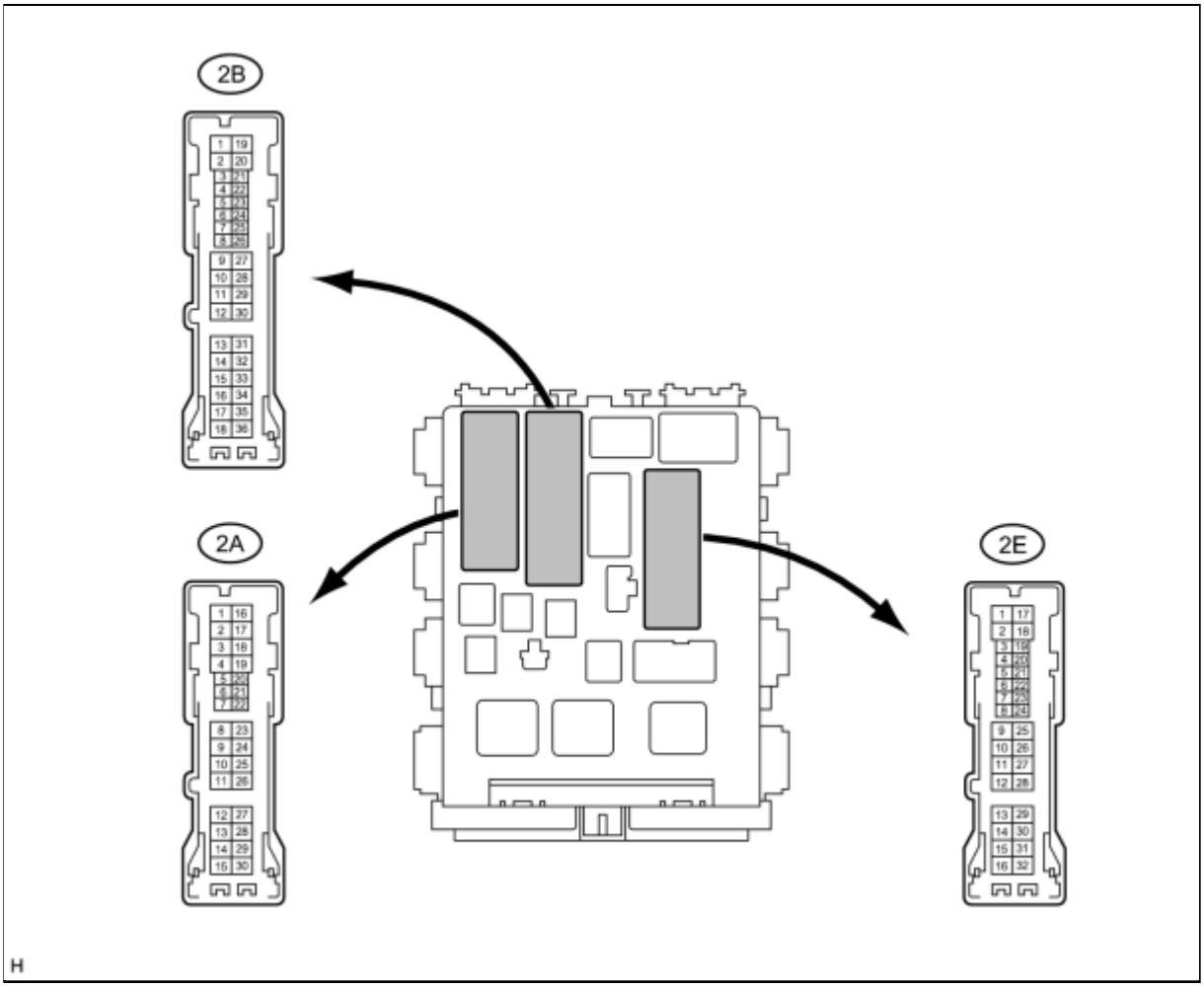

(b) Measure the resistance and voltage according to the value(s) in the table below.

TESTER CONNECTION	WIRING COLOR	TERMINAL DESCRIPTION	CONDITION	SPECIFIED CONDITION
2E-17 (GND1) - Body ground	W-B - Body ground	Ground	Always	Below 1 Ω
2B-30 (BECU) - Body ground	W - Body ground	Power Source	Always	11 to 14 V

TESTER CONNECTION	WIRING COLOR	TERMINAL DESCRIPTION	CONDITION	SPECIFIED CONDITION
2A-21 (DCTY) - Body ground	W - Body ground*1 V - Body ground*2	Driver door courtesy light switch signal	Switch pushed (Door closed)	10 kΩ or higher
2A-21 (DCTY) - Body ground	W - Body ground*1 V - Body ground*2	Driver door courtesy light switch signal	Switch free (Door open)	Below 1 Ω
2E-23 (KSW) - Body ground	L - Body ground	Key unlock warning switch signal	No key is in ignition key cylinder	10 kΩ or higher
2E-23 (KSW) - Body ground	L - Body ground	Key unlock warning switch signal	Key is in ignition key cylinder	Below 1 Ω

- *1: for TMC Made
- *2: Except for TMC made

If the result is not as specified, there may be a malfunction on the wire harness side.

Last Modified: 3-10-2010	6.4 J	**From:** 200901
Model Year: 2010	**Model:** Corolla	**Doc ID:** RM000001PD901BX
Title: DOOR LOCK: KEY REMINDER WARNING SYSTEM: Key Reminder Buzzer does not Sound (2010 Corolla)		

Key Reminder Buzzer does not Sound

DESCRIPTION

The key reminder warning buzzer sounds when the driver side door is opened while the ignition switch is in LOCK or ACC. The key reminder warning buzzer is activated when the main body ECU sends a key switch signal and driver side courtesy switch signal to the combination meter.

HINT:

Since the key reminder warning system has functions that use CAN communication, first confirm that there is no malfunction in the communication system by inspecting the CAN communication functions in accordance with the How to Proceed with Troubleshooting procedure. Then, conduct the following inspection procedure.

WIRING DIAGRAM

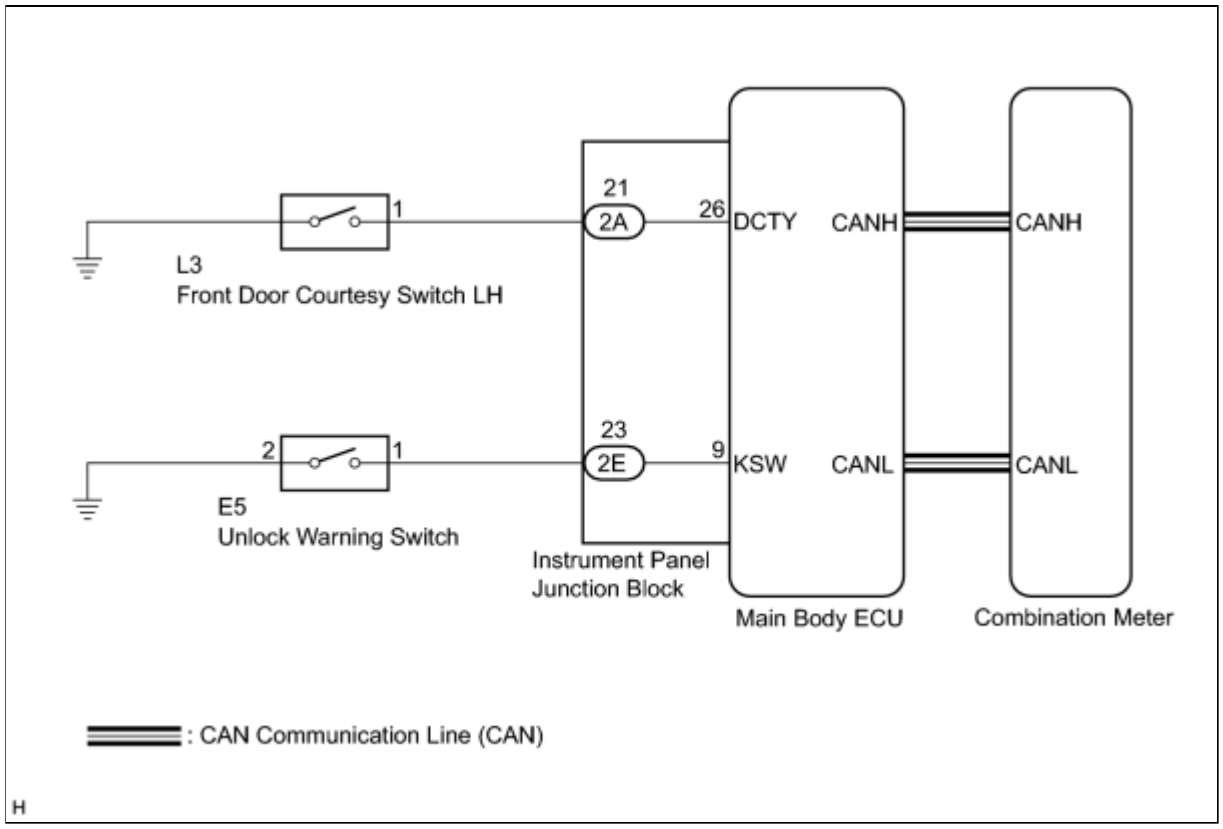

INSPECTION PROCEDURE

PROCEDURE

1.	CHECK COMBINATION METER ASSEMBLY (BUZZER OPERATION)

(a) Turn the ignition switch to ON. Place luggage on the passenger seat to cause the passenger seat belt warning light to blink.

(b) When driving the vehicle at 15 km/h (9 mph) or higher, check that the seat belt warning buzzer sounds to inform that the passenger seat belt is not fastened.

HINT:

The key reminder warning system sounds the buzzer built into the combination meter as a key reminder warnings. This buzzer is also used for the seat belt warning system. Therefore, check the operation of the combination meter buzzer by checking if the buzzer sounds to inform that the seat belt is not fastened.

OK:
Combination meter buzzer sounds.

NG ▶ **REPLACE COMBINATION METER ASSEMBLY**

OK ▼

2.	READ VALUE USING TECHSTREAM (DOOR COURTESY SWITCH)

(a) Connect the Techstream to the DLC3.

(b) Turn the ignition switch to ON.

(c) Turn the Techstream on.

(d) Enter the following menus: Body Electrical / Main Body / Data List.

(e) Select D Door Courtesy SW in the Data List and read the Techstream display.

Main Body

TESTER DISPLAY	MEASUREMENT ITEM/RANGE	NORMAL CONDITION	DIAGNOSTIC NOTE
D Door Courtesy SW	Driver side door courtesy switch signal/ON or OFF	ON: Driver side door is open OFF: Driver side door is closed	-

OK:
ON or OFF appears on the screen according to the driver side door condition.

NG ▶ INSPECT FRONT DOOR COURTESY LIGHT SWITCH ASSEMBLY (DRIVER SIDE)

OK ▼

3.	READ VALUE USING TECHSTREAM (UNLOCK WARNING SWITCH)

(a) Connect the Techstream to the DLC3.

(b) Turn the ignition switch to ON.

(c) Turn the Techstream on.

(d) Enter the following menus: Body Electrical / Main Body / Data List.

(e) Select Key Unlock Warning SW in the Data List and read the Techstream display.

Main Body

TESTER DISPLAY	MEASUREMENT ITEM/RANGE	NORMAL CONDITION	DIAGNOSTIC NOTE
Key Unlock Warning SW	Unlock warning switch signal/ON or OFF	ON: Key is in ignition key cylinder OFF: No key is in ignition key cylinder	-

OK:

ON or OFF appears on the screen according to whether the key is in the ignition key cylinder.

NG ▶ INSPECT UNLOCK WARNING SWITCH ASSEMBLY

OK ▶ REPLACE MAIN BODY ECU (INSTRUMENT PANEL JUNCTION BLOCK)

4.	INSPECT FRONT DOOR COURTESY LIGHT SWITCH ASSEMBLY (DRIVER SIDE)

(a) Remove the driver side front door courtesy light switch (driver side) INFO .

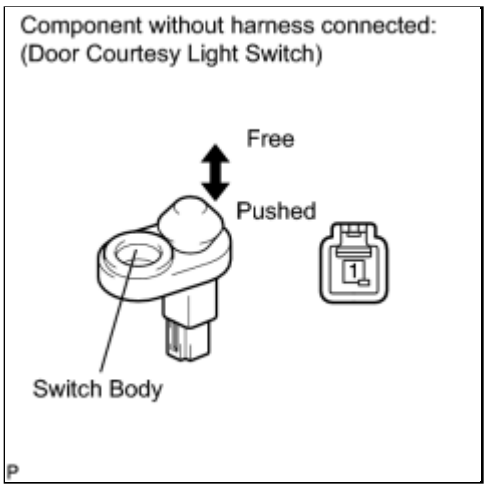

(b) Measure the resistance according to the value(s) in the table below.

Standard Resistance:

TESTER CONNECTION	SWITCH CONDITION	SPECIFIED CONDITION
1 - Switch body	Courtesy switch pushed (Door closed)	10 kΩ or higher
1 - Switch body	Courtesy switch free (Door open)	Below 1 Ω

NG ▶ **REPLACE FRONT DOOR COURTESY LIGHT SWITCH ASSEMBLY (DRIVER SIDE)**

OK ▼

5.	**CHECK HARNESS AND CONNECTOR (FRONT DOOR COURTESY LIGHT SWITCH - MAIN BODY ECU)**

(a) Disconnect the 2A instrument panel junction block connector.

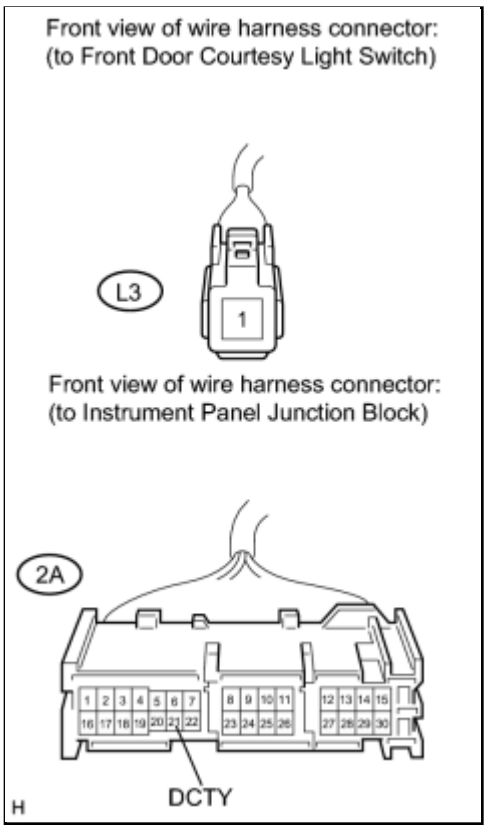

(b) Measure the resistance according to the value(s) in the table below.

Standard Resistance:

TESTER CONNECTION	CONDITION	SPECIFIED CONDITION
L3-1 - 2A-21 (DCTY)	Always	Below 1 Ω
L3-1 - Body ground	Always	10 kΩ or higher

NG ▶ **REPAIR OR REPLACE HARNESS OR CONNECTOR**

OK ▶ **REPLACE MAIN BODY ECU (INSTRUMENT PANEL JUNCTION BLOCK)**

6.	**INSPECT UNLOCK WARNING SWITCH ASSEMBLY**

(a) Remove the unlock warning switch assembly INFO .

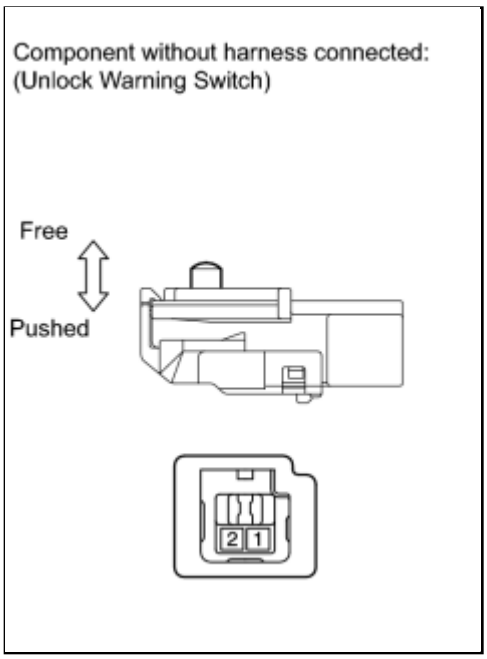

(b) Measure the resistance according to the value(s) in the table below.

Standard Resistance:

TESTER CONNECTION	SWITCH CONDITION	SPECIFIED CONDITION
1 - 2	Switch free (Key removed)	10 kΩ or higher
1 - 2	Switch pushed (Key set)	Below 1 Ω

NG ▶ **REPLACE UNLOCK WARNING SWITCH ASSEMBLY**

OK ▼

7.	**CHECK HARNESS AND CONNECTOR (UNLOCK WARNING SWITCH - MAIN BODY ECU)**

(a) Disconnect the 2E instrument panel junction block connector.

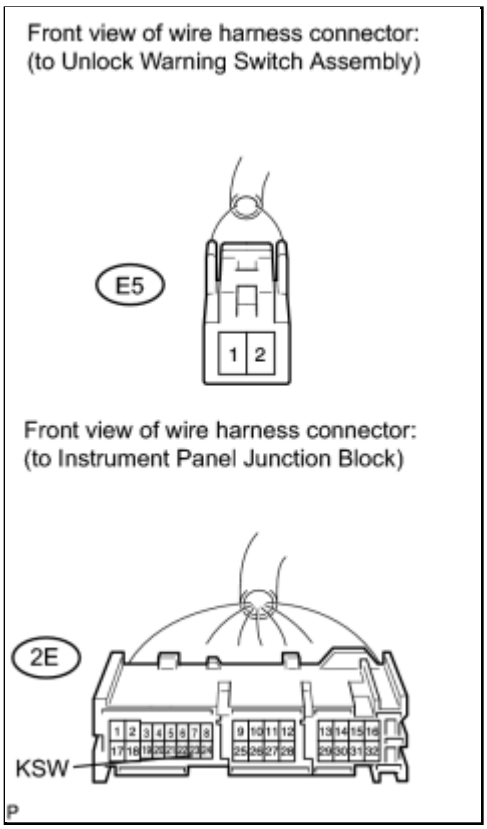

(b) Measure the resistance according to the value(s) in the table below.

Standard Resistance:

TESTER CONNECTION	CONDITION	SPECIFIED CONDITION
E5-1 - 2E-23 (KSW)	Always	Below 1 Ω
E5-2 - Body ground	Always	Below 1 Ω
E5-1 - Body ground	Always	10 kΩ or higher

NG ▶ **REPAIR OR REPLACE HARNESS OR CONNECTOR**

OK ▶ **REPLACE MAIN BODY ECU (INSTRUMENT PANEL JUNCTION BLOCK)**

Last Modified: 3-10-2010	6.4 D	**From:** 200901
Model Year: 2010	**Model:** Corolla	**Doc ID:** RM0000011G7023X
Title: DOOR LOCK: KEY REMINDER WARNING SYSTEM: DIAGNOSIS SYSTEM (2010 Corolla)		

DIAGNOSIS SYSTEM

1. CHECK DLC3

(a) Check the DLC3 INFO .

2. INSPECT BATTERY VOLTAGE

(a) Measure the battery voltage.

Standard Voltage:
11 to 14 V

If the voltage is below 11 V, recharge or replace the battery before proceeding.

Last Modified: 3-10-2010	6.4 U	**From:** 200901
Model Year: 2010	**Model:** Corolla	**Doc ID:** RM0000011WG02FX
Title: DOOR LOCK: KEY REMINDER WARNING SYSTEM: DATA LIST / ACTIVE TEST (2010 Corolla)		

DATA LIST / ACTIVE TEST

1. READ DATA LIST

HINT:

Using the Techstream to read the Data List allows the values or states of switches, sensors, actuators and other items to be read without removing any parts. This non-intrusive inspection can be very useful because intermittent conditions or signals may be discovered before parts or wiring is disturbed. Reading the Data List information early in troubleshooting is one way to save diagnostic time.

NOTICE:

In the following table, the values listed under "Normal Condition" are reference values. Do not depend solely on these reference values when deciding whether a part is faulty or not.

(a) Connect the Techstream to the DLC3.

(b) Turn the ignition switch to ON.

(c) Turn the Techstream on.

(d) Enter the following menus: Body Electrical / Main Body / Data List.

(e) Read the Data List according to the display on the Techstream.

Main Body

TESTER DISPLAY	MEASUREMENT ITEM/RANGE	NORMAL CONDITION	DIAGNOSTIC NOTE
Key Unlock Warning SW	Unlock warning switch signal/ON or OFF	ON: Key is in ignition key cylinder OFF: No key is in ignition key cylinder	-
D Door Courtesy SW	Driver side door courtesy switch signal/ON or OFF	ON: Driver side door is open OFF: Driver side door is closed	-

Last Modified: 3-10-2010	6.4 K	**From:** 200901
Model Year: 2010	**Model:** Corolla	**Doc ID:** RM000002Y9P00GX
Title: DOOR LOCK: LUGGAGE COMPARTMENT DOOR LOCK: COMPONENTS (2010 Corolla)		

COMPONENTS

ILLUSTRATION

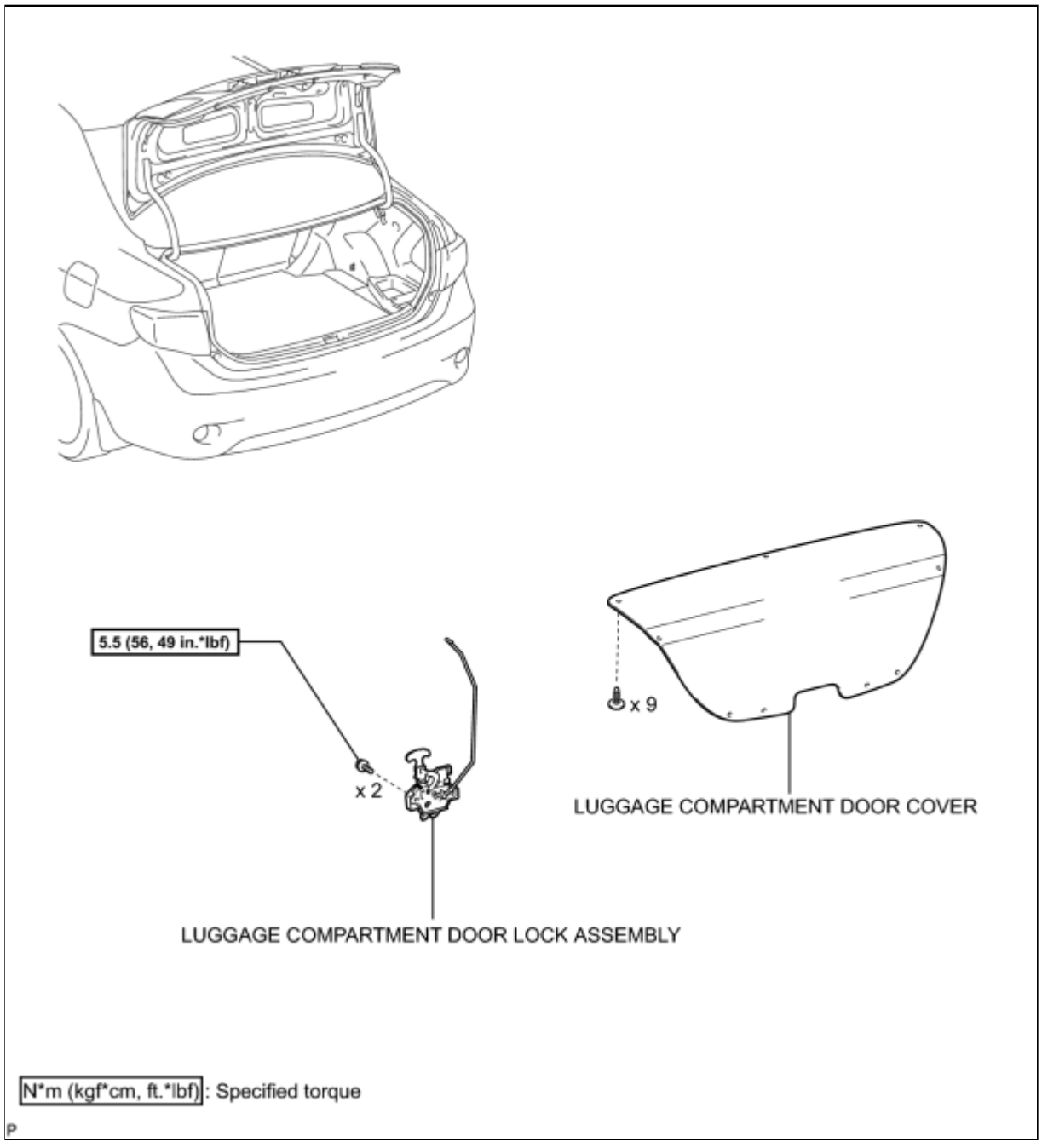

Last Modified: 3-10-2010	6.4 A	**From:** 200901
Model Year: 2010	**Model:** Corolla	**Doc ID:** RM000002Y9Q00GX
Title: DOOR LOCK: LUGGAGE COMPARTMENT DOOR LOCK: REMOVAL (2010 Corolla)		

REMOVAL

1. REMOVE LUGGAGE COMPARTMENT DOOR COVER

2. REMOVE LUGGAGE COMPARTMENT DOOR LOCK ASSEMBLY (w/o Smart Key System)

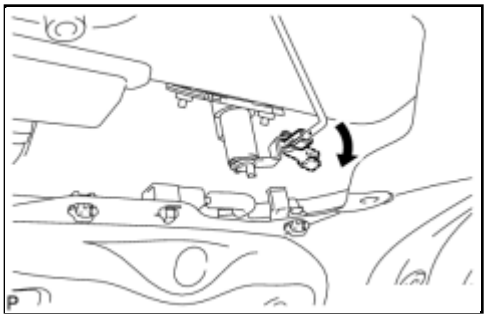

(a) Disconnect the rod as shown in the illustration.

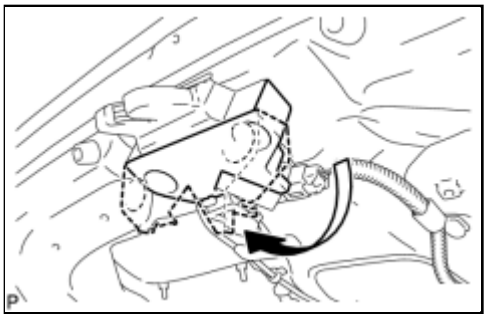

(b) Raise the cover of the luggage compartment door lock as shown in the illustration.

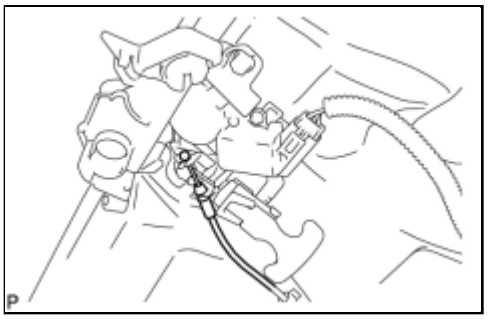

(c) Disconnect the luggage door lock control cable sub-assembly.

(d) Return the cover of the luggage compartment door lock to its original position.

(e) Disconnect the connector.

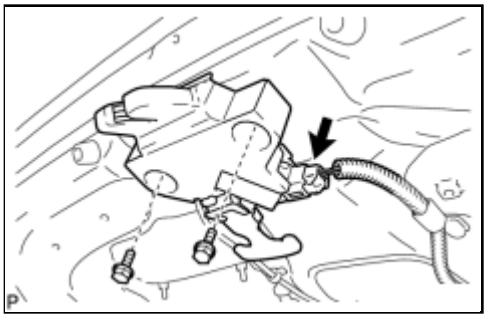

(f) Remove the 2 bolts and luggage compartment door lock assembly.

3. REMOVE LUGGAGE COMPARTMENT DOOR LOCK ASSEMBLY (w/ Smart Key System)

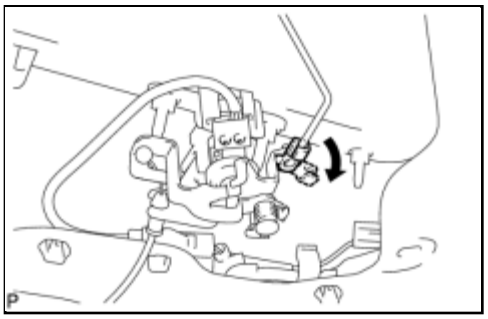

(a) Disconnect the rod as shown in the illustration.

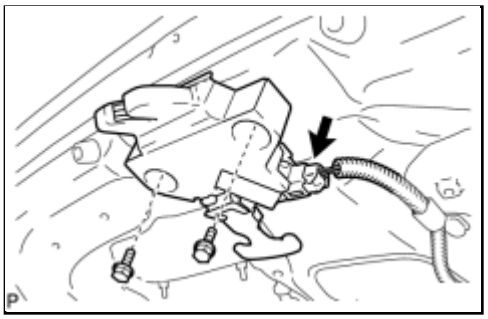

(b) Disconnect the connector.

(c) Remove the 2 bolts and luggage compartment door lock assembly.

Last Modified: 3-10-2010	6.4 G	**From:** 200901
Model Year: 2010	**Model:** Corolla	**Doc ID:** RM000002KTM011X
Title: DOOR LOCK: LUGGAGE COMPARTMENT DOOR LOCK: INSPECTION (2010 Corolla)		

INSPECTION

1. INSPECT LUGGAGE COMPARTMENT DOOR LOCK

(a) Check operation of the door lock motor.

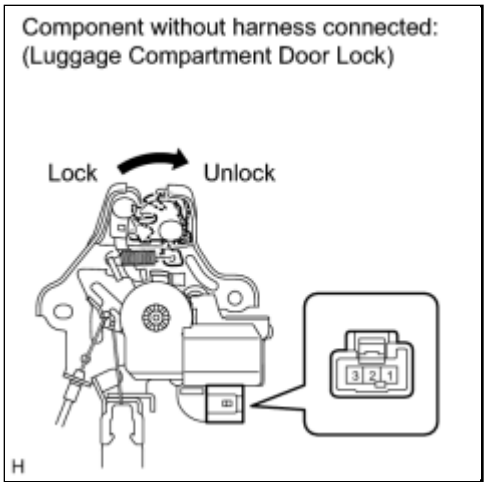

(1) Move the door lock to the lock position.

(2) Apply battery voltage to the door lock motor and check operation of the door lock motor.

OK:

MEASUREMENT CONDITION	SPECIFIED CONDITION
Battery positive (+) → Terminal 1 Battery negative (-) → Terminal 2	Unlock

If the result is not as specified, replace the luggage compartment door lock assembly.

(b) Check operation of the door courtesy switch.

(1) Measure the resistance according to the value(s) in the table below.

Standard resistance:

TESTER CONNECTION	CONDITION	SPECIFIED CONDITION
2 - 3	Unlock	Below 1 Ω
2 - 3	Lock	10 kΩ or higher

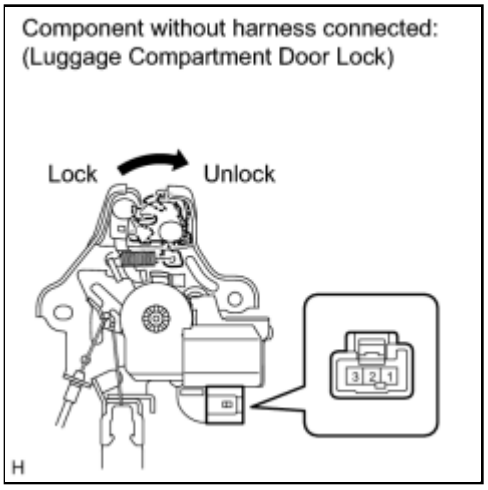

If the result is not as specified, replace the luggage compartment door lock assembly.

Last Modified: 3-10-2010	6.4 A	**From:** 200901
Model Year: 2010	**Model:** Corolla	**Doc ID:** RM000002Y9O00GX
Title: DOOR LOCK: LUGGAGE COMPARTMENT DOOR LOCK: INSTALLATION (2010 Corolla)		

INSTALLATION

1. INSTALL LUGGAGE COMPARTMENT DOOR LOCK ASSEMBLY (w/o Smart Key System)

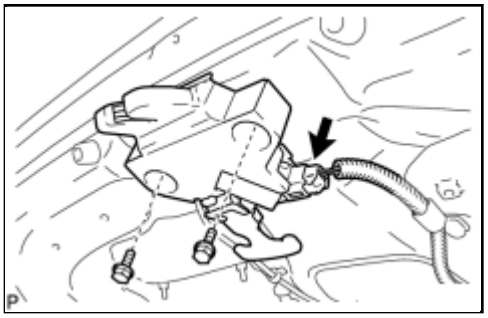

(a) Install the luggage compartment door lock assembly with the 2 bolts.

Torque: 5.5 N·m (56 kgf·cm, 49in·lbf)

(b) Connect the connector.

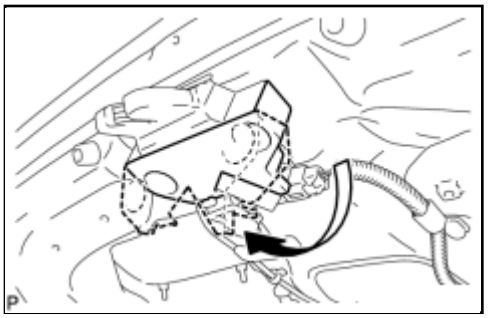

(c) Raise the cover of the luggage compartment door lock as shown in the illustration.

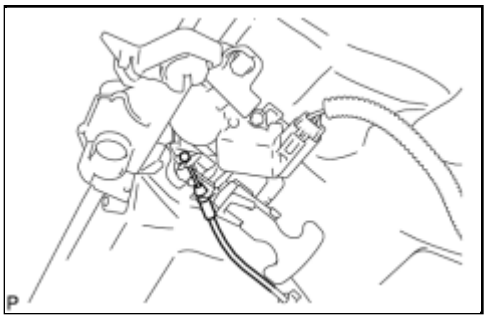

(d) Connect the luggage door lock control cable subassembly.

(e) Return the cover of the luggage compartment door lock to its original position.

(f) Connect the rod as shown in the illustration.

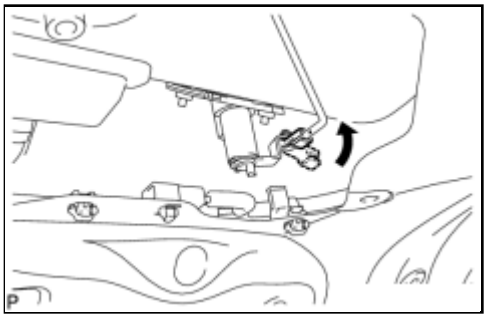

2. INSTALL LUGGAGE COMPARTMENT DOOR LOCK ASSEMBLY (w/ Smart Key System)

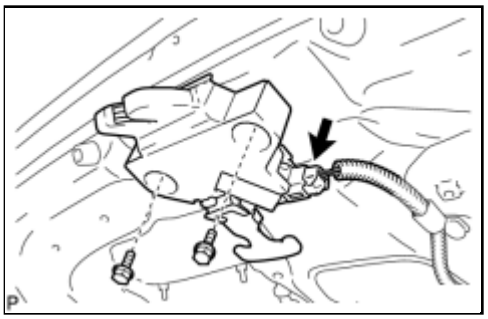

(a) Install the luggage compartment door lock assembly with the 2 bolts.

Torque: 5.5 N·m (56 kgf·cm, 49in·lbf)

(b) Connect the connector.

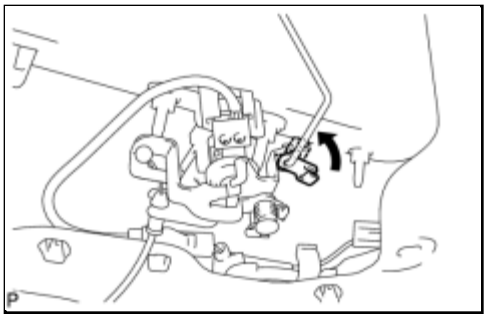

(c) Connect the rod as shown in the illustration.

3. INSTALL LUGGAGE COMPARTMENT DOOR COVER

Last Modified: 3-10-2010	6.4 L	**From:** 200901
Model Year: 2010	**Model:** Corolla	**Doc ID:** RM000003GBK003X
Title: DOOR LOCK: POWER DOOR LOCK CONTROL SYSTEM: PRECAUTION (2010 Corolla)		

PRECAUTION

1. EXPRESSIONS OF IGNITION SWITCH

(a) The type of ignition switch used on this model differs according to the specifications of the vehicle.

The expressions listed in the table below are used in this section.

SWITCH TYPE		IGNITION SWITCH (POSITION)	ENGINE SWITCH (CONDITION)
Expression	Ignition switch off	LOCK	Off
	Ignition switch ON	ON	On (IG)
	Ignition switch ACC	ACC	On (ACC)
	Engine Start	START	Start

Last Modified: 3-10-2010	6.4 R	**From:** 200901
Model Year: 2010	**Model:** Corolla	**Doc ID:** RM0000011GA028X
Title: DOOR LOCK: POWER DOOR LOCK CONTROL SYSTEM: PARTS LOCATION (2010 Corolla)		

PARTS LOCATION

ILLUSTRATION

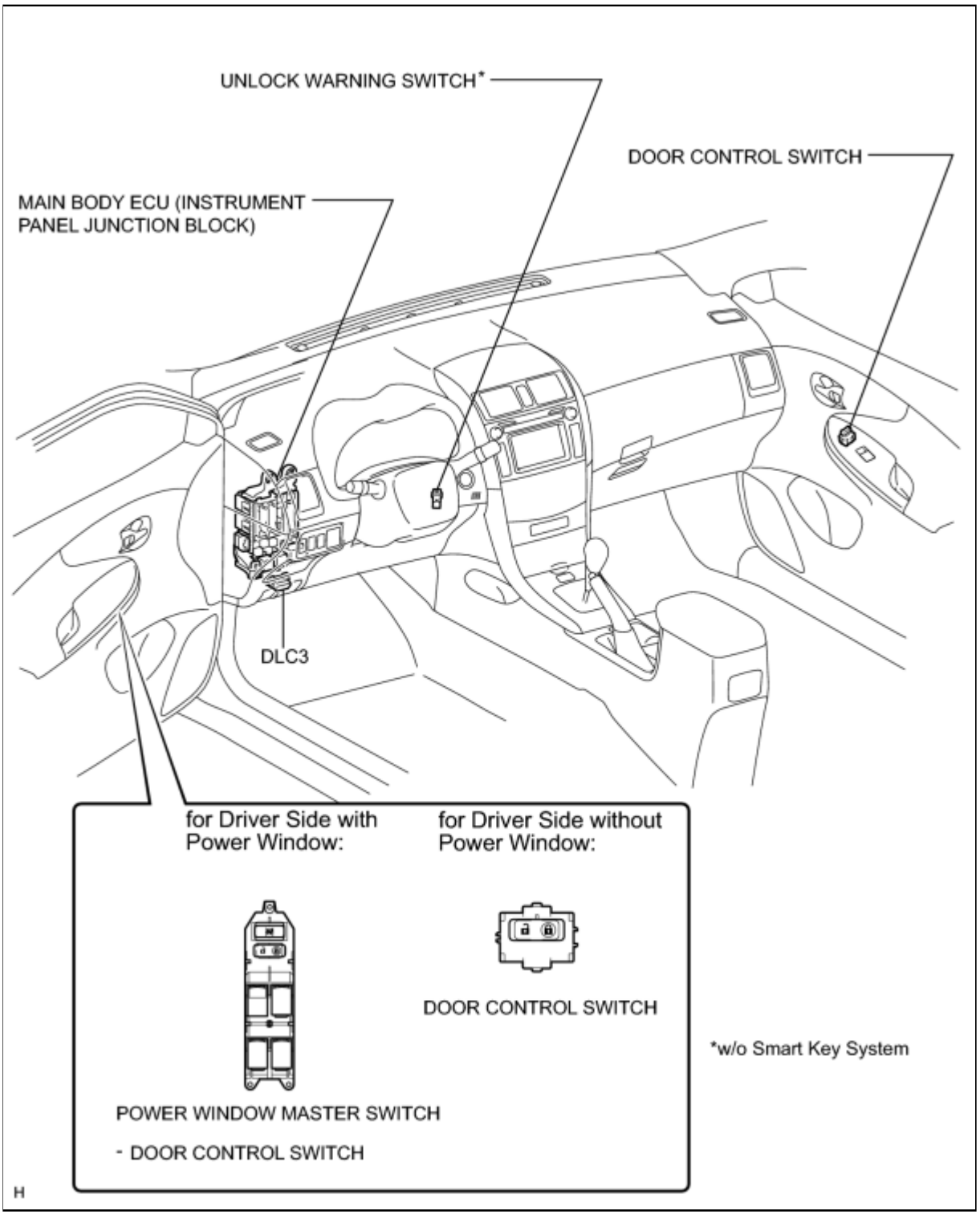

ILLUSTRATION

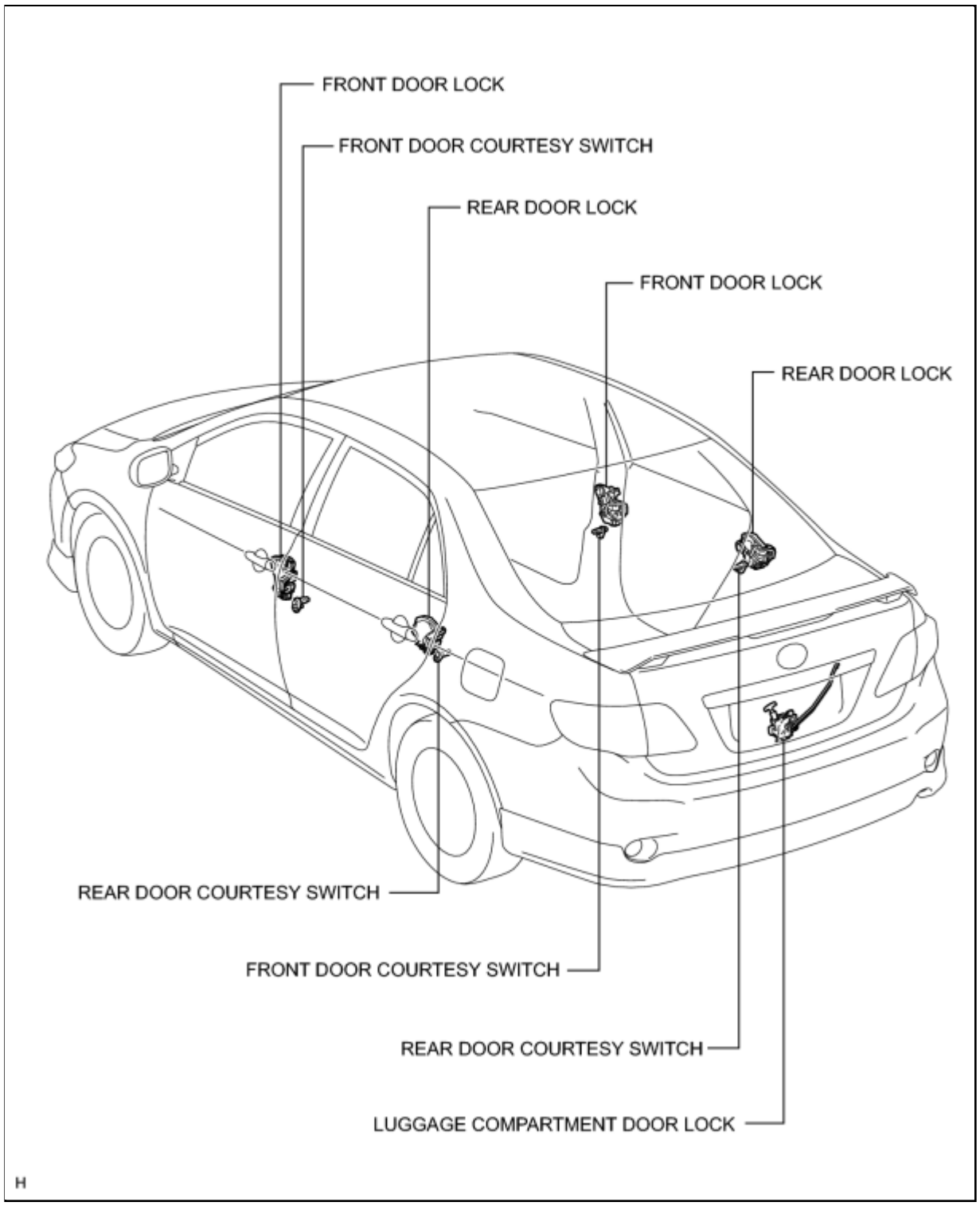

Last Modified: 3-10-2010	6.4 D	**From:** 200901
Model Year: 2010	**Model:** Corolla	**Doc ID:** RM0000011GD028X
Title: DOOR LOCK: POWER DOOR LOCK CONTROL SYSTEM: SYSTEM DESCRIPTION (2010 Corolla)		

SYSTEM DESCRIPTION

1. POWER DOOR LOCK CONTROL SYSTEM DESCRIPTION

(a) The power door lock system locks/unlocks all the doors.

The master switch and the door control switch on the passenger door send "lock/unlock" request signals to the main body ECU (instrument panel junction block). Then, the main body ECU (instrument panel junction block) sends these request signals to the lock motors in each door to lock/unlock all the doors at once in response to the inputs.

Operating the driver's door lock using a mechanical key sends request signals to lock/unlock the doors to the main body ECU (instrument panel junction block).

2. FUNCTION OF MAIN COMPONENT

COMPONENT	FUNCTION
Power window master switch	Door control switch on master switch locks/unlocks all doors.
Door courtesy switch	Placed on each door. Detects door status (open or closed) and outputs data to main body ECU (instrument panel junction block). Turns on when door is open and turns off when door is closed.
Driver side door lock	• Built-in motor locks/unlocks door. • Built-in door control switch (key-linked) detects door key operation door status (locked or unlocked) and outputs data to main body ECU (instrument panel junction block). • Built-in position switch detects door status (locked or unlocked) and outputs data to main body ECU (instrument panel junction block). This switch turns off when door is locked and turns on when door is unlocked.
Passenger side door lock	• Built-in motor locks/unlocks door. • Built-in door control switch*1 (key-linked) detects door key operation's door status (locked or unlocked) and outputs data to main body ECU (instrument panel junction block). • Built-in position switch detects door status (locked or unlocked) and outputs data to main body ECU (instrument panel junction block). This switch turns off when door is locked and turns on when door is unlocked.
Rear LH and RH door locks	• Built-in motor locks/unlocks door. • Built-in position switch*2 detects door status (locked or unlocked) and outputs data to main body ECU (instrument panel junction block). This switch turns off when door is locked and turns on when door is

COMPONENT	FUNCTION
	unlocked.
Luggage compartment door lock	Built-in luggage door open motor.

- *1: w/o Wireless Door Lock System
- *2: w/ Smart Key System

3. SYSTEM FUNCTION

(a) This system is controlled by the main body ECU (instrument panel junction block). The main body ECU (instrument panel junction block) outputs signals to each door lock motor. The vehicle door lock control system has the following functions:

FUNCTION	OUTLINE
Manual lock and unlock function	This function can lock or unlock all doors by the door lock control switch operation.
Key-linked lock and unlock function	This function, which is linked with the mechanical key cylinder, can lock or unlock all the doors.
Manual unlock prohibition function	Performing the door lock operation with an electrical key*1 or a mechanical key*2 or key linked operation will prohibit the unlock operation by the door lock control switch.
Key lock-in prevention function	If each door lock*1 or driver's door lock*2 and passenger's door lock*3 operation is performed when the electrical key*1 or mechanical key*2 is in the cabin*1 or ignition key cylinder*2, all the doors will be unlocked.
Shift-linked automatic door lock function (A/T)	When the conditions listed below are met consecutively, this function causes all the doors to be automatically locked. • All doors are closed. • The engine is started. • The shift lever is moved out of P.
Shift-linked automatic door unlock function (A/T)	If the shift lever is moved out of P after the engine is started, all the doors will be automatically unlocked.
2-step unlock function	This function is provided to unlock the driver's door by turning the key cylinder once and to unlock the remaining doors by turning it twice.
Speed-sensitive automatic door lock function*3	When the conditions listed below are met consecutively, this function causes all the doors to be automatically locked. • Vehicle speed is higher than approximately 20 km/h (12 mph). • All doors are closed. • Any one of the door's is unlocked.

FUNCTION	OUTLINE
Opening driver's door-linked automatic door unlock*4	All doors are unlocked automatically when the driver's door is opened within 10 seconds after the power source is changed from "IG-ON" to "ACC" or "OFF".

- *1: w/ Smart Key System
- *2: w/o Smart Key System
- *3: w/o Wireless Door Lock Control System
- *4: Default setting is OFF

Last Modified: 3-10-2010	6.4 U	**From:** 200901
Model Year: 2010	**Model:** Corolla	**Doc ID:** RM0000011GF028X
Title: DOOR LOCK: POWER DOOR LOCK CONTROL SYSTEM: SYSTEM DIAGRAM (2010 Corolla)		

SYSTEM DIAGRAM

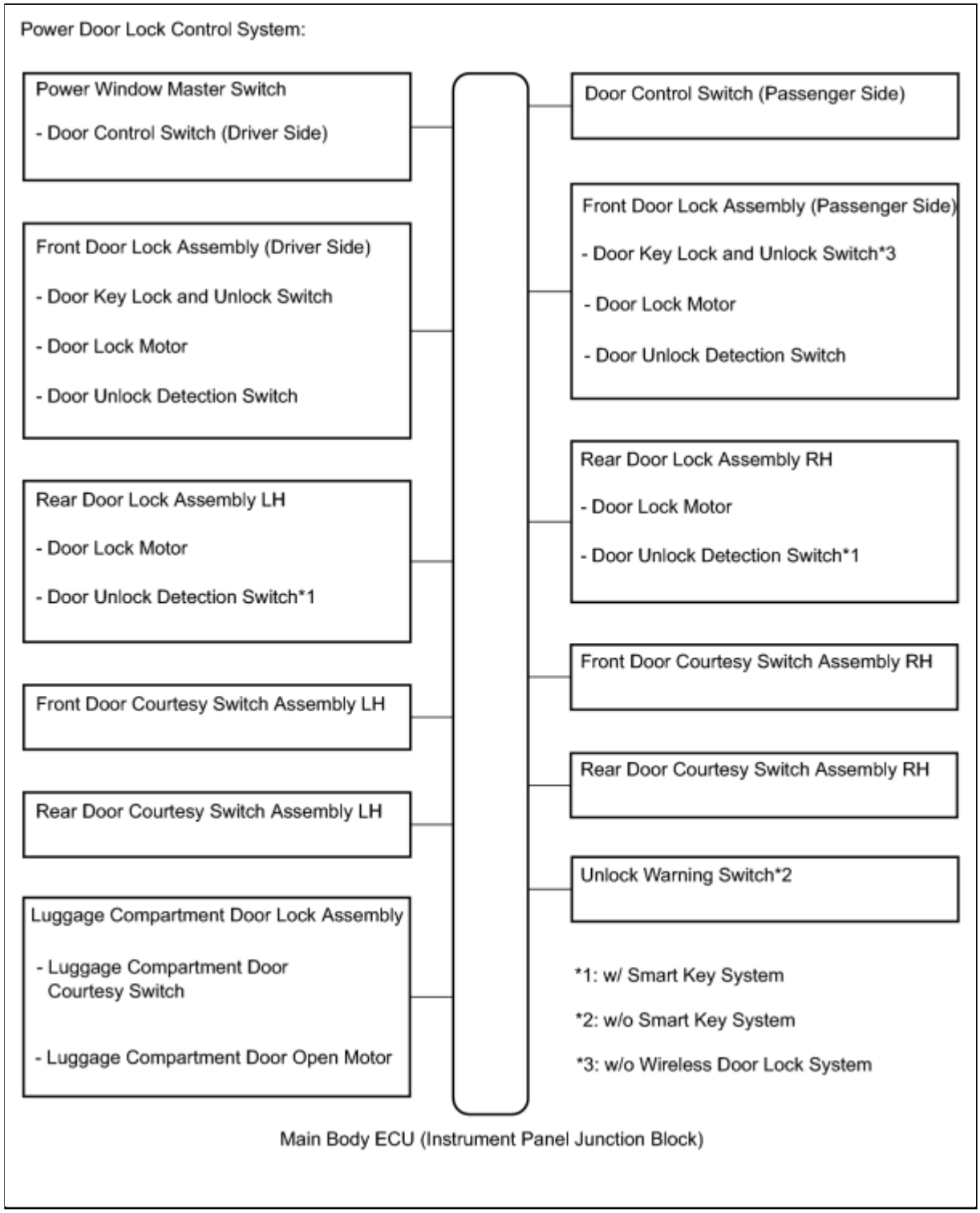

Last Modified: 3-10-2010	6.4 D	**From:** 200901
Model Year: 2010	**Model:** Corolla	**Doc ID:** RM0000011G902UX
Title: DOOR LOCK: POWER DOOR LOCK CONTROL SYSTEM: HOW TO PROCEED WITH TROUBLESHOOTING (2010 Corolla)		

HOW TO PROCEED WITH TROUBLESHOOTING

HINT:

- Use the following procedure to troubleshoot the power door lock control system.
- The Techstream should be used in step 5.

1.	**VEHICLE BROUGHT TO WORKSHOP**

NEXT

2.	**CUSTOMER PROBLEM ANALYSIS CHECK**

HINT:

- In troubleshooting, confirm that the problem symptoms have been accurately identified. Preconceptions should be discarded in order to make an accurate judgment. To clearly understand what the problem symptoms are, it is extremely important to ask the customer about the problem and the conditions at the time the malfunction occurred.
- Gather as much information as possible for reference. Past problems that seem unrelated may also help in some cases.
- The following 5 items are important points in the problem analysis:

What	Vehicle model, system name
When	Date, time, occurrence frequency
Where	Road conditions
Under what conditions?	Running conditions, driving conditions, weather conditions
How did it happen?	Problem symptoms

NEXT

3.	INSPECT BATTERY VOLTAGE

(a) Measure the battery voltage.

Standard voltage:
11 to 14 V

If the voltage is below 11 V, recharge or replace the battery before proceeding to the next step.

NEXT

4.	PROBLEM SYMPTOMS TABLE

Result:

RESULT	PROCEED TO
Fault is not listed in problem symptoms table	A
Fault is listed in problem symptoms table	B

B **GO TO STEP 6**

A

5.	OVERALL ANALYSIS AND TROUBLESHOOTING

(a) Terminals of ECU INFO

(b) Data List / Active Test INFO

(c) Operation Check INFO

NEXT

6.	REPAIR OR REPLACE

NEXT

7.	CONFIRMATION TEST

NEXT END

Last Modified: 3-10-2010	6.4 J	**From:** 200901
Model Year: 2010	**Model:** Corolla	**Doc ID:** RM000000TO502IX
Title: DOOR LOCK: POWER DOOR LOCK CONTROL SYSTEM: All Doors LOCK / UNLOCK Functions do not Operate Via Master Switch, Both Front Door Key Cylinders (2010 Corolla)		

All Doors LOCK / UNLOCK Functions do not Operate Via Master Switch, Both Front Door Key Cylinders

DESCRIPTION

The main body ECU (instrument panel junction block) receives switch signals from the door control switch and front door key cylinder, and activates the door lock motor on each door according to these signals.

WIRING DIAGRAM

1. Except for TMC made:

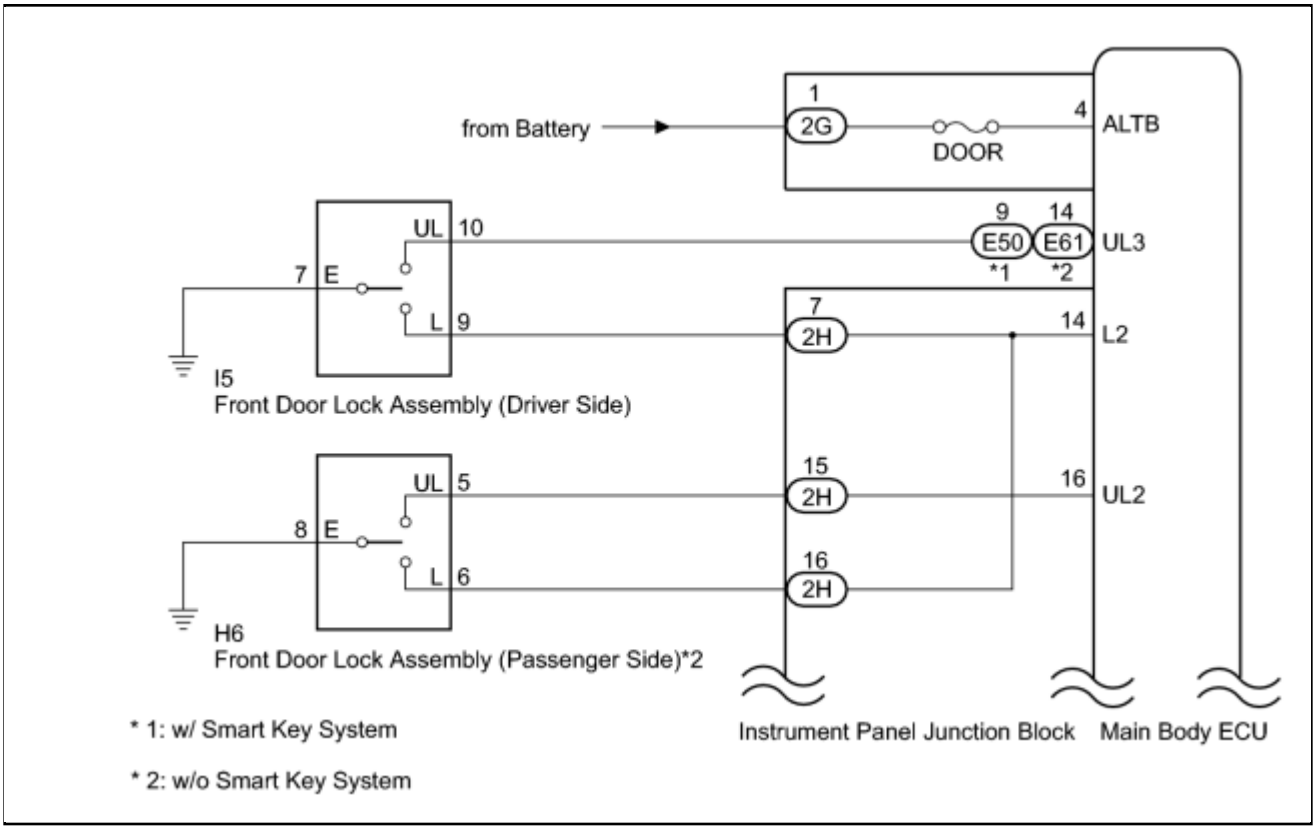

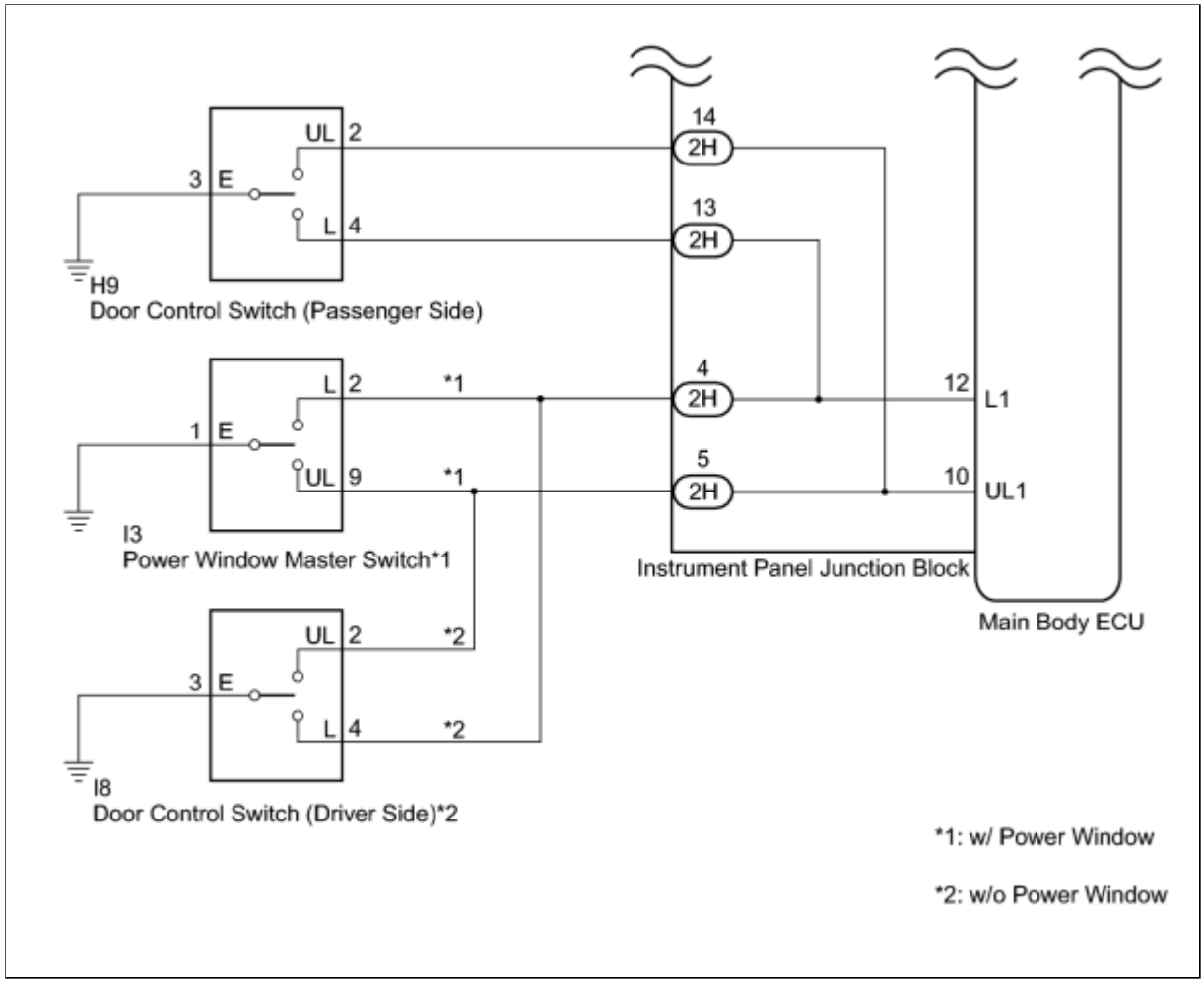

2. for TMC Made:

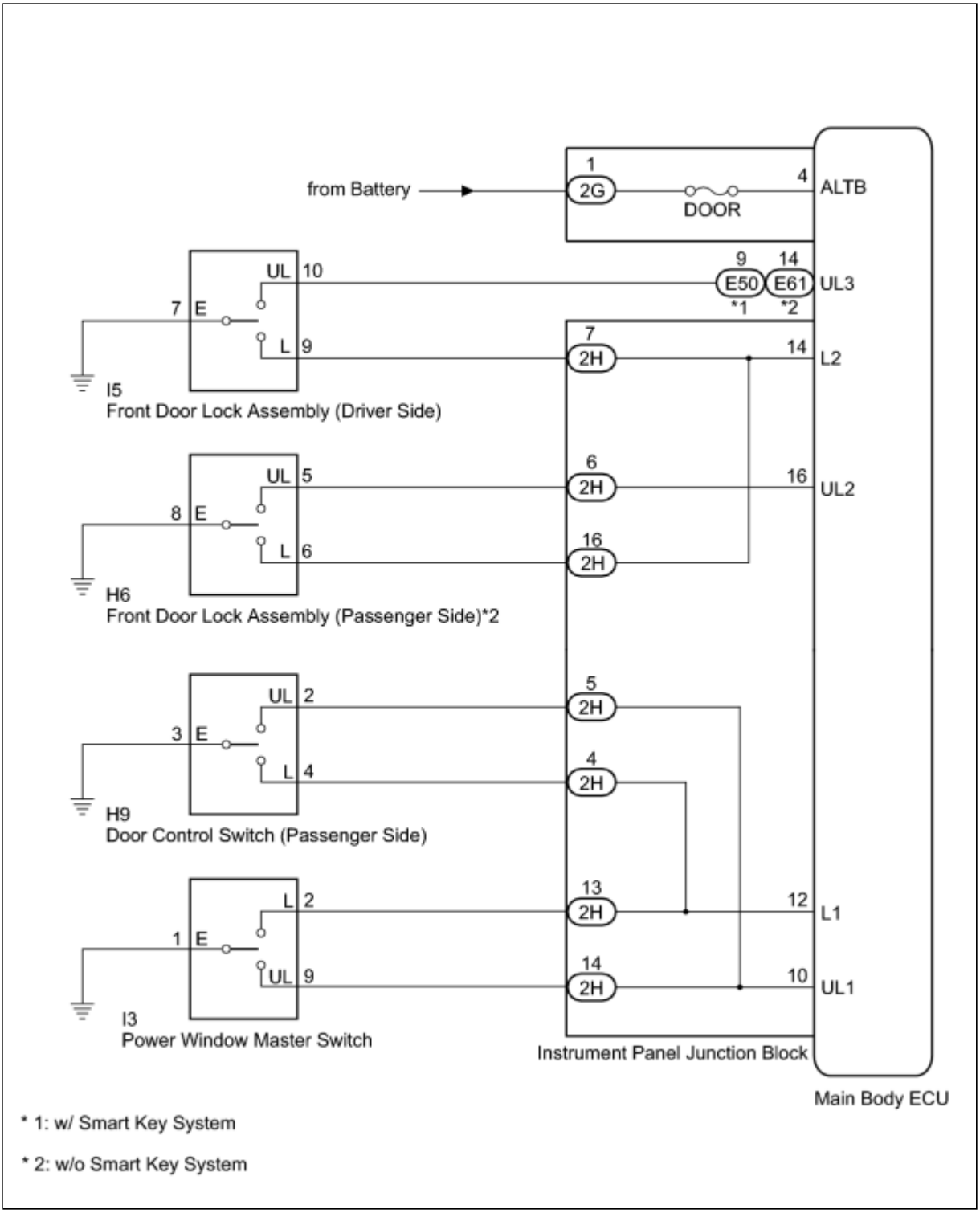

INSPECTION PROCEDURE

PROCEDURE

1.	**INSPECT FUSE (DOOR)**

(a) Remove the DOOR fuse from the instrument panel junction block.

(b) Measure the resistance according to the value(s) in the table below.

Standard Resistance:

TESTER CONNECTION	CONDITION	SPECIFIED CONDITION
DOOR fuse	Always	Below 1 Ω

NG ▶ **REPLACE FUSE**

OK ▼

2.	CHECK DOOR LOCK OPERATION (ALL DOORS LOCK / UNLOCK)

(a) All doors can be locked/unlocked at once using the following:

- Door control switch on the driver side (switch operation)
- Door control switch on the passenger side (switch operation)
- Door key cylinder linked with door lock on the driver side (key operation)
- Door key cylinder linked with door lock on the passenger side (key operation) (w/o Wireless Door Control System)

(b) Proceed to the next step according to symptom if all the doors cannot be locked/unlocked at once.

Result:

RESULT	PROCEED TO
All doors cannot be locked/unlocked at once by using door control switch.	A
All doors cannot be locked/unlocked at once by using door key cylinder.	B

B ▶ **CHECK DOOR LOCK OPERATION (DOOR KEY CYLINDER)**

A ▼

3.	CHECK DOOR LOCK OPERATION (DOOR CONTROL SWITCH)

(a) Proceed to the next step according to symptom if all the doors cannot be

locked/unlocked at once.

Result:

RESULT	PROCEED TO
All doors cannot be locked/unlocked at once by using door control switch on driver side or power window master switch.	A
All doors cannot be locked/unlocked at once by using door control switch on passenger side.	B
All doors cannot be locked/unlocked at once by using both driver and passenger side door control switch.	C

C ▶ **REPLACE MAIN BODY ECU (INSTRUMENT PANEL JUNCTION BLOCK)**

B ▶ **READ VALUE USING TECHSTREAM (DOOR CONTROL SWITCH (PASSENGER SIDE))**

A ▼

4.	READ VALUE USING TECHSTREAM (DOOR CONTROL SWITCH (DRIVER SIDE))

(a) Connect the Techstream

(b) Turn the ignition switch to ON.

(c) Turn the Techstream on.

(d) Enter the following menus: Body Electrical / Main Body / Data List.

(e) Read the Data List according to the display on the Techstream.

Main Body

TESTER DISPLAY	MEASUREMENT ITEM/RANGE	NORMAL CONDITION	DIAGNOSTIC NOTE
Door Lock SW-Lock	Driver door manual lock switch signal / ON or OFF	ON: Driver side door control switch is pushed to lock position OFF: Driver side door control switch is released	-
Door Lock SW-Unlock	Driver door manual unlock switch signal / ON or OFF	ON: Driver side door control switch is pushed to unlock	-

TESTER DISPLAY	MEASUREMENT ITEM/RANGE	NORMAL CONDITION	DIAGNOSTIC NOTE
		position OFF: Driver side door control switch is released	

OK:

The Techstream indicates ON or OFF according to the switch operation as shown in the table above.

NG ▶ **INSPECT DOOR CONTROL SWITCH ASSEMBLY (DRIVER SIDE)**

OK ▶ **REPLACE MAIN BODY ECU (INSTRUMENT PANEL JUNCTION BLOCK)**

5.	INSPECT DOOR CONTROL SWITCH ASSEMBLY (DRIVER SIDE)

(a) w/ Power Window:

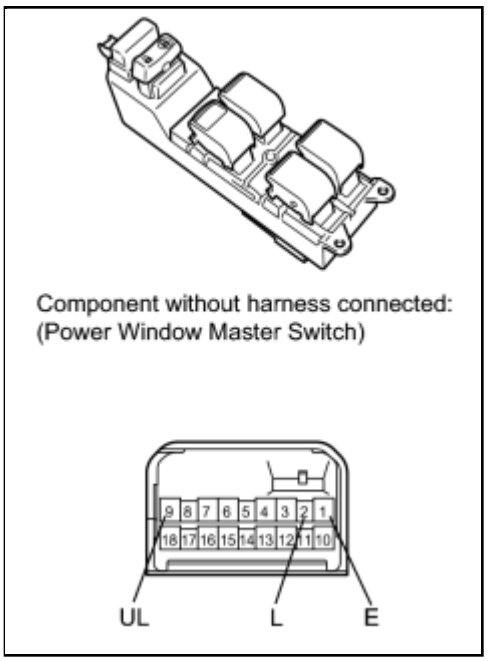

(1) Remove the power window master switch INFO .

(2) Measure the resistance according to the value(s) in the table below.

Standard Resistance:

TESTER CONNECTION	SWITCH CONDITION	SPECIFIED CONDITION
1 (E) - 2 (L)	Lock	Below 1 Ω

TESTER CONNECTION	SWITCH CONDITION	SPECIFIED CONDITION
1 (E) - 2 (L) 1 (E) - 9 (UL)	OFF (Free)	10 kΩ or higher
1 (E) - 9 (UL)	Unlock	Below 1 Ω

(b) w/o Power Window: (Except for TMC made)

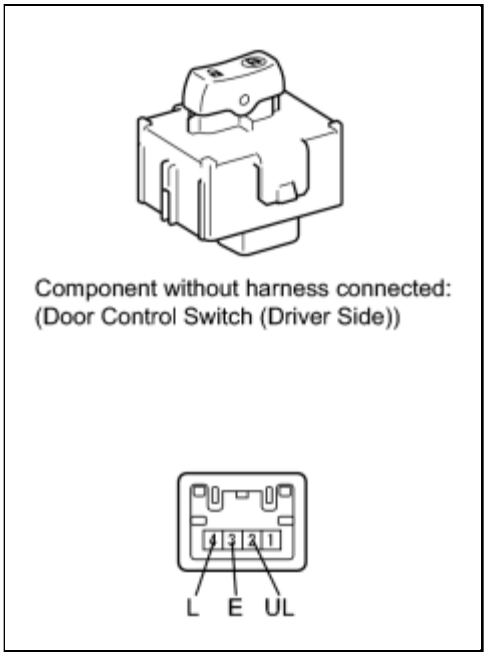

(1) Remove the door control switch INFO .

(2) Measure the resistance according to the value(s) in the table below.

Standard Resistance:

TESTER CONNECTION	SWITCH CONDITION	SPECIFIED CONDITION
3 (E) - 4 (L)	Lock	Below 1 Ω
3 (E) - 4 (L) 2 (UL) - 3 (E)	OFF (Free)	10 kΩ or higher
2 (UL) - 3 (E)	Unlock	Below 1 Ω

Result:

RESULT	PROCEED TO
OK	A
NG (for Driver Side with Power Window)	B
NG (for Driver Side without Power Window)	C

C ▶ REPLACE DOOR CONTROL SWITCH ASSEMBLY

(DRIVER SIDE)

B ▶ REPLACE POWER WINDOW MASTER SWITCH

A ▼

6.	CHECK HARNESS AND CONNECTOR (JUNCTION BLOCK - DOOR CONTROL SWITCH (DRIVER SIDE))

(a) Disconnect the 2H junction block connector.

(b) w/ Power Window: (Except for TMC made)

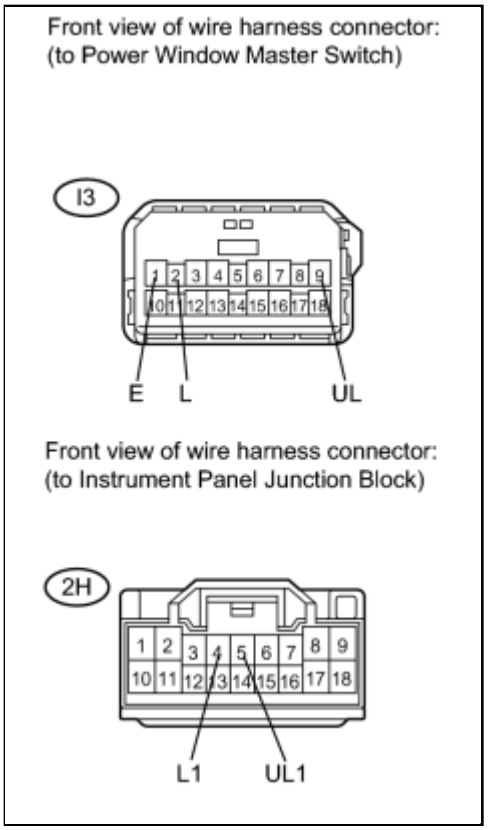

(1) Disconnect the I3 switch connector.

(2) Measure the resistance according to the value(s) in the table below.

Standard Resistance:

TESTER CONNECTION	CONDITION	SPECIFIED CONDITION
I3-2 (L) - 2H-4 (L1)	Always	Below 1 Ω

TESTER CONNECTION	CONDITION	SPECIFIED CONDITION
I3-9 (UL) - 2H-5 (UL1)	Always	Below 1 Ω
I3-1 (E) - Body ground	Always	Below 1 Ω
I3-2 (L) - Body ground	Always	10 kΩ or higher
I3-9 (UL) - Body ground	Always	10 kΩ or higher

(c) w/o Power Window: (Except for TMC made)

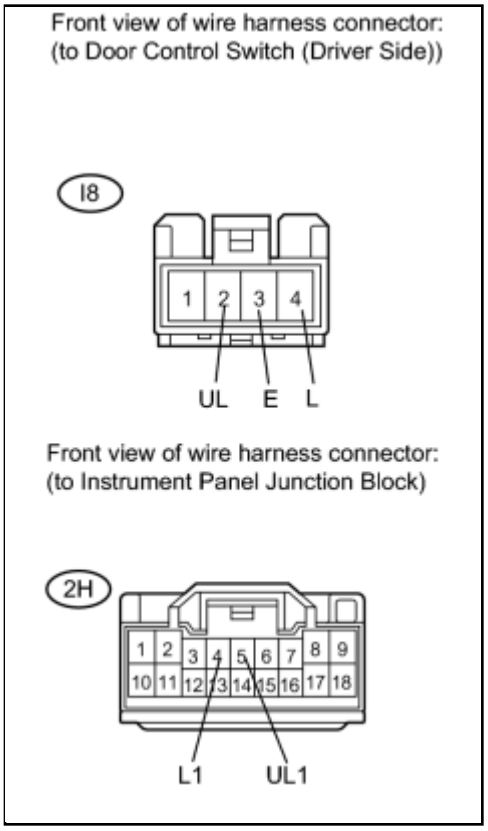

(1) Disconnect the 2H J/B connector.

(2) Measure the resistance according to the value(s) in the table below.

Standard Resistance:

TESTER CONNECTION	CONDITION	SPECIFIED CONDITION
I8-4 (L) - 2H-4 (L1)	Always	Below 1 Ω
I8-2 (UL) - 2H-5 (UL1)	Always	Below 1 Ω
I8-3 (E) - Body ground	Always	Below 1 Ω
I8-4 (L) - Body ground	Always	10 kΩ or higher
I8-2 (UL) - Body ground	Always	10 kΩ or higher

(d) w/ Power Window: (for TMC made)

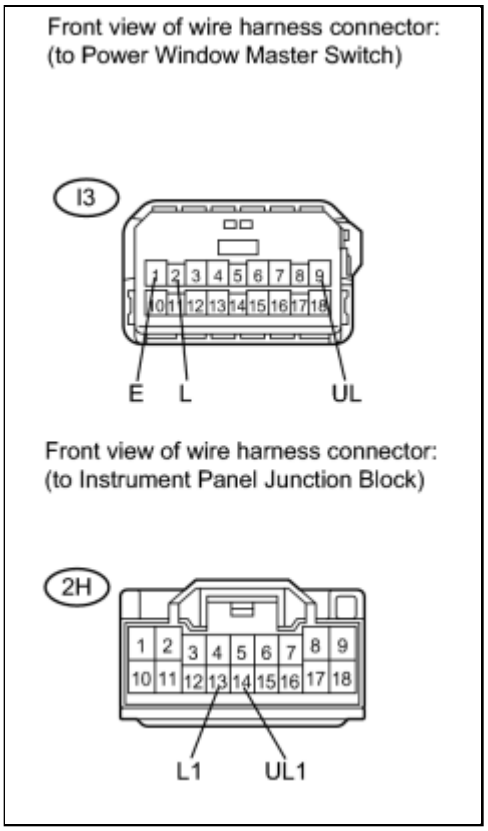

(1) Disconnect the I3 switch connector.

(2) Measure the resistance according to the value(s) in the table below.

Standard Resistance:

TESTER CONNECTION	CONDITION	SPECIFIED CONDITION
I3-2 (L) - 2H-13 (L1)	Always	Below 1 Ω
I3-9 (UL) - 2H-14 (UL1)	Always	Below 1 Ω
I3-1 (E) - Body ground	Always	Below 1 Ω
I3-2 (L) - Body ground	Always	10 kΩ or higher
I3-9 (UL) - Body ground	Always	10 kΩ or higher

NG ▶ **REPAIR OR REPLACE HARNESS OR CONNECTOR**

OK ▶ **REPLACE MAIN BODY ECU (INSTRUMENT PANEL JUNCTION BLOCK)**

7.	**READ VALUE USING TECHSTREAM (DOOR CONTROL SWITCH (PASSENGER SIDE))**

(a) Connect the Techstream

(b) Turn the ignition switch to ON.

(c) Turn the Techstream on.

(d) Enter the following menus: Body Electrical / Main Body / Data List.

(e) Read the Data List according to the display on the Techstream.

Main Body

TESTER DISPLAY	MEASUREMENT ITEM/RANGE	NORMAL CONDITION	DIAGNOSTIC NOTE
Door Lock SW-Lock	Passenger door manual lock switch signal / ON or OFF	ON: Passenger side door control switch is pushed to lock position OFF: Passenger side door control switch is released	-
Door Lock SW-Unlock	Passenger door manual unlock switch signal / ON or OFF	ON: Passenger side door control switch is pushed to unlock position OFF: Passenger side door control switch is released	-

OK:

The Techstream indicates ON or OFF according to the switch operation as shown in the table above.

NG ▶ **INSPECT DOOR CONTROL SWITCH ASSEMBLY (PASSENGER SIDE)**

OK ▶ **REPLACE MAIN BODY ECU (INSTRUMENT PANEL JUNCTION BLOCK)**

8.	**INSPECT DOOR CONTROL SWITCH ASSEMBLY (PASSENGER SIDE)**

(a) Remove the door control switch INFO .

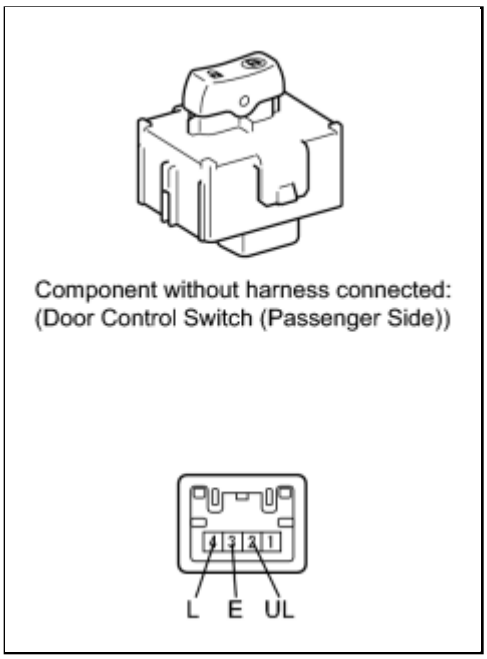

(b) Measure the resistance according to the value(s) in the table below.

Standard Resistance:

TESTER CONNECTION	SWITCH CONDITION	SPECIFIED CONDITION
3 (E) - 4 (L)	Lock	Below 1 Ω
3 (E) - 4 (L) 2 (UL) - 3 (E)	OFF (Free)	10 kΩ or higher
2 (UL) - 3 (E)	Unlock	Below 1 Ω

NG ▶ **REPLACE DOOR CONTROL SWITCH ASSEMBLY (PASSENGER SIDE)**

OK ▼

9.	**CHECK HARNESS AND CONNECTOR (JUNCTION BLOCK - DOOR CONTROL SWITCH (PASSENGER SIDE))**

(a) Except for TMC made:

(1) Disconnect the 2H junction block connector.

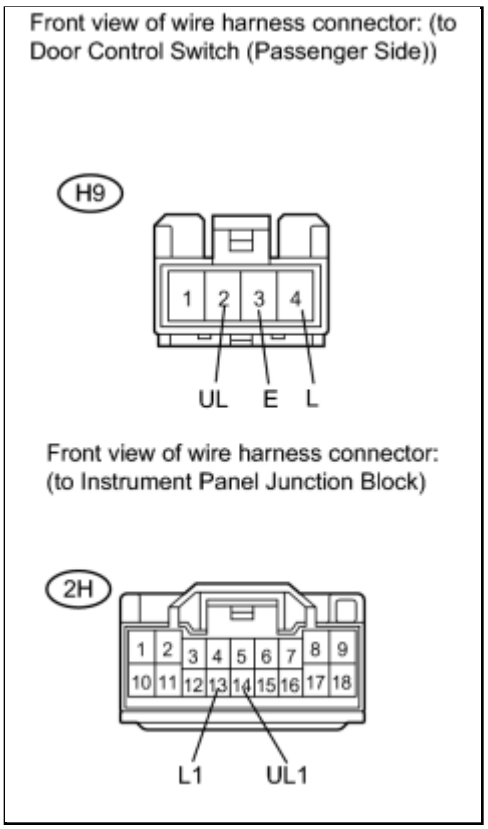

(2) Measure the resistance according to the value(s) in the table below.

Standard Resistance:

TESTER CONNECTION	CONDITION	SPECIFIED CONDITION
H9-4 (L) - 2H-13 (L1)	Always	Below 1 Ω
H9-2 (UL) - 2H-14 (UL1)	Always	Below 1 Ω
H9-3 (E) - Body ground	Always	Below 1 Ω
H9-4 (L) - Body ground	Always	10 kΩ or higher
H9-2 (UL) - Body ground	Always	10 kΩ or higher

(b) for TMC made:

(1) Disconnect the 2H junction block connector.

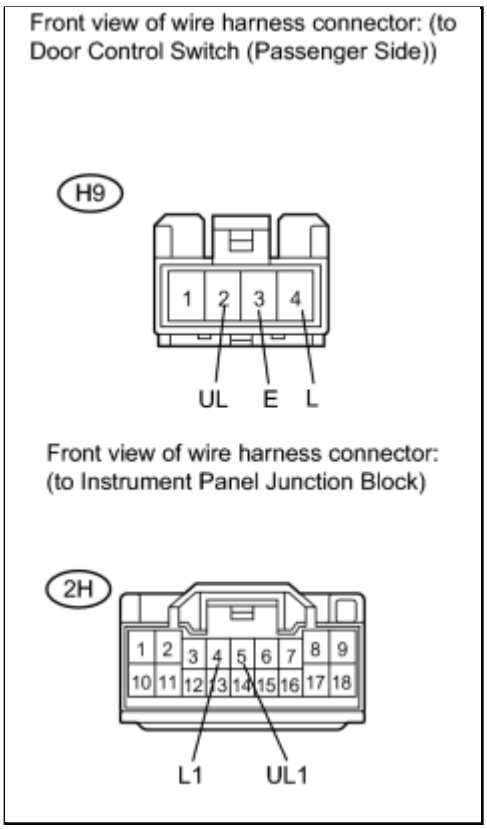

(2) Measure the resistance according to the value(s) in the table below.

Standard Resistance:

TESTER CONNECTION	CONDITION	SPECIFIED CONDITION
H9-4 (L) - 2H-4 (L1)	Always	Below 1 Ω
H9-2 (UL) - 2H-5 (UL1)	Always	Below 1 Ω
H9-3 (E) - Body ground	Always	Below 1 Ω
H9-4 (L) - Body ground	Always	10 kΩ or higher
H9-2 (UL) - Body ground	Always	10 kΩ or higher

NG ▶ **REPAIR OR REPLACE HARNESS OR CONNECTOR**

OK ▶ **REPLACE MAIN BODY ECU (INSTRUMENT PANEL JUNCTION BLOCK)**

10.	**CHECK DOOR LOCK OPERATION (DOOR KEY CYLINDER)**

(a) Proceed to the next step according to symptom if all the doors cannot be locked/unlocked at once.

Result:

RESULT	PROCEED TO
All doors cannot be locked/unlocked at once by using door key cylinder on driver side.	A
All doors cannot be locked/unlocked at once by using door key cylinder on passenger side.	B
All doors cannot be locked/unlocked at once by using either driver and passenger side door key cylinder.	C

C ▶ **REPLACE MAIN BODY ECU (INSTRUMENT PANEL JUNCTION BLOCK)**

B ▶ **READ VALUE USING TECHSTREAM (DOOR KEY LINKED LOCK AND UNLOCK SWITCH (PASSENGER SIDE))**

A

11.	**READ VALUE USING TECHSTREAM (DOOR KEY LINKED LOCK AND UNLOCK SWITCH (DRIVER SIDE))**

(a) Connect the Techstream

(b) Turn the ignition switch to ON.

(c) Turn the Techstream on.

(d) Enter the following menus: Body Electrical / Main Body / Data List.

(e) Read the Data List according to the display on the Techstream.

Main Body

TESTER DISPLAY	MEASUREMENT ITEM/RANGE	NORMAL CONDITION	DIAGNOSTIC NOTE
Door Key SW-Lock	Driver side door key linked lock switch signal/ON or OFF	ON: Driver side door key cylinder is turned to lock position OFF: Driver side door key cylinder is not turned	-
D-Door Key SW-UL	Driver side door key linked unlock switch signal/ON or OFF	ON: Driver side door key cylinder is turned to unlock position	-

TESTER DISPLAY	MEASUREMENT ITEM/RANGE	NORMAL CONDITION	DIAGNOSTIC NOTE
		OFF: Driver side door key cylinder is not turned	

OK:

The Techstream indicates ON or OFF according to the switch operation as shown in the table above.

NG ▶ **INSPECT FRONT DOOR LOCK ASSEMBLY (DRIVER SIDE)**

OK ▶ **REPLACE MAIN BODY ECU (INSTRUMENT PANEL JUNCTION BLOCK)**

12.	INSPECT FRONT DOOR LOCK ASSEMBLY (DRIVER SIDE)

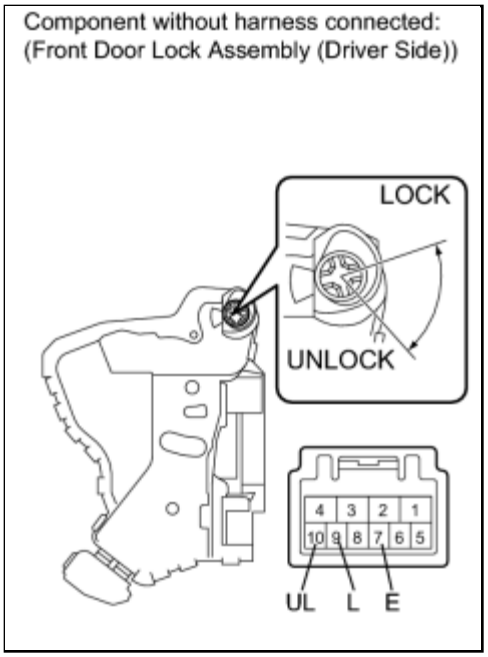

(a) Remove the front door lock assembly (driver side) INFO .

(b) Measure the resistance according to the value(s) in the table below.

Standard Resistance:

TESTER CONNECTION	CONDITION	SPECIFIED CONDITION
9 (L) - 7 (E)	ON (Door lock set to LOCK)	Below 1 Ω
9 (L) - 7 (E) 10 (UL) - 7 (E)	OFF (Free)	10 kΩ or higher

TESTER CONNECTION	CONDITION	SPECIFIED CONDITION
10 (UL) - 7 (E)	ON (Door lock set to UNLOCK)	Below 1 Ω

NG ▶ **REPLACE FRONT DOOR LOCK ASSEMBLY (DRIVER SIDE)**

OK ▼

13.	**CHECK HARNESS AND CONNECTOR (FRONT DOOR LOCK - MAIN BODY ECU (INSTRUMENT PANEL J/B))**

(a) w/ Smart Key System:

(1) Disconnect the 2H junction block connector.

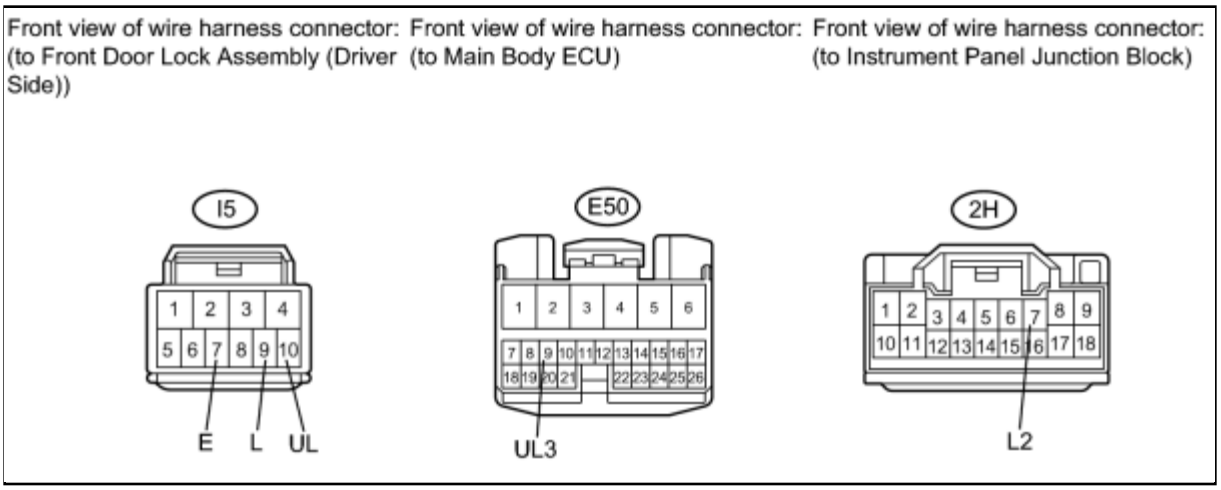

(2) Disconnect the E50 ECU connector.

(3) Measure the resistance according to the value(s) in the table below.

Standard Resistance:

TESTER CONNECTION	CONDITION	SPECIFIED CONDITION
I5-9 (L) - 2H-7 (L2)	Always	Below 1 Ω
I5-10 (UL) - E50-9 (UL3)	Always	Below 1 Ω
I5-7 (E) - Body ground	Always	Below 1 Ω
I5-9 (L) - Body ground	Always	10 kΩ or higher

TESTER CONNECTION	CONDITION	SPECIFIED CONDITION
I5-10 (UL) - Body ground	Always	10 kΩ or higher

(b) w/o Smart Key System:

(1) Disconnect the 2H junction block connector.

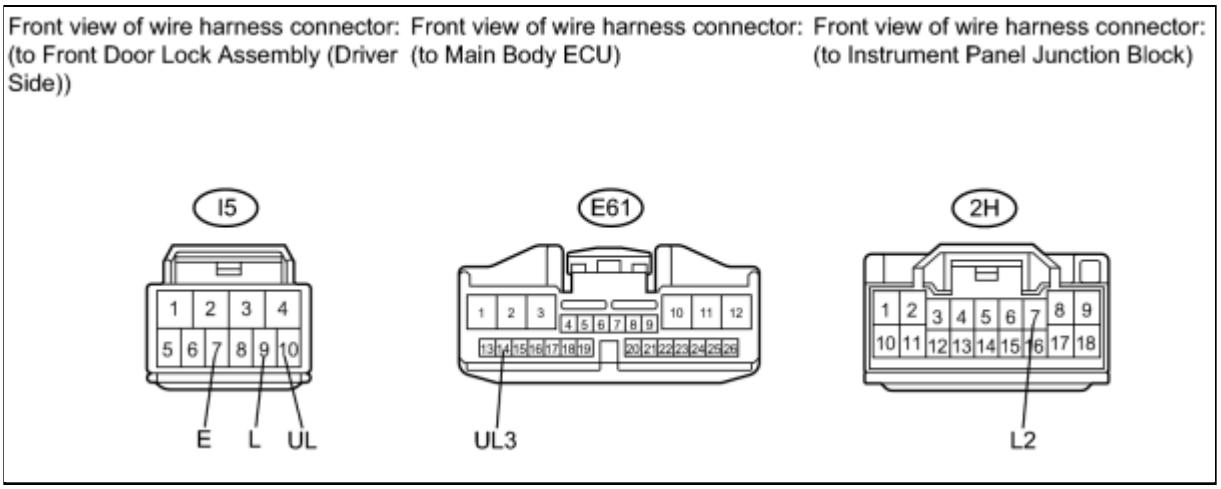

(2) Disconnect the E61 ECU connector.

(3) Measure the resistance according to the value(s) in the table below.

Standard Resistance:

TESTER CONNECTION	CONDITION	SPECIFIED CONDITION
I5-9 (L) - 2H-7 (L2)	Always	Below 1 Ω
I5-10 (UL) - E61-14 (UL3)	Always	Below 1 Ω
I5-7 (E) - Body ground	Always	Below 1 Ω
I5-9 (L) - Body ground	Always	10 kΩ or higher
I5-10 (UL) - Body ground	Always	10 kΩ or higher

NG ▶ **REPAIR OR REPLACE HARNESS OR CONNECTOR**

OK ▶ **REPLACE MAIN BODY ECU (INSTRUMENT PANEL JUNCTION BLOCK)**

14.	**READ VALUE USING TECHSTREAM (DOOR KEY LINKED LOCK AND UNLOCK SWITCH (PASSENGER SIDE))**

(a) Connect the Techstream

(b) Turn the ignition switch to ON.

(c) Turn the Techstream on.

(d) Enter the following menus: Body Electrical / Main Body / Data List.

(e) Read the Data List according to the display on the Techstream.

Main Body ECU

TESTER DISPLAY	MEASUREMENT ITEM/RANGE	NORMAL CONDITION	DIAGNOSTIC NOTE
Door Key SW-Lock	Passenger side door key linked lock switch signal/ON or OFF	ON: Passenger side door key cylinder is turned to lock position OFF: Passenger side door key cylinder is not turned	-
Door Key SW-Unlock	Passenger side door key linked unlock switch signal/ON or OFF	ON: Passenger side door key cylinder is turned to unlock position OFF: Passenger side door key cylinder is not turned	-

OK:

The Techstream indicates ON or OFF according to the switch operation as shown in the table above.

NG ▶ **INSPECT FRONT DOOR LOCK ASSEMBLY (PASSENGER SIDE)**

OK ▶ **REPLACE MAIN BODY ECU (INSTRUMENT PANEL JUNCTION BLOCK)**

15.	**INSPECT FRONT DOOR LOCK ASSEMBLY (PASSENGER SIDE)**

(a) Remove the front door lock assembly (passenger side) INFO .

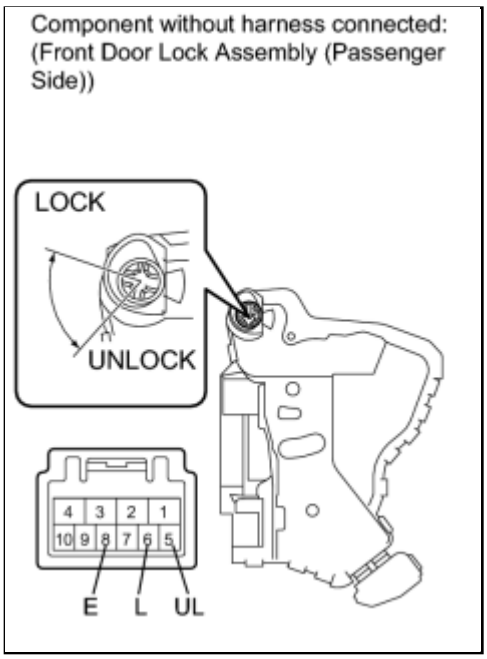

(b) Measure the resistance according to the value(s) in the table below.

Standard Resistance:

TESTER CONNECTION	CONDITION	SPECIFIED CONDITION
6 (L) - 8 (E)	ON (Door lock set to LOCK)	Below 1 Ω
6 (L) - 8 (E) 5 (UL) - 8 (E)	OFF (Free)	10 kΩ or higher
5 (UL) - 8 (E)	ON (Door lock set to UNLOCK)	Below 1 Ω

NG ▶ **REPLACE FRONT DOOR LOCK ASSEMBLY (PASSENGER SIDE)**

OK
▼

16.	**CHECK HARNESS AND CONNECTOR (FRONT DOOR LOCK - INSTRUMENT PANEL JUNCTION BLOCK)**

(a) Except for TMC made:

(1) Disconnect the 2H junction block connector.

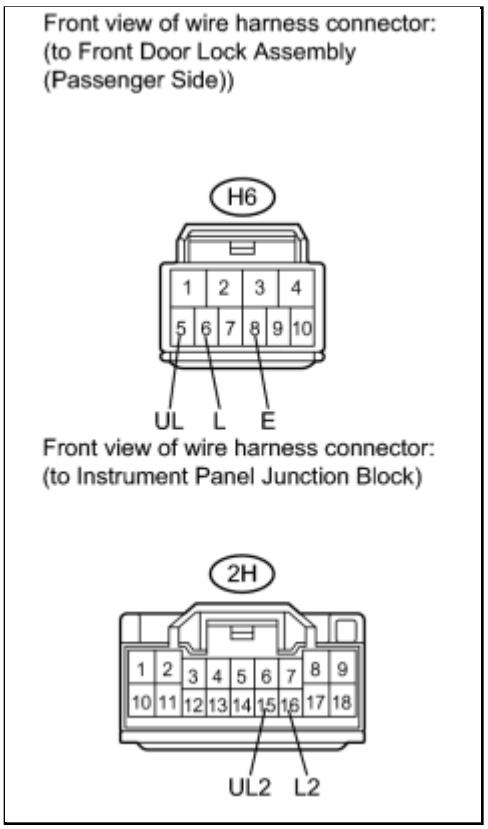

(2) Measure the resistance according to the value(s) in the table below.

Standard Resistance:

TESTER CONNECTION	CONDITION	SPECIFIED CONDITION
H6-6 (L) - 2H-16 (L2)	Always	Below 1 Ω
H6-5 (UL) - 2H-15 (UL2)	Always	Below 1 Ω
H6-8 (E) - Body ground	Always	Below 1 Ω
H6-6 (L) - Body ground	Always	10 kΩ or higher
H6-5 (UL) - Body ground	Always	10 kΩ or higher

(b) for TMC made:

(1) Disconnect the 2H junction block connector.

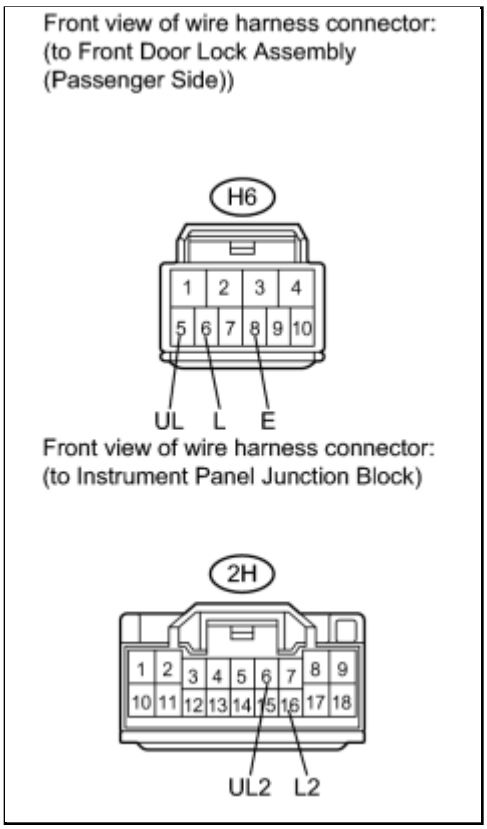

(2) Measure the resistance according to the value(s) in the table below.

Standard Resistance:

TESTER CONNECTION	CONDITION	SPECIFIED CONDITION
H6-6 (L) - 2H-16 (L2)	Always	Below 1 Ω
H6-5 (UL) - 2H-6 (UL2)	Always	Below 1 Ω
H6-8 (E) - Body ground	Always	Below 1 Ω
H6-6 (L) - Body ground	Always	10 kΩ or higher
H6-5 (UL) - Body ground	Always	10 kΩ or higher

NG ▶ **REPAIR OR REPLACE HARNESS OR CONNECTOR**

OK ▶ **REPLACE MAIN BODY ECU (INSTRUMENT PANEL JUNCTION BLOCK)**

Last Modified: 3-10-2010	6.4 D	**From:** 200901
Model Year: 2010	**Model:** Corolla	**Doc ID:** RM000000133302JX
Title: DOOR LOCK: POWER DOOR LOCK CONTROL SYSTEM: OPERATION CHECK (2010 Corolla)		

OPERATION CHECK

1. CHECK POWER DOOR LOCK CONTROL OPERATION

NOTICE:

The following procedure is based on the assumption that the functions have not been customized using the Techstream.

(a) Check basic functions.

(1) Check that all doors lock when the door control switch (for manual operation) is turned to LOCK and all doors unlock when turned to UNLOCK.

(2) Check that all doors lock when either driver or passenger* side door lock key cylinder is turned to LOCK using the mechanical key.

- *: w/o Wireless Door Lock System

(b) Check the electrical key lock-in prevention function (w/ Smart Key System).

NOTICE:

In order to prevent the electrical key from being actually locked-in, the following inspection should be performed with the driver side door window open.

(1) Place the electrical key in the cabin.

(2) With the driver or passenger side door open, turn the driver side door lock knob or door control switch to LOCK, and then close the driver side door. Then check that all doors unlock.

(c) Check the key lock-in prevention function (w/o Smart Key System).

NOTICE:

In order to prevent the key from being actually locked-in, the inspection should be performed with the driver side door window open.

(1) Insert the key into the ignition key cylinder.

(2) With either driver or passenger side door open, check that all doors unlock immediately after the door lock knob for the driver side door is turned to LOCK.

(3) With either driver or passenger side door open, check that all doors unlock immediately after the door control switch (for manual operation) is turned to LOCK.

(4) With either driver or passenger side door open, turn the driver side door lock knob to LOCK, and close the driver side door. Check that all doors unlock.

(d) Check the security function.

(1) Close all doors with the driver side door glass open so that the door control switch can be operated from outside the vehicle.

(2) Remove the key from the inside of the vehicle, open either driver or passenger side door and then close and lock the door without using the key. Then, check that all doors do not unlock when the door control switch (for manual operation) is turned to UNLOCK from outside the vehicle.

(3) Remove the key from the inside of the vehicle, then close and lock either driver or passenger side door with the key operation. Under this condition, check that all doors do not unlock when the door control switch (for manual operation) is turned to UNLOCK from outside the vehicle.

(4) Remove the key from the inside of the vehicle, close either driver or passenger side door and lock the door with the wireless door lock operation. Then, check that all doors do not unlock when the door control switch (for manual operation) is turned to UNLOCK from outside the vehicle.

HINT:

Check that the security function is canceled under the following conditions:

- The ignition switch is turned ON.
- The driver side door is unlocked using the key.
- The door control switch (for manual operation) is turned to UNLOCK after the door lock knob is unlocked manually.
- The doors are unlocked by wireless operation.

(e) Check the illumination function.

(1) Set the room light switch to the DOOR position.

(2) With all doors locked, check that the either driver or passenger side door unlocks when either driver or passenger side door lock cylinder is turned to UNLOCK using the key. At the same time, the room light comes on.

(3) Check that the room light goes off in approximately 15 seconds if the doors have not been opened.

(f) Check the key-linked 2-step unlock function.

(1) Lock all doors.

(2) Check that only the driver side door unlocks when the driver side door lock cylinder is turned to UNLOCK once using the key and other doors unlock when turned to UNLOCK consecutively once again.

(g) Check the shift linked automatic door lock function.

(1) When the ignition switch is turned ON and all doors close and the shift lever is moved from P to a position other than P, check that all doors lock automatically.

- *: for A/T

(h) Check the shift linked automatic door unlock function.

(1) When the ignition switch is turned ON and the shift lever is moved to P from a position other than P, check that all doors unlock automatically.

- *: for A/T

(i) Check the speed-sensitive automatic door lock function*.

(1) When a door is unlocked and the vehicle is driven at approximately 20 km/h (12 mph) or more, check that all doors automatically lock at once (automatic door lock).

HINT:

***: Default setting is OFF**

(j) Check the driver's door-linked automatic unlock function*.

(1) When the driver's door is closed, turning the ignition switch ON to off and opening the driver door within 10 seconds will automatically unlock all the doors.

HINT:

***: Default setting is OFF**



Last Modified: 3-10-2010	6.4 D	**From:** 200901
Model Year: 2010	**Model:** Corolla	**Doc ID:** RM000000WI3026X
Title: DOOR LOCK: POWER DOOR LOCK CONTROL SYSTEM: CUSTOMIZE PARAMETERS (2010 Corolla)		

CUSTOMIZE PARAMETERS

1. CUSTOMIZING FUNCTION WITH TECHSTREAM

HINT:

The following items can be customized.

NOTICE:

- When the customer requests a change in a function, first make sure that the function can be customized.
- Be sure to make a note of the current settings before customizing.
- When troubleshooting a function, first make sure that the function is set to the default setting.

(a) Connect the Techstream to the DLC3.

(b) Turn the ignition switch to ON.

(c) Turn the Techstream on.

(d) Enter the following menus: Customize Setting / Door Lock.

(e) Select the setting by referring to the table below.

Main Body

TESTER DISPLAY	DEFAULT	CONTENTS	SETTING
Unlock Key Twice	ON	Function that unlocks only driver side door when driver side door key cylinder is turned to UNLOCK once, and unlock all doors when it is turned to UNLOCK twice. For OFF setting, turning it once unlocks all doors.	ON/OFF
Auto Lock/Shift*	ON	Function that locks all doors when shift lever is shifted from P to any other position with engine running and all doors closed	ON/OFF
Auto Unlock/Shift*	ON	Function that unlocks all doors when shift lever is shifted to P from any other position while the ignition switch is ON	ON/OFF
All Unlock/Open-Close	OFF	Function that unlocks all doors when opening driver door within 10 seconds after turning the ignition switch is OFF	ON/OFF
Auto Lock	OFF	Function that locks all doors when vehicle speed reaches a certain level	ON/OFF

- *: for A/T

Last Modified: 3-10-2010	6.4 U	**From:** 200901
Model Year: 2010	**Model:** Corolla	**Doc ID:** RM000000TNT039X
Title: DOOR LOCK: POWER DOOR LOCK CONTROL SYSTEM: TERMINALS OF ECU (2010 Corolla)		

TERMINALS OF ECU

1. CHECK MAIN BODY ECU (INSTRUMENT PANEL JUNCTION BLOCK)

(a) Disconnect the 2A, 2B, 2E, 2F, 2G and 2H junction block connectors.

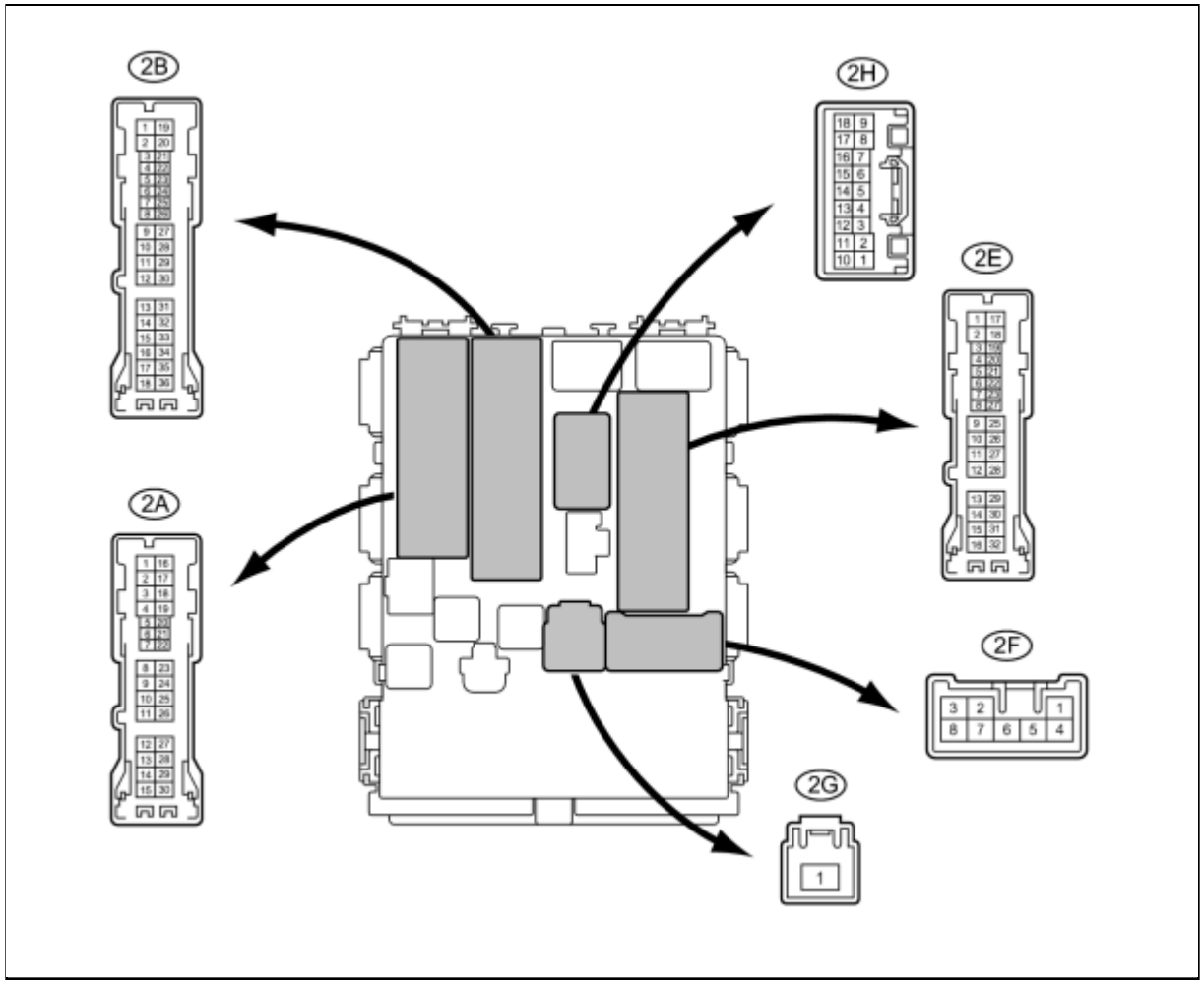

(b) Disconnect the E61 and E50 ECU connector.

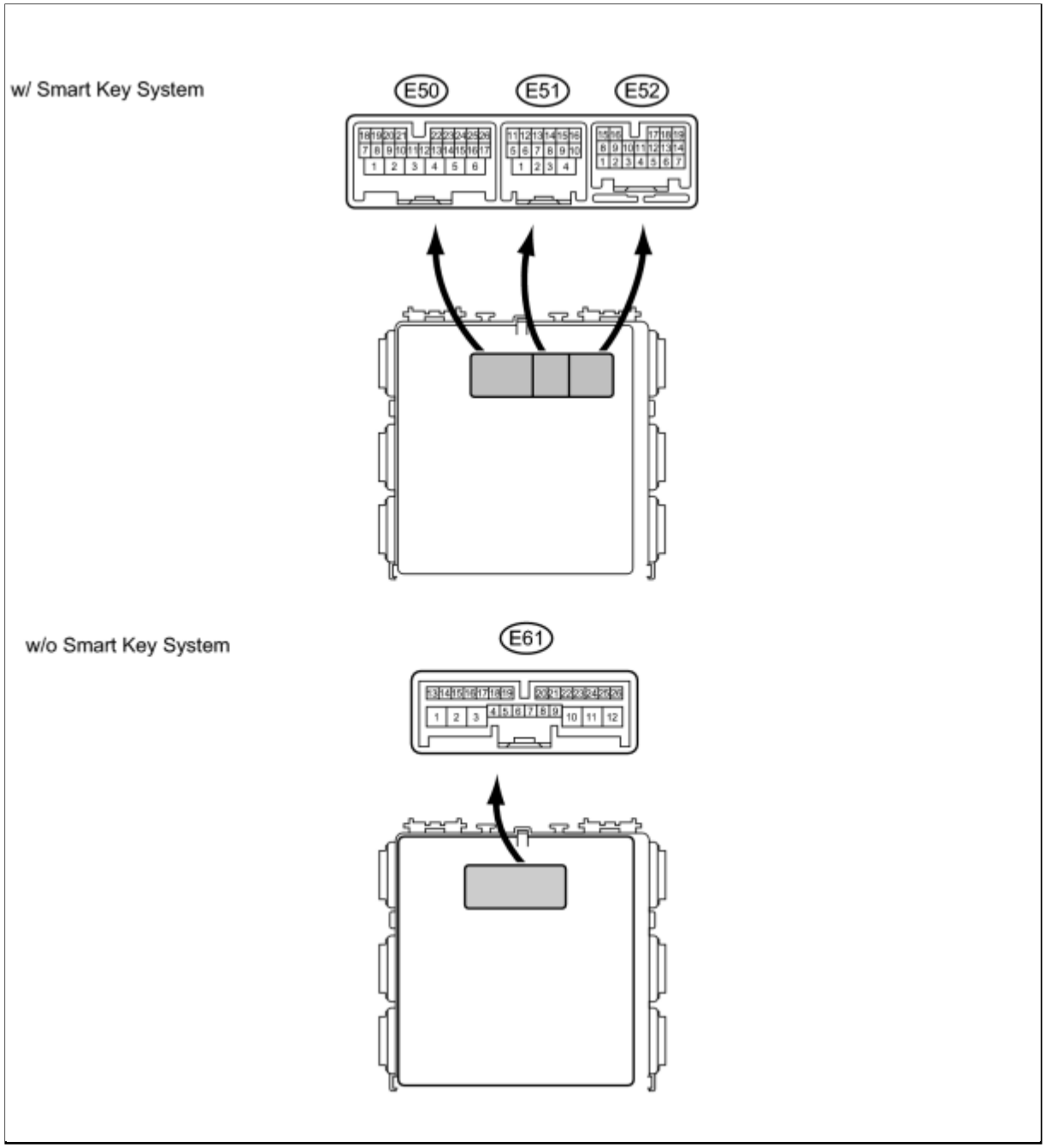

(c) Measure the voltage and resistance according to the value(s) in the table below.

TESTER CONNECTION	TERMINAL DESCRIPTION	CONDITION	SPECIFIED CONDITION
2A-21 (DCTY) - Body ground	Driver door courtesy switch	Driver door CLOSED → OPEN	10 kΩ or higher → Below 1 Ω
2E-19 (RCTY) - Body ground	Rear right door courtesy switch input	Rear right door CLOSED → OPEN	10 kΩ or higher → Below 1 Ω
2E-20 (PCTY) - Body ground	Passenger door courtesy switch input	Passenger door CLOSED → OPEN	10 kΩ or higher → Below 1 Ω

TESTER CONNECTION	TERMINAL DESCRIPTION	CONDITION	SPECIFIED CONDITION
E50-8 (LCTY) - Body ground*1	Rear left door courtesy switch input	Rear left door CLOSED → OPEN	10 kΩ or higher → Below 1 Ω
E61-13 (LCTY) - Body ground*2	Rear left door courtesy switch input	Rear left door CLOSED → OPEN	10 kΩ or higher → Below 1 Ω
2G-1 (ALTB) - Body ground	+B power supply	Always	11 to 14 V
2E-17 (E) - Body ground	Ground	Always	Below 1 Ω
2F-5 (ACC) - Body ground	ACC power supply	Ignition switch ON → OFF	11 to 14 V → Below 1 V
2H-4 (L1) - Body ground*3	Driver door control switch LOCK input	Driver door control switch or power window master switch OFF → LOCK	10 kΩ or higher → Below 1 Ω
2H-13 (L1) - Body ground*4	Power window master switch LOCK input	Driver door control switch OFF → LOCK	10 kΩ or higher → Below 1 Ω
2H-5 (UL1) - Body ground*3	Driver door control switch UNLOCK input	Driver door control switch or power window master switch OFF → UNLOCK	10 kΩ or higher → Below 1 Ω
2H-14 (UL1) - Body ground*4	Power window master switch UNLOCK input	Driver door control switch OFF → UNLOCK	10 kΩ or higher → Below 1 Ω
2H-13 (L1) - Body ground*3	Passenger door control switch LOCK input	Passenger door control switch OFF → LOCK	10 kΩ or higher → Below 1 Ω
2H-4 (L1) - Body ground*4	Passenger door control switch LOCK input	Passenger door control switch OFF → LOCK	10 kΩ or higher → Below 1 Ω
2H-14 (UL1) - Body ground*3	Passenger door control switch UNLOCK input	Passenger door control switch OFF → UNLOCK	10 kΩ or higher → Below 1 Ω
2H-5 (UL1) - Body ground*4	Passenger door control switch UNLOCK input	Passenger door control switch OFF → UNLOCK	10 kΩ or higher → Below 1 Ω
2B-30 (BECU) - Body ground*2	+B (BECU) power supply	Always	11 to 14 V
2A-7 (LGCY) - Body ground	Luggage door courtesy switch signal input	Luggage door CLOSE → OPEN	10 kΩ or higher → Below 1 Ω
2E-23 (KSW) - Body ground*2	Unlock warning switch signal input	No key is in ignition key cylinder → Key is in ignition key cylinder	10 kΩ or higher → Below 1 Ω

- *1: w/ Smart Key System
- *2: w/o Smart Key System
- *3: Except for TMC made
- *4: for TMC made

If the result is not as specified, there may be a malfunction on the wire harness side.

(d) Reconnect the ECU and junction block connectors.

(e) Measure the voltage according to the value(s) in the table below.

TESTER CONNECTION	TERMINAL DESCRIPTION	CONDITION	SPECIFIED CONDITION
E50-9 (UL3) - Body ground*1	Driver door key-linked door unlock switch	Driver door lock cylinder is turned LOCK → UNLOCK with key	Below 1 V → 11 to 14 V (or pulse generation)
E61-14 (UL3) - Body ground*2	Driver door key-linked door unlock switch	Driver door lock cylinder is turned LOCK → UNLOCK with key	Below 1 V → 11 to 14 V (or pulse generation)
2H-15 (UL2) - Body ground*2,*3	Passenger door key-linked door unlock switch	Passenger door lock cylinder is turned LOCK → UNLOCK with key	Below 1 V → 11 to 14 V (or pulse generation)
2H-6 (UL2) - Body ground*4	Passenger door key-linked door unlock switch	Passenger door lock cylinder is turned LOCK → UNLOCK with key	Below 1 V → 11 to 14 V (or pulse generation)
2H-7 (L2) - Body ground	Driver door key-linked door lock switch	Driver door lock cylinder is turned UNLOCK → LOCK with key	Below 1 V → 11 to 14 V (or pulse generation)
2H-16 (L2) - Body ground*2	Passenger door key-linked door lock switch	Passenger door lock cylinder is turned UNLOCK → LOCK with key	Below 1 V → 11 to 14 V (or pulse generation)
2H-8 (ACT+) - Body ground	Passenger door key-linked door lock switch	Passenger door lock cylinder is turned UNLOCK → LOCK with key	Below 1 V → 11 to 14 V (or pulse generation)
2H-8 (ACT+) - Body ground 2H-17 (ACT+) - Body ground 2A-3 (ACT+) - Body ground	Door lock motor LOCK drive output (All doors)	Door control switch (Driver side or passenger side switch) or driver side door key cylinder or passenger side door key cylinder OFF → LOCK → OFF	Below 1 V → 11 to 14 V → Below 1 V
E61-21 (LSWD) - Body ground*2	Driver door lock position switch input	Driver door UNLOCK → LOCK	Below 1 V → 11 to 14 V (or pulse generation)
2H-9 (ACT-) - Body ground*3 2H-18 (ACT-) - Body ground 2A-4 (ACT-) - Body ground	Door lock motor UNLOCK drive output (All doors)	Door control switch (Driver side or passenger side switch) or driver side door key cylinder or passenger side door key cylinder OFF → UNLOCK → OFF	Below 1 V → 11 to 14 V → Below 1 V
E50-25 (LSWD) - Body ground*1	Driver door lock position switch input	Driver door UNLOCK → LOCK	Below 1 V → 11 to 14 V (or pulse

TESTER CONNECTION	TERMINAL DESCRIPTION	CONDITION	SPECIFIED CONDITION
			generation)
E61-21 (LSWD) - Body ground*2	Driver door lock position switch input	Driver door UNLOCK → LOCK	Below 1 V → 11 to 14 V (or pulse generation)
E50-10 (LSWP) - Body ground*1	Passenger door lock position switch input	Passenger door UNLOCK → LOCK	Below 1 V → 11 to 14 V (or pulse generation)
E61-5 (LSWP) - Body ground*2	Passenger door lock position switch input	Passenger door UNLOCK → LOCK	Below 1 V → 11 to 14 V (or pulse generation)
E52-10 (LSR) - Body ground*1	Rear door lock position switch input	Rear door UNLOCK → LOCK	Below 1 V → 11 to 14 V (or pulse generation)
E61-24 (LSR) - Body ground*2	Rear door lock position switch input	Rear door UNLOCK → LOCK	Below 1 V → 11 to 14 V (or pulse generation)

- *1: w/ Smart Key System
- *2: w/o Smart Key System
- *3: Except for TMC made
- *4: for TMC made

If the result is not as specified, the main body ECU (instrument panel junction block) may have a malfunction.

Last Modified: 3-10-2010	6.4 T	**From:** 200901
Model Year: 2010	**Model:** Corolla	**Doc ID:** RM000000TNU02PX
Title: DOOR LOCK: POWER DOOR LOCK CONTROL SYSTEM: PROBLEM SYMPTOMS TABLE (2010 Corolla)		

PROBLEM SYMPTOMS TABLE

HINT:

Use the table below to help determine the cause of problem symptoms. If multiple suspected areas are listed, the potential causes of the symptoms are listed in order of probability in the "Suspected Area" column of the table. Check each symptom by checking the suspected areas in the order they are listed. Replace parts as necessary.

Power Door Lock Control System

SYMPTOM	SUSPECTED AREA	SEE PAGE
All Doors LOCK/UNLOCK Functions do not Operate Via Master Switch, Both Front Door Key Cylinders	Fuse (DOOR)	INFO
	Front door lock assembly (for driver side)	INFO
	Front door lock assembly (for passenger side)	INFO
	Wire harness or connector	-
	Door control switch (for driver side)	INFO
	Door control switch (for passenger side)	INFO
	Main body ECU (instrument panel junction block)	-
Only Driver Door LOCK/UNLOCK Functions do not Operate	Front door lock assembly (for driver side)	INFO
	Wire harness or connector	-
	Main body ECU (instrument panel junction block)	-
Only Passenger Door LOCK/UNLOCK Functions do not Operate	Front door lock assembly (for passenger side)	INFO
	Wire harness or connector	-
	Main body ECU (instrument panel junction block)	-
Only Rear Door LH LOCK/UNLOCK Functions do not Operate	Rear door lock assembly LH	INFO
	Wire harness or connector	-

SYMPTOM	SUSPECTED AREA	SEE PAGE
	Main body ECU (instrument panel junction block)	-
Only Rear Door RH LOCK/UNLOCK Functions do not Operate	Rear door lock assembly RH	INFO
	Wire harness or connector	-
	Main body ECU (instrument panel junction block)	-
Key Lock-in Prevention Function does not Work Properly*1	Smart key system (Room oscillator does not recognize key)	INFO
	Front door courtesy light switch assembly (for driver side)	INFO
	Front door courtesy light switch assembly (for passenger side)	INFO
	Wire harness or connector	-
	Main body ECU (instrument panel junction block)	-
Key Lock-in Prevention Function does not Work Properly*2	Front door courtesy light switch assembly (for driver side)	INFO
	Front door courtesy light switch assembly (for passenger side)	INFO
	Unlock warning switch assembly	INFO
	Wire harness or connector	-
	Main body ECU (instrument panel junction block)	-

Last Modified: 3-10-2010	6.4 J	**From:** 200901
Model Year: 2010	**Model:** Corolla	**Doc ID:** RM000001Y7O01AX
Title: DOOR LOCK: POWER DOOR LOCK CONTROL SYSTEM: Key Lock-in Prevention Function does not Work Properly (2010 Corolla)		

Key Lock-in Prevention Function does not Work Properly

DESCRIPTION

When the key is in the ignition key cylinder or the door courtesy switch ON signal is output to the main body ECU (instrument panel junction block), performing the door lock operation with the lock switch does not lock the door.

WIRING DIAGRAM

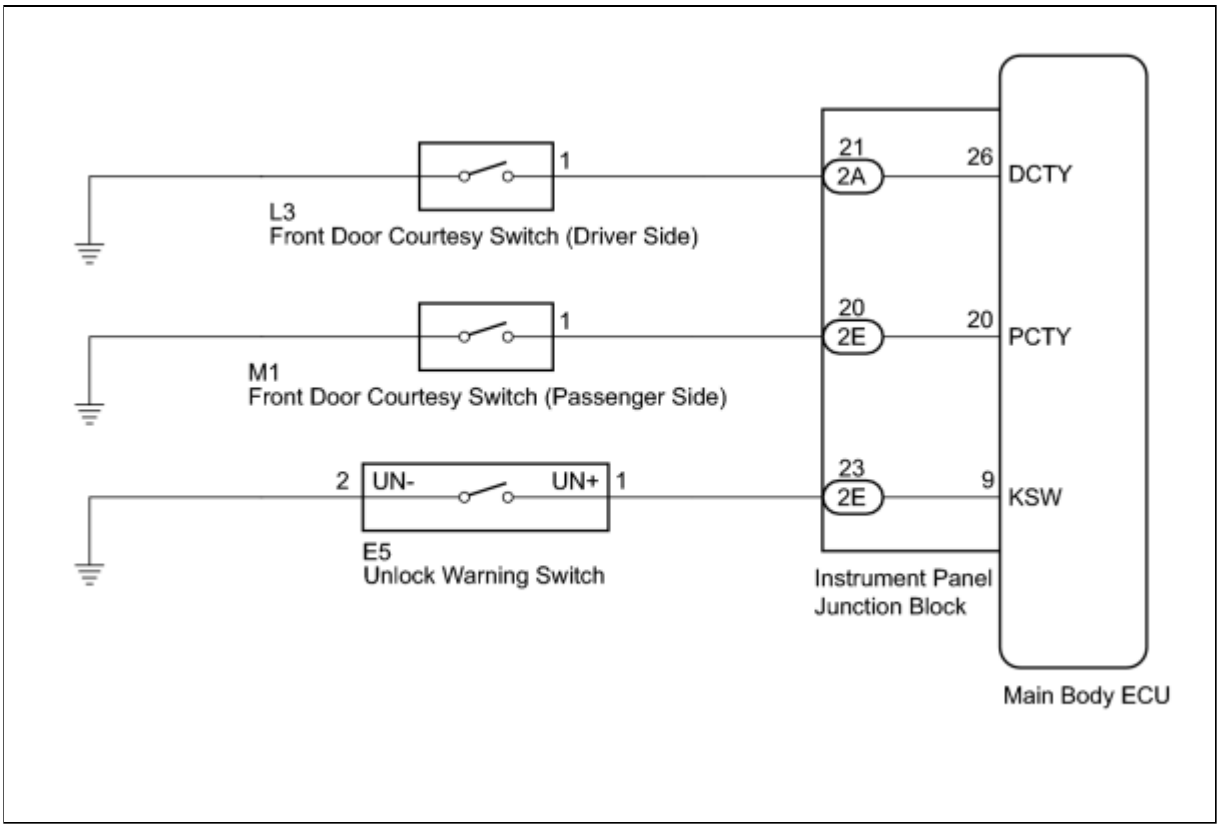

INSPECTION PROCEDURE

PROCEDURE

1.	**READ VALUE USING TECHSTREAM (UNLOCK WARNING SWITCH AND COURTESY**

	SWITCHES)

(a) Connect the Techstream

(b) Turn the ignition switch to ON.

(c) Turn the Techstream on.

(d) Enter the following menus: Body Electrical / Main Body / Data List.

(e) Read the Data List according to the display on the Techstream.

Main Body

TESTER DISPLAY	MEASUREMENT ITEM/RANGE	NORMAL CONDITION	DIAGNOSTIC NOTE
Key Unlock Warning SW	Unlock warning switch signal / ON or OFF	ON: Key is in ignition key cylinder OFF: No key is in ignition key cylinder	-
D Door Courtesy SW	Driver side door courtesy light switch signal / ON or OFF	ON: Driver side door is open OFF: Driver side door is closed	-
P Door Courtesy SW	Passenger side door courtesy light switch signal / ON or OFF	ON: Passenger side door is open OFF: Passenger side door is closed	-

OK:

The Techstream indicates ON or OFF according to the switch operation as shown in the table above.

Result:

RESULT	PROCEED TO
OK	A
NG (Unlock Warning Switch)	B
NG (Front Door Courtesy Light Switch (Driver Side))	C
NG (Front Door Courtesy Light Switch (Passenger Side))	D

D ▶ **INSPECT FRONT DOOR COURTESY LIGHT SWITCH ASSEMBLY (PASSENGER SIDE)**

C ▶ **INSPECT FRONT DOOR COURTESY LIGHT SWITCH ASSEMBLY (DRIVER SIDE)**

B ▶ INSPECT UNLOCK WARNING SWITCH ASSEMBLY

A ▶ REPLACE MAIN BODY ECU (INSTRUMENT PANEL JUNCTION BLOCK)

2.	**INSPECT UNLOCK WARNING SWITCH ASSEMBLY**

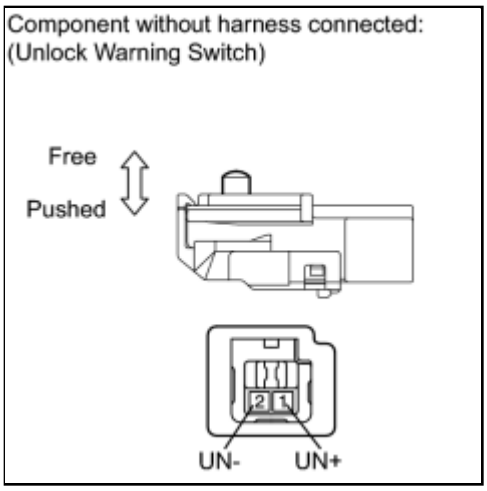

(a) Remove the unlock warning switch INFO .

(b) Measure the resistance according to the value(s) in the table below.

Standard Resistance:

TESTER CONNECTION	SWITCH CONDITION	SPECIFIED CONDITION
1 (UN+) - 2 (UN-)	Pushed	10 kΩ or higher
1 (UN+) - 2 (UN-)	Not pushed	Below 1 Ω

NG ▶ REPLACE UNLOCK WARNING SWITCH ASSEMBLY

OK ▼

3.	**CHECK HARNESS AND CONNECTOR (UNLOCK WARNING SWITCH - JUNCTION BLOCK)**

(a) Disconnect the 2E junction block connector.

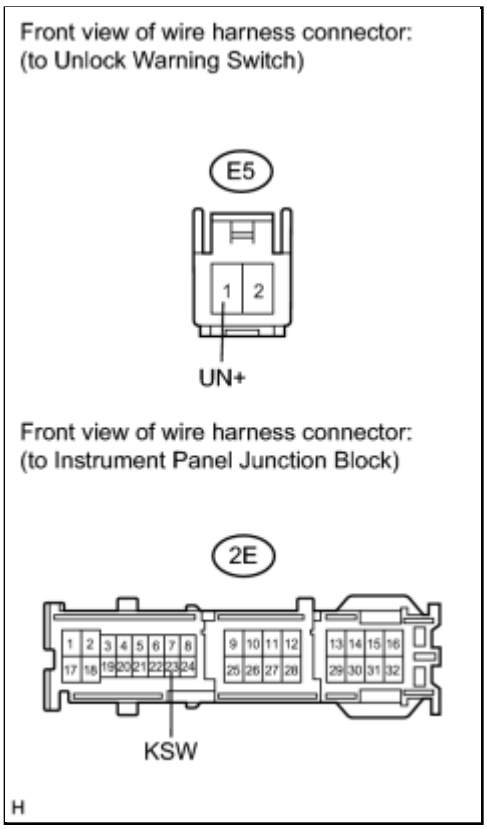

(b) Measure the resistance according to the value(s) in the table below.

Standard Resistance:

TESTER CONNECTION	CONDITION	SPECIFIED CONDITION
E5-1 (UN+) - 2E-23 (KSW)	Always	Below 1 Ω
E5-1 (UN+) - Body ground	Always	10 kΩ or higher

NG ▶ **REPAIR OR REPLACE HARNESS OR CONNECTOR**

OK ▼

4.	**CHECK HARNESS AND CONNECTOR (UNLOCK WARNING SWITCH - BODY GROUND)**

(a) Measure the resistance according to the value(s) in the table below.

Standard Resistance:

Front view of wire harness connector:
(to Unlock Warning Switch)

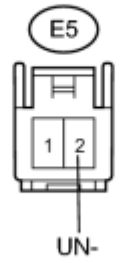

H

TESTER CONNECTION	CONDITION	SPECIFIED CONDITION
E5-2 (UN-) - Body ground	Always	Below 1 Ω

NG ▶ **REPAIR OR REPLACE HARNESS OR CONNECTOR**

OK ▶ **REPLACE MAIN BODY ECU (INSTRUMENT PANEL JUNCTION BLOCK)**

5.	**INSPECT FRONT DOOR COURTESY LIGHT SWITCH ASSEMBLY (DRIVER SIDE)**

Component without harness connected:
(Front Door Courtesy Light Switch (Driver Side))

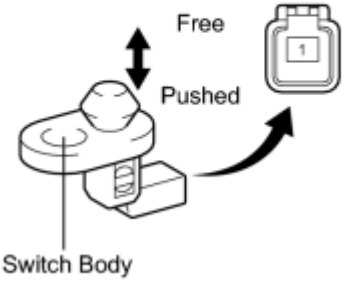

H

(a) Remove the front door courtesy light switch (driver side) INFO .

(b) Measure the resistance according to the value(s) in the table below.

Standard Resistance:

TESTER CONNECTION	SWITCH CONDITION	SPECIFIED CONDITION
1 - Switch ground	Not pushed (ON)	Below 1 Ω
1 - Switch ground	Pushed (OFF)	10 kΩ or higher

NG ▶ **REPLACE FRONT DOOR COURTESY LIGHT SWITCH ASSEMBLY (DRIVER SIDE)**

OK

6.	**CHECK HARNESS AND CONNECTOR (FRONT DOOR COURTESY LIGHT SWITCH - JUNCTION BLOCK)**

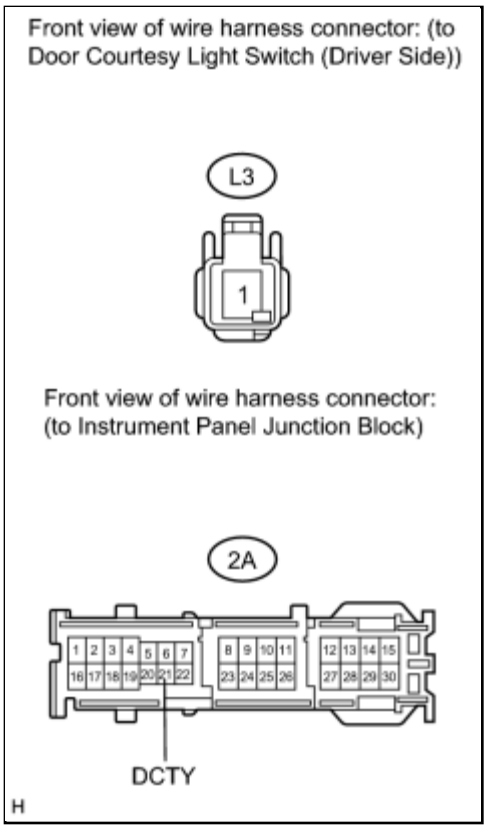

(a) Disconnect the 2A junction block connector.

(b) Measure the resistance according to the value(s) in the table below.

Standard Resistance:

TESTER CONNECTION	CONDITION	SPECIFIED CONDITION
L3-1 - 2A-21 (DCTY)	Always	Below 1 Ω
L3-1 - Body ground	Always	10 kΩ or higher

NG ▶ **REPAIR OR REPLACE HARNESS OR CONNECTOR**

OK ▶ **REPLACE MAIN BODY ECU (INSTRUMENT PANEL JUNCTION BLOCK)**

7.	**INSPECT FRONT DOOR COURTESY LIGHT SWITCH ASSEMBLY (PASSENGER SIDE)**

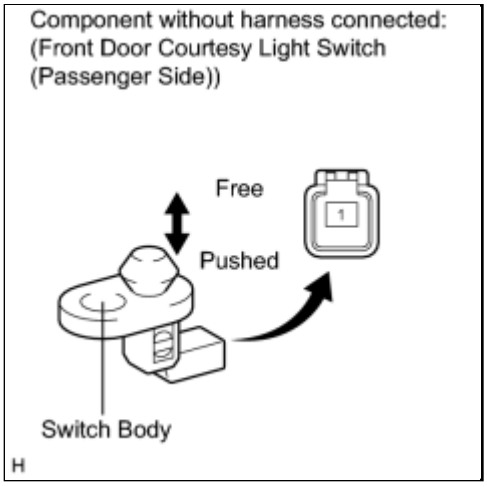

(a) Remove the front door courtesy light switch (passenger side) INFO .

(b) Measure the resistance according to the value(s) in the table below.

Standard Resistance:

TESTER CONNECTION	SWITCH CONDITION	SPECIFIED CONDITION
1 - Switch ground	Not pushed (ON)	Below 1 Ω
1 - Switch ground	Pushed (OFF)	10 kΩ or higher

NG ▶ **REPLACE FRONT DOOR COURTESY LIGHT SWITCH ASSEMBLY (PASSENGER SIDE)**

OK ▼

8.	**CHECK HARNESS AND CONNECTOR (FRONT DOOR COURTESY LIGHT SWITCH - JUNCTION BLOCK)**

(a) Disconnect the 2E junction block connector.

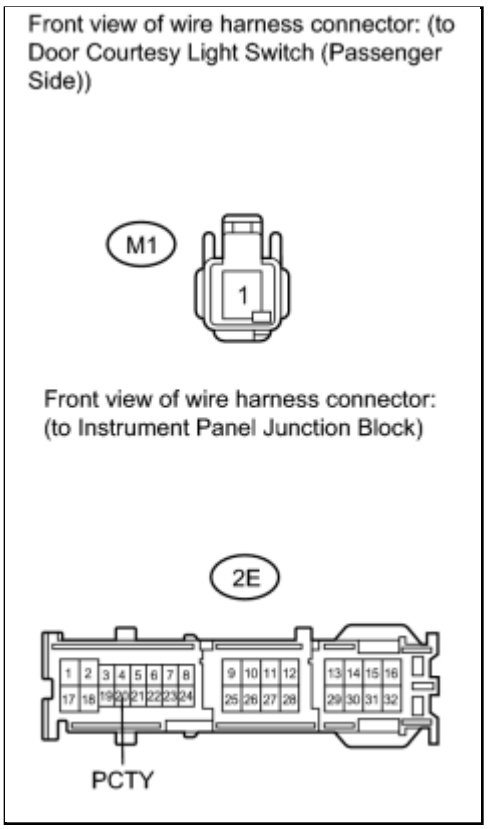

(b) Measure the resistance according to the value(s) in the table below.

Standard Resistance:

TESTER CONNECTION	CONDITION	SPECIFIED CONDITION
M1-1 - 2E-20 (PCTY)	Always	Below 1 Ω
M1-1 - Body ground	Always	10 kΩ or higher

NG ▶ **REPAIR OR REPLACE HARNESS OR CONNECTOR**

OK ▶ **REPLACE MAIN BODY ECU (INSTRUMENT PANEL JUNCTION BLOCK)**

Last Modified: 3-10-2010	6.4 U	**From:** 200901
Model Year: 2010	**Model:** Corolla	**Doc ID:** RM000000TNZ03NX
Title: DOOR LOCK: POWER DOOR LOCK CONTROL SYSTEM: DATA LIST / ACTIVE TEST (2010 Corolla)		

DATA LIST / ACTIVE TEST

1. READ DATA LIST

HINT:

Using the Techstream to read the Data List allows the values or states of switches, sensors, actuators and other items to be read without removing any parts. This non-intrusive inspection can be very useful because intermittent conditions or signals may be discovered before parts or wiring is disturbed. Reading the Data List information early in troubleshooting is one way to save diagnostic time.

(a) Connect the Techstream to the DLC3.

(b) Turn the ignition switch to ON.

(c) Turn the Techstream on.

(d) Enter the following menus: Body Electrical / Main Body / Data List.

(e) Read the Data List according to the display on the Techstream.

Main Body

TESTER DISPLAY	MEASUREMENT ITEM/RANGE	NORMAL CONDITION	DIAGNOSTIC NOTE
Key Unlock Warning SW*1	Unlock warning switch signal/ON or OFF	ON: Key is in ignition key cylinder OFF: No key is in ignition key cylinder	-
D Door Courtesy SW	Driver side door courtesy light switch signal/ON or OFF	ON: Driver side door is OPEN OFF: Driver side door is CLOSED	-
P Door Courtesy SW	Passenger side door courtesy light switch signal/ON or OFF	ON: Passenger side door is OPEN OFF: Passenger side door is CLOSED	-
RR Door Courtesy SW	Rear right door courtesy light switch signal/ON or OFF	ON: Rear right door is OPEN OFF: Rear right door is CLOSED	-
RL Door Courtesy SW	Rear left door courtesy light switch signal/ON or OFF	ON: Rear left door is OPEN OFF: Rear left door is CLOSED	-

TESTER DISPLAY	MEASUREMENT ITEM/RANGE	NORMAL CONDITION	DIAGNOSTIC NOTE
D-Door Lock Pos SW	Driver side door lock position switch signal/ON or OFF	ON: Driver side door is unlocked OFF: Driver side door is locked	-
P-Door Lock Pos SW	Front passenger side door lock position switch signal/ON or OFF	ON: Front passenger side door is unlocked OFF: Front passenger side door is locked	-
Door Lock SW-Lock	Door control switch lock signal/ON or OFF	ON: Door control switch is pushed to lock position OFF: Door control switch is not pushed to lock position	-
Door Lock SW-Unlock	Door control switch unlock signal/ON or OFF	ON: Door control switch is pushed to unlock position OFF: Door control switch is not pushed to unlock position	-
Door Key SW-Lock	Front door lock/unlock switch lock signal (key-linked lock switch)/ON or OFF	ON: Front door key cylinder is turned to lock position OFF: Front door key cylinder is turned to unlock position	-
Door Key SW-Unlock*2	Passenger door lock/unlock switch unlock signal (key-linked unlock switch)/ON or OFF	ON: Passenger door key cylinder is turned to unlock position OFF: Passenger door key cylinder is turned to lock position	-
D-Door Key SW-UL	Driver door lock/unlock switch unlock signal (key-linked unlock switch)/ON or OFF	ON: Driver side door key cylinder is turned to unlock position OFF: Driver side door key cylinder is turned to lock position	-
Luggage Courtesy SW	Luggage courtesy light switch signal/ON or OFF	ON: Luggage door is OPEN OFF: Luggage door is CLOSED	-

TESTER DISPLAY	MEASUREMENT ITEM/RANGE	NORMAL CONDITION	DIAGNOSTIC NOTE
Unlock Key Twice	Key-linked 2-step unlock function/ON or OFF	Customized value is displayed	-
Auto Lock	Speed-sensitive automatic door lock function/ON or OFF	Customized value is displayed	-
Auto Lock/Shift	Shift-linked automatic door lock function/ON or OFF	Customized value is displayed	-
Auto Unlock/Shift	Shift-linked automatic door unlock function/ON or OFF	Customized value is displayed	-
All Unlock/Open-Close	Driver door-linked automatic door unlock function/ON or OFF	Customized value is displayed	-

- *1: w/o Smart Key System
- *2: w/o Wireless Door Lock Control System

2. PERFORM ACTIVE TEST

HINT:

Using the Techstream to perform Active Tests allows relays, VSVs, actuators and other items to be operated without removing any parts. This non-intrusive functional inspection can be very useful because intermittent operation may be discovered before parts or wiring is disturbed. Performing Active Tests early in troubleshooting is one way to save diagnostic time. Data List information can be displayed while performing Active Tests.

(a) Connect the Techstream to the DLC3.

(b) Turn the ignition switch to ON.

(c) Turn the Techstream on.

(d) Enter the following menus: Body Electrical / Main Body / Active Test.

(e) Perform the Active Test according to the display on the Techstream.

Main Body

TESTER DISPLAY	TEST PART	CONTROL RANGE	DIAGNOSTIC NOTE
Door Lock	Door lock motor	LOCK/UNLOCK	-
D-Door Unlock	Driver side door lock motor	ON/OFF	-

Last Modified: 3-10-2010	6.4 D	**From:** 200901
Model Year: 2010	**Model:** Corolla	**Doc ID:** RM000000PY9045X
Title: DOOR LOCK: POWER DOOR LOCK CONTROL SYSTEM: DIAGNOSIS SYSTEM (2010 Corolla)		

DIAGNOSIS SYSTEM

1. CHECK DLC3

(a) Check the DLC3 INFO .

2. INSPECT BATTERY VOLTAGE

(a) Measure the battery voltage.

Standard voltage:
11 to 14 V

If the voltage is below 11 V, recharge or replace the battery before proceeding to the next step.

Last Modified: 3-10-2010	6.4 K	**From:** 200901
Model Year: 2010	**Model:** Corolla	**Doc ID:** RM000002Y9Y00LX
Title: DOOR LOCK: REAR DOOR LOCK: COMPONENTS (2010 Corolla)		

COMPONENTS

ILLUSTRATION

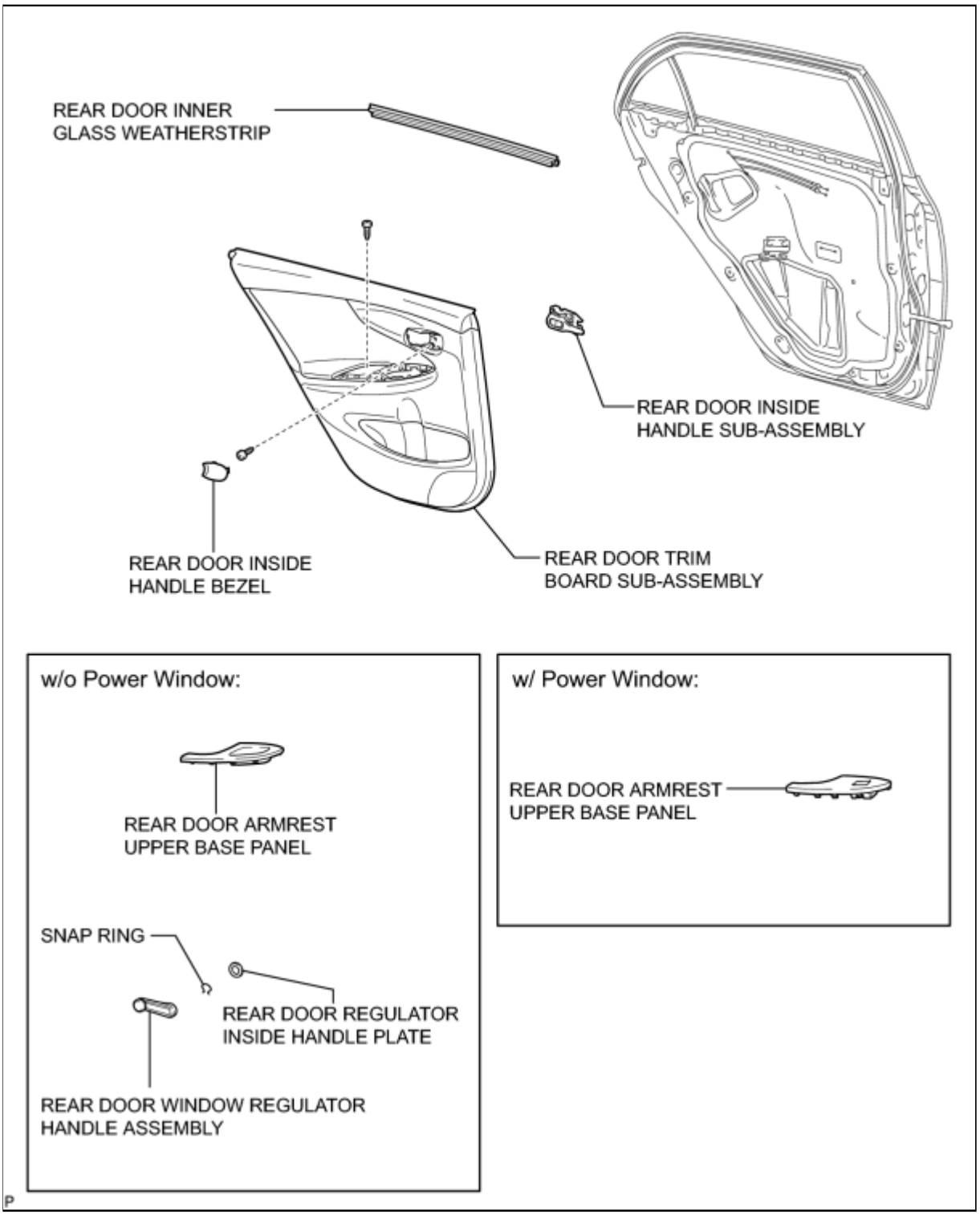

ILLUSTRATION

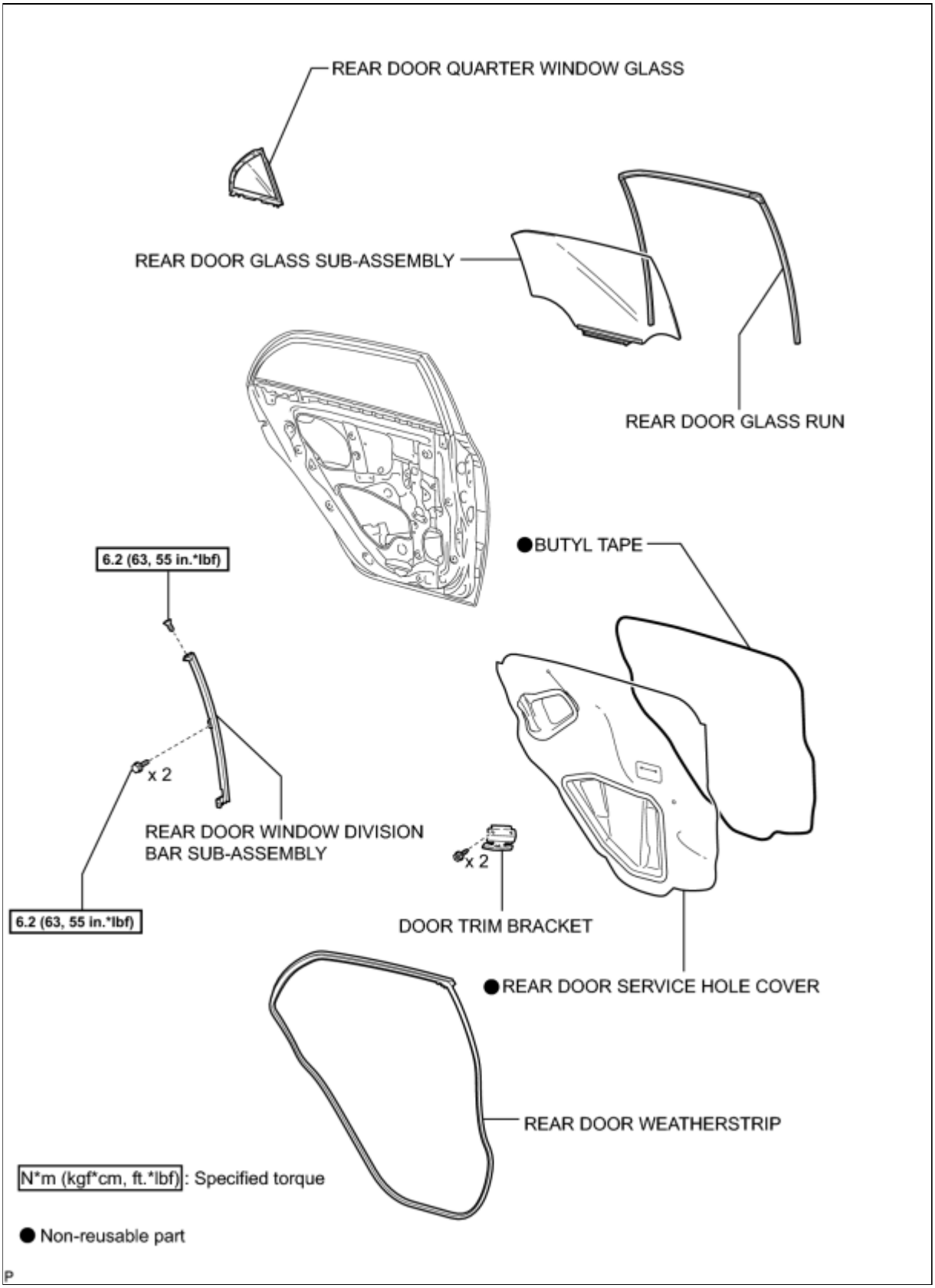

ILLUSTRATION

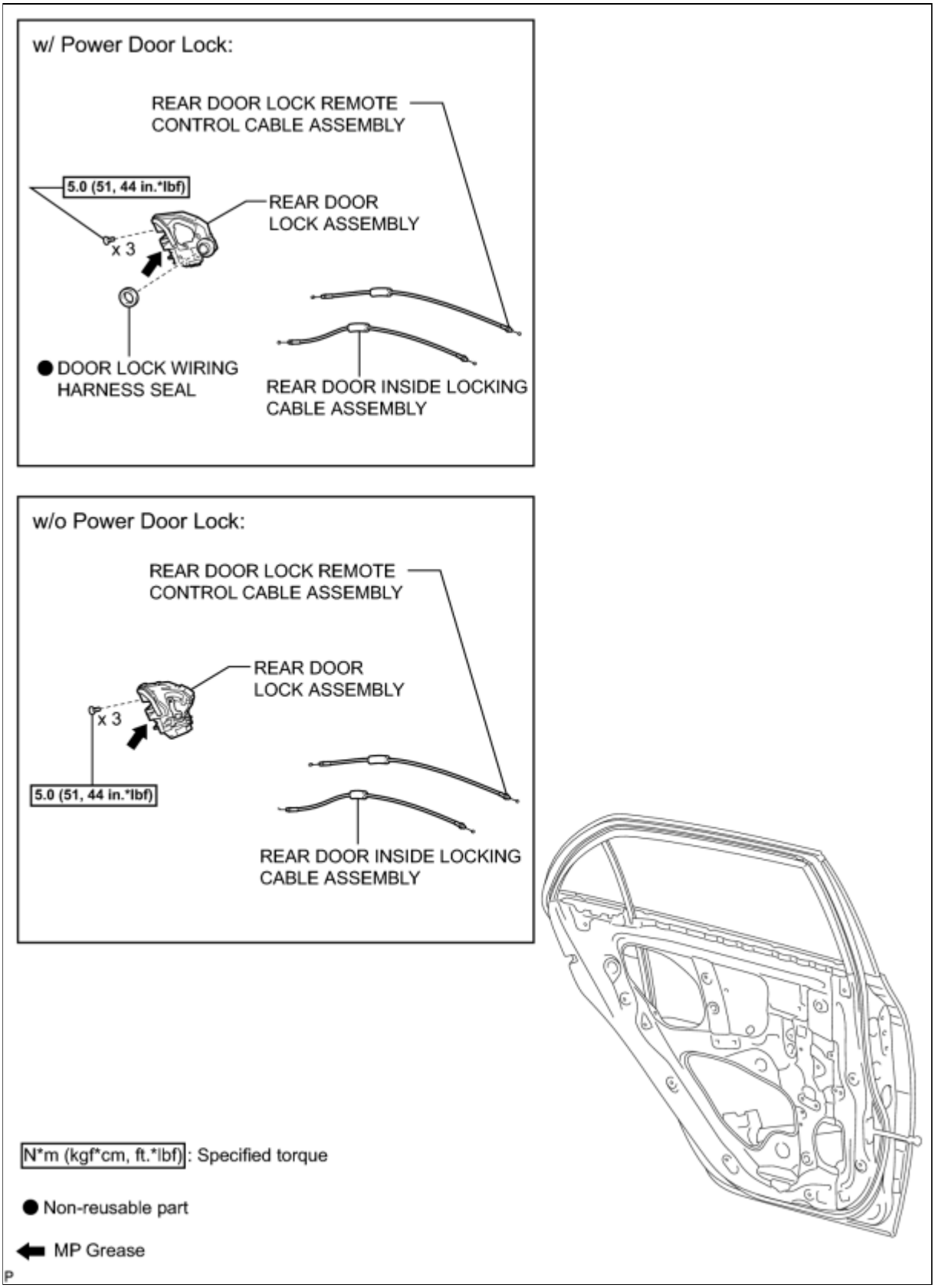

Last Modified: 3-10-2010	6.4 A	**From:** 200901
Model Year: 2010	**Model:** Corolla	**Doc ID:** RM000002Y9Z00NX
Title: DOOR LOCK: REAR DOOR LOCK: REMOVAL (2010 Corolla)		

REMOVAL

1. REMOVE REAR DOOR WINDOW REGULATOR HANDLE ASSEMBLY (w/o Power Window) INFO

2. REMOVE REAR DOOR INSIDE HANDLE BEZEL INFO

3. REMOVE REAR DOOR ARMREST UPPER BASE PANEL (w/o Power Window) INFO

4. REMOVE REAR DOOR ARMREST UPPER BASE PANEL (w/ Power Window) INFO

5. REMOVE REAR DOOR TRIM BOARD SUB-ASSEMBLY INFO

6. REMOVE REAR DOOR INSIDE HANDLE SUB-ASSEMBLY INFO

7. REMOVE REAR DOOR INNER GLASS WEATHERSTRIP INFO

8. REMOVE DOOR TRIM BRACKET INFO

9. REMOVE REAR DOOR SERVICE HOLE COVER INFO

10. REMOVE REAR DOOR WEATHERSTRIP INFO

11. REMOVE REAR DOOR GLASS RUN INFO

12. REMOVE REAR DOOR WINDOW DIVISION BAR SUB-ASSEMBLY INFO

13. REMOVE REAR DOOR QUARTER WINDOW GLASS INFO

14. REMOVE REAR DOOR GLASS SUB-ASSEMBLY INFO

15. REMOVE REAR DOOR LOCK ASSEMBLY (w/o Power Door Lock)

(a) Using a "TORX" socket wrench (T30), remove the 3 screws.

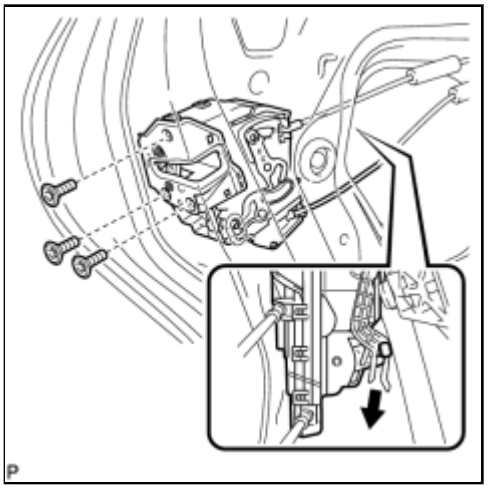

(b) Move the rear door lock assembly downward and pull the release plate out of the rear door outside handle frame.

16. REMOVE REAR DOOR LOCK ASSEMBLY (w/ Power Door Lock)

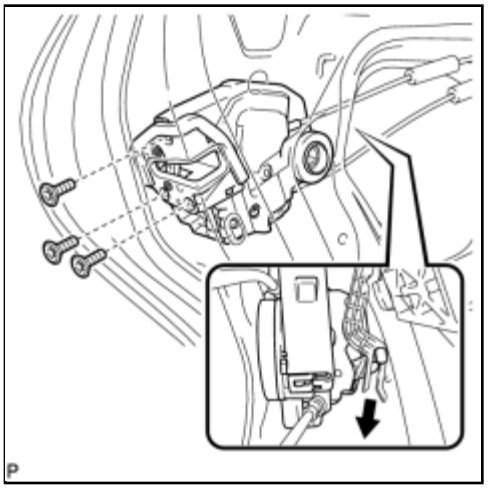

(a) Using a "TORX" socket wrench (T30), remove the 3 screws.

(b) Move the rear door lock assembly downward and pull the release plate out of the rear door outside handle frame.

(c) Remove the door lock wiring harness seal from the rear door lock assembly.

17. REMOVE REAR DOOR LOCK REMOTE CONTROL CABLE ASSEMBLY (w/o Power Door Lock)

(a) Remove the rear door lock remote control cable assembly.

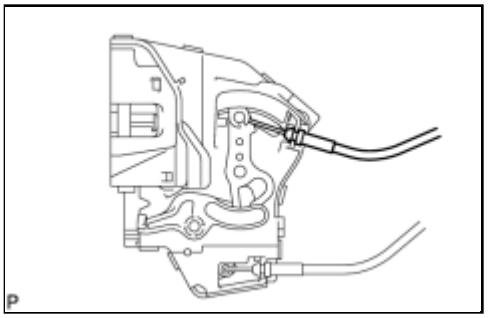

18. REMOVE REAR DOOR LOCK REMOTE CONTROL CABLE ASSEMBLY (w/ Power Door Lock)

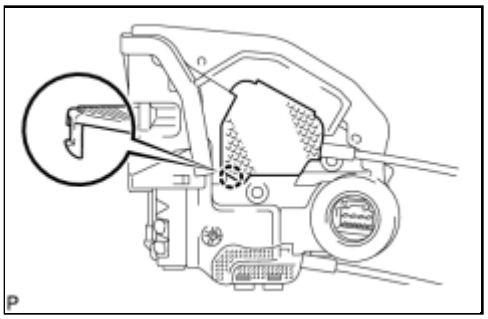

(a) Using a screwdriver, disengage the claw.

HINT:

Tape the screwdriver tip before use.

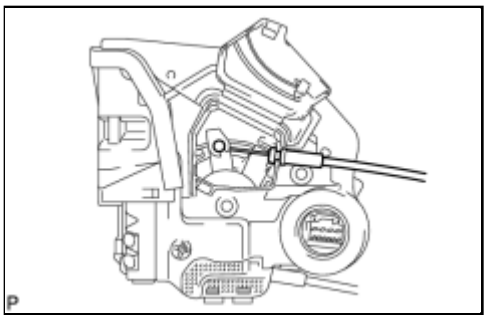

(b) Remove the rear door lock remote control cable assembly.

19. REMOVE REAR DOOR INSIDE LOCKING CABLE ASSEMBLY (w/o Power Door Lock)

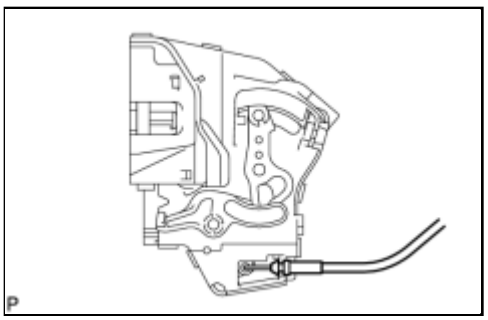

(a) Remove the rear door inside locking cable assembly.

20. REMOVE REAR DOOR INSIDE LOCKING CABLE ASSEMBLY (w/ Power Door Lock)

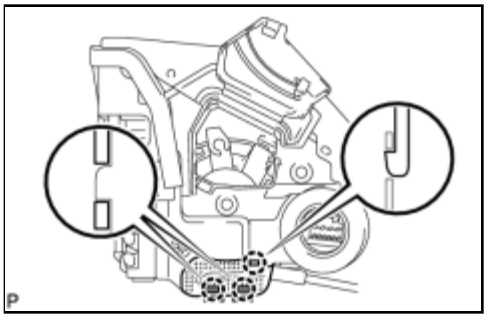

(a) Using a screwdriver, disengage the 3 claws.

HINT:

Tape the screwdriver tip before use.

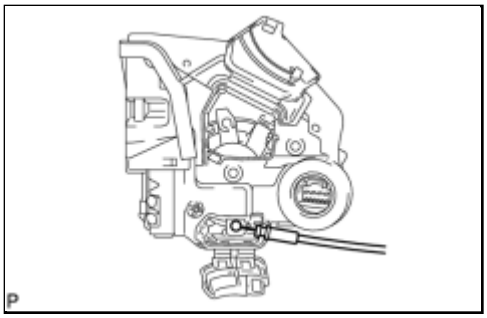

(b) Remove the rear door inside locking cable assembly.

Last Modified: 3-10-2010	6.4 G	**From:** 200901
Model Year: 2010	**Model:** Corolla	**Doc ID:** RM000001P8301AX
Title: DOOR LOCK: REAR DOOR LOCK: INSPECTION (2010 Corolla)		

INSPECTION

1. INSPECT REAR DOOR LOCK ASSEMBLY LH

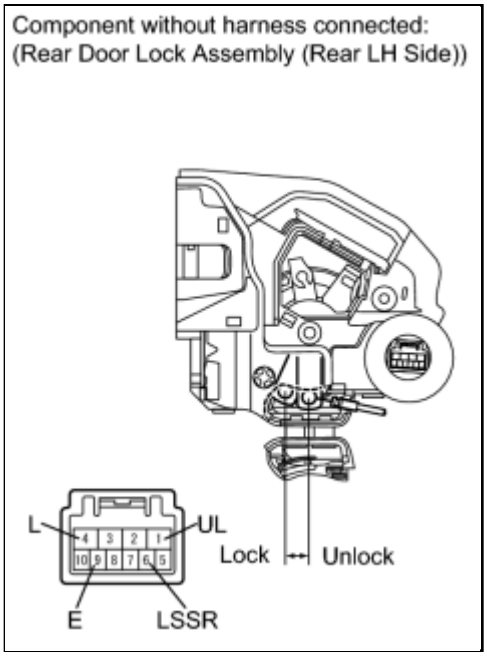

(a) Apply battery voltage to the door lock motor and check the operation of the door lock motor.

OK:

MEASUREMENT CONDITION	SPECIFIED CONDITION
Battery positive (+) → Terminal 4 (L) Battery negative (-) → Terminal 1 (UL)	Lock
Battery positive (+) → Terminal 1 (UL) Battery negative (-) → Terminal 4 (L)	Unlock

If the result is not as specified, replace the door lock assembly.

(b) Measure the resistance of the door lock position switch. (w/ Smart Key System)

Standard resistance:

TESTER CONNECTION	MEASUREMENT CONDITION	DOOR LOCK CONDITION	SPECIFIED CONDITION
6 (LSSR) - 9 (E)	Battery positive (+) → Terminal 4 (L) Battery negative (-) → Terminal 1 (UL)	LOCK	10 kΩ or higher
6 (LSSR) - 9 (E)	Battery positive (+) → Terminal 1 (UL) Battery negative (-) → Terminal 4 (L)	UNLOCK	Below 1 Ω

If the result is not as specified, replace the door lock assembly.

2. INSPECT REAR DOOR LOCK ASSEMBLY RH

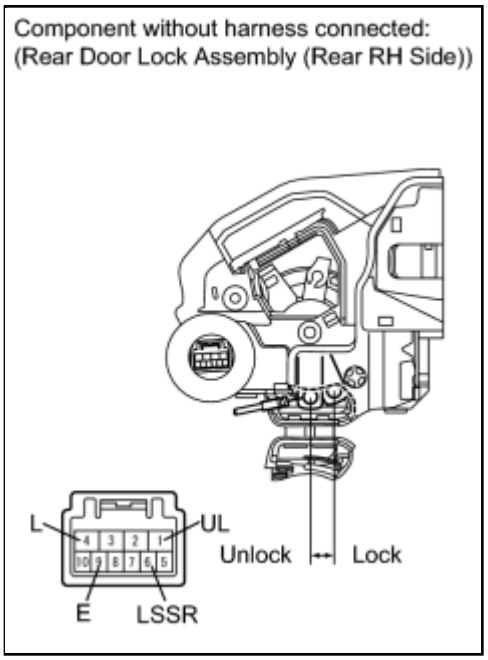

(a) Apply battery voltage to the door lock motor and check the operation of the door lock motor.

OK:

MEASUREMENT CONDITION	SPECIFIED CONDITION
Battery positive (+) → Terminal 4 (L) Battery negative (-) → Terminal 1 (UL)	Lock
Battery positive (+) → Terminal 1 (UL) Battery negative (-) → Terminal 4 (L)	Unlock

If the result is not as specified, replace the door lock assembly.

(b) Measure the resistance of the door lock position switch. (w/ Smart Key System)

Standard resistance:

TESTER CONNECTION	MEASUREMENT CONDITION	DOOR LOCK CONDITION	SPECIFIED CONDITION
6 (LSSR) - 9 (E)	Battery positive (+) → Terminal 4 (L) Battery negative (-) → Terminal 1 (UL)	LOCK	10 kΩ or higher
6 (LSSR) - 9 (E)	Battery positive (+) → Terminal 1 (UL) Battery negative (-) → Terminal 4 (L)	UNLOCK	Below 1 Ω

If the result is not as specified, replace the door lock assembly.

Last Modified: 3-10-2010	6.4 A	**From:** 200901
Model Year: 2010	**Model:** Corolla	**Doc ID:** RM000002Y9X00NX
Title: DOOR LOCK: REAR DOOR LOCK: INSTALLATION (2010 Corolla)		

INSTALLATION

1. INSTALL REAR DOOR INSIDE LOCKING CABLE ASSEMBLY (w/o Power Door Lock)

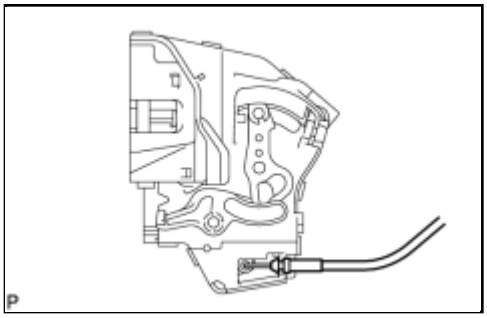

(a) Install the rear door inside locking cable assembly.

2. INSTALL REAR DOOR INSIDE LOCKING CABLE ASSEMBLY (w/ Power Door Lock)

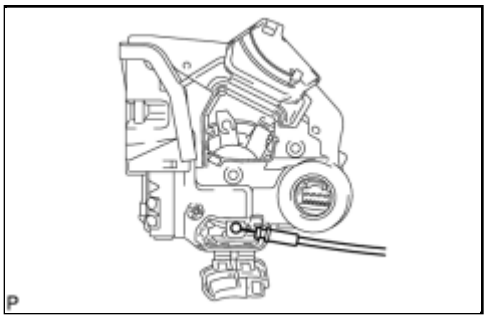

(a) Install the rear door inside locking cable assembly.

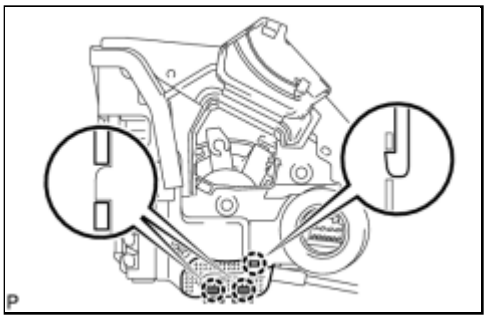

(b) Engage the 3 claws.

3. INSTALL REAR DOOR LOCK REMOTE CONTROL CABLE ASSEMBLY (w/o Power Door Lock)

(a) Install the rear door lock remote control cable assembly.

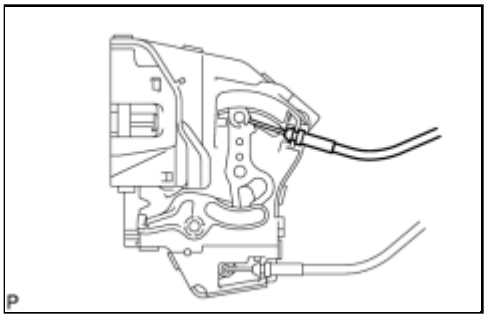

4. INSTALL REAR DOOR LOCK REMOTE CONTROL CABLE ASSEMBLY (w/ Power Door Lock)

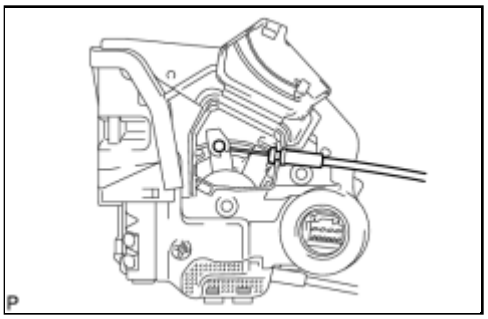

(a) Install the rear door lock remote control cable assembly.

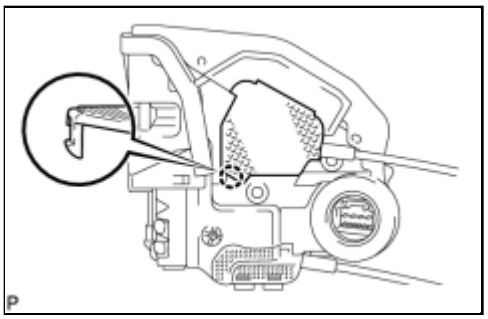

(b) Engage the claw.

5. INSTALL REAR DOOR LOCK ASSEMBLY (w/o Power Door Lock)

(a) Apply MP grease to the sliding parts of the rear door lock assembly.

(b) Insert the rear door lock assembly to the rear door outside handle release plate, and set it to the rear door panel.

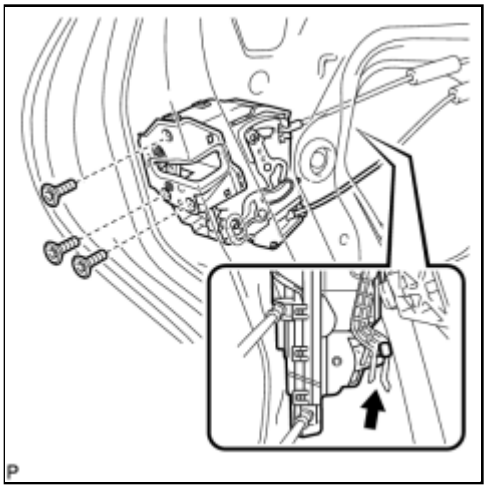

(c) Make sure that the rear door outside handle frame release plate is securely connected to the rear door lock assembly.

(d) Using a "TORX" socket wrench (T30), install the rear door lock assembly with the 3 screws.

Torque: 5.0 N·m (51 kgf·cm, 44in·lbf)

6. INSTALL REAR DOOR LOCK ASSEMBLY (w/ Power Door Lock)

NOTICE:

- When reusing the removed rear door lock assembly, replace the door lock wiring harness seal on the connector with a new one.
- Do not allow grease or dust to adhere to the door lock wiring harness seal surface of the connector.
- Reusing the door lock wiring harness seal or using a damaged door lock wiring harness seal may cause water intrusion to the connection. This may result in a malfunction of the rear door lock assembly.

(a) Apply MP grease to the sliding parts of the rear door lock assembly.

(b) Install a new door lock wiring harness seal to the rear door lock assembly.

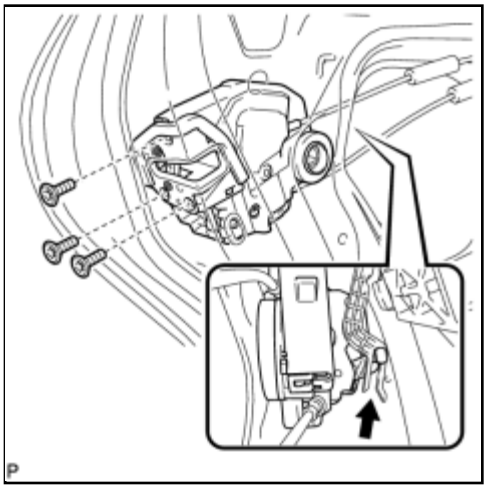

(c) Insert the rear door lock assembly to the rear door outside handle release plate, and set it to the rear door panel.

(d) Make sure that the rear door outside handle frame release plate is securely connected to the rear

door lock assembly.

(e) Using a "TORX" socket wrench (T30), install the rear door lock assembly with the 3 screws.

Torque: 5.0 N·m (51 kgf·cm, 44in·lbf)

(f) Connect the connector.

7. INSTALL REAR DOOR GLASS RUN INFO

8. INSTALL REAR DOOR GLASS SUB-ASSEMBLY INFO

9. INSTALL REAR DOOR QUARTER WINDOW GLASS INFO

10. INSTALL REAR DOOR WINDOW DIVISION BAR SUB-ASSEMBLY INFO

11. INSTALL REAR DOOR WEATHERSTRIP INFO

12. INSTALL REAR DOOR SERVICE HOLE COVER INFO

13. INSTALL DOOR TRIM BRACKET INFO

14. INSTALL REAR DOOR INNER GLASS WEATHERSTRIP INFO

15. INSTALL REAR DOOR INSIDE HANDLE SUB-ASSEMBLY INFO

16. INSTALL REAR DOOR TRIM BOARD SUB-ASSEMBLY INFO

17. INSTALL REAR DOOR ARMREST UPPER BASE PANEL (w/o Power Window) INFO

18. INSTALL REAR DOOR ARMREST UPPER BASE PANEL (w/ Power Window) INFO

19. INSTALL REAR DOOR INSIDE HANDLE BEZEL INFO

20. INSTALL REAR DOOR WINDOW REGULATOR HANDLE ASSEMBLY (w/o Power Window) INFO

Last Modified: 3-10-2010	6.4 A	**From:** 200901
Model Year: 2010	**Model:** Corolla	**Doc ID:** RM000001P7R01QX
Title: DOOR LOCK: TRANSMITTER BATTERY (w/ Smart Key System): REPLACEMENT (2010 Corolla)		

REPLACEMENT

1. REMOVE TRANSMITTER BATTERY

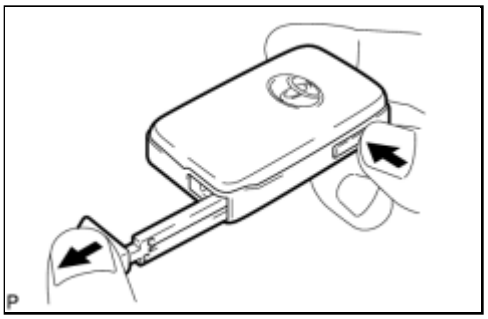

(a) Remove the mechanical key.

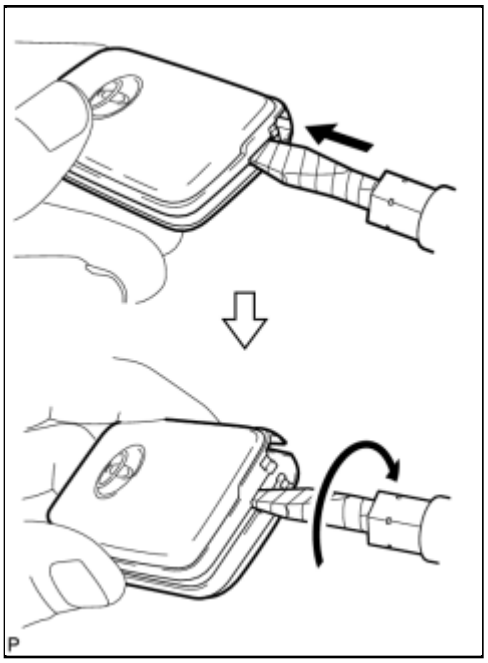

(b) Insert a screwdriver into the gap, and turn the screwdriver to detach the cover.

HINT:

Tape the screwdriver tip before use.

(c) Insert a screwdriver into the gap and gently remove the battery (lithium battery).

NOTICE:

- Do not push the terminals with your finger.
- Do not forcibly pry up the battery (lithium battery) because doing so will deform the terminals.

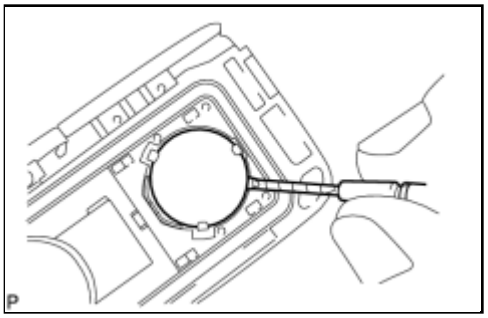

- Do not touch the battery with wet hands. Water may result in corrosion.
- Do not touch or move any components inside the transmitter because handling the components may interfere with proper operation of the transmitter.

2. INSTALL TRANSMITTER BATTERY

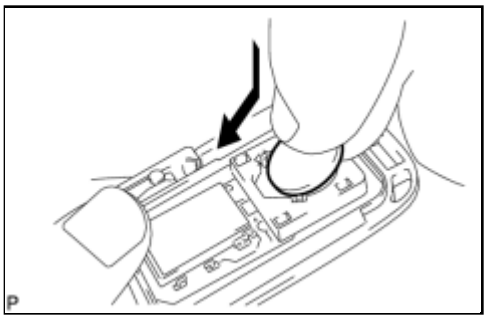

(a) Install a new battery (lithium battery) with the positive (+) side up as shown in the illustration.

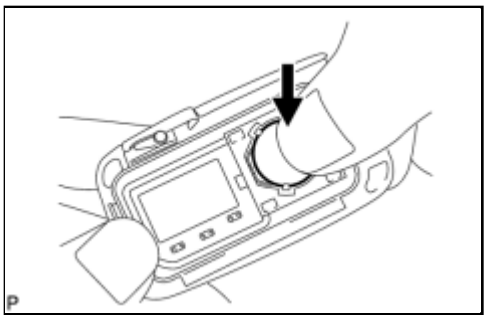

(b) Press down gently on the battery to set it in place.

NOTICE:

- Be sure that the positive and negative sides of the transmitter battery are positioned correctly.
- Be careful not to bend the terminals of the transmitter battery during installation.
- Keep the interior of the transmitter case free of dust, water, and oil.

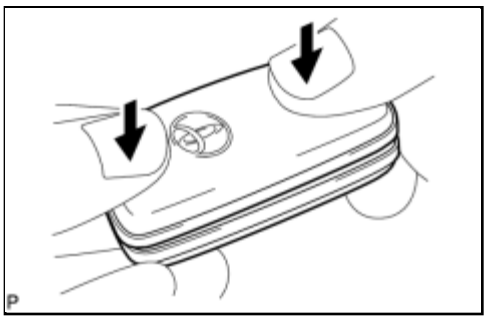

(c) Install the cover by pressing it as shown in the illustration.

(d) Install the mechanical key.

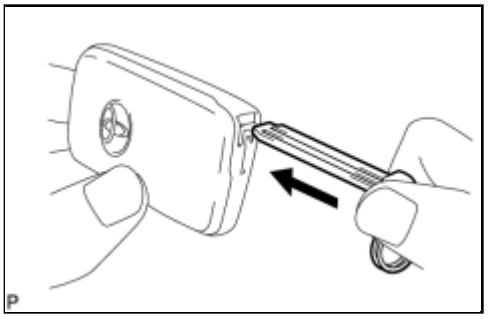

HINT:

After the installation, press one of the transmitter switches and check that the LED illuminates.

Last Modified: 3-10-2010	6.4 A	**From:** 200901
Model Year: 2010	**Model:** Corolla	**Doc ID:** RM000003D3H005X
Title: DOOR LOCK: TRANSMITTER BATTERY (w/o Smart Key System): REPLACEMENT (2010 Corolla)		

REPLACEMENT

1. REMOVE TRANSMITTER HOUSING COVER

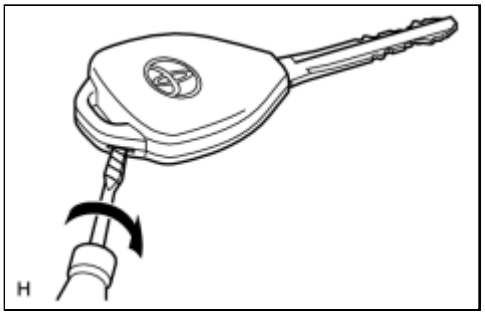

(a) Using a screwdriver with its tip wrapped in protective tape, pry open the transmitter housing cover.

NOTICE:

Do not forcibly pry the cover.

2. REMOVE DOOR CONTROL TRANSMITTER MODULE

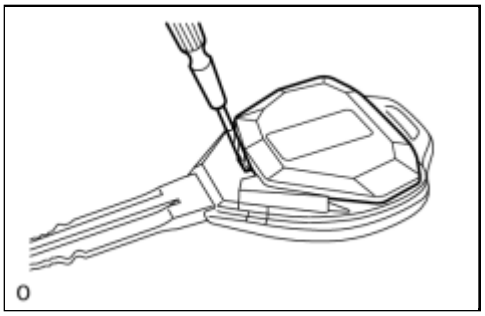

(a) Using a screwdriver with its tip wrapped in protective tape, remove the door control transmitter module from the transmitter housing case.

NOTICE:

Handle each part with care as they are delicate electrical parts.

3. REMOVE TRANSMITTER BATTERY

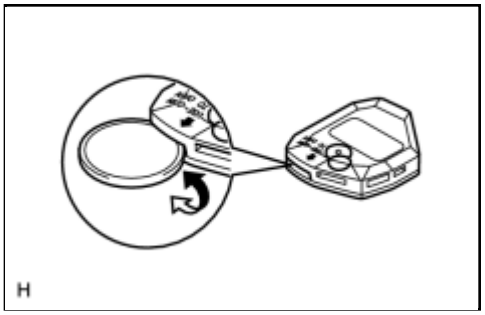

(a) Twist the coin in the direction of the arrow mark in the illustration, and remove the transmitter battery cover.

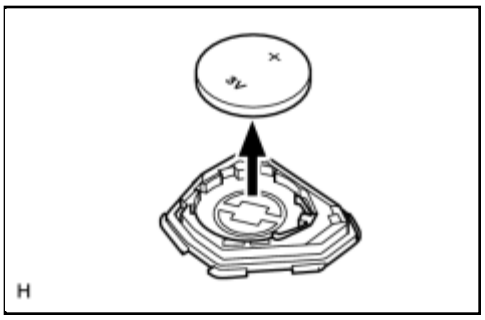

(b) Remove the battery (lithium battery: CR2025).

NOTICE:

- Do not push the terminals with your finger.
- Do not forcibly pry up the battery. The terminals may become damaged.
- Do not touch the battery with wet hands. Water may cause rust.
- Do not touch or move any components inside the transmitter. It may cease to work.

4. INSTALL TRANSMITTER BATTERY

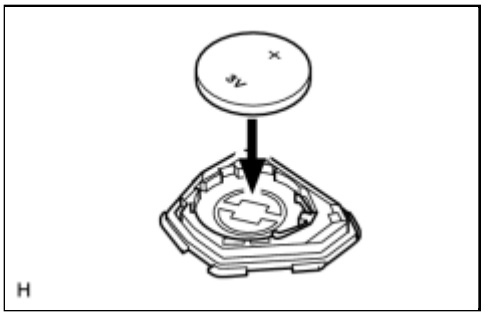

(a) Install a battery (lithium battery: CR2025) with the positive (+) side facing upward, as shown in the illustration.

NOTICE:

- Be careful not to bend the transmitter battery electrode during insertion.
- Keep the transmitter cover interior free of dust and oil.

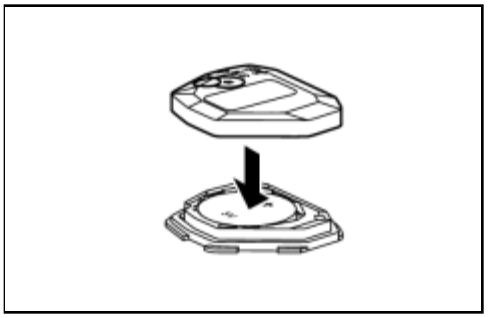

(b) Install the cover.

5. INSTALL DOOR CONTROL TRANSMITTER MODULE

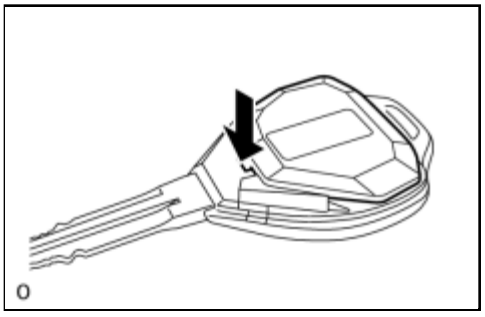

(a) Install the door control transmitter module into the transmitter housing case, and install the transmitter housing cover securely onto the transmitter housing case.

6. INSTALL TRANSMITTER HOUSING COVER

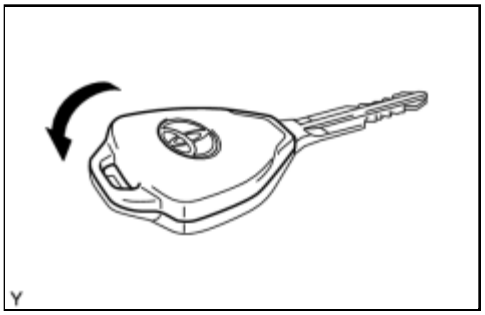

(a) Install the transmitter housing cover to the transmitter housing case.

(b) Check that the transmitter LED illuminates when the switch is pressed.

OK:

Transmitter LED illuminates when switch is pressed.

Last Modified: 3-10-2010	6.4 K	**From:** 200901
Model Year: 2010	**Model:** Corolla	**Doc ID:** RM0000026TT00VX
Title: DOOR LOCK: UNLOCK WARNING SWITCH: COMPONENTS (2010 Corolla)		

COMPONENTS

ILLUSTRATION

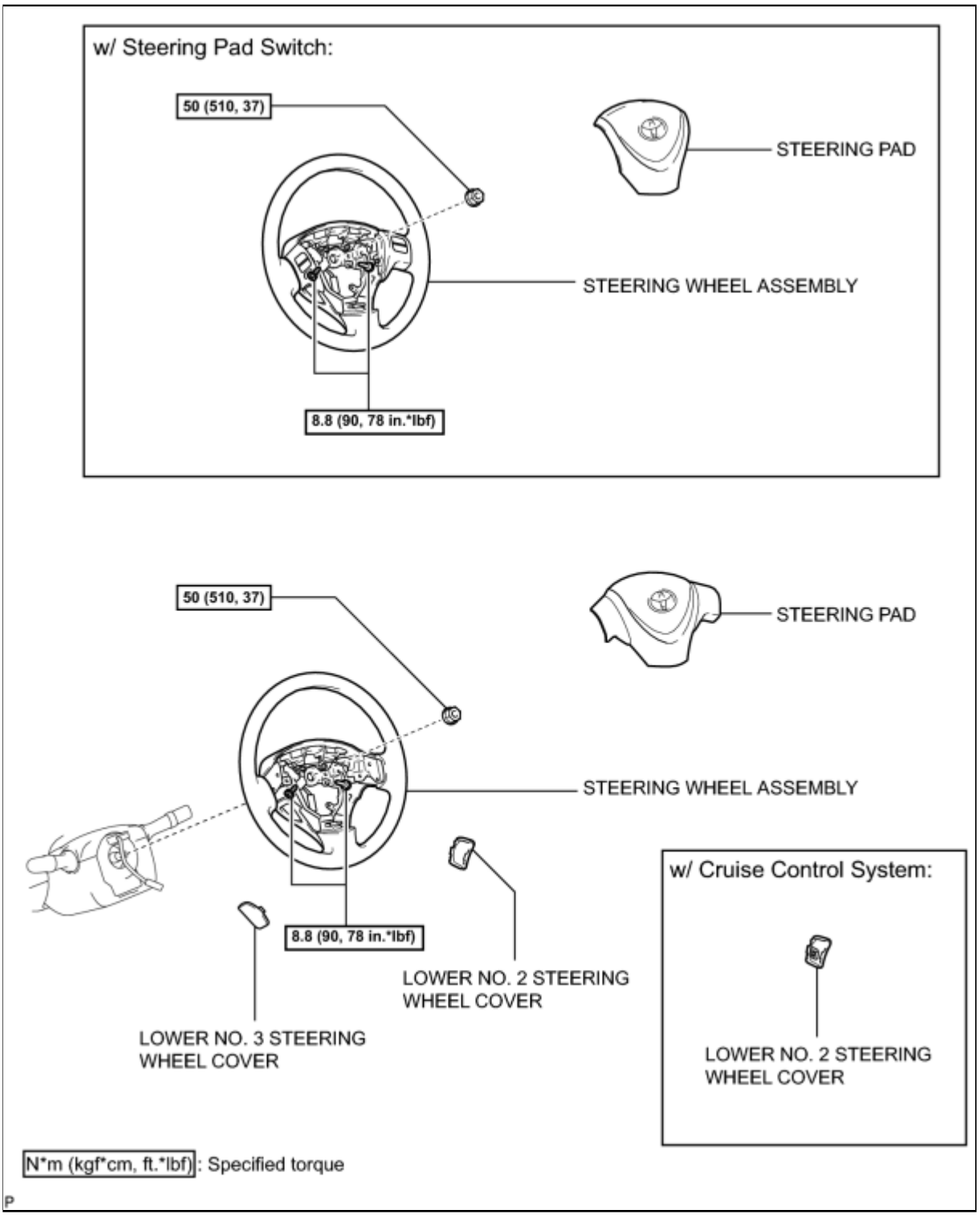

ILLUSTRATION

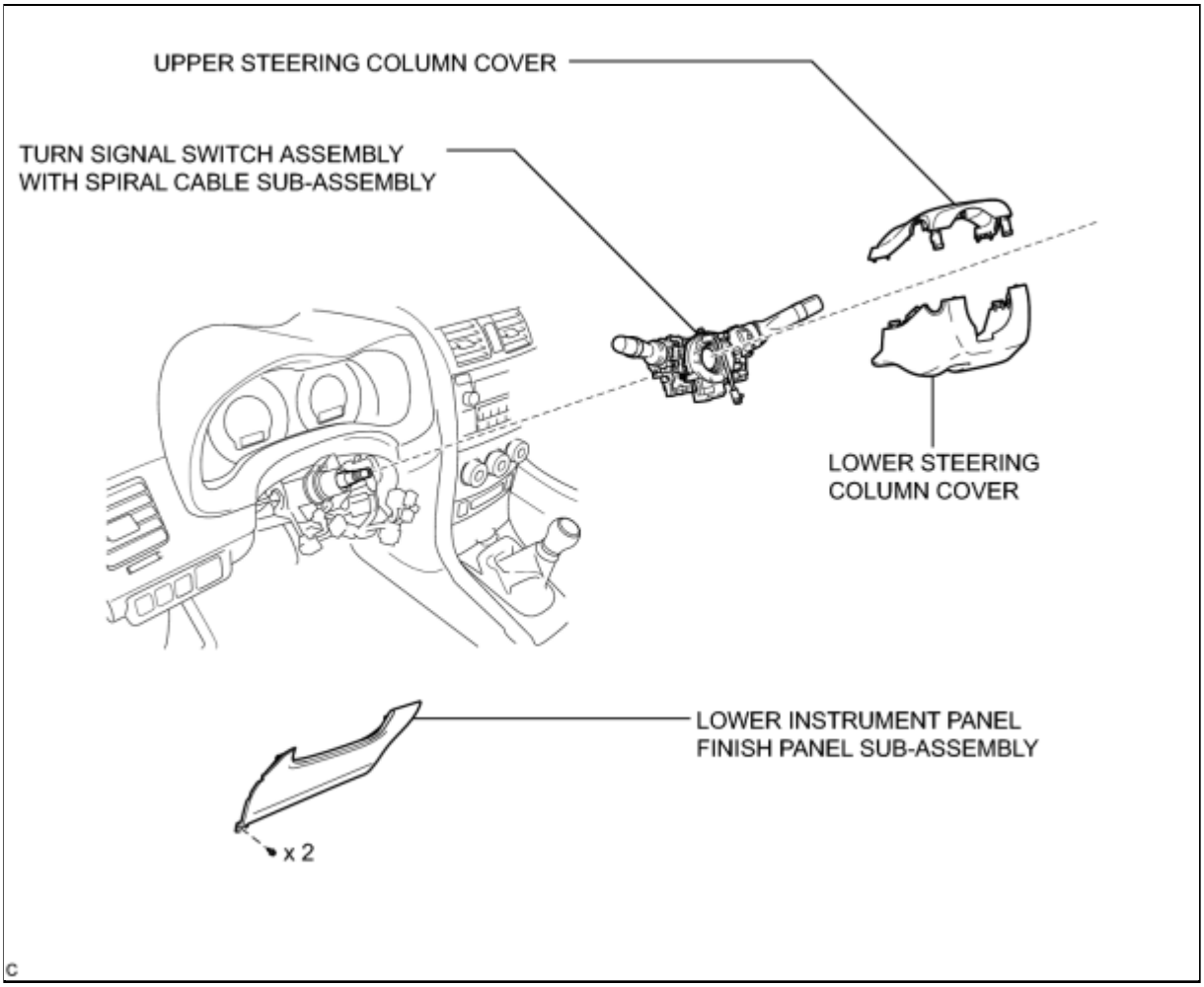

ILLUSTRATION

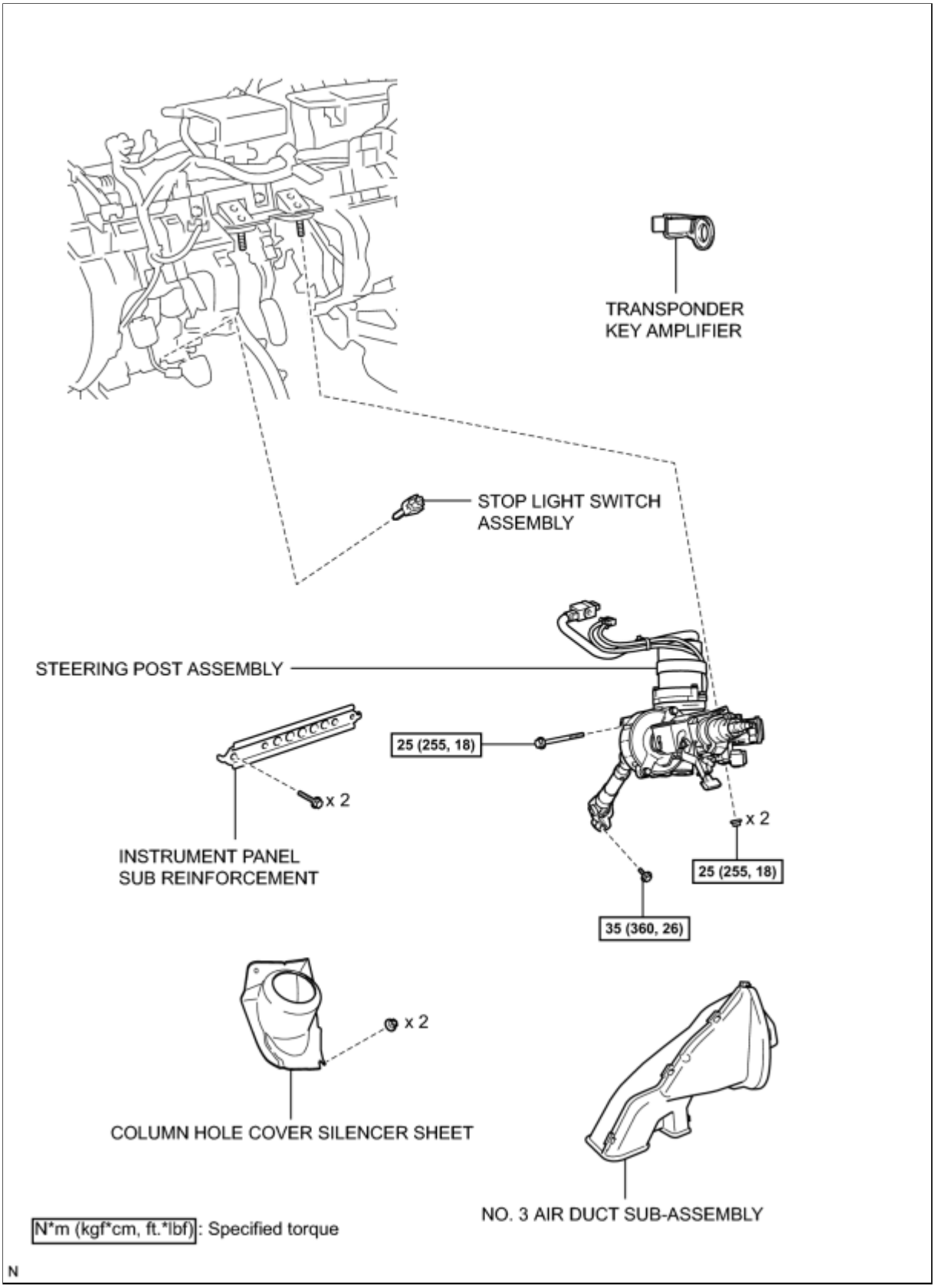

ILLUSTRATION

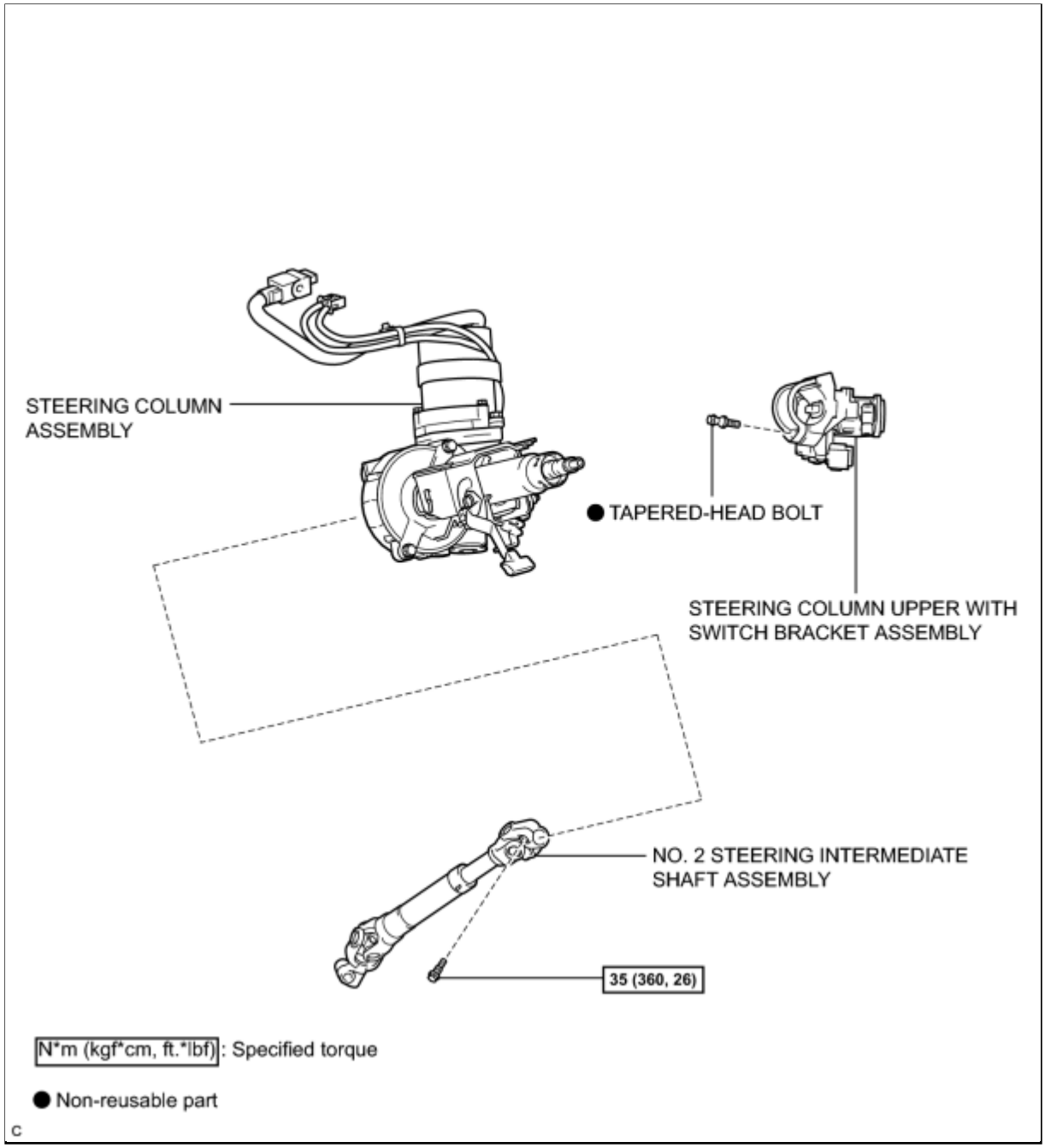

ILLUSTRATION

for Automatic Transaxle:

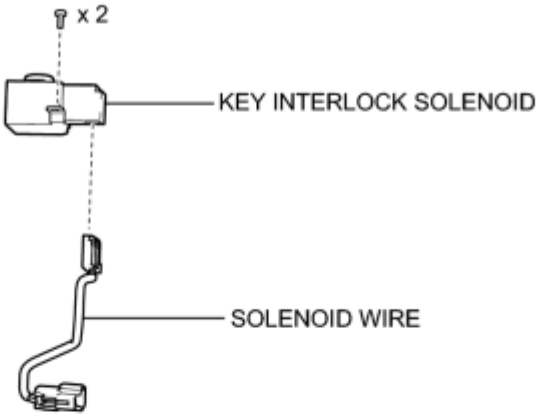

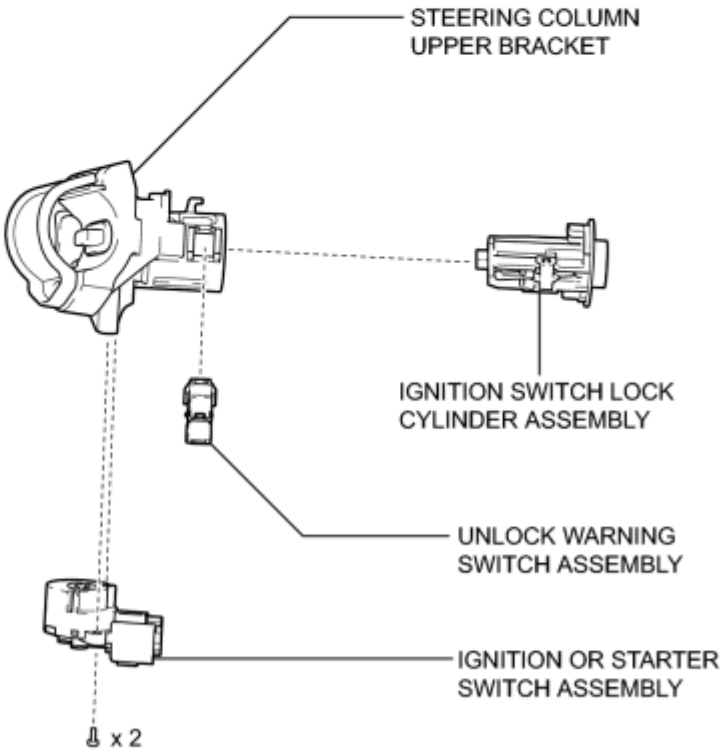

C

Last Modified: 3-10-2010	6.4 A	**From:** 200901
Model Year: 2010	**Model:** Corolla	**Doc ID:** RM0000026TU016X
Title: DOOR LOCK: UNLOCK WARNING SWITCH: REMOVAL (2010 Corolla)		

REMOVAL

CAUTION:

Some of these service operations affect the SRS airbag system. Read the precautionary notices concerning the SRS airbag system before servicing the steering column INFO .

1. TURN FRONT WHEELS TO FACE STRAIGHT AHEAD

2. DISCONNECT CABLE FROM NEGATIVE BATTERY TERMINAL

CAUTION:

Wait at least 90 seconds after disconnecting the cable from the negative (-) battery terminal to prevent airbag and seat belt pretensioner activation.

3. REMOVE LOWER NO. 3 STEERING WHEEL COVER INFO

4. REMOVE LOWER NO. 2 STEERING WHEEL COVER INFO

5. REMOVE STEERING PAD INFO

6. REMOVE STEERING WHEEL ASSEMBLY INFO

7. REMOVE LOWER INSTRUMENT PANEL FINISH PANEL SUB-ASSEMBLY INFO

8. REMOVE LOWER STEERING COLUMN COVER INFO

9. REMOVE UPPER STEERING COLUMN COVER INFO

10. REMOVE TURN SIGNAL SWITCH ASSEMBLY WITH SPIRAL CABLE SUB-ASSEMBLY INFO

11. REMOVE UPPER INSTRUMENT PANEL SUB-ASSEMBLY

HINT:

Refer to the instructions for Removal of the upper instrument panel INFO .

12. REMOVE COLUMN HOLE COVER SILENCER SHEET INFO

13. SEPARATE NO. 2 STEERING INTERMEDIATE SHAFT ASSEMBLY INFO

14. REMOVE INSTRUMENT PANEL SUB REINFORCEMENT INFO

15. REMOVE NO. 3 AIR DUCT SUB-ASSEMBLY INFO

16. REMOVE TRANSPONDER KEY AMPLIFIER INFO

17. REMOVE STOP LIGHT SWITCH ASSEMBLY INFO

18. REMOVE STEERING POST ASSEMBLY (for 2ZR-FE) INFO

19. REMOVE STEERING POST ASSEMBLY (for 2AZ-FE) INFO

20. REMOVE NO. 2 STEERING INTERMEDIATE SHAFT ASSEMBLY INFO

21. REMOVE STEERING COLUMN UPPER WITH SWITCH BRACKET ASSEMBLY INFO

22. REMOVE IGNITION OR STARTER SWITCH ASSEMBLY (for Manual Transaxle) INFO

23. REMOVE IGNITION OR STARTER SWITCH ASSEMBLY (for Automatic Transaxle) INFO

24. REMOVE KEY INTERLOCK SOLENOID (for Automatic Transaxle) INFO

25. REMOVE SOLENOID WIRE (for Automatic Transaxle) INFO

26. REMOVE IGNITION SWITCH LOCK CYLINDER ASSEMBLY INFO

27. REMOVE UNLOCK WARNING SWITCH ASSEMBLY

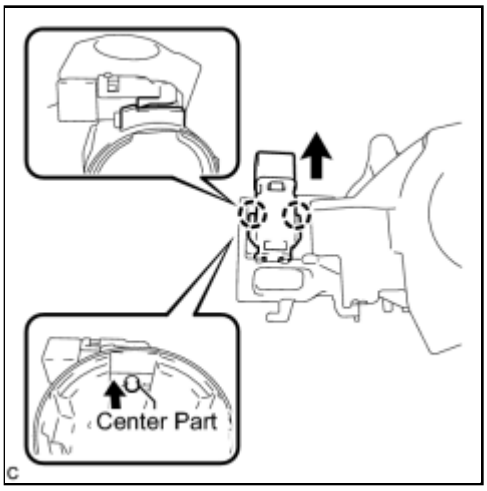

(a) Remove the unlock warning switch assembly by pushing up the center part and releasing the 2 claws.

HINT:

Slide the unlock warning switch in the direction shown by the arrow in the illustration to remove it.

Last Modified: 3-10-2010	6.4 G	**From:** 200901
Model Year: 2010	**Model:** Corolla	**Doc ID:** RM0000028XE00WX
Title: DOOR LOCK: UNLOCK WARNING SWITCH: INSPECTION (2010 Corolla)		

INSPECTION

1. INSPECT UNLOCK WARNING SWITCH ASSEMBLY

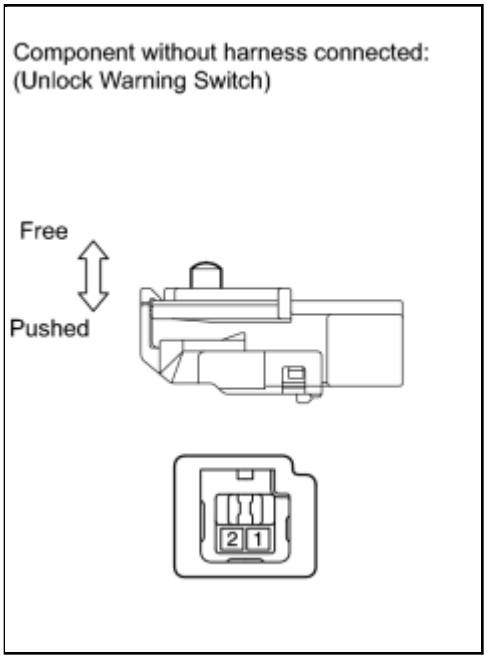

(a) Measure the resistance according to the value(s) in the table below.

Standard Resistance:

TESTER CONNECTION	CONDITION	SPECIFIED CONDITION
1 - 2	Switch free (Key removed)	10 kΩ or higher
1 - 2	Switch pushed (Key set)	Below 1 Ω

If the result is not as specified, replace the unlock warning switch assembly.

Last Modified: 3-10-2010	6.4 A	**From:** 200901
Model Year: 2010	**Model:** Corolla	**Doc ID:** RM0000026TS016X
Title: DOOR LOCK: UNLOCK WARNING SWITCH: INSTALLATION (2010 Corolla)		

INSTALLATION

1. INSTALL UNLOCK WARNING SWITCH ASSEMBLY

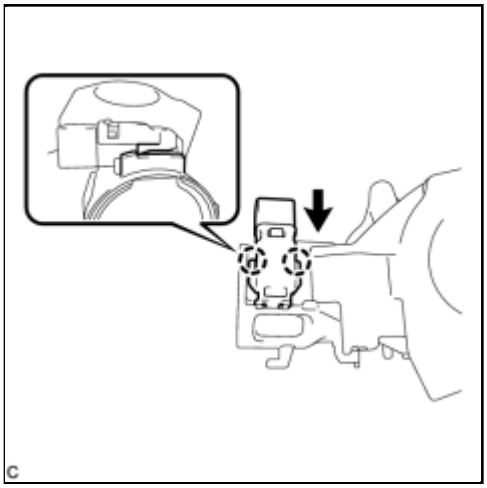

(a) Make sure that the ignition switch lock cylinder assembly is in the ACC position.

(b) Install the ignition switch lock cylinder assembly to the steering lock sub-assembly.

(c) Make sure that the ignition switch lock cylinder assembly is securely installed.

2. INSTALL IGNITION SWITCH LOCK CYLINDER ASSEMBLY INFO

3. INSTALL SOLENOID WIRE (for Automatic Transaxle) INFO

4. INSTALL KEY INTERLOCK SOLENOID INFO

5. INSTALL IGNITION OR STARTER SWITCH ASSEMBLY (for Manual Transaxle) INFO

6. INSTALL IGNITION OR STARTER SWITCH ASSEMBLY (for Automatic Transaxle) INFO

7. INSTALL STEERING LOCK OPERATION INFO

8. INSTALL STEERING COLUMN UPPER WITH SWITCH BRACKET ASSEMBLY INFO

9. INSTALL NO. 2 STEERING INTERMEDIATE SHAFT ASSEMBLY INFO

10. INSTALL STEERING POST ASSEMBLY (for 2ZR-FE) INFO

11. INSTALL STEERING POST ASSEMBLY (for 2AZ-FE) INFO

12. TURN FRONT WHEELS TO FACE STRAIGHT AHEAD

13. CONNECT NO. 2 STEERING INTERMEDIATE SHAFT ASSEMBLY INFO

14. INSTALL STOP LIGHT SWITCH ASSEMBLY INFO

15. INSTALL NO. 3 AIR DUCT SUB-ASSEMBLY INFO

16. INSTALL INSTRUMENT PANEL SUB REINFORCEMENT INFO

17. INSTALL COLUMN HOLE COVER SILENCER SHEET INFO

18. INSTALL TRANSPONDER KEY AMPLIFIER INFO

19. INSTALL UPPER INSTRUMENT PANEL SUB-ASSEMBLY

HINT:

Refer to the instructions for Installation of the upper instrument panel INFO .

20. INSTALL TURN SIGNAL SWITCH ASSEMBLY WITH SPIRAL CABLE SUB-ASSEMBLY INFO

21. INSTALL UPPER STEERING COLUMN COVER INFO

22. INSTALL LOWER STEERING COLUMN COVER INFO

23. INSTALL LOWER INSTRUMENT PANEL FINISH PANEL SUB-ASSEMBLY INFO

24. TURN FRONT WHEELS TO FACE STRAIGHT AHEAD

25. ADJUST SPIRAL CABLE INFO

26. INSTALL STEERING WHEEL ASSEMBLY INFO

27. INSTALL STEERING PAD INFO

28. INSTALL LOWER NO. 3 STEERING WHEEL COVER INFO

29. INSTALL LOWER NO. 2 STEERING WHEEL COVER INFO

30. INSPECT STEERING WHEEL CENTER POINT

31. CONNECT CABLE TO NEGATIVE BATTERY TERMINAL

32. INSPECT STEERING PAD INFO

33. INSPECT SRS WARNING LIGHT

INFO

Last Modified: 3-10-2010	6.4 K	**From:** 200901
Model Year: 2010	**Model:** Corolla	**Doc ID:** RM000002XKV00HX
Title: DOOR LOCK: WIRELESS DOOR LOCK BUZZER: COMPONENTS (2010 Corolla)		

COMPONENTS

ILLUSTRATION

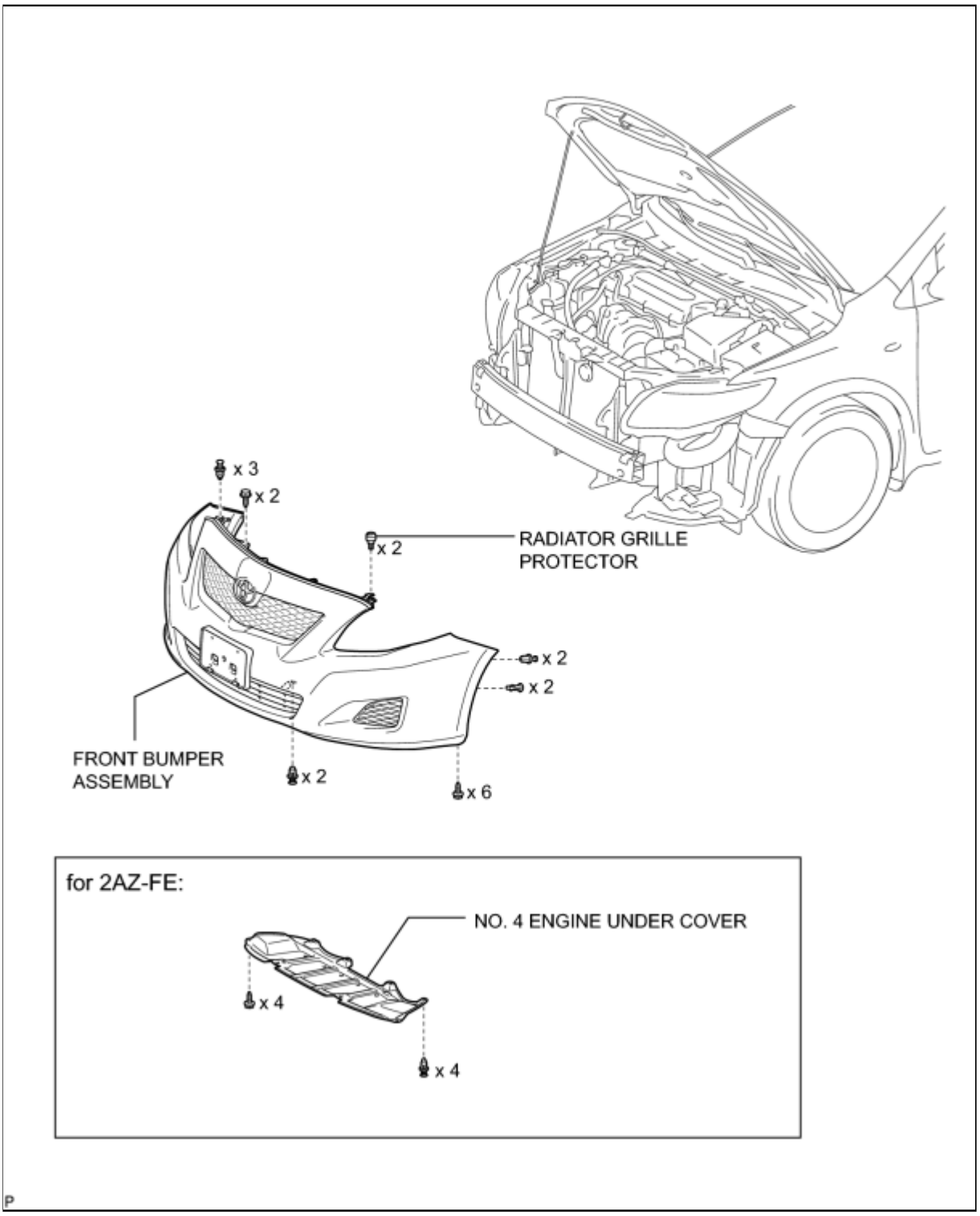

ILLUSTRATION

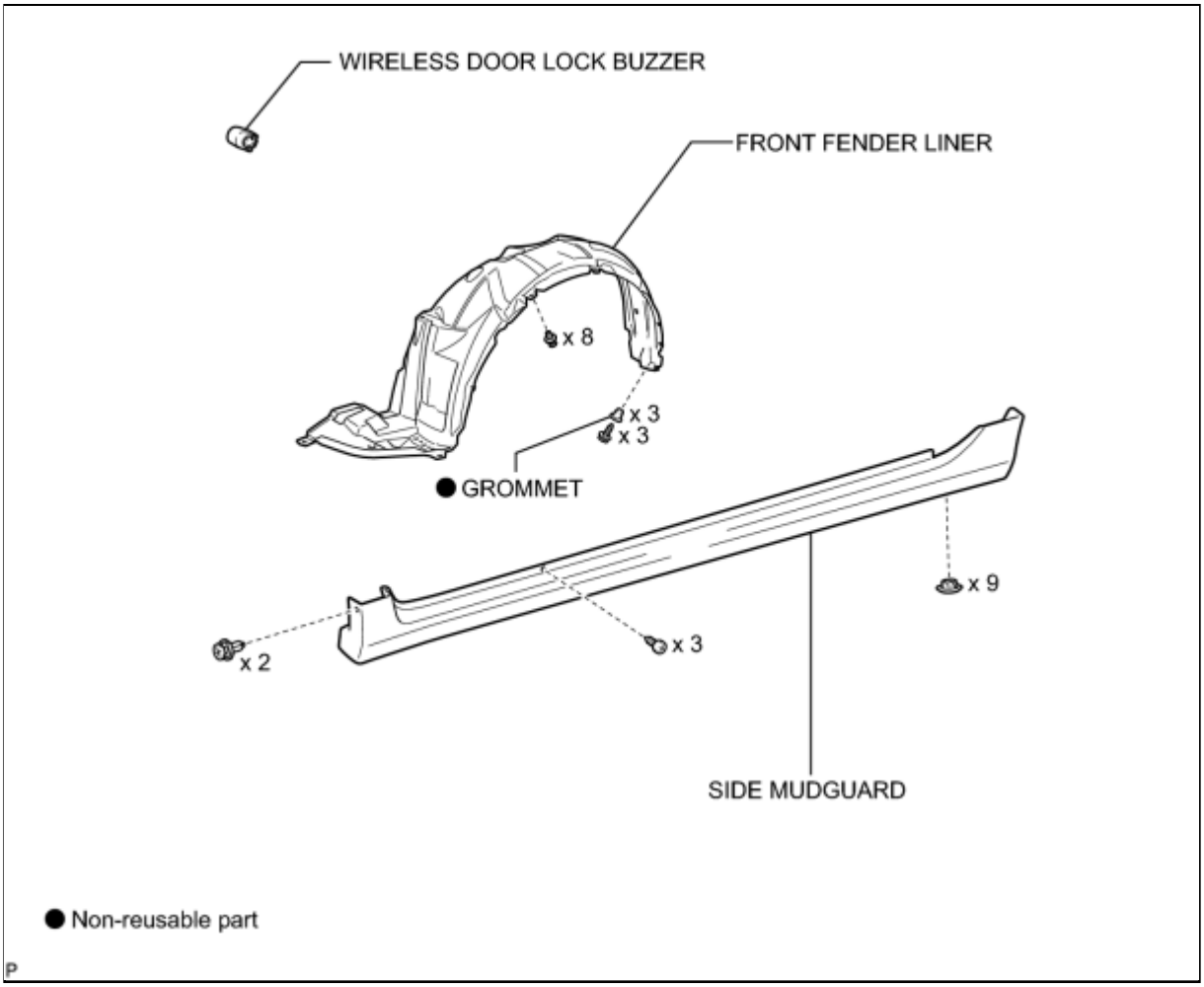

Last Modified: 3-10-2010	6.4 A	**From:** 200901
Model Year: 2010	**Model:** Corolla	**Doc ID:** RM000002XKW00IX
Title: DOOR LOCK: WIRELESS DOOR LOCK BUZZER: REMOVAL (2010 Corolla)		

REMOVAL

1. REMOVE RADIATOR GRILLE PROTECTOR INFO

2. REMOVE NO. 4 ENGINE UNDER COVER (for 2AZ-FE) INFO

3. REMOVE FRONT BUMPER ASSEMBLY INFO

4. REMOVE SIDE MUDGUARD INFO

5. REMOVE FRONT WHEEL

6. REMOVE FRONT FENDER LINER INFO

7. REMOVE WIRELESS DOOR LOCK BUZZER

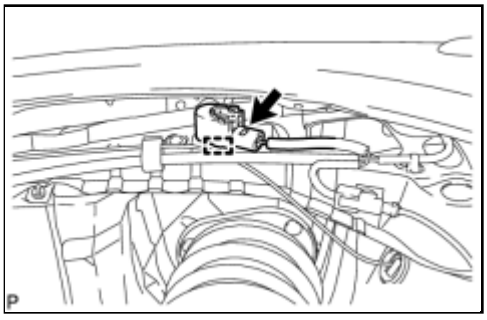

(a) Disconnect the connector.

(b) Disconnect the clamp and remove the wireless door lock buzzer.

Last Modified: 3-10-2010	6.4 G	**From:** 200901
Model Year: 2010	**Model:** Corolla	**Doc ID:** RM000002XKU00OX
Title: DOOR LOCK: WIRELESS DOOR LOCK BUZZER: INSPECTION (2010 Corolla)		

INSPECTION

1. INSPECT WIRELESS DOOR LOCK BUZZER

(a) Measure the resistance according to the value(s) in the table below.

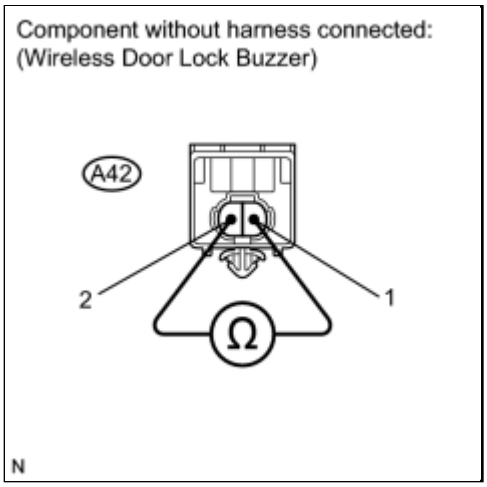

HINT:

The buzzer activation circuit is built into the ECU, not into the buzzer itself. When battery voltage is applied directly to the buzzer, the buzzer will not sound.

Standard resistance:

TESTER CONNECTION	CONDITION	SPECIFIED CONDITION
A42-1 - A42-2	Always	950 to 1050 Ω

If the result is not as specified, replace the wireless door lock buzzer.

Last Modified: 3-10-2010	6.4 R	**From:** 200901
Model Year: 2010	**Model:** Corolla	**Doc ID:** RM0000026DC00WX
Title: DOOR LOCK: WIRELESS DOOR LOCK CONTROL SYSTEM (w/ Smart Key System): PARTS LOCATION (2010 Corolla)		

PARTS LOCATION

ILLUSTRATION

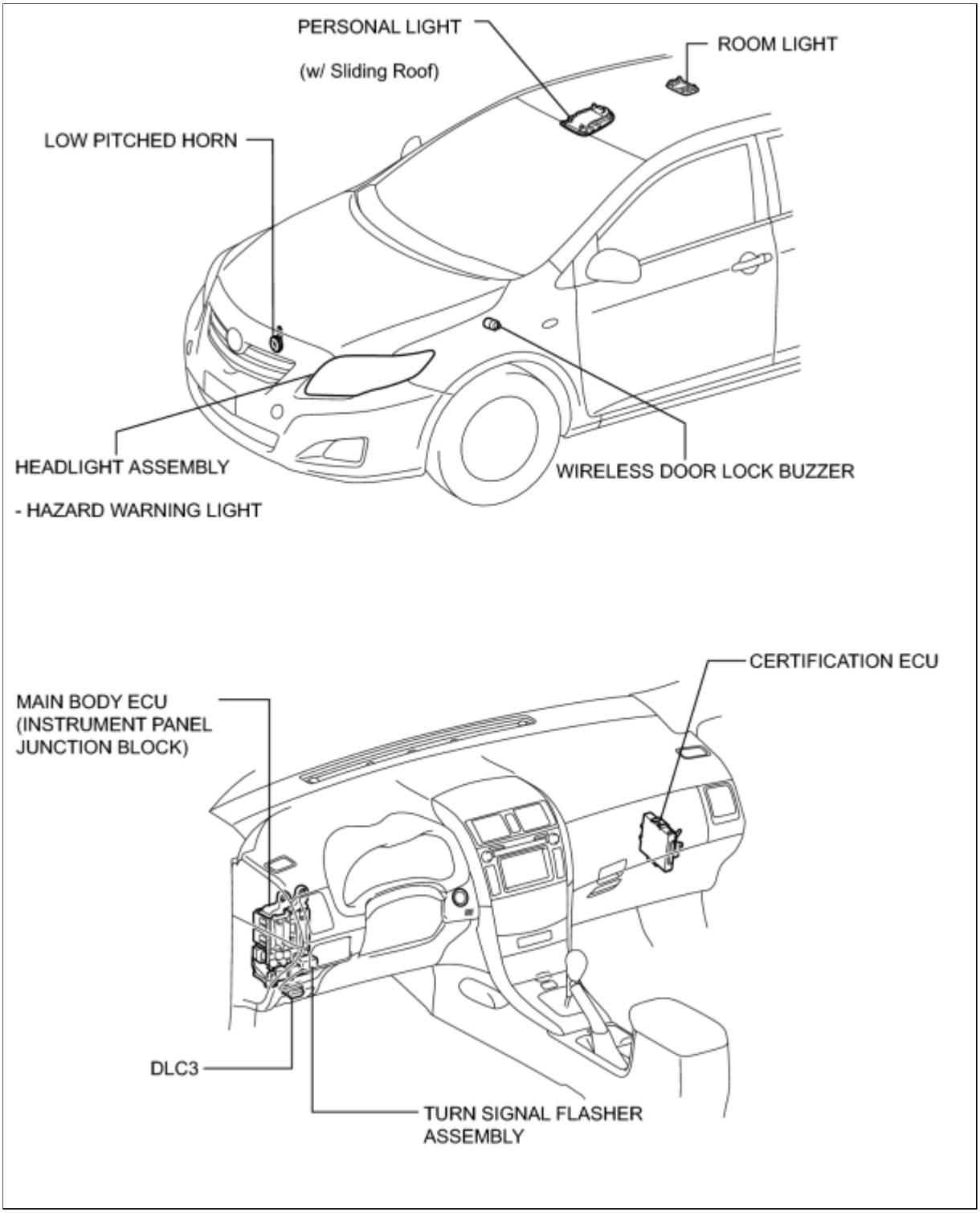

ILLUSTRATION

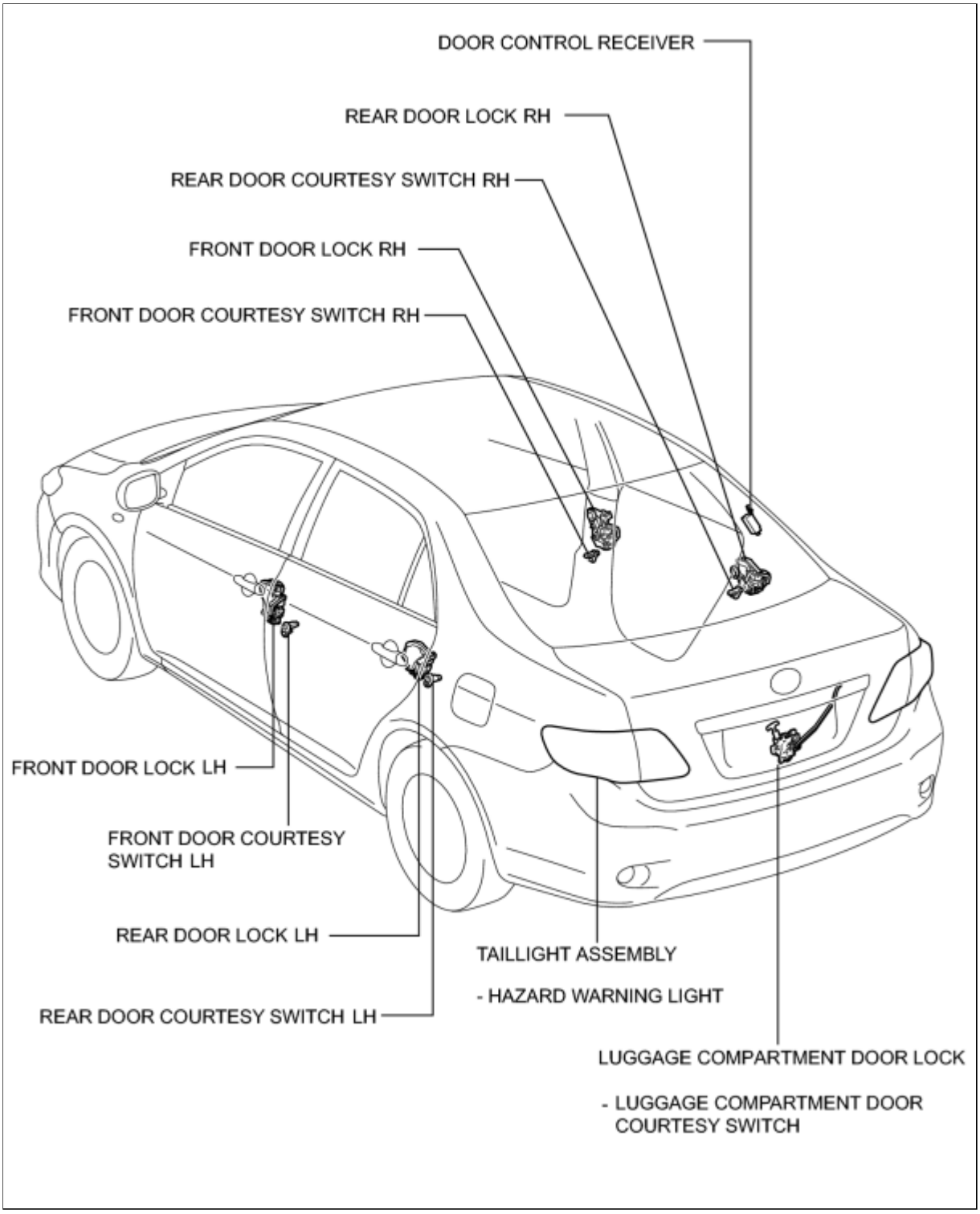

ILLUSTRATION

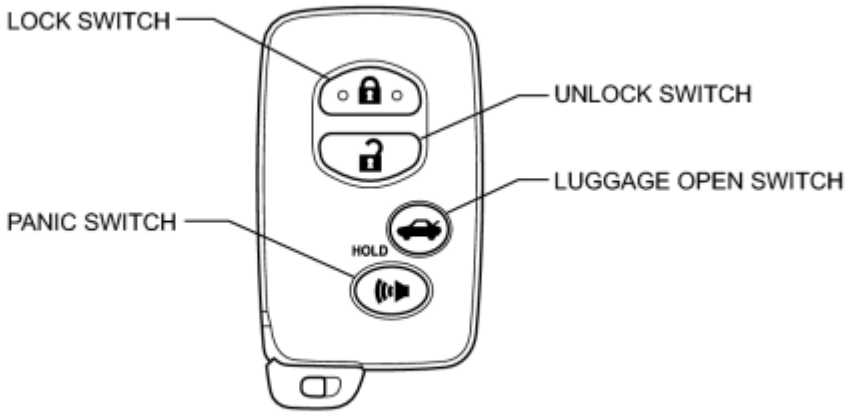

DOOR CONTROL TRANSMITTER

H

Last Modified: 3-10-2010	6.4 A	**From:** 200901
Model Year: 2010	**Model:** Corolla	**Doc ID:** RM000002XKT00JX
Title: DOOR LOCK: WIRELESS DOOR LOCK BUZZER: INSTALLATION (2010 Corolla)		

INSTALLATION

1. INSTALL WIRELESS DOOR LOCK BUZZER

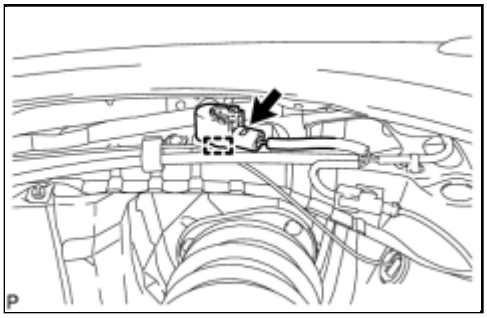

(a) Connect the connector.

(b) Install the wireless door lock buzzer with the clamp.

2. INSTALL FRONT FENDER LINER INFO

3. INSTALL FRONT WHEEL

Torque: 103 N·m (1050 kgf·cm, 76ft·lbf)

4. INSTALL SIDE MUDGUARD INFO

5. INSTALL FRONT BUMPER ASSEMBLY INFO

6. INSTALL NO. 4 ENGINE UNDER COVER (for 2AZ-FE) INFO

7. INSTALL RADIATOR GRILLE PROTECTOR INFO

8. VEHICLE PREPARATION FOR FOG LIGHT AIMING (w/ Fog Light) INFO

9. PREPARATION FOR FOG LIGHT AIMING (w/ Fog Light) INFO

10. INSPECT FOG LIGHT AIMING (w/ Fog Light) INFO

11. ADJUST FOG LIGHT AIMING (w/ Fog Light) INFO

Last Modified: 3-10-2010	6.4 U	**From:** 200901
Model Year: 2010	**Model:** Corolla	**Doc ID:** RM000002IZ200TX
Title: DOOR LOCK: WIRELESS DOOR LOCK CONTROL SYSTEM (w/ Smart Key System): SYSTEM DIAGRAM (2010 Corolla)		

SYSTEM DIAGRAM

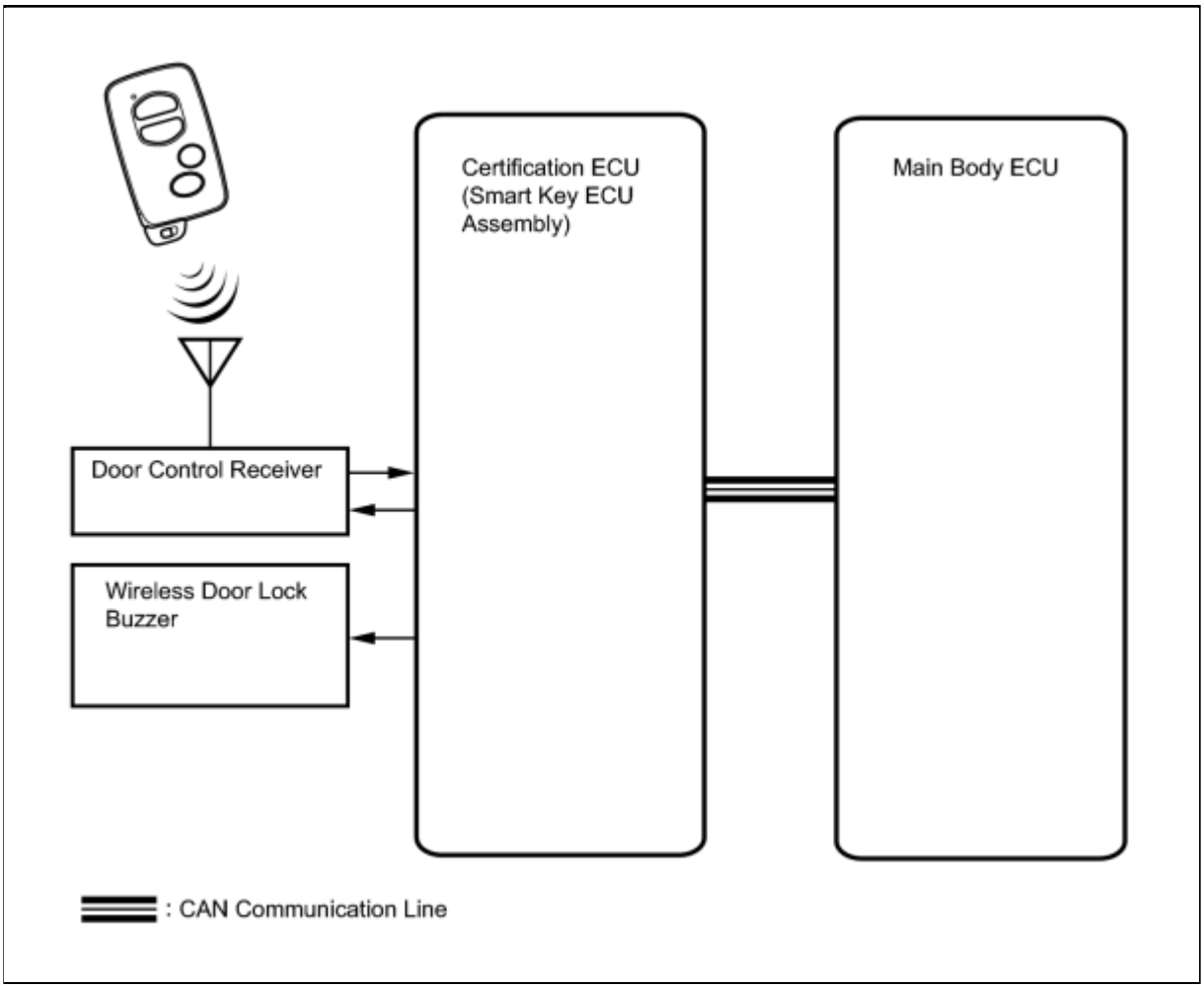

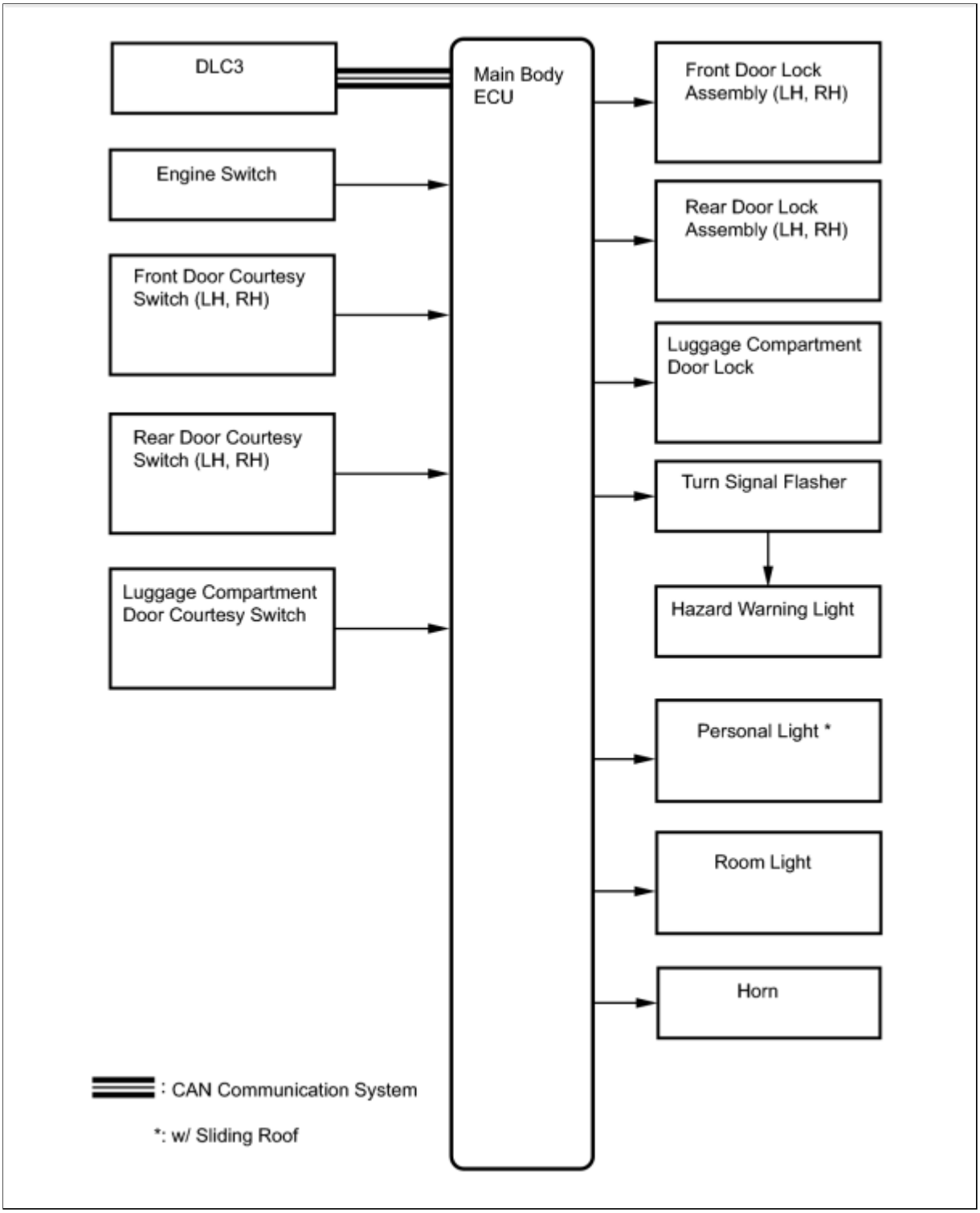

TRANSMITTING ECU (TRANSMITTER)	RECEIVING ECU (RECEIVER)	SIGNAL	LINE
Certification ECU	Main Body ECU	Wireless door lock signal	CAN

Last Modified: 3-10-2010	6.4 D	**From:** 200901
Model Year: 2010	**Model:** Corolla	**Doc ID:** RM0000010J306JX
Title: DOOR LOCK: WIRELESS DOOR LOCK CONTROL SYSTEM (w/ Smart Key System): HOW TO PROCEED WITH TROUBLESHOOTING (2010 Corolla)		

HOW TO PROCEED WITH TROUBLESHOOTING

HINT:

The wireless door lock control system troubleshooting procedure is based on the premise that the power door lock control system is operating normally. Check the power door lock control system first before troubleshooting the wireless door lock control system INFO **.**

Use this procedure to troubleshoot the wireless door lock control system.

1.	**VEHICLE BROUGHT TO WORKSHOP**

NEXT

2.	**CUSTOMER PROBLEM ANALYSIS**

(a) Interview the customer to confirm the trouble INFO .

NEXT

3.	**INSPECT COMMUNICATION FUNCTION OF CAN COMMUNICATION SYSTEM**

(a) Use the Techstream to check for normal function of the can communication system.

Result:

RESULT	PROCEED TO
CAN DTC is not output	A
CAN DTC is output	B

B INFO **Go to CAN COMMUNICATION SYSTEM**

A

4.	**DTC CHECK**

(a) Check for DTCs and note any codes that are output.

(b) Clear the DTCs.

(c) Recheck for DTCs.

Result:

RESULT	PROCEED TO
DTC does not recur	A
DTC recurs	B

B INFO **Go to DTC CHECK/CLEAR**

A

5.	**SYMPTOM SIMULATION**

NEXT

6.	**PROBLEM SYMPTOMS TABLE**

(a) If the fault is not listed in the problem symptoms table, proceed to A.

(b) If the fault is listed in the problem symptoms table, proceed to B.

B ▶ Go to step 8

A

▼

7.	PERFORM TROUBLESHOOTING ACCORDING TO MALFUNCTION SYMPTOM

(a) Terminals of ECU INFO

(b) Data List/Active Test INFO

NEXT

▼

8.	ADJUST, REPAIR OR REPLACE

NEXT

▼

9.	CONFIRMATION TEST

NEXT ▶ END

Last Modified: 3-10-2010	6.4 D	**From:** 200901
Model Year: 2010	**Model:** Corolla	**Doc ID:** RM000002IZ100TX
Title: DOOR LOCK: WIRELESS DOOR LOCK CONTROL SYSTEM (w/ Smart Key System): SYSTEM DESCRIPTION (2010 Corolla)		

SYSTEM DESCRIPTION

1. WIRELESS DOOR LOCK CONTROL SYSTEM

The wireless door lock control system functions to lock and unlock all the doors from a distance. The system is controlled by a hand-held transmitter which sends radio waves to the door control receiver. The certification ECU performs an ID code identification process and engages the door lock.

2. FUNCTION OF MAIN COMPONENTS

COMPONENT	FUNCTION
Door control transmitter	• Has LOCK, UNLOCK, LUGGAGE OPEN and PANIC switches. • Transmits weak radio waves (recognition codes and function codes) to the door control receiver.
Door control receiver	Receives weak radio waves from the door control transmitter and sends them to the certification ECU.
• Front door courtesy light switch • Rear door courtesy light switch • Luggage compartment door courtesy light switch	Turns on when a door is opened and turns off when it is closed. Outputs door status codes (open or closed) to the main body ECU.
Door lock position switch	Transmits the door lock positions of each door to the main body ECU.
Certification ECU	Sends wireless door lock control signals in response to the code data from the door control receiver and signals from each ECU.

3. SYSTEM FUNCTION

The door control transmitter has LOCK, UNLOCK, LUGGAGE OPEN and PANIC switches. Operating these switches activates each function.

The wireless door lock control system has the following functions:

HINT:

The default settings of the following functions are ON. Some of these functions can be customized INFO **.**

FUNCTION	OPERATION
All door lock	Pressing the LOCK switch locks all doors.
All door unlock (Unlock 2 operation)	Pressing the UNLOCK switch twice within 3 seconds unlocks all the doors after the driver's door is unlocked.
Automatic lock	If none of the doors is opened within 60 seconds after they are unlocked by the wireless door lock control, all the doors will lock again automatically.
Luggage compartment door open	Pressing the LUGGAGE OPEN switch of the transmitter opens the luggage compartment door.
Answer back	• When the doors are locked by wireless operation, the hazard warning lights flash once, and wireless door lock buzzer sounds once. • When the doors are unlocked by wireless operation, the hazard warning lights flash twice and wireless door lock buzzer sounds twice. • When the luggage compartment door is opened by wireless operation, the wireless door lock buzzer sounds.
Panic alarm	Pressing the PANIC switch of the transmitter for longer than about 0.8 seconds causes the following alarms to activate: • Sounds the horn. • Flashes the hazard lights. • Illuminates the front interior light (when the switch is in the DOOR position). While the panic alarm is operating, pressing any switch of the transmitter cancels the alarm operation.
Door ajar warning	The buzzer sounds when the LOCK switch is pressed when any of the doors are ajar, and it sounds for 10 seconds continuously. The buzzer stops when all doors are closed or the UNLOCK switch is pressed.
Illuminated Entry	When all the doors are locked, pressing the UNLOCK switch causes the interior light to come on simultaneously with the unlock operation.

Last Modified: 3-10-2010	6.4 D	**From:** 200901
Model Year: 2010	**Model:** Corolla	**Doc ID:** RM0000027AH018X
Title: DOOR LOCK: WIRELESS DOOR LOCK CONTROL SYSTEM (w/ Smart Key System): OPERATION CHECK (2010 Corolla)		

OPERATION CHECK

1. FUNCTIONS AND OPERATING CONDITIONS

(a) This wireless door lock control function operates only when the following 4 conditions are met:

(1) There is no wireless transmitter in the cabin.

(2) All the doors are closed.

(3) The power door lock system is functioning normally.

(4) The function is not disabled by customization.

HINT:

The UNLOCK function operates even when any of the doors are open.

(b) The wireless transmitter operational range differs depending on the situation.

(1) The operational range differs depending on the user, the way the transmitter is held, and the location.

(2) In certain areas, the operational range will be reduced due to the vehicle body shape and the influence of the surrounding environment.

(3) Since the transmitter uses weak radio waves, the operational range may be reduced or the transmitter may not function if interference or stronger radio waves occur in the area where the transmitter is used.

(4) When the battery is low, the operational range is reduced and/or the transmitter may not function.

HINT:

If the transmitter has been left in a place that is exposed to direct sunlight, such as on the instrument panel, the battery may be weakened or other problems may occur.

2. CHECK WIRELESS DOOR LOCK CONTROL FUNCTIONS

HINT:

- The switches built into the door control transmitter send radio waves to the door lock control receiver.
- The operational range must be taken into account during checks.

(a) Establish conditions that allow the wireless control function to be operated successfully.

(b) Check these basic functions.

(1) Check that all the doors lock when the LOCK switch is pressed.

(2) Check that the driver side door unlock when the UNLOCK switch is pressed once, and unlocks all doors when pressed twice within 3 seconds.

(3) Check that the luggage compartment door opens when the LUGGAGE OPEN switch is pressed and held 0.8 second.

(c) Check the automatic lock function.

(1) Check that if all doors are unlocked with the UNLOCK switch and none of the doors is opened or locked within approximately 60 seconds, the doors automatically re-lock.

(2) Check that if all doors are unlocked with the UNLOCK switch and a door is opened or locked within approximately 60 seconds, the automatic lock function does not operate.

(d) Check the interior light ON function.

HINT:

Turn the interior light switch to the DOOR position before the check.

(1) Check that the interior lights come on simultaneously with the unlocking operation when the UNLOCK switch has been pressed.

(2) Check that the interior lights go off in approximately 15 seconds if none of the doors is opened after the unlocking operation.

(e) Check the answer back function.

(1) When the doors are locked by wireless operation, the hazard warning lights flash once and the wireless door lock buzzer sounds once.

(2) When the doors are unlocked by wireless operation, the hazard warning lights flash twice and the wireless door lock buzzer sounds twice.

(3) When the luggage compartment door is opened by wireless operation, the wireless door lock buzzer sounds.

(f) Check the switch operation fail-safe function.

(1) Check that the doors cannot be locked or unlocked by operating a switch on the unregistered transmitter, and that the doors are locked and unlocked by operating a switch on the registered transmitter.

(g) Check the chattering prevention function.

(1) Check that the corresponding operation occurs only once, and does not repeat itself while the switch is held down. Check that the corresponding operation is carried out when the switch is operated repeatedly at 1-second intervals.

(h) Check the door ajar warning function.

(1) Check that the wireless door lock buzzer sounds for approximately 10 seconds when the LOCK switch is pressed with any of the doors ajar or open.

(i) Check the remote panic function.

(1) Check that the horn sounds, the headlights and taillights flash and the interior light remains on (when the light switch is turned to the DOOR position) for 60 seconds by the theft alarm function, when the PANIC switch is held down for 0.8 seconds or more. Also, check that the horn stops sounding and the lights stop flashing when either switch of the transmitter is pressed.

Last Modified: 3-10-2010	6.4 D	**From:** 200901
Model Year: 2010	**Model:** Corolla	**Doc ID:** RM000001NN002BX
Title: DOOR LOCK: WIRELESS DOOR LOCK CONTROL SYSTEM (w/ Smart Key System): CUSTOMIZE PARAMETERS (2010 Corolla)		

CUSTOMIZE PARAMETERS

HINT:

The following items can be customized.

NOTICE:

- After confirming whether the items requested by the customer are applicable or not for customization, perform customizing operations.
- Be sure to record the current settings before each customization.
- When troubleshooting, make sure that the item in question is not set to "OFF" as a result of customization (Example: If the wireless function does not operate, first check that the wireless function is not set to "OFF", then perform troubleshooting).

1. CUSTOMIZE

(a) Connect the Techstream to the DLC3.

(b) Turn the engine switch on (ACC).

(c) Turn the Techstream on.

(d) Enter the following menu:

Customize Setting

(e) Select the setting by referring to the table below.

Wireless Door Lock Control System

DISPLAY (ITEM)	DEFAULT	FUNCTION	SETTING
Wireless Control	ON	Function that turns wireless door lock function ON/OFF	ON/OFF
Hazard Answer Back	ON	• When the doors are locked by wireless operation, the hazard warning lights flash once. • When the doors are unlocked by wireless operation, the hazard warning lights flash twice.	ON/OFF
Wireless Auto Lock	ON	This function turns the wireless auto lock function on or off.	ON / OFF
Open Door Warning	ON	The buzzer sounds when LOCK is pressed when any of the doors are ajar.	ON/OFF
Unlock 2 Operation	ON	Function that unlocks driver side door when unlock switch on transmitter is pressed once, and unlocks all	ON/OFF

DISPLAY (ITEM)	DEFAULT	FUNCTION	SETTING
		doors when pressed twice. If setting is OFF, pressing unlock switch once makes all doors unlock.	
Panic Function	ON	Function to operate theft deterrent system by continuously pressing panic switch on transmitter for 0.8 seconds	ON/OFF
Auto Lock Time	60 s	This function regulates the interval between unlocking and automatic relocking of doors.	30 s/60 s/120 s
Wireless Buzzer Resp	ON	Wireless door lock buzzer response / ON or OFF	ON/OFF
Trunk Lid Operation	0.8PR	This function changes operation method of transmitter to open luggage compartment door. • 1TIME: Push once • 2 TIMES: Push twice • 0.8PR: Push and hold for 0.8 seconds • OFF: Does not operate	1TIME/2 TIMES/0.8PR/OFF



Last Modified: 3-10-2010	6.4 T	**From:** 200901
Model Year: 2010	**Model:** Corolla	**Doc ID:** RM0000026DD01IX
Title: DOOR LOCK: WIRELESS DOOR LOCK CONTROL SYSTEM (w/ Smart Key System): PROBLEM SYMPTOMS TABLE (2010 Corolla)		

PROBLEM SYMPTOMS TABLE

If a normal system code is displayed during the DTC check, but the problem still occurs, check the circuits for each problem symptom in the order given in the table below and proceed to the relevant troubleshooting page.

HINT:

- Use the table below to help determine the cause of problem symptoms. If multiple suspected areas are listed, the potential causes of the symptoms are listed in order of probability in the "Suspected Area" column of the table. Check each symptom by checking the suspected areas in the order they are listed. Replace parts as necessary.
- Inspect the fuses and relays related to this system before inspecting the suspected areas below.

Wireless Door Lock Control System

SYMPTOM	SUSPECTED AREA	SEE PAGE
Wireless control function and entry function do not operate	Proceed to "All Door Entry Lock/Unlock Functions and Wireless Functions do not Operate"	INFO
Wireless control function does not operate but entry function operate	Replace electrical key transmitter	-
Luggage compartment door open function only does not operate	Perform operation check	INFO
	Proceed to "Luggage Compartment Door Entry Unlock Function does not Operate when Key is Outside Luggage Compartment"	INFO
Answer-back function only does not operate	Proceed to "No Answer-Back"	INFO
Automatic lock function only does not operate normally	Perform operation check	INFO
	Lighting system (door courtesy light switch circuit)	INFO
	Main body ECU	-
Illuminated entry function only does not operate	Perform operation check	INFO
	Lighting system (illuminated entry function)	INFO
	Main body ECU	-
Door ajar warning function only does not operate	Perform operation check	INFO
	Lighting system (door courtesy light switch circuit)	INFO
	Main body ECU	-

SYMPTOM	SUSPECTED AREA	SEE PAGE
Panic alarm function only does not operate	Perform operation check	INFO
	Horn system	-
	Main body ECU	-

Last Modified: 3-10-2010	6.4 U	**From:** 200901
Model Year: 2010	**Model:** Corolla	**Doc ID:** RM000001QP801NX
Title: DOOR LOCK: WIRELESS DOOR LOCK CONTROL SYSTEM (w/ Smart Key System): TERMINALS OF ECU (2010 Corolla)		

TERMINALS OF ECU

1. CHECK MAIN BODY ECU (INSTRUMENT PANEL JUNCTION BLOCK)

(a) Disconnect the 2A, 2B, 2C, 2E, 2F and 2G instrument panel junction block connectors and E50 and E51 main body ECU connectors.

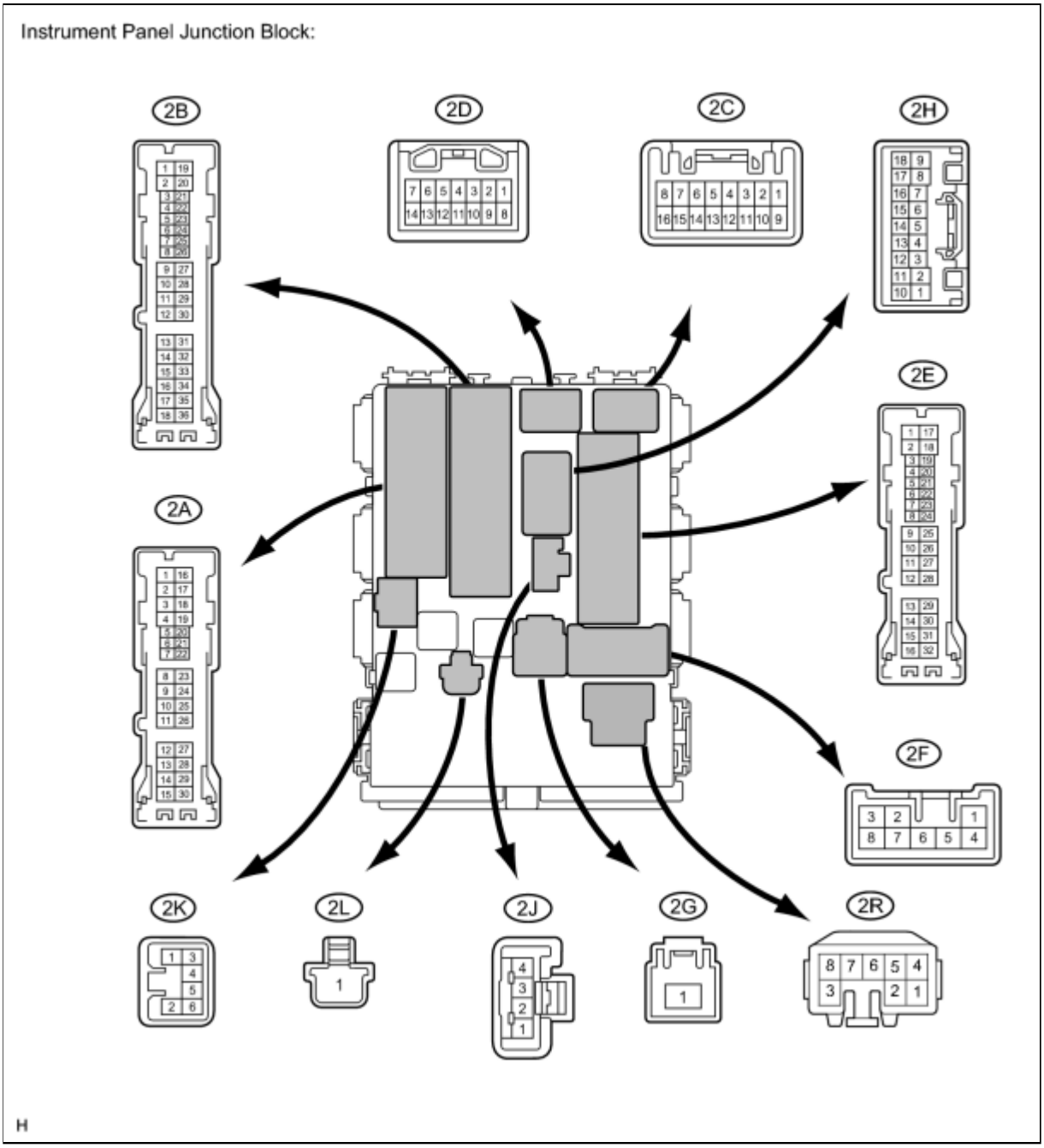

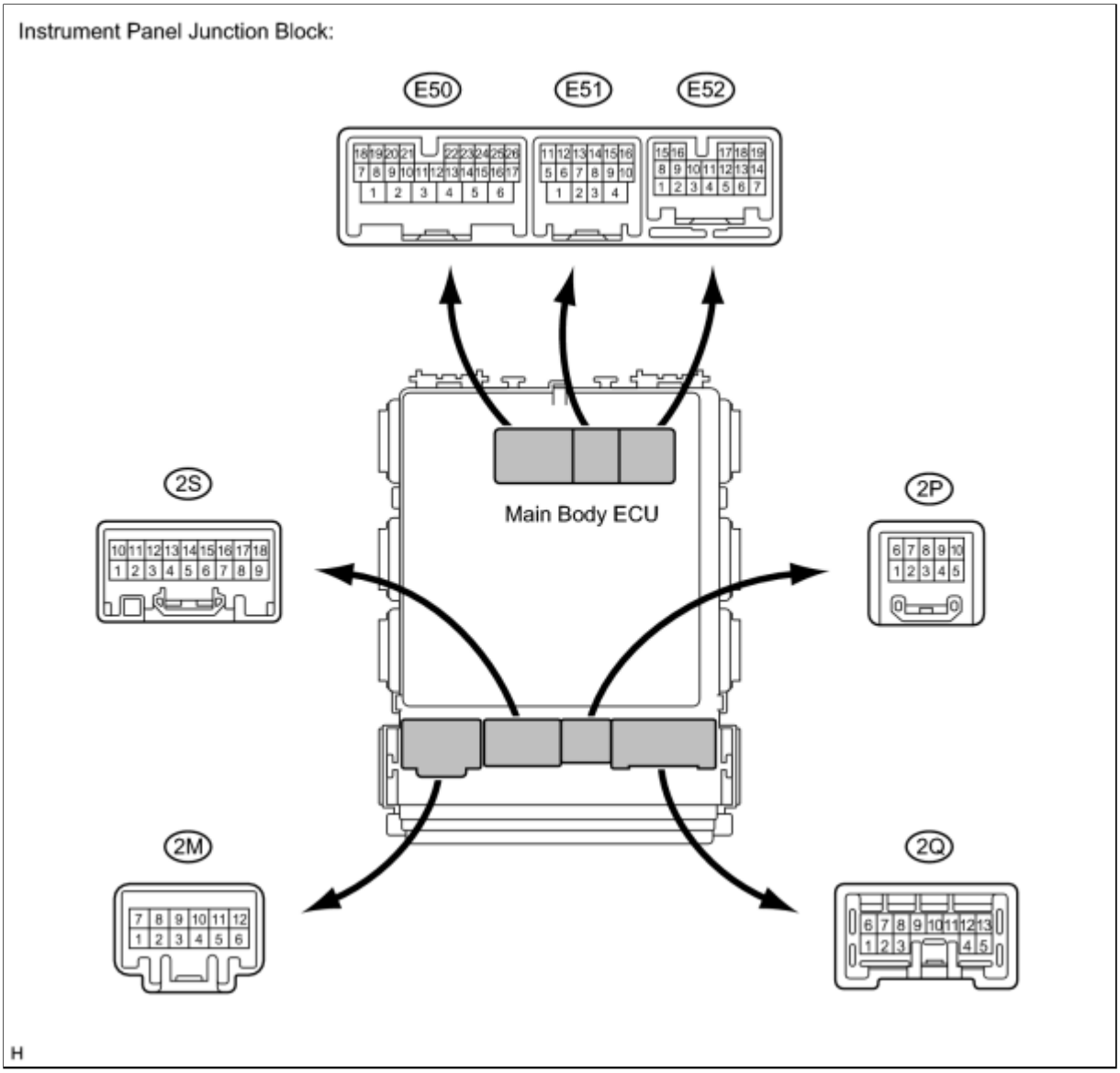

(b) Measure the resistance and voltage between each terminal of the wire harness side connectors and body ground.

TESTER CONNECTION	WIRING COLOR	TERMINAL DESCRIPTION	CONDITION	SPECIFIED CONDITION
2A-7 (LGCY) - Body ground	LG - Body ground	Luggage compartment door courtesy light switch input	Luggage compartment door CLOSED (OFF) → OPEN (ON)	10 kΩ or higher → Below 1 Ω
2E-20 (PCTY) - Body ground	BR - Body ground*1 BE - Body ground*2	Passenger side door courtesy light switch input	Passenger side door CLOSED (OFF) → OPEN (ON)	10 kΩ or higher → Below 1 Ω
2B-30 (BECU) - Body ground	W - Body ground	+B power supply	Always	11 to 14 V

TESTER CONNECTION	WIRING COLOR	TERMINAL DESCRIPTION	CONDITION	SPECIFIED CONDITION
2C-6 (DCTY) - Body ground	W - Body ground*1 R - Body ground*2	Driver side door courtesy light switch input	Driver side door CLOSED (OFF) → OPEN (ON)	10 kΩ or higher → Below 1 Ω
2E-17 (GND1) - Body ground	W-B - Body ground	Ground	Always	Below 1 Ω
2E-19 (RCTY) - Body ground	LG - Body ground*1 Y - Body ground*2	Rear courtesy light switch RH input	Rear door RH CLOSED (OFF) → OPEN (ON)	10 kΩ or higher → Below 1 Ω
2F-5 (ACC) - Body ground	W - Body ground*1 L - Body ground*2	IG supply (ACC signal)	Engine switch on (ACC) → off	11 to 14 V → Below 1 V
2G-1 (IG) - Body ground	W - Body ground	IG supply (IG signal)	Engine switch on (IG) → off	11 to 14 V → Below 1 V
2G-1 (ALTB) - Body ground	W - Body ground	+B (power system alternator system) power supply	Always	11 to 14 V
E50-8 (LCTY) - Body ground	SB - Body ground*1 B - Body ground*2	Rear courtesy light switch LH input	Rear door LH CLOSED (OFF) → OPEN (ON)	10 kΩ or higher → Below 1 Ω
E51-4 (GND2) - Body ground	W-B - Body ground	Ground	Always	Below 1 Ω

If the result is not as specified, there may be a malfunction on the wire harness side.

- *1: for TMC Made
- *2: Except for TMC made

(c) Reconnect the main body (instrument panel junction block) connectors.

(d) Measure the voltage between each terminal of the wire harness side connectors and body ground.

TESTER CONNECTION	WIRING COLOR	TERMINAL DESCRIPTION	CONDITION	SPECIFIED CONDITION
2S-17 (HAZ) - Body ground	GR - Body ground*3 BE - Body ground*4	Turn signal flasher relay signal	Transmitter LOCK or UNLOCK switch is pressed → not pressed	Below 1 V*1 → 11 to 14 V
E50-1 (TR+)- Body ground	R - Body ground*3	Luggage compartment door	Luggage compartment door CLOSED (LOCKED) →	Below 1 V → 11 to 14 V*2

TESTER CONNECTION	WIRING COLOR	TERMINAL DESCRIPTION	CONDITION	SPECIFIED CONDITION
	P - Body ground*4	opener motor	OPEN (UNLOCKED)	

- *1: When operating the answer back function.
- *2: When operating the motor.
- *3: for TMC Made
- *4: Except for TMC made

2. CHECK CERTIFICATION ECU ASSEMBLY

(a) Disconnect the E36 ECU connector.

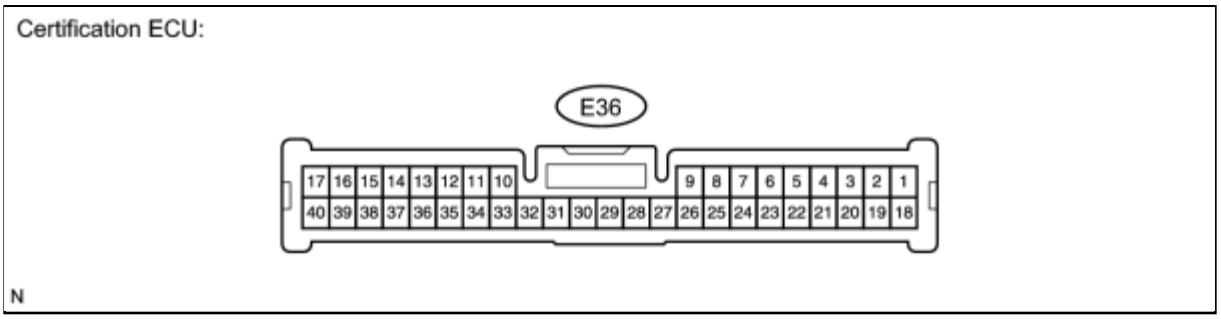

(b) Measure the voltage and resistance of the wire harness side connector.

TESTER CONNECTION	WIRING COLOR	TERMINAL DESCRIPTION	CONDITION	SPECIFIED CONDITION
E36-1 (+B) - E36-17 (E)	W - W-B*1 BR - W-B*2	Battery power supply	Always	11 to 14 V
E36-17 (E) - Body ground	W-B - Body ground	Ground	Always	Below 1 Ω

If the result is not as specified, there may be a malfunction on the wire harness side.

(c) Reconnect the E36 ECU connector.

(d) Measure the voltage of the connector.

TESTER CONNECTION	WIRING COLOR	TERMINAL DESCRIPTION	CONDITION	SPECIFIED CONDITION
E36-29 (RC0) - E36-17 (E)	V - W-B*1 LG - W-B*2	Door control receiver power supply	Engine switch off, all doors closed and transmitter switch not pressed	Below 1 V
E36-29 (RC0) - E36-17 (E)	V - W-B*1	Door control receiver power	Engine switch off, all doors closed and transmitter	4.6 to 5.4 V

TESTER CONNECTION	WIRING COLOR	TERMINAL DESCRIPTION	CONDITION	SPECIFIED CONDITION
	LG - W-B*2	supply	switch pressed	
E36-38 (RDA) - E36-17 (E)	Y - W-B*1 P - W-B*2	Door control receiver output signal	Engine switch off, all doors closed and transmitter switch not pressed	11 to 14 V
E36-38 (RDA) - E36-17 (E)	Y - W-B*1 P - W-B*2	Door control receiver output signal	Engine switch off, all doors closed and transmitter switch pressed	Pulse generation
E36-18 (IG) - E36-17 (E)	L - W-B*1 B - W-B*2	IG power supply	Engine switch on (IG)	11 to 14 V
E36-18 (IG) - E36-17 (E)	L - W-B*1 B - W-B*2	IG power supply	Engine switch off	Below 1 V

If the result is not as specified, the ECU may have a malfunction.

- *1: for TMC Made
- *2: Except for TMC made

Last Modified: 3-10-2010	6.4 D	**From:** 200901
Model Year: 2010	**Model:** Corolla	**Doc ID:** RM000001PQX057X
Title: DOOR LOCK: WIRELESS DOOR LOCK CONTROL SYSTEM (w/ Smart Key System): DIAGNOSIS SYSTEM (2010 Corolla)		

DIAGNOSIS SYSTEM

1. DESCRIPTION

The ECU stores trouble codes if a vehicle malfunction occurs.

The diagnostic system allows for reading of the trouble codes from the DLC3 using the Techstream.

Use the Techstream to diagnose and solve the problem.

2. CHECK DLC3

(a) Check the DLC3 INFO .

Last Modified: 3-10-2010	6.4 U	**From:** 200901
Model Year: 2010	**Model:** Corolla	**Doc ID:** RM0000027AI026X
Title: DOOR LOCK: WIRELESS DOOR LOCK CONTROL SYSTEM (w/ Smart Key System): DATA LIST / ACTIVE TEST (2010 Corolla)		

DATA LIST / ACTIVE TEST

1. DATA LIST

HINT:

Using the Techstream to read the Data List allows the values or states of switches, sensors, actuators and other items to be read without removing any parts. This non-intrusive inspection can be very useful because intermittent conditions or signals may be discovered before parts or wiring is disturbed. Reading the Data List information early in troubleshooting is one way to save diagnostic time.

NOTICE:

In the table below, the values listed under "Normal Condition" are reference values. Do not depend solely on these reference values when deciding whether a part is faulty or not.

(a) Connect the Techstream to the DLC3.

(b) Turn the ignition switch on (IG).

(c) Enter the following menus: Body / Main Body or Entry & Start / Data List.

(d) Read the Data List according to the display on the Techstream.

Main Body (Main Body ECU)

TESTER DISPLAY	MEASUREMENT ITEM/RANGE	NORMAL CONDITION	DIAGNOSTIC NOTE
Wireless Control	Wireless door lock control function/ON or OFF	ON: Operating OFF: Not operating	-
Hazard Answer Back	Hazard answer-back of wireless/ON or OFF	ON: Operating OFF: Not operating	-
Wireless Buzzer Resp	Wireless door lock buzzer response/ON or OFF	ON: Operating OFF: Not operating	-
Open Door Warning	Open door warning/ON or OFF	ON: Operating OFF: Not operating	-
Unlock 2 Operation	Unlock 2 Operation of wireless unlock/ON or OFF	ON: All doors unlock when UNLOCK switch is pressed twice OFF: All doors unlock when UNLOCK switch is pressed once	-
Trunk Lid Operation	Luggage compartment door open function type / 1 TIME/2 TIMES/0.8PR/OFF	1 TIME: Luggage compartment door opens when LUGGAGE OPEN switch is pressed once 2 TIMES: Luggage compartment door opens when LUGGAGE OPEN switch is pressed twice	-

TESTER DISPLAY	MEASUREMENT ITEM/RANGE	NORMAL CONDITION	DIAGNOSTIC NOTE
		0.8PR: Luggage compartment door opens when LUGGAGE OPEN switch is pressed and held down for 0.8 seconds. OFF: Not operating	
Auto Lock Time	Automatic lock time/120 s, 60 s or 30 s	120 s: 120 seconds 60 s: 60 seconds 30 s: 30 seconds	-

Smart Key (Certification ECU (Smart Key ECU Assembly))

TESTER DISPLAY	MEASUREMENT ITEM/RANGE	NORMAL CONDITION	DIAGNOSTIC NOTE
Panic Alarm Function	Panic function/ON or OFF	ON: Operating OFF: Not operating	-

2. ACTIVE TEST

HINT:

Using the Techstream to perform Active Tests allows relays, VSVs, actuators and other items to be operated without removing any parts.

This non-intrusive functional inspection can be very useful because intermittent operation may be discovered before parts or wiring is disturbed. Performing Active Tests early in troubleshooting is one way to save diagnostic time. Data List information can be displayed while performing Active Tests.

(a) Connect the Techstream to the DLC3.

(b) Turn the engine switch on (IG).

(c) Enter the following menus: Body / Main Body or Entry & Start / Active Test.

(d) Perform the Active Test according to the display on the Techstream.

Main Body (Main Body ECU)

TESTER DISPLAY	TEST PART	CONTROL RANGE	DIAGNOSTIC NOTE
Hazard	Turn signal flasher relay	ON/OFF	Observe headlight and rear combination light for correct operation
Vehicle Horn	Vehicle horns	ON/OFF	-
Illuminated Entry System	Interior light and engine switch light (Interior light switch is in DOOR position and all doors are closed)	ON/OFF	-

TESTER DISPLAY	TEST PART	CONTROL RANGE	DIAGNOSTIC NOTE
Trunk and Back-Door Open	Back door opener motor	ON/OFF	Observe back door

Smart Key (Certification ECU (Smart Key ECU Assembly))

TESTER DISPLAY	TEST PART	CONTROL RANGE	DIAGNOSTIC NOTE
Wireless Buzzer Operation	Wireless door lock buzzer	ON/OFF	-

Last Modified: 3-10-2010	6.4 D	**From:** 200901
Model Year: 2010	**Model:** Corolla	**Doc ID:** RM00000208K01KX
Title: DOOR LOCK: WIRELESS DOOR LOCK CONTROL SYSTEM (w/ Smart Key System): DTC CHECK / CLEAR (2010 Corolla)		

DTC CHECK / CLEAR

1. DTC CHECK/CLEAR (USING TECHSTREAM)

(a) DTC check

(1) Connect the Techstream to the DLC3.

(2) Turn the engine switch on (IG).

(3) Read DTCs on the Techstream screen.

(b) DTC clear

(1) Connect the Techstream to the DLC3.

(2) Turn the engine switch on (IG).

(3) Clear the DTCs following the prompts on the Techstream screen.

HINT:

The Techstream has a SNAPSHOT function which records the monitored data.

Refer to the Techstream operator's manual for further details.

Last Modified: 3-10-2010	6.4 C	**From:** 200901
Model Year: 2010	**Model:** Corolla	**Doc ID:** RM000002075O1IX
Title: DOOR LOCK: WIRELESS DOOR LOCK CONTROL SYSTEM (w/ Smart Key System): B1242: Wireless Door Lock Tuner Circuit Malfunction (2010 Corolla)		

DTC	**B1242**	**Wireless Door Lock Tuner Circuit Malfunction**

DESCRIPTION

- The electrical key antenna is used to receive electric waves relating to the entry functions of the smart key system with push-button start. The certification ECU decodes the requested smart key system with push-button start operation by identifying a key code based on electric waves received via the electrical key antenna and the door control receiver.
- The door control receiver receives a signal from the wireless door control transmitter and sends signals to the main body ECU through the certification ECU.
- The certification ECU then sends a command, according to the requested operation, to each ECU. (e.g. If door lock operation is requested, the certification ECU sends a door lock command to the main body ECU.)

DTC NO.	DTC DETECTION CONDITION	TROUBLE AREA
B1242	The certification ECU detects that there is a short in the circuit between terminals RSSI, or between terminals DATA and RDA.	• Door Control Receiver • Wire harness or connector • Certification ECU

WIRING DIAGRAM

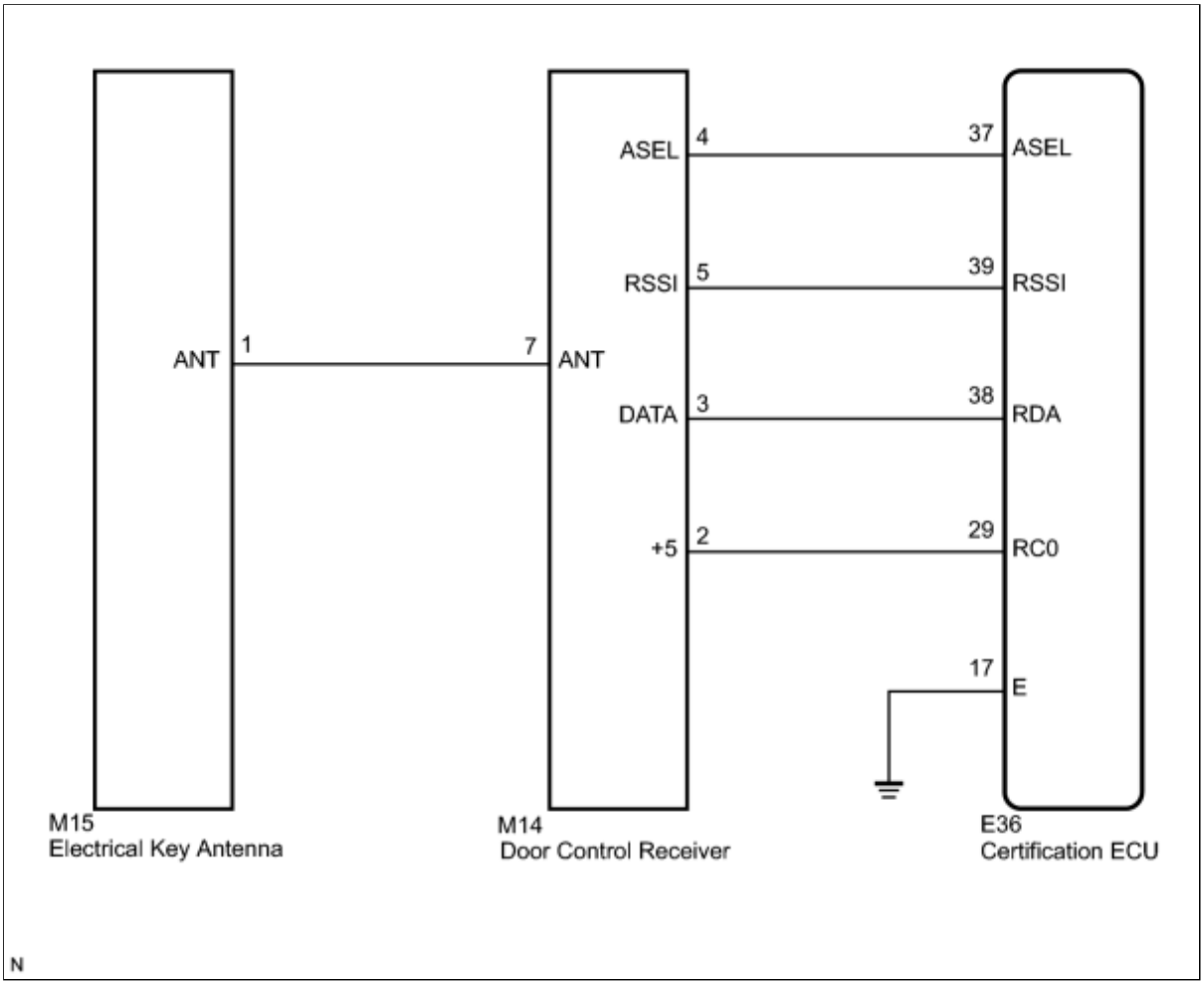

INSPECTION PROCEDURE

PROCEDURE

1.	CHECK HARNESS AND CONNECTOR (CERTIFICATION ECU - DOOR CONTROL RECEIVER)

(a) Disconnect the E36 certification ECU connector and M14 door control receiver connector.

(1) Measure the resistance according to the value(s) in the table below.

Standard Resistance:

TESTER CONNECTION	CONDITION	SPECIFIED CONDITION
E36-39 (RSSI) - M14-5 (RSSI)	Always	Below 1 Ω

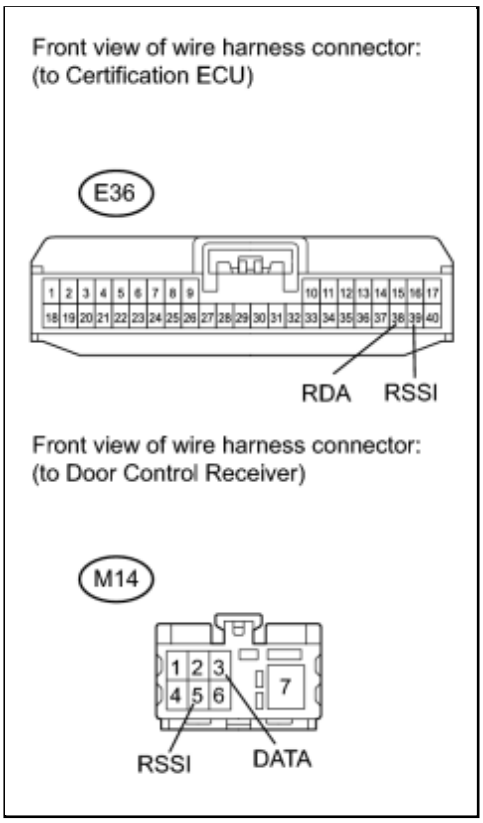

E36-38 (RDA) - M14-3 (DATA)	Always	Below 1 Ω
E36-39 (RSSI) - E36-38 (RDA)	Always	10 kΩ or higher
E36-39 (RSSI) - Body ground	Always	10 kΩ or higher
E36-38 (RDA) - Body ground	Always	10 kΩ or higher

NG ▶ **REPAIR OR REPLACE HARNESS OR CONNECTOR**

OK ▼

2.	**CHECK CERTIFICATION ECU**

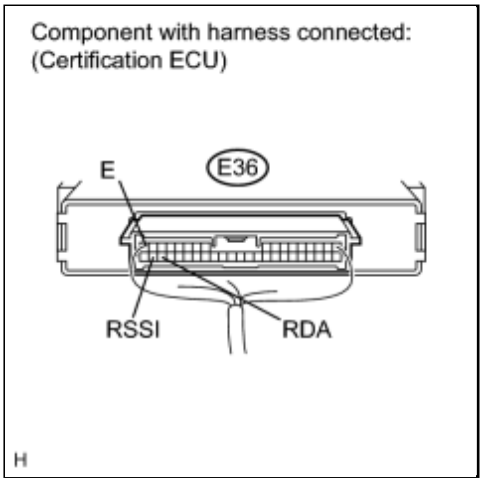

(a) Reconnect the E36 ECU connector.

(b) Measure the voltage according to the value(s) in the table below.

Standard Voltage:

TESTER CONNECTION	CONDITION	SPECIFIED CONDITION
E36-39 (RSSI) - E36-17 (E)	Engine switch off, all doors closed, the electrical key is not in the actuation area	Below 1 V

TESTER CONNECTION	CONDITION	SPECIFIED CONDITION
	Engine switch off, all doors closed, the electrical key is in the actuation area	4.6 to 5.4 V
E36-38 (RDA) - E36-17 (E)	Engine switch off, all doors closed and transmitter switch not pressed	Below 1 V
	Engine switch off, all doors closed and transmitter switch pressed	4.6 to 5.4 V

NG ▶ **REPLACE CERTIFICATION ECU (SMART KEY ECU)**

OK ▼

3.	REPLACE DOOR CONTROL RECEIVER

(a) Replace the door control receiver with a known good one INFO .

NEXT ▼

4.	CONFIRM DTC

(a) Clear the DTCs INFO .

(b) Check if the same DTC is detected.

Result:

RESULT	PROCEED TO

RESULT	PROCEED TO
DTC is not output	A
DTC is output	B

B ▶ **REPLACE CERTIFICATION ECU (SMART KEY ECU)**

A ▶ **END (DOOR CONTROL RECEIVER IS DEFECTIVE)**

Last Modified: 3-10-2010	6.4 S	**From:** 200901
Model Year: 2010	**Model:** Corolla	**Doc ID:** RM0000026DB019X
Title: DOOR LOCK: WIRELESS DOOR LOCK CONTROL SYSTEM (w/ Smart Key System): DIAGNOSTIC TROUBLE CODE CHART (2010 Corolla)		

DIAGNOSTIC TROUBLE CODE CHART

HINT:

If a trouble code is displayed during the DTC check, inspect the trouble areas listed for that code. For details of the code, refer to "See page" in the DTC chart.

- Inspect the fuses and relays before troubleshooting the areas shown in the table below.

Wireless Door Lock Control System

DTC CODE	DETECTION ITEM	TROUBLE AREA	SEE PAGE
B1242	Wireless Door Lock Tuner Circuit Malfunction	Door control receiver Wire harness or connector Certification ECU	INFO

Last Modified: 3-10-2010	6.4 J	**From:** 200901
Model Year: 2010	**Model:** Corolla	**Doc ID:** RM0000027Q800NX
Title: DOOR LOCK: WIRELESS DOOR LOCK CONTROL SYSTEM (w/ Smart Key System): No Answer-Back (2010 Corolla)		

No Answer-Back

DESCRIPTION

In some cases, wireless door lock control functions are normal but the hazard warning lights and/or wireless door lock buzzer answer-back function(s) do not operate. In such cases, the certification ECU (smart key ECU assembly) hazard warning light and/or wireless door lock buzzer signal outputs may be malfunctioning.

NOTICE:

Troubleshooting should be started after confirming that the customize status of the answer-back function has been switched ON.

WIRING DIAGRAM

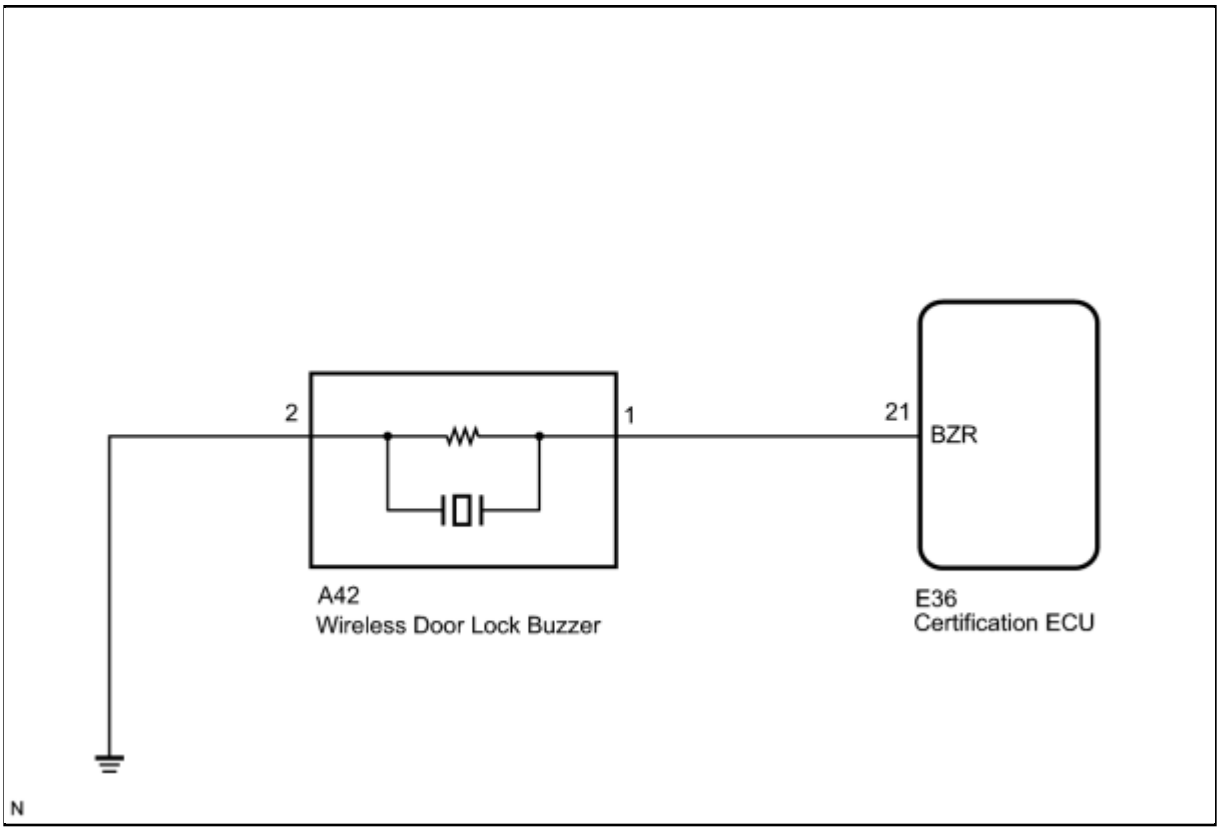

INSPECTION PROCEDURE

PROCEDURE

1.	**CHECK WIRELESS DOOR LOCK CONTROL FUNCTION**

(a) Check the wireless door lock control functions by operating the transmitter switch.

Result:

RESULT	PROCEED TO
Wireless door lock functions are normal but hazard warning lights answer-back does not occur	A
Wireless door lock functions are normal but wireless door lock buzzer answer-back does not occur	B
Doors cannot be locked and unlocked using transmitter	C

C ▶ **GO TO FLOWCHART**

B ▶ **PERFORM ACTIVE TEST USING TECHSTREAM (WIRELESS DOOR LOCK BUZZER)**

A ▼

2.	**CHECK HAZARD WARNING LIGHT**

(a) Check that the hazard warning lights flash continuously when the hazard warning signal switch is pressed.

OK:

Hazard warning lights flash continuously.

NG ▶ **GO TO LIGHTING SYSTEM**

OK ▼

3.	**REPLACE MAIN BODY ECU**

(a) Replace the main body ECU with a known good one.

NEXT

4.	**CHECK HAZARD WARNING LIGHTS**

(a) Check that the hazard warning lights flash continuously when the door control transmitter LOCK or UNLOCK switch is pressed.

OK:

Hazard warning lights flash continuously.

NG ▶ **REPLACE CERTIFICATION ECU (SMART KEY ECU)**

OK ▶ **END (MAIN BODY ECU IS DEFECTIVE)**

5.	**PERFORM ACTIVE TEST USING TECHSTREAM (WIRELESS DOOR LOCK BUZZER)**

(a) Enter Active Test, using the Techstream to generate a control command, and then check that the wireless buzzer operates normally.

Main Body

TESTER DISPLAY	TEST PART	CONTROL RANGE	DIAGNOSTIC NOTE
Wireless Buzzer	Wireless Door Lock Buzzer	ON/OFF	-

OK:

Wireless buzzer turns ON/OFF.

NG ▶ **INSPECT WIRELESS DOOR LOCK BUZZER**

OK ▶ **REPLACE CERTIFICATION ECU (SMART KEY ECU)**

6.	**INSPECT WIRELESS DOOR LOCK BUZZER**

(a) Measure the resistance according to the value(s) in the table below.

Standard Resistance:

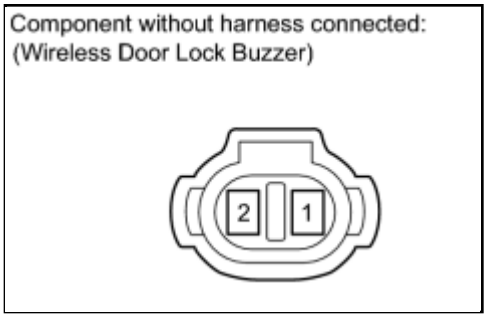

TESTER CONNECTION	CONDITION	SPECIFIED CONDITION
1 - 2	Always	950 to 1050 Ω

NOTICE:

When battery voltage is directly applied to the buzzer, the buzzer does not sound.

NG ▶ **REPLACE WIRELESS DOOR LOCK BUZZER**

OK ▼

7.	**CHECK WIRE HARNESS (WIRELESS DOOR LOCK BUZZER - CERTIFICATION ECU AND BODY GROUND)**

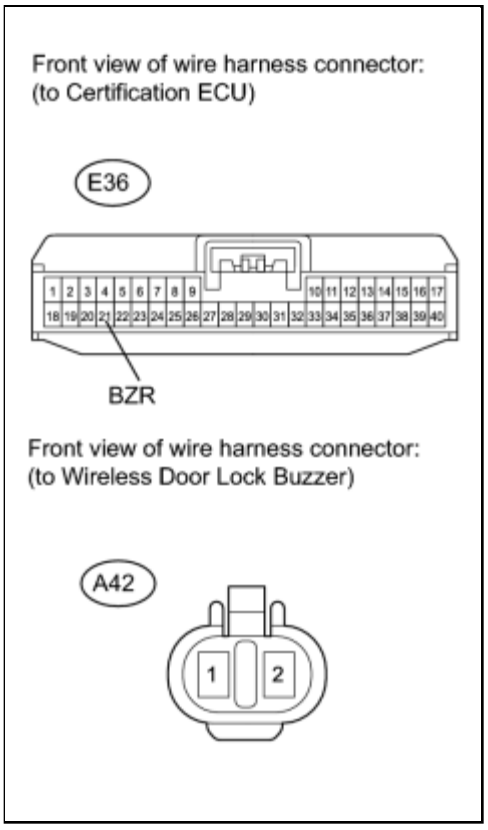

(a) Disconnect the E36 certification ECU connector and A42 wireless door lock buzzer connector.

(b) Measure the resistance according to the value(s) in the table below.

Standard Resistance:

TESTER CONNECTION	CONDITION	SPECIFIED CONDITION
E36-21 (BZR) - A42-1	Always	Below 1 Ω
E36-21 (BZR) - Body ground	Always	10 kΩ or higher
A42-2 - Body ground	Always	Below 1 Ω

NG ▶ **REPAIR OR REPLACE HARNESS OR CONNECTOR**

OK ▶ **REPLACE CERTIFICATION ECU (SMART KEY ECU)**

Last Modified: 3-10-2010	6.4 R	**From:** 200901
Model Year: 2010	**Model:** Corolla	**Doc ID:** RM0000024CQ00ZX
Title: DOOR LOCK: WIRELESS DOOR LOCK CONTROL SYSTEM (w/o Smart Key System): PARTS LOCATION (2010 Corolla)		

PARTS LOCATION

ILLUSTRATION

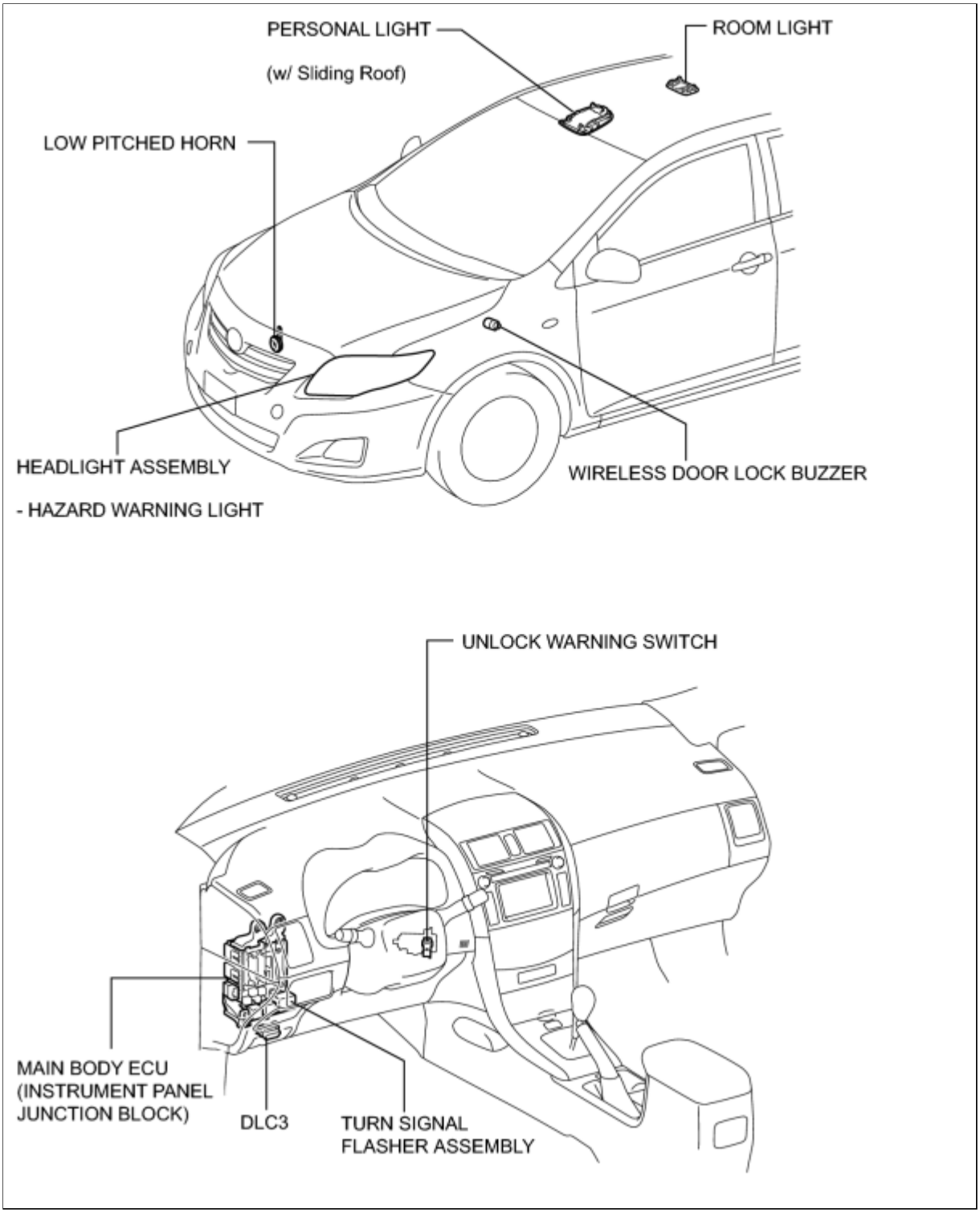

ILLUSTRATION

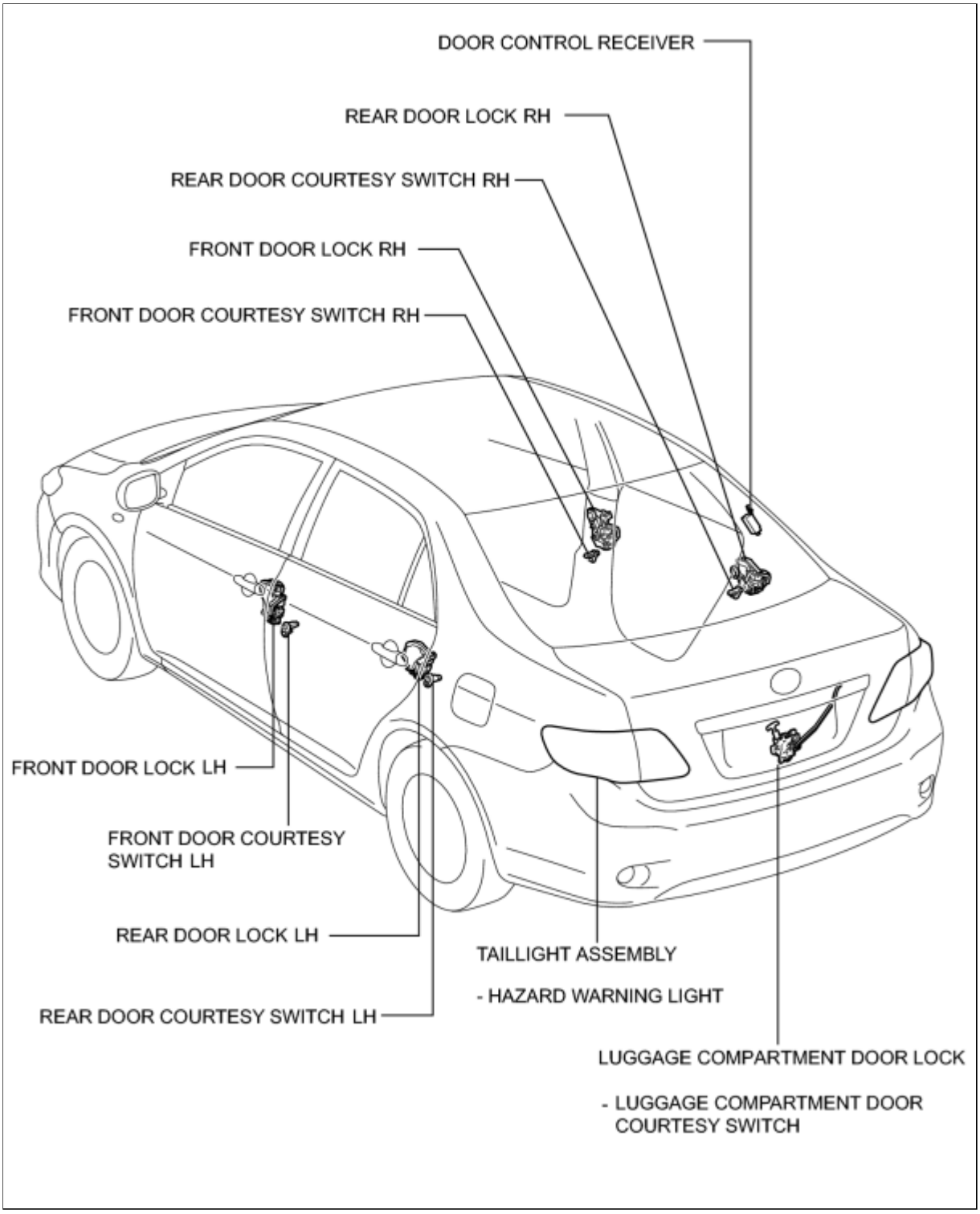

ILLUSTRATION

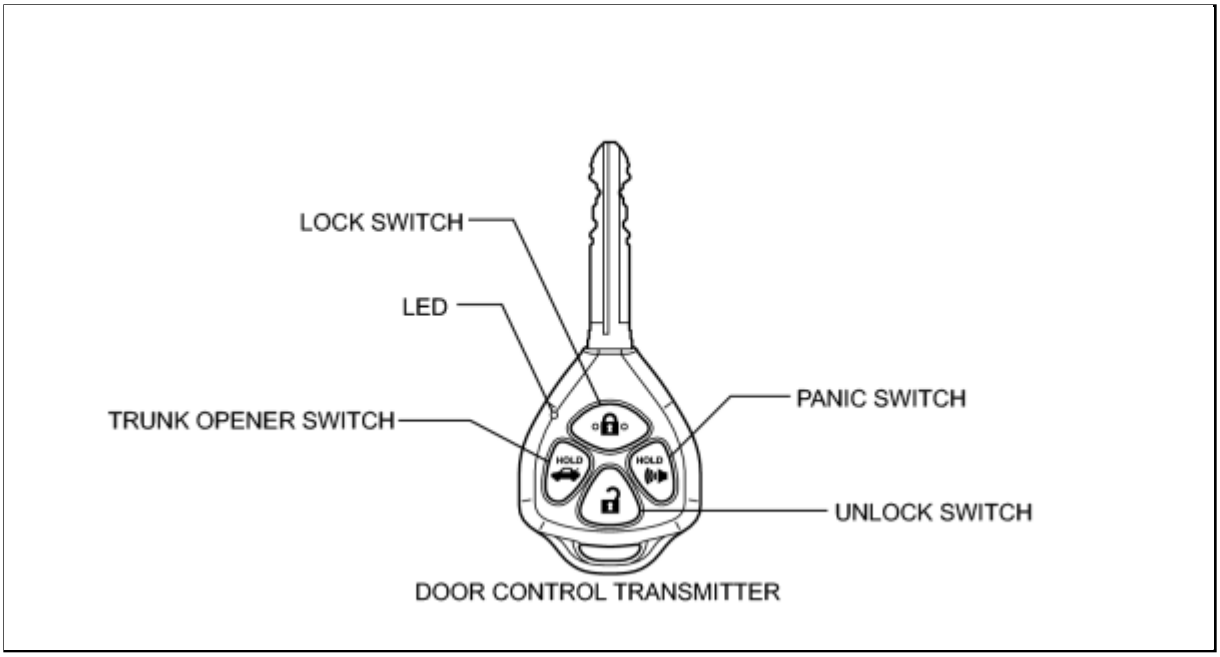
LOCK SWITCH
LED
TRUNK OPENER SWITCH
PANIC SWITCH
UNLOCK SWITCH
HOLD
HOLD
DOOR CONTROL TRANSMITTER

Last Modified: 3-10-2010	6.4 U	**From:** 200901
Model Year: 2010	**Model:** Corolla	**Doc ID:** RM000001OBR014X
Title: DOOR LOCK: WIRELESS DOOR LOCK CONTROL SYSTEM (w/o Smart Key System): SYSTEM DIAGRAM (2010 Corolla)		

SYSTEM DIAGRAM

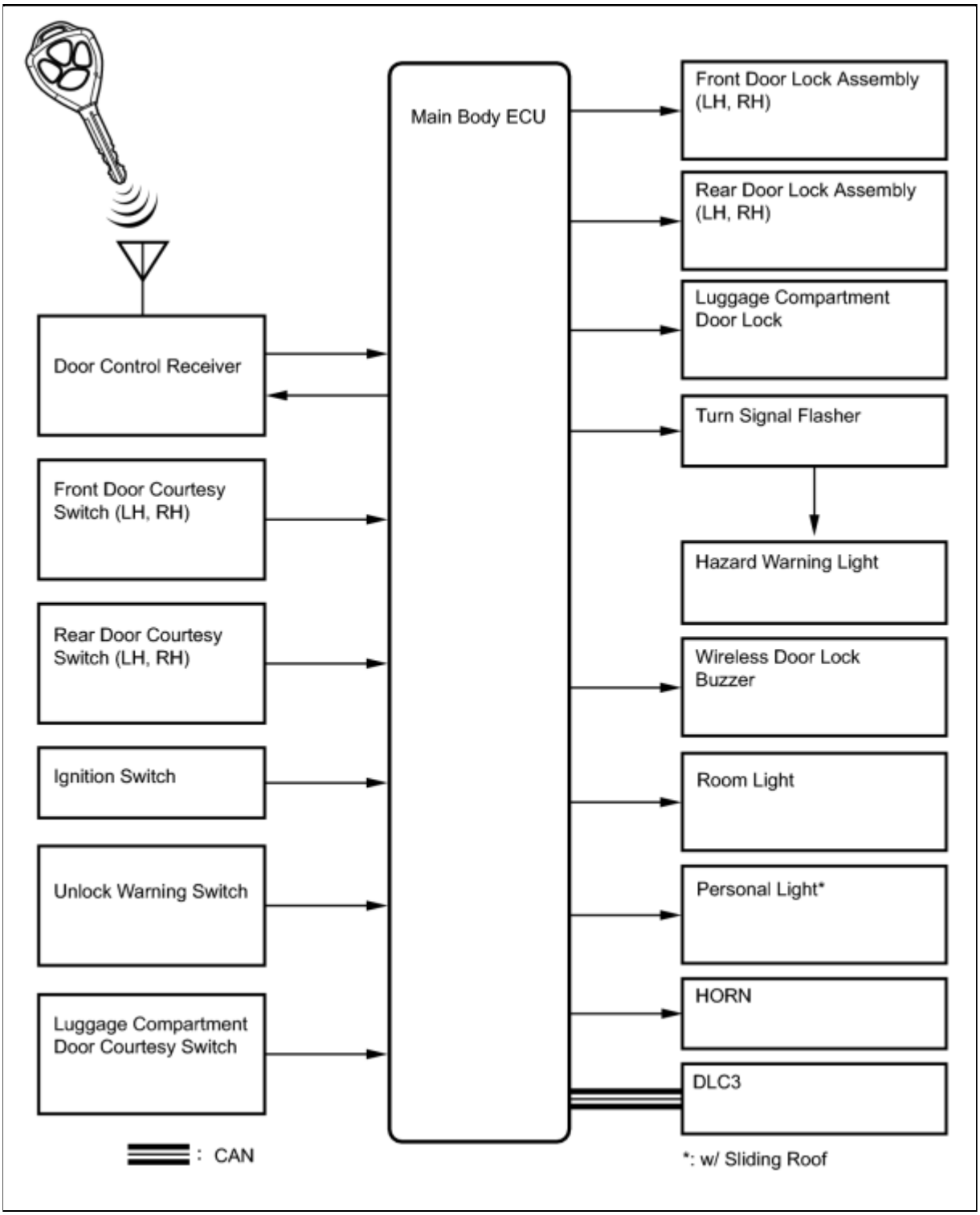

Last Modified: 3-10-2010	6.4 D	**From:** 200901
Model Year: 2010	**Model:** Corolla	**Doc ID:** RM0000012LZ01FX
Title: DOOR LOCK: WIRELESS DOOR LOCK CONTROL SYSTEM (w/o Smart Key System): SYSTEM DESCRIPTION (2010 Corolla)		

SYSTEM DESCRIPTION

1. WIRELESS DOOR LOCK CONTROL SYSTEM

The wireless door lock control system functions to lock and unlock all the doors from a distance. The system is controlled by a hand-held transmitter which sends radio waves to the door control receiver. The main body ECU performs an ID code identification process and engages the door lock.

2. FUNCTION OF MAIN COMPONENTS

COMPONENT	FUNCTION
Door control transmitter	• Has LOCK, UNLOCK, LUGGAGE OPEN and PANIC switches. • Transmits weak radio waves (recognition codes and function codes) to the door control receiver. • Illuminates the indicator light (LED) during transmission.
Door control receiver	Receives weak radio waves (recognition codes and function codes) and outputs them as code data to the main body ECU.
• Front door courtesy light switch • Rear door courtesy light switch • Luggage compartment door courtesy light switch	Turns on when a door is opened and turns off when it is closed. Outputs door status codes (open or closed) to the main body ECU.
Unlock warning switch	Detects if the key is inserted in the ignition key cylinder or not.
Door lock position switch	Transmits the door lock positions of each door to the main body ECU.
Main body ECU	Sends wireless door lock control signals in response to the code data from the door control receiver and signals from each switch.

3. SYSTEM FUNCTION

The door control transmitter has the LOCK, UNLOCK, LUGGAGE OPEN and PANIC switches. Operating these switches activates each function.

The wireless door lock control system has the following functions:

HINT:

The default settings of the following functions are ON. Some of these functions can be customized INFO **.**

FUNCTION	OPERATION
All door lock	Pressing the LOCK switch locks all doors.
All door unlock (Unlock 2 operation)	Pressing the UNLOCK switch twice within 3 seconds unlocks all the doors after the driver's door is unlocked.
Automatic lock	If none of the doors is opened within 60 seconds after they are unlocked by the wireless door lock control, all the doors will lock again automatically.
Luggage compartment door open	Pressing the LUGGAGE OPEN switch of the transmitter opens the luggage compartment door.
Answer back	• When the doors are locked by wireless operation, the hazard warning lights flash once, and wireless door lock buzzer sounds once. • When the doors are unlocked by wireless operation, the hazard warning lights flash twice and wireless door lock buzzer sounds twice. • When the luggage compartment door is opened by wireless operation, the wireless door lock buzzer sounds.
Panic alarm	Pressing the PANIC switch of the transmitter for longer than about 0.8 seconds causes the following alarms to activate: • Sounds the horn. • Flashes the hazard lights. • Illuminates the front interior lights (when the switch is in the DOOR position). While the panic alarm is operating, pressing any switch of the transmitter cancels the alarm operation.
Door ajar warning	The buzzer sounds when the LOCK switch is pressed when any of the doors are ajar, and it sounds for 10 seconds continuously. The buzzer stops when all doors are closed or the UNLOCK switch is pressed.
Illuminated entry	When all the doors are locked, pressing UNLOCK switch causes the interior lights to come on simultaneously with the unlock operation.
Self-diagnostic mode	The following are conditions to enter the self-diagnostic mode: • If the door control receiver receives normal radio waves from the door control transmitter when the system is in diagnostic mode, it flashes the interior lights and sounds the wireless door lock buzzer in a normal pattern that corresponds to the function of each switch. • Read DTCs using the Techstream.
Transmitter recognition code registration	Enables the registration (writing and storing) of 6 types of transmitter recognition codes in the EEPROM that is contained in the door control receiver.

4. TRANSMITTER RECOGNITION CODE REGISTRATION FUNCTION

The table below shows the 4 ID registration function modes by which up to 6 different codes can be registered. The codes are electronically registered (written and stored) in the EEPROM that is contained in the door control receiver.

MODE	FUNCTION
Add mode	Adds a newly received code while preserving any previously registered codes. This mode is used when adding a new transmitter. If the number of registered codes exceeds 6, the oldest registered code is erased first.
Rewrite mode	Erases all previously registered codes and registers only newly input codes.
Confirmation mode	Confirms how many codes are currently registered. When adding a new code, this mode is used to check how many codes already exist.
Prohibition mode	Deletes all the registered codes and disables the wireless door lock function. This mode is used when the transmitter is lost.

5. CONDITIONS THAT WIRELESS FUNCTIONS DO NOT OPERATE

(a) Lock function will not operate when:

- Any of the doors is open.
- The key is inserted in the ignition key cylinder.

(b) Unlock function will not operate when:

- The key is inserted in the ignition key cylinder.

Last Modified: 3-10-2010	6.4 D	**From:** 200901
Model Year: 2010	**Model:** Corolla	**Doc ID:** RM0000010J306KX
Title: DOOR LOCK: WIRELESS DOOR LOCK CONTROL SYSTEM (w/o Smart Key System): HOW TO PROCEED WITH TROUBLESHOOTING (2010 Corolla)		

HOW TO PROCEED WITH TROUBLESHOOTING

HINT:

The wireless door lock control system troubleshooting procedure is based on the premise that the power door lock control system is operating normally. Check the power door lock control system first before troubleshooting the wireless door lock control system INFO **.**

Use this procedure to troubleshoot the wireless door lock control system.

1.	**VEHICLE BROUGHT TO WORKSHOP**

NEXT

2.	**CUSTOMER PROBLEM ANALYSIS**

(a) Interview the customer to confirm the problem INFO .

NEXT

3.	**DTC CHECK**

(a) Check for DTCs and note any codes that are output.

(b) Clear the DTCs.

(c) Recheck for DTCs.

Result:

RESULT	PROCEED TO
DTC does not recur	A
DTC recurs	B

B ▶ INFO **Go to DTC CHART**

A
▼

4.	**SYMPTOM SIMULATION**

NEXT
▼

5.	**PROBLEM SYMPTOMS TABLE**

(a) If the fault is not listed in the problem symptoms table, proceed to A.

(b) If the fault is listed in the problem symptoms table, proceed to B.

B ▶ **Go to step 8**

A
▼

6.	**PERFORM TROUBLESHOOTING ACCORDING TO MALFUNCTION SYMPTOM**

(a) Terminals of ECU INFO

(b) Data List/Active Test INFO

NEXT

7.	ADJUST, REPAIR OR REPLACE

NEXT

8.	CONFIRMATION TEST

NEXT END

Last Modified: 3-10-2010	6.4 D	**From:** 200901
Model Year: 2010	**Model:** Corolla	**Doc ID:** RM000001NMX019X
Title: DOOR LOCK: WIRELESS DOOR LOCK CONTROL SYSTEM (w/o Smart Key System): OPERATION CHECK (2010 Corolla)		

OPERATION CHECK

1. FUNCTIONS AND OPERATING CONDITIONS

(a) This wireless door lock control function operates only when the following 4 conditions are met:

(1) There is no key in the ignition key cylinder.

(2) All the doors are closed.

(3) The power door lock system is functioning normally.

(4) The function is not disabled by customization.

HINT:

The UNLOCK function operates even when any of the doors are open.

(b) The wireless transmitter operational range differs depending on the situation.

(1) The operational range differs depending on the user, the way the transmitter is held and the location.

(2) In certain areas, the operational range will be reduced due to the vehicle body shape and the influence of the surrounding environment.

(3) Since the transmitter uses weak radio waves, the operational range may be reduced or the transmitter may not function if interference or stronger radio waves occur in the area where the transmitter is used.

(4) When the battery is low, the operational range is reduced and/or the transmitter may not function.

HINT:

If the transmitter has been left in a place that is exposed to direct sunlight, such as on the instrument panel, the battery may be weakened or other problems may occur.

2. CHECK WIRELESS DOOR LOCK CONTROL FUNCTIONS

HINT:

- The switches built into the door control transmitter send radio waves to the door lock control receiver.
- The operational range must be taken into account during checks.

(a) Establish conditions that allow the wireless control function to be operated successfully.

(b) Check the following basic functions.

(1) Check that the transmitter LED lights up 3 times when each switch is pressed 3 times and that the LED blinks when each switch is pressed and held down.

HINT:

If the LED does not illuminate when the switch has been pressed 3 times or more, the battery may be depleted.

(2) Check that all the doors lock when the LOCK switch is pressed.

(3) Check that the driver side door unlock when the UNLOCK switch is pressed once, and unlocks all doors when pressed twice within 3 seconds.

(4) Check that the luggage compartment door opens when the LUGGAGE OPEN switch is pressed and held 0.6 second.

(c) Check the automatic lock function.

(1) Check that if the all doors are unlocked with the UNLOCK switch and none of the doors is opened or locked within approximately 60 seconds, the doors automatically re-lock.

(2) Check that if the all doors are unlocked with the UNLOCK switch and a door is opened or locked within approximately 60 seconds, the automatic lock function does not operate.

(d) Check the interior light ON function.

HINT:

Turn the interior light switch to the DOOR position before the check.

(1) Check that the interior lights come on simultaneously with the unlocking operation when the UNLOCK switch is pressed.

(2) Check that the interior lights go off in approximately 15 seconds if none of the doors is opened after the unlocking operation.

(e) Check the answer back function.

(1) When the doors are locked by wireless operation, the hazard warning lights flash once and the wireless door lock buzzer sounds once.

(2) When the doors are unlocked by wireless operation, the hazard warning lights flash twice and the wireless door lock buzzer sounds twice.

(3) When the luggage compartment door is opened by wireless operation, the wireless door lock buzzer sounds.

(f) Check the switch operation fail-safe function.

(1) Check that the doors cannot be locked by operating a switch while the key is in the ignition key cylinder.

HINT:

This check cannot be made when the system is in recognition code registration mode.

(g) Check the chattering prevention function.

(1) Check that the corresponding operation occurs only once, and does not repeat itself while the switch is held down pressed. Check that the corresponding operation is carried out when the switch is operated repeatedly at 1-second intervals.

(h) Check the door ajar warning function.

(1) Check that the wireless door lock buzzer sounds for approximately 10 seconds when the LOCK switch is pressed with any of the doors ajar or open.

(i) Check the remote panic function.

(1) Check that the horn sounds, the headlights and taillights flash and the interior light remains on (when the light switch is turned to the DOOR position) for 60 seconds by the theft alarm function, when the PANIC switch is held down for 0.8 seconds or more. Also, check that the horn stops sounding and the lights stop flashing when either switch of the transmitter is pressed.

Last Modified: 3-10-2010	6.4 M	**From:** 200901
Model Year: 2010	**Model:** Corolla	**Doc ID:** RM0000023D301HX
Title: DOOR LOCK: WIRELESS DOOR LOCK CONTROL SYSTEM (w/o Smart Key System): REGISTRATION (2010 Corolla)		

REGISTRATION

HINT:

- Register a new recognition code when replacing the door control transmitter or the door control receiver.
- Add mode is used to retain the already registered codes while registering a new recognition code. This mode is used when adding a transmitter. If the number of registered codes exceeds 6, the previously registered code will be correspondingly erased in order, starting from the code registered first.
- Rewrite mode is used to erase all the previously registered codes and register only new recognition codes. This mode is used when exchanging the transmitter or the door control receiver for new one.
- Confirmation mode is used to confirm how many recognition codes have already been registered before an additional registration of a recognition code.
- Prohibition mode is used to erase all the registered codes and cancel the wireless door lock function. Use this mode when the transmitter is lost.
- All of the steps in the following registration procedure must be performed in sequential order continuously.

1. REGISTRATION OF RECOGNITION CODE (MANUAL OPERATION)

(a) The following conditions should be met.

(1) No key is inserted in the ignition key cylinder.

(2) Only driver side door is opened.

(b) Perform the following operations to select the desired mode.

(1) Insert and remove the key from the ignition switch twice within 5 seconds. (End in removed)

(2) After the above operation, close and open the driver's door twice. (End in open)

Then insert the key into the ignition key cylinder and remove it.

HINT:

Complete this procedure within 40 seconds.

(3) After the above operations, close and open the driver side door twice. (End in open)

Then insert the key into the ignition key cylinder and close the door.

HINT:

Complete this procedure within 40 seconds.

(4) Turn the ignition switch from LOCK to ON and back to LOCK at approximately 1 second intervals 1 to 5 times to select a mode (see the illustration). Then remove the key from the ignition key cylinder.

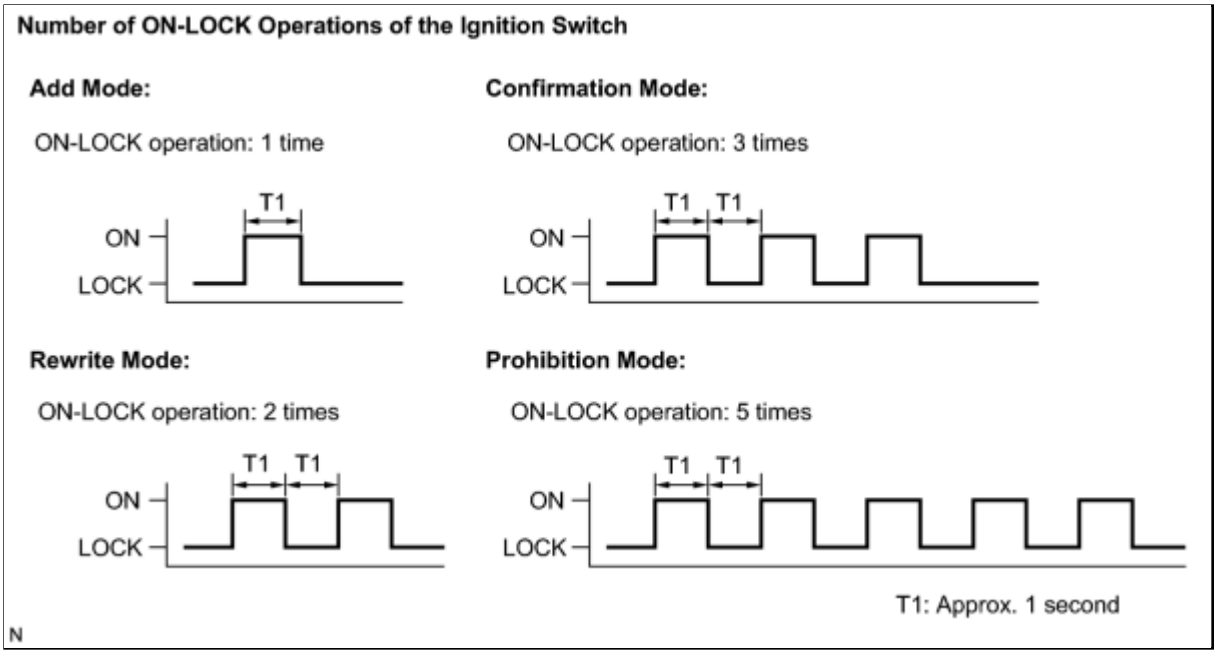

HINT:

Complete this procedure within 40 seconds.

NOTICE:

If the number of the ON-LOCK operations of the ignition switch is 0, 4, 6 or more, there will be no response to inform which mode has been selected.

(5) After selecting a mode, the main body ECU automatically performs the power door LOCK-UNLOCK operation within 5 seconds to inform the selected mode (see the illustration).

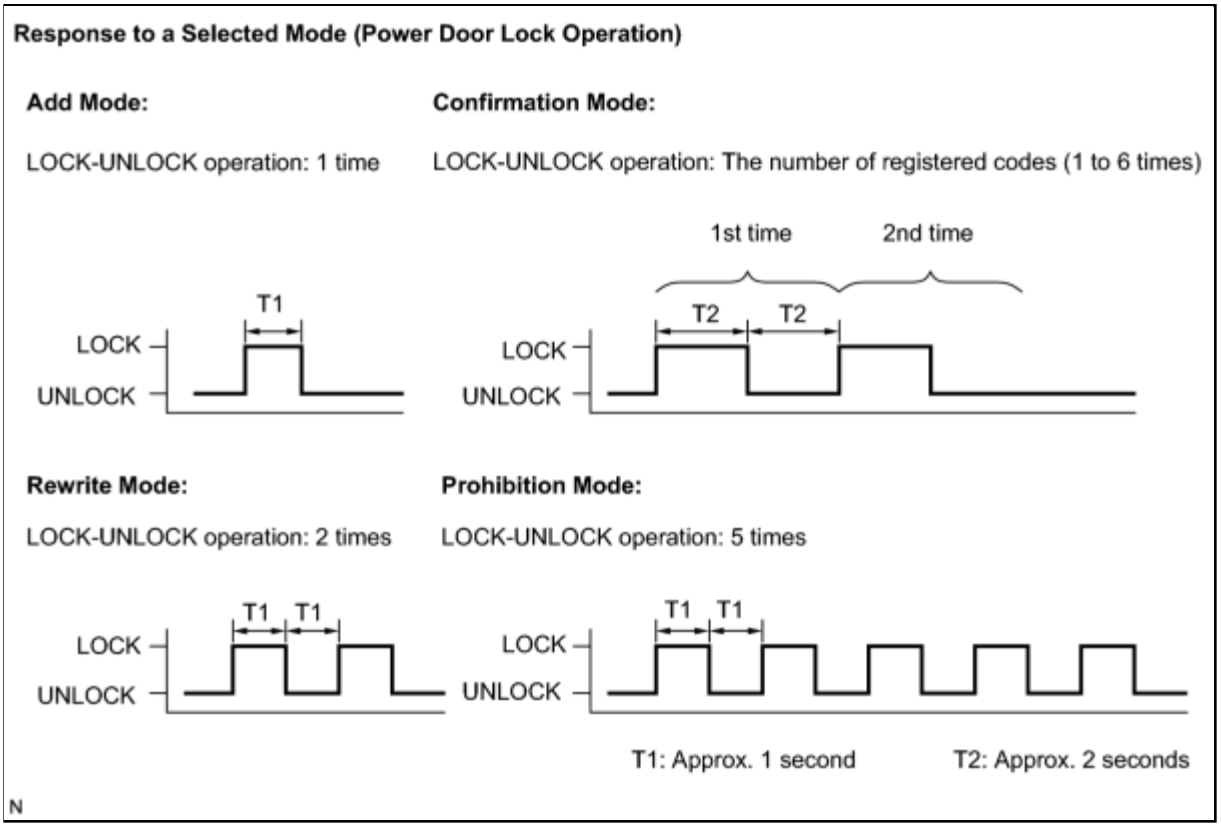

HINT:

- In confirmation mode, the LOCK- UNLOCK operation will occur once for each recognition code that has been registered. For example, if 2 recognition codes have been registered, the LOCK-UNLOCK operation will occur 2 times.
- In confirmation mode and prohibition mode, once a LOCK-UNLOCK operation response has occurred, the registration procedure will end.

(c) Register new recognition codes (Add mode or Rewrite mode):

(1) Within 45 seconds after add mode or rewrite mode has been selected, press the LOCK and UNLOCK switches on the transmitter switch simultaneously for 1.0 to 1.5 seconds.

Then, press either one of the switches for more than 1.0 second (Procedure "A").

(2) Within 5 seconds after the transmitter switch has been released, the LOCK-UNLOCK operation will be automatically performed once if the registration of the recognition code of the transmitter is completed correctly.

If the LOCK-UNLOCK operation is performed twice, registration of the recognition code has failed. Perform the registration procedure from the beginning (Procedure "B").

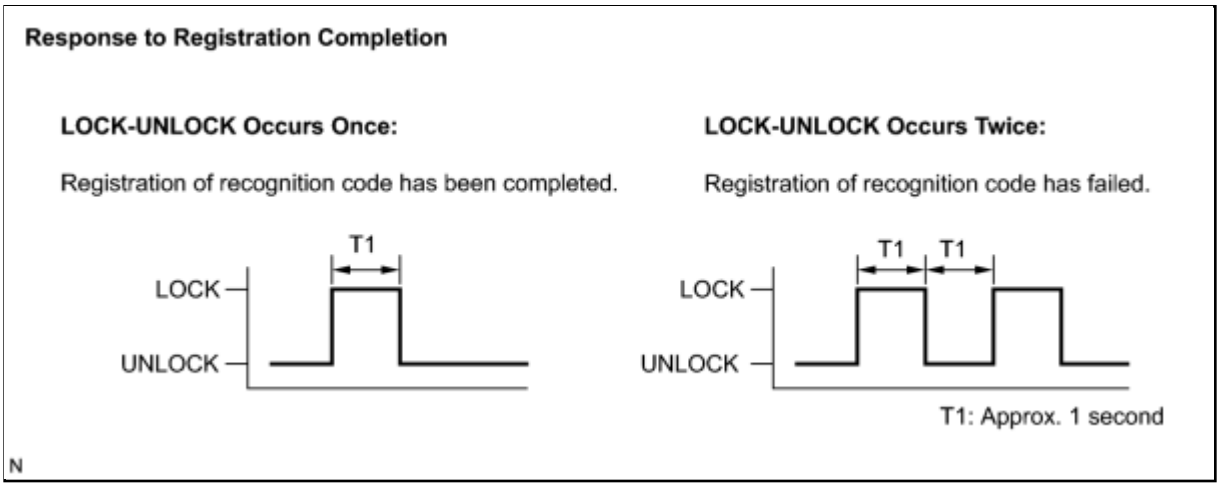

(3) If multiple transmitters need to be registered, repeat procedures "A" and "B" within 45 seconds each.

HINT:

- Up to 6 recognition codes can be registered at once.
- If even one of the following conditions is satisfied, registration mode will end.
  - 40 seconds have elapsed after a recognition code has been registered.
  - Any of the doors are opened.
  - The key is inserted into the ignition key cylinder.
  - 6 recognition codes are registered.

2. REGISTRATION OF RECOGNITION CODE (USING TECHSTREAM)

(a) Turn the ignition switch to ON.

(b) Select either add or rewrite mode according to the Techstream display.

(c) The number of registered codes is indicated.

(d) Registration of the door control transmitter.

(1) If either add mode or rewrite mode has been selected, press the LOCK and UNLOCK switches on the transmitter simultaneously.

(2) Within 3 seconds of releasing the LOCK and UNLOCK switches, press either of the switches on the door control transmitter.

NOTICE:

- Do not press the LOCK and UNLOCK switches simultaneously for more than 1.5 seconds.
- Perform this operation within 1 meter of the driver's seat to register the transmitter.
- Do not push other transmitter switches during the transmitter registration process.

(3) The main body ECU automatically performs the power door LOCK-UNLOCK operation once in order to indicate whether registration has been completed correctly or not.

(4) If continuing registration, the next recognition code must be registered in the door control transmitter within 30 seconds.

HINT:

Up to 6 recognition codes can be registered.

(e) Completing the registration mode.

(1) Registration mode will end when any of the following occurs:

- 30 seconds or more have elapsed after a code is registered.
- The Techstream is used to finish registration.
- The Techstream is disconnected.
- The ignition switch is turned off.

(f) Perform the following after registration is completed.

(1) Perform the wireless door lock control operation check 

.

HINT:

If the wireless door lock control does not operate, perform the registration procedure again.

Last Modified: 3-10-2010	6.4 D	**From:** 200901
Model Year: 2010	**Model:** Corolla	**Doc ID:** RM000001NN002CX
Title: DOOR LOCK: WIRELESS DOOR LOCK CONTROL SYSTEM (w/o Smart Key System): CUSTOMIZE PARAMETERS (2010 Corolla)		

CUSTOMIZE PARAMETERS

HINT:

The following items can be customized.

NOTICE:

- After confirming whether the items requested by the customer are applicable or not for customization, perform customizing operations.
- Be sure to record the current settings before customization.
- When troubleshooting, make sure that the item in question is not set to "OFF" as a result of customization (Example: If the wireless function does not operate, first check that the wireless function is not set to "OFF", then perform troubleshooting).

1. CUSTOMIZE

(a) Connect the Techstream to the DLC3.

(b) Turn the ignition switch to ON.

(c) Turn the Techstream on.

(d) Enter the following menu:

Customize Setting

(e) Select the setting by referring to the table below.

Wireless Door Lock Control System

DISPLAY (ITEM)	DEFAULT	FUNCTION	SETTING
Wireless Control	ON	Function that turns wireless door lock function ON/OFF	ON/OFF
Hazard Answer Back	ON	• When the doors are locked by wireless operation, the hazard warning lights flash once. • When the doors are unlocked by wireless operation, the hazard warning lights flash twice.	ON/OFF
Wireless Auto Lock	ON	This function turns the wireless auto lock function on or off.	ON / OFF
Wireless Buzzer Resp	ON	Wireless door lock buzzer response / ON or OFF	ON/OFF
Open Door Warning	ON	The buzzer sounds when LOCK is pressed when any of the doors are ajar.	ON/OFF

DISPLAY (ITEM)	DEFAULT	FUNCTION	SETTING
Unlock 2 Operation	ON	Function that unlocks driver side door when unlock switch on transmitter is pressed once, and unlocks all doors when pressed twice. If setting is OFF, pressing unlock switch once makes all doors unlock.	ON/OFF
Panic Function	ON	Function to operate theft deterrent system by continuously pressing panic switch on transmitter for 0.8 seconds	ON/OFF
Trunk Lid Operation	Long1	This function changes operation method of transmitter to open luggage compartment door. • 1tim ON: Push once • 2tim ON: Push twice • Long1: Push and hold for 0.6 seconds • Long2: Push and hold for 1.6 seconds • Prohibit: Does not operate	1tim ON/2tim ON/Long1 /Long2/Prohibit
Auto Lock Time	60 s	This function regulates the interval between unlocking and automatic relocking of doors.	30 s/60 s/120 s

Last Modified: 3-10-2010	6.4 T	**From:** 200901
Model Year: 2010	**Model:** Corolla	**Doc ID:** RM0000024CR01EX
Title: DOOR LOCK: WIRELESS DOOR LOCK CONTROL SYSTEM (w/o Smart Key System): PROBLEM SYMPTOMS TABLE (2010 Corolla)		

PROBLEM SYMPTOMS TABLE

If a normal system code is displayed during the DTC check, but the problem still occurs, check the circuits for each problem symptom in the order given in the table below and proceed to the relevant troubleshooting page.

HINT:

- Use the table below to help determine the cause of problem symptoms. If multiple suspected areas are listed, the potential causes of the symptoms are listed in order of probability in the "Suspected Area" column of the table. Check each symptom by checking the suspected areas in the order they are listed. Replace parts as necessary.
- Inspect the fuses and relays related to this system before inspecting the suspected areas below.

Wireless Door Lock Control System

SYMPTOM	SUSPECTED AREA	SEE PAGE
Only wireless control function is inoperative	Proceed to "Only wireless control function is inoperative"	INFO
Answer-back function only does not operate normally.	Proceed to "No answer-back"	INFO
Automatic lock function only does not operate normally.	Perform the operation check	INFO
	Key reminder warning system (unlock warning switch circuit)	INFO
	Lighting system (door courtesy light switch circuit)	INFO
	Main body ECU	-
Luggage compartment door open function only does not operate	Perform operation check	INFO
	Luggage compartment door lock assembly	INFO
	Main body ECU	-
	Wireharness or connector	-
Illuminated entry function only does not operate.	Perform the operation check	INFO
	Lighting system (illuminated entry function)	INFO
	Main body ECU	-
Door ajar warning function only does not	Perform the operation check	INFO

SYMPTOM	SUSPECTED AREA	SEE PAGE
operate	Lighting system (door courtesy light switch circuit)	INFO
	Main body ECU	-
Panic alarm function only does not operate	Perform operation check	INFO
	Horn system	-
	Main body ECU	-

Last Modified: 3-10-2010	6.4 U	**From:** 200901
Model Year: 2010	**Model:** Corolla	**Doc ID:** RM000001O1S016X
Title: DOOR LOCK: WIRELESS DOOR LOCK CONTROL SYSTEM (w/o Smart Key System): TERMINALS OF ECU (2010 Corolla)		

TERMINALS OF ECU

1. CHECK MAIN BODY ECU (INSTRUMENT PANEL JUNCTION BLOCK)

(a) Disconnect the 2A, 2B, 2C, 2E, 2F and 2G junction block connectors and E61 main body ECU connector.

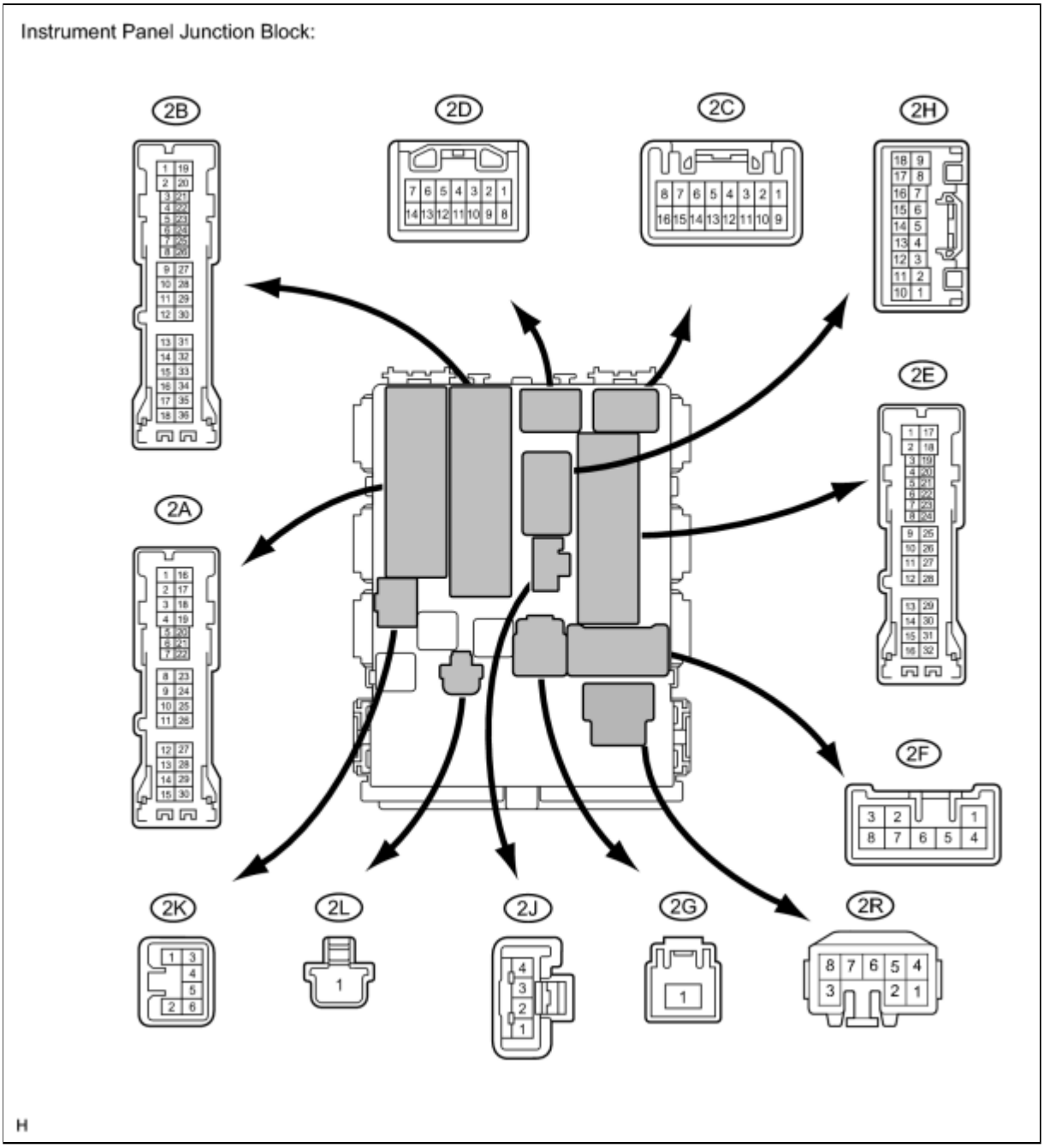

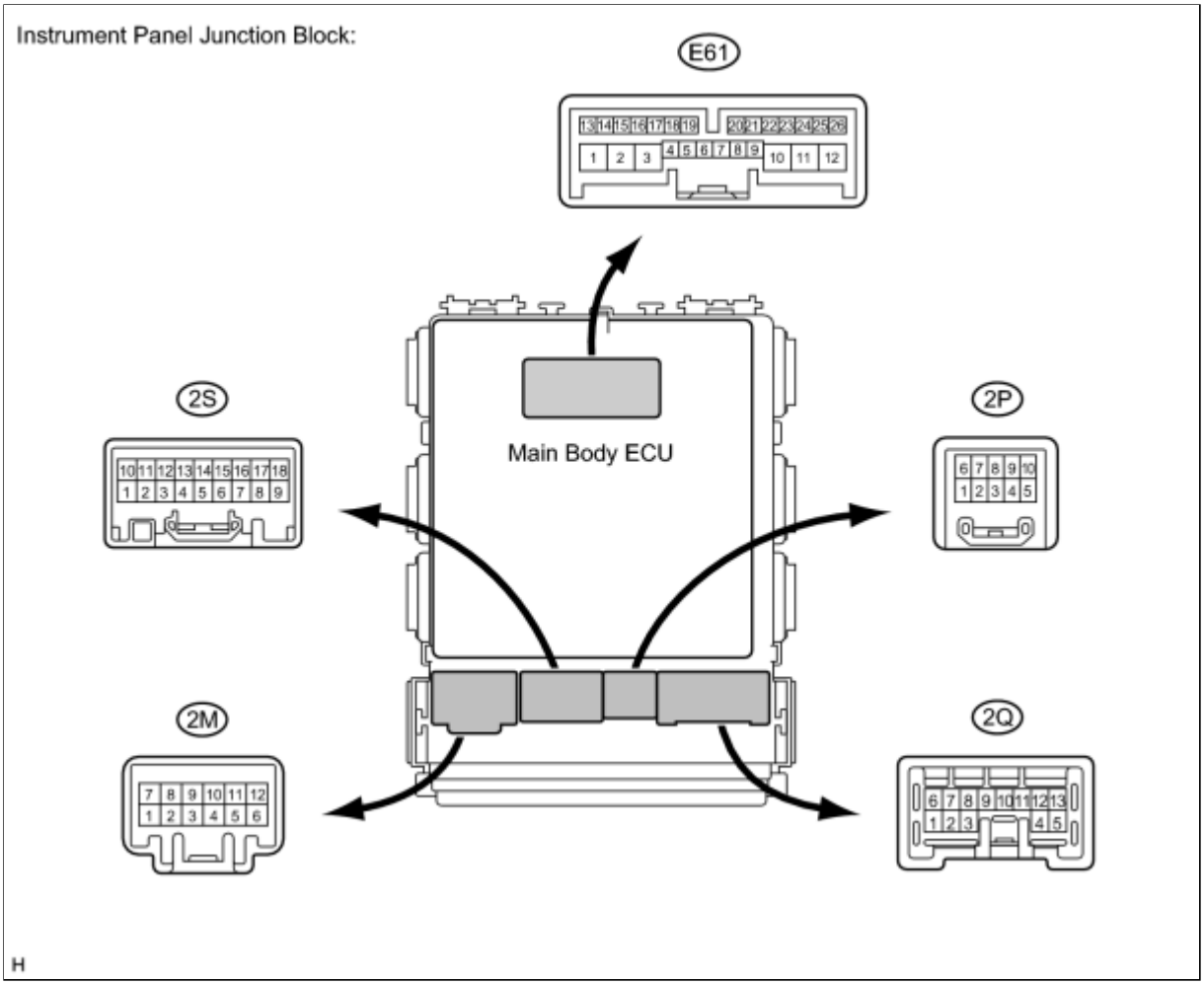

(b) Measure the resistance and voltage between each terminal of the wire harness side connectors and body ground.

TESTER CONNECTION	WIRING COLOR	TERMINAL DESCRIPTION	CONDITION	SPECIFIED CONDITION
2A-7 (LGCY) - Body ground	LG - Body ground	Luggage compartment door courtesy light switch input	Luggage compartment door CLOSED (OFF) → OPEN (ON)	10 kΩ or higher → Below 1 Ω
2E-20 (PCTY) - Body ground	BR - Body ground*1 BE - Body ground*2	Passenger side door courtesy light switch input	Passenger side door CLOSED (OFF) → OPEN (ON)	10 kΩ or higher → Below 1 Ω
2B-30 (BECU) - Body ground	W - Body ground	+B power supply	Always	11 to 14 V
2C-6 (DCTY) - Body ground	W - Body ground*1 R - Body ground*2	Driver side door courtesy light switch input	Driver side door CLOSED (OFF) → OPEN (ON)	10 kΩ or higher → Below 1 Ω
2E-17 (GND1) - Body ground	W-B - Body ground	Ground	Always	Below 1 Ω

TESTER CONNECTION	WIRING COLOR	TERMINAL DESCRIPTION	CONDITION	SPECIFIED CONDITION
2E-19 (RCTY) - Body ground	LG - Body ground*1 Y - Body ground*2	Rear courtesy light switch RH input	Rear door RH CLOSED (OFF) → OPEN (ON)	10 kΩ or higher → Below 1 Ω
2E-23 (KSW) - Body ground	L - Body ground	Unlock warning switch input	No key in ignition key cylinder (OFF) → Key inserted (ON)	10 kΩ or higher → Below 1 Ω
2F-5 (ACC) - Body ground	W - Body ground*1 L - Body ground*2	Ignition power supply (ACC signal)	Ignition switch ACC → off	11 to 14 V → Below 1 V
2G-1 (IG) - Body ground	W - Body ground	Ignition power supply (IG signal)	Ignition switch ON → off	11 to 14 V → Below 1 V
2G-1 (ALTB) - Body ground	W - Body ground	+B (power system alternator system) power supply	Always	11 to 14 V
E61-13 (LCTY) - Body ground	SB - Body ground*1 B - Body ground*2	Rear courtesy light switch LH input	Rear door LH CLOSED (OFF) → OPEN (ON)	10 kΩ or higher → Below 1 Ω

If the result is not as specified, there may be a malfunction on the wire harness side.

- *1: for TMC Made
- *2: Except for TMC made

(c) Reconnect the main body ECU and instrument panel junction block connectors.

(d) Measure the voltage between each terminal of the wire harness side connectors and body ground.

TESTER CONNECTION	WIRING COLOR	TERMINAL DESCRIPTION	CONDITION	SPECIFIED CONDITION
2R-8 (HAZ) - Body ground	GR - Body ground	Turn signal flasher relay signal	Transmitter LOCK or UNLOCK switch is pressed → not pressed	Below 1 V* → 11 to 14 V

- *: When operating the answer back function.

Last Modified: 3-10-2010	6.4 D	**From:** 200901
Model Year: 2010	**Model:** Corolla	**Doc ID:** RM000001NN601LX
Title: DOOR LOCK: WIRELESS DOOR LOCK CONTROL SYSTEM (w/o Smart Key System): DTC CHECK / CLEAR (2010 Corolla)		

DTC CHECK / CLEAR

1. DTC CHECK/CLEAR (USING TECHSTREAM)

(a) DTC check

(1) Connect the Techstream to the DLC3.

(2) Turn the ignition switch to ON.

(3) Read DTCs on the Techstream screen.

(b) DTC clear

(1) Connect the Techstream to the DLC3.

(2) Turn the ignition switch to ON.

(3) Clear the DTCs following the prompts on the Techstream screen.

HINT:

The Techstream has a SNAPSHOT function which records the monitored data.

Refer to the Techstream operator's manual for further details.

2. SELF-DIAGNOSTIC MODE (OPERATING IGNITION KEY CYLINDER)

(a) Switch to self-diagnostic mode.

(1) Insert the key into the ignition key cylinder and remove it.

(2) Within 5 seconds after the key is removed, insert it into the ignition key cylinder and then turn the ignition switch to ON then OFF 1 time. (End in OFF)

(3) Within 30 seconds of turning the ignition switch off, perform the following 9 times: Turn the ignition switch to ON then off. (End in OFF)

HINT:

Turning the ignition switch to ON after the procedure above has been completed will end the self-diagnostic mode.

NOTICE:

If the system fails to enter self-diagnostic mode, the system will return to normal mode.

(b) Check that the system has switched to self-diagnostic mode by checking the interior light output pattern.

Interior Light Output:

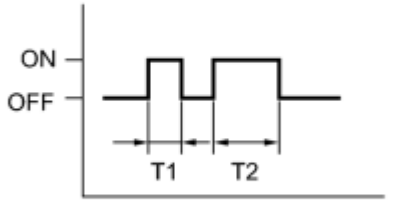

T1: 0.25 seconds

T2: 0.5 seconds

Wireless Door Lock Buzzer Output:

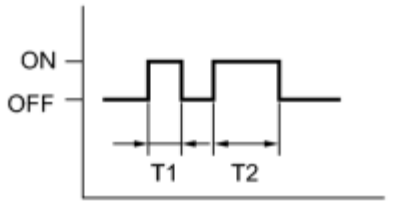

T1: 0.13 seconds

T2: 0.5 seconds

(c) Check that the system has switched to self-diagnostic mode by checking the wireless door lock buzzer output pattern.

(d) Check the diagnostic outputs when the door control transmitter switch is held down. The diagnostic outputs can be checked by the interior light and wireless door lock buzzer patterns.

Interior Light*1 and Wireless Door Lock Buzzer*2 Output:

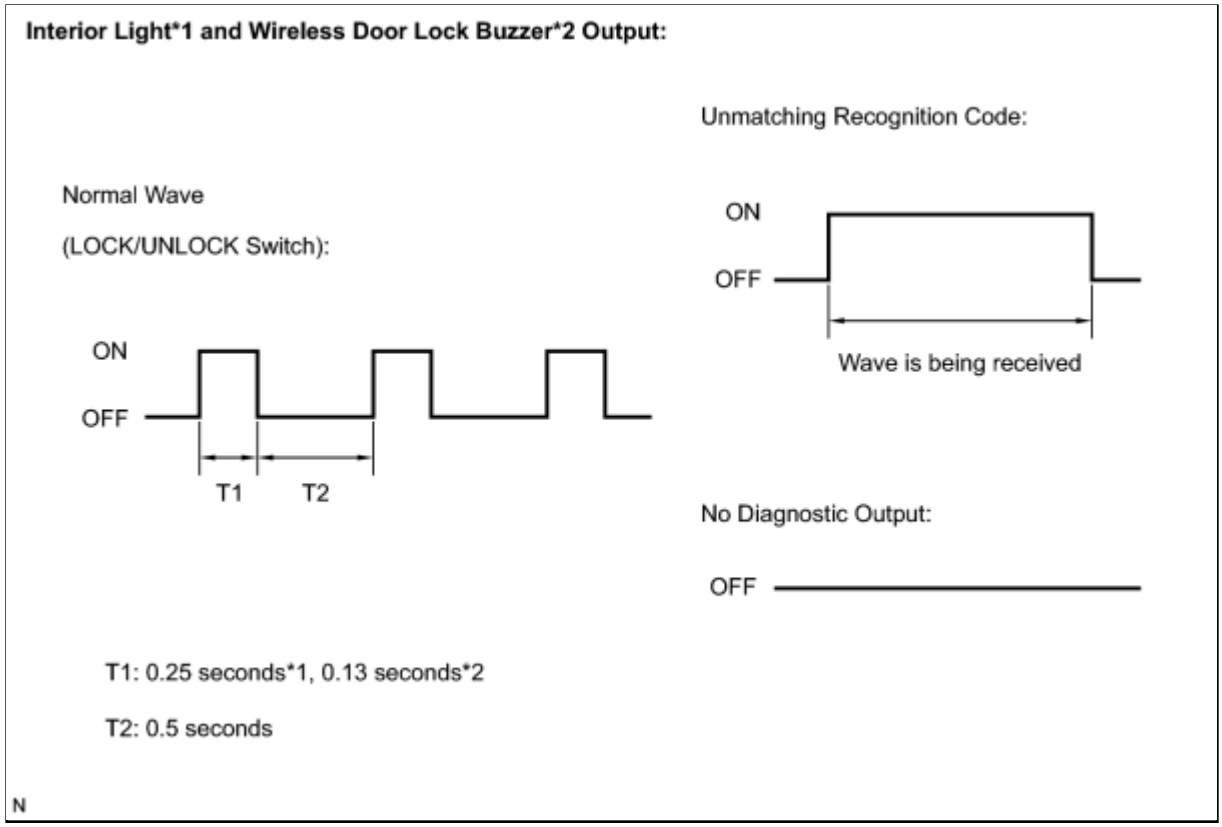

N

3. SELF-DIAGNOSTIC MODE (USING TECHSTREAM)

(a) Switch to self-diagnostic mode.

(1) Connect the Techstream to the DLC3.

(2) Turn the ignition switch to ON and turn the Techstream main switch on.

HINT:

Refer to the Techstream operator's manual for further details.

Last Modified: 3-10-2010	6.4 D	**From:** 200901
Model Year: 2010	**Model:** Corolla	**Doc ID:** RM000001PQX058X
Title: DOOR LOCK: WIRELESS DOOR LOCK CONTROL SYSTEM (w/o Smart Key System): DIAGNOSIS SYSTEM (2010 Corolla)		

DIAGNOSIS SYSTEM

1. DESCRIPTION

The ECU stores trouble codes if a vehicle malfunction occurs.

The diagnostic system allows for reading of the trouble codes from the DLC3 using the Techstream.

Use the Techstream to diagnose and solve the problem.

2. CHECK DLC3

(a) Check the DLC3 INFO .

Last Modified: 3-10-2010	6.4 U	**From:** 200901
Model Year: 2010	**Model:** Corolla	**Doc ID:** RM0000027AI027X
Title: DOOR LOCK: WIRELESS DOOR LOCK CONTROL SYSTEM (w/o Smart Key System): DATA LIST / ACTIVE TEST (2010 Corolla)		

DATA LIST / ACTIVE TEST

1. DATA LIST

HINT:

Using the Techstream to read the Data List allows the values or states of switches, sensors, actuators and other items to be read without removing any parts. This non-intrusive inspection can be very useful because intermittent conditions or signals may be discovered before parts or wiring is disturbed. Reading the Data List information early in troubleshooting is one way to save diagnostic time.

NOTICE:

In the table below, the values listed under "Normal Condition" are reference values. Do not depend solely on these reference values when deciding whether a part is faulty or not.

(a) Connect the Techstream to the DLC3.

(b) Turn the ignition switch to ON.

(c) Enter the following menus: Body / Main Body / Data List.

(d) Read the Data List according to the display on the Techstream.

Main Body (Main Body ECU)

TESTER DISPLAY	MEASUREMENT ITEM/RANGE	NORMAL CONDITION	DIAGNOSTIC NOTE
Key Unlock Warning SW	Unlock warning switch/ON or OFF	ON: Ignition key is inserted OFF: Ignition key is not inserted	-
Wireless Control	Wireless door lock control function/ON or OFF	ON: Operating OFF: Not operating	-
Hazard Answer Back	Hazard answer-back of wireless/ON or OFF	ON: Operating OFF: Not operating	-
Wireless Buzzer Resp	Wireless door lock buzzer response/ON or OFF	ON: Operating OFF: Not operating	-
Open Door Warning	Open door warning/ON or OFF	ON: Operating OFF: Not operating	-
Unlock 2 Operation	Unlock 2 Operation of wireless unlock/ON or OFF	ON: All doors unlock when UNLOCK switch pressed twice OFF: All doors unlock when UNLOCK switch pressed once	-
Panic Function	Panic function/ON or OFF	ON: Operating OFF: Not operating	-

TESTER DISPLAY	MEASUREMENT ITEM/RANGE	NORMAL CONDITION	DIAGNOSTIC NOTE
Trunk Lid Operation	Luggage compartment door open function type/1tim ON/2tim ON/Long1/Long2/Prohibit	1tim ON: Luggage compartment door opens when LUGGAGE OPEN switch is pressed once 2tim ON: Luggage compartment door opens when LUGGAGE OPEN switch is pressed twice Long1: Luggage compartment door opens when LUGGAGE OPEN switch is pressed and held down for 0.6 seconds Long2: Luggage compartment door opens when LUGGAGE OPEN switch is pressed and held down for 1.6 seconds Prohibit: Does not operating	-
Auto Lock Time	Automatic lock time/120 s, 60 s or 30 s	120 s: 120 seconds 60 s: 60 seconds 30 s: 30 seconds	-

2. ACTIVE TEST

HINT:

Using the Techstream to perform Active Tests allows relays, VSVs, actuators and other items to be operated without removing any parts.

This non-intrusive functional inspection can be very useful because intermittent operation may be discovered before parts or wiring is disturbed. Performing Active Tests early in troubleshooting is one way to save diagnostic time. Data List information can be displayed while performing Active Tests.

(a) Connect the Techstream to the DLC3.

(b) Turn the ignition switch to ON.

(c) Enter the following menus: Body / Main Body / Active Test.

(d) Perform the Active Test according to the display on the Techstream.

Main Body (Main Body ECU)

TESTER DISPLAY	TEST PART	CONTROL RANGE	DIAGNOSTIC NOTE
Hazard	Turns the turn signal flasher relay	ON/OFF	Observe headlight and rear combination light for correct operation
Illuminated Entry System	Interior light and ignition key cylinder light (Interior light switch is in DOOR position and all doors are closed)	ON/OFF	-

TESTER DISPLAY	TEST PART	CONTROL RANGE	DIAGNOSTIC NOTE
Vehicle Horn	Turns the vehicle horns	ON/OFF	-
Trunk and Back-Door Open	Turns the back door opener motor	ON/OFF	Observe back door
Wireless Buzzer	Wireless door lock buzzer	ON/OFF	-

Last Modified: 3-10-2010	6.4 J	**From:** 200901
Model Year: 2010	**Model:** Corolla	**Doc ID:** RM000001WYB019X
Title: DOOR LOCK: WIRELESS DOOR LOCK CONTROL SYSTEM (w/o Smart Key System): Only Wireless Control Function is Inoperative (2010 Corolla)		

Only Wireless Control Function is Inoperative

DESCRIPTION

The door control receiver receives signals from the transmitter and sends these signals to the main body ECU. The main body ECU then controls all doors by sending lock/unlock signals to each door, and sends hazard flasher relay signals to the turn signal flasher relay (hazard warning lights).

WIRING DIAGRAM

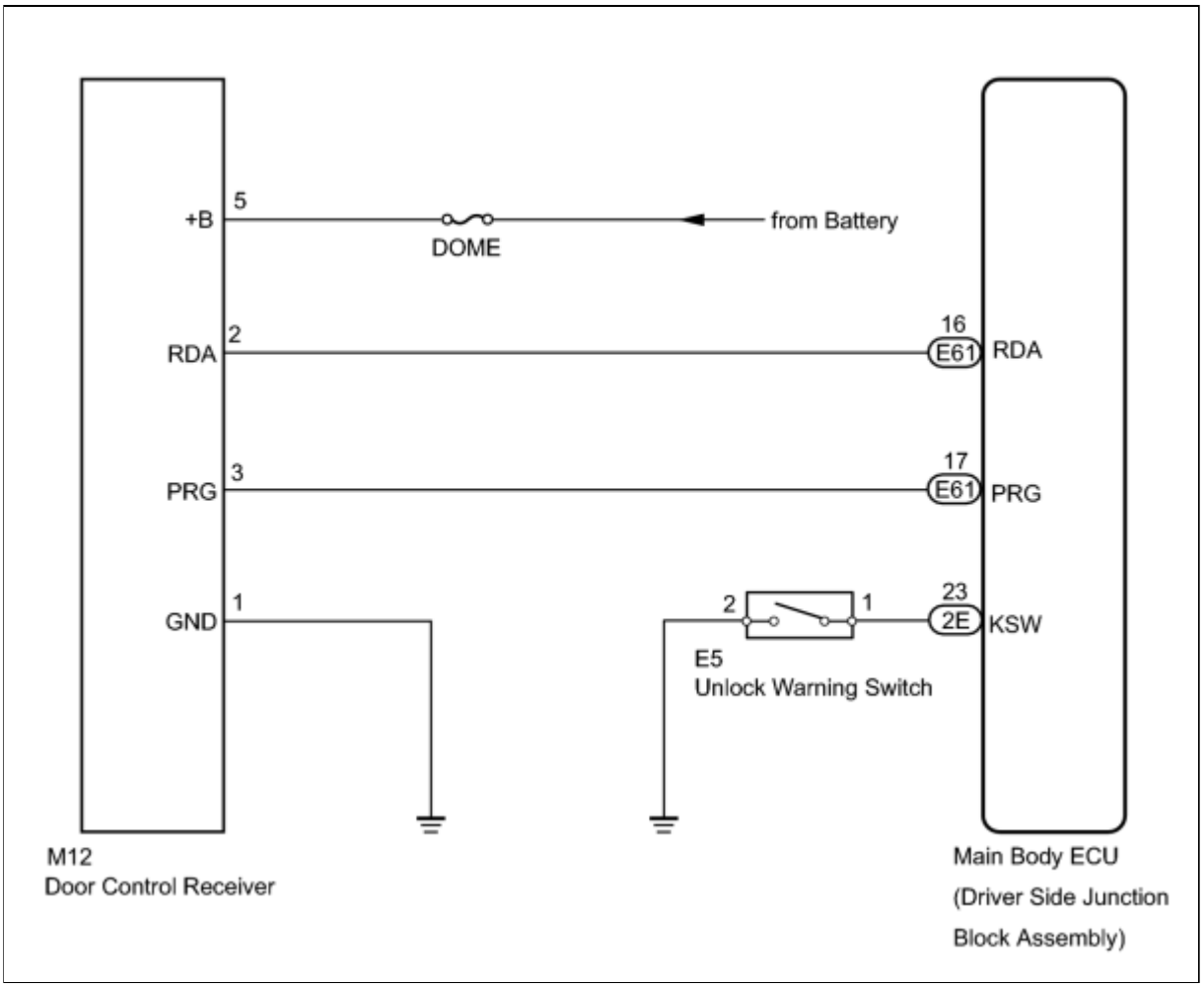

INSPECTION PROCEDURE

PROCEDURE

1.	CHECK POWER DOOR LOCK OPERATION

(a) When the door control switch on the master switch assembly is operated, check that the locked doors unlock INFO .

OK:

Locked doors unlock.

NG ▶ GO TO POWER DOOR LOCK CONTROL SYSTEM

OK ▼

2.	CHECK KEY REMINDER WARNING SYSTEM

(a) Check that the key reminder warning buzzer operates normally.

OK:

Key reminder warning buzzer operates normally.

NG ▶ GO TO KEY REMINDER WARNING SYSTEM

OK ▼

3.	CHECK DOOR CONTROL TRANSMITTER ASSEMBLY

(a) When another registered door control transmitter is used, check that the wireless operates normally.

Result:

RESULT	PROCEED TO
Wireless door LOCK/UNLOCK function operates and door control transmitter that did not operate is electrical key transmitter	A
Wireless door LOCK/UNLOCK function does not operate	B

B CHECK WAVE ENVIRONMENT

A

4.	CHECK TRANSMITTER BATTERY

(a) Inspect the battery capacity.

(1) Remove the battery from the electrical key transmitter that does not operate INFO. Attach a lead wire (0.6 mm (0.0236 in.) in diameter or less including wire sheath) with tape or equivalent to the negative terminal.

NOTICE:

Do not wrap the lead wire around a terminal, wedge it between the terminals, or solder it. A terminal may be deformed or damaged, and the battery will not be able to be installed correctly.

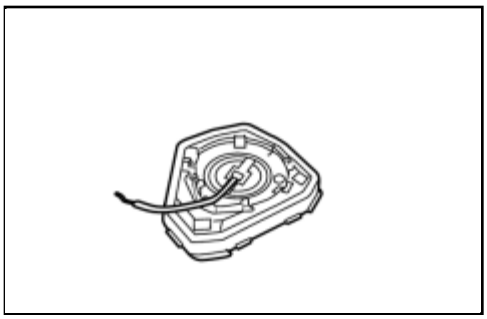

(b) Carefully pull the lead wire out from the position shown in the illustration and install the previously removed transmitter battery.

(c) Using an oscilloscope, check the transmitter battery voltage waveform.

HINT:

Measure the transmitter battery voltage while pressing the LOCK or UNLOCK switch on the transmitter.

Standard Voltage:

ITEM	CONTENT
Tester Connection	Battery positive (+) - Battery negative (-)
Tool Setting	0.5 V/DIV., 100 ms/DIV.
Condition	Ignition switch off, all doors closed and lock or unlock switch is pressed

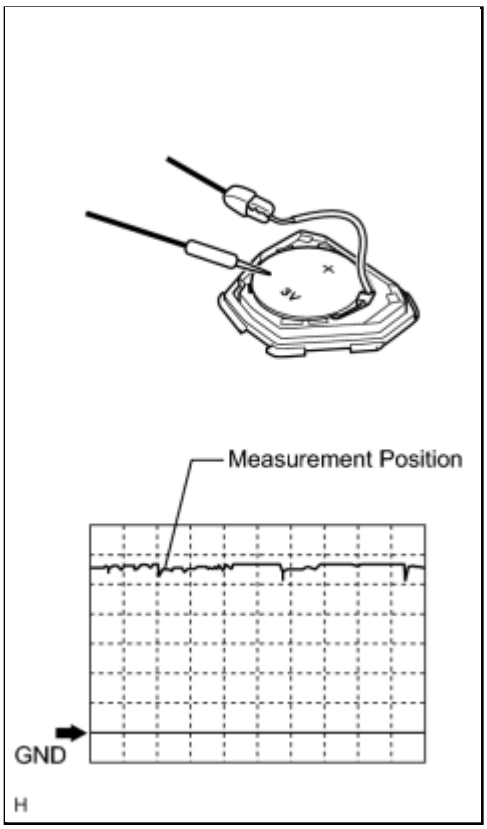

Specified Condition	2.2 to 3.2 V (Refer to the waveform)

NG ▶ **REPLACE TRANSMITTER BATTERY**

OK ▶ **REPLACE DOOR CONTROL TRANSMITTER MODULE**

5.	**CHECK WAVE ENVIRONMENT**

(a) Bring the transmitter near the door control receiver, and perform a wireless operation check.

HINT:

- When the transmitter is brought near the door control receiver, the possibility of wave interference decreases, and it can be determined if wave interference is causing the problem symptom.
- If the inspection result is that the problem only occurs in certain locations or times of day, the possibility of wave interference is high. Also, added vehicle components may cause wave interference. If installed, remove them and perform the operation check.

OK:

Wireless functions operate normally.

NG ▶ **AFFECTED BY WAVE INTERFERENCE**

OK

6.	SWITCH TO SELF-DIAGNOSTIC MODE

(a) Switch to self-diagnostic mode by operating the ignition key cylinder.

(1) Make sure the vehicle is in its initial condition. Then insert the key into the ignition key cylinder and remove it.

(2) Within 5 seconds after removing the key, insert the key into the ignition key cylinder (ignition switch off). Then turn the ignition switch to ON and off.

(3) Within 30 seconds after turning the ignition switch off, perform the following operation 9 times: turn the ignition switch to ON and then off.

NOTICE:

If the system cannot enter self-diagnostic mode, the system returns to normal mode.

HINT:

- Turning the ignition switch to ON after the above operations have been completed ends self-diagnostic mode.
- Do not lock or unlock doors during self-diagnostic mode.

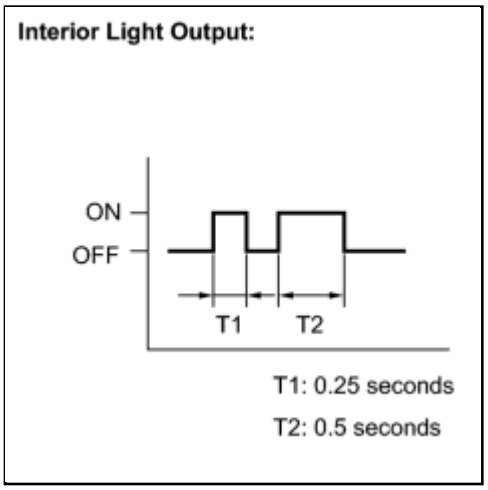

(b) Check that the system has switched to self-diagnostic mode by checking the room light output pattern.

(c) Check that the system has switched to self-diagnostic mode by checking the wireless door lock buzzer output pattern.

Wireless Door Lock Buzzer Output:

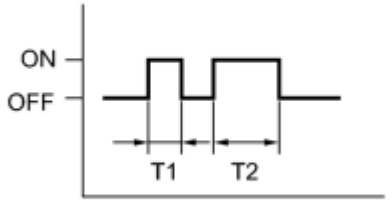

T1: 0.13 seconds

T2: 0.5 seconds

NEXT

7.	CHECK SELF DIAGNOSTIC MODE

Interior Light*1 and Wireless Door Lock Buzzer*2 Output:

Normal Wave

(LOCK/UNLOCK Switch):

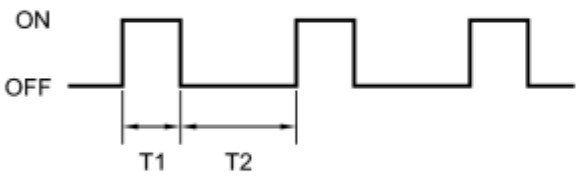

Unmatching Recognition Code:



Wave is being received

No Diagnostic Output:



T1: 0.25 seconds*1, 0.13 seconds*2

T2: 0.5 seconds

N

(a) Inspect the diagnostic outputs when the door control transmitter switch is held down. The diagnostic outputs can be checked by the flash patterns of the interior lights and the buzzer patterns of the wireless door lock buzzer.

Result:

RESULT	PROCEED TO
Normal wave (light flash pattern and buzzer pattern) is output	A
Unmatching recognition code is output	B
No diagnosis outputs	C

C ▶ **CHECK DOOR CONTROL RECEIVER (RESPONSE)**

B ▶ **REGISTER RECOGNITION CODE**

A ▶ **REPLACE MAIN BODY ECU**

8.	REGISTER RECOGNITION CODE

(a) Check that the system can be switched to rewrite mode or add mode, and that a recognition code can be registered INFO .

OK:
Recognition code can be registered.

NG ▶ **REPLACE DOOR CONTROL RECEIVER**

OK ▶ **END (GO TO OPERATION CHECK)**

9.	CHECK DOOR CONTROL RECEIVER (RESPONSE)

(a) Prepare the door control transmitter from another vehicle.

(b) Press and hold down the door control transmitter switch.

(c) Check that an unmatching recognition code is output.

OK:
Unmatching recognition code is output.

NG ▶ **CHECK DOOR CONTROL RECEIVER (+B, GND)**

OK ▶ **REPLACE DOOR CONTROL TRANSMITTER MODULE**

10.	CHECK DOOR CONTROL RECEIVER (+B, GND)

(a) Disconnect the door control receiver.

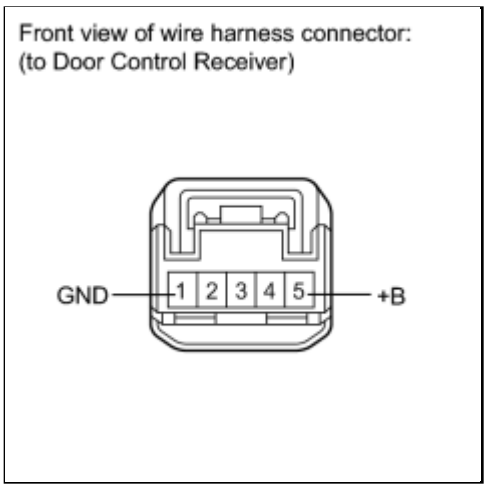

(b) Measure the resistance according to the value(s) in the table below.

Standard Resistance:

TESTER CONNECTION	CONDITION	SPECIFIED CONDITION
1 (GND) - Body ground	Always	Below 1 Ω

(c) Measure the voltage according to the value(s) in the table below.

Standard Voltage:

TESTER CONNECTION	CONDITION	SPECIFIED CONDITION
5 (+B) - Body ground	Always	11 to 14 V

NG ▶ **REPAIR OR REPLACE HARNESS OR CONNECTOR**

OK ▼

11.	**CHECK DOOR CONTROL RECEIVER (OUTPUT)**

(a) Measure the voltage according to the value(s) in the table below.

Standard Voltage:

TESTER CONNECTION	SWITCH CONDITION	SPECIFIED CONDITION
M12-2 (RDA) -	Transmitter switch OFF	6 V or higher →

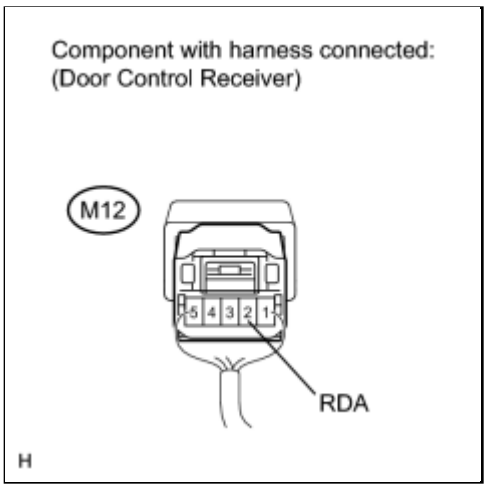

Body ground	→ ON (No key in ignition key cylinder, all doors closed)	Below 1 V → 6 V or higher

NG ▶ **REPLACE DOOR CONTROL RECEIVER**

OK ▼

12.	**CHECK HARNESS AND CONNECTOR (MAIN BODY ECU - DOOR CONTROL RECEIVER)**

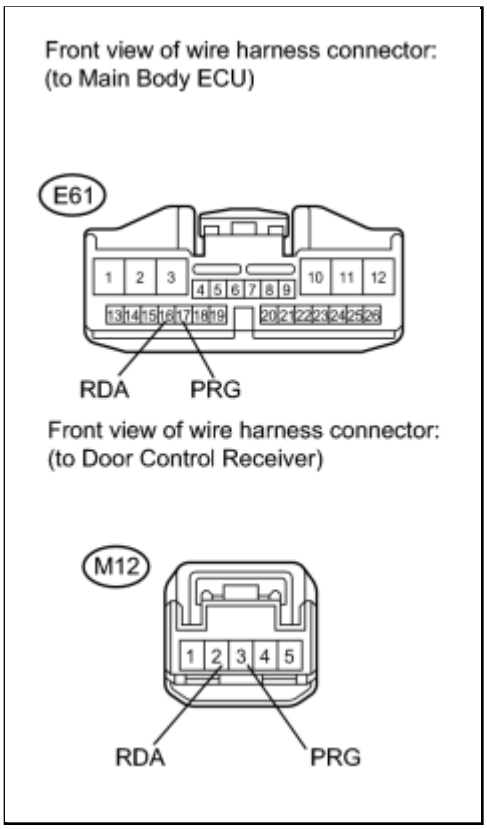

(a) Disconnect the E61 main body ECU connector and the M12 door control receiver connector.

(b) Measure the resistance according to the value(s) in the table below.

Standard Resistance:

TESTER CONNECTION	CONDITION	SPECIFIED CONDITION
E61-16 (RDA) - M12-2 (RDA)	Always	Below 1 Ω
E61-16 (RDA) - Body ground	Always	10 kΩ or higher
E61-17 (PRG) - M12-3 (PRG)	Always	Below 1 Ω
E61-17 (PRG) - Body ground	Always	10 kΩ or higher

NG ▶ **REPAIR OR REPLACE HARNESS OR CONNECTOR**

OK
▼

13.	**REPLACE DOOR CONTROL RECEIVER**

(a) Temporarily replace the door lock control receiver with a new or known good one INFO .

NEXT
▼

14.	**REGISTER RECOGNITION CODE**

(a) Perform the Registration procedure INFO .

NEXT
▼

15.	**CHECK DOOR CONTROL RECEIVER (OPERATION)**

(a) Check that the doors can be locked and unlocked by using the transmitter LOCK and UNLOCK switches.

OK:

Doors can be locked and unlocked using transmitter.

NG ▶ **REPLACE MAIN BODY ECU**

OK ▶ **END (DOOR CONTROL RECEIVER IS DEFECTIVE)**



Last Modified: 3-10-2010	6.4 C	**From:** 200901
Model Year: 2010	**Model:** Corolla	**Doc ID:** RM000001NN301EX
Title: DOOR LOCK: WIRELESS DOOR LOCK CONTROL SYSTEM (w/o Smart Key System): B1242: Wireless Door Lock Tuner Circuit Malfunction (2010 Corolla)		

DTC	**B1242**	**Wireless Door Lock Tuner Circuit Malfunction**

DESCRIPTION

The door control receiver receives signals from the transmitter and sends these signals to the main body ECU.

DTC NO.	DTC DETECTION CONDITION	TROUBLE AREA
B1242	In diagnostic mode, an applicable RDA signal cannot be received within 2.4 second after an PRG signal has been output from the main body ECU.	• Wire harness or connector • Door control receiver • Main body ECU (Instrument panel junction block)

WIRING DIAGRAM

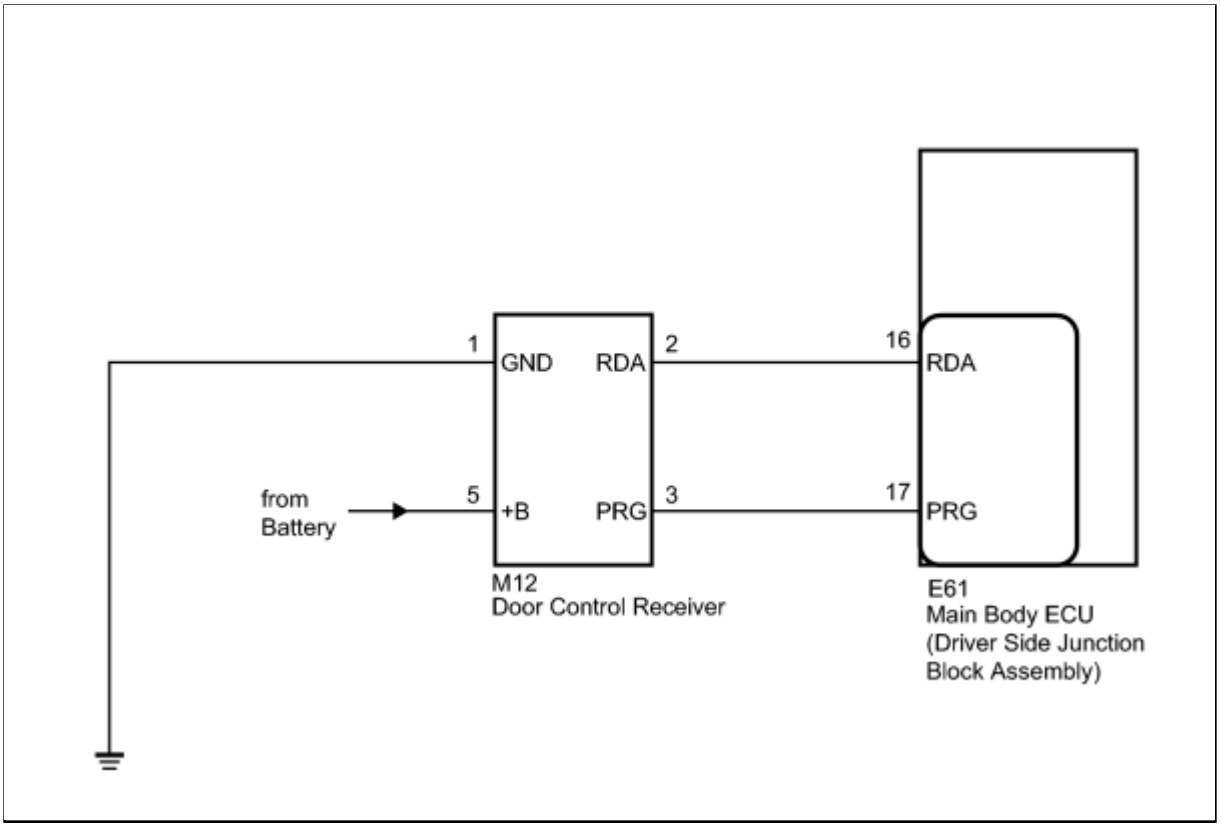

INSPECTION PROCEDURE

PROCEDURE

1.	**CHECK HARNESS AND CONNECTOR (MAIN BODY ECU - DOOR CONTROL RECEIVER)**

(a) Disconnect the E61 main body ECU connector and the M12 door control receiver connector.

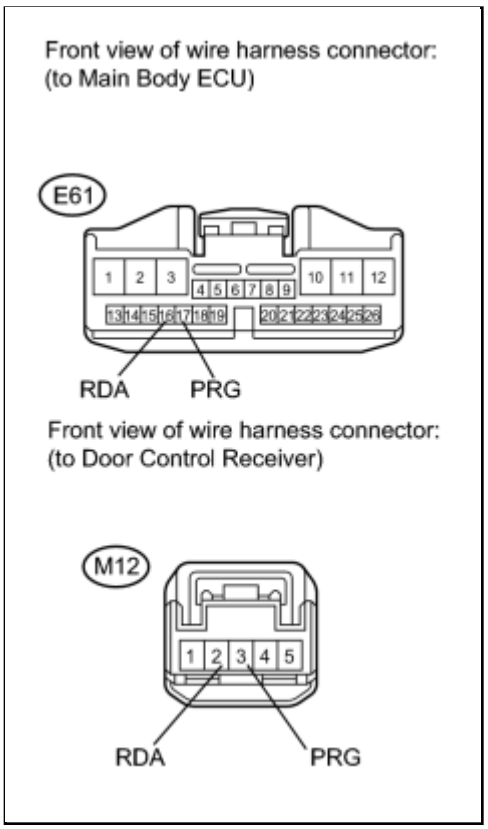

(b) Measure the resistance according to the value(s) in the table below.

Standard Resistance:

TESTER CONNECTION	CONDITION	SPECIFIED CONDITION
E61-16 (RDA) - M12-2 (RDA)	Always	Below 1 Ω
E61-16 (RDA) - Body ground	Always	10 kΩ or higher
E61-17 (PRG) - M12-3 (PRG)	Always	Below 1 Ω
E61-17 (PRG) - Body ground	Always	10 kΩ or higher

NG ▶ **REPAIR OR REPLACE HARNESS OR CONNECTOR**

OK ▼

2.	**CHECK HARNESS AND CONNECTOR (BATTERY, BODY GROUND)**

(a) Measure the voltage and resistance according to the value(s) in the table below.

Front view of wire harness connector:
(to Door Control Receiver)

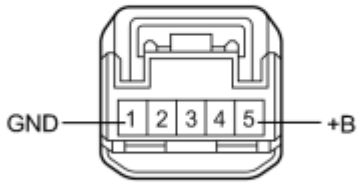

Standard:

TESTER CONNECTION	CONDITION	SPECIFIED CONDITION
M12-1 (GND) - Body ground	Always	Below 1 Ω
M12-5 (+B) - Body ground	Always	11 to 14 V

NG ▶ **REPAIR OR REPLACE HARNESS OR CONNECTOR**

OK ▼

3.	**REPLACE DOOR CONTROL RECEIVER**

(a) Temporarily replace the door lock control receiver with a new or known good one INFO .

NEXT ▼

4.	**REGISTER RECOGNITION CODE**

(a) Perform the Registration procedure INFO .

NEXT ▼

5.	**CONFIRM DTC**

(a) Clear the DTCs INFO .

(b) Check if the same DTC is detected.

Result:

RESULT	PROCEED TO
DTC is not output	A
DTC is output	B

B ▶ **REPLACE MAIN BODY ECU (INSTRUMENT PANEL JUNCTION BLOCK)**

A ▶ **END (DOOR CONTROL RECEIVER IS DEFECTIVE)**

Last Modified: 3-10-2010	6.4 S	**From:** 200901
Model Year: 2010	**Model:** Corolla	**Doc ID:** RM000001NN201AX
Title: DOOR LOCK: WIRELESS DOOR LOCK CONTROL SYSTEM (w/o Smart Key System): DIAGNOSTIC TROUBLE CODE CHART (2010 Corolla)		

DIAGNOSTIC TROUBLE CODE CHART

HINT:

If a trouble code is displayed during the DTC check, inspect the trouble areas listed for that code. For details of the code, refer to "See page" in the DTC chart.

- Inspect the fuses and relays before troubleshooting the areas shown in the table below.

Wireless Door Lock Control System

DTC CODE	DETECTION ITEM	TROUBLE AREA	SEE PAGE
B1242	Wireless Door Lock Tuner Circuit Malfunction	1. Wire harness or connector 2. Door control receiver 3. Main body ECU (instrument panel junction block)	INFO

Last Modified: 3-10-2010	6.4 J	**From:** 200901
Model Year: 2010	**Model:** Corolla	**Doc ID:** RM000001WYD012X
Title: DOOR LOCK: WIRELESS DOOR LOCK CONTROL SYSTEM (w/o Smart Key System): No Answer-Back (2010 Corolla)		

No Answer-Back

DESCRIPTION

In some cases, wireless door lock control functions are normal but the hazard warning lights and/or wireless door lock buzzer answer-back function(s) do not operate. In such cases, the main body ECU hazard warning lights and/or wireless door lock buzzer signal outputs may be malfunctioning.

NOTICE:

Troubleshooting should be started after confirming that the customize status of the answer-back function has been switched ON.

WIRING DIAGRAM

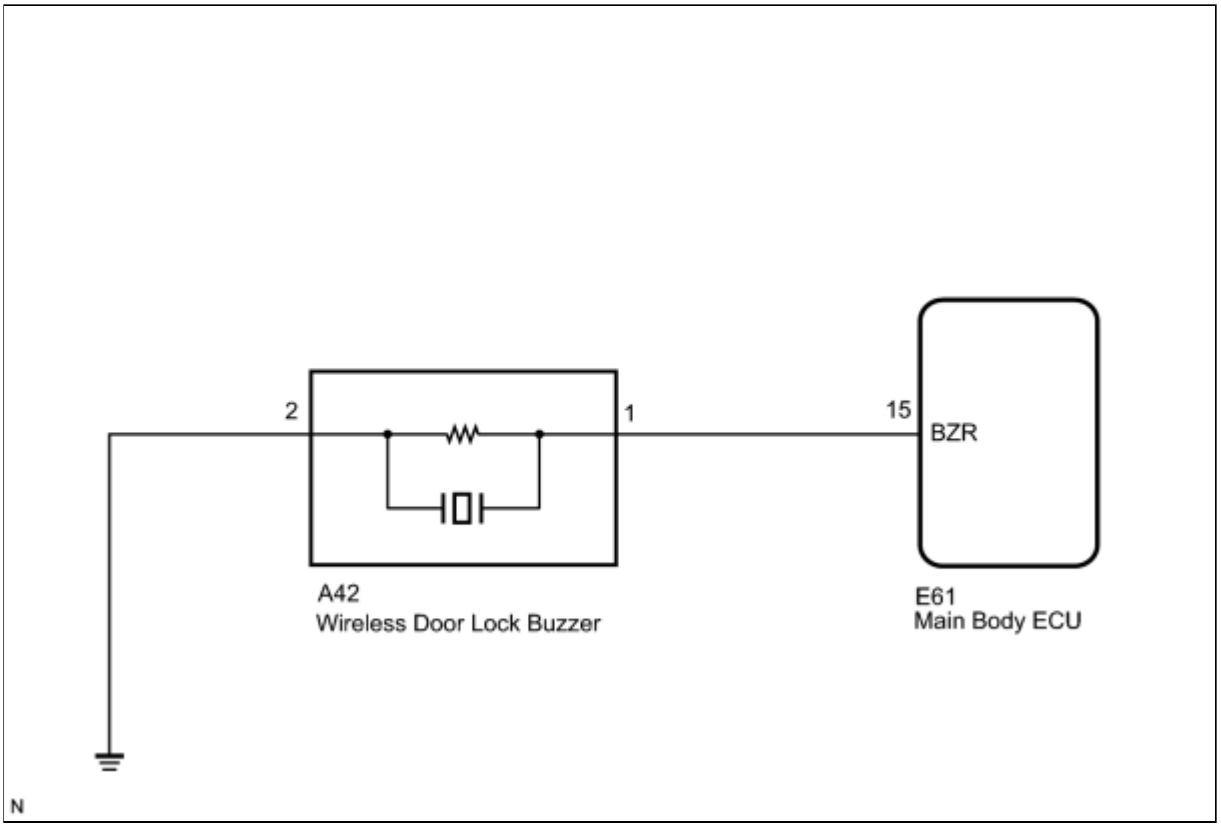

INSPECTION PROCEDURE

PROCEDURE

1.	CHECK WIRELESS DOOR LOCK CONTROL FUNCTION

(a) Check the wireless door lock control functions by operating the transmitter switch.

Result:

RESULT	PROCEED TO
Wireless door lock functions are normal but hazard warning lights answer-back does not occur	A
Wireless door lock functions are normal but wireless door lock buzzer answer-back does not occur	B
Doors cannot be locked and unlocked using transmitter	C

C ▶ **GO TO PROBLEM SYMPTOMS TABLE**

B ▶ **PERFORM ACTIVE TEST USING TECHSTREAM (WIRELESS DOOR LOCK BUZZER)**

A ▼

2.	CHECK HAZARD WARNING LIGHT

(a) Check that the hazard warning lights flash continuously when the hazard warning signal switch is pressed.

OK:

Hazard warning lights flash continuously.

NG ▶ **GO TO LIGHTING SYSTEM**

OK ▶ **REPLACE MAIN BODY ECU**

3.	PERFORM ACTIVE TEST USING TECHSTREAM (WIRELESS DOOR LOCK BUZZER)

(a) Enter Active Test, using the Techstream to generate a control command, and then check that the wireless buzzer operates normally.

Main Body

TESTER DISPLAY	TEST PART	CONTROL RANGE	DIAGNOSTIC NOTE
Wireless Buzzer	Wireless Door Lock Buzzer	ON/OFF	-

OK:

Wireless buzzer turns ON/OFF.

NG ▶ **INSPECT WIRELESS DOOR LOCK BUZZER**

OK ▶ **REPLACE MAIN BODY ECU**

4.	**INSPECT WIRELESS DOOR LOCK BUZZER**

(a) Measure the resistance according to the value(s) in the table below.

Standard Resistance:

TESTER CONNECTION	CONDITION	SPECIFIED CONDITION
1 - 2	Always	950 to 1050 Ω

Component without harness connected:
(Wireless Door Lock Buzzer)



NOTICE:

When battery voltage is directly applied to the buzzer, the buzzer does not sound.

NG ▶ **REPLACE WIRELESS DOOR LOCK BUZZER**

OK ▼

5.	**CHECK HARNESS AND CONNECTOR (WIRELESS DOOR LOCK BUZZER - MAIN BODY ECU AND BODY GROUND)**

(a) Disconnect the E61 main body ECU connector.

Front view of wire harness connector:
(to Main Body ECU)

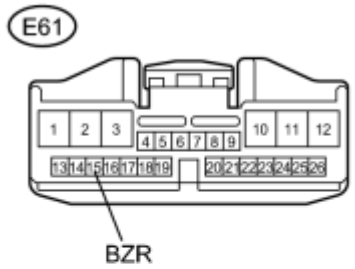

Front view of wire harness connector:
(to Wireless Door Lock Buzzer)

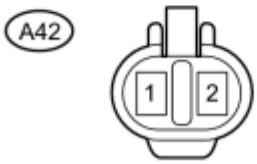

(b) Disconnect the A42 wireless door lock buzzer connector.

(c) Measure the resistance according to the value(s) in the table below.

Standard Resistance:

TESTER CONNECTION	CONDITION	SPECIFIED CONDITION
E61-15 (BZR) - A42-1	Always	Below 1 Ω
E61-15 (BZR) - Body ground	Always	10 kΩ or higher
A42-2 - Body ground	Always	Below 1 Ω

NG ▶ **REPAIR OR REPLACE HARNESS OR CONNECTOR**

OK ▶ **REPLACE MAIN BODY ECU**

Last Modified: 3-10-2010	6.4 L	**From:** 200901
Model Year: 2010	**Model:** Corolla	**Doc ID:** RM000000Y5Q03GX
Title: HEATING / AIR CONDITIONING: AIR CONDITIONING SYSTEM (for Manual Air Conditioning System): PRECAUTION (2010 Corolla)		

PRECAUTION

1. EXPRESSIONS OF IGNITION SWITCH

(a) The type of ignition switch used on this model differs according to the specifications of the vehicle. The expressions listed in the table below are used in this section.

SWITCH TYPE		IGNITION SWITCH (POSITION)	ENGINE SWITCH (CONDITION)
Expression	Ignition switch off	LOCK	Off
	Ignition switch ON	ON	On (IG)
	Ignition switch ACC	ACC	On (ACC)
	Engine start	START	Start

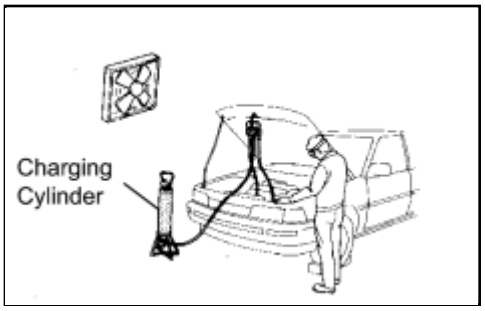

2. DO NOT HANDLE REFRIGERANT IN AN ENCLOSED AREA OR NEAR AN OPEN FLAME

3. ALWAYS WEAR EYE PROTECTION

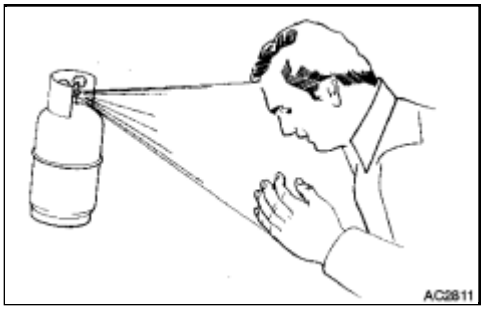

4. BE CAREFUL NOT TO GET LIQUID REFRIGERANT IN YOUR EYES OR ON YOUR SKIN

If liquid refrigerant gets in your eyes or on your skin:

(a) Wash the affected area with lots of cold water.

CAUTION:

Do not rub your eyes or skin.

(b) Apply clean petroleum jelly to the skin.

(c) Go immediately to a hospital or see a physician for professional treatment.

5. NEVER HEAT CONTAINER OR EXPOSE THE CONTAINER TO AN OPEN FLAME

6. BE CAREFUL NOT TO DROP CONTAINER OR APPLY PHYSICAL SHOCKS TO IT

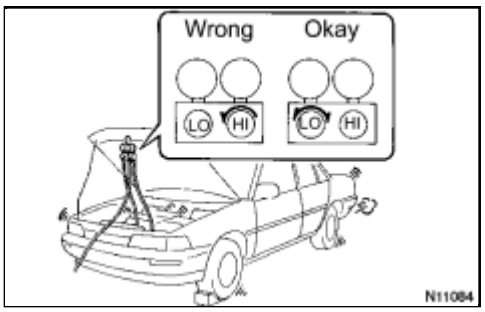

7. DO NOT OPERATE COMPRESSOR WITHOUT ENOUGH REFRIGERANT IN REFRIGERANT SYSTEM

If there is not enough refrigerant in the A/C system, oil lubrication will be insufficient and the compressor may be damaged.

Ensure that the system is fully charged and free of leaks to avoid this.

8. DO NOT OPEN HIGH PRESSURE MANIFOLD VALVE WHILE COMPRESSOR IS OPERATING

(a) Open and close only the low pressure valve.

If the high pressure valve is opened, refrigerant flows in the reverse direction causing the charging cylinder to rupture.

9. BE CAREFUL NOT TO OVERCHARGE SYSTEM WITH REFRIGERANT

If refrigerant is overcharged, it will cause problems such as insufficient cooling, poor fuel economy, engine overheating, etc.

10. DO NOT OPERATE ENGINE WITHOUT REFRIGERANT

CAUTION:

Doing so may damage the inside of the compressor because the compressor parts will always move regardless of whether the A/C system is turned on or off.

11. SUPPLEMENTAL RESTRAINT SYSTEM (SRS)

(a) This vehicle is equipped with an SRS (Supplemental Restraint System) consisting of the driver, front passenger, side, and curtain shield airbags. Failure to carry out service operations in the correct sequence could cause the SRS to unexpectedly deploy during servicing, possibly leading to a serious accident. Before servicing (including removal or installation of parts, inspection or replacement), be sure to read the precautionary notices INFO .

12. GENERAL PRECAUTION

(a) While using battery voltage during the inspection, do not bring the positive and negative tester probes too close to each other as a short circuit may occur.

Last Modified: 3-10-2010	6.4 R	**From:** 200901
Model Year: 2010	**Model:** Corolla	**Doc ID:** RM0000026DG01AX
Title: HEATING / AIR CONDITIONING: AIR CONDITIONING SYSTEM (for Manual Air Conditioning System): PARTS LOCATION (2010 Corolla)		

PARTS LOCATION

ILLUSTRATION

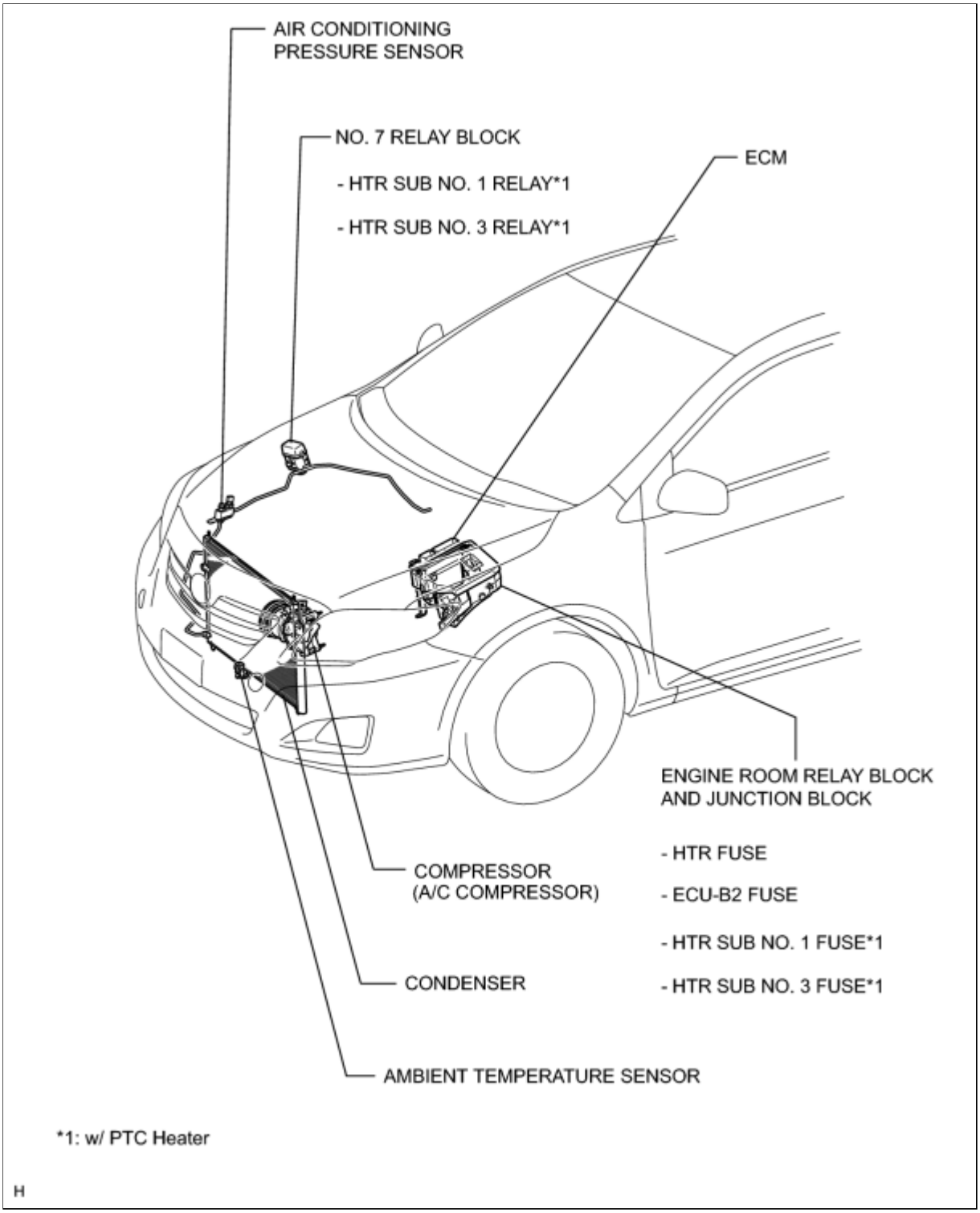

ILLUSTRATION

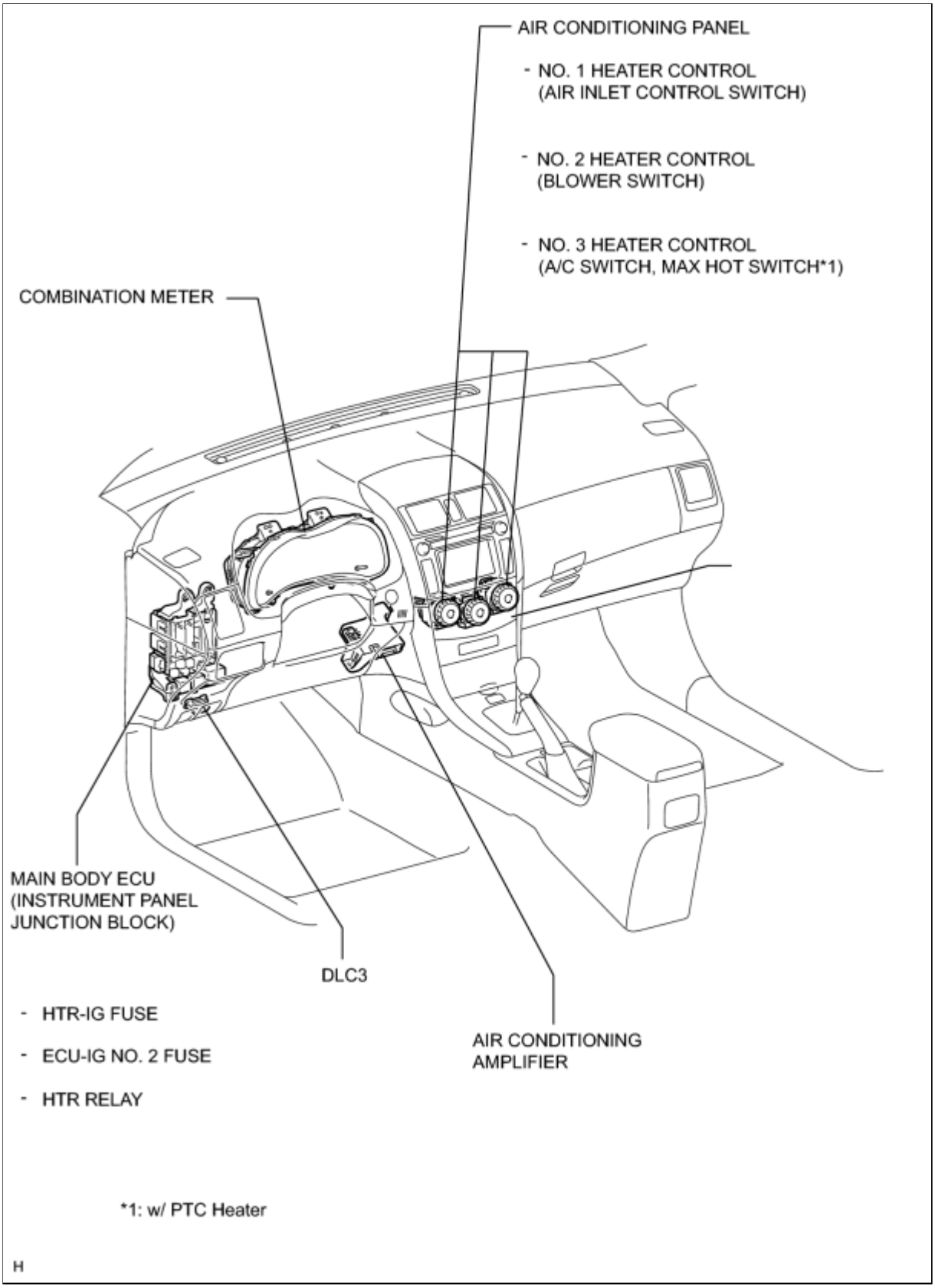

ILLUSTRATION

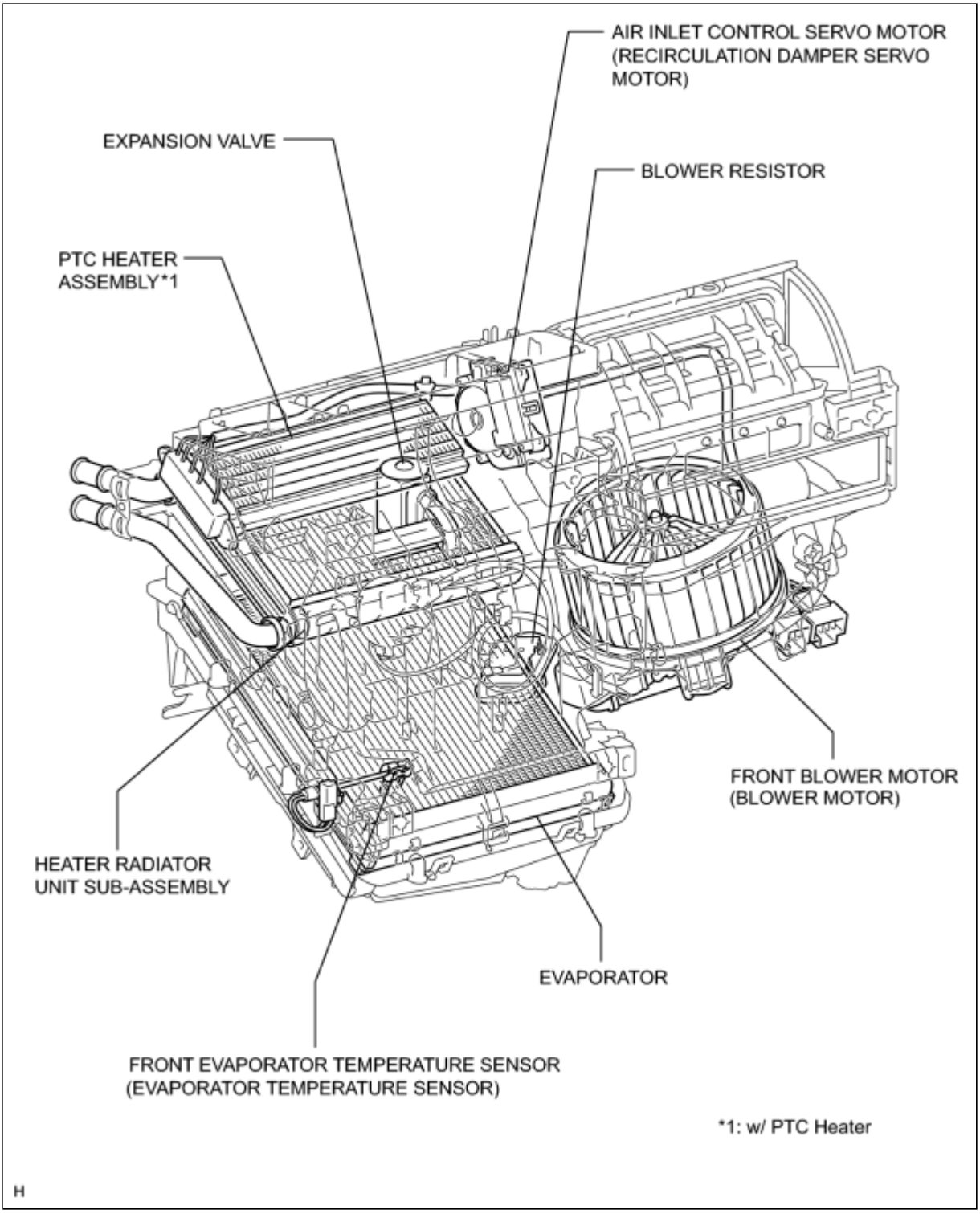
AIR INLET CONTROL SERVO MOTOR
(RECIRCULATION DAMPER SERVO
MOTOR)
EXPANSION VALVE
BLOWER RESISTOR
PTC HEATER
ASSEMBLY*1
FRONT BLOWER MOTOR
(BLOWER MOTOR)
HEATER RADIATOR
UNIT SUB-ASSEMBLY
EVAPORATOR
FRONT EVAPORATOR TEMPERATURE SENSOR
(EVAPORATOR TEMPERATURE SENSOR)
*1: w/ PTC Heater

H

Last Modified: 3-10-2010	6.4 D	**From:** 200901
Model Year: 2010	**Model:** Corolla	**Doc ID:** RM000001O7U027X
Title: HEATING / AIR CONDITIONING: AIR CONDITIONING SYSTEM (for Manual Air Conditioning System): SYSTEM DESCRIPTION (2010 Corolla)		

SYSTEM DESCRIPTION

1. GENERAL

The air conditioning system has the following controls:

CONTROL	OUTLINE
Variable Capacity Compressor Control	Controls the compressor to turn ON or OFF and the discharge capacity based on the signals from various sensors.
Self-diagnosis	Checks the sensors in accordance with operation of air conditioning switches, then clock displays a DTC (Diagnosis Trouble Code) to indicate if there is a malfunction or not (sensor check function).

2. MODE POSITION AND DAMPER OPERATION

(a) Mode Position and Damper Operation

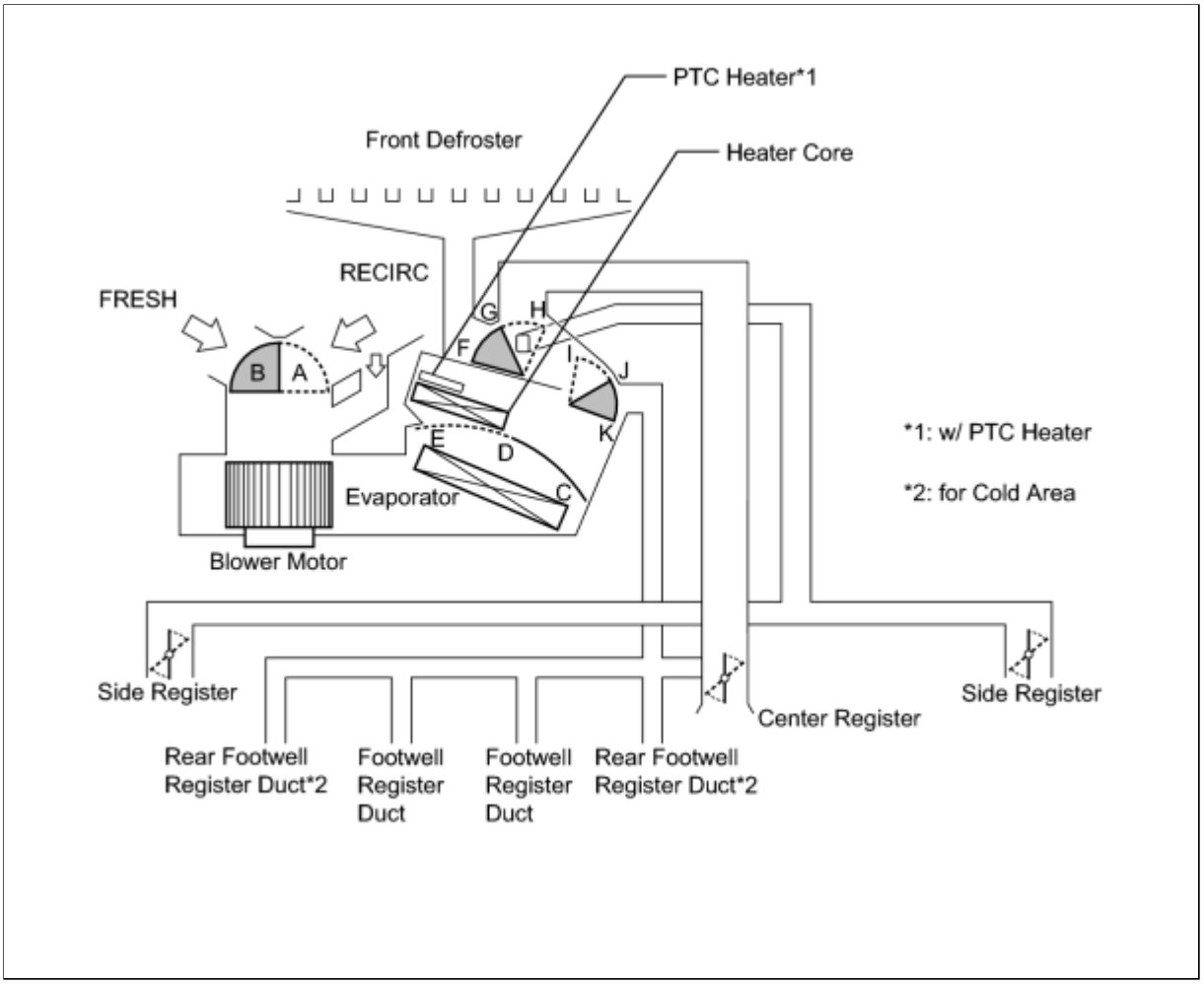

Functions of Main Dampers

CONTROL DAMPER	OPERATION POSITION	DAMPER POSITION	OPERATION
Air Inlet Control Damper	FRESH	A	Brings in fresh air.
	RECIRC	B	Recirculates internal air.
Air Mix Control Damper	MAX COLD to MAX HOT Temperature Setting 16°C (61°F) to 30°C (86°F)	C - D - E	Varies the mixture ratio of the fresh air and the recirculation air in order to regulate the temperature continuously from HOT to COLD.
Mode Control Damper	DEF 	H, K	Defrosts the windshield through the front defroster and side register.
	FOOT/DEF 	H, J	Defrosts the windshield through the front defroster and side register, while air is also blown out from the front footwell register duct and rear foot well register duct*2.

CONTROL DAMPER	OPERATION POSITION	DAMPER POSITION	OPERATION
	FOOT 	H, I	Air blows out of the footwell register duct, rear footwell register duct*2, and side register. In addition, air blows out slightly from the front defroster.
	BI-LEVEL 	F, I	Air blows out of the center register, side register, front footwell register duct and rear footwell register duct*2.
	FACE 	F, K	Air blows out of the center register and side register.

*1: w/ PTC Heater

*2: for Cold Area

3. AIR OUTLETS AND AIRFLOW VOLUME

(a) Air Outlets and Airflow Volume

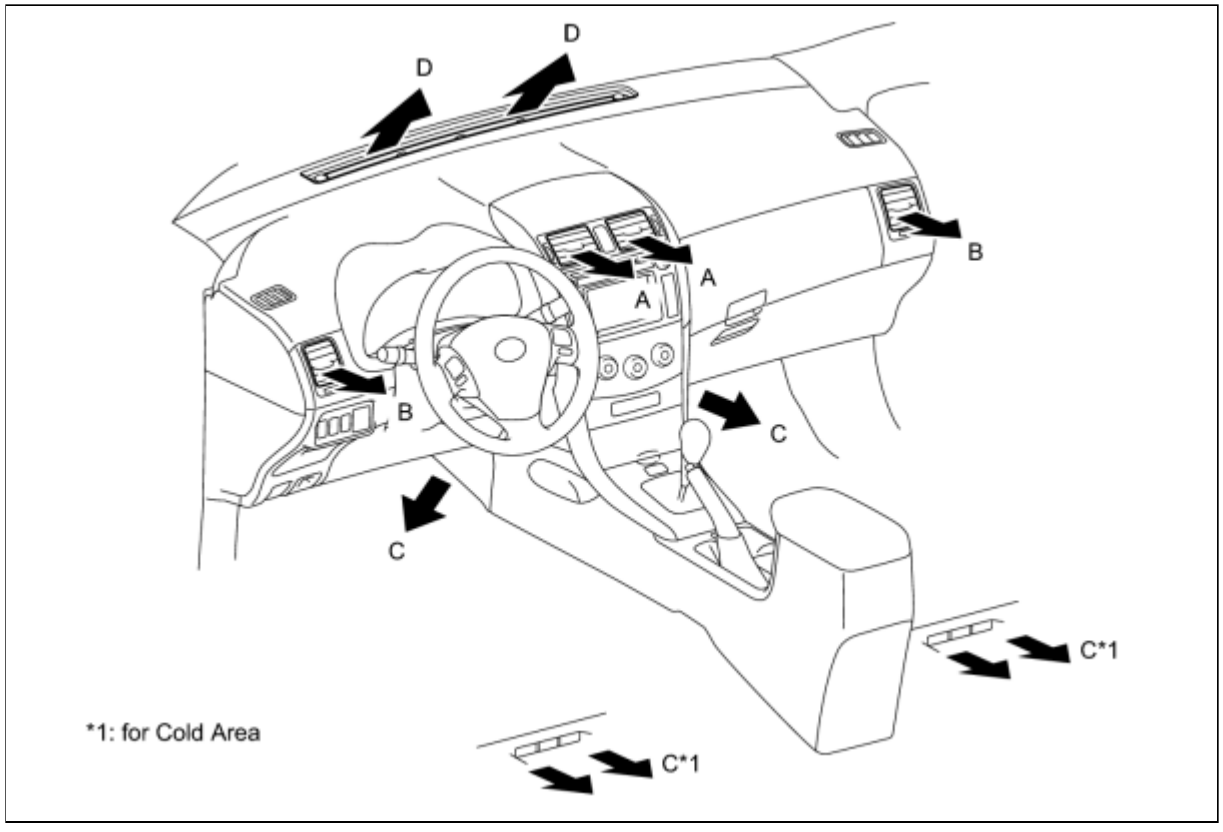

INDICATION	CTR	SIDE	FOOTWELL	DEFROSTER

(MODE)	A	B	C	D
 FACE	◎	◎	—	—
 BI-LEVEL	○	○	◎	—
 FOOT	—	○	◎	○
 FOOT/DEF	—	○	○	○
 DEF	—	○	—	◎

The size of the circle ○ indicates the proportion of airflow volume.

4. A/C COMPRESSOR

(a) General

(1) The A/C compressor is a continuously variable capacity type in which its capacity varies with the cooling load of the air conditioning system.

(2) The compressor consists of the shaft, lug plate, piston, shoe, crank chamber, cylinder, and solenoid control valve.

(3) The solenoid control valve adjusts the suction pressure is provided to enable to be controlled as desired.

(4) A plastic DL (Damper Limiter) type A/C pulley is used.

(5) A rotary valve uses suction to pull refrigerant gas into the cylinder.

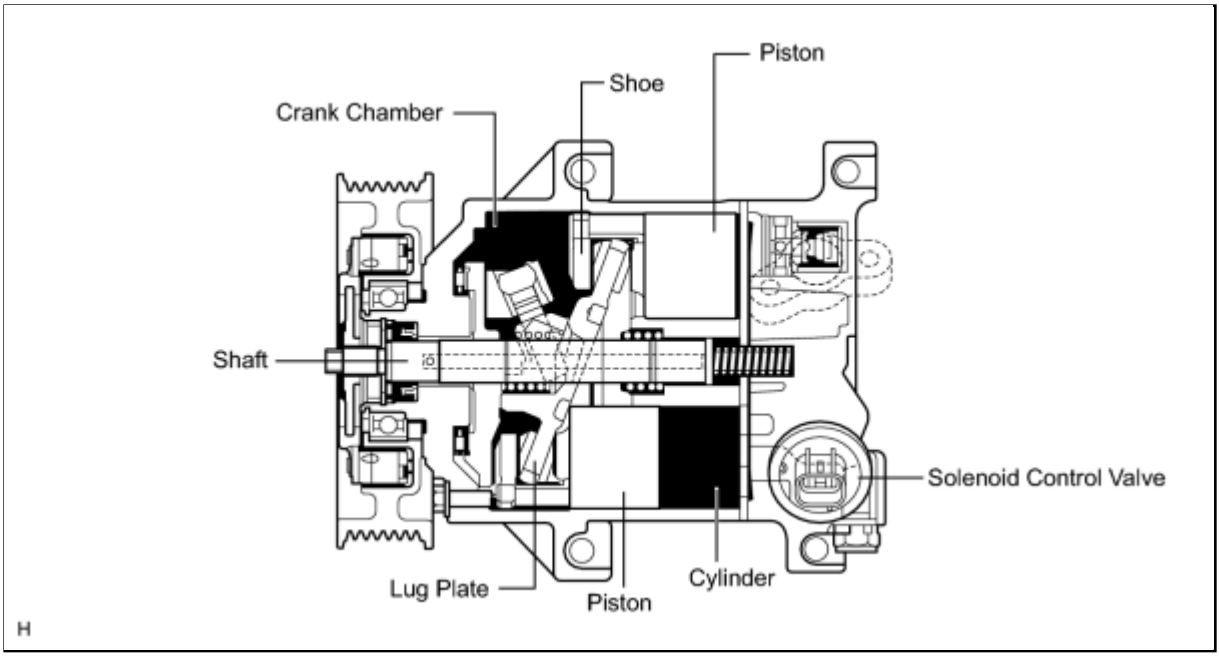

(b) Operation

(1) The crank chamber is connected to the suction passage. A solenoid control valve is provided between the suction passage (low pressure) and the discharge passage (high pressure).

(2) The solenoid control valve duty cycle is controlled in accordance with the signals from the air conditioning amplifier.

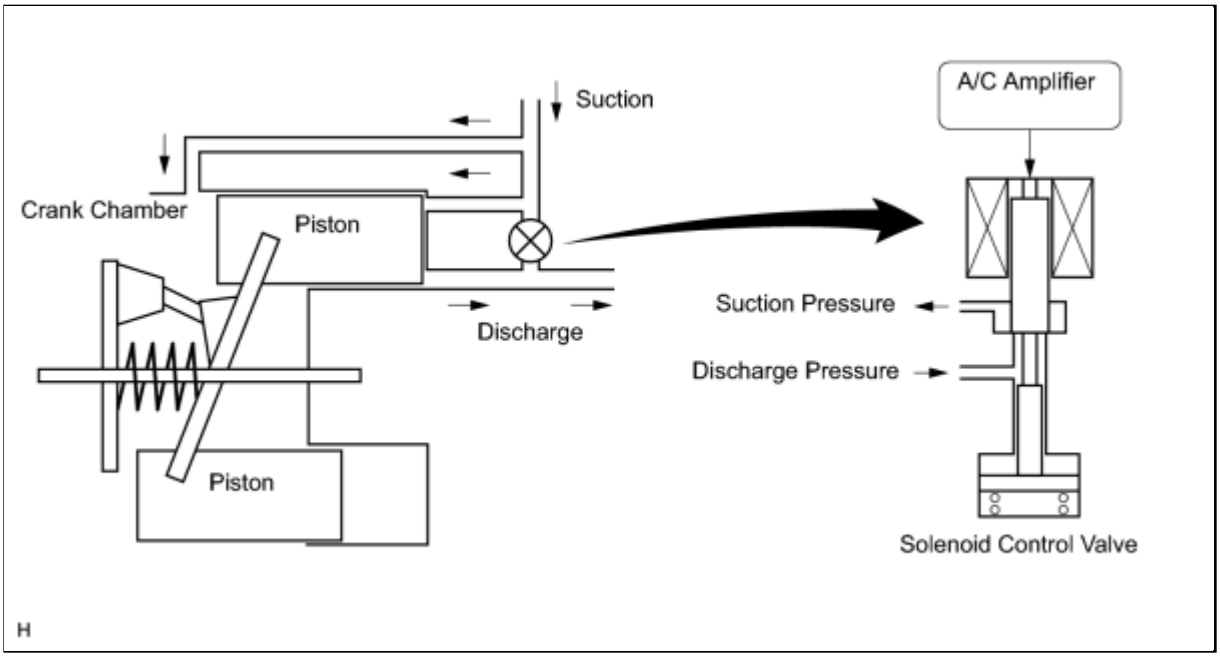

(3) When the solenoid control valve closes (solenoid coil is energized), a difference in pressure is created and the crank chamber pressure decreases. Then, the pressure that is applied to the right side of the piston becomes greater than the pressure that is applied to the left side. This compresses the spring and tilts the lug plate. As a result, there is a large piston stroke and the discharge capacity increases.

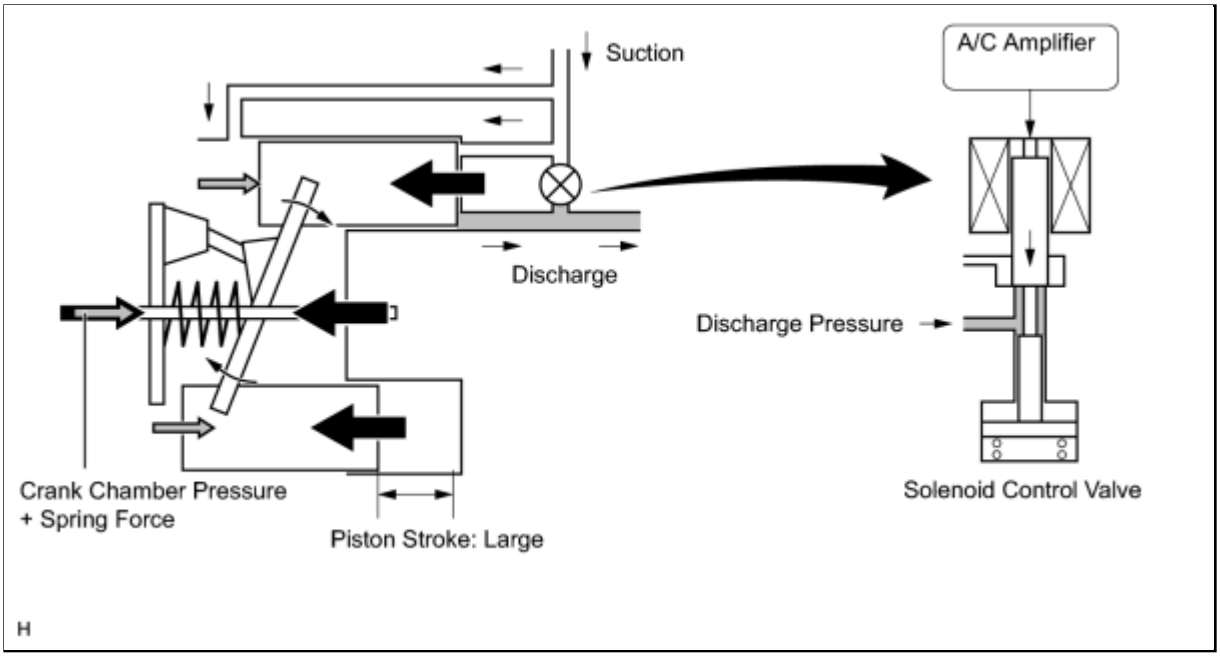

(4) When the solenoid control valve opens (solenoid coil is not energized), the pressure is equalized. The pressure applied to the left side of the piston becomes equal to the right side. This is performed when the spring elongates and eliminates the tilt of the lug plate. As a result, there is a small piston stroke and the discharge capacity decreases.

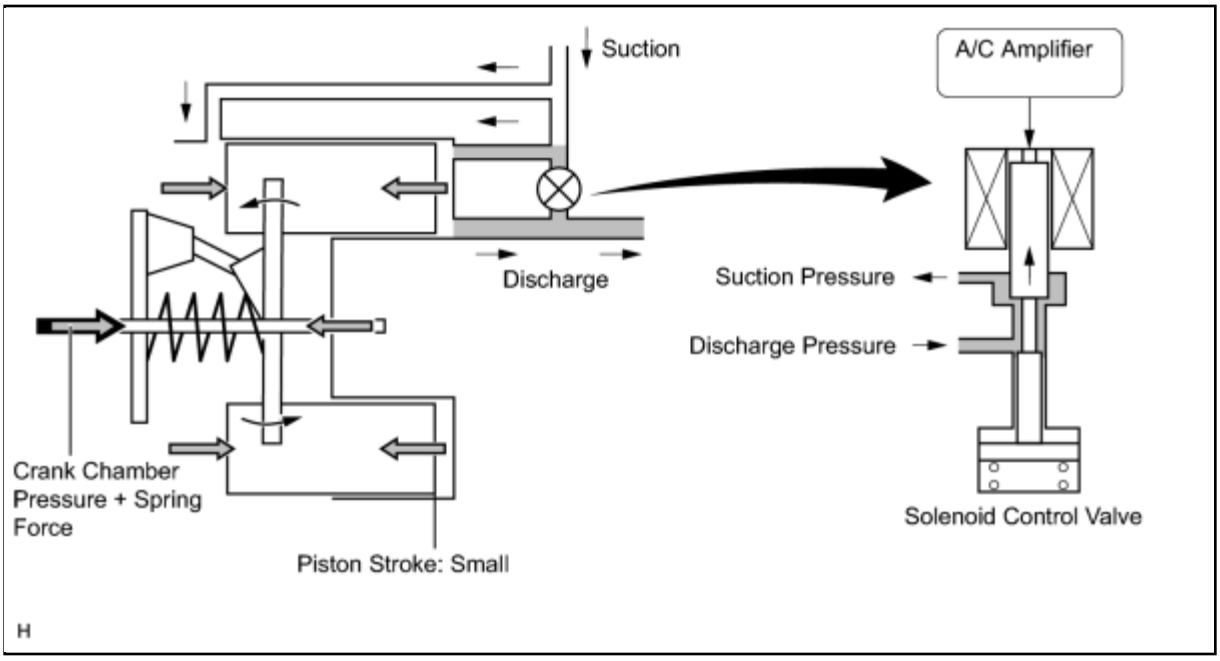

5. PTC HEATER (w/ PTC Heater)

(a) General

(1) The PTC heater is located above the heater core in the air conditioner unit.

(2) The PTC heater consists of a PTC element, aluminum fin, and brass plate. When current is applied to the PTC element, it generates heat to warm the air that passes through the unit.

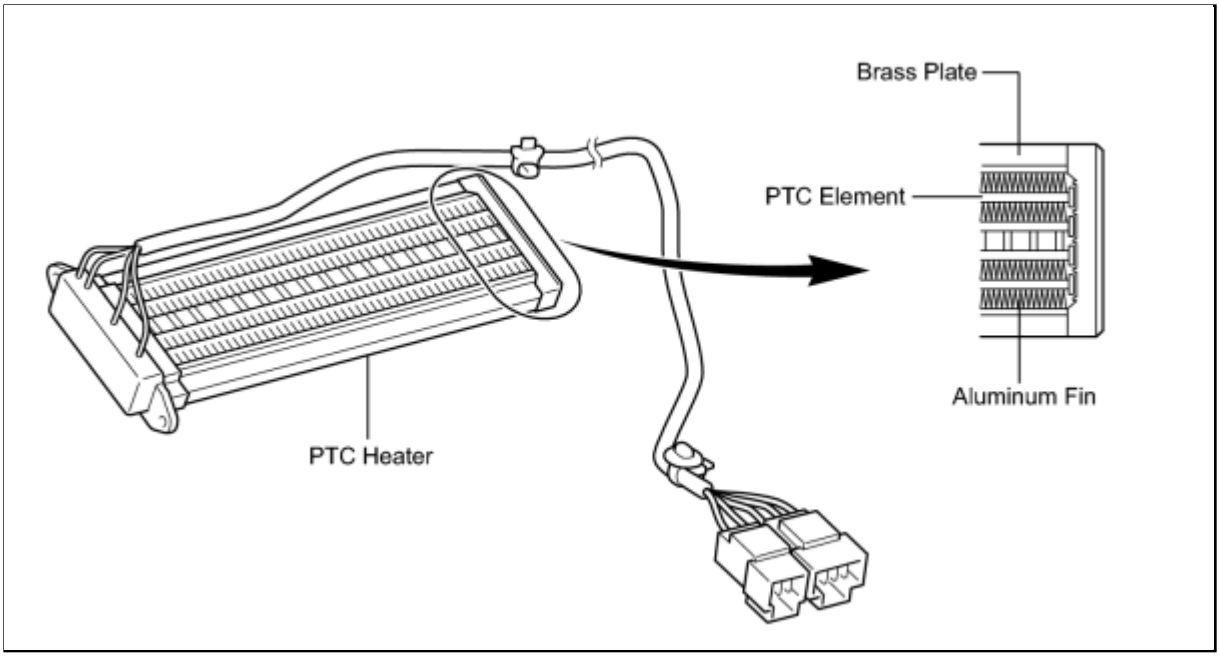

(b) PTC Heater Operating Conditions

(1) The PTC heater is turned on and off by the air conditioning amplifier in accordance with the coolant temperature, ambient temperature, engine speed, air mix setting, and electrical load (generator power ratio).

For example, the number of the operating PTC heaters varies by the coolant temperature as in the graph below.

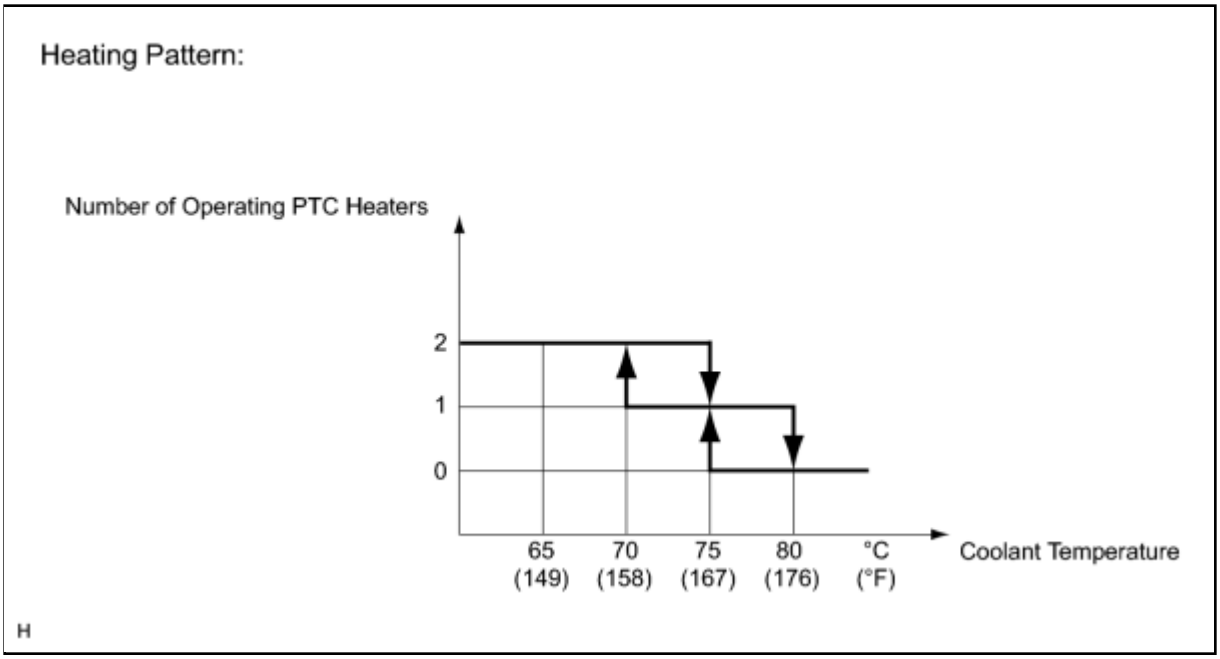

6. AMBIENT TEMPERATURE SENSOR

The ambient temperature sensor detects the outside temperature based on changes in the resistance of its built-in thermistor and sends a signal to the A/C amplifier.

7. EVAPORATOR TEMPERATURE SENSOR

The evaporator temperature sensor detects the temperature of the cool air immediately past the evaporator in the form of resistance changes, and outputs it to the A/C amplifier.

8. A/C PRESSURE SENSOR

The A/C pressure sensor detects the refrigerant pressure and outputs it to the A/C amplifier in the form of voltage changes.



Last Modified: 3-10-2010	6.4 U	**From:** 200901
Model Year: 2010	**Model:** Corolla	**Doc ID:** RM0000026DI01OX
Title: HEATING / AIR CONDITIONING: AIR CONDITIONING SYSTEM (for Manual Air Conditioning System): SYSTEM DIAGRAM (2010 Corolla)		

SYSTEM DIAGRAM

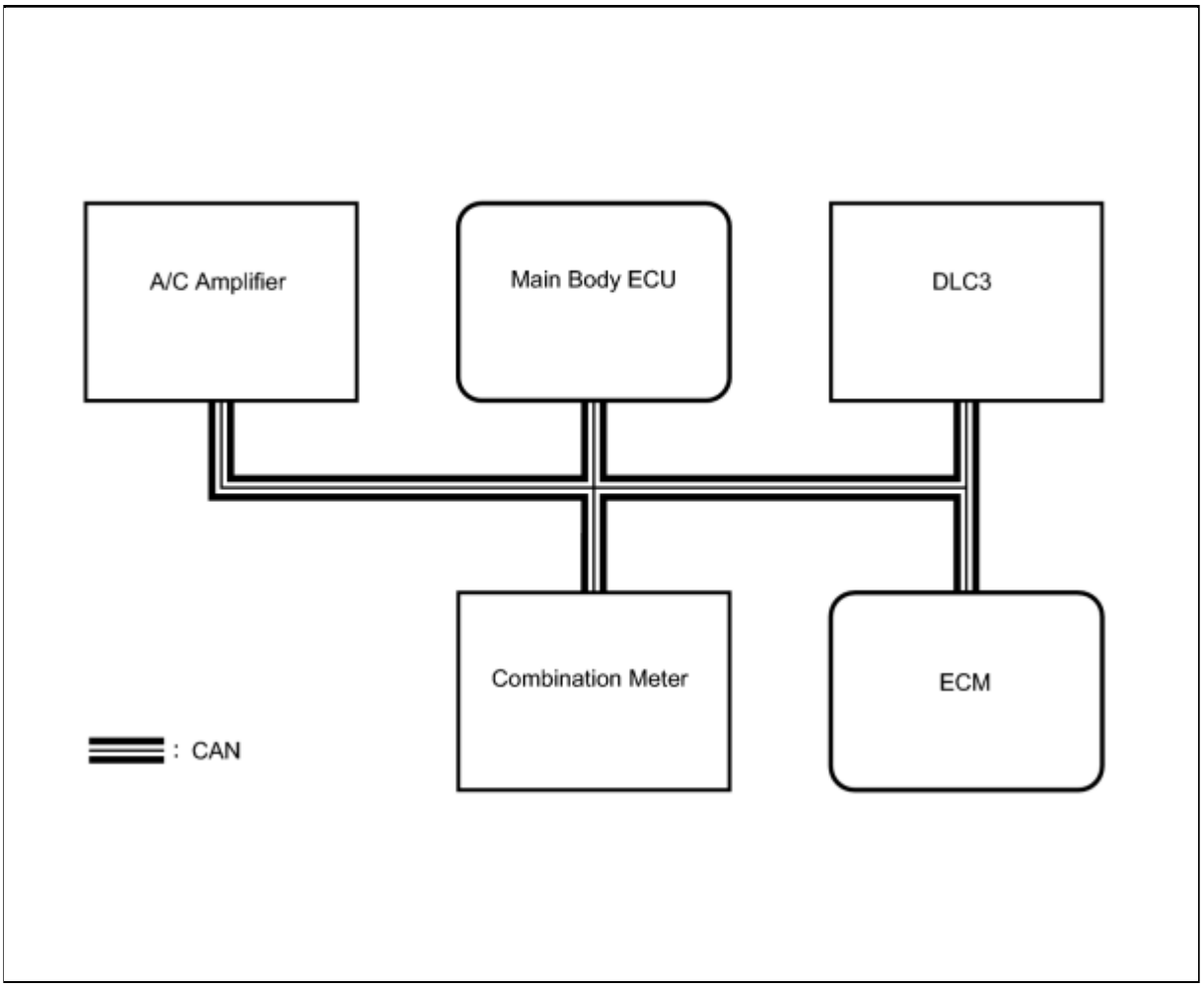

TRANSMITTER	RECEIVER	LINE	SIGNAL
A/C Amplifier	ECM	CAN	Heater Idle Up Request Signal
			A/C Idle Up Request Signal
			Outside Temperature Data
			External Variable Control Solenoid Current Signal
			Prior A/C Control Request Signal
			A/C (refrigerant) Pressure Sensor Signal
A/C Amplifier	Combination Meter	CAN	Outside Temperature Data

TRANSMITTER	RECEIVER	LINE	SIGNAL
A/C Amplifier	DLC3	CAN	Diagnostic Tool Response
Main Body ECU	A/C Amplifier	CAN	Destination Symbol (Steering Wheel)
Combination Meter	A/C Amplifier	CAN	Vehicle Speed Signal
ECM	A/C Amplifier	CAN	Engine Coolant Temperature Signal
			Engine rpm Data
			A/C Control Cut-off Signal
			A/C-E/G Cooperation Control

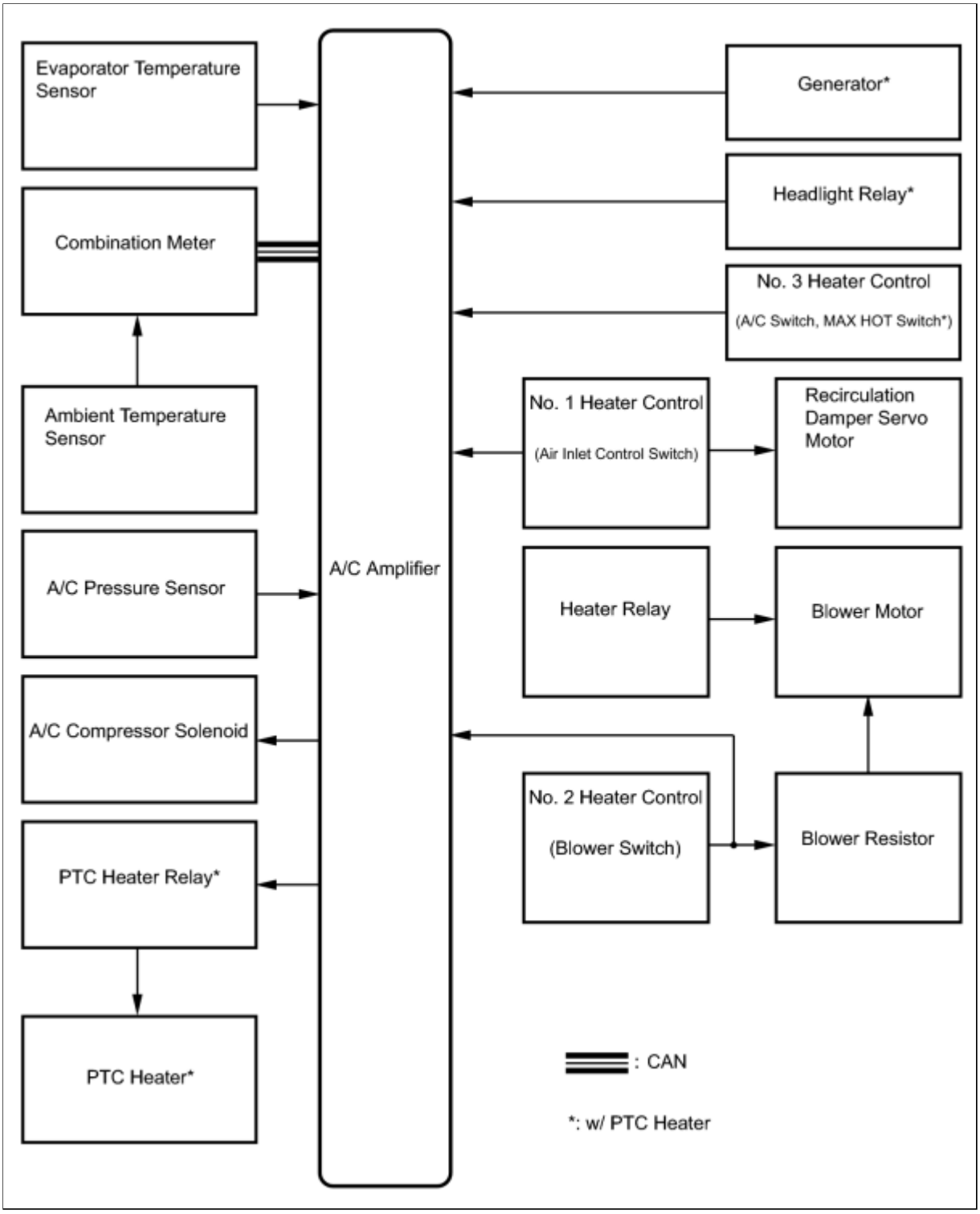
Evaporator Temperature Sensor
Combination Meter
Ambient Temperature Sensor
A/C Pressure Sensor
A/C Compressor Solenoid
PTC Heater Relay*
PTC Heater*
A/C Amplifier
Generator*
Headlight Relay*
No. 3 Heater Control
(A/C Switch, MAX HOT Switch*)
No. 1 Heater Control
(Air Inlet Control Switch)
Recirculation Damper Servo Motor
Heater Relay
Blower Motor
No. 2 Heater Control
(Blower Switch)
Blower Resistor
: CAN
*: w/ PTC Heater

Last Modified: 3-10-2010	6.4 D	**From:** 200901
Model Year: 2010	**Model:** Corolla	**Doc ID:** RM000000PM6030X
Title: HEATING / AIR CONDITIONING: AIR CONDITIONING SYSTEM (for Manual Air Conditioning System): HOW TO PROCEED WITH TROUBLESHOOTING (2010 Corolla)		

HOW TO PROCEED WITH TROUBLESHOOTING

HINT:

- Use the following procedures to troubleshoot the air conditioning system.
- *: Use the Techstream.

1.	**VEHICLE BROUGHT TO WORKSHOP**

NEXT

2.	**INSPECT BATTERY VOLTAGE**

(a) Inspect the battery voltage.

Standard Voltage:
11 to 14 V

If the voltage is below 11 V, recharge or replace the battery before proceeding.

NEXT

3.	**CHECK COMMUNICATION FUNCTION OF CAN COMMUNICATION SYSTEM***

(a) Use the Techstream to check if the CAN communication system is functioning normally.

Result:

RESULT	PROCEED TO
CAN DTC is not output	A

RESULT	PROCEED TO
CAN DTC is output	B

B ▶ **Go to CAN COMMUNICATION SYSTEM**

A ▼

4.	CHECK FOR DTC*

(a) Check for DTCs and note any codes that are output.

HINT:

Refer to DTC Check / Clear INFO .

(b) Clear the DTCs.

(c) Recheck for DTCs. Based on the DTCs output above, try to force the A/C system to output DTCs by simulating the conditions indicated by the DTCs.

Result:

RESULT	PROCEED TO
DTC is not output	A
DTC is output	B

B ▶ **Go to step 7**

A ▼

5.	PROBLEM SYMPTOMS TABLE

(a) Refer to Problem Symptoms Table INFO .

Result:

RESULT	PROCEED TO
Fault is not listed in problem symptoms table	A
Fault is listed in problem symptoms table	B

B ▶ **Go to step 7**

A
▼

6.	OVERALL ANALYSIS AND TROUBLESHOOTING*

(a) Data List / Active Test INFO

(b) Terminals of ECU INFO

(c) On-vehicle Inspection

(d) Inspection

NEXT
▼

7.	ADJUST, REPAIR OR REPLACE

NEXT ▶ **END**

Last Modified: 3-10-2010	6.4 T	**From:** 200901
Model Year: 2010	**Model:** Corolla	**Doc ID:** RM000001M2W025X
Title: HEATING / AIR CONDITIONING: AIR CONDITIONING SYSTEM (for Manual Air Conditioning System): PROBLEM SYMPTOMS TABLE (2010 Corolla)		

PROBLEM SYMPTOMS TABLE

HINT:

- Use the table below to help determine the cause of problem symptoms. If multiple suspected areas are listed, the potential causes of the symptoms are listed in order of probability in the "Suspected Area" column of the table. Check each symptom by checking the suspected areas in the order they are listed. Replace parts as necessary.
- Inspect the fuses and relays related to this system before inspecting the suspected areas below.

Air Conditioning System (for Manual Air Conditioning System)

SYMPTOM	SUSPECTED AREA	SEE PAGE
All functions of the A/C system do not operate.	IG power source circuit	INFO
	Back-up power source circuit	INFO
	A/C amplifier	INFO
Air Flow Control: No blower operation	Blower motor circuit	INFO
	A/C amplifier	INFO
Air Flow Control: No blower control	Blower motor circuit	INFO
	A/C amplifier	INFO
Air Flow Control: Insufficient air flow	Blower motor circuit	INFO
	A/C amplifier	INFO
Temperature Control: No cool air comes out.	Refrigerant volume	-
	Refrigerant pressure	INFO
	Pressure sensor circuit	INFO
	Compressor solenoid circuit	INFO
	Evaporator temperature sensor circuit	INFO
	Ambient temperature sensor circuit	INFO
	Heater control switch circuit	INFO
	Air mix damper control cable	INFO
	Expansion valve	INFO

SYMPTOM	SUSPECTED AREA	SEE PAGE
	A/C amplifier	INFO
Temperature Control: No warm air comes out.	Evaporator temperature sensor circuit	INFO
	Ambient temperature sensor circuit	INFO
	Generator signal circuit*1	INFO
	Headlight signal circuit*1	INFO
	PTC heater circuit*1	INFO
	Engine coolant temperature sensor circuit (for 2AZ-FE)	INFO
	Engine coolant temperature sensor circuit (for 2ZR-FE)	INFO
	CAN communication system	INFO
	Air mix damper control cable	INFO
	A/C amplifier	INFO
	ECM (for 2AZ-FE)	INFO
	ECM (for 2ZR-FE)	INFO
Temperature Control: Output air is warmer or cooler than the set temperature or response is slow.	Refrigerant volume	-
	Refrigerant pressure	INFO
	Ambient temperature sensor circuit	INFO
	Generator signal circuit*1	INFO
	Headlight signal circuit*1	INFO
	PTC heater circuit*1	INFO
	Engine coolant temperature sensor circuit (for 2AZ-FE)	INFO
	Engine coolant temperature sensor circuit (for 2ZR-FE)	INFO
	CAN communication system	INFO
	Air mix damper control cable	INFO
	Radiator unit sub-assembly	INFO
	Expansion valve	INFO

SYMPTOM	SUSPECTED AREA	SEE PAGE
	A/C amplifier	INFO
	ECM (for 2AZ-FE)	INFO
	ECM (for 2ZR-FE)	INFO
Temperature Control: No temperature control (only Max. cool or Max. hot)	Ambient temperature sensor circuit	INFO
	Evaporator temperature sensor circuit	INFO
	Heater control switch circuit	INFO
	Generator signal circuit*1	INFO
	Headlight signal circuit*1	INFO
	PTC heater circuit*1	INFO
	Engine coolant temperature sensor circuit (for 2AZ-FE)	INFO
	Engine coolant temperature sensor circuit (for 2ZR-FE)	INFO
	CAN communication system	INFO
	Air mix damper control cable	INFO
	A/C amplifier	INFO
	ECM (for 2AZ-FE)	INFO
	ECM (for 2ZR-FE)	INFO
No air inlet control	Recirculation damper servo motor circuit	INFO
	A/C amplifier	INFO
No air flow mode control	No. 2 heater control cable	INFO
Engine idle up does not occur, or is continuous.	Compressor solenoid circuit	INFO
	A/C amplifier	INFO
	ECM (for 2AZ-FE)	INFO
	ECM (for 2ZR-FE)	INFO
	CAN communication system	INFO
A/C indicator blinks.	Compressor solenoid circuit	INFO
	A/C amplifier	INFO

SYMPTOM	SUSPECTED AREA	SEE PAGE
Diagnostic trouble codes are not recorded. Set mode is cleared when ignition switch is turned off.	Back-up power source circuit	INFO
	A/C amplifier	INFO

*1: w/ PTC Heater

Last Modified: 3-10-2010	6.4 U	**From:** 200901
Model Year: 2010	**Model:** Corolla	**Doc ID:** RM0000026DR01QX
Title: HEATING / AIR CONDITIONING: AIR CONDITIONING SYSTEM (for Manual Air Conditioning System): TERMINALS OF ECU (2010 Corolla)		

TERMINALS OF ECU

1. A/C AMPLIFIER

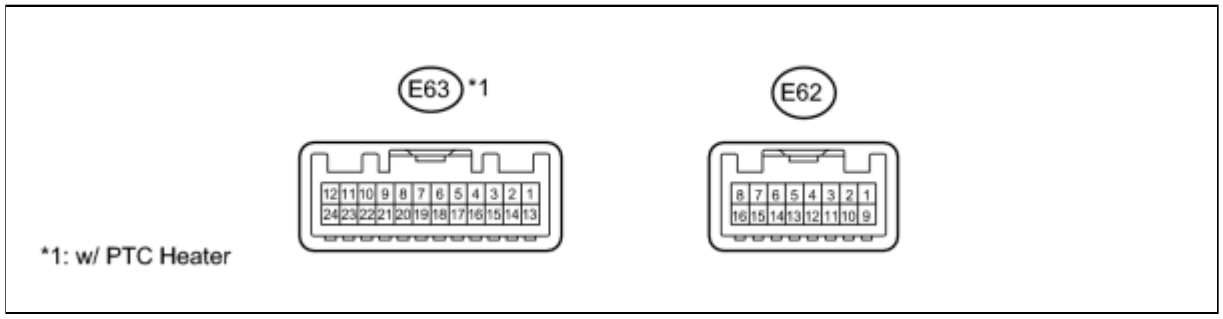

HINT:

Check from the rear of the connector while it is connected to the A/C amplifier.

TERMINAL NO. (SYMBOL)	WIRING COLOR	DESCRIPTION	CONDITION	SPECIFIED CONDITION
E62-1 (S5-3) - E62-4 (SG-2)	B - G	Power supply for A/C pressure sensor	Ignition switch ON	4.75 to 5.25 V
E62-2 (CANH) - E62-3 (CANL)	V - W	CAN communication system	CAN communication circuit	Pulse generation
E62-4 (SG-2) - Body ground	G - Body ground	Ground for A/C pressure sensor	Always	Below 1 V
E62-6 (PRE) - E62-4 (SG-2)	L - G	A/C pressure sensor signal	Engine is running A/C system is operating Refrigerant pressure: Abnormal pressure (more than 3140 kPa ($32.0\ kgf/cm^2$, 455 psi))	4.848 V or higher
E62-6 (PRE) - E62-4 (SG-2)	L - G	A/C pressure sensor signal	Engine is running A/C system is operating Refrigerant pressure: Abnormal pressure (less than 196 kPa ($2.0\ kgf/cm^2$, 28 psi))	Below 0.734 V

TERMINAL NO. (SYMBOL)	WIRING COLOR	DESCRIPTION	CONDITION	SPECIFIED CONDITION
E62-6 (PRE) - E62-4 (SG-2)	L - G	A/C pressure sensor signal	Engine is running A/C system is operating Refrigerant pressure: Normal pressure (less than 3140 kPa (32.0 kgf/cm2, 455 psi) and more than 196 kPa (2.0 kgf/cm^2, 28 psi))	0.734 to 4.848 V
E62-7 (SOL+) - E62-12 (GND)	LG*1, V*2 - W-B	A/C compressor operation signal	Engine is running A/C switch: ON Blower switch: LO	Pulse generation (See waveform 1)
E62-8 (IG+) - E62-12 (GND)	Y*1, R*2 - W-B	Power source (IG)	Ignition switch off	Below 1 V
E62-8 (IG+) - E62-12 (GND)	Y*1, R*2 - W-B	Power source (IG)	Ignition switch ON	11 to 14 V
E62-9 (SBLW) - E62-12 (GND)	O*1, GR*2 - W-B	Blower motor speed control signal	Ignition switch ON Blower switch: OFF	11 to 14 V
E62-9 (SBLW) - E62-12 (GND)	O*1, GR*2 - W-B	Blower motor speed control signal	Ignition switch ON Blower switch: LO	Below 1 V
E62-10 (TE) - E62-11 (SG-3)	W*1, LG*2 - P*1, SB*2	A/C evaporator temperature sensor signal	Ignition switch ON Evaporator temperature at 10°C (50°F)	1.7 to 2.0 V
E62-10 (TE) - E62-11 (SG-3)	W*1, LG*2 - P*1, SB*2	A/C evaporator temperature sensor signal	Ignition switch ON Evaporator temperature at 15°C (59°F)	1.0 to 1.3 V
E62-11 (SG-3) - Body ground	P*1, SB*2 - Body ground	Ground for A/C evaporator temperature sensor	Always	Below 1 V
E62-12 (GND) - Body ground	W-B - Body ground	Ground for main power supply	Always	Below 1 V
E62-15 (A/C) - E62-12 (GND)	L*1, Y*2 - W-B	A/C switch signal	Ignition switch ON A/C switch: OFF	Below 1 V
E62-15 (A/C) - E62-12 (GND)	L*1, Y*2 - W-B	A/C switch signal	Ignition switch ON A/C switch: ON	11 to 14 V

TERMINAL NO. (SYMBOL)	WIRING COLOR	DESCRIPTION	CONDITION	SPECIFIED CONDITION
E62-16 (LED) - E62-12 (GND)	GR*1, BE*2 - W-B	A/C switch indicator light signal	Ignition switch ON A/C switch: OFF Blower switch: ON	11 to 14 V
E62-16 (LED) - E62-12 (GND)	GR*1, BE*2 - W-B	A/C switch indicator light signal	Ignition switch ON A/C switch: ON Blower switch: ON	Below 4 V
E63-1 (B) - E62-12 (GND)*3	W*1, BR*2 - W-B	Power source (Battery)	Always	11 to 14 V
E63-9 (PTC1) - E62-12 (GND)*3	W*1, P*2 - W-B	PTC heater operation signal	Ignition switch ON Temperature setting: MAX HOT Ambient temperature: 10°C (50°F) or lower Engine coolant temperature: 65°C (149°F) or lower Light control switch: OFF Blower switch: OFF	Below 1 V
E63-9 (PTC1) - E62-12 (GND)*3	W*1, P*2 - W-B	PTC heater operation signal	Engine is running (1250 rpm or higher) Temperature setting: MAX HOT Ambient temperature: 10°C (50°F) or lower Engine coolant temperature: 75°C (167°F) or lower Light control switch: OFF Blower switch: LO	11 to 14 V
E63-10 (PTC2) - E62-12 (GND)*3	B - W-B	PTC heater operation signal	Ignition switch ON Temperature setting: MAX HOT Ambient temperature: 10°C (50°F) or lower Engine coolant temperature: 70°C (158°F) or lower Light control switch: OFF Blower switch: OFF	Below 1 V
E63-10 (PTC2) - E62-12 (GND)*3	B - W-B	PTC heater operation signal	Engine is running (1250 rpm or higher) Temperature setting: MAX HOT Ambient temperature: 10°C (50°F) or lower Engine coolant temperature: 65°C (149°F) or lower Light control switch: OFF	11 to 14 V

TERMINAL NO. (SYMBOL)	WIRING COLOR	DESCRIPTION	CONDITION	SPECIFIED CONDITION
			Blower switch: LO	
E63-14 (HEAT) - E62-12 (GND)*3	LG*1, GR*2 - W-B	MAX HOT switch signal	Ignition switch ON MAX HOT switch: OFF	Below 1 V
E63-14 (HEAT) - E62-12 (GND)*3	LG*1, GR*2 - W-B	MAX HOT switch signal	Ignition switch ON MAX HOT switch: ON	11 to 14 V
E63-23 (HLS) - E62-12 (GND)*3	B*1, V*2 - W-B	Headlight dimmer signal (for PTC heater function)	Light control switch: OFF	11 to 14 V
E63-23 (HLS) - E62-12 (GND)*3	B*1, V*2 - W-B	Headlight dimmer signal (for PTC heater function)	Light control switch: ON	Below 1 V
E63-24 (ALT) - E62-12 (GND)*3	L - W-B	Generator signal (for PTC heater function)	Engine is running	Pulse generation

HINT:

- *1: TMC Made
- *2: NUMMI, TMMC Made
- *3: w/ PTC Heater

(a) Waveform 1

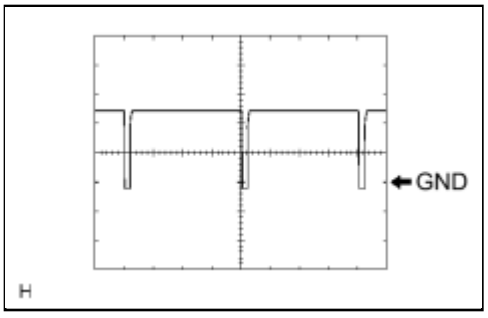

ITEM	CONTENT
Terminal No. (Symbol)	E62-7 (SOL+) - E62-12 (GND)
Tool Setting	5 V/DIV., 500 µs/DIV.
Vehicle Condition	Engine is running A/C switch: ON Blower switch: LO

Last Modified: 3-10-2010	6.4 C	**From:** 200901
Model Year: 2010	**Model:** Corolla	**Doc ID:** RM000000STP03TX
Title: HEATING / AIR CONDITIONING: AIR CONDITIONING SYSTEM (for Manual Air Conditioning System): B1423: Pressure Sensor Circuit (2010 Corolla)		

DTC	**B1423**	**Pressure Sensor Circuit**

DESCRIPTION

This DTC is output when refrigerant pressure on the high pressure side is extremely low (0.19 MPa (2.0 kgf/cm^2, 28 psi) or less) or extremely high (3.14 MPa (32.0 kgf/cm^2, 455 psi) or more). The A/C pressure sensor, installed on the high pressure line to detect refrigerant pressure, outputs a refrigerant pressure signal to the A/C amplifier. The A/C amplifier converts this signal to a pressure value according to the sensor characteristics to control the compressor.

DTC NO.	DTC DETECTION CONDITION	TROUBLE AREA
B1423	• Open or short in A/C pressure sensor circuit • Refrigerant pressure on the high pressure line is extremely low (0.19 MPa (2.0 kgf/cm^2, 28 psi) or less) or extremely high (3.14 MPa (32.0 kgf/cm^2, 455 psi) or more).	• A/C Pressure sensor • Harness or connector between A/C pressure sensor and A/C amplifier • A/C amplifier • Expansion valve (blocked, stuck) • Condenser (blocked, deterioration of cooling capacity due to dirt) • Cooler dryer (moisture in the refrigerant cycle cannot be absorbed) • Cooling fan system (condenser cannot be cooled down) • A/C system (leaks, blocked)

WIRING DIAGRAM

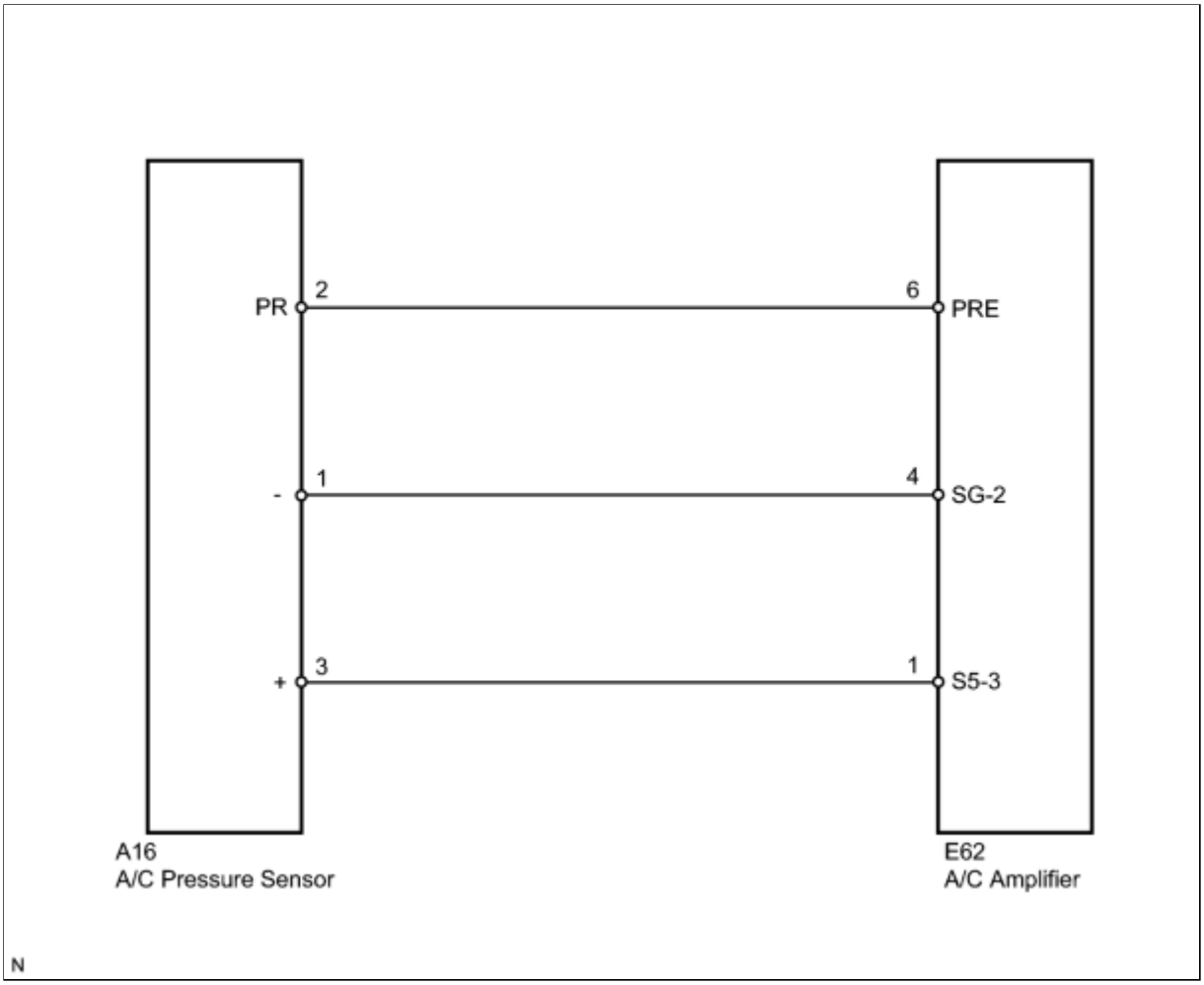

INSPECTION PROCEDURE

PROCEDURE

1.	**CHECK HARNESS AND CONNECTOR (POWER SOURCE CIRCUIT)**

(a) Disconnect the connector from the A/C pressure sensor.

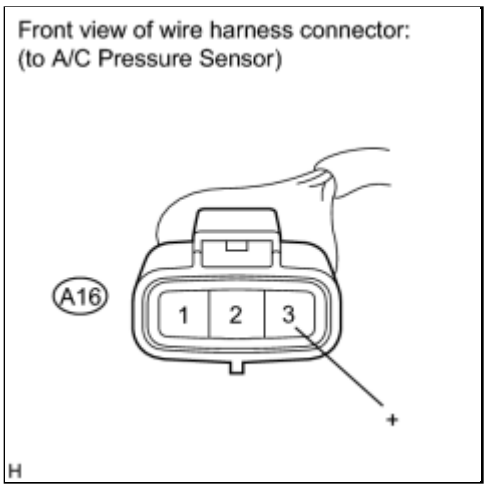

(b) Measure the voltage according to the value(s) in the table below.

Standard Voltage:

TESTER CONNECTION	SWITCH CONDITION	SPECIFIED CONDITION
A16-3 (+) - Body ground	Ignition switch ON	4.75 to 5.25 V

NG ▶ **CHECK HARNESS AND CONNECTOR (A/C AMPLIFIER - A/C PRESSURE SENSOR)**

OK ▼

2.	**CHECK HARNESS AND CONNECTOR (GROUND CIRCUIT)**

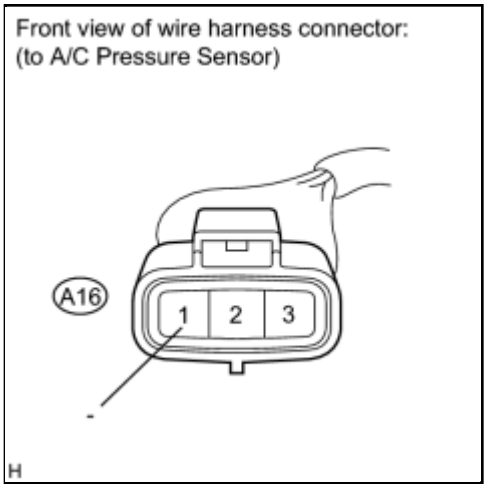

(a) Measure the resistance according to the value(s) in the table below.

Standard Resistance:

TESTER CONNECTION	CONDITION	SPECIFIED CONDITION
A16-1 (-) - Body ground	Always	Below 1 Ω

NG ▶ CHECK HARNESS AND CONNECTOR (A/C AMPLIFIER - A/C PRESSURE SENSOR)

OK ▼

3.	INSPECT A/C PRESSURE SENSOR (SENSOR SIGNAL CIRCUIT)

(a) Reconnect the connector to the A/C pressure sensor.

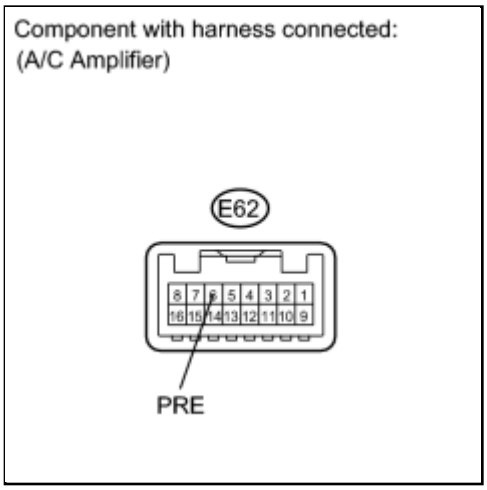

(b) Remove the A/C amplifier with the connectors still connected.

(c) Measure the voltage according to the value(s) in the table below.

Standard Voltage:

TESTER CONNECTION	CONDITION	SPECIFIED CONDITION
E62-6 (PRE) - Body ground	Ignition switch ON (A/C: OFF)	0.7 to 4.8 V

HINT:

If the measured voltage is not within the normal range, there may be a malfunction in the A/C amplifier, A/C pressure sensor, or wire harness. It is also possible that the amount of refrigerant may not be appropriate.

NG ▶ CHECK HARNESS AND CONNECTOR (A/C AMPLIFIER - A/C PRESSURE SENSOR)

OK

4.	INSPECT A/C PRESSURE SENSOR (SENSOR SIGNAL CIRCUIT)

(a) Measure the voltage when the following conditions are satisfied.

ITEM	CONDITION
Vehicle Doors	Fully open
Temperature Setting	MAX COLD
Blower Speed	HI
A/C Switch	ON
R/F Switch	RECIRCULATION
Interior Temperature	25 to 35°C (77 to 95°F)
Engine Speed	2000 rpm

NOTICE:

- If refrigerant pressure on the high pressure line becomes extremely high during the inspection (if the voltage exceeds 4.8 V), the fail-safe function stops compressor operation. Therefore, measure the voltage before the fail-safe function operates.
- It is necessary to measure the voltage over a period of time (approximately 10 minutes) because the problem symptom may recur after a while.

HINT:

When the outside air temperature is low (below -1.5°C (29.3°F)), the compressor stops due to operation of the ambient temperature sensor and the evaporator temperature sensor to prevent the evaporator from freezing. In this case, perform the inspection in a warm indoor environment.

(1) Measure the voltage according to the value(s) in the table below.

Standard Voltage:

TESTER CONNECTION	CONDITION	SPECIFIED CONDITION
E62-6 (PRE) - Body ground	Ignition switch ON (A/C: ON)	0.7 to 4.8 V

Result:

Component with harness connected:
(A/C Amplifier)

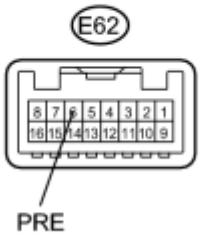

RESULT	PROCEED TO
OK (When troubleshooting according to DTC)	A
OK (When troubleshooting according to Problem Symptoms Table)	B
NG	C

C ▶ **INSPECT COOLING FAN SYSTEM**

B ▶ **PROCEED TO NEXT CIRCUIT INSPECTION SHOWN IN PROBLEM SYMPTOMS TABLE**

A ▶ **REPLACE AIR CONDITIONING AMPLIFIER**

5.	CHECK HARNESS AND CONNECTOR (A/C AMPLIFIER - A/C PRESSURE SENSOR)

Front view of wire harness connector:
(to A/C Amplifier)

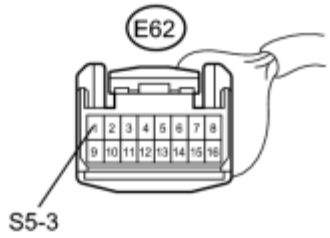

H

(a) Disconnect the connector from the A/C amplifier.

(b) Measure the resistance according to the value(s) in the table below.

Standard Resistance:

TESTER CONNECTION	CONDITION	SPECIFIED CONDITION

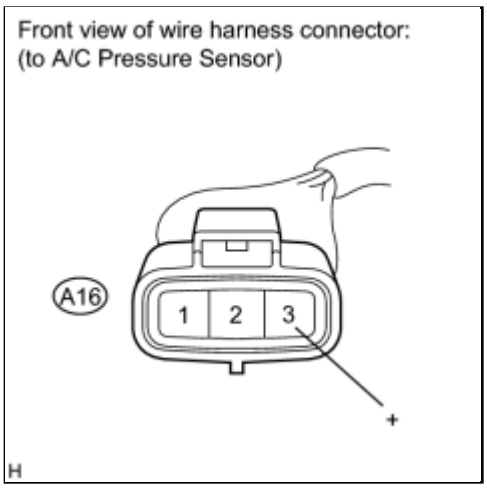

A16-3 (+) - E62-1 (S5-3)	Always	Below 1 Ω
E62-1 (S5-3) - Body ground	Always	10 kΩ or higher

NG ▶ **REPAIR OR REPLACE HARNESS OR CONNECTOR**

OK ▶ **REPLACE AIR CONDITIONING AMPLIFIER**

6.	**CHECK HARNESS AND CONNECTOR (A/C AMPLIFIER - A/C PRESSURE SENSOR)**

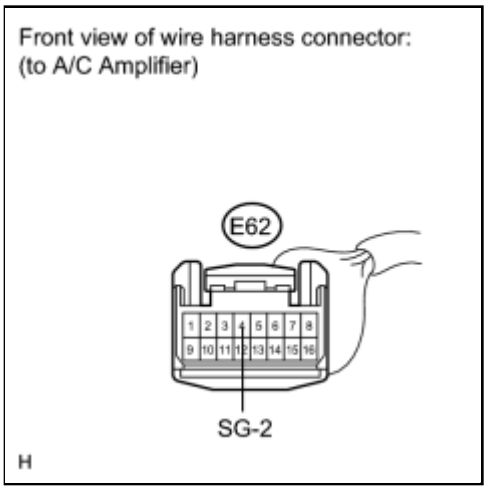

(a) Disconnect the connector from the A/C amplifier.

(b) Measure the resistance according to the value(s) in the table below.

Standard Resistance:

TESTER CONNECTION	CONDITION	SPECIFIED CONDITION
A16-1 (-) - E62-4 (SG-2)	Always	Below 1 Ω
E62-4 (SG-2) - Body ground	Always	10 kΩ or higher

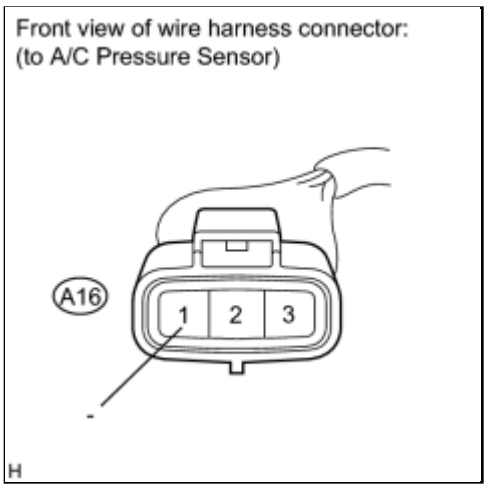

NG ▶ **REPAIR OR REPLACE HARNESS OR CONNECTOR**

OK ▶ **REPLACE AIR CONDITIONING AMPLIFIER**

7.	**CHECK HARNESS AND CONNECTOR (A/C AMPLIFIER - A/C PRESSURE SENSOR)**

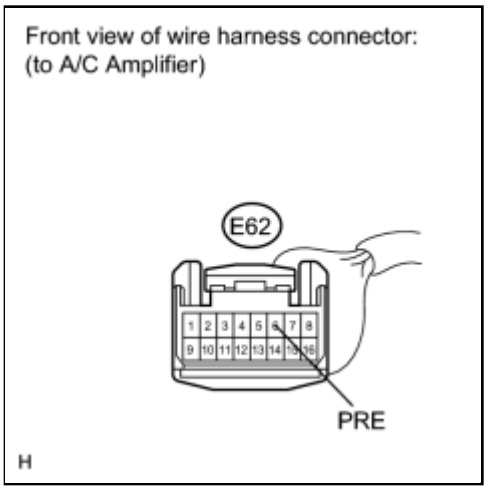

(a) Disconnect the connector from the A/C amplifier.

(b) Measure the resistance according to the value(s) in the table below.

Standard Resistance:

TESTER CONNECTION	CONDITION	SPECIFIED CONDITION
A16-2 (PR) - E62-6 (PRE)	Always	Below 1 Ω
E62-6 (PRE) - Body ground	Always	10 kΩ or higher

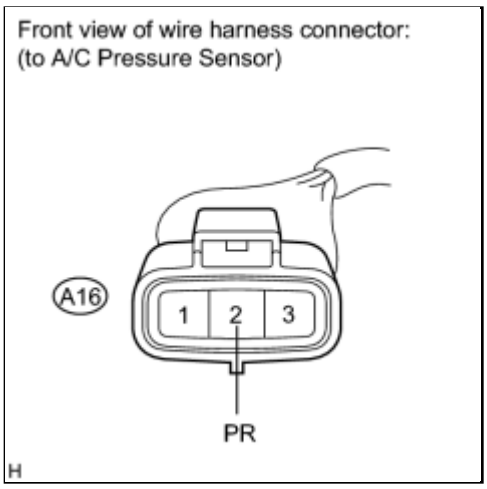

NG ▶ **REPAIR OR REPLACE HARNESS OR CONNECTOR**

OK ▼

8.	**CHECK FOR A/C SYSTEM LEAK**

(a) Install the manifold gauge set.

(b) Recover the refrigerant from the A/C system using a refrigerant recovery unit.

(c) Evacuate the A/C system and check that vacuum can be maintained.

OK:
Vacuum can be maintained in the A/C system.

HINT:

If vacuum cannot be maintained in the A/C system, there may be a refrigerant leak. In this case, it is necessary to repair or replace the leaking part of the A/C system.

NG ▶ **REPAIR A/C SYSTEM LEAK**

OK ▼

9.	**CHARGE REFRIGERANT**

(a) Add an appropriate amount of refrigerant INFO .

NEXT

10.	**RECHECK DTC**

(a) Recheck for DTCs when the following conditions are satisfied.

ITEM	CONDITION
Vehicle Doors	Fully open
Temperature Setting	MAX COLD
Blower Speed	HI
A/C Switch	ON
R/F Switch	RECIRCULATION
Interior Temperature	25 to 35°C (77 to 95°F)
Engine Speed	2000 rpm

NOTICE:

If refrigerant pressure on the high pressure line is excessive, this DTC will be set. Therefore, it is necessary to measure the voltage over a period of time (approximately 10 minutes) because this DTC may be set after the A/C has been operating for a while.

HINT:

When the outside air temperature is low (below -1.5°C (29.3°F)), the compressor stops due to signals from the ambient temperature sensor and the evaporator temperature sensor to prevent the evaporator from freezing. In this case, perform the inspection in a warm indoor environment.

Result:

RESULT	PROCEED TO
DTC B1423 is output	A
DTC B1423 is not output	B

NOTICE:

If the DTC was set due to an insufficient or excessive amount of refrigerant, the problem may have been solved after performing the previous step. However, the root cause of insufficient refrigerant may be refrigerant leaks. The root cause of excessive refrigerant may be adding refrigerant when the level was insufficient. Therefore, identify and repair any refrigerant leaks as necessary.

B **END**

A

11.	INSPECT A/C PRESSURE SENSOR

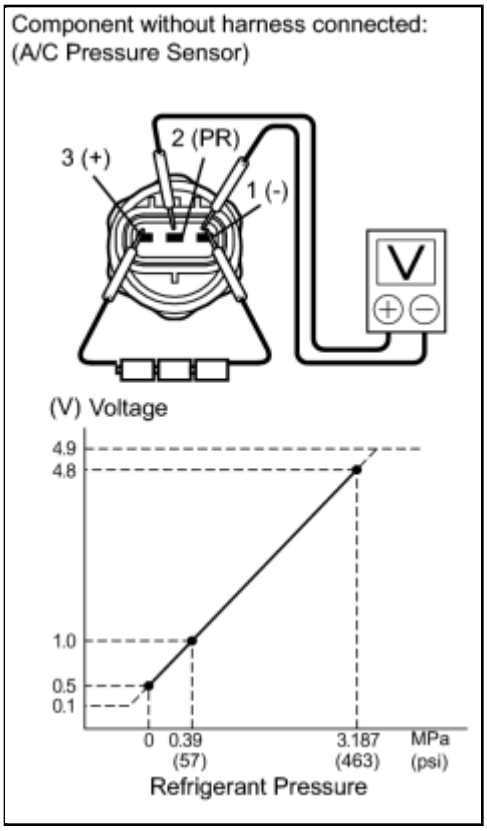

(a) Install the manifold gauge set.

(b) Disconnect the connector from the A/C pressure sensor.

(c) Connect the three 1.5 V dry cell batteries' positive (+) lead to terminal 3, and the negative (-) lead to terminal 1.

(d) Connect the voltmeter's positive (+) lead to terminal 2, and the negative (-) lead to terminal 1.

(e) Measure the voltage according to the value(s) in the table below.

Standard Voltage:

TESTER CONNECTION	CONDITION	SPECIFIED CONDITION
2 (PR) - 1 (-)	Refrigerant pressure: 0.39 to 3.187 MPa (57 to 463 psi)	1.0 to 4.8 V

NG ▶ REPLACE A/C PRESSURE SENSOR

OK ▶ REPLACE AIR CONDITIONING AMPLIFIER

12.	REPAIR A/C SYSTEM LEAK

(a) Identify the area where refrigerant leaks from INFO.

(b) Repair the identified area of the A/C system.

(c) Evacuate the A/C system.

NEXT ▶ CHARGE REFRIGERANT

13.	INSPECT COOLING FAN SYSTEM

(a) Check that the cooling fan operates normally.

HINT:

- Cooling Fan Circuit INFO for 2AZ-FE).
- Cooling Fan Circuit INFO for 2ZR-FE).

NG ▶ REPAIR COOLING FAN SYSTEM

OK ▼

14.	CHARGE REFRIGERANT

(a) Use a refrigerant recovery unit to recover refrigerant.

(b) Evacuate the A/C system.

(c) Add an appropriate amount of refrigerant INFO .

HINT:

If refrigerant is added and the system has not been properly evacuated (insufficient vacuum time), moisture in the air remaining in the system will freeze in the expansion valve, blocking the flow on the high pressure side. Therefore, recover the refrigerant and properly evacuate the system. Add an appropriate amount of refrigerant, and check for DTCs.

NEXT ▼

15.	RECHECK DTC

(a) Recheck for DTCs when the following conditions are satisfied.

ITEM	CONDITION
Vehicle Doors	Fully open
Temperature Setting	MAX COLD
Blower Speed	HI
A/C Switch	ON
R/F Switch	RECIRCULATION
Interior Temperature	25 to 35°C (77 to 95°F)
Engine Speed	2000 rpm

NOTICE:

If refrigerant pressure on the high pressure line is excessive, this DTC will be set. Therefore, it is necessary to measure the voltage over a period of time (approximately 10 minutes) because DTC may be set after the A/C has been operating for a while.

HINT:

- When the outside air temperature is low (below -1.5°C (29.3°F)), the compressor stops due to signals from the ambient temperature sensor and the evaporator temperature sensor to prevent the evaporator from freezing. In this case, perform the inspection in a warm indoor environment.
- If refrigerant is added and the system has not been properly evacuated (insufficient vacuum time), moisture in the air remaining in the system will freeze in the expansion valve, blocking the flow on the high pressure side. Therefore, recover the refrigerant and properly evacuate the system. Add an appropriate amount of refrigerant, and check for DTCs. If the DTC is not output, it indicates that the cooler dryer in the condenser is not able to absorb moisture in the refrigerant. In this case, to complete the repair, it is necessary to replace the cooler dryer.

Result:

RESULT	PROCEED TO
DTC B1423 is output	A
DTC B1423 is not output	B

B ▶ **REPLACE COOLER DRYER**

A ▼

16.	**REPLACE EXPANSION VALVE**

(a) Replace the expansion valve with a new one INFO .

HINT:

Replace the expansion valve with a normal one because the expansion valve is either stuck or clogged.

NEXT

17.	**CHARGE REFRIGERANT**

(a) Add an appropriate amount of refrigerant INFO .

NEXT

18.	**RECHECK DTC**

(a) Recheck for DTCs when the following conditions are satisfied.

ITEM	CONDITION
Vehicle Doors	Fully open
Temperature Setting	MAX COLD
Blower Speed	HI
A/C Switch	ON
R/F Switch	RECIRCULATION
Interior Temperature	25 to 35°C (77 to 95°F)
Engine Speed	2000 rpm

NOTICE:

If refrigerant pressure on the high pressure line is excessive, this DTC will be set. Therefore, it is necessary to measure the voltage over a period of time (approximately 10 minutes) because this DTC may be set after the A/C has been operating for a while.

HINT:

- When the outside air temperature is low (below -1.5°C (29.3°F)), the compressor stops due to operation of the ambient temperature sensor and the evaporator temperature sensor to prevent the evaporator from freezing. In this case, perform the inspection in a warm indoor environment.
- If refrigerant pressure is not normal after replacing the expansion valve with a new one, the

condenser or pipes may be clogged with dirt, dust or other contaminants. In this case, clean or replace the condenser or pipes.

Result:

RESULT	PROCEED TO
DTC B1423 is not output	A
DTC B1423 is output	B

B ▶ **REPLACE CONDENSER**

A ▶ **END**

Last Modified: 3-10-2010	6.4 D	**From:** 200901
Model Year: 2010	**Model:** Corolla	**Doc ID:** RM000001O7Y024X
Title: HEATING / AIR CONDITIONING: AIR CONDITIONING SYSTEM (for Manual Air Conditioning System): DIAGNOSIS SYSTEM (2010 Corolla)		

DIAGNOSIS SYSTEM

1. CHECK DLC3

(a) Check the DLC3 INFO .

Last Modified: 3-10-2010	6.4 D	**From:** 200901
Model Year: 2010	**Model:** Corolla	**Doc ID:** RM000001GUF02RX
Title: HEATING / AIR CONDITIONING: AIR CONDITIONING SYSTEM (for Manual Air Conditioning System): DTC CHECK / CLEAR (2010 Corolla)		

DTC CHECK / CLEAR

1. DTC CHECK USING TECHSTREAM

(a) Connect the Techstream to the DLC3.

(b) Turn the ignition switch to ON.

(c) Turn the Techstream on.

(d) Enter the following menus: Body Electrical / Trouble Codes.

(e) Check for DTCs.

2. DTC CLEAR USING TECHSTREAM

(a) Connect the Techstream to the DLC3.

(b) Turn the ignition switch to ON.

(c) Turn the Techstream on.

(d) Enter the following menus: Body Electrical / Trouble Codes.

(e) Clear the DTCs by pressing the YES button on the Techstream display.

Last Modified: 3-10-2010	6.4 C	**From:** 200901
Model Year: 2010	**Model:** Corolla	**Doc ID:** RM000000STK02EX
Title: HEATING / AIR CONDITIONING: AIR CONDITIONING SYSTEM (for Manual Air Conditioning System): B1412: Ambient Temperature Sensor Circuit (2010 Corolla)		

DTC	**B1412**	**Ambient Temperature Sensor Circuit**

DESCRIPTION

The ambient temperature sensor is installed in front of the condenser. This sensor detects the temperature outside the cabin and sends the appropriate signals to the A/C amplifier via the CAN communication system.

DTC NO.	DTC DETECTION CONDITION	TROUBLE AREA
B1412	Open or short in ambient temperature sensor circuit	• Ambient temperature sensor • Harness or connector between ambient temperature sensor and combination meter • Combination meter • A/C amplifier • CAN communication system

WIRING DIAGRAM

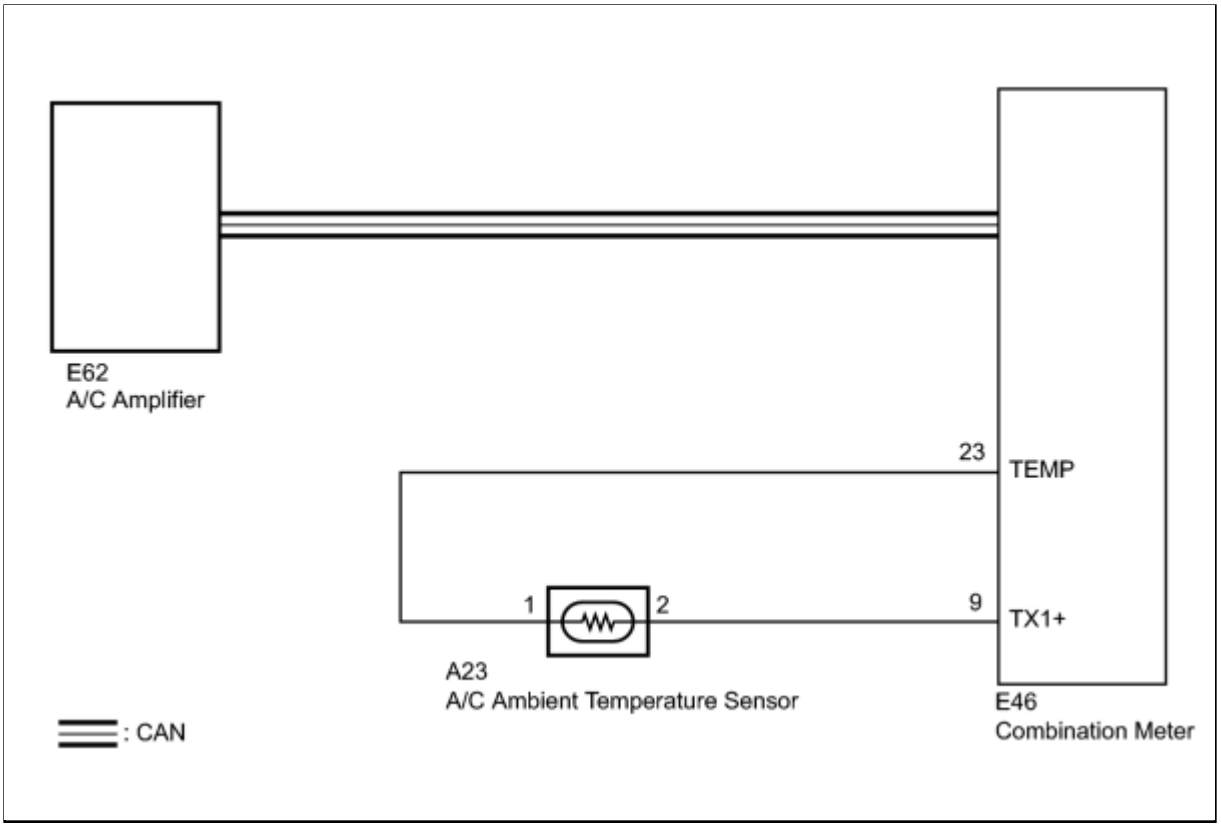

INSPECTION PROCEDURE

PROCEDURE

1.	**CHECK CAN COMMUNICATION SYSTEM**

(a) Use the Techstream to check if the CAN communication system is functioning normally.

Result:

RESULT	PROCEED TO
CAN DTC is not output	A
CAN DTC is output	B

B ▶ **GO TO CAN COMMUNICATION SYSTEM**

A ▼

2.	**READ VALUE USING TECHSTREAM**

(a) Connect the Techstream to the DLC3.

(b) Turn the ignition switch to ON.

(c) Turn the Techstream on.

(d) Select the item below in the Data List, and read the display on the Techstream.

Data List / Air Conditioner

TESTER DISPLAY	MEASUREMENT ITEM/RANGE	NORMAL CONDITION	DIAGNOSTIC NOTE
Ambient Temp Sensor (Ambi Temp Sens)	Ambient temperature sensor / Min: -23.3°C (-9.94°F), Max: 65.95°C (150.71°F)	Actual ambient temperature is displayed	Open in circuit: -23.3°C (-9.94°F) Short in circuit: 65.95°C (150.71°F)

OK:
The display is as specified in the "Normal Condition" column.
Result:

RESULT	PROCEED TO
NG	A
OK (When troubleshooting according to Problem Symptoms Table)	B
OK (When troubleshooting according to the DTC output)	C

C ▶ **REPLACE AIR CONDITIONING AMPLIFIER**

B ▶ **PROCEED TO NEXT CIRCUIT INSPECTION SHOWN IN PROBLEM SYMPTOMS TABLE**

A ▼

3.	**CHECK HARNESS AND CONNECTOR (AMBIENT TEMPERATURE SENSOR CIRCUIT)**

(a) Disconnect the connector from the combination meter.

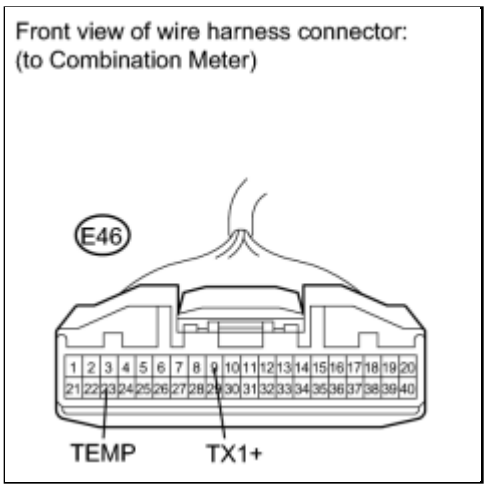

(b) Measure the resistance according to the value(s) in the table below.

Standard Resistance:

TESTER CONNECTION	CONDITION	SPECIFIED CONDITION
E46-9 (TX1+) - E46-23 (TEMP)	25°C (77°F)	1.60 to 1.80 kΩ
E46-9 (TX1+) - E46-23 (TEMP)	40°C (104°F)	0.80 to 1.00 kΩ

NG ▶ **INSPECT AMBIENT TEMPERATURE SENSOR**

OK ▼

4.	**INSPECT COMBINATION METER**

(a) Temporarily replace the combination meter with a known good one INFO.

HINT:

Since the combination meter cannot be inspected while it is removed from the vehicle, replace the combination meter with a known good one and check that the condition returns to normal.

(b) Check for DTCs.

Result:

RESULT	PROCEED TO
DTC B1412 is not output	A
DTC B1412 is output	B

B ▶ REPLACE AIR CONDITIONING AMPLIFIER

A ▶ REPLACE COMBINATION METER

5.	INSPECT AMBIENT TEMPERATURE SENSOR

(a) Remove the ambient temperature sensor.

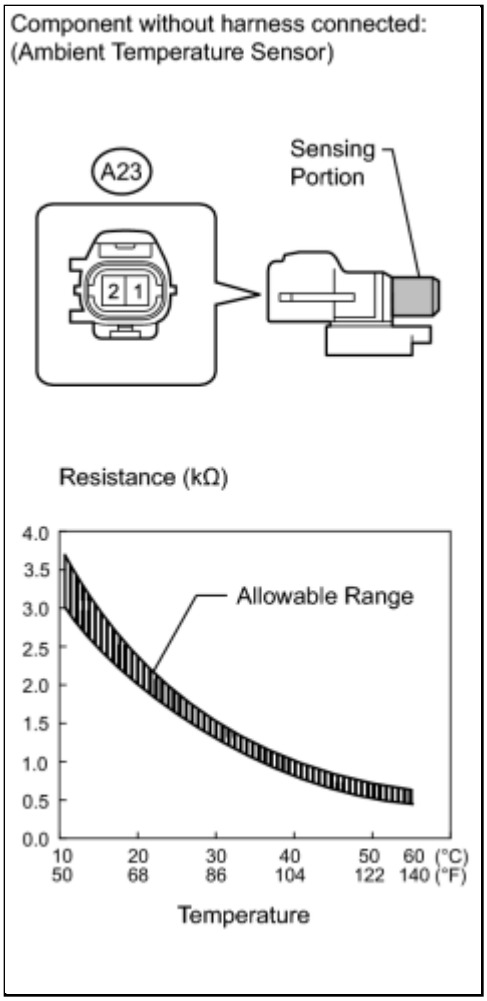

(b) Disconnect the connector from the ambient temperature sensor.

(c) Measure the resistance according to the value(s) in the table below.

Standard Resistance:

TESTER CONNECTION	CONDITION	SPECIFIED CONDITION
A23-1 - A23-2	10°C (50°F)	3.00 to 3.73 kΩ
A23-1 - A23-2	15°C (59°F)	2.45 to 2.88 kΩ
A23-1 - A23-2	20°C (68°F)	1.95 to 2.30 kΩ

TESTER CONNECTION	CONDITION	SPECIFIED CONDITION
A23-1 - A23-2	25°C (77°F)	1.60 to 1.80 kΩ
A23-1 - A23-2	30°C (86°F)	1.28 to 1.47 kΩ
A23-1 - A23-2	35°C (95°F)	1.00 to 1.22 kΩ
A23-1 - A23-2	40°C (104°F)	0.80 to 1.00 kΩ
A23-1 - A23-2	45°C (113°F)	0.65 to 0.85 kΩ
A23-1 - A23-2	50°C (122°F)	0.50 to 0.70 kΩ
A23-1 - A23-2	55°C (131°F)	0.44 to 0.60 kΩ
A23-1 - A23-2	60°C (140°F)	0.36 to 0.50 kΩ

NOTICE:

- Hold the sensor only by its connector. Touching the sensor may change the resistance value.
- When measuring, the sensor temperature must be the same as the ambient temperature.

HINT:

As the temperature increases, the resistance decreases (see the graph).

NG ▶ **REPLACE AMBIENT TEMPERATURE SENSOR**

OK ▶ **REPAIR OR REPLACE HARNESS OR CONNECTOR (AMBIENT TEMPERATURE SENSOR - COMBINATION METER)**

Last Modified: 3-10-2010	6.4 U	**From:** 200901
Model Year: 2010	**Model:** Corolla	**Doc ID:** RM000000PMG02OX
Title: HEATING / AIR CONDITIONING: AIR CONDITIONING SYSTEM (for Manual Air Conditioning System): DATA LIST / ACTIVE TEST (2010 Corolla)		

DATA LIST / ACTIVE TEST

1. Data List

Use the Techstream to read the Data List allows the values or states of switches, sensors, actuators and other items to be read without removing any parts. This non-intrusive inspection can be very useful because intermittent conditions or signals may be discovered before parts or wiring is disturbed. Reading the Data List information early in troubleshooting is one way to save diagnostic time.

(a) Connect the Techstream to the DLC3.

(b) Turn the ignition switch to ON.

(c) Turn the Techstream on.

(d) Enter the following menus: Body Electrical / Air Conditioner / Data List.

(e) Check the value(s) by referring to the table below.

Air Conditioner

TESTER DISPLAY	MEASUREMENT ITEM/RANGE	NORMAL CONDITION	DIAGNOSTIC NOTE
Ambient Temp Sensor (Ambi Temp Sens)	Ambient temperature sensor / Min.: -23.3°C (-9.94°F), Max.: 65.95°C (150.71°F)	Actual ambient temperature is displayed	-
Adjusted Ambient Temp (Ambi Temp)	Adjusted ambient temperature / Min.: -30.8°C (-23.44°F), Max.: 50.8°C (123.44°F)	-	-
Evaporator Fin Thermistor (Evap Fin Temp)	Evaporator fin thermistor / Min.: -29.7°C (-21.46°F), Max.: 59.55°C (139.19°F)	Actual evaporator temperature is displayed	-
Engine Coolant Temp (Coolant Temp)	Engine coolant temperature / Min.: 1.3°C (34.34°F), Max.: 90.55°C (194.99°F)	Actual engine coolant temperature is displayed while engine is warmed up	-
Regulator Pressure Sensor (Reg Press Sens)	Regulator pressure sensor / Min.: 0 kgf/cm^2G (-0.45668 MPaG), Max.: 38.25 kgf/cm^2G (3.29437 MPaG)	Actual refrigerant pressure is displayed	-
Regulator Control	Compressor variable output current / Min.: 0 A, Max.: 0.997 A	-	-

TESTER DISPLAY	MEASUREMENT ITEM/RANGE	NORMAL CONDITION	DIAGNOSTIC NOTE
Current (Reg Ctrl Currnt)			
Number of Trouble Codes (#Codes)	Number of trouble codes / Min.: 0, Max.: 255	Number of DTCs will be displayed	-

2. ACTIVE TEST

Use the Techstream to perform Active Tests allows the relay, actuator, and other items to be operated without removing any parts. This non-intrusive functional inspection can be very useful because intermittent operation may be discovered before parts or wiring is disturbed. Performing Active Test early in troubleshooting is one way to save diagnostic time. Data List information can be displayed while performing Active Test.

(a) Connect the Techstream to the DLC3.

(b) Turn the ignition switch to ON.

(c) Turn the Techstream on.

(d) Enter the following menus: Body Electrical / Air Conditioner / Active Test.

(e) Check the operation by referring to the table below.

Air Conditioner

TESTER DISPLAY	TEST PART	CONTROL RANGE	NORMAL CONDITION
Heater Active Level (Heater Level)	Heater active level	Min.: 0, Max.: 3	-

Last Modified: 3-10-2010	6.4 S	**From:** 200901
Model Year: 2010	**Model:** Corolla	**Doc ID:** RM000001O7Z02HX
Title: HEATING / AIR CONDITIONING: AIR CONDITIONING SYSTEM (for Manual Air Conditioning System): DIAGNOSTIC TROUBLE CODE CHART (2010 Corolla)		

DIAGNOSTIC TROUBLE CODE CHART

HINT:

When the air conditioning system functions properly, DTC B1400 is output.

Air Conditioning System (for Manual Air Conditioning System)

DTC CODE	DETECTION ITEM	TROUBLE AREA	MEMORY*2	SEE PAGE
B1412*1	Ambient Temperature Sensor Circuit	1. Ambient temperature sensor 2. Harness or connector between ambient temperature sensor and combination meter 3. Combination meter 4. A/C amplifier 5. CAN communication system	Memorized (8.5 min. or more)	INFO
B1413*3	Evaporator Temperature Sensor Circuit	1. Evaporator temperature sensor 2. Harness or connector between evaporator temperature sensor and A/C amplifier 3. A/C amplifier	Memorized (8.5 min. or more)	INFO
B1423*3	Pressure Sensor Circuit	1. A/C pressure sensor 2. Harness or connector between A/C pressure sensor and A/C amplifier 3. A/C amplifier 4. Expansion valve (blocked, stuck) 5. Condenser (blocked, deterioration of cooling capacity due to dirt) 6. Cooler dryer (moisture in the refrigerant cycle cannot be absorbed) 7. Cooling fan system (condenser cannot be cooled down) 8. A/C system (leaks, blocked)	-	INFO
B1451*3	Compressor Solenoid Circuit	1. A/C compressor (compressor solenoid) 2. Harness or connector between A/C compressor (compressor solenoid) and A/C amplifier or body ground 4. A/C amplifier	-	INFO

DTC CODE	DETECTION ITEM	TROUBLE AREA	MEMORY*2	SEE PAGE
B1499	Multiplex Communication Circuit	CAN communication system	Memorized	INFO

HINT:

- *1: If the ambient temperature is approx. -52.9°C (-63.22°F) or lower, DTC B1412/12 may be output even though the system is normal.
- *2: The A/C amplifier memorizes the DTC of the respective malfunction if it has occurred for the period of time indicated in the brackets.
- *3: For models without an air conditioning system, if this DTC is output, it does not indicate a problem.

Last Modified: 3-10-2010	6.4 C	**From:** 200901
Model Year: 2010	**Model:** Corolla	**Doc ID:** RM000000STL031X
Title: HEATING / AIR CONDITIONING: AIR CONDITIONING SYSTEM (for Manual Air Conditioning System): B1413: Evaporator Temperature Sensor Circuit (2010 Corolla)		

DTC	**B1413**	**Evaporator Temperature Sensor Circuit**

DESCRIPTION

The evaporator temperature sensor (A/C thermistor) is installed on the evaporator in the air conditioning unit. It detects the temperature of the cooled air passed through the evaporator and its signal sent to the A/C amplifier is used to control the air conditioning. The resistance of the evaporator temperature sensor (A/C thermistor) changes in accordance with the temperature of the cooled air passed through the evaporator. As the temperature decreases, the resistance increases. As the temperature increases, the resistance decreases.

The A/C amplifier applies voltage (5 V) to the evaporator temperature sensor (A/C thermistor) and reads voltage changes as the resistance of the evaporator temperature sensor (A/C thermistor) changes. This sensor is used to prevent the evaporator from freezing.

DTC NO.	DTC DETECTION CONDITION	TROUBLE AREA
B1413	Open or short in evaporator temperature sensor circuit	• Evaporator temperature sensor • Harness or connector between evaporator temperature sensor and A/C amplifier • A/C amplifier

WIRING DIAGRAM

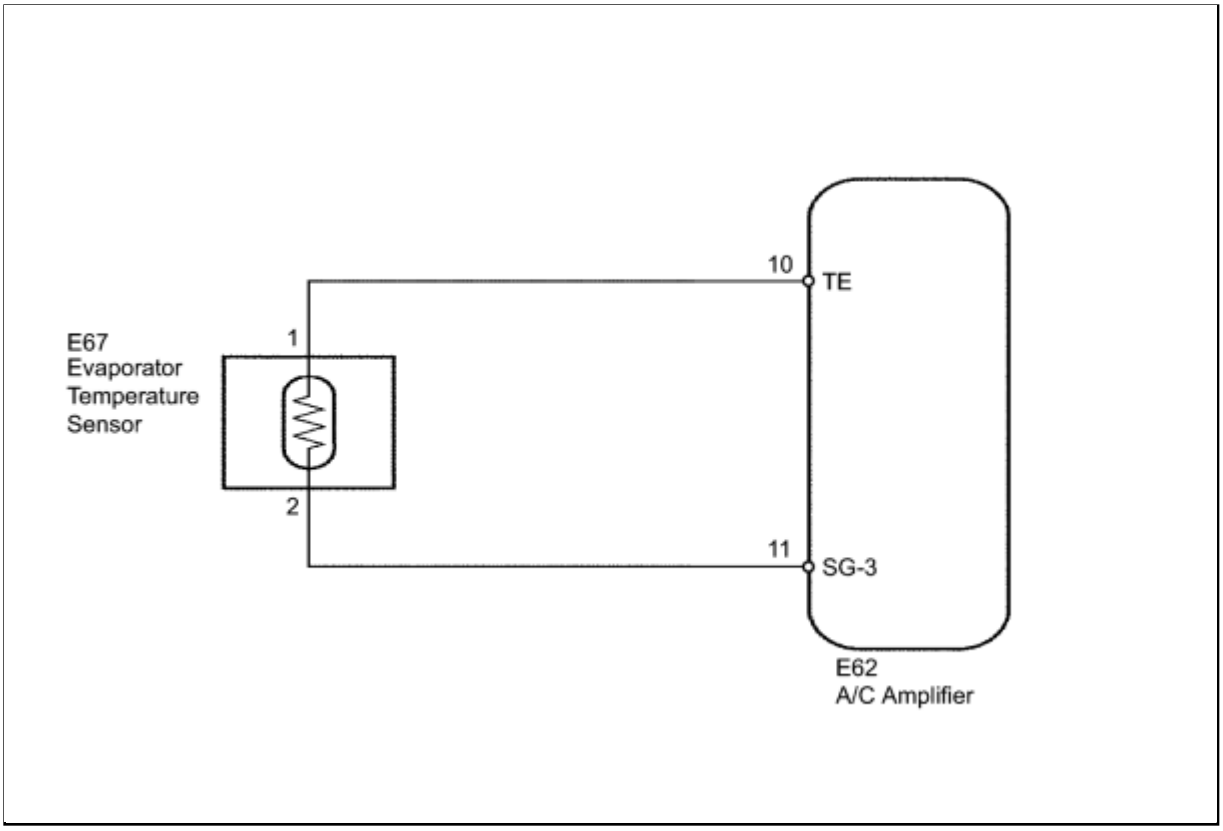

INSPECTION PROCEDURE

PROCEDURE

1.	**READ VALUE USING TECHSTREAM**

(a) Connect the Techstream to the DLC3.

(b) Turn the ignition switch to ON.

(c) Turn the Techstream on.

(d) Select the item below in the Data List, and read the display on the Techstream.

Data List / Air Conditioner

TESTER DISPLAY	MEASUREMENT ITEM/RANGE	NORMAL CONDITION	DIAGNOSTIC NOTE
Evaporator Fin Thermistor (Evap Fin Temp)	Evaporator fin thermistor / Min.: -29.7°C (-21.46°F), Max.: 59.55°C (139.19°F)	Actual evaporator temperature is displayed	Open in circuit: -29.7°C (-21.46°F) Short in circuit: 59.55°C (139.19°F)

OK:

The display is as specified in the "Normal Condition" column.

Result:

RESULT	PROCEED TO
NG	A
OK (When troubleshooting according to Problem Symptoms Table)	B
OK (When troubleshooting according to the DTC output)	C

C ▶ **REPLACE AIR CONDITIONING AMPLIFIER**

B ▶ **PROCEED TO NEXT CIRCUIT INSPECTION SHOWN IN PROBLEM SYMPTOMS TABLE**

A ▼

2.	**INSPECT EVAPORATOR TEMPERATURE SENSOR**

(a) Remove the evaporator temperature sensor.

(b) Disconnect the connector from the evaporator temperature sensor.

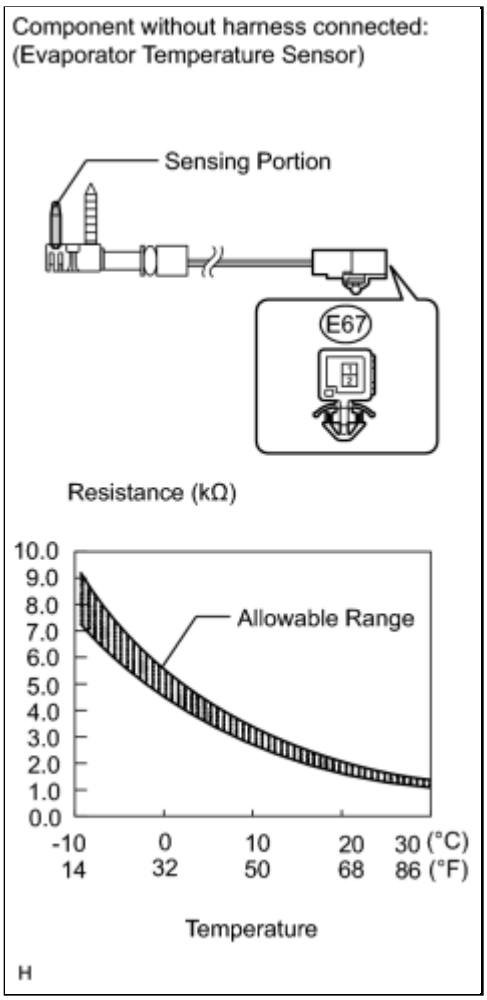

(c) Measure the resistance according to the value(s) in the table below.

Standard Resistance:

TESTER CONNECTION	CONDITION	SPECIFIED CONDITION
E67-1 - E67-2	-10°C (14°F)	7.30 to 9.10 kΩ
E67-1 - E67-2	-5°C (23°F)	5.65 to 6.95 kΩ
E67-1 - E67-2	0°C (32°F)	4.40 to 5.35 kΩ
E67-1 - E67-2	5°C (41°F)	3.40 to 4.15 kΩ
E67-1 - E67-2	10°C (50°F)	2.70 to 3.25 kΩ
E67-1 - E67-2	15°C (59°F)	2.14 to 2.58 kΩ
E67-1 - E67-2	20°C (68°F)	1.71 to 2.05 kΩ
E67-1 - E67-2	25°C (77°F)	1.38 to 1.64 kΩ
E67-1 - E67-2	30°C (86°F)	1.11 to 1.32 kΩ

NOTICE:

- Hold the sensor only by its connector. Touching the sensor may change the resistance value.
- When measuring, the sensor temperature must be the same as the ambient temperature.

HINT:

As the temperature increases, the resistance decreases (see the graph).

NG ▶ **REPLACE EVAPORATOR TEMPERATURE SENSOR**

OK ▼

3.	**CHECK HARNESS AND CONNECTOR (A/C AMPLIFIER - EVAPORATOR TEMPERATURE SENSOR)**

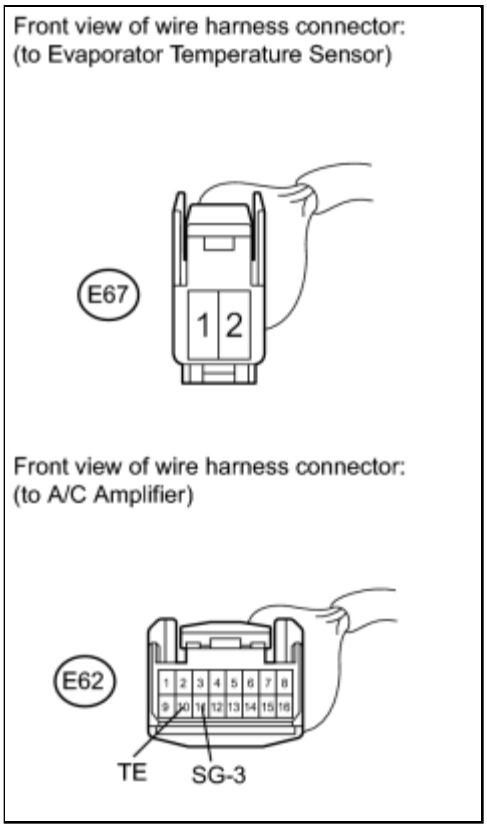

(a) Disconnect the connector from the A/C amplifier.

(b) Measure the resistance according to the value(s) in the table below.

Standard Resistance:

TESTER CONNECTION	CONDITION	SPECIFIED CONDITION
E62-10 (TE) - E67-1	Always	Below 1 Ω
E62-11 (SG-3) - E67-2	Always	Below 1 Ω

TESTER CONNECTION	CONDITION	SPECIFIED CONDITION
E62-10 (TE) - Body ground	Always	10 kΩ or higher
E62-11 (SG-3) - Body ground	Always	10 kΩ or higher

NG ▶ **REPAIR OR REPLACE HARNESS OR CONNECTOR**

OK ▶ **REPLACE AIR CONDITIONING AMPLIFIER**

TOYOTA

Last Modified: 3-10-2010	6.4 C	**From:** 200901
Model Year: 2010	**Model:** Corolla	**Doc ID:** RM000000VAV028X
Title: HEATING / AIR CONDITIONING: AIR CONDITIONING SYSTEM (for Manual Air Conditioning System): B1451: Compressor Solenoid Circuit (2010 Corolla)		

DTC	**B1451**	**Compressor Solenoid Circuit**

DESCRIPTION

Through this circuit, the A/C compressor receives a refrigerant compression demand signal from the A/C amplifier.

Based on this signal, the A/C compressor changes the amount of compressor output.

DTC NO.	DTC DETECTION CONDITION	TROUBLE AREA
B1451	Open or short in A/C compressor solenoid circuit	• A/C compressor (compressor solenoid) • Harness or connector between A/C compressor (compressor solenoid) and A/C amplifier or body ground • A/C amplifier

WIRING DIAGRAM

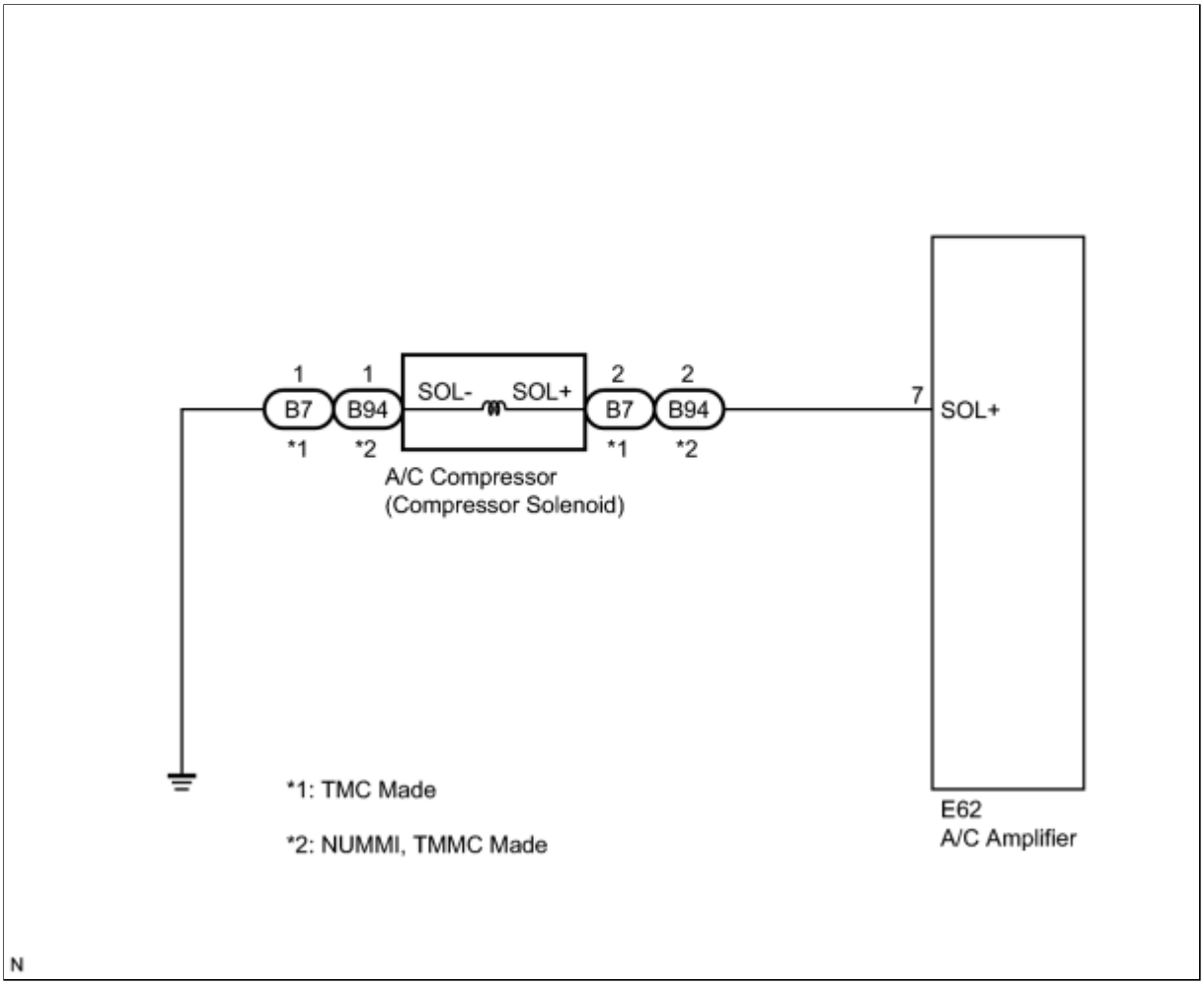

INSPECTION PROCEDURE

PROCEDURE

1.	**CHECK HARNESS AND CONNECTOR (A/C COMPRESSOR - BODY GROUND)**

(a) Disconnect the connector from the A/C compressor (compressor solenoid).

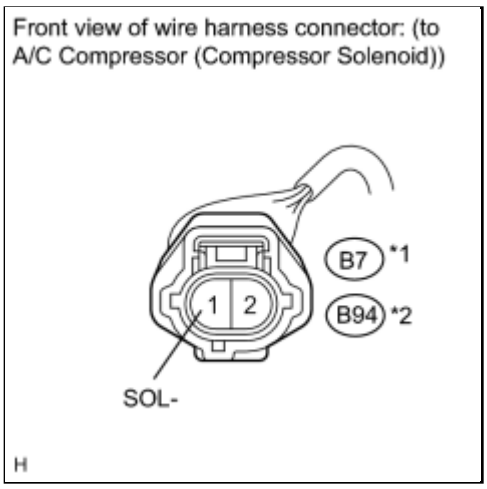

(b) Measure the resistance according to the value(s) in the table below.

Standard Resistance:

TESTER CONNECTION	CONDITION	SPECIFIED CONDITION
B7-1 (SOL-) - Body ground*1	Always	Below 1 Ω
B94-1 (SOL-) - Body ground*2	Always	Below 1 Ω

HINT:

- *1: TMC Made
- *2: NUMMI, TMMC Made

NG ▶ **REPAIR OR REPLACE HARNESS OR CONNECTOR**

OK ▼

2.	**INSPECT A/C COMPRESSOR (COMPRESSOR SOLENOID)**

(a) Measure the resistance according to the value(s) in the table below.

Standard Resistance:

TESTER CONNECTION	CONDITION	SPECIFIED CONDITION
B7-2 (SOL+) - B7-1 (SOL-)*1	20°C (68°F)	10 to 11 Ω

Component without harness connected:
(A/C Compressor (Compressor Solenoid))

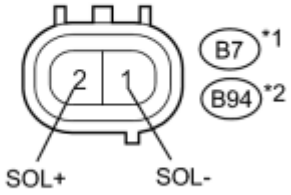

H

B94-2 (SOL+) - B94-1 (SOL-)*2	20°C (68°F)	10 to 11 Ω

HINT:

- *1: TMC Made
- *2: NUMMI, TMMC Made

Result:

RESULT	PROCEED TO
OK	A
NG (for 2AZ-FE)	B
NG (for 2ZR-FE)	C

C ▶ **REPLACE A/C COMPRESSOR (for 2ZR-FE)**

B ▶ **REPLACE A/C COMPRESSOR (for 2AZ-FE)**

A ▼

3.	**CHECK HARNESS AND CONNECTOR (A/C COMPRESSOR - A/C AMPLIFIER)**

Front view of wire harness connector:
(to A/C Amplifier)

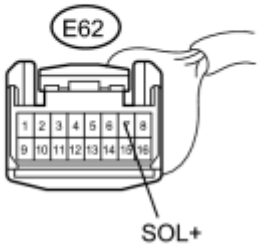

H

(a) Disconnect the connector from the A/C amplifier.

(b) Measure the resistance according to the value(s) in the table below.

Standard Resistance:

TESTER CONNECTION	CONDITION	SPECIFIED CONDITION
E62-7 (SOL+) - B7-2 (SOL+)*1	Always	Below 1 Ω
E62-7 (SOL+) - B94-2 (SOL+)*2	Always	Below 1 Ω
E62-7 (SOL+) - Body ground	Always	10 kΩ or higher

Front view of wire harness connector: (to A/C Compressor (Compressor Solenoid))

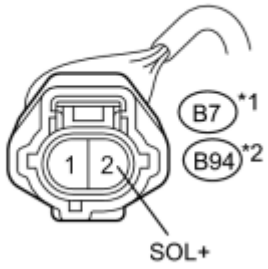

H

HINT:

- *1: TMC Made
- *2: NUMMI, TMMC Made

Result:

RESULT	PROCEED TO
NG	A
OK (When troubleshooting according to Problem Symptoms Table)	B
OK (When troubleshooting according to the DTC)	C

C ▶ **REPLACE AIR CONDITIONING AMPLIFIER**

B ▶ **PROCEED TO NEXT CIRCUIT INSPECTION SHOWN IN PROBLEM SYMPTOMS TABLE**

A ▶ **REPAIR OR REPLACE HARNESS OR CONNECTOR**

Last Modified: 3-10-2010	6.4 J	**From:** 200901
Model Year: 2010	**Model:** Corolla	**Doc ID:** RM000002Y1K00PX
Title: HEATING / AIR CONDITIONING: AIR CONDITIONING SYSTEM (for Manual Air Conditioning System): Recirculation Damper Servo Motor Circuit (2010 Corolla)		

Recirculation Damper Servo Motor Circuit

DESCRIPTION

The recirculation damper servo motor and No. 1 heater control (air inlet control switch) are powered through the HTR-IG fuse. Operating the No. 1 heater control (air inlet control switch) drives the recirculation damper servo motor to switch between "FRESH" and "RECIRCULATION".

WIRING DIAGRAM

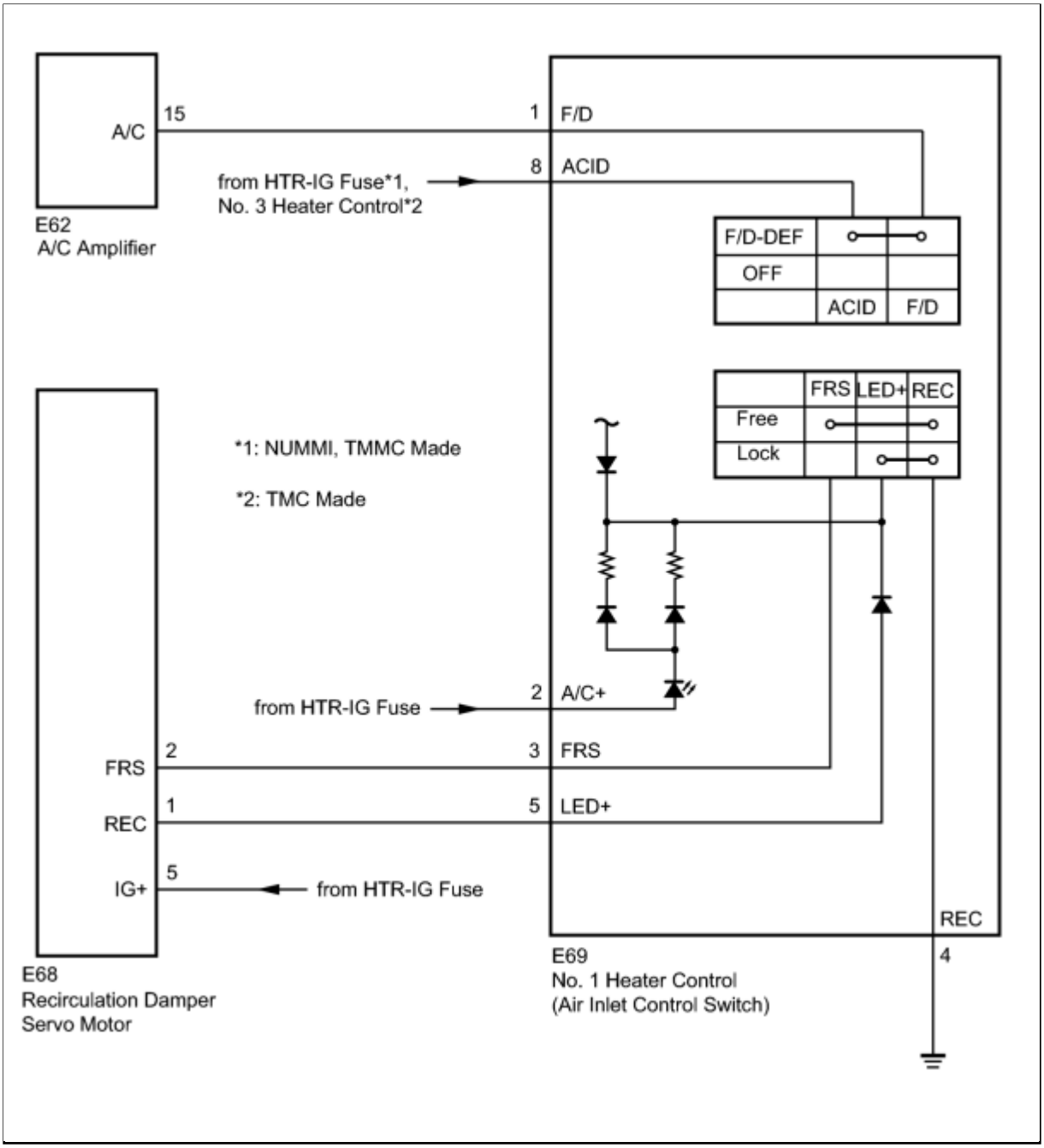

INSPECTION PROCEDURE

PROCEDURE

1.	**INSPECT FUSE (HTR-IG)**

(a) Remove the HTR-IG fuse from the instrument panel junction block.

(b) Measure the resistance according to the value(s) in the table below.

Standard Resistance:

TEST ITEM	CONDITION	SPECIFIED CONDITION
HTR-IG fuse	Always	Below 1 Ω

NG ▶ **REPLACE FUSE (HTR-IG)**

OK ▼

2.	**INSPECT RECIRCULATION DAMPER SERVO MOTOR**

(a) Remove the recirculation damper servo motor.

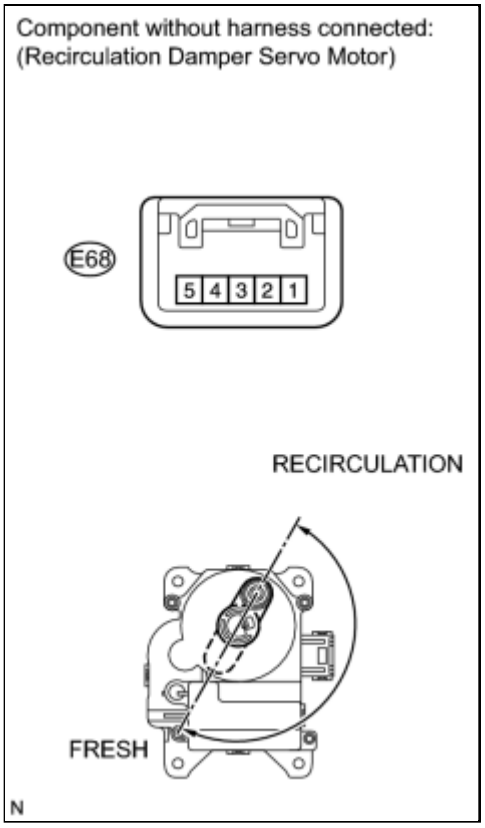

(b) Disconnect the connector from the recirculation damper servo motor.

(c) Connect a positive (+) lead from the battery to terminal 5 and a negative (-) lead from the battery to terminal 2, then check that the arm turns to the "FRESH" side smoothly.

OK:

Lever turns to "FRESH" side smoothly.

(d) Connect a positive (+) lead from the battery to terminal 5 and a negative (-) lead from the battery to terminal 1, then check that the arm turns to the "RECIRCULATION" side smoothly.

OK:

Lever turns to "RECIRCULATION" side smoothly.

NG ▶ **REPLACE RECIRCULATION DAMPER SERVO MOTOR**

OK ▼

3.	**INSPECT NO. 1 HEATER CONTROL (AIR INLET CONTROL SWITCH)**

(a) Remove the No. 1 heater control (air inlet control switch).

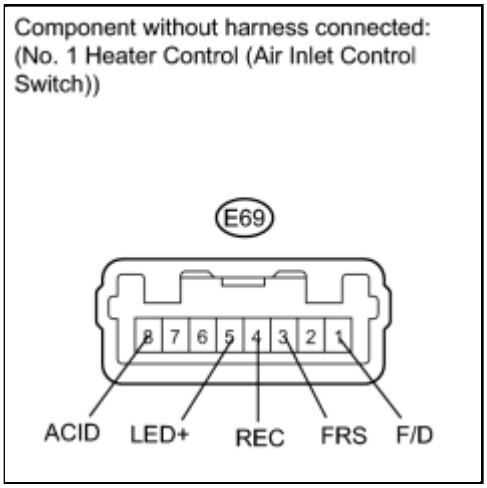

(b) Disconnect the connector from the No. 1 heater control (air inlet control switch).

(c) Measure the resistance according to the value(s) in the table below.

Standard Resistance:

TESTER CONNECTION	SWITCH CONDITION	SPECIFIED CONDITION
E69-3 (FRS) - E69-4 (REC)	Air inlet control switch: FREE	Below 1 Ω
E69-3 (FRS) - E69-4 (REC)	Air inlet control switch: LOCK	10 kΩ or higher
E69-1 (F/D) - E69-8 (ACID)	Mode control dial: except Foot/DEF position and DEF position	10 kΩ or higher
E69-1 (F/D) - E69-8 (ACID)	Mode control dial: Foot/DEF position or DEF position	Below 1 Ω

(d) Check that the indicator light comes on.

(1) Turn the heater control base (air inlet control switch) to LOCK.

(2) Connect a positive (+) lead from the battery to terminal 2 and a negative (-) lead from the battery to terminal 4, and check that the indicator light comes on.

OK:

The indicator light comes on.

(e) Check that the illumination comes on.

(1) Connect a positive (+) lead from the battery to terminal 7 and negative (-) lead from the battery to terminal 6, and check that the illumination comes on.

OK:

The illumination comes on.

NG ▶ **REPLACE NO. 1 HEATER CONTROL (AIR INLET CONTROL SWITCH)**

OK ▼

4.	**CHECK HARNESS AND CONNECTOR (RECIRCULATION DAMPER SERVO MOTOR - BATTERY)**

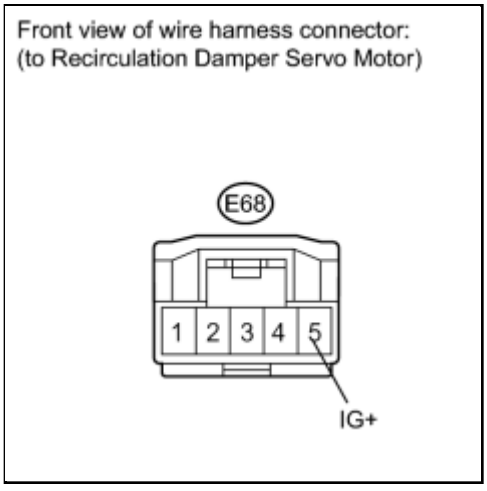

(a) Measure the voltage according to the value(s) in the table below.

Standard Voltage:

TESTER CONNECTION	SWITCH CONDITION	SPECIFIED CONDITION
E68-5 (IG+) - Body ground	Ignition switch off	Below 1 V
E68-5 (IG+) - Body ground	Ignition switch ON	11 to 14 V

NG ▶ **REPAIR OR REPLACE HARNESS OR CONNECTOR**

OK ▼

5.	**CHECK HARNESS AND CONNECTOR (NO. 1 HEATER CONTROL (AIR INLET CONTROL SWITCH) - BATTERY)**

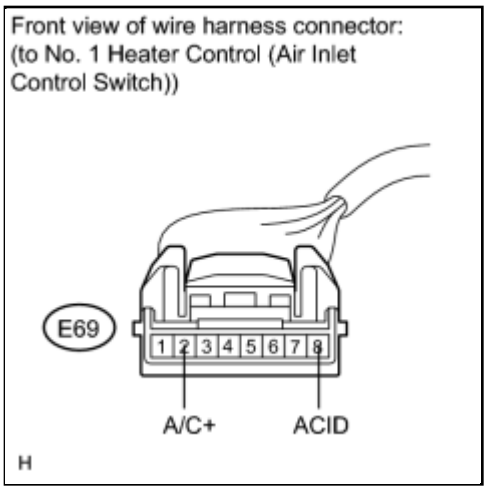

(a) Measure the voltage according to the value(s) in the table below.

Standard Voltage:

TESTER CONNECTION	SWITCH CONDITION	SPECIFIED CONDITION
E69-2 (A/C+) - Body ground	Ignition switch off	Below 1 V
E69-2 (A/C+) - Body ground	Ignition switch ON	11 to 14 V
E69-8 (ACID) - Body ground	Ignition switch off	Below 1 V
E69-8 (ACID) - Body ground	Ignition switch ON	11 to 14 V

NG ▶ **REPAIR OR REPLACE HARNESS OR CONNECTOR**

OK ▼

6.	**CHECK HARNESS AND CONNECTOR (NO. 1 HEATER CONTROL(AIR INLET CONTROL SWITCH) - BODY GROUND)**

(a) Measure the resistance according to the value(s) in the table below.

Standard Resistance:

TESTER CONNECTION	CONDITION	SPECIFIED CONDITION
E69-4 (REC) - Body ground	Always	Below 1 Ω

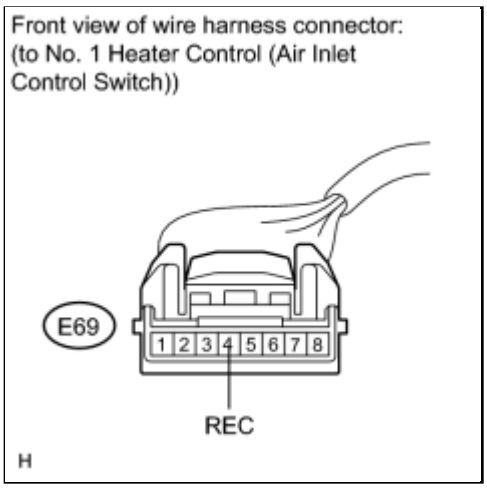

NG ▶ **REPAIR OR REPLACE HARNESS OR CONNECTOR**

OK ▼

7.	**CHECK HARNESS AND CONNECTOR (NO. 1 HEATER CONTROL - RECIRCULATION DAMPER SERVO MOTOR)**

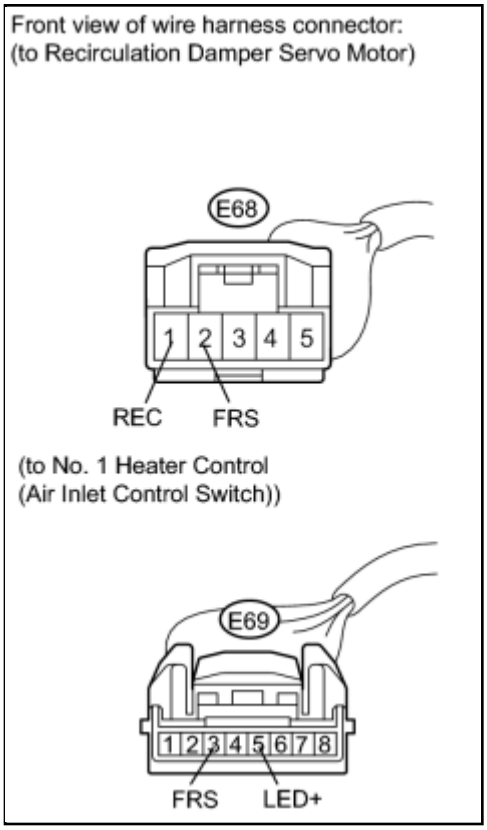

(a) Measure the resistance according to the value(s) in the table below.

Standard Resistance:

TESTER CONNECTION	CONDITION	SPECIFIED CONDITION
E69-3 (FRS) - E68-2 (FRS)	Always	Below 1 Ω
E69-5 (LED+) - E68-1 (REC)	Always	Below 1 Ω
E69-3 (FRS) - Body ground	Always	10 kΩ or higher
E69-5 (LED+) - Body ground	Always	10 kΩ or higher

NG ▶ **REPAIR OR REPLACE HARNESS OR CONNECTOR**

OK ▼

8.	CHECK HARNESS AND CONNECTOR (NO. 1 HEATER CONTROL - A/C AMPLIFIER)

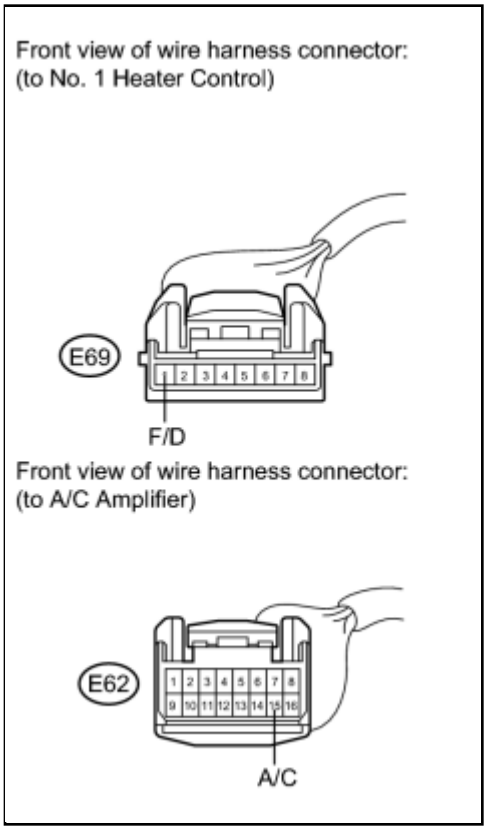

(a) Disconnect the connector from the A/C amplifier.

(b) Measure the resistance according to the value(s) in the table below.

Standard Resistance:

TESTER CONNECTION	CONDITION	SPECIFIED CONDITION
E69-1 (F/D) - E62-15 (A/C)	Always	Below 1 Ω
E69-1 (F/D) - Body ground	Always	10 kΩ or higher

NG ▶ **REPAIR OR REPLACE HARNESS OR CONNECTOR**

OK ▶ **PROCEED TO NEXT CIRCUIT INSPECTION SHOWN IN PROBLEM SYMPTOMS TABLE**

Last Modified: 3-10-2010	6.4 C	**From:** 200901
Model Year: 2010	**Model:** Corolla	**Doc ID:** RM0000017SQ02SX
Title: HEATING / AIR CONDITIONING: AIR CONDITIONING SYSTEM (for Manual Air Conditioning System): B1499: Multiplex Communication Circuit (2010 Corolla)		

DTC	**B1499**	**Multiplex Communication Circuit**

DESCRIPTION

DTC NO.	DTC DETECTION CONDITION	TROUBLE AREA
B1499	Open in CAN communication circuit	CAN communication system

INSPECTION PROCEDURE

PROCEDURE

1.	**GO TO CAN COMMUNICATION SYSTEM**

(a) Refer to the CAN Communication System INFO .

NEXT **END**

Last Modified: 3-10-2010	6.4 J	**From:** 200901
Model Year: 2010	**Model:** Corolla	**Doc ID:** RM000002YEX00OX
Title: HEATING / AIR CONDITIONING: AIR CONDITIONING SYSTEM (for Manual Air Conditioning System): Blower Motor Circuit (2010 Corolla)		

Blower Motor Circuit

DESCRIPTION

When the No. 2 heater control (blower switch) is operated, the HTR relay will turn on and send current to operate the blower motor. Operating the No. 2 heater control (blower switch) adjusts the flow of current between the blower resistor and body ground, thus, adjusting the speed of the blower motor.

WIRING DIAGRAM

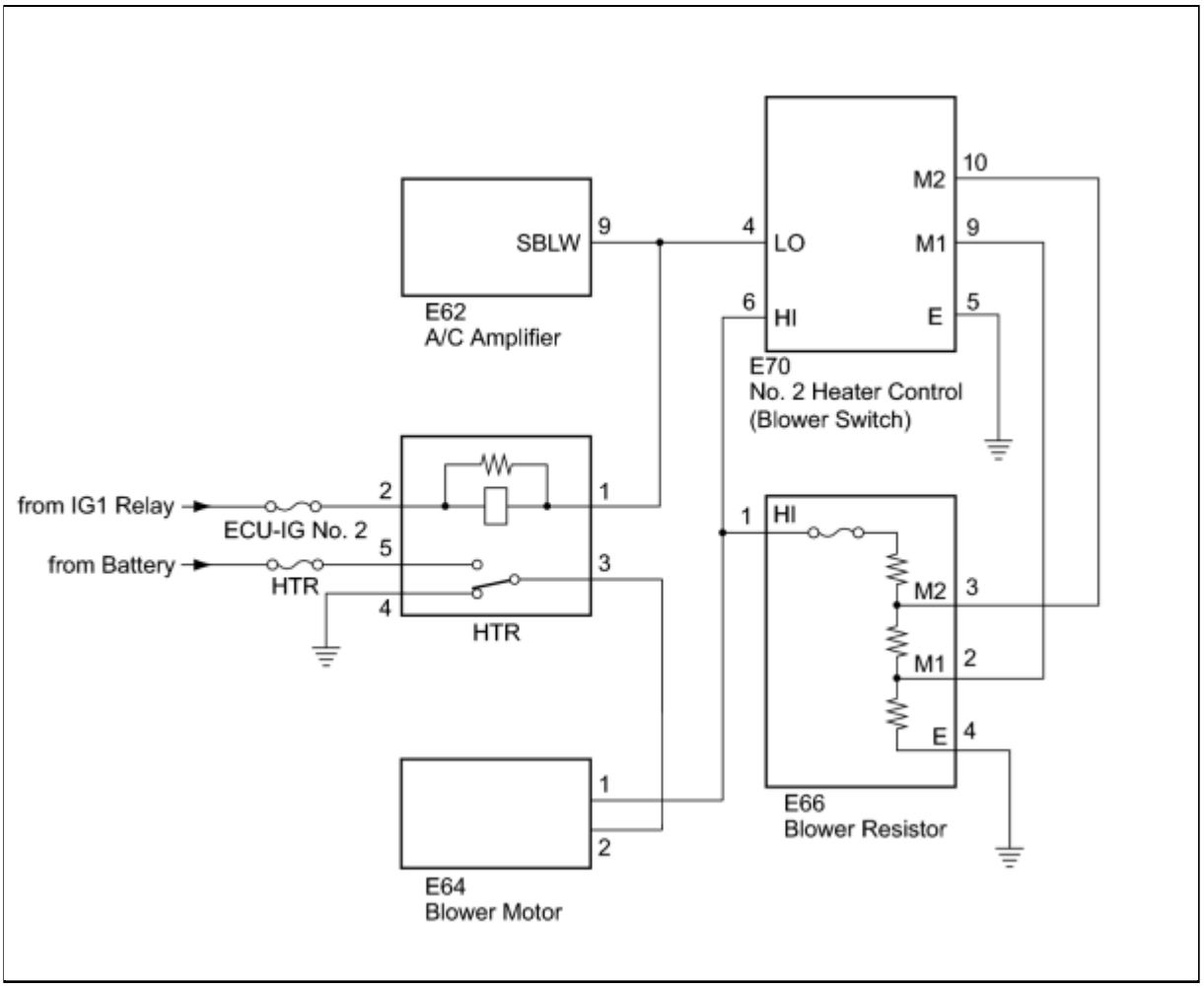

INSPECTION PROCEDURE

PROCEDURE

1.	**INSPECT FUSE (HTR, ECU-IG NO. 2)**

(a) Remove the HTR fuse from the engine room relay block and junction block.

(b) Remove the ECU-IG No. 2 fuse from the instrument panel junction block.

(c) Measure the resistance according to the value(s) in the table below.

Standard Resistance:

TEST ITEM	CONDITION	SPECIFIED CONDITION
HTR fuse	Always	Below 1 Ω
ECU-IG NO. 2 fuse	Always	Below 1 Ω

NG ▶ **REPLACE FUSE (HTR, ECU-IG NO. 2)**

OK ▼

2.	**INSPECT RELAY (HTR)**

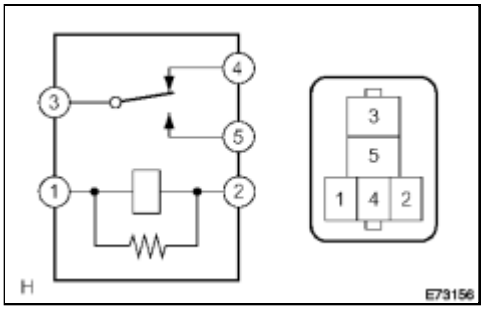

(a) Remove the HTR relay from the instrument panel junction block.

(b) Measure the resistance according to the value(s) in the table below.

Standard Resistance:

TESTER CONNECTION	SPECIFIED CONDITION
3 - 4	Below 1 Ω
3 - 4	10 kΩ or higher (When battery voltage is applied to terminals 1 and 2)
3 - 5	10 kΩ or higher
3 - 5	Below 1 Ω (When battery voltage is applied to terminals 1 and 2)

NG ▶ REPLACE RELAY (HTR)

OK ▼

3.	CHECK HARNESS AND CONNECTOR (A/C AMPLIFIER - BATTERY)

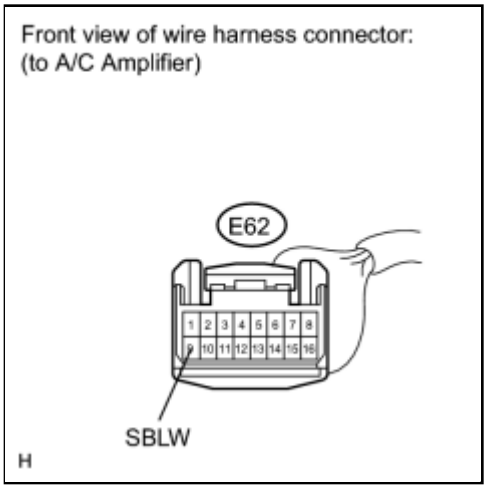

(a) Disconnect the connector from the A/C amplifier.

(b) Measure the voltage according to the value(s) in the table below.

Standard Voltage:

TESTER CONNECTION	CONDITION	SPECIFIED CONDITION
E62-9 (SBLW) - Body ground	Ignition switch ON Blower switch: OFF	11 to 14 V
E62-9 (SBLW) - Body ground	Ignition switch ON Blower switch: ON	Below 1 V

NG ▶ INSPECT BLOWER MOTOR

OK ▶ PROCEED TO NEXT CIRCUIT INSPECTION SHOWN IN PROBLEM SYMPTOMS TABLE

4.	INSPECT BLOWER MOTOR

(a) Remove the blower motor.

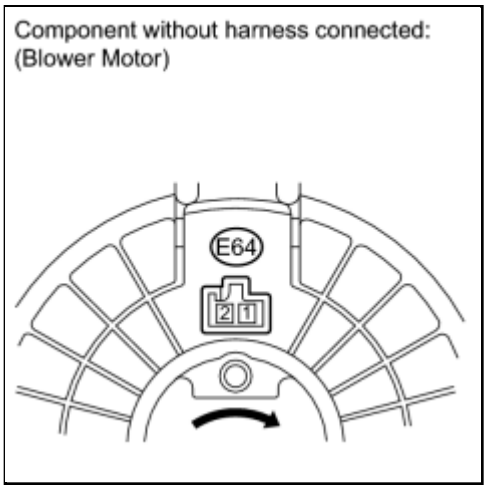

(b) Disconnect the connector from the blower motor.

(c) Connect a positive (+) lead from the battery to terminal 2 and a negative (-) lead from the battery to terminal 1, and check that the motor operates.

OK:

The blower motor operates smoothly.

NG ▶ **REPLACE BLOWER MOTOR**

OK ▼

5.	**INSPECT BLOWER RESISTOR**

(a) Remove the blower resistor.

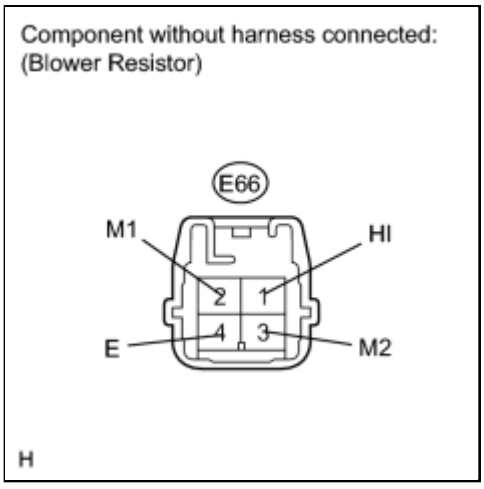

(b) Disconnect the connector from the blower resistor.

(c) Measure the resistance according to the value(s) in the table below.

Standard Resistance:

TESTER CONNECTION	CONDITION	SPECIFIED CONDITION
E66-1 (HI) - E66-4 (E)	Always	3.12 to 3.60 Ω
E66-1 (HI) - E66-2 (M1)	Always	1.45 to 1.67 Ω
E66-1 (HI) - E66-3 (M2)	Always	0.52 to 0.60 Ω

NG ▶ **REPLACE BLOWER RESISTOR**

OK ▼

6.	**INSPECT NO. 2 HEATER CONTROL (BLOWER SWITCH)**

(a) Remove the No. 2 heater control (blower switch).

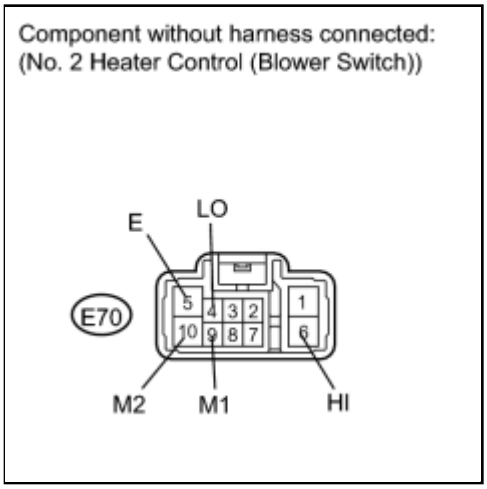

(b) Disconnect the connector from the No. 2 heater control (blower switch).

(c) Measure the resistance according to the value(s) in the table below.

Standard Resistance:

TESTER CONNECTION	SWITCH CONDITION	SPECIFIED CONDITION
E70-4 (LO), E70-6 (HI), E70-9 (M1), E70-10 (M2) - E70-5 (E)	Blower switch: OFF	10 kΩ or higher
E70-4 (LO) - E70-5 (E)	Blower switch: LO	Below 1 Ω
E70-4 (LO), E70-9 (M1) - E70-5 (E)	Blower switch: M1	Below 1 Ω

TESTER CONNECTION	SWITCH CONDITION	SPECIFIED CONDITION
E70-4 (LO), E70-10 (M2) - E70-5 (E)	Blower switch: M2	Below 1 Ω
E70-4 (LO), E70-6 (HI) - E70-5 (E)	Blower switch: HI	Below 1 Ω

NG ▶ **REPLACE NO. 2 HEATER CONTROL (BLOWER SWITCH)**

OK ▼

7.	CHECK HARNESS AND CONNECTOR (A/C AMPLIFIER - BATTERY)

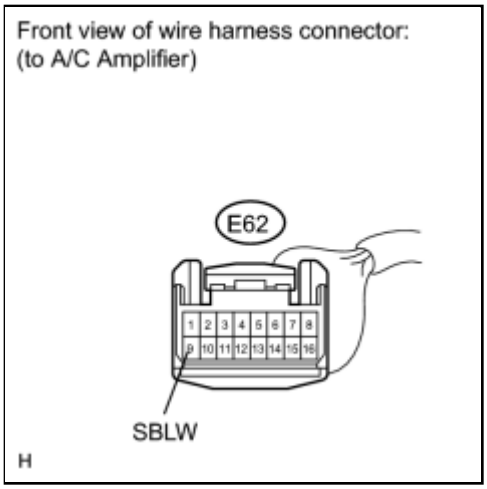

(a) Measure the voltage according to the value(s) in the table below.

Standard Voltage:

TESTER CONNECTION	SWITCH CONDITION	SPECIFIED CONDITION
E62-9 (SBLW) - Body ground	Ignition switch ON	11 to 14 V
E62-9 (SBLW) - Body ground	Ignition switch off	Below 1 V

NG ▶ **REPAIR OR REPLACE HARNESS OR CONNECTOR**

OK ▼

8.	CHECK HARNESS AND CONNECTOR (NO. 2 HEATER CONTROL (BLOWER SWITCH) - BATTERY)

(a) Measure the voltage according to the value(s) in the table below.

Front view of wire harness connector:
(to No. 2 Heater Control (Blower Switch))

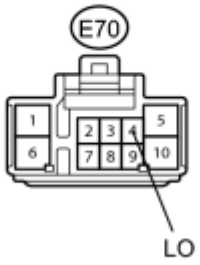

N

Standard Voltage:

TESTER CONNECTION	SWITCH CONDITION	SPECIFIED CONDITION
E70-4 (LO) - Body ground	Ignition switch ON	11 to 14 V
E70-4 (LO) - Body ground	Ignition switch off	Below 1 V

NG ▶ **REPAIR OR REPLACE HARNESS OR CONNECTOR**

OK ▼

9.	**CHECK HARNESS AND CONNECTOR (BLOWER RESISTOR - NO. 2 HEATER CONTROL (BLOWER SWITCH))**

Front view of wire harness connector:
(to Blower Resistor)

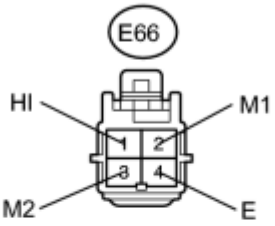

Front view of wire harness connector:
(to No. 2 Heater Control (Blower Switch))

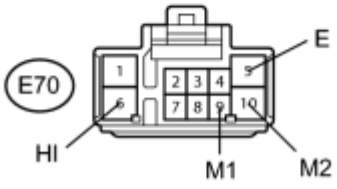

(a) Measure the resistance according to the value(s) in the table below.

Standard Resistance:

TESTER CONNECTION	CONDITION	SPECIFIED CONDITION
E66-1 (HI) - E70-6 (HI)	Always	Below 1 Ω
E66-3 (M2) - E70-10 (M2)	Always	Below 1 Ω
E66-2 (M1) - E70-9 (M1)	Always	Below 1 Ω
E66-4 (E) - Body ground	Always	Below 1 Ω
E70-5 (E) - Body ground	Always	Below 1 Ω
E66-1 (HI) - Body ground	Always	10 kΩ or higher

E66-3 (M2) - Body ground	Always	10 kΩ or higher
E66-2 (M1) - Body ground	Always	10 kΩ or higher

NG ▶ **REPAIR OR REPLACE HARNESS OR CONNECTOR**

OK ▼

10.	**CHECK HARNESS AND CONNECTOR (BLOWER MOTOR - BLOWER RESISTOR, NO. 2 HEATER CONTROL)**

Front view of wire harness connector:
(to Blower Motor)

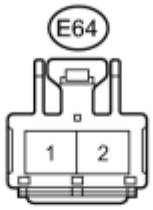

Front view of wire harness connector:
(to Blower Resistor)

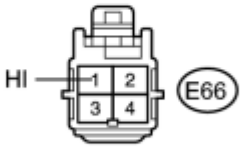

Front view of wire harness connector:
(to No. 2 Heater Control (Blower Switch))



(a) Measure the resistance according to the value(s) in the table below.

Standard Resistance:

TESTER CONNECTION	CONDITION	SPECIFIED CONDITION
E64-1 - E66-1 (HI)	Always	Below 1 Ω
E64-1 - E70-6 (HI)	Always	Below 1 Ω
E64-1 - Body ground	Always	10 kΩ or higher

NG ▶ **REPAIR OR REPLACE HARNESS OR CONNECTOR**

OK

11.	CHECK HARNESS AND CONNECTOR (BLOWER MOTOR - BATTERY, BODY GROUND)

(a) Reconnect the connector to the A/C amplifier.

(b) Reconnect the connector to the blower resistor.

(c) Reconnect the connector to the No. 2 heater control (blower switch).

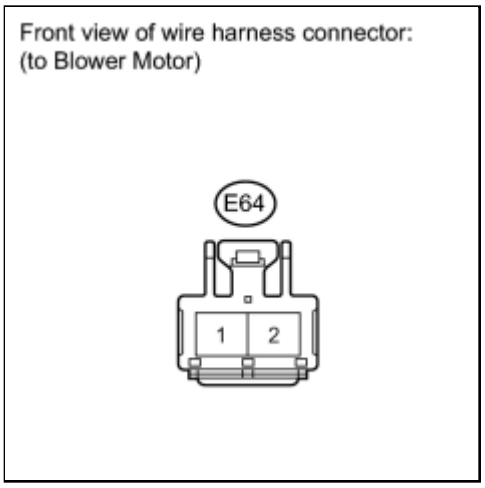

(d) Measure the voltage according to the value(s) in the table below.

Standard Voltage:

TESTER CONNECTION	SWITCH CONDITION	SPECIFIED CONDITION
E64-2 - Body ground	Ignition switch ON Blower switch: OFF	Below 1 V
E64-2 - Body ground	Ignition switch ON Blower switch: ON	11 to 14 V

(e) Measure the resistance according to the value(s) in the table below.

Standard Resistance:

TESTER CONNECTION	SWITCH CONDITION	SPECIFIED CONDITION
E64-2 - Body ground	Ignition switch off Blower switch: OFF	Below 1 Ω

NG ▶ **REPAIR OR REPLACE HARNESS OR CONNECTOR**

OK ▶ **REPLACE AIR CONDITIONING AMPLIFIER**

Last Modified: 3-10-2010	6.4 J	**From:** 200901
Model Year: 2010	**Model:** Corolla	**Doc ID:** RM000002Y1M00VX
Title: HEATING / AIR CONDITIONING: AIR CONDITIONING SYSTEM (for Manual Air Conditioning System): Heater Control Switch Circuit (2010 Corolla)		

Heater Control Switch Circuit

DESCRIPTION

The No. 3 heater control is powered through the HTR-IG fuse. The No. 3 heater control transmits operational signals of each switch to the A/C amplifier.

WIRING DIAGRAM

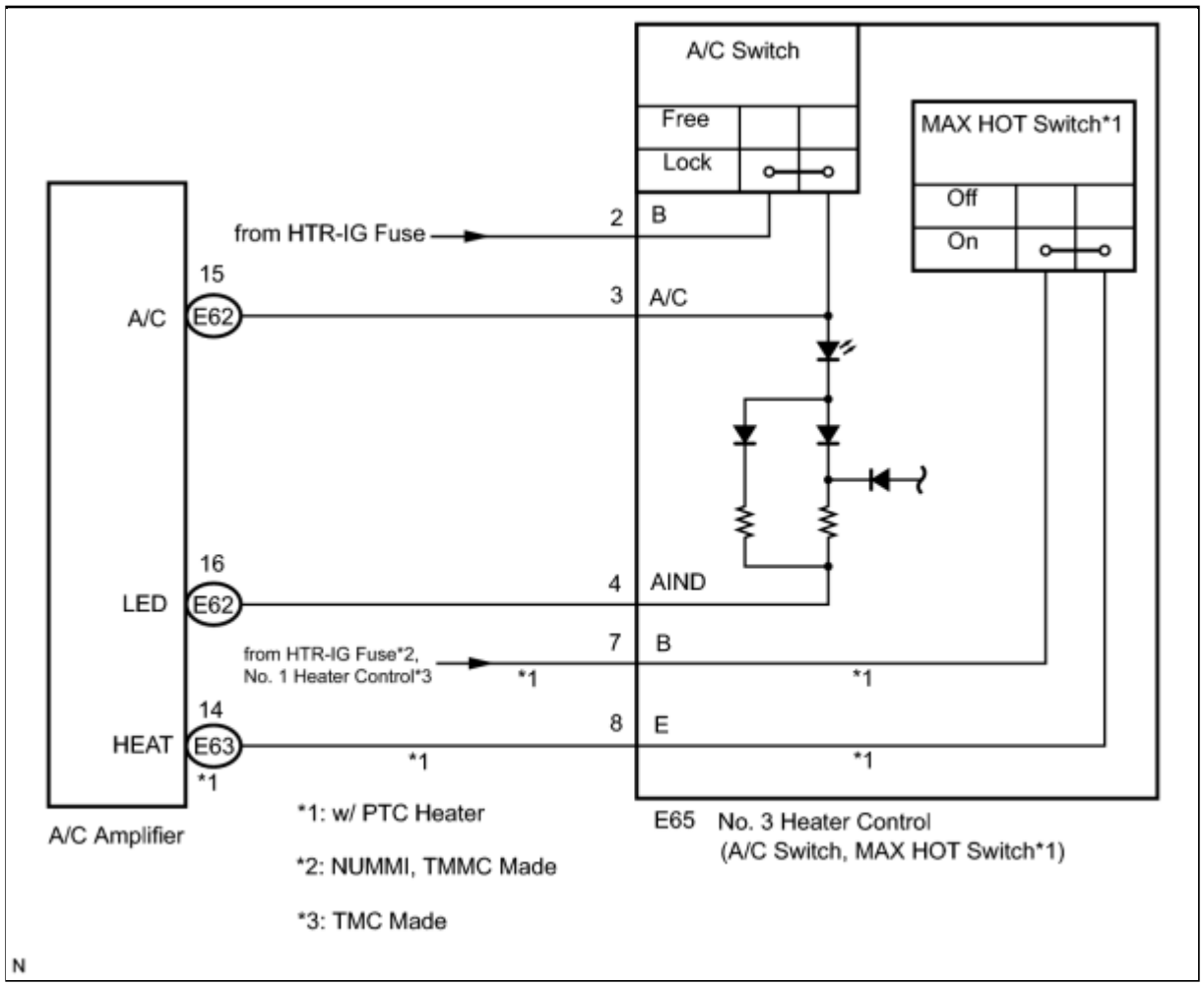

INSPECTION PROCEDURE

PROCEDURE

1.	**INSPECT FUSE (HTR-IG)**

(a) Remove the HTR-IG fuse from the instrument panel junction block.

(b) Measure the resistance according to the value(s) in the table below.

Standard Resistance:

TEST ITEM	CONDITION	SPECIFIED CONDITION
HTR-IG fuse	Always	Below 1 Ω

NG ▶ **REPLACE FUSE (HTR-IG)**

OK ▼

2.	**INSPECT NO. 3 HEATER CONTROL**

(a) Measure the resistance.

(1) Remove the No. 3 heater control.

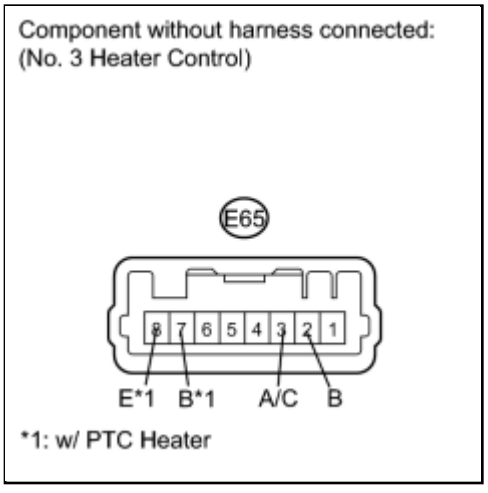

(2) Disconnect the connector from the No. 3 heater control.

(3) Measure the resistance according to the value(s) in the table below.

Standard Resistance:

TESTER CONNECTION	SWITCH CONDITION	SPECIFIED CONDITION

TESTER CONNECTION	SWITCH CONDITION	SPECIFIED CONDITION
E65-2 (B) - E65-3 (A/C)	A/C switch: LOCK	Below 1 Ω
E65-2 (B) - E65-3 (A/C)	A/C switch: FREE	10 kΩ or higher
E65-7 (B) - E65-8 (E)*1	Air mix control dial: MAX HOT position	Below 1 Ω
E65-7 (B) - E65-8 (E)*1	Air mix control dial: except MAX HOT position	10 kΩ or higher

HINT:

***1: w/ PTC Heater**

(b) Check that the indicator light comes on.

(1) Connect a positive (+) lead from the battery to terminal 3 and a negative (-) lead from the battery to terminal 4, and check that the indicator light comes on.

OK:

The indicator light comes on.

(c) Check that the illumination comes on.

(1) Connect a positive (+) lead from the battery to terminal 5 and a negative (-) lead from the battery to terminal 6, and check that the illumination comes on.

OK:

The illumination comes on.

NG ▶ **REPLACE NO. 3 HEATER CONTROL**

OK ▼

3.	CHECK HARNESS AND CONNECTOR (NO. 3 HEATER CONTROL - BATTERY)

(a) Measure the voltage according to the value(s) in the table below.

Standard Voltage:

TESTER CONNECTION	SWITCH CONDITION	SPECIFIED CONDITION
E65-2 (B) - Body ground	Ignition switch ON	11 to 14 V

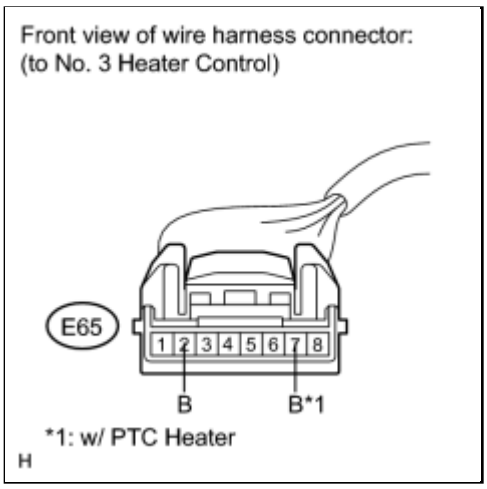

E65-2 (B) - Body ground	Ignition switch off	Below 1 V
E65-7 (B) - Body ground*1	Ignition switch ON	11 to 14 V
E65-7 (B) - Body ground*1	Ignition switch off	Below 1 V

HINT:

***1: w/ PTC Heater**

NG ▶ **REPAIR OR REPLACE HARNESS OR CONNECTOR**

OK ▼

4.	**CHECK HARNESS AND CONNECTOR (NO. 3 HEATER CONTROL - A/C AMPLIFIER)**

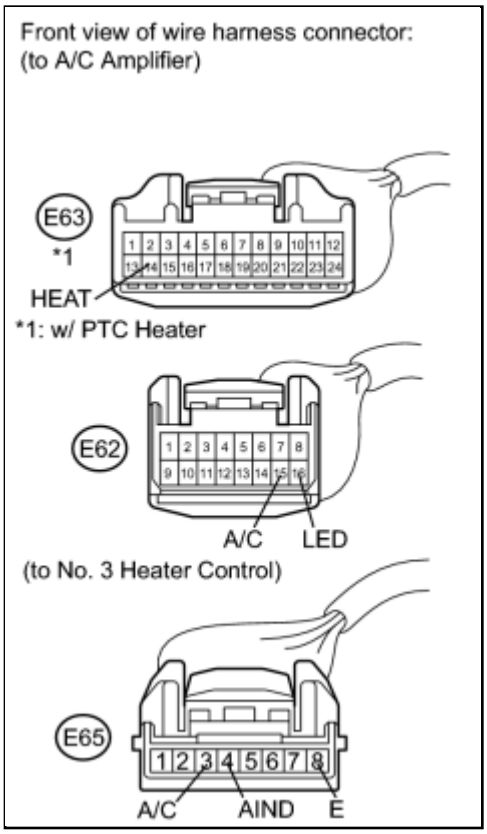

(a) Disconnect the connector from the A/C amplifier.

(b) Measure the resistance according to the value(s) in the table below.

Standard Resistance:

TESTER CONNECTION	CONDITION	SPECIFIED CONDITION
E65-3 (A/C) - E62-15 (A/C)	Always	Below 1 Ω
E65-4 (AIND) - E62-16 (LED)	Always	Below 1 Ω
E65-8 (E) - E63-14 (HEAT)*1	Always	Below 1 Ω
E65-3 (A/C) - Body ground	Always	10 kΩ or higher
E65-4 (AIND) - Body ground	Always	10 kΩ or higher
E65-8 (E) - Body ground*1	Always	10 kΩ or higher

HINT:

***1: w/ PTC Heater**

NG ▶ **REPAIR OR REPLACE HARNESS OR CONNECTOR**

OK ▶ **PROCEED TO NEXT CIRCUIT INSPECTION SHOWN IN PROBLEM SYMPTOMS TABLE**

Last Modified: 3-10-2010	6.4 J	**From:** 200901
Model Year: 2010	**Model:** Corolla	**Doc ID:** RM000002BRP00LX
Title: HEATING / AIR CONDITIONING: AIR CONDITIONING SYSTEM (for Manual Air Conditioning System): PTC Heater Circuit (2010 Corolla)		

PTC Heater Circuit

DESCRIPTION

The PTC heater is installed in the heater unit and operates when the coolant temperature is low and normal heater operation is insufficient.

The A/C amplifier switches the circuit in the PTC relay and operates the PTC heater when the operating conditions (the coolant temperature is below 65°C (149°F), setting temperature is MAX. HOT, ambient temperature is below 10°C (50°F) and blower switch is not OFF) are met.

The PTC heater controls the number of the heater elements to be heated based on the electrical load and the amount of voltage generated. Therefore, when inspecting the PTC heater, be sure to turn off other electrical devices.

WIRING DIAGRAM

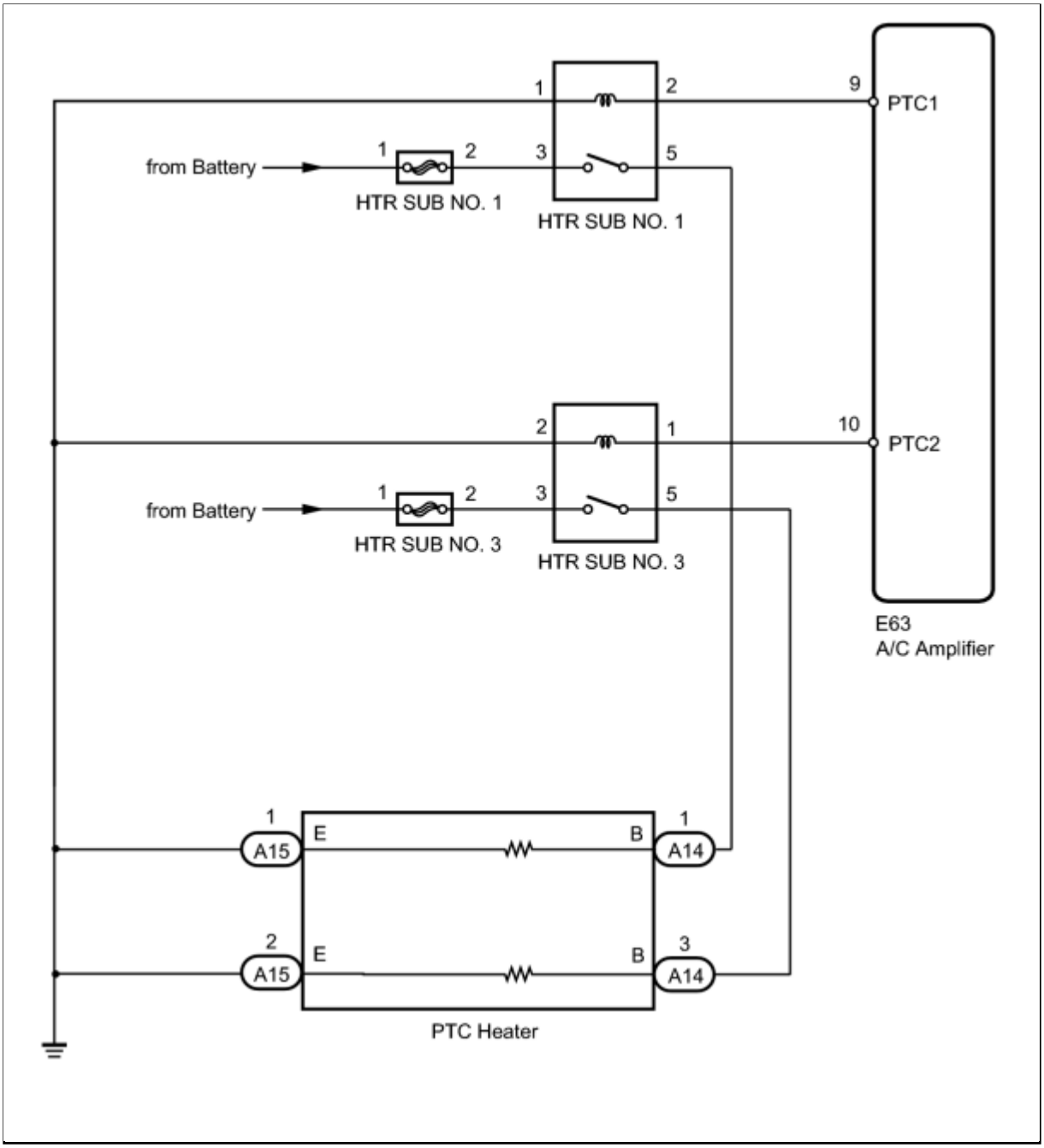

INSPECTION PROCEDURE

PROCEDURE

1.	**INSPECT FUSE (HTR SUB NO. 1, HTR SUB NO. 3)**

(a) Remove the HTR SUB No. 1 and HTR SUB No. 3 fuses from the engine room relay block and junction block.

(b) Measure the resistance according to the value(s) in the table below.

Standard Resistance:

TEST ITEM	CONDITION	SPECIFIED CONDITION
HTR SUB No. 1 fuse	Always	Below 1 Ω
HTR SUB No. 3 fuse	Always	Below 1 Ω

(c) Install the HTR SUB No. 1 and HTR SUB No. 3 fuses to the engine room relay block and junction block.

NG ▶ **REPLACE FUSE (HTR SUB NO. 1, HTR SUB NO. 3)**

OK ▼

2.	**INSPECT RELAY (HTR SUB NO. 1, HTR SUB NO. 3)**

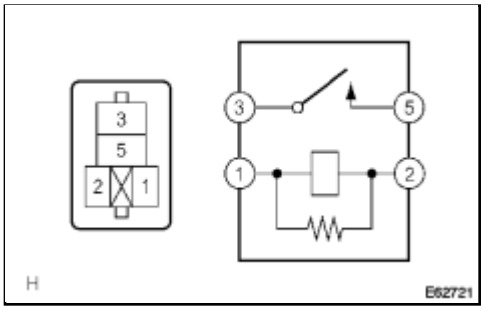

(a) Remove the HTR SUB No. 1 and HTR SUB No. 3 relays from the No. 7 relay block.

(b) Measure the resistance according to the value(s) in the table below.

Standard Resistance:

TESTER CONNECTION	SPECIFIED CONDITION
3 - 5	10 kΩ or higher
3 - 5	Below 1 Ω (When battery voltage applied to terminals 1 and 2)

(c) Install the HTR SUB No. 1 and HTR SUB No. 3 relays to the No. 7 relay block.

NG ▶ **REPLACE RELAY (HTR SUB NO. 1, HTR SUB NO. 3)**

OK

3.	**CHECK HARNESS AND CONNECTOR (NO. 7 RELAY BLOCK - A/C AMPLIFIER, BODY GROUND)**

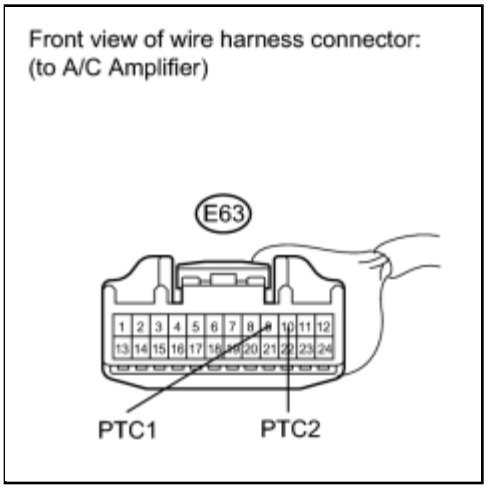

(a) Disconnect the connector from the A/C amplifier.

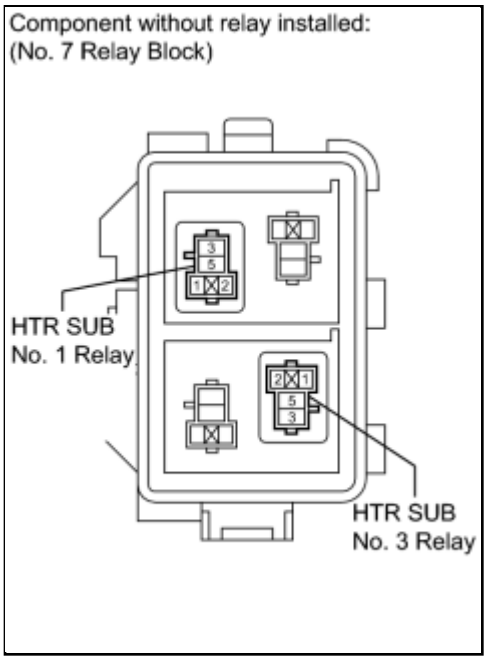

(b) Remove the HTR SUB No. 1 and HTR SUB No. 3 fuses from the No. 7 relay block.

(c) Measure the resistance according to the value(s) in the table below.

Standard Resistance:

TESTER CONNECTION	CONDITION	SPECIFIED CONDITION

TESTER CONNECTION	CONDITION	SPECIFIED CONDITION
E63-9 (PTC1) - HTR SUB No. 1 relay terminal 2	Always	Below 1 Ω
E63-10 (PTC2) - HTR SUB No. 3 relay terminal 1	Always	Below 1 Ω
E63-9 (PTC1) - Body ground	Always	10 kΩ or higher
E63-10 (PTC2) - Body ground	Always	10 kΩ or higher
HTR SUB No. 1 relay terminal 1 - Body ground	Always	Below 1 Ω
HTR SUB No. 3 relay terminal 2 - Body ground	Always	Below 1 Ω

NG ▶ **REPAIR OR REPLACE HARNESS OR CONNECTOR**

OK ▼

4.	**INSPECT AIR CONDITIONING AMPLIFIER**

(a) Reconnect the connector to the A/C amplifier.

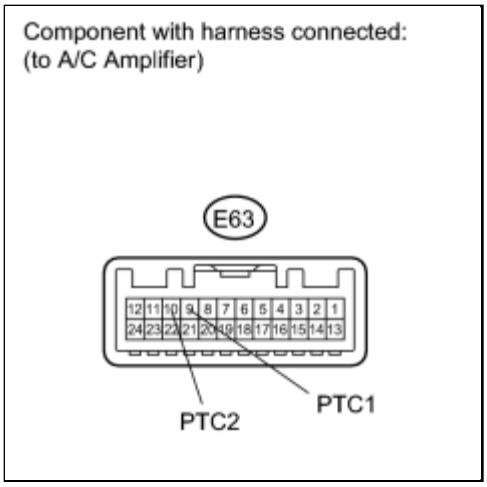

(b) Remove the A/C amplifier with the connectors still connected.

(c) Measure the voltage according to the value(s) in the table below.

Standard Voltage:

TESTER CONNECTION	CONDITION	SPECIFIED CONDITION
E63-9 (PTC1) - Body ground	Ignition switch ON Temperature setting: MAX. HOT	Below 1 V

TESTER CONNECTION	CONDITION	SPECIFIED CONDITION
	Ambient temperature: 10°C (50°F) or lower Engine coolant temperature: 65°C (149°F) or lower Light control switch: OFF Blower switch: OFF	
E63-9 (PTC1) - Body ground	Engine running (1250 rpm or higher) Temperature setting: MAX. HOT Ambient temperature: 10°C (50°F) or lower Engine coolant temperature: 65°C (149°F) or lower Light control switch: OFF Blower switch: ON	11 to 14 V
E63-10 (PTC2) - Body ground	Ignition switch ON Temperature setting: MAX. HOT Ambient temperature: 10°C (50°F) or lower Engine coolant temperature: 65°C (149°F) or lower Light control switch: OFF Blower switch: OFF	Below 1 V
E63-10 (PTC2) - Body ground	Engine running (1250 rpm or higher) Temperature setting: MAX. HOT Ambient temperature: 10°C (50°F) or lower Engine coolant temperature: 65°C (149°F) or lower Light control switch: OFF Blower switch: ON	11 to 14 V

NG ▶ **PROCEED TO NEXT CIRCUIT INSPECTION SHOWN IN PROBLEM SYMPTOMS TABLE**

OK ▼

5.	**INSPECT PTC HEATER**

(a) Disconnect the connector from the PTC heater.

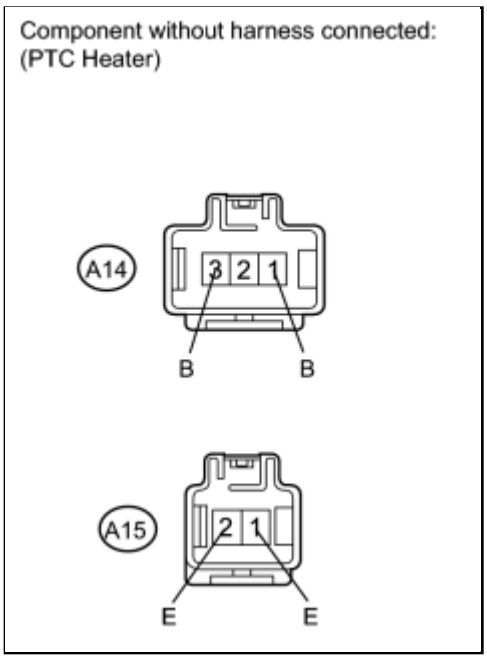

(b) Measure the resistance according to the value(s) in the table below.

Standard Resistance:

TESTER CONNECTION	CONDITION	SPECIFIED CONDITION
A14-1 (B) - A15-1 (E)	Always	Below 1 Ω
A14-3 (B) - A15-2 (E)	Always	Below 1 Ω

NG ▶ **REPLACE PTC HEATER**

OK ▼

6.	**CHECK HARNESS AND CONNECTOR (PTC HEATER - BATTERY)**

(a) Measure the voltage according to the value(s) in the table below.

Standard Voltage:

TESTER CONNECTION	CONDITION	SPECIFIED CONDITION
A14-1 (B) - Body ground	Ignition switch ON Temperature setting:	Below 1 V

Front view of wire harness connector:
(to PTC Heater)

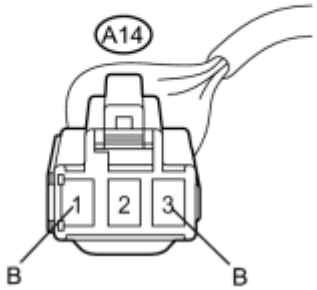

	MAX. HOT Ambient temperature: 10°C (50°F) or lower Engine coolant temperature: 65°C (149°F) or lower Light control switch: OFF Blower switch: OFF	
A14-1 (B) - Body ground	Engine running (1250 rpm or higher) Temperature setting: MAX. HOT Ambient temperature: 10°C (50°F) or lower Engine coolant temperature: 65°C (149°F) or lower Light control switch: OFF Blower switch: ON	11 to 14 V
A14-3 (B) - Body ground	Ignition switch ON Temperature setting: MAX. HOT Ambient temperature: 10°C (50°F) or lower Engine coolant temperature: 65°C (149°F) or lower Light control switch: OFF Blower switch: OFF	Below 1 V
A14-3 (B) - Body ground	Engine running (1250 rpm or higher) Temperature setting: MAX. HOT Ambient temperature: 10°C (50°F) or lower Engine coolant temperature: 65°C (149°F) or lower Light control switch: OFF Blower switch: ON	11 to 14 V

NG ▶ **REPAIR OR REPLACE HARNESS OR CONNECTOR**

OK ▶ REPAIR OR REPLACE HARNESS OR CONNECTOR (PTC HEATER - BODY GROUND)

Last Modified: 3-10-2010	6.4 K	**From:** 200901
Model Year: 2010	**Model:** Corolla	**Doc ID:** RM000003FXE001X
Title: HEATING / AIR CONDITIONING: AIR CONDITIONING UNIT: COMPONENTS (2010 Corolla)		

COMPONENTS

ILLUSTRATION

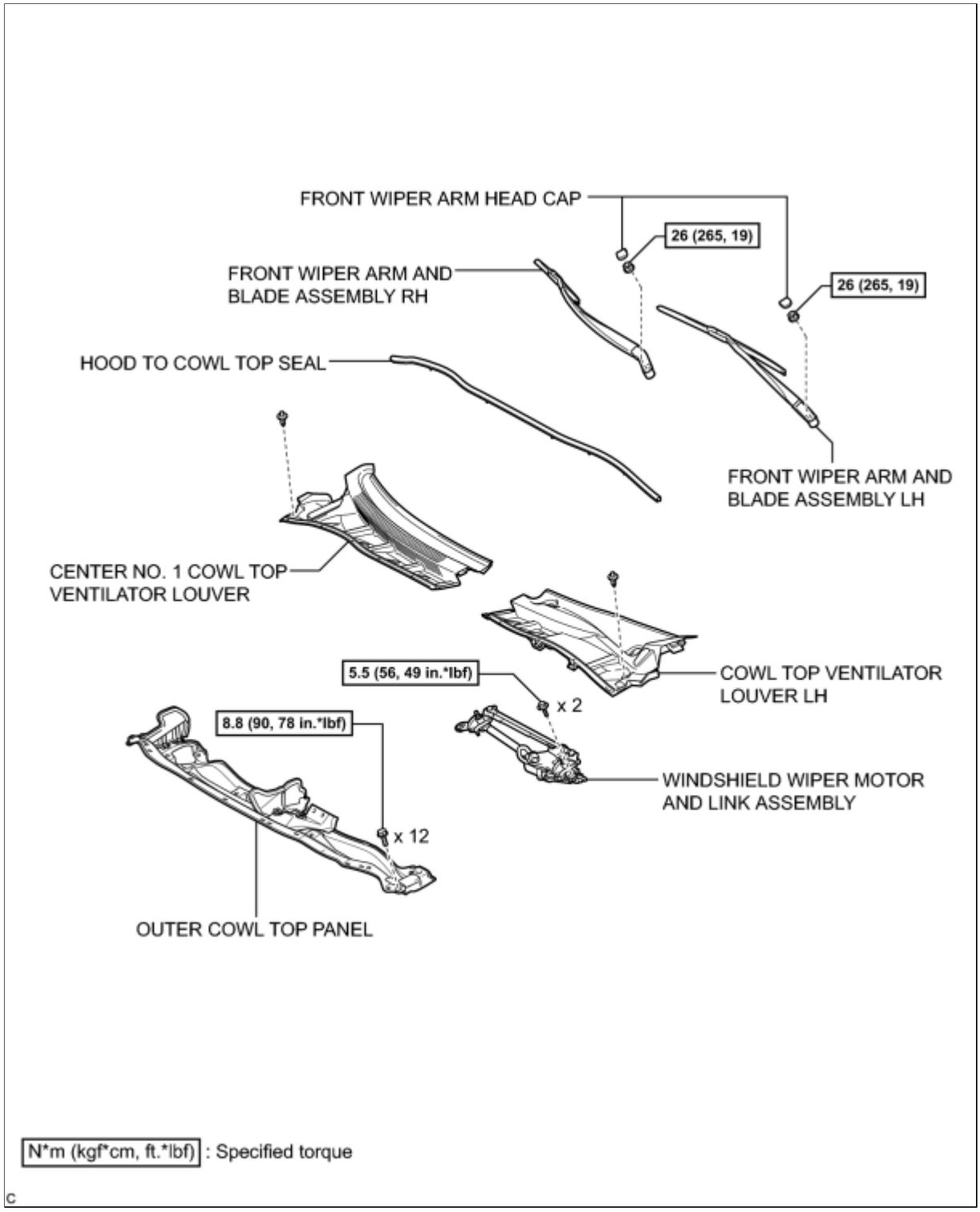

ILLUSTRATION

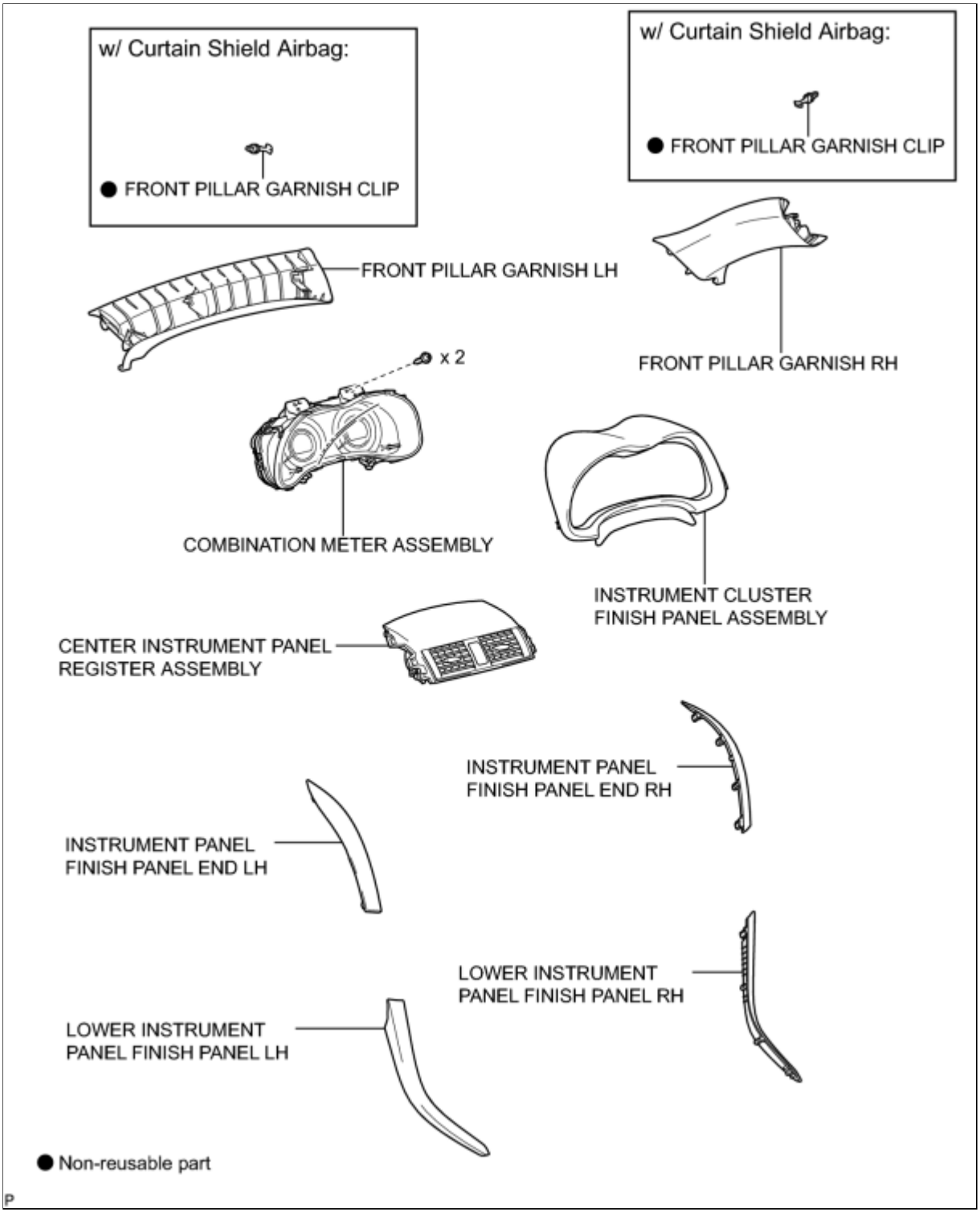

ILLUSTRATION

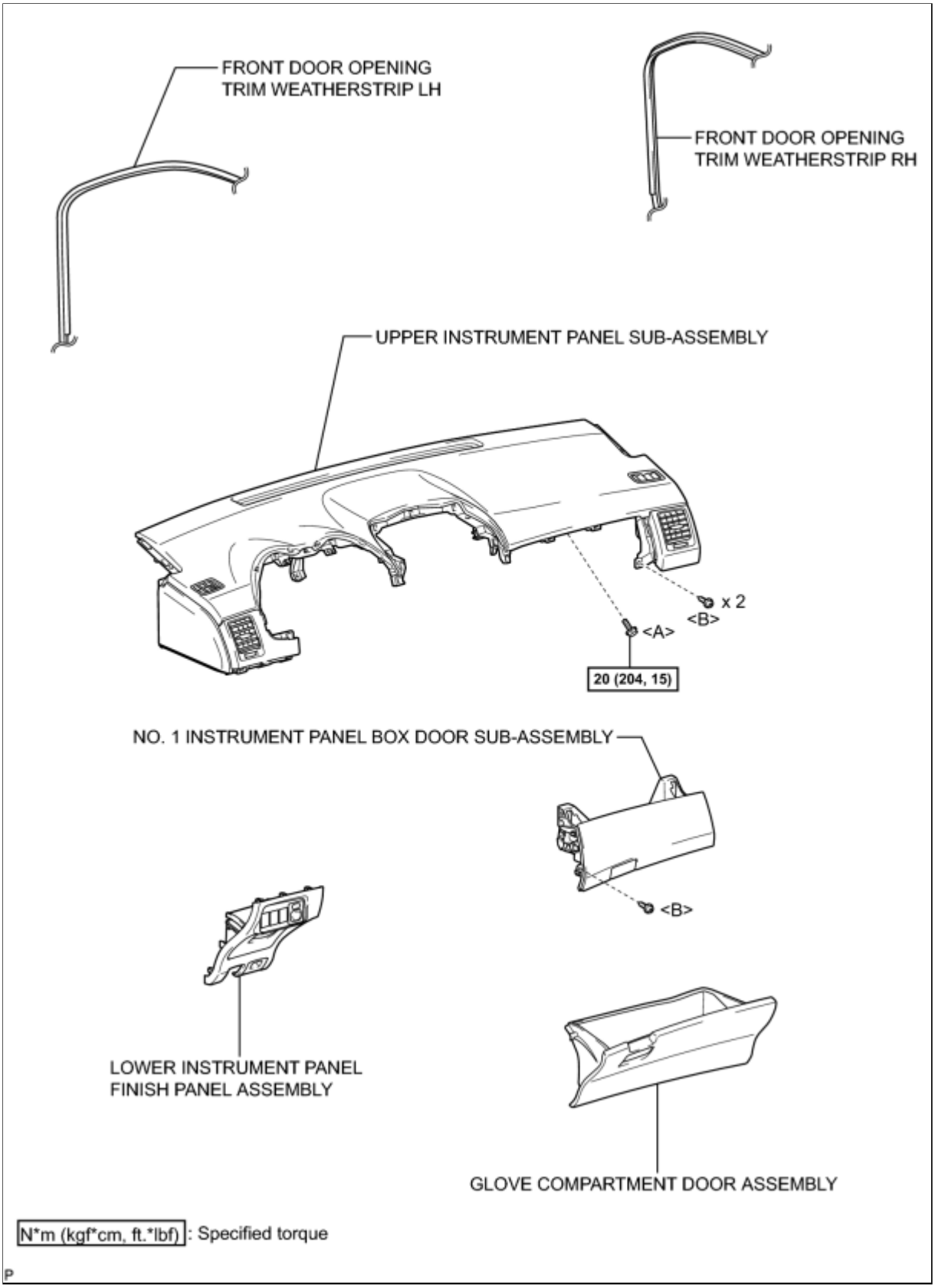

ILLUSTRATION

for 2ZR-FE:

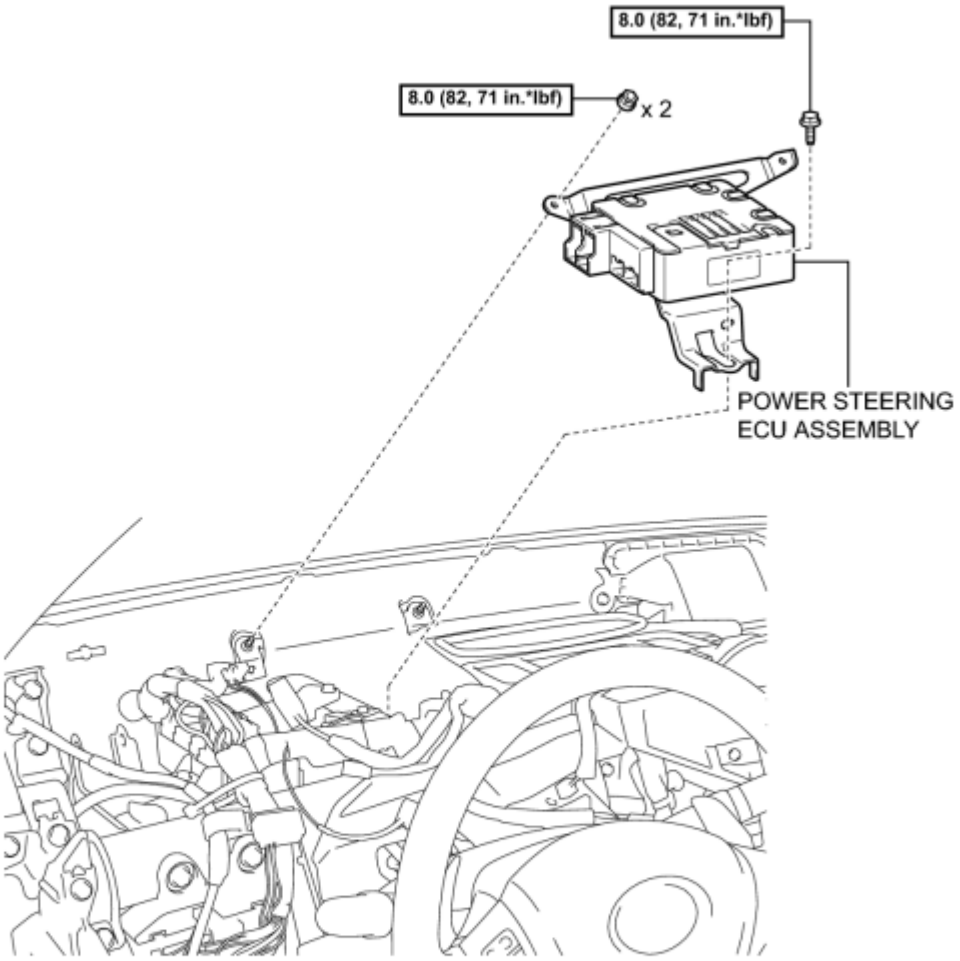

N*m (kgf*cm, ft.*lbf): Specified torque

P

ILLUSTRATION

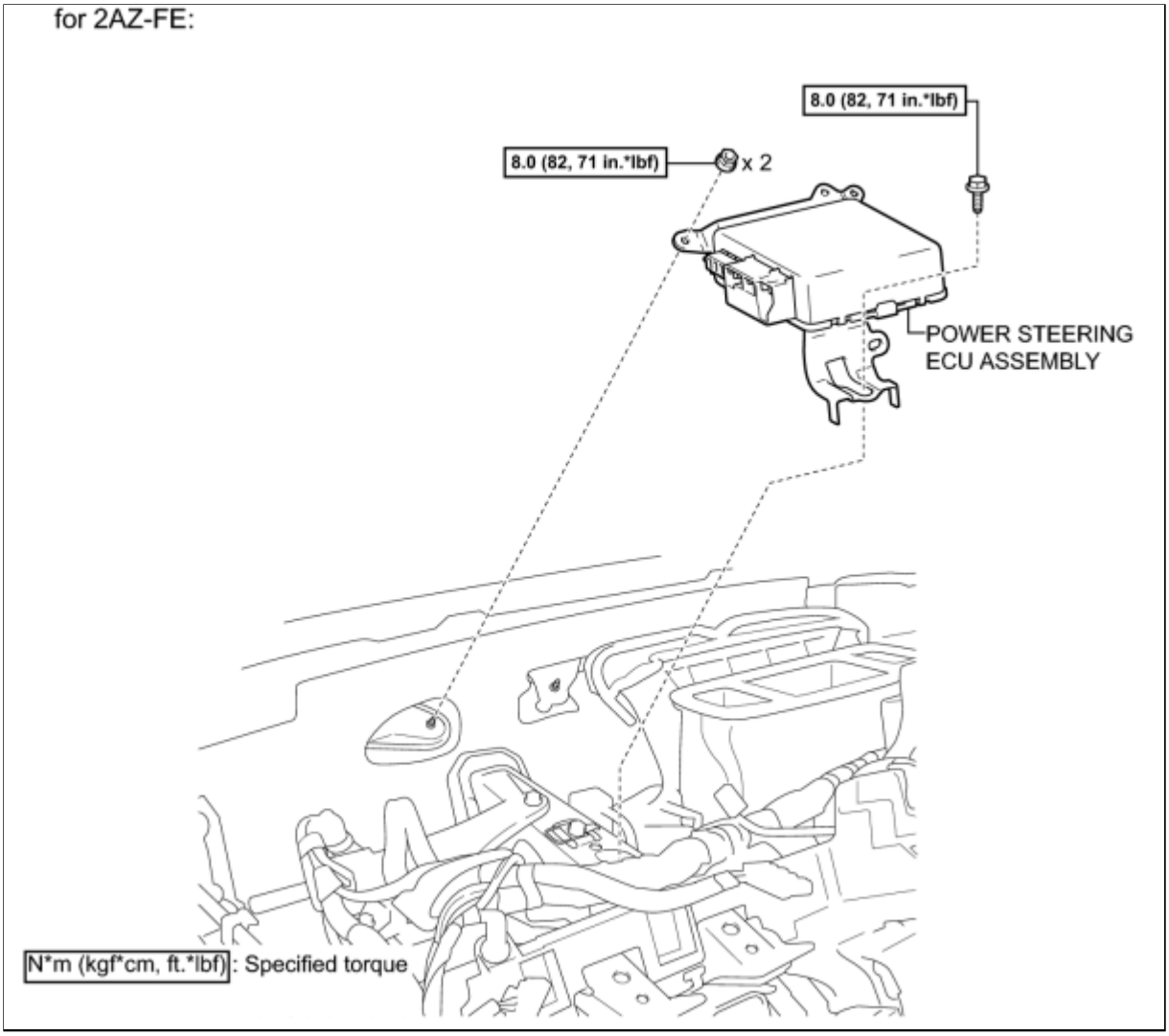

ILLUSTRATION

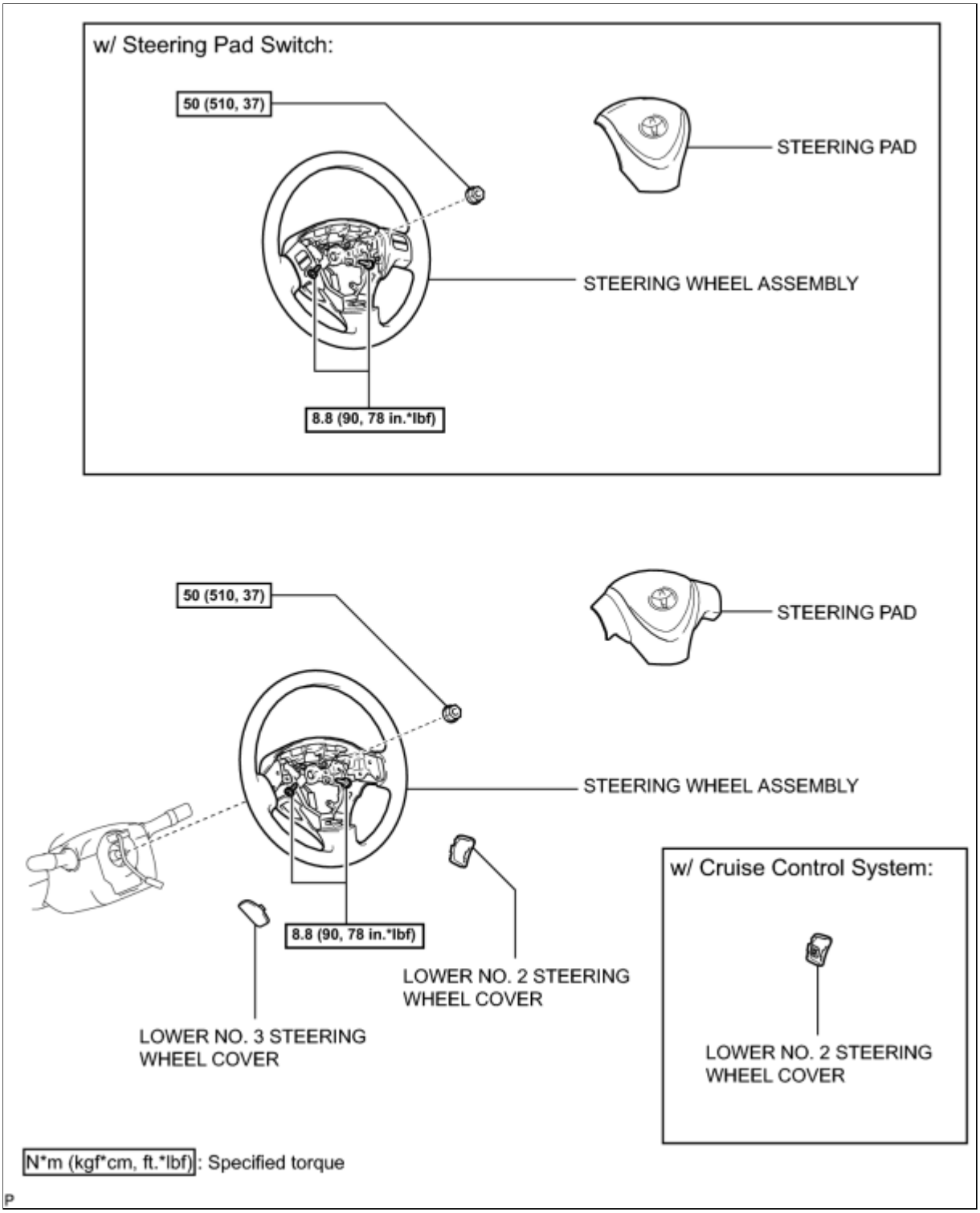

ILLUSTRATION

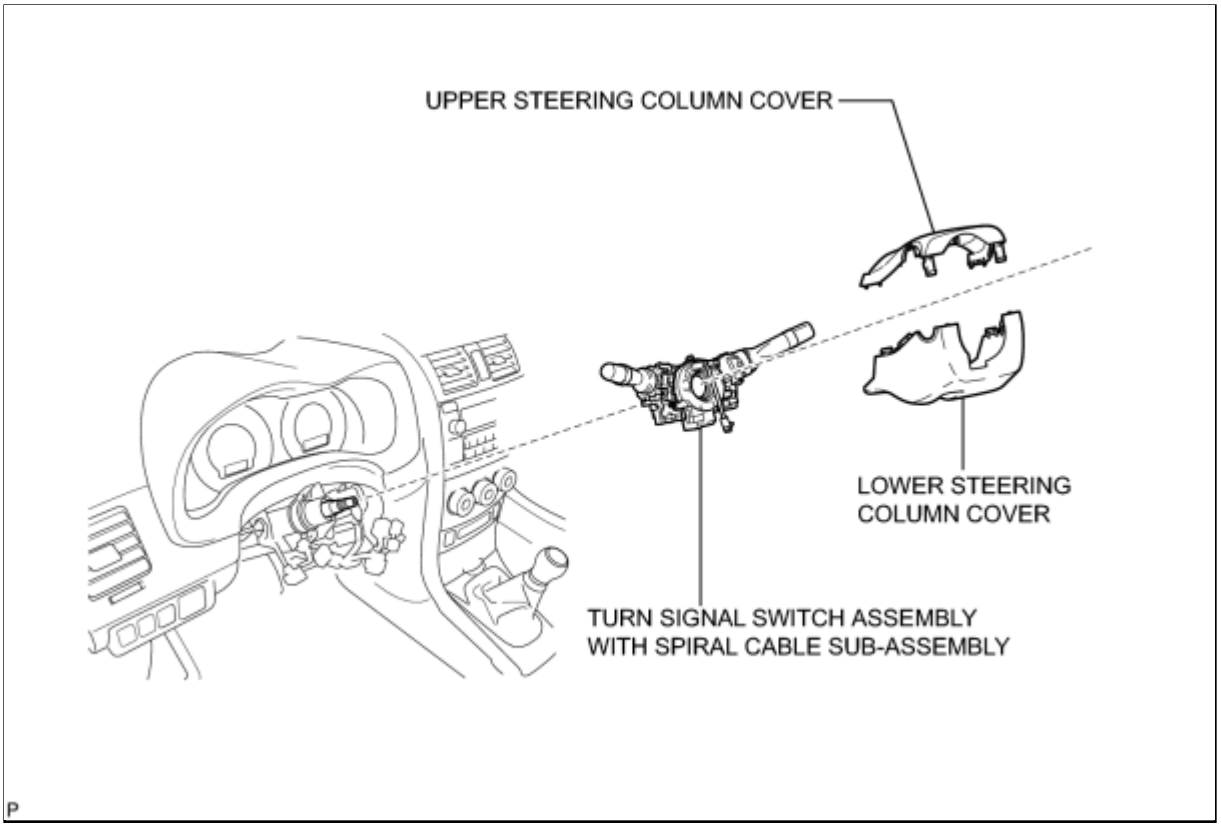

ILLUSTRATION

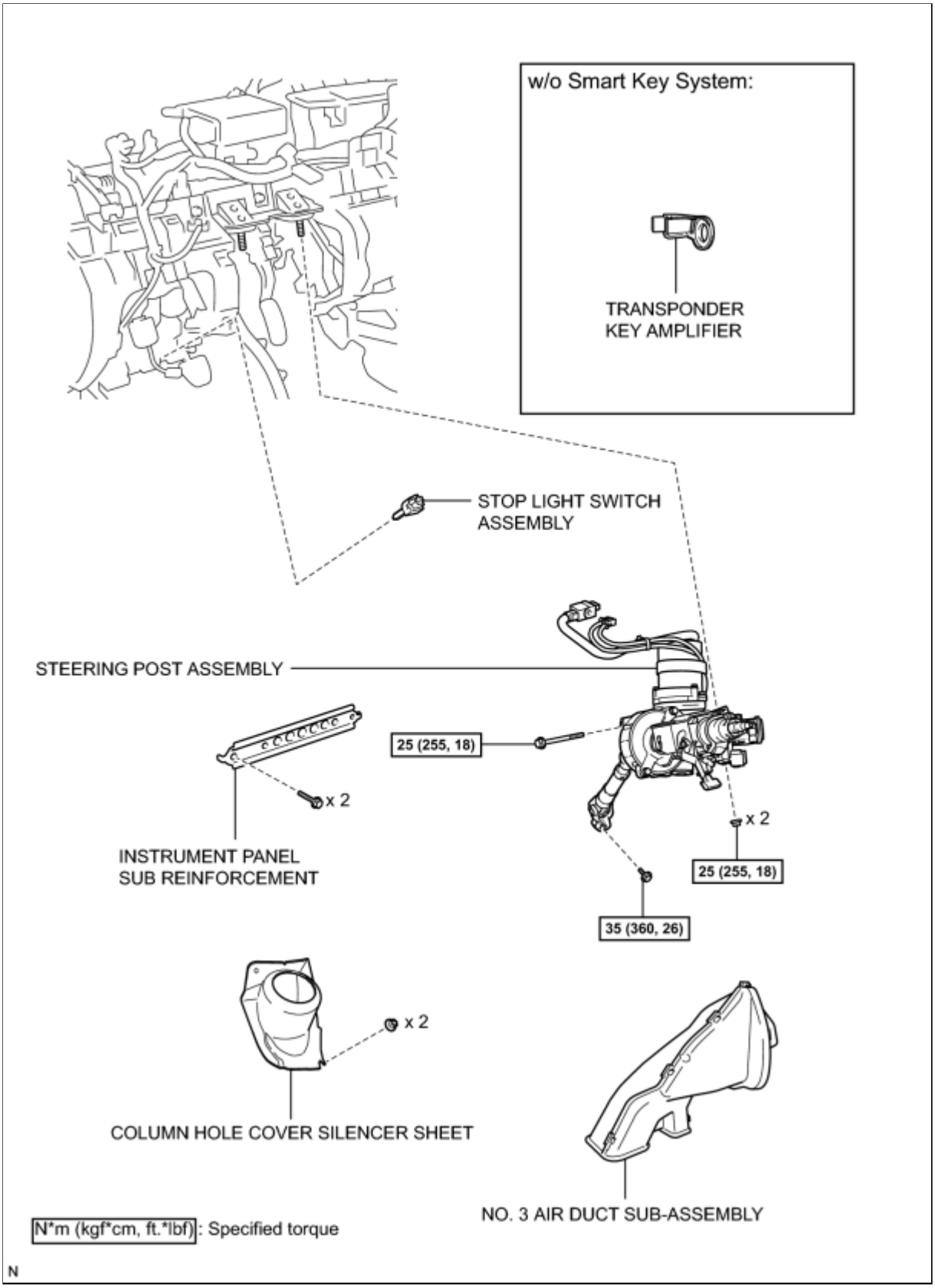

ILLUSTRATION

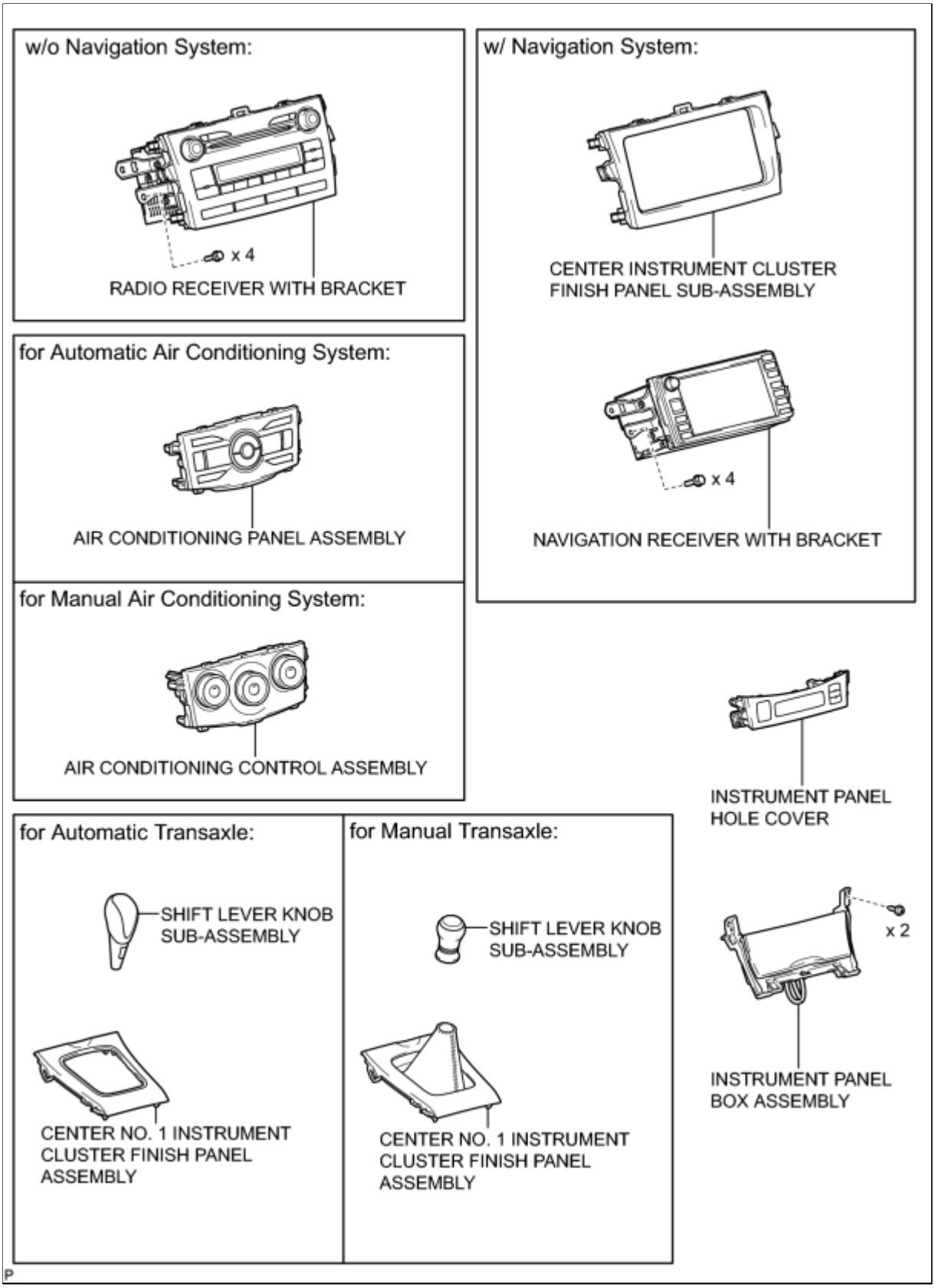

ILLUSTRATION

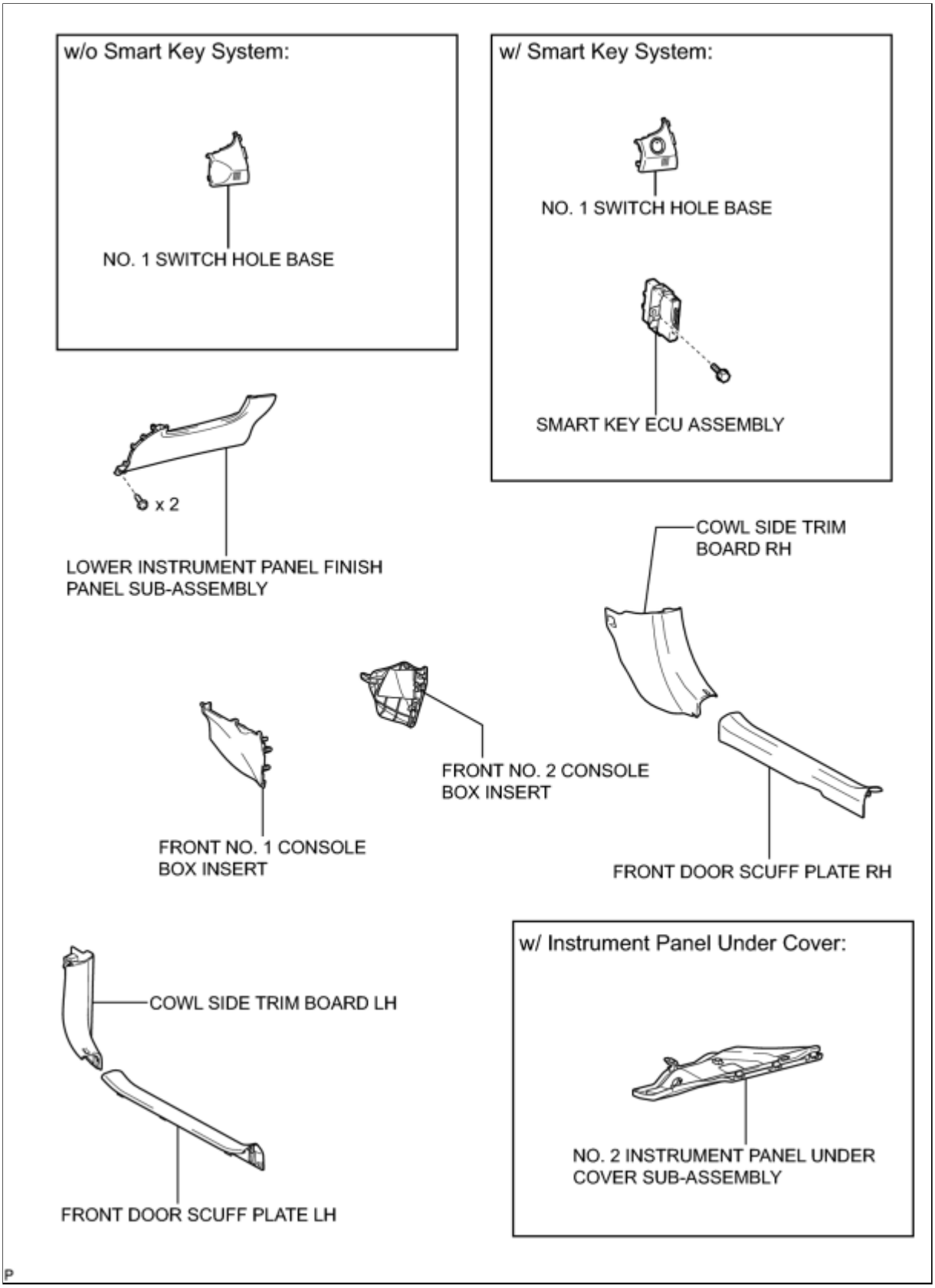

ILLUSTRATION

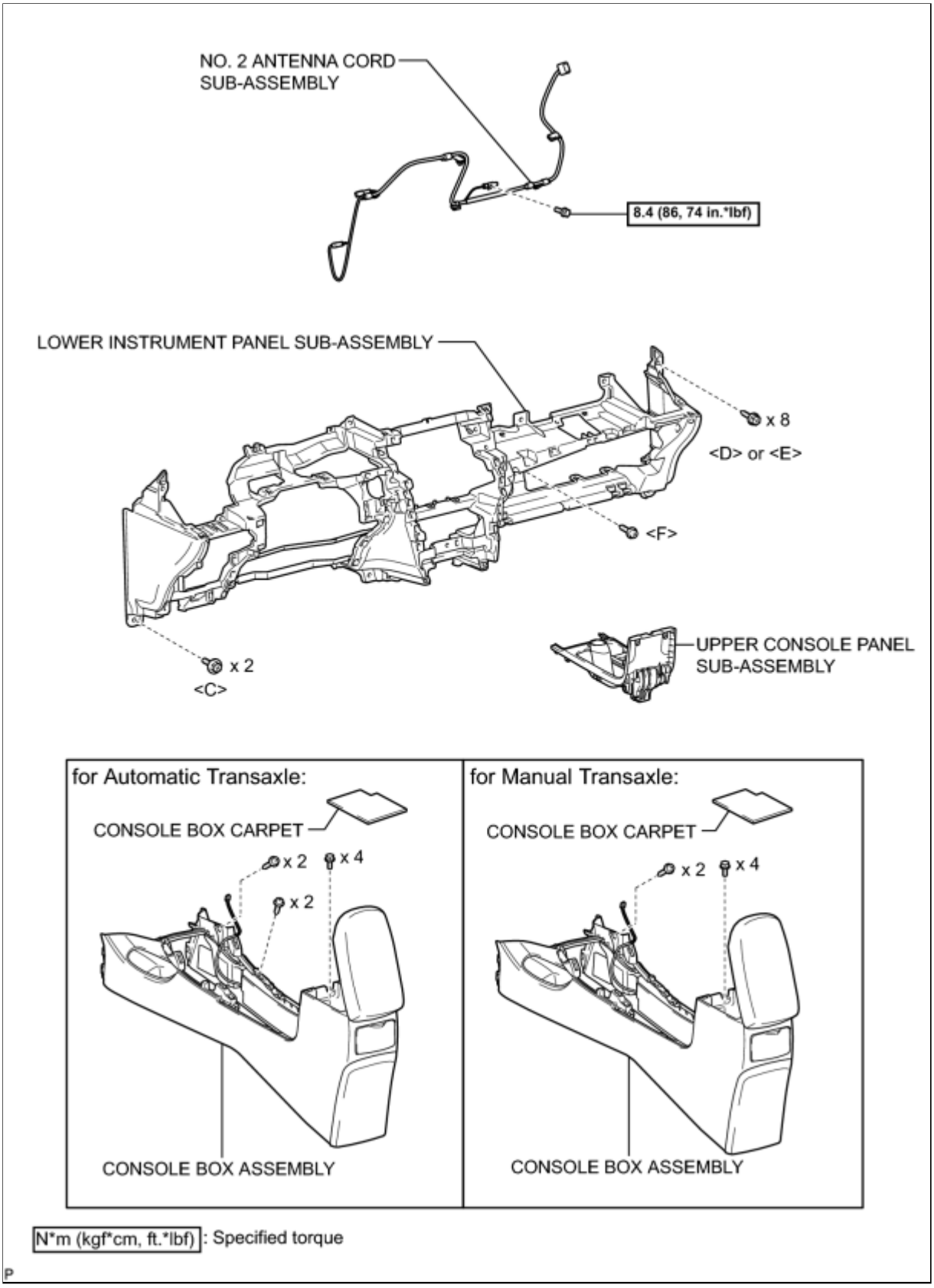

ILLUSTRATION

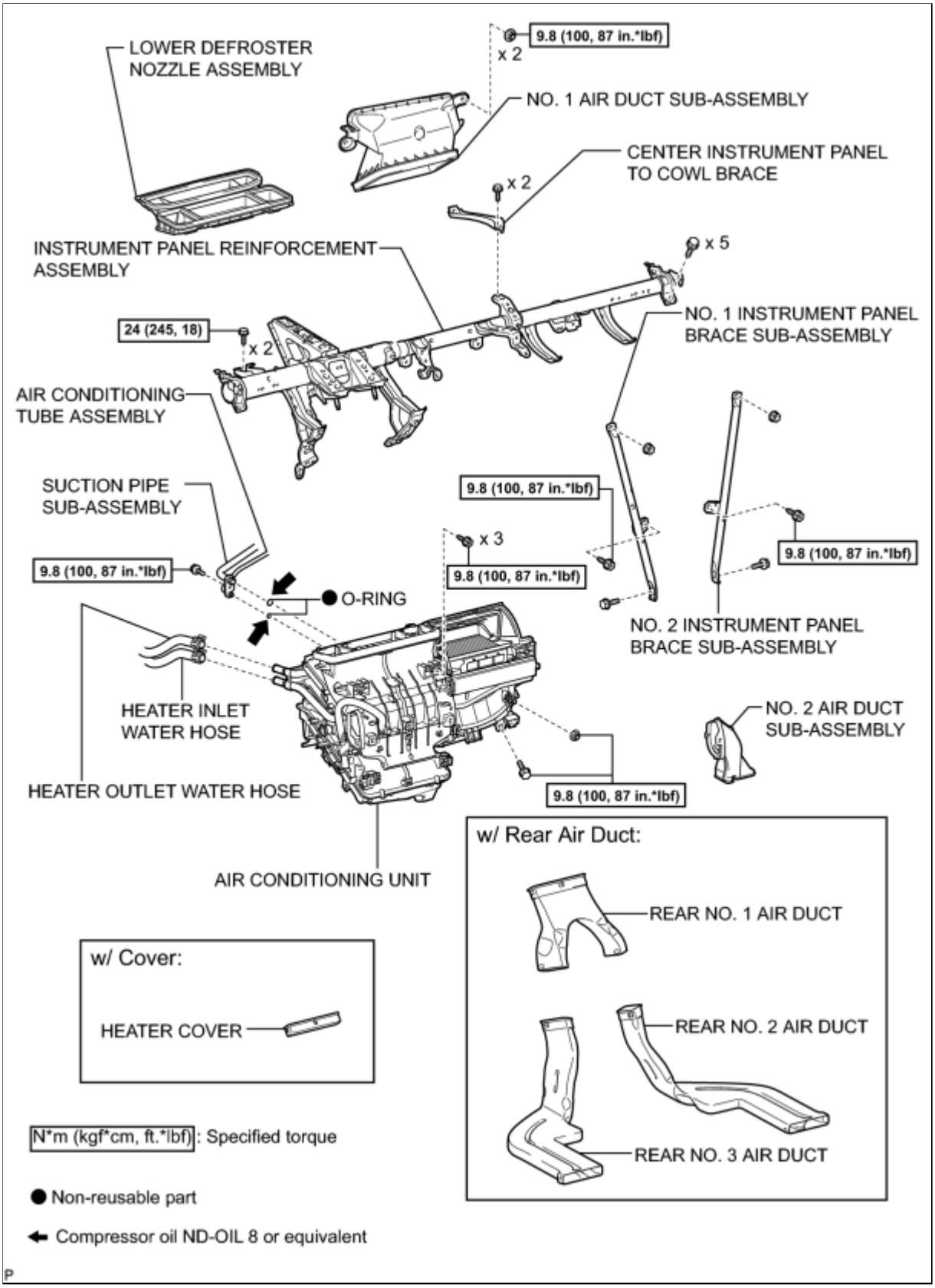

ILLUSTRATION

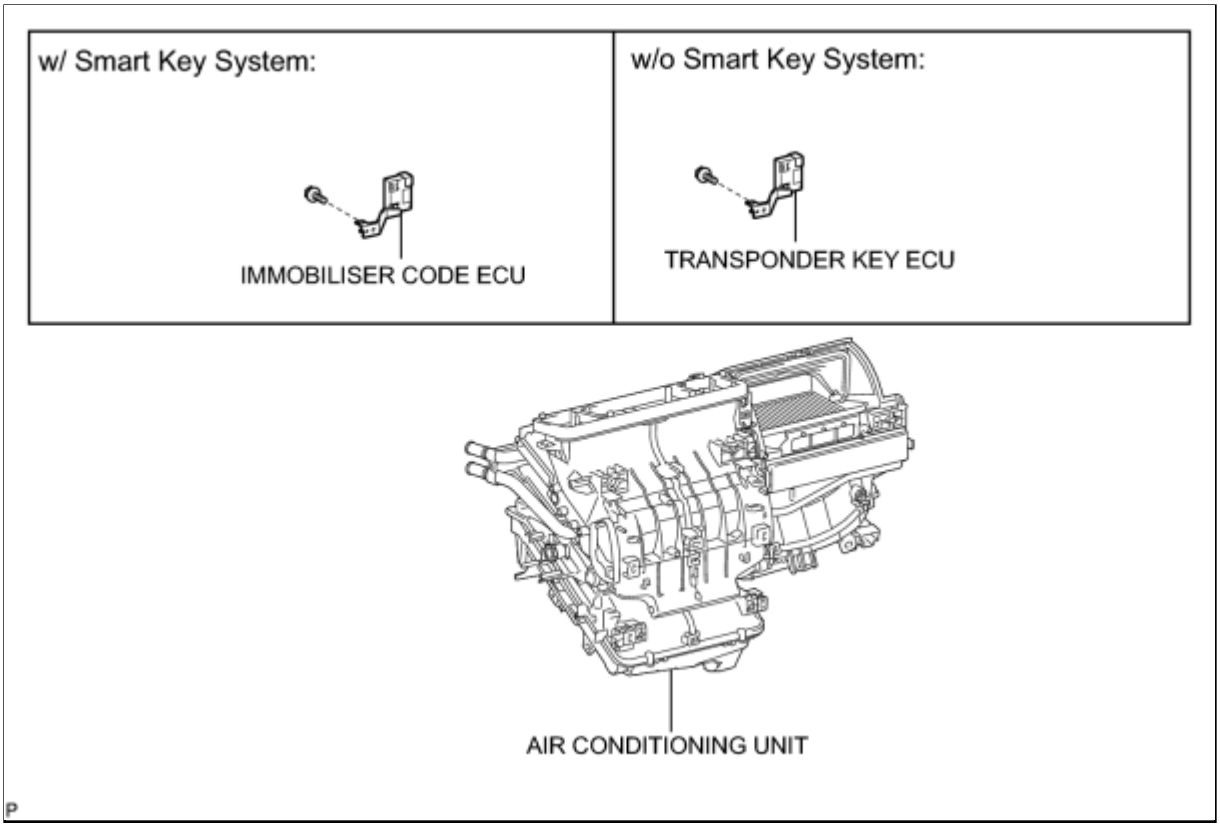

ILLUSTRATION

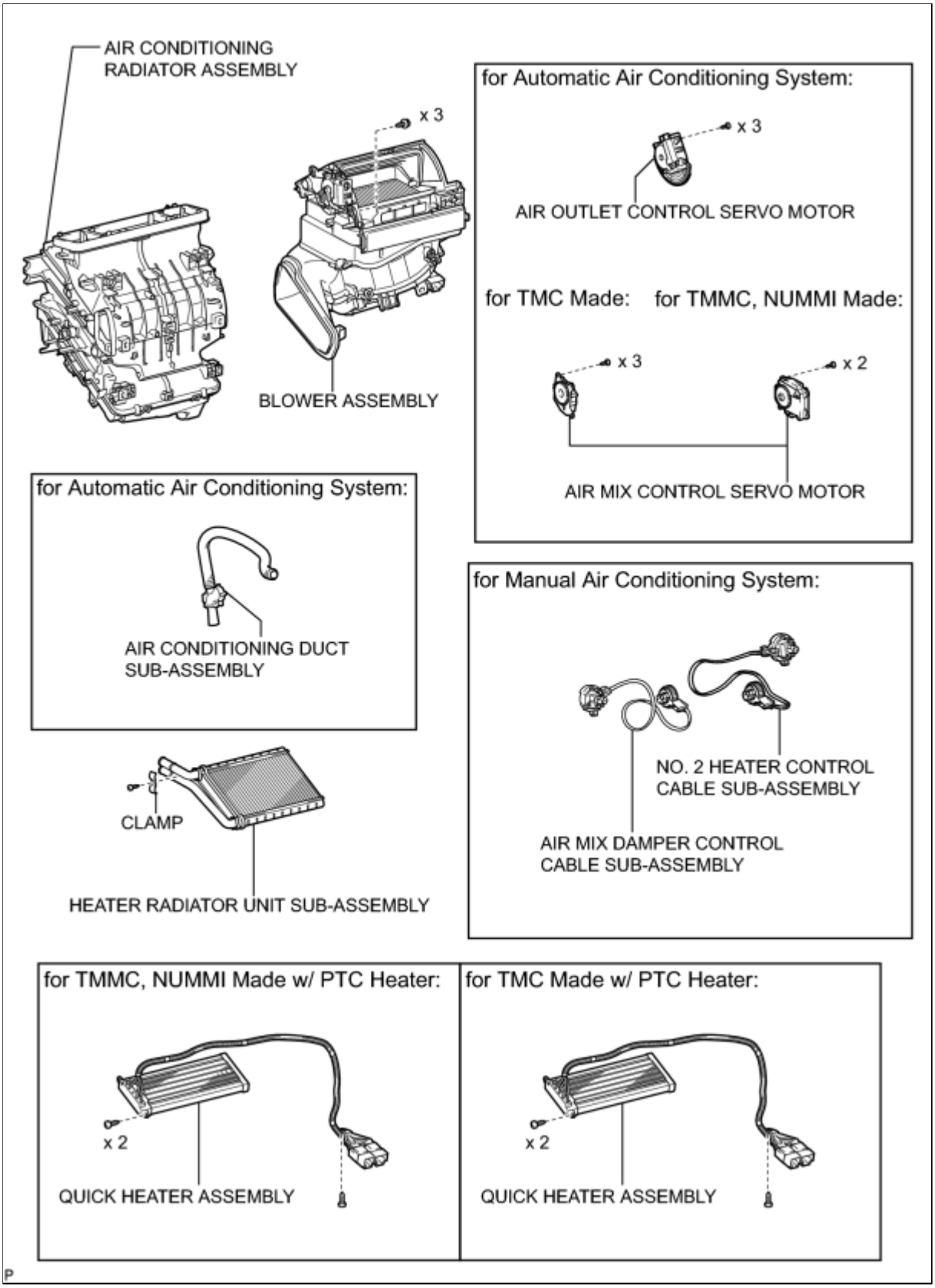

ILLUSTRATION

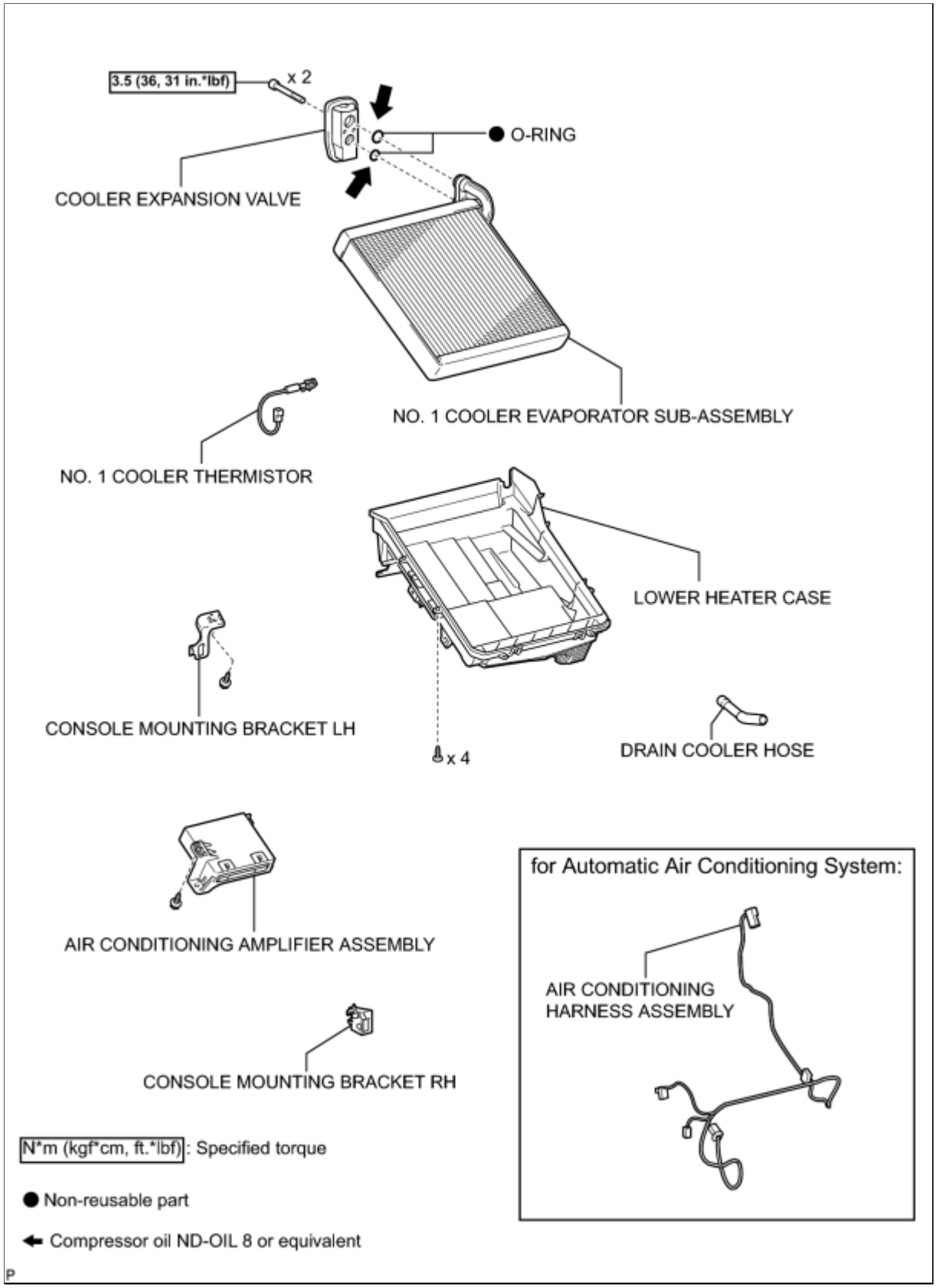
3.5 (36, 31 in.*lbf)
x 2
O-RING
COOLER EXPANSION VALVE
NO. 1 COOLER EVAPORATOR SUB-ASSEMBLY
NO. 1 COOLER THERMISTOR
LOWER HEATER CASE
CONSOLE MOUNTING BRACKET LH
x 4
DRAIN COOLER HOSE
AIR CONDITIONING AMPLIFIER ASSEMBLY
for Automatic Air Conditioning System:
AIR CONDITIONING HARNESS ASSEMBLY
CONSOLE MOUNTING BRACKET RH
N*m (kgf*cm, ft.*lbf): Specified torque
● Non-reusable part
← Compressor oil ND-OIL 8 or equivalent

P

Last Modified: 3-10-2010	6.4 A	**From:** 200901
Model Year: 2010	**Model:** Corolla	**Doc ID:** RM000001HLW0A7X
Title: HEATING / AIR CONDITIONING: AIR CONDITIONING UNIT: REMOVAL (2010 Corolla)		

REMOVAL

1. PRECAUTION

INFO

2. ALIGN FRONT WHEELS FACING STRAIGHT AHEAD

3. DISCONNECT CABLE FROM NEGATIVE BATTERY TERMINAL

CAUTION:

Wait at least 90 seconds after disconnecting the cable from the negative (-) battery terminal to disable the SRS system INFO **.**

HINT:

Before disconnecting the cable, set the air conditioning control switch to DEF-MODE. (for Automatic Air Conditioning System)

4. RECOVER REFRIGERANT FROM REFRIGERATION SYSTEM INFO

5. REMOVE FRONT WIPER ARM HEAD CAP INFO

6. REMOVE FRONT WIPER ARM AND BLADE ASSEMBLY LH INFO

7. REMOVE FRONT WIPER ARM AND BLADE ASSEMBLY RH INFO

8. REMOVE HOOD TO COWL TOP SEAL INFO

9. REMOVE CENTER NO. 1 COWL TOP VENTILATOR LOUVER INFO

10. REMOVE COWL TOP VENTILATOR LOUVER LH INFO

11. REMOVE WINDSHIELD WIPER MOTOR AND LINK ASSEMBLY INFO

12. REMOVE OUTER COWL TOP PANEL (for TMC Made) INFO

13. REMOVE OUTER COWL TOP PANEL (except TMC Made) INFO

14. DISCONNECT SUCTION PIPE SUB-ASSEMBLY

(a) Remove the bolt and slide the hook connector.

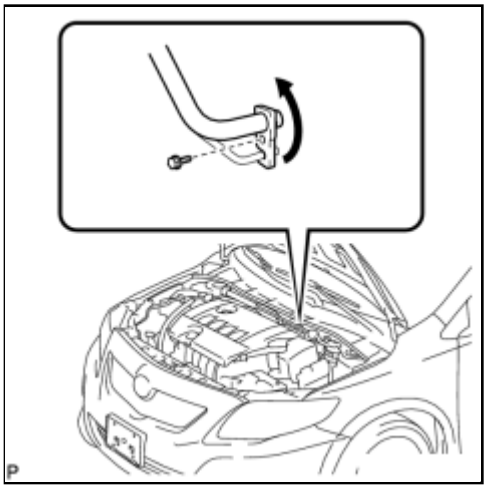

(b) Disconnect the suction pipe sub-assembly.

(c) Remove the O-ring from the suction hose sub-assembly.

NOTICE:

Seal the openings of the disconnected parts using vinyl tape to prevent entry of moisture and foreign matter.

15. DISCONNECT AIR CONDITIONING TUBE ASSEMBLY

(a) Disconnect the air conditioning tube assembly.

(b) Remove the O-ring from the air conditioning tube assembly.

NOTICE:

Seal the openings of the disconnected parts using vinyl tape to prevent entry of moisture and foreign matter.

16. DISCONNECT HEATER WATER HOSE OUTLET

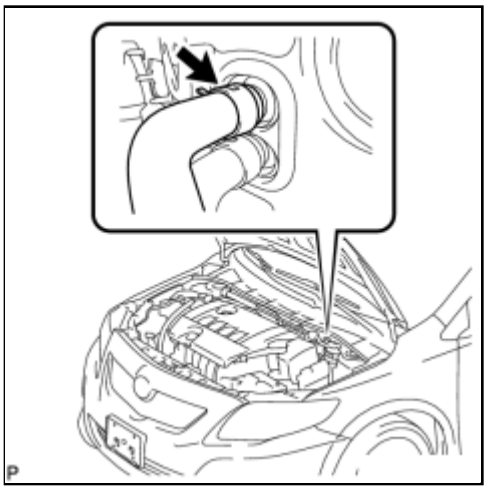

(a) Using pliers, grip the claws of the clip and slide the clip to disconnect the heater outlet water hose.

NOTICE:

- Do not apply excessive force to the heater outlet water hose.
- Prepare a drain pan or a piece of cloth in case the coolant leaks.

17. DISCONNECT HEATER WATER HOSE INLET

HINT:

Disconnection procedure for the heater inlet water hose is the same as that for the heater outlet water hose.

18. REMOVE LOWER INSTRUMENT PANEL FINISH PANEL LH INFO
19. REMOVE LOWER INSTRUMENT PANEL FINISH PANEL RH INFO
20. REMOVE INSTRUMENT PANEL FINISH PANEL END LH INFO
21. REMOVE INSTRUMENT PANEL FINISH PANEL END RH INFO
22. REMOVE CENTER INSTRUMENT PANEL REGISTER ASSEMBLY INFO
23. REMOVE INSTRUMENT CLUSTER FINISH PANEL ASSEMBLY INFO
24. REMOVE COMBINATION METER ASSEMBLY INFO
25. REMOVE FRONT PILLAR GARNISH LH (w/o Curtain Shield Airbag) INFO
26. REMOVE FRONT PILLAR GARNISH LH (w/ Curtain Shield Airbag) INFO
27. REMOVE FRONT PILLAR GARNISH RH (w/o Curtain Shield Airbag) INFO
28. REMOVE FRONT PILLAR GARNISH RH (w/ Curtain Shield Airbag) INFO
29. REMOVE LOWER INSTRUMENT PANEL FINISH PANEL ASSEMBLY INFO
30. DISCONNECT FRONT DOOR OPENING TRIM WEATHERSTRIP LH INFO
31. REMOVE GLOVE COMPARTMENT DOOR ASSEMBLY INFO
32. REMOVE NO. 1 INSTRUMENT PANEL BOX DOOR SUB-ASSEMBLY INFO
33. DISCONNECT FRONT DOOR OPENING TRIM WEATHERSTRIP RH INFO
34. DISCONNECT INSTRUMENT PANEL WIRE ASSEMBLY INFO
35. REMOVE UPPER INSTRUMENT PANEL SUB-ASSEMBLY INFO
36. REMOVE POWER STEERING ECU ASSEMBLY (for 2ZR-FE) INFO
37. REMOVE POWER STEERING ECU ASSEMBLY (for 2AZ-FE) INFO
38. REMOVE LOWER INSTRUMENT PANEL FINISH PANEL SUB-ASSEMBLY INFO
39. REMOVE LOWER NO. 3 STEERING WHEEL COVER INFO
40. REMOVE LOWER NO. 2 STEERING WHEEL COVER INFO
41. REMOVE STEERING PAD INFO
42. REMOVE STEERING WHEEL ASSEMBLY INFO
43. REMOVE LOWER STEERING COLUMN COVER INFO
44. REMOVE UPPER STEERING COLUMN COVER INFO

45. REMOVE TURN SIGNAL SWITCH ASSEMBLY WITH SPIRAL CABLE SUB-ASSEMBLY INFO

46. REMOVE COLUMN HOLE COVER SILENCER SHEET INFO

47. SEPARATE NO. 2 STEERING INTERMEDIATE SHAFT ASSEMBLY INFO

48. REMOVE INSTRUMENT PANEL SUB REINFORCEMENT INFO

49. REMOVE NO. 3 AIR DUCT SUB-ASSEMBLY INFO

50. REMOVE TRANSPONDER KEY AMPLIFIER (w/ Smart Key System) INFO

51. REMOVE STOP LIGHT SWITCH ASSEMBLY INFO

52. REMOVE STEERING POST ASSEMBLY (for 2ZR-FE) INFO

53. REMOVE STEERING POST ASSEMBLY (for 2AZ-FE) INFO

54. REMOVE RADIO RECEIVER WITH BRACKET (w/o Navigation System) INFO

55. REMOVE CENTER INSTRUMENT CLUSTER FINISH PANEL SUB-ASSEMBLY (w/ Navigation System) INFO

56. REMOVE NAVIGATION RECEIVER WITH BRACKET (w/ Navigation System) INFO

57. REMOVE SHIFT LEVER KNOB SUB-ASSEMBLY (for Manual Transaxle) INFO

58. REMOVE SHIFT LEVER KNOB SUB-ASSEMBLY (for Automatic Transaxle) INFO

59. REMOVE CENTER NO. 1 INSTRUMENT CLUSTER FINISH PANEL ASSEMBLY (for Manual Transaxle) INFO

60. REMOVE CENTER NO. 1 INSTRUMENT CLUSTER FINISH PANEL ASSEMBLY (for Automatic Transaxle) INFO

61. REMOVE INSTRUMENT PANEL BOX ASSEMBLY INFO

62. REMOVE INSTRUMENT PANEL HOLE COVER INFO

63. REMOVE AIR CONDITIONING PANEL ASSEMBLY (for Manual Air Conditioning System) INFO

64. REMOVE AIR CONDITIONING CONTROL ASSEMBLY (for Automatic Air Conditioning System) INFO

65. REMOVE FRONT DOOR SCUFF PLATE LH INFO

66. REMOVE COWL SIDE TRIM BOARD LH INFO

67. REMOVE FRONT NO. 1 CONSOLE BOX INSERT INFO

68. REMOVE NO. 1 SWITCH HOLE BASE (w/o Smart Key System) INFO

69. REMOVE NO. 1 SWITCH HOLE BASE (w/ Smart Key System) INFO

70. REMOVE FRONT DOOR SCUFF PLATE RH INFO

71. REMOVE COWL SIDE TRIM BOARD RH INFO

72. REMOVE NO. 2 INSTRUMENT PANEL UNDER COVER SUB-ASSEMBLY (w/ Instrument Panel Under Cover) INFO

73. REMOVE FRONT NO. 2 CONSOLE BOX INSERT INFO

74. REMOVE UPPER CONSOLE PANEL SUB-ASSEMBLY INFO

75. REMOVE CONSOLE BOX CARPET INFO

76. REMOVE CONSOLE BOX ASSEMBLY (for Manual Transaxle) INFO

77. REMOVE CONSOLE BOX ASSEMBLY (for Automatic Transaxle) INFO

78. REMOVE NO. 2 ANTENNA CORD SUB-ASSEMBLY INFO

79. REMOVE LOWER INSTRUMENT PANEL SUB-ASSEMBLY INFO

80. REMOVE SMART KEY ECU ASSEMBLY (w/ Smart Key System) INFO

81. REMOVE NO. 1 AIR DUCT SUB-ASSEMBLY

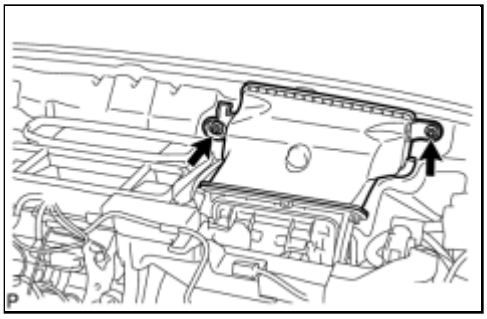

(a) Remove the 2 nuts and the No. 1 air duct sub-assembly.

82. REMOVE LOWER DEFROSTER NOZZLE ASSEMBLY

(a) Disengage the 6 claws and remove the lower defroster nozzle assembly.

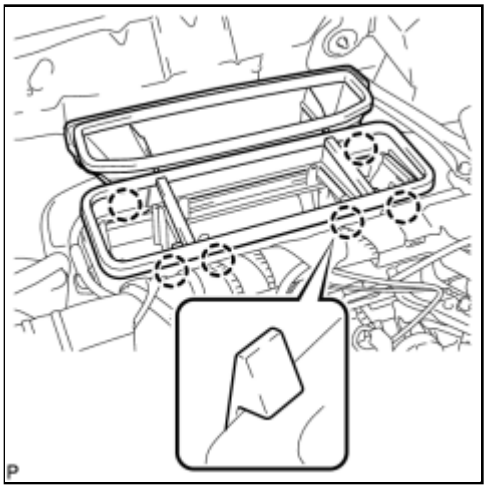

83. REMOVE CENTER INSTRUMENT PANEL TO COWL BRACE

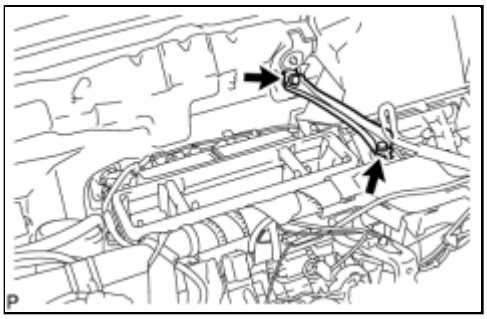

(a) Remove the 2 bolts and the center instrument panel to cowl brace.

84. REMOVE REAR NO. 2 AIR DUCT (w/ Rear Air Duct)



(a) Remove the clip.

(b) Turn back the floor carpet.

(c) Disengage the 2 claws and remove the rear No. 2 air duct.

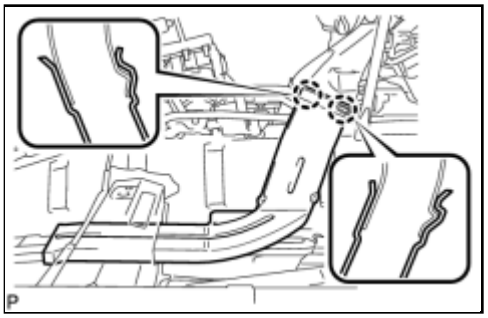

85. REMOVE REAR NO. 3 AIR DUCT (w/ Rear Air Duct)

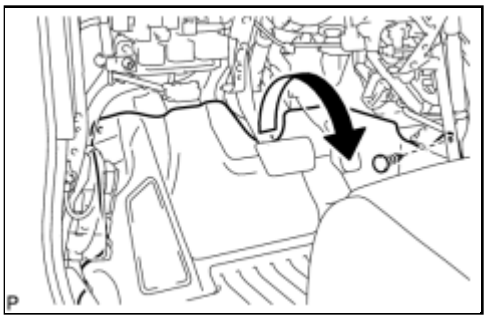

(a) Remove the clip.

(b) Turn back the floor carpet.

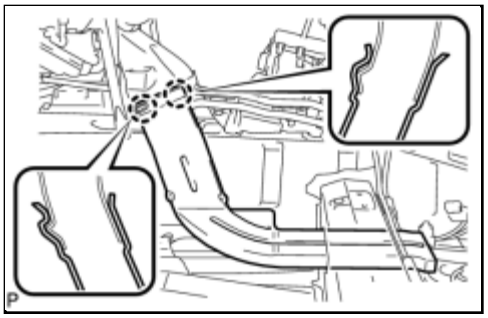

(c) Disengage the 2 claws and remove the rear No. 3 air duct.

86. REMOVE NO. 1 INSTRUMENT PANEL BRACE SUB-ASSEMBLY (for Manual Air Conditioning System)

(a) for TMC made:

(1) Disconnect the connector.

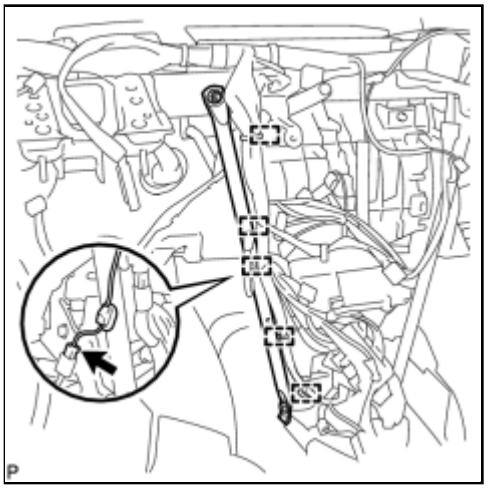

(2) Disengage each clamp.

(b) for TMMC, NUMMI made:

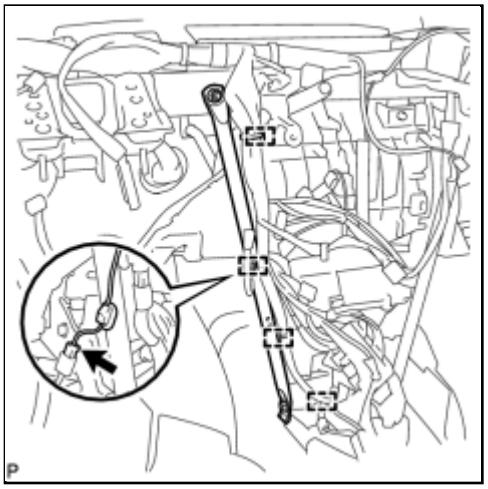

(1) Disconnect the connector.

(2) Disengage each clamp.

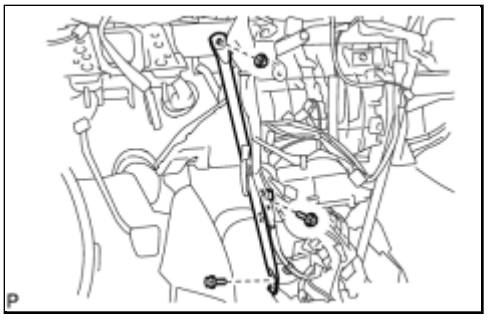

(c) Remove the screw.

(d) Remove the bolt, the nut, and the No. 1 instrument panel brace sub-assembly.

87. REMOVE NO. 1 INSTRUMENT PANEL BRACE SUB-ASSEMBLY (for Automatic Air

Conditioning System)

(a) for TMC Made:



(1) Disengage each clamp.

(b) for TMMC, NUMMI Made:

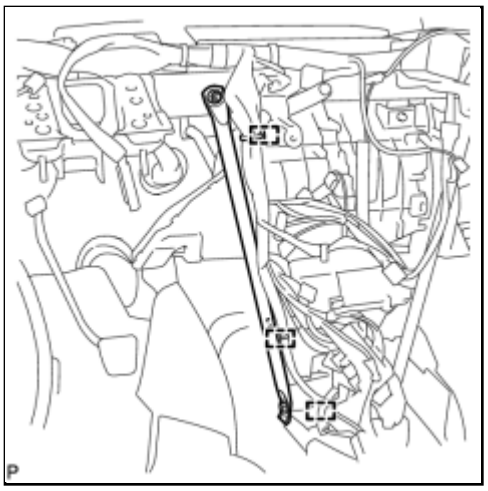

(1) Disengage each clamp.

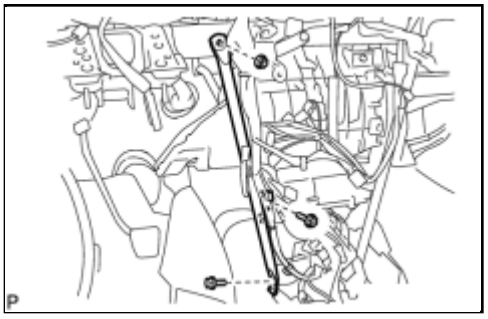

(c) Remove the screw.

(d) Remove the bolt, the nut, and the No. 1 instrument panel brace sub-assembly.

88. REMOVE NO. 2 INSTRUMENT PANEL BRACE SUB-ASSEMBLY

(a) for TMC Made:

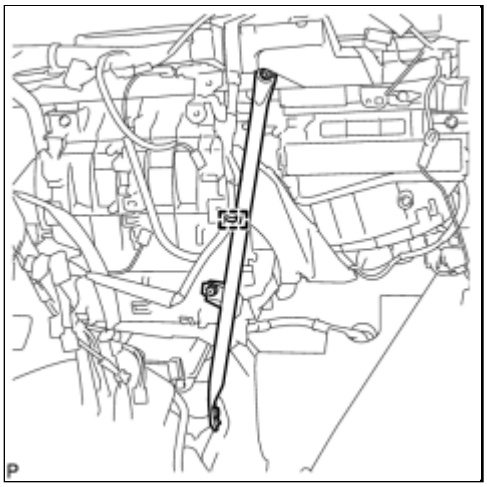

(1) Disengage each clamp.

(b) for TMMC, NUMMI Made:

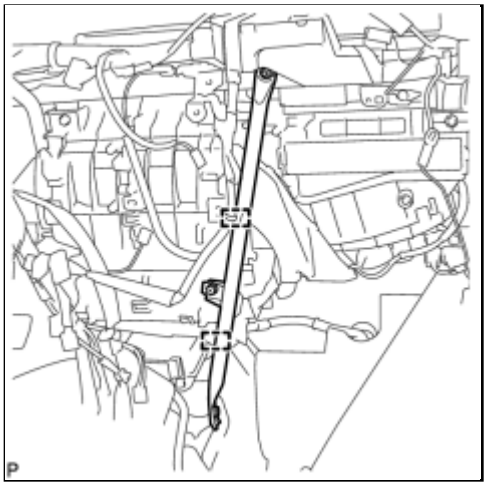

(1) Disengage each clamp.

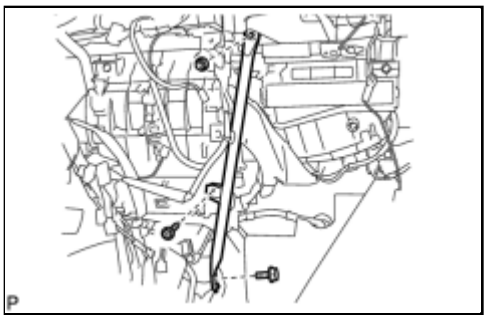

(c) Remove the screw.

(d) Remove the bolt, the nut, and the No. 2 instrument panel brace sub-assembly.

89. REMOVE HEATER COVER (w/ Cover)

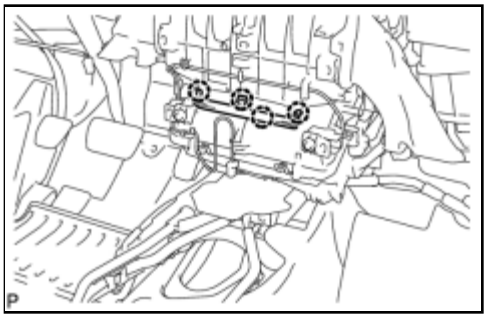

(a) Disengage the 4 claws and remove the heater cover.

90. REMOVE REAR NO. 1 AIR DUCT (w/ Rear Air Duct)

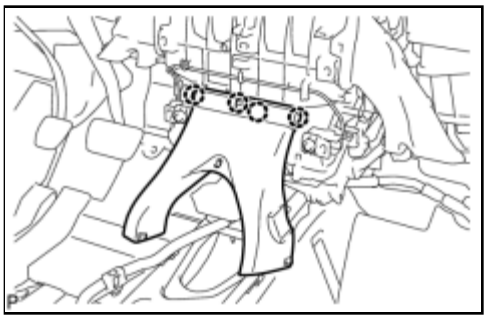

(a) Disengage the 4 claws and remove the rear No. 1 air duct.

91. REMOVE INSTRUMENT PANEL REINFORCEMENT ASSEMBLY (for Manual Air Conditioning System)

(a) Disconnect the connector.

(b) Disengage each clamp and the wire harness.

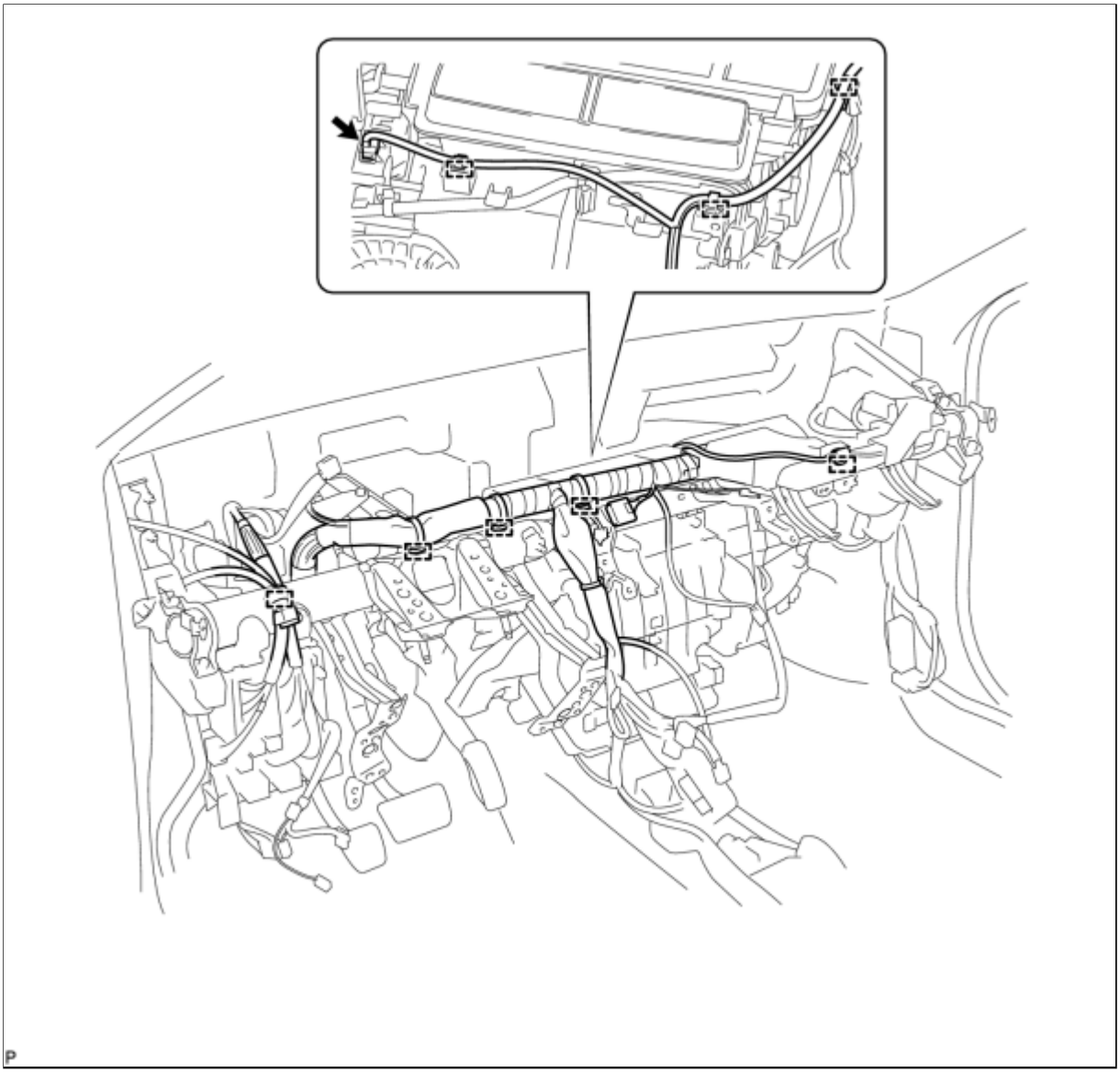

(c) Disconnect each connector.

(d) Disengage each clamp.

(e) Remove the 12 bolts, and disengage the wire harness and junction block.

(f) Disengage the cooler drain hose.

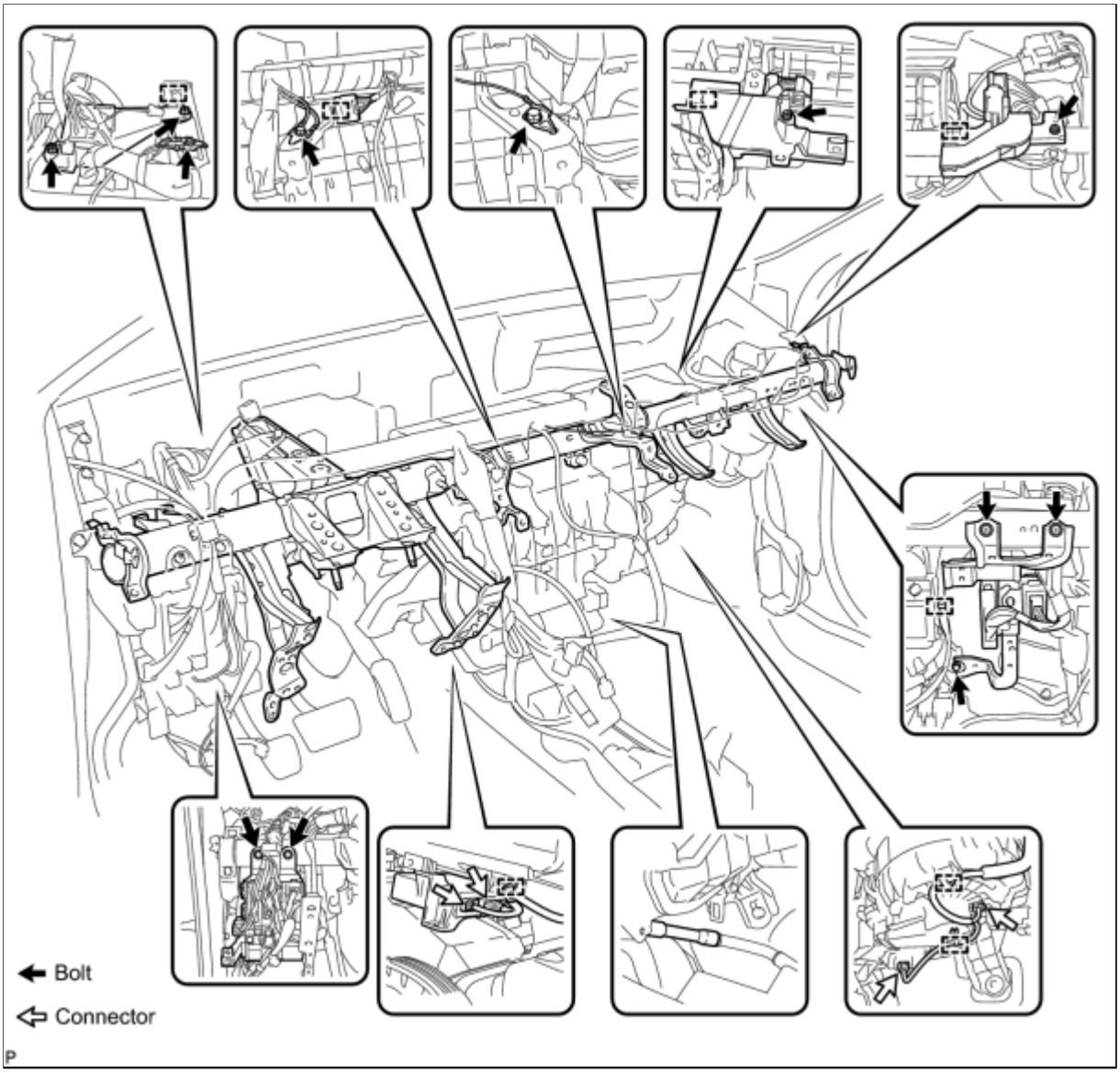

(g) Remove the 7 bolts.

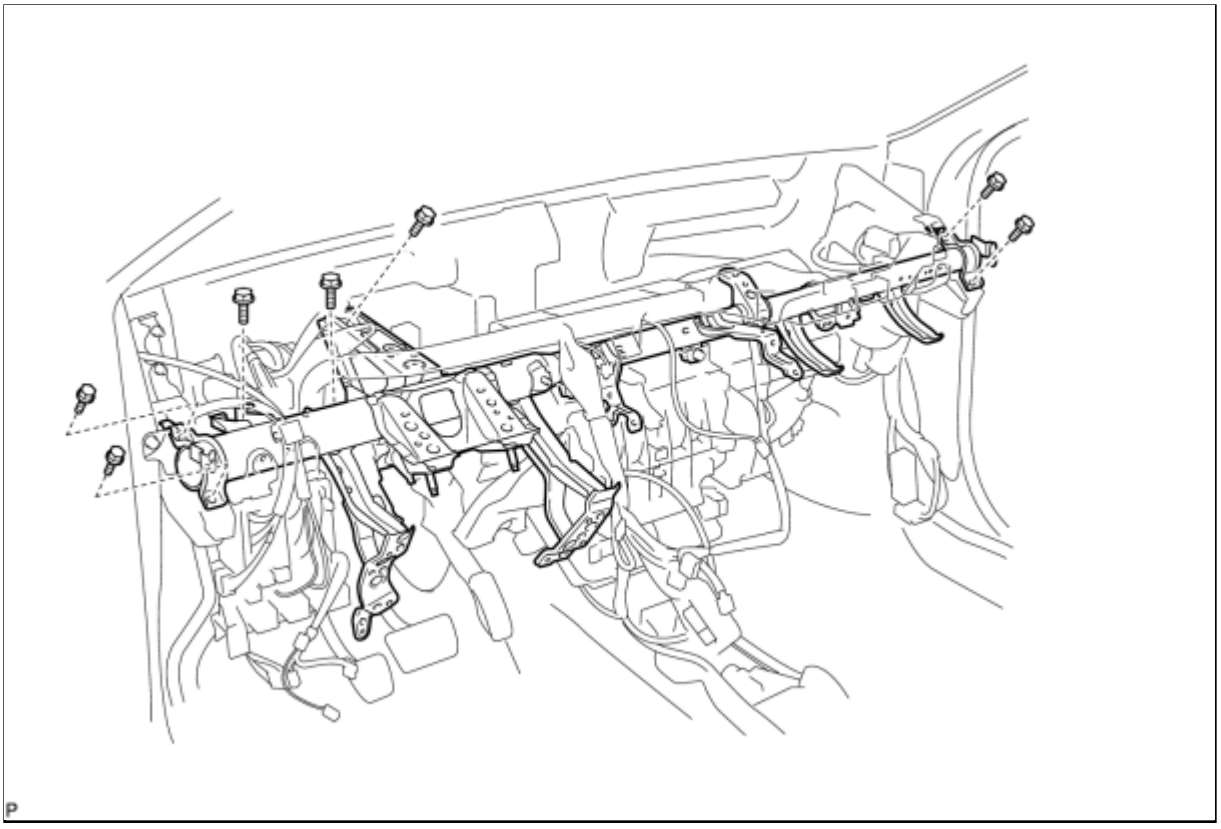

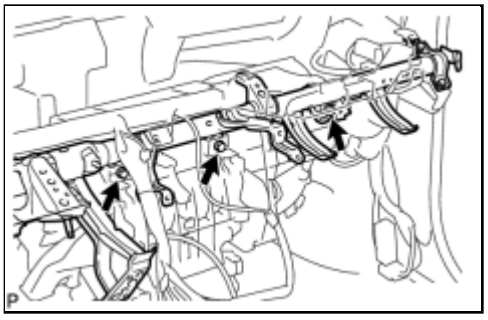

(h) Remove the 3 bolts and the instrument panel reinforcement assembly.

92. REMOVE INSTRUMENT PANEL REINFORCEMENT ASSEMBLY (for Automatic Air Conditioning System)

(a) Disengage each clamp and the wire harness.

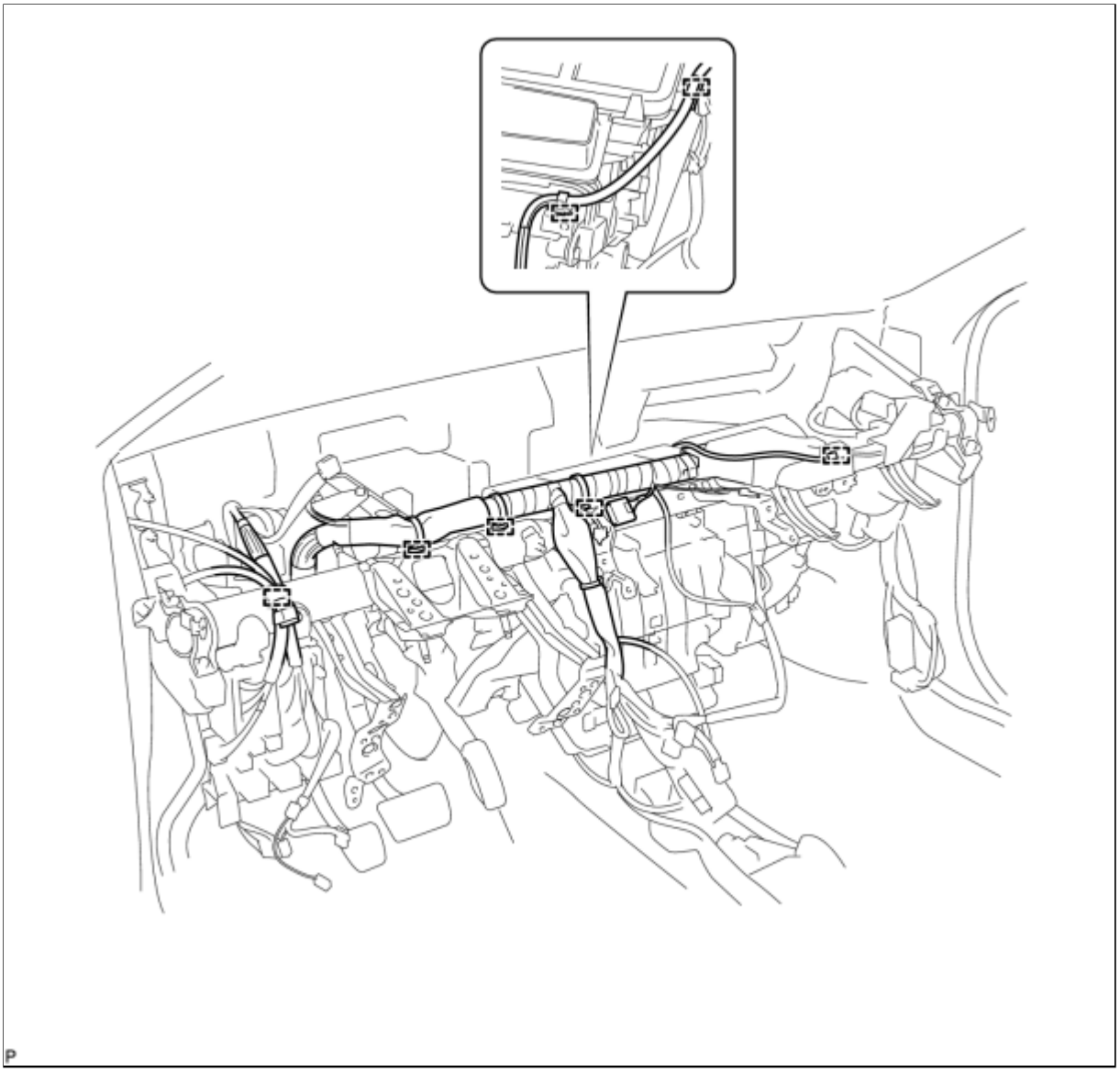

(b) Disconnect each connector.

(c) Disengage each clamp.

(d) Remove the 12 bolts, and disengage the wire harness and junction block.

(e) Disengage the cooler drain hose.

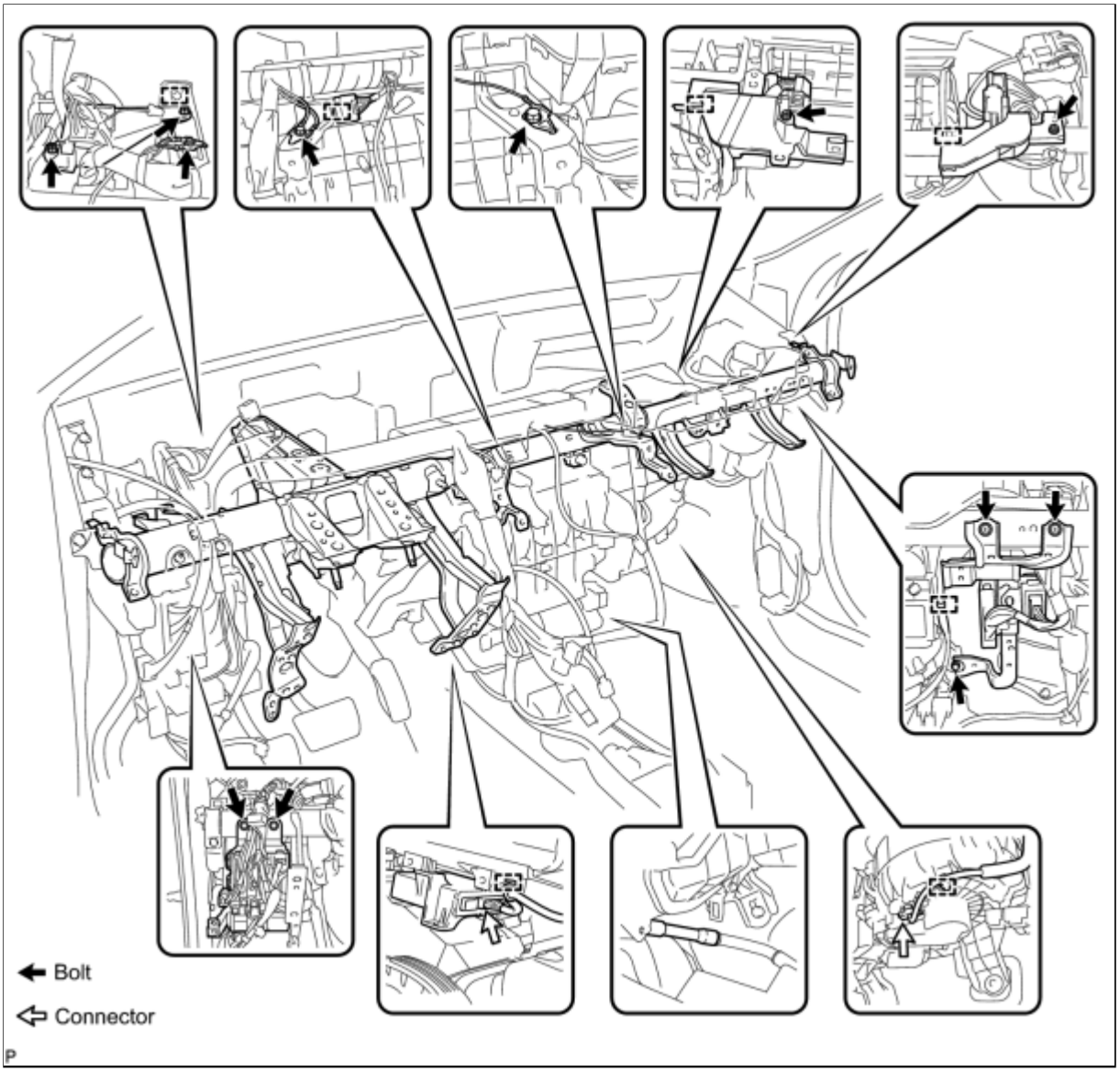

(f) Remove the 7 bolts.

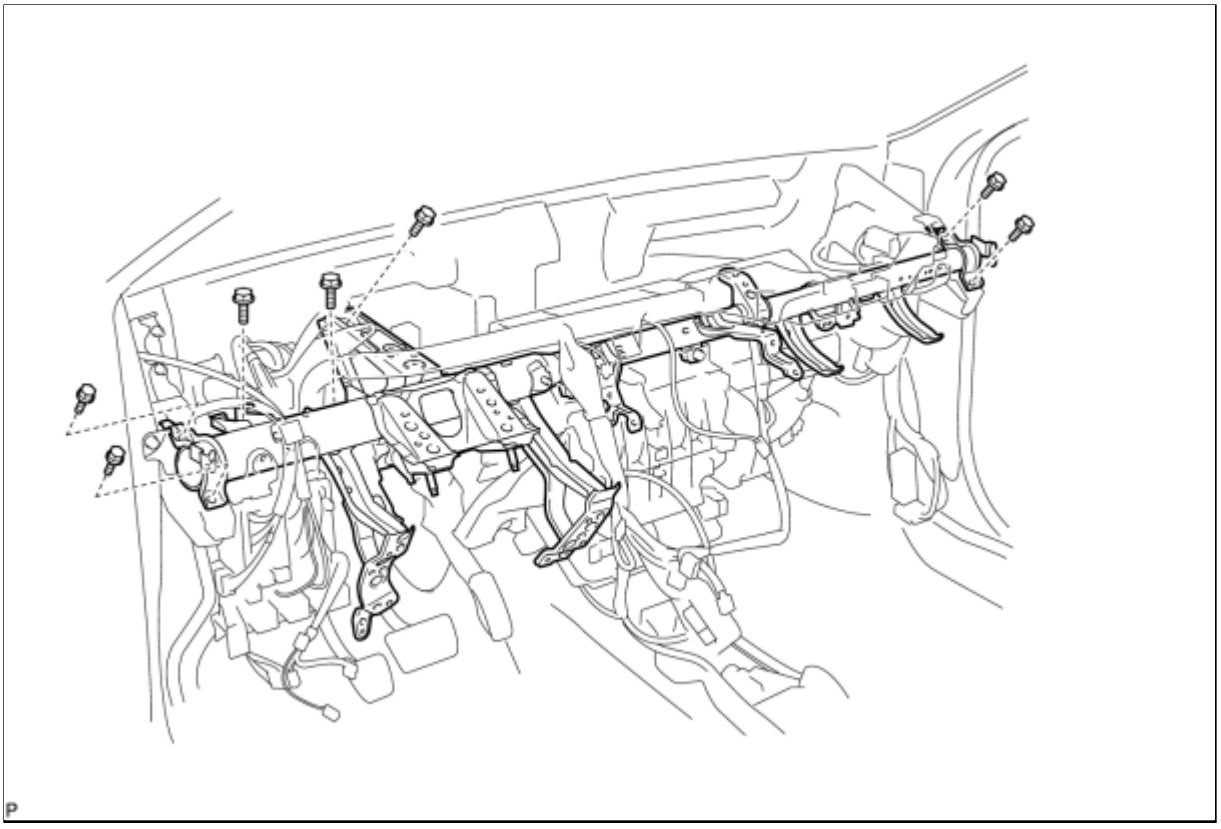

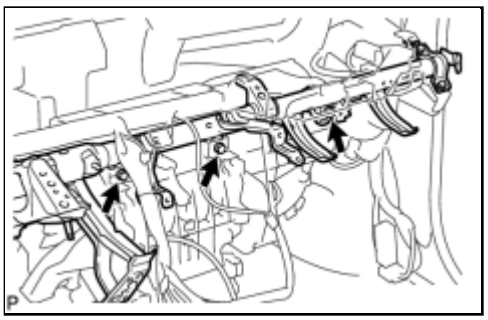

(g) Remove the 3 bolts and the instrument panel reinforcement assembly.

93. REMOVE AIR CONDITIONING UNIT

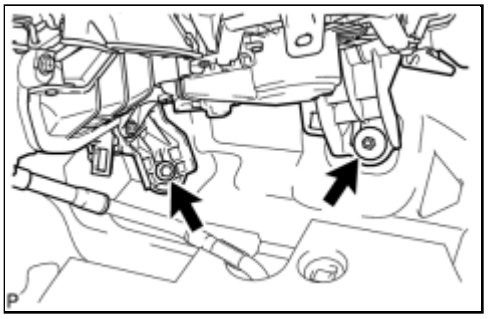

(a) Remove the bolt, the nut, and the air conditioning unit.

NOTICE:

- Be sure to support the air conditioning unit assembly when removing it because failure to do so may cause the bracket of the air conditioning unit assembly to break.
- When disassembling the air conditioning unit, eliminate static electricity by touching the vehicle body to prevent the components from being damaged.

94. REMOVE NO. 2 AIR DUCT SUB-ASSEMBLY

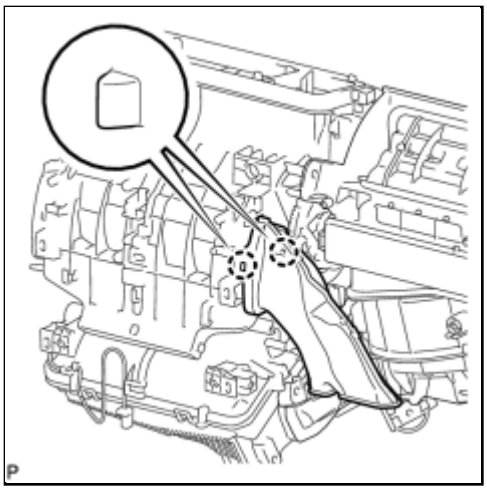

(a) Disengage the 2 claws and remove the No. 2 air duct sub-assembly.

95. REMOVE BLOWER ASSEMBLY (w/o PTC Heater)

(a) for Automatic Air Conditioning System:

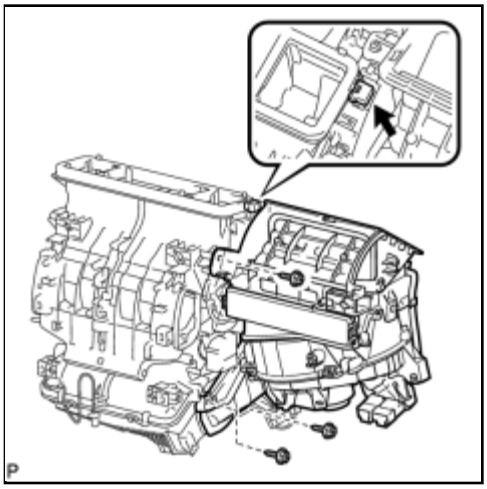

(1) Disconnect the connector.

(b) Remove the 3 screws and the blower assembly.

96. REMOVE BLOWER ASSEMBLY (w/ PTC Heater)

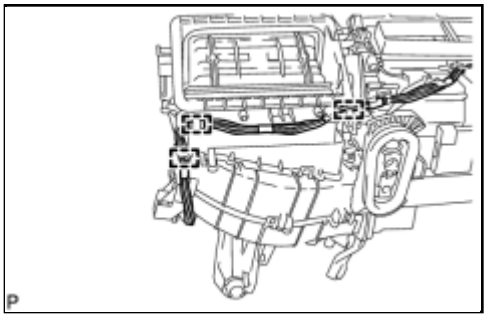

(a) Disengage each clamp.

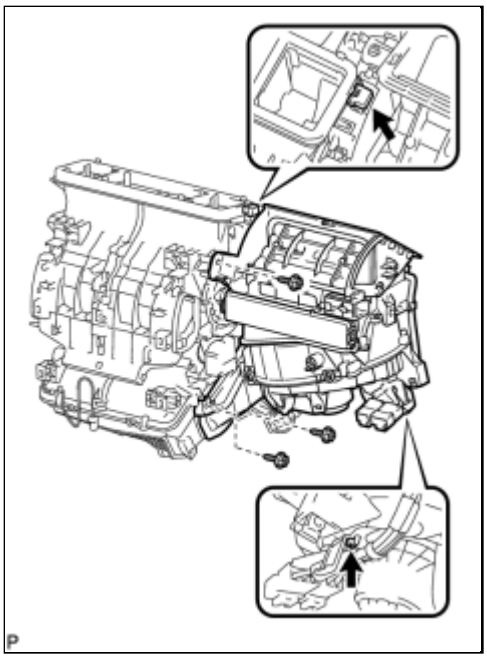

(b) Remove the screw and disengage the quick heater connector.

(c) for Automatic Air Conditioning System:

(1) Disconnect the connector.

(d) Remove the 3 screws and the blower assembly.

Last Modified: 3-10-2010	6.4 J	**From:** 200901
Model Year: 2010	**Model:** Corolla	**Doc ID:** RM000002Y1L00KX
Title: HEATING / AIR CONDITIONING: AIR CONDITIONING SYSTEM (for Manual Air Conditioning System): Headlight Signal Circuit (2010 Corolla)		

Headlight Signal Circuit

DESCRIPTION

The A/C amplifier receives headlight operational signals to determine the electrical load. The electrical load signals are used for controlling the number of the PTC heater elements to be heated.

WIRING DIAGRAM

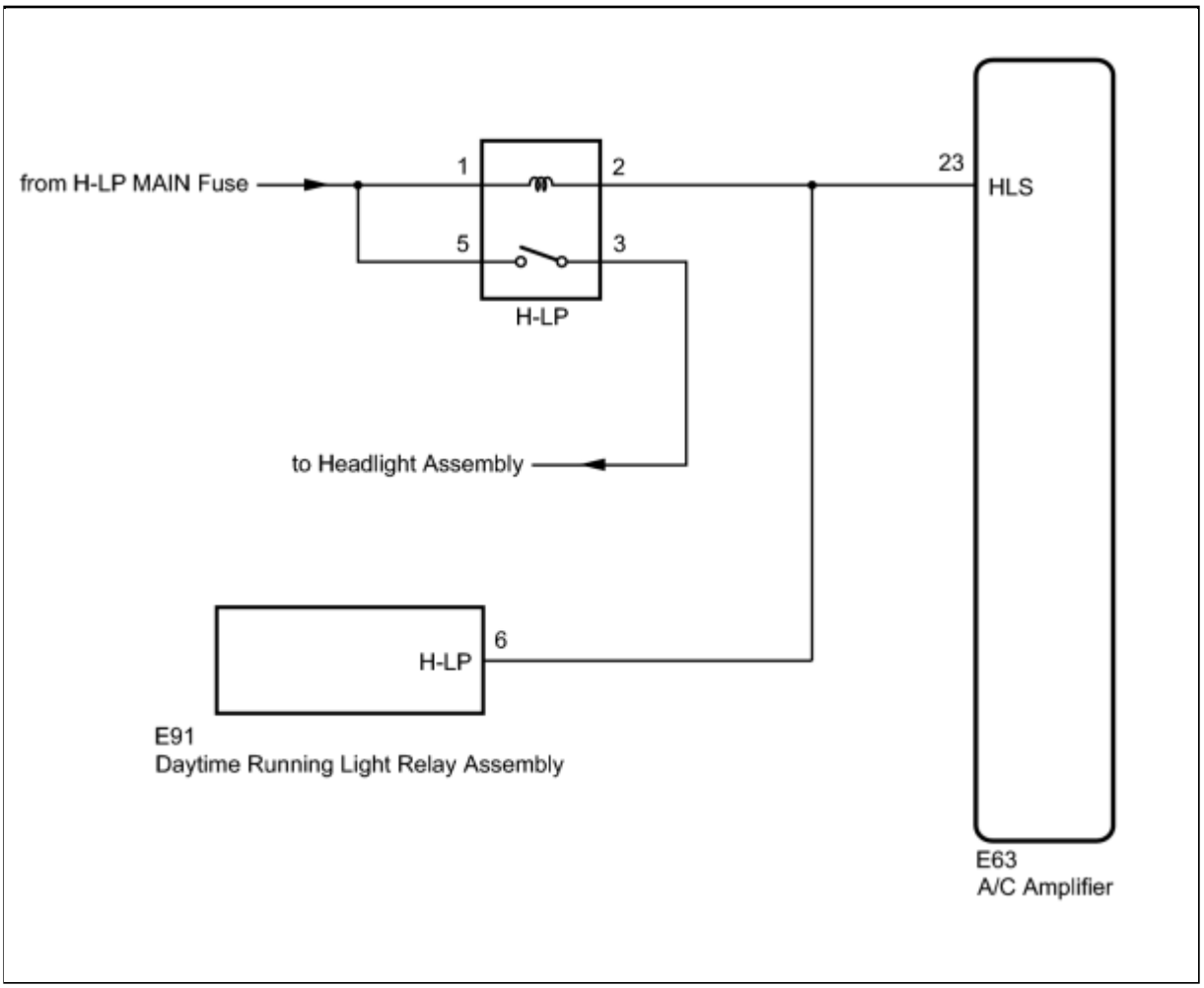

INSPECTION PROCEDURE

PROCEDURE

1.	INSPECT HEADLIGHT ASSEMBLY

(a) Check if the headlights come on when the light control switch is turned to the HEAD position.

OK:

The headlights come on.

NG ▶ GO TO LIGHTING SYSTEM

OK ▼

2.	CHECK HARNESS AND CONNECTOR (HEADLIGHT SIGNAL)

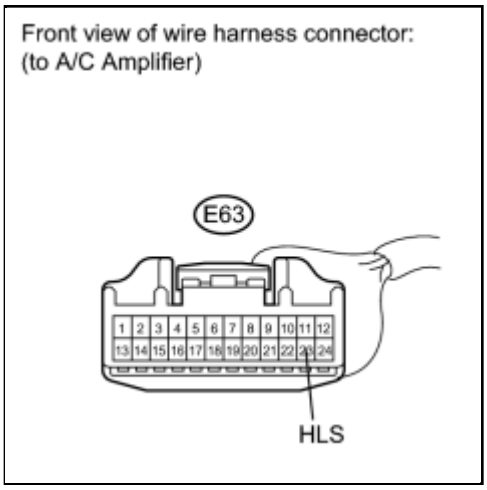

(a) Disconnect the connector from the A/C amplifier.

(b) Measure the voltage according to the value(s) in the table below.

Standard Voltage:

TESTER CONNECTION	CONDITION	SPECIFIED CONDITION
E63-23 (HLS) - Body ground	Light control switch: OFF	11 to 14 V
E63-23 (HLS) - Body ground	Light control switch: HEAD	Below 1 V

NG ▶ REPAIR OR REPLACE HARNESS OR CONNECTOR

OK ▶ PROCEED TO NEXT CIRCUIT INSPECTION SHOWN IN PROBLEM SYMPTOMS TABLE

Last Modified: 3-10-2010	6.4 J	**From:** 200901
Model Year: 2010	**Model:** Corolla	**Doc ID:** RM000002Y8100KX
Title: HEATING / AIR CONDITIONING: AIR CONDITIONING SYSTEM (for Manual Air Conditioning System): Generator Signal Circuit (2010 Corolla)		

Generator Signal Circuit

DESCRIPTION

When the engine is started, the generator rotates and a pulsed voltage signal is generated. This signal is used by the A/C amplifier. The generated voltage signals sent from the generator are used for controlling the number of the heater elements to be heated.

WIRING DIAGRAM

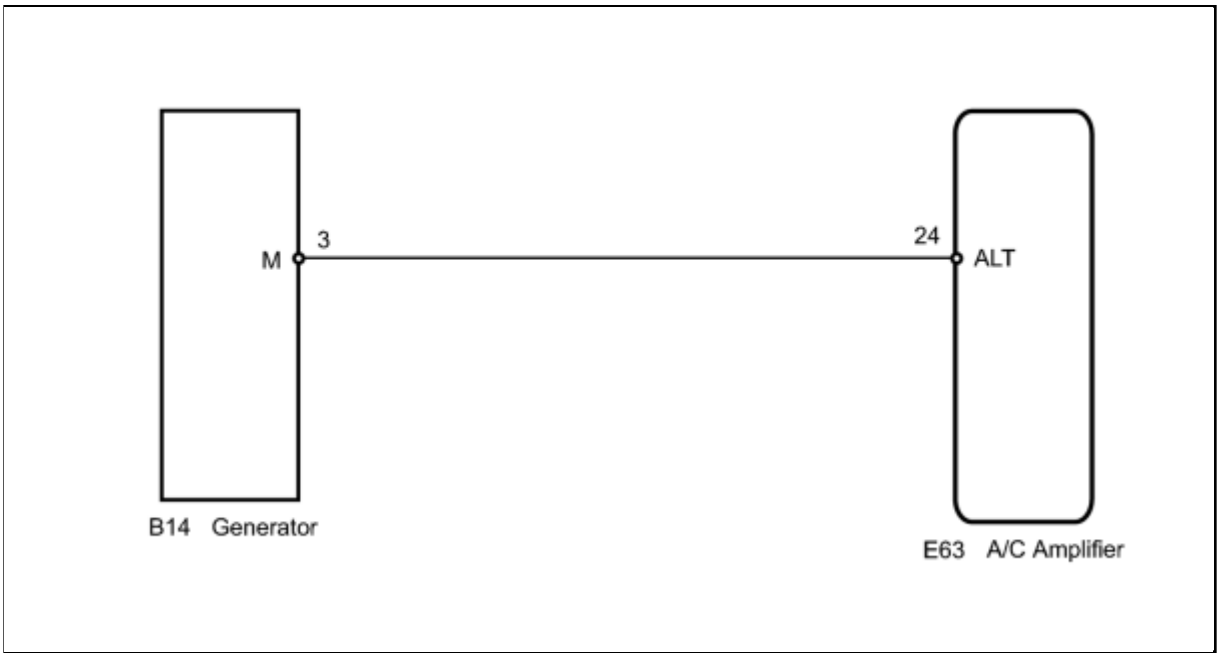

INSPECTION PROCEDURE

PROCEDURE

1.	**CHECK HARNESS AND CONNECTOR (A/C AMPLIFIER - GENERATOR)**

(a) Disconnect the connector from the A/C amplifier.

(b) Disconnect the connector from the generator.

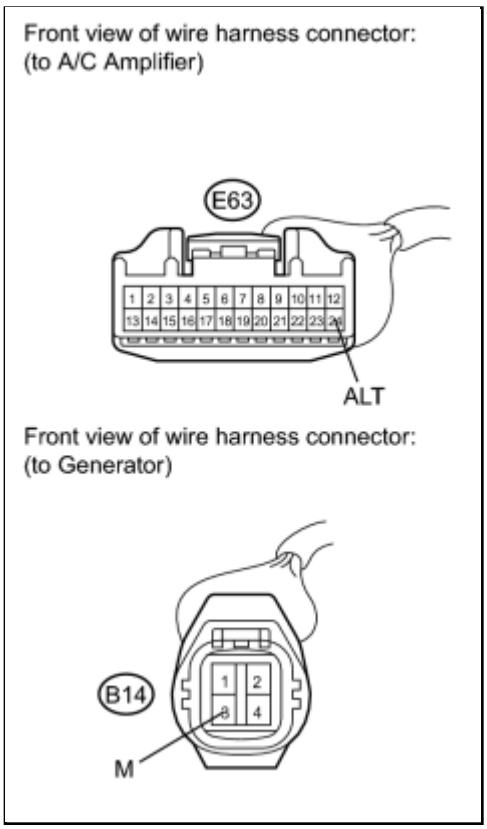

(c) Measure the resistance according to the value(s) in the table below.

Standard Resistance:

TESTER CONNECTION	CONDITION	SPECIFIED CONDITION
E63-24 (ALT) - B14-3 (M)	Always	Below 1 Ω
E63-24 (ALT) - Body ground	Always	10 kΩ or higher

NG ▶ **REPAIR OR REPLACE HARNESS OR CONNECTOR**

OK ▼

2.	**INSPECT GENERATOR**

(a) Inspect the generator.

(1) for 2AZ-FE:

Inspect the generator INFO for On-vehicle Inspection, INFO for Inspection).

(2) for 2ZR-FE:

Inspect the generator INFO for On-vehicle Inspection, INFO for Inspection).

Result:

RESULT	PROCEED TO
OK	A
NG (for 2AZ-FE)	B
NG (for 2ZR-FE)	C

C ▶ **REPLACE GENERATOR (for 2ZR-FE)**

B ▶ **REPLACE GENERATOR (for 2AZ-FE)**

A ▶ **PROCEED TO NEXT CIRCUIT INSPECTION SHOWN IN PROBLEM SYMPTOMS TABLE**

Last Modified: 3-10-2010	6.4 A	**From:** 200901
Model Year: 2010	**Model:** Corolla	**Doc ID:** RM000001HLU0AAX
Title: HEATING / AIR CONDITIONING: AIR CONDITIONING UNIT: INSTALLATION (2010 Corolla)		

INSTALLATION

1. INSTALL BLOWER ASSEMBLY (w/o PTC Heater)

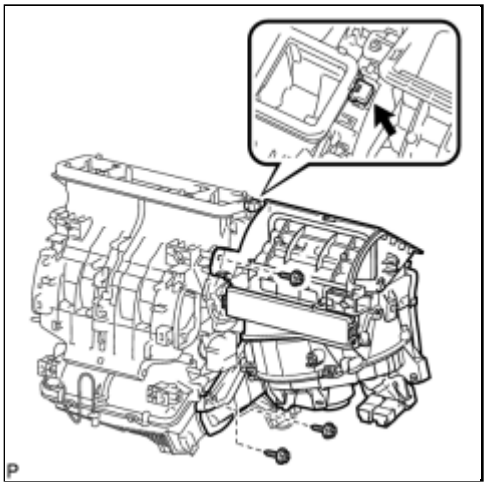

(a) Install the blower assembly with the 3 screws.

(b) for Automatic Air Conditioning System:

(1) Connect the connector.

2. INSTALL BLOWER ASSEMBLY (w/ PTC Heater)

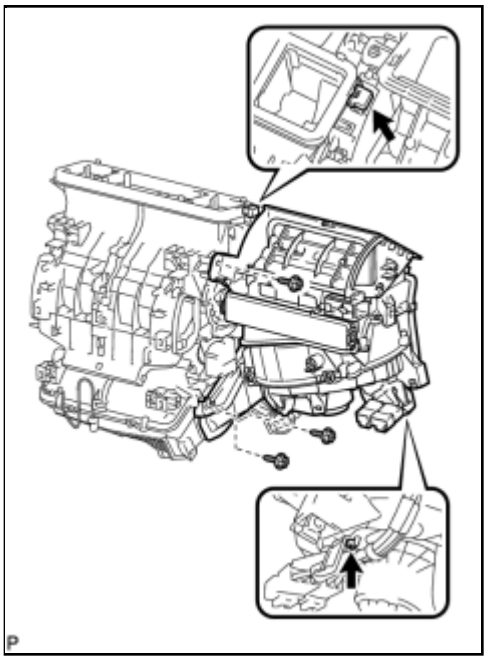

(a) Install the blower assembly with the 3 screws.

(b) Engage the quick heater connector and install the screw.

(c) for Automatic Air Conditioning System:

(1) Connect the connector.

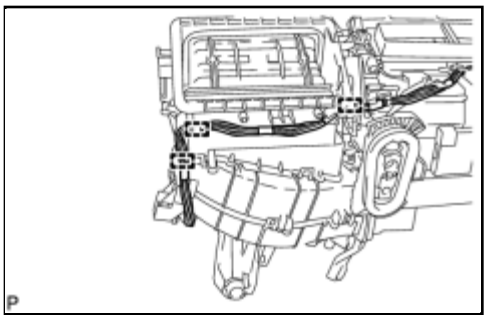

(d) Engage each clamp.

3. INSTALL NO. 2 AIR DUCT SUB-ASSEMBLY

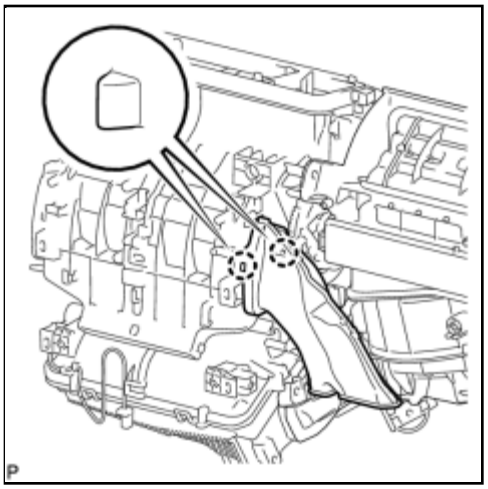

(a) Engage the 2 claws and install the No. 2 air duct sub-assembly.

4. TEMPORARILY TIGHTEN AIR CONDITIONING UNIT

(a) Temporarily tighten the air conditioning unit with the bolt and the nut.

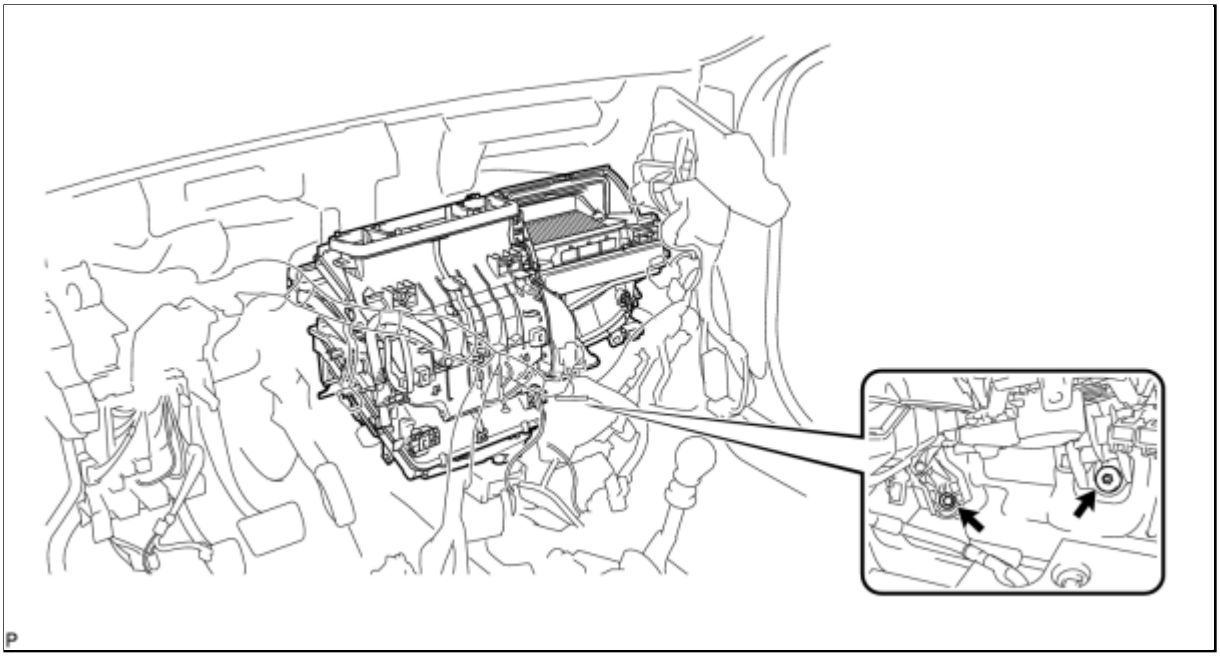

NOTICE:

- Be sure to support the air conditioning unit assembly when removing it because failure to do so may cause the bracket of the air conditioning unit assembly to break.
- When installing the air conditioning unit, eliminate static electricity by touching the vehicle body to prevent the components from being damaged.

5. INSTALL INSTRUMENT PANEL REINFORCEMENT ASSEMBLY (for Manual Air Conditioning System)

(a) Install the instrument panel reinforcement assembly with the 7 bolts.

<A> - Torque: 24 N·m (245 kgf·cm, 18ft·lbf)

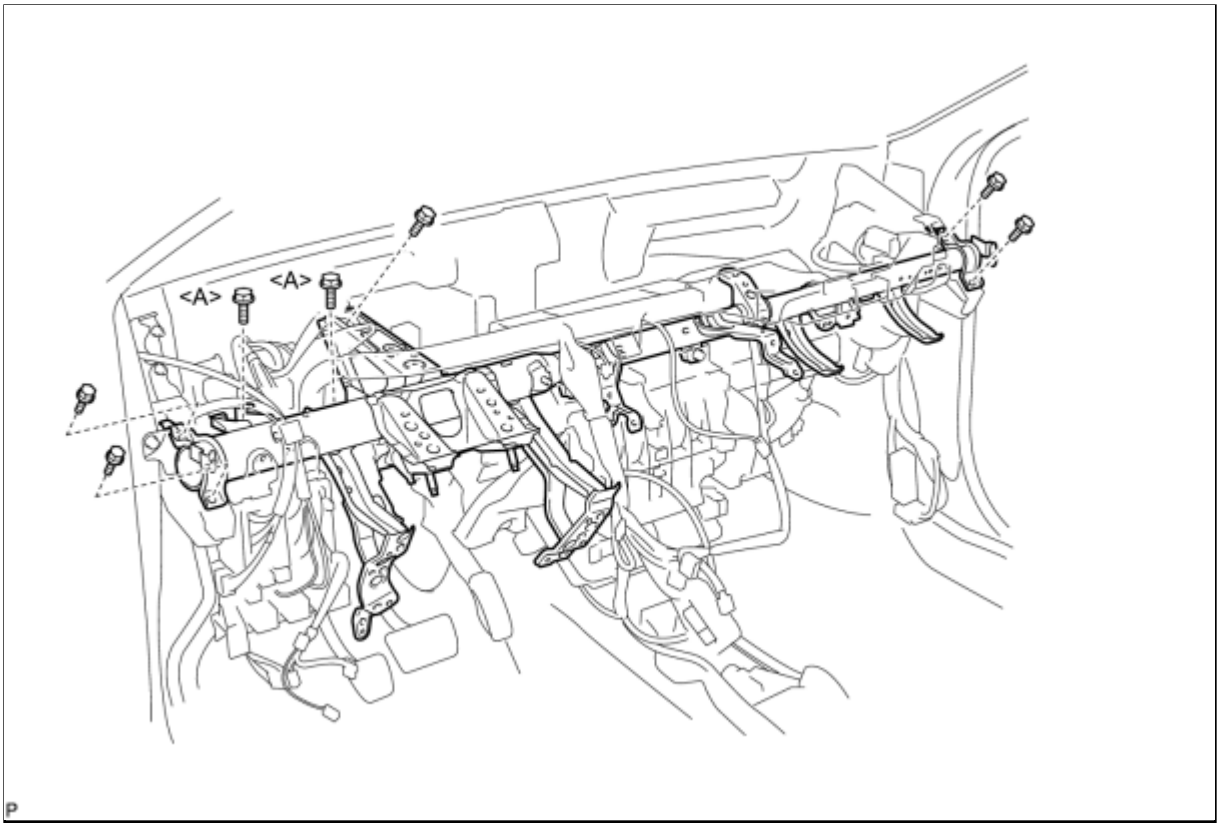

(b) Connect each connector.

(c) Engage each clamp.

(d) Engage the wire harness and junction block with the 12 bolts.

<A> - Torque: 8.4 N·m (86 kgf·cm, 74in·lbf)

(e) Engage the cooler drain hose.

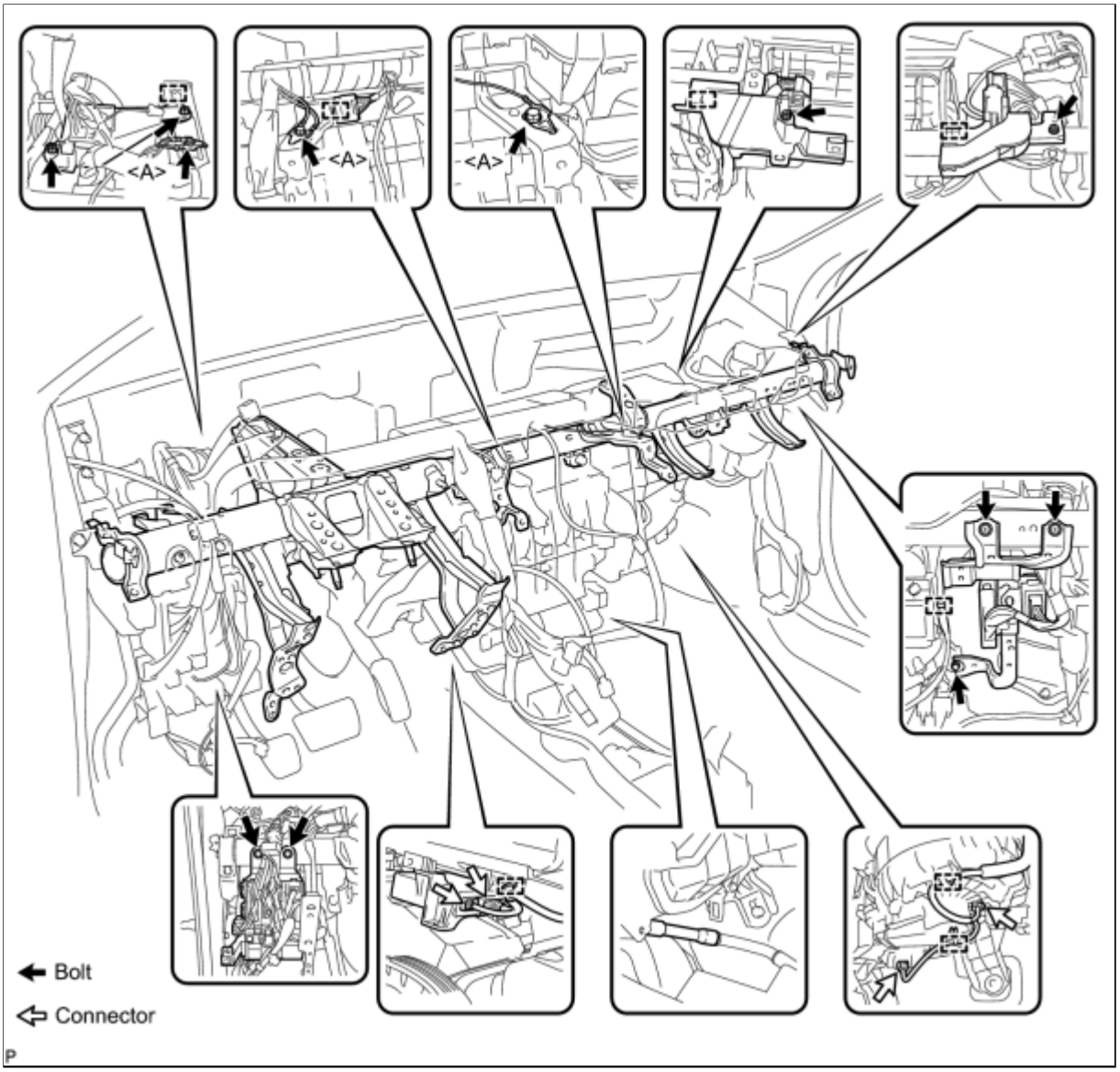

(f) Engage each clamp and the wire harness.

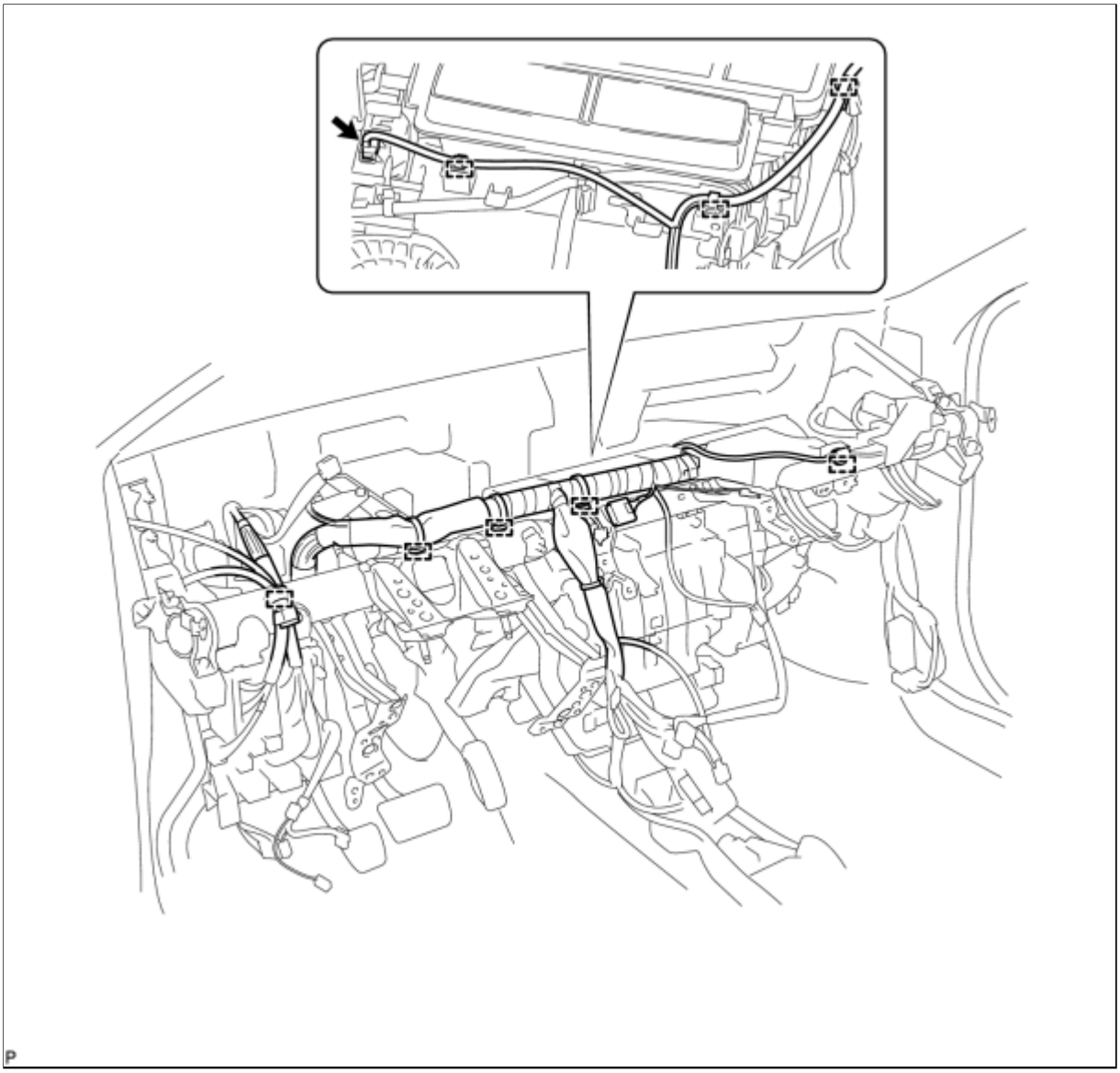

6. INSTALL INSTRUMENT PANEL REINFORCEMENT ASSEMBLY (for Automatic Air Conditioning System)

(a) Install the instrument panel reinforcement assembly with the 7 bolts.

<A> - Torque: 24 N·m (245 kgf·cm, 18ft·lbf)

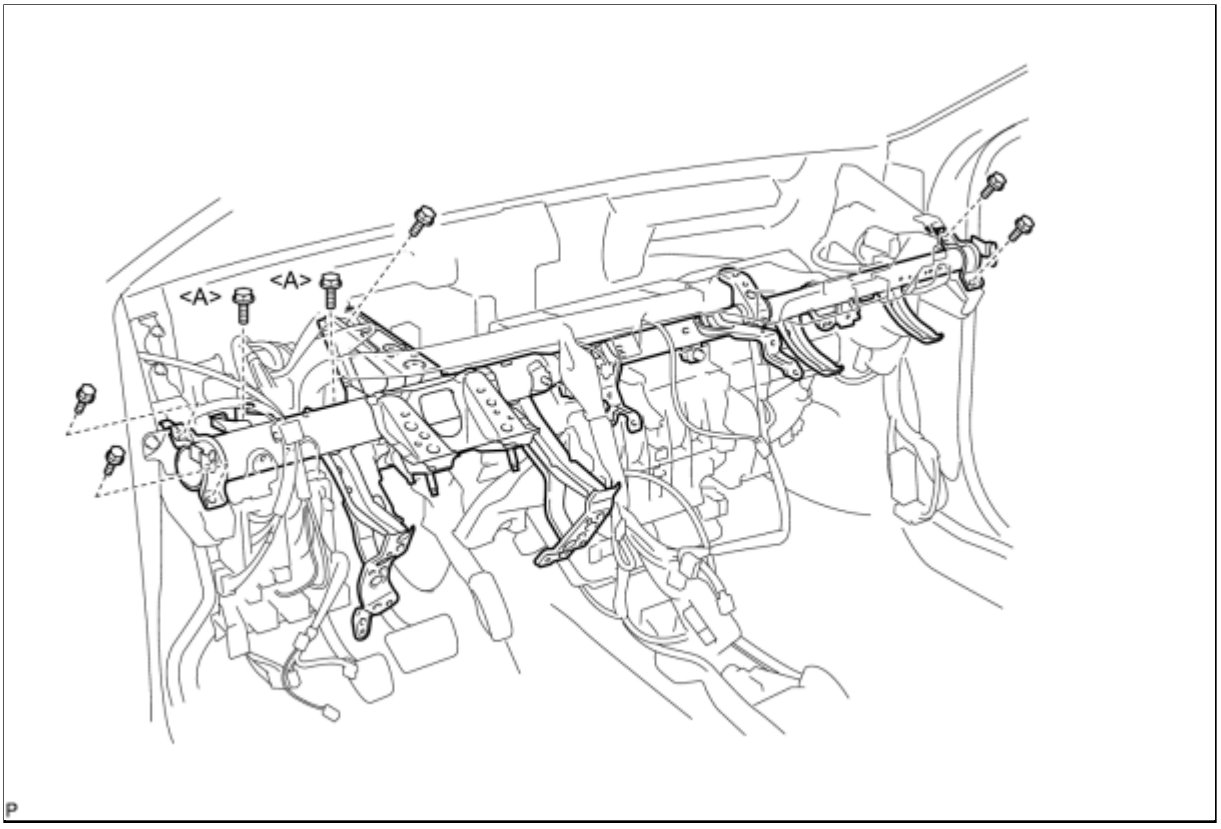

(b) Connect each connector.

(c) Engage each clamp.

(d) Engage the wire harness and junction block with the 12 bolts.

<A> - Torque: 8.4 N·m (86 kgf·cm, 74in·lbf)

(e) Engage the cooler drain hose.

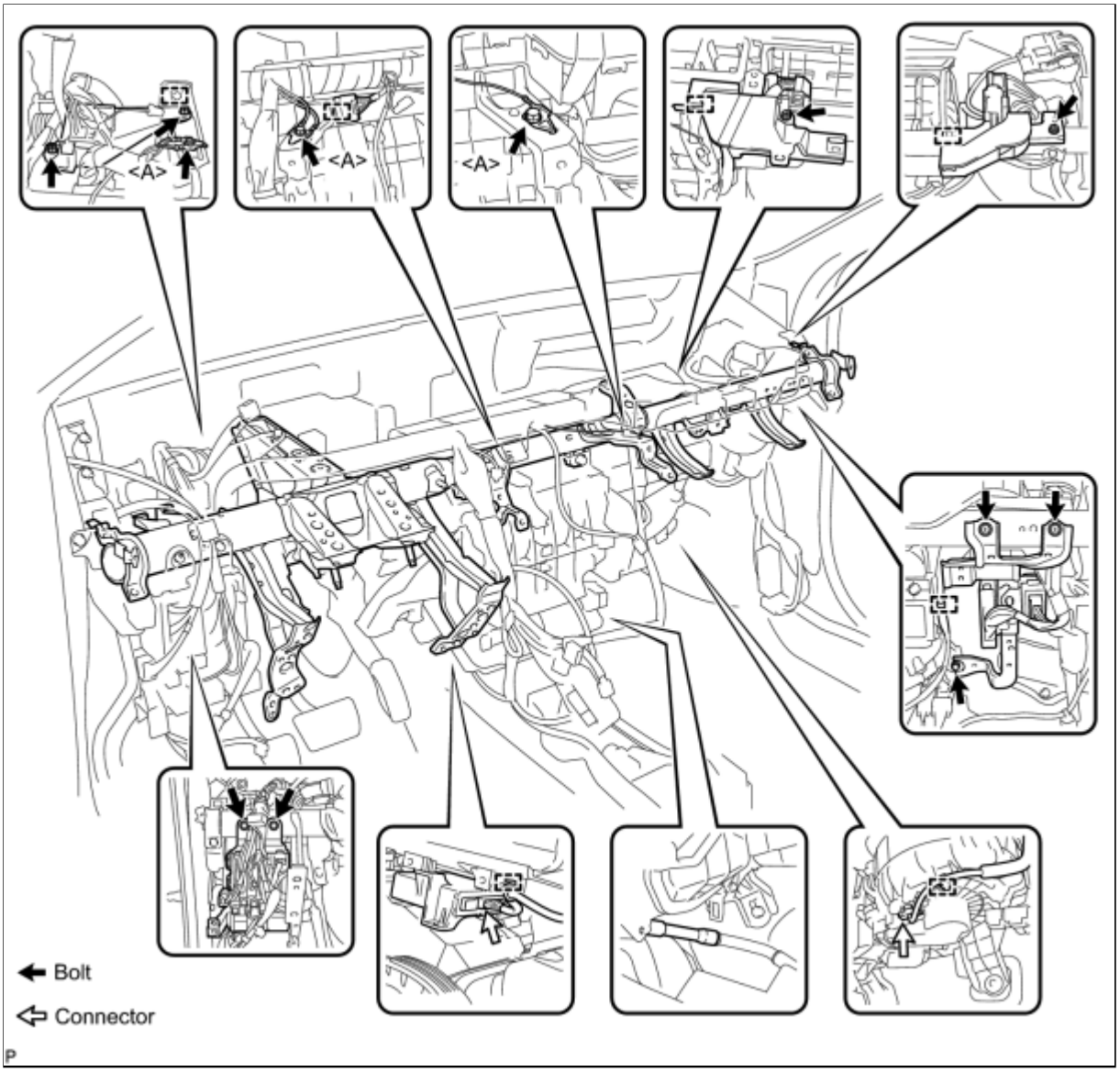

(f) Engage each clamp and the wire harness.

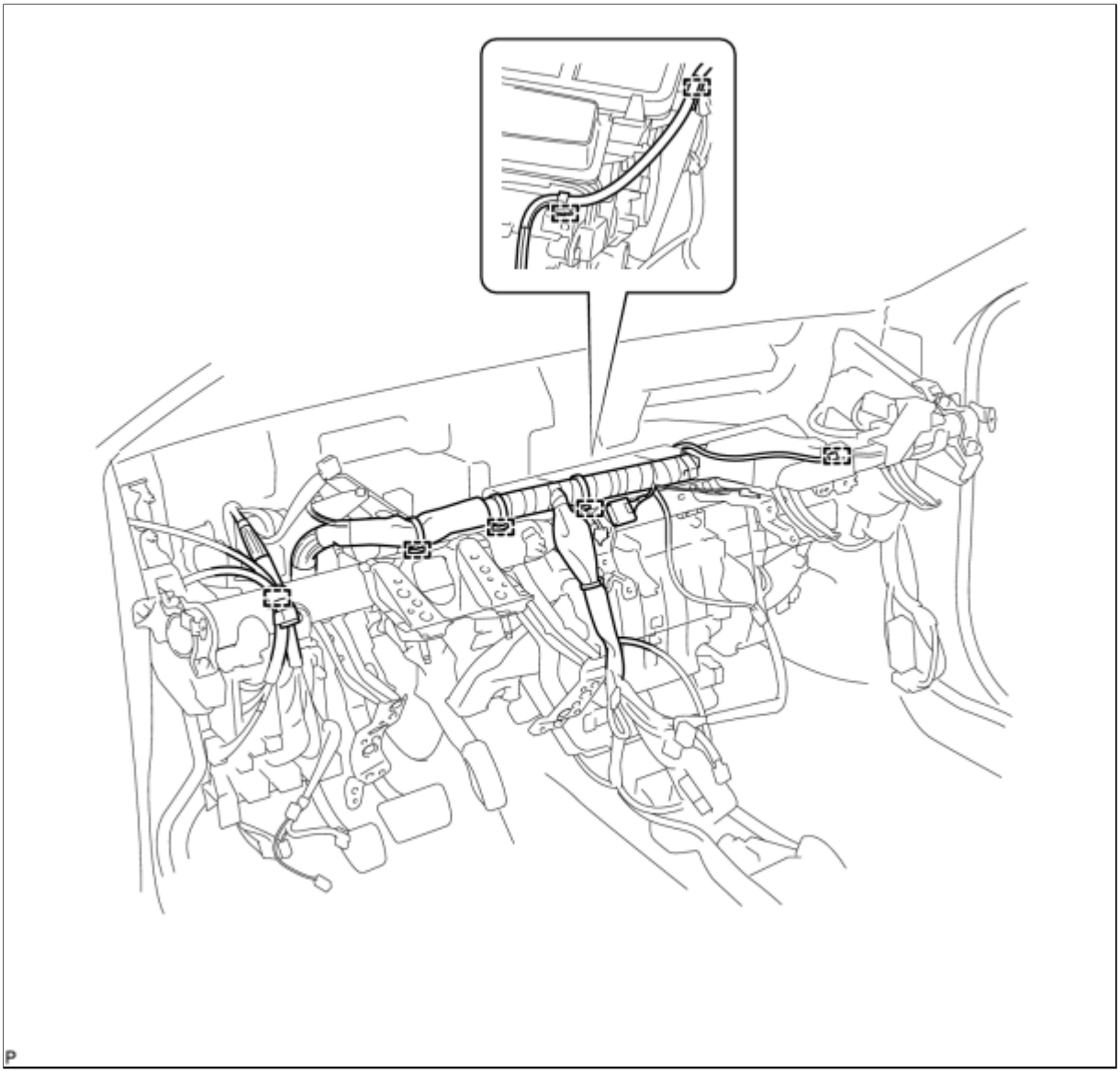

7. INSTALL AIR CONDITIONING UNIT

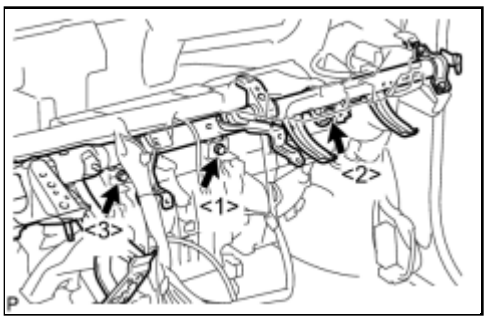

(a) Install the 3 bolts.

Torque: 9.8 N·m (100 kgf·cm, 87in·lbf)

HINT:

Tighten the bolts in the order shown in the illustration.

(b) Install the bolt.

Torque: 9.8 N·m (100 kgf·cm, 87in·lbf)

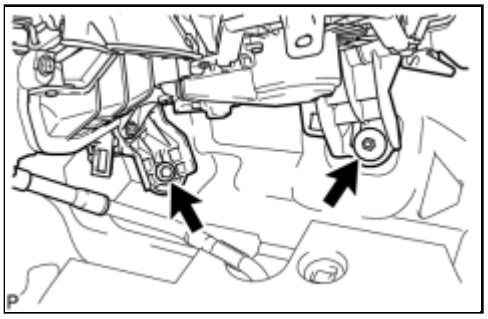

(c) Install the air conditioning unit with the nut.

Torque: 9.8 N·m (100 kgf·cm, 87in·lbf)

8. INSTALL HEATER COVER (w/ Cover)

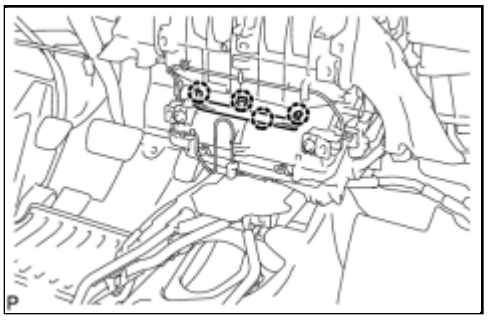

(a) Engage the 4 claws and install the heater cover.

9. REMOVE REAR NO. 1 AIR DUCT (w/ Rear Air Duct)

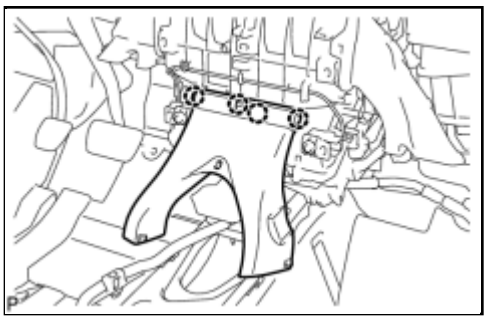

(a) Engage the 4 claws and install the rear No. 1 air duct.

10. INSTALL NO. 2 INSTRUMENT PANEL BRACE SUB-ASSEMBLY

(a) Install the No. 2 instrument panel brace sub-assembly with the bolt, screw and the nut.

Screw - Torque: 9.8 N·m (100 kgf·cm, 87in·lbf)

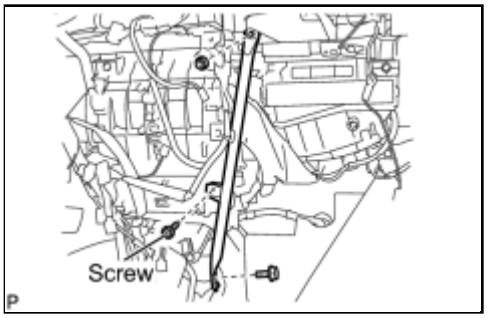

(b) for TMC Made:

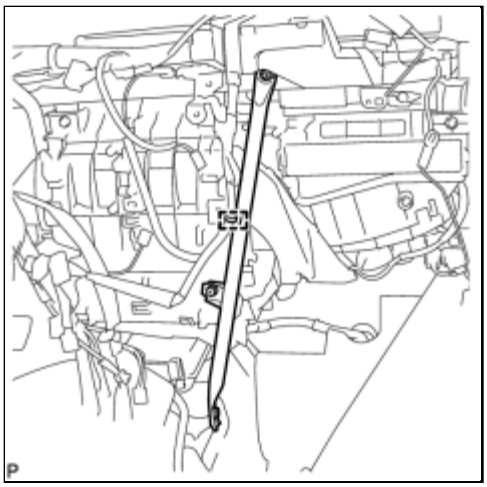

(1) Engage the clamp.

(c) for TMMC, NUMMI Made:

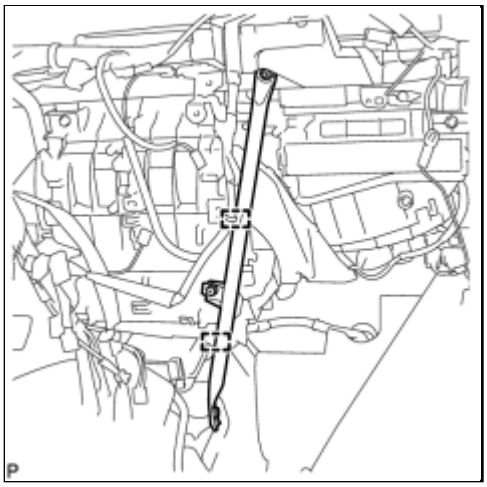

(1) Engage each clamp.

11. INSTALL NO. 1 INSTRUMENT PANEL BRACE SUB-ASSEMBLY (for Manual Air Conditioning System)

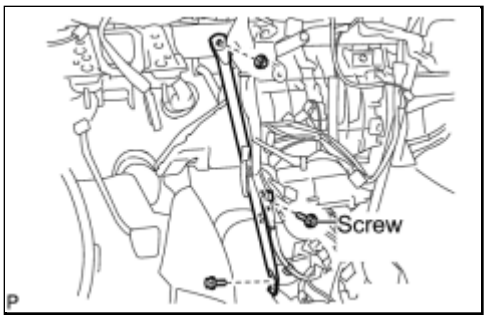

(a) Install the No. 1 instrument panel brace sub-assembly with the bolt, screw and the nut.

Screw - Torque: 9.8 N·m (100 kgf·cm, 87in·lbf)

(b) for TMC Made:



(1) Engage each clamp.

(2) Connect the connector.

(c) for TMMC, NUMMI Made:



(1) Engage each clamp.

(2) Connect the connector.

12. INSTALL NO. 1 INSTRUMENT PANEL BRACE SUB-ASSEMBLY (for Automatic Air Conditioning System)

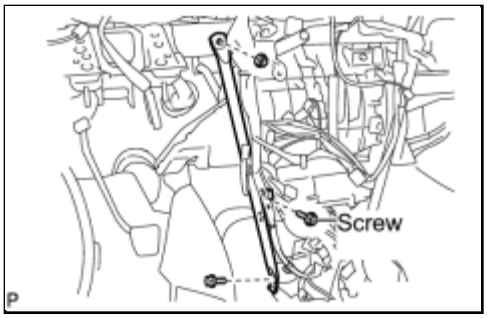

(a) Install the No. 1 instrument panel brace sub-assembly with the bolt, screw and the nut.

Screw - Torque: 9.8 N·m (100 kgf·cm, 87in·lbf)

(b) for TMC Made:



(1) Engage each clamp.

(c) for TMMC, NUMMI Made:



(1) Engage each clamp.

13. INSTALL REAR NO. 3 AIR DUCT (w/ Rear Air Duct)

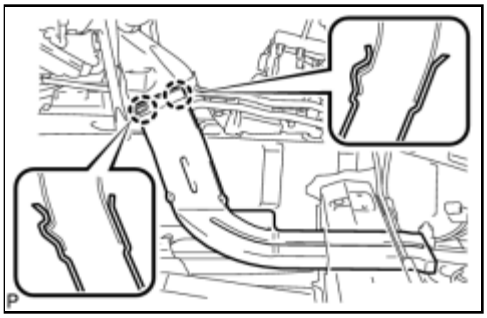

(a) Engage the 2 claws to install the rear No. 3 air duct.

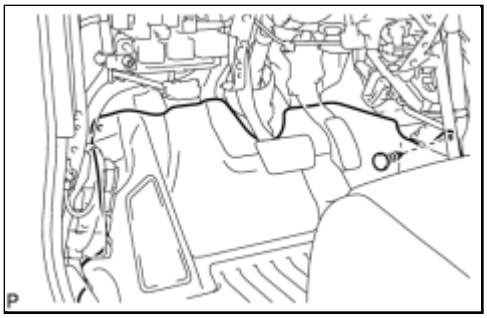

(b) Engage the clip and install the floor carpet.

14. INSTALL REAR NO. 2 AIR DUCT (w/ Rear Air Duct)

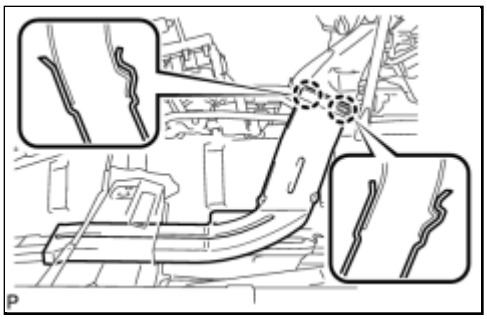

(a) Engage the 2 claws to install the rear No. 2 air duct.

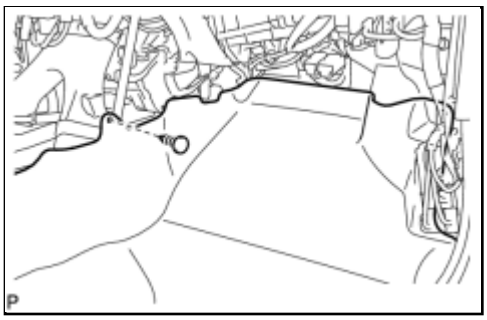

(b) Engage the clip and install the floor carpet.

15. INSTALL CENTER INSTRUMENT PANEL TO COWL BRACE

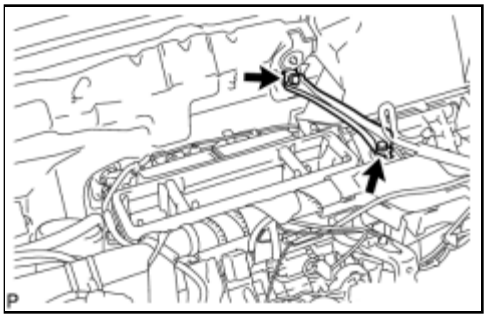

(a) Install the center instrument panel to cowl brace with the 2 bolts.

16. INSTALL LOWER DEFROSTER NOZZLE ASSEMBLY

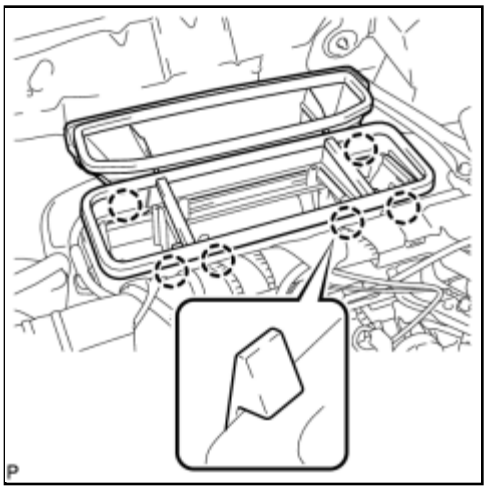

(a) Engage the 6 claws and install the lower defroster nozzle assembly.

17. INSTALL NO. 1 AIR DUCT SUB-ASSEMBLY

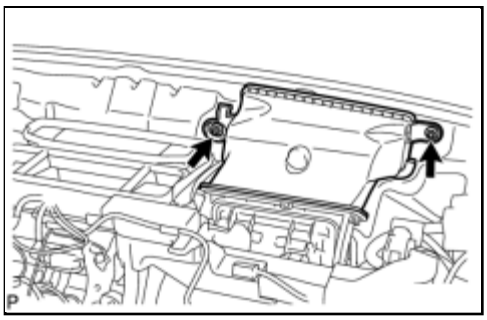

(a) Install the No. 1 air duct sub-assembly with the 2 nuts.

Torque: 9.8 N·m (100 kgf·cm, 87in·lbf)

18. INSTALL SMART KEY ECU ASSEMBLY (w/ Smart Key System) INFO

19. INSTALL LOWER INSTRUMENT PANEL SUB-ASSEMBLY INFO

20. INSTALL NO. 2 ANTENNA CORD SUB-ASSEMBLY INFO

21. INSTALL CONSOLE BOX ASSEMBLY (for Manual Transaxle) INFO

22. INSTALL CONSOLE BOX ASSEMBLY (for Automatic Transaxle) INFO

23. INSTALL CONSOLE BOX CARPET INFO

24. INSTALL UPPER CONSOLE PANEL SUB-ASSEMBLY INFO

25. INSTALL NO. 1 SWITCH HOLE BASE (w/o Smart Key System) INFO

26. INSTALL NO. 1 SWITCH HOLE BASE (w/ Smart Key System) INFO

27. INSTALL FRONT NO. 1 CONSOLE BOX INSERT INFO

28. INSTALL COWL SIDE TRIM BOARD LH INFO

29. INSTALL FRONT DOOR SCUFF PLATE LH INFO

30. INSTALL FRONT NO. 2 CONSOLE BOX INSERT INFO

31. INSTALL NO. 2 INSTRUMENT PANEL UNDER COVER SUB-ASSEMBLY (w/ Instrument Panel Under Cover) INFO

32. INSTALL COWL SIDE TRIM BOARD RH INFO

33. INSTALL FRONT DOOR SCUFF PLATE RH INFO

34. INSTALL AIR CONDITIONING PANEL ASSEMBLY (for Manual Air Conditioning System) INFO

35. INSTALL AIR CONDITIONING CONTROL ASSEMBLY (for Automatic Air Conditioning System) INFO

36. INSTALL INSTRUMENT PANEL HOLE COVER INFO

37. INSTALL INSTRUMENT PANEL BOX ASSEMBLY INFO

38. INSTALL CENTER NO. 1 INSTRUMENT CLUSTER FINISH PANEL ASSEMBLY (for Manual Transaxle) INFO

39. INSTALL CENTER NO. 1 INSTRUMENT CLUSTER FINISH PANEL ASSEMBLY (for Automatic Transaxle) INFO

40. INSTALL SHIFT LEVER KNOB SUB-ASSEMBLY (for Manual Transaxle) INFO

41. INSTALL SHIFT LEVER KNOB SUB-ASSEMBLY (for Automatic Transaxle) INFO

42. INSTALL RADIO RECEIVER WITH BRACKET (w/o Navigation System) INFO

43. INSTALL CENTER INSTRUMENT CLUSTER FINISH PANEL SUB-ASSEMBLY (w/ Navigation System) INFO

44. INSTALL NAVIGATION RECEIVER WITH BRACKET (w/ Navigation System) INFO

45. INSTALL STEERING POST ASSEMBLY (for 2ZR-FE) INFO

46. INSTALL STEERING POST ASSEMBLY (for 2AZ-FE) INFO

47. TURN FRONT WHEELS FACING STRAIGHT AHEAD

48. CONNECT NO. 2 STEERING INTERMEDIATE SHAFT ASSEMBLY INFO

49. INSTALL STOP LIGHT SWITCH ASSEMBLY INFO

50. INSTALL NO. 3 AIR DUCT SUB-ASSEMBLY INFO

51. INSTALL INSTRUMENT PANEL SUB REINFORCEMENT INFO

52. INSTALL COLUMN HOLE COVER SILENCER SHEET INFO

53. INSTALL TRANSPONDER KEY AMPLIFIER (w/o Smart Key System) INFO

54. INSTALL TURN SIGNAL SWITCH ASSEMBLY WITH SPIRAL CABLE SUB-ASSEMBLY INFO

55. INSTALL UPPER STEERING COLUMN COVER INFO

56. INSTALL LOWER STEERING COLUMN COVER INFO

57. TURN FRONT WHEELS FACING STRAIGHT AHEAD

58. ADJUST SPIRAL CABLE INFO

59. INSTALL STEERING WHEEL ASSEMBLY INFO

60. INSTALL STEERING PAD INFO

61. INSTALL LOWER NO. 3 STEERING WHEEL COVER INFO

62. INSTALL LOWER NO. 2 STEERING WHEEL COVER INFO

63. INSPECT STEERING WHEEL CENTER POINT

64. INSTALL LOWER INSTRUMENT PANEL FINISH PANEL SUB-ASSEMBLY INFO

65. INSTALL POWER STEERING ECU ASSEMBLY (for 2ZR-FE) INFO

66. INSTALL POWER STEERING ECU ASSEMBLY (for 2AZ-FE) INFO

67. INSTALL UPPER INSTRUMENT PANEL SUB-ASSEMBLY INFO

68. CONNECT INSTRUMENT PANEL WIRE ASSEMBLY INFO

69. CONNECT FRONT DOOR OPENING TRIM WEATHERSTRIP LH INFO

70. INSTALL LOWER INSTRUMENT PANEL FINISH PANEL ASSEMBLY INFO

71. CONNECT FRONT DOOR OPENING TRIM WEATHERSTRIP RH INFO

72. INSTALL NO. 1 INSTRUMENT PANEL BOX DOOR SUB-ASSEMBLY INFO

73. INSTALL GLOVE COMPARTMENT DOOR ASSEMBLY INFO

74. INSTALL FRONT PILLAR GARNISH LH (w/ Curtain Shield Airbag) INFO

75. INSTALL FRONT PILLAR GARNISH LH (w/o Curtain Shield Airbag) INFO

76. INSTALL FRONT PILLAR GARNISH RH (w/ Curtain Shield Airbag) INFO

77. INSTALL FRONT PILLAR GARNISH RH (w/o Curtain Shield Airbag) INFO

78. INSTALL COMBINATION METER ASSEMBLY INFO

79. INSTALL INSTRUMENT CLUSTER FINISH PANEL ASSEMBLY INFO

80. INSTALL CENTER INSTRUMENT PANEL REGISTER ASSEMBLY INFO

81. INSTALL INSTRUMENT PANEL FINISH PANEL END LH INFO

82. INSTALL INSTRUMENT PANEL FINISH PANEL END RH INFO

83. INSTALL LOWER INSTRUMENT PANEL FINISH PANEL LH INFO

84. INSTALL LOWER INSTRUMENT PANEL FINISH PANEL RH INFO

85. INSTALL HEATER WATER HOSE OUTLET

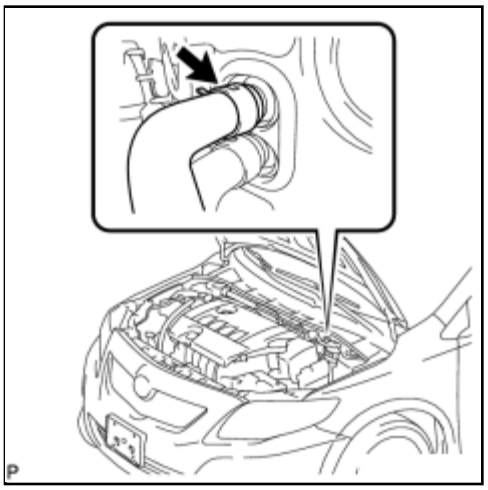

(a) Install the water hose and attach the clip.

86. INSTALL HEATER WATER HOSE INLET

HINT:

Use the same procedure described for the heater outlet water hose.

87. INSTALL AIR CONDITIONING TUBE ASSEMBLY

(a) Remove the attached vinyl tape from the tube.

(b) Sufficiently apply compressor oil to a new O-ring and the fitting surface of the air conditioning tube assembly.

Compressor oil:
ND-OIL 8 or equivalent

(c) Install the O-ring on the air conditioning tube assembly.

(d) Install the air conditioning tube assembly.

88. INSTALL SUCTION PIPE SUB-ASSEMBLY

(a) Remove the attached vinyl tape from the hose.

(b) Sufficiently apply compressor oil to a new O-ring and the fitting surface of the suction hose sub-assembly.

Compressor oil:
ND-OIL 8 or equivalent

(c) Install the O-ring on the suction hose sub-assembly.

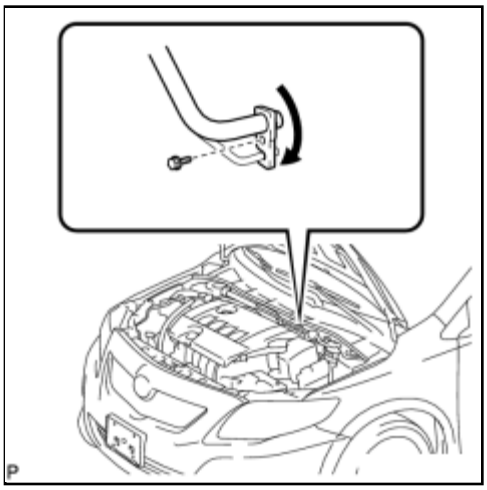

(d) Move the hook connector in the direction indicated by the arrow in the illustration.

(e) Insert the pipe joint into the fitting hole securely and tighten the bolt.

Torque: 9.8 N·m (100 kgf·cm, 87in·lbf)

89. INSTALL OUTER COWL TOP PANEL (for TMC Made) INFO

90. INSTALL OUTER COWL TOP PANEL (except TMC Made) INFO

91. INSTALL WINDSHIELD WIPER MOTOR AND LINK ASSEMBLY INFO

92. INSTALL COWL TOP VENTILATOR LOUVER LH INFO

93. INSTALL CENTER NO. 1 COWL TOP VENTILATOR LOUVER INFO

94. INSTALL HOOD TO COWL TOP SEAL INFO

95. INSTALL FRONT WIPER ARM AND BLADE ASSEMBLY RH INFO

96. INSTALL FRONT WIPER ARM AND BLADE ASSEMBLY LH INFO

97. INSTALL FRONT WIPER ARM HEAD CAP INFO

98. CHARGE WITH REFRIGERANT INFO

99. ADD ENGINE COOLANT (for 2ZR-FE) INFO

100. ADD ENGINE COOLANT (for 2AZ-FE) INFO

101. CONNECT CABLE TO NEGATIVE BATTERY TERMINAL

102. INSPECT FOR COOLANT LEAK (for 2ZR-FE) INFO

103. INSPECT FOR COOLANT LEAK (for 2AZ-FE) INFO

104. INSPECT STEERING PAD INFO

105. INSPECT SRS WARNING LIGHT

INFO

106. WARM UP ENGINE INFO

107. INSPECT FOR REFRIGERANT LEAK INFO

Last Modified: 3-10-2010	6.4 J	**From:** 200901
Model Year: 2010	**Model:** Corolla	**Doc ID:** RM000000TS6031X
Title: HEATING / AIR CONDITIONING: AIR CONDITIONING SYSTEM (for Manual Air Conditioning System): IG Power Source Circuit (2010 Corolla)		

IG Power Source Circuit

DESCRIPTION

The main power source is supplied to the A/C amplifier when the ignition switch is turned to ON.

The power source is used for operating the A/C amplifier and servo motor, etc.

WIRING DIAGRAM

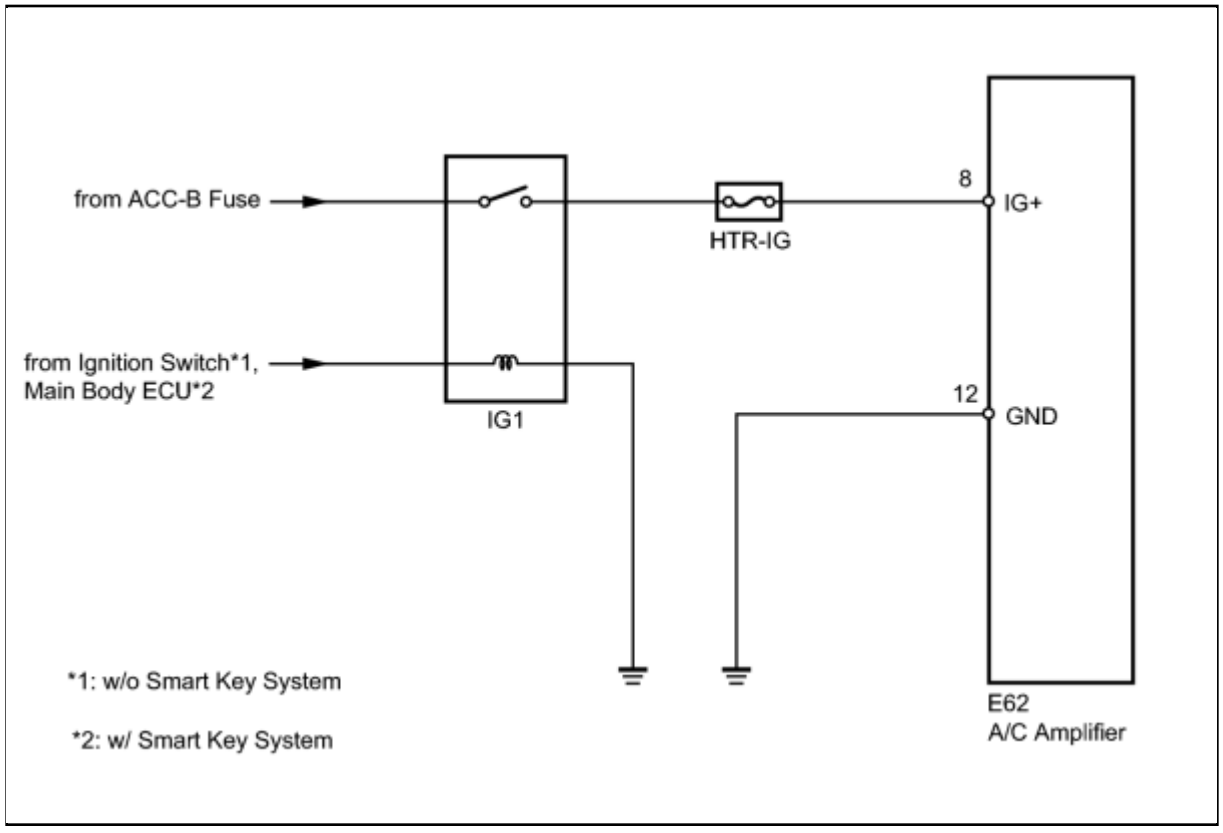

INSPECTION PROCEDURE

HINT:

Start the engine before inspection. Check the IG1 relay or battery if the engine does not start.

PROCEDURE

1.	**INSPECT FUSE (HTR-IG)**

(a) Remove the HTR-IG fuse from the instrument panel junction block.

(b) Measure the resistance according to the value(s) in the table below.

Standard Resistance:

TEST ITEM	CONDITION	SPECIFIED CONDITION
HTR-IG fuse	Always	Below 1 Ω

NG ▶ **REPLACE FUSE (HTR-IG)**

OK ▼

2.	**INSPECT AIR CONDITIONING AMPLIFIER (IG+ - GND)**

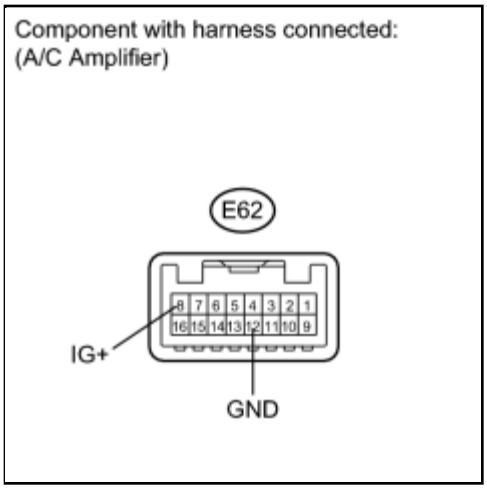

(a) Remove the A/C amplifier with the connectors still connected.

(b) Turn the ignition switch to ON.

(c) Measure the voltage according to the value(s) in the table below.

Standard Voltage:

TESTER CONNECTION	SWITCH CONDITION	SPECIFIED CONDITION
E62-8 (IG+) - E62-12 (GND)	Ignition switch ON	11 to 14 V

NG ▶ **CHECK HARNESS AND CONNECTOR (AIR CONDITIONING AMPLIFIER - BATTERY)**

OK ▶ **PROCEED TO NEXT CIRCUIT INSPECTION SHOWN IN PROBLEM SYMPTOMS TABLE**

3.	**CHECK HARNESS AND CONNECTOR (AIR CONDITIONING AMPLIFIER - BATTERY)**

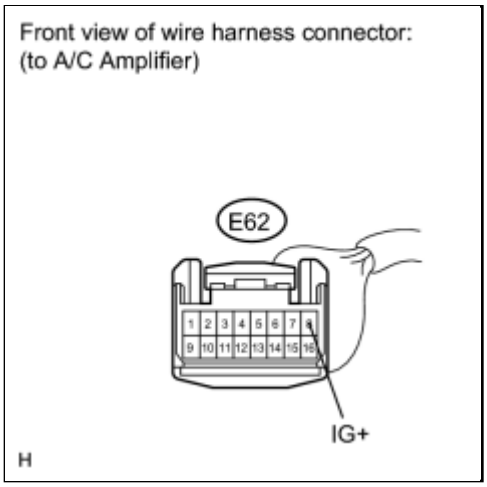

(a) Disconnect the connector from the A/C amplifier.

(b) Measure the voltage according to the value(s) in the table below.

Standard Voltage:

TESTER CONNECTION	SWITCH CONDITION	SPECIFIED CONDITION
E62-8 (IG+) - Body ground	Ignition switch off	Below 1 V
	Ignition switch ON	11 to 14 V

NG ▶ **REPAIR OR REPLACE HARNESS OR CONNECTOR**

OK ▼

4.	**CHECK HARNESS AND CONNECTOR (AIR CONDITIONING AMPLIFIER - BODY GROUND)**

(a) Measure the resistance according to the value(s) in the table below.

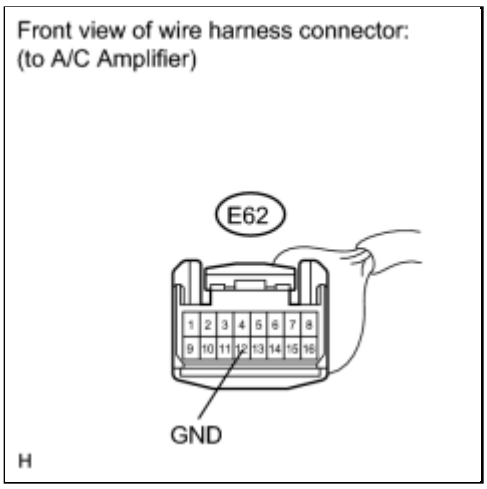

Standard Resistance:

TESTER CONNECTION	CONDITION	SPECIFIED CONDITION
E62-12 (GND) - Body ground	Always	Below 1 Ω

NG ▶ **REPAIR OR REPLACE HARNESS OR CONNECTOR**

OK ▶ **REPLACE AIR CONDITIONING AMPLIFIER**

Last Modified: 3-10-2010	6.4 J	**From:** 200901
Model Year: 2010	**Model:** Corolla	**Doc ID:** RM000000TS702HX
Title: HEATING / AIR CONDITIONING: AIR CONDITIONING SYSTEM (for Manual Air Conditioning System): Back-up Power Source Circuit (2010 Corolla)		

Back-up Power Source Circuit

DESCRIPTION

The back-up power source circuit for the A/C amplifier is shown below. Power used for DTC memory etc is supplied even when the ignition switch is off.

WIRING DIAGRAM

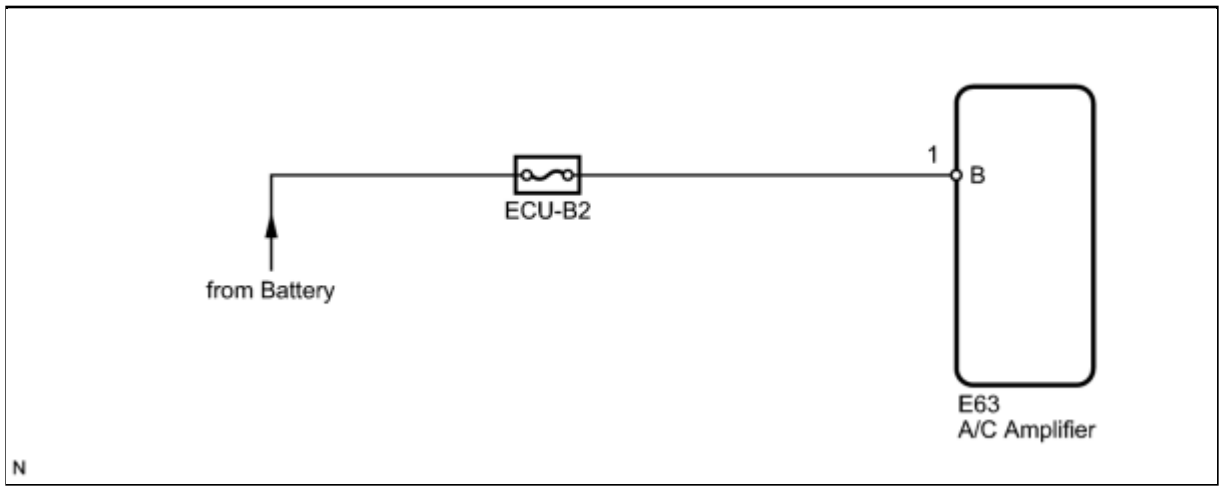

INSPECTION PROCEDURE

PROCEDURE

1.	**INSPECT FUSE (ECU-B2)**

(a) Remove the ECU-B2 fuse from the engine room relay block and junction block.

(b) Measure the resistance according to the value(s) in the table below.

Standard Resistance:

TEST ITEM	CONDITION	SPECIFIED CONDITION
ECU-B2 fuse	Always	Below 1 Ω

NG ▶ **REPLACE FUSE (ECU-B2)**

OK ▼

2.	**CHECK HARNESS AND CONNECTOR (AIR CONDITIONING AMPLIFIER - BODY GROUND)**

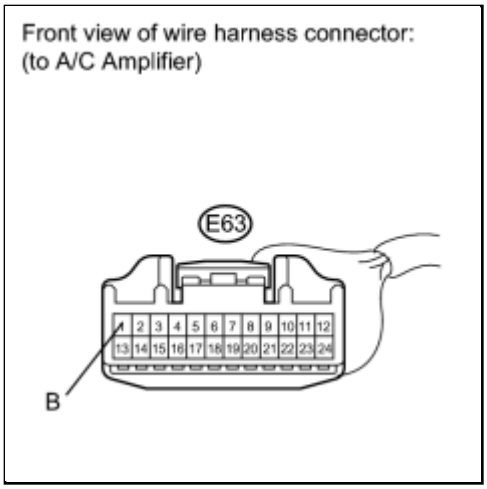

(a) Disconnect the connector from the A/C amplifier.

(b) Measure the voltage according to the value(s) in the table below.

Standard Voltage:

TESTER CONNECTION	CONDITION	SPECIFIED CONDITION
E63-1 (B) - Body ground	Always	11 to 14 V

NG ▶ **REPAIR OR REPLACE HARNESS OR CONNECTOR**

OK ▶ **PROCEED TO NEXT CIRCUIT INSPECTION SHOWN IN PROBLEM SYMPTOMS TABLE**

Last Modified: 3-10-2010	6.4 A	**From:** 200901
Model Year: 2010	**Model:** Corolla	**Doc ID:** RM000001HLX01UX
Title: HEATING / AIR CONDITIONING: AIR CONDITIONING UNIT: DISASSEMBLY (2010 Corolla)		

DISASSEMBLY

1. REMOVE IMMOBILISER CODE ECU (w/ Smart Key System) INFO

2. REMOVE TRANSPONDER KEY ECU (w/o Smart Key System) INFO

3. REMOVE AIR OUTLET CONTROL SERVO MOTOR (for Automatic Air Conditioning System)

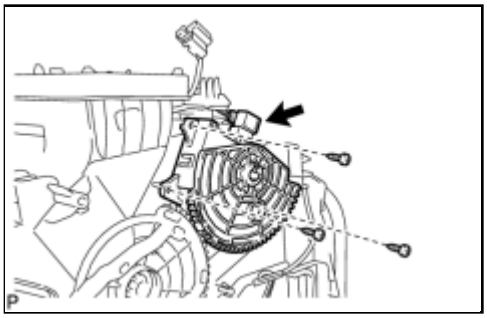

(a) Disconnect the connector.

(b) Remove the 3 screws and the air outlet control servo motor.

4. REMOVE AIR MIX CONTROL SERVO MOTOR (for TMC Made with Automatic Air Conditioning System)

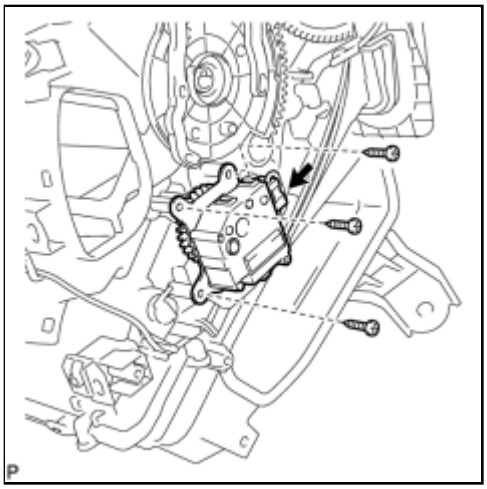

(a) Disconnect the connector.

(b) Remove the 3 screws and the air mix control servo motor.

5. REMOVE AIR MIX CONTROL SERVO MOTOR (for TMMC, NUMMI Made with Automatic Air Conditioning System)

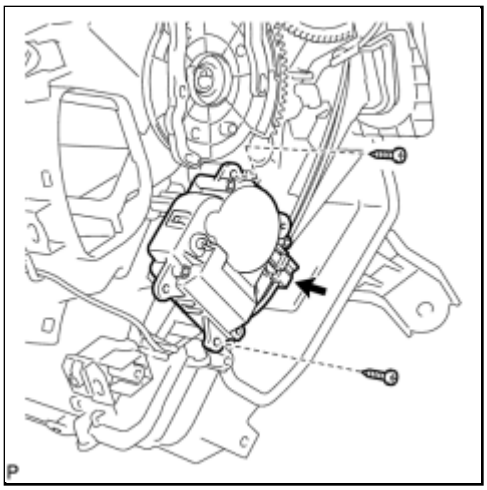

(a) Disconnect the connector.

(b) Remove the 2 screws and the air mix control servo motor.

6. REMOVE NO. 2 HEATER CONTROL CABLE SUB-ASSEMBLY (for Manual Air Conditioning System)

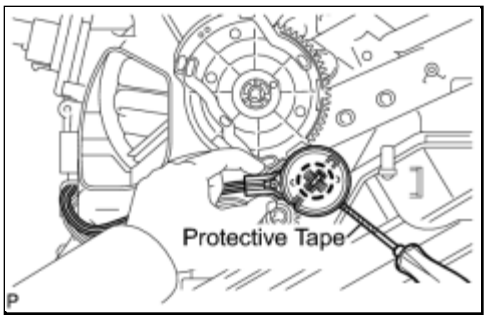

(a) Using a screwdriver with the tip taped, disengage the claw and remove the No. 2 heater control cable sub-assembly.

7. REMOVE AIR MIX DAMPER CONTROL CABLE SUB-ASSEMBLY (for Manual Air Conditioning System)

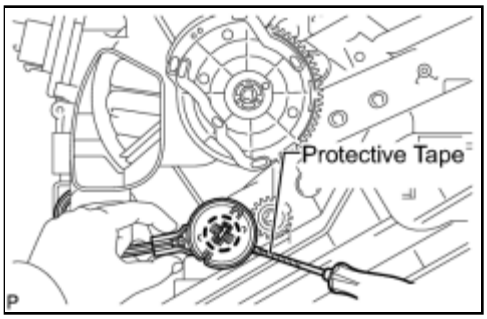

(a) Using a screwdriver with the tip taped, disengage the claw and remove the air mix damper control cable sub-assembly.

8. REMOVE QUICK HEATER ASSEMBLY (w/ PTC Heater)

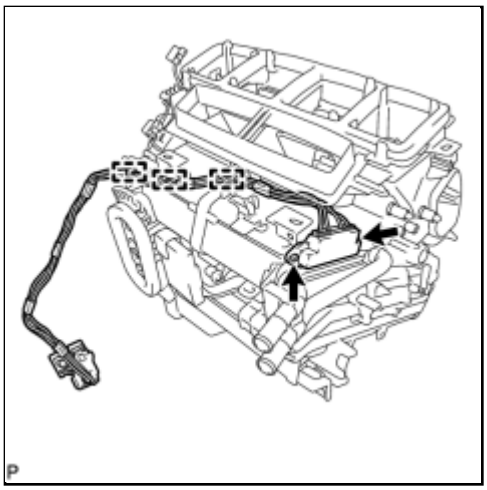

(a) Disengage each clamp.

(b) Remove the 2 screws.

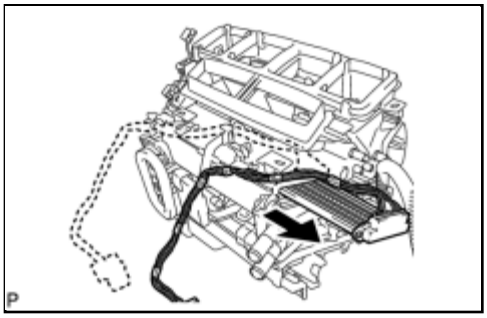

(c) Remove the quick heater assembly as shown in the illustration.

9. REMOVE AIR CONDITIONING HARNESS ASSEMBLY (for Automatic Air Conditioning System)

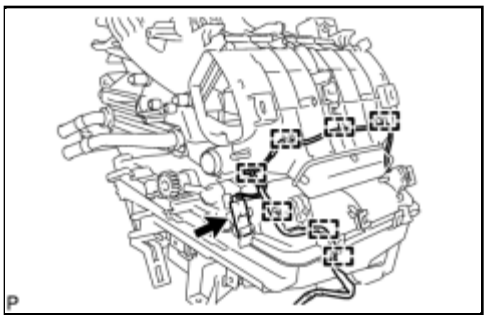

(a) Disengage each clamp and remove the air conditioning harness.

10. REMOVE CONSOLE MOUNTING BRACKET RH

(a) Disengage the 2 claws and remove the console mounting

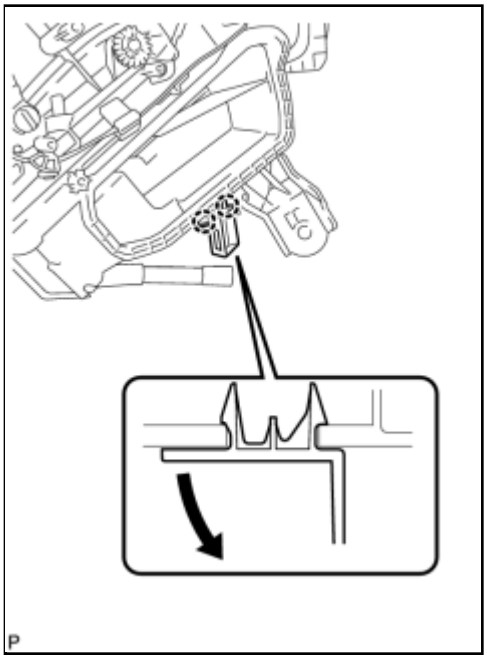

bracket RH as shown in the illustration.

11. REMOVE CONSOLE MOUNTING BRACKET LH

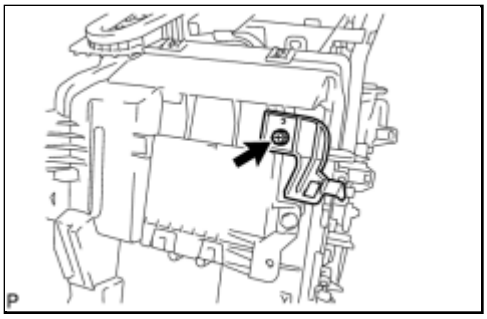

(a) Remove the screw and the console mounting bracket LH.

12. REMOVE AIR CONDITIONING AMPLIFIER ASSEMBLY

(a) Remove the screw.

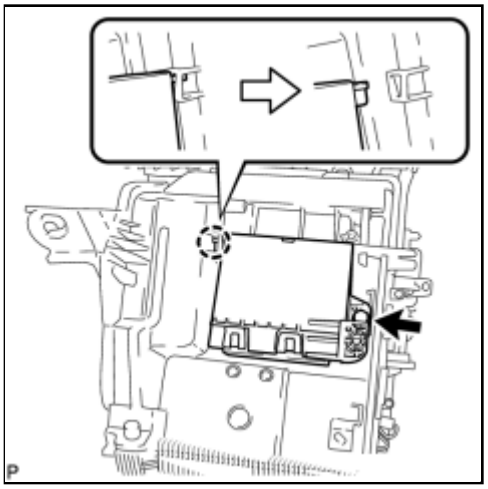

(b) Disengage the claw and remove the air conditioning amplifier assembly as shown in the illustration.

13. REMOVE AIR CONDITIONING DUCT SUB-ASSEMBLY (for Automatic Air Conditioning System)

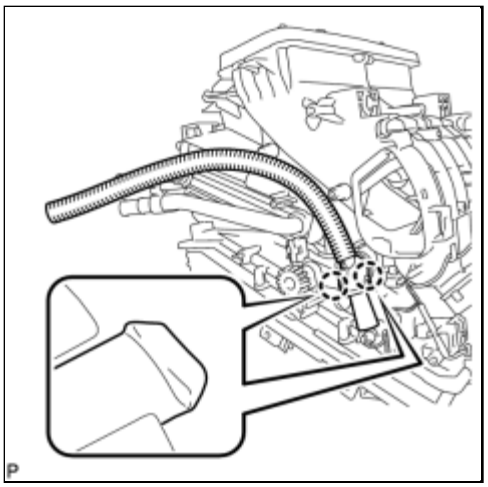

(a) Disengage the 2 claws and remove the air conditioning duct sub-assembly.

14. REMOVE DRAIN COOLER HOSE

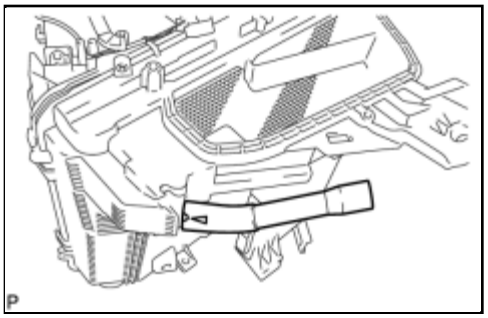

(a) Remove the drain cooler hose from the air conditioning radiator assembly.

15. REMOVE HEATER RADIATOR UNIT SUB-ASSEMBLY

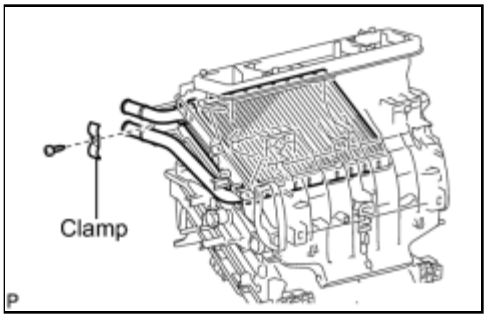

(a) Remove the screw and the clamp.

(b) Remove the heater radiator unit sub-assembly from the air conditioning unit assembly.

16. REMOVE COOLER EXPANSION VALVE

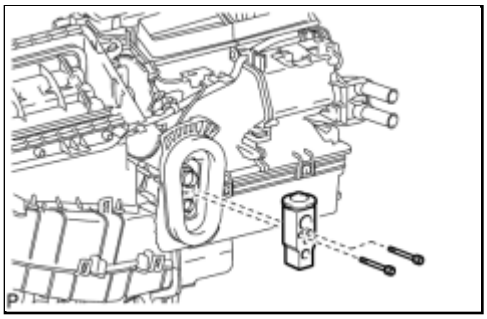

(a) Using a 4 mm hexagon wrench, remove the 2 hexagon bolts and cooler expansion valve.

17. REMOVE NO. 1 COOLER EVAPORATOR SUB-ASSEMBLY

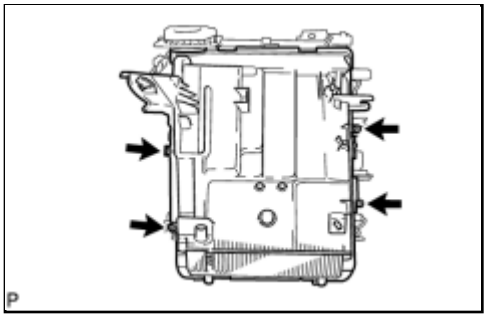

(a) Remove the 4 screws.

(b) Disengage the 4 claws and remove the lower heater case.

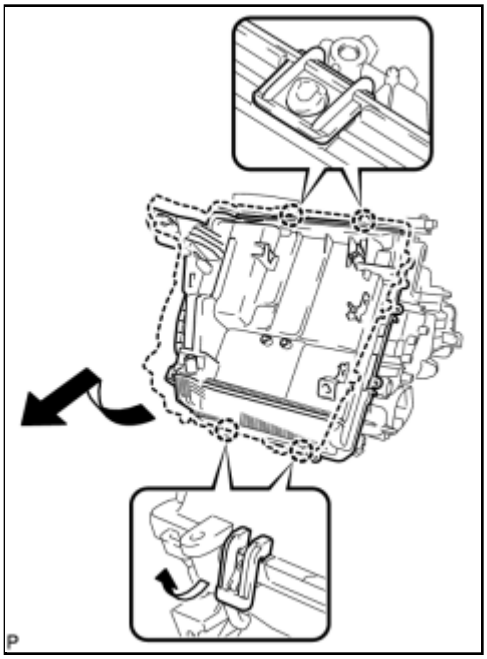

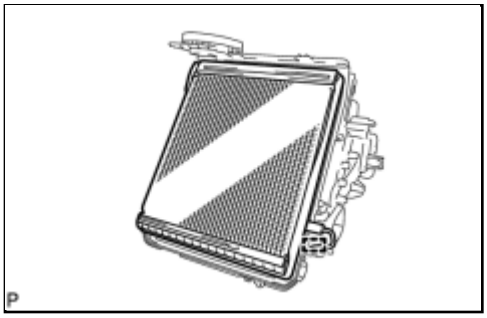

(c) Disengage the clamp, and remove the No. 1 cooler evaporator sub-assembly together with the No. 1 cooler thermistor.

(d) Remove the 2 O-rings.

18. REMOVE NO. 1 COOLER THERMISTOR

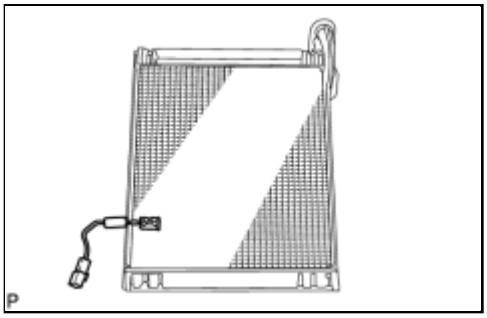

(a) Remove the No. 1 cooler thermistor from the No. 1 cooler evaporator sub-assembly.

Last Modified: 3-10-2010	6.4 A	**From:** 200901
Model Year: 2010	**Model:** Corolla	**Doc ID:** RM000001HLY01UX
Title: HEATING / AIR CONDITIONING: AIR CONDITIONING UNIT: REASSEMBLY (2010 Corolla)		

REASSEMBLY

1. INSTALL NO. 1 COOLER THERMISTOR

(a) Install the No. 1 cooler thermistor as shown in the illustration.

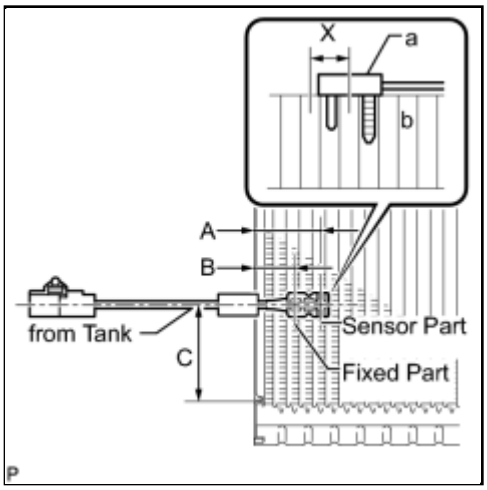

PART	LENGTH	
A	34.3 mm	1.35 in.
B	20.9 mm	0.823 in.
C	50 mm	1.96 in.

NOTICE:

- Be sure to insert the thermistor only once because reinserting it will not allow it to be firmly secured.
- When reusing the evaporator, insert the thermistor one row next to the one that has been used previously (X in the illustration).
- After inserting the thermistor, do not apply excessive force to the wire.
- Directly insert the thermistor until the edge of plastic case "a" comes into contact with evaporator "b".

2. INSTALL NO. 1 COOLER EVAPORATOR SUB-ASSEMBLY

(a) Sufficiently apply compressor oil to 2 new O-rings and the fitting surfaces. Install the 2 O-rings to the No. 1 cooler evaporator sub-assembly.

Compressor oil:
ND-OIL 8 or equivalent

NOTICE:

Keep the O-rings and O-ring fitting surfaces clean from dirt or foreign matter.

(b) Install the No. 1 cooler evaporator sub-assembly together with the No. 1 cooler thermistor as a set.

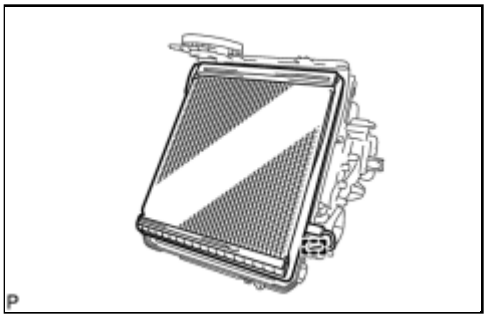

(c) Engage the clamp.

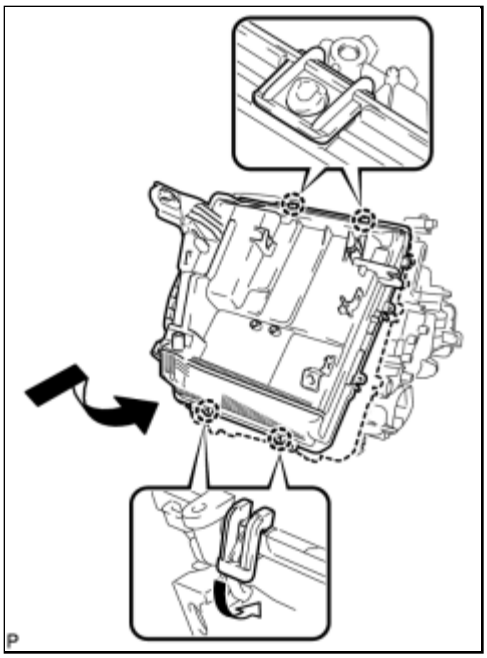

(d) Engage the 4 claws as shown in the illustration.

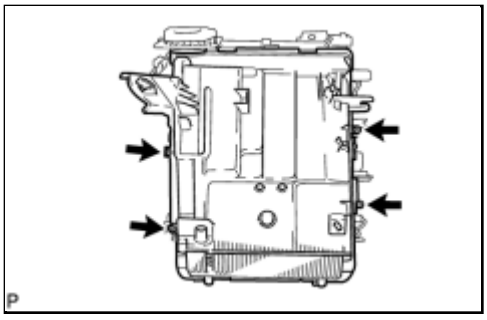

(e) Install the lower heater case with the 4 screws.

3. INSTALL COOLER EXPANSION VALVE

(a) Using a 4 mm hexagon wrench, install the cooler expansion valve with the 2 hexagon bolts.

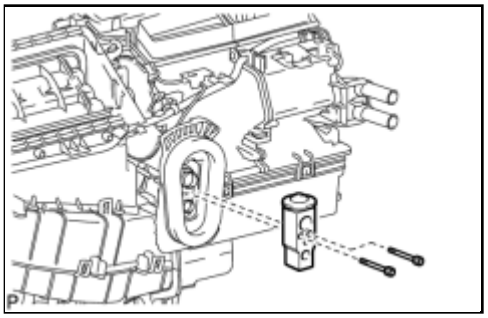

Torque: 3.5 N·m (36 kgf·cm, 31in·lbf)

4. INSTALL HEATER RADIATOR UNIT SUB-ASSEMBLY

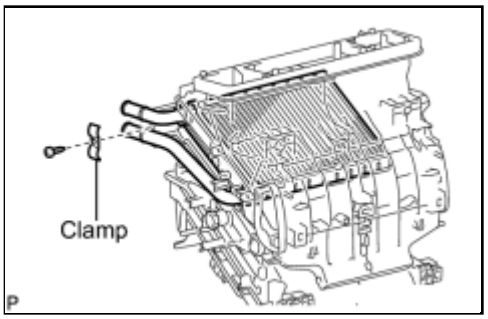

(a) Install the heater radiator unit sub-assembly to the air conditioning unit assembly.

(b) Install the clamp with the screw.

5. INSTALL DRAIN COOLER HOSE

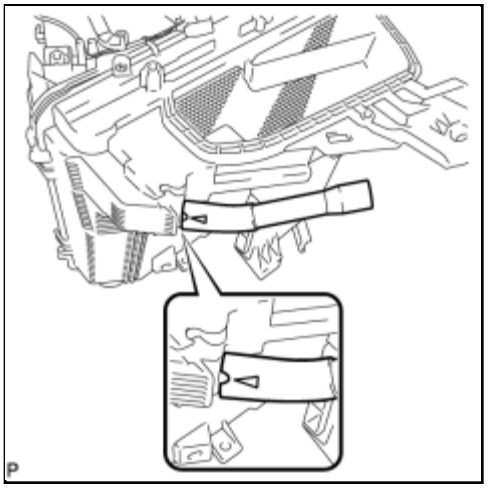

(a) Install the drain cooler hose to the air conditioning unit assembly.

6. INSTALL AIR CONDITIONING DUCT SUB-ASSEMBLY (for Automatic Air Conditioning System)

(a) Engage the 2 claws and install the air conditioning duct sub-assembly.

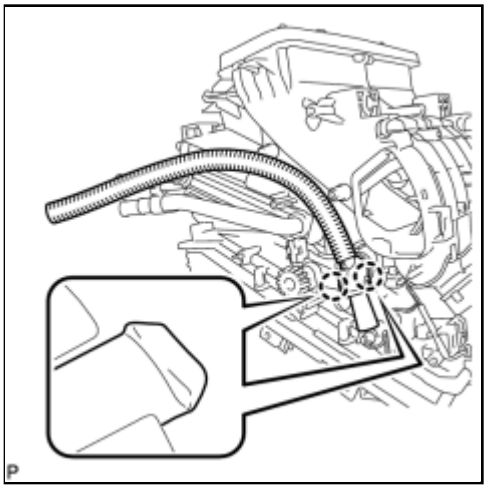

7. INSTALL AIR CONDITIONING AMPLIFIER ASSEMBLY

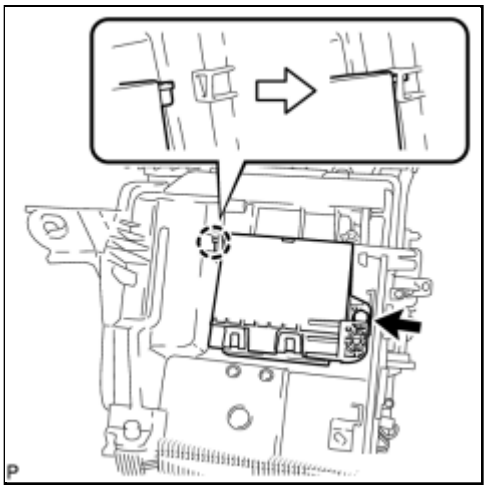

(a) Engage the claw.

(b) Install the air conditioning amplifier assembly with the screw.

8. INSTALL CONSOLE MOUNTING BRACKET LH

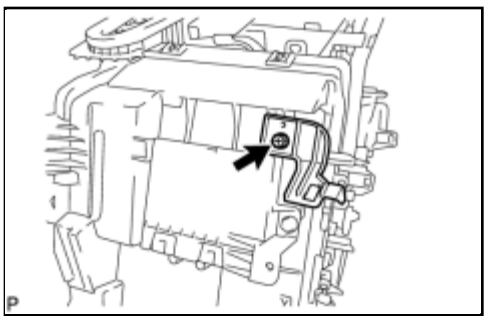

(a) Install the console mounting bracket LH with the screw.

9. INSTALL CONSOLE MOUNTING BRACKET RH

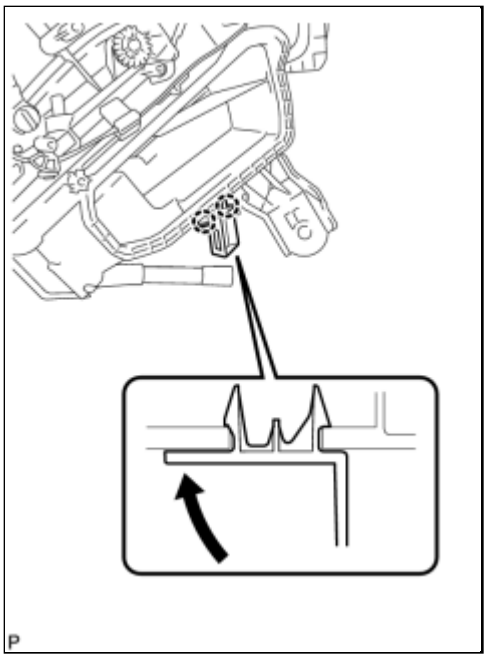

(a) Engage the 2 claws and install the console mounting bracket RH as shown in the illustration.

10. INSTALL AIR CONDITIONING HARNESS ASSEMBLY (for Automatic Air Conditioning System)

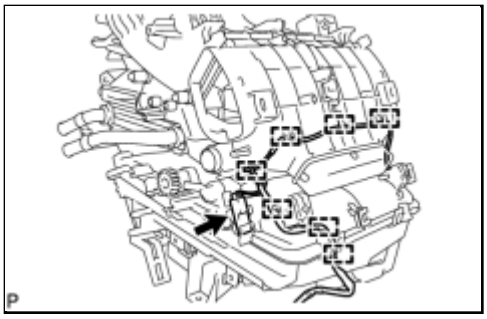

(a) Connect the connector.

(b) Engage each clamp and install the air conditioning harness assembly.

11. INSTALL QUICK HEATER ASSEMBLY (w/ PTC Heater)

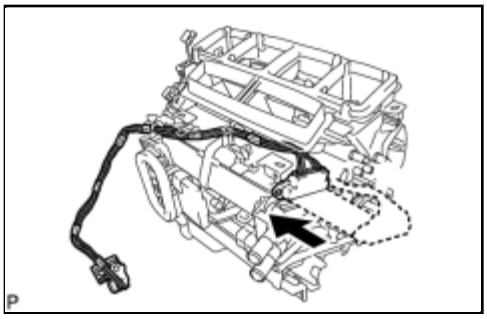

(a) Install the quick heater assembly as shown in the illustration.

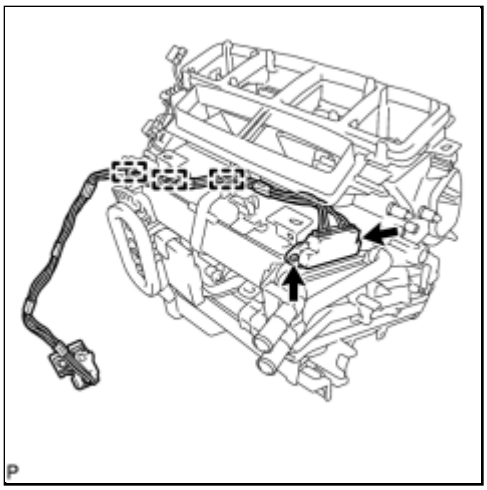

(b) Install the 2 screws.

(c) Engage each clamp.

12. INSTALL AIR MIX DAMPER CONTROL CABLE SUB-ASSEMBLY (for Manual Air Conditioning System)

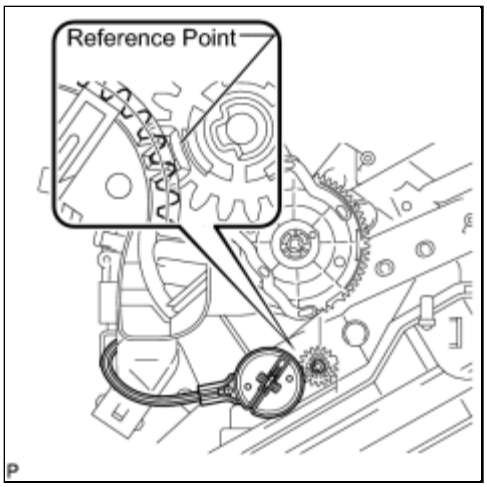

(a) Position the gear of the air mix damper control cable sub-assembly and the unit gear as shown in the illustration, and install the air mix damper control cable sub-assembly.

13. INSTALL NO. 2 HEATER CONTROL CABLE SUB-ASSEMBLY (for Manual Air Conditioning System)

(a) Position the gear of the No. 2 heater control cable sub-assembly and the unit link as shown in the illustration, and install the No. 2 heater control cable sub-assembly.

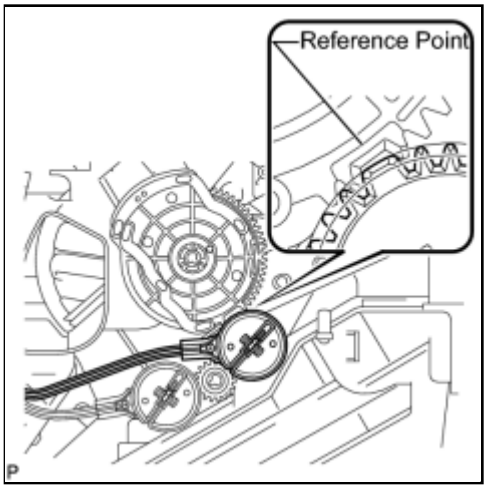

14. INSTALL AIR MIX CONTROL SERVO MOTOR (for TMC Made with Automatic Air Conditioning System)

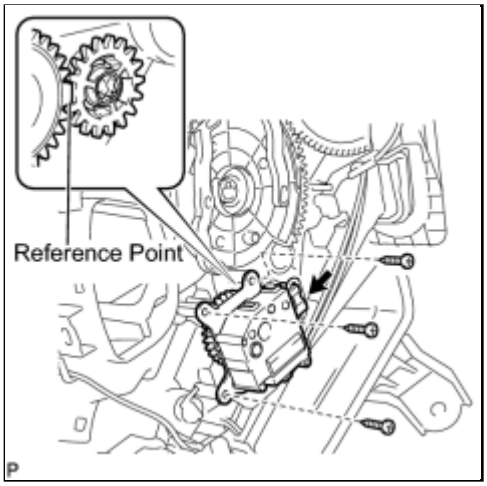

(a) Using the reference point, install the air mix control servo motor with the 3 screws.

(b) Connect the connector.

15. INSTALL AIR MIX CONTROL SERVO MOTOR (for TMMC, NUMMI Made with Automatic Air Conditioning System)

(a) Using the reference point, install the air mix control servo motor with the 2 screws.

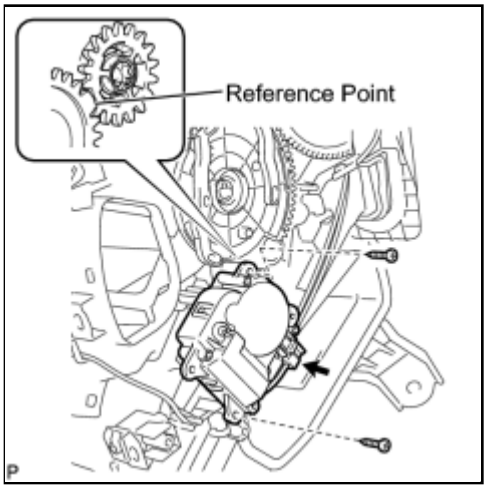

(b) Connect the connector.

16. INSTALL AIR OUTLET CONTROL SERVO MOTOR (for Automatic Air Conditioning System)

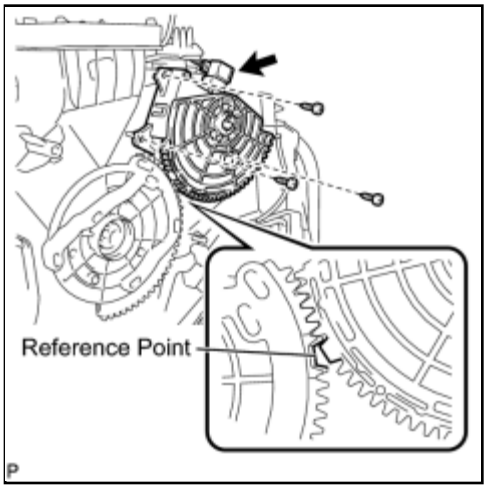

(a) Using the reference point, install the air outlet control servo motor with the 3 screws.

(b) Connect the connector.

17. INSTALL IMMOBILISER CODE ECU (w/ Smart Key System) INFO

18. INSTALL TRANSPONDER KEY ECU (w/o Smart Key System) INFO

Last Modified: 3-10-2010	6.4 K	**From:** 200901
Model Year: 2010	**Model:** Corolla	**Doc ID:** RM000003FXJ001X
Title: HEATING / AIR CONDITIONING: AIR INLET CONTROL SERVO MOTOR: COMPONENTS (2010 Corolla)		

COMPONENTS

ILLUSTRATION

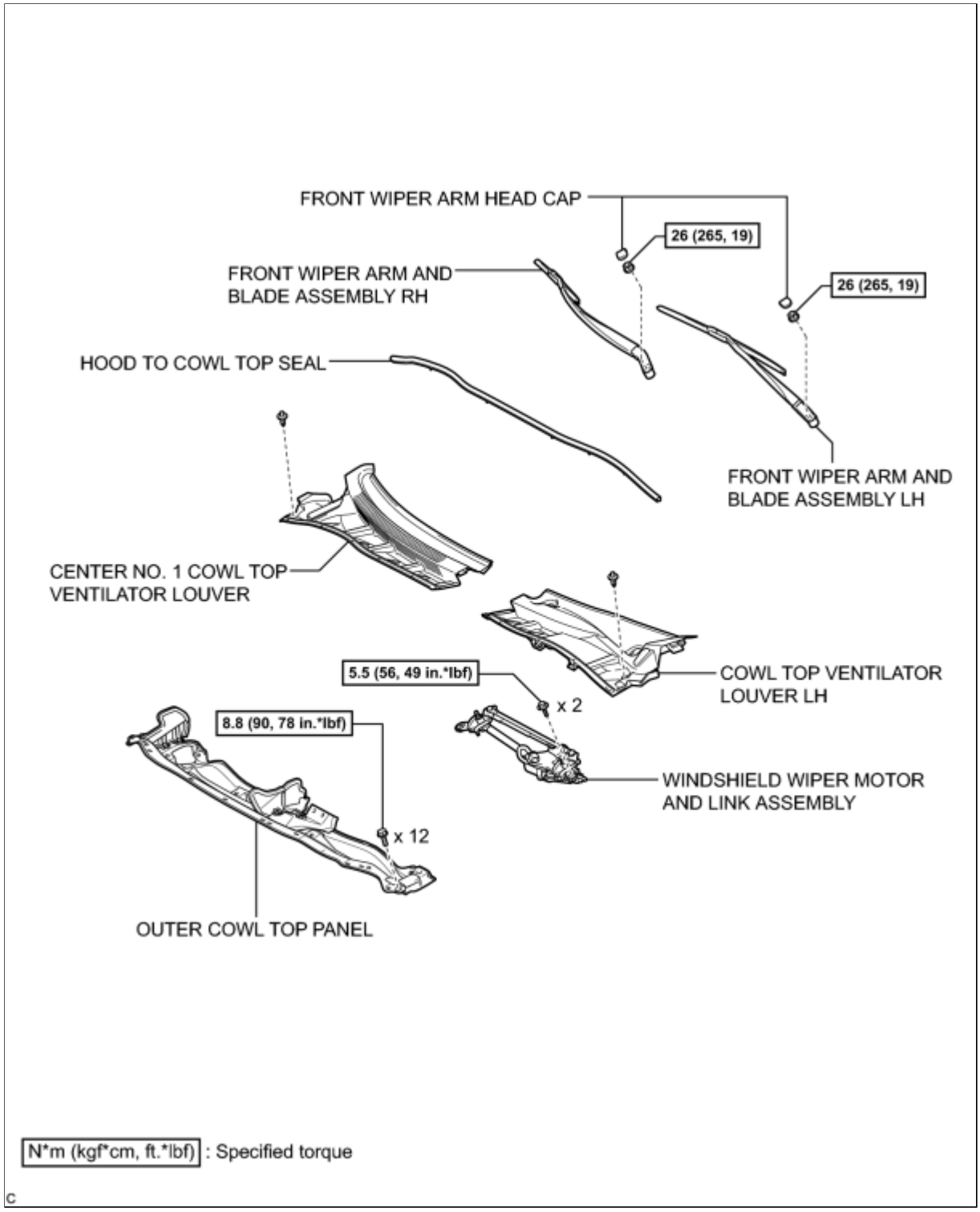

ILLUSTRATION

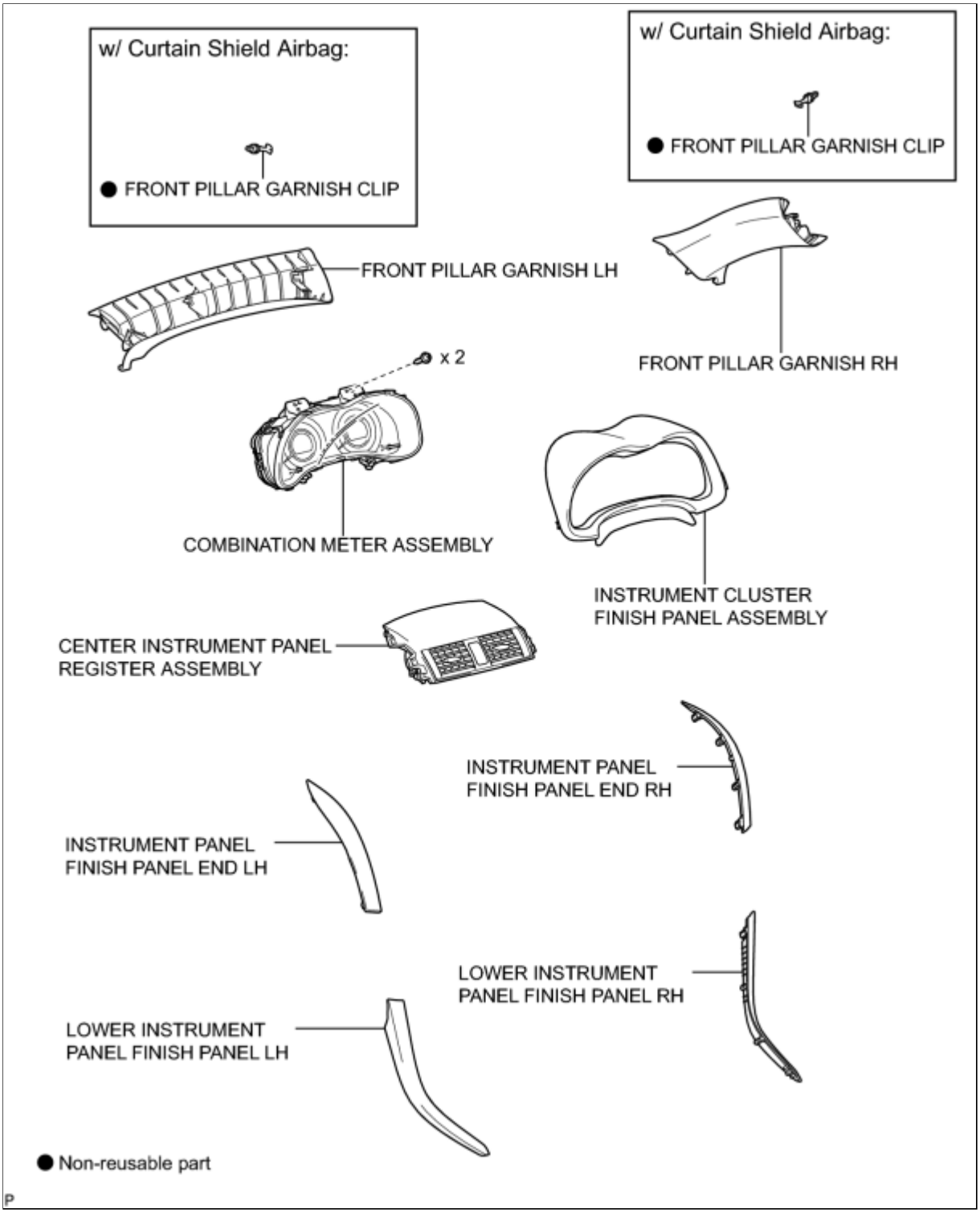

ILLUSTRATION

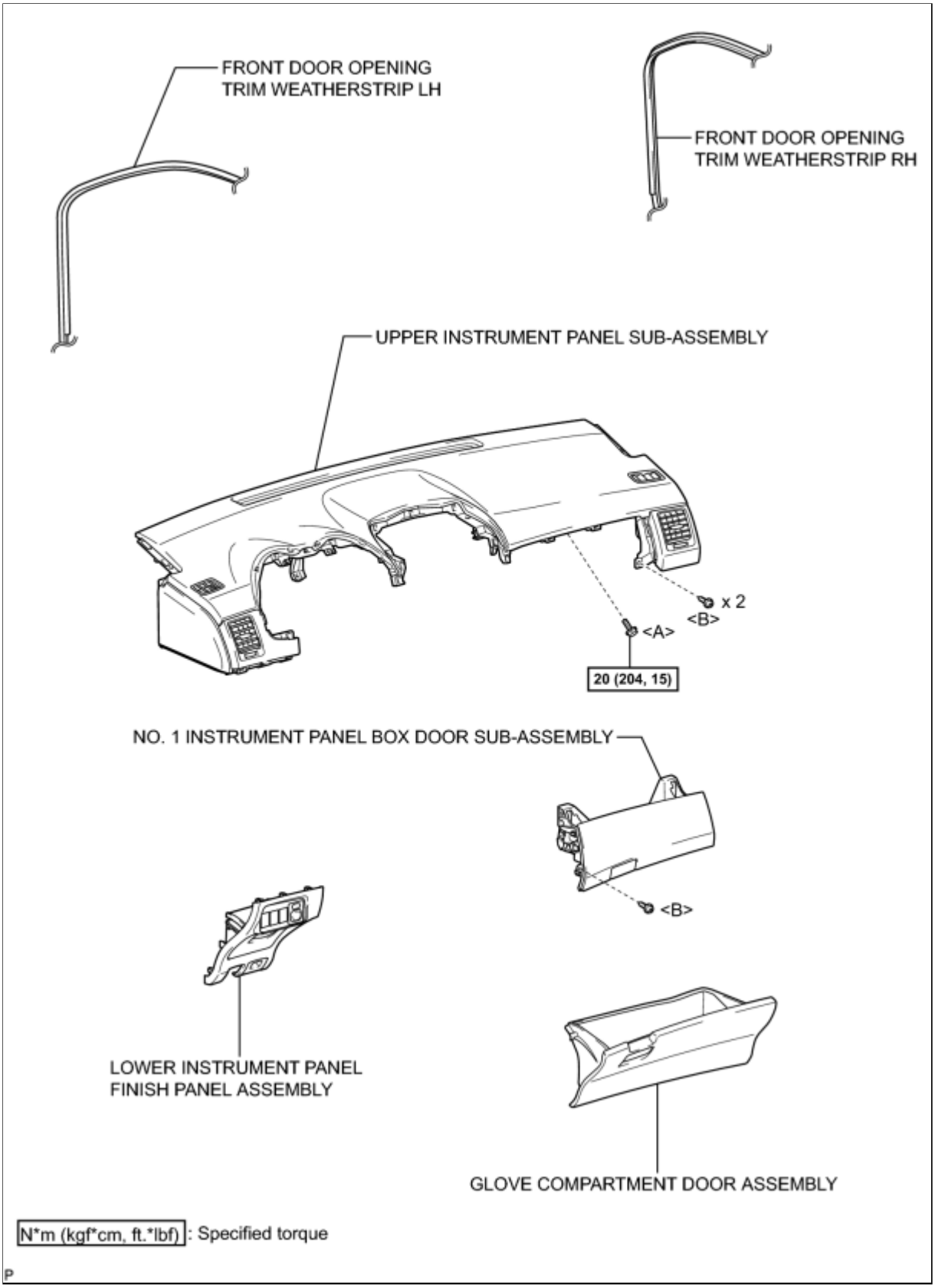

ILLUSTRATION

for 2ZR-FE:

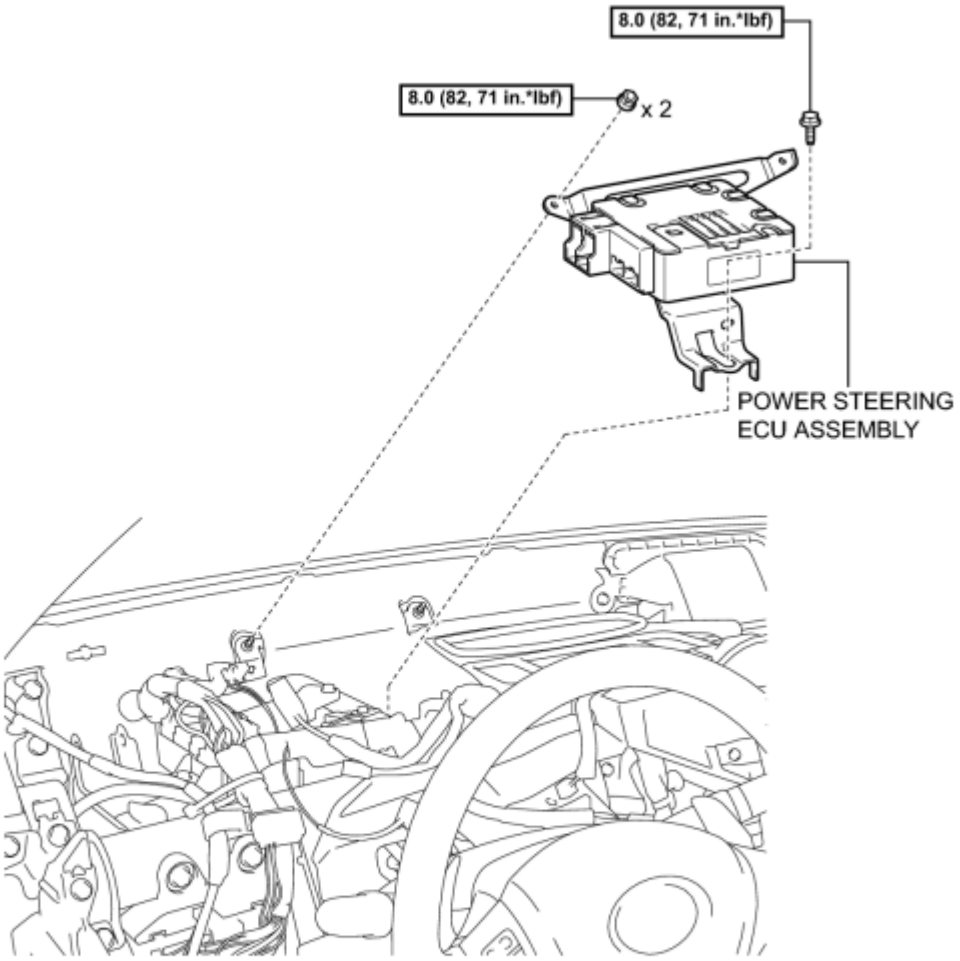

N*m (kgf*cm, ft.*lbf): Specified torque

P

ILLUSTRATION

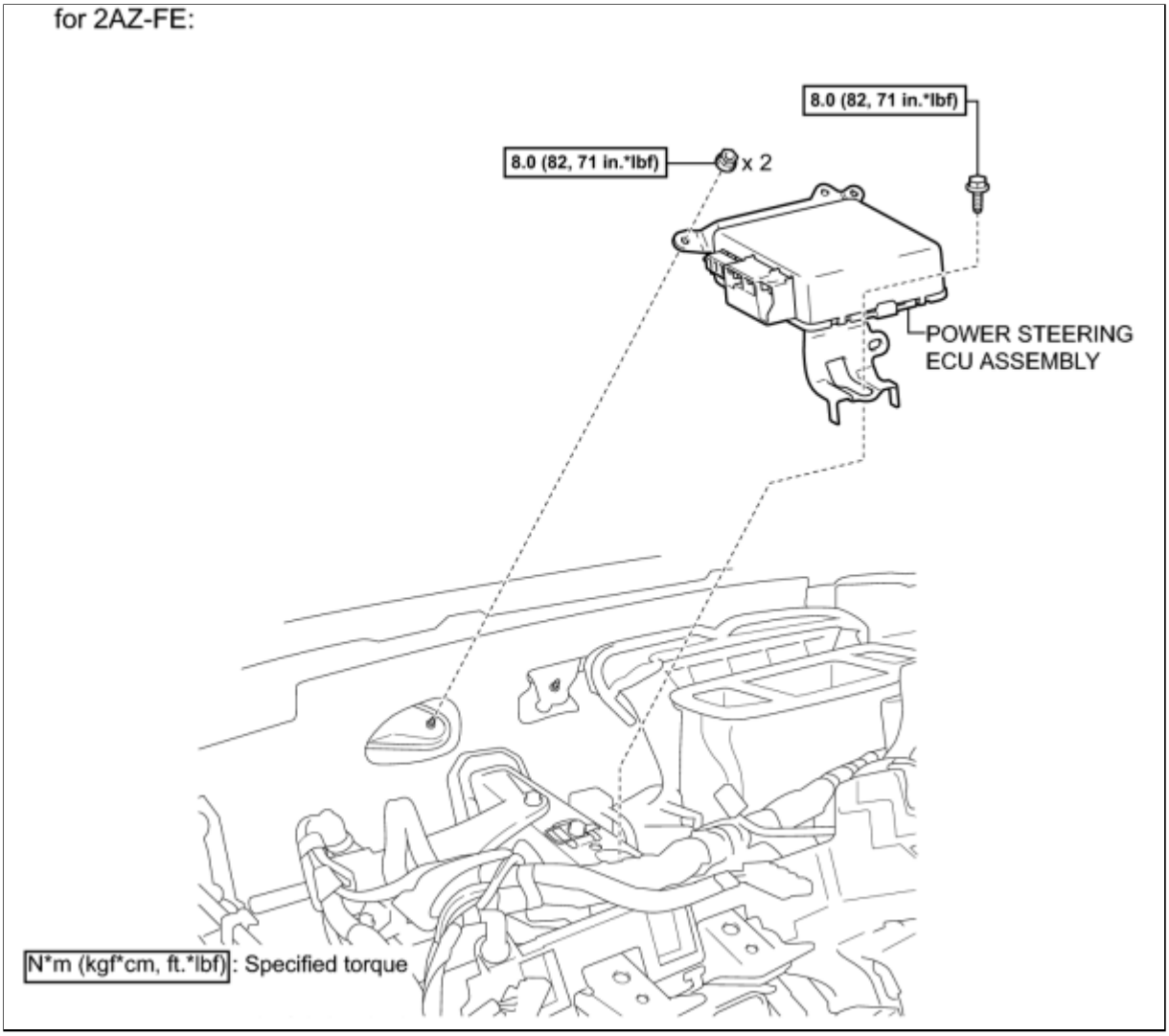

ILLUSTRATION

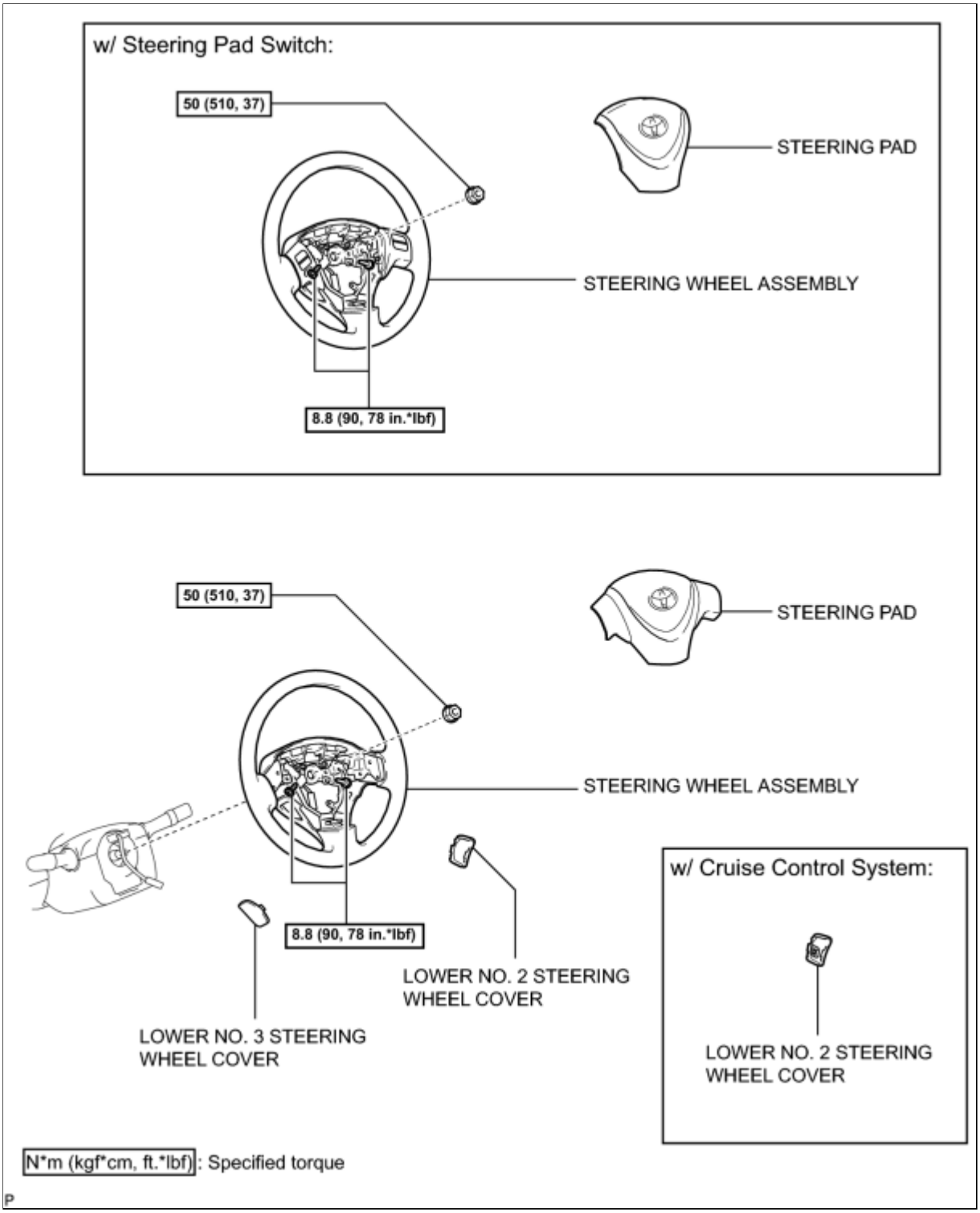

ILLUSTRATION

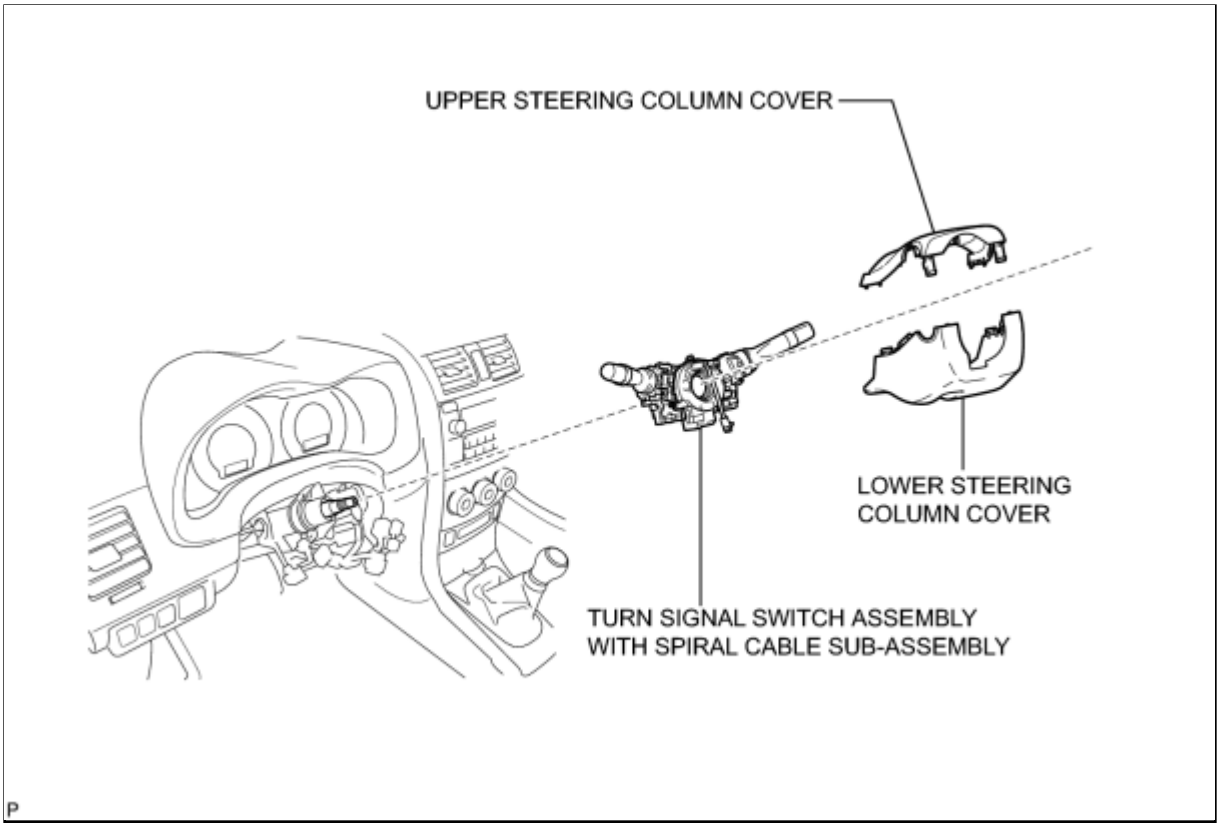

ILLUSTRATION

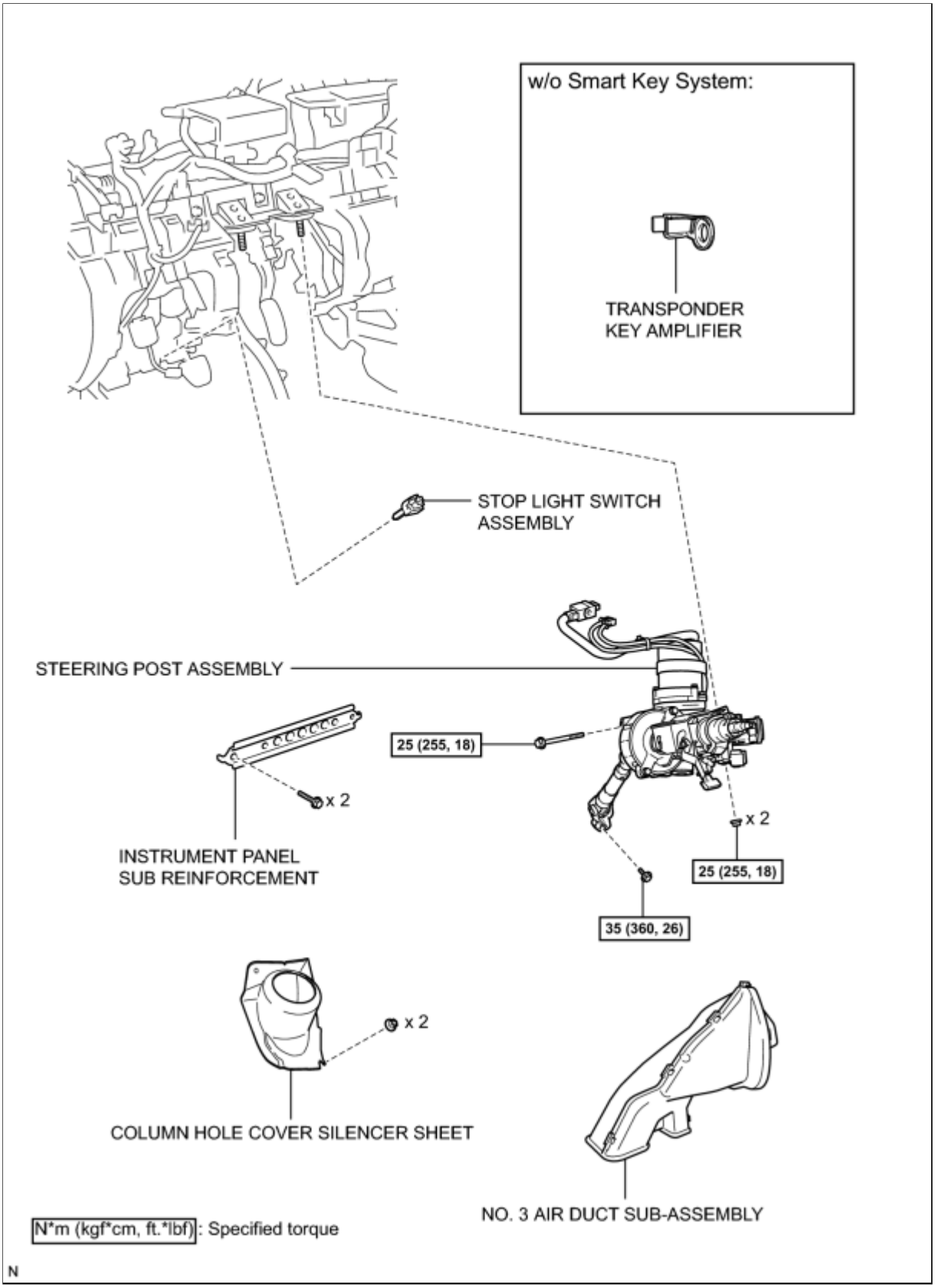

ILLUSTRATION

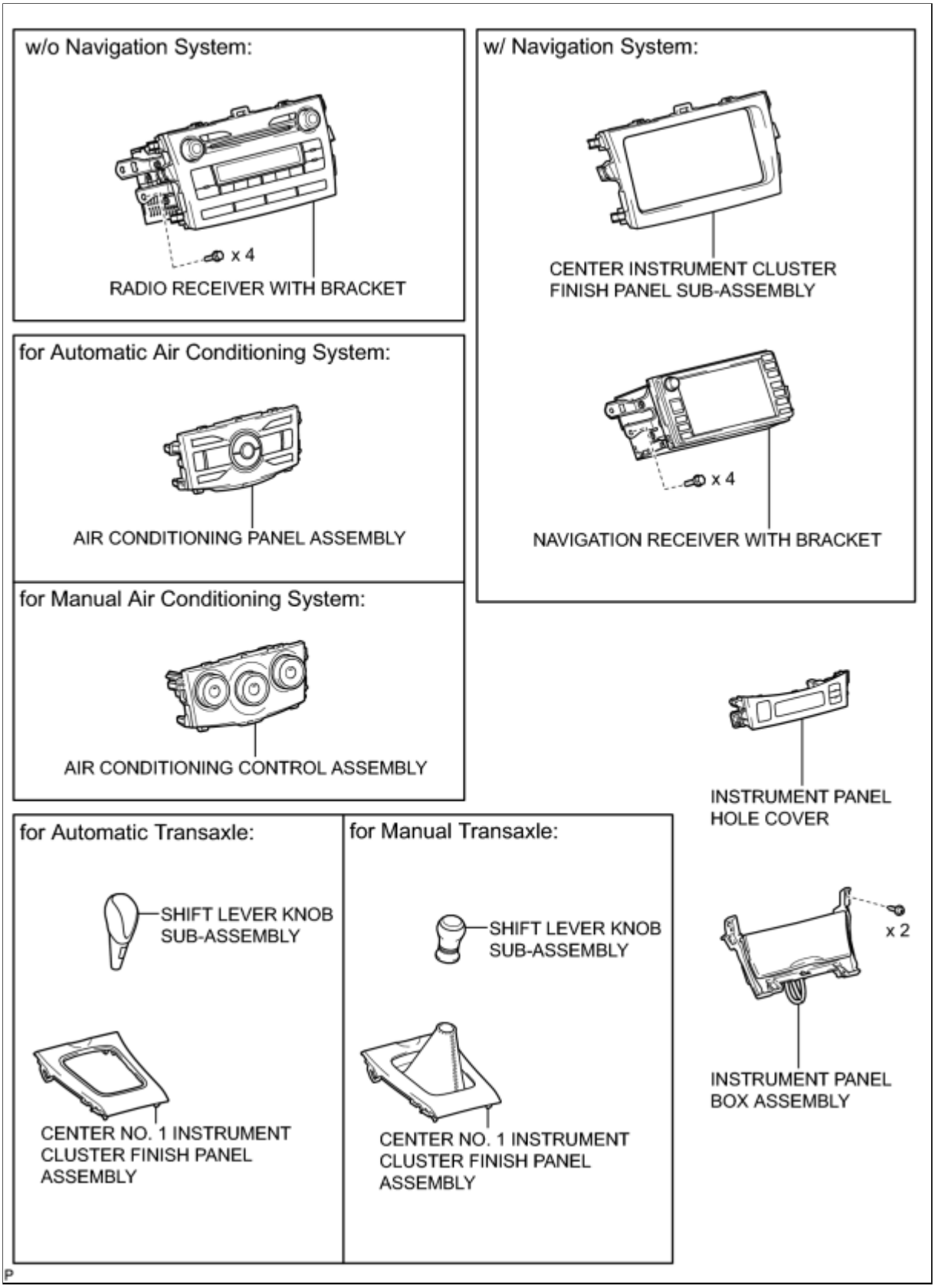

ILLUSTRATION

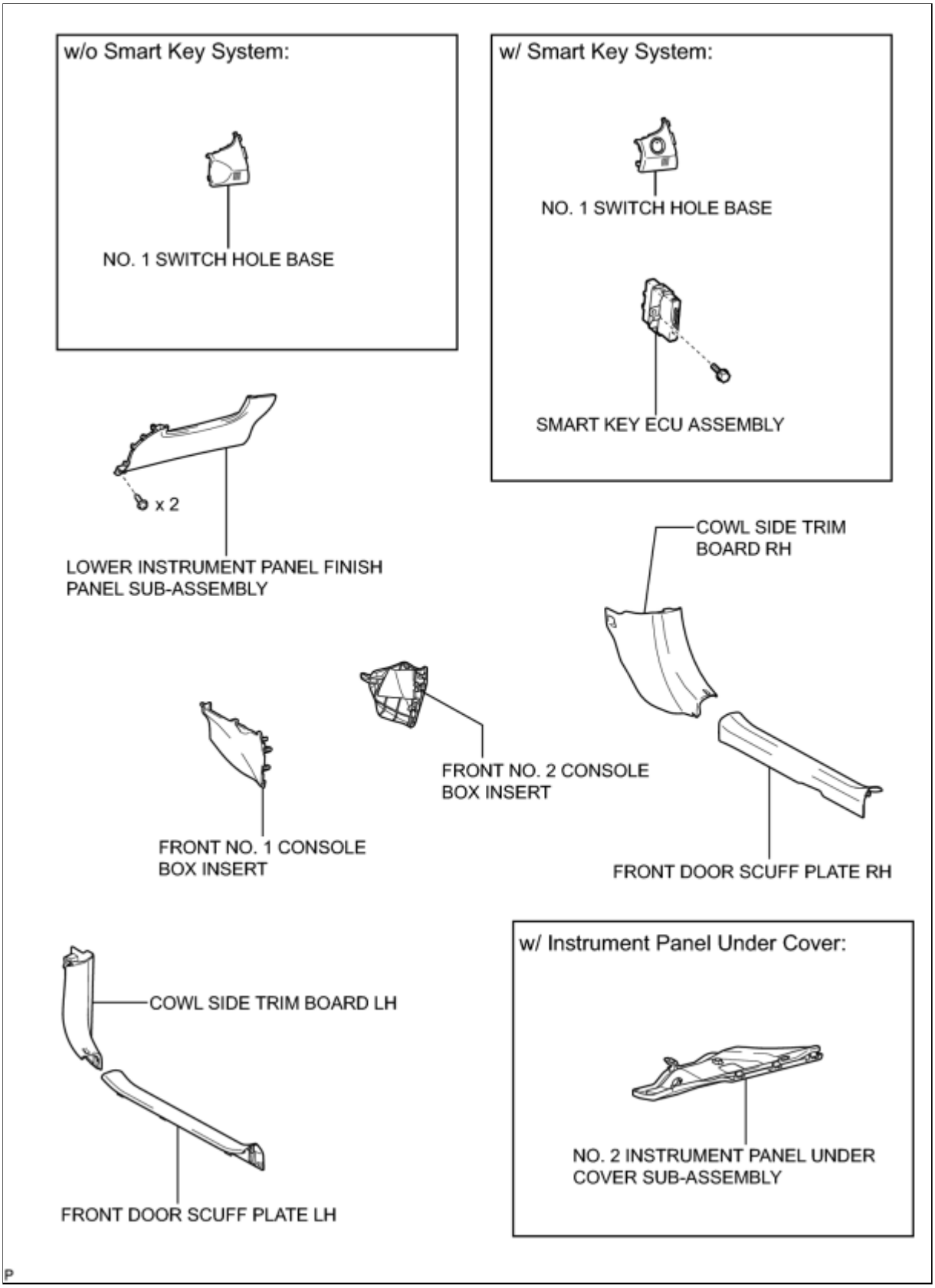

ILLUSTRATION

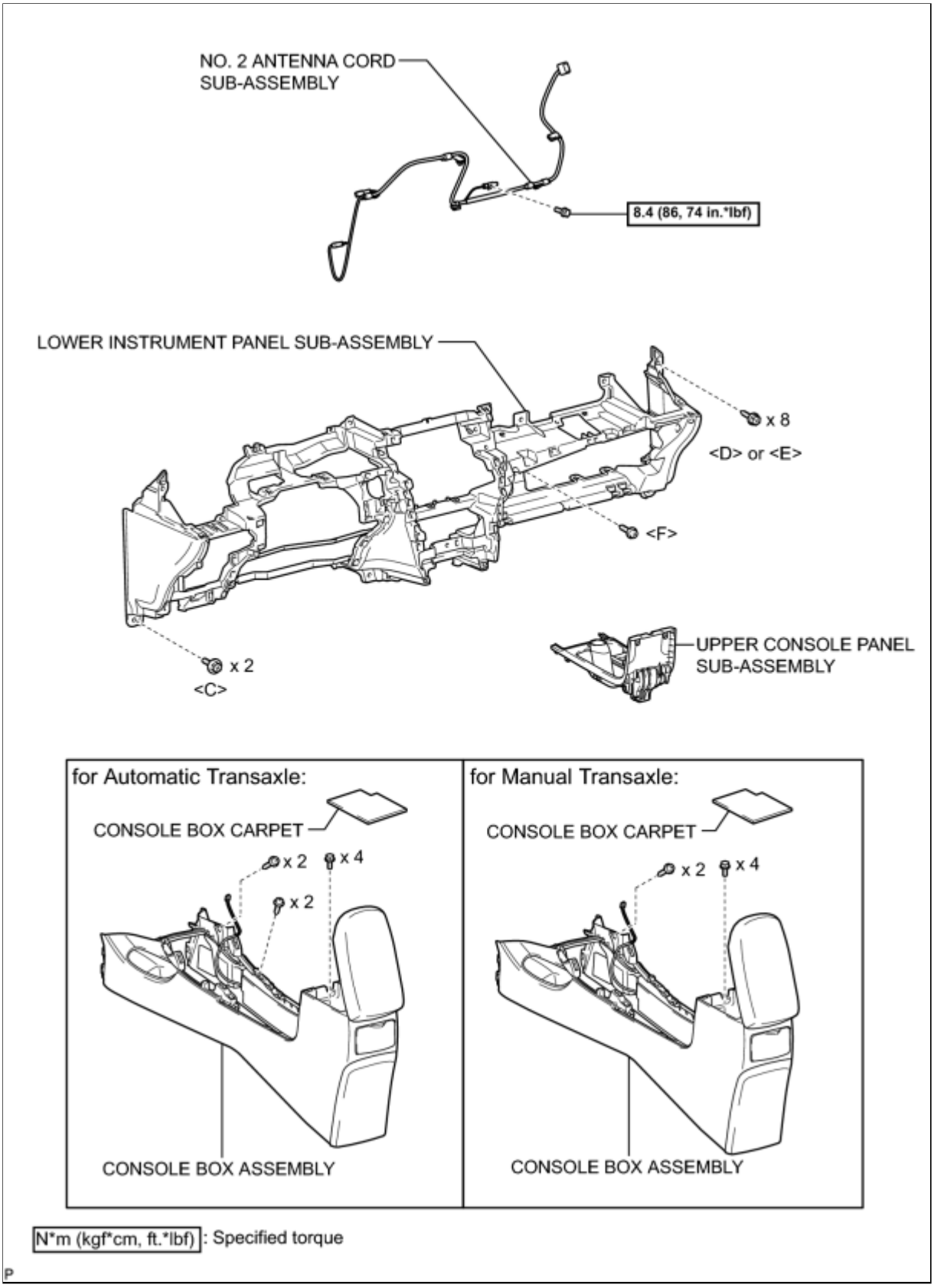

ILLUSTRATION

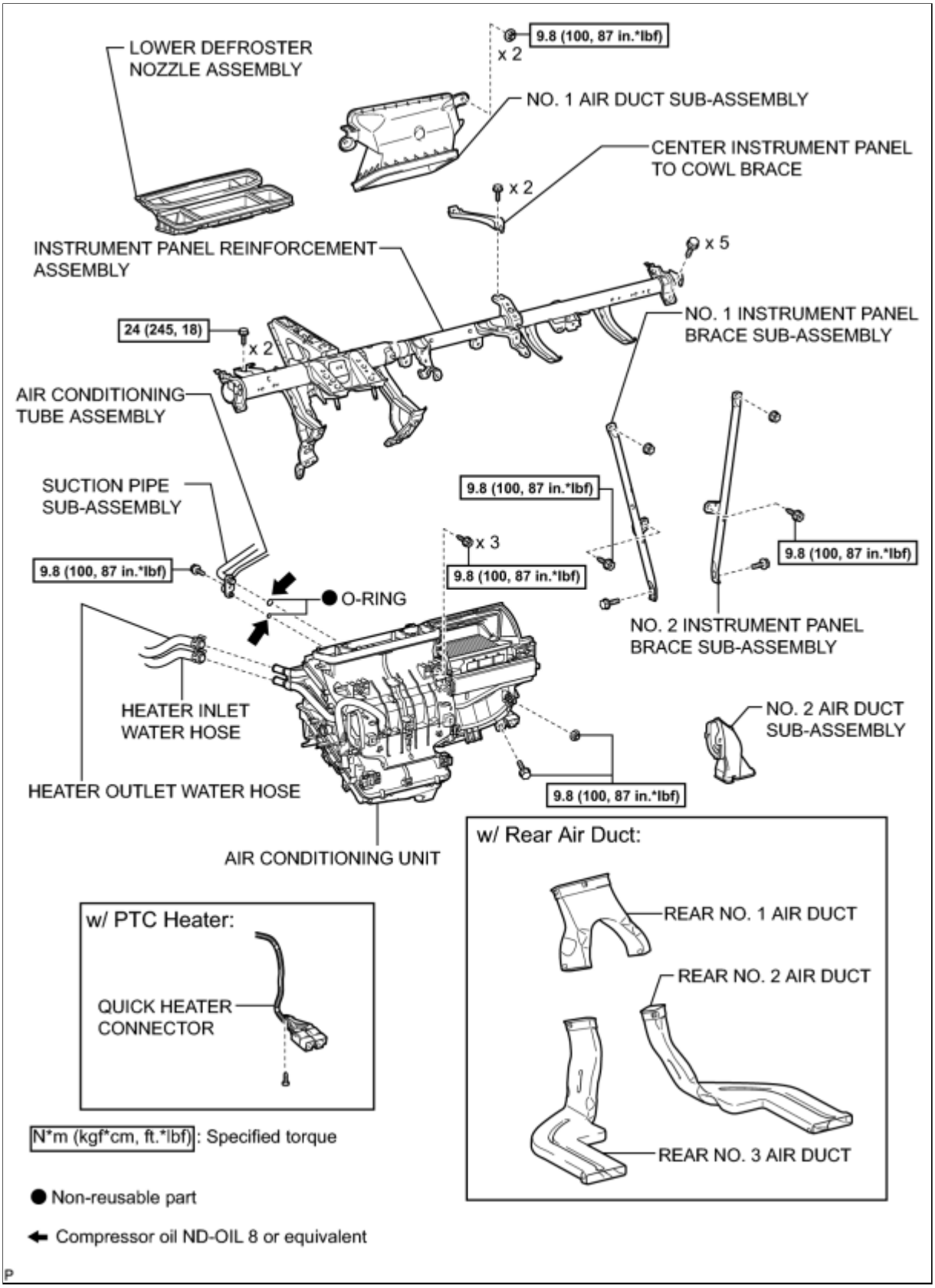

ILLUSTRATION

for Automatic Air Conditioning System:

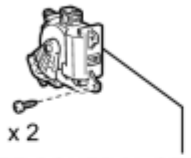

AIR INLET CONTROL SERVO MOTOR

for Manual Air Conditioning System:



AIR INLET CONTROL SERVO MOTOR

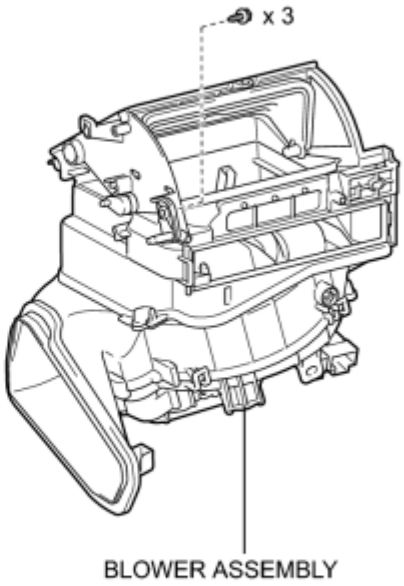

BLOWER ASSEMBLY

P

Last Modified: 3-10-2010	6.4 A	**From:** 200901
Model Year: 2010	**Model:** Corolla	**Doc ID:** RM000001HLW0A9X
Title: HEATING / AIR CONDITIONING: AIR INLET CONTROL SERVO MOTOR: REMOVAL (2010 Corolla)		

REMOVAL

1. PRECAUTION

INFO

2. ALIGN FRONT WHEELS FACING STRAIGHT AHEAD

3. DISCONNECT CABLE FROM NEGATIVE BATTERY TERMINAL

CAUTION:

Wait at least 90 seconds after disconnecting the cable from the negative (-) battery terminal to disable the SRS system INFO **.**

HINT:

Before disconnecting the cable, set the air conditioning control switch to DEF-MODE. (for Automatic Air Conditioning System)

4. RECOVER REFRIGERANT FROM REFRIGERATION SYSTEM INFO

5. REMOVE FRONT WIPER ARM HEAD CAP INFO

6. REMOVE FRONT WIPER ARM AND BLADE ASSEMBLY LH INFO

7. REMOVE FRONT WIPER ARM AND BLADE ASSEMBLY RH INFO

8. REMOVE HOOD TO COWL TOP SEAL INFO

9. REMOVE CENTER NO. 1 COWL TOP VENTILATOR LOUVER INFO

10. REMOVE COWL TOP VENTILATOR LOUVER LH INFO

11. REMOVE WINDSHIELD WIPER MOTOR AND LINK ASSEMBLY INFO

12. REMOVE OUTER COWL TOP PANEL (for TMC Made) INFO

13. REMOVE OUTER COWL TOP PANEL (except TMC Made) INFO

14. DISCONNECT SUCTION PIPE SUB-ASSEMBLY INFO

15. DISCONNECT AIR CONDITIONING TUBE ASSEMBLY INFO

16. DISCONNECT HEATER WATER HOSE OUTLET INFO

17. DISCONNECT HEATER WATER HOSE INLET INFO

18. REMOVE LOWER INSTRUMENT PANEL FINISH PANEL LH INFO

19. REMOVE LOWER INSTRUMENT PANEL FINISH PANEL RH INFO

20. REMOVE INSTRUMENT PANEL FINISH PANEL END LH INFO

21. REMOVE INSTRUMENT PANEL FINISH PANEL END RH INFO

22. REMOVE CENTER INSTRUMENT PANEL REGISTER ASSEMBLY INFO

23. REMOVE INSTRUMENT CLUSTER FINISH PANEL ASSEMBLY INFO

24. REMOVE COMBINATION METER ASSEMBLY INFO

25. REMOVE FRONT PILLAR GARNISH LH (w/o Curtain Shield Airbag) INFO

26. REMOVE FRONT PILLAR GARNISH LH (w/ Curtain Shield Airbag) INFO

27. REMOVE FRONT PILLAR GARNISH RH (w/o Curtain Shield Airbag) INFO

28. REMOVE FRONT PILLAR GARNISH RH (w/ Curtain Shield Airbag) INFO

29. REMOVE LOWER INSTRUMENT PANEL FINISH PANEL ASSEMBLY INFO

30. DISCONNECT FRONT DOOR OPENING TRIM WEATHERSTRIP LH INFO

31. REMOVE GLOVE COMPARTMENT DOOR ASSEMBLY INFO

32. REMOVE NO. 1 INSTRUMENT PANEL BOX DOOR SUB-ASSEMBLY INFO

33. DISCONNECT FRONT DOOR OPENING TRIM WEATHERSTRIP RH INFO

34. DISCONNECT INSTRUMENT PANEL WIRE ASSEMBLY INFO

35. REMOVE UPPER INSTRUMENT PANEL SUB-ASSEMBLY INFO

36. REMOVE POWER STEERING ECU ASSEMBLY (for 2ZR-FE) INFO

37. REMOVE POWER STEERING ECU ASSEMBLY (for 2AZ-FE) INFO

38. REMOVE LOWER INSTRUMENT PANEL FINISH PANEL SUB-ASSEMBLY INFO

39. REMOVE LOWER NO. 3 STEERING WHEEL COVER INFO

40. REMOVE LOWER NO. 2 STEERING WHEEL COVER INFO

41. REMOVE STEERING PAD INFO

42. REMOVE STEERING WHEEL ASSEMBLY INFO

43. REMOVE LOWER STEERING COLUMN COVER INFO

44. REMOVE UPPER STEERING COLUMN COVER INFO

45. REMOVE TURN SIGNAL SWITCH ASSEMBLY WITH SPIRAL CABLE SUB-ASSEMBLY INFO

46. REMOVE COLUMN HOLE COVER SILENCER SHEET INFO

47. SEPARATE NO. 2 STEERING INTERMEDIATE SHAFT ASSEMBLY INFO

48. REMOVE INSTRUMENT PANEL SUB REINFORCEMENT INFO

49. REMOVE NO. 3 AIR DUCT SUB-ASSEMBLY INFO

50. REMOVE TRANSPONDER KEY AMPLIFIER (w/ Smart Key System) INFO

51. REMOVE STOP LIGHT SWITCH ASSEMBLY INFO

52. REMOVE STEERING POST ASSEMBLY (for 2ZR-FE) INFO

53. REMOVE STEERING POST ASSEMBLY (for 2AZ-FE) INFO

54. REMOVE RADIO RECEIVER WITH BRACKET (w/o Navigation System) INFO

55. REMOVE CENTER INSTRUMENT CLUSTER FINISH PANEL SUB-ASSEMBLY (w/ Navigation System) INFO

56. REMOVE NAVIGATION RECEIVER WITH BRACKET (w/ Navigation System) INFO

57. REMOVE SHIFT LEVER KNOB SUB-ASSEMBLY (for Manual Transaxle) INFO

58. REMOVE SHIFT LEVER KNOB SUB-ASSEMBLY (for Automatic Transaxle) INFO

59. REMOVE CENTER NO. 1 INSTRUMENT CLUSTER FINISH PANEL ASSEMBLY (for Manual Transaxle) INFO

60. REMOVE CENTER NO. 1 INSTRUMENT CLUSTER FINISH PANEL ASSEMBLY (for Automatic Transaxle) INFO

61. REMOVE INSTRUMENT PANEL BOX ASSEMBLY INFO

62. REMOVE INSTRUMENT PANEL HOLE COVER INFO

63. REMOVE AIR CONDITIONING PANEL ASSEMBLY (for Manual Air Conditioning System) INFO

64. REMOVE AIR CONDITIONING CONTROL ASSEMBLY (for Automatic Air Conditioning System) INFO

65. REMOVE FRONT DOOR SCUFF PLATE LH INFO

66. REMOVE COWL SIDE TRIM BOARD LH INFO

67. REMOVE FRONT NO. 1 CONSOLE BOX INSERT INFO

68. REMOVE NO. 1 SWITCH HOLE BASE (w/o Smart Key System) INFO

69. REMOVE NO. 1 SWITCH HOLE BASE (w/ Smart Key System) INFO

70. REMOVE FRONT DOOR SCUFF PLATE RH INFO

71. REMOVE COWL SIDE TRIM BOARD RH INFO

72. REMOVE NO. 2 INSTRUMENT PANEL UNDER COVER SUB-ASSEMBLY (w/ Instrument Panel Under Cover) INFO

73. REMOVE FRONT NO. 2 CONSOLE BOX INSERT INFO

74. REMOVE UPPER CONSOLE PANEL SUB-ASSEMBLY INFO

75. REMOVE CONSOLE BOX CARPET INFO

76. REMOVE CONSOLE BOX ASSEMBLY (for Manual Transaxle) INFO

77. REMOVE CONSOLE BOX ASSEMBLY (for Automatic Transaxle) INFO

78. REMOVE NO. 2 ANTENNA CORD SUB-ASSEMBLY INFO

79. REMOVE LOWER INSTRUMENT PANEL SUB-ASSEMBLY INFO

80. REMOVE SMART KEY ECU ASSEMBLY (w/ Smart Key System) INFO

81. REMOVE NO. 1 AIR DUCT SUB-ASSEMBLY INFO

82. REMOVE LOWER DEFROSTER NOZZLE ASSEMBLY INFO

83. REMOVE CENTER INSTRUMENT PANEL TO COWL BRACE INFO

84. REMOVE REAR NO. 2 AIR DUCT (w/ Rear Air Duct) INFO

85. REMOVE REAR NO. 3 AIR DUCT (w/ Rear Air Duct) INFO

86. REMOVE NO. 1 INSTRUMENT PANEL BRACE SUB-ASSEMBLY (for Manual Air Conditioning System) INFO

87. REMOVE NO. 1 INSTRUMENT PANEL BRACE SUB-ASSEMBLY (for Automatic Air Conditioning System) INFO

88. REMOVE NO. 2 INSTRUMENT PANEL BRACE SUB-ASSEMBLY INFO

89. REMOVE REAR NO. 1 AIR DUCT (w/ Rear Air Duct) INFO

90. REMOVE INSTRUMENT PANEL REINFORCEMENT ASSEMBLY (for Manual Air Conditioning System) INFO

91. REMOVE INSTRUMENT PANEL REINFORCEMENT ASSEMBLY (for Automatic Air Conditioning System) INFO

92. REMOVE AIR CONDITIONING UNIT INFO

93. REMOVE NO. 2 AIR DUCT SUB-ASSEMBLY INFO

94. REMOVE BLOWER ASSEMBLY (w/o PTC Heater) INFO

95. REMOVE BLOWER ASSEMBLY (w/ PTC Heater) INFO

96. REMOVE AIR INLET CONTROL SERVO MOTOR (for Manual Air Conditioning System)

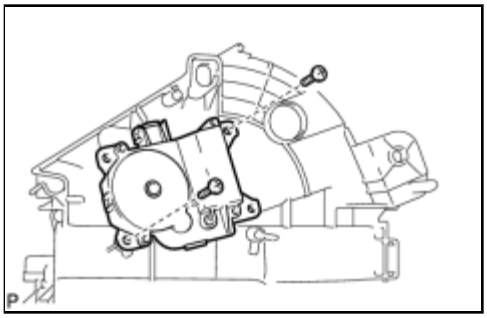

(a) Remove the 2 screws and the air inlet control servo motor.

97. REMOVE AIR INLET CONTROL SERVO MOTOR (for Automatic Air Conditioning System)

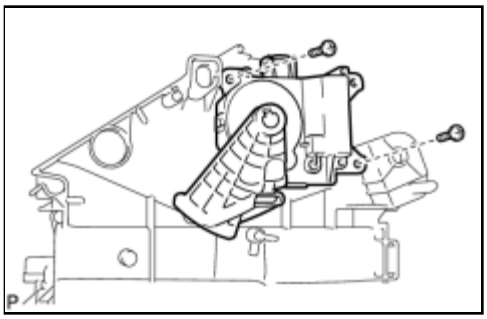

(a) Remove the 2 screws and the air inlet control servo motor.

Last Modified: 3-10-2010	6.4 A	**From:** 200901
Model Year: 2010	**Model:** Corolla	**Doc ID:** RM000001HLU0ACX
Title: HEATING / AIR CONDITIONING: AIR INLET CONTROL SERVO MOTOR: INSTALLATION (2010 Corolla)		

INSTALLATION

1. INSTALL AIR INLET CONTROL SERVO MOTOR (for Manual Air Conditioning System)

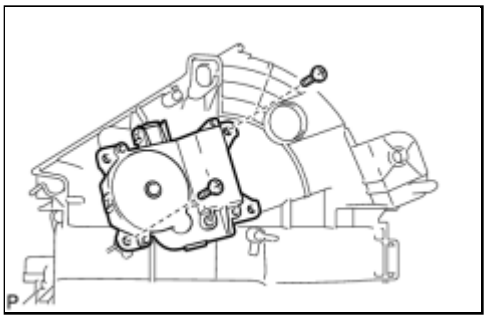

(a) Install the air inlet control servo motor with the 2 screws.

2. INSTALL AIR INLET CONTROL SERVO MOTOR (for Automatic Air Conditioning System)

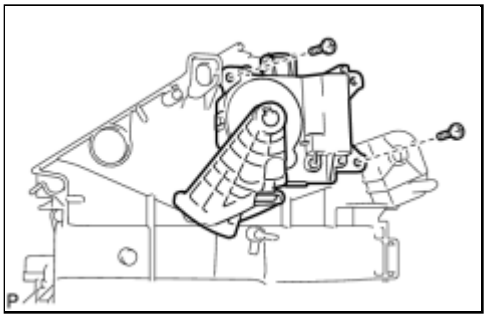

(a) Install the air inlet control servo motor with the 2 screws.

3. INSTALL BLOWER ASSEMBLY (w/o PTC Heater) INFO

4. INSTALL BLOWER ASSEMBLY (w/ PTC Heater) INFO

5. INSTALL NO. 2 AIR DUCT SUB-ASSEMBLY INFO

6. TEMPORARILY TIGHTEN AIR CONDITIONING UNIT INFO

7. INSTALL INSTRUMENT PANEL REINFORCEMENT ASSEMBLY (for Manual Air Conditioning System) INFO

8. INSTALL INSTRUMENT PANEL REINFORCEMENT ASSEMBLY (for Automatic Air Conditioning System) INFO

9. INSTALL AIR CONDITIONING UNIT INFO

10. REMOVE REAR NO. 1 AIR DUCT (w/ Rear Air Duct) INFO

11. INSTALL NO. 2 INSTRUMENT PANEL BRACE SUB-ASSEMBLY INFO

12. INSTALL NO. 1 INSTRUMENT PANEL BRACE SUB-ASSEMBLY (for Manual Air Conditioning System) INFO

13. INSTALL NO. 1 INSTRUMENT PANEL BRACE SUB-ASSEMBLY (for Automatic Air Conditioning System) INFO

14. INSTALL REAR NO. 3 AIR DUCT (w/ Rear Air Duct) INFO

15. INSTALL REAR NO. 2 AIR DUCT (w/ Rear Air Duct) INFO

16. INSTALL CENTER INSTRUMENT PANEL TO COWL BRACE INFO

17. INSTALL LOWER DEFROSTER NOZZLE ASSEMBLY INFO

18. INSTALL NO. 1 AIR DUCT SUB-ASSEMBLY INFO

19. INSTALL SMART KEY ECU ASSEMBLY (w/ Smart Key System) INFO

20. INSTALL LOWER INSTRUMENT PANEL SUB-ASSEMBLY INFO

21. INSTALL NO. 2 ANTENNA CORD SUB-ASSEMBLY INFO

22. INSTALL CONSOLE BOX ASSEMBLY (for Manual Transaxle) INFO

23. INSTALL CONSOLE BOX ASSEMBLY (for Automatic Transaxle) INFO

24. INSTALL CONSOLE BOX CARPET INFO

25. INSTALL UPPER CONSOLE PANEL SUB-ASSEMBLY INFO

26. INSTALL NO. 1 SWITCH HOLE BASE (w/o Smart Key System) INFO

27. INSTALL NO. 1 SWITCH HOLE BASE (w/ Smart Key System) INFO

28. INSTALL FRONT NO. 1 CONSOLE BOX INSERT INFO

29. INSTALL COWL SIDE TRIM BOARD LH INFO

30. INSTALL FRONT DOOR SCUFF PLATE LH INFO

31. INSTALL FRONT NO. 2 CONSOLE BOX INSERT INFO

32. INSTALL NO. 2 INSTRUMENT PANEL UNDER COVER SUB-ASSEMBLY (w/ Instrument Panel Under Cover) INFO

33. INSTALL COWL SIDE TRIM BOARD RH INFO

34. INSTALL FRONT DOOR SCUFF PLATE RH INFO

35. INSTALL AIR CONDITIONING PANEL ASSEMBLY (for Manual Air Conditioning System)

INFO

36. INSTALL AIR CONDITIONING CONTROL ASSEMBLY (for Automatic Air Conditioning System) INFO

37. INSTALL INSTRUMENT PANEL HOLE COVER INFO

38. INSTALL INSTRUMENT PANEL BOX ASSEMBLY INFO

39. INSTALL CENTER NO. 1 INSTRUMENT CLUSTER FINISH PANEL ASSEMBLY (for Manual Transaxle) INFO

40. INSTALL CENTER NO. 1 INSTRUMENT CLUSTER FINISH PANEL ASSEMBLY (for Automatic Transaxle) INFO

41. INSTALL SHIFT LEVER KNOB SUB-ASSEMBLY (for Manual Transaxle) INFO

42. INSTALL SHIFT LEVER KNOB SUB-ASSEMBLY (for Automatic Transaxle) INFO

43. INSTALL RADIO RECEIVER WITH BRACKET (w/o Navigation System) INFO

44. INSTALL CENTER INSTRUMENT CLUSTER FINISH PANEL SUB-ASSEMBLY (w/ Navigation System) INFO

45. INSTALL NAVIGATION RECEIVER WITH BRACKET (w/ Navigation System) INFO

46. INSTALL STEERING POST ASSEMBLY (for 2ZR-FE) INFO

47. INSTALL STEERING POST ASSEMBLY (for 2AZ-FE) INFO

48. TURN FRONT WHEELS FACING STRAIGHT AHEAD

49. CONNECT NO. 2 STEERING INTERMEDIATE SHAFT ASSEMBLY INFO

50. INSTALL STOP LIGHT SWITCH ASSEMBLY INFO

51. INSTALL NO. 3 AIR DUCT SUB-ASSEMBLY INFO

52. INSTALL INSTRUMENT PANEL SUB REINFORCEMENT INFO

53. INSTALL COLUMN HOLE COVER SILENCER SHEET INFO

54. INSTALL TRANSPONDER KEY AMPLIFIER (w/o Smart Key System) INFO

55. INSTALL TURN SIGNAL SWITCH ASSEMBLY WITH SPIRAL CABLE SUB-ASSEMBLY INFO

56. INSTALL UPPER STEERING COLUMN COVER INFO

57. INSTALL LOWER STEERING COLUMN COVER INFO

58. TURN FRONT WHEELS FACING STRAIGHT AHEAD

59. ADJUST SPIRAL CABLE INFO

60. INSTALL STEERING WHEEL ASSEMBLY INFO

61. INSTALL STEERING PAD INFO

62. INSTALL LOWER NO. 3 STEERING WHEEL COVER INFO

63. INSTALL LOWER NO. 2 STEERING WHEEL COVER INFO

64. INSPECT STEERING WHEEL CENTER POINT

65. INSTALL LOWER INSTRUMENT PANEL FINISH PANEL SUB-ASSEMBLY INFO

66. INSTALL POWER STEERING ECU ASSEMBLY (for 2ZR-FE) INFO

67. INSTALL POWER STEERING ECU ASSEMBLY (for 2AZ-FE) INFO

68. INSTALL UPPER INSTRUMENT PANEL SUB-ASSEMBLY INFO

69. CONNECT INSTRUMENT PANEL WIRE ASSEMBLY INFO

70. CONNECT FRONT DOOR OPENING TRIM WEATHERSTRIP LH INFO

71. INSTALL LOWER INSTRUMENT PANEL FINISH PANEL ASSEMBLY INFO

72. CONNECT FRONT DOOR OPENING TRIM WEATHERSTRIP RH INFO

73. INSTALL NO. 1 INSTRUMENT PANEL BOX DOOR SUB-ASSEMBLY INFO

74. INSTALL GLOVE COMPARTMENT DOOR ASSEMBLY INFO

75. INSTALL FRONT PILLAR GARNISH LH (w/ Curtain Shield Airbag) INFO

76. INSTALL FRONT PILLAR GARNISH LH (w/o Curtain Shield Airbag) INFO

77. INSTALL FRONT PILLAR GARNISH RH (w/ Curtain Shield Airbag) INFO

78. INSTALL FRONT PILLAR GARNISH RH (w/o Curtain Shield Airbag) INFO

79. INSTALL COMBINATION METER ASSEMBLY INFO

80. INSTALL INSTRUMENT CLUSTER FINISH PANEL ASSEMBLY INFO

81. INSTALL CENTER INSTRUMENT PANEL REGISTER ASSEMBLY INFO

82. INSTALL INSTRUMENT PANEL FINISH PANEL END LH INFO

83. INSTALL INSTRUMENT PANEL FINISH PANEL END RH INFO

84. INSTALL LOWER INSTRUMENT PANEL FINISH PANEL LH INFO

85. INSTALL LOWER INSTRUMENT PANEL FINISH PANEL RH INFO

86. INSTALL HEATER WATER HOSE OUTLET INFO

87. INSTALL HEATER WATER HOSE INLET INFO

88. INSTALL AIR CONDITIONING TUBE ASSEMBLY INFO

89. INSTALL SUCTION PIPE SUB-ASSEMBLY INFO

90. INSTALL OUTER COWL TOP PANEL (for TMC Made) INFO

91. INSTALL OUTER COWL TOP PANEL (except TMC Made) INFO

92. INSTALL WINDSHIELD WIPER MOTOR AND LINK ASSEMBLY INFO

93. INSTALL COWL TOP VENTILATOR LOUVER LH INFO

94. INSTALL CENTER NO. 1 COWL TOP VENTILATOR LOUVER INFO

95. INSTALL HOOD TO COWL TOP SEAL INFO

96. INSTALL FRONT WIPER ARM AND BLADE ASSEMBLY RH INFO

97. INSTALL FRONT WIPER ARM AND BLADE ASSEMBLY LH INFO

98. INSTALL FRONT WIPER ARM HEAD CAP INFO

99. CHARGE WITH REFRIGERANT INFO

100. ADD ENGINE COOLANT (for 2ZR-FE) INFO

101. ADD ENGINE COOLANT (for 2AZ-FE) INFO

102. CONNECT CABLE TO NEGATIVE BATTERY TERMINAL

103. INSPECT FOR COOLANT LEAK (for 2ZR-FE) INFO

104. INSPECT FOR COOLANT LEAK (for 2AZ-FE) INFO

105. INSPECT STEERING PAD INFO

106. INSPECT SRS WARNING LIGHT

INFO

107. WARM UP ENGINE INFO

108. INSPECT FOR REFRIGERANT LEAK INFO

Last Modified: 3-10-2010	6.4 G	**From:** 200901
Model Year: 2010	**Model:** Corolla	**Doc ID:** RM00000314U00MX
Title: HEATING / AIR CONDITIONING: AIR INLET CONTROL SERVO MOTOR: INSPECTION (2010 Corolla)		

INSPECTION

1. INSPECT RECIRCULATION DAMPER SERVO MOTOR (for Manual Air Conditioning System)

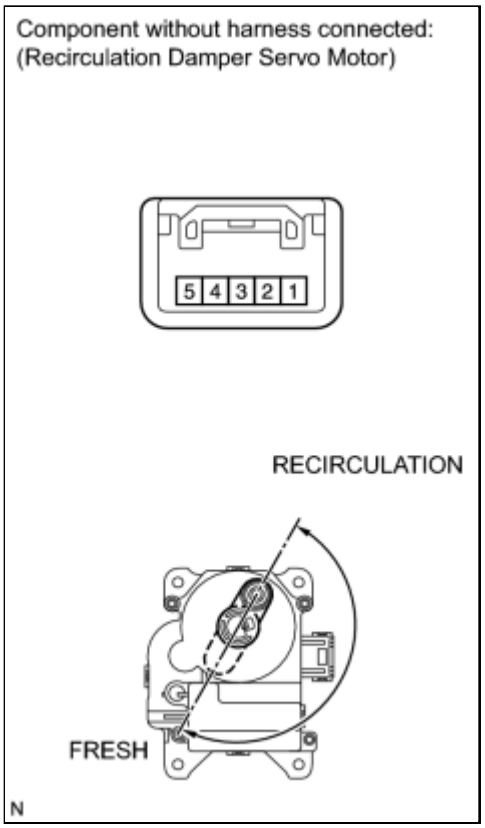

(a) Disconnect the connector from the recirculation damper servo motor.

(b) Connect a positive (+) lead from the battery to terminal 5 and a negative (-) lead from the battery to terminal 2, then check that the arm turns to the "FRESH" side smoothly.

OK:

Lever turns to "FRESH" side smoothly.

(c) Connect a positive (+) lead from the battery to terminal 5 and a negative (-) lead from the battery to terminal 1, then check that the arm turns to the "RECIRCULATION" side smoothly.

OK:

Lever turns to "RECIRCULATION" side smoothly.

If the result is not as specified, replace the recirculation damper servo motor.

Last Modified: 3-10-2010	6.4 K	**From:** 200901
Model Year: 2010	**Model:** Corolla	**Doc ID:** RM000003FXQ001X
Title: HEATING / AIR CONDITIONING: AMBIENT TEMPERATURE SENSOR: COMPONENTS (2010 Corolla)		

COMPONENTS

ILLUSTRATION

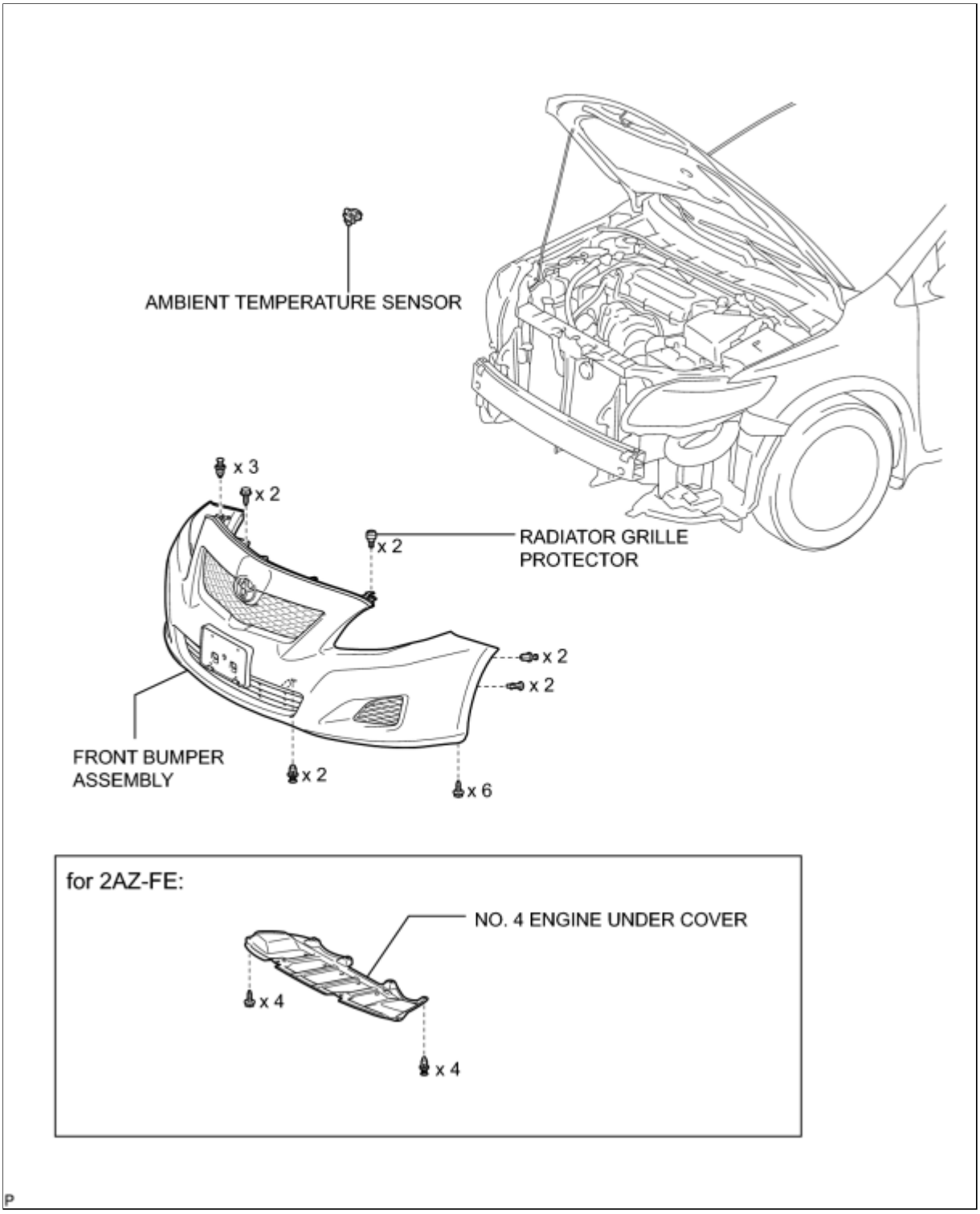
AMBIENT TEMPERATURE SENSOR
x 3
x 2
x 2
RADIATOR GRILLE PROTECTOR
x 2
x 2
FRONT BUMPER ASSEMBLY
x 2
x 6

for 2AZ-FE:

NO. 4 ENGINE UNDER COVER
x 4
x 4

P

Last Modified: 3-10-2010	6.4 A	**From:** 200901
Model Year: 2010	**Model:** Corolla	**Doc ID:** RM000002XMI00DX
Title: HEATING / AIR CONDITIONING: AMBIENT TEMPERATURE SENSOR: REMOVAL (2010 Corolla)		

REMOVAL

1. REMOVE RADIATOR GRILLE PROTECTOR INFO

2. REMOVE NO. 4 ENGINE UNDER COVER (for 2AZ-FE) INFO

3. REMOVE FRONT BUMPER ASSEMBLY INFO

4. REMOVE AMBIENT TEMPERATURE SENSOR

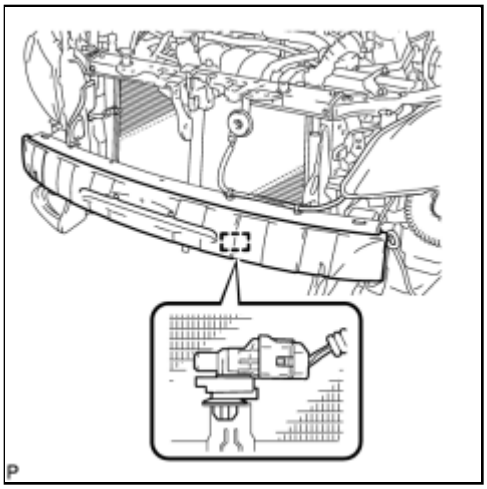

(a) Disconnect the connector.

(b) Disengage the clamp and the ambient temperature sensor.

Last Modified: 3-10-2010	6.4 G	**From:** 200901
Model Year: 2010	**Model:** Corolla	**Doc ID:** RM00000201P020X
Title: HEATING / AIR CONDITIONING: AMBIENT TEMPERATURE SENSOR: INSPECTION (2010 Corolla)		

INSPECTION

1. INSPECT AMBIENT TEMPERATURE SENSOR

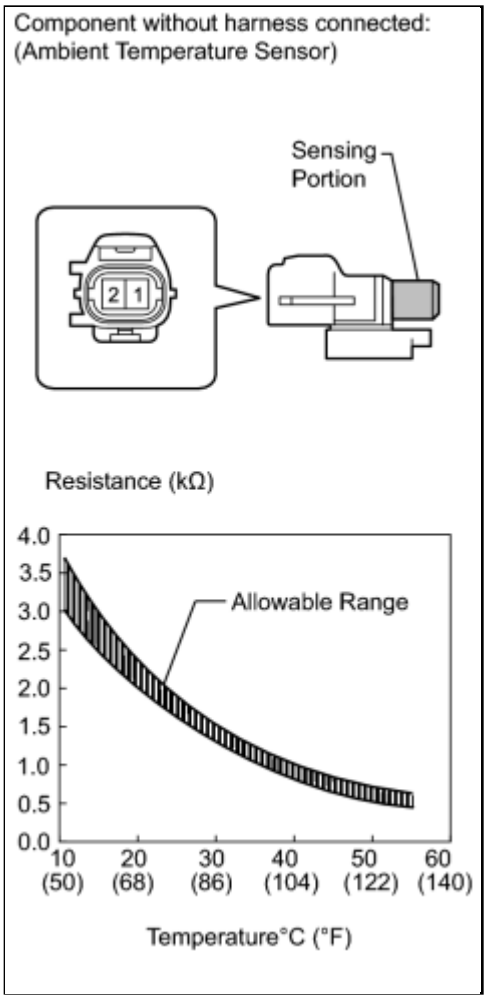

(a) Disconnect the connector from the ambient temperature sensor.

(b) Measure the resistance according to the value(s) in the table below.

Standard Resistance:

TESTER CONNECTION	CONDITION	SPECIFIED CONDITION
1 - 2	10°C (50°F)	3.00 to 3.73 kΩ
1 - 2	15°C (59°F)	2.45 to 2.88 kΩ
1 - 2	20°C (68°F)	1.95 to 2.30 kΩ

TESTER CONNECTION	CONDITION	SPECIFIED CONDITION
1 - 2	25°C (77°F)	1.60 to 1.80 kΩ
1 - 2	30°C (86°F)	1.28 to 1.47 kΩ
1 - 2	35°C (95°F)	1.00 to 1.22 kΩ
1 - 2	40°C (104°F)	0.80 to 1.00 kΩ
1 - 2	45°C (113°F)	0.65 to 0.85 kΩ
1 - 2	50°C (122°F)	0.50 to 0.70 kΩ
1 - 2	55°C (131°F)	0.44 to 0.60 kΩ
1 - 2	60°C (140°F)	0.36 to 0.50 kΩ

NOTICE:

- Even slightly touching the sensor may change the resistance value. Be sure to hold the connector of the sensor.
- When measuring, the sensor temperature must be the same as the ambient temperature.

HINT:

As the temperature increases, the resistance decreases (see the graph).

If the resistance is not as specified, replace the ambient temperature sensor.

Last Modified: 3-10-2010	6.4 A	**From:** 200901
Model Year: 2010	**Model:** Corolla	**Doc ID:** RM000002XMG00DX
Title: HEATING / AIR CONDITIONING: AMBIENT TEMPERATURE SENSOR: INSTALLATION (2010 Corolla)		

INSTALLATION

1. INSTALL AMBIENT TEMPERATURE SENSOR

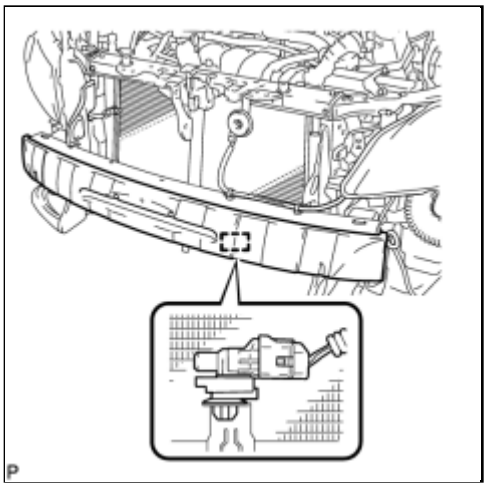

(a) Engage the clamp and install the ambient temperature sensor.

(b) Connect the connector.

2. INSTALL FRONT BUMPER ASSEMBLY INFO

3. INSTALL NO. 4 ENGINE UNDER COVER (for 2AZ-FE) INFO

4. INSTALL RADIATOR GRILLE PROTECTOR INFO

5. VEHICLE PREPARATION FOR FOG LIGHT AIMING ADJUSTMENT (w/ Fog Light) INFO

6. PREPARATION FOR FOG LIGHT AIMING (w/ Fog Light) INFO

7. INSPECT FOG LIGHT AIMING (w/ Fog Light) INFO

8. ADJUST FOG LIGHT AIMING (w/ Fog Light) INFO

Last Modified: 3-10-2010	6.4 K	**From:** 200901
Model Year: 2010	**Model:** Corolla	**Doc ID:** RM000003FXK001X
Title: HEATING / AIR CONDITIONING: BLOWER RESISTOR: COMPONENTS (2010 Corolla)		

COMPONENTS

ILLUSTRATION

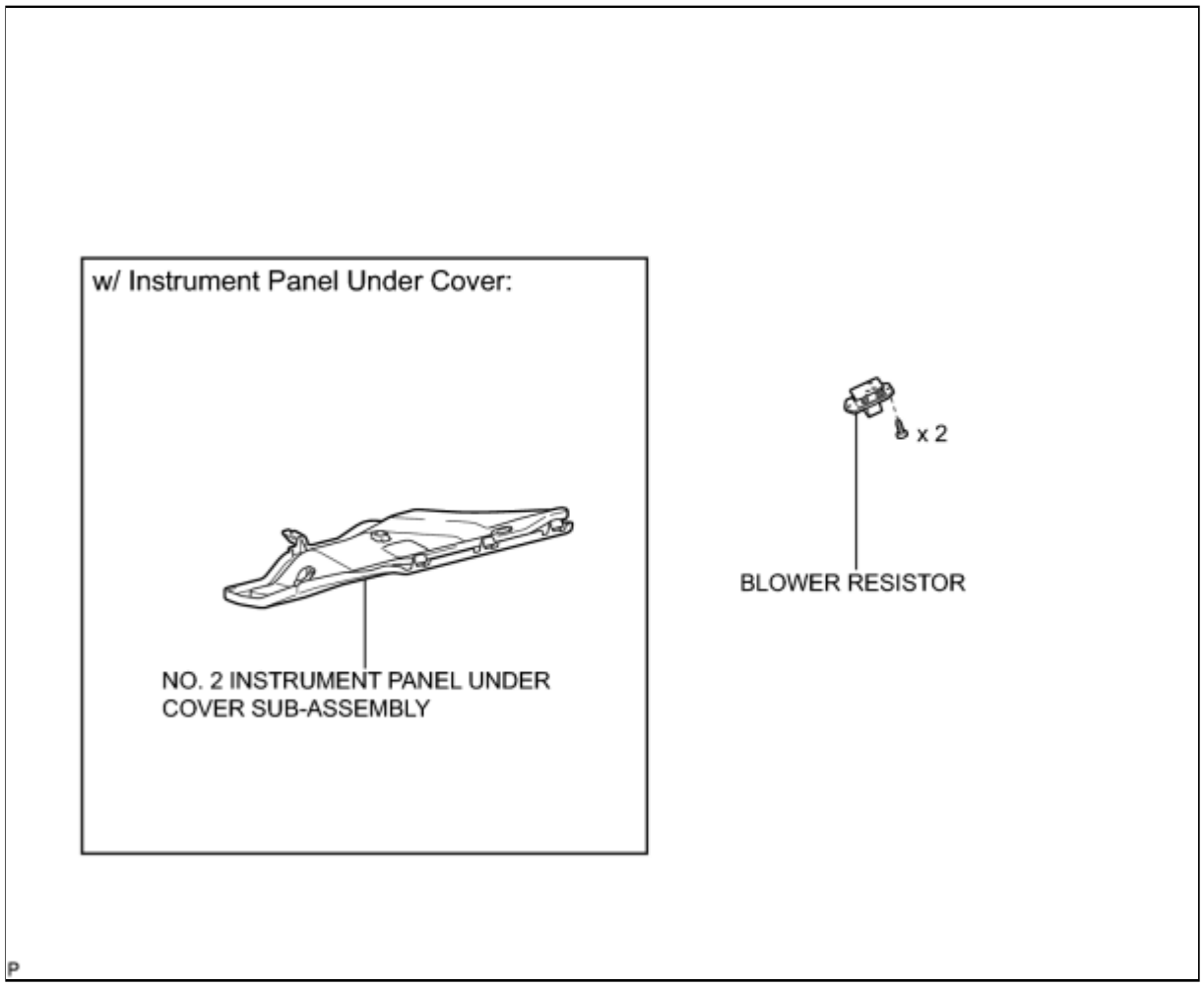

Last Modified: 3-10-2010	6.4 A	**From:** 200901
Model Year: 2010	**Model:** Corolla	**Doc ID:** RM000002XU300EX
Title: HEATING / AIR CONDITIONING: BLOWER RESISTOR: REMOVAL (2010 Corolla)		

REMOVAL

1. REMOVE NO. 2 INSTRUMENT PANEL UNDER COVER SUB-ASSEMBLY (w/ Instrument Panel Under Cover) INFO

2. REMOVE BLOWER RESISTOR

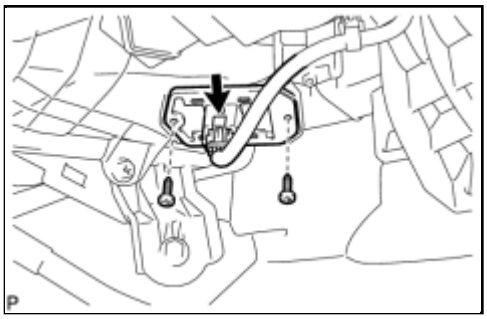

(a) Disconnect the connector.

(b) Remove the 2 screws and the blower resistor.

Last Modified: 3-10-2010	6.4 G	**From:** 200901
Model Year: 2010	**Model:** Corolla	**Doc ID:** RM00000314S00PX
Title: HEATING / AIR CONDITIONING: BLOWER RESISTOR: INSPECTION (2010 Corolla)		

INSPECTION

1. INSPECT BLOWER RESISTOR (for Manual Air Conditioning System)

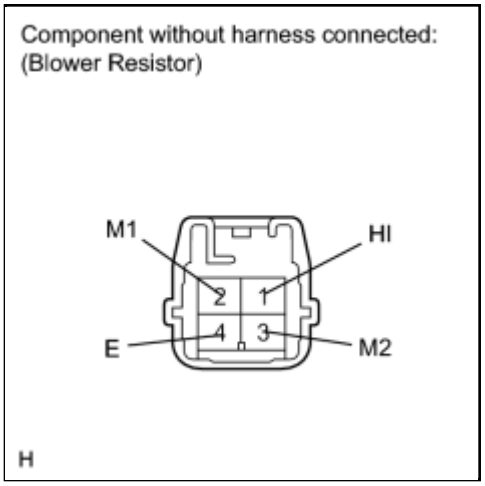

(a) Disconnect the connector from the blower resistor.

(b) Measure the resistance according to the value(s) in the table below.

Standard Resistance:

TESTER CONNECTION	CONDITION	SPECIFIED CONDITION
1 (HI) - 4 (E)	Always	3.12 to 3.60 Ω
1 (HI) - 2 (M1)	Always	1.45 to 1.67 Ω
1 (HI) - 3 (M2)	Always	0.52 to 0.60 Ω

If the resistance is not as specified, replace the blower resistor.

Last Modified: 3-10-2010	6.4 A	**From:** 200901
Model Year: 2010	**Model:** Corolla	**Doc ID:** RM000002XU100EX
Title: HEATING / AIR CONDITIONING: BLOWER RESISTOR: INSTALLATION (2010 Corolla)		

INSTALLATION

1. INSTALL BLOWER RESISTOR

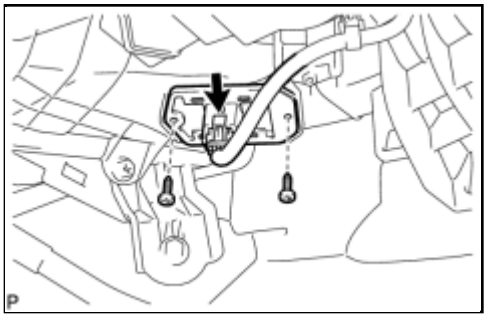

(a) Install the blower resistor with the 2 screws.

(b) Connect the connector.

2. INSTALL NO. 2 INSTRUMENT PANEL UNDER COVER SUB-ASSEMBLY (w/ Instrument Panel Under Cover) INFO

Last Modified: 3-10-2010	6.4 K	**From:** 200901
Model Year: 2010	**Model:** Corolla	**Doc ID:** RM000003FXF001X
Title: HEATING / AIR CONDITIONING: BLOWER UNIT: COMPONENTS (2010 Corolla)		

COMPONENTS

ILLUSTRATION

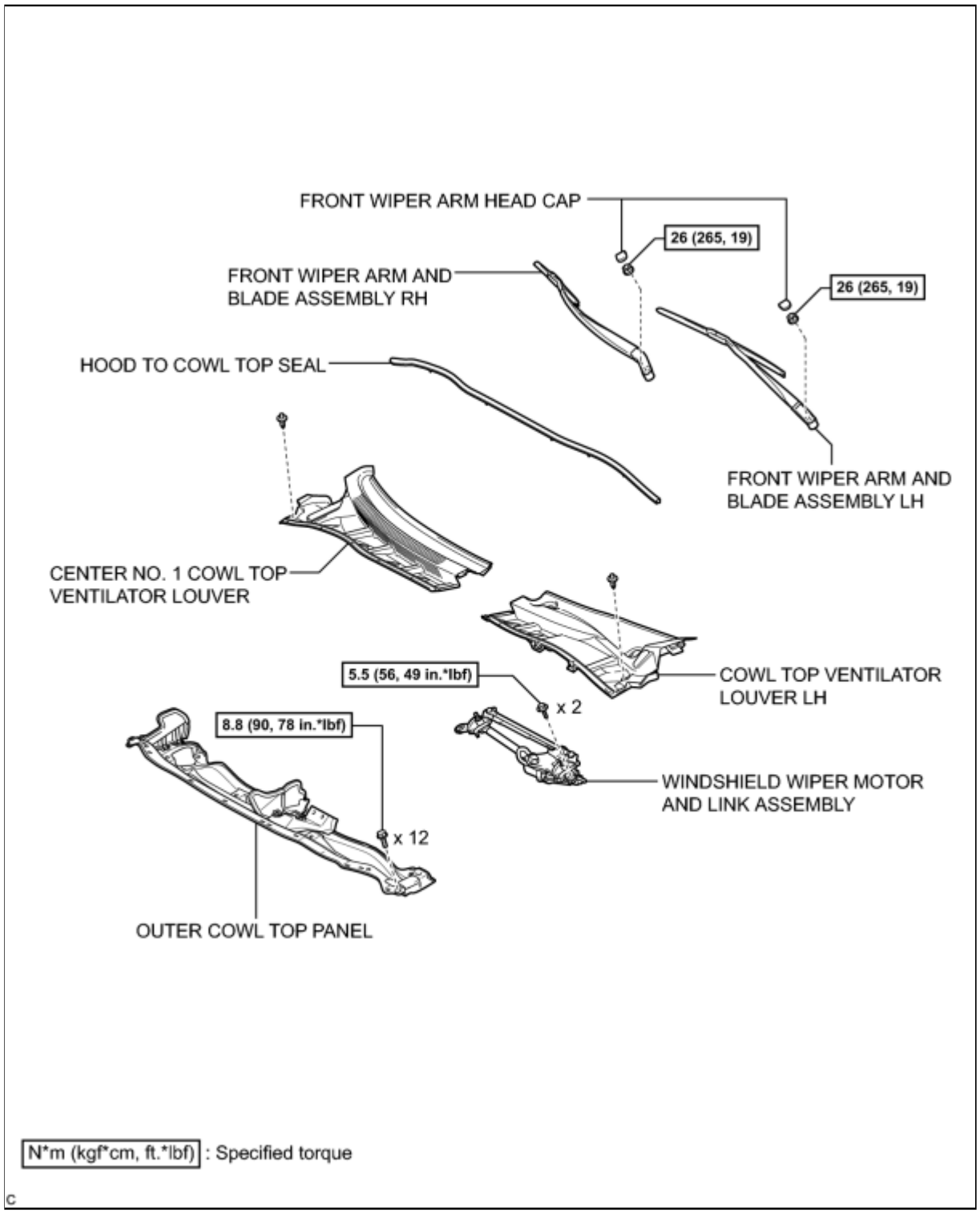

ILLUSTRATION

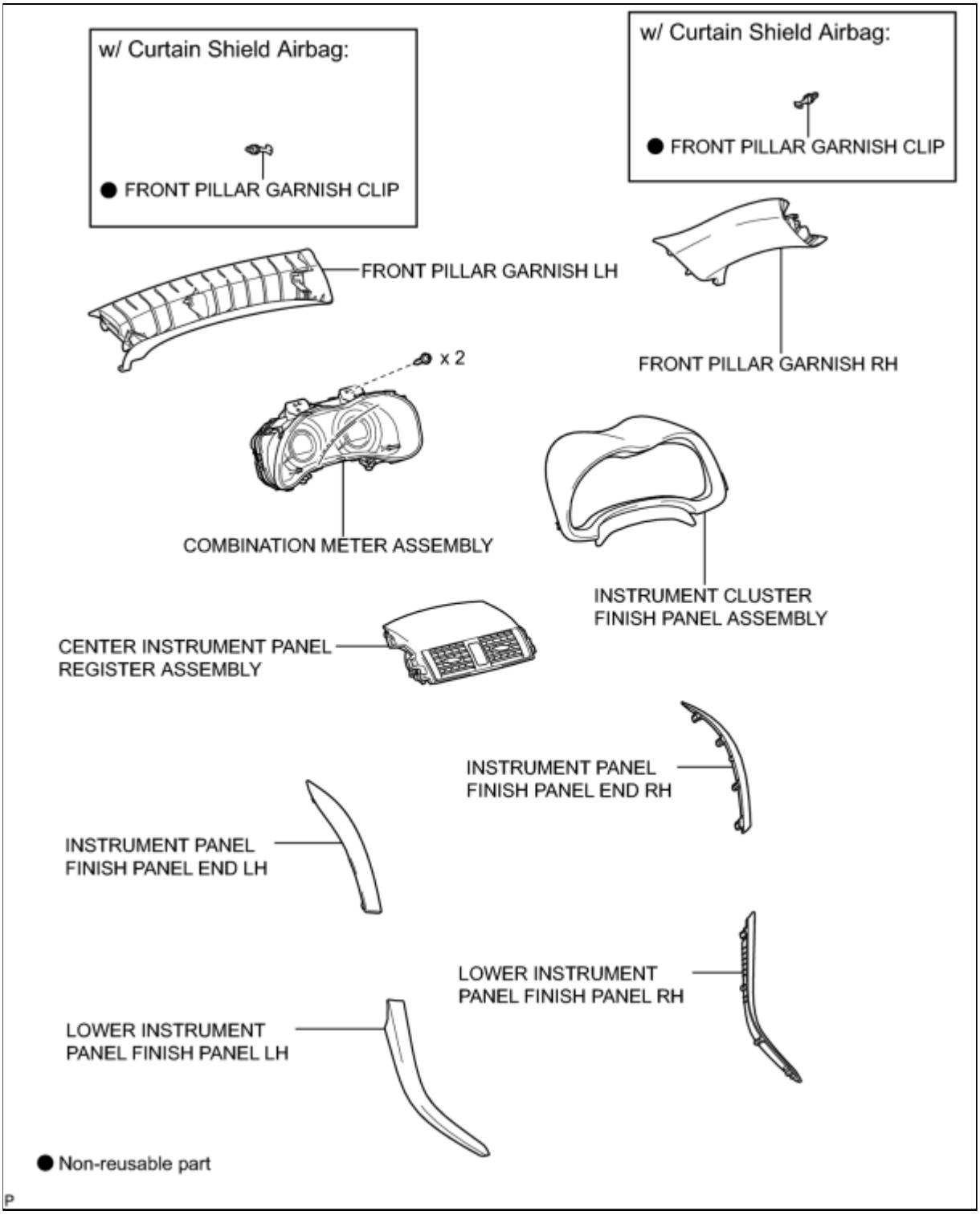

ILLUSTRATION

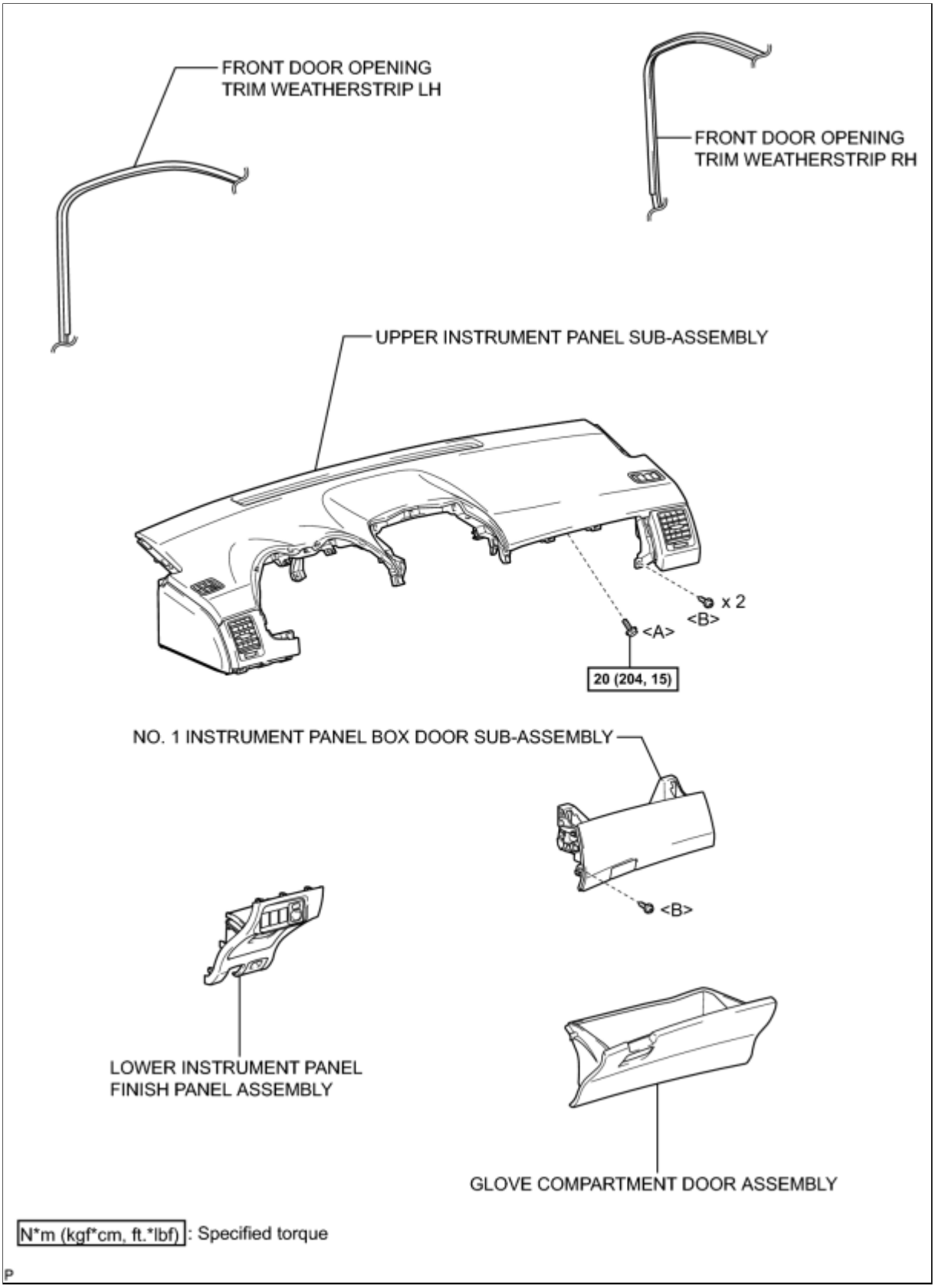

ILLUSTRATION

for 2ZR-FE:

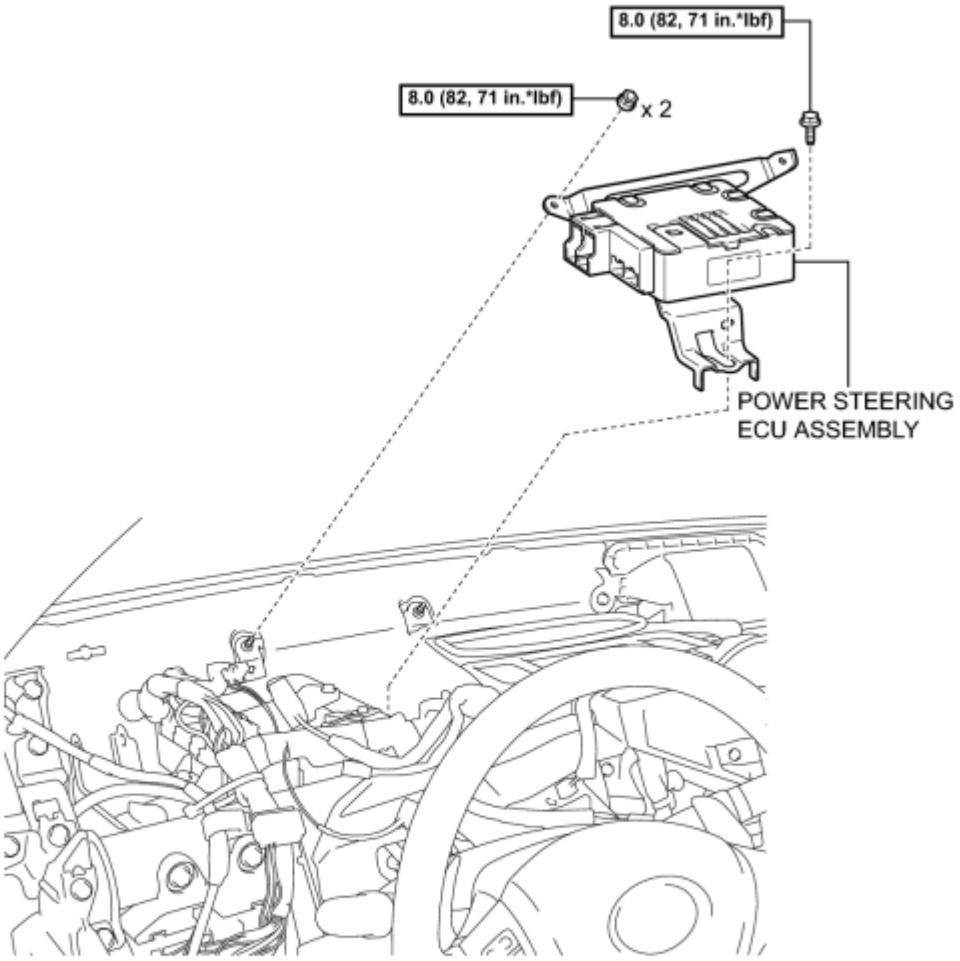

N*m (kgf*cm, ft.*lbf): Specified torque

P

ILLUSTRATION

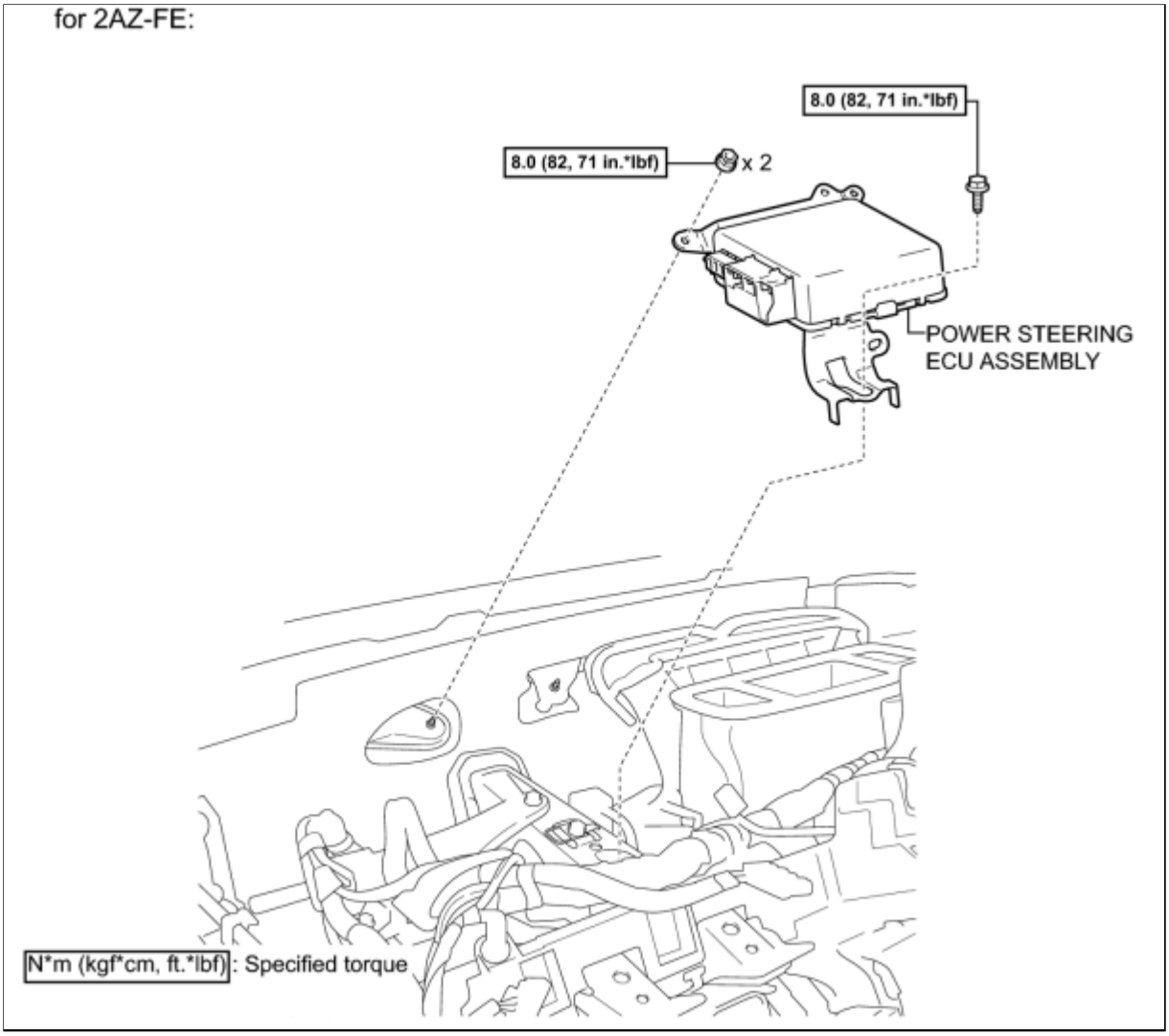

ILLUSTRATION

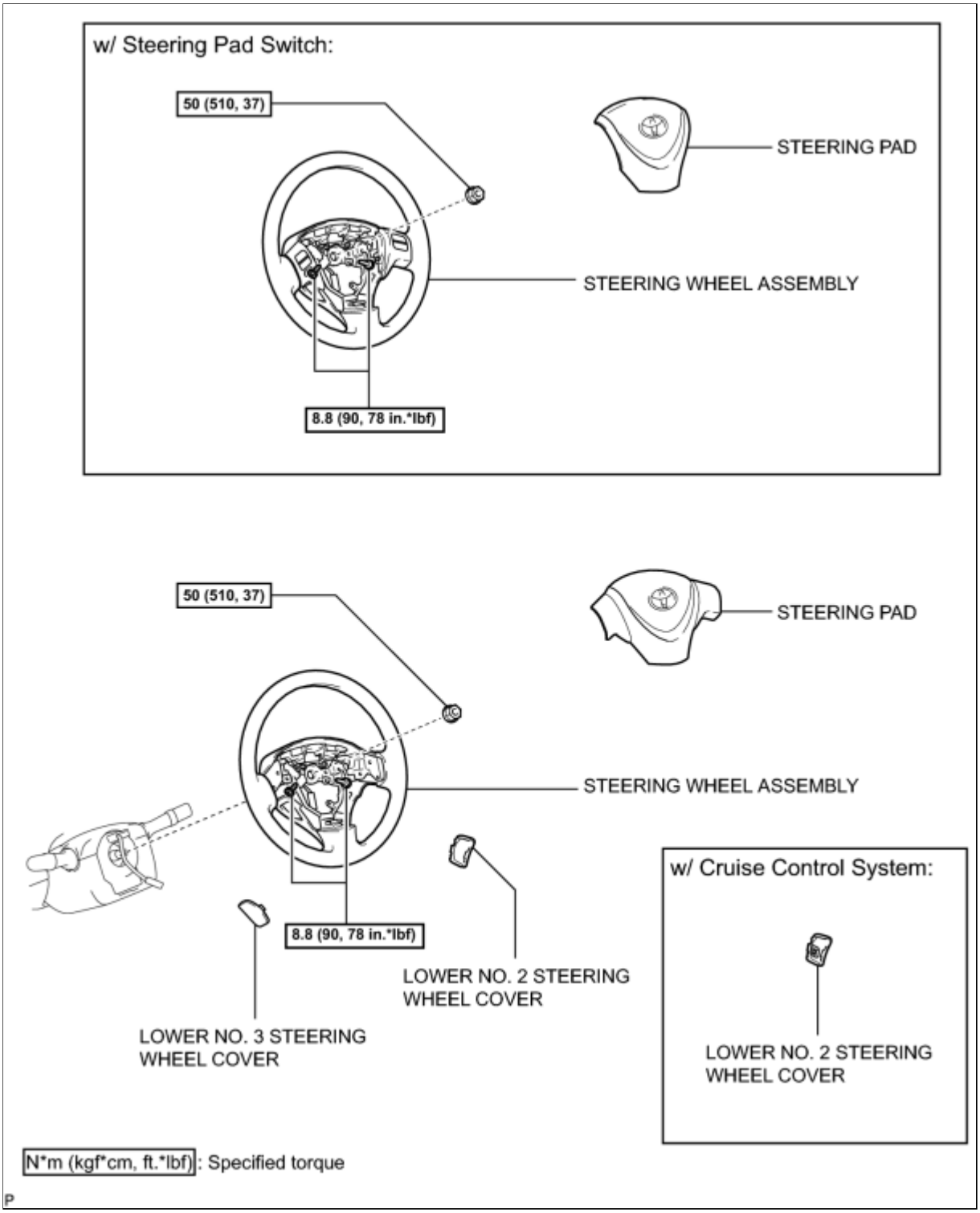

ILLUSTRATION

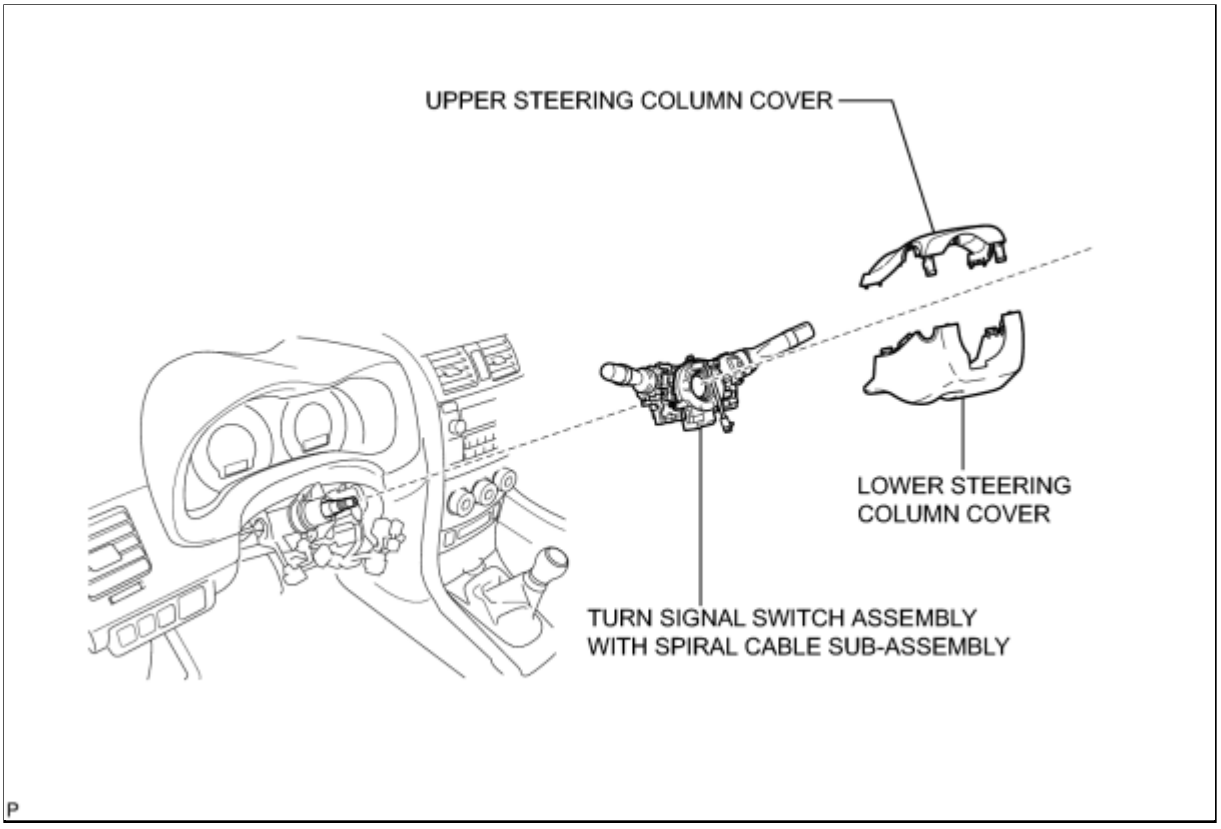

ILLUSTRATION

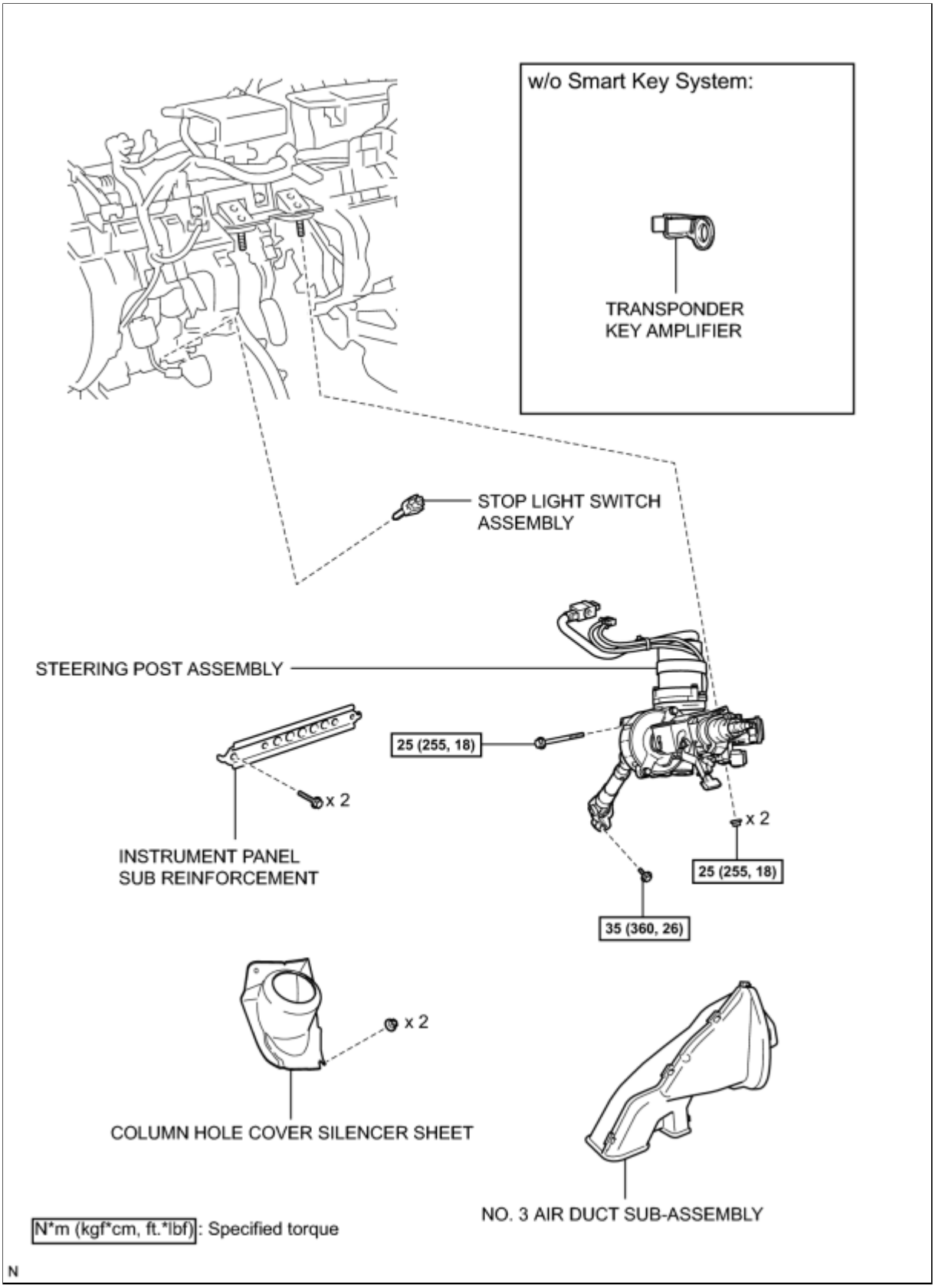

ILLUSTRATION

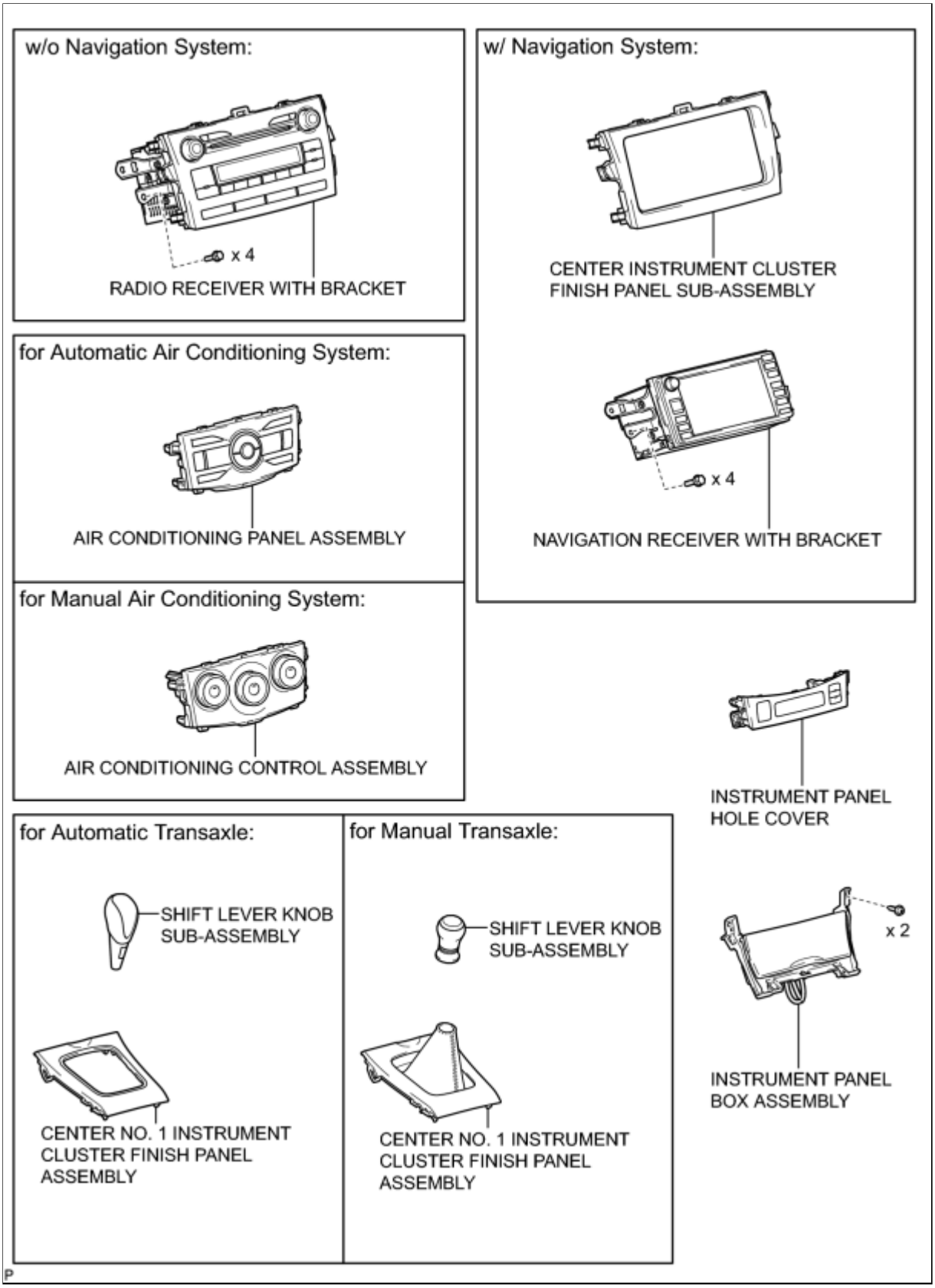

ILLUSTRATION

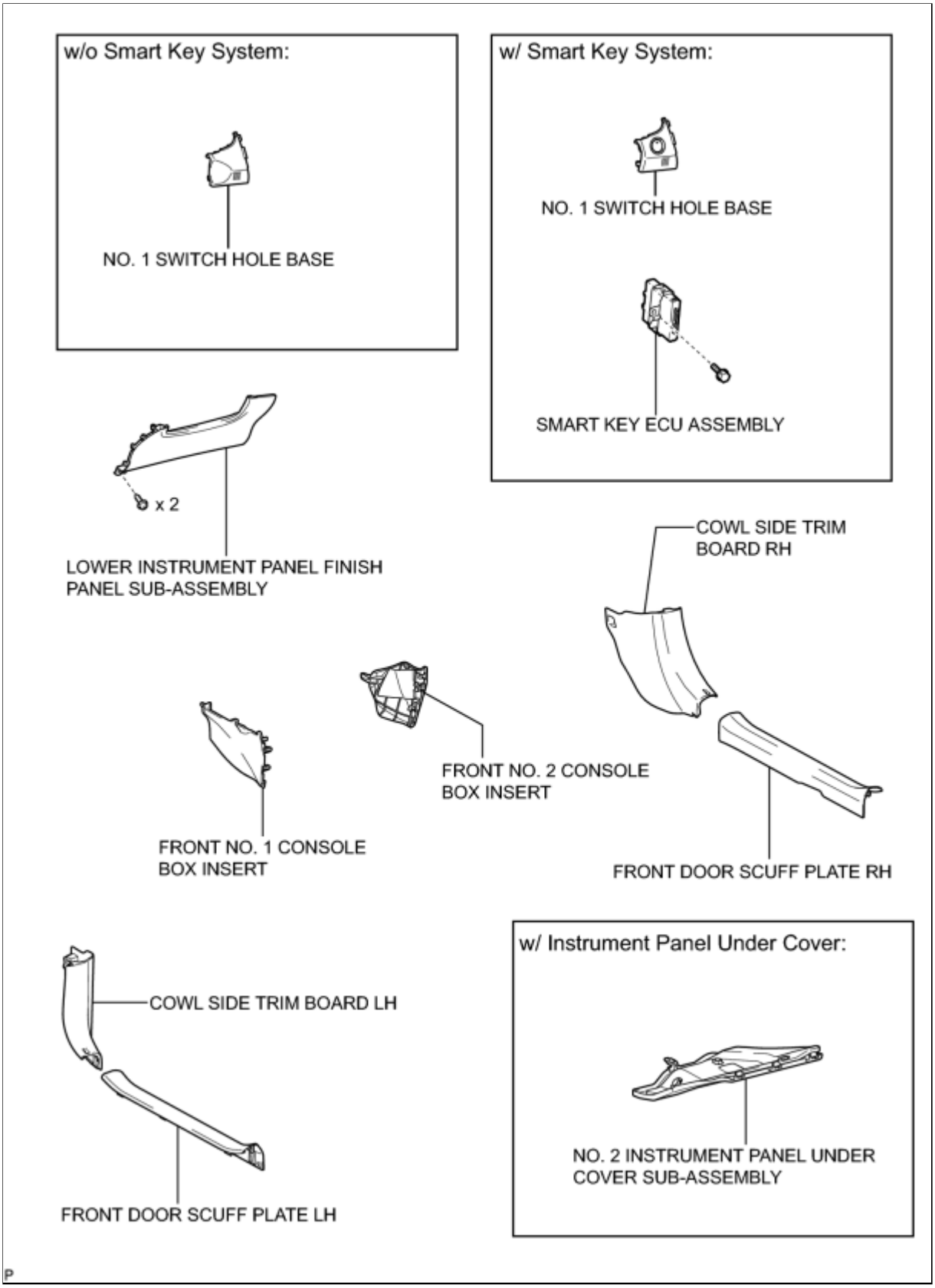

ILLUSTRATION

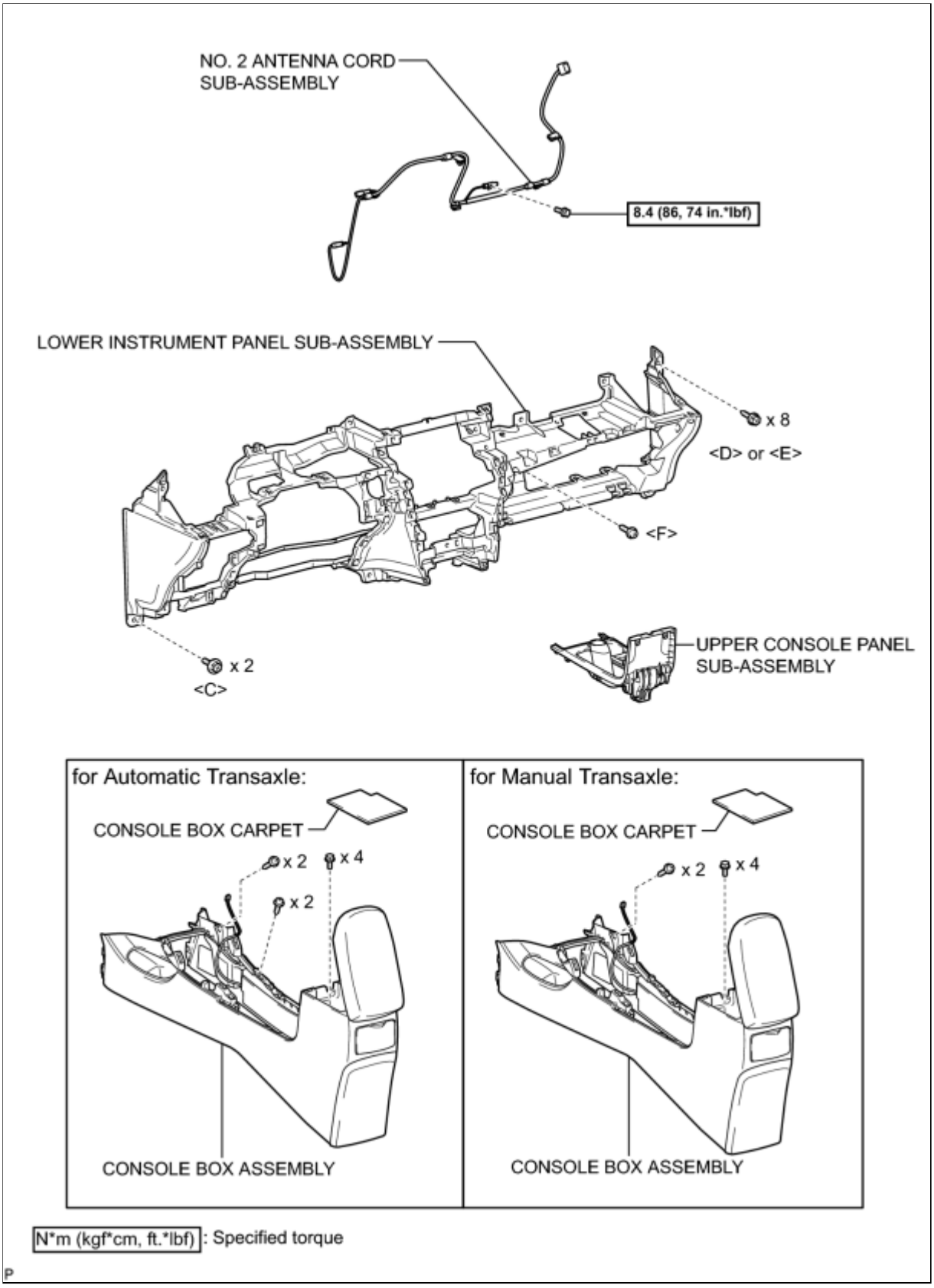

ILLUSTRATION

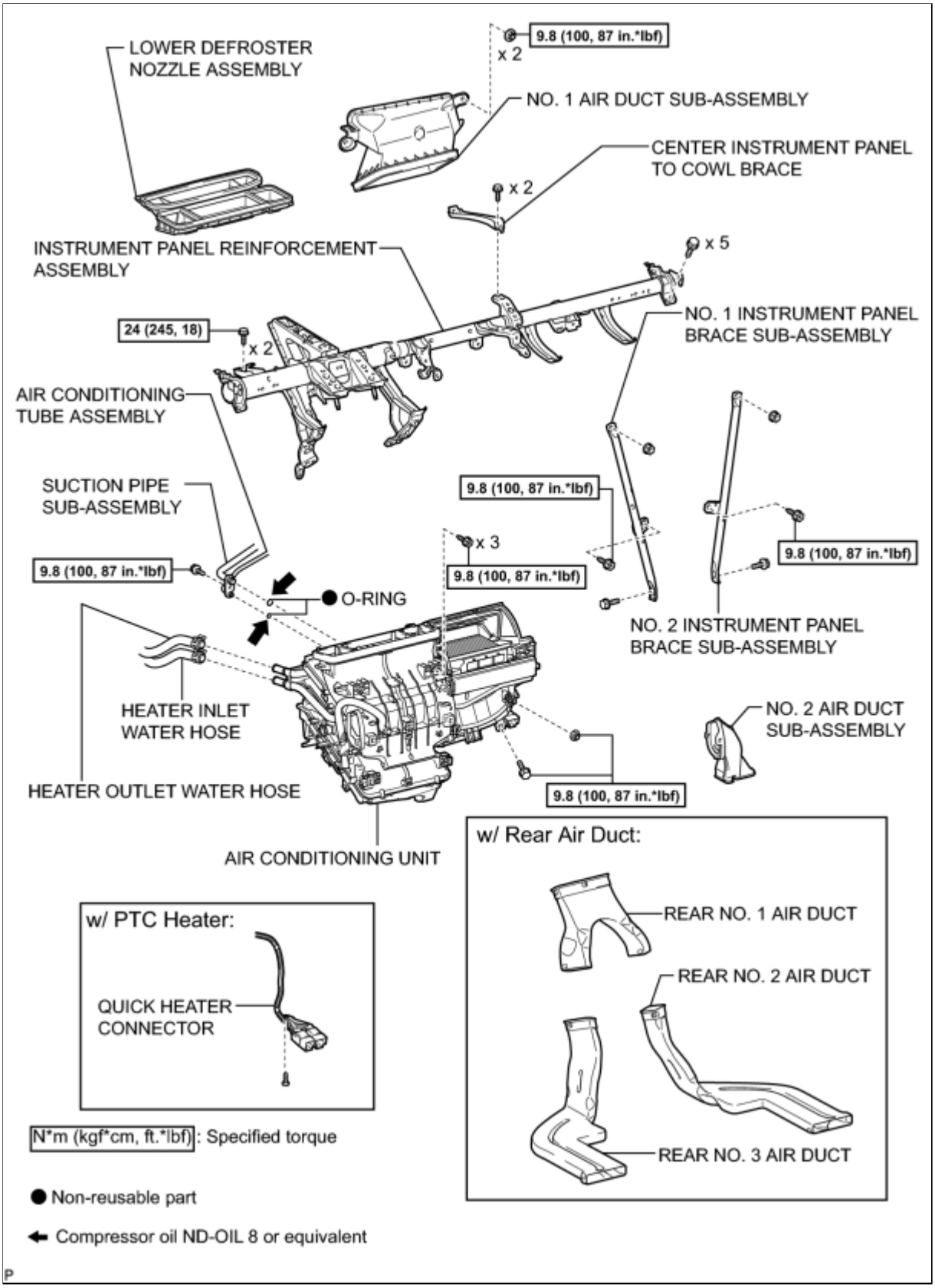

ILLUSTRATION

for Automatic Air Conditioning System:

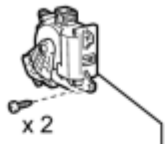

AIR INLET CONTROL SERVO MOTOR

for Manual Air Conditioning System:



AIR INLET CONTROL SERVO MOTOR

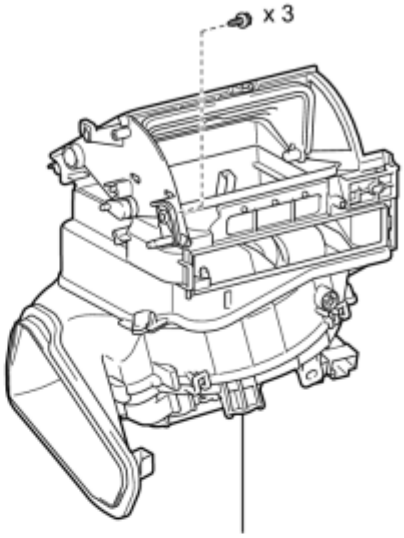

BLOWER ASSEMBLY

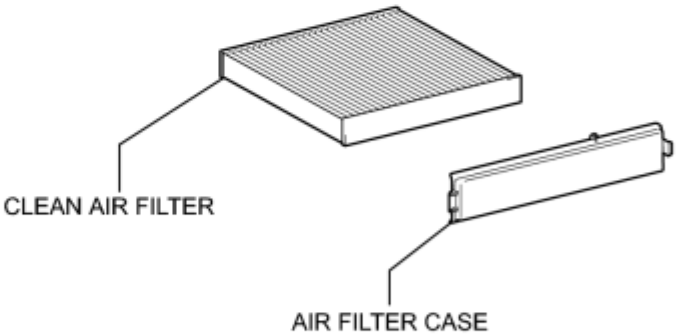

CLEAN AIR FILTER

AIR FILTER CASE

for Manual Air Conditioning System:



BLOWER RESISTOR

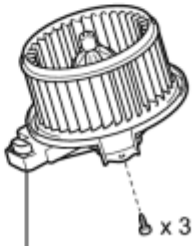

BLOWER MOTOR SUB-ASSEMBLY

P

Last Modified: 3-10-2010	6.4 A	**From:** 200901
Model Year: 2010	**Model:** Corolla	**Doc ID:** RM000001HLW0A8X
Title: HEATING / AIR CONDITIONING: BLOWER UNIT: REMOVAL (2010 Corolla)		

REMOVAL

1. PRECAUTION

INFO

2. ALIGN FRONT WHEELS FACING STRAIGHT AHEAD

3. DISCONNECT CABLE FROM NEGATIVE BATTERY TERMINAL

CAUTION:

Wait at least 90 seconds after disconnecting the cable from the negative (-) battery terminal to disable the SRS system INFO **.**

HINT:

Before disconnecting the cable, set the air conditioning control switch to DEF-MODE. (for Automatic Air Conditioning System)

4. RECOVER REFRIGERANT FROM REFRIGERATION SYSTEM INFO

5. REMOVE FRONT WIPER ARM HEAD CAP INFO

6. REMOVE FRONT WIPER ARM AND BLADE ASSEMBLY LH INFO

7. REMOVE FRONT WIPER ARM AND BLADE ASSEMBLY RH INFO

8. REMOVE HOOD TO COWL TOP SEAL INFO

9. REMOVE CENTER NO. 1 COWL TOP VENTILATOR LOUVER INFO

10. REMOVE COWL TOP VENTILATOR LOUVER LH INFO

11. REMOVE WINDSHIELD WIPER MOTOR AND LINK ASSEMBLY INFO

12. REMOVE OUTER COWL TOP PANEL (for TMC Made) INFO

13. REMOVE OUTER COWL TOP PANEL (except TMC Made) INFO

14. DISCONNECT SUCTION PIPE SUB-ASSEMBLY INFO

15. DISCONNECT AIR CONDITIONING TUBE ASSEMBLY INFO

16. DISCONNECT HEATER WATER HOSE OUTLET INFO

17. DISCONNECT HEATER WATER HOSE INLET INFO

18. REMOVE LOWER INSTRUMENT PANEL FINISH PANEL LH INFO

19. REMOVE LOWER INSTRUMENT PANEL FINISH PANEL RH INFO

20. REMOVE INSTRUMENT PANEL FINISH PANEL END LH INFO

21. REMOVE INSTRUMENT PANEL FINISH PANEL END RH INFO

22. REMOVE CENTER INSTRUMENT PANEL REGISTER ASSEMBLY INFO

23. REMOVE INSTRUMENT CLUSTER FINISH PANEL ASSEMBLY INFO

24. REMOVE COMBINATION METER ASSEMBLY INFO

25. REMOVE FRONT PILLAR GARNISH LH (w/o Curtain Shield Airbag) INFO

26. REMOVE FRONT PILLAR GARNISH LH (w/ Curtain Shield Airbag) INFO

27. REMOVE FRONT PILLAR GARNISH RH (w/o Curtain Shield Airbag) INFO

28. REMOVE FRONT PILLAR GARNISH RH (w/ Curtain Shield Airbag) INFO

29. REMOVE LOWER INSTRUMENT PANEL FINISH PANEL ASSEMBLY INFO

30. DISCONNECT FRONT DOOR OPENING TRIM WEATHERSTRIP LH INFO

31. REMOVE GLOVE COMPARTMENT DOOR ASSEMBLY INFO

32. REMOVE NO. 1 INSTRUMENT PANEL BOX DOOR SUB-ASSEMBLY INFO

33. DISCONNECT FRONT DOOR OPENING TRIM WEATHERSTRIP RH INFO

34. DISCONNECT INSTRUMENT PANEL WIRE ASSEMBLY INFO

35. REMOVE UPPER INSTRUMENT PANEL SUB-ASSEMBLY INFO

36. REMOVE POWER STEERING ECU ASSEMBLY (for 2ZR-FE) INFO

37. REMOVE POWER STEERING ECU ASSEMBLY (for 2AZ-FE) INFO

38. REMOVE LOWER INSTRUMENT PANEL FINISH PANEL SUB-ASSEMBLY INFO

39. REMOVE LOWER NO. 3 STEERING WHEEL COVER INFO

40. REMOVE LOWER NO. 2 STEERING WHEEL COVER INFO

41. REMOVE STEERING PAD INFO

42. REMOVE STEERING WHEEL ASSEMBLY INFO

43. REMOVE LOWER STEERING COLUMN COVER INFO

44. REMOVE UPPER STEERING COLUMN COVER INFO

45. REMOVE TURN SIGNAL SWITCH ASSEMBLY WITH SPIRAL CABLE SUB-ASSEMBLY INFO

46. REMOVE COLUMN HOLE COVER SILENCER SHEET INFO

47. SEPARATE NO. 2 STEERING INTERMEDIATE SHAFT ASSEMBLY INFO

48. REMOVE INSTRUMENT PANEL SUB REINFORCEMENT INFO

49. REMOVE NO. 3 AIR DUCT SUB-ASSEMBLY INFO

50. REMOVE TRANSPONDER KEY AMPLIFIER (w/ Smart Key System) INFO

51. REMOVE STOP LIGHT SWITCH ASSEMBLY INFO

52. REMOVE STEERING POST ASSEMBLY (for 2ZR-FE) INFO

53. REMOVE STEERING POST ASSEMBLY (for 2AZ-FE) INFO

54. REMOVE RADIO RECEIVER WITH BRACKET (w/o Navigation System) INFO

55. REMOVE CENTER INSTRUMENT CLUSTER FINISH PANEL SUB-ASSEMBLY (w/ Navigation System) INFO

56. REMOVE NAVIGATION RECEIVER WITH BRACKET (w/ Navigation System) INFO

57. REMOVE SHIFT LEVER KNOB SUB-ASSEMBLY (for Manual Transaxle) INFO

58. REMOVE SHIFT LEVER KNOB SUB-ASSEMBLY (for Automatic Transaxle) INFO

59. REMOVE CENTER NO. 1 INSTRUMENT CLUSTER FINISH PANEL ASSEMBLY (for Manual Transaxle) INFO

60. REMOVE CENTER NO. 1 INSTRUMENT CLUSTER FINISH PANEL ASSEMBLY (for Automatic Transaxle) INFO

61. REMOVE INSTRUMENT PANEL BOX ASSEMBLY INFO

62. REMOVE INSTRUMENT PANEL HOLE COVER INFO

63. REMOVE AIR CONDITIONING PANEL ASSEMBLY (for Manual Air Conditioning System) INFO

64. REMOVE AIR CONDITIONING CONTROL ASSEMBLY (for Automatic Air Conditioning System) INFO

65. REMOVE FRONT DOOR SCUFF PLATE LH INFO

66. REMOVE COWL SIDE TRIM BOARD LH INFO

67. REMOVE FRONT NO. 1 CONSOLE BOX INSERT INFO

68. REMOVE NO. 1 SWITCH HOLE BASE (w/o Smart Key System) INFO

69. REMOVE NO. 1 SWITCH HOLE BASE (w/ Smart Key System) INFO

70. REMOVE FRONT DOOR SCUFF PLATE RH INFO

71. REMOVE COWL SIDE TRIM BOARD RH INFO

72. REMOVE NO. 2 INSTRUMENT PANEL UNDER COVER SUB-ASSEMBLY (w/ Instrument Panel Under Cover) INFO

73. REMOVE FRONT NO. 2 CONSOLE BOX INSERT INFO

74. REMOVE UPPER CONSOLE PANEL SUB-ASSEMBLY INFO

75. REMOVE CONSOLE BOX CARPET INFO

76. REMOVE CONSOLE BOX ASSEMBLY (for Manual Transaxle) INFO

77. REMOVE CONSOLE BOX ASSEMBLY (for Automatic Transaxle) INFO

78. REMOVE NO. 2 ANTENNA CORD SUB-ASSEMBLY INFO

79. REMOVE LOWER INSTRUMENT PANEL SUB-ASSEMBLY INFO

80. REMOVE SMART KEY ECU ASSEMBLY (w/ Smart Key System) INFO

81. REMOVE NO. 1 AIR DUCT SUB-ASSEMBLY INFO

82. REMOVE LOWER DEFROSTER NOZZLE ASSEMBLY INFO

83. REMOVE CENTER INSTRUMENT PANEL TO COWL BRACE INFO

84. REMOVE REAR NO. 2 AIR DUCT (w/ Rear Air Duct) INFO

85. REMOVE REAR NO. 3 AIR DUCT (w/ Rear Air Duct) INFO

86. REMOVE NO. 1 INSTRUMENT PANEL BRACE SUB-ASSEMBLY (for Manual Air Conditioning System) INFO

87. REMOVE NO. 1 INSTRUMENT PANEL BRACE SUB-ASSEMBLY (for Automatic Air Conditioning System) INFO

88. REMOVE NO. 2 INSTRUMENT PANEL BRACE SUB-ASSEMBLY INFO

89. REMOVE REAR NO. 1 AIR DUCT (w/ Rear Air Duct) INFO

90. REMOVE INSTRUMENT PANEL REINFORCEMENT ASSEMBLY (for Manual Air Conditioning System) INFO

91. REMOVE INSTRUMENT PANEL REINFORCEMENT ASSEMBLY (for Automatic Air Conditioning System) INFO

92. REMOVE AIR CONDITIONING UNIT INFO

93. REMOVE NO. 2 AIR DUCT SUB-ASSEMBLY INFO

94. REMOVE BLOWER ASSEMBLY (w/o PTC Heater)

(a) for Automatic Air Conditioning System:

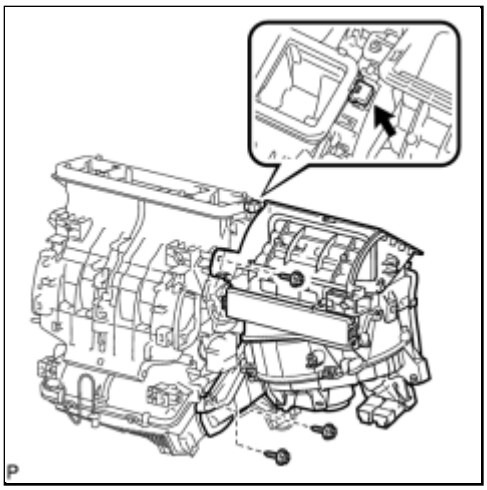

(1) Disconnect the connector.

(b) Remove the 3 screws and the blower assembly.

95. REMOVE BLOWER ASSEMBLY (w/ PTC Heater)

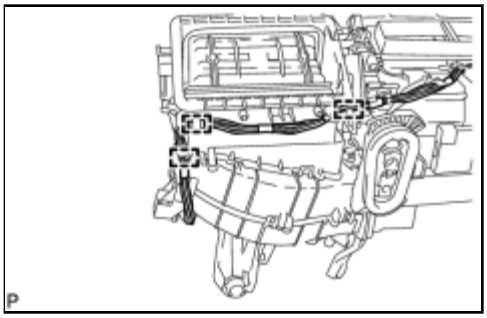

(a) Disengage each clamp.

(b) Remove the screw and disengage the quick heater connector.

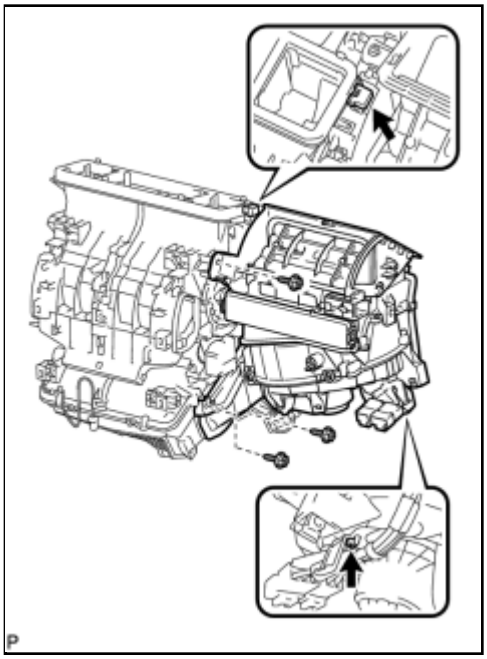

(c) for Automatic Air Conditioning System:

(1) Disconnect the connector.

(d) Remove the 3 screws and the blower assembly.

Last Modified: 3-10-2010	6.4 A	**From:** 200901
Model Year: 2010	**Model:** Corolla	**Doc ID:** RM000002Y2100LX
Title: HEATING / AIR CONDITIONING: BLOWER UNIT: DISASSEMBLY (2010 Corolla)		

DISASSEMBLY

1. REMOVE AIR INLET CONTROL SERVO MOTOR (for Manual Air Conditioning System)

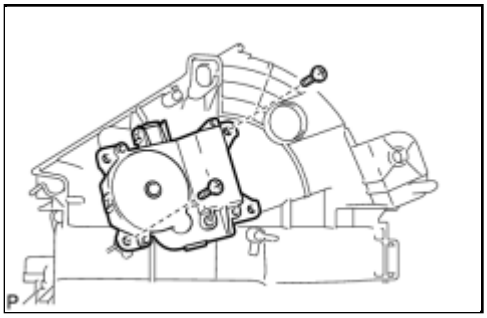

(a) Remove the 2 screws and the air inlet control servo motor.

2. REMOVE AIR INLET CONTROL SERVO MOTOR (for Automatic Air Conditioning System)

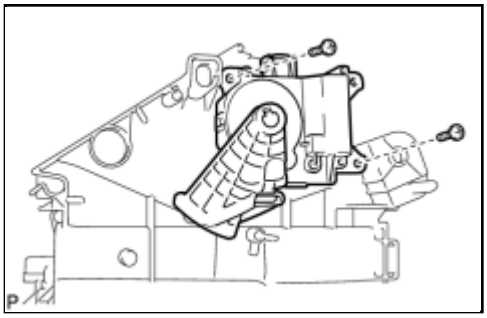

(a) Remove the 2 screws and the air inlet control servo motor.

3. REMOVE AIR FILTER CASE

(a) Disengage the 2 claws and remove the air filter case as shown in the illustration.

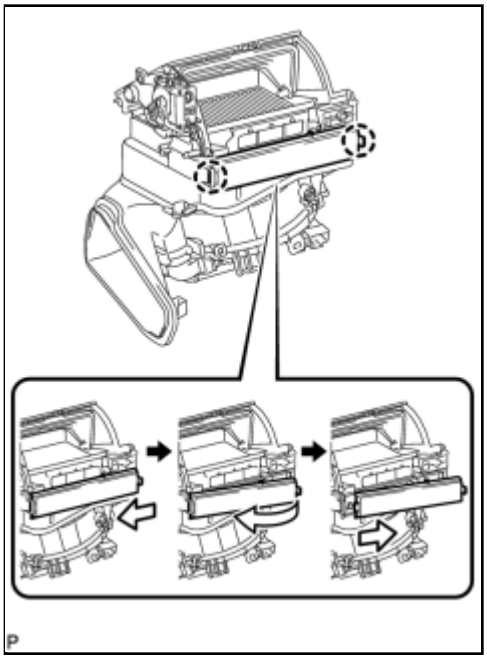

4. REMOVE CLEAN AIR FILTER

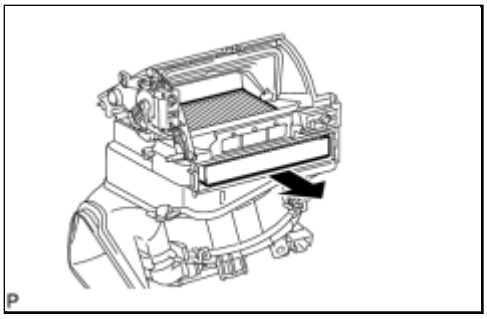

(a) Remove the clean air filter as shown in the illustration.

5. REMOVE BLOWER RESISTOR (for Manual Air Conditioning System)

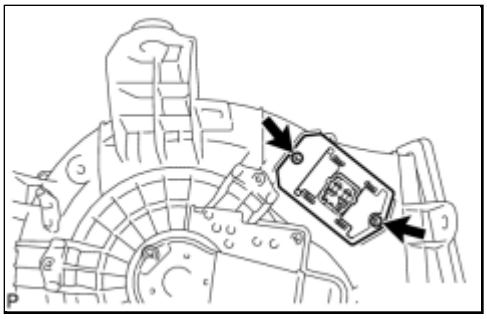

(a) Remove the 2 screws and the blower resistor.

6. REMOVE BLOWER MOTOR SUB-ASSEMBLY

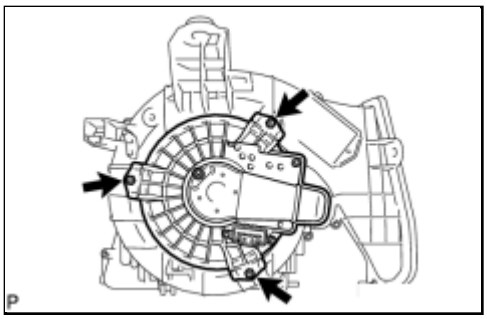

(a) Remove the 3 screws and the blower motor sub-assembly.

Last Modified: 3-10-2010	6.4 A	**From:** 200901
Model Year: 2010	**Model:** Corolla	**Doc ID:** RM000002Y2200LX
Title: HEATING / AIR CONDITIONING: BLOWER UNIT: REASSEMBLY (2010 Corolla)		

REASSEMBLY

1. INSTALL BLOWER MOTOR SUB-ASSEMBLY

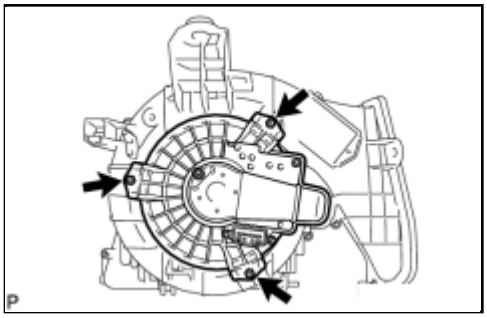

(a) Install the blower motor sub-assembly with the 3 screws.

2. INSTALL BLOWER RESISTOR

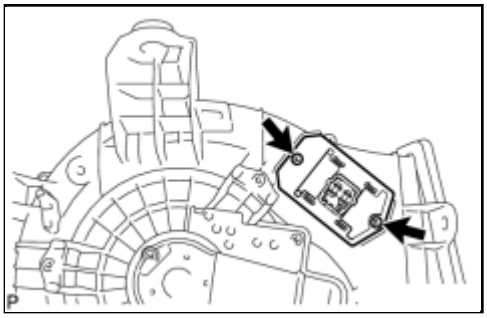

(a) Install the blower resistor with the 2 screws.

3. INSTALL CLEAN AIR FILTER

(a) Install the clean air filter as shown in the illustration.

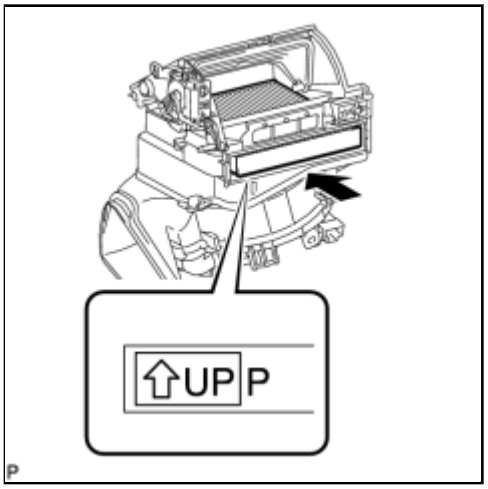

4. INSTALL AIR FILTER CASE

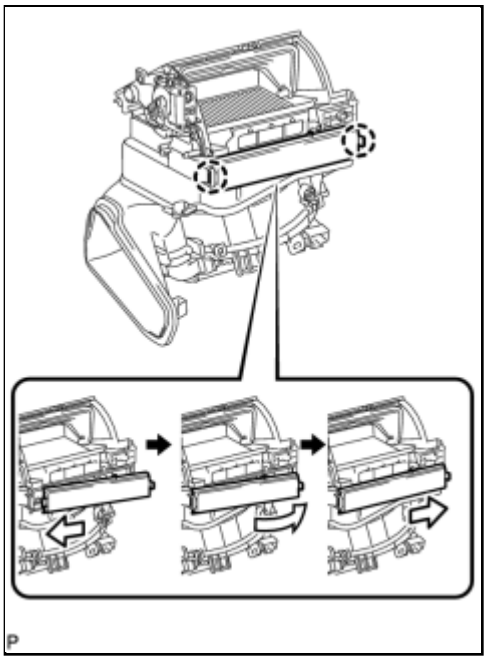

(a) Engage the 2 claws and install the air filter case as shown in the illustration.

5. INSTALL AIR INLET CONTROL SERVO MOTOR (for Manual Air Conditioning System)

(a) Install the air inlet control servo motor with the 2 screws.

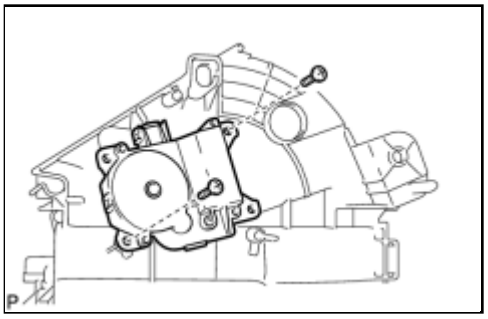

6. INSTALL AIR INLET CONTROL SERVO MOTOR (for Automatic Air Conditioning System)

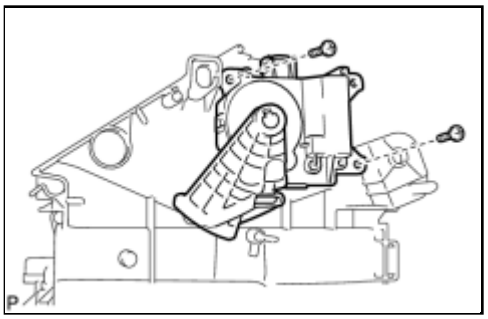

(a) Install the air inlet control servo motor with the 2 screws.

Last Modified: 3-10-2010	6.4 A	**From:** 200901
Model Year: 2010	**Model:** Corolla	**Doc ID:** RM000001HLU0ABX
Title: HEATING / AIR CONDITIONING: BLOWER UNIT: INSTALLATION (2010 Corolla)		

INSTALLATION

1. INSTALL BLOWER ASSEMBLY (w/o PTC Heater)

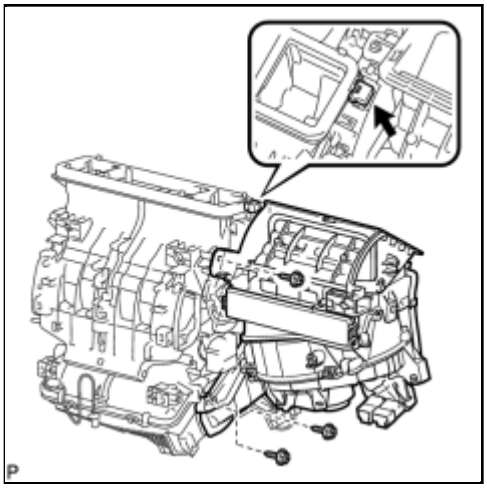

(a) Install the blower assembly with the 3 screws.

(b) for Automatic Air Conditioning System:

(1) Connect the connector.

2. INSTALL BLOWER ASSEMBLY (w/ PTC Heater)

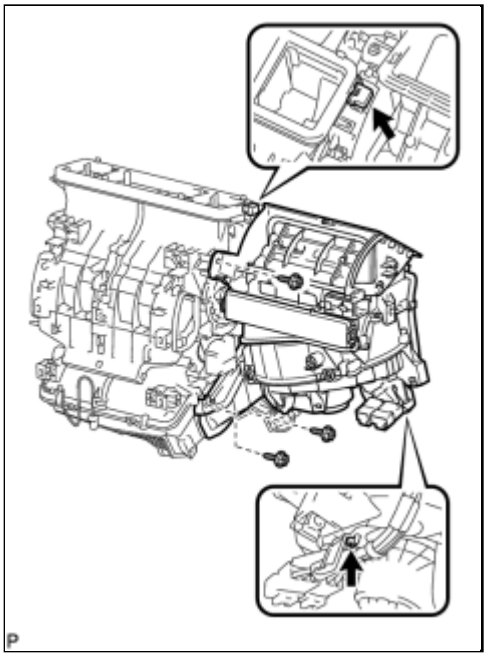

(a) Install the blower assembly with the 3 screws.

(b) Engage the quick heater connector and install the screw.

(c) for Automatic Air Conditioning System:

(1) Connect the connector.

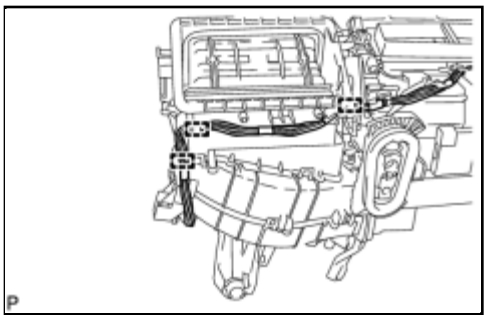

(d) Engage each clamp.

3. INSTALL NO. 2 AIR DUCT SUB-ASSEMBLY INFO

4. TEMPORARILY TIGHTEN AIR CONDITIONING UNIT INFO

5. INSTALL INSTRUMENT PANEL REINFORCEMENT ASSEMBLY (for Manual Air Conditioning System) INFO

6. INSTALL INSTRUMENT PANEL REINFORCEMENT ASSEMBLY (for Automatic Air Conditioning System) INFO

7. INSTALL AIR CONDITIONING UNIT INFO

8. REMOVE REAR NO. 1 AIR DUCT (w/ Rear Air Duct) INFO

9. INSTALL NO. 2 INSTRUMENT PANEL BRACE SUB-ASSEMBLY INFO

10. INSTALL NO. 1 INSTRUMENT PANEL BRACE SUB-ASSEMBLY (for Manual Air Conditioning System) INFO

11. INSTALL NO. 1 INSTRUMENT PANEL BRACE SUB-ASSEMBLY (for Automatic Air Conditioning System) INFO

12. INSTALL REAR NO. 3 AIR DUCT (w/ Rear Air Duct) INFO

13. INSTALL REAR NO. 2 AIR DUCT (w/ Rear Air Duct) INFO

14. INSTALL CENTER INSTRUMENT PANEL TO COWL BRACE INFO

15. INSTALL LOWER DEFROSTER NOZZLE ASSEMBLY INFO

16. INSTALL NO. 1 AIR DUCT SUB-ASSEMBLY INFO

17. INSTALL SMART KEY ECU ASSEMBLY (w/ Smart Key System) INFO

18. INSTALL LOWER INSTRUMENT PANEL SUB-ASSEMBLY INFO

19. INSTALL NO. 2 ANTENNA CORD SUB-ASSEMBLY INFO

20. INSTALL CONSOLE BOX ASSEMBLY (for Manual Transaxle) INFO

21. INSTALL CONSOLE BOX ASSEMBLY (for Automatic Transaxle) INFO

22. INSTALL CONSOLE BOX CARPET INFO

23. INSTALL UPPER CONSOLE PANEL SUB-ASSEMBLY INFO

24. INSTALL NO. 1 SWITCH HOLE BASE (w/o Smart Key System) INFO

25. INSTALL NO. 1 SWITCH HOLE BASE (w/ Smart Key System) INFO

26. INSTALL FRONT NO. 1 CONSOLE BOX INSERT INFO

27. INSTALL COWL SIDE TRIM BOARD LH INFO

28. INSTALL FRONT DOOR SCUFF PLATE LH INFO

29. INSTALL FRONT NO. 2 CONSOLE BOX INSERT INFO

30. INSTALL NO. 2 INSTRUMENT PANEL UNDER COVER SUB-ASSEMBLY (w/ Instrument Panel Under Cover) INFO

31. INSTALL COWL SIDE TRIM BOARD RH INFO

32. INSTALL FRONT DOOR SCUFF PLATE RH INFO

33. INSTALL AIR CONDITIONING PANEL ASSEMBLY (for Manual Air Conditioning System) INFO

34. INSTALL AIR CONDITIONING CONTROL ASSEMBLY (for Automatic Air Conditioning System) INFO

35. INSTALL INSTRUMENT PANEL HOLE COVER INFO

36. INSTALL INSTRUMENT PANEL BOX ASSEMBLY INFO

37. INSTALL CENTER NO. 1 INSTRUMENT CLUSTER FINISH PANEL ASSEMBLY (for Manual Transaxle) INFO

38. INSTALL CENTER NO. 1 INSTRUMENT CLUSTER FINISH PANEL ASSEMBLY (for Automatic Transaxle) INFO

39. INSTALL SHIFT LEVER KNOB SUB-ASSEMBLY (for Manual Transaxle) INFO

40. INSTALL SHIFT LEVER KNOB SUB-ASSEMBLY (for Automatic Transaxle) INFO

41. INSTALL RADIO RECEIVER WITH BRACKET (w/o Navigation System) INFO

42. INSTALL CENTER INSTRUMENT CLUSTER FINISH PANEL SUB-ASSEMBLY (w/ Navigation System) INFO

43. INSTALL NAVIGATION RECEIVER WITH BRACKET (w/ Navigation System) INFO

44. INSTALL STEERING POST ASSEMBLY (for 2ZR-FE) INFO

45. INSTALL STEERING POST ASSEMBLY (for 2AZ-FE) INFO

46. TURN FRONT WHEELS FACING STRAIGHT AHEAD

47. CONNECT NO. 2 STEERING INTERMEDIATE SHAFT ASSEMBLY INFO

48. INSTALL STOP LIGHT SWITCH ASSEMBLY INFO

49. INSTALL NO. 3 AIR DUCT SUB-ASSEMBLY INFO

50. INSTALL INSTRUMENT PANEL SUB REINFORCEMENT INFO

51. INSTALL COLUMN HOLE COVER SILENCER SHEET INFO

52. INSTALL TRANSPONDER KEY AMPLIFIER (w/o Smart Key System) INFO

53. INSTALL TURN SIGNAL SWITCH ASSEMBLY WITH SPIRAL CABLE SUB-ASSEMBLY INFO

54. INSTALL UPPER STEERING COLUMN COVER INFO

55. INSTALL LOWER STEERING COLUMN COVER INFO

56. TURN FRONT WHEELS FACING STRAIGHT AHEAD

57. ADJUST SPIRAL CABLE INFO

58. INSTALL STEERING WHEEL ASSEMBLY INFO

59. INSTALL STEERING PAD INFO

60. INSTALL LOWER NO. 3 STEERING WHEEL COVER INFO

61. INSTALL LOWER NO. 2 STEERING WHEEL COVER INFO

62. INSPECT STEERING WHEEL CENTER POINT

63. INSTALL LOWER INSTRUMENT PANEL FINISH PANEL SUB-ASSEMBLY INFO

64. INSTALL POWER STEERING ECU ASSEMBLY (for 2ZR-FE) INFO

65. INSTALL POWER STEERING ECU ASSEMBLY (for 2AZ-FE) INFO

66. INSTALL UPPER INSTRUMENT PANEL SUB-ASSEMBLY INFO

67. CONNECT INSTRUMENT PANEL WIRE ASSEMBLY INFO

68. CONNECT FRONT DOOR OPENING TRIM WEATHERSTRIP LH INFO

69. INSTALL LOWER INSTRUMENT PANEL FINISH PANEL ASSEMBLY INFO

70. CONNECT FRONT DOOR OPENING TRIM WEATHERSTRIP RH INFO

71. INSTALL NO. 1 INSTRUMENT PANEL BOX DOOR SUB-ASSEMBLY INFO

72. INSTALL GLOVE COMPARTMENT DOOR ASSEMBLY INFO

73. INSTALL FRONT PILLAR GARNISH LH (w/ Curtain Shield Airbag) INFO

74. INSTALL FRONT PILLAR GARNISH LH (w/o Curtain Shield Airbag) INFO

75. INSTALL FRONT PILLAR GARNISH RH (w/ Curtain Shield Airbag) INFO

76. INSTALL FRONT PILLAR GARNISH RH (w/o Curtain Shield Airbag) INFO

77. INSTALL COMBINATION METER ASSEMBLY INFO

78. INSTALL INSTRUMENT CLUSTER FINISH PANEL ASSEMBLY INFO

79. INSTALL CENTER INSTRUMENT PANEL REGISTER ASSEMBLY INFO

80. INSTALL INSTRUMENT PANEL FINISH PANEL END LH INFO

81. INSTALL INSTRUMENT PANEL FINISH PANEL END RH INFO

82. INSTALL LOWER INSTRUMENT PANEL FINISH PANEL LH INFO

83. INSTALL LOWER INSTRUMENT PANEL FINISH PANEL RH INFO

84. INSTALL HEATER WATER HOSE OUTLET INFO

85. INSTALL HEATER WATER HOSE INLET INFO

86. INSTALL AIR CONDITIONING TUBE ASSEMBLY INFO

87. INSTALL SUCTION PIPE SUB-ASSEMBLY INFO

88. INSTALL OUTER COWL TOP PANEL (for TMC Made) INFO

89. INSTALL OUTER COWL TOP PANEL (except TMC Made) INFO

90. INSTALL WINDSHIELD WIPER MOTOR AND LINK ASSEMBLY INFO

91. INSTALL COWL TOP VENTILATOR LOUVER LH INFO

92. INSTALL CENTER NO. 1 COWL TOP VENTILATOR LOUVER INFO

93. INSTALL HOOD TO COWL TOP SEAL INFO

94. INSTALL FRONT WIPER ARM AND BLADE ASSEMBLY RH INFO

95. INSTALL FRONT WIPER ARM AND BLADE ASSEMBLY LH INFO

96. INSTALL FRONT WIPER ARM HEAD CAP INFO

97. CHARGE WITH REFRIGERANT INFO

98. ADD ENGINE COOLANT (for 2ZR-FE) INFO

99. ADD ENGINE COOLANT (for 2AZ-FE) INFO

100. CONNECT CABLE TO NEGATIVE BATTERY TERMINAL

101. INSPECT FOR COOLANT LEAK (for 2ZR-FE) INFO

102. INSPECT FOR COOLANT LEAK (for 2AZ-FE) INFO

103. INSPECT STEERING PAD INFO

104. INSPECT SRS WARNING LIGHT

INFO

105. WARM UP ENGINE INFO

106. INSPECT FOR REFRIGERANT LEAK INFO



Last Modified: 3-10-2010	6.4 K	**From:** 200901
Model Year: 2010	**Model:** Corolla	**Doc ID:** RM000003FXM001X
Title: HEATING / AIR CONDITIONING: COMPRESSOR (for 2AZ-FE): COMPONENTS (2010 Corolla)		

COMPONENTS

ILLUSTRATION

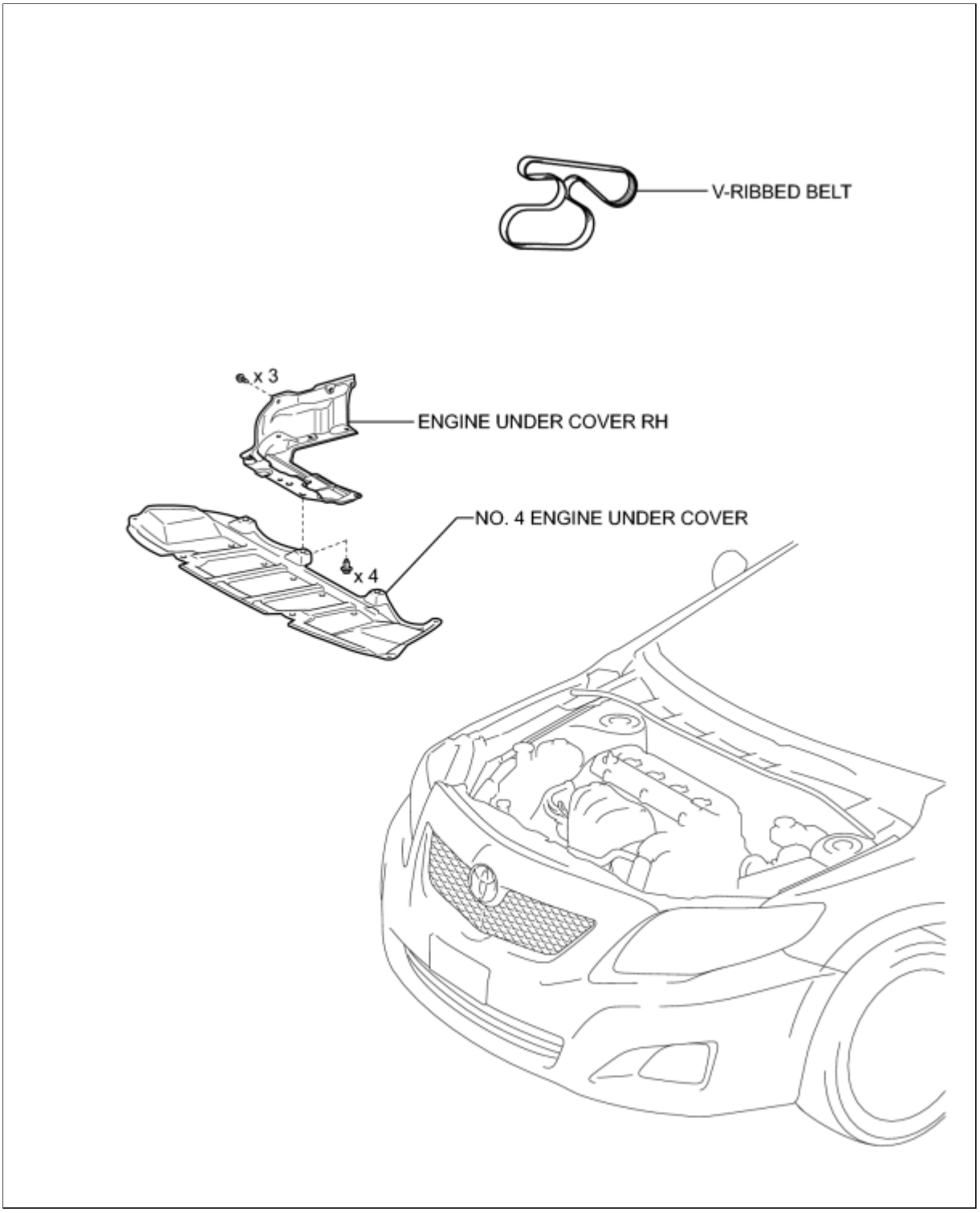

ILLUSTRATION

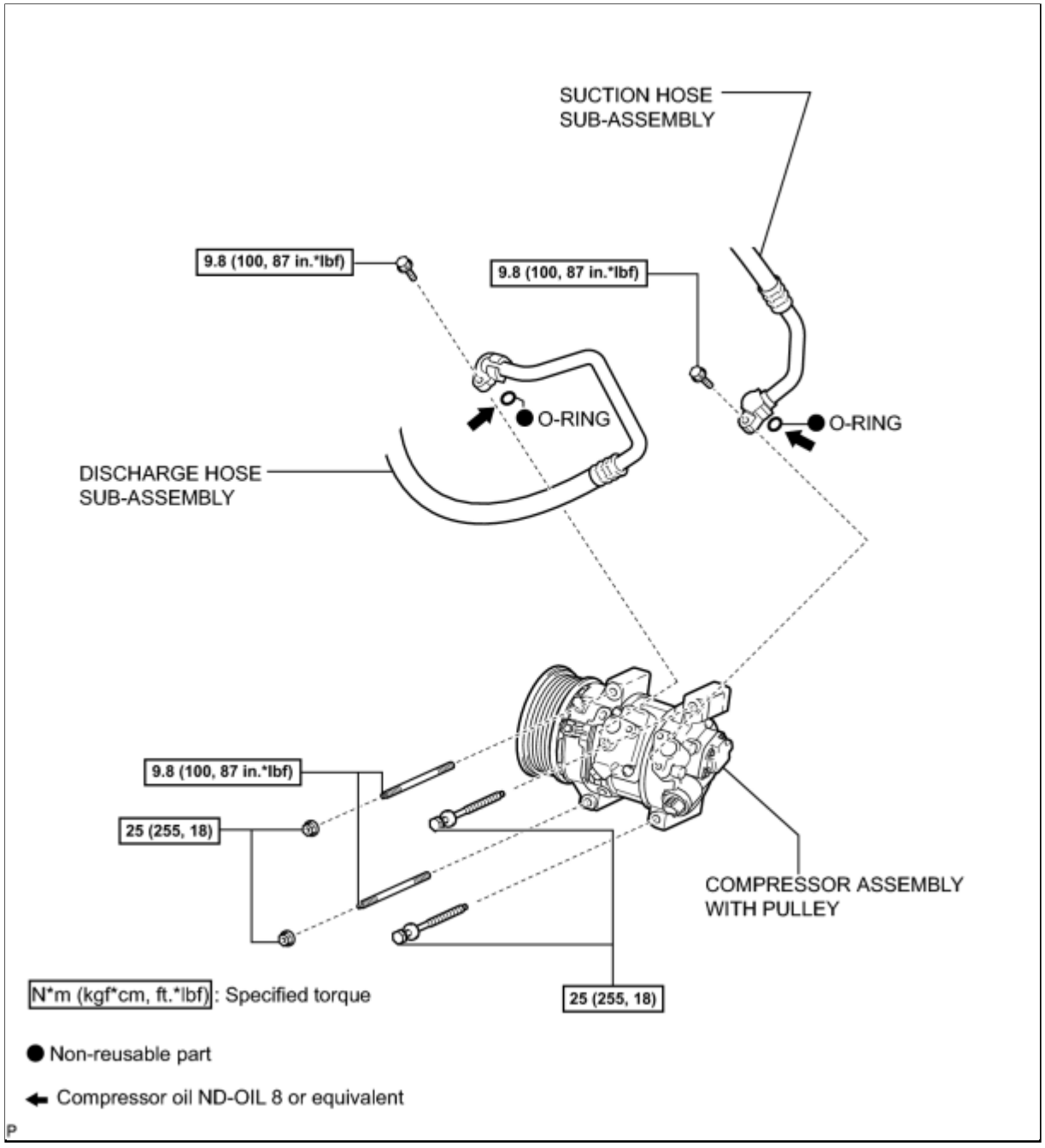
SUCTION HOSE
SUB-ASSEMBLY
9.8 (100, 87 in.*lbf)
9.8 (100, 87 in.*lbf)
O-RING
O-RING
DISCHARGE HOSE
SUB-ASSEMBLY
9.8 (100, 87 in.*lbf)
25 (255, 18)
COMPRESSOR ASSEMBLY
WITH PULLEY
N*m (kgf*cm, ft.*lbf): Specified torque
25 (255, 18)
Non-reusable part
Compressor oil ND-OIL 8 or equivalent

P

Last Modified: 3-10-2010	6.4 G	**From:** 200901
Model Year: 2010	**Model:** Corolla	**Doc ID:** RM000002CVY020X
Title: HEATING / AIR CONDITIONING: COMPRESSOR (for 2AZ-FE): ON-VEHICLE INSPECTION (2010 Corolla)		

ON-VEHICLE INSPECTION

1. INSPECT COMPRESSOR FOR METALLIC SOUND

(a) Check if there is abnormal metallic sound from the compressor when the A/C switch is on and the compressor operates.

If abnormal metallic sound is heard, replace the compressor and pulley.

2. INSPECT REFRIGERANT PRESSURE

(a) Inspect the refrigerant pressure INFO .

3. INSPECT FOR LEAKAGE OF REFRIGERANT

(a) Using a gas leak detector, check for leakage of refrigerant.

If there is any leakage, replace the compressor and pulley.

4. INSPECT COMPRESSOR AND PULLEY

(a) Check operation of compressor and pulley.

(1) Start the engine.

(2) Inspect the compressor pulley.

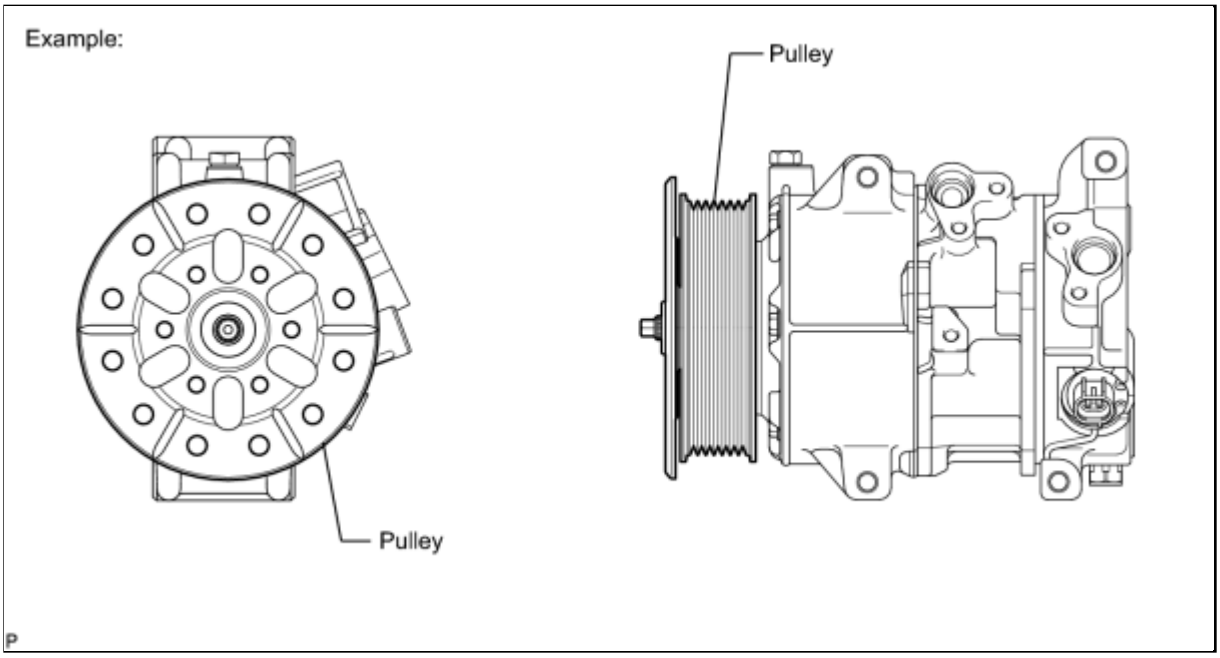

Standard:

The compressor shaft rotates along with the pulley.

If the result is not as specified, replace the compressor and pulley.

Last Modified: 3-10-2010	6.4 A	**From:** 200901
Model Year: 2010	**Model:** Corolla	**Doc ID:** RM000002XUM00YX
Title: HEATING / AIR CONDITIONING: COMPRESSOR (for 2AZ-FE): REMOVAL (2010 Corolla)		

REMOVAL

1. RECOVER REFRIGERANT FROM REFRIGERATION SYSTEM INFO

2. REMOVE ENGINE UNDER COVER RH

3. REMOVE V-RIBBED BELT INFO

4. DISCONNECT SUCTION HOSE SUB-ASSEMBLY

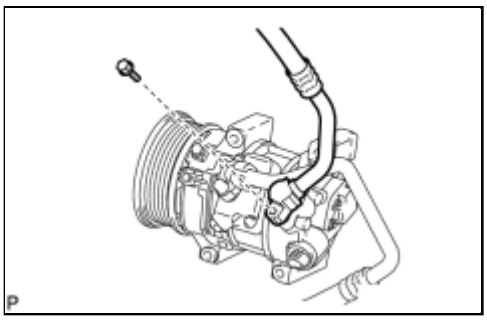

(a) Remove the bolt and disconnect the suction hose sub-assembly from the compressor assembly with pulley.

(b) Remove the O-ring from the suction hose sub-assembly.

NOTICE:

Seal the openings of the disconnected parts using vinyl tape to prevent entry of moisture and foreign matter.

5. DISCONNECT DISCHARGE HOSE SUB-ASSEMBLY

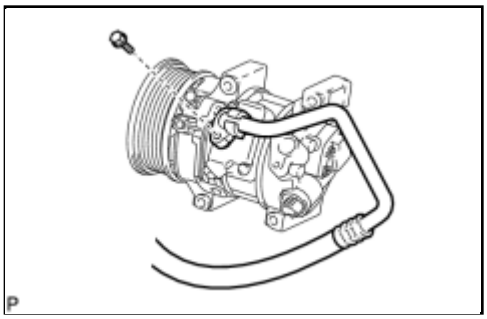

(a) Remove the bolt and disconnect the discharge hose sub-assembly from the compressor assembly with pulley.

(b) Remove the O-ring from the discharge hose sub-assembly.

NOTICE:

Seal the openings of the disconnected parts using vinyl tape to prevent entry of moisture and foreign matter.

6. REMOVE COMPRESSOR ASSEMBLY WITH PULLEY

(a) Disconnect the connector.

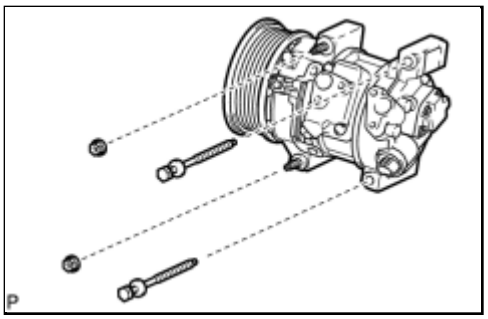

(b) Remove the 2 bolts and the 2 nuts.

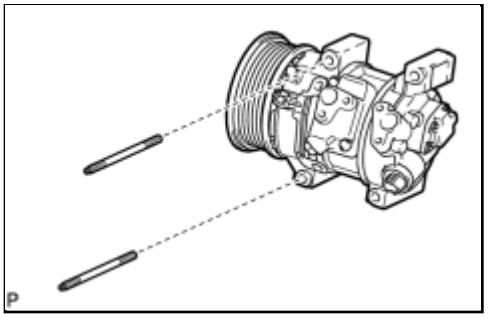

(c) Using a "TORX" socket wrench (E8), remove the 2 stud bolts and the compressor assembly with pulley.

Last Modified: 3-10-2010	6.4 G	**From:** 200901
Model Year: 2010	**Model:** Corolla	**Doc ID:** RM000002CVX021X
Title: HEATING / AIR CONDITIONING: COMPRESSOR (for 2AZ-FE): INSPECTION (2010 Corolla)		

INSPECTION

1. INSPECT COMPRESSOR AND PULLEY (A/C COMPRESSOR)

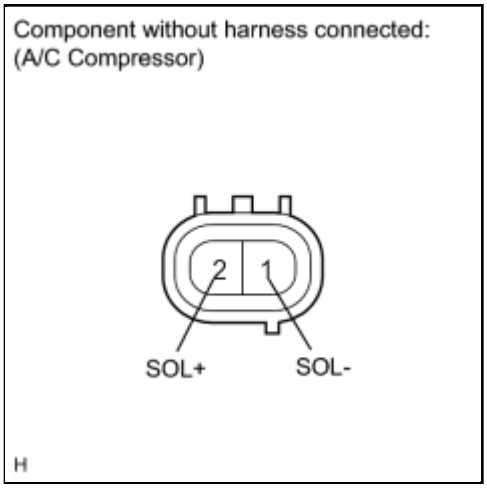

(a) Disconnect the connector from the compressor and pulley.

(b) Measure the resistance according to the value(s) in the table below.

Standard Resistance:

TESTER CONNECTION	CONDITION	SPECIFIED CONDITION
2 (SOL+) - 1 (SOL-)	20°C (68°F)	10 to 11 Ω

If the resistance is not as specified, replace the compressor and pulley.

Last Modified: 3-10-2010	6.4 A	**From:** 200901
Model Year: 2010	**Model:** Corolla	**Doc ID:** RM000002XUK00YX
Title: HEATING / AIR CONDITIONING: COMPRESSOR (for 2AZ-FE): INSTALLATION (2010 Corolla)		

INSTALLATION

1. ADJUST COMPRESSOR OIL LEVEL

(a) When replacing the cooler compressor assembly with a new one, gradually discharge the inert gas (helium) from the service valve, and drain the following amount of oil from the vents indicated by the arrows in the illustration before installation.

HINT:

The drain bolt and washer can be reused.

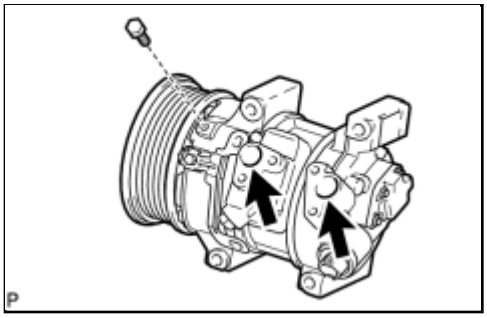

Standard:
(Oil capacity inside the new compressor: 90 + 15 cc (3 + 0.51 fl.oz.)) - (Remaining oil amount in the removed compressor) = (Oil amount to be removed from the new compressor when replacing)

NOTICE:

- If a new compressor is installed without removing some oil remaining in the pipes of the vehicle, the oil amount will be excessive. This prevents heat exchange in the refrigerant cycle and causes refrigeration system failure.
- If the volume of oil remaining in the removed compressor is too small, check for oil leaks.
- Be sure to use ND-OIL 8 or equivalent for compressor oil.

2. INSTALL COMPRESSOR ASSEMBLY WITH PULLEY

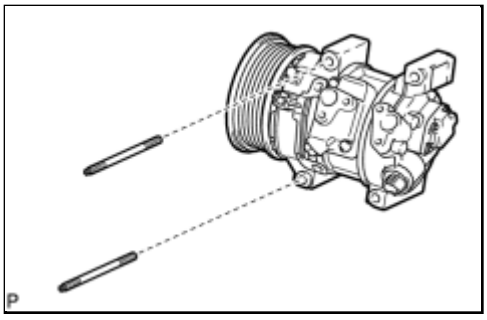

(a) Using a "TORX" socket wrench (E8), install the compressor assembly with pulley with the 2 stud bolts.

Torque: 9.8 N·m (100 kgf·cm, 87in·lbf)

(b) Install the compressor assembly with pulley with the 2

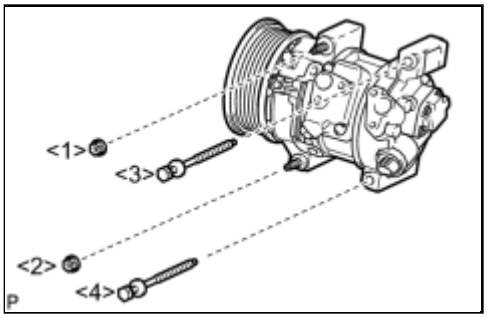

bolts and the 2 nuts.

HINT:

Tighten the bolts and the nuts in the order shown in the illustration.

Torque: 25 N·m (255 kgf·cm, 18ft·lbf)

(c) Connect the connector.

3. CONNECT DISCHARGE HOSE SUB-ASSEMBLY

(a) Remove the attached vinyl tape from the hose.

(b) Apply sufficient compressor oil to a new O-ring and the fitting surface of the compressor assembly with pulley.

Compressor oil:
ND-OIL 8 or equivalent

(c) Install the O-ring onto the discharge hose sub-assembly.

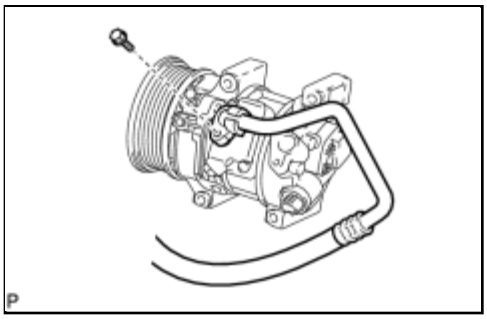

(d) Install the discharge hose sub-assembly onto the compressor assembly with pulley with the bolt.

Torque: 9.8 N·m (100 kgf·cm, 87in·lbf)

4. CONNECT SUCTION HOSE SUB-ASSEMBLY

(a) Remove the attached vinyl tape from the hose.

(b) Apply sufficient compressor oil to a new O-ring and the fitting surface of the compressor assembly with pulley.

Compressor oil:
ND-OIL 8 or equivalent

(c) Install the O-ring onto the suction hose sub-assembly.

(d) Install the suction hose sub-assembly onto the compressor assembly with pulley with the bolt.

Torque: 9.8 N·m (100 kgf·cm, 87in·lbf)

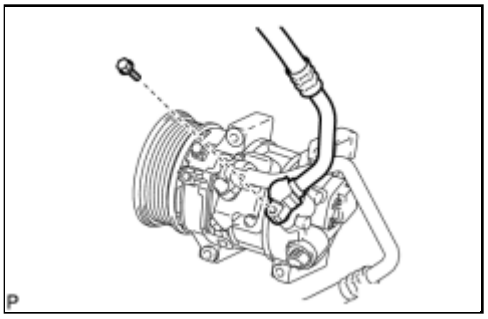

5. INSTALL V-RIBBED BELT INFO

6. INSTALL ENGINE UNDER COVER RH

7. CHARGE WITH REFRIGERANT INFO

8. WARM UP ENGINE INFO

9. INSPECT FOR REFRIGERANT LEAK INFO

Last Modified: 3-10-2010	6.4 K	**From:** 200901
Model Year: 2010	**Model:** Corolla	**Doc ID:** RM000003FXN001X
Title: HEATING / AIR CONDITIONING: COMPRESSOR (for 2ZR-FE): COMPONENTS (2010 Corolla)		

COMPONENTS

ILLUSTRATION

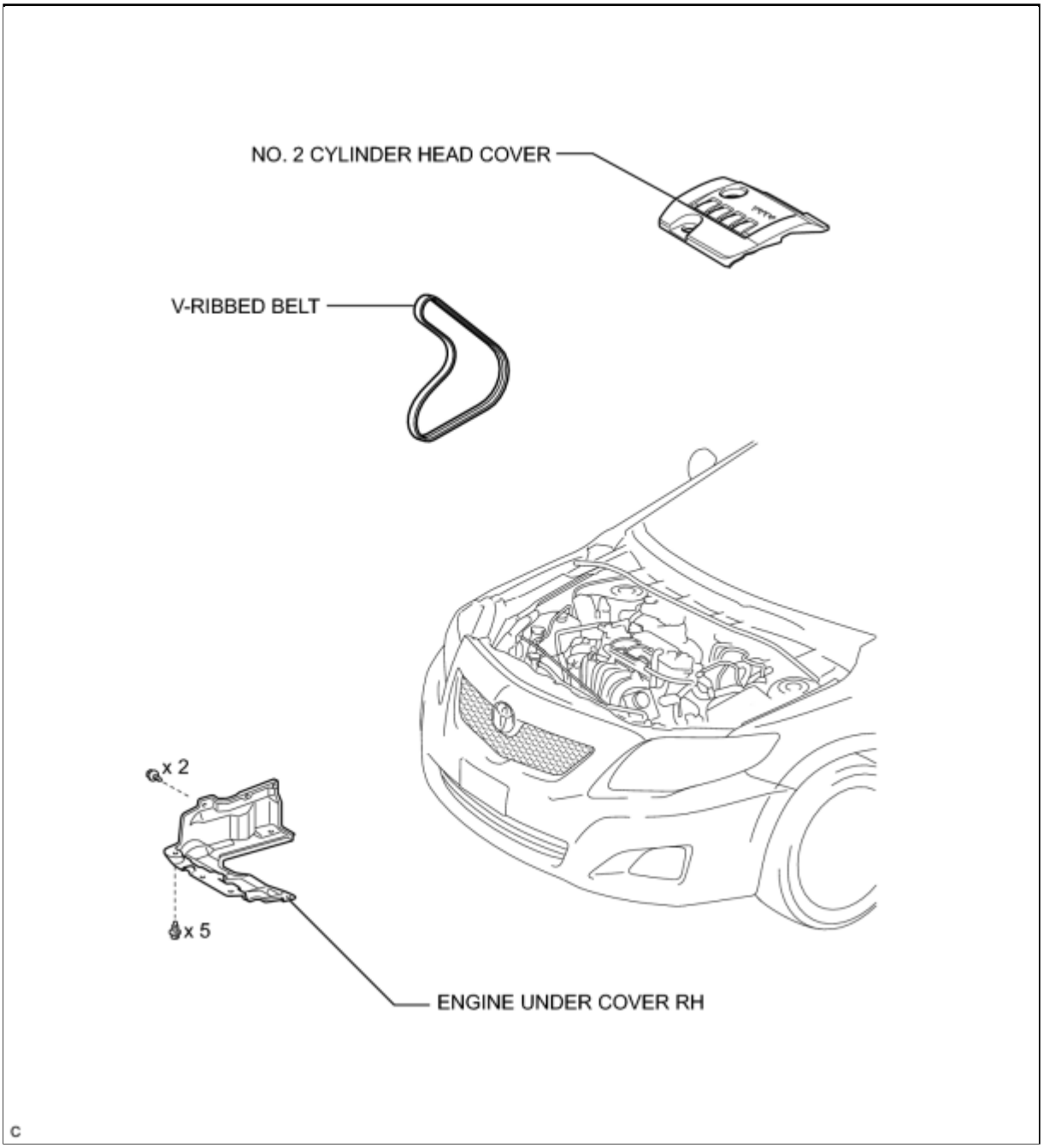

ILLUSTRATION

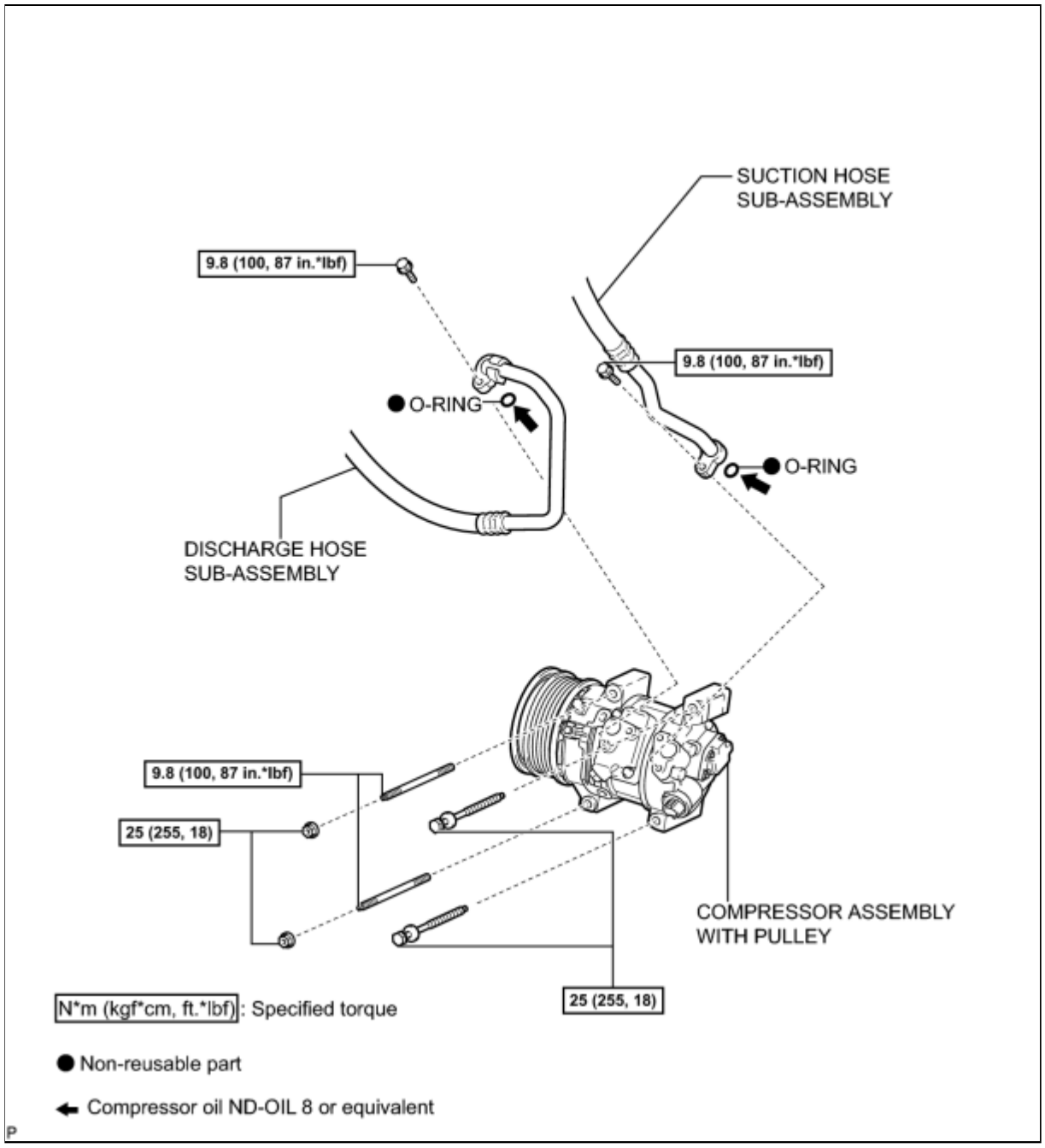
SUCTION HOSE
SUB-ASSEMBLY
9.8 (100, 87 in.*lbf)
9.8 (100, 87 in.*lbf)
O-RING
O-RING
DISCHARGE HOSE
SUB-ASSEMBLY
9.8 (100, 87 in.*lbf)
25 (255, 18)
COMPRESSOR ASSEMBLY
WITH PULLEY
25 (255, 18)
N*m (kgf*cm, ft.*lbf): Specified torque
Non-reusable part
Compressor oil ND-OIL 8 or equivalent
P

Last Modified: 3-10-2010	6.4 G	**From:** 200901
Model Year: 2010	**Model:** Corolla	**Doc ID:** RM000002CVY021X
Title: HEATING / AIR CONDITIONING: COMPRESSOR (for 2ZR-FE): ON-VEHICLE INSPECTION (2010 Corolla)		

ON-VEHICLE INSPECTION

1. INSPECT COMPRESSOR FOR METALLIC SOUND

(a) Check if there is abnormal metallic sound from the compressor when the A/C switch is on and the compressor operates.

If abnormal metallic sound is heard, replace the compressor and pulley.

2. INSPECT REFRIGERANT PRESSURE

(a) Inspect the refrigerant pressure INFO .

3. INSPECT FOR LEAKAGE OF REFRIGERANT

(a) Using a gas leak detector, check for leakage of refrigerant.

If there is any leakage, replace the compressor and pulley.

4. INSPECT COMPRESSOR AND PULLEY

(a) Check operation of compressor and pulley.

(1) Start the engine.

(2) Inspect the compressor pulley.

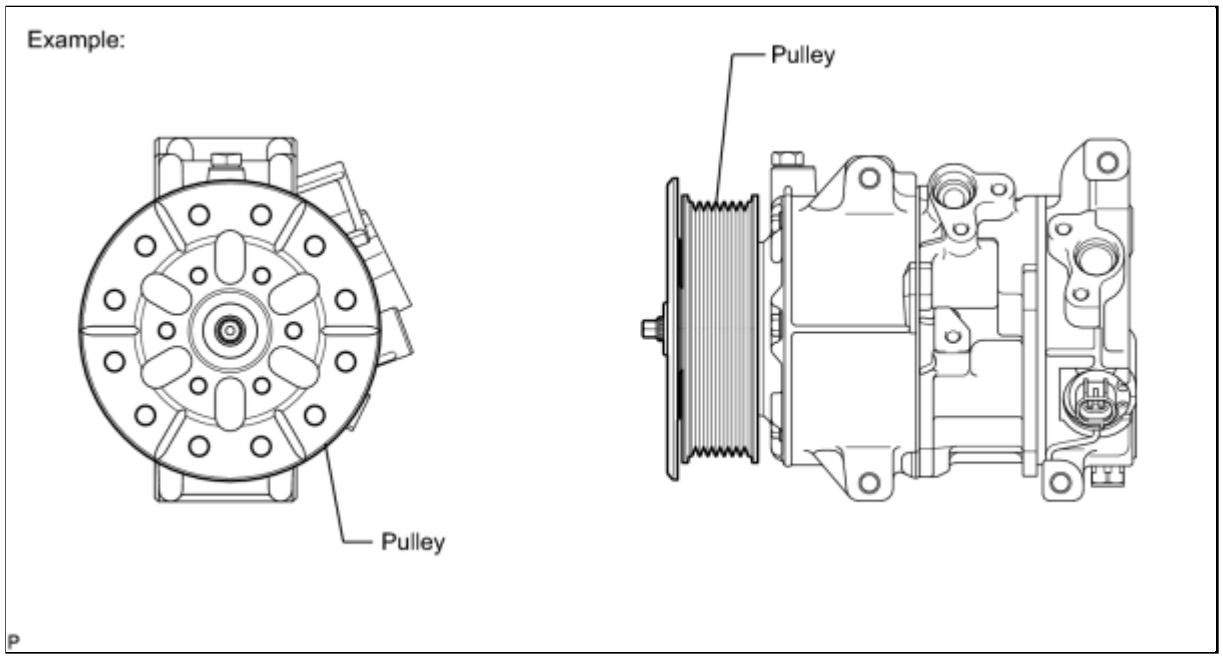

Standard:

The compressor shaft rotates along with the pulley.

If the result is not as specified, replace the compressor and pulley.

Last Modified: 3-10-2010	6.4 A	**From:** 200901
Model Year: 2010	**Model:** Corolla	**Doc ID:** RM000002XUM00ZX
Title: HEATING / AIR CONDITIONING: COMPRESSOR (for 2ZR-FE): REMOVAL (2010 Corolla)		

REMOVAL

1. RECOVER REFRIGERANT FROM REFRIGERATION SYSTEM INFO

2. REMOVE NO. 2 CYLINDER HEAD COVER INFO

3. REMOVE ENGINE UNDER COVER RH

4. REMOVE V-RIBBED BELT INFO

5. DISCONNECT SUCTION HOSE SUB-ASSEMBLY

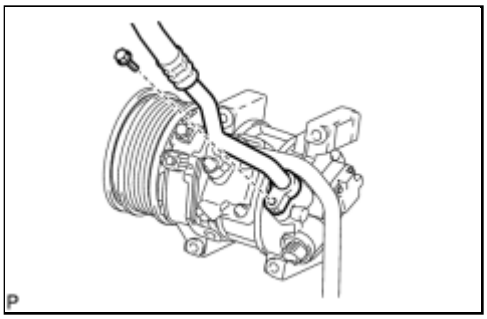

(a) Remove the bolt and disconnect the suction hose sub-assembly from the compressor assembly with pulley.

(b) Remove the O-ring from the suction hose sub-assembly.

NOTICE:

Seal the openings of the disconnected parts using vinyl tape to prevent entry of moisture and foreign matter.

6. DISCONNECT DISCHARGE HOSE SUB-ASSEMBLY

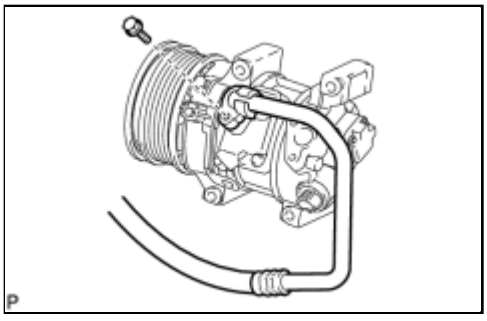

(a) Remove the bolt and disconnect the discharge hose sub-assembly from the compressor assembly with pulley.

(b) Remove the O-ring from the discharge hose sub-assembly.

NOTICE:

Seal the openings of the disconnected parts using vinyl tape to prevent entry of moisture and foreign matter.

7. REMOVE COMPRESSOR ASSEMBLY WITH PULLEY

(a) Disconnect the connector.

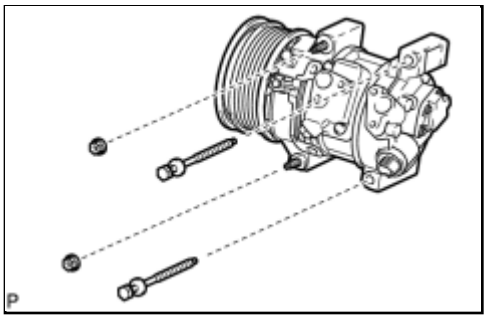

(b) Remove the 2 bolts and the 2 nuts.

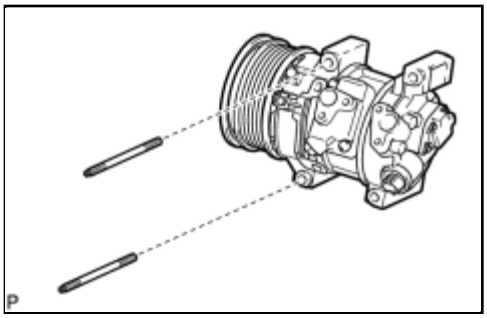

(c) Using a "TORX" socket wrench (E8), remove the 2 stud bolts and the compressor assembly with pulley.

Last Modified: 3-10-2010	6.4 K	**From:** 200901
Model Year: 2010	**Model:** Corolla	**Doc ID:** RM000003FXO001X
Title: HEATING / AIR CONDITIONING: CONDENSER: COMPONENTS (2010 Corolla)		

COMPONENTS

ILLUSTRATION

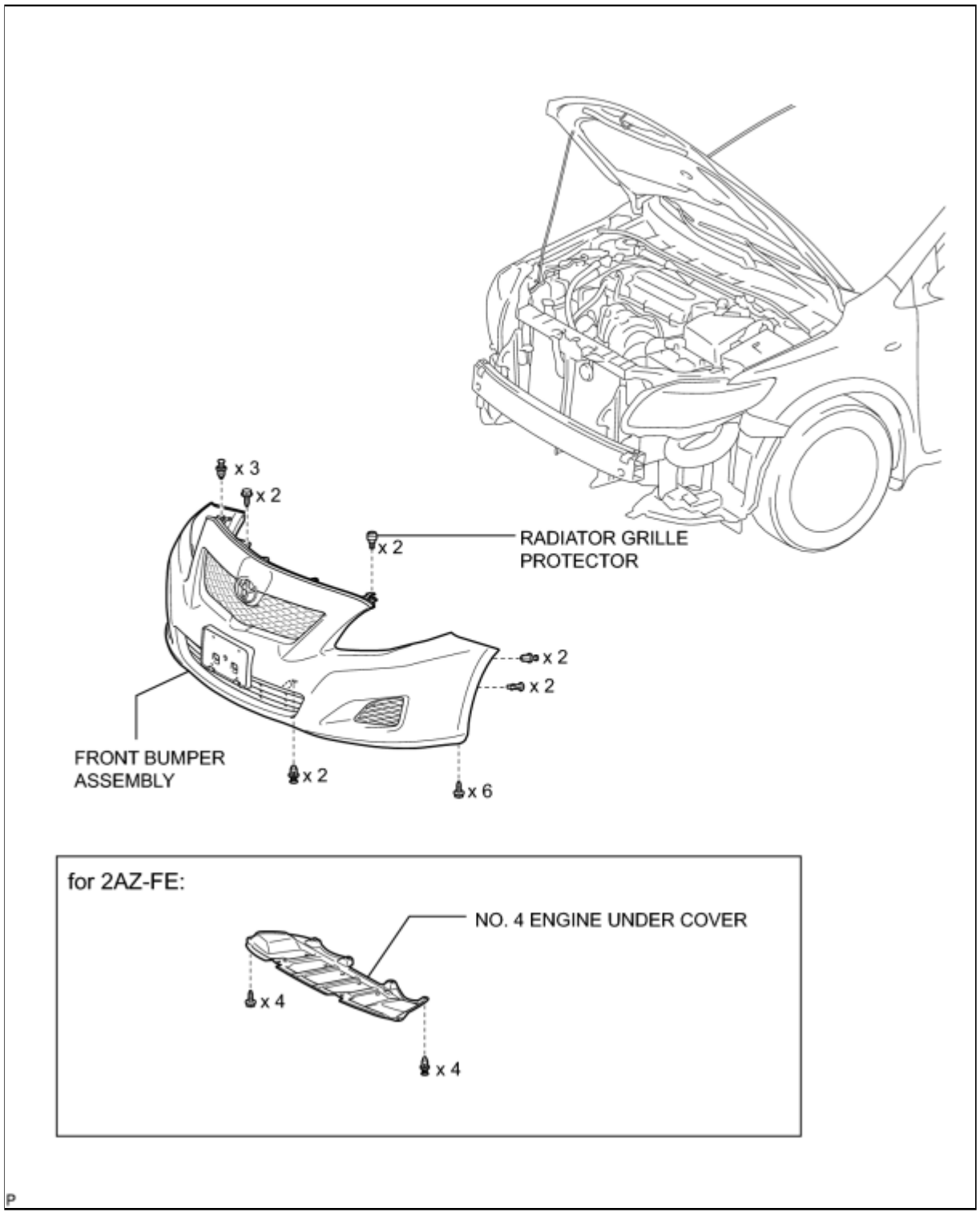

ILLUSTRATION

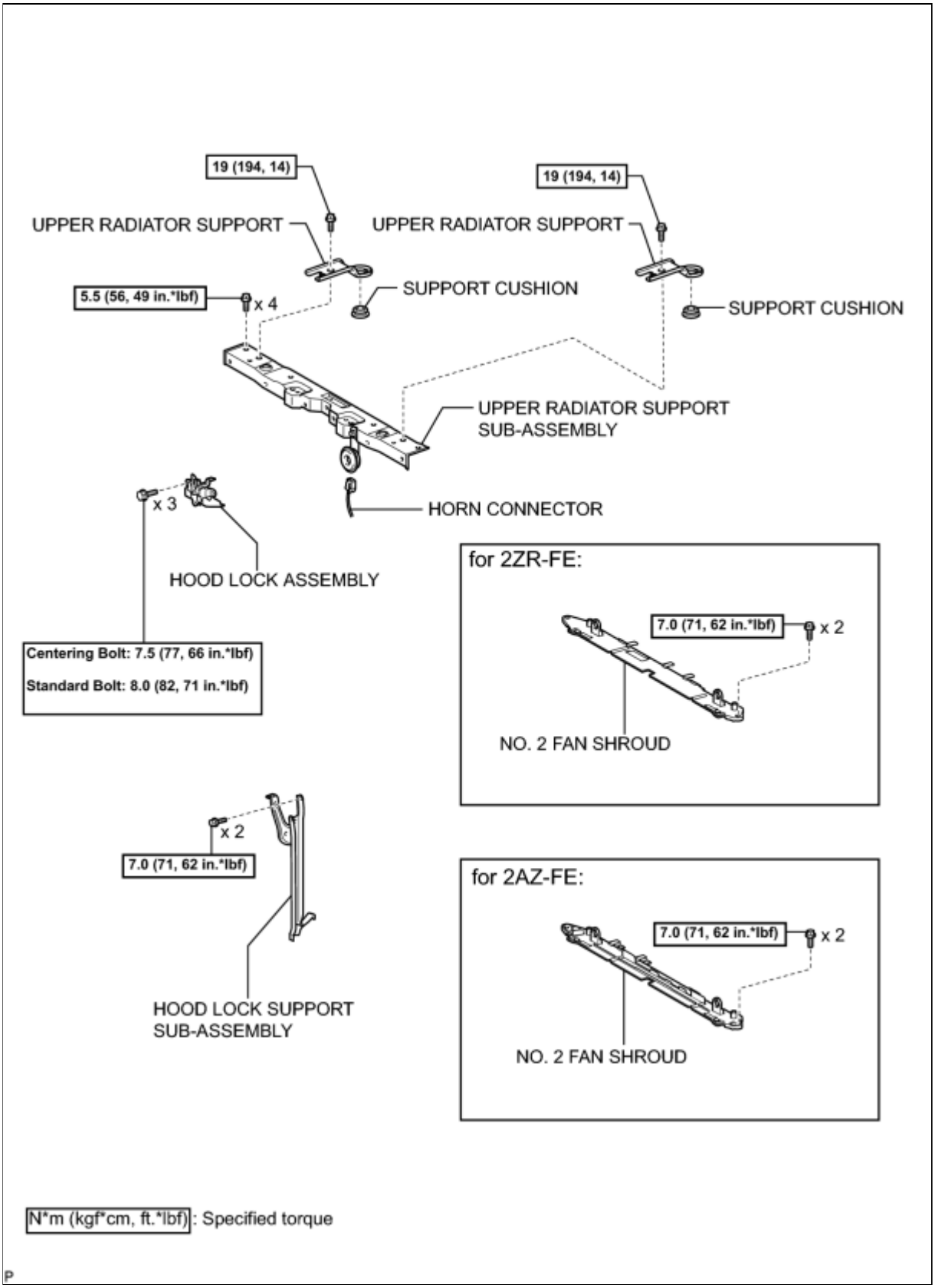

ILLUSTRATION

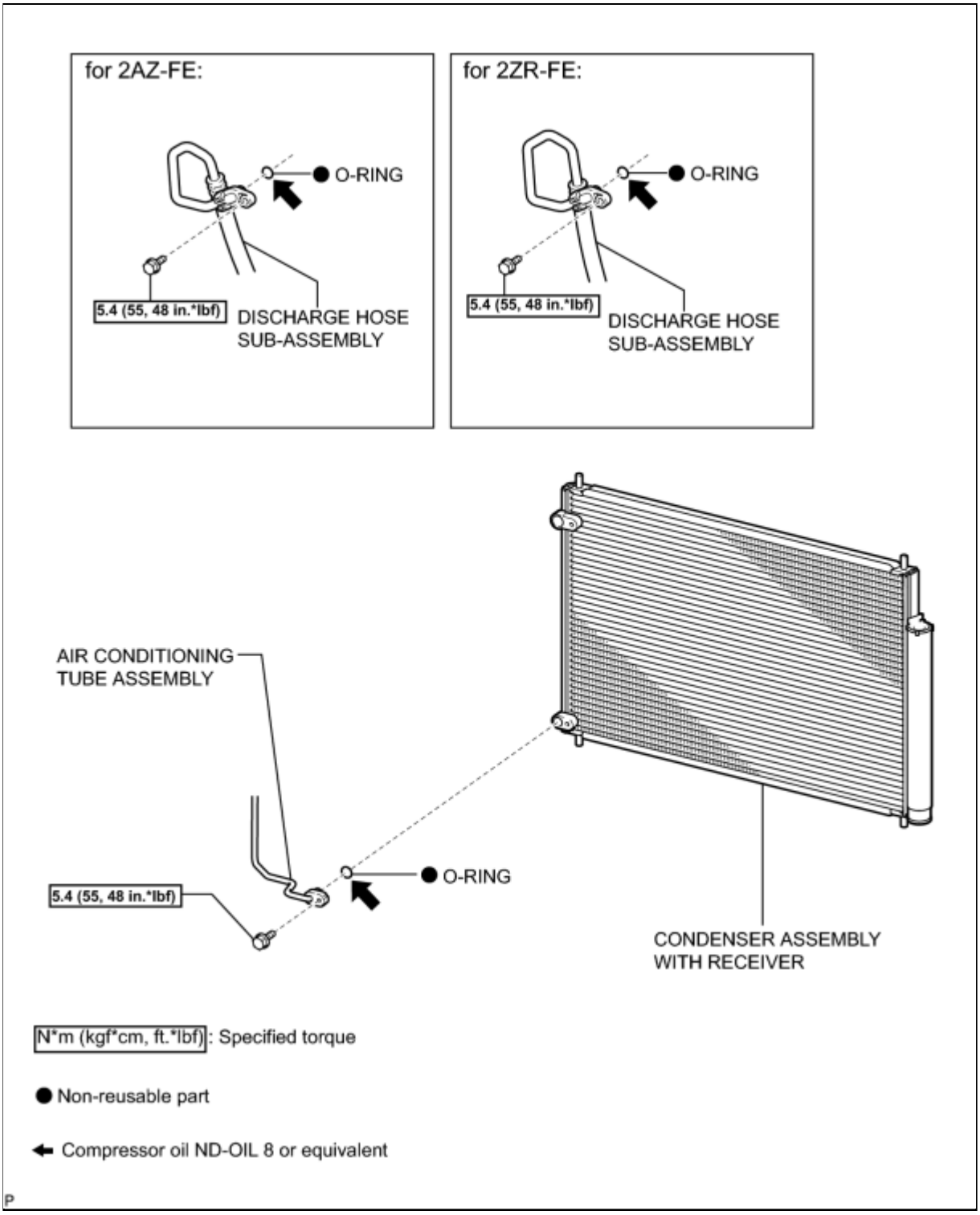

ILLUSTRATION

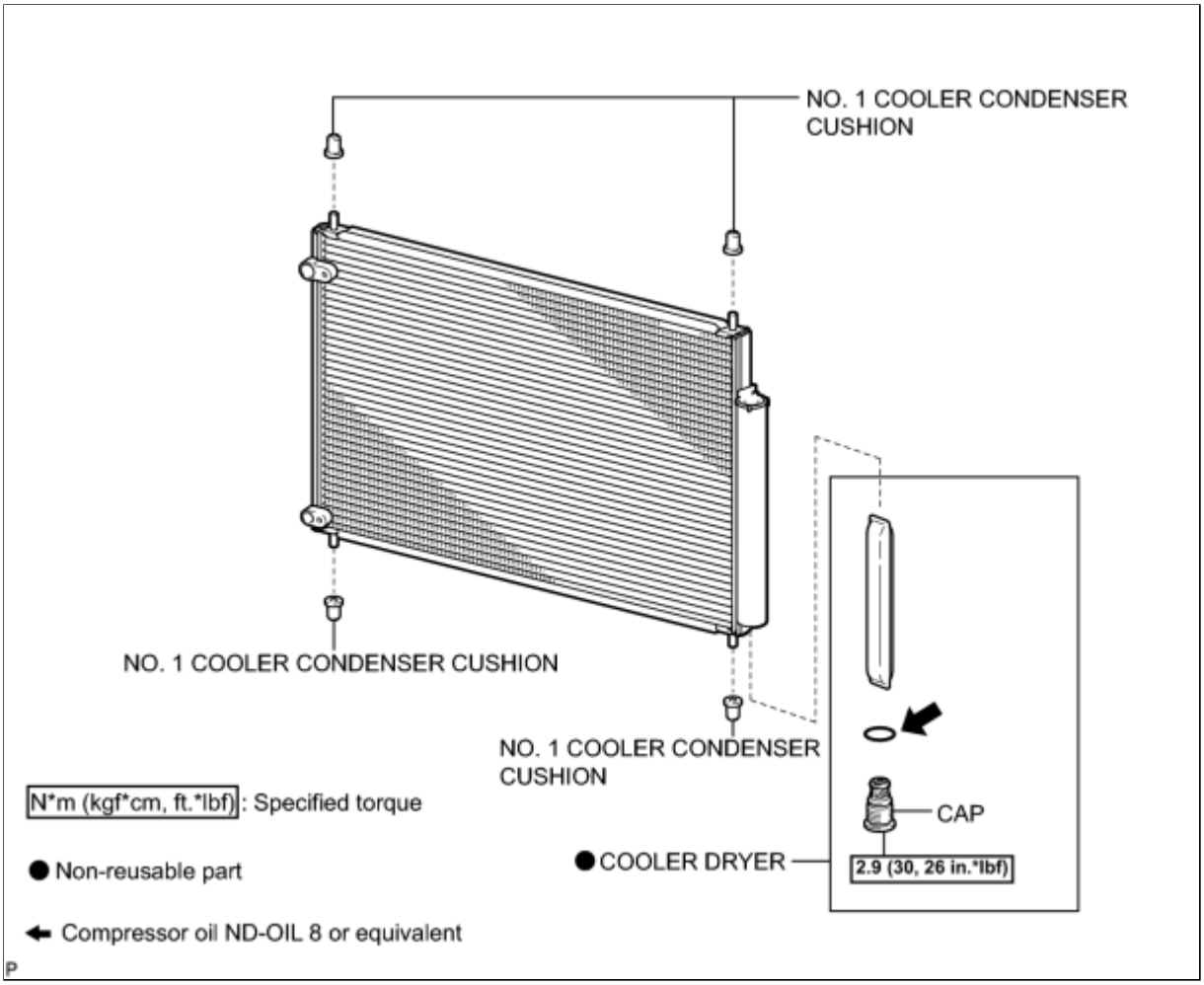
NO. 1 COOLER CONDENSER CUSHION
NO. 1 COOLER CONDENSER CUSHION
NO. 1 COOLER CONDENSER CUSHION
CAP
COOLER DRYER
2.9 (30, 26 in.*lbf)
N*m (kgf*cm, ft.*lbf): Specified torque
Non-reusable part
Compressor oil ND-OIL 8 or equivalent

P

Last Modified: 3-10-2010	6.4 G	**From:** 200901
Model Year: 2010	**Model:** Corolla	**Doc ID:** RM000002CVX022X
Title: HEATING / AIR CONDITIONING: COMPRESSOR (for 2ZR-FE): INSPECTION (2010 Corolla)		

INSPECTION

1. INSPECT COMPRESSOR AND PULLEY (A/C COMPRESSOR)

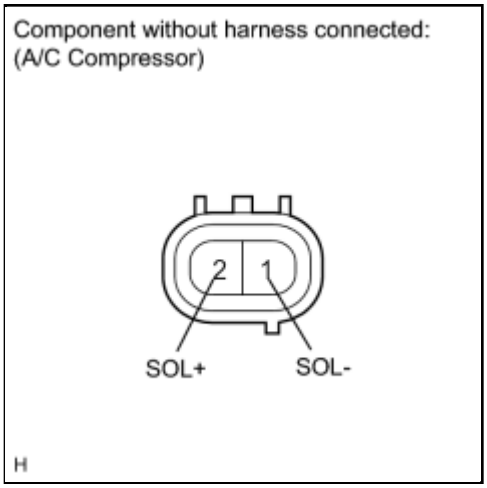

(a) Disconnect the connector from the compressor and pulley.

(b) Measure the resistance according to the value(s) in the table below.

Standard Resistance:

TESTER CONNECTION	CONDITION	SPECIFIED CONDITION
2 (SOL+) - 1 (SOL-)	20°C (68°F)	10 to 11 Ω

If the resistance is not as specified, replace the compressor and pulley.

Last Modified: 3-10-2010	6.4 G	**From:** 200901
Model Year: 2010	**Model:** Corolla	**Doc ID:** RM0000012UU00TX
Title: HEATING / AIR CONDITIONING: CONDENSER: ON-VEHICLE INSPECTION (2010 Corolla)		

ON-VEHICLE INSPECTION

1. INSPECT CONDENSER ASSEMBLY WITH RECEIVER

(a) If the condenser assembly fins are dirty, clean them with water and dry with compressed air.

NOTICE:

Do not damage the condenser assembly fins.

(b) If any condenser assembly fins are bent, straighten them using a screwdriver or pliers.

2. INSPECT FOR REFRIGERANT LEAK

(a) Using a halogen leak detector, check pipe joints for refrigerant leakage.

(b) If refrigerant leakage is detected in a joint, check the torque of the joint.

Last Modified: 3-10-2010	6.4 A	**From:** 200901
Model Year: 2010	**Model:** Corolla	**Doc ID:** RM000002XLT00XX
Title: HEATING / AIR CONDITIONING: CONDENSER: REMOVAL (2010 Corolla)		

REMOVAL

1. RECOVER REFRIGERANT FROM REFRIGERATION SYSTEM INFO

2. REMOVE RADIATOR GRILLE PROTECTOR INFO

3. REMOVE NO. 4 ENGINE UNDER COVER (for 2AZ-FE) INFO

4. REMOVE FRONT BUMPER ASSEMBLY INFO

5. DISCONNECT DISCHARGE HOSE SUB-ASSEMBLY

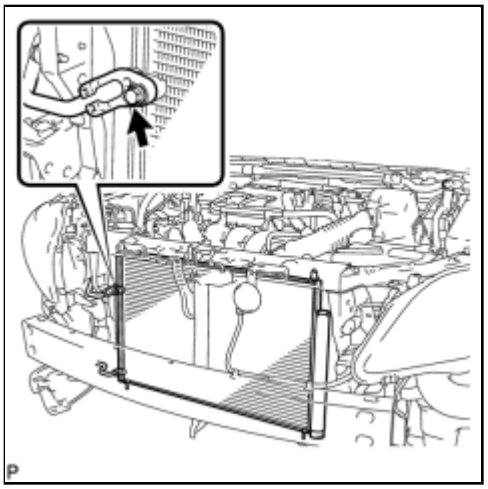

(a) Remove the bolt and disconnect the discharge hose sub-assembly from the condenser.

(b) Remove the O-ring from the discharge hose sub-assembly.

NOTICE:

Seal the openings of the disconnected parts using vinyl tape to prevent entry of moisture and foreign matter.

6. DISCONNECT AIR CONDITIONING TUBE ASSEMBLY

(a) Remove the bolt and disconnect the air conditioning tube assembly from the condenser.

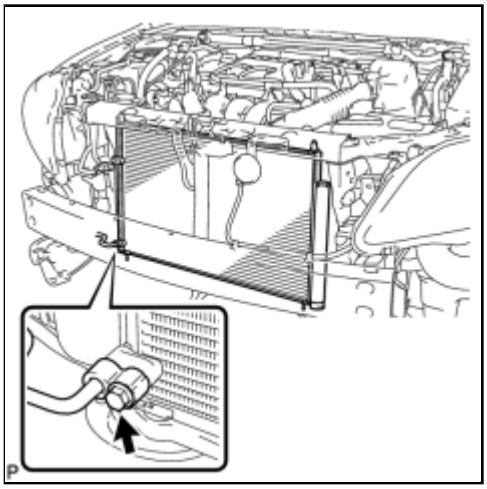

(b) Remove the O-ring from the air conditioning tube assembly.

NOTICE:

Seal the openings of the disconnected parts using vinyl tape to prevent entry of moisture and foreign matter.

7. REMOVE UPPER RADIATOR SUPPORT (for 2ZR-FE) INFO

8. REMOVE UPPER RADIATOR SUPPORT (for 2AZ-FE) INFO

9. DISCONNECT HOOD LOCK ASSEMBLY INFO

10. SEPARATE WATER BY-PASS HOSE (for 2ZR-FE) INFO

11. SEPARATE WATER BY-PASS HOSE (for 2AZ-FE) INFO

12. REMOVE HOOD LOCK SUPPORT SUB-ASSEMBLY (for 2ZR-FE) INFO

13. REMOVE HOOD LOCK SUPPORT SUB-ASSEMBLY (for 2AZ-FE) INFO

14. REMOVE UPPER RADIATOR SUPPORT SUB-ASSEMBLY (for 2ZR-FE) INFO

15. REMOVE UPPER RADIATOR SUPPORT SUB-ASSEMBLY (for 2AZ-FE) INFO

16. REMOVE NO. 2 FAN SHROUD (for 2ZR-FE) INFO

17. REMOVE NO. 2 FAN SHROUD (for 2AZ-FE) INFO

18. REMOVE CONDENSER ASSEMBLY WITH RECEIVER

(a) Remove the condenser assembly with receiver as shown in the illustration.

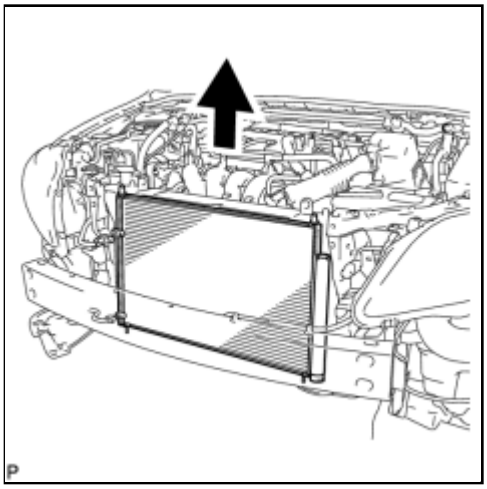
P

Last Modified: 3-10-2010	6.4 A	**From:** 200901
Model Year: 2010	**Model:** Corolla	**Doc ID:** RM000002XLU010X
Title: HEATING / AIR CONDITIONING: CONDENSER: DISASSEMBLY (2010 Corolla)		

DISASSEMBLY

1. REMOVE NO. 1 COOLER CONDENSER CUSHION

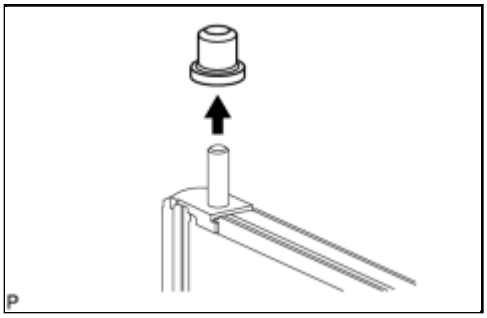

(a) Remove the 4 No. 1 cooler condenser cushions.

2. REMOVE COOLER DRYER

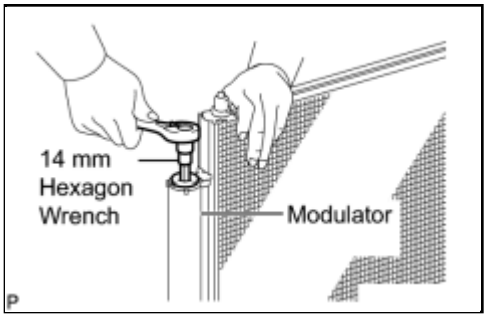

(a) Using a 14 mm straight hexagon wrench, remove the cap from the modulator.

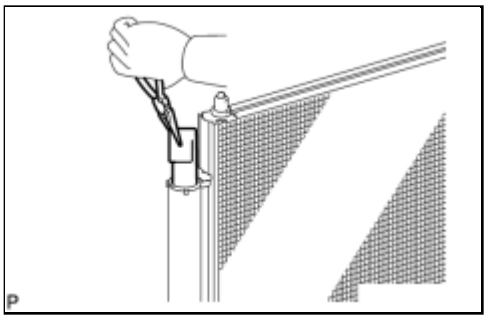

(b) Using pliers, remove the cooler dryer.

Last Modified: 3-10-2010	6.4 A	**From:** 200901
Model Year: 2010	**Model:** Corolla	**Doc ID:** RM000002XLV010X
Title: HEATING / AIR CONDITIONING: CONDENSER: REASSEMBLY (2010 Corolla)		

REASSEMBLY

1. INSTALL COOLER DRYER

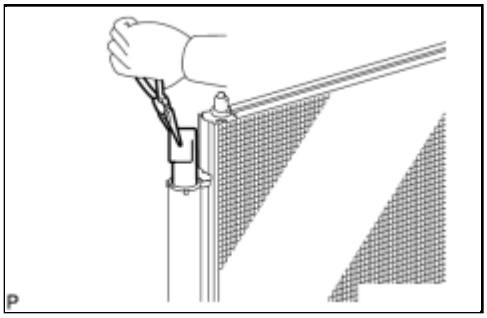

(a) Using pliers, install the new cooler dryer to the modulator.

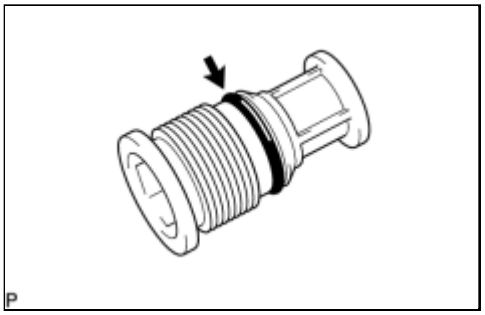

(b) Apply sufficient compressor oil to a new O-ring and the cap fitting surface.

Compressor oil:
ND-OIL 8 or equivalent

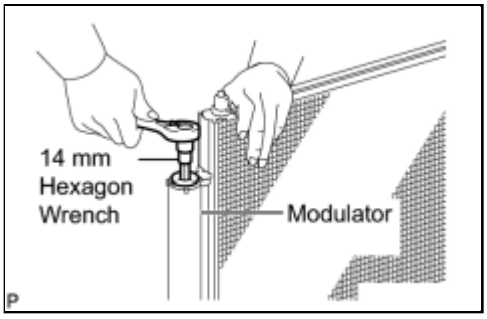

(c) Using a 14 mm straight hexagon wrench, install the new cap to the cooler condenser core.

Torque: 2.9 N·m (30 kgf·cm, 26in·lbf)

2. INSTALL NO. 1 COOLER CONDENSER CUSHION

(a) Install the 4 No. 1 cooler condenser cushions.

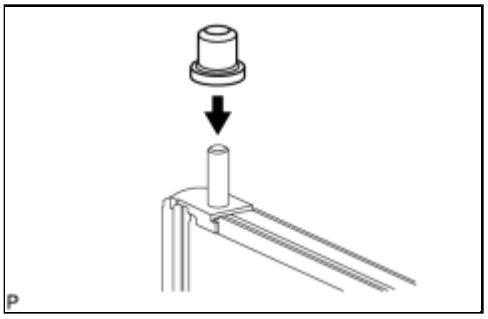
P

Last Modified: 3-10-2010	6.4 A	**From:** 200901
Model Year: 2010	**Model:** Corolla	**Doc ID:** RM000002XLR00XX
Title: HEATING / AIR CONDITIONING: CONDENSER: INSTALLATION (2010 Corolla)		

INSTALLATION

1. INSTALL CONDENSER ASSEMBLY WITH RECEIVER

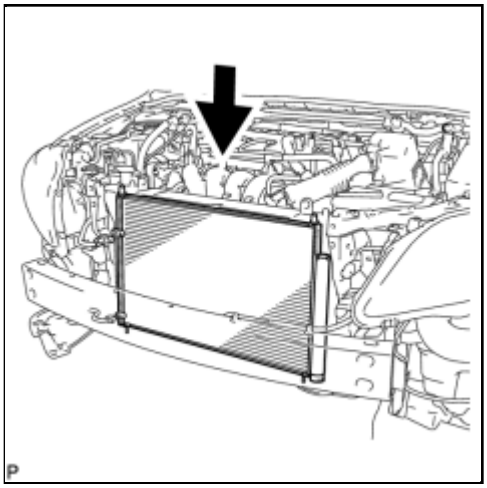

(a) Install the condenser assembly with receiver as shown in the illustration.

HINT:

If the condenser is replaced with a new one, add compressor oil to the new condenser.

Capacity:
40 cc (1.4 fl.oz.)
Compressor oil:
ND-8 or equivalent

2. INSTALL NO. 2 FAN SHROUD (for 2ZR-FE) INFO

3. INSTALL NO. 2 FAN SHROUD (for 2AZ-FE) INFO

4. INSTALL UPPER RADIATOR SUPPORT SUB-ASSEMBLY (for 2ZR-FE) INFO

5. INSTALL UPPER RADIATOR SUPPORT SUB-ASSEMBLY (for 2AZ-FE) INFO

6. INSTALL HOOD LOCK SUPPORT SUB-ASSEMBLY (for 2ZR-FE) INFO

7. INSTALL HOOD LOCK SUPPORT SUB-ASSEMBLY (for 2AZ-FE) INFO

8. INSTALL WATER BY-PASS HOSE (for 2ZR-FE) INFO

9. INSTALL WATER BY-PASS HOSE (for 2AZ-FE) INFO

10. INSTALL HOOD LOCK ASSEMBLY INFO

11. INSPECT HOOD SUB-ASSEMBLY INFO

12. ADJUST HOOD SUB-ASSEMBLY INFO

13. INSTALL UPPER RADIATOR SUPPORT (for 2ZR-FE) INFO

14. INSTALL UPPER RADIATOR SUPPORT (for 2AZ-FE) INFO

15. CONNECT AIR CONDITIONING TUBE ASSEMBLY

(a) Remove the attached vinyl tape from the tube and the connecting part of the cooler condenser assembly.

(b) Sufficiently apply compressor oil to a new O-ring and the fitting surface of the tube joint.

Compressor oil:
ND-OIL 8 or equivalent

(c) Install the O-ring on the air conditioning tube assembly.

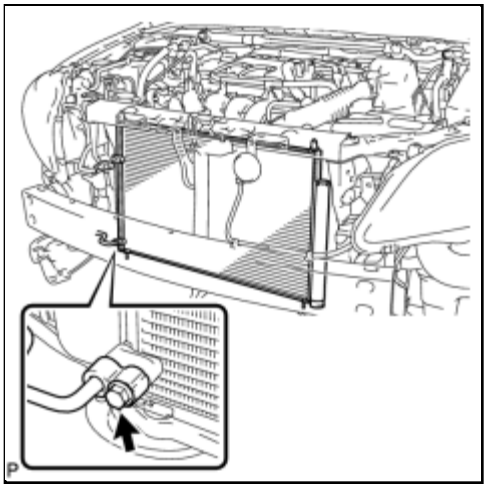

(d) Install the air conditioning tube assembly on the cooler condenser assembly with the bolt.

Torque: 5.4 N·m (55 kgf·cm, 48in·lbf)

16. CONNECT DISCHARGE HOSE SUB-ASSEMBLY

(a) Remove the attached vinyl tape from the pipe and the connecting part of the cooler condenser assembly.

(b) Sufficiently apply compressor oil to a new O-ring and the fitting surface of the pipe joint.

Compressor oil:
ND-OIL 8 or equivalent

(c) Install the O-ring on the discharge hose sub-assembly.

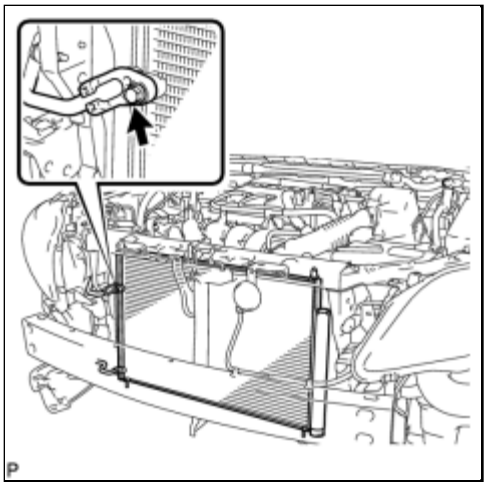

(d) Install the discharge hose sub-assembly on the cooler condenser assembly with the bolt.

Torque: 5.4 N·m (55 kgf·cm, 48in·lbf)

17. CHARGE WITH REFRIGERANT INFO

18. INSTALL FRONT BUMPER ASSEMBLY INFO

19. INSTALL NO. 4 ENGINE UNDER COVER INFO

20. INSTALL RADIATOR GRILLE PROTECTOR INFO

21. WARM UP ENGINE INFO

22. INSPECT FOR REFRIGERANT LEAK INFO

23. VEHICLE PREPARATION FOR FOG LIGHT AIMING ADJUSTMENT INFO

24. PREPARATION FOR FOG LIGHT AIMING INFO

25. INSPECT FOG LIGHT AIMING INFO

26. ADJUST FOG LIGHT AIMING INFO

Last Modified: 3-10-2010	6.4 K	**From:** 200901
Model Year: 2010	**Model:** Corolla	**Doc ID:** RM000003FXI001X
Title: HEATING / AIR CONDITIONING: FRONT BLOWER MOTOR: COMPONENTS (2010 Corolla)		

COMPONENTS

ILLUSTRATION

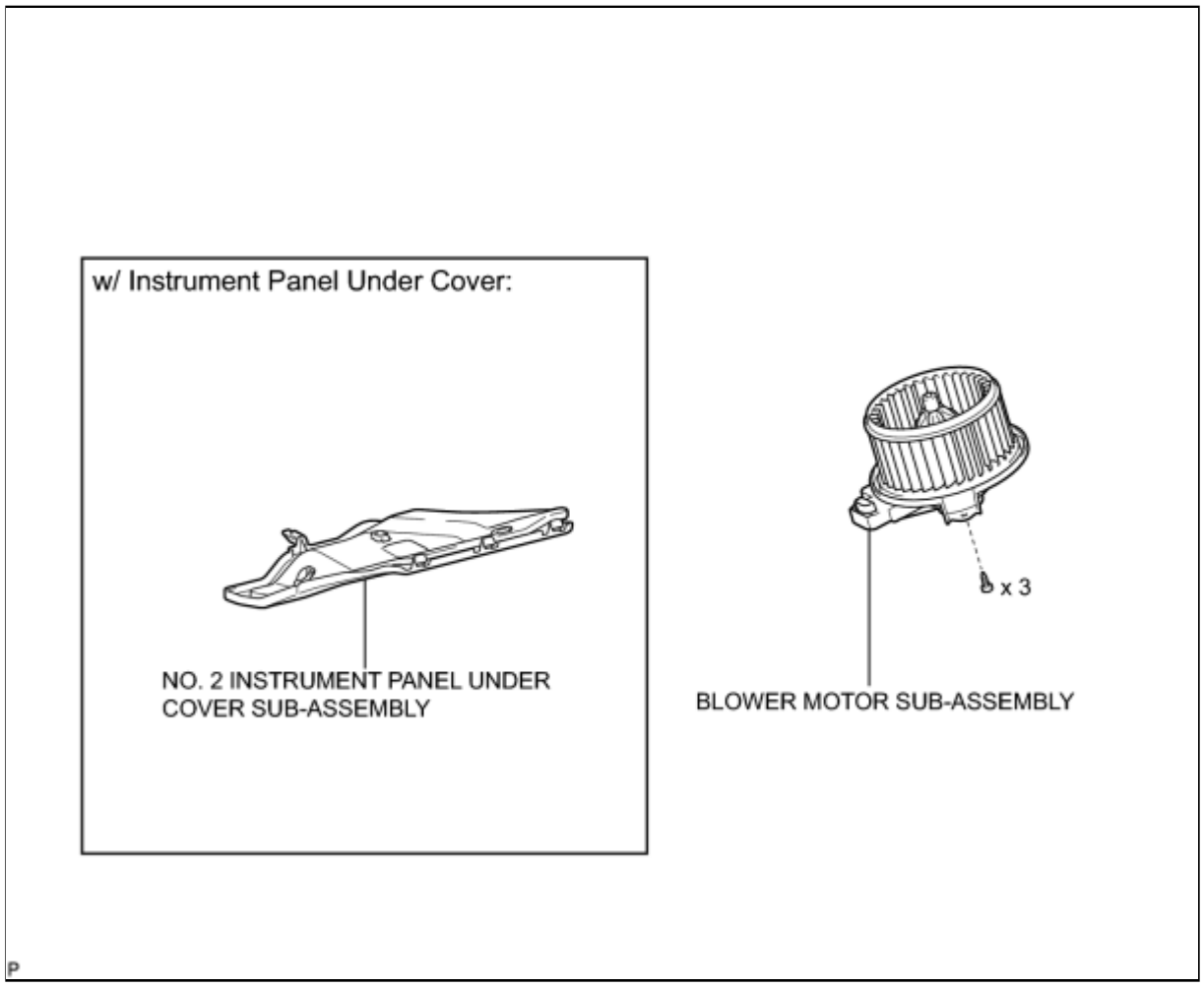

Last Modified: 3-10-2010	6.4 K	**From:** 200901
Model Year: 2010	**Model:** Corolla	**Doc ID:** RM000003FXR001X
Title: HEATING / AIR CONDITIONING: FRONT EVAPORATOR TEMPERATURE SENSOR: COMPONENTS (2010 Corolla)		

COMPONENTS

ILLUSTRATION

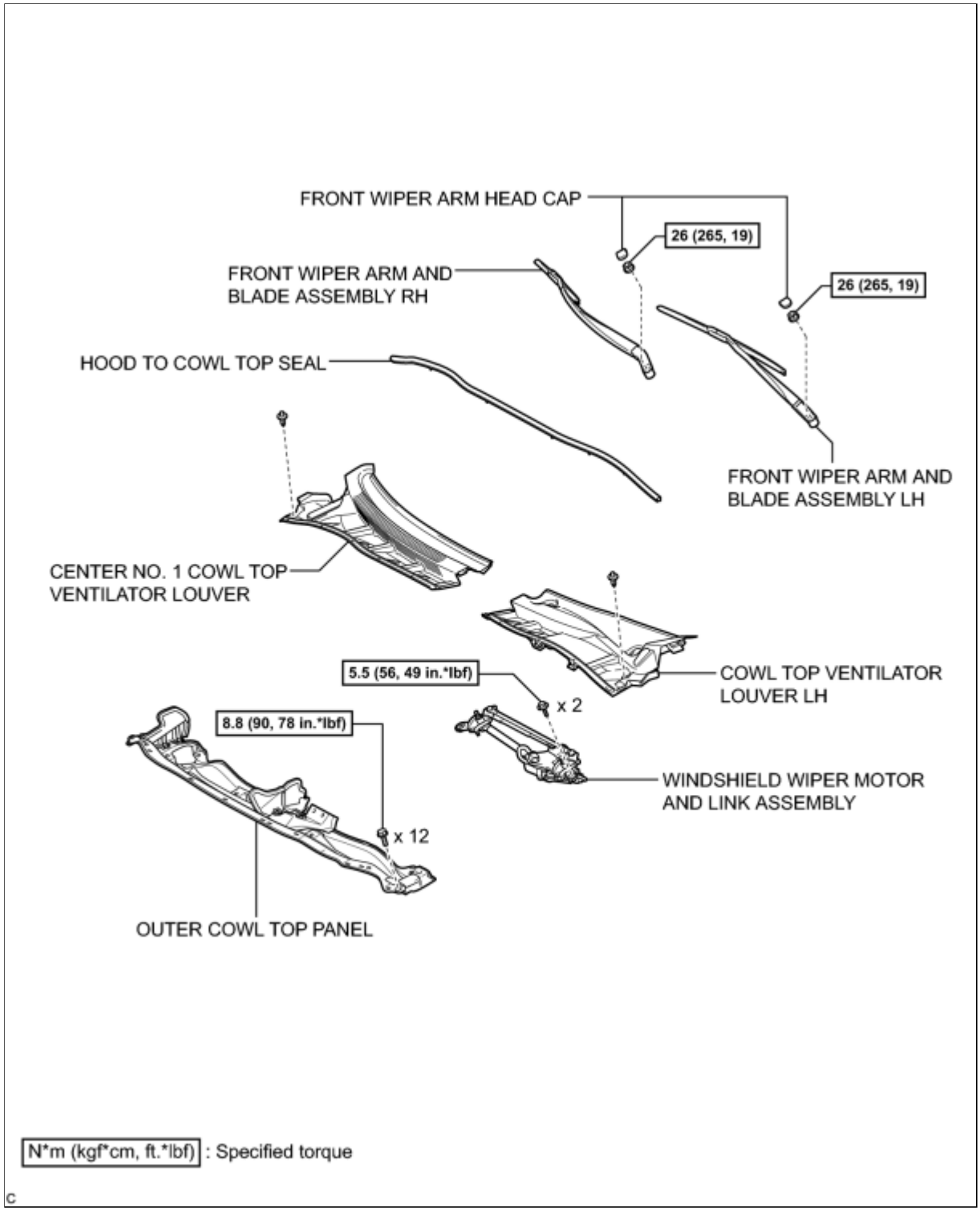

ILLUSTRATION

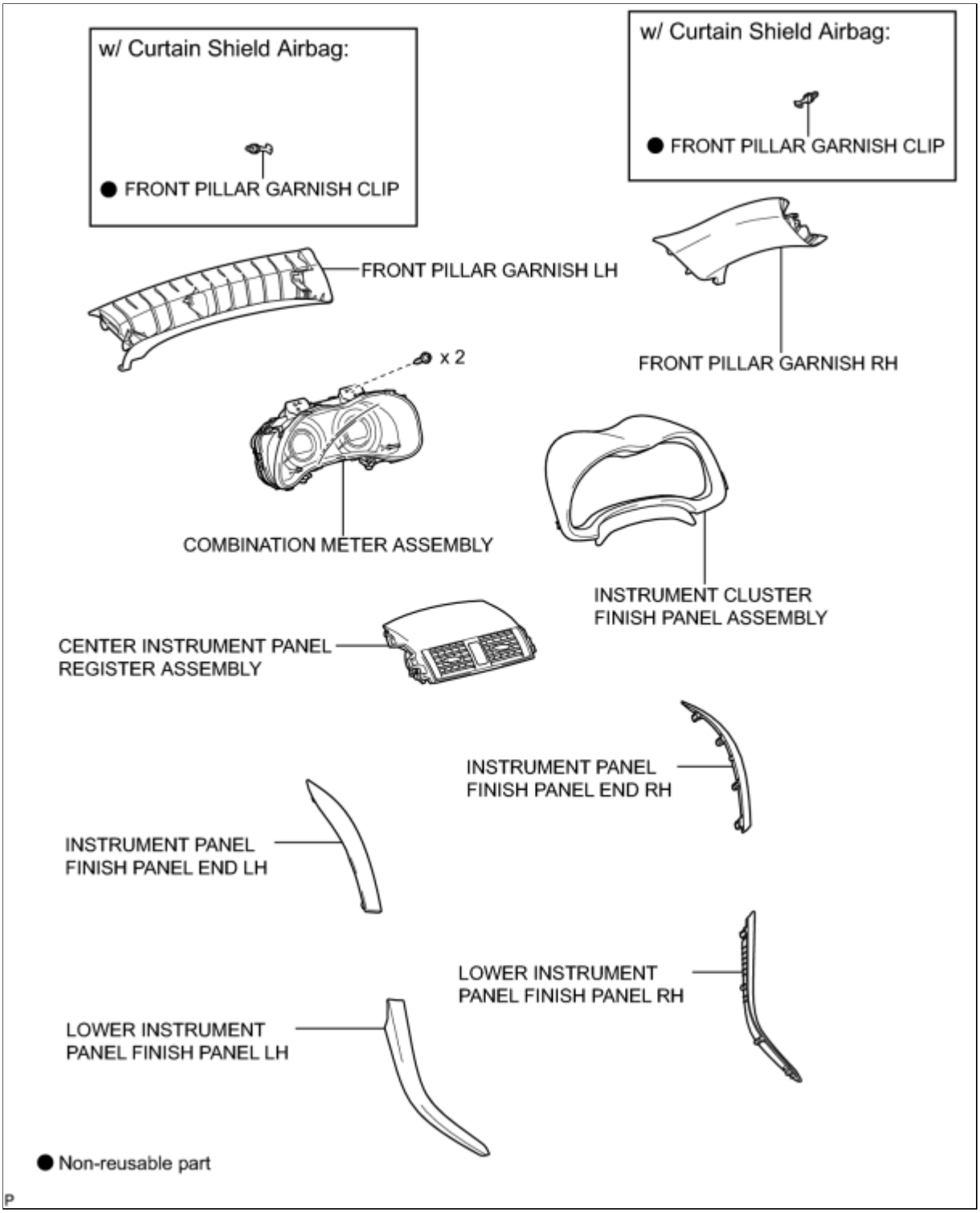

ILLUSTRATION

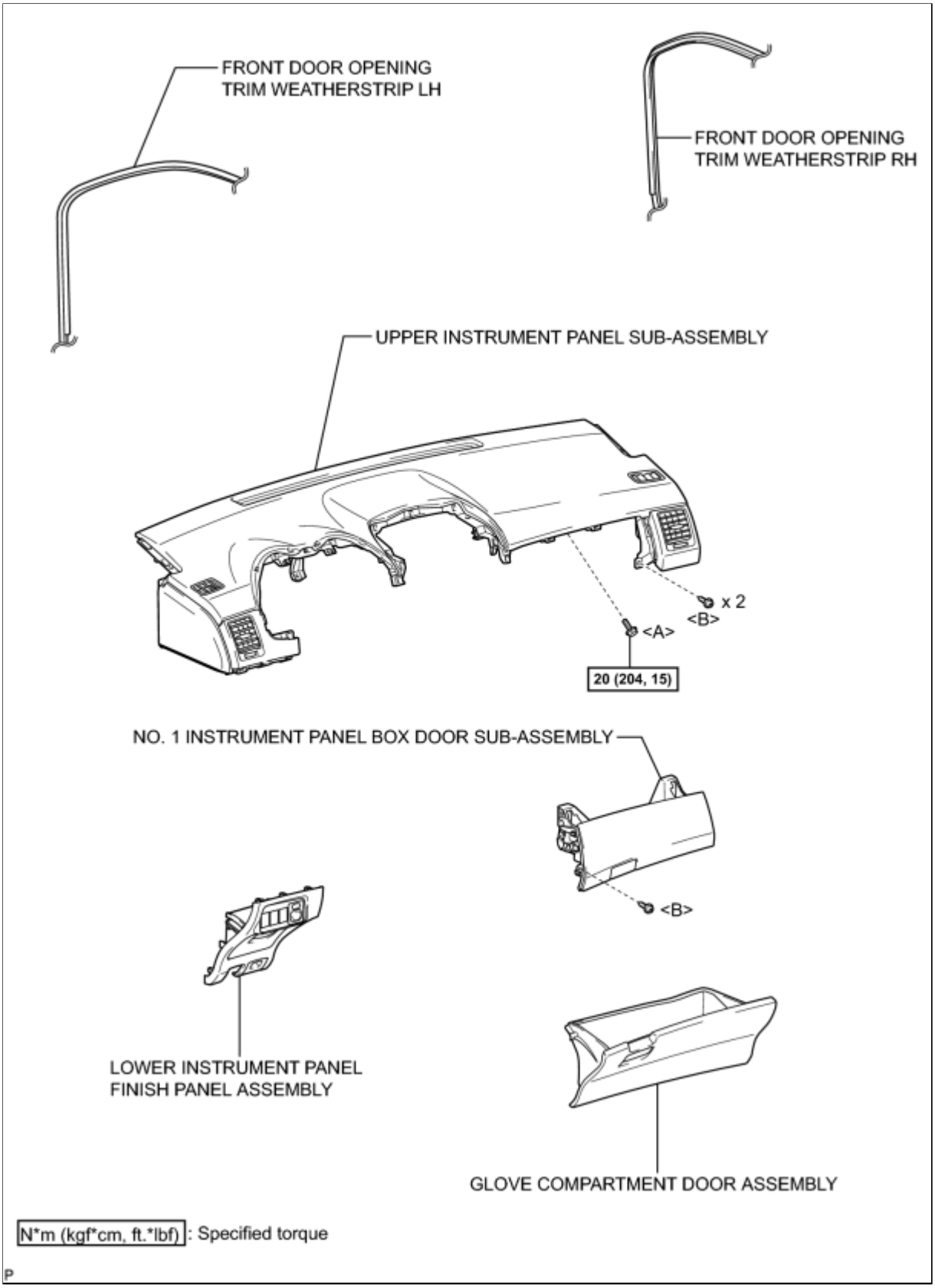

ILLUSTRATION

for 2ZR-FE:

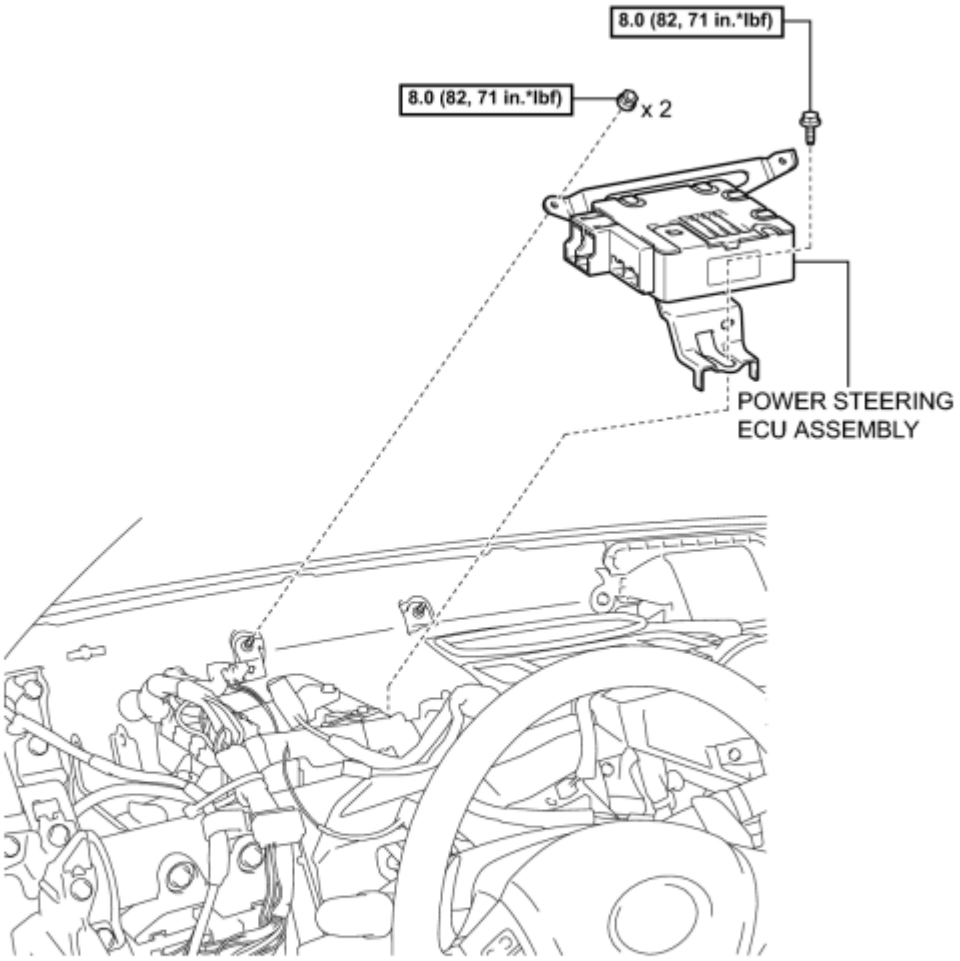

N*m (kgf*cm, ft.*lbf): Specified torque

P

ILLUSTRATION

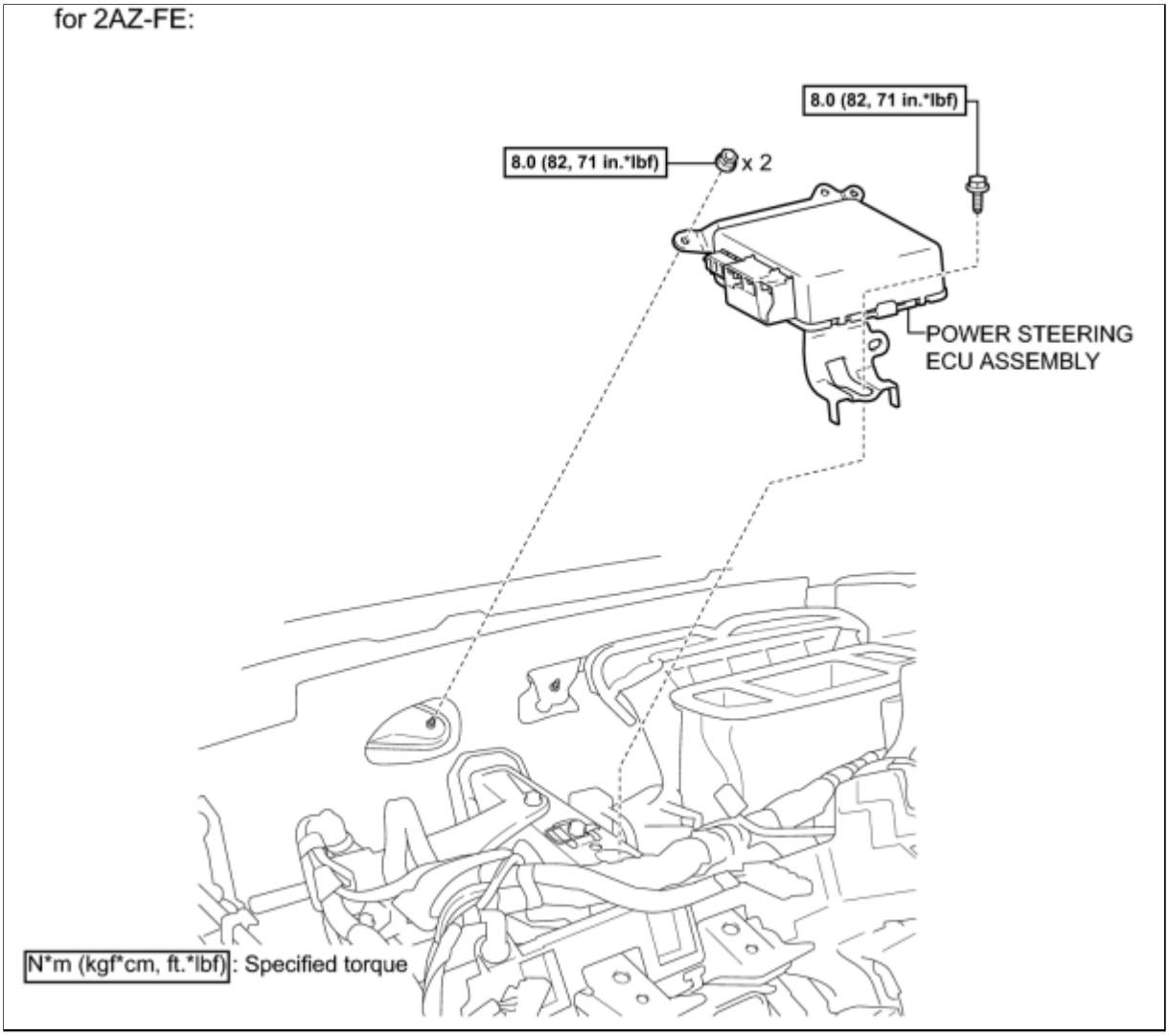

ILLUSTRATION

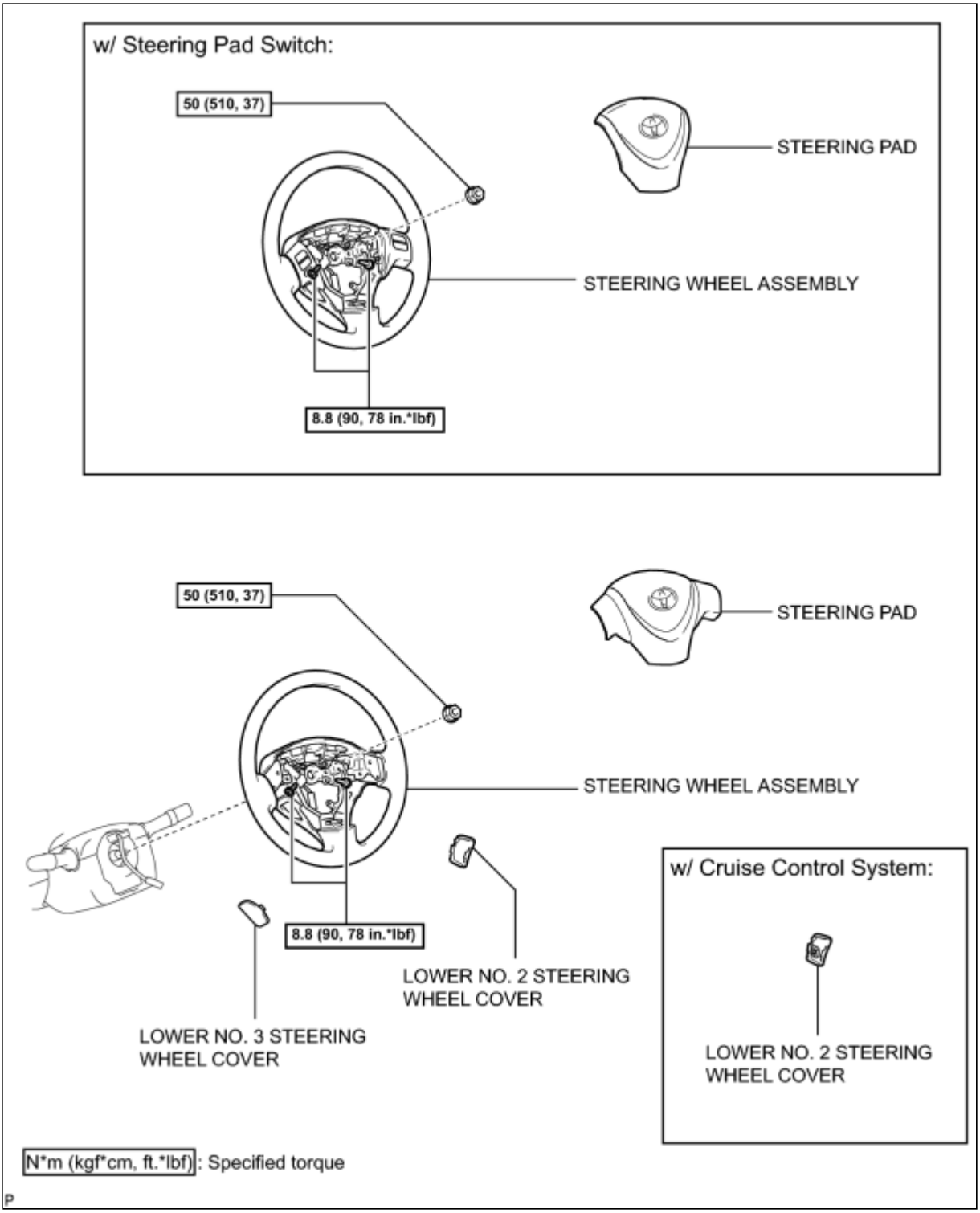

ILLUSTRATION

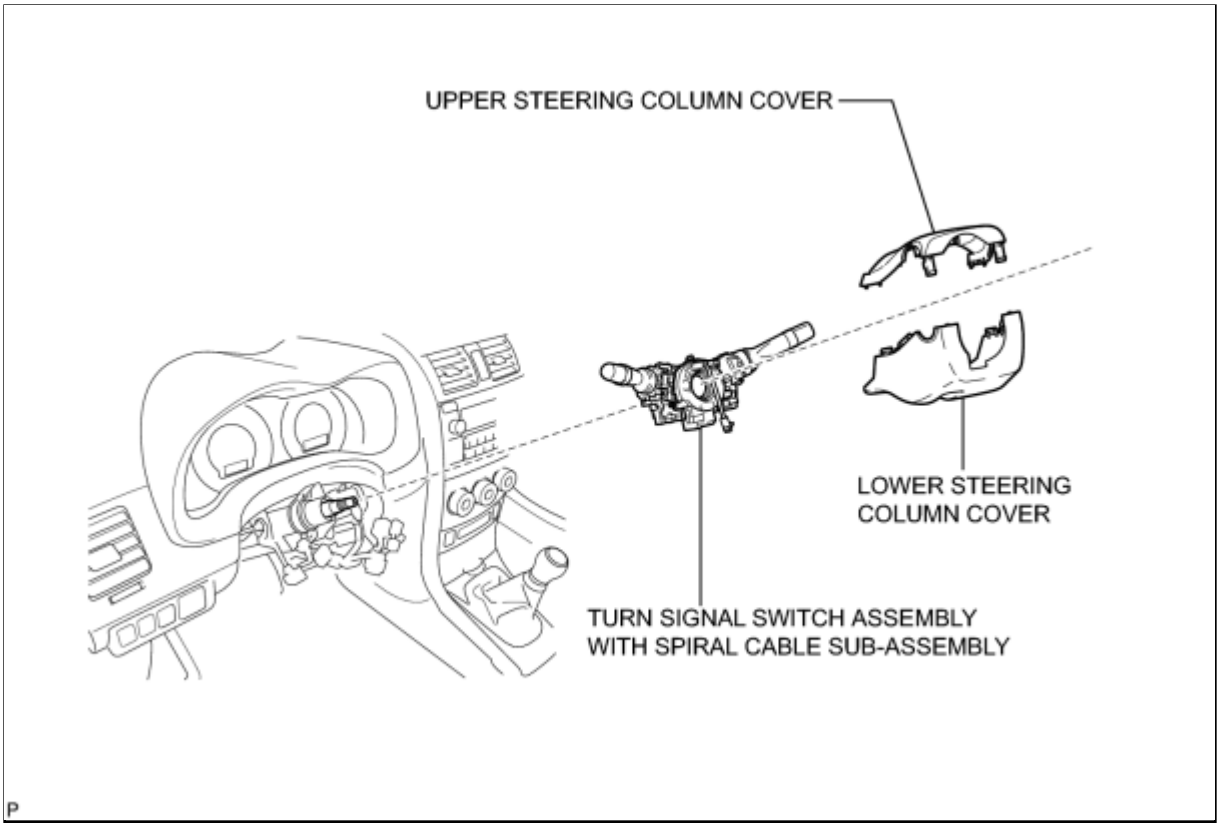

ILLUSTRATION

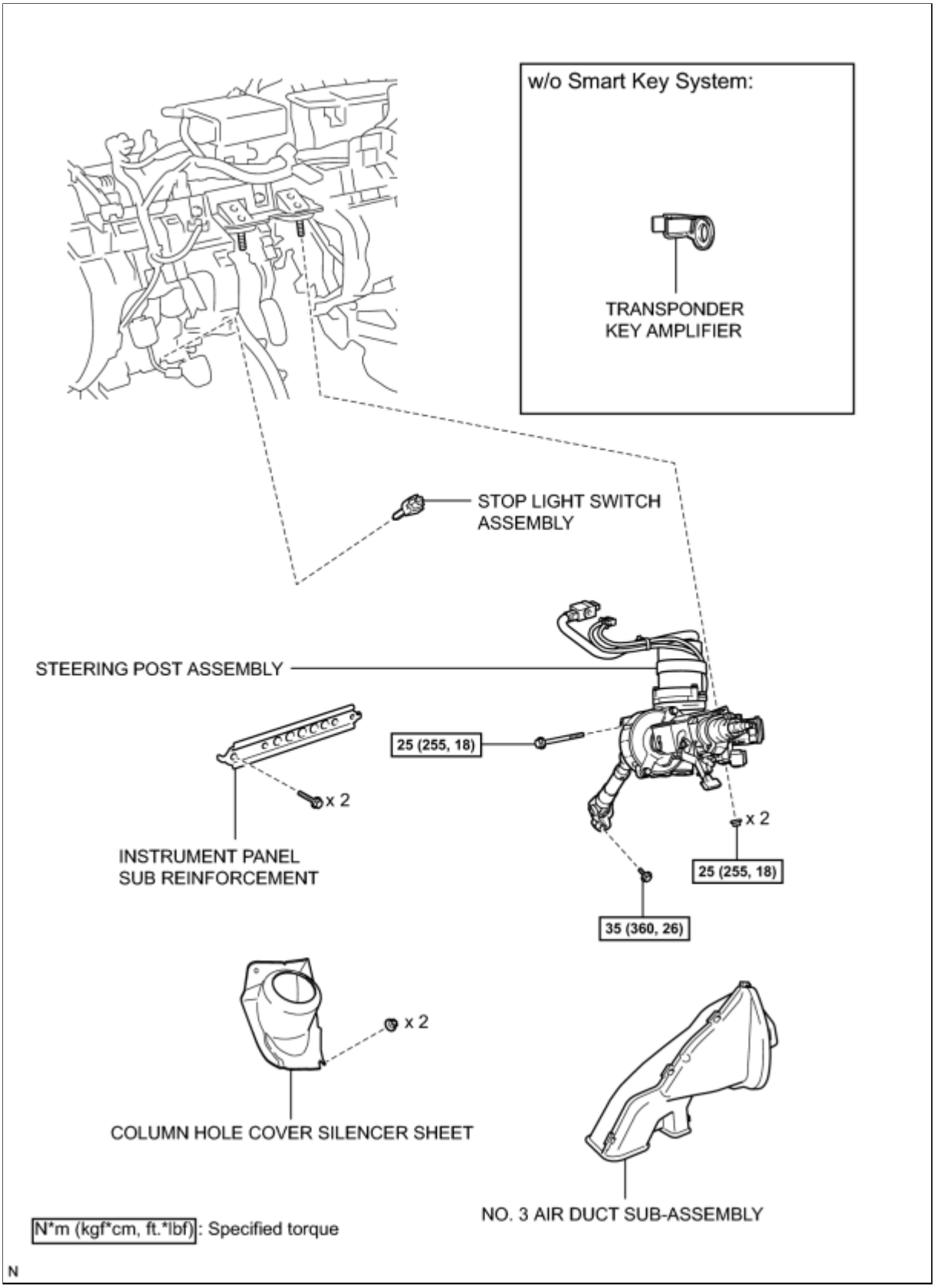

ILLUSTRATION

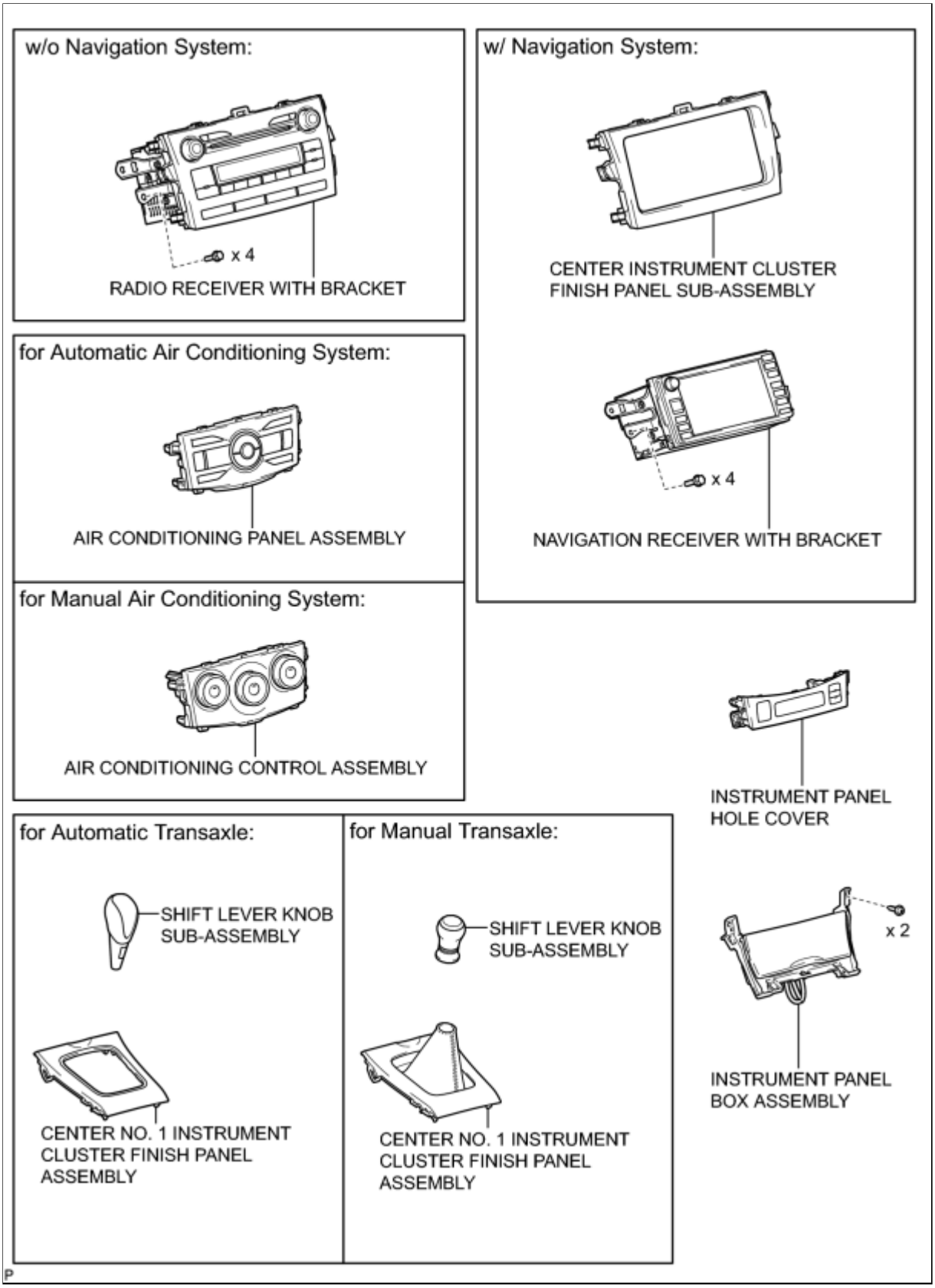

ILLUSTRATION

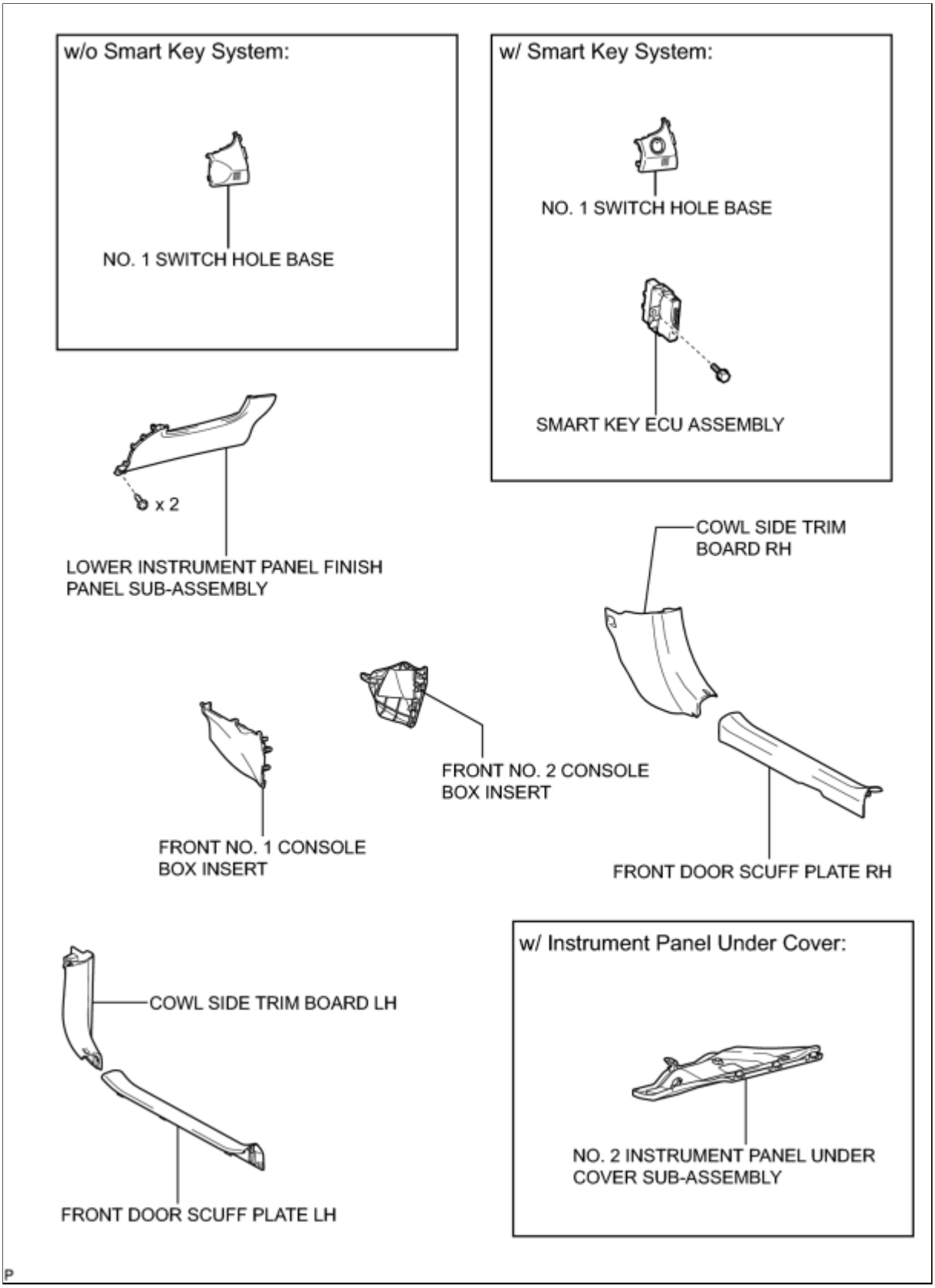

ILLUSTRATION

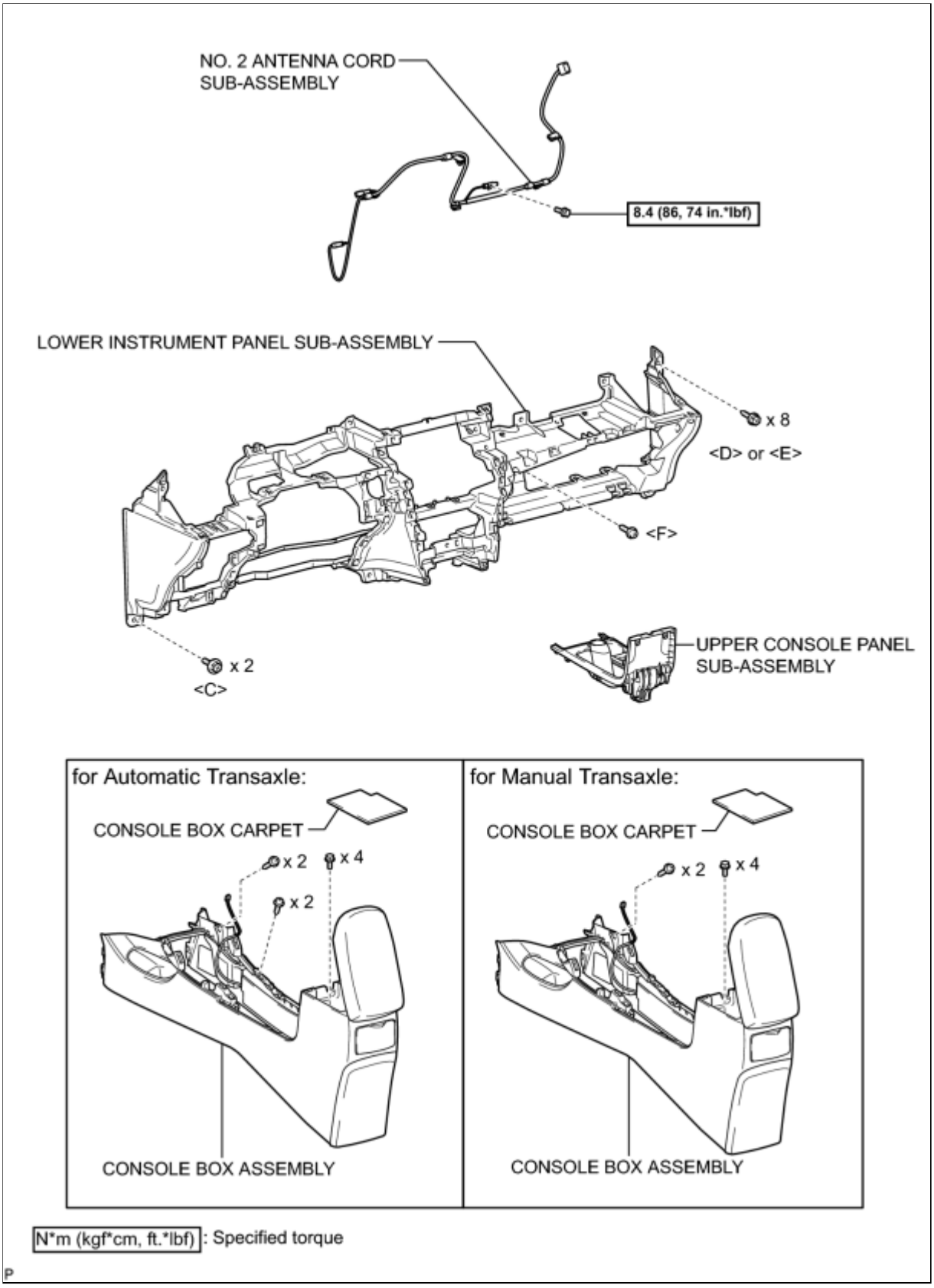

ILLUSTRATION

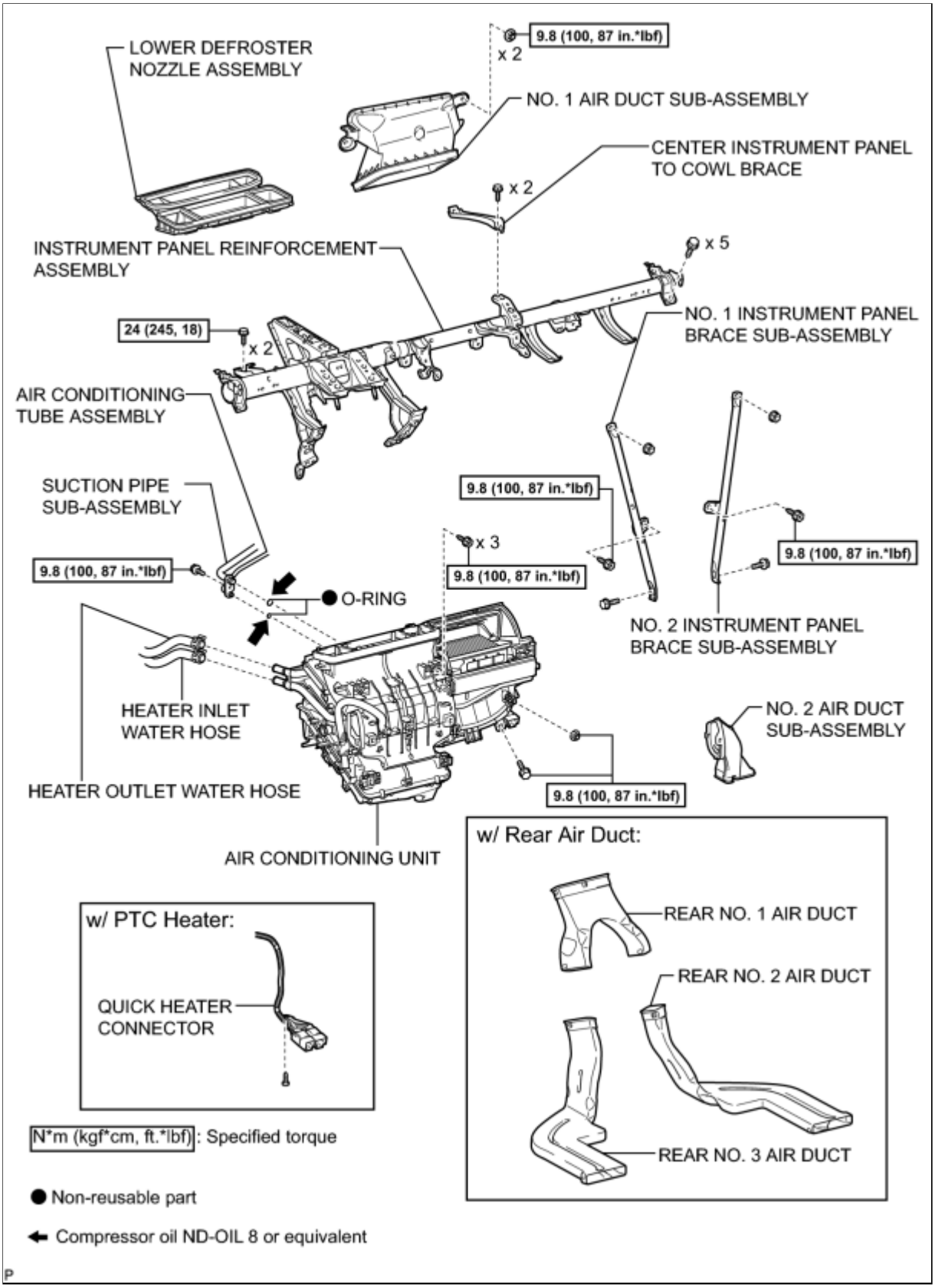

ILLUSTRATION

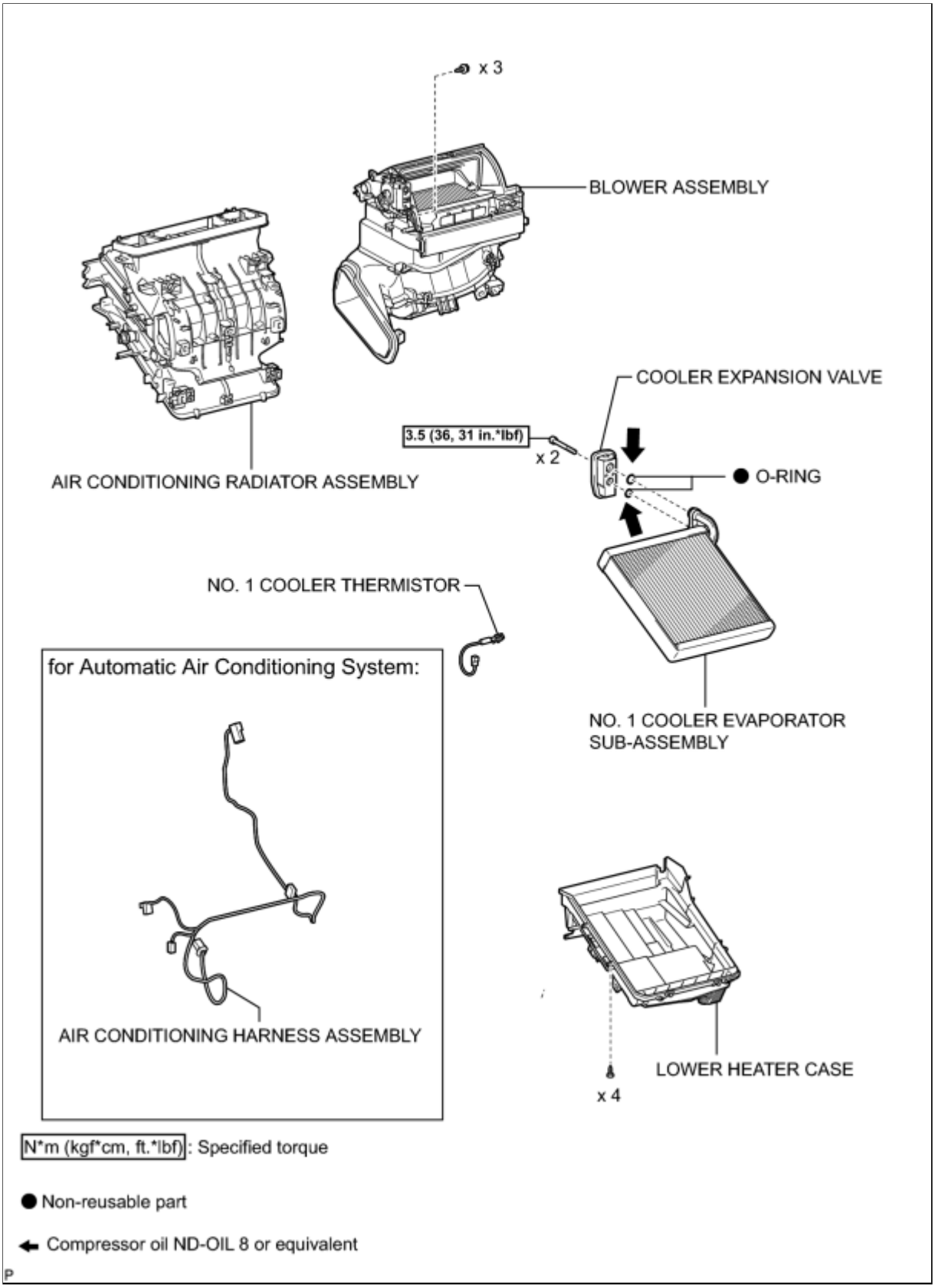
x 3
BLOWER ASSEMBLY
COOLER EXPANSION VALVE
3.5 (36, 31 in.*lbf)
x 2
O-RING
AIR CONDITIONING RADIATOR ASSEMBLY
NO. 1 COOLER THERMISTOR
NO. 1 COOLER EVAPORATOR SUB-ASSEMBLY
for Automatic Air Conditioning System:
AIR CONDITIONING HARNESS ASSEMBLY
LOWER HEATER CASE
x 4
N*m (kgf*cm, ft.*lbf): Specified torque
Non-reusable part
Compressor oil ND-OIL 8 or equivalent

Last Modified: 3-10-2010	6.4 A	**From:** 200901
Model Year: 2010	**Model:** Corolla	**Doc ID:** RM000002XU900FX
Title: HEATING / AIR CONDITIONING: FRONT BLOWER MOTOR: REMOVAL (2010 Corolla)		

REMOVAL

1. REMOVE NO. 2 INSTRUMENT PANEL UNDER COVER SUB-ASSEMBLY (w/ Instrument Panel Under Cover) INFO

2. REMOVE BLOWER MOTOR SUB-ASSEMBLY (w/o PTC Heater)

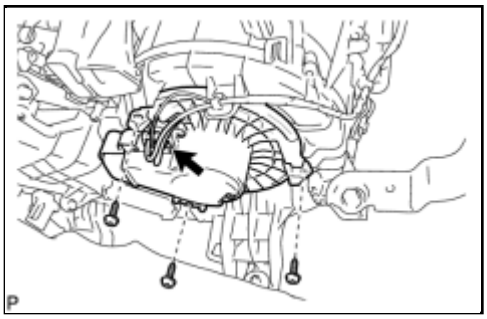

(a) Disconnect the connector.

(b) Remove the 3 screws and the blower motor sub-assembly.

3. REMOVE BLOWER MOTOR SUB-ASSEMBLY (w/ PTC Heater)

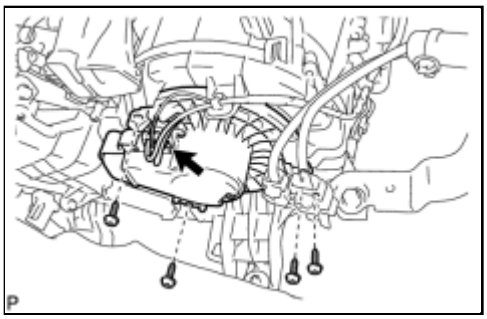

(a) Remove the quick heater connector screw.

(b) Disconnect the connector.

(c) Remove the 4 screws and the blower motor sub-assembly.

Last Modified: 3-10-2010	6.4 G	**From:** 200901
Model Year: 2010	**Model:** Corolla	**Doc ID:** RM00000314T00QX
Title: HEATING / AIR CONDITIONING: FRONT BLOWER MOTOR: INSPECTION (2010 Corolla)		

INSPECTION

1. INSPECT BLOWER MOTOR (for Manual Air Conditioning System)

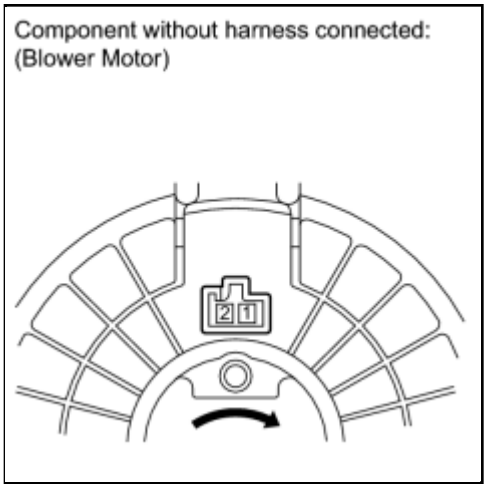

(a) Disconnect the connector from the blower motor.

(b) Connect a positive (+) lead from the battery to terminal 2 and a negative (-) lead from the battery to terminal 1, and check that the motor operates.

OK:

The blower motor operates smoothly.

If the result is not as specified, replace the blower motor.

Last Modified: 3-10-2010	6.4 A	**From:** 200901
Model Year: 2010	**Model:** Corolla	**Doc ID:** RM000002XU700FX
Title: HEATING / AIR CONDITIONING: FRONT BLOWER MOTOR: INSTALLATION (2010 Corolla)		

INSTALLATION

1. INSTALL BLOWER MOTOR SUB-ASSEMBLY (w/o PTC Heater)

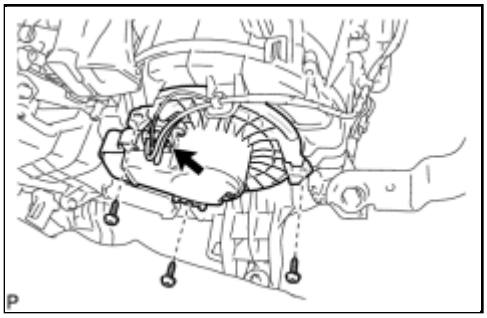

(a) Install the blower motor sub-assembly with the 3 screws.

(b) Connect the connector.

2. INSTALL BLOWER MOTOR SUB-ASSEMBLY (w/ PTC Heater)

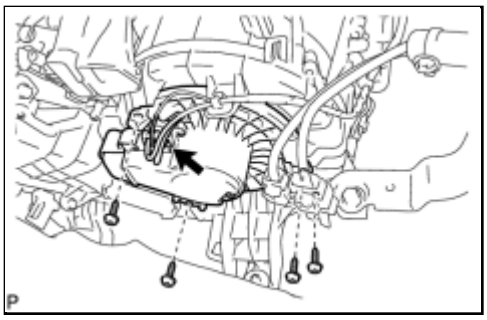

(a) Install the blower motor sub-assembly with the 3 screws.

(b) Connect the connector.

(c) Install the quick heater connector screw.

3. INSTALL NO. 2 INSTRUMENT PANEL UNDER COVER SUB-ASSEMBLY (w/ Instrument Panel Under Cover) INFO

Last Modified: 3-10-2010	6.4 A	**From:** 200901
Model Year: 2010	**Model:** Corolla	**Doc ID:** RM000001HLW0ABX
Title: HEATING / AIR CONDITIONING: FRONT EVAPORATOR TEMPERATURE SENSOR: REMOVAL (2010 Corolla)		

REMOVAL

1. PRECAUTION

INFO

2. ALIGN FRONT WHEELS FACING STRAIGHT AHEAD

3. DISCONNECT CABLE FROM NEGATIVE BATTERY TERMINAL

CAUTION:

Wait at least 90 seconds after disconnecting the cable from the negative (-) battery terminal to disable the SRS system INFO **.**

HINT:

Before disconnecting the cable, set the air conditioning control switch to DEF-MODE. (for Automatic Air Conditioning System)

4. RECOVER REFRIGERANT FROM REFRIGERATION SYSTEM INFO

5. REMOVE FRONT WIPER ARM HEAD CAP INFO

6. REMOVE FRONT WIPER ARM AND BLADE ASSEMBLY LH INFO

7. REMOVE FRONT WIPER ARM AND BLADE ASSEMBLY RH INFO

8. REMOVE HOOD TO COWL TOP SEAL INFO

9. REMOVE CENTER NO. 1 COWL TOP VENTILATOR LOUVER INFO

10. REMOVE COWL TOP VENTILATOR LOUVER LH INFO

11. REMOVE WINDSHIELD WIPER MOTOR AND LINK ASSEMBLY INFO

12. REMOVE OUTER COWL TOP PANEL (for TMC Made) INFO

13. REMOVE OUTER COWL TOP PANEL (except TMC Made) INFO

14. DISCONNECT SUCTION PIPE SUB-ASSEMBLY INFO

15. DISCONNECT AIR CONDITIONING TUBE ASSEMBLY INFO

16. DISCONNECT HEATER WATER HOSE OUTLET INFO

17. DISCONNECT HEATER WATER HOSE INLET INFO

18. REMOVE LOWER INSTRUMENT PANEL FINISH PANEL LH INFO

19. REMOVE LOWER INSTRUMENT PANEL FINISH PANEL RH INFO

20. REMOVE INSTRUMENT PANEL FINISH PANEL END LH INFO

21. REMOVE INSTRUMENT PANEL FINISH PANEL END RH INFO

22. REMOVE CENTER INSTRUMENT PANEL REGISTER ASSEMBLY INFO

23. REMOVE INSTRUMENT CLUSTER FINISH PANEL ASSEMBLY INFO

24. REMOVE COMBINATION METER ASSEMBLY INFO

25. REMOVE FRONT PILLAR GARNISH LH (w/o Curtain Shield Airbag) INFO

26. REMOVE FRONT PILLAR GARNISH LH (w/ Curtain Shield Airbag) INFO

27. REMOVE FRONT PILLAR GARNISH RH (w/o Curtain Shield Airbag) INFO

28. REMOVE FRONT PILLAR GARNISH RH (w/ Curtain Shield Airbag) INFO

29. REMOVE LOWER INSTRUMENT PANEL FINISH PANEL ASSEMBLY INFO

30. DISCONNECT FRONT DOOR OPENING TRIM WEATHERSTRIP LH INFO

31. REMOVE GLOVE COMPARTMENT DOOR ASSEMBLY INFO

32. REMOVE NO. 1 INSTRUMENT PANEL BOX DOOR SUB-ASSEMBLY INFO

33. DISCONNECT FRONT DOOR OPENING TRIM WEATHERSTRIP RH INFO

34. DISCONNECT INSTRUMENT PANEL WIRE ASSEMBLY INFO

35. REMOVE UPPER INSTRUMENT PANEL SUB-ASSEMBLY INFO

36. REMOVE POWER STEERING ECU ASSEMBLY (for 2ZR-FE) INFO

37. REMOVE POWER STEERING ECU ASSEMBLY (for 2AZ-FE) INFO

38. REMOVE LOWER INSTRUMENT PANEL FINISH PANEL SUB-ASSEMBLY INFO

39. REMOVE LOWER NO. 3 STEERING WHEEL COVER INFO

40. REMOVE LOWER NO. 2 STEERING WHEEL COVER INFO

41. REMOVE STEERING PAD INFO

42. REMOVE STEERING WHEEL ASSEMBLY INFO

43. REMOVE LOWER STEERING COLUMN COVER INFO

44. REMOVE UPPER STEERING COLUMN COVER INFO

45. REMOVE TURN SIGNAL SWITCH ASSEMBLY WITH SPIRAL CABLE SUB-ASSEMBLY INFO

46. REMOVE COLUMN HOLE COVER SILENCER SHEET INFO

47. SEPARATE NO. 2 STEERING INTERMEDIATE SHAFT ASSEMBLY INFO

48. REMOVE INSTRUMENT PANEL SUB REINFORCEMENT INFO

49. REMOVE NO. 3 AIR DUCT SUB-ASSEMBLY INFO

50. REMOVE TRANSPONDER KEY AMPLIFIER (w/ Smart Key System) INFO

51. REMOVE STOP LIGHT SWITCH ASSEMBLY INFO

52. REMOVE STEERING POST ASSEMBLY (for 2ZR-FE) INFO

53. REMOVE STEERING POST ASSEMBLY (for 2AZ-FE) INFO

54. REMOVE RADIO RECEIVER WITH BRACKET (w/o Navigation System) INFO

55. REMOVE CENTER INSTRUMENT CLUSTER FINISH PANEL SUB-ASSEMBLY (w/ Navigation System) INFO

56. REMOVE NAVIGATION RECEIVER WITH BRACKET (w/ Navigation System) INFO

57. REMOVE SHIFT LEVER KNOB SUB-ASSEMBLY (for Manual Transaxle) INFO

58. REMOVE SHIFT LEVER KNOB SUB-ASSEMBLY (for Automatic Transaxle) INFO

59. REMOVE CENTER NO. 1 INSTRUMENT CLUSTER FINISH PANEL ASSEMBLY (for Manual Transaxle) INFO

60. REMOVE CENTER NO. 1 INSTRUMENT CLUSTER FINISH PANEL ASSEMBLY (for Automatic Transaxle) INFO

61. REMOVE INSTRUMENT PANEL BOX ASSEMBLY INFO

62. REMOVE INSTRUMENT PANEL HOLE COVER INFO

63. REMOVE AIR CONDITIONING PANEL ASSEMBLY (for Manual Air Conditioning System) INFO

64. REMOVE AIR CONDITIONING CONTROL ASSEMBLY (for Automatic Air Conditioning System) INFO

65. REMOVE FRONT DOOR SCUFF PLATE LH INFO

66. REMOVE COWL SIDE TRIM BOARD LH INFO

67. REMOVE FRONT NO. 1 CONSOLE BOX INSERT INFO

68. REMOVE NO. 1 SWITCH HOLE BASE (w/o Smart Key System) INFO

69. REMOVE NO. 1 SWITCH HOLE BASE (w/ Smart Key System) INFO

70. REMOVE FRONT DOOR SCUFF PLATE RH INFO

71. REMOVE COWL SIDE TRIM BOARD RH INFO

72. REMOVE NO. 2 INSTRUMENT PANEL UNDER COVER SUB-ASSEMBLY (w/ Instrument Panel Under Cover) INFO

73. REMOVE FRONT NO. 2 CONSOLE BOX INSERT INFO

74. REMOVE UPPER CONSOLE PANEL SUB-ASSEMBLY INFO

75. REMOVE CONSOLE BOX CARPET INFO

76. REMOVE CONSOLE BOX ASSEMBLY (for Manual Transaxle) INFO

77. REMOVE CONSOLE BOX ASSEMBLY (for Automatic Transaxle) INFO

78. REMOVE NO. 2 ANTENNA CORD SUB-ASSEMBLY INFO

79. REMOVE LOWER INSTRUMENT PANEL SUB-ASSEMBLY INFO

80. REMOVE SMART KEY ECU ASSEMBLY (w/ Smart Key System) INFO

81. REMOVE NO. 1 AIR DUCT SUB-ASSEMBLY INFO

82. REMOVE LOWER DEFROSTER NOZZLE ASSEMBLY INFO

83. REMOVE CENTER INSTRUMENT PANEL TO COWL BRACE INFO

84. REMOVE REAR NO. 2 AIR DUCT (w/ Rear Air Duct) INFO

85. REMOVE REAR NO. 3 AIR DUCT (w/ Rear Air Duct) INFO

86. REMOVE NO. 1 INSTRUMENT PANEL BRACE SUB-ASSEMBLY (for Manual Air Conditioning System) INFO

87. REMOVE NO. 1 INSTRUMENT PANEL BRACE SUB-ASSEMBLY (for Automatic Air Conditioning System) INFO

88. REMOVE NO. 2 INSTRUMENT PANEL BRACE SUB-ASSEMBLY INFO

89. REMOVE REAR NO. 1 AIR DUCT (w/ Rear Air Duct) INFO

90. REMOVE INSTRUMENT PANEL REINFORCEMENT ASSEMBLY (for Manual Air Conditioning System) INFO

91. REMOVE INSTRUMENT PANEL REINFORCEMENT ASSEMBLY (for Automatic Air Conditioning System) INFO

92. REMOVE AIR CONDITIONING UNIT INFO

93. REMOVE NO. 2 AIR DUCT SUB-ASSEMBLY INFO

94. REMOVE BLOWER ASSEMBLY (w/o PTC Heater) INFO

95. REMOVE BLOWER ASSEMBLY (w/ PTC Heater) INFO

96. REMOVE AIR CONDITIONING HARNESS ASSEMBLY (for Automatic Air Conditioning System) INFO

97. REMOVE COOLER EXPANSION VALVE INFO

98. REMOVE NO. 1 COOLER EVAPORATOR SUB-ASSEMBLY INFO

99. REMOVE NO. 1 COOLER THERMISTOR

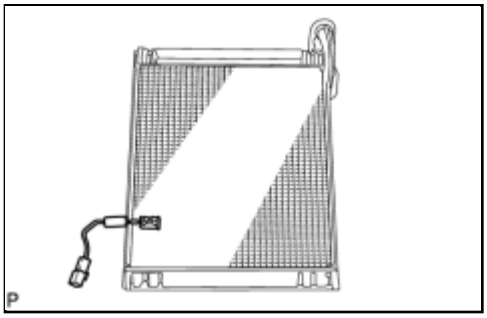

(a) Remove the No. 1 cooler thermistor from the No. 1 cooler evaporator sub-assembly.

Last Modified: 3-10-2010	6.4 K	**From:** 200901
Model Year: 2010	**Model:** Corolla	**Doc ID:** RM000003FXL001X
Title: HEATING / AIR CONDITIONING: PTC HEATER ASSEMBLY: COMPONENTS (2010 Corolla)		

COMPONENTS

ILLUSTRATION

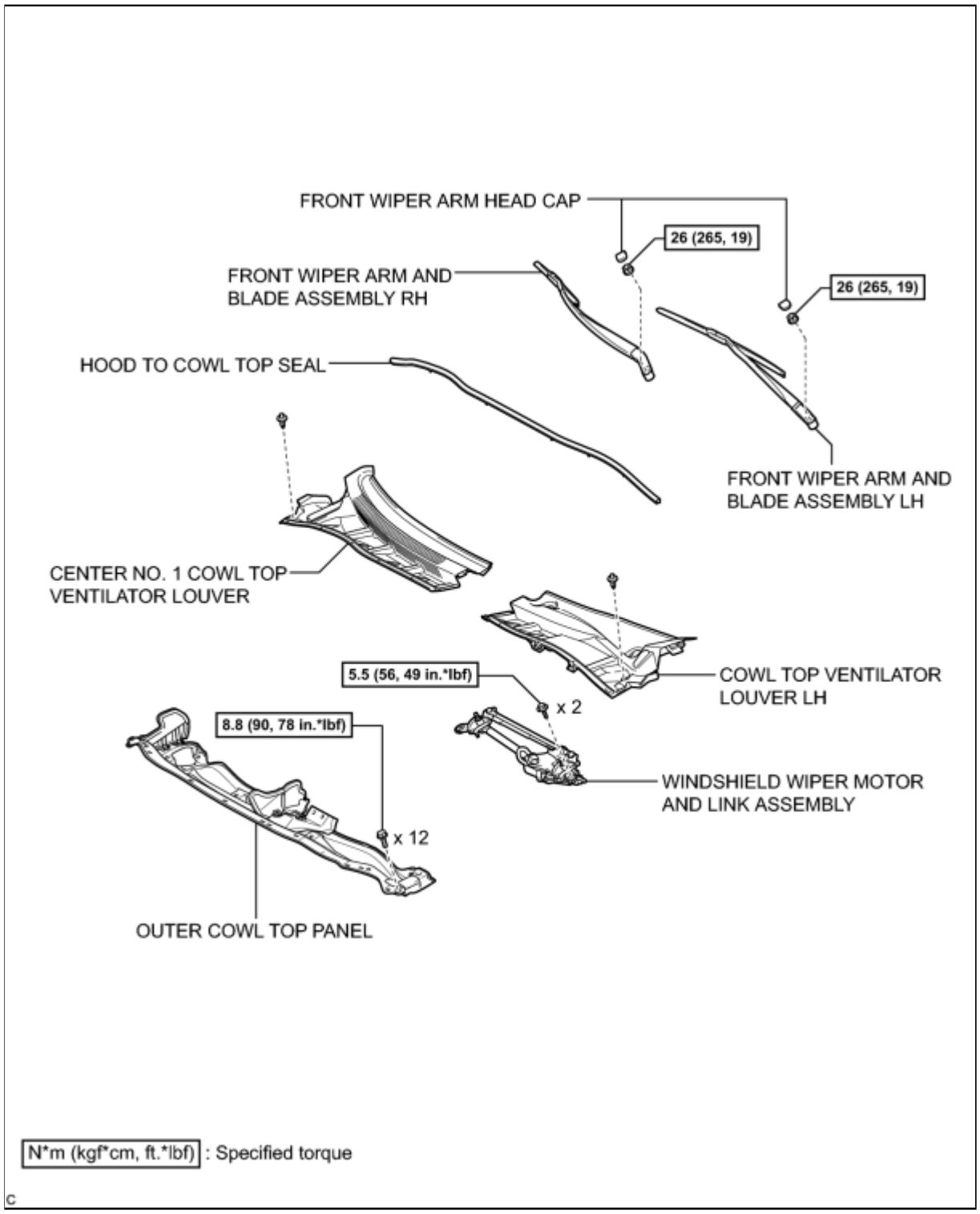

ILLUSTRATION

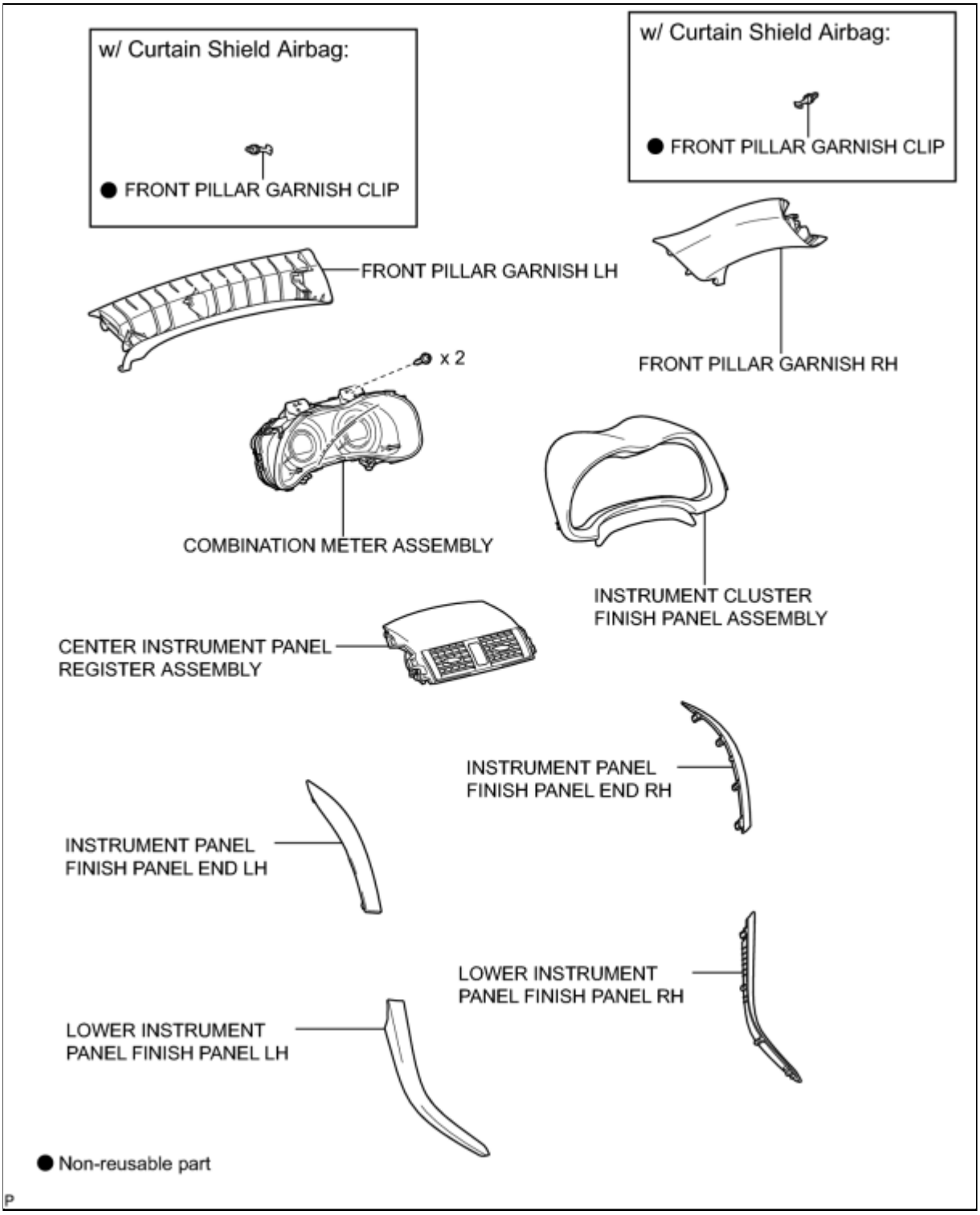

ILLUSTRATION

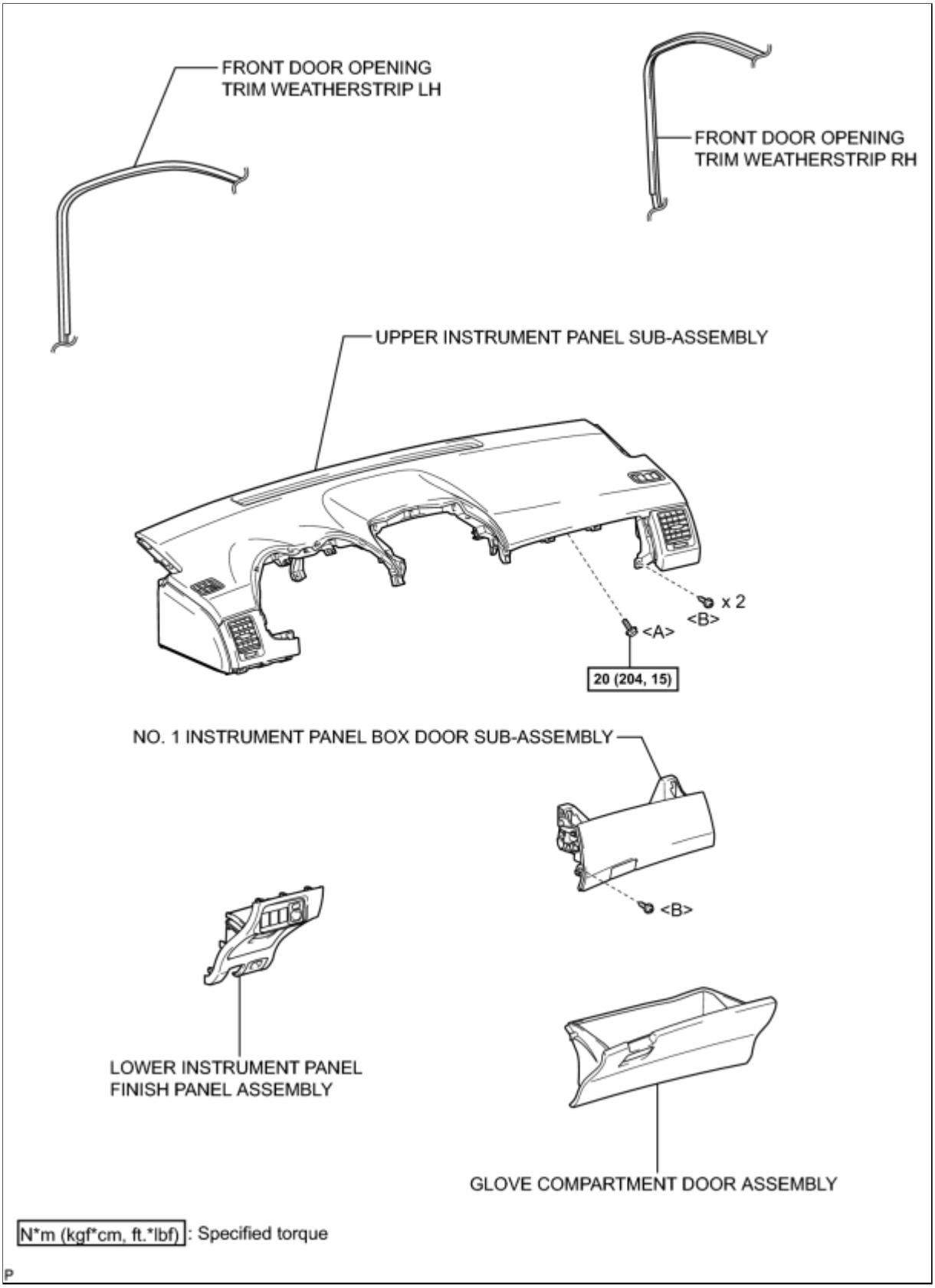

ILLUSTRATION

for 2ZR-FE:

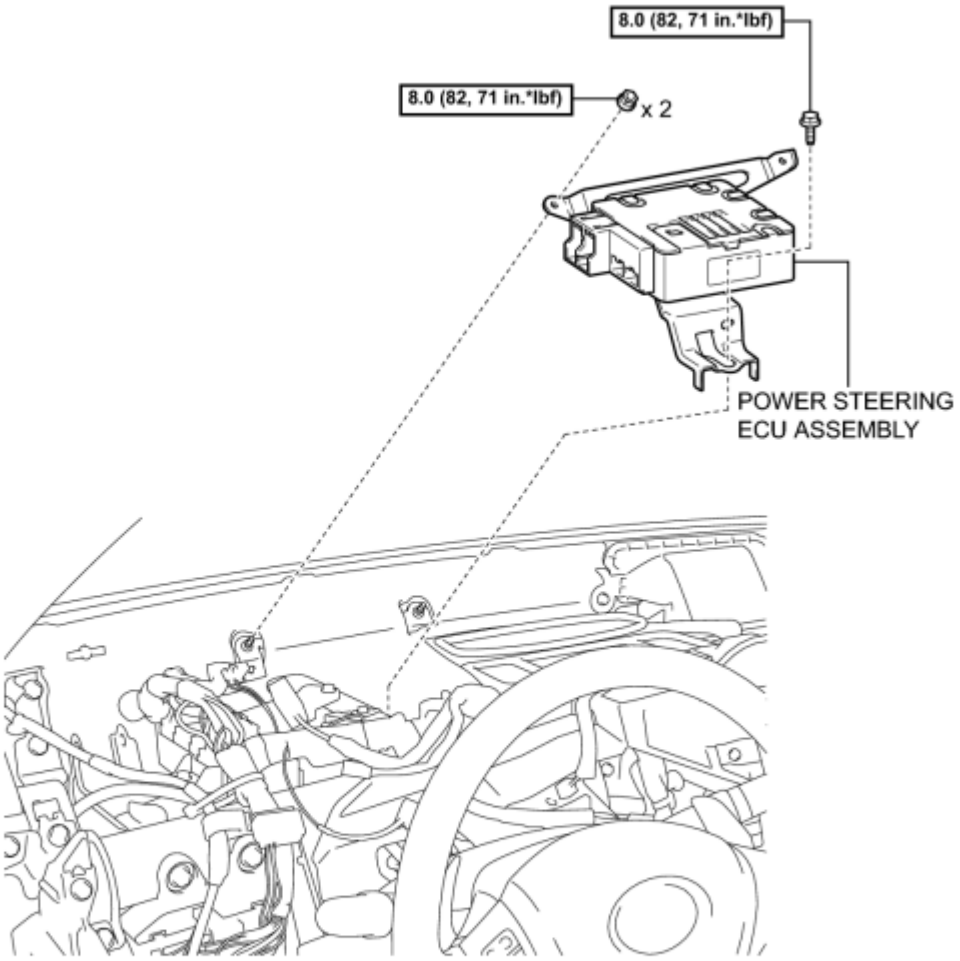

N*m (kgf*cm, ft.*lbf): Specified torque

P

ILLUSTRATION

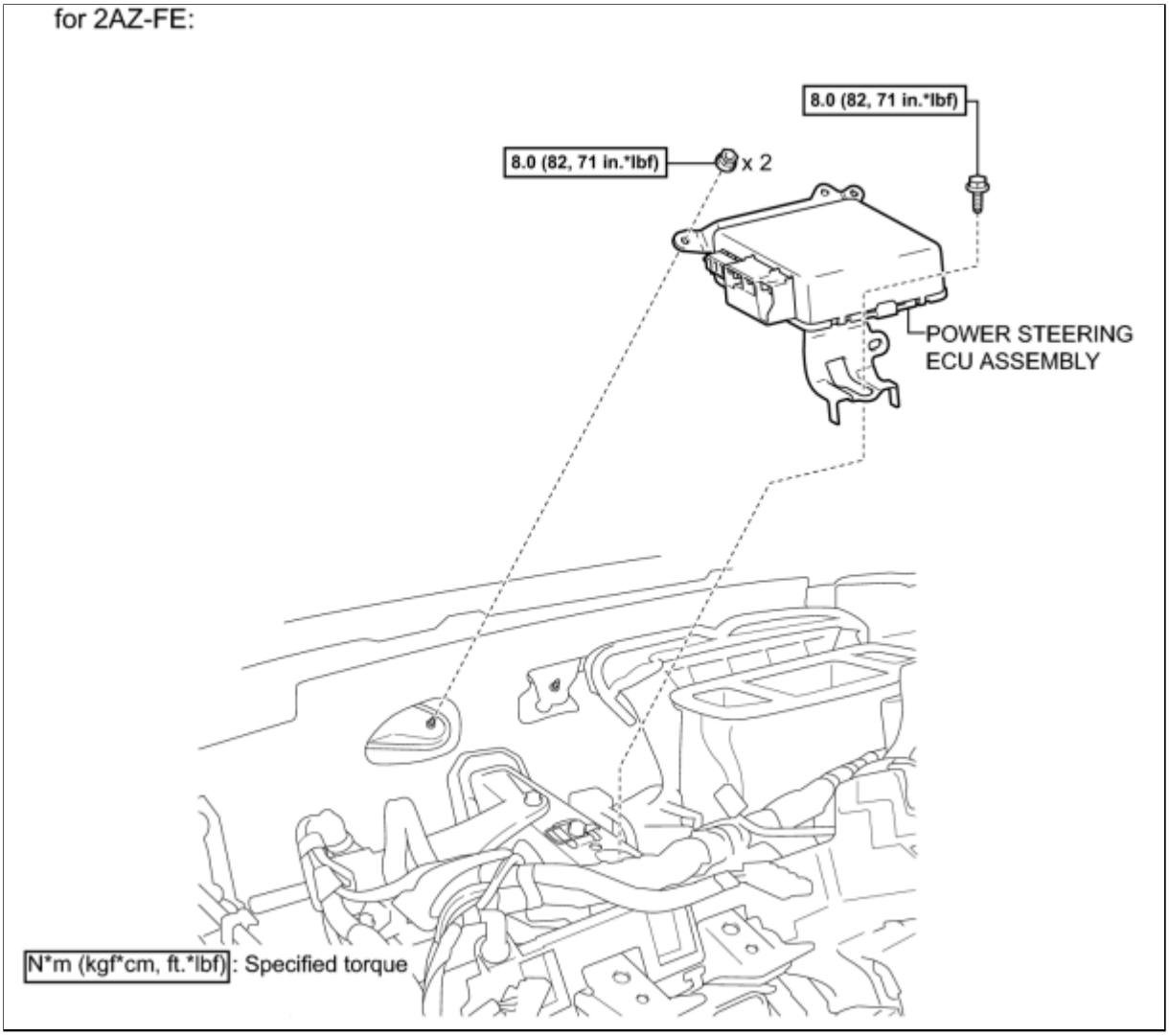

ILLUSTRATION

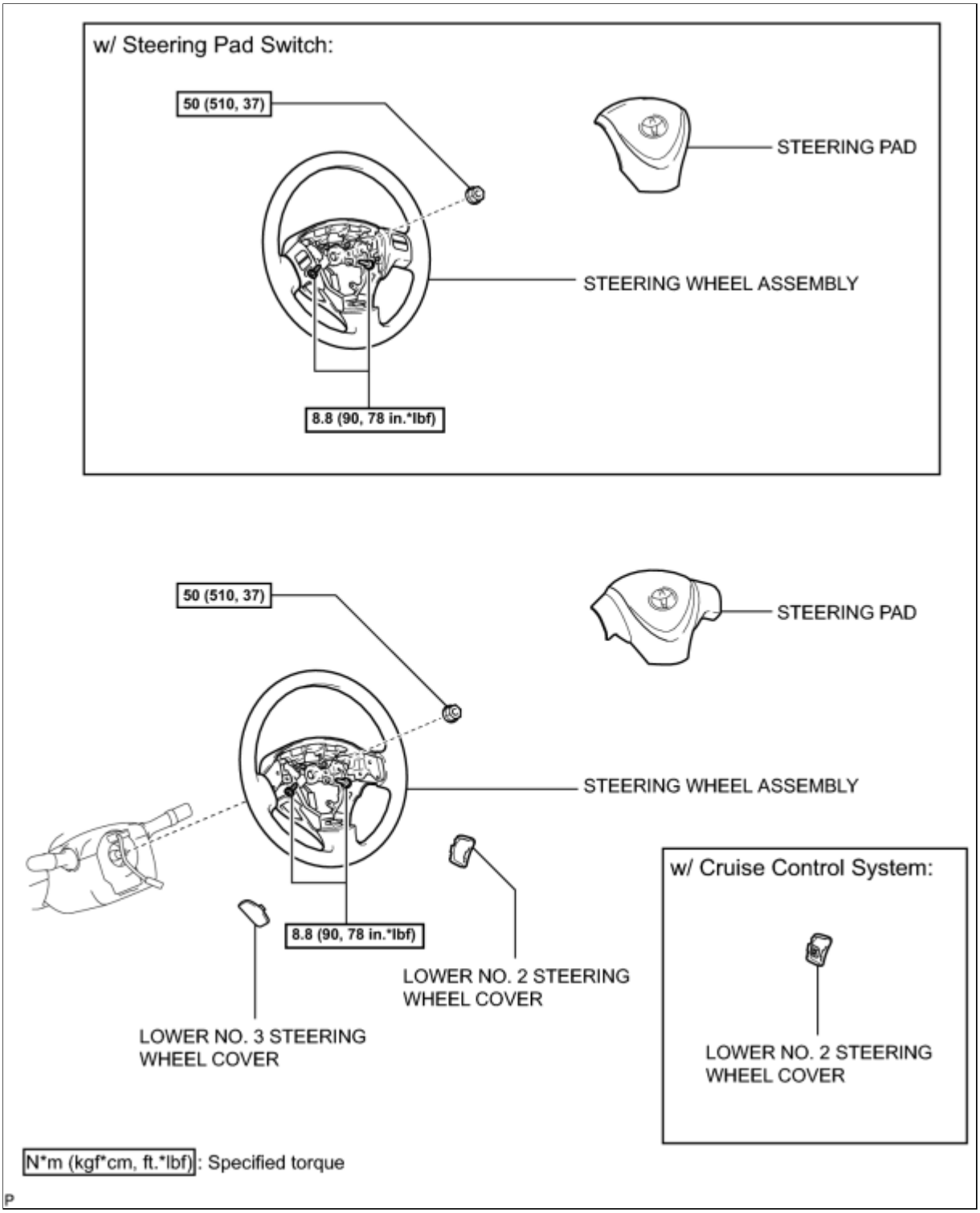

ILLUSTRATION

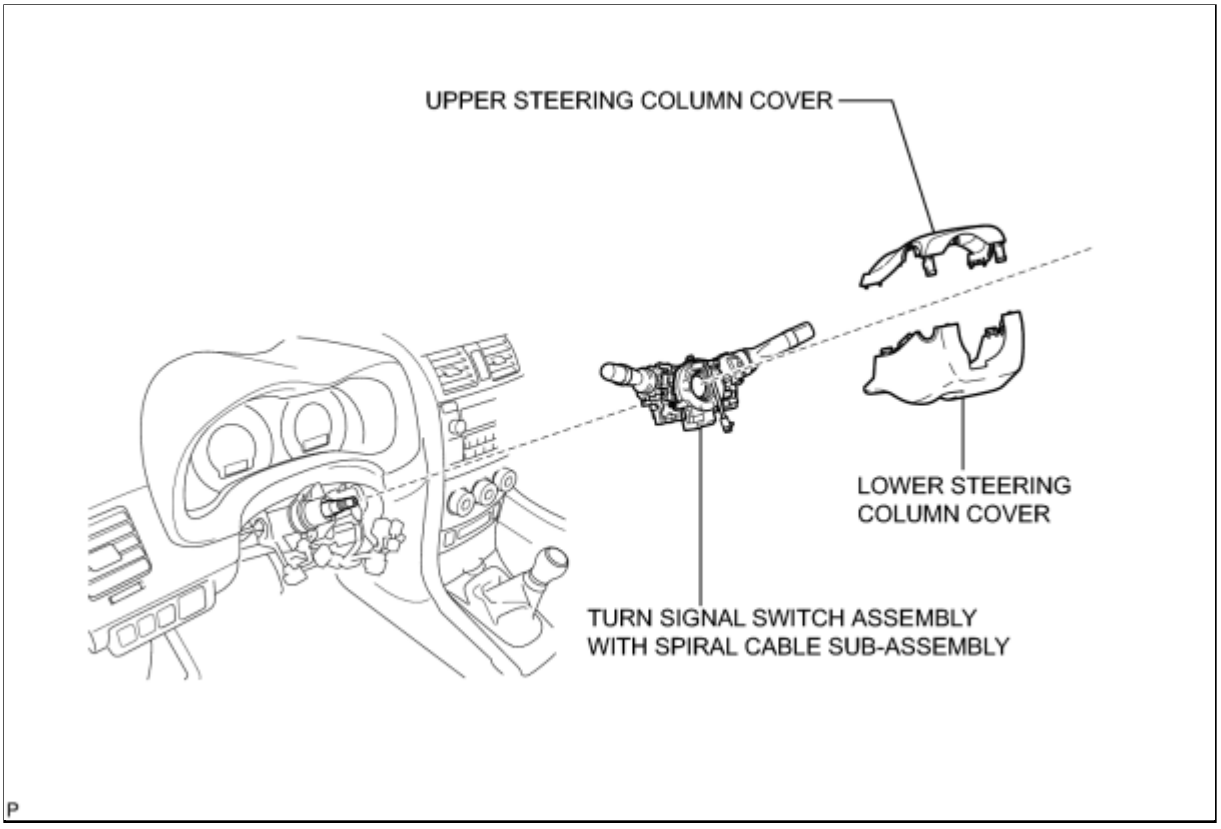

ILLUSTRATION

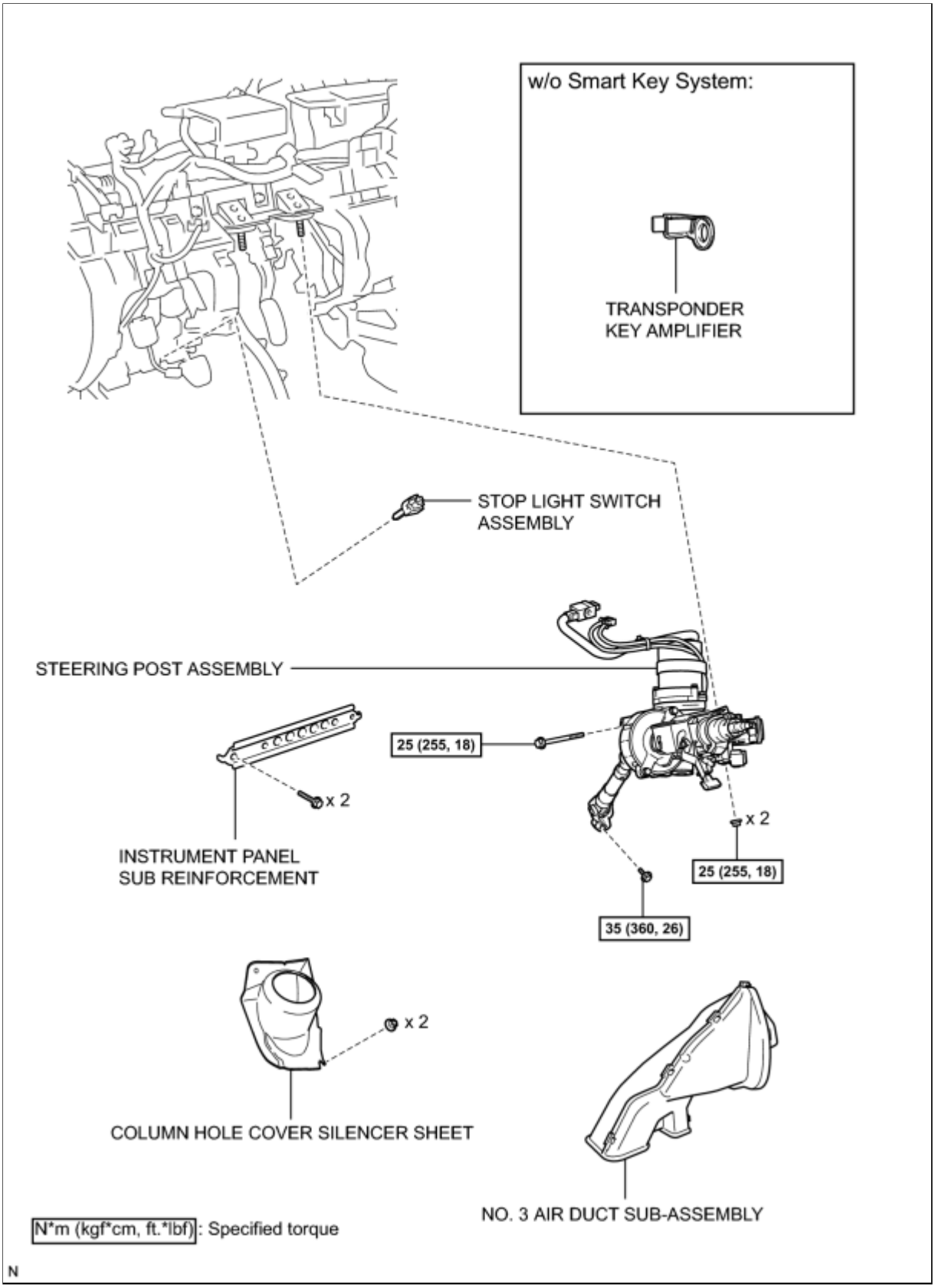

ILLUSTRATION

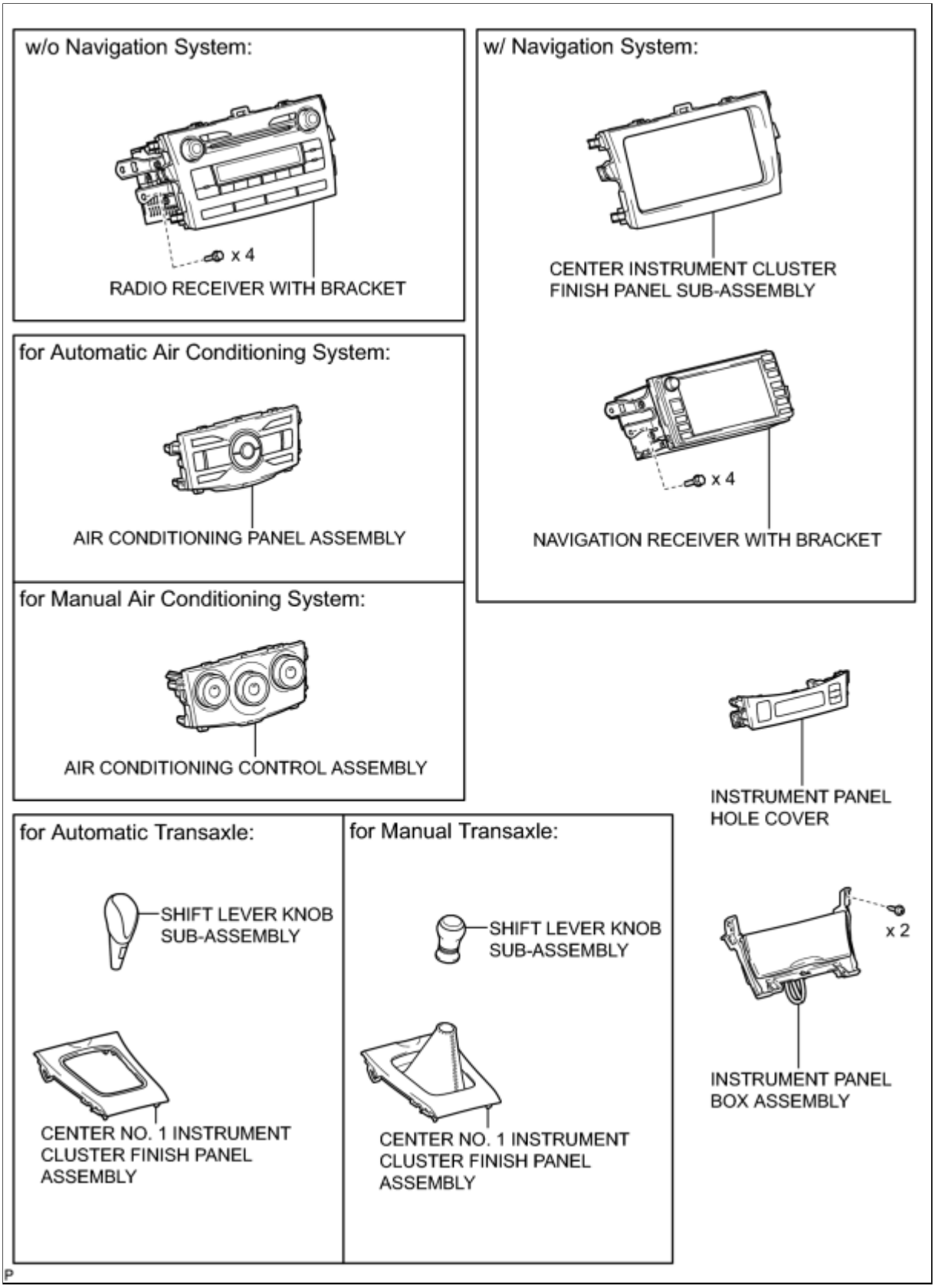

ILLUSTRATION

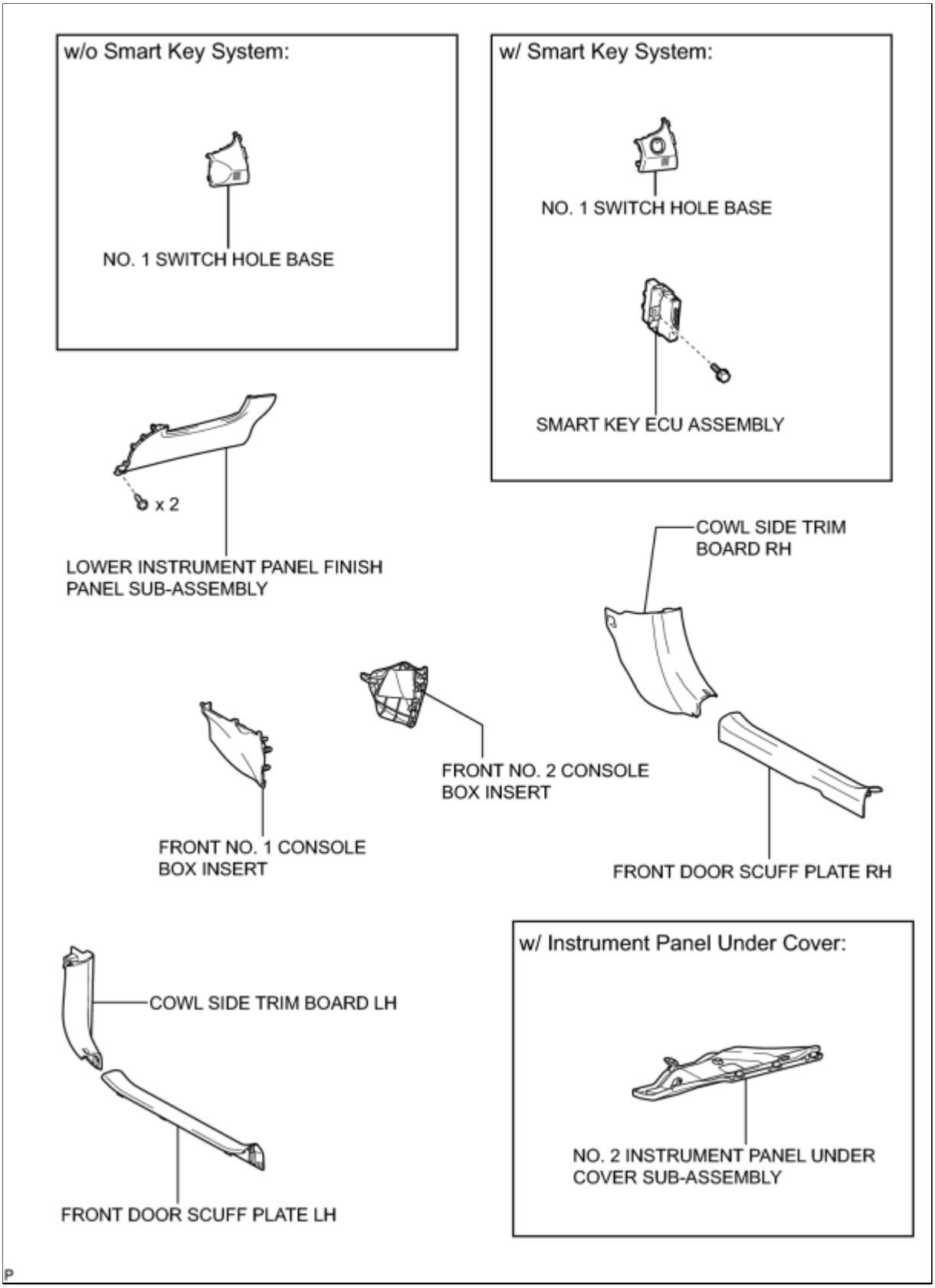

ILLUSTRATION

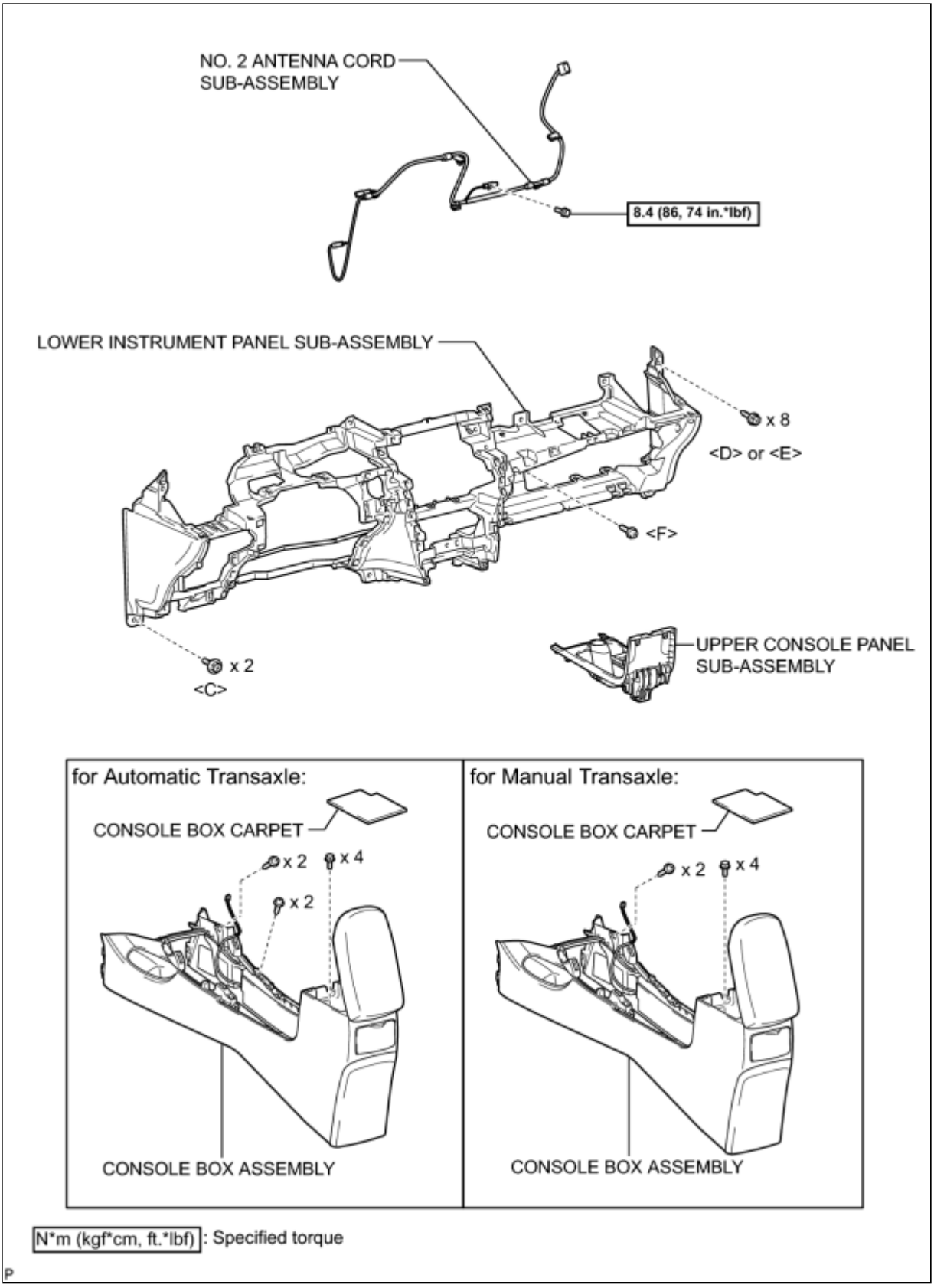

ILLUSTRATION

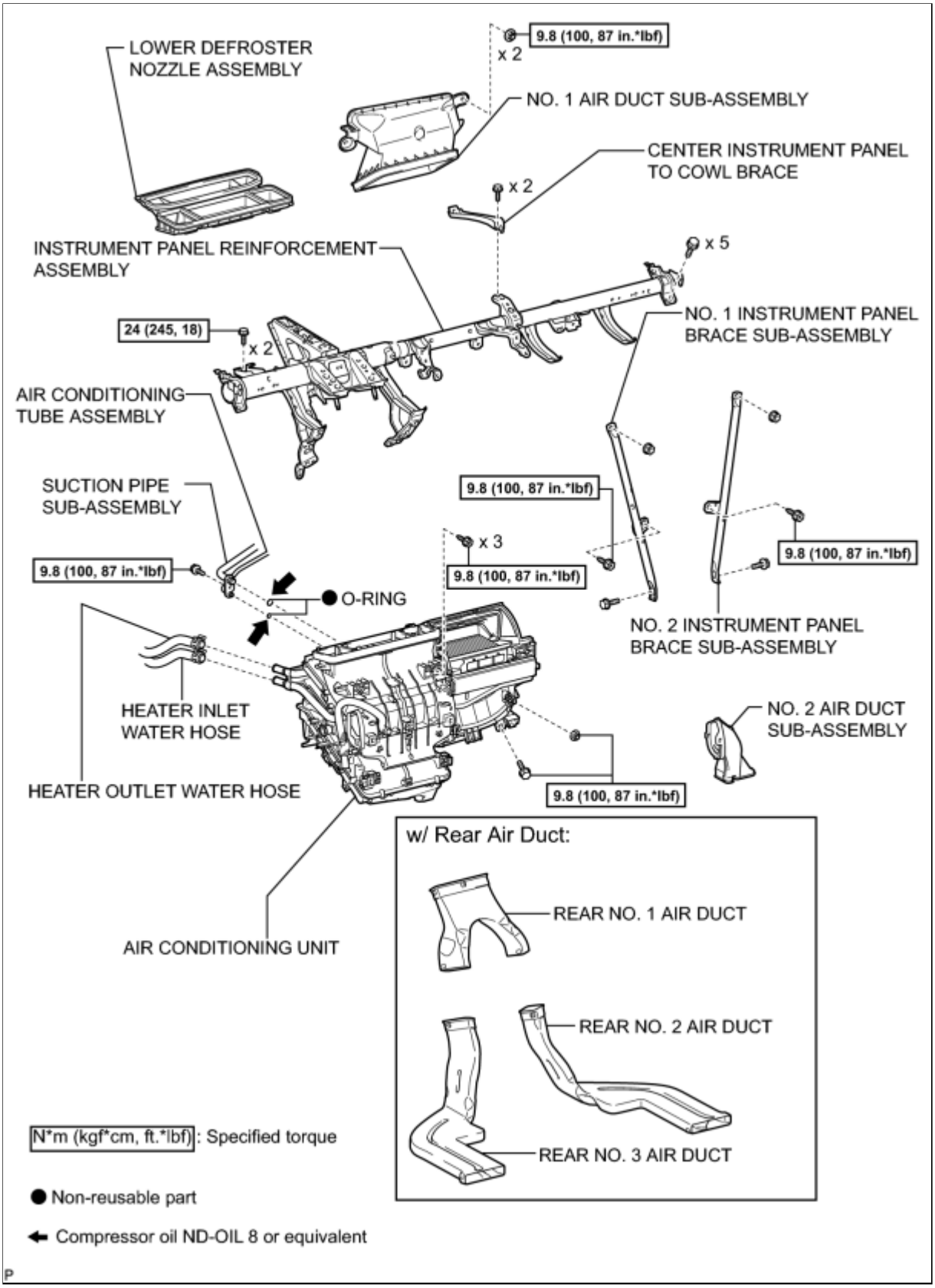

ILLUSTRATION

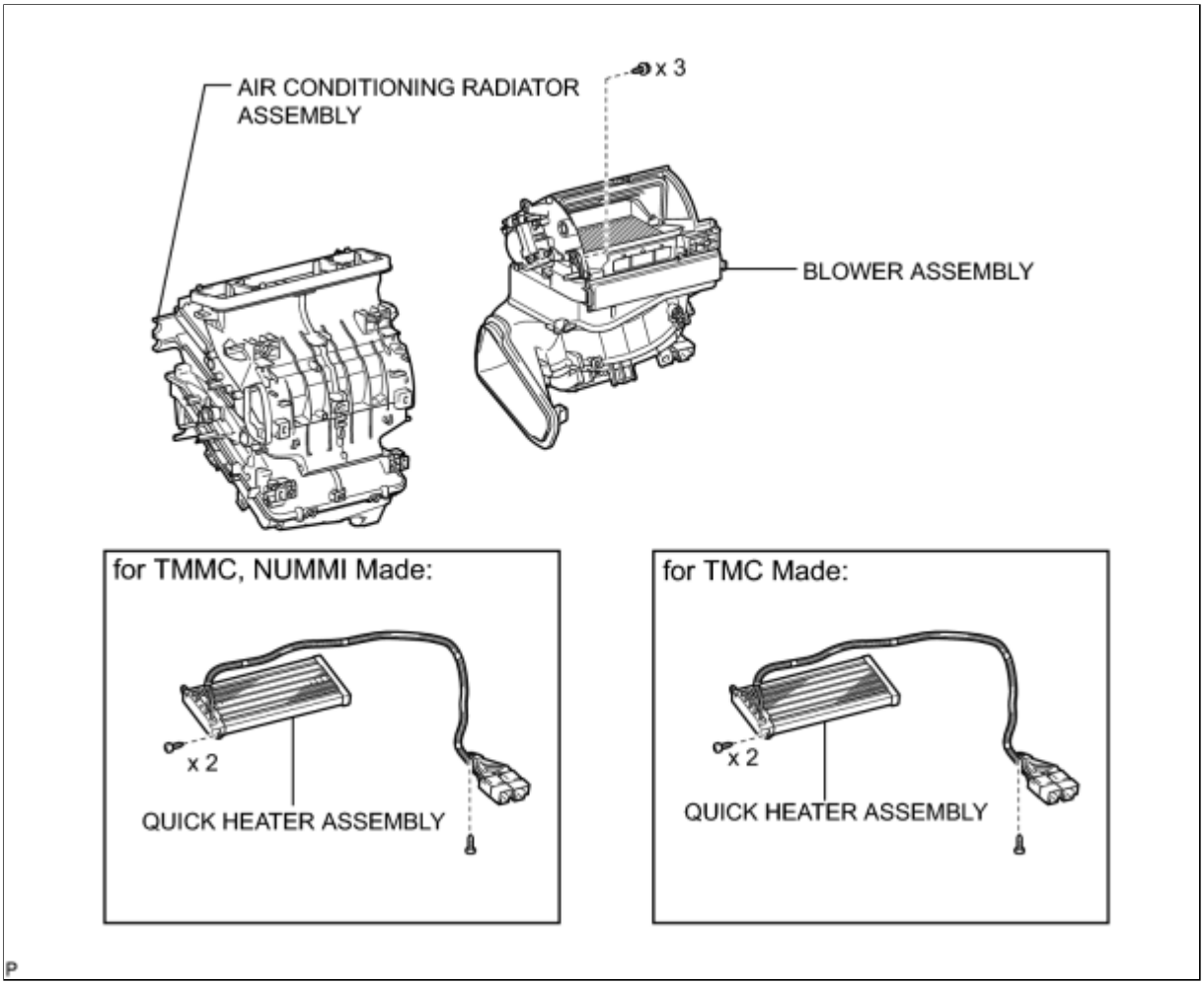
AIR CONDITIONING RADIATOR ASSEMBLY
x 3
BLOWER ASSEMBLY
for TMMC, NUMMI Made:
x 2
QUICK HEATER ASSEMBLY
for TMC Made:
x 2
QUICK HEATER ASSEMBLY

P

Last Modified: 3-10-2010	6.4 G	**From:** 200901
Model Year: 2010	**Model:** Corolla	**Doc ID:** RM00000202X01UX
Title: HEATING / AIR CONDITIONING: FRONT EVAPORATOR TEMPERATURE SENSOR: INSPECTION (2010 Corolla)		

INSPECTION

1. INSPECT EVAPORATOR TEMPERATURE SENSOR

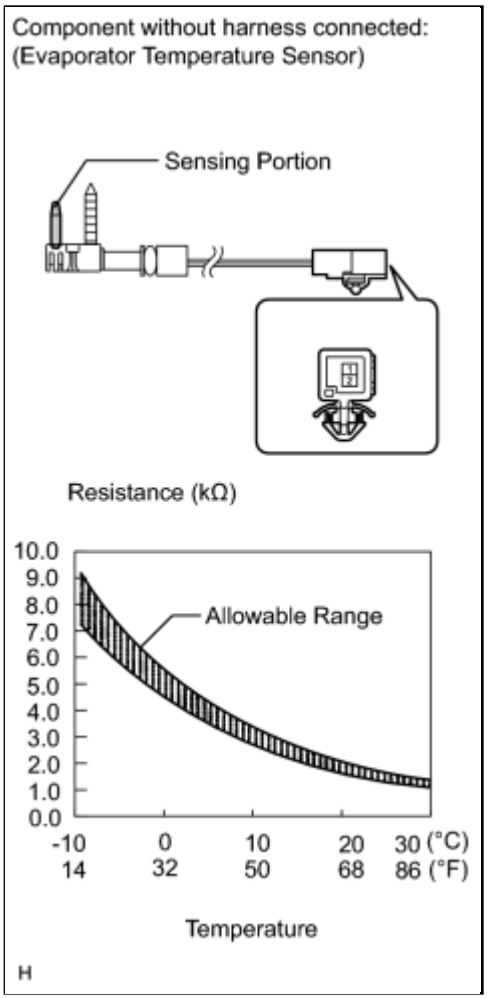

(a) Disconnect the connector from the evaporator temperature sensor.

(b) Measure the resistance according to the value(s) in the table below.

Standard Resistance:

TESTER CONNECTION	CONDITION	SPECIFIED CONDITION
1 - 2	-10°C (14°F)	7.30 to 9.10 kΩ
1 - 2	-5°C (23°F)	5.65 to 6.95 kΩ
1 - 2	0°C (32°F)	4.40 to 5.35 kΩ

TESTER CONNECTION	CONDITION	SPECIFIED CONDITION
1 - 2	5°C (41°F)	3.40 to 4.15 kΩ
1 - 2	10°C (50°F)	2.70 to 3.25 kΩ
1 - 2	15°C (59°F)	2.14 to 2.58 kΩ
1 - 2	20°C (68°F)	1.71 to 2.05 kΩ
1 - 2	25°C (77°F)	1.38 to 1.64 kΩ
1 - 2	30°C (86°F)	1.11 to 1.32 kΩ

NOTICE:

- Even slightly touching the sensor may change the resistance value. Be sure to hold the connector of the sensor.
- When measuring, the sensor temperature must be the same as the ambient temperature.

HINT:

As the temperature increases, the resistance decreases (see the graph).

If the resistance is not as specified, replace the evaporator temperature sensor.

Last Modified: 3-10-2010	6.4 A	**From:** 200901
Model Year: 2010	**Model:** Corolla	**Doc ID:** RM000001HLU0AEX
Title: HEATING / AIR CONDITIONING: FRONT EVAPORATOR TEMPERATURE SENSOR: INSTALLATION (2010 Corolla)		

INSTALLATION

1. INSTALL NO. 1 COOLER THERMISTOR

(a) Install the No. 1 cooler thermistor as shown in the illustration.

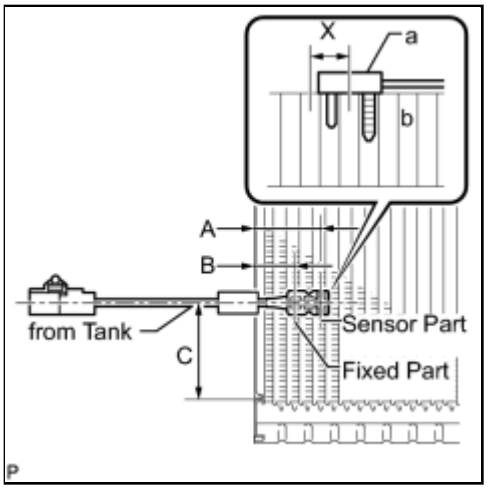

PART	LENGTH	
A	34.3 mm	1.35 in.
B	20.9 mm	0.823 in.
C	50 mm	1.96 in.

NOTICE:

- Be sure to insert the thermistor only once because reinserting it will not allow it to be firmly secured.
- When reusing the evaporator, insert the thermistor one row next to the one that has been used previously (X in the illustration).
- After inserting the thermistor, do not apply excessive force to the wire.
- Directly insert the thermistor until the edge of plastic case "a" comes into contact with evaporator "b".

2. INSTALL NO. 1 COOLER EVAPORATOR SUB-ASSEMBLY INFO

3. INSTALL COOLER EXPANSION VALVE INFO

4. INSTALL AIR CONDITIONING HARNESS ASSEMBLY (for Automatic Air Conditioning System) INFO

5. INSTALL BLOWER ASSEMBLY (w/o PTC Heater) INFO

6. INSTALL BLOWER ASSEMBLY (w/ PTC Heater) INFO

7. INSTALL NO. 2 AIR DUCT SUB-ASSEMBLY INFO

8. TEMPORARILY TIGHTEN AIR CONDITIONING UNIT INFO

9. INSTALL INSTRUMENT PANEL REINFORCEMENT ASSEMBLY (for Manual Air Conditioning System) INFO

10. INSTALL INSTRUMENT PANEL REINFORCEMENT ASSEMBLY (for Automatic Air

Conditioning System) INFO

11. INSTALL AIR CONDITIONING UNIT INFO

12. REMOVE REAR NO. 1 AIR DUCT (w/ Rear Air Duct) INFO

13. INSTALL NO. 2 INSTRUMENT PANEL BRACE SUB-ASSEMBLY INFO

14. INSTALL NO. 1 INSTRUMENT PANEL BRACE SUB-ASSEMBLY (for Manual Air Conditioning System) INFO

15. INSTALL NO. 1 INSTRUMENT PANEL BRACE SUB-ASSEMBLY (for Automatic Air Conditioning System) INFO

16. INSTALL REAR NO. 3 AIR DUCT (w/ Rear Air Duct) INFO

17. INSTALL REAR NO. 2 AIR DUCT (w/ Rear Air Duct) INFO

18. INSTALL CENTER INSTRUMENT PANEL TO COWL BRACE INFO

19. INSTALL LOWER DEFROSTER NOZZLE ASSEMBLY INFO

20. INSTALL NO. 1 AIR DUCT SUB-ASSEMBLY INFO

21. INSTALL SMART KEY ECU ASSEMBLY (w/ Smart Key System) INFO

22. INSTALL LOWER INSTRUMENT PANEL SUB-ASSEMBLY INFO

23. INSTALL NO. 2 ANTENNA CORD SUB-ASSEMBLY INFO

24. INSTALL CONSOLE BOX ASSEMBLY (for Manual Transaxle) INFO

25. INSTALL CONSOLE BOX ASSEMBLY (for Automatic Transaxle) INFO

26. INSTALL CONSOLE BOX CARPET INFO

27. INSTALL UPPER CONSOLE PANEL SUB-ASSEMBLY INFO

28. INSTALL NO. 1 SWITCH HOLE BASE (w/o Smart Key System) INFO

29. INSTALL NO. 1 SWITCH HOLE BASE (w/ Smart Key System) INFO

30. INSTALL FRONT NO. 1 CONSOLE BOX INSERT INFO

31. INSTALL COWL SIDE TRIM BOARD LH INFO

32. INSTALL FRONT DOOR SCUFF PLATE LH INFO

33. INSTALL FRONT NO. 2 CONSOLE BOX INSERT INFO

34. INSTALL NO. 2 INSTRUMENT PANEL UNDER COVER SUB-ASSEMBLY (w/ Instrument Panel Under Cover) INFO

35. INSTALL COWL SIDE TRIM BOARD RH INFO

36. INSTALL FRONT DOOR SCUFF PLATE RH INFO

37. INSTALL AIR CONDITIONING PANEL ASSEMBLY (for Manual Air Conditioning System) INFO

38. INSTALL AIR CONDITIONING CONTROL ASSEMBLY (for Automatic Air Conditioning System) INFO

39. INSTALL INSTRUMENT PANEL HOLE COVER INFO

40. INSTALL INSTRUMENT PANEL BOX ASSEMBLY INFO

41. INSTALL CENTER NO. 1 INSTRUMENT CLUSTER FINISH PANEL ASSEMBLY (for Manual Transaxle) INFO

42. INSTALL CENTER NO. 1 INSTRUMENT CLUSTER FINISH PANEL ASSEMBLY (for Automatic Transaxle) INFO

43. INSTALL SHIFT LEVER KNOB SUB-ASSEMBLY (for Manual Transaxle) INFO

44. INSTALL SHIFT LEVER KNOB SUB-ASSEMBLY (for Automatic Transaxle) INFO

45. INSTALL RADIO RECEIVER WITH BRACKET (w/o Navigation System) INFO

46. INSTALL CENTER INSTRUMENT CLUSTER FINISH PANEL SUB-ASSEMBLY (w/ Navigation System) INFO

47. INSTALL NAVIGATION RECEIVER WITH BRACKET (w/ Navigation System) INFO

48. INSTALL STEERING POST ASSEMBLY (for 2ZR-FE) INFO

49. INSTALL STEERING POST ASSEMBLY (for 2AZ-FE) INFO

50. TURN FRONT WHEELS FACING STRAIGHT AHEAD

51. CONNECT NO. 2 STEERING INTERMEDIATE SHAFT ASSEMBLY INFO

52. INSTALL STOP LIGHT SWITCH ASSEMBLY INFO

53. INSTALL NO. 3 AIR DUCT SUB-ASSEMBLY INFO

54. INSTALL INSTRUMENT PANEL SUB REINFORCEMENT INFO

55. INSTALL COLUMN HOLE COVER SILENCER SHEET INFO

56. INSTALL TRANSPONDER KEY AMPLIFIER (w/o Smart Key System) INFO

57. INSTALL TURN SIGNAL SWITCH ASSEMBLY WITH SPIRAL CABLE SUB-ASSEMBLY INFO

58. INSTALL UPPER STEERING COLUMN COVER INFO

59. INSTALL LOWER STEERING COLUMN COVER INFO

60. TURN FRONT WHEELS FACING STRAIGHT AHEAD

61. ADJUST SPIRAL CABLE INFO

62. INSTALL STEERING WHEEL ASSEMBLY INFO

63. INSTALL STEERING PAD INFO

64. INSTALL LOWER NO. 3 STEERING WHEEL COVER INFO

65. INSTALL LOWER NO. 2 STEERING WHEEL COVER INFO

66. INSPECT STEERING WHEEL CENTER POINT

67. INSTALL LOWER INSTRUMENT PANEL FINISH PANEL SUB-ASSEMBLY INFO

68. INSTALL POWER STEERING ECU ASSEMBLY (for 2ZR-FE) INFO

69. INSTALL POWER STEERING ECU ASSEMBLY (for 2AZ-FE) INFO

70. INSTALL UPPER INSTRUMENT PANEL SUB-ASSEMBLY INFO

71. CONNECT INSTRUMENT PANEL WIRE ASSEMBLY INFO

72. CONNECT FRONT DOOR OPENING TRIM WEATHERSTRIP LH INFO

73. INSTALL LOWER INSTRUMENT PANEL FINISH PANEL ASSEMBLY INFO

74. CONNECT FRONT DOOR OPENING TRIM WEATHERSTRIP RH INFO

75. INSTALL NO. 1 INSTRUMENT PANEL BOX DOOR SUB-ASSEMBLY INFO

76. INSTALL GLOVE COMPARTMENT DOOR ASSEMBLY INFO

77. INSTALL FRONT PILLAR GARNISH LH (w/ Curtain Shield Airbag) INFO

78. INSTALL FRONT PILLAR GARNISH LH (w/o Curtain Shield Airbag) INFO

79. INSTALL FRONT PILLAR GARNISH RH (w/ Curtain Shield Airbag) INFO

80. INSTALL FRONT PILLAR GARNISH RH (w/o Curtain Shield Airbag) INFO

81. INSTALL COMBINATION METER ASSEMBLY INFO

82. INSTALL INSTRUMENT CLUSTER FINISH PANEL ASSEMBLY INFO

83. INSTALL CENTER INSTRUMENT PANEL REGISTER ASSEMBLY INFO

84. INSTALL INSTRUMENT PANEL FINISH PANEL END LH INFO

85. INSTALL INSTRUMENT PANEL FINISH PANEL END RH INFO

86. INSTALL LOWER INSTRUMENT PANEL FINISH PANEL LH INFO

87. INSTALL LOWER INSTRUMENT PANEL FINISH PANEL RH INFO

88. INSTALL HEATER WATER HOSE OUTLET INFO

89. INSTALL HEATER WATER HOSE INLET INFO

90. INSTALL AIR CONDITIONING TUBE ASSEMBLY INFO

91. INSTALL SUCTION PIPE SUB-ASSEMBLY INFO

92. INSTALL OUTER COWL TOP PANEL (for TMC Made) INFO

93. INSTALL OUTER COWL TOP PANEL (except TMC Made) INFO

94. INSTALL WINDSHIELD WIPER MOTOR AND LINK ASSEMBLY INFO

95. INSTALL COWL TOP VENTILATOR LOUVER LH INFO

96. INSTALL CENTER NO. 1 COWL TOP VENTILATOR LOUVER INFO

97. INSTALL HOOD TO COWL TOP SEAL INFO

98. INSTALL FRONT WIPER ARM AND BLADE ASSEMBLY RH INFO

99. INSTALL FRONT WIPER ARM AND BLADE ASSEMBLY LH INFO

100. INSTALL FRONT WIPER ARM HEAD CAP INFO

101. CHARGE WITH REFRIGERANT INFO

102. ADD ENGINE COOLANT (for 2ZR-FE) INFO

103. ADD ENGINE COOLANT (for 2AZ-FE) INFO

104. CONNECT CABLE TO NEGATIVE BATTERY TERMINAL

105. INSPECT FOR COOLANT LEAK (for 2ZR-FE) INFO

106. INSPECT FOR COOLANT LEAK (for 2AZ-FE) INFO

107. INSPECT STEERING PAD INFO

108. INSPECT SRS WARNING LIGHT

INFO

109. WARM UP ENGINE INFO

110. INSPECT FOR REFRIGERANT LEAK INFO

Last Modified: 3-10-2010	6.4 A	**From:** 200901
Model Year: 2010	**Model:** Corolla	**Doc ID:** RM000001HLW0AAX
Title: HEATING / AIR CONDITIONING: PTC HEATER ASSEMBLY: REMOVAL (2010 Corolla)		

REMOVAL

1. PRECAUTION

INFO

2. ALIGN FRONT WHEELS FACING STRAIGHT AHEAD

3. DISCONNECT CABLE FROM NEGATIVE BATTERY TERMINAL

CAUTION:

Wait at least 90 seconds after disconnecting the cable from the negative (-) battery terminal to disable the SRS system INFO **.**

HINT:

Before disconnecting the cable, set the air conditioning control switch to DEF-MODE. (for Automatic Air Conditioning System)

4. RECOVER REFRIGERANT FROM REFRIGERATION SYSTEM INFO

5. REMOVE FRONT WIPER ARM HEAD CAP INFO

6. REMOVE FRONT WIPER ARM AND BLADE ASSEMBLY LH INFO

7. REMOVE FRONT WIPER ARM AND BLADE ASSEMBLY RH INFO

8. REMOVE HOOD TO COWL TOP SEAL INFO

9. REMOVE CENTER NO. 1 COWL TOP VENTILATOR LOUVER INFO

10. REMOVE COWL TOP VENTILATOR LOUVER LH INFO

11. REMOVE WINDSHIELD WIPER MOTOR AND LINK ASSEMBLY INFO

12. REMOVE OUTER COWL TOP PANEL (for TMC Made) INFO

13. REMOVE OUTER COWL TOP PANEL (except TMC Made) INFO

14. DISCONNECT SUCTION PIPE SUB-ASSEMBLY INFO

15. DISCONNECT AIR CONDITIONING TUBE ASSEMBLY INFO

16. DISCONNECT HEATER WATER HOSE OUTLET INFO

17. DISCONNECT HEATER WATER HOSE INLET INFO

18. REMOVE LOWER INSTRUMENT PANEL FINISH PANEL LH INFO

19. REMOVE LOWER INSTRUMENT PANEL FINISH PANEL RH INFO

20. REMOVE INSTRUMENT PANEL FINISH PANEL END LH INFO

21. REMOVE INSTRUMENT PANEL FINISH PANEL END RH INFO

22. REMOVE CENTER INSTRUMENT PANEL REGISTER ASSEMBLY INFO

23. REMOVE INSTRUMENT CLUSTER FINISH PANEL ASSEMBLY INFO

24. REMOVE COMBINATION METER ASSEMBLY INFO

25. REMOVE FRONT PILLAR GARNISH LH (w/o Curtain Shield Airbag) INFO

26. REMOVE FRONT PILLAR GARNISH LH (w/ Curtain Shield Airbag) INFO

27. REMOVE FRONT PILLAR GARNISH RH (w/o Curtain Shield Airbag) INFO

28. REMOVE FRONT PILLAR GARNISH RH (w/ Curtain Shield Airbag) INFO

29. REMOVE LOWER INSTRUMENT PANEL FINISH PANEL ASSEMBLY INFO

30. DISCONNECT FRONT DOOR OPENING TRIM WEATHERSTRIP LH INFO

31. REMOVE GLOVE COMPARTMENT DOOR ASSEMBLY INFO

32. REMOVE NO. 1 INSTRUMENT PANEL BOX DOOR SUB-ASSEMBLY INFO

33. DISCONNECT FRONT DOOR OPENING TRIM WEATHERSTRIP RH INFO

34. DISCONNECT INSTRUMENT PANEL WIRE ASSEMBLY INFO

35. REMOVE UPPER INSTRUMENT PANEL SUB-ASSEMBLY INFO

36. REMOVE POWER STEERING ECU ASSEMBLY (for 2ZR-FE) INFO

37. REMOVE POWER STEERING ECU ASSEMBLY (for 2AZ-FE) INFO

38. REMOVE LOWER INSTRUMENT PANEL FINISH PANEL SUB-ASSEMBLY INFO

39. REMOVE LOWER NO. 3 STEERING WHEEL COVER INFO

40. REMOVE LOWER NO. 2 STEERING WHEEL COVER INFO

41. REMOVE STEERING PAD INFO

42. REMOVE STEERING WHEEL ASSEMBLY INFO

43. REMOVE LOWER STEERING COLUMN COVER INFO

44. REMOVE UPPER STEERING COLUMN COVER INFO

45. REMOVE TURN SIGNAL SWITCH ASSEMBLY WITH SPIRAL CABLE SUB-ASSEMBLY INFO

46. REMOVE COLUMN HOLE COVER SILENCER SHEET INFO

47. SEPARATE NO. 2 STEERING INTERMEDIATE SHAFT ASSEMBLY INFO

48. REMOVE INSTRUMENT PANEL SUB REINFORCEMENT INFO

49. REMOVE NO. 3 AIR DUCT SUB-ASSEMBLY INFO

50. REMOVE TRANSPONDER KEY AMPLIFIER (w/ Smart Key System) INFO

51. REMOVE STOP LIGHT SWITCH ASSEMBLY INFO

52. REMOVE STEERING POST ASSEMBLY (for 2ZR-FE) INFO

53. REMOVE STEERING POST ASSEMBLY (for 2AZ-FE) INFO

54. REMOVE RADIO RECEIVER WITH BRACKET (w/o Navigation System) INFO

55. REMOVE CENTER INSTRUMENT CLUSTER FINISH PANEL SUB-ASSEMBLY (w/ Navigation System) INFO

56. REMOVE NAVIGATION RECEIVER WITH BRACKET (w/ Navigation System) INFO

57. REMOVE SHIFT LEVER KNOB SUB-ASSEMBLY (for Manual Transaxle) INFO

58. REMOVE SHIFT LEVER KNOB SUB-ASSEMBLY (for Automatic Transaxle) INFO

59. REMOVE CENTER NO. 1 INSTRUMENT CLUSTER FINISH PANEL ASSEMBLY (for Manual Transaxle) INFO

60. REMOVE CENTER NO. 1 INSTRUMENT CLUSTER FINISH PANEL ASSEMBLY (for Automatic Transaxle) INFO

61. REMOVE INSTRUMENT PANEL BOX ASSEMBLY INFO

62. REMOVE INSTRUMENT PANEL HOLE COVER INFO

63. REMOVE AIR CONDITIONING PANEL ASSEMBLY (for Manual Air Conditioning System) INFO

64. REMOVE AIR CONDITIONING CONTROL ASSEMBLY (for Automatic Air Conditioning System) INFO

65. REMOVE FRONT DOOR SCUFF PLATE LH INFO

66. REMOVE COWL SIDE TRIM BOARD LH INFO

67. REMOVE FRONT NO. 1 CONSOLE BOX INSERT INFO

68. REMOVE NO. 1 SWITCH HOLE BASE (w/o Smart Key System) INFO

69. REMOVE NO. 1 SWITCH HOLE BASE (w/ Smart Key System) INFO

70. REMOVE FRONT DOOR SCUFF PLATE RH INFO

71. REMOVE COWL SIDE TRIM BOARD RH INFO

72. REMOVE NO. 2 INSTRUMENT PANEL UNDER COVER SUB-ASSEMBLY (w/ Instrument Panel Under Cover) INFO

73. REMOVE FRONT NO. 2 CONSOLE BOX INSERT INFO

74. REMOVE UPPER CONSOLE PANEL SUB-ASSEMBLY INFO

75. REMOVE CONSOLE BOX CARPET INFO

76. REMOVE CONSOLE BOX ASSEMBLY (for Manual Transaxle) INFO

77. REMOVE CONSOLE BOX ASSEMBLY (for Automatic Transaxle) INFO

78. REMOVE NO. 2 ANTENNA CORD SUB-ASSEMBLY INFO

79. REMOVE LOWER INSTRUMENT PANEL SUB-ASSEMBLY INFO

80. REMOVE SMART KEY ECU ASSEMBLY (w/ Smart Key System) INFO

81. REMOVE NO. 1 AIR DUCT SUB-ASSEMBLY INFO

82. REMOVE LOWER DEFROSTER NOZZLE ASSEMBLY INFO

83. REMOVE CENTER INSTRUMENT PANEL TO COWL BRACE INFO

84. REMOVE REAR NO. 2 AIR DUCT (w/ Rear Air Duct) INFO

85. REMOVE REAR NO. 3 AIR DUCT (w/ Rear Air Duct) INFO

86. REMOVE NO. 1 INSTRUMENT PANEL BRACE SUB-ASSEMBLY (for Manual Air Conditioning System) INFO

87. REMOVE NO. 1 INSTRUMENT PANEL BRACE SUB-ASSEMBLY (for Automatic Air Conditioning System) INFO

88. REMOVE NO. 2 INSTRUMENT PANEL BRACE SUB-ASSEMBLY INFO

89. REMOVE REAR NO. 1 AIR DUCT (w/ Rear Air Duct) INFO

90. REMOVE INSTRUMENT PANEL REINFORCEMENT ASSEMBLY (for Manual Air Conditioning System) INFO

91. REMOVE INSTRUMENT PANEL REINFORCEMENT ASSEMBLY (for Automatic Air Conditioning System) INFO

92. REMOVE AIR CONDITIONING UNIT INFO

93. REMOVE NO. 2 AIR DUCT SUB-ASSEMBLY INFO

94. REMOVE BLOWER ASSEMBLY INFO

95. REMOVE QUICK HEATER ASSEMBLY

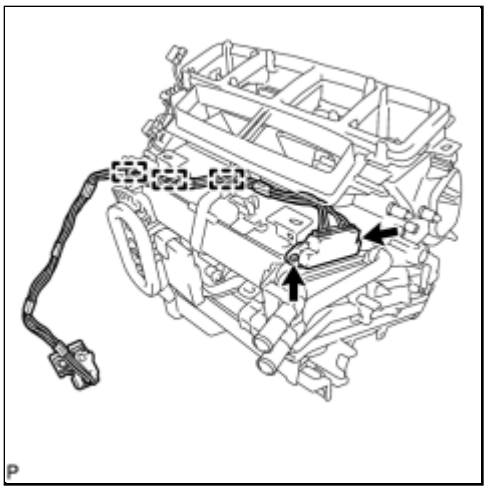

(a) Disengage each clamp.

(b) Remove the 2 screws.

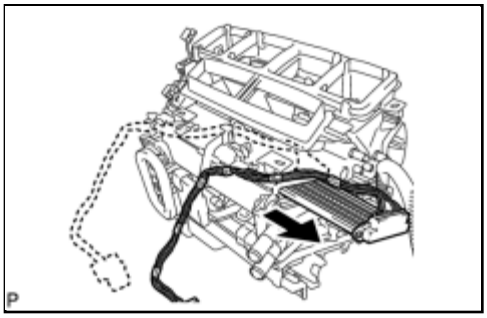

(c) Remove the quick heater assembly as shown in the illustration.

Last Modified: 3-10-2010	6.4 G	**From:** 200901
Model Year: 2010	**Model:** Corolla	**Doc ID:** RM000003G4L003X
Title: HEATING / AIR CONDITIONING: PTC HEATER ASSEMBLY: INSPECTION (2010 Corolla)		

INSPECTION

1. INSPECT PTC HEATER

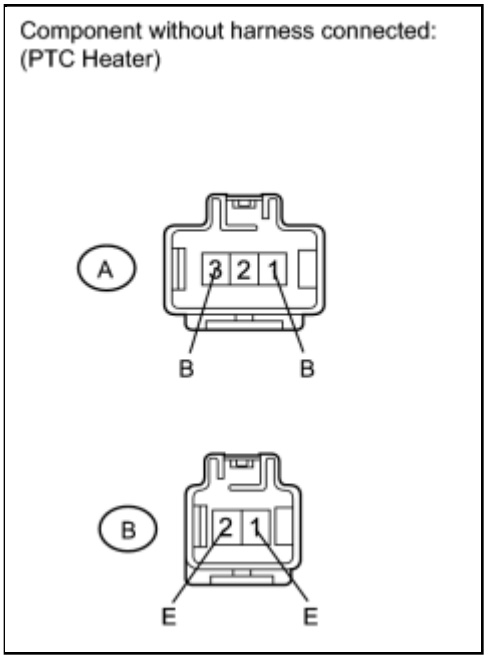

(a) Disconnect the connector from the PTC heater.

(b) Measure the resistance according to the value(s) in the table below.

Standard Resistance:

TESTER CONNECTION	CONDITION	SPECIFIED CONDITION
A-1 (B) - B-1 (E)	Always	Below 1 Ω
A-3 (B) - B-2 (E)	Always	Below 1 Ω

If the resistance is not as specified, replace the PTC heater.

Last Modified: 3-10-2010	6.4 A	**From:** 200901
Model Year: 2010	**Model:** Corolla	**Doc ID:** RM000001HLU0ADX
Title: HEATING / AIR CONDITIONING: PTC HEATER ASSEMBLY: INSTALLATION (2010 Corolla)		

INSTALLATION

1. INSTALL QUICK HEATER ASSEMBLY

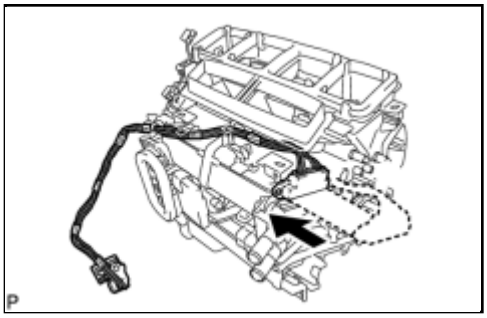

(a) Install the quick heater assembly as shown in the illustration.

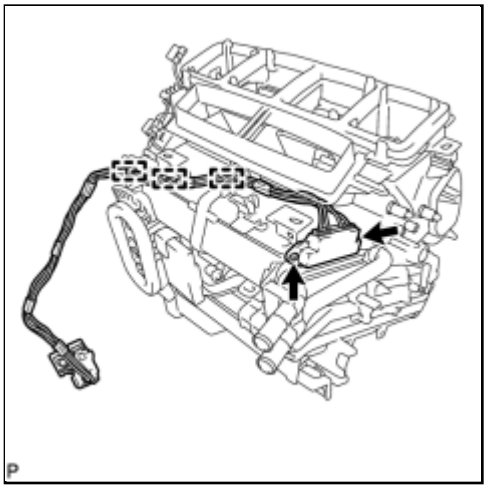

(b) Install the 2 screws.

(c) Engage each clamp.

2. INSTALL BLOWER ASSEMBLY INFO

3. INSTALL NO. 2 AIR DUCT SUB-ASSEMBLY INFO

4. TEMPORARILY TIGHTEN AIR CONDITIONING UNIT INFO

5. INSTALL INSTRUMENT PANEL REINFORCEMENT ASSEMBLY (for Manual Air Conditioning System) INFO

6. INSTALL INSTRUMENT PANEL REINFORCEMENT ASSEMBLY (for Automatic Air Conditioning System) INFO

7. INSTALL AIR CONDITIONING UNIT INFO

8. REMOVE REAR NO. 1 AIR DUCT (w/ Rear Air Duct) INFO

9. INSTALL NO. 2 INSTRUMENT PANEL BRACE SUB-ASSEMBLY INFO

10. INSTALL NO. 1 INSTRUMENT PANEL BRACE SUB-ASSEMBLY (for Manual Air Conditioning System) INFO

11. INSTALL NO. 1 INSTRUMENT PANEL BRACE SUB-ASSEMBLY (for Automatic Air Conditioning System) INFO

12. INSTALL REAR NO. 3 AIR DUCT (w/ Rear Air Duct) INFO

13. INSTALL REAR NO. 2 AIR DUCT (w/ Rear Air Duct) INFO

14. INSTALL CENTER INSTRUMENT PANEL TO COWL BRACE INFO

15. INSTALL LOWER DEFROSTER NOZZLE ASSEMBLY INFO

16. INSTALL NO. 1 AIR DUCT SUB-ASSEMBLY INFO

17. INSTALL SMART KEY ECU ASSEMBLY (w/ Smart Key System) INFO

18. INSTALL LOWER INSTRUMENT PANEL SUB-ASSEMBLY INFO

19. INSTALL NO. 2 ANTENNA CORD SUB-ASSEMBLY INFO

20. INSTALL CONSOLE BOX ASSEMBLY (for Manual Transaxle) INFO

21. INSTALL CONSOLE BOX ASSEMBLY (for Automatic Transaxle) INFO

22. INSTALL CONSOLE BOX CARPET INFO

23. INSTALL UPPER CONSOLE PANEL SUB-ASSEMBLY INFO

24. INSTALL NO. 1 SWITCH HOLE BASE (w/o Smart Key System) INFO

25. INSTALL NO. 1 SWITCH HOLE BASE (w/ Smart Key System) INFO

26. INSTALL FRONT NO. 1 CONSOLE BOX INSERT INFO

27. INSTALL COWL SIDE TRIM BOARD LH INFO

28. INSTALL FRONT DOOR SCUFF PLATE LH INFO

29. INSTALL FRONT NO. 2 CONSOLE BOX INSERT INFO

30. INSTALL NO. 2 INSTRUMENT PANEL UNDER COVER SUB-ASSEMBLY (w/ Instrument Panel Under Cover) INFO

31. INSTALL COWL SIDE TRIM BOARD RH INFO

32. INSTALL FRONT DOOR SCUFF PLATE RH INFO

33. INSTALL AIR CONDITIONING PANEL ASSEMBLY (for Manual Air Conditioning System)

INFO

34. INSTALL AIR CONDITIONING CONTROL ASSEMBLY (for Automatic Air Conditioning System) INFO

35. INSTALL INSTRUMENT PANEL HOLE COVER INFO

36. INSTALL INSTRUMENT PANEL BOX ASSEMBLY INFO

37. INSTALL CENTER NO. 1 INSTRUMENT CLUSTER FINISH PANEL ASSEMBLY (for Manual Transaxle) INFO

38. INSTALL CENTER NO. 1 INSTRUMENT CLUSTER FINISH PANEL ASSEMBLY (for Automatic Transaxle) INFO

39. INSTALL SHIFT LEVER KNOB SUB-ASSEMBLY (for Manual Transaxle) INFO

40. INSTALL SHIFT LEVER KNOB SUB-ASSEMBLY (for Automatic Transaxle) INFO

41. INSTALL RADIO RECEIVER WITH BRACKET (w/o Navigation System) INFO

42. INSTALL CENTER INSTRUMENT CLUSTER FINISH PANEL SUB-ASSEMBLY (w/ Navigation System) INFO

43. INSTALL NAVIGATION RECEIVER WITH BRACKET (w/ Navigation System) INFO

44. INSTALL STEERING POST ASSEMBLY (for 2ZR-FE) INFO

45. INSTALL STEERING POST ASSEMBLY (for 2AZ-FE) INFO

46. TURN FRONT WHEELS FACING STRAIGHT AHEAD

47. CONNECT NO. 2 STEERING INTERMEDIATE SHAFT ASSEMBLY INFO

48. INSTALL STOP LIGHT SWITCH ASSEMBLY INFO

49. INSTALL NO. 3 AIR DUCT SUB-ASSEMBLY INFO

50. INSTALL INSTRUMENT PANEL SUB REINFORCEMENT INFO

51. INSTALL COLUMN HOLE COVER SILENCER SHEET INFO

52. INSTALL TRANSPONDER KEY AMPLIFIER (w/o Smart Key System) INFO

53. INSTALL TURN SIGNAL SWITCH ASSEMBLY WITH SPIRAL CABLE SUB-ASSEMBLY INFO

54. INSTALL UPPER STEERING COLUMN COVER INFO

55. INSTALL LOWER STEERING COLUMN COVER INFO

56. TURN FRONT WHEELS FACING STRAIGHT AHEAD

57. ADJUST SPIRAL CABLE INFO

58. INSTALL STEERING WHEEL ASSEMBLY INFO

59. INSTALL STEERING PAD INFO

60. INSTALL LOWER NO. 3 STEERING WHEEL COVER INFO

61. INSTALL LOWER NO. 2 STEERING WHEEL COVER INFO

62. INSPECT STEERING WHEEL CENTER POINT

63. INSTALL LOWER INSTRUMENT PANEL FINISH PANEL SUB-ASSEMBLY INFO

64. INSTALL POWER STEERING ECU ASSEMBLY (for 2ZR-FE) INFO

65. INSTALL POWER STEERING ECU ASSEMBLY (for 2AZ-FE) INFO

66. INSTALL UPPER INSTRUMENT PANEL SUB-ASSEMBLY INFO

67. CONNECT INSTRUMENT PANEL WIRE ASSEMBLY INFO

68. CONNECT FRONT DOOR OPENING TRIM WEATHERSTRIP LH INFO

69. INSTALL LOWER INSTRUMENT PANEL FINISH PANEL ASSEMBLY INFO

70. CONNECT FRONT DOOR OPENING TRIM WEATHERSTRIP RH INFO

71. INSTALL NO. 1 INSTRUMENT PANEL BOX DOOR SUB-ASSEMBLY INFO

72. INSTALL GLOVE COMPARTMENT DOOR ASSEMBLY INFO

73. INSTALL FRONT PILLAR GARNISH LH (w/ Curtain Shield Airbag) INFO

74. INSTALL FRONT PILLAR GARNISH LH (w/o Curtain Shield Airbag) INFO

75. INSTALL FRONT PILLAR GARNISH RH (w/ Curtain Shield Airbag) INFO

76. INSTALL FRONT PILLAR GARNISH RH (w/o Curtain Shield Airbag) INFO

77. INSTALL COMBINATION METER ASSEMBLY INFO

78. INSTALL INSTRUMENT CLUSTER FINISH PANEL ASSEMBLY INFO

79. INSTALL CENTER INSTRUMENT PANEL REGISTER ASSEMBLY INFO

80. INSTALL INSTRUMENT PANEL FINISH PANEL END LH INFO

81. INSTALL INSTRUMENT PANEL FINISH PANEL END RH INFO

82. INSTALL LOWER INSTRUMENT PANEL FINISH PANEL LH INFO

83. INSTALL LOWER INSTRUMENT PANEL FINISH PANEL RH INFO

84. INSTALL HEATER WATER HOSE OUTLET INFO

85. INSTALL HEATER WATER HOSE INLET INFO

86. INSTALL AIR CONDITIONING TUBE ASSEMBLY INFO

87. INSTALL SUCTION PIPE SUB-ASSEMBLY INFO

88. INSTALL OUTER COWL TOP PANEL (for TMC Made) INFO

89. INSTALL OUTER COWL TOP PANEL (except TMC Made) INFO

90. INSTALL WINDSHIELD WIPER MOTOR AND LINK ASSEMBLY INFO

91. INSTALL COWL TOP VENTILATOR LOUVER LH INFO

92. INSTALL CENTER NO. 1 COWL TOP VENTILATOR LOUVER INFO

93. INSTALL HOOD TO COWL TOP SEAL INFO

94. INSTALL FRONT WIPER ARM AND BLADE ASSEMBLY RH INFO

95. INSTALL FRONT WIPER ARM AND BLADE ASSEMBLY LH INFO

96. INSTALL FRONT WIPER ARM HEAD CAP INFO

97. CHARGE WITH REFRIGERANT INFO

98. ADD ENGINE COOLANT (for 2ZR-FE) INFO

99. ADD ENGINE COOLANT (for 2AZ-FE) INFO

100. CONNECT CABLE TO NEGATIVE BATTERY TERMINAL

101. INSPECT FOR COOLANT LEAK (for 2ZR-FE) INFO

102. INSPECT FOR COOLANT LEAK (for 2AZ-FE) INFO

103. INSPECT STEERING PAD INFO

104. INSPECT SRS WARNING LIGHT

INFO

105. WARM UP ENGINE INFO

106. INSPECT FOR REFRIGERANT LEAK INFO

Last Modified: 3-10-2010	6.4 G	**From:** 200901
Model Year: 2010	**Model:** Corolla	**Doc ID:** RM00000114701QX
Title: HEATING / AIR CONDITIONING: REFRIGERANT: ON-VEHICLE INSPECTION (2010 Corolla)		

ON-VEHICLE INSPECTION

1. INSPECT REFRIGERANT PRESSURE WITH MANIFOLD GAUGE SET

HINT:

This is a method where a manifold gauge set is used to help locate the problem.

(a) Read the manifold gauge pressure when the following conditions are established.

Test conditions:

- Temperature at the air inlet with the switch set at RECIRC is 30 to 35°C (86 to 95°F).
- Engine is running at 1500 rpm.
- Blower speed control switch is at "HI".
- Temperature control dial is at "COOL".
- A/C switch is ON.
- Doors are fully open.

(1) Normally functioning refrigeration system

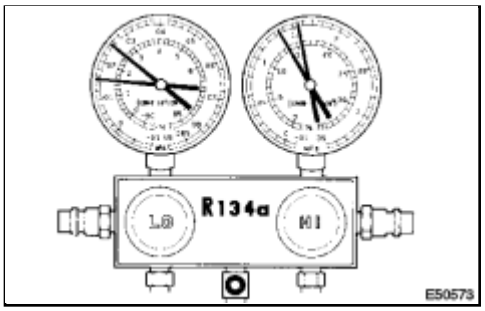

Gauge Reading

PRESSURE SIDE	REFRIGERANT VOLUME
Low	0.15 to 0.25 MPa (1.5 to 2.5 kgf/cm^2, 21 to 36 psi)
High	1.37 to 1.57 MPa (13.9 to 16.0 kgf/cm^2, 198 to 227 psi)

(2) Moisture is present in refrigeration system.

Condition:
Periodically cools and then fails to cool.

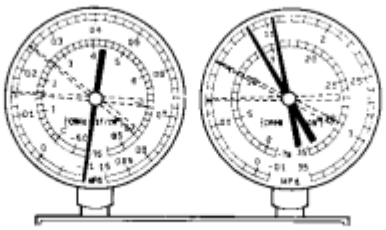

SYMPTOM	PROBABLE CAUSE	DIAGNOSIS	CORRECTIVE ACTION
During operation, pressure on low pressure side cycles between normal and vacuum	• Moisture in the A/C system will freeze at the expansion valve orifice, causing the refrigeration cycle to temporarily stop • After the system stops, and warms up again, the ice will melt and normal operation will be temporarily restored	• Cooler dryer (integrated into the condenser tank) in oversaturated state • Moisture in the refrigeration system freezes at the expansion valve orifice and blocks circulation of refrigerant	1. Replace the cooler dryer 2. Remove moisture in the system by repeatedly evacuating air 3. Supply a proper amount of new refrigerant

(3) Insufficient cooling

Condition: Cooling system does not function effectively.

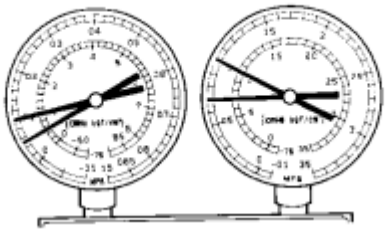

I22118

SYMPTOM	PROBABLE CAUSE	DIAGNOSIS	CORRECTIVE ACTION
• Pressure is low on both low and high pressure sides • Insufficient cooling performance	Gas leakage from the refrigeration system	• Insufficient refrigerant • Refrigerant leaking	1. Check for gas leaks and repair if necessary 2. Supply a proper amount of new refrigerant 3. If the gauge indicates a pressure of close to 0, then it will be necessary to evacuate the system after repairing the leak

(4) Poor circulation of refrigerant

Condition: Cooling system does not function effectively.

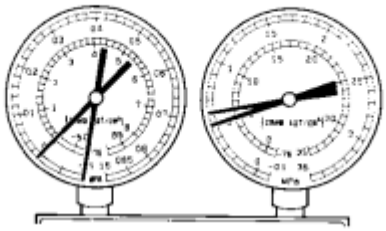

I22119

SYMPTOM	PROBABLE CAUSE	DIAGNOSIS	CORRECTIVE ACTION
• Pressure is low on both low and high pressure sides • Frost exists on pipe from condenser to unit	Refrigerant flow is obstructed by dirt inside the pipes of the condenser core	Receiver is clogged	Replace the condenser

(5) Refrigerant does not circulate.

Condition: Cooling system does not function. (Sometimes it may function.)

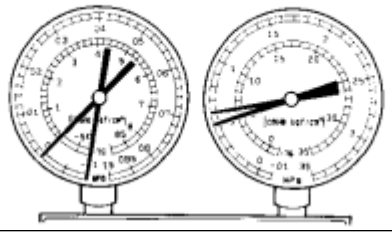

I22120

SYMPTOM	PROBABLE CAUSE	DIAGNOSIS	CORRECTIVE ACTION
• Vacuum is indicated on low pressure side and very low pressure is indicated on high pressure side • Frost or condensation is seen on piping on both sides of receiver/drier or expansion valve	• Refrigerant flow is obstructed by moisture or dirt in the refrigeration system • Refrigerant flow is obstructed by gas leaking internally through the expansion valve	Refrigerant does not circulate	1. Check the expansion valve 2. Replace the expansion valve 3. Replace the condenser 4. Evacuate air and supply a proper amount of new refrigerant 5. For internal gas leak at the expansion valve, replace

SYMPTOM	PROBABLE CAUSE	DIAGNOSIS	CORRECTIVE ACTION
			the expansion valve

(6) Refrigerant is overcharged or cooling effectiveness of the condenser is insufficient.

Condition: Cooling system does not function.

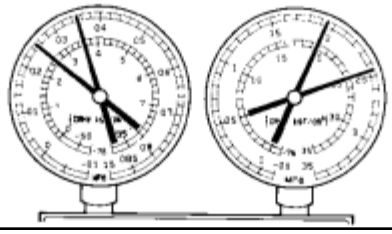

I22121

SYMPTOM	PROBABLE CAUSE	DIAGNOSIS	CORRECTIVE ACTION
Pressure is too high on both low and high pressure sides	• Unable to develop sufficient performance due to an excessive use of refrigeration system • Cooling effectiveness of the condenser is insufficient	• Excessive refrigerant in cycle → excessive refrigerant was added during recharging • Condenser cooling effectiveness is insufficient → condenser fins are clogged at the cooling fan	1. Clean the condenser 2. Check the operation of the condenser cooling fan 3. If 1 and 2 are normal state, check the amount of refrigerant and supply the proper amount of refrigerant

(7) Air is present in the refrigeration system.

Condition: Cooling system does not function.

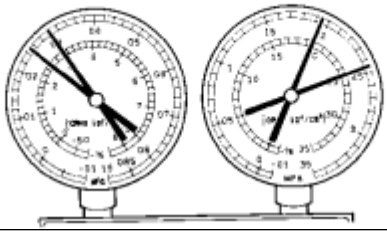

NOTE: These gauge indications occur when the refrigeration system opens and the refrigerant is charged without vacuum purging.

SYMPTOM	PROBABLE CAUSE	DIAGNOSIS	CORRECTIVE ACTION

SYMPTOM	PROBABLE CAUSE	DIAGNOSIS	CORRECTIVE ACTION
• Pressure is too high on both low and high pressure sides • The low pressure piping is too hot to touch	Air in the system	• Air present in the refrigeration system • Insufficient vacuum purging	1. Check compressor oil to see if it is dirty or insufficient 2. Evacuate the system and recharge it with new or purified refrigerant

(8) Expansion valve malfunction

Condition: Insufficient cooling

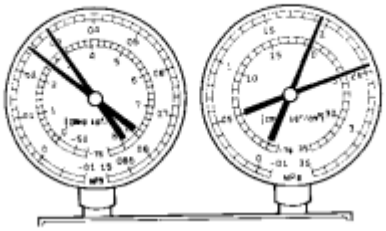

I22128

SYMPTOM	PROBABLE CAUSE	DIAGNOSIS	CORRECTIVE ACTION
• Pressure is too high on both low and high pressure sides • Frost or a large amount of condensation on piping on low pressure side	Expansion valve may be sticking	• Excessive refrigerant in low pressure piping • Expansion valve opened too wide	Check expansion valve

(9) Insufficient compressor compression

Condition: Insufficient cooling

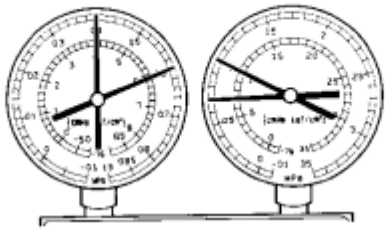

SYMPTOM	PROBABLE CAUSE	DIAGNOSIS	CORRECTIVE ACTION

SYMPTOM	PROBABLE CAUSE	DIAGNOSIS	CORRECTIVE ACTION
• Pressure is too high both on low and high pressure sides • Pressure is too low on high pressure side	Internal leak in the compressor	• Low compression • Leak from a damaged valve, or parts may be broken	Replace the compressor

Gauge readings (Reference)

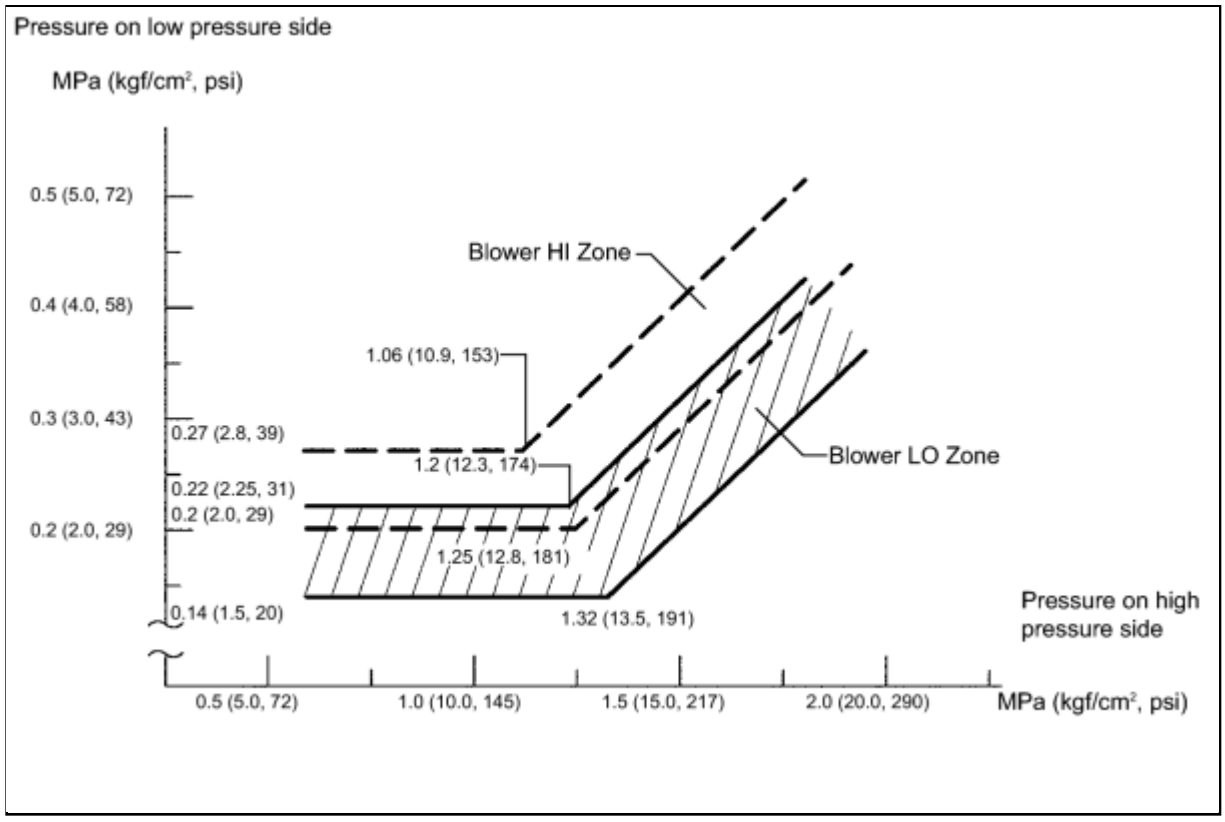

Last Modified: 3-10-2010	6.4 A	**From:** 200901
Model Year: 2010	**Model:** Corolla	**Doc ID:** RM00000114601TX
Title: HEATING / AIR CONDITIONING: REFRIGERANT: REPLACEMENT (2010 Corolla)		

REPLACEMENT

1. RECOVER REFRIGERANT FROM REFRIGERATION SYSTEM

(a) Start up the engine.

(b) Turn the A/C switch on.

(c) Operate the cooler compressor at an engine speed of approximately 1000 rpm for 5 to 6 minutes to circulate the refrigerant. This causes most of the compressor oil from the various components of the A/C system to collect in the A/C compressor.

(d) Stop the engine.

(e) Recover the refrigerant from the A/C system using a refrigerant recovery unit.

2. CHARGE WITH REFRIGERANT

(a) Perform vacuum purging using a vacuum pump.

(b) Charge with refrigerant HFC-134a (R134a).

Standard:
410 to 470 g (14.5 to 16.6 oz.)

SST: 09985-20010

09985-02130
09985-02150
09985-02090
09985-02110
09985-02010
09985-02050
09985-02060
09985-02070
09985-02140
09985-02080

NOTICE:

Do not turn the A/C on before charging with refrigerant. Doing so will cause the cooler compressor to work without refrigerant, resulting in overheating of the cooler compressor.

HINT:

Ensure that sufficient refrigerant is available to recharge the system when using a refrigerant recovery unit. Refrigerant recovery units are not always able to recover 100% of the refrigerant from an A/C system.

3. WARM UP ENGINE

(a) Keep the A/C switch on for at least 2 minutes to warm up the compressor.

NOTICE:

Be sure to warm up the compressor when turning the A/C on after removing and installing the cooler refrigerant lines (including the compressor), to prevent damage to the compressor.

4. INSPECT FOR REFRIGERANT LEAK

(a) After recharging with refrigerant, inspect for refrigerant leaks using a halogen leak detector.

(b) Carry out the test under the following conditions:

- Turn the ignition switch off.
- Secure good ventilation (the halogen leak detector may react to volatile gases which are not refrigerant, such as evaporated gasoline and exhaust gas).
- Repeat the test 2 or 3 times.
- Make sure that there is some refrigerant remaining in the refrigeration system.

  When the compressor is off: approx. 392 to 588 kPa (3.9 to 5.9 kgf/cm^2, 57 to 85 psi).

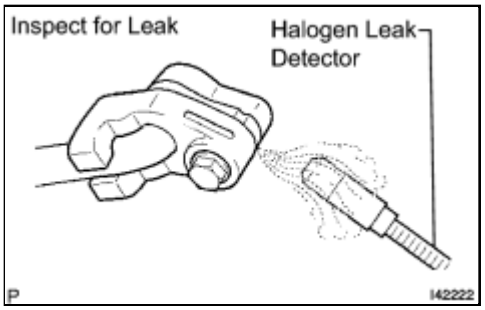

(c) Using a halogen leak detector, inspect for refrigerant leaks from the refrigerant lines.

(d) Bring the halogen leak detector close to the drain hose with the detector's power off, and then turn the detector on.

HINT:

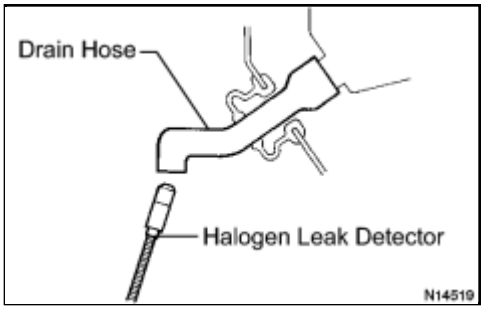

- After the blower motor has stopped, let the cooling unit stand for more than 15 minutes.
- Bring the halogen leak detector sensor under the drain hose.
- When bringing the halogen leak detector close to the drain hose, make sure that the halogen leak detector does not react to volatile gases.

  If it is not possible to avoid interference from volatile gases, the vehicle should be lifted up to allow testing.

(e) If a refrigerant leak is not detected from the drain hose, remove the blower motor control from the cooling unit. Insert the halogen leak detector sensor into the unit and perform the test.

(f) Disconnect the pressure switch connector and leave it for approximately 20 minutes. Bring the halogen leak detector close to the pressure switch and perform the test.

Last Modified: 3-10-2010	6.4 K	**From:** 200901
Model Year: 2010	**Model:** Corolla	**Doc ID:** RM000003FXC001X
Title: HEATING / AIR CONDITIONING: REFRIGERANT LINE: COMPONENTS (2010 Corolla)		

COMPONENTS

ILLUSTRATION

for TMC Made 2ZR-FE:

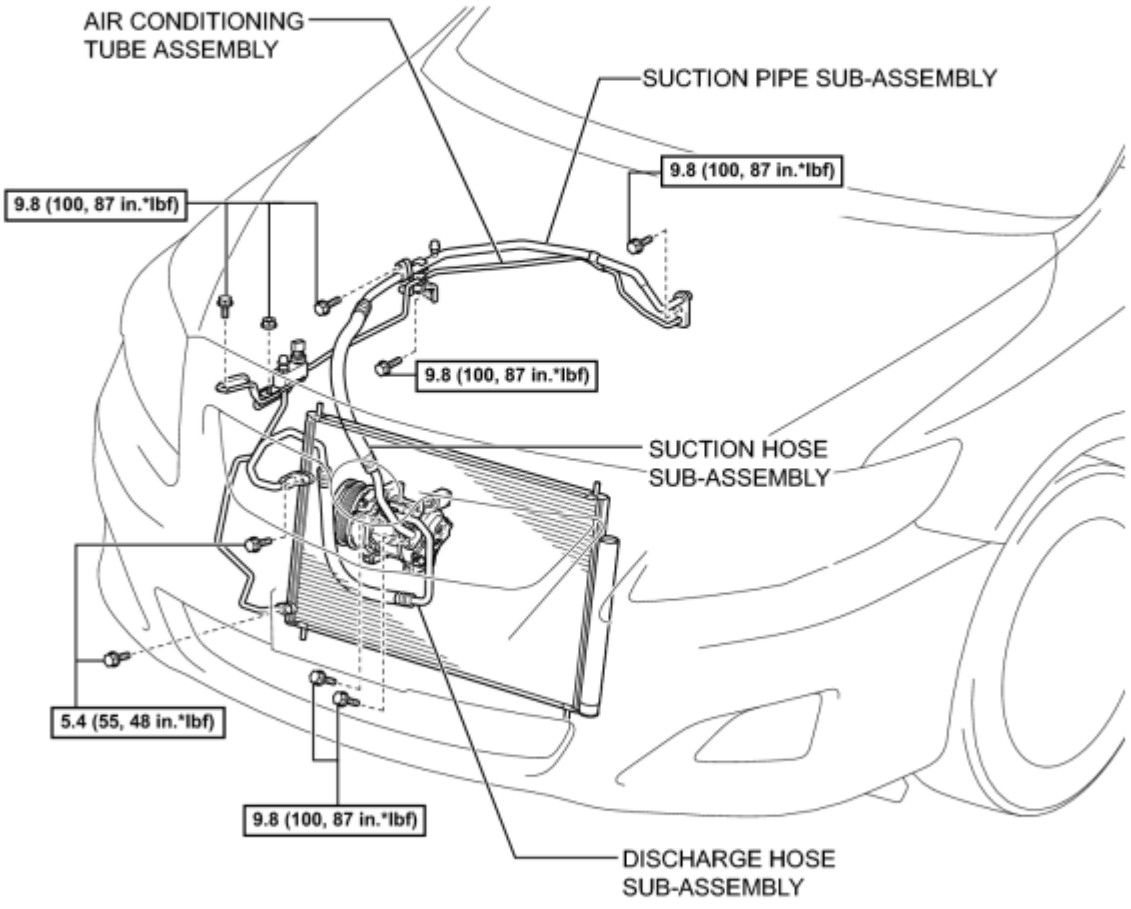

N*m (kgf*cm, ft.*lbf): Specified torque

P

ILLUSTRATION

for TMMC, NUMMI Made 2ZR-FE:

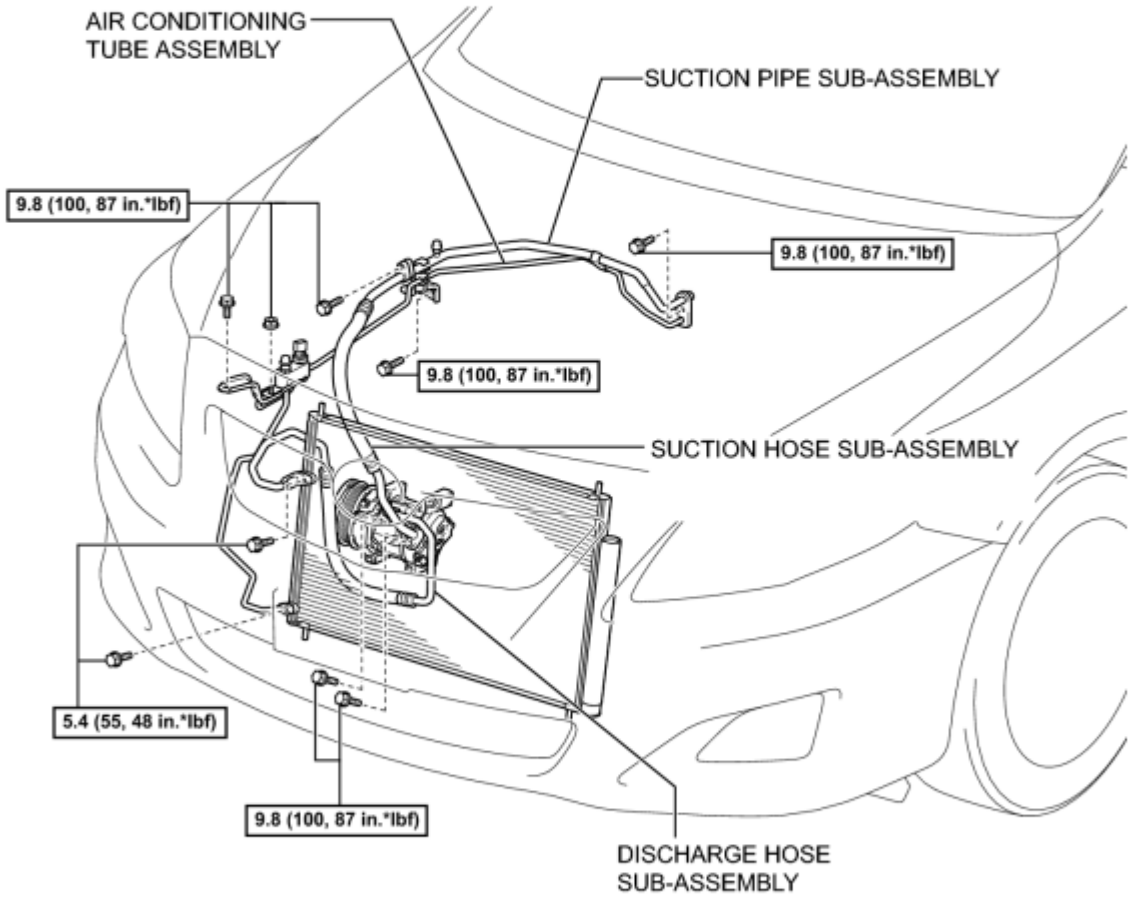

N*m (kgf*cm, ft.*lbf): Specified torque

P

ILLUSTRATION

for 2AZ-FE:

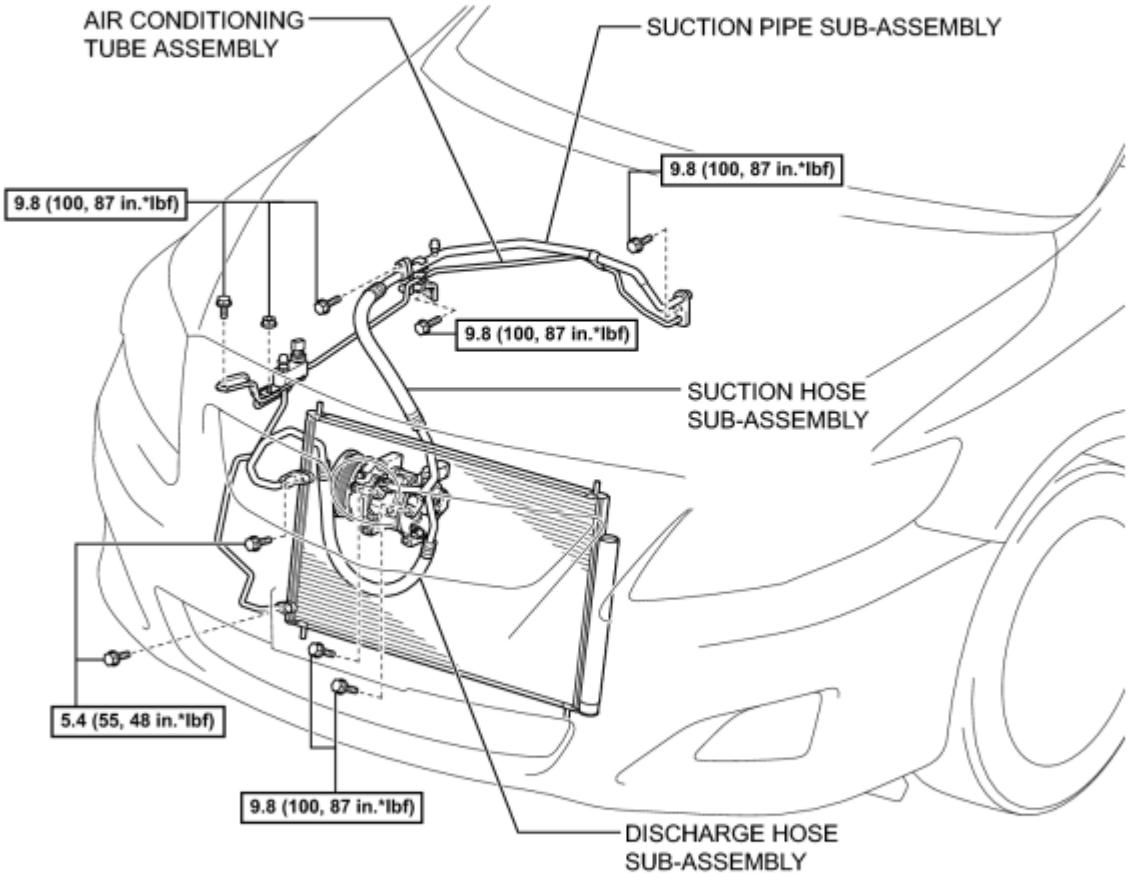

N*m (kgf*cm, ft.*lbf): Specified torque

P

Last Modified: 3-10-2010	6.4 K	**From:** 200901
Model Year: 2010	**Model:** Corolla	**Doc ID:** RM000003FXP001X
Title: HEATING / AIR CONDITIONING: ROOM TEMPERATURE SENSOR: COMPONENTS (2010 Corolla)		

COMPONENTS

ILLUSTRATION

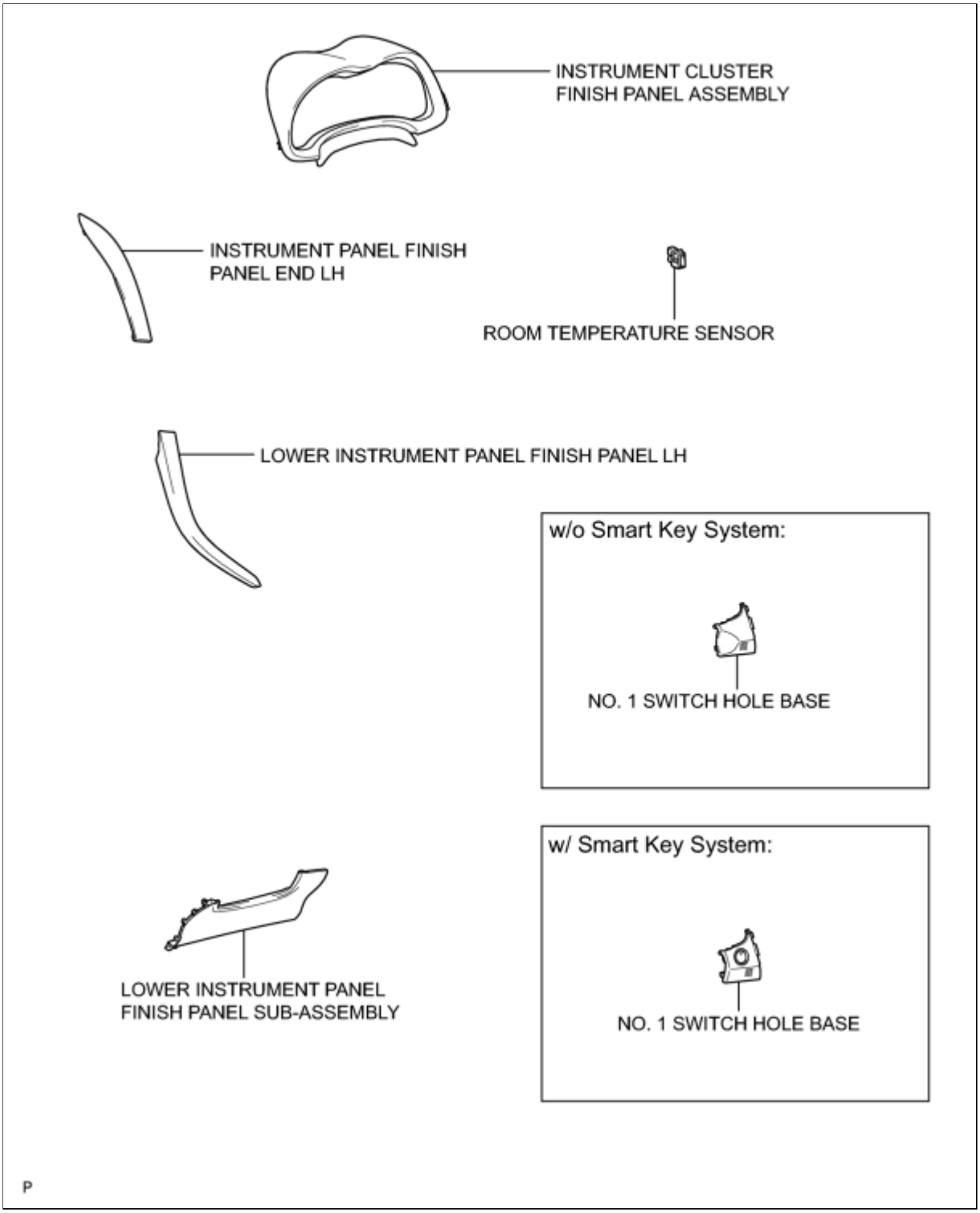

ILLUSTRATION

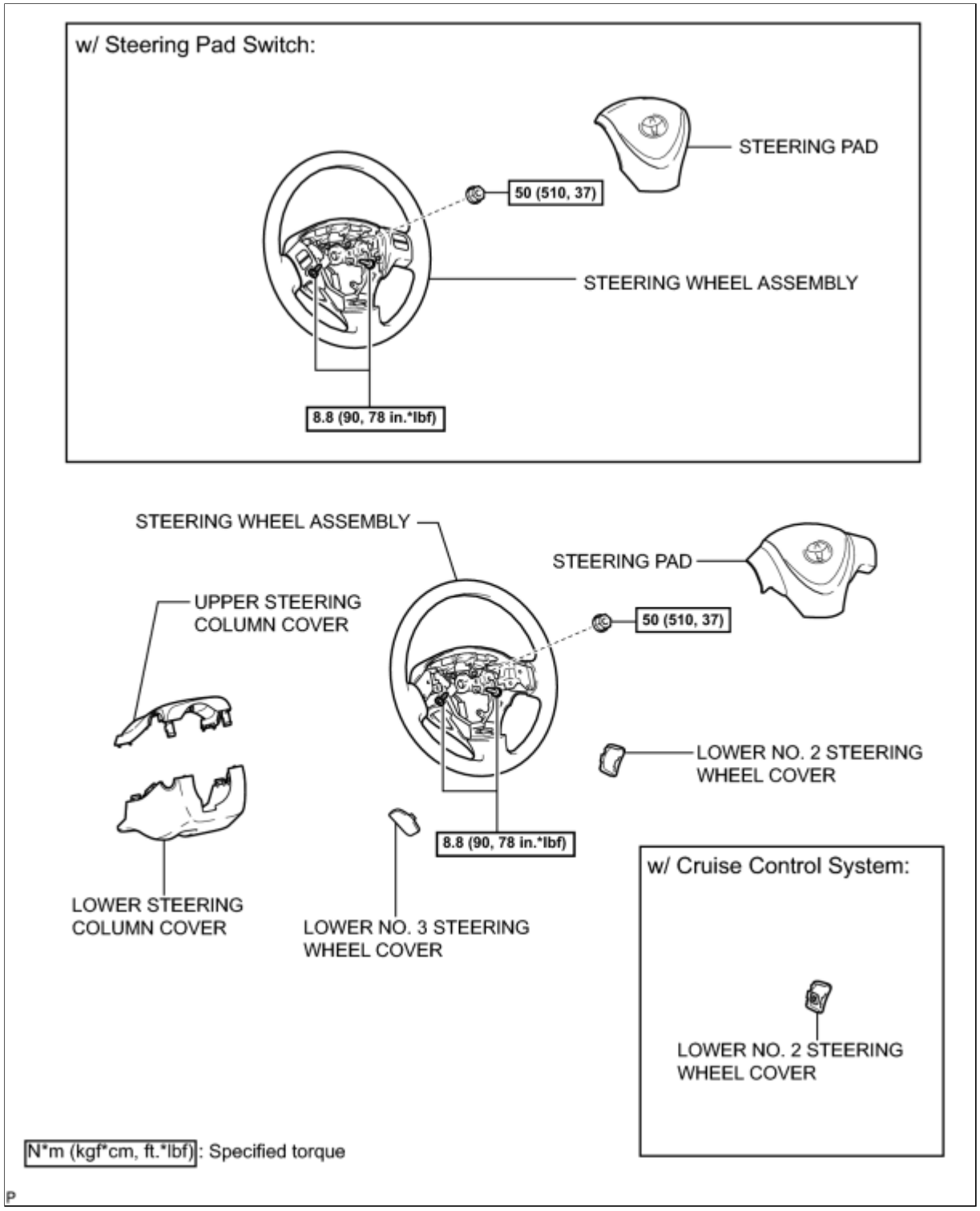
w/ Steering Pad Switch:
STEERING PAD
50 (510, 37)
STEERING WHEEL ASSEMBLY
8.8 (90, 78 in.*lbf)
STEERING WHEEL ASSEMBLY
STEERING PAD
UPPER STEERING COLUMN COVER
50 (510, 37)
LOWER NO. 2 STEERING WHEEL COVER
8.8 (90, 78 in.*lbf)
LOWER STEERING COLUMN COVER
LOWER NO. 3 STEERING WHEEL COVER
w/ Cruise Control System:
LOWER NO. 2 STEERING WHEEL COVER
N*m (kgf*cm, ft.*lbf): Specified torque

P

Last Modified: 3-10-2010	6.4 A	**From:** 200901
Model Year: 2010	**Model:** Corolla	**Doc ID:** RM000002XMT00DX
Title: HEATING / AIR CONDITIONING: ROOM TEMPERATURE SENSOR: REMOVAL (2010 Corolla)		

REMOVAL

1. DISCONNECT CABLE FROM NEGATIVE BATTERY TERMINAL

CAUTION:

Wait at least 90 seconds after disconnecting the cable from the negative (-) battery terminal to disable the SRS system INFO **.**

2. REMOVE LOWER INSTRUMENT PANEL FINISH PANEL SUB-ASSEMBLY INFO

3. REMOVE LOWER NO. 3 STEERING WHEEL COVER INFO

4. REMOVE LOWER NO. 2 STEERING WHEEL COVER INFO

5. REMOVE STEERING PAD INFO

6. REMOVE STEERING WHEEL ASSEMBLY INFO

7. REMOVE LOWER STEERING COLUMN COVER INFO

8. REMOVE UPPER STEERING COLUMN COVER INFO

9. REMOVE LOWER INSTRUMENT PANEL FINISH PANEL LH INFO

10. REMOVE INSTRUMENT PANEL FINISH PANEL END LH INFO

11. REMOVE INSTRUMENT CLUSTER FINISH PANEL ASSEMBLY INFO

12. REMOVE NO. 1 SWITCH HOLE BASE (w/o Smart Key System) INFO

13. REMOVE NO. 1 SWITCH HOLE BASE (w/ Smart Key System) INFO

14. REMOVE ROOM TEMPERATURE SENSOR

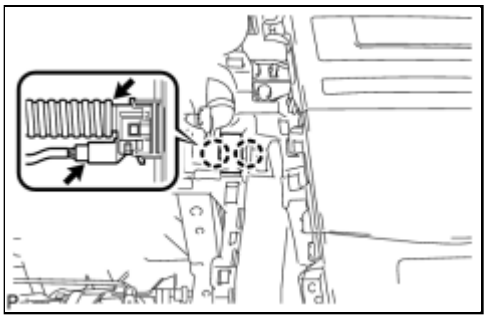

(a) Disconnect the connector.

(b) Disengage the air hose.

(c) Disengage the 2 claws and remove the room temperature sensor.

Last Modified: 3-10-2010	6.4 G	**From:** 200901
Model Year: 2010	**Model:** Corolla	**Doc ID:** RM00000201O01WX
Title: HEATING / AIR CONDITIONING: ROOM TEMPERATURE SENSOR: INSPECTION (2010 Corolla)		

INSPECTION

1. INSPECT ROOM TEMPERATURE SENSOR

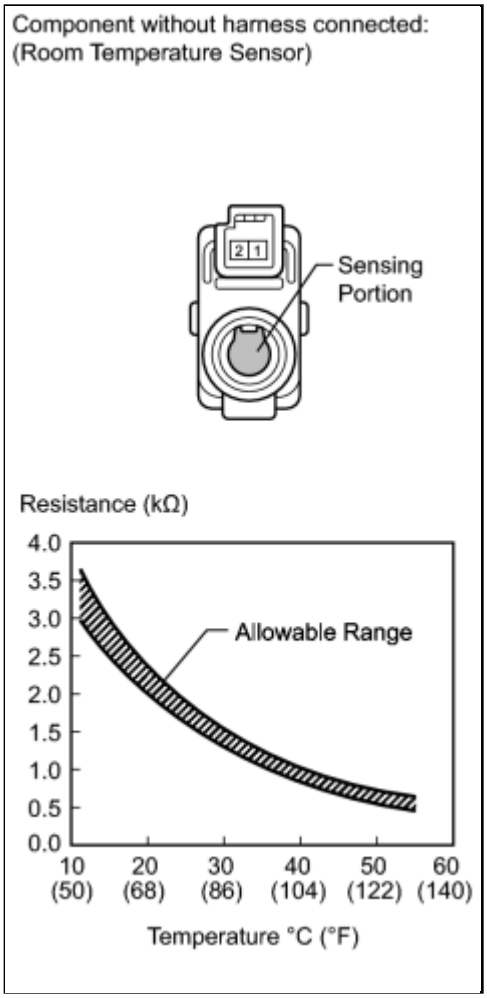

(a) Disconnect the connector from the room temperature sensor.

(b) Measure the resistance according to the value(s) in the table below.

Standard Resistance:

TESTER CONNECTION	CONDITION	SPECIFIED CONDITION
1 - 2	10°C (50°F)	3.00 to 3.73 kΩ
1 - 2	15°C (59°F)	2.45 to 2.88 kΩ
1 - 2	20°C (68°F)	1.95 to 2.30 kΩ

TESTER CONNECTION	CONDITION	SPECIFIED CONDITION
1 - 2	25°C (77°F)	1.60 to 1.80 kΩ
1 - 2	30°C (86°F)	1.28 to 1.47 kΩ
1 - 2	35°C (95°F)	1.00 to 1.22 kΩ
1 - 2	40°C (104°F)	0.80 to 1.00 kΩ
1 - 2	45°C (113°F)	0.65 to 0.85 kΩ
1 - 2	50°C (122°F)	0.50 to 0.70 kΩ
1 - 2	55°C (131°F)	0.44 to 0.60 kΩ
1 - 2	60°C (140°F)	0.36 to 0.50 kΩ

NOTICE:

- Hold the sensor only by its connector. Touching the sensor may change the resistance value.
- When measuring, the sensor temperature must be the same as the ambient temperature.

HINT:

As the temperature increases, the resistance decreases (see the graph).

If the resistance is not as specified, replace the room temperature sensor.

Last Modified: 3-10-2010	6.4 A	**From:** 200901
Model Year: 2010	**Model:** Corolla	**Doc ID:** RM000002XMR00DX
Title: HEATING / AIR CONDITIONING: ROOM TEMPERATURE SENSOR: INSTALLATION (2010 Corolla)		

INSTALLATION

1. INSTALL ROOM TEMPERATURE SENSOR

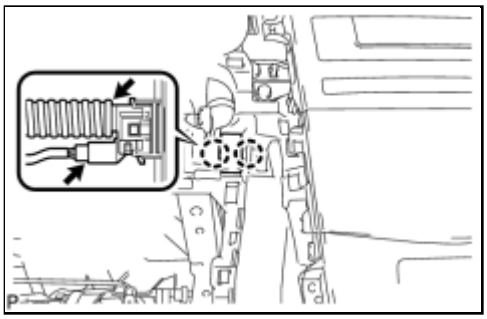

(a) Engage the 2 claws and install the room temperature sensor.

(b) Engage the air hose.

(c) Connect the connector.

2. INSTALL NO. 1 SWITCH HOLE BASE (w/o Smart Key System) INFO

3. INSTALL NO. 1 SWITCH HOLE BASE (w/ Smart Key System) INFO

4. INSTALL INSTRUMENT CLUSTER FINISH PANEL ASSEMBLY INFO

5. INSTALL INSTRUMENT PANEL FINISH PANEL END LH INFO

6. INSTALL LOWER INSTRUMENT PANEL FINISH PANEL LH INFO

7. INSTALL UPPER STEERING COLUMN COVER INFO

8. INSTALL LOWER STEERING COLUMN COVER INFO

9. TURN FRONT WHEELS TO FACE STRAIGHT AHEAD

10. ADJUST SPIRAL CABLE INFO

11. INSTALL STEERING WHEEL ASSEMBLY INFO

12. INSTALL STEERING PAD INFO

13. INSTALL LOWER NO. 3 STEERING WHEEL COVER INFO

14. INSTALL LOWER NO. 2 STEERING WHEEL COVER INFO

15. INSPECT STEERING WHEEL CENTER POINT

16. INSTALL LOWER INSTRUMENT PANEL FINISH PANEL SUB-ASSEMBLY INFO

17. CONNECT CABLE TO NEGATIVE BATTERY TERMINAL

18. INSPECT STEERING PAD INFO

19. INSPECT SRS WARNING LIGHT

INFO

Last Modified: 3-10-2010	6.4 K	**From:** 200901
Model Year: 2010	**Model:** Corolla	**Doc ID:** RM000003FXS001X
Title: HEATING / AIR CONDITIONING: SOLAR SENSOR: COMPONENTS (2010 Corolla)		

COMPONENTS

ILLUSTRATION

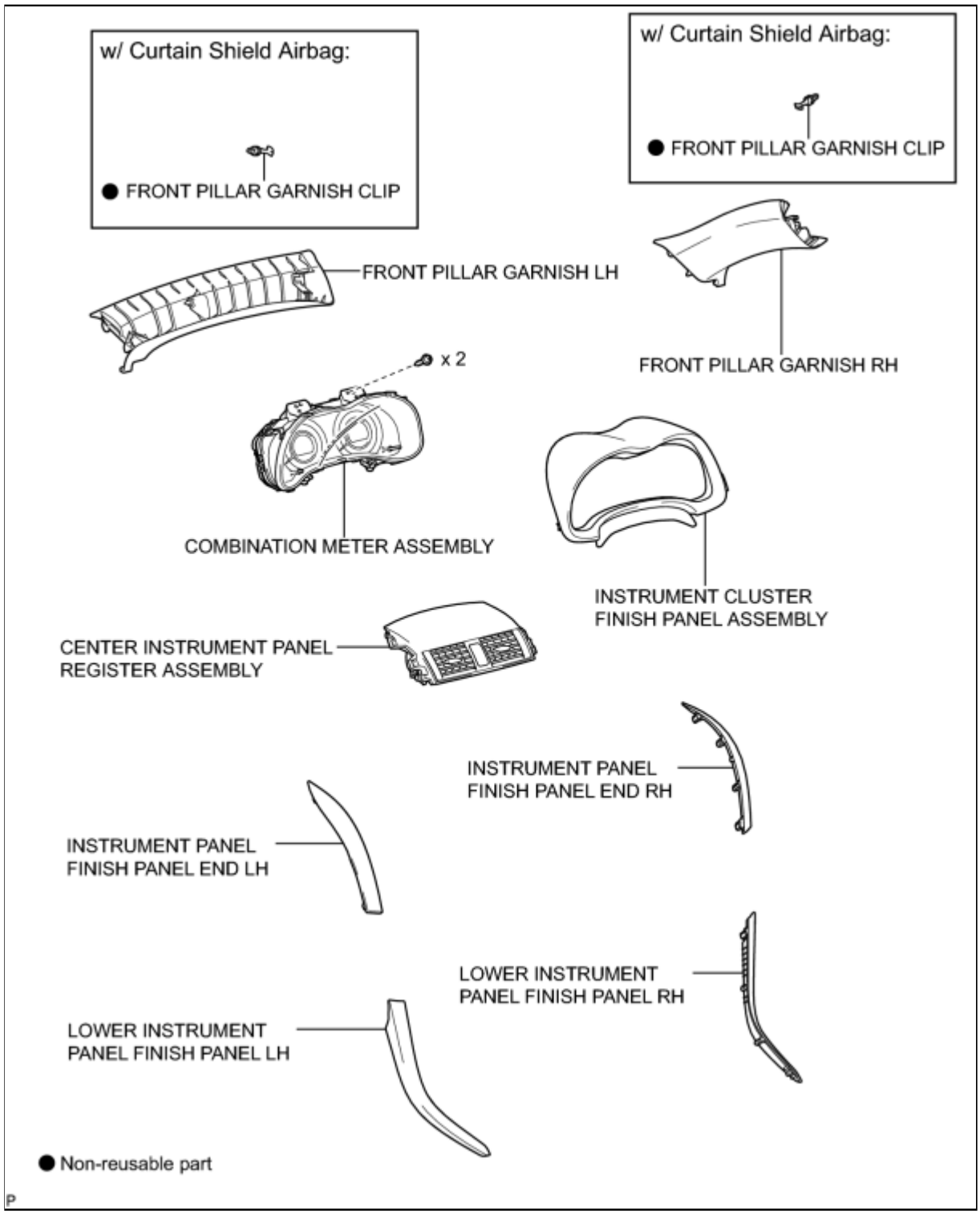

ILLUSTRATION

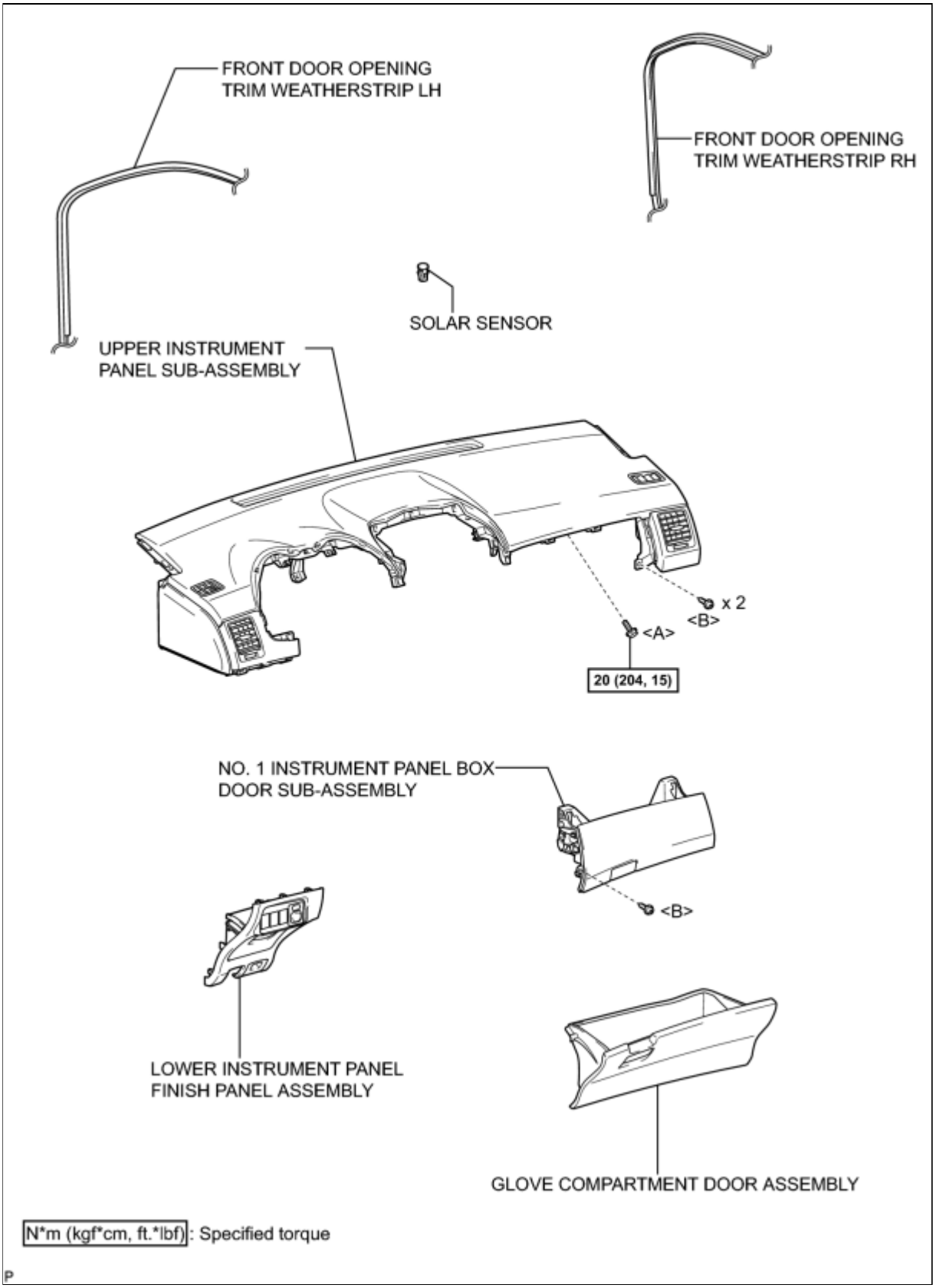

P

Last Modified: 3-10-2010	6.4 A	**From:** 200901
Model Year: 2010	**Model:** Corolla	**Doc ID:** RM000001WID01MX
Title: HEATING / AIR CONDITIONING: SOLAR SENSOR: REMOVAL (2010 Corolla)		

REMOVAL

1. PRECAUTION

INFO

2. DISCONNECT CABLE FROM NEGATIVE BATTERY TERMINAL

CAUTION:

Wait at least 90 seconds after disconnecting the cable from the negative (-) battery terminal to disable the SRS system INFO **.**

3. REMOVE LOWER INSTRUMENT PANEL FINISH PANEL LH INFO

4. REMOVE LOWER INSTRUMENT PANEL FINISH PANEL RH INFO

5. REMOVE INSTRUMENT PANEL FINISH PANEL END LH INFO

6. REMOVE INSTRUMENT PANEL FINISH PANEL END RH INFO

7. REMOVE CENTER INSTRUMENT PANEL REGISTER ASSEMBLY INFO

8. REMOVE INSTRUMENT CLUSTER FINISH PANEL ASSEMBLY INFO

9. REMOVE COMBINATION METER ASSEMBLY INFO

10. REMOVE FRONT PILLAR GARNISH LH (w/o Curtain Shield Airbag) INFO

11. REMOVE FRONT PILLAR GARNISH LH (w/ Curtain Shield Airbag) INFO

12. REMOVE FRONT PILLAR GARNISH RH (w/o Curtain Shield Airbag) INFO

13. REMOVE FRONT PILLAR GARNISH RH (w/ Curtain Shield Airbag) INFO

14. REMOVE LOWER INSTRUMENT PANEL FINISH PANEL ASSEMBLY INFO

15. DISCONNECT FRONT DOOR OPENING TRIM WEATHERSTRIP LH INFO

16. REMOVE GLOVE COMPARTMENT DOOR ASSEMBLY INFO

17. REMOVE NO. 1 INSTRUMENT PANEL BOX DOOR SUB-ASSEMBLY INFO

18. DISCONNECT FRONT DOOR OPENING TRIM WEATHERSTRIP RH INFO

19. DISCONNECT INSTRUMENT PANEL WIRE ASSEMBLY INFO

20. REMOVE UPPER INSTRUMENT PANEL SUB-ASSEMBLY INFO

21. REMOVE SOLAR SENSOR

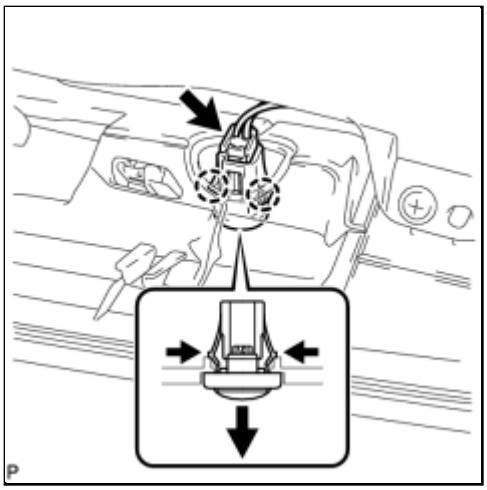

(a) Disconnect the connector.

(b) Disengage the 2 claws and remove the solar sensor.

Last Modified: 3-10-2010	6.4 G	**From:** 200901
Model Year: 2010	**Model:** Corolla	**Doc ID:** RM00000314V00WX
Title: HEATING / AIR CONDITIONING: SOLAR SENSOR: INSPECTION (2010 Corolla)		

INSPECTION

1. INSPECT SOLAR SENSOR

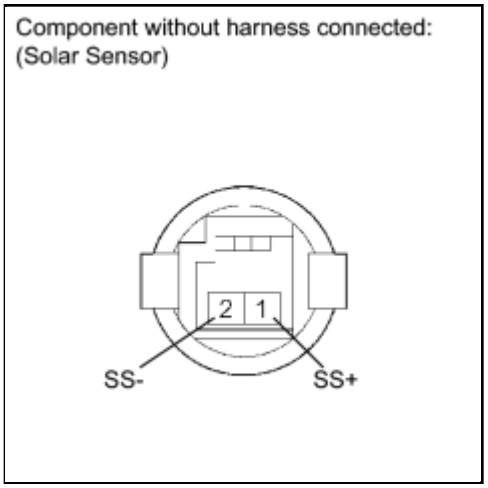

(a) Disconnect the connector from the solar sensor.

(b) Measure the resistance according to the value(s) in the table below.

Standard Resistance:

TESTER CONNECTION	CONDITION	SPECIFIED CONDITION
1 - 2	Solar sensor covered with a cloth.	∞ Ω
1 - 2	Solar sensor exposed to electric light.	Except ∞ Ω

HINT:

Use an incandescent light for inspection. Bring it within about 30 cm (11.8 in.) of the solar sensor.

If the resistance is not as specified, replace the solar sensor.

Last Modified: 3-10-2010	6.4 A	**From:** 200901
Model Year: 2010	**Model:** Corolla	**Doc ID:** RM000001WIB01MX
Title: HEATING / AIR CONDITIONING: SOLAR SENSOR: INSTALLATION (2010 Corolla)		

INSTALLATION

1. INSTALL SOLAR SENSOR

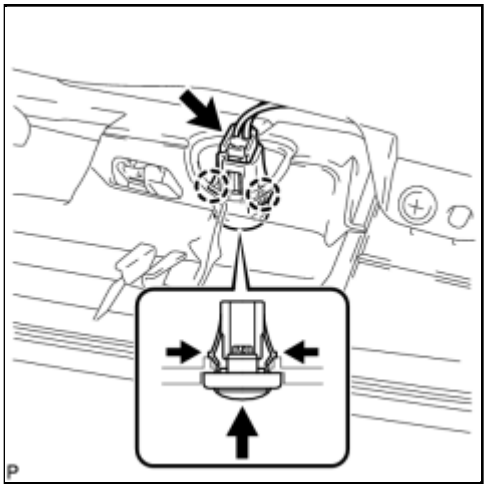

(a) Engage the 2 claws and install the solar sensor.

(b) Connect the connector.

2. INSTALL UPPER INSTRUMENT PANEL SUB-ASSEMBLY INFO

3. CONNECT INSTRUMENT PANEL WIRE ASSEMBLY INFO

4. CONNECT FRONT DOOR OPENING TRIM WEATHERSTRIP LH INFO

5. INSTALL LOWER INSTRUMENT PANEL FINISH PANEL ASSEMBLY INFO

6. CONNECT FRONT DOOR OPENING TRIM WEATHERSTRIP RH INFO

7. INSTALL NO. 1 INSTRUMENT PANEL BOX DOOR SUB-ASSEMBLY INFO

8. INSTALL GLOVE COMPARTMENT DOOR ASSEMBLY INFO

9. INSTALL FRONT PILLAR GARNISH LH (w/ Curtain Shield Airbag) INFO

10. INSTALL FRONT PILLAR GARNISH LH (w/o Curtain Shield Airbag) INFO

11. INSTALL FRONT PILLAR GARNISH RH (w/ Curtain Shield Airbag) INFO

12. INSTALL FRONT PILLAR GARNISH RH (w/o Curtain Shield Airbag) INFO

13. INSTALL COMBINATION METER ASSEMBLY INFO

14. INSTALL INSTRUMENT CLUSTER FINISH PANEL ASSEMBLY INFO

15. INSTALL CENTER INSTRUMENT PANEL REGISTER ASSEMBLY INFO

16. INSTALL INSTRUMENT PANEL FINISH PANEL END LH INFO

17. INSTALL INSTRUMENT PANEL FINISH PANEL END RH INFO

18. INSTALL LOWER INSTRUMENT PANEL FINISH PANEL LH INFO

19. INSTALL LOWER INSTRUMENT PANEL FINISH PANEL RH INFO

20. CONNECT CABLE TO NEGATIVE BATTERY TERMINAL

21. INSPECT SRS WARNING LIGHT

INFO

Last Modified: 3-10-2010	6.4 K	**From:** 200901
Model Year: 2010	**Model:** Corolla	**Doc ID:** RM000003FXW001X
Title: HEATING / AIR CONDITIONING: AIR CONDITIONING AMPLIFIER: COMPONENTS (2010 Corolla)		

COMPONENTS

ILLUSTRATION

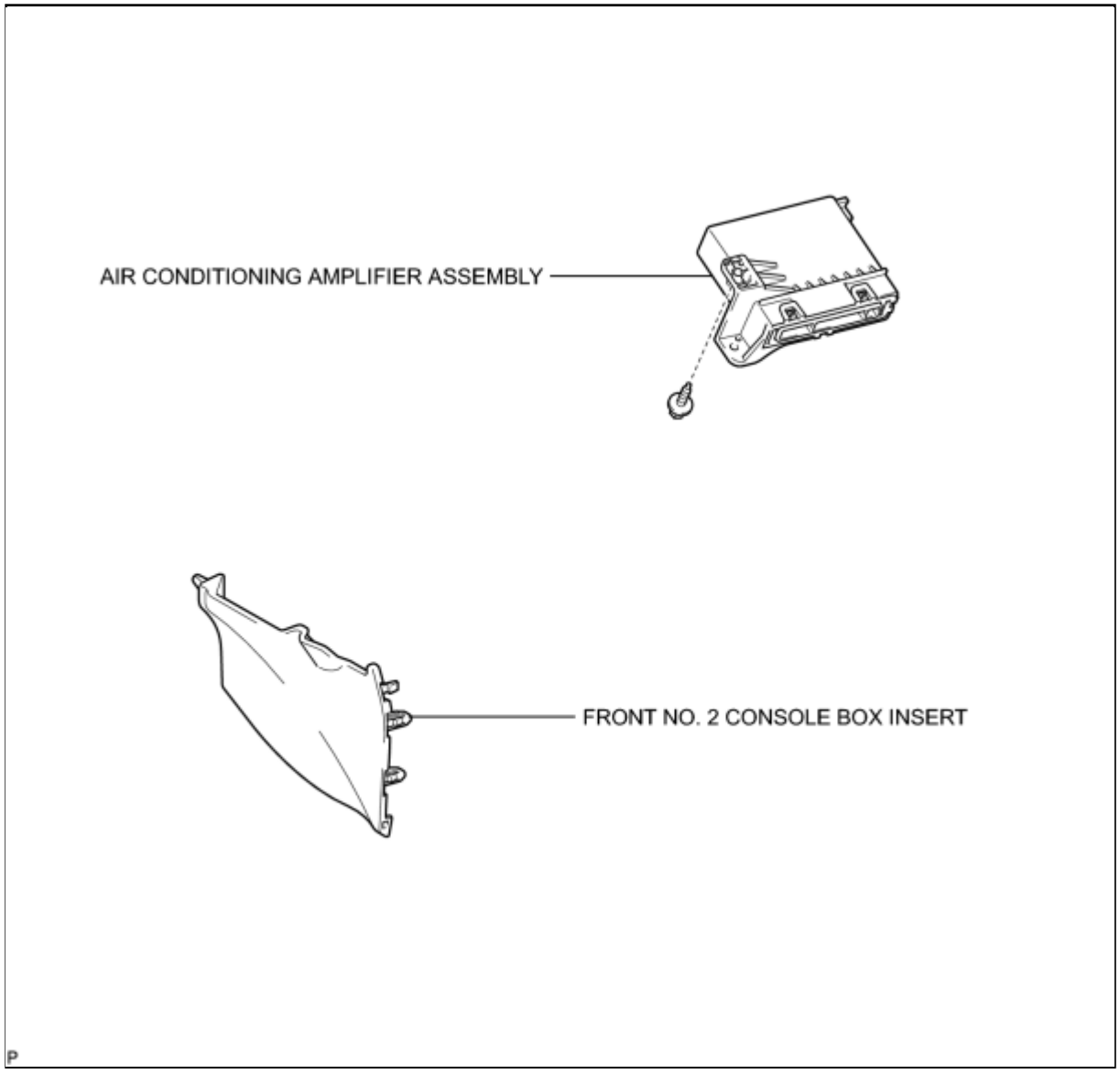

Last Modified: 3-10-2010	6.4 A	**From:** 200901
Model Year: 2010	**Model:** Corolla	**Doc ID:** RM000002XMC00IX
Title: HEATING / AIR CONDITIONING: AIR CONDITIONING AMPLIFIER: REMOVAL (2010 Corolla)		

REMOVAL

1. REMOVE FRONT NO. 2 CONSOLE BOX INSERT INFO

2. REMOVE AIR CONDITIONING AMPLIFIER ASSEMBLY

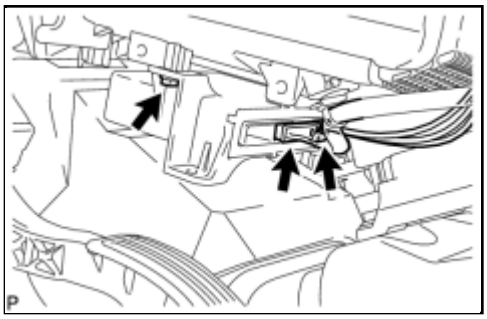

(a) Disconnect each connector.

(b) Remove the screw.

(c) Remove the air conditioning amplifier assembly as shown in the illustration.

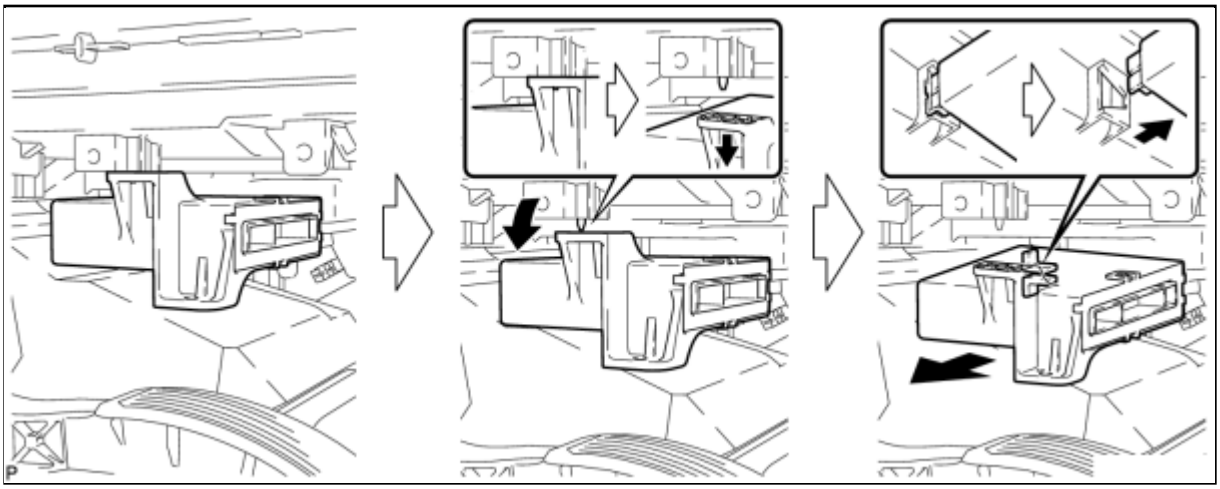

Last Modified: 3-10-2010	6.4 A	**From:** 200901
Model Year: 2010	**Model:** Corolla	**Doc ID:** RM000002XMA00IX
Title: HEATING / AIR CONDITIONING: AIR CONDITIONING AMPLIFIER: INSTALLATION (2010 Corolla)		

INSTALLATION

1. INSTALL AIR CONDITIONING AMPLIFIER ASSEMBLY

(a) Install the air conditioning amplifier assembly as shown in the illustration.



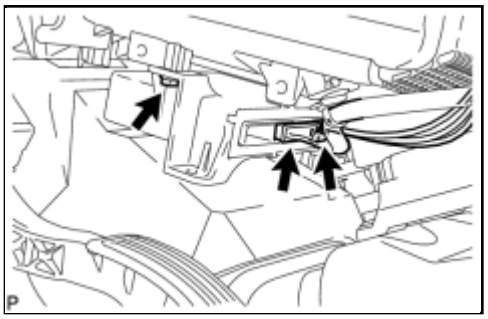

(b) Install the screw.

(c) Connect each connector.

2. INSTALL FRONT NO. 2 CONSOLE BOX INSERT INFO

Last Modified: 3-10-2010	6.4 K	**From:** 200901
Model Year: 2010	**Model:** Corolla	**Doc ID:** RM000002XLY00BX
Title: HEATING / AIR CONDITIONING: AIR CONDITIONING PANEL (for Automatic Air Conditioning System): COMPONENTS (2010 Corolla)		

COMPONENTS

ILLUSTRATION

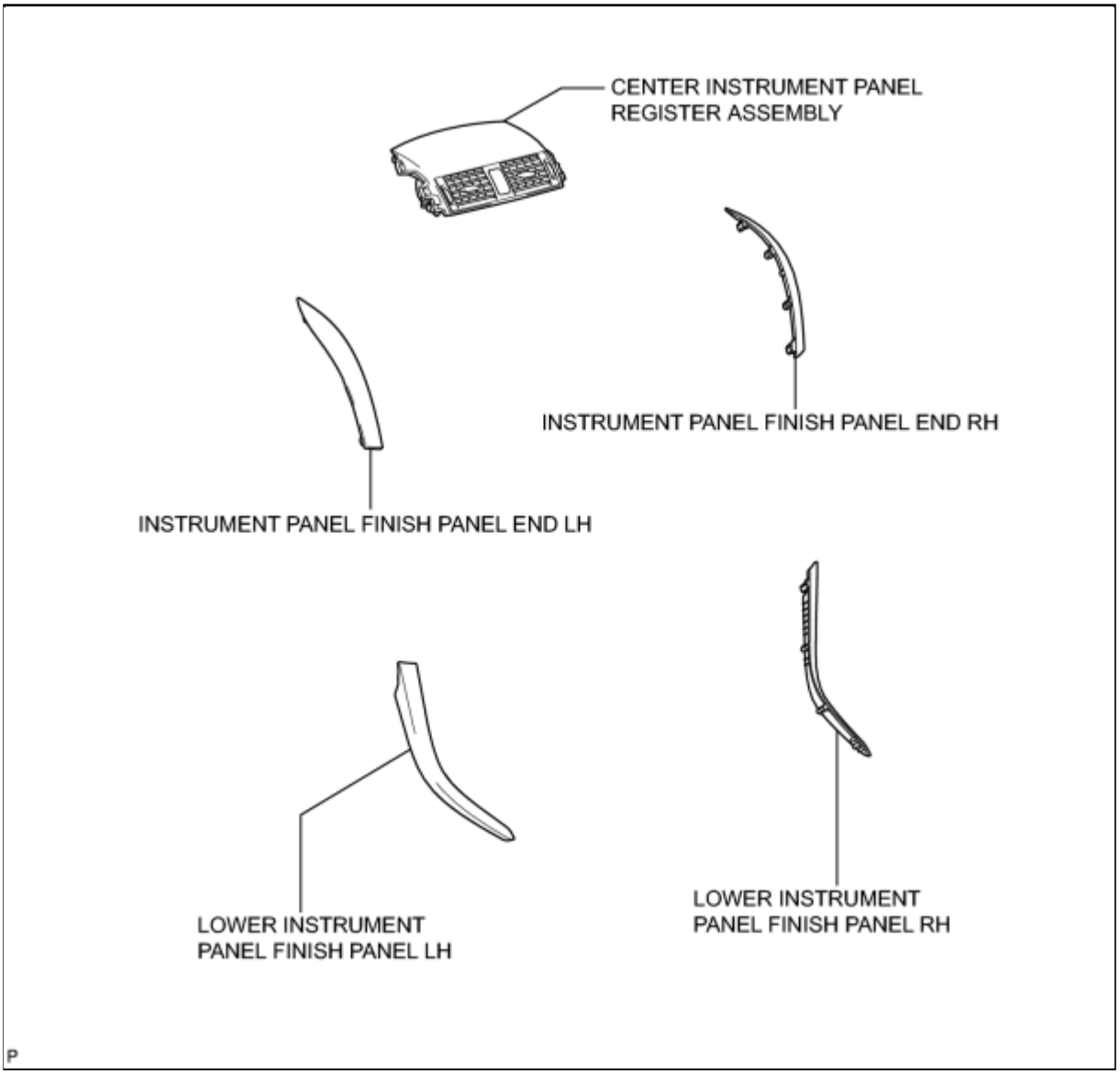

ILLUSTRATION

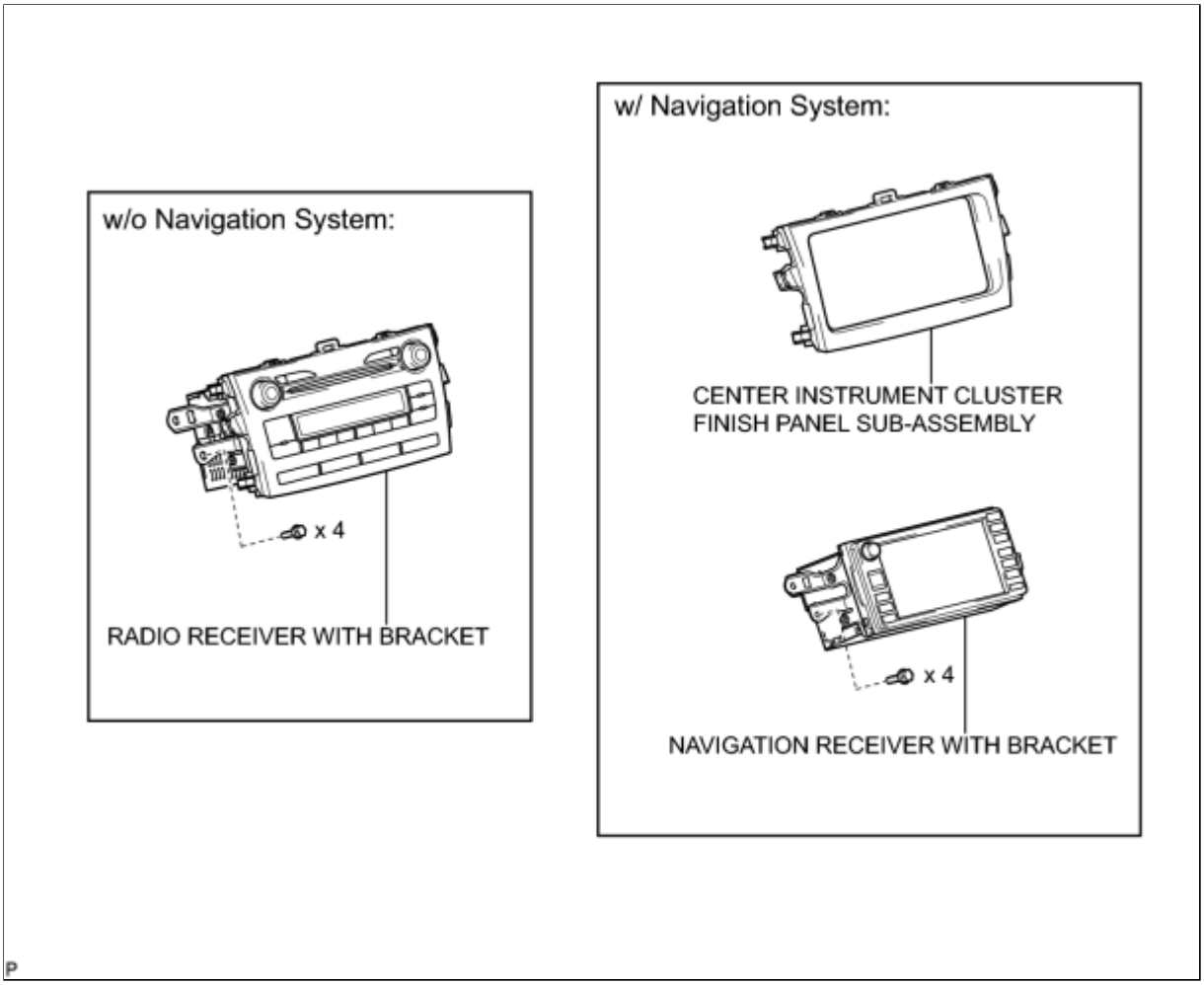

P

ILLUSTRATION



AIR CONDITIONING CONTROL ASSEMBLY

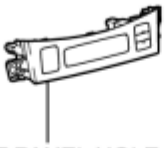

INSTRUMENT PANEL HOLE COVER

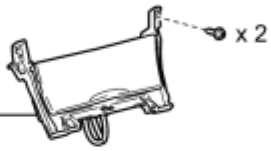

INSTRUMENT PANEL BOX ASSEMBLY

for Automatic Transaxle:



SHIFT LEVER KNOB SUB-ASSEMBLY



CENTER NO. 1 INSTRUMENT CLUSTER FINISH PANEL ASSEMBLY

for Manual Transaxle:



SHIFT LEVER KNOB SUB-ASSEMBLY



CENTER NO. 1 INSTRUMENT CLUSTER FINISH PANEL ASSEMBLY

P

Last Modified: 3-10-2010	6.4 A	**From:** 200901
Model Year: 2010	**Model:** Corolla	**Doc ID:** RM000002XM200UX
Title: HEATING / AIR CONDITIONING: AIR CONDITIONING PANEL (for Automatic Air Conditioning System): REMOVAL (2010 Corolla)		

REMOVAL

1. REMOVE LOWER INSTRUMENT PANEL FINISH PANEL LH INFO

2. REMOVE LOWER INSTRUMENT PANEL FINISH PANEL RH INFO

3. REMOVE INSTRUMENT PANEL FINISH PANEL END LH INFO

4. REMOVE INSTRUMENT PANEL FINISH PANEL END RH INFO

5. REMOVE CENTER INSTRUMENT PANEL REGISTER ASSEMBLY INFO

6. REMOVE RADIO RECEIVER WITH BRACKET (w/o Navigation System) INFO

7. REMOVE CENTER INSTRUMENT CLUSTER FINISH PANEL SUB-ASSEMBLY (w/ Navigation System) INFO

8. REMOVE NAVIGATION RECEIVER WITH BRACKET (w/ Navigation System) INFO

9. REMOVE SHIFT LEVER KNOB SUB-ASSEMBLY (for Manual Transaxle) INFO

10. REMOVE SHIFT LEVER KNOB SUB-ASSEMBLY (for Automatic Transaxle) INFO

11. REMOVE CENTER NO. 1 INSTRUMENT CLUSTER FINISH PANEL ASSEMBLY (for Manual Transaxle) INFO

12. REMOVE CENTER NO. 1 INSTRUMENT CLUSTER FINISH PANEL ASSEMBLY (for Automatic Transaxle) INFO

13. REMOVE INSTRUMENT PANEL BOX ASSEMBLY INFO

14. REMOVE INSTRUMENT PANEL HOLE COVER INFO

15. REMOVE AIR CONDITIONING CONTROL ASSEMBLY

(a) Disengage the 4 clips and remove the air conditioning control assembly.

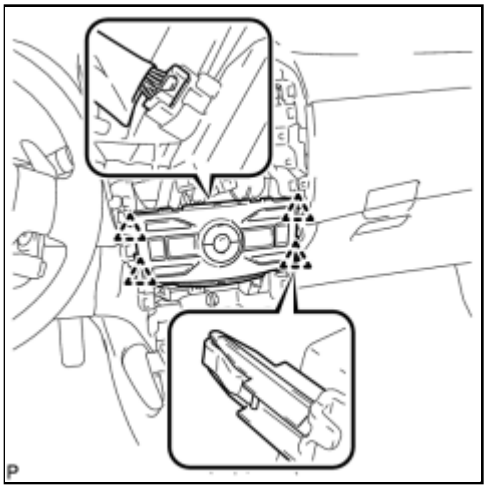

(b) Disconnect the connector.

Last Modified: 3-10-2010	6.4 A	**From:** 200901
Model Year: 2010	**Model:** Corolla	**Doc ID:** RM000002XM000UX
Title: HEATING / AIR CONDITIONING: AIR CONDITIONING PANEL (for Automatic Air Conditioning System): INSTALLATION (2010 Corolla)		

INSTALLATION

1. INSTALL AIR CONDITIONING CONTROL ASSEMBLY

(a) Connect the connector.

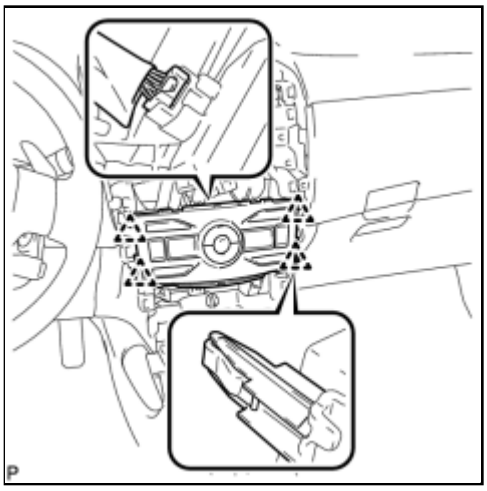

(b) Engage the 4 clips and install the air conditioning control assembly.

2. INSTALL INSTRUMENT PANEL HOLE COVER INFO

3. INSTALL INSTRUMENT PANEL BOX ASSEMBLY INFO

4. INSTALL CENTER NO. 1 INSTRUMENT CLUSTER FINISH PANEL ASSEMBLY (for Manual Transaxle) INFO

5. INSTALL CENTER NO. 1 INSTRUMENT CLUSTER FINISH PANEL ASSEMBLY (for Automatic Transaxle) INFO

6. INSTALL SHIFT LEVER KNOB SUB-ASSEMBLY (for Manual Transaxle) INFO

7. INSTALL SHIFT LEVER KNOB SUB-ASSEMBLY (for Automatic Transaxle) INFO

8. INSTALL RADIO RECEIVER WITH BRACKET (w/o Navigation System) INFO

9. INSTALL CENTER INSTRUMENT CLUSTER FINISH PANEL SUB-ASSEMBLY (w/ Navigation System) INFO

10. INSTALL NAVIGATION RECEIVER WITH BRACKET (w/ Navigation System) INFO

11. INSTALL CENTER INSTRUMENT PANEL REGISTER ASSEMBLY INFO

12. INSTALL INSTRUMENT PANEL FINISH PANEL END LH INFO

13. INSTALL INSTRUMENT PANEL FINISH PANEL END RH INFO

14. INSTALL LOWER INSTRUMENT PANEL FINISH PANEL LH INFO

15. INSTALL LOWER INSTRUMENT PANEL FINISH PANEL RH INFO

Last Modified: 3-10-2010	6.4 K	**From:** 200901
Model Year: 2010	**Model:** Corolla	**Doc ID:** RM000002XM100FX
Title: HEATING / AIR CONDITIONING: AIR CONDITIONING PANEL (for Manual Air Conditioning System): COMPONENTS (2010 Corolla)		

COMPONENTS

ILLUSTRATION

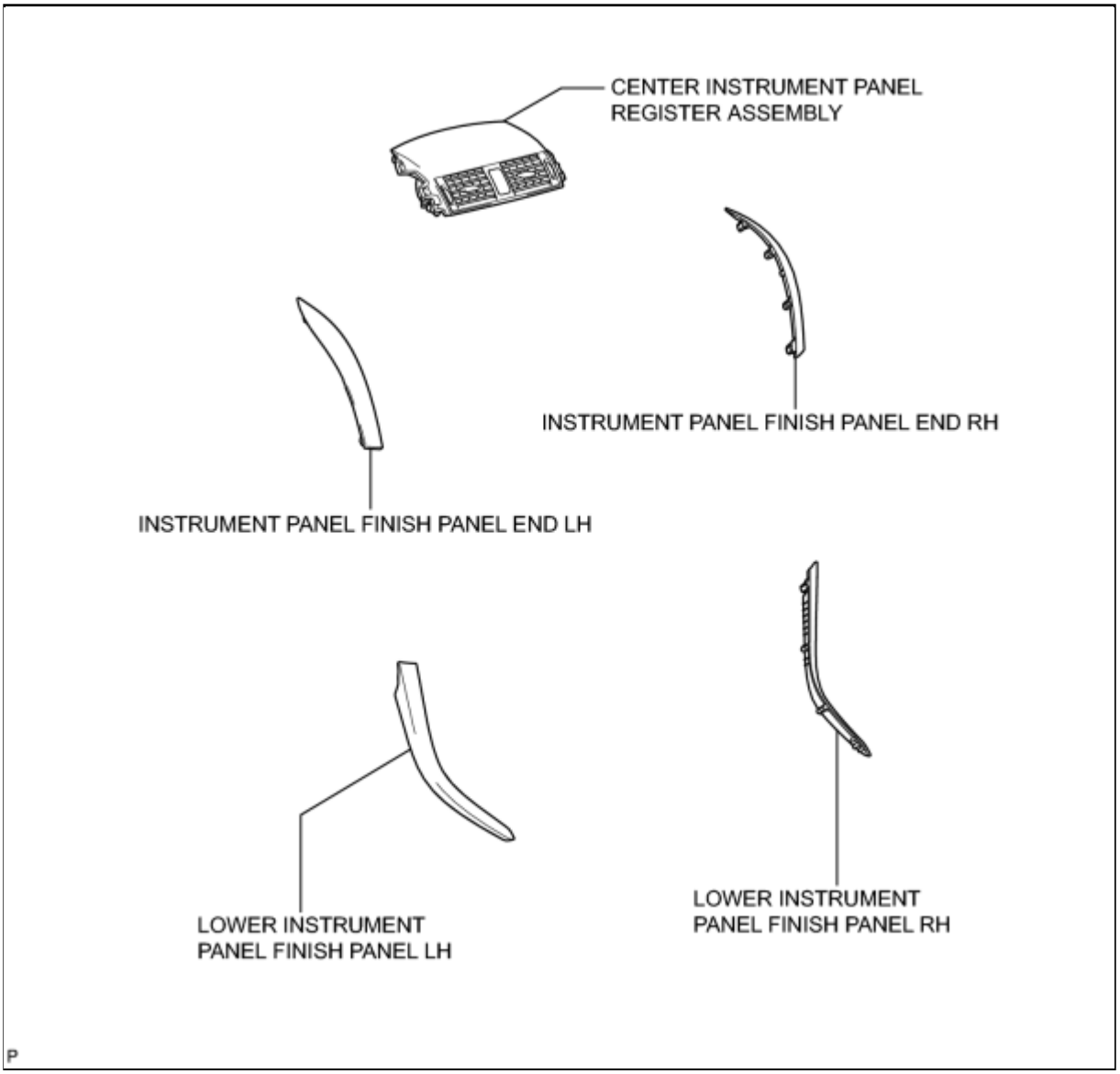

ILLUSTRATION

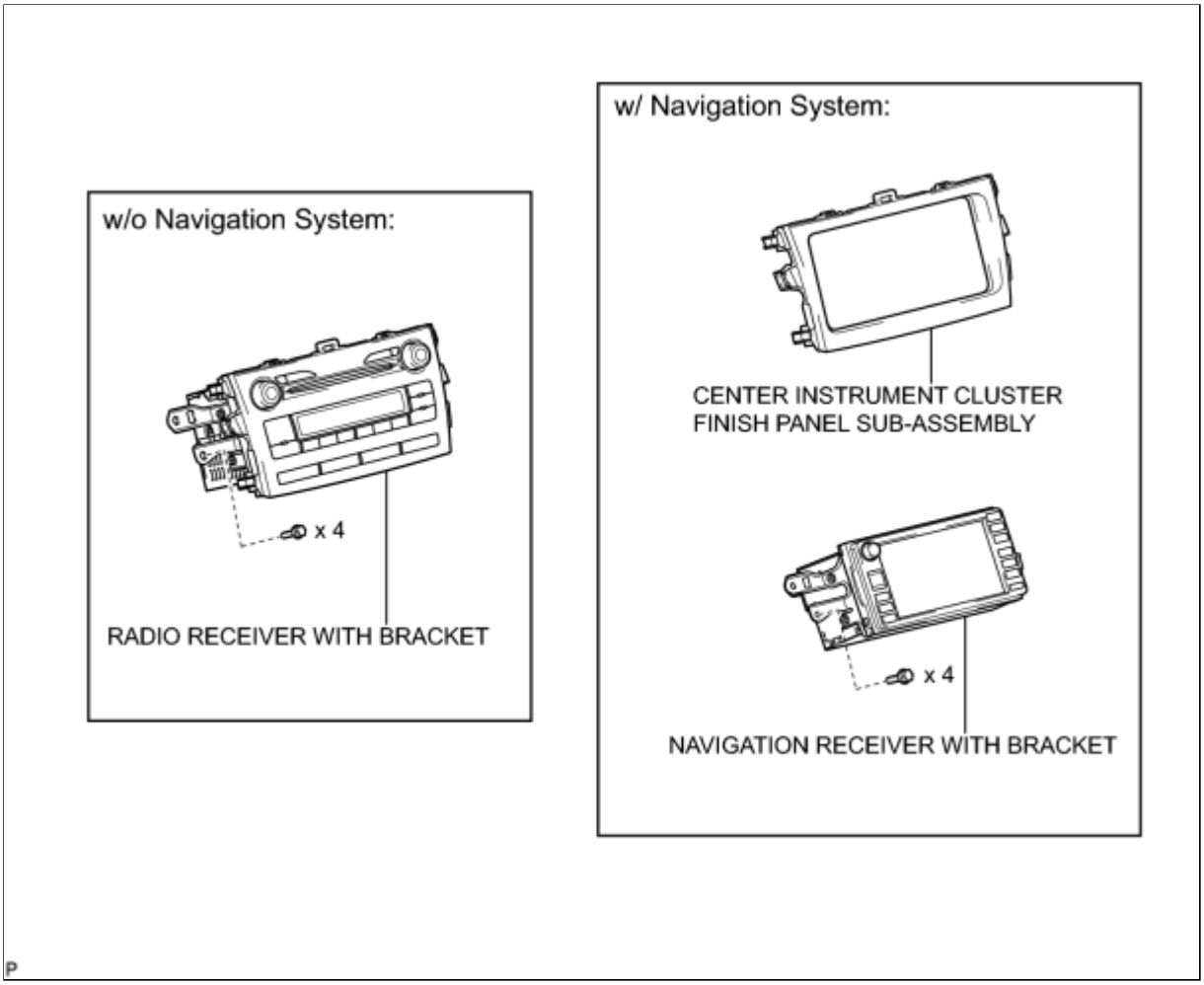

P

ILLUSTRATION

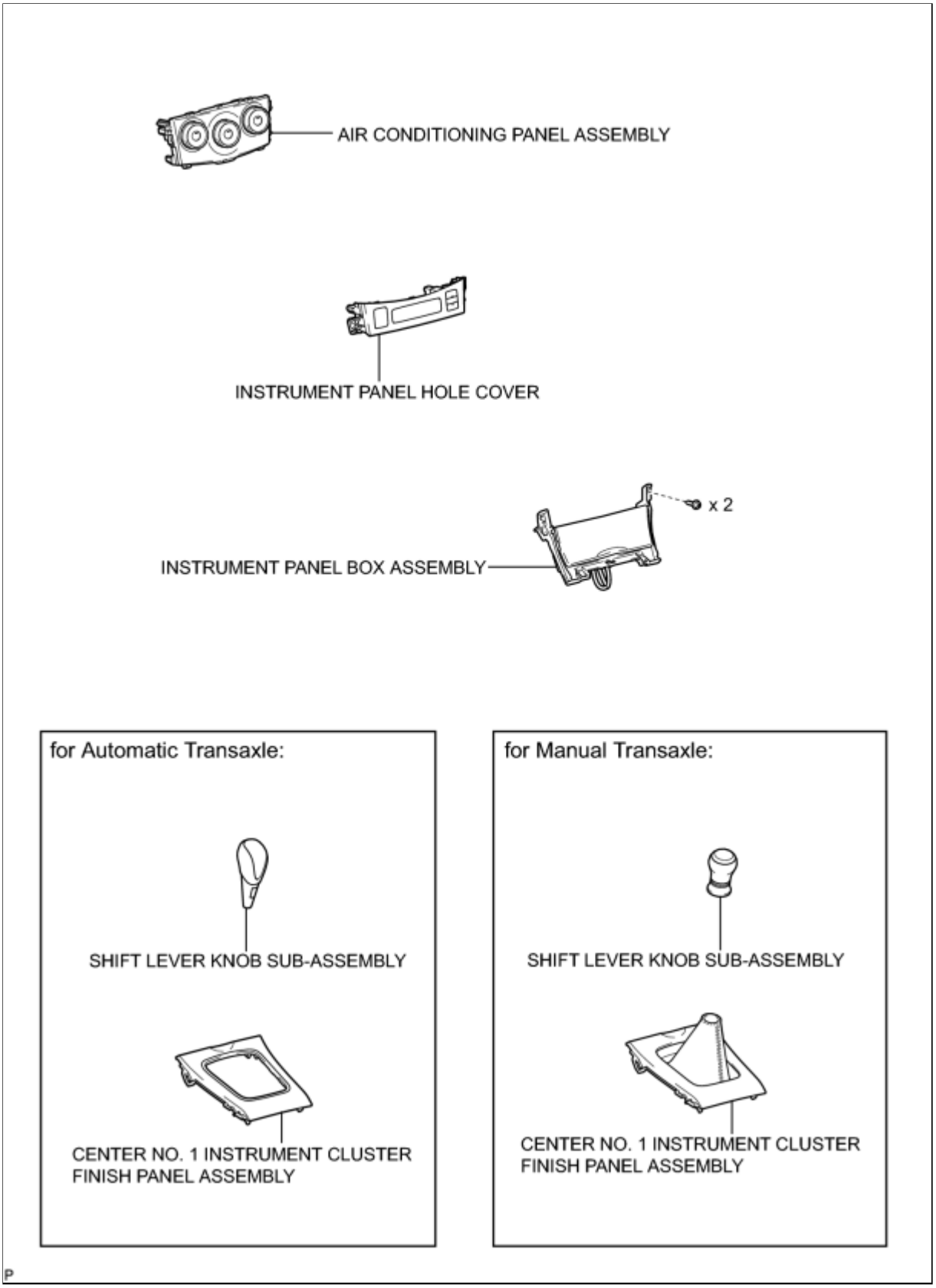

ILLUSTRATION

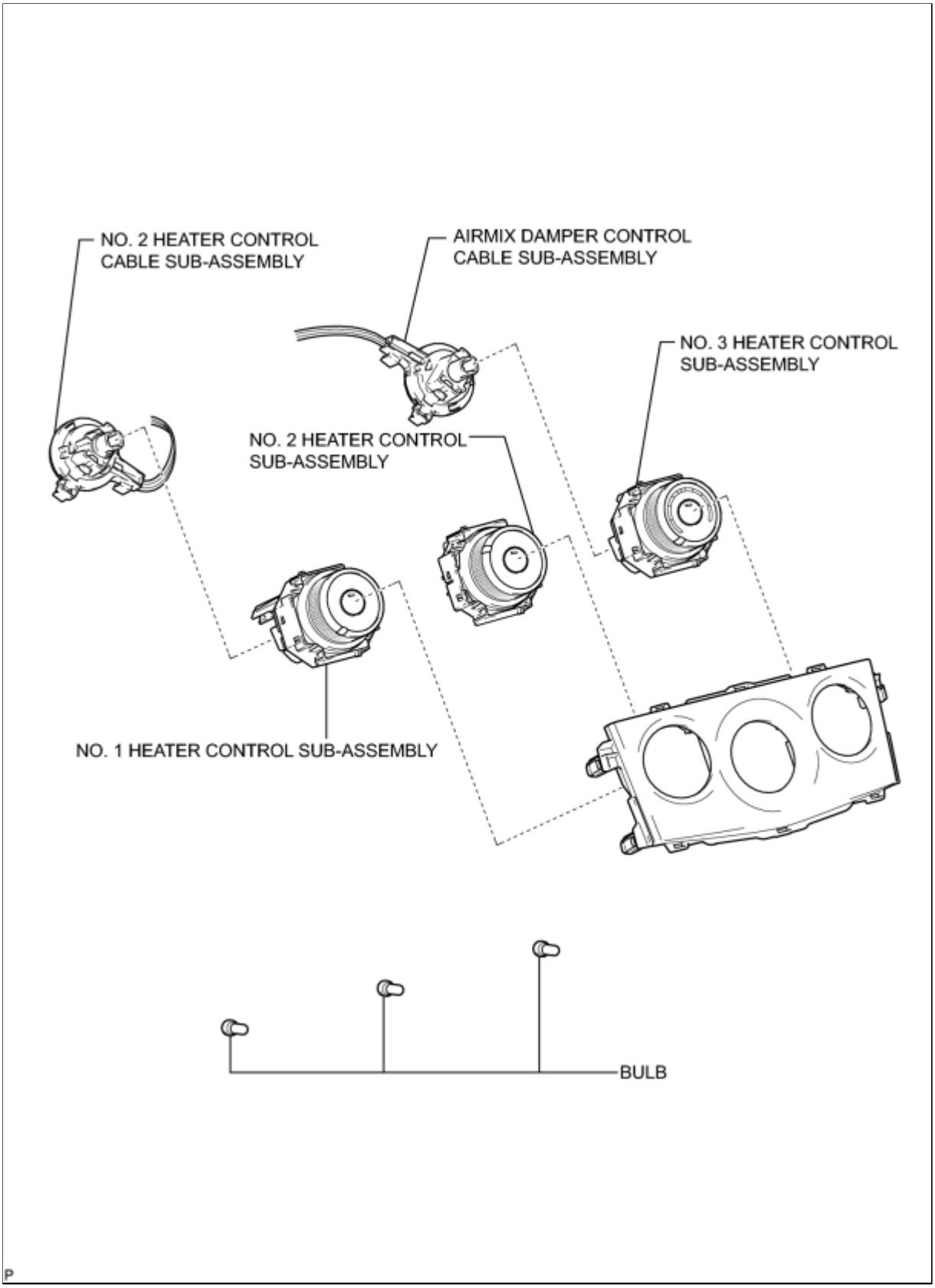
NO. 2 HEATER CONTROL CABLE SUB-ASSEMBLY
AIRMIX DAMPER CONTROL CABLE SUB-ASSEMBLY
NO. 3 HEATER CONTROL SUB-ASSEMBLY
NO. 2 HEATER CONTROL SUB-ASSEMBLY
NO. 1 HEATER CONTROL SUB-ASSEMBLY
BULB

P

Last Modified: 3-10-2010	6.4 A	**From:** 200901
Model Year: 2010	**Model:** Corolla	**Doc ID:** RM000002XM200VX
Title: HEATING / AIR CONDITIONING: AIR CONDITIONING PANEL (for Manual Air Conditioning System): REMOVAL (2010 Corolla)		

REMOVAL

1. REMOVE LOWER INSTRUMENT PANEL FINISH PANEL LH INFO

2. REMOVE LOWER INSTRUMENT PANEL FINISH PANEL RH INFO

3. REMOVE INSTRUMENT PANEL FINISH PANEL END LH INFO

4. REMOVE INSTRUMENT PANEL FINISH PANEL END RH INFO

5. REMOVE CENTER INSTRUMENT PANEL REGISTER ASSEMBLY INFO

6. REMOVE RADIO RECEIVER WITH BRACKET (w/o Navigation System) INFO

7. REMOVE CENTER INSTRUMENT CLUSTER FINISH PANEL SUB-ASSEMBLY (w/ Navigation System) INFO

8. REMOVE NAVIGATION RECEIVER WITH BRACKET (w/ Navigation System) INFO

9. REMOVE SHIFT LEVER KNOB SUB-ASSEMBLY (for Manual Transaxle) INFO

10. REMOVE SHIFT LEVER KNOB SUB-ASSEMBLY (for Automatic Transaxle) INFO

11. REMOVE CENTER NO. 1 INSTRUMENT CLUSTER FINISH PANEL ASSEMBLY (for Manual Transaxle) INFO

12. REMOVE CENTER NO. 1 INSTRUMENT CLUSTER FINISH PANEL ASSEMBLY (for Automatic Transaxle) INFO

13. REMOVE INSTRUMENT PANEL BOX ASSEMBLY INFO

14. REMOVE INSTRUMENT PANEL HOLE COVER INFO

15. REMOVE AIR CONDITIONING PANEL ASSEMBLY

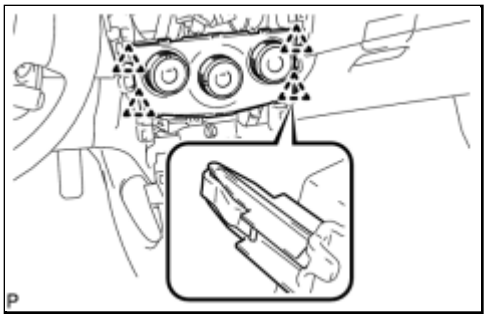

(a) Disengage the 4 clips and remove the air conditioning panel assembly.

(b) Disconnect each connector.

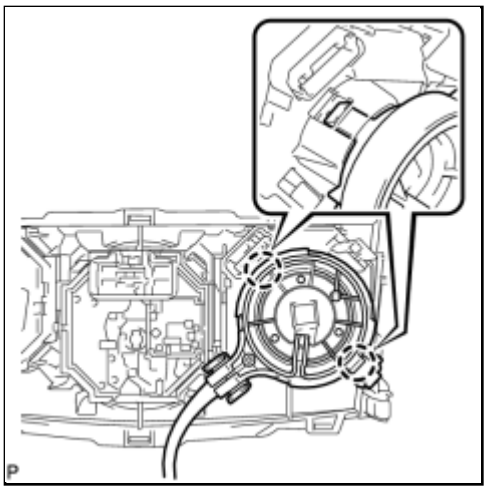

(c) Disengage the 2 claws and the No. 2 heater control cable sub-assembly.

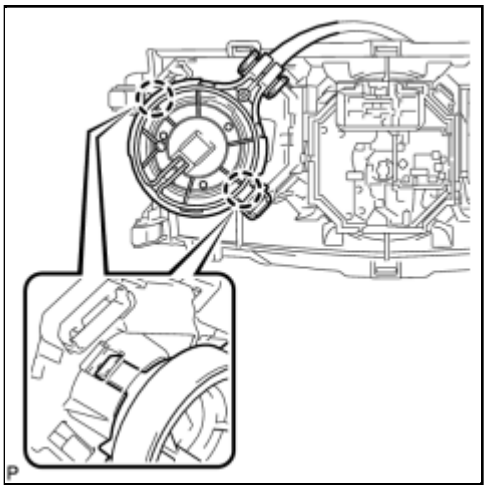

(d) Disengage the 2 claws and the airmix damper control cable sub-assembly.

Last Modified: 3-10-2010	6.4 A	**From:** 200901
Model Year: 2010	**Model:** Corolla	**Doc ID:** RM000002XM300FX
Title: HEATING / AIR CONDITIONING: AIR CONDITIONING PANEL (for Manual Air Conditioning System): DISASSEMBLY (2010 Corolla)		

DISASSEMBLY

1. REMOVE NO. 1 HEATER CONTROL SUB-ASSEMBLY

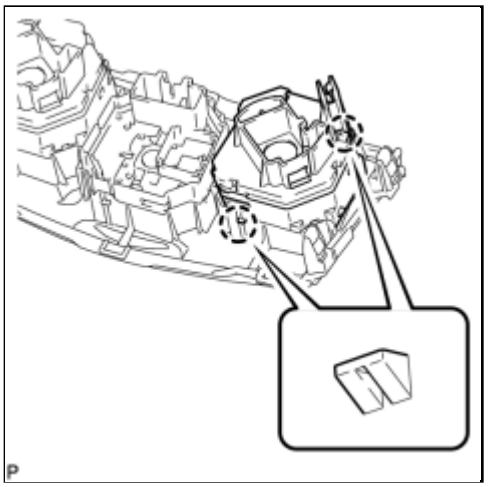

(a) Disengage the 2 claws and remove the No. 1 heater control sub-assembly.

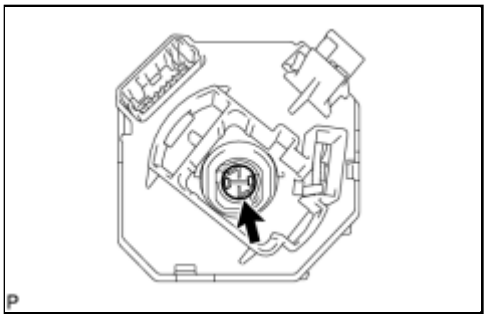

(b) Remove the bulb.

2. REMOVE NO. 2 HEATER CONTROL SUB-ASSEMBLY

(a) Disengage the 2 claws and remove the No. 2 heater control sub-assembly.

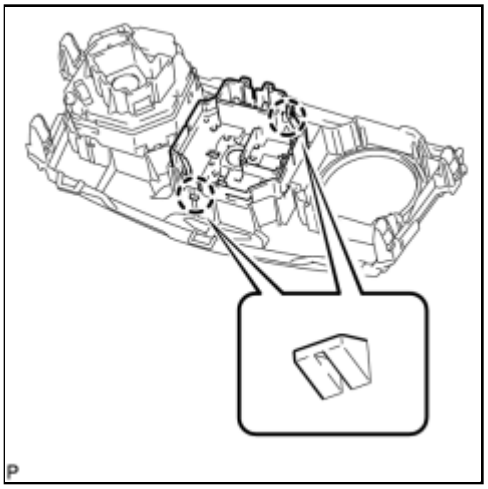

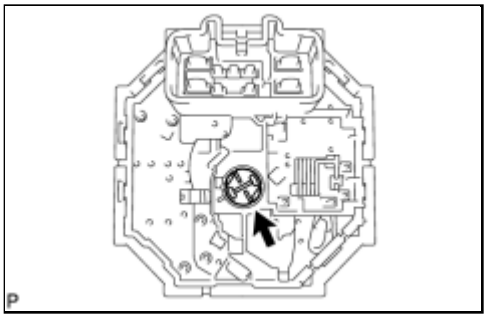

(b) Remove the bulb.

3. REMOVE NO. 3 HEATER CONTROL SUB-ASSEMBLY

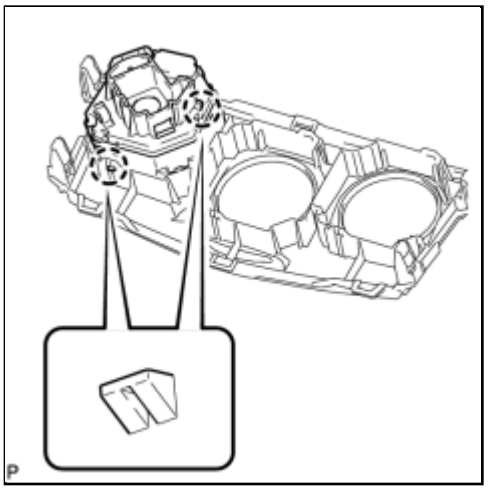

(a) Disengage the 2 claws and remove the No. 3 heater control sub-assembly.

(b) Remove the bulb.

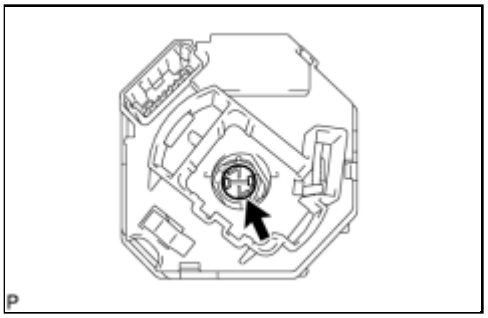

P

Last Modified: 3-10-2010	6.4 G	**From:** 200901
Model Year: 2010	**Model:** Corolla	**Doc ID:** RM00000314R00SX
Title: HEATING / AIR CONDITIONING: AIR CONDITIONING PANEL (for Manual Air Conditioning System): INSPECTION (2010 Corolla)		

INSPECTION

1. INSPECT NO. 1 HEATER CONTROL (AIR INLET CONTROL SWITCH)

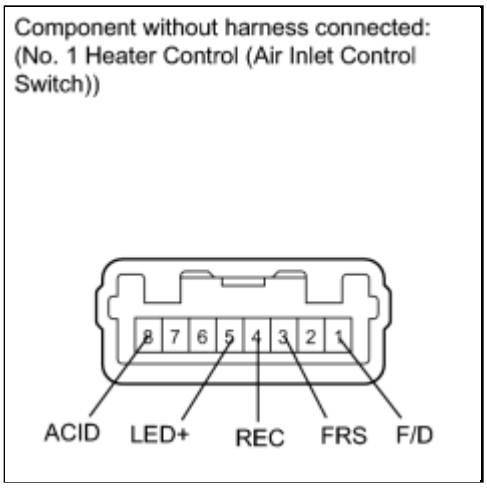

(a) Disconnect the connector from the No. 1 heater control (air inlet control switch).

(b) Measure the resistance according to the value(s) in the table below.

Standard Resistance:

TESTER CONNECTION	SWITCH CONDITION	SPECIFIED CONDITION
3 (FRS) - 4 (REC)	Air inlet control switch: FREE	Below 1 Ω
3 (FRS) - 4 (REC)	Air inlet control switch: LOCK	10 kΩ or higher
1 (F/D) - 8 (ACID)	Mode control dial: except Foot/DEF position and DEF position	10 kΩ or higher
1 (F/D) - 8 (ACID)	Mode control dial: Foot/DEF position or DEF position	Below 1 Ω

(c) Check that the indicator light comes on.

(1) Turn the No. 1 heater control (air inlet control switch) to LOCK.

(2) Connect a positive (+) lead from the battery to terminal 2 and a negative (-) lead from the battery to terminal 4, and check that the indicator light comes on.

OK:

The indicator light comes on.

(d) Check that the illumination comes on.

(1) Connect a positive (+) lead from the battery to terminal 7 and negative (-) to terminal 6, and

check that the illumination comes on.

OK:

The illumination comes on.

If the result is not as specified, replace the No. 1 heater control (air inlet control switch).

2. INSPECT NO. 2 HEATER CONTROL (BLOWER SWITCH)

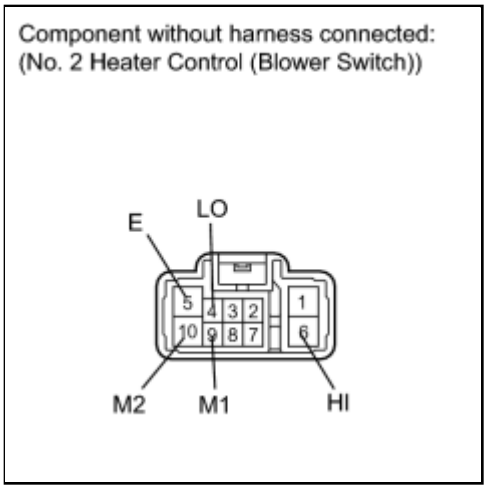

(a) Disconnect the connector from the No. 2 heater control (blower switch).

(b) Measure the resistance according to the value(s) in the table below.

Standard Resistance:

TESTER CONNECTION	SWITCH CONDITION	SPECIFIED CONDITION
4 (LO), 6 (HI), 9 (M1), 10 (M2) - 5 (E)	Blower switch: OFF	10 kΩ or higher
4 (LO) - 5 (E)	Blower switch: LO	Below 1 Ω
4 (LO), 9 (M1) - 5 (E)	Blower switch: M1	Below 1 Ω
4 (LO), 10 (M2) - 5 (E)	Blower switch: M2	Below 1 Ω
4 (LO), 6 (HI) - 5 (E)	Blower switch: HI	Below 1 Ω

If the resistance is not as specified, replace the No. 2 heater control (blower switch).

3. INSPECT NO. 3 HEATER CONTROL

(a) Disconnect the connector from the No. 3 heater control.

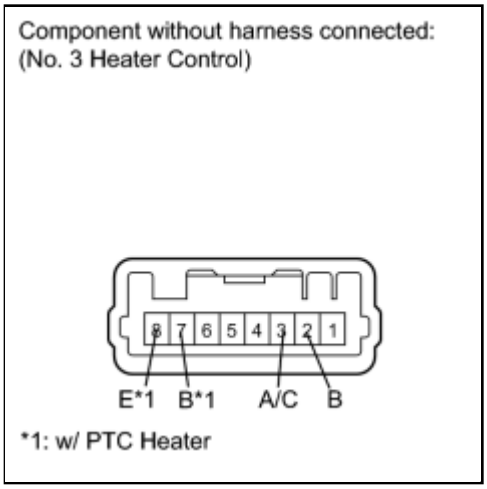

(b) Measure the resistance according to the value(s) in the table below.

Standard Resistance:

TESTER CONNECTION	SWITCH CONDITION	SPECIFIED CONDITION
2 (B) - 3 (A/C)	A/C switch: LOCK	Below 1 Ω
2 (B) - 3 (A/C)	A/C switch: FREE	10 kΩ or higher
7 (B) - 8 (E)*1	Air mix control dial: MAX HOT position	Below 1 Ω
7 (B) - 8 (E)*1	Air mix control dial: except MAX HOT position	10 kΩ or higher

HINT:

***1: w/ PTC heater**

(c) Check that the indicator light comes on.

(1) Connect a positive (+) lead from the battery to terminal 3 and a negative (-) lead from the battery to terminal 4, and check that the indicator light comes on.

OK:

The indicator light comes on.

(d) Check that the illumination comes on.

(1) Connect a positive (+) lead from the battery to terminal 5 and a negative (-) lead from the battery to terminal 6, and check that the illumination comes on.

OK:

The illumination comes on.

If the result is not as specified, replace the No. 3 heater control.

Last Modified: 3-10-2010	6.4 A	**From:** 200901
Model Year: 2010	**Model:** Corolla	**Doc ID:** RM000002XM400FX
Title: HEATING / AIR CONDITIONING: AIR CONDITIONING PANEL (for Manual Air Conditioning System): REASSEMBLY (2010 Corolla)		

REASSEMBLY

1. INSTALL NO. 3 HEATER CONTROL SUB-ASSEMBLY

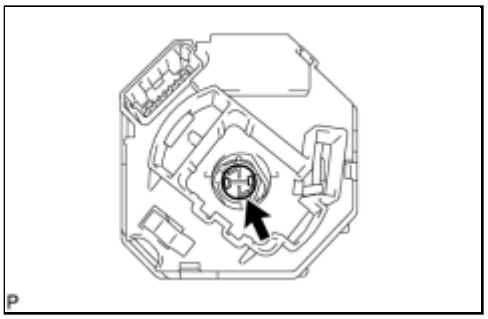

(a) Install the bulb.

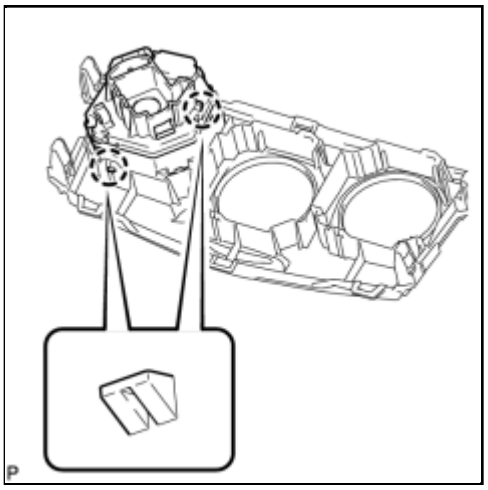

(b) Engage the 2 claws and install the No. 3 heater control sub-assembly.

2. INSTALL NO. 2 HEATER CONTROL SUB-ASSEMBLY

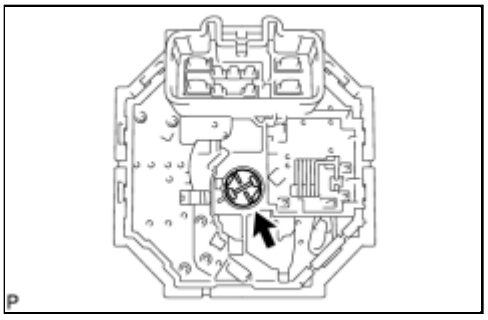

(a) Install the bulb.

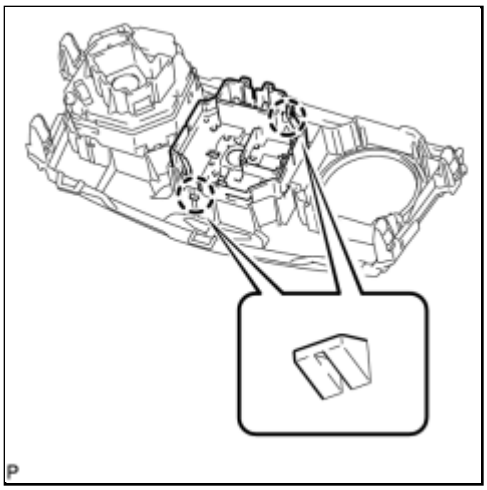

(b) Engage the 2 claws and install the No. 2 heater control sub-assembly.

3. INSTALL NO. 1 HEATER CONTROL SUB-ASSEMBLY

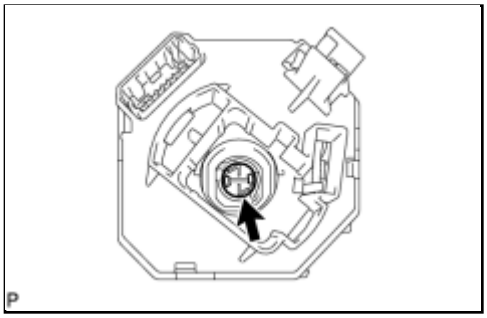

(a) Install the bulb.

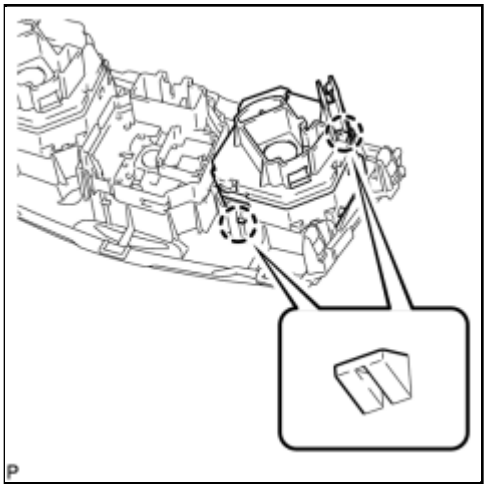

(b) Engage the 2 claws and install the No. 1 heater control sub-assembly.

Last Modified: 3-10-2010	6.4 A	**From:** 200901
Model Year: 2010	**Model:** Corolla	**Doc ID:** RM000002XM000VX
Title: HEATING / AIR CONDITIONING: AIR CONDITIONING PANEL (for Manual Air Conditioning System): INSTALLATION (2010 Corolla)		

INSTALLATION

1. INSTALL AIR CONDITIONING PANEL ASSEMBLY

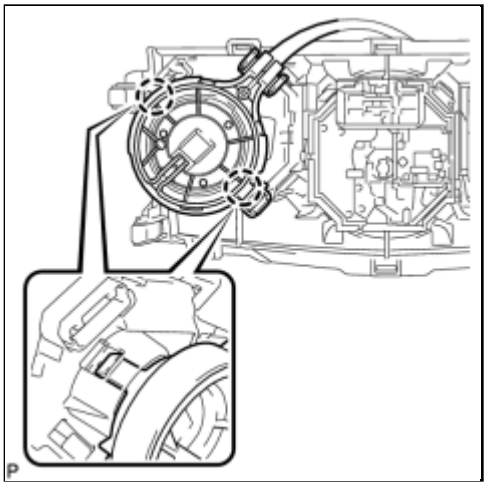

(a) Engage the 2 claws and the airmix damper control cable sub-assembly.

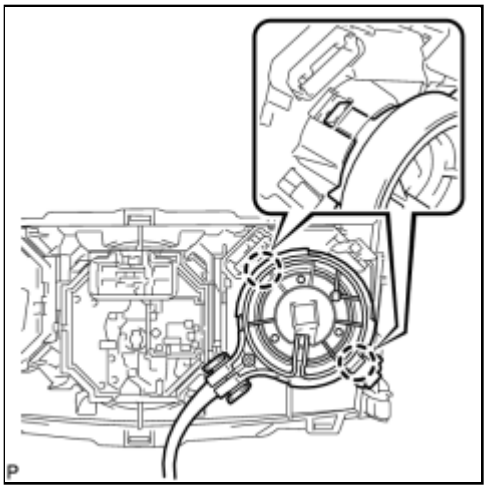

(b) Engage the 2 claws and the No. 2 heater control cable sub-assembly.

(c) Connect each connector.

(d) Engage the 4 clips and install the air conditioning panel assembly.

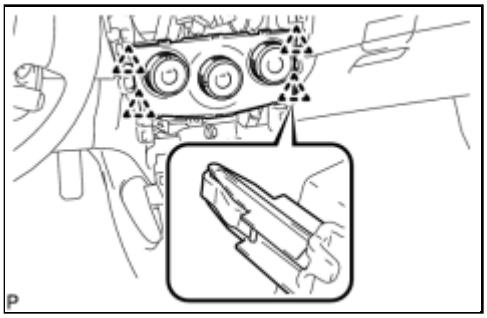

2. INSTALL INSTRUMENT PANEL HOLE COVER INFO

3. INSTALL INSTRUMENT PANEL BOX ASSEMBLY INFO

4. INSTALL CENTER NO. 1 INSTRUMENT CLUSTER FINISH PANEL ASSEMBLY (for Manual Transaxle) INFO

5. INSTALL CENTER NO. 1 INSTRUMENT CLUSTER FINISH PANEL ASSEMBLY (for Automatic Transaxle) INFO

6. INSTALL SHIFT LEVER KNOB SUB-ASSEMBLY (for Manual Transaxle) INFO

7. INSTALL SHIFT LEVER KNOB SUB-ASSEMBLY (for Automatic Transaxle) INFO

8. INSTALL RADIO RECEIVER WITH BRACKET (w/o Navigation System) INFO

9. INSTALL CENTER INSTRUMENT CLUSTER FINISH PANEL SUB-ASSEMBLY (w/ Navigation System) INFO

10. INSTALL NAVIGATION RECEIVER WITH BRACKET (w/ Navigation System) INFO

11. INSTALL CENTER INSTRUMENT PANEL REGISTER ASSEMBLY INFO

12. INSTALL INSTRUMENT PANEL FINISH PANEL END LH INFO

13. INSTALL INSTRUMENT PANEL FINISH PANEL END RH INFO

14. INSTALL LOWER INSTRUMENT PANEL FINISH PANEL LH INFO

15. INSTALL LOWER INSTRUMENT PANEL FINISH PANEL RH INFO

Last Modified: 3-10-2010	6.4 K	**From:** 200901
Model Year: 2010	**Model:** Corolla	**Doc ID:** RM000003FXT001X
Title: HEATING / AIR CONDITIONING: AIR CONDITIONING PRESSURE SENSOR: COMPONENTS (2010 Corolla)		

COMPONENTS

ILLUSTRATION

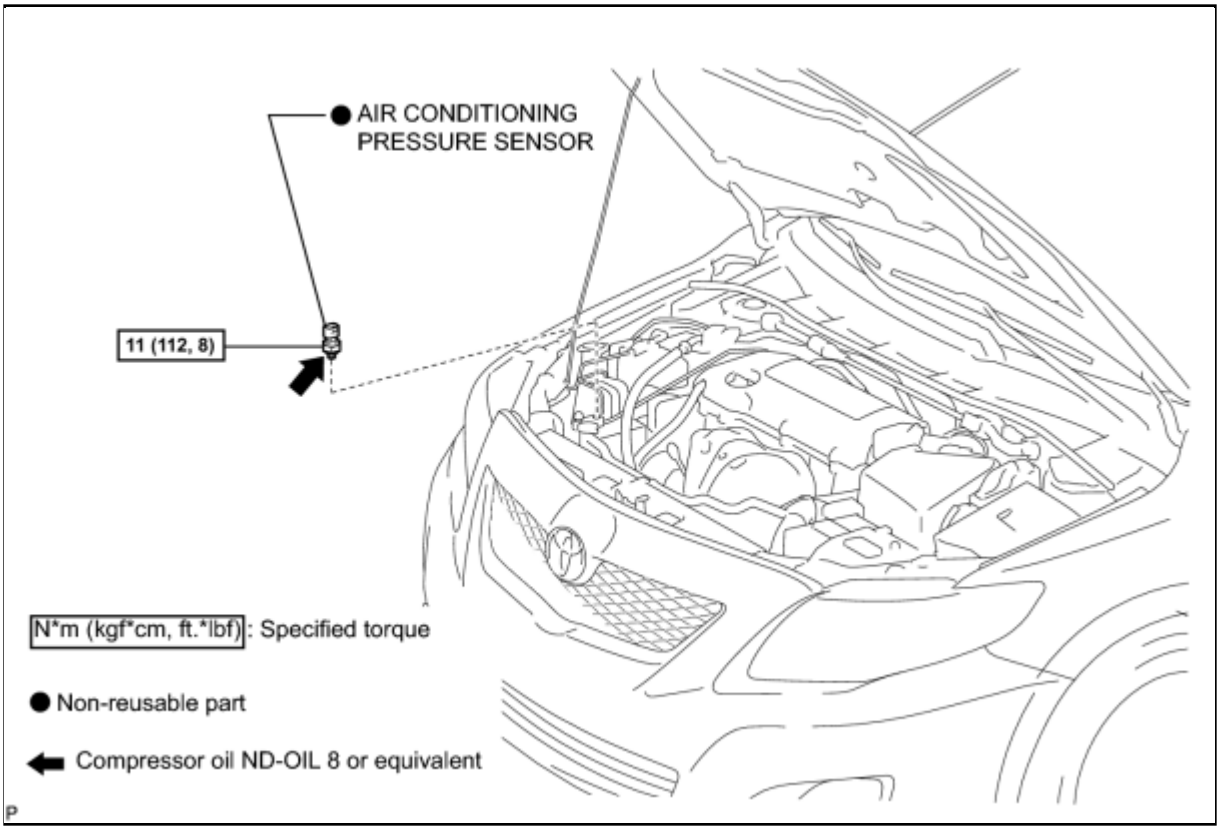

Last Modified: 3-10-2010	6.4 G	**From:** 200901
Model Year: 2010	**Model:** Corolla	**Doc ID:** RM00000202W01RX
Title: HEATING / AIR CONDITIONING: AIR CONDITIONING PRESSURE SENSOR: ON-VEHICLE INSPECTION (2010 Corolla)		

ON-VEHICLE INSPECTION

1. INSPECT A/C PRESSURE SENSOR

(a) Install the manifold gauge set.

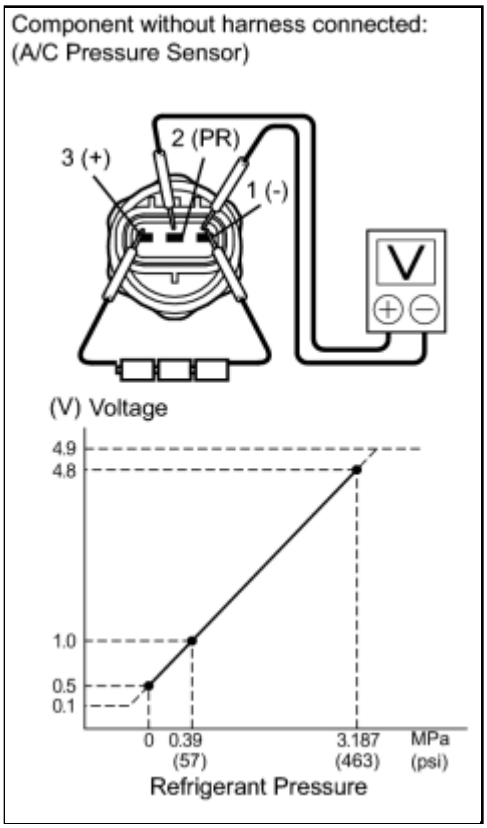

(b) Disconnect the connector from the A/C pressure sensor.

(c) Connect the three 1.5 V dry cell batteries' positive (+) lead to terminal 3 and the negative (-) lead to terminal 1.

(d) Connect the voltmeter's positive (+) lead to terminal 2 and the negative (-) lead to terminal 1.

(e) Measure the voltage according to the value(s) in the table below.

Standard Voltage:

TESTER CONNECTION	CONDITION	SPECIFIED CONDITION
2 (PR) - 1 (-)	Refrigerant pressure: 0.39 to 3.187 MPa (57 to 463 psi)	1.0 to 4.8 V

If the voltage is not as specified, replace the A/C pressure sensor.

Last Modified: 3-10-2010	6.4 A	**From:** 200901
Model Year: 2010	**Model:** Corolla	**Doc ID:** RM000003CY1004X
Title: HEATING / AIR CONDITIONING: AIR CONDITIONING PRESSURE SENSOR: REMOVAL (2010 Corolla)		

REMOVAL

1. RECOVER REFRIGERANT FROM REFRIGERATION SYSTEM INFO

2. REMOVE AIR CONDITIONING PRESSURE SENSOR

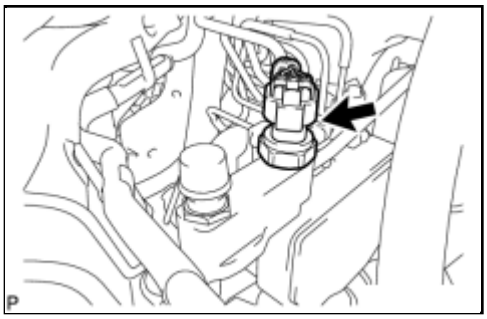

(a) Disconnect the connector.

(b) Remove the air conditioning pressure sensor.

Last Modified: 3-10-2010	6.4 A	**From:** 200901
Model Year: 2010	**Model:** Corolla	**Doc ID:** RM000003CXZ004X
Title: HEATING / AIR CONDITIONING: AIR CONDITIONING PRESSURE SENSOR: INSTALLATION (2010 Corolla)		

INSTALLATION

1. INSTALL AIR CONDITIONING PRESSURE SENSOR

(a) Sufficiently apply compressor oil to a new air conditioning pressure sensor.

Compressor oil:
ND-OIL 8 or equivalent

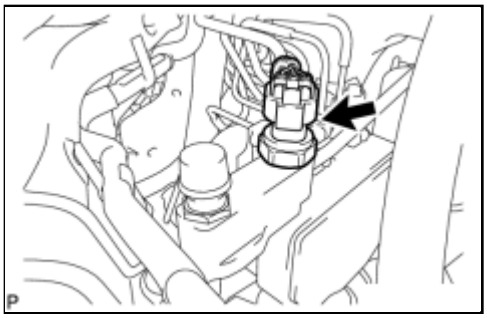

(b) Install the new air conditioning pressure sensor.

Torque: 11 N·m (112 kgf·cm, 8ft·lbf)

(c) Connect the connector.

2. CHARGE WITH REFRIGERANT INFO

3. WARM UP ENGINE INFO

4. INSPECT FOR REFRIGERANT LEAK INFO

Last Modified: 3-10-2010	6.4 R	**From:** 200901
Model Year: 2010	**Model:** Corolla	**Doc ID:** RM0000026DG019X
Title: HEATING / AIR CONDITIONING: AIR CONDITIONING SYSTEM (for Automatic Air Conditioning System): PARTS LOCATION (2010 Corolla)		

PARTS LOCATION

ILLUSTRATION

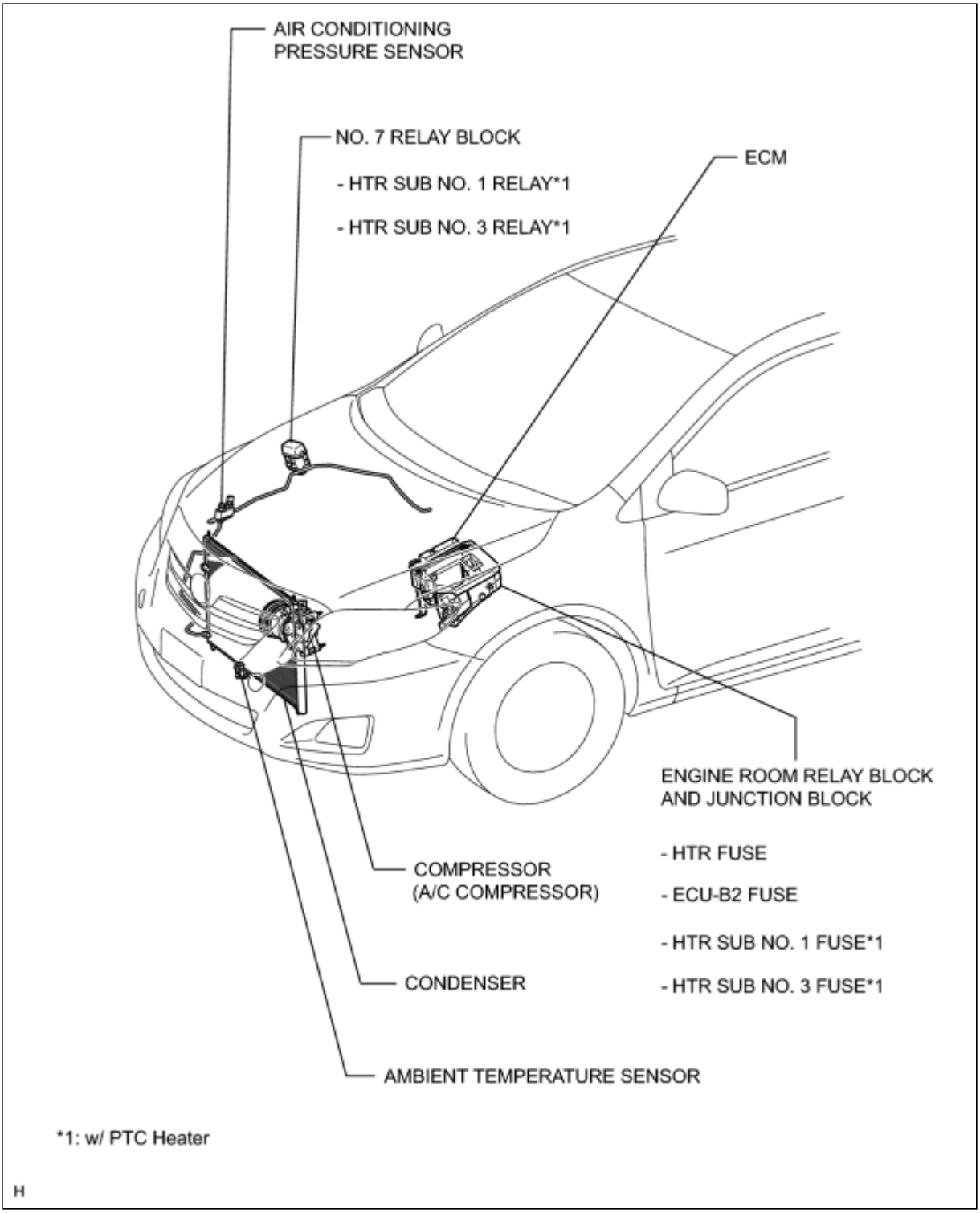

ILLUSTRATION

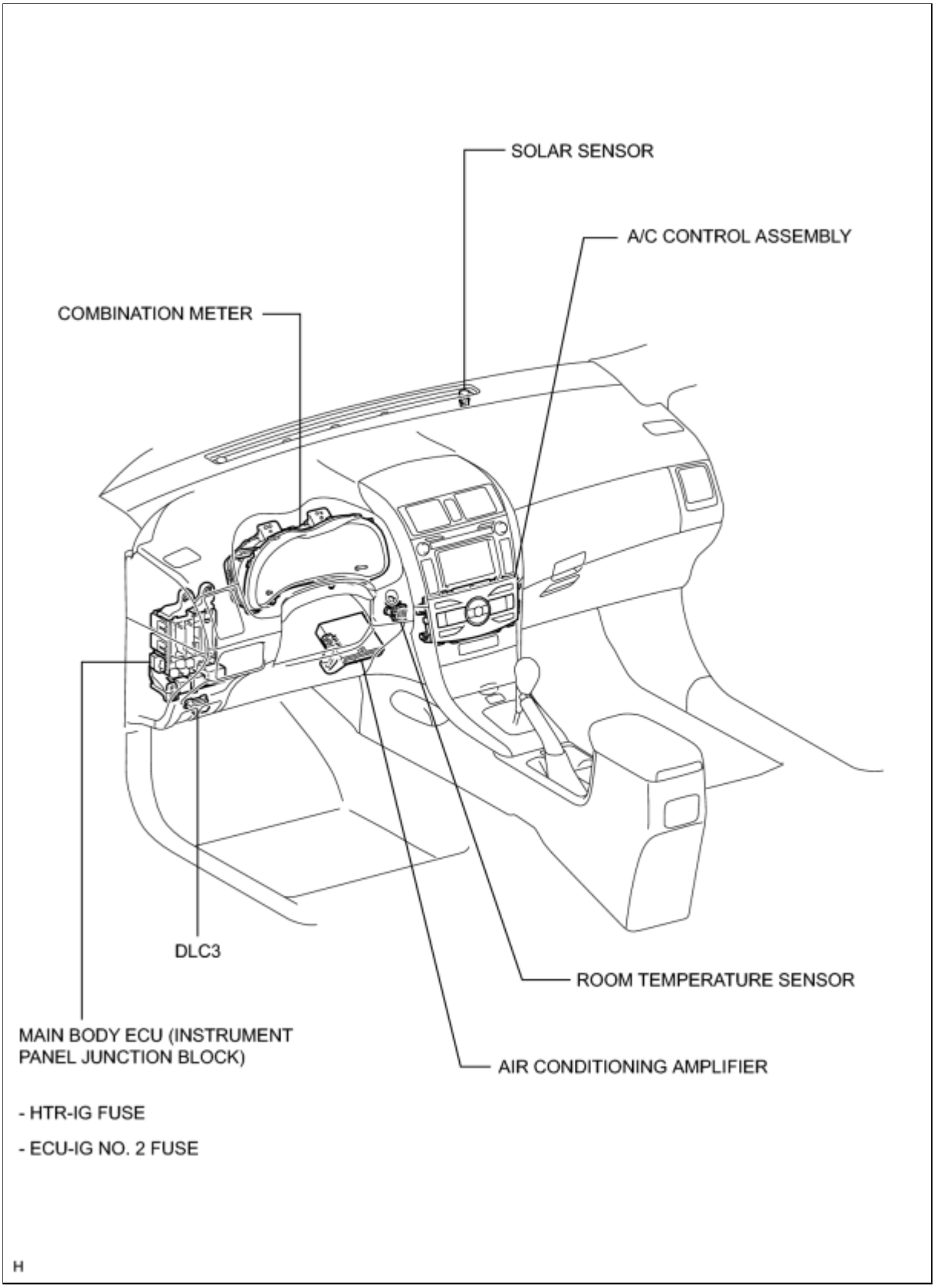

ILLUSTRATION

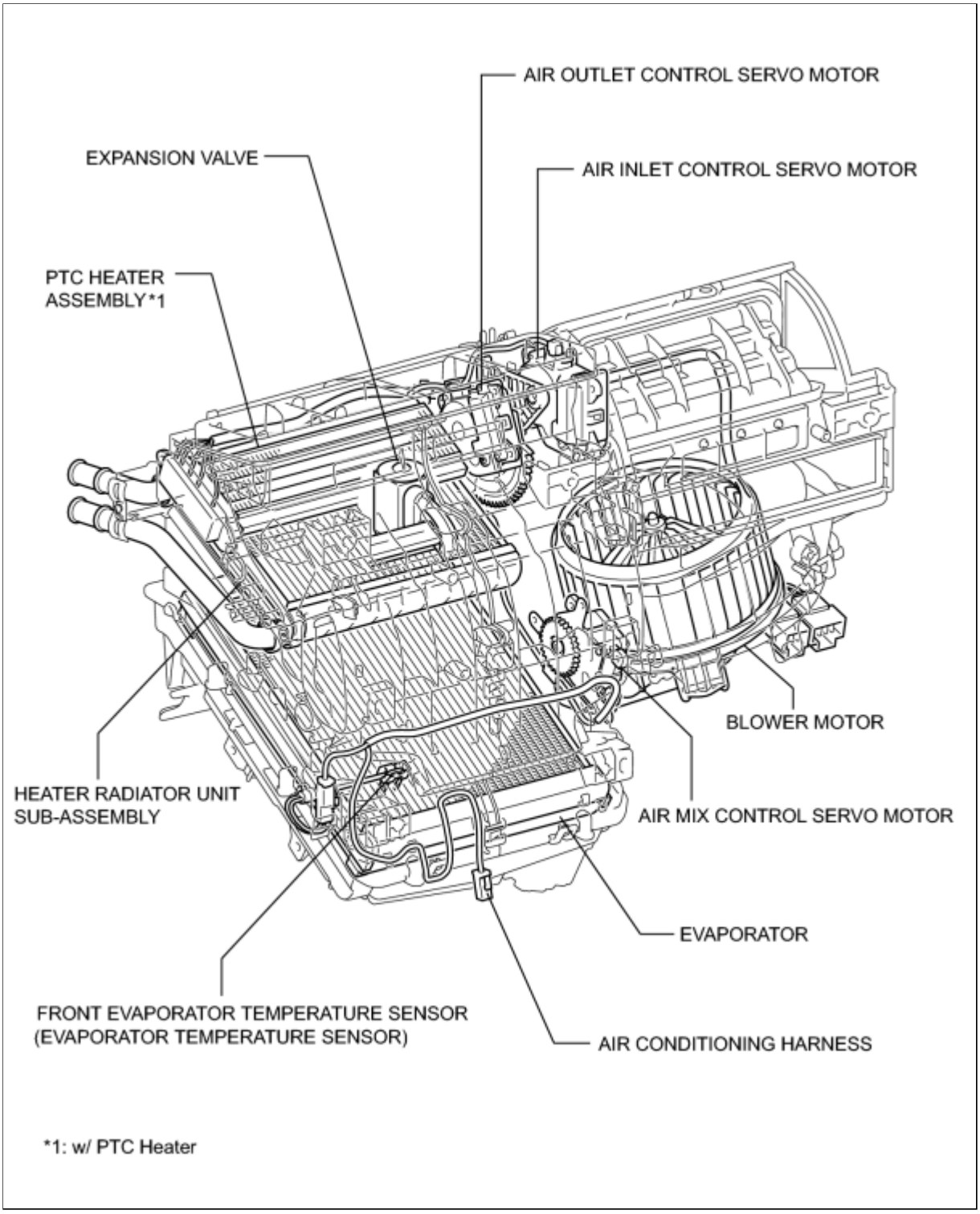
AIR OUTLET CONTROL SERVO MOTOR
EXPANSION VALVE
AIR INLET CONTROL SERVO MOTOR
PTC HEATER ASSEMBLY*1
BLOWER MOTOR
HEATER RADIATOR UNIT SUB-ASSEMBLY
AIR MIX CONTROL SERVO MOTOR
EVAPORATOR
FRONT EVAPORATOR TEMPERATURE SENSOR (EVAPORATOR TEMPERATURE SENSOR)
AIR CONDITIONING HARNESS
*1: w/ PTC Heater

Last Modified: 3-10-2010	6.4 L	**From:** 200901
Model Year: 2010	**Model:** Corolla	**Doc ID:** RM000000Y5Q03FX
Title: HEATING / AIR CONDITIONING: AIR CONDITIONING SYSTEM (for Automatic Air Conditioning System): PRECAUTION (2010 Corolla)		

PRECAUTION

1. EXPRESSIONS OF IGNITION SWITCH

(a) The type of ignition switch used on this model differs according to the specifications of the vehicle. The expressions listed in the table below are used in this section.

SWITCH TYPE		IGNITION SWITCH (POSITION)	ENGINE SWITCH (CONDITION)
Expression	Ignition switch off	LOCK	Off
	Ignition switch ON	ON	On (IG)
	Ignition switch ACC	ACC	On (ACC)
	Engine start	START	Start

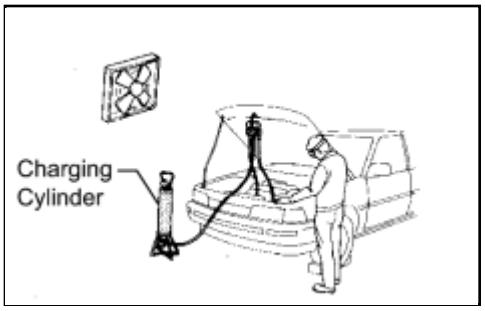

2. DO NOT HANDLE REFRIGERANT IN AN ENCLOSED AREA OR NEAR AN OPEN FLAME

3. ALWAYS WEAR EYE PROTECTION

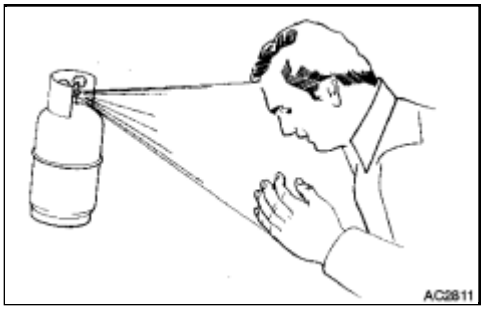

4. BE CAREFUL NOT TO GET LIQUID REFRIGERANT IN YOUR EYES OR ON YOUR SKIN

If liquid refrigerant gets in your eyes or on your skin:

(a) Wash the area with lots of cold water.

CAUTION:

Do not rub your eyes or skin.

(b) Apply clean petroleum jelly to the skin.

(c) Go immediately to a hospital or see a physician for professional treatment.

5. NEVER HEAT CONTAINER OR EXPOSE THE CONTAINER TO AN OPEN FLAME

6. BE CAREFUL NOT TO DROP CONTAINER OR APPLY PHYSICAL SHOCKS TO IT

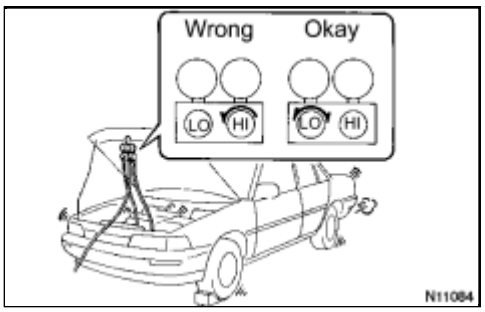

7. DO NOT OPERATE COMPRESSOR WITHOUT ENOUGH REFRIGERANT IN REFRIGERANT SYSTEM

If there is not enough refrigerant in the A/C system, oil lubrication will be insufficient and the compressor may be damaged.

Necessary care should be taken to avoid this.

8. DO NOT OPEN HIGH PRESSURE MANIFOLD VALVE WHILE COMPRESSOR IS OPERATING

(a) Open and close only the low pressure valve.

If the high pressure valve is opened, refrigerant flows in the reverse direction, causing the charging cylinder to rupture.

9. BE CAREFUL NOT TO OVERCHARGE SYSTEM WITH REFRIGERANT

If refrigerant is overcharged, it causes problems such as insufficient cooling, poor fuel economy, engine overheating, etc.

10. DO NOT OPERATE ENGINE AND COMPRESSOR WITH NO REFRIGERANT

CAUTION:

Doing so may damage the inside of the compressor because the compressor parts always move regardless of whether the A/C system is turned on or off.

11. SUPPLEMENTAL RESTRAINT SYSTEM (SRS)

(a) This vehicle is equipped with an SRS (Supplemental Restraint System) consisting of the driver, front passenger, side, and curtain shield airbags. Failure to carry out service operations in the correct sequence could cause the SRS to unexpectedly deploy during servicing, possibly leading to a serious accident. Before servicing (including removal or installation of parts, inspection or replacement), be sure to read the precautionary notices INFO .

12. GENERAL PRECAUTION

(a) While using the battery during inspection, do not bring the positive and negative tester probes too close to each other as a short circuit may occur.

Last Modified: 3-10-2010	6.4 D	**From:** 200901
Model Year: 2010	**Model:** Corolla	**Doc ID:** RM000001O7U026X
Title: HEATING / AIR CONDITIONING: AIR CONDITIONING SYSTEM (for Automatic Air Conditioning System): SYSTEM DESCRIPTION (2010 Corolla)		

SYSTEM DESCRIPTION

1. GENERAL

The air conditioning system has the following controls:

CONTROL	OUTLINE
Neural Network Control	This control is capable of effecting complex control by artificially simulating the information processing method of the nervous system of living organisms in order to establish a complex input or output relationship that is similar to a human brain.
Outlet Air Temperature Control	In compliance with the temperature set at the temperature control switch, the neural network control calculates the outlet temperature based on the input signals from various sensors. In addition, corrections in accordance with the signals from the evaporative temperature sensor and engine coolant temperature sensor are added to control the outlet air temperature.
Blower Control	Controls the blower motor in accordance with the airflow volume that has been calculated by the neural network control based on the input signals from various sensors.
Air Outlet Control	Automatically switches the outlets in accordance with the outlet mode ratio that has been calculated by the neural network control based on the input signals from various sensors.
Air Inlet Control	Automatically controls the air inlet control damper in accordance with the airflow volume that has been calculated by the neural network control.
Variable Capacity Compressor Control	Controls the compressor to turn ON or OFF and the discharge capacity based on the signals from various sensors.
Ambient Temperature Indication Control	Based on the signals from the ambient temperature sensor, this control calculates the ambient temperature, which is then corrected in the air conditioning amplifier, and shown in the multi-information display in the combination meter.
Rear Window Defogger Control	Switches the rear defogger and outside rear view mirror heaters on for 15 minutes when the rear defogger button is pressed. Switches them OFF if the button is pressed while they are operating.
Self-diagnosis	Checks the sensors in accordance with the operation of air conditioning switches, then temperature setting displays a DTC (Diagnosis Trouble Code) to indicate if there is a malfunction or not (sensor check function).
	Drives the actuators through a predetermined sequence in accordance with the operation of the air conditioning switches (actuator check function).

2. NEURAL NETWORK CONTROL

- In previous automatic air conditioning systems, the A/C amplifier determined the required outlet air temperature and blower air volume in accordance with the calculation formula that has been obtained based on information received from the sensors.

  However, because the senses of a person are rather complex, a given temperature is sensed differently, depending on the environment in which the person is situated. For example, a given amount of solar radiation can feel comfortably warm in a cold climate, or extremely uncomfortable in a hot climate. Therefore, as a technique for effecting a higher level of control, a neural network has been adopted in the automatic air conditioning system. With this technique, the data that has been collected under varying environmental conditions is stored in the A/C amplifier. The A/C amplifier can then effect control to provide enhanced air conditioning comfort.
- The neural network control consists of neurons in the input layer, intermediate layer, and output layer. The input layer neurons process the input data of the outside temperature, the amount of sunlight, and the cabin temperature based on the outputs of the switches and sensors, and output them to the intermediate layer neurons. Based on this data, the intermediate layer neurons adjust the strength of the links among the neurons. The sum of these is then calculated by the output layer neurons in the form of the required outlet temperature, solar correction, target airflow volume, and outlet mode control volume. Accordingly, the A/C amplifier controls the servo motors and blower motor in accordance with the control volumes that have been calculated by the neural network control.

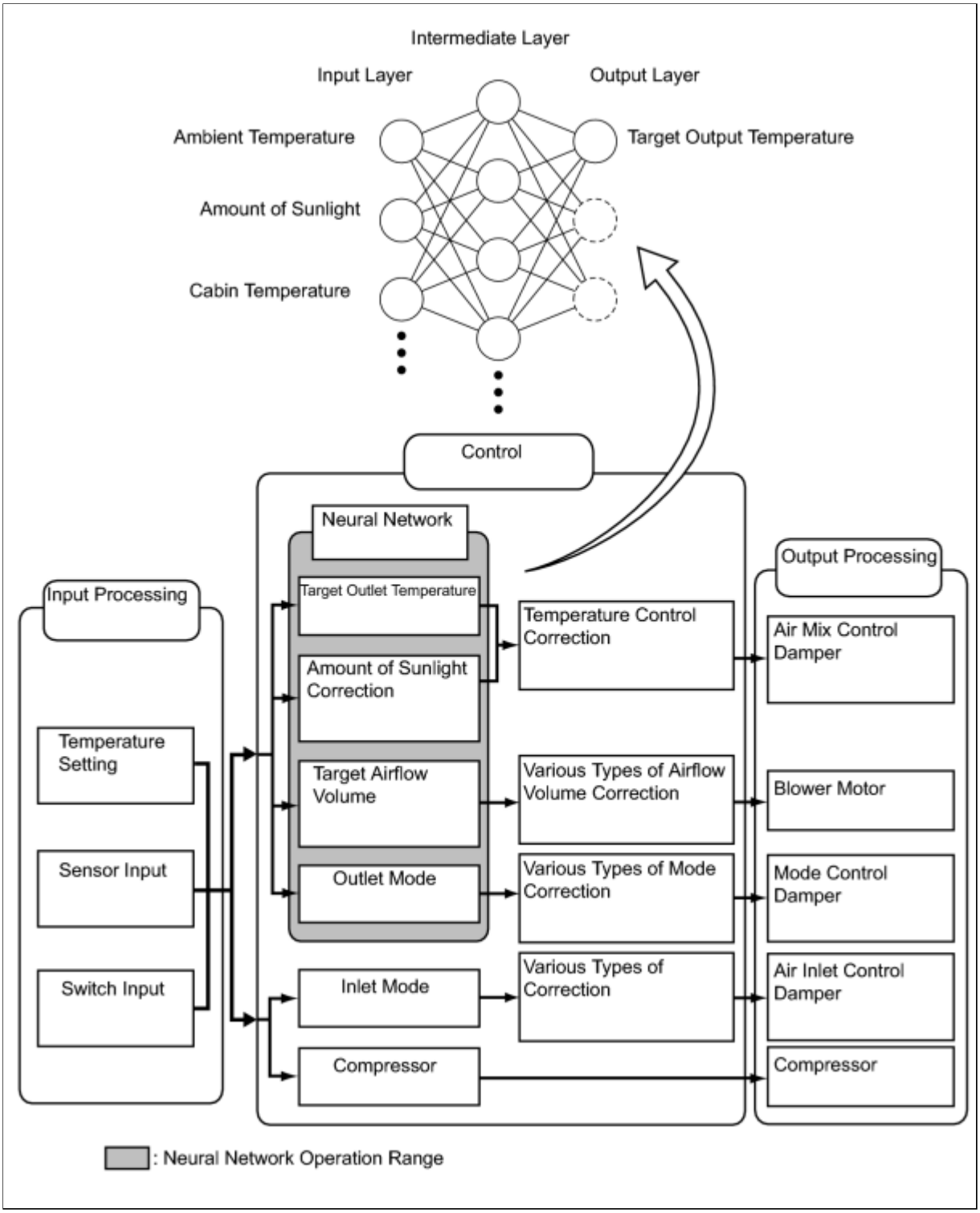

3. MODE POSITION AND DAMPER OPERATION

(a) Mode position and damper operation

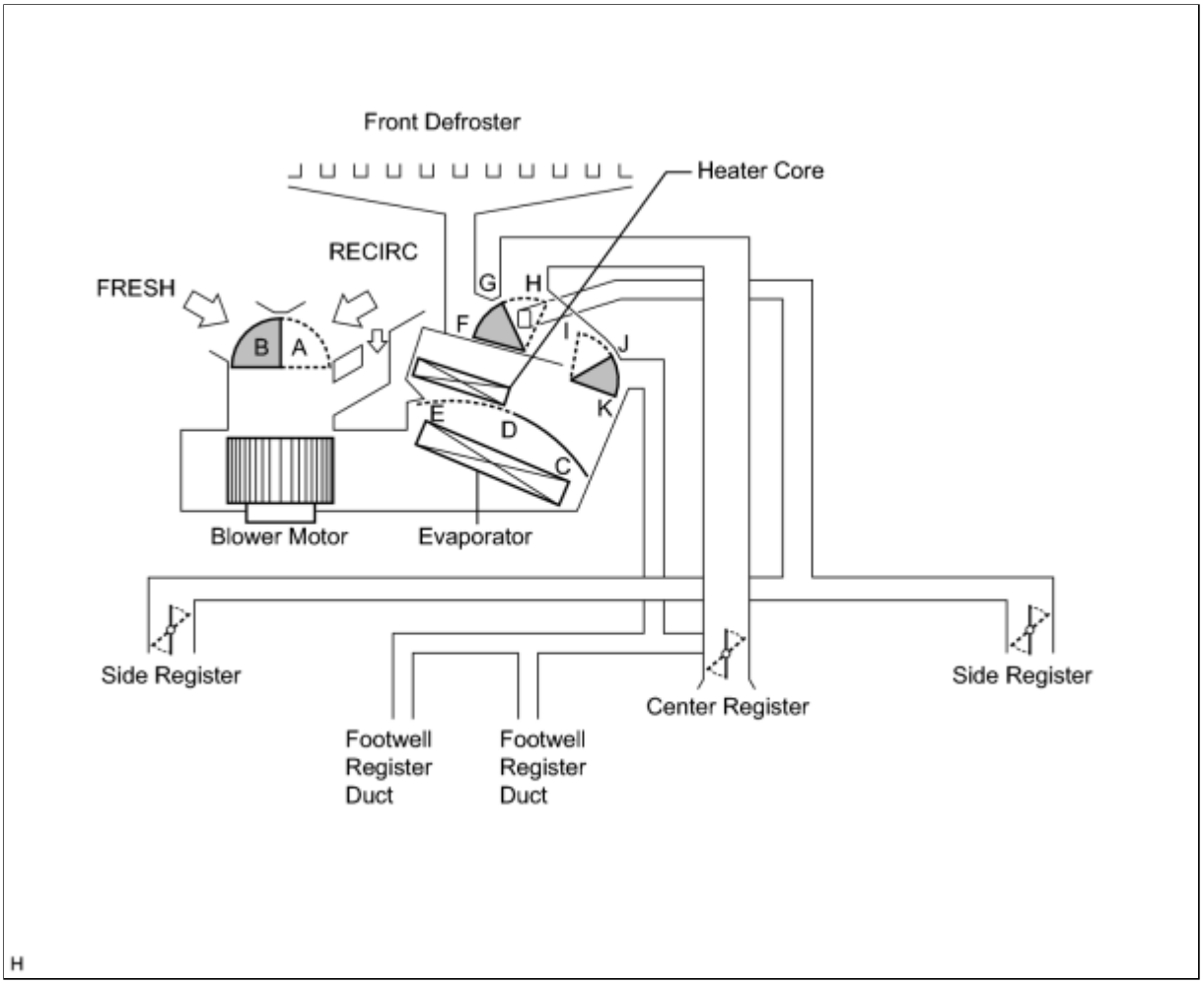

Functions of Main Dampers:

CONTROL DAMPER	OPERATION POSITION	DAMPER POSITION	OPERATION
Air Inlet Control Damper	FRESH	A	Brings in fresh air.
	RECIRC	B	Recirculates internal air.
Air Mix Control Damper	MAX COLD to MAX HOT Temperature Setting 16°C (61°F) to 30°C (86°F)	C - D - E	Varies the mixture ratio of the fresh air and the recirculation air in order to regulate the temperature continuously from HOT to COLD.
Mode Control Damper	DEF 	H, K	Defrosts the windshield through the front defroster and side register.
	FOOT/DEF 	H, J	Defrosts the windshield through the front defroster and side register, while air is also blown out from the front foot well register ducts.

CONTROL DAMPER	OPERATION POSITION	DAMPER POSITION	OPERATION
	FOOT 	H, I	Air blows out of the footwell register duct and side register. In addition, air blows out slightly from the front defroster.
	BI-LEVEL 	F, I	Air blows out of the center register, side register, and front footwell register ducts.
	FACE 	F, K	Air blows out of the center register and side register.

4. AIR OUTLETS AND AIRFLOW VOLUME

(a) Air Outlets and Airflow Volume

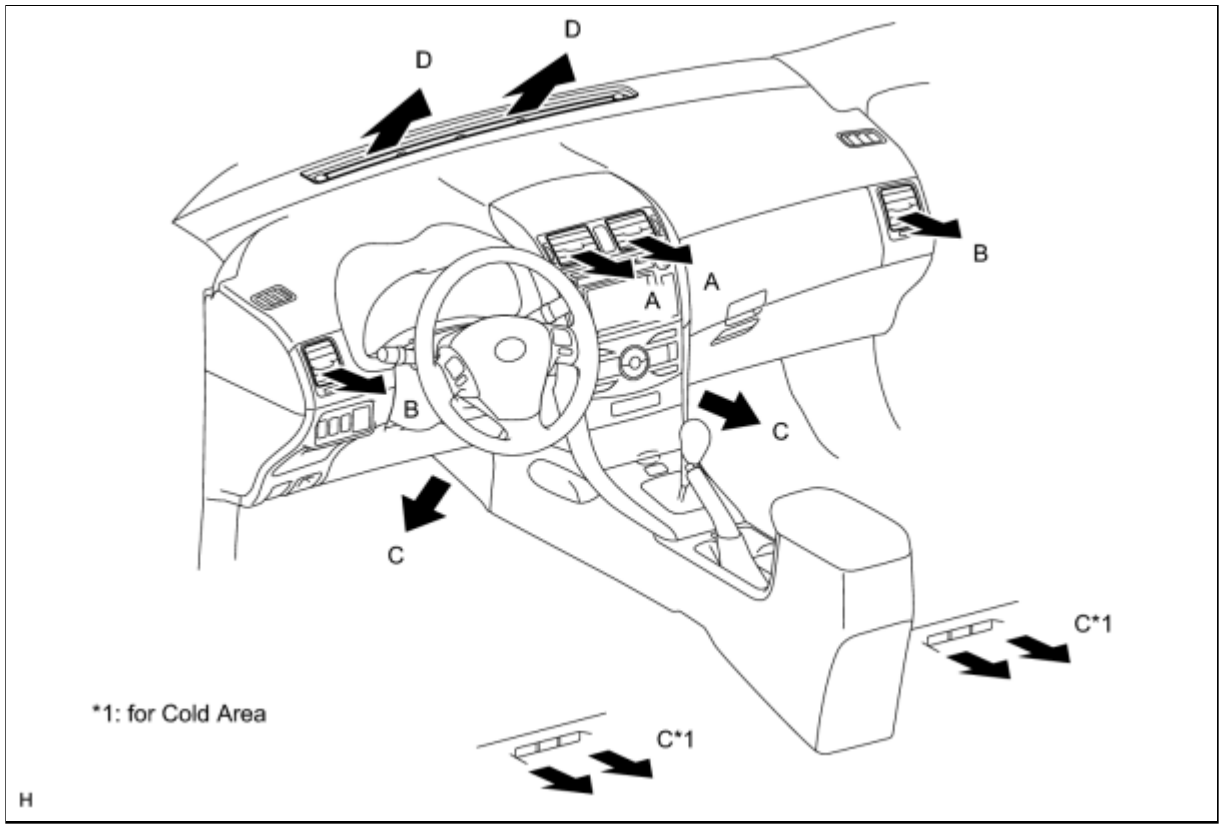

INDICATION (MODE)	CTR	SIDE	FOOTWELL	DEFROSTER
	A	B	C	D

INDICATION (MODE)	CTR	SIDE	FOOTWELL	DEFROSTER
	A	B	C	D
 FACE	◯	◯	—	—
 BI-LEVEL	○	○	◯	—
 FOOT	—	○	◯	○
 FOOT/DEF	—	○	○	○
 DEF	—	○	—	◯

The size of the circle ○ indicates the proportion of airflow volume.

5. BLOWER MOTOR

The blower motor has a built-in blower controller, and is controlled with duty control from the A/C amplifier.

6. BUS CONNECTOR

(a) A BUS connector is used in the wire harness connection that connects the servo motor from the A/C amplifier.

(1) for TMC Made

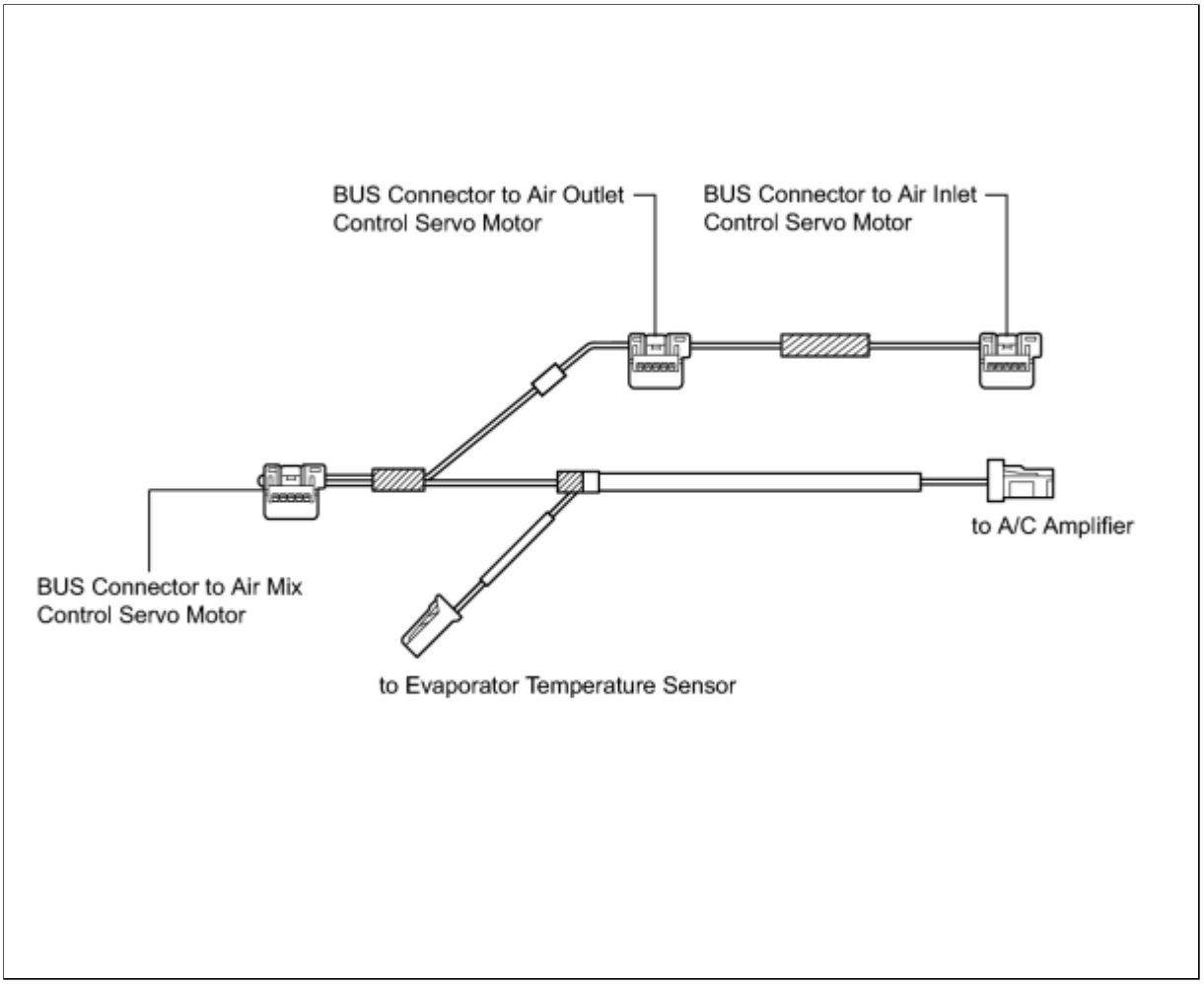

(2) for NUMMI, TMMC Made

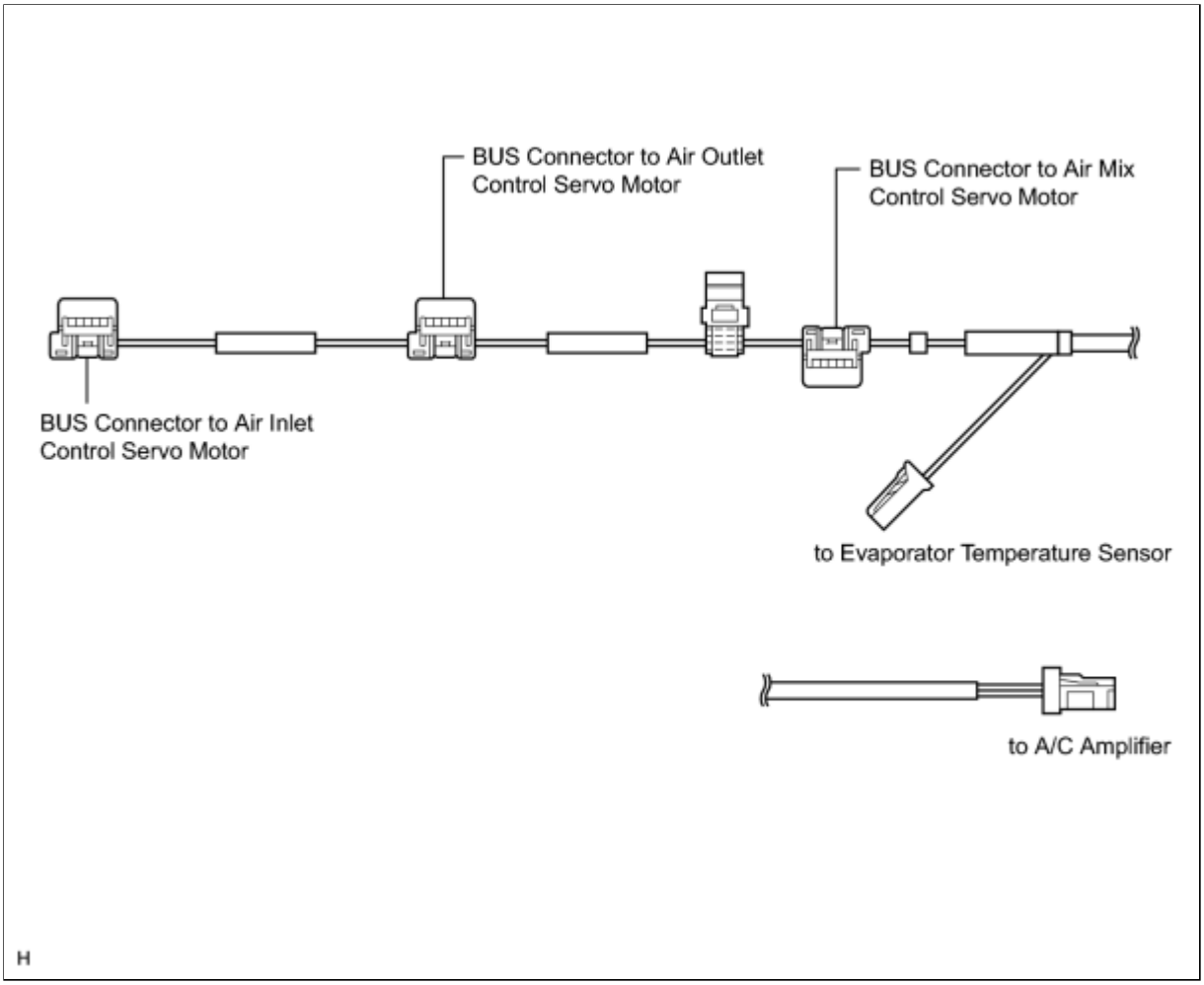

(b) Each BUS connector has a built-in communication/driver IC which communicates with each servo motor connector, actuates the servo motor, and has a position detection function. This enables bus communication for the servo motor wire harness, for a more lightweight construction and a reduced number of wires.

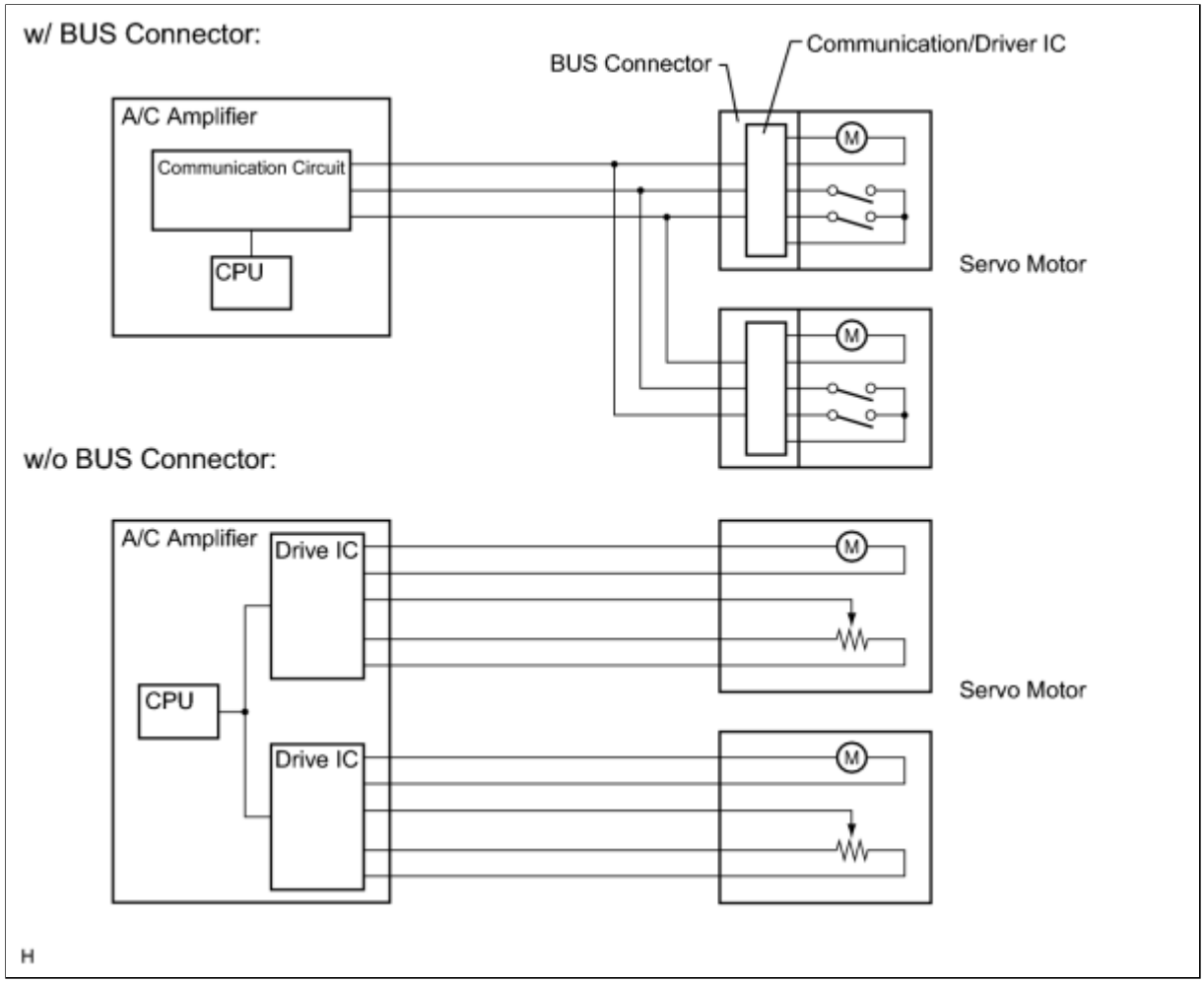

7. SERVO MOTOR

(a) In contrast to the previous type that detects the position using potentiometer voltage, the pulse pattern type servo motor detects the relative position using the 2-bit ON/OFF signals.

The forward and reverse revolutions of this motor are detected by way of two phases, A and B, which output four types of patterns. The air conditioning amplifier counts the number of pulse patterns in order to determine the stopped position.

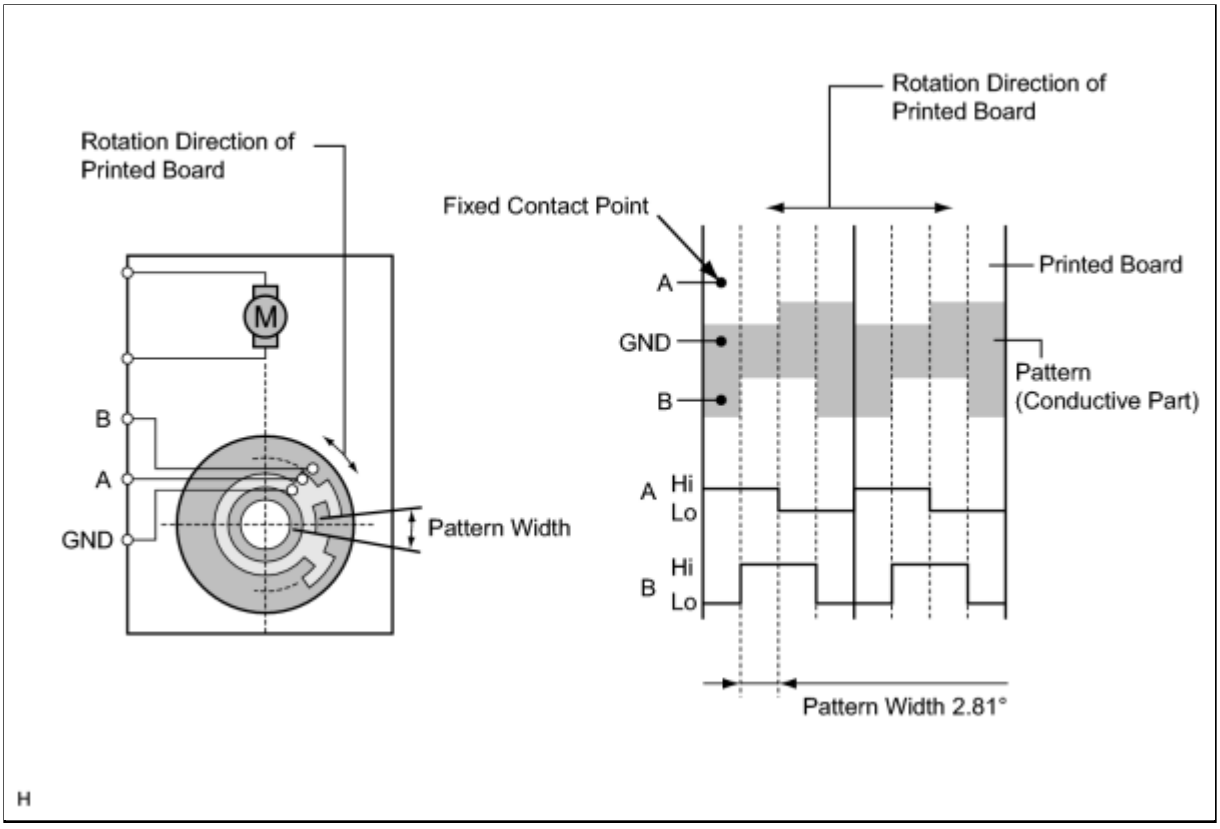

8. A/C COMPRESSOR

(a) General

(1) The A/C compressor is a continuously variable capacity type in which its capacity varies in accordance with the cooling load of the air conditioning system.

(2) The compressor consists of the shaft, lug plate, piston, shoe, crank chamber, cylinder, and solenoid control valve.

(3) The solenoid control valve is provided to enable the suction pressure to be controlled as desired.

(4) A plastic DL (Damper Limiter) type A/C pulley is used.

(5) A rotary type valve is used to suction refrigerant gas into the cylinder.

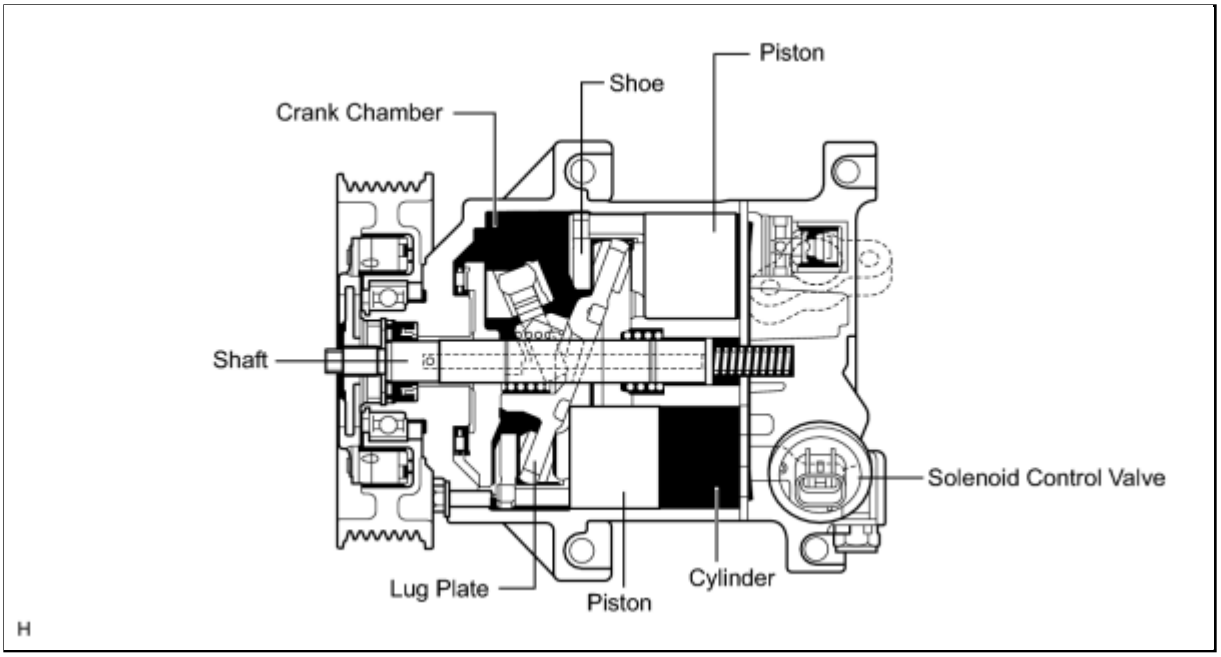

(b) Operation

(1) The crank chamber is connected to the suction passage. A solenoid control valve is provided between the suction passage (low pressure) and the discharge passage (high pressure).

(2) The solenoid control valve operates under duty cycle control in accordance with the signals from the air conditioning amplifier.

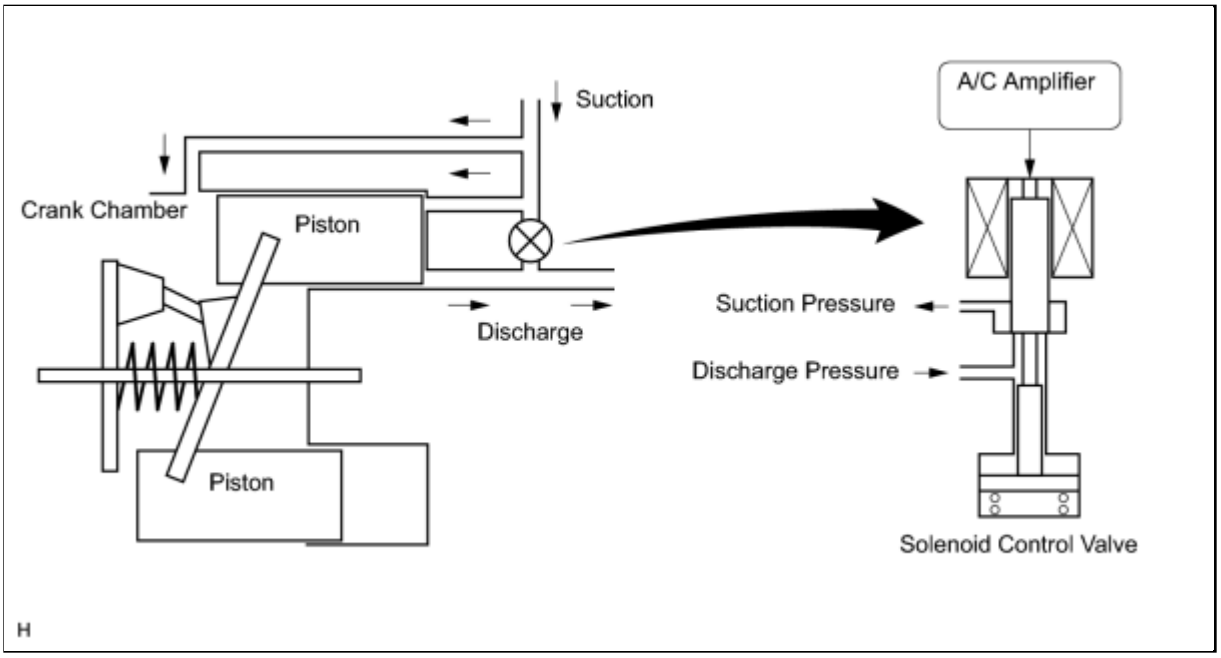

(3) When the solenoid control valve closes (solenoid coil is energized), a difference in pressure is created and the pressure in the crank chamber decreases. Then, the pressure that is applied to the right side of the piston becomes greater than the pressure that is applied to the left side of the piston. This compresses the spring and tilts the lug plate. As a result, there is a large piston stroke and the discharge capacity increases.

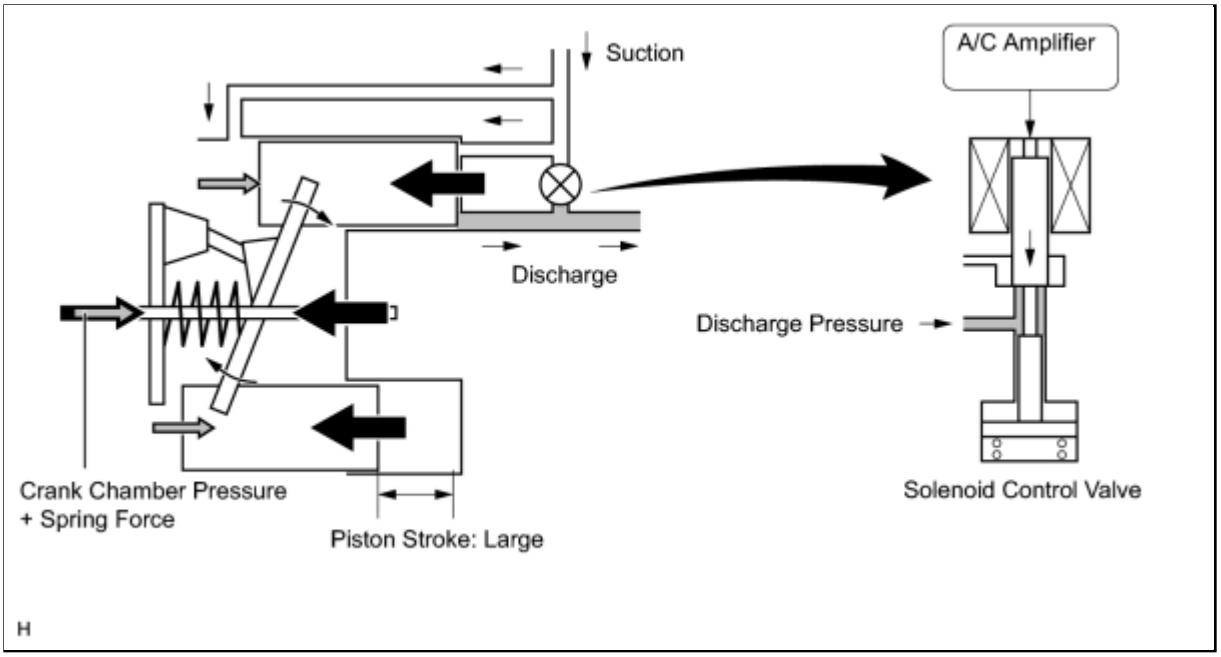

(4) When the solenoid control valve opens (solenoid coil is not energized), the difference in pressure disappears. Then, the pressure that is applied to the left side of the piston becomes the same as the pressure that is applied to the right side of the piston. Thus, the spring elongates and eliminates the tilt of the lag plate. As a result, there is a small piston stroke and the discharge capacity decreases.

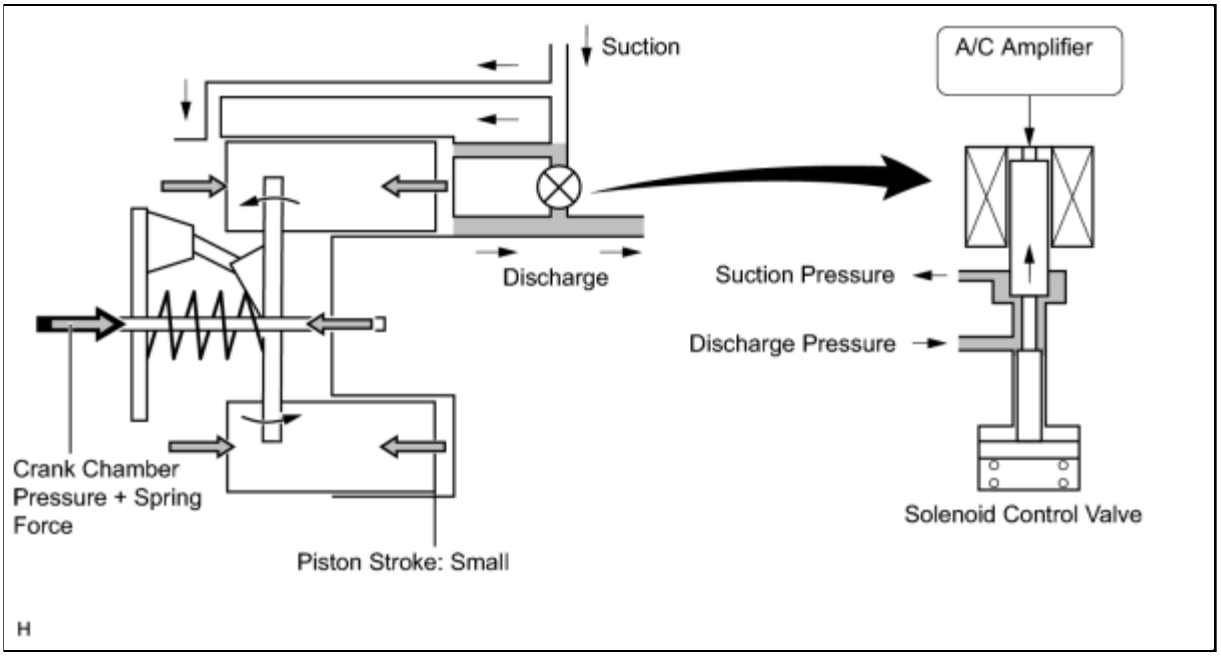

9. ROOM TEMPERATURE SENSOR

The room temperature sensor detects the cabin temperature based on changes in the resistance of its built-in thermistor and sends a signal to the A/C amplifier.

10. AMBIENT TEMPERATURE SENSOR

The ambient temperature sensor detects the outside temperature based on changes in the resistance of its built-in thermistor and sends a signal to the A/C amplifier.

11. EVAPORATOR TEMPERATURE SENSOR

The evaporator temperature sensor detects the temperature of the cool air immediately after the evaporator in the form of resistance changes, and outputs it to the A/C amplifier.

12. SOLAR SENSOR

The solar sensor detects the changes in the amount of sunlight and outputs it to the A/C amplifier in the form of voltage changes.

13. A/C PRESSURE SENSOR

The A/C pressure sensor detects the refrigerant pressure and outputs it to the A/C amplifier in the form of voltage changes.

14. PTC HEATER (w/ PTC Heater)

(a) General

(1) The PTC heater is located above the heater core in the air conditioner unit.

(2) The PTC heater consists of a PTC element, aluminum fin, and brass plate. When current is applied to the PTC element, it generates heat to warm the air that passes through the unit.

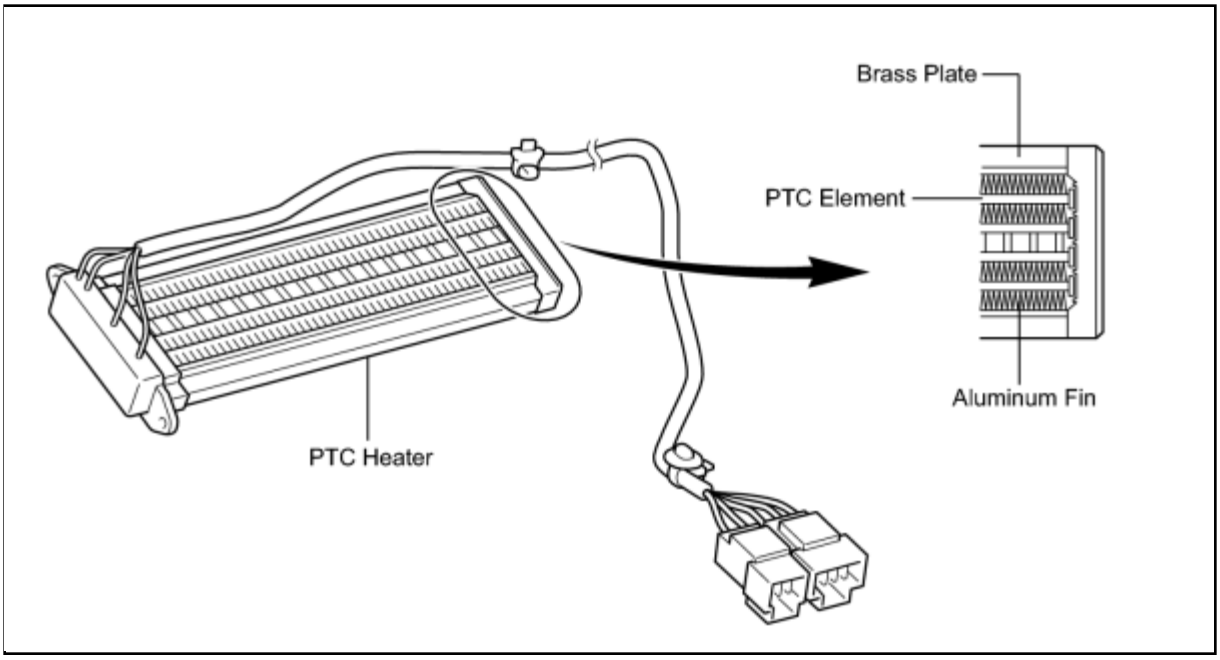

(b) PTC Heater Operating Conditions

(1) The PTC heater is turned on and off by the air conditioning amplifier in accordance with the coolant temperature, ambient temperature, engine speed, air mix setting, and electrical load (generator power ratio).

For example, the number of the operating PTC heaters varies by the coolant temperature as in the graph below.

Heating Pattern:

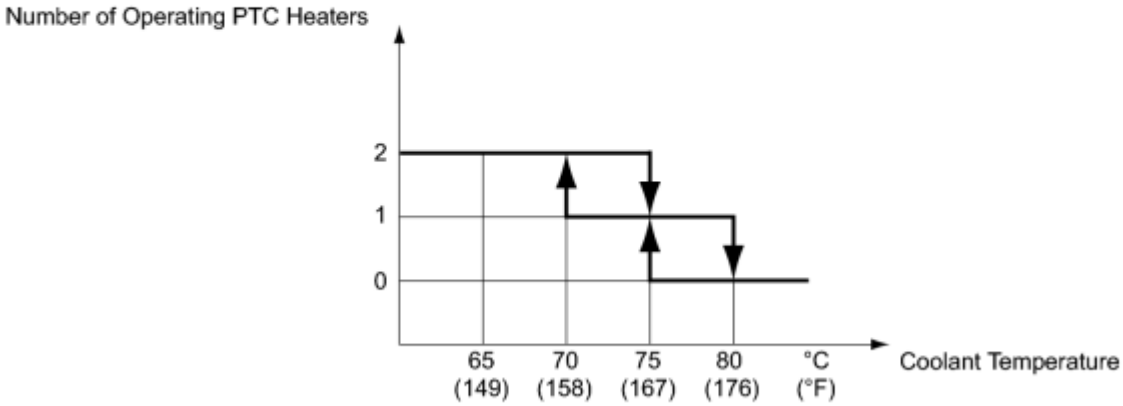

H

Last Modified: 3-10-2010	6.4 U	**From:** 200901
Model Year: 2010	**Model:** Corolla	**Doc ID:** RM0000026DI01NX
Title: HEATING / AIR CONDITIONING: AIR CONDITIONING SYSTEM (for Automatic Air Conditioning System): SYSTEM DIAGRAM (2010 Corolla)		

SYSTEM DIAGRAM

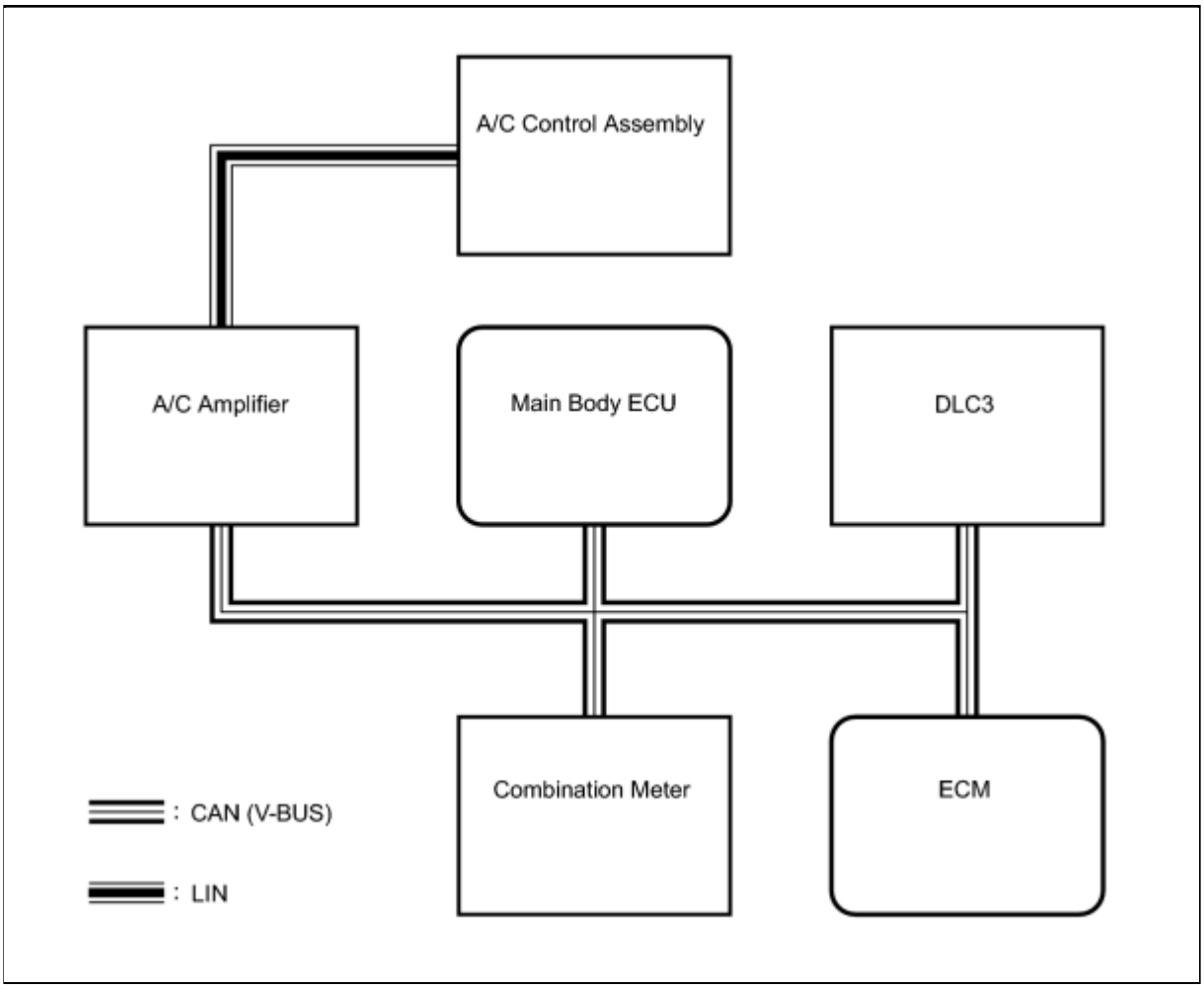

TRANSMITTER	RECEIVER	LINE	SIGNAL
A/C Amplifier	ECM	CAN	Magnetic Clutch Request Signal
			Heater Idle Up Request Signal
			A/C Idle Up Request Signal
			Outside Temperature Data
			External Variable Control Solenoid Current Signal
			Prior A/C Control Request Signal
			Refrigerant Gas Pressure Sensor Signal

TRANSMITTER	RECEIVER	LINE	SIGNAL
			Motor Cooling Fan Drive Request Signal
			Acceleration Cut Inhibit Signal
A/C Amplifier	DLC3	CAN	Diagnostic Tool Response Signal
A/C Amplifier	A/C Control Assembly	LIN	A/C Operating State Signal
Main Body ECU	A/C Amplifier	CAN	Destination Symbol (Steering Wheel)
Combination Meter	A/C Amplifier	CAN	Vehicle Speed Signal
			Outside Temperature Data
ECM	A/C Amplifier	CAN	Engine Coolant Temperature Signal
			Engine rpm Data
			A/C Control Cut-off Signal
			A/C-E/G Cooperation Control Signal
A/C Control Assembly	A/C Amplifier	LIN	A/C Operation Signal

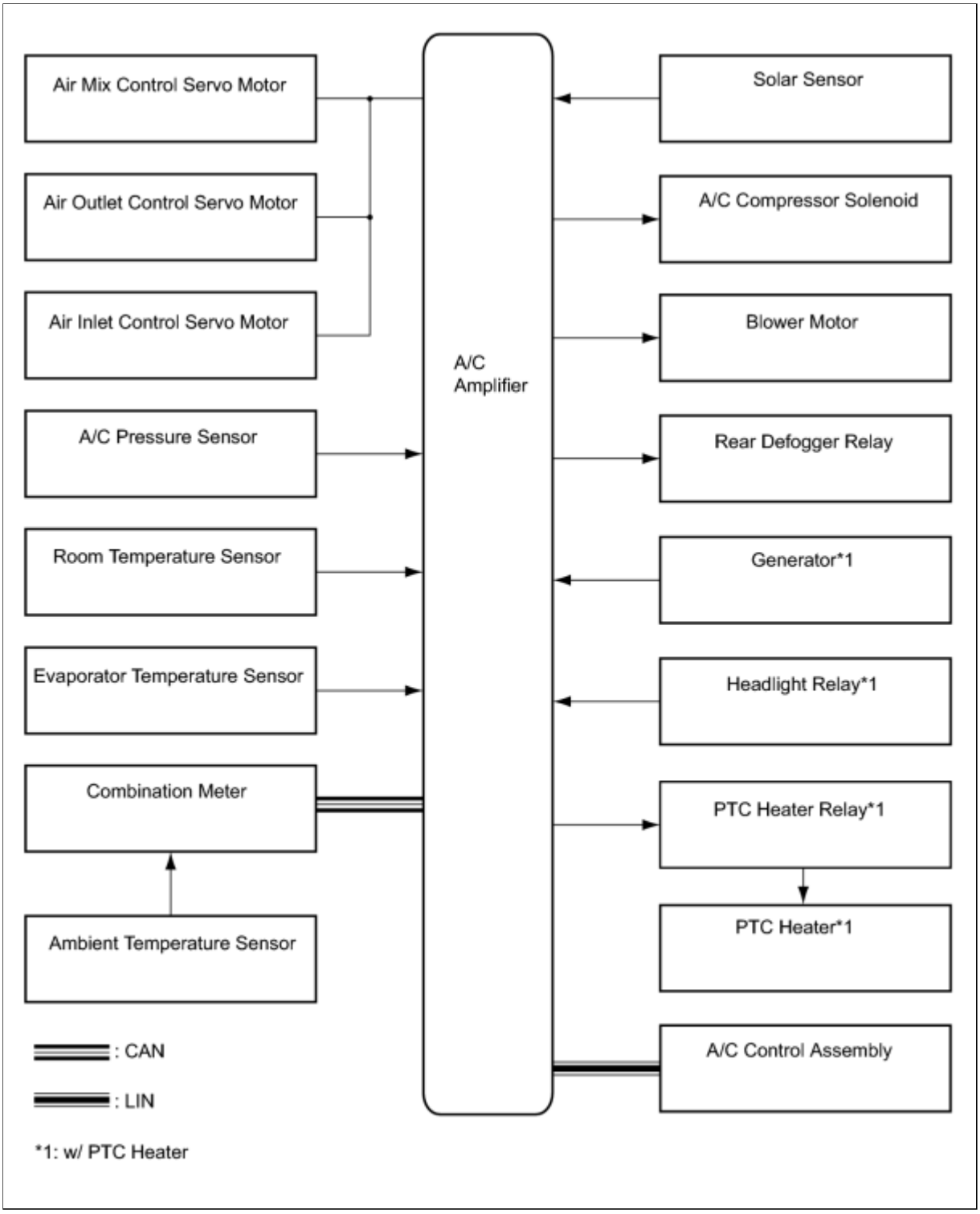
Air Mix Control Servo Motor
Air Outlet Control Servo Motor
Air Inlet Control Servo Motor
A/C Pressure Sensor
Room Temperature Sensor
Evaporator Temperature Sensor
Combination Meter
Ambient Temperature Sensor
A/C Amplifier
Solar Sensor
A/C Compressor Solenoid
Blower Motor
Rear Defogger Relay
Generator*1
Headlight Relay*1
PTC Heater Relay*1
PTC Heater*1
A/C Control Assembly
: CAN
: LIN
*1: w/ PTC Heater

Last Modified: 3-10-2010	6.4 D	**From:** 200901
Model Year: 2010	**Model:** Corolla	**Doc ID:** RM000000PM602ZX
Title: HEATING / AIR CONDITIONING: AIR CONDITIONING SYSTEM (for Automatic Air Conditioning System): HOW TO PROCEED WITH TROUBLESHOOTING (2010 Corolla)		

HOW TO PROCEED WITH TROUBLESHOOTING

HINT:

- Use the following procedures to troubleshoot the air conditioning system.
- *: Use the Techstream.

1.	**VEHICLE BROUGHT TO WORKSHOP**

NEXT

2.	**INSPECT BATTERY VOLTAGE**

(a) Inspect the battery voltage.

Standard Voltage:
11 to 14 V

If the voltage is below 11 V, recharge or replace the battery before proceeding.

NEXT

3.	**CHECK COMMUNICATION FUNCTION OF CAN COMMUNICATION SYSTEM***

(a) Use the Techstream to check if the CAN Communication System is functioning normally.

Result:

RESULT	PROCEED TO
CAN DTC is not output	A

RESULT	PROCEED TO
CAN DTC is output	B

B ▶ INFO **Go to CAN COMMUNICATION SYSTEM**

A ▼

4.	CHECK FOR DTC*

(a) Check for DTCs and write down any codes that are output.

HINT:

Refer to DTC Check / Clear INFO **.**

(b) Clear the DTCs.

(c) Recheck for DTCs. Based on the DTCs output above, try to force the A/C system to output DTCs by simulating the conditions indicated by the DTCs.

Result:

RESULT	PROCEED TO
DTC is not output	A
DTC is output	B

B ▶ **GO TO STEP 7**

A ▼

5.	PROBLEM SYMPTOMS TABLE

(a) Refer to Problem Symptoms Table INFO .

Result:

RESULT	PROCEED TO
Fault is not listed in problem symptoms table	A
Fault is listed in problem symptoms table	B

B ▶ **GO TO STEP 7**

A

▼

6.	OVERALL ANALYSIS AND TROUBLESHOOTING*

(a) Actuator Check INFO

(b) Data List / Active Test INFO

(c) Terminals of ECU INFO

(d) On-vehicle Inspection

(e) Inspection

NEXT

▼

7.	ADJUST, REPAIR OR REPLACE

NEXT ▶ **END**

Last Modified: 3-10-2010	6.4 T	**From:** 200901
Model Year: 2010	**Model:** Corolla	**Doc ID:** RM000001M2W024X
Title: HEATING / AIR CONDITIONING: AIR CONDITIONING SYSTEM (for Automatic Air Conditioning System): PROBLEM SYMPTOMS TABLE (2010 Corolla)		

PROBLEM SYMPTOMS TABLE

HINT:

- Use the table below to help determine the cause of problem symptoms. If multiple suspected areas are listed, the potential causes of the symptoms are listed in order of probability in the "Suspected Area" column of the table. Check each symptom by checking the suspected areas in the order they are listed. Replace parts as necessary.
- Inspect the fuses and relays related to this system before inspecting the suspected areas below.

Air Conditioning System

SYMPTOM	SUSPECTED AREA	SEE PAGE
All functions of the A/C system do not operate.	IG power source circuit	INFO
	Back-up power source circuit	INFO
	Heater control panel power source circuit	INFO
	LIN communication circuit	INFO
	A/C control assembly	INFO
	A/C amplifier	INFO
Air Flow Control: No blower operation	Blower motor circuit	INFO
	Heater control panel power source circuit	INFO
	LIN communication circuit	INFO
	A/C control assembly	INFO
	A/C amplifier	INFO
Air Flow Control: No blower control	Blower motor circuit	INFO
	Heater control panel power source circuit	INFO
	LIN communication circuit	INFO
	A/C control assembly	INFO
	A/C amplifier	INFO
Air Flow Control: Insufficient air flow	Blower motor circuit	INFO

SYMPTOM	SUSPECTED AREA	SEE PAGE
	A/C amplifier	INFO
Temperature Control: No cool air comes out.	Refrigerant volume	-
	Refrigerant pressure	INFO
	Pressure sensor circuit	INFO
	Compressor solenoid circuit	INFO
	Air mix control servo motor circuit	INFO
	Evaporator temperature sensor circuit	INFO
	Room temperature sensor circuit	INFO
	Ambient temperature sensor circuit	INFO
	Heater control panel power source circuit	INFO
	LIN communication circuit	INFO
	Expansion valve	INFO
	A/C control assembly	INFO
	A/C amplifier	INFO
	ECM (for 2AZ-FE)	INFO
	ECM (for 2ZR-FE)	INFO
Temperature Control: No warm air comes out.	Air mix control servo motor circuit	INFO
	Evaporator temperature sensor circuit	INFO
	Room temperature sensor circuit	INFO
	Ambient temperature sensor circuit	INFO
	Generator signal circuit*1	INFO
	Headlight signal circuit*1	INFO
	PTC heater circuit*1	INFO
	CAN communication system	INFO
	Engine coolant temperature sensor circuit (for 2AZ-FE)	INFO

SYMPTOM	SUSPECTED AREA	SEE PAGE
	Engine coolant temperature sensor circuit (for 2ZR-FE)	INFO
	A/C amplifier	INFO
Temperature Control: Output air is warmer or cooler than the set temperature or response is slow.	Refrigerant volume	-
	Refrigerant pressure	INFO
	Solar sensor circuit	INFO
	Room temperature sensor circuit	INFO
	Ambient temperature sensor circuit	INFO
	Generator signal circuit*1	INFO
	Headlight signal circuit*1	INFO
	PTC heater circuit*1	INFO
	Air mix control servo motor circuit	INFO
	Radiator unit sub-assembly	INFO
	Expansion valve	INFO
	CAN communication system	INFO
	Engine coolant temperature sensor circuit (for 2AZ-FE)	INFO
	Engine coolant temperature sensor circuit (for 2ZR-FE)	INFO
	A/C amplifier	INFO
Temperature Control: No temperature control (only Max. cool or Max. warm)	Air mix control servo motor circuit	INFO
	Room temperature sensor circuit	INFO
	Ambient temperature sensor circuit	INFO
	Evaporator temperature sensor circuit	INFO
	Solar sensor circuit	INFO
	Generator signal circuit*1	INFO
	Headlight signal circuit*1	INFO
	PTC heater circuit*1	INFO

SYMPTOM	SUSPECTED AREA	SEE PAGE
	Compressor solenoid circuit	INFO
	Engine coolant temperature sensor circuit (for 2AZ-FE)	INFO
	Engine coolant temperature sensor circuit (for 2ZR-FE)	INFO
	CAN communication system	INFO
	A/C control assembly	INFO
	ECM (for 2AZ-FE)	INFO
	ECM (for 2ZR-FE)	INFO
	A/C amplifier	INFO
No air inlet control	Air inlet control servo motor circuit	INFO
	A/C amplifier	INFO
No air flow mode control	Air outlet control servo motor circuit	INFO
	A/C amplifier	INFO
Engine idle up does not occur, or is continuous.	Compressor solenoid circuit	INFO
	Heater control panel power source circuit	INFO
	LIN communication circuit	INFO
	A/C control assembly	INFO
	A/C amplifier	INFO
	ECM (for 2AZ-FE)	INFO
	ECM (for 2ZR-FE)	INFO
A/C indicator blinks.	Compressor solenoid circuit	INFO
	A/C amplifier	INFO
Diagnostic trouble codes are not recorded. Set mode is cleared when ignition switch is off.	Back-up power source circuit	INFO
	A/C amplifier	INFO

*1: w/ PTC Heater

Last Modified: 3-10-2010	6.4 D	**From:** 200901
Model Year: 2010	**Model:** Corolla	**Doc ID:** RM000000PMH01LX
Title: HEATING / AIR CONDITIONING: AIR CONDITIONING SYSTEM (for Automatic Air Conditioning System): CUSTOMIZE PARAMETERS (2010 Corolla)		

CUSTOMIZE PARAMETERS

HINT:

The following items can be customized.

NOTICE:

- When the customer requests a change in a function, first make sure that the function can be customized.
- Be sure to make a note of the current settings before customizing.
- When troubleshooting a function, first make sure that the function is set to the default setting.

Air Conditioner

TESTER DISPLAY	DEFAULT	CONTENTS	SETTING
Set Temperature Shift	NORMAL	Function to shift the temperature against the displayed temperature	+2 C / +1 C / NORMAL / -1 C / -2 C
Air Inlet Mode	AUTO	When turning the A/C ON to make the cabin cool down quickly, this is the function to change the mode automatically to RECIRCULATION mode	MANUAL / AUTO
Compressor Mode	AUTO	Function to turn the A/C ON automatically by pressing the AUTO button when the blower is ON and the A/C is OFF	MANUAL / AUTO
Compressor/Air Inlet DEF operation	LINK	Function to turn the A/C ON automatically linked with the FRONT DEF button when the A/C is OFF	NORMAL / LINK
Evaporator Control	AUTO	Function to set the evaporator control to the coldest position	MANUAL / AUTO
Foot/DEF Auto Mode	ON	Function to turn the airflow from FOOT / DEF ON automatically when AUTO MODE is ON	OFF / ON
Foot/DEF Automatic Blow Up Function	ON	Function to change the blower level automatically when the defroster is ON	OFF / ON

Last Modified: 3-10-2010	6.4 U	**From:** 200901
Model Year: 2010	**Model:** Corolla	**Doc ID:** RM0000026DR01PX
Title: HEATING / AIR CONDITIONING: AIR CONDITIONING SYSTEM (for Automatic Air Conditioning System): TERMINALS OF ECU (2010 Corolla)		

TERMINALS OF ECU

1. A/C AMPLIFIER

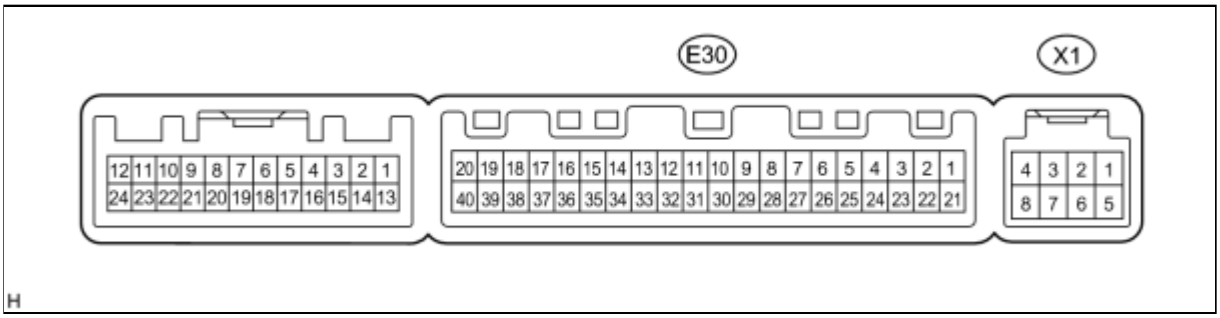

HINT:

Check from the rear of the connector while it is connected to the A/C amplifier.

TERMINAL NO. (SYMBOL)	WIRING COLOR	TERMINAL DESCRIPTION	CONDITION	SPECIFIED CONDITION
E30-1 (IG+) - E30-14 (GND)	Y*1, R*2 - W-B	Power source (IG)	Ignition switch ON	11 to 14 V
E30-1 (IG+) - E30-14 (GND)	Y*1, R*2 - W-B	Power source (IG)	Ignition switch off	Below 1 V
E30-2 (SOL+) - E30-14 (GND)	LG*1, V*2 - W-B	A/C compressor operation signal	Engine is running A/C switch: ON Blower switch: LO	Pulse generation (See waveform 1)
E30-3 (PTC1) - E30-14 (GND)*3	W*1, P*2 - W-B	PTC heater operation signal	Engine is running (1250 rpm or higher) Temperature setting: MAX. HOT Ambient temperature: 10°C (50°F) or lower Engine coolant temperature: 75°C (167°F) or lower Light control switch: OFF Blower switch: ON	11 to 14 V

TERMINAL NO. (SYMBOL)	WIRING COLOR	TERMINAL DESCRIPTION	CONDITION	SPECIFIED CONDITION
E30-9 (PRE) - E30-13 (SG-2)	L - G	A/C pressure sensor signal	Engine is running, A/C system is operating, Refrigerant pressure: Abnormal pressure (more than 3140 kPa (32.0 kgf/cm^2, 455 psi))	4.848 V or higher
E30-9 (PRE) - E30-13 (SG-2)	L - G	A/C pressure sensor signal	Engine is running, A/C system is operating, Refrigerant pressure: Abnormal pressure (less than 196 kPa (2.0 kgf/cm^2, 28 psi))	Below 0.734 V
E30-9 (PRE) - E30-13 (SG-2)	L - G	A/C pressure sensor signal	Engine is running, A/C system is operating, Refrigerant pressure: Normal pressure (less than 3140 kPa (32.0 kgf/cm^2, 455 psi) and more than 196 kPa (2.0 kgf/cm^2, 28 psi))	0.734 to 4.848 V
E30-10 (S5-3) - E30-13 (SG-2)	B - G	Power supply for A/C pressure sensor	Ignition switch ON A/C switch: ON	4.75 to 5.25 V
E30-10 (S5-3) - E30-13 (SG-2)	B - G	Power supply for A/C pressure sensor	Ignition switch ON A/C switch: OFF	Below 1 V
E30-11 (CANH) - E30-12 (CANL)	V - W	CAN communication circuit	Ignition switch ON	Pulse generation
E30-13 (SG-2) - Body ground	G - Body ground	Ground for A/C pressure sensor	Always	Below 1 V
E30-14 (GND) - Body ground	W-B - Body ground	Ground for main power supply	Always	Below 1 V
E30-21 (B) - E30-14 (GND)	W*1, BR*2 - W-B	Power source (Back-up)	Always	11 to 14 V
E30-22 (PTC2) - E30-14 (GND)*3	B - W-B	PTC heater operation signal	Engine is running (1250 rpm or higher) Temperature setting: MAX. HOT Ambient temperature: 10°C (50°F) or lower Engine coolant temperature: 70°C (158°F) or lower	11 to 14 V

TERMINAL NO. (SYMBOL)	WIRING COLOR	TERMINAL DESCRIPTION	CONDITION	SPECIFIED CONDITION
			Light control switch: OFF Blower switch: ON	
E30-23 (BLW) - E30-14 (GND)	R*1, L*2 - W-B	Blower motor speed control signal	Ignition switch ON Blower switch: ON	Pulse generation (See waveform 2)
E30-25 (ALT) - E30-14 (GND)*3	L - W-B	Alternator signal (PTC Heater line control)	Start engine	Pulse generation
E30-27 (HLS) - E30-14 (GND)*3	B*1, V*2 - W-B	Headlight signal (PTC Heater line control)	Start engine Headlight switch: OFF	11 to 14 V
E30-27 (HLS) - E30-14 (GND)*3	B*1, V*2 - W-B	Headlight signal (PTC Heater line control)	Start engine Headlight switch: ON	Below 1 V
E30-29 (TR) - E30-34 (SG-1)	GR*1, W*2 - V*1, SB*2	Room temperature sensor signal	Ignition switch ON Cabin temperature at 25°C (77°F)	1.8 to 2.2 V
E30-29 (TR) - E30-34 (SG-1)	GR*1, W*2 - V*1, SB*2	Room temperature sensor signal	Ignition switch ON Cabin temperature at 40°C (104°F)	1.2 to 1.6 V
E30-31 (S5-4) - E30-14 (GND)	LG*1, Y*2 - W-B	Solar sensor power source	Ignition switch ON A/C switch: ON	4.5 to 5.5 V
E30-33 (TS) - E30-14 (GND)	P*1, R*2 - W-B	Solar sensor signal	Ignition switch ON Solar sensor is subjected to light.	0.8 to 4.3 V
E30-33 (TS) - E30-14 (GND)	P*1, R*2 - W-B	Solar sensor signal	Ignition switch ON Solar sensor is covered with cloth.	Below 0.8 V
E30-34 (SG-1) - Body ground	V*1, SB*2 - Body ground	Ground for room temperature sensor	Always	Below 1 V
E30-37 (LIN1) - E30-14 (GND)	SB*1, LG*2 - W-B	LIN communication signal	Ignition switch ON	Pulse generation

TERMINAL NO. (SYMBOL)	WIRING COLOR	TERMINAL DESCRIPTION	CONDITION	SPECIFIED CONDITION
E30-38 (RDFG) - E30-14 (GND)	B*1, BE*2 - W-B	DEF relay signal	Ignition switch ON REAR DEF switch: ON	Below 1 V
E30-38 (RDFG) - E30-14 (GND)	B*1, BE*2 - W-B	DEF relay signal	Ignition switch ON REAR DEF switch: OFF	11 to 14 V
X1-2 (BUS G) - Body ground	-	Ground for BUS IC	Always	Below 1 V
X1-3 (BUS) - X1-2 (BUS G)	-	BUS IC control signal	Ignition switch off → ON	Pulse generation
X1-4 (B BUS) - X1-2 (BUS G)	-	Power supply for BUS IC	Ignition switch off	Below 1 V
X1-4 (B BUS) - X1-2 (BUS G)	-	Power supply for BUS IC	Ignition switch ON	11 to 14 V
X1-5 (SGA) - Body ground	-	Ground for evaporator temperature sensor	Always	Below 1 V
X1-6 (TEA) - X1-5 (SGA)	-	Evaporator temperature sensor signal	Ignition switch ON Evaporator temperature at 0°C (32°F)	1.7 to 2.1 V
X1-6 (TEA) - X1-5 (SGA)	-	Evaporator temperature sensor signal	Ignition switch ON Evaporator temperature at 15°C (59°F)	0.9 to 1.3 V

HINT:

- *1: TMC Made
- *2: NUMMI, TMMC Made
- *3: w/ PTC Heater

(a) Waveform 1

ITEM	CONTENT
Terminal No. (Symbol)	E30-2 (SOL+) - E30-14 (GND)
Tool Setting	5 V/DIV., 500 µs/DIV.

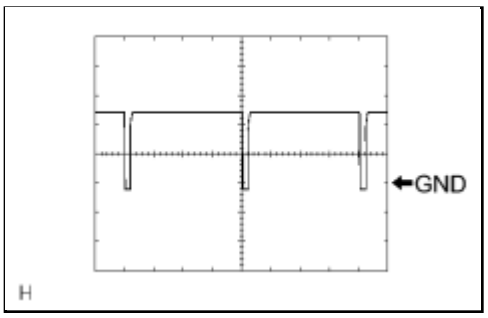

Vehicle Condition	Engine is running A/C switch: ON Blower Switch: LO

(b) Waveform 2

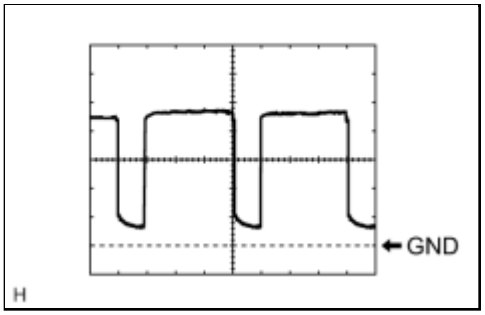

ITEM	CONTENT
Terminal No. (Symbol)	E30-23 (BLW) - E30-14 (GND)
Tool Setting	1 V/DIV., 500 µs/DIV.
Vehicle Condition	Ignition switch ON Blower switch: ON

2. A/C CONTROL ASSEMBLY

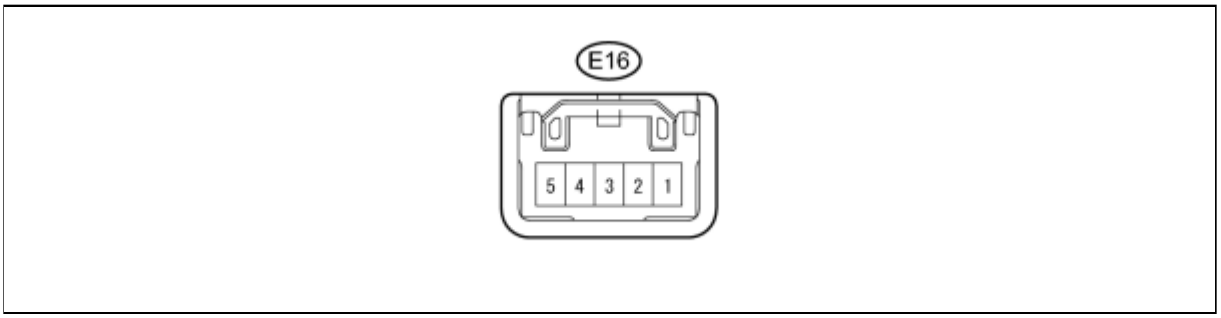

HINT:

Check from the rear of the connector while it is connected to the A/C control assembly.

TERMINAL NO. (SYMBOL)	WIRING COLOR	TERMINAL DESCRIPTION	CONDITION	SPECIFIED CONDITION
E16-2 (GND) - Body ground	W-B - Body ground	Ground for A/C control assembly	Always	Below 1 V
E16-3 (LIN1) - E16-2 (GND)	SB*1, LG*2 - W-B	LIN communication circuit	Ignition switch ON	Pulse generation
E16-5 (IG+) - E16-2 (GND)	B*1, V*2 - W-B	Power source (IG)	Ignition switch off	Below 1 V
E16-5 (IG+) - E16-2 (GND)	B*1, V*2 - W-B	Power source (IG)	Ignition switch ON	11 to 14 V

HINT:

- *1: TMC Made
- *2: NUMMI, TMMC Made



Last Modified: 3-10-2010	6.4 D	**From:** 200901
Model Year: 2010	**Model:** Corolla	**Doc ID:** RM000001MYG01HX
Title: HEATING / AIR CONDITIONING: AIR CONDITIONING SYSTEM (for Automatic Air Conditioning System): DIAGNOSIS SYSTEM (2010 Corolla)		

DIAGNOSIS SYSTEM

1. DESCRIPTION

(a) Air conditioning system data and the Diagnostic Trouble Codes (DTCs) can be read through the Data Link Connector 3 (DLC3) of the vehicle. When the system seems to be malfunctioning, use the Techstream to check for malfunctions and perform troubleshooting.

2. CHECK DLC3

(a) Check the DLC3 INFO .

3. LIST OF OPERATION METHODS

(a) By operating each of the air conditioning control switches as shown in the diagram below, it is possible to enter the diagnostic check mode.

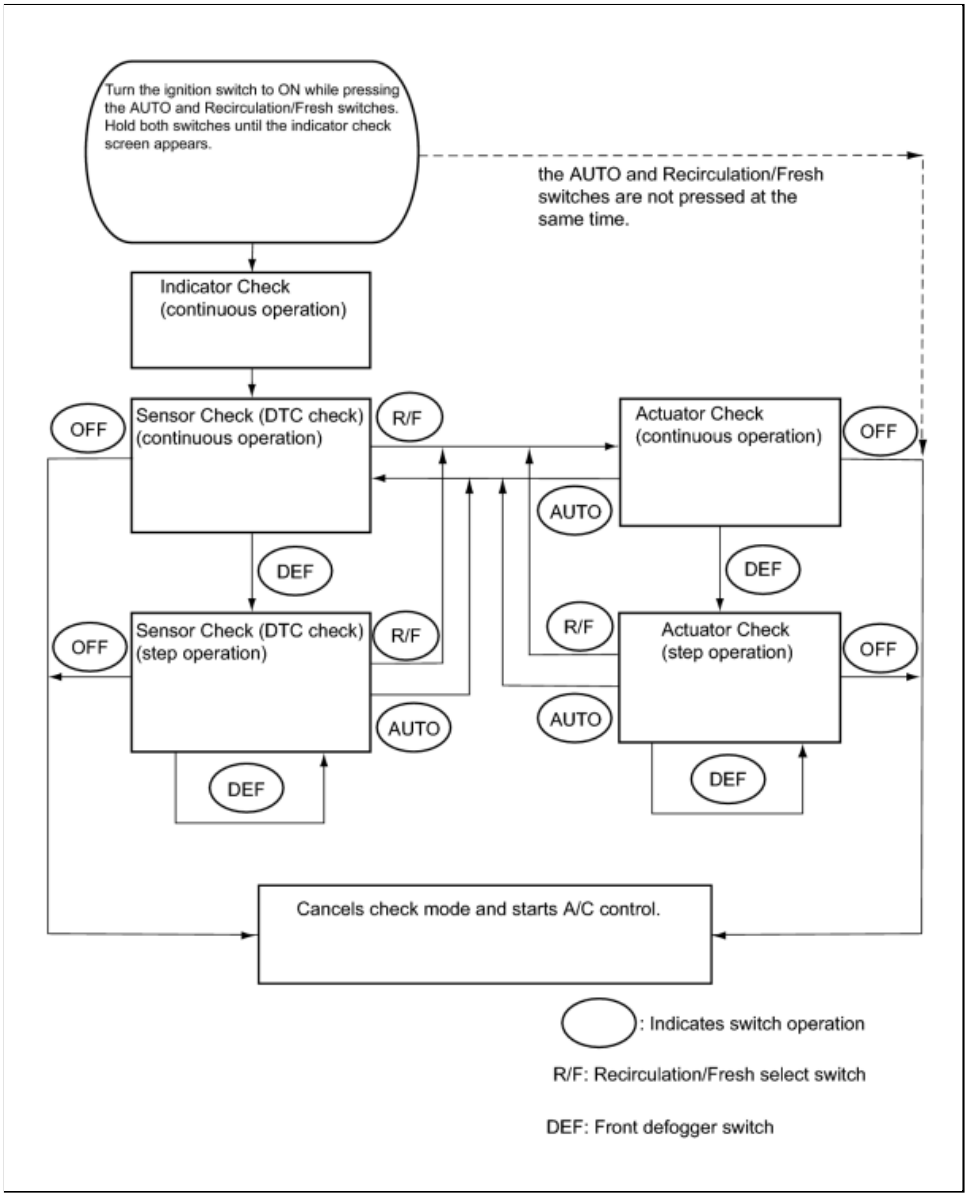

4. INDICATOR CHECK

(a) Turn the ignition switch off.

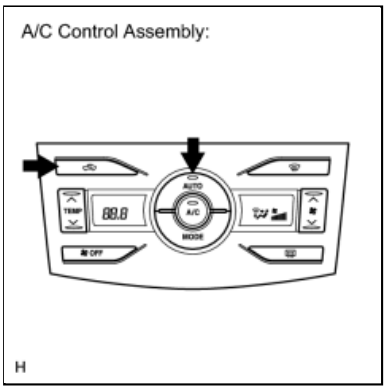

(b) Turn the ignition switch to ON while pressing the A/C control assembly "AUTO" switch and "R/F" switch simultaneously. Hold both switches until the indicator check screen appears.

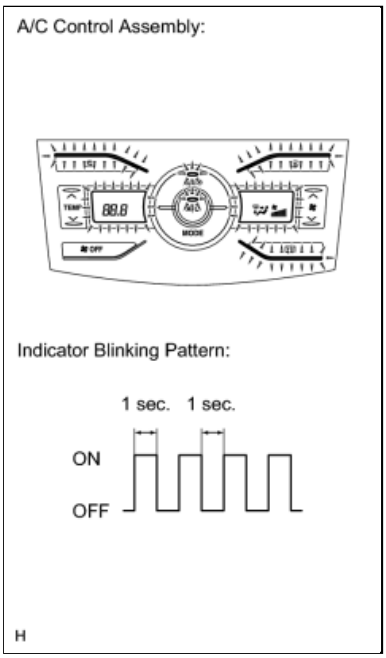

(c) The indicator check is automatically performed when panel diagnosis is activated. Check that the indicators light up and go off at 1 second intervals 4 times in succession.

HINT:

- The sensor check automatically starts when the indicator check is completed.
- Press the "OFF" switch to cancel the check mode.
- If a navigation system is installed, the indicator will blink and the buzzer will sound.

5. SENSOR CHECK (DTC CHECK)

(a) Start the engine and warm it up.

(b) Perform the indicator check.

HINT:

After the indicator check is completed, the system enters the DTC check mode automatically.

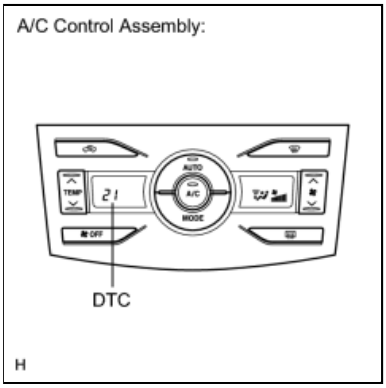

(c) Read the DTC displayed on the panel.

NOTICE:

- In the sensor check mode, which is automatically entered after indicator check mode, troubleshooting may be partially performed. Be sure to perform the actuator and sensor checks again.
- If the check is performed in a dark place, DTC 21 may be displayed even though the system is normal.

HINT:

Refer to the DTC chart (Diagnostic Trouble Code chart) for details of the codes INFO **.**

- When there are no problems, DTC 00 is output.
- As an example, the illustration shows that display code 21 is output.

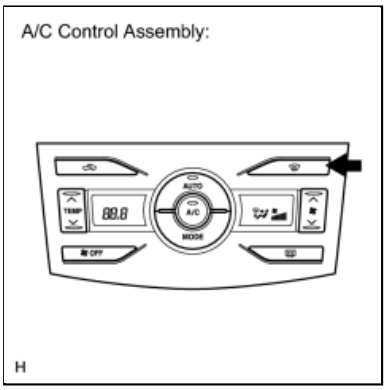

(d) If the steps are difficult to read because they change automatically, push the "DEF" switch to display the steps one at a time so that they can be read easily. The items are displayed step by step each time the "DEF" switch is pushed.

- Push the "OFF" switch to finish panel diagnosis.
- Push the "R/F" switch to enter the actuator check mode.

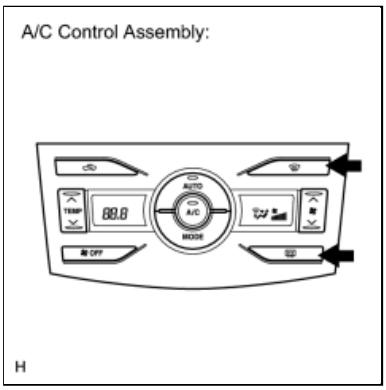

(e) Clear the DTC

(1) During the sensor check, press the "DEF" switch and "REAR DEF" switch at the same time.

6. ACTUATOR CHECK

(a) Start the engine and warm it up.

(b) Perform the indicator check.

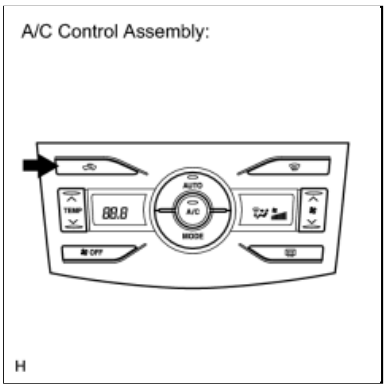

(c) Push the "R/F" switch to perform the actuator check.

HINT:

Be sure to perform the actuator check after starting the engine.

(d) As the actuator check is repeated from steps 1 to 10 at 1 second intervals, check the temperature and air flow visually and by hand.

HINT:

- The display blinks at 1 second intervals in the step operation.
- Push the "OFF" switch to finish panel diagnosis.
- Push the "AUTO" switch to enter the sensor check mode.

STEP	DISPLAY	CONDITION

A/C Control Assembly:

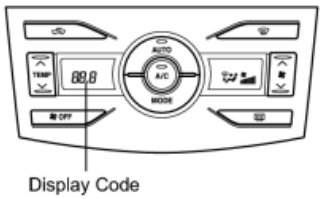

H

NO.	CODE					
		BLOWER LEVEL	AIR MIX DAMPER	AIRFLOW VENT	AIR INLET DAMPER	COMPRESSOR
1	0	0	0% open	FACE	FRESH	OFF
2	1	1	0% open	FACE	FRESH	OFF
3	2	17	0% open	FACE	RECIRCULATION/FRESH	ON
4	3	17	0% open	FACE	RECIRCULATION	ON
5	4	17	50% open	B/L	RECIRCULATION	ON
6	5	17	50% open	B/L	RECIRCULATION	ON
7	6	17	50% open	FOOT	FRESH	ON
8	7	17	100% open	FOOT-0	FRESH	ON
9	8	17	100% open	F/D	FRESH	ON
10	9	31	100% open	DEF	FRESH	ON

A/C Control Assembly:

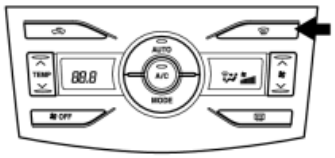

H

(e) If the steps are difficult to read because they change automatically, push the "DEF" switch to display the steps one at a time so that they can be read easily. The items are displayed step by step each time the "DEF" switch is pushed.

HINT:

- Push the "OFF" switch to finish panel diagnosis.
- Push the "R/F" switch to enter the sensor check mode.

Last Modified: 3-10-2010	6.4 U	**From:** 200901
Model Year: 2010	**Model:** Corolla	**Doc ID:** RM000000PMG02NX
Title: HEATING / AIR CONDITIONING: AIR CONDITIONING SYSTEM (for Automatic Air Conditioning System): DATA LIST / ACTIVE TEST (2010 Corolla)		

DATA LIST / ACTIVE TEST

1. Data List

Use the Techstream to read the Data List allows the values or states of switches, sensors, actuators and other items to be read without removing any parts. This non-intrusive inspection can be very useful because intermittent conditions or signals may be discovered before parts or wiring is disturbed. Reading the Data List information early in troubleshooting is one way to save diagnostic time.

(a) Connect the Techstream to the DLC3.

(b) Turn the ignition switch to ON.

(c) Turn the Techstream on.

(d) Enter the following menus: Body Electrical / Air Conditioner / Data List.

(e) Check the value(s) by referring to the table below.

Air Conditioner

TESTER DISPLAY	MEASUREMENT ITEM/RANGE	NORMAL CONDITION	DIAGNOSTIC NOTE
Room Temperature Sensor (Room Temp)	Room temperature sensor / Min.: -6.5°C (20.3°F), Max.: 57.25°C (135.05°F)	Actual cabin temperature is displayed	-
Ambient Temp Sensor (Ambi Temp Sens)	Ambient temperature sensor / Min.: -23.3°C (-9.94°F), Max.: 65.95°C (150.71°F)	Actual ambient temperature is displayed	-
Adjusted Ambient Temp (Ambi Temp)	Adjusted ambient temperature / Min.: -30.8°C (-23.44°F), Max.: 50.8°C (123.44°F)	-	-
Evaporator Fin Thermistor (Evap Fin Temp)	Evaporator fin thermistor / Min.: -29.7°C (-21.46°F), Max.: 59.55°C (139.19°F)	Actual evaporator temperature is displayed	-
Solar Sensor (D side) (Solar Sens-D)	Driver side solar sensor / Min.: 0, Max.: 255	Driver side solar sensor value increases as brightness increases	-
Engine Coolant Temp (Coolant Temp)	Engine coolant temperature / Min.: 1.3°C (34.34°F), Max.: 90.55°C (194.99°F)	Actual engine coolant temperature is displayed while engine is warmed up	-

TESTER DISPLAY	MEASUREMENT ITEM/RANGE	NORMAL CONDITION	DIAGNOSTIC NOTE
Set Temperature (D side) (Set Temp-D)	Driver side set temperature / Min.: 18°C (65°F), Max.: 32°C (85°F)	Driver side set temperature is displayed	-
Blower Motor Speed Level (Blower Level)	Blower motor speed level / Min.: 0, Max.: 31	Increases in the range between 0 and 31 as the blower motor speed increases	-
Regulator Pressure Sensor (Reg Press Sens)	Regulator pressure sensor / Min.: -0.45668 MPaG, Max.: 3.29437 MPaG	Actual refrigerant pressure is displayed	-
Regulator Control Current (Reg Ctrl Currnt)	Compressor variable output current / Min.: 0 A, Max.: 0.997 A	-	-
Air Mix Servo Targ Pulse(D) (Air Mix Pulse-D)	Driver side air mix servo motor target pulse / Min.: 0, Max.: 255	MAX. COLD: 93 (pulse) MAX. HOT: 6 (pulse)	-
Air Outlet Servo Pulse (D) (Air Out Pulse-D)	Driver side air outlet servo motor target pulse / Min.: 0, Max.: 255	FACE: 47 (pulse) B/L: 37 (pulse) FOOT: 17 (pulse) FOOT/DEF: 9 (pulse) DEF: 5 (pulse)	-
Air Inlet Damper Targ Pulse (A/I Damp Targ Pls)	Air inlet damper target pulse / Min.: 0, Max.: 255	• RECIRCULATION: 19 (pulse) • FRESH: 7 (pulse)	-
Number of Trouble Codes (#Codes)	Number of trouble codes / Min.: 0, Max.: 255	Number of DTCs will be displayed	-

2. Active Test

HINT:

Using the Techstream to perform Active Tests allows the relay actuator and other items to be operated without removing any parts. This non-intrusive functional inspection can be very useful because intermittent operation may be discovered before parts or wiring is disturbed. Performing Active Test early in troubleshooting is one way to save diagnostic time. Data List information can be displayed while performing Active Test.

(a) Connect the Techstream to the DLC3.

(b) Turn the ignition switch to ON.

(c) Turn the Techstream on.

(d) Enter the following menus: Body Electrical / Air Conditioner / Active Test.

(e) Check the operation by referring to the table below.

Air Conditioner

TESTER DISPLAY	TEST PART	CONTROL RANGE	DIAGNOSTIC NOTE
Blower Motor (Blower Motor)	Blower motor	Min.: 0, Max.: 31	-
Defogger Relay (Rear) (Defogger Rly-R)	Defogger relay (Rear)	OFF, ON	-
Heater Active Level (Heater Level)	Heater active level	Min.: 0, Max.: 3	-
Air Mix Servo Targ Pulse(D) (Air Mix Pulse-D)	Driver side air mix servo motor pulse	Min.: 0, Max.: 255	-
Air Outlet Servo Pulse (D) (Air Out Pulse-D)	Driver side air outlet servo motor pulse	Min.: 0, Max.: 255	-
Air Inlet Damper Targ Pulse (A/I Damp Targ Pls)	Air inlet damper target pulse	Min.: 0, Max.: 255	-

Last Modified: 3-10-2010	6.4 D	**From:** 200901
Model Year: 2010	**Model:** Corolla	**Doc ID:** RM000001GUF02QX
Title: HEATING / AIR CONDITIONING: AIR CONDITIONING SYSTEM (for Automatic Air Conditioning System): DTC CHECK / CLEAR (2010 Corolla)		

DTC CHECK / CLEAR

1. DTC CHECK USING TECHSTREAM

(a) Connect the Techstream to the DLC3.

(b) Turn the ignition switch to ON.

(c) Turn the Techstream on.

(d) Enter the following menus: Body Electrical / Trouble Codes.

(e) Check for DTCs.

2. DTC CLEAR USING TECHSTREAM

(a) Connect the Techstream to the DLC3.

(b) Turn the ignition switch to ON.

(c) Turn the Techstream on.

(d) Enter the following menus: Body Electrical / Trouble Codes.

(e) Clear DTCs by pressing the YES button on the Techstream display.

Last Modified: 3-10-2010	6.4 S	**From:** 200901
Model Year: 2010	**Model:** Corolla	**Doc ID:** RM000001O7Z02GX
Title: HEATING / AIR CONDITIONING: AIR CONDITIONING SYSTEM (for Automatic Air Conditioning System): DIAGNOSTIC TROUBLE CODE CHART (2010 Corolla)		

DIAGNOSTIC TROUBLE CODE CHART

HINT:

When the air conditioning system functions properly, DTC B1400/00 is output.

Air Conditioning System

DTC CODE	DETECTION ITEM	TROUBLE AREA	MEMORY*4	SEE PAGE
B1411/11*1	Room Temperature Sensor Circuit	1. Room temperature sensor 2. Harness or connector between room temperature sensor and A/C amplifier 3. A/C amplifier	Memorized (8.5 min. or more)	INFO
B1412/12*2	Ambient Temperature Sensor Circuit	1. Ambient temperature sensor 2. Harness or connector between ambient temperature sensor and combination meter 3. Combination meter 4. CAN communication system 5. A/C amplifier	Memorized (8.5 min. or more)	INFO
B1413/13	Evaporator Temperature Sensor Circuit	1. Air conditioning harness 2. Evaporator temperature sensor 3. A/C amplifier	Memorized (8.5 min. or more)	INFO
B1421/21*3	Solar Sensor Circuit (Passenger Side)	1. Solar sensor 2. Harness or connector between solar sensor and A/C amplifier 3. A/C amplifier	Memorized (8.5 min. or more) (only when circuit is shorted)	INFO
B1423/23	Pressure Sensor Circuit	1. A/C pressure sensor 2. Harness or connector between A/C pressure sensor and A/C amplifier 3. A/C amplifier 4. Expansion valve (blocked, stuck) 5. Condenser (blocked, deterioration of cooling capacity due to dirt)	-	INFO

DTC CODE	DETECTION ITEM	TROUBLE AREA	MEMORY*4	SEE PAGE
		6. Cooler dryer (moisture in the refrigerant cycle cannot be absorbed) 7. Cooling fan system (condenser cannot be cooled down) 8. A/C system (leaks, blocked)		
B1441/41	Air Mix Damper Control Servo Motor Circuit (Passenger Side)	1. A/C amplifier 2. Air conditioning harness 3. Air mix control servo motor	Memorized (30 sec.)	INFO
B1442/42	Air Inlet Damper Control Servo Motor Circuit	1. A/C amplifier 2. Air conditioning harness 3. Air inlet control servo motor	Memorized (30 sec.)	INFO
B1443/43	Air Outlet Damper Control Servo Motor Circuit	1. A/C amplifier 2. Air conditioning harness 3. Air outlet control servo motor	Memorized (30 sec.)	INFO
B1451/51	Compressor Solenoid Circuit	1. A/C compressor 2. Harness or connector between A/C amplifier and A/C compressor 3. A/C amplifier	-	INFO
B1497/97	BUS IC Communication Malfunction	1. Air conditioning harness 2. A/C amplifier	Memorized (10 sec. or more)	INFO
B1499/99	Multiplex Communication Circuit	CAN communication system	Memorized	INFO

*1: If the cabin temperature is approximately -18.6°C (-1.48°F) or lower, DTC B1411/11 may be output even though the system is normal.

*2: If the ambient temperature is approximately -52.9°C (-63.22°F) or lower, DTC B1412/12 may be output even though the system is normal.

*3: If the check is performed in a dark place, DTC B1421/21 (solar sensor circuit abnormal) may be output even though the system is normal.

*4: The A/C amplifier memorizes the DTC of the respective malfunction if it has occurred for the period of time indicated in the brackets.

Last Modified: 3-10-2010	6.4 D	**From:** 200901
Model Year: 2010	**Model:** Corolla	**Doc ID:** RM000001GUG022X
Title: HEATING / AIR CONDITIONING: AIR CONDITIONING SYSTEM (for Automatic Air Conditioning System): ACTUATOR CHECK (2010 Corolla)		

ACTUATOR CHECK

1. ACTUATOR CHECK

(a) Start the engine and warm it up.

(b) Perform the indicator check INFO .

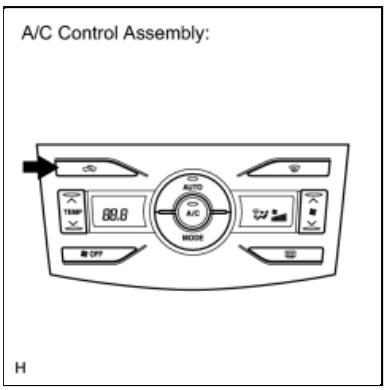

(c) Push the "R/F" switch to perform the actuator check.

HINT:

Be sure to perform the actuator check after starting the engine.

(d) As the actuator check is repeated from steps 1 to 10 at 1 second intervals, check the temperature and air flow visually and by hand.

HINT:

- The display blinks at 1 second intervals in the step operation.
- Push the "OFF" switch to finish panel diagnosis.
- Push the "AUTO" switch to enter the sensor check mode.

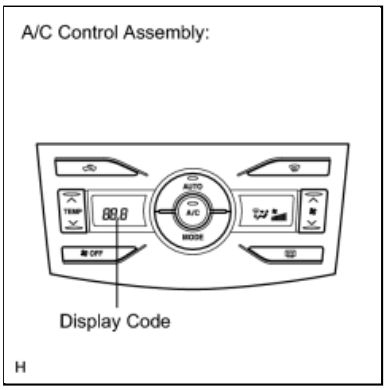

STEP NO.	DISPLAY CODE	CONDITION				
		BLOWER LEVEL	AIR MIX DAMPER	AIRFLOW VENT	AIR INLET DAMPER	COMPRESSOR
1	0	0	0% open	FACE	FRESH	OFF
2	1	1	0% open	FACE	FRESH	OFF
3	2	17	0% open	FACE	RECIRCULATION/FRESH	ON
4	3	17	0% open	FACE	RECIRCULATION	ON
5	4	17	50% open	B/L	RECIRCULATION	ON
6	5	17	50% open	B/L	RECIRCULATION	ON
7	6	17	50% open	FOOT	FRESH	ON
8	7	17	100% open	FOOT-0	FRESH	ON
9	8	17	100% open	F/D	FRESH	ON
10	9	31	100% open	DEF	FRESH	ON

A/C Control Assembly:

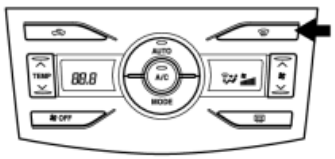

H

(e) If the steps are difficult to read because they change automatically, push the "DEF" switch to display the steps one at a time so that they can be read easily. The items are displayed step by step each time the "DEF" switch is pushed.

HINT:

- Push the "OFF" switch to finish panel diagnosis.
- Push the "R/F" switch to enter the sensor check mode.

Last Modified: 3-10-2010	6.4 C	**From:** 200901
Model Year: 2010	**Model:** Corolla	**Doc ID:** RM000001M2X01KX
Title: HEATING / AIR CONDITIONING: AIR CONDITIONING SYSTEM (for Automatic Air Conditioning System): B1411/11: Room Temperature Sensor Circuit (2010 Corolla)		

DTC	**B1411/11**	**Room Temperature Sensor Circuit**

DESCRIPTION

This sensor detects the cabin temperature that is used as the basis for temperature control and sends a signal to the A/C amplifier.

DTC NO.	DTC DETECTION CONDITION	TROUBLE AREA
B1411/11	Open or short in room temperature sensor circuit	• Room temperature sensor • Harness or connector between room temperature sensor and A/C amplifier • A/C amplifier

WIRING DIAGRAM

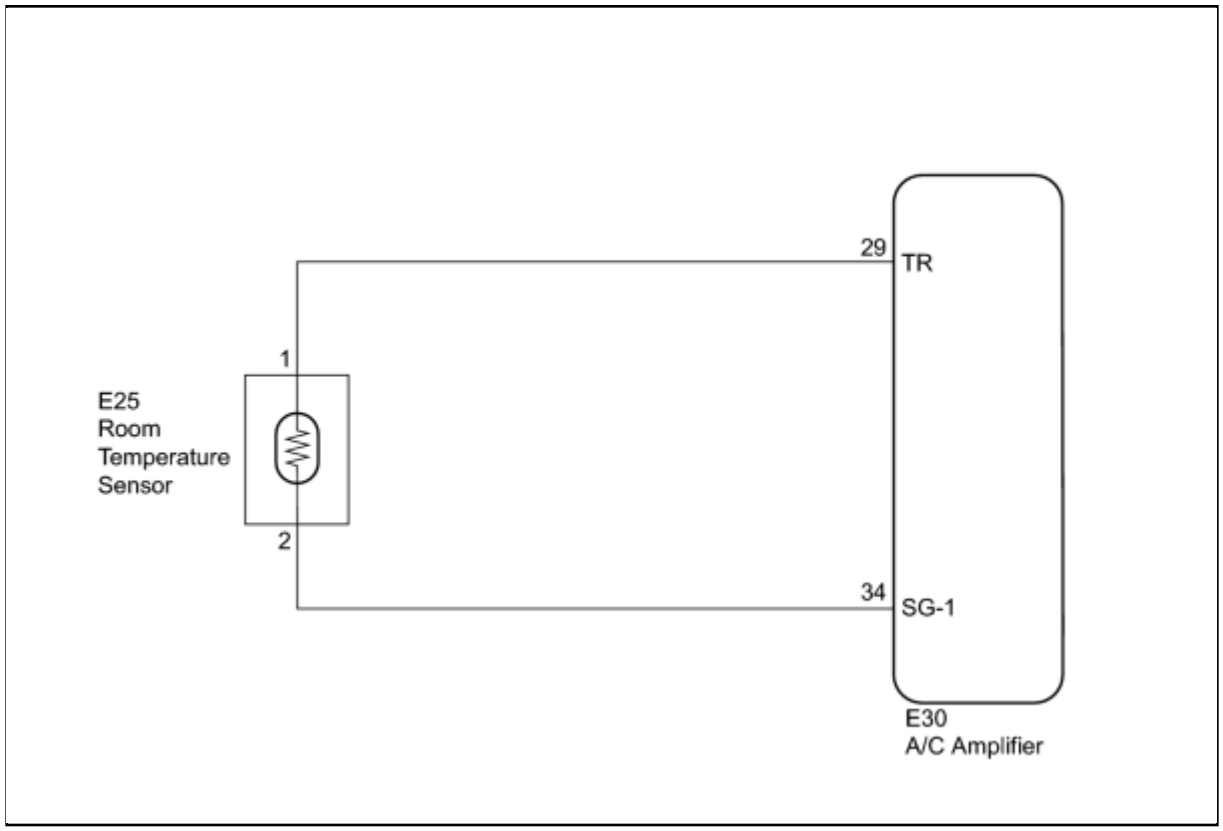

INSPECTION PROCEDURE

PROCEDURE

1.	**READ VALUE USING TECHSTREAM**

(a) Connect the Techstream to the DLC3.

(b) Turn the ignition switch to ON and turn the Techstream main switch on.

(c) Select the item below in the Data List, and read the display on the Techstream.

Data List / Air Conditioner

TESTER DISPLAY	MEASUREMENT ITEM/RANGE	NORMAL CONDITION	DIAGNOSTIC NOTE
Room Temperature Sensor (Room Temp)	Room temperature sensor / Min.: -6.5°C (20.3°F), Max.: 57.25°C (135.05°F)	Actual cabin temperature is displayed	-

OK:

The display is as specified in the "Normal Condition" column.

Result:

RESULT	PROCEED TO
NG	A
OK (When troubleshooting according to Problem Symptoms Table)	B
OK (When troubleshooting according to DTC)	C

C ▶ **REPLACE AIR CONDITIONING AMPLIFIER**

B ▶ **PROCEED TO NEXT CIRCUIT INSPECTION SHOWN IN PROBLEM SYMPTOMS TABLE**

A ▼

2.	**INSPECT ROOM TEMPERATURE SENSOR**

(a) Remove the room temperature sensor.

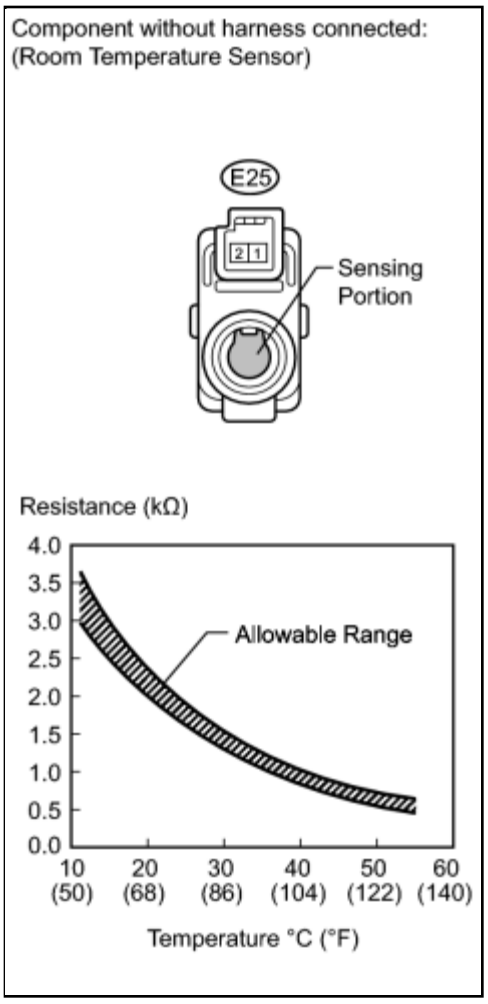

(b) Disconnect the connector from the room temperature sensor.

(c) Measure the resistance according to the value(s) in the table below.

Standard Resistance:

TESTER CONNECTION	CONDITION	SPECIFIED CONDITION
E25-1 - E25-2	10°C (50°F)	3.00 to 3.73 kΩ
E25-1 - E25-2	15°C (59°F)	2.45 to 2.88 kΩ
E25-1 - E25-2	20°C (68°F)	1.95 to 2.30 kΩ
E25-1 - E25-2	25°C (77°F)	1.60 to 1.80 kΩ
E25-1 - E25-2	30°C (86°F)	1.28 to 1.47 kΩ
E25-1 - E25-2	35°C (95°F)	1.00 to 1.22 kΩ
E25-1 - E25-2	40°C (104°F)	0.80 to 1.00 kΩ
E25-1 - E25-2	45°C (113°F)	0.65 to 0.85 kΩ
E25-1 - E25-2	50°C (122°F)	0.50 to 0.70 kΩ

TESTER CONNECTION	CONDITION	SPECIFIED CONDITION
E25-1 - E25-2	55°C (131°F)	0.44 to 0.60 kΩ
E25-1 - E25-2	60°C (140°F)	0.36 to 0.50 kΩ

NOTICE:

- Hold the sensor only by its connector. Touching the sensor may change the resistance value.
- When measuring, the sensor temperature must be the same as the ambient temperature.

HINT:

As the temperature increases, the resistance decreases (see the graph).

NG ▶ **REPLACE ROOM TEMPERATURE SENSOR**

OK ▼

3.	**CHECK HARNESS AND CONNECTOR (ROOM TEMPERATURE SENSOR - AIR CONDITIONING AMPLIFIER)**

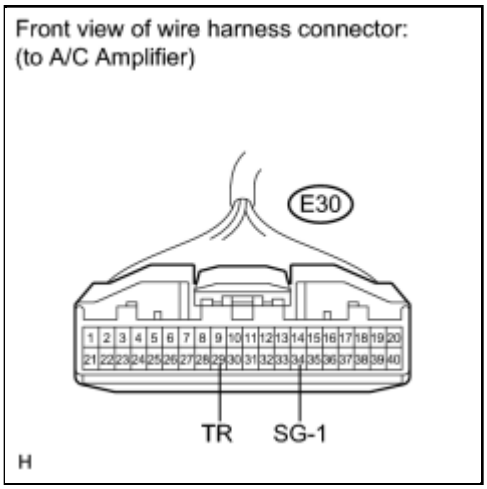

(a) Disconnect the connector from the A/C amplifier.

(b) Measure the resistance according to the value(s) in the table below.

Standard Resistance:

TESTER CONNECTION	CONDITION	SPECIFIED CONDITION

Front view of wire harness connector:
(to Room Temperature Sensor)



H

E30-29 (TR) - E25-1	Always	Below 1 Ω
E30-34 (SG-1) - E25-2	Always	Below 1 Ω
E30-29 (TR) - Body ground	Always	10 kΩ or higher
E30-34 (SG-1) - Body ground	Always	10 kΩ or higher

NG ▶ **REPAIR OR REPLACE HARNESS OR CONNECTOR**

OK ▶ **REPLACE AIR CONDITIONING AMPLIFIER**

Last Modified: 3-10-2010	6.4 C	**From:** 200901
Model Year: 2010	**Model:** Corolla	**Doc ID:** RM000002HT000JX
Title: HEATING / AIR CONDITIONING: AIR CONDITIONING SYSTEM (for Automatic Air Conditioning System): B1412/12: Ambient Temperature Sensor Circuit (2010 Corolla)		

DTC	**B1412/12**	**Ambient Temperature Sensor Circuit**

DESCRIPTION

This sensor detects the temperature outside the cabin and sends the appropriate signals to the A/C amplifier via the CAN communication system.

DTC NO.	DTC DETECTION CONDITION	TROUBLE AREA
B1412/12	Open or short in ambient temperature sensor circuit	• Ambient temperature sensor • Harness or connector between ambient temperature sensor and combination meter • Combination meter • CAN communication system • A/C amplifier

WIRING DIAGRAM

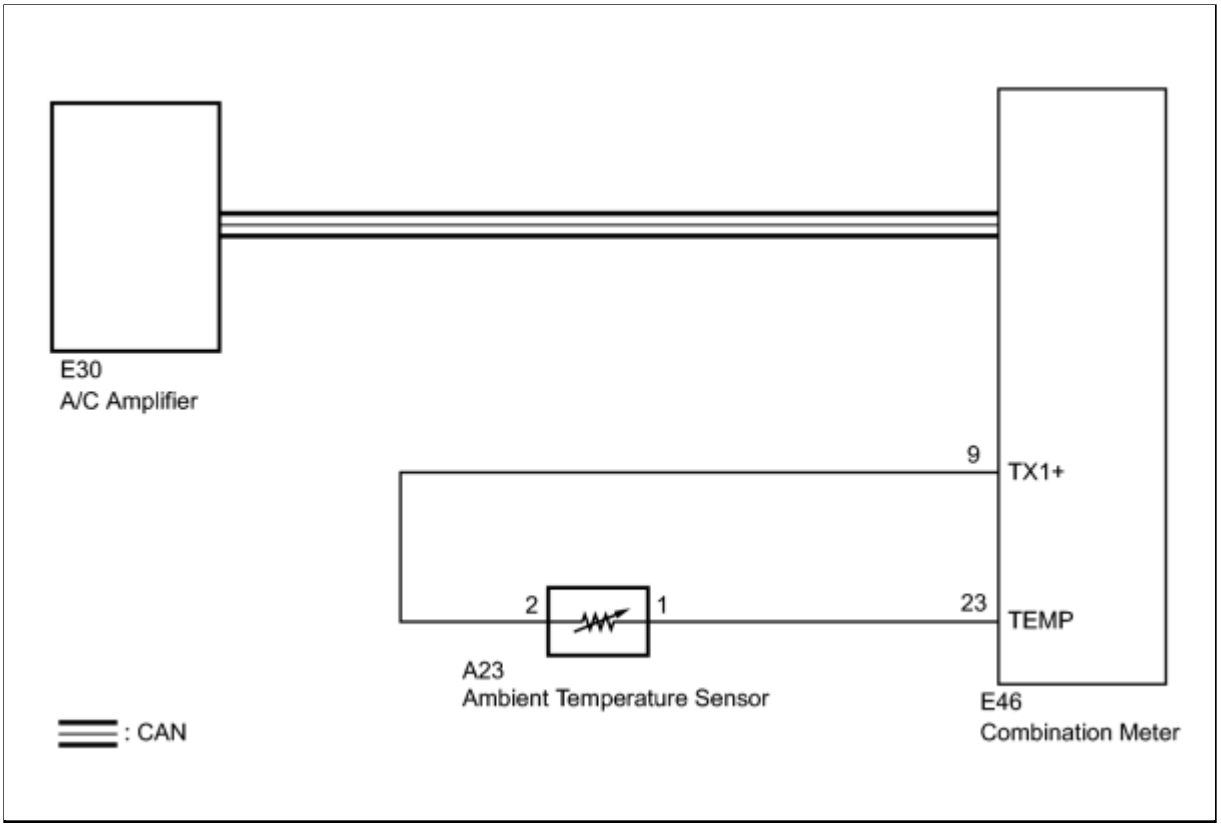

INSPECTION PROCEDURE

PROCEDURE

1.	**CHECK CAN COMMUNICATION SYSTEM (COMBINATION METER - A/C AMPLIFIER)**

(a) Use the Techstream.

(b) Check that the CAN communication system functions normally between the combination meter and the A/C amplifier.

Result:

RESULT	PROCEED TO
CAN DTC is not output	A
CAN DTC is output	B

B ▶ **GO TO CAN COMMUNICATION SYSTEM**

A

2.	**READ VALUE USING TECHSTREAM**

(a) Connect the Techstream to the DLC3.

(b) Turn the ignition switch to ON and turn the Techstream main switch on.

(c) Select the item below in the Data List, and read the display on the Techstream.

Data List / Air Conditioner

TESTER DISPLAY	MEASUREMENT ITEM/RANGE	NORMAL CONDITION	DIAGNOSTIC NOTE
Ambient Temp Sensor (Ambi Temp Sens)	Ambient temperature sensor / Min: -23.3°C (-9.94°F), Max: 65.95°C (150.71°F)	Actual ambient temperature is displayed	Open in circuit: -23.3°C (-9.94°F) Short in circuit: 65.95°C (150.71°F)

OK:
The display is as specified in the "Normal Condition" column.
Result:

RESULT	PROCEED TO
NG	A
OK (When troubleshooting according to Problem Symptoms Table)	B
OK (When troubleshooting according to DTC)	C

C ▶ **REPLACE AIR CONDITIONING AMPLIFIER**

B ▶ **PROCEED TO NEXT CIRCUIT INSPECTION SHOWN IN PROBLEM SYMPTOMS TABLE**

A

3.	**CHECK HARNESS AND CONNECTOR (AMBIENT TEMPERATURE SENSOR CIRCUIT)**

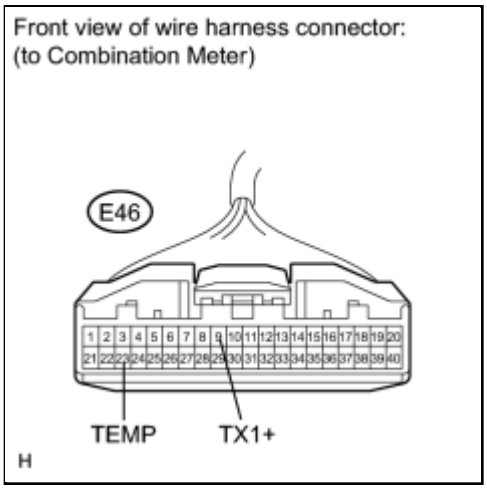

(a) Disconnect the connector from the combination meter.

(b) Measure the resistance according to the value(s) in the table below.

Standard Resistance:

TESTER CONNECTION	CONDITION	SPECIFIED CONDITION
E46-9 (TX1+) - E46-23 (TEMP)	Outside temperature: 25°C (77°F)	1.60 to 1.80 kΩ
E46-9 (TX1+) - E46-23 (TEMP)	Outside temperature: 40°C (104°F)	0.80 to 1.00 kΩ

HINT:

As the temperature increases, the resistance decreases.

NG ▶ **INSPECT AMBIENT TEMPERATURE SENSOR**

OK ▼

4.	**REPLACE COMBINATION METER**

(a) Replace the combination meter INFO .

HINT:

Since the combination meter cannot be inspected while it is removed from the vehicle, replace the combination meter with a known good one and check that the condition returns to normal.

(b) Check for DTCs.

Result:

RESULT	PROCEED TO
DTC B1412 is not output	A
DTC B1412 is output	B

B ▶ **REPLACE AIR CONDITIONING AMPLIFIER**

A ▶ **END**

5.	INSPECT AMBIENT TEMPERATURE SENSOR

(a) Remove the ambient temperature sensor.

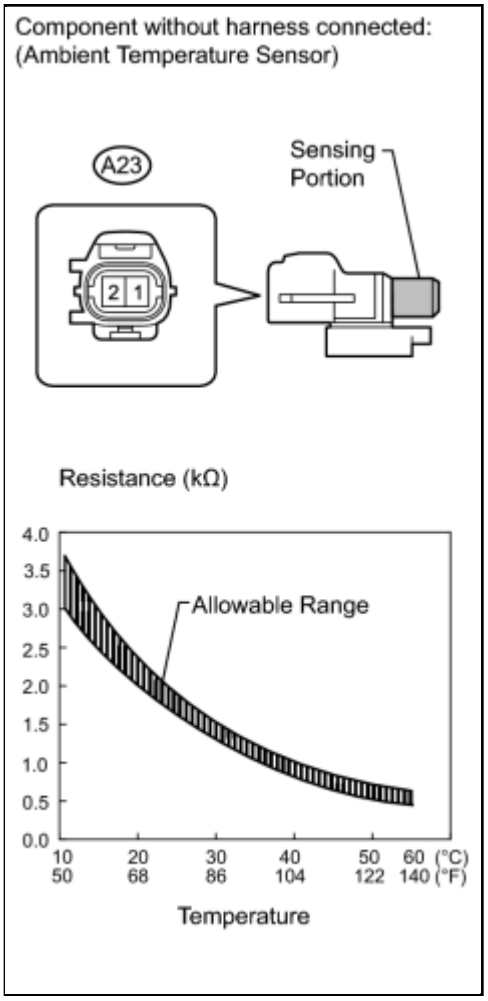

(b) Disconnect the connector from the ambient temperature sensor.

(c) Measure the resistance according to the value(s) in the table below.

Standard Resistance:

TESTER CONNECTION	CONDITION	SPECIFIED CONDITION
A23-1 - A23-2	10°C (50°F)	3.00 to 3.73 kΩ
A23-1 - A23-2	15°C (59°F)	2.45 to 2.88 kΩ
A23-1 - A23-2	20°C (68°F)	1.95 to 2.30 kΩ
A23-1 - A23-2	25°C (77°F)	1.60 to 1.80 kΩ
A23-1 - A23-2	30°C (86°F)	1.28 to 1.47 kΩ
A23-1 - A23-2	35°C (95°F)	1.00 to 1.22 kΩ
A23-1 - A23-2	40°C (104°F)	0.80 to 1.00 kΩ
A23-1 - A23-2	45°C (113°F)	0.65 to 0.85 kΩ
A23-1 - A23-2	50°C (122°F)	0.50 to 0.70 kΩ
A23-1 - A23-2	55°C (131°F)	0.44 to 0.60 kΩ
A23-1 - A23-2	60°C (140°F)	0.36 to 0.50 kΩ

NOTICE:

- Hold the sensor only by its connector. Touching the sensor may change the resistance value.
- When measuring, the sensor temperature must be the same as the ambient temperature.

HINT:

As the temperature increases, the resistance decreases (see the graph).

NG ▶ **REPLACE AMBIENT TEMPERATURE SENSOR**

OK ▶ **REPAIR OR REPLACE HARNESS OR CONNECTOR (COMBINATION METER - AMBIENT TEMPERATURE SENSOR)**

Last Modified: 3-10-2010	6.4 C	**From:** 200901
Model Year: 2010	**Model:** Corolla	**Doc ID:** RM000000STP03SX
Title: HEATING / AIR CONDITIONING: AIR CONDITIONING SYSTEM (for Automatic Air Conditioning System): B1423/23: Pressure Sensor Circuit (2010 Corolla)		

DTC	**B1423/23**	**Pressure Sensor Circuit**

DESCRIPTION

This DTC is output when refrigerant pressure on the high pressure side is extremely low (0.19 MPa (2.0 kgf/cm^2, 28 psi) or less) or extremely high (3.14 MPa (32.0 kgf/cm^2, 455 psi) or more). The A/C pressure sensor, which is installed on the high pressure side pipe to detect refrigerant pressure, outputs a refrigerant pressure signal to the A/C amplifier. The A/C amplifier converts this signal to a pressure value according to the sensor characteristics to control the compressor.

DTC NO.	DTC DETECTION CONDITION	TROUBLE AREA
B1423/23	• Open or short in A/C pressure sensor circuit • Refrigerant pressure on the high pressure side is extremely low (0.19 MPa (2.0 kgf/cm^2, 28 psi) or less) or extremely high (3.14 MPa (32.0 kgf/cm^2, 455 psi) or more).	• A/C pressure sensor • Harness or connector between A/C pressure sensor and A/C amplifier • A/C amplifier • Expansion valve (blocked, stuck) • Condenser (blocked, deterioration of cooling capacity due to dirt) • Cooler dryer (moisture in the refrigerant cycle cannot be absorbed) • Cooling fan system (condenser cannot be cooled down) • A/C system (leaks, blocked)

WIRING DIAGRAM

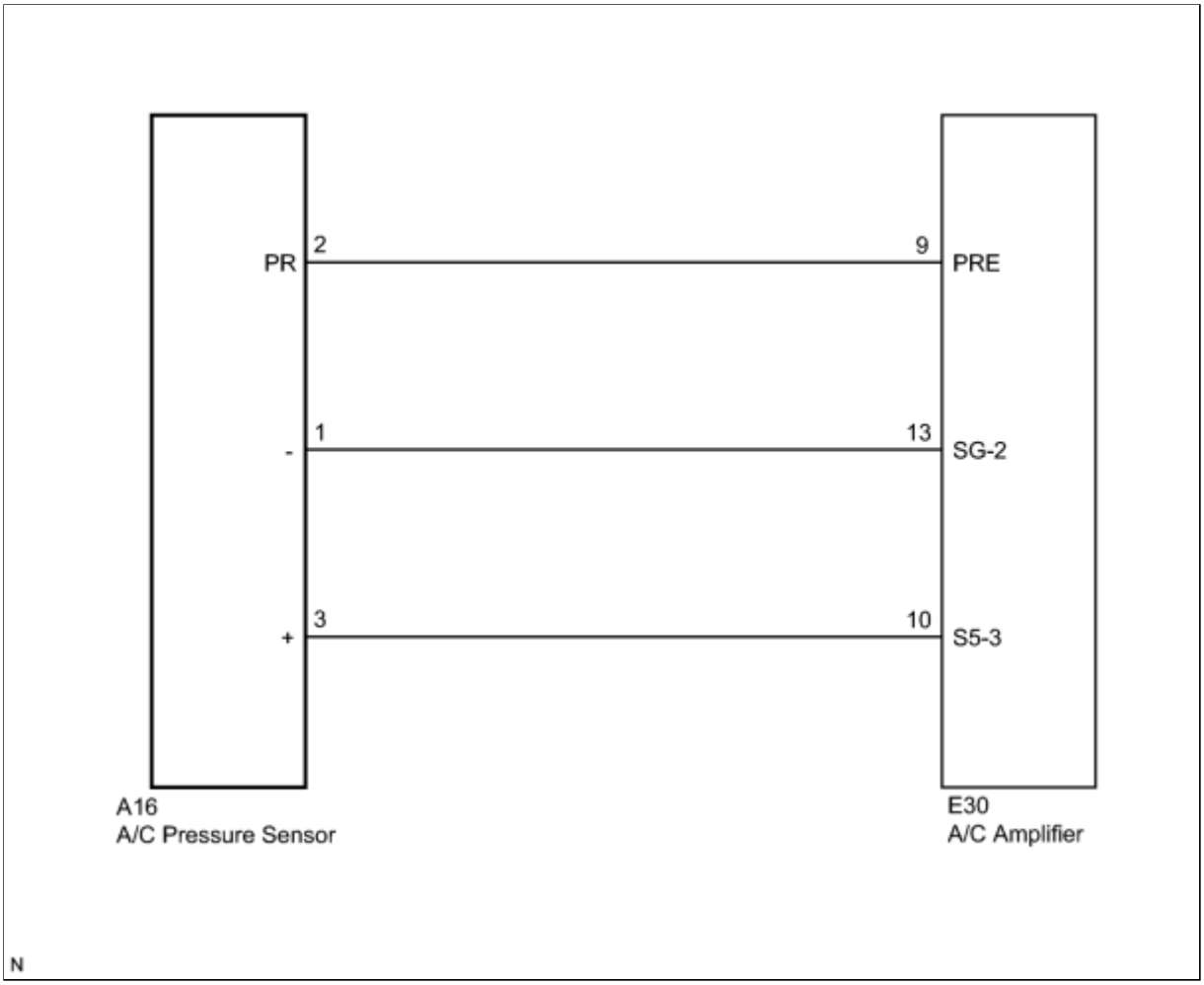

INSPECTION PROCEDURE

PROCEDURE

1.	**CHECK HARNESS AND CONNECTOR (POWER SOURCE CIRCUIT)**

(a) Disconnect the connector from the A/C pressure sensor.

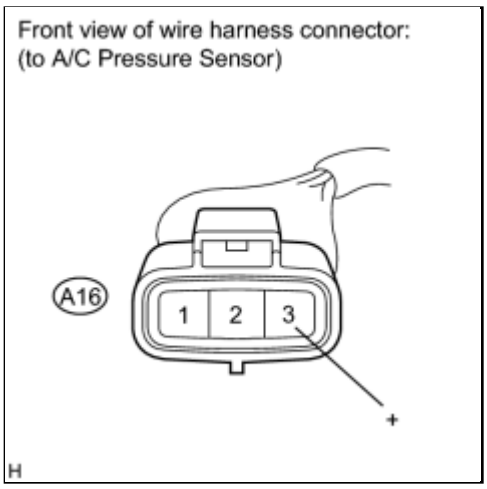

(b) Measure the voltage according to the value(s) in the table below.

Standard Voltage:

TESTER CONNECTION	SWITCH CONDITION	SPECIFIED CONDITION
A16-3 (+) - Body ground	Ignition switch ON	4.75 to 5.25 V

NG ▶ **CHECK HARNESS AND CONNECTOR (A/C AMPLIFIER - A/C PRESSURE SENSOR)**

OK ▼

2.	**CHECK HARNESS AND CONNECTOR (GROUND CIRCUIT)**

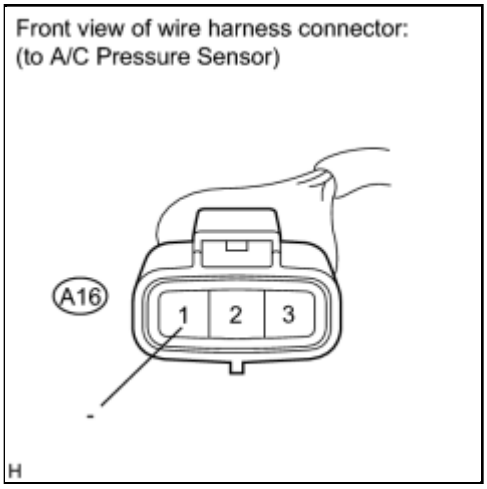

(a) Measure the resistance according to the value(s) in the table below.

Standard Resistance:

TESTER CONNECTION	CONDITION	SPECIFIED CONDITION
A16-1 (-) - Body ground	Always	Below 1 Ω

NG ▶ CHECK HARNESS AND CONNECTOR (A/C AMPLIFIER - A/C PRESSURE SENSOR)

OK ▼

3.	INSPECT A/C PRESSURE SENSOR (SENSOR SIGNAL CIRCUIT)

(a) Reconnect the connector to the A/C pressure sensor.

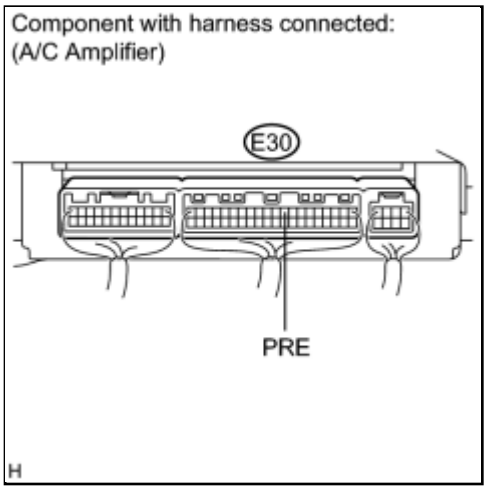

(b) Remove the A/C amplifier with the connectors still connected.

(c) Measure the voltage according to the value(s) in the table below.

Standard Voltage:

TESTER CONNECTION	CONDITION	SPECIFIED CONDITION
E30-9 (PRE) - Body ground	Ignition switch ON (A/C: OFF)	0.7 to 4.8 V

HINT:

If the measured voltage is not within the normal range, there may be a malfunction in the A/C amplifier, A/C pressure sensor, or wire harness. It is also possible that the amount of refrigerant may not be appropriate.

NG ▶ CHECK HARNESS AND CONNECTOR (A/C AMPLIFIER - A/C PRESSURE SENSOR)

OK

4.	INSPECT A/C PRESSURE SENSOR (SENSOR SIGNAL CIRCUIT)

(a) Measure the voltage when the following conditions are satisfied.

ITEM	CONDITION
Vehicle Doors	Fully open
Temperature Setting	MAX COLD
Blower Speed	HI
A/C Switch	ON
R/F Switch	RECIRCULATION
Interior Temperature	25 to 35°C (77 to 95°F)
Engine Speed	2000 rpm

NOTICE:

- If refrigerant pressure on the high pressure side becomes extremely high during the inspection (if the voltage exceeds 4.8 V), the fail-safe function stops compressor operation. Therefore, measure the voltage before the fail-safe function operates.
- It is necessary to measure the voltage for a certain amount of time (approximately 10 minutes) because the problem symptom may recur after a while.

HINT:

When the outside air temperature is low (below -1.5°C (29.3°F)), the compressor stops due to the operation of the ambient temperature and the evaporator temperature sensor to prevent the evaporator from freezing. In this case, perform the inspection in a warm indoor environment.

(1) Measure the voltage according to the value(s) in the table below.

Standard Voltage:

TESTER CONNECTION	CONDITION	SPECIFIED CONDITION
E30-9 (PRE) - Body ground	Ignition switch ON (A/C: ON)	0.7 to 4.8 V

Result:

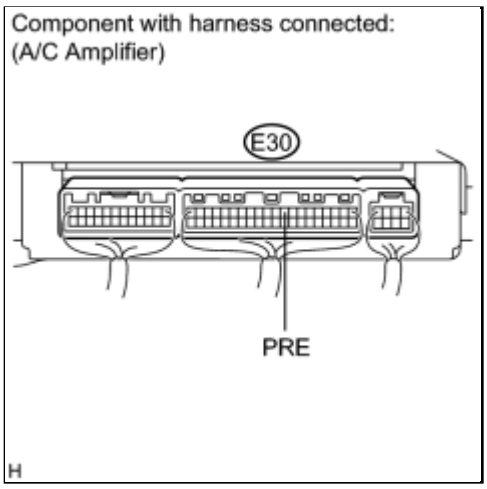

RESULT	PROCEED TO
NG	A
OK (When troubleshooting according to Problem Symptoms Table)	B
OK (When troubleshooting according to DTC)	C

C ▶ **REPLACE AIR CONDITIONING AMPLIFIER**

B ▶ **PROCEED TO NEXT CIRCUIT INSPECTION SHOWN IN PROBLEM SYMPTOMS TABLE**

A
▼

5.	INSPECT COOLING FAN SYSTEM

(a) Check that the cooling fan operates normally.

HINT:

- INFO for 2AZ-FE.
- INFO for 2ZR-FE.

NG ▶ **REPAIR COOLING FAN SYSTEM**

OK
▼

6.	CHARGE REFRIGERANT

(a) Use a refrigerant recovery unit to recover refrigerant.

(b) Evacuate the A/C system.

(c) Add an appropriate amount of refrigerant INFO .

HINT:

If refrigerant is added and the system has not been properly evacuated (insufficient vacuum time), moisture in the air remaining in the system will freeze in the expansion valve, blocking the flow on the high pressure side. Therefore, in order to confirm the problem, recover the refrigerant and properly evacuate the system. Add an appropriate amount of refrigerant, and check for DTCs.

NEXT

7.	**RECHECK DTC**

(a) Recheck for DTCs when the following conditions are satisfied.

ITEM	CONDITION
Vehicle Doors	Fully open
Temperature Setting	MAX COLD
Blower Speed	HI
A/C Switch	ON
R/F Switch	RECIRCULATION
Interior Temperature	25 to 35°C (77 to 95°F)
Engine Speed	2000 rpm

NOTICE:

If refrigerant pressure on the high pressure side becomes high, the DTC will be set. Therefore, it is necessary to measure the voltage for a certain amount of time (approximately 10 minutes) because the DTC may be set after the A/C operates for a while.

HINT:

- When the outside air temperature is low (below -1.5°C (29.3°F)), the compressor stops due to operation of the ambient temperature sensor and the evaporator temperature sensor to prevent the evaporator from freezing. In this case, perform the inspection in a warm indoor environment.
- If refrigerant is added and the system has not been properly evacuated (insufficient vacuum time), moisture in the air remaining in the system will freeze in the expansion valve, blocking the flow on the high pressure side. Therefore, in order to confirm the problem, recover the refrigerant and properly evacuate the system. Add an appropriate amount of refrigerant, and check for DTCs. If the DTC is not output after this work, it indicates that the cooler dryer in the condenser is not able to absorb moisture in the refrigerant cycle. In this case, to complete the repair, it is necessary to replace the cooler dryer.

Result:

RESULT	PROCEED TO
DTC B1423 is not output	A
DTC B1423 is output	B

B ▶ **REPLACE EXPANSION VALVE**

A ▶ **REPLACE COOLER DRYER**

8.	REPLACE EXPANSION VALVE

(a) Replace the expansion valve with a new one INFO .

HINT:

Replace the expansion valve with a new one because the expansion valve is either stuck or clogged.

NEXT

9.	CHARGE REFRIGERANT

(a) Add an appropriate amount of refrigerant INFO .

NEXT

10.	RECHECK DTC

(a) Recheck for DTCs when the following conditions are satisfied.

ITEM	CONDITION
Vehicle Doors	Fully open

ITEM	CONDITION
Temperature Setting	MAX COLD
Blower Speed	HI
A/C Switch	ON
R/F Switch	RECIRCULATION
Interior Temperature	25 to 35°C (77 to 95°F)
Engine Speed	2000 rpm

NOTICE:

If refrigerant pressure on the high pressure side becomes high, the DTC will be set. Therefore, it is necessary to measure the voltage for a certain amount of time (approximately 10 minutes) because the DTC may be set after the A/C operates for a while.

HINT:

- When the outside air temperature is low (below -1.5°C (29.3°F)), the compressor stops due to the operation of the ambient temperature sensor and the evaporator temperature sensor to prevent the evaporator from freezing. In this case, perform the inspection in a warm indoor environment.
- If refrigerant pressure is not normal after replacing the expansion valve with a new one, the condenser or pipes may be clogged due to dirt, dust or other contaminants. In this case, clean or replace the condenser or pipes.

Result:

RESULT	PROCEED TO
DTC B1423 is not output	A
DTC B1423 is output	B

B ▶ **REPLACE CONDENSER**

A ▶ **END**

11.	**CHECK HARNESS AND CONNECTOR (A/C AMPLIFIER - A/C PRESSURE SENSOR)**

(a) Disconnect the connector from the A/C amplifier.

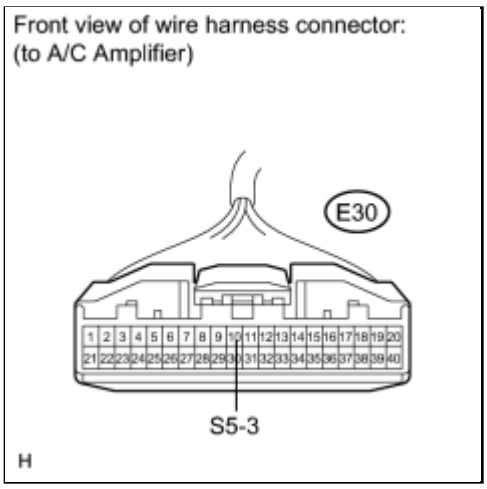

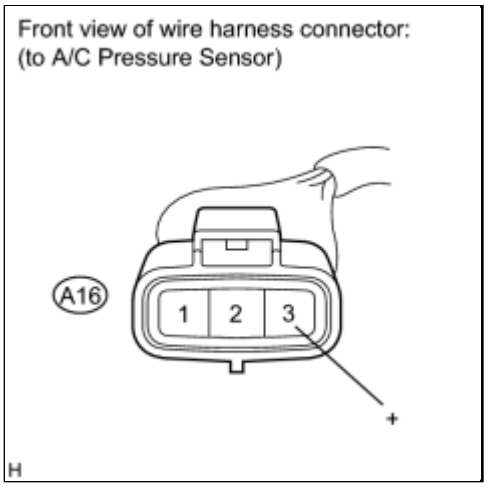

(b) Measure the resistance according to the value(s) in the table below.

Standard Resistance:

TESTER CONNECTION	CONDITION	SPECIFIED CONDITION
A16-3 (+) - E30-10 (S5-3)	Always	Below 1 Ω
E30-10 (S5-3) - Body ground	Always	10 kΩ or higher

NG ▶ **REPAIR OR REPLACE HARNESS OR CONNECTOR**

OK ▶ **REPLACE AIR CONDITIONING AMPLIFIER**

12.	**CHECK HARNESS AND CONNECTOR (A/C AMPLIFIER - A/C PRESSURE SENSOR)**

(a) Disconnect the connector from the A/C amplifier.

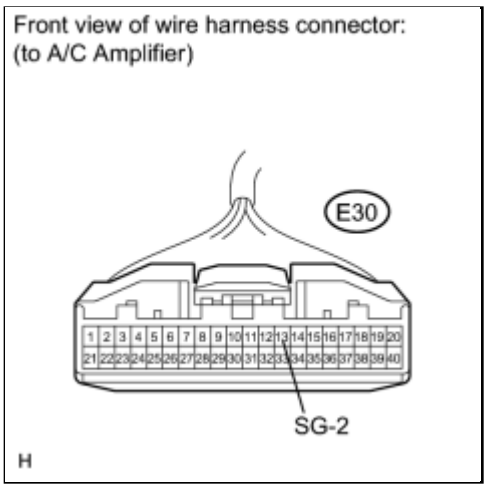

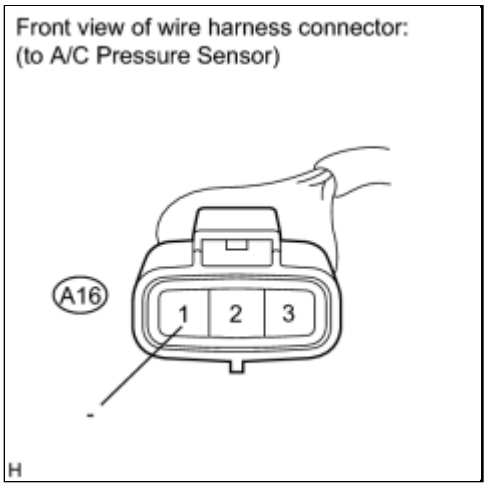

(b) Measure the resistance according to the value(s) in the table below.

Standard Resistance:

TESTER CONNECTION	CONDITION	SPECIFIED CONDITION
A16-1 (-) - E30-13 (SG-2)	Always	Below 1 Ω
E30-13 (SG-2) - Body ground	Always	10 kΩ or higher

NG ▶ **REPAIR OR REPLACE HARNESS OR CONNECTOR**

OK ▶ **REPLACE AIR CONDITIONING AMPLIFIER**

13.	**CHECK HARNESS AND CONNECTOR (A/C AMPLIFIER - A/C PRESSURE SENSOR)**

(a) Disconnect the connector from the A/C amplifier.

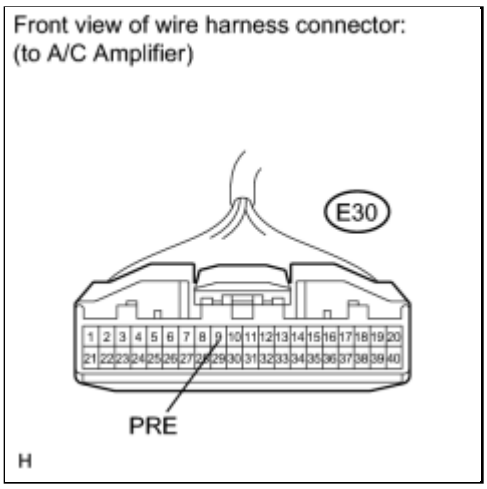

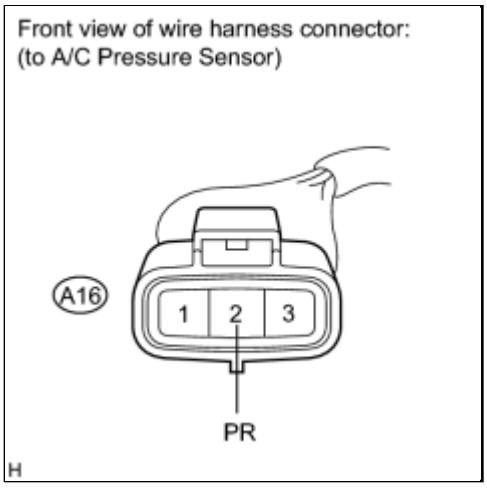

(b) Measure the resistance according to the value(s) in the table below.

Standard Resistance:

TESTER CONNECTION	CONDITION	SPECIFIED CONDITION
A16-2 (PR) - E30-9 (PRE)	Always	Below 1 Ω
E30-9 (PRE) - Body ground	Always	10 kΩ or higher

NG ▶ **REPAIR OR REPLACE HARNESS OR CONNECTOR**

OK ▼

14.	INSPECT FOR A/C SYSTEM LEAK

(a) Install the manifold gauge set.

(b) Recover the refrigerant from the A/C system using a refrigerant recovery unit.

(c) Evacuate the A/C system and check that vacuum can be maintained.

OK:

Vacuum can be maintained in the A/C system.

HINT:

If vacuum cannot be maintained in the A/C system, there may be a refrigerant leak. In this case, it is necessary

to repair or replace the leaking part of the A/C system.

NG ▶ REPAIR A/C SYSTEM LEAK

OK ▼

15.	CHARGE REFRIGERANT

(a) Add an appropriate amount of refrigerant INFO .

NEXT ▼

16.	RECHECK DTC

(a) Recheck for DTCs when the following conditions are satisfied.

ITEM	CONDITION
Vehicle Doors	Fully open
Temperature Setting	MAX COLD
Blower Speed	HI
A/C Switch	ON
R/F Switch	RECIRCULATION
Interior Temperature	25 to 35°C (77 to 95°F)
Engine Speed	2000 rpm

NOTICE:

If refrigerant pressure on the high pressure side becomes high, the DTC will be set. Therefore, it is necessary to measure the voltage for a certain amount of time (approximately 10 minutes) because the DTC may be set after the A/C operates for a while.

HINT:

When the outside air temperature is low (below -1.5°C (29.3°F)), the compressor stops due to the operation of the ambient temperature sensor and the evaporator temperature sensor to prevent the evaporator from freezing. In this case, perform the inspection in a warm indoor environment.

Result:

RESULT	PROCEED TO
DTC B1423 is not output	A
DTC B1423 is output	B

NOTICE:

If the DTC was set due to an insufficient or excessive amount of refrigerant, the problem may have been solved after performing the previous step. However, the root cause of insufficient refrigerant may be refrigerant leaks. The root cause of excessive refrigerant may be adding refrigerant when the level was insufficient. Therefore, identify and repair the area where refrigerant leaks from as necessary.

B ▶ **INSPECT A/C PRESSURE SENSOR**

A ▶ **END**

17.	INSPECT A/C PRESSURE SENSOR

(a) Install the manifold gauge set.

(b) Disconnect the connector from the A/C pressure sensor.

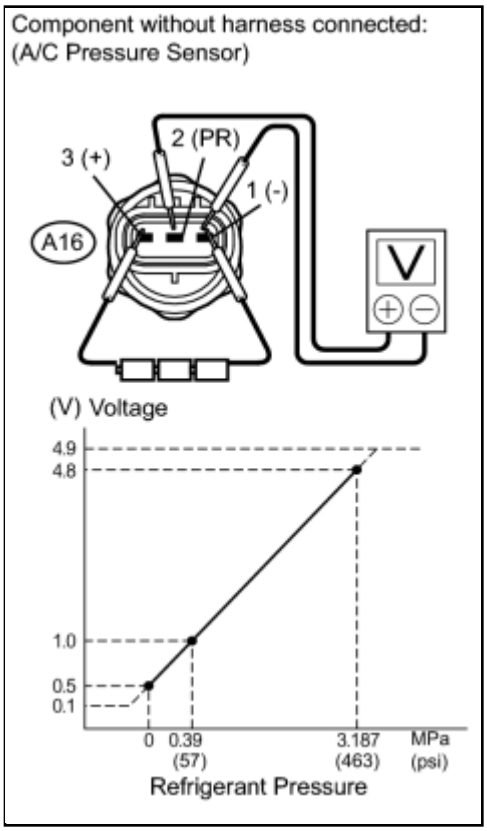

(c) Connect the three 1.5 V dry cell batteries' positive (+) lead to terminal 3, and the negative (-) lead to terminal 1.

(d) Connect the voltmeter's positive (+) lead to terminal 2, and the negative (-) lead to

terminal 1.

(e) Measure the voltage according to the value(s) in the table below.

Standard Voltage:

TESTER CONNECTION	CONDITION	SPECIFIED CONDITION
A16-2 (PR) - A16-1 (-)	Refrigerant pressure: 0.39 to 3.187 MPa (57 to 463 psi)	1.0 to 4.8 V

NG ▶ **REPLACE A/C PRESSURE SENSOR**

OK ▶ **REPLACE AIR CONDITIONING AMPLIFIER**

18.	**REPAIR A/C SYSTEM LEAK**

(a) Identify the area where refrigerant leaks from INFO.

(b) Repair the identified area of the A/C system.

(c) Evacuate the A/C system.

NEXT ▶ **CHARGE REFRIGERANT**

Last Modified: 3-10-2010	6.4 C	**From:** 200901
Model Year: 2010	**Model:** Corolla	**Doc ID:** RM000000STL030X
Title: HEATING / AIR CONDITIONING: AIR CONDITIONING SYSTEM (for Automatic Air Conditioning System): B1413/13: Evaporator Temperature Sensor Circuit (2010 Corolla)		

DTC	**B1413/13**	**Evaporator Temperature Sensor Circuit**

DESCRIPTION

The evaporator temperature sensor (A/C thermistor) is installed on the evaporator in the air conditioning unit. It detects the temperature of the cooled air that has passed through the evaporator and its signal is used to control the air conditioning. It sends a signal to the A/C amplifier. The resistance of the evaporator temperature sensor (A/C thermistor) changes in accordance with the temperature of the cooled air that has passed through the evaporator. As the temperature decreases, the resistance increases. As the temperature increases, the resistance decreases.

The A/C amplifier applies voltage (5 V) to the evaporator temperature sensor (A/C thermistor) and reads voltage changes as the resistance of the evaporator temperature sensor (A/C thermistor) changes. This sensor is used to prevent the evaporator from freezing.

DTC NO.	DTC DETECTION CONDITION	TROUBLE AREA
B1413/13	Open or short in evaporator temperature sensor circuit	• Evaporator temperature sensor • Air conditioning harness • A/C amplifier

WIRING DIAGRAM

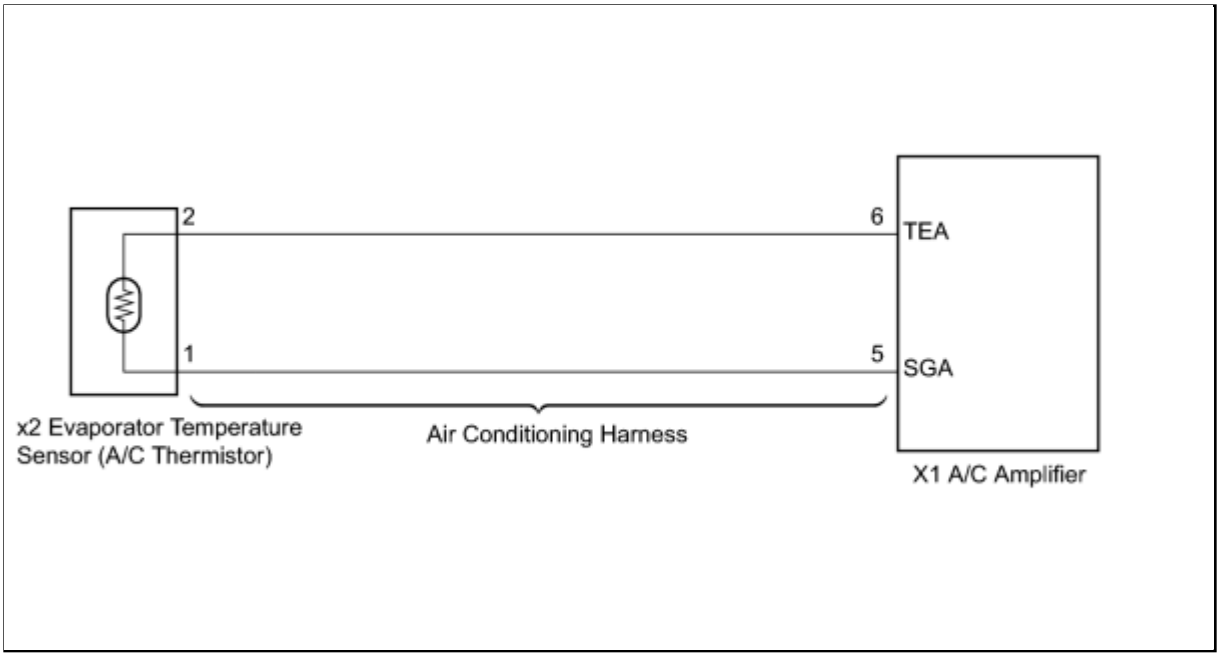

INSPECTION PROCEDURE

PROCEDURE

1.	**READ VALUE USING TECHSTREAM**

(a) Connect the Techstream to the DLC3.

(b) Turn the ignition switch to ON and turn the Techstream main switch on.

(c) Select the item below in the Data List, and read the display on the Techstream.

Data List / Air Conditioner

TESTER DISPLAY	MEASUREMENT ITEM/RANGE	NORMAL CONDITION	DIAGNOSTIC NOTE
Evaporator Fin Thermistor (Evap Fin Temp)	Evaporator fin thermistor / Min.: -29.7°C (-21.46°F), Max.: 59.55°C (139.19°F)	Actual evaporator temperature is displayed	Open in circuit: -29.7°C (-21.46°F) Short in circuit: 59.55°C (139.19°F)

OK:
The display is as specified in the "Normal Condition" column.
Result:

RESULT	PROCEED TO
NG	A

RESULT	PROCEED TO
OK (When troubleshooting according to Problem Symptoms Table)	B
OK (When troubleshooting according to DTC)	C

C ▶ **REPLACE AIR CONDITIONING AMPLIFIER**

B ▶ **PROCEED TO NEXT CIRCUIT INSPECTION SHOWN IN PROBLEM SYMPTOMS TABLE**

A ▼

2.	**INSPECT EVAPORATOR TEMPERATURE SENSOR**

(a) Remove the evaporator temperature sensor.

(b) Disconnect the connector from the evaporator temperature sensor.

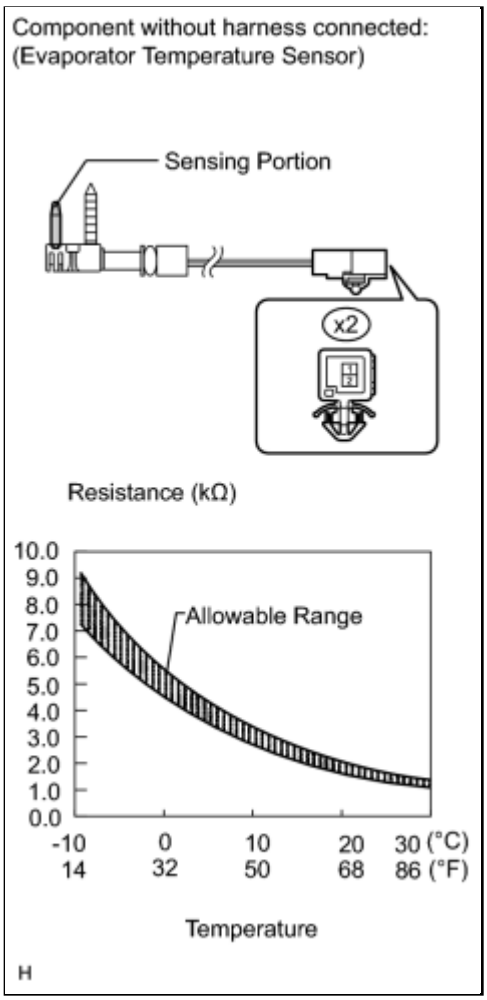

(c) Measure the resistance according to the value(s) in the table below.

Standard Resistance:

TESTER CONNECTION	CONDITION	SPECIFIED CONDITION
x2-1 - x2-2	-10°C (14°F)	7.30 to 9.10 kΩ
x2-1 - x2-2	-5°C (23°F)	5.65 to 6.95 kΩ
x2-1 - x2-2	0°C (32°F)	4.40 to 5.35 kΩ
x2-1 - x2-2	5°C (41°F)	3.40 to 4.15 kΩ
x2-1 - x2-2	10°C (50°F)	2.70 to 3.25 kΩ
x2-1 - x2-2	15°C (59°F)	2.14 to 2.58 kΩ
x2-1 - x2-2	20°C (68°F)	1.71 to 2.05 kΩ
x2-1 - x2-2	25°C (77°F)	1.38 to 1.64 kΩ
x2-1 - x2-2	30°C (86°F)	1.11 to 1.32 kΩ

NOTICE:

- Hold the sensor only by its connector. Touching the sensor may change the resistance value.
- When measuring, the sensor temperature must be the same as the ambient temperature.

HINT:

As the temperature increases, the resistance decreases (see the graph).

NG ▶ **REPLACE EVAPORATOR TEMPERATURE SENSOR**

OK
▼

3.	INSPECT AIR CONDITIONING HARNESS

(a) Remove the air conditioning harness.

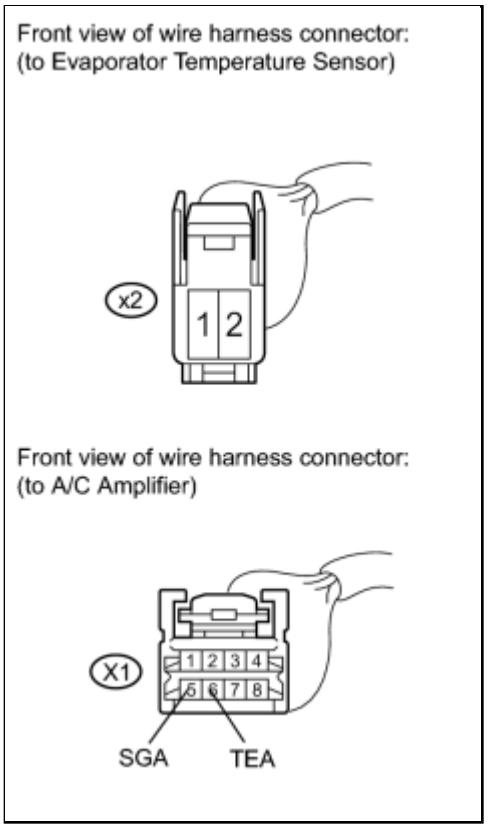

(1) Disconnect the connector from the A/C amplifier.

(b) Measure the resistance according to the value(s) in the table below.

Standard Resistance:

TESTER CONNECTION	CONDITION	SPECIFIED CONDITION
X1-6 (TEA) - x2-2	Always	Below 1 Ω

TESTER CONNECTION	CONDITION	SPECIFIED CONDITION
X1-5 (SGA) - x2-1	Always	Below 1 Ω
X1-6 (TEA) - Body ground	Always	10 kΩ or higher
X1-5 (SGA) - Body ground	Always	10 kΩ or higher

NG ▶ **REPLACE AIR CONDITIONING HARNESS**

OK ▶ **REPLACE AIR CONDITIONING AMPLIFIER**

Last Modified: 3-10-2010	6.4 C	**From:** 200901
Model Year: 2010	**Model:** Corolla	**Doc ID:** RM000000STN01TX
Title: HEATING / AIR CONDITIONING: AIR CONDITIONING SYSTEM (for Automatic Air Conditioning System): B1421/21: Solar Sensor Circuit (Passenger Side) (2010 Corolla)		

DTC	**B1421/21**	**Solar Sensor Circuit (Passenger Side)**

DESCRIPTION

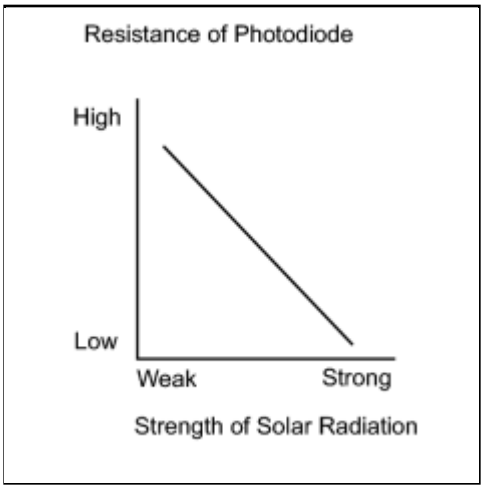

The solar sensor, which is installed on the upper side of the instrument panel, detects sunlight and controls the air conditioning in AUTO mode. The output voltage from the solar sensor varies according to the amount of sunlight. When the sunlight increases, the output voltage increases. As the sunlight decreases, the output voltage decreases. The A/C amplifier detects voltage output from the solar sensor.

DTC NO.	DTC DETECTION CONDITION	TROUBLE AREA
B1421/21	Open or short in passenger side solar sensor circuit	• Solar sensor • Harness or connector between solar sensor and A/C amplifier • A/C amplifier

WIRING DIAGRAM

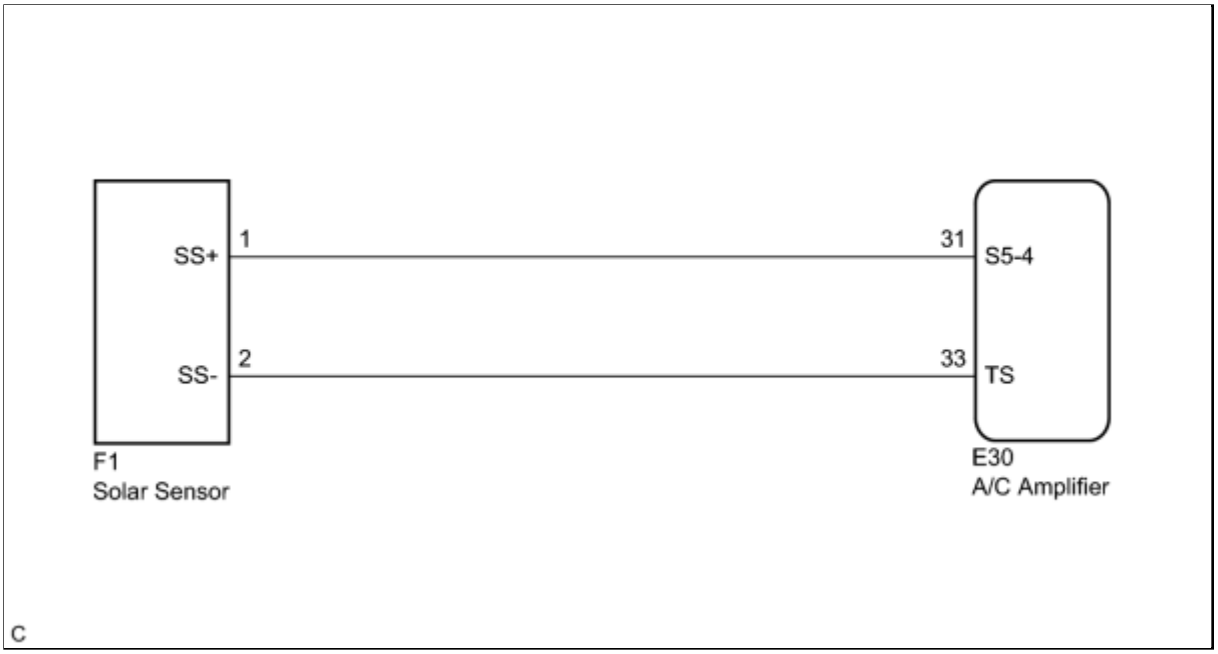

INSPECTION PROCEDURE

HINT:

If the check is performed in a dark place, DTC B1421/21 (solar sensor circuit abnormal) may be output even though the system is normal.

PROCEDURE

1.	**READ VALUE USING TECHSTREAM**

(a) Connect the Techstream to the DLC3.

(b) Turn the ignition switch to ON and turn the Techstream on.

(c) Expose the sensing portion of the solar sensor to light.

HINT:

Use an incandescent light for inspection.

(d) Select the item below in the Data List, and read the display on the Techstream.

Data List / Air Conditioner

TESTER DISPLAY	MEASUREMENT ITEM/RANGE	NORMAL CONDITION	DIAGNOSTIC NOTE
Solar Sensor (D side) (Solar	Driver side solar sensor / Min.: 0, Max.: 255	Driver side solar sensor value increases as brightness increases	-

TESTER DISPLAY	MEASUREMENT ITEM/RANGE	NORMAL CONDITION	DIAGNOSTIC NOTE
Sens-D)			

OK:

The display is as specified in the "Normal Condition" column.

Result:

RESULT	PROCEED TO
NG	A
OK (When troubleshooting according to Problem Symptoms Table)	B
OK (When troubleshooting according to DTC)	C

C ▶ **REPLACE AIR CONDITIONING AMPLIFIER**

B ▶ **PROCEED TO NEXT CIRCUIT INSPECTION SHOWN IN PROBLEM SYMPTOMS TABLE**

A ▼

2.	CHECK HARNESS AND CONNECTOR (SOLAR SENSOR)

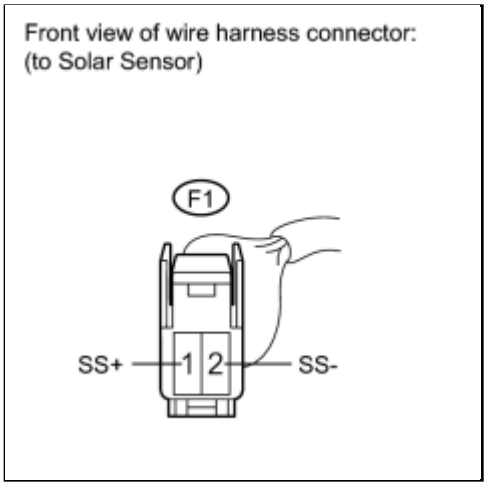

(a) Disconnect the connector from the solar sensor.

(b) Measure the voltage according to the value(s) in the table below.

Standard Voltage:

TESTER CONNECTION	SWITCH CONDITION	SPECIFIED CONDITION
F1-1 (SS+) - F1-2 (SS-)	Ignition switch off	Below 1 V
F1-1 (SS+) - F1-2 (SS-)	Ignition switch ON	11 to 14 V

NG ▶ **CHECK HARNESS AND CONNECTOR (SOLAR SENSOR - A/C AMPLIFIER)**

OK ▶ **REPLACE SOLAR SENSOR**

3.	CHECK HARNESS AND CONNECTOR (SOLAR SENSOR - A/C AMPLIFIER)

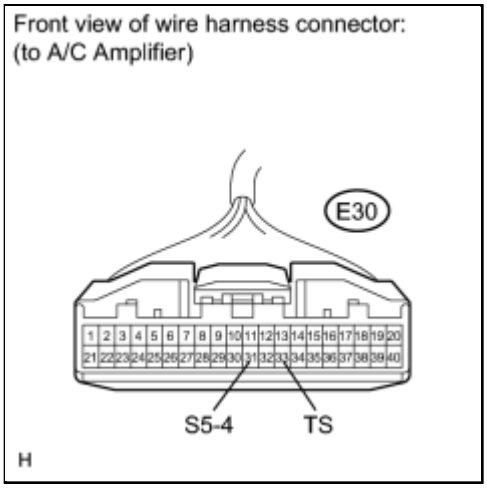

(a) Disconnect the connector from the A/C amplifier.

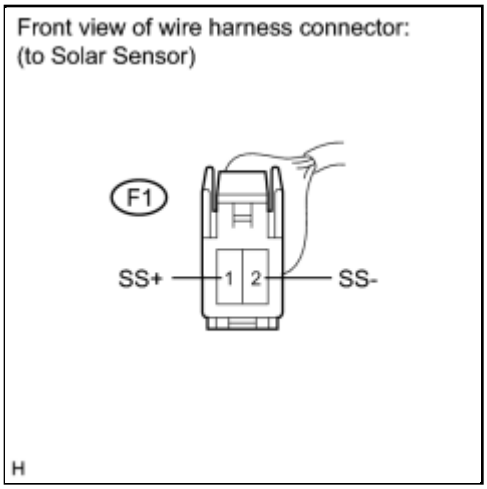

(b) Measure the resistance according to the value(s) in the table below.

Standard Resistance:

TESTER CONNECTION	CONDITION	SPECIFIED CONDITION
E30-33 (TS) - F1-2 (SS-)	Always	Below 1 Ω
E30-31 (S5-4) - F1-1 (SS+)	Always	Below 1 Ω
E30-33 (TS) - Body ground	Always	10 kΩ or higher
E30-31 (S5-4) - Body ground	Always	10 kΩ or higher

NG ▶ **REPAIR OR REPLACE HARNESS OR CONNECTOR**

OK ▶ REPLACE AIR CONDITIONING AMPLIFIER

Last Modified: 3-10-2010	6.4 C	**From:** 200901
Model Year: 2010	**Model:** Corolla	**Doc ID:** RM000000STR01SX
Title: HEATING / AIR CONDITIONING: AIR CONDITIONING SYSTEM (for Automatic Air Conditioning System): B1441/41: Air Mix Damper Control Servo Motor Circuit (Passenger Side) (2010 Corolla)		

DTC	**B1441/41**	**Air Mix Damper Control Servo Motor Circuit (Passenger Side)**

DESCRIPTION

The air mix damper servo sends pulse signals to inform the air conditioning amplifier of the damper position. The air conditioning amplifier activates the motor (normal, reverse) based on the signals to move the air mix damper (passenger seat) to any position, which adjusts the amount of air passing the heater core after passing the evaporator to control the blowing temperature. The A/C amplifier communicates with the servo through a communication/driver IC and wiring assembly called the air conditioning harness.

HINT:

Confirm that no mechanical problem is present because this DTC can be output when either a damper link or the damper is mechanically locked.

DTC NO.	DTC DETECTION CONDITION	TROUBLE AREA
B1441/41	Air mix damper position sensor value does not change even if air conditioning amplifier operates air mix control servo motor	• Air mix control servo motor • Air conditioning harness • A/C amplifier

WIRING DIAGRAM

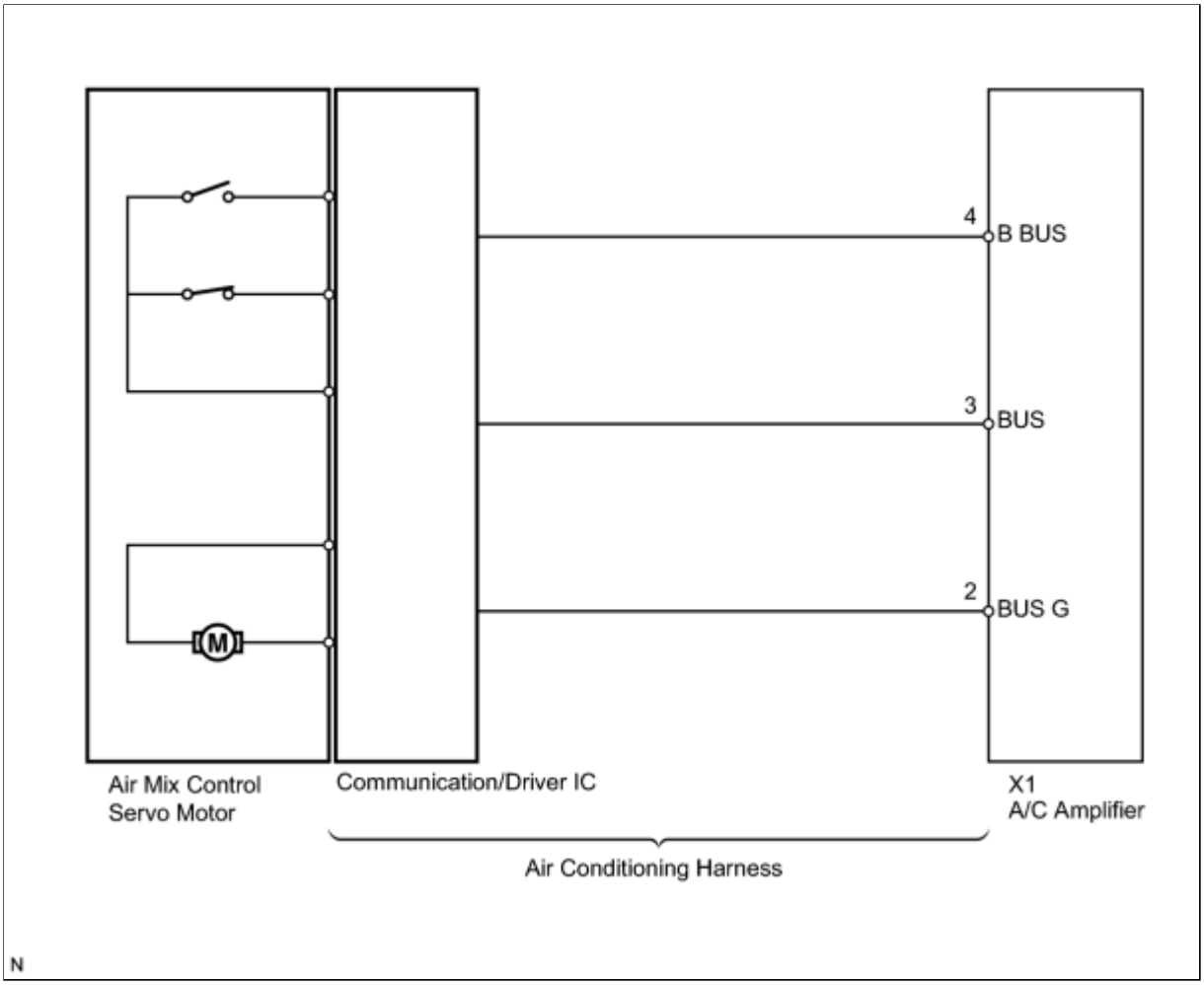

INSPECTION PROCEDURE

PROCEDURE

1.	**READ VALUE USING TECHSTREAM**

(a) Connect the Techstream to the DLC3.

(b) Turn the ignition switch to ON and turn the Techstream on.

(c) Operate the temperature adjustment switch.

(d) Select the item below in the Data List, and read the display on the Techstream.

Data List / Air Conditioner

TESTER DISPLAY	MEASUREMENT ITEM/RANGE	NORMAL CONDITION	DIAGNOSTIC NOTE
Air Mix Servo Targ Pulse (D)	Driver side air mix servo motor target pulse / Min.: 0, Max.: 255	MAX. COLD: 93 (pulse)	-

TESTER DISPLAY	MEASUREMENT ITEM/RANGE	NORMAL CONDITION	DIAGNOSTIC NOTE
(Air Mix Pulse-D)		MAX. HOT: 6 (pulse)	

OK:

The display is as specified in the "Normal Condition" column.

Result:

RESULT	PROCEED TO
NG	A
OK (When troubleshooting according to Problem Symptoms Table)	B
OK (When troubleshooting according to DTC)	C

C ▶ **REPLACE AIR CONDITIONING AMPLIFIER**

B ▶ **PROCEED TO NEXT CIRCUIT INSPECTION SHOWN IN PROBLEM SYMPTOMS TABLE**

A ▼

2.	**INSPECT AIR MIX CONTROL SERVO MOTOR**

(a) Replace the air mix control servo motor INFO.

HINT:

Since the servo motor cannot be inspected while it is removed from the vehicle, replace the servo motor with a known good one and check that the condition returns to normal.

(b) Check for DTCs.

Result:

RESULT	PROCEED TO
DTC B1441/41 is output	A
DTC B1441/41 is not output	B

B ▶ **REPLACE AIR MIX CONTROL SERVO MOTOR**

A

3.	INSPECT AIR CONDITIONING HARNESS

(a) Replace the air conditioning harness INFO .

HINT:

Since the air conditioning harness cannot be inspected while it is removed from the vehicle, replace the air conditioning harness with a known good one and check that the condition returns to normal.

(b) Check for DTCs.

Result:

RESULT	PROCEED TO
DTC B1441/41 is output	A
DTC B1441/41 is not output	B

B REPLACE AIR CONDITIONING HARNESS

A REPLACE AIR CONDITIONING AMPLIFIER

Last Modified: 3-10-2010	6.4 C	**From:** 200901
Model Year: 2010	**Model:** Corolla	**Doc ID:** RM000000STS01TX
Title: HEATING / AIR CONDITIONING: AIR CONDITIONING SYSTEM (for Automatic Air Conditioning System): B1442/42: Air Inlet Damper Control Servo Motor Circuit (2010 Corolla)		

DTC	**B1442/42**	**Air Inlet Damper Control Servo Motor Circuit**

DESCRIPTION

The damper servo (air inlet control) sends pulse signals to inform the air conditioning amplifier of the damper position. The air conditioning amplifier activates the motor (normal, reverse) based on the signals to move the air inlet damper to any position, which controls the intake air settings (FRESH, FRESH/RECIRCULATION, and RECIRCULATION). The A/C amplifier communicates with the servo through a communication/driver IC and wiring assembly called the air conditioning harness.

HINT:

Confirm that no mechanical problem is present because this DTC can be output when either a damper link or the damper is mechanically locked.

DTC NO.	DTC DETECTION CONDITION	TROUBLE AREA
B1442/42	Air inlet damper position sensor value does not change even if air conditioning amplifier operates air inlet control servo motor	• Air inlet control servo motor • Air conditioning harness • A/C amplifier

WIRING DIAGRAM

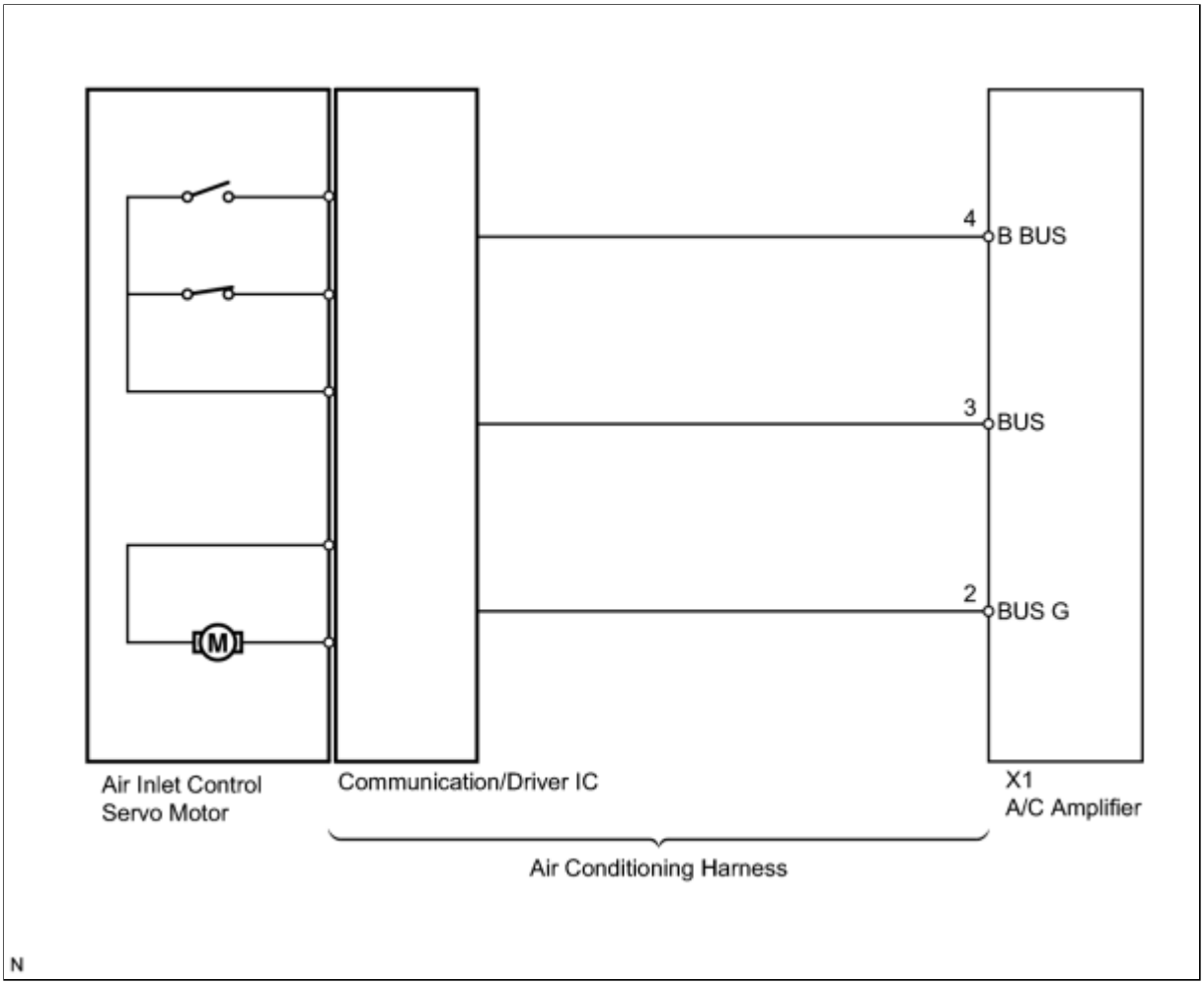

INSPECTION PROCEDURE

PROCEDURE

1.	**READ VALUE USING TECHSTREAM**

(a) Connect the Techstream to the DLC3.

(b) Turn the ignition switch to ON and turn the Techstream on.

(c) Operate the R/F (Recirculation/Fresh) switch.

(d) Select the item below in the Data List, and read the display on the Techstream.

Data List / Air Conditioner

TESTER DISPLAY	MEASUREMENT ITEM/RANGE	NORMAL CONDITION	DIAGNOSTIC NOTE
Air Inlet Damper Targ Pulse	Air inlet damper target pulse / Min.: 0, Max.: 255	• RECIRCULATION: 19	-

TESTER DISPLAY	MEASUREMENT ITEM/RANGE	NORMAL CONDITION	DIAGNOSTIC NOTE
(A/I Damp Targ Pls)	•	(pulse) FRESH: 7 (pulse)	

OK:

The display is as specified in the "Normal Condition" column.

Result:

RESULT	PROCEED TO
NG	A
OK (When troubleshooting according to Problem Symptoms Table)	B
OK (When troubleshooting according to DTC)	C

C ▶ **REPLACE AIR CONDITIONING AMPLIFIER**

B ▶ **PROCEED TO NEXT CIRCUIT INSPECTION SHOWN IN PROBLEM SYMPTOMS TABLE**

A ▼

2.	**INSPECT AIR INLET CONTROL SERVO MOTOR**

(a) Replace the air inlet control servo motor INFO .

HINT:

Since the servo motor cannot be inspected while it is removed from the vehicle, replace the servo motor with a known good one and check that the condition returns to normal.

(b) Check for DTCs.

Result:

RESULT	PROCEED TO
DTC B1442/42 is output	A
DTC B1442/42 is not output	B

B ▶ **REPLACE AIR INLET CONTROL SERVO MOTOR**

A

3.	INSPECT AIR CONDITIONING HARNESS

(a) Replace the air conditioning harness INFO .

HINT:

Since the air conditioning harness cannot be inspected while it is removed from the vehicle, replace the air conditioning harness with a known good one and check that the condition returns to normal.

(b) Check for DTCs.

Result:

RESULT	PROCEED TO
DTC B1442/42 is output	A
DTC B1442/42 is not output	B

B REPLACE AIR CONDITIONING HARNESS

A REPLACE AIR CONDITIONING AMPLIFIER

Last Modified: 3-10-2010	6.4 C	**From:** 200901
Model Year: 2010	**Model:** Corolla	**Doc ID:** RM000000STT01UX
Title: HEATING / AIR CONDITIONING: AIR CONDITIONING SYSTEM (for Automatic Air Conditioning System): B1443/43: Air Outlet Damper Control Servo Motor Circuit (2010 Corolla)		

DTC	**B1443/43**	**Air Outlet Damper Control Servo Motor Circuit**

DESCRIPTION

The mode damper servo sends pulse signals to inform the air conditioning amplifier of the damper position. The air conditioning amplifier activates the motor (normal, reverse) based on the signals to move the air outlet damper to any position, which controls the air outlet switching. The A/C amplifier communicates with the servo through a communication/driver IC and wiring assembly called the air conditioning harness.

HINT:

Confirm that no mechanical problem is present because this DTC can be output when either a damper link or the damper is mechanically locked.

DTC NO.	DTC DETECTION CONDITION	TROUBLE AREA
B1443/43	Air outlet damper position sensor value does not change even if air conditioning amplifier operates air outlet control servo motor	• Air outlet control servo motor • Air conditioning harness • A/C amplifier

WIRING DIAGRAM

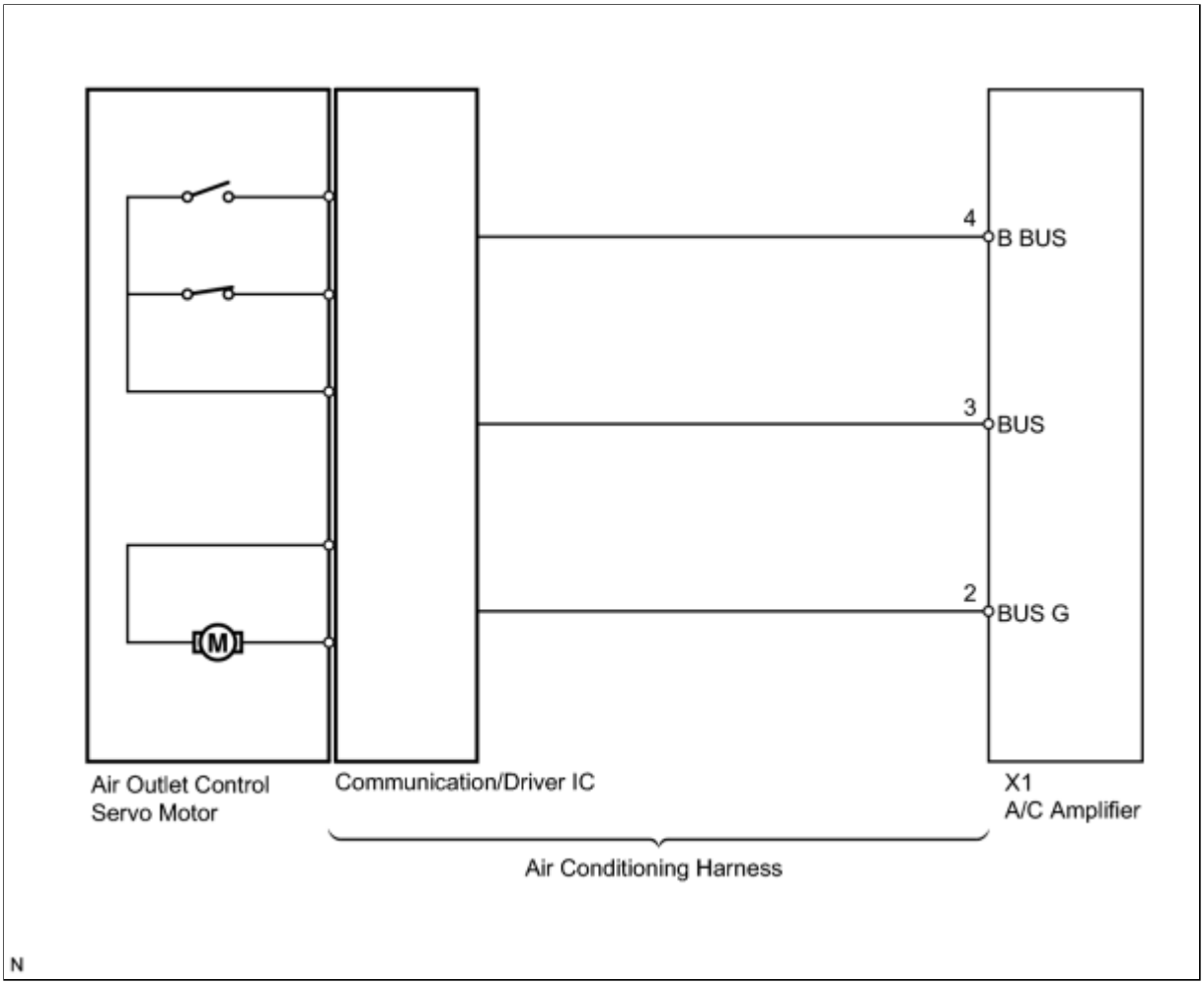

INSPECTION PROCEDURE

PROCEDURE

1.	**READ VALUE USING TECHSTREAM**

(a) Connect the Techstream to the DLC3.

(b) Turn the ignition switch to ON and turn the Techstream on.

(c) Operate the MODE switch.

(d) Select the item below in the Data List, and read the display on the Techstream.

Data List / Air Conditioner

TESTER DISPLAY	MEASUREMENT ITEM/RANGE	NORMAL CONDITION	DIAGNOSTIC NOTE
Air Outlet Servo Pulse (D)	Driver side air outlet servo motor target pulse / Min.: 0, Max.: 255	FACE: 47 (pulse) B/L: 37 (pulse)	-

TESTER DISPLAY	MEASUREMENT ITEM/RANGE	NORMAL CONDITION	DIAGNOSTIC NOTE
(Air Out Pulse-D)		FOOT: 17 (pulse) FOOT/DEF: 9 (pulse) DEF: 5 (pulse)	

OK:

The display is as specified in the "Normal Condition" column.

Result:

RESULT	PROCEED TO
NG	A
OK (When troubleshooting according to Problem Symptoms Table)	B
OK (When troubleshooting according to DTC)	C

C ▶ **REPLACE AIR CONDITIONING AMPLIFIER**

B ▶ **PROCEED TO NEXT CIRCUIT INSPECTION SHOWN IN PROBLEM SYMPTOMS TABLE**

A ▼

2.	**INSPECT AIR OUTLET CONTROL SERVO MOTOR**

(a) Replace the air outlet control servo motor INFO .

HINT:

Since the servo motor cannot be inspected while it is removed from the vehicle, replace the servo motor with a known good one and check that the condition returns to normal.

(b) Check for DTCs.

Result:

RESULT	PROCEED TO
DTC B1443/43 is output	A
DTC B1443/43 is not output	B

B ▶ REPLACE AIR OUTLET CONTROL SERVO MOTOR

A ▼

3.	INSPECT AIR CONDITIONING HARNESS

(a) Replace the air conditioning harness INFO .

HINT:

Since the air conditioning harness cannot be inspected while it is removed from the vehicle, replace the air conditioning harness with a known good one and check that the condition returns to normal.

(b) Check for DTCs.

Result:

RESULT	PROCEED TO
DTC B1443/43 is output	A
DTC B1443/43 is not output	B

B ▶ REPLACE AIR CONDITIONING HARNESS

A ▶ REPLACE AIR CONDITIONING AMPLIFIER

Last Modified: 3-10-2010	6.4 C	**From:** 200901
Model Year: 2010	**Model:** Corolla	**Doc ID:** RM000000VAV027X
Title: HEATING / AIR CONDITIONING: AIR CONDITIONING SYSTEM (for Automatic Air Conditioning System): B1451/51: Compressor Solenoid Circuit (2010 Corolla)		

DTC	**B1451/51**	**Compressor Solenoid Circuit**

DESCRIPTION

Through this circuit, the A/C compressor receives a refrigerant compression demand signal from the air conditioning amplifier.

Based on this signal, the A/C compressor changes the amount of compressor output.

DTC NO.	DTC DETECTION CONDITION	TROUBLE AREA
B1451/51	Open or short in A/C compressor solenoid circuit	• A/C compressor • Harness or connector between A/C amplifier and A/C compressor • A/C amplifier

WIRING DIAGRAM

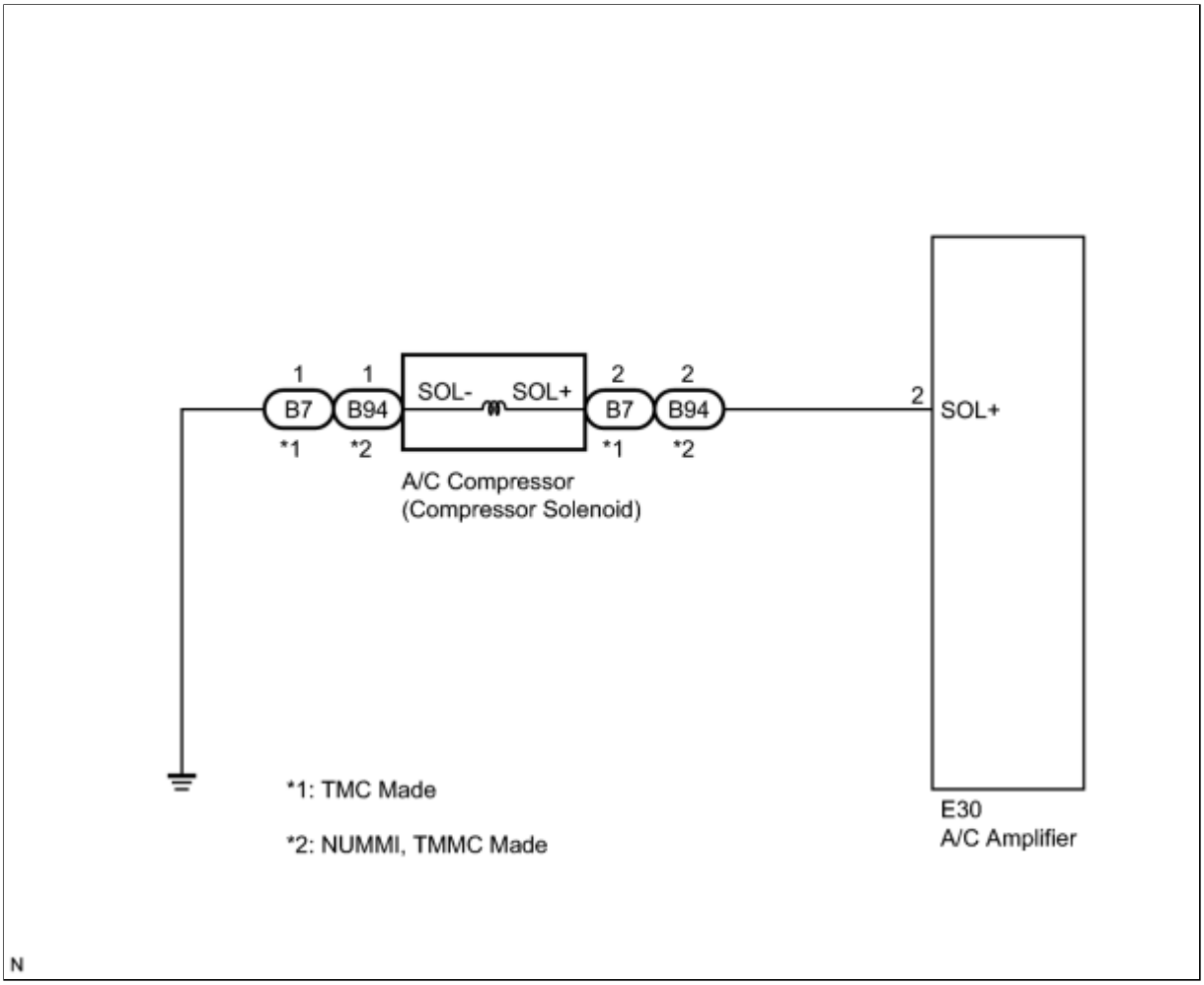

INSPECTION PROCEDURE

PROCEDURE

1.	**INSPECT A/C COMPRESSOR**

(a) Disconnect the A/C compressor connector.

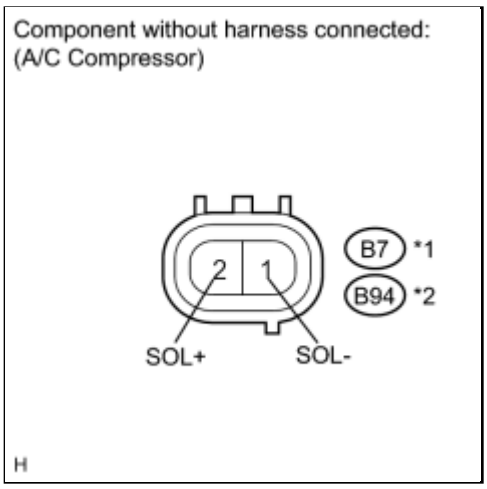

(b) Measure the resistance according to the value(s) in the table below.

Standard Resistance:

TESTER CONNECTION	CONDITION	SPECIFIED CONDITION
B7-2 (SOL+) - B7-1 (SOL-)*1	20°C (68°F)	10 to 11 Ω
B94-2 (SOL+) - B94-1 (SOL-)*2	20°C (68°F)	10 to 11 Ω

*1: TMC Made

*2: NUMMI, TMMC Made

Result:

RESULT	PROCEED TO
OK	A
NG (for 2AZ-FE)	B
NG (for 2ZR-FE)	C

C ▶ **REPLACE A/C COMPRESSOR (for 2ZR-FE)**

B ▶ **REPLACE A/C COMPRESSOR (for 2AZ-FE)**

A ▼

2.	CHECK HARNESS AND CONNECTOR (A/C COMPRESSOR - BODY GROUND)

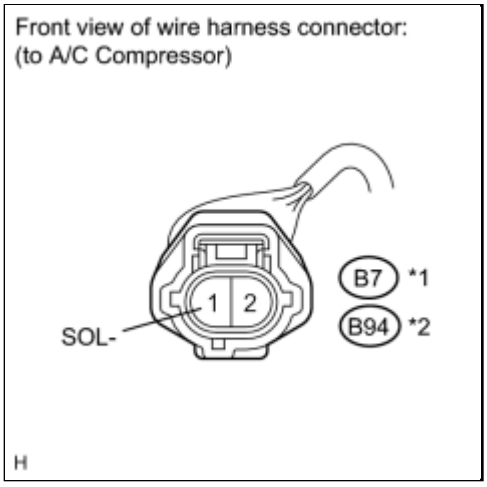

(a) Disconnect the A/C compressor connector.

(b) Measure the resistance according to the value(s) in the table below.

Standard Resistance:

TESTER CONNECTION	CONDITION	SPECIFIED CONDITION
B7-1 (SOL-) - Body ground*1	Always	Below 1 Ω
B94-1 (SOL-) - Body ground*2	Always	Below 1 Ω

*1: TMC Made

*2: NUMMI, TMMC Made

NG ▶ **REPAIR OR REPLACE HARNESS OR CONNECTOR**

OK ▼

3.	CHECK HARNESS AND CONNECTOR (A/C COMPRESSOR - A/C AMPLIFIER)

(a) Disconnect the A/C compressor connector.

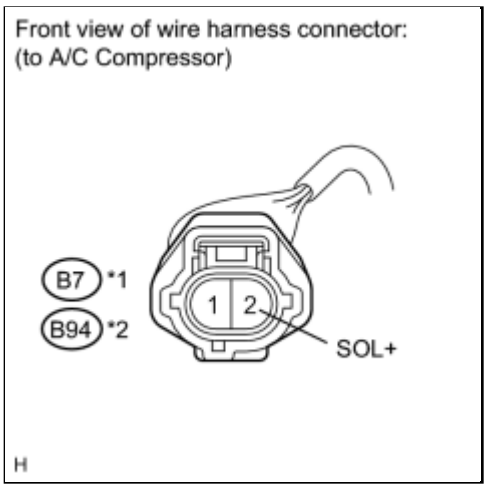

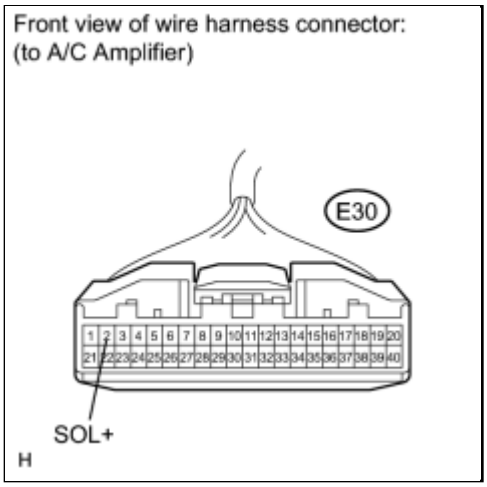

(b) Disconnect the A/C amplifier connector.

(c) Measure the resistance according to the value(s) in the table below.

Standard Resistance:

TESTER CONNECTION	CONDITION	SPECIFIED CONDITION
E30-2 (SOL+) - B7-2 (SOL+)*1	Always	Below 1 Ω
E30-2 (SOL+) - B94-2 (SOL+)*2	Always	Below 1 Ω
E30-2 (SOL+) - Body ground	Always	10 kΩ or higher

*1: TMC Made

*2: NUMMI, TMMC Made

Result:

RESULT	PROCEED TO
NG	A
OK (When troubleshooting according to Problem Symptoms Table)	B

RESULT	PROCEED TO
OK (When troubleshooting according to DTC)	C

C ▶ **REPLACE AIR CONDITIONING AMPLIFIER**

B ▶ **PROCEED TO NEXT CIRCUIT INSPECTION SHOWN IN PROBLEM SYMPTOMS TABLE**

A ▶ **REPAIR OR REPLACE HARNESS OR CONNECTOR**

Last Modified: 3-10-2010	6.4 C	**From:** 200901
Model Year: 2010	**Model:** Corolla	**Doc ID:** RM000000VAW01OX
Title: HEATING / AIR CONDITIONING: AIR CONDITIONING SYSTEM (for Automatic Air Conditioning System): B1497/97: BUS IC Communication Malfunction (2010 Corolla)		

DTC	**B1497/97**	**BUS IC Communication Malfunction**

DESCRIPTION

The air conditioning harness connects the air conditioning amplifier and each servo motor. The air conditioning amplifier supplies power and sends operation instructions to each servo motor through the air conditioning harness. Each servo motor sends the damper position information to the air conditioning amplifier. The A/C amplifier communicates with the servo through a communication/driver IC and wiring assembly called the air conditioning harness.

DTC NO.	DTC DETECTION CONDITION	TROUBLE AREA
B1497/97	Communication line error or open	• Air conditioning harness • A/C amplifier

WIRING DIAGRAM

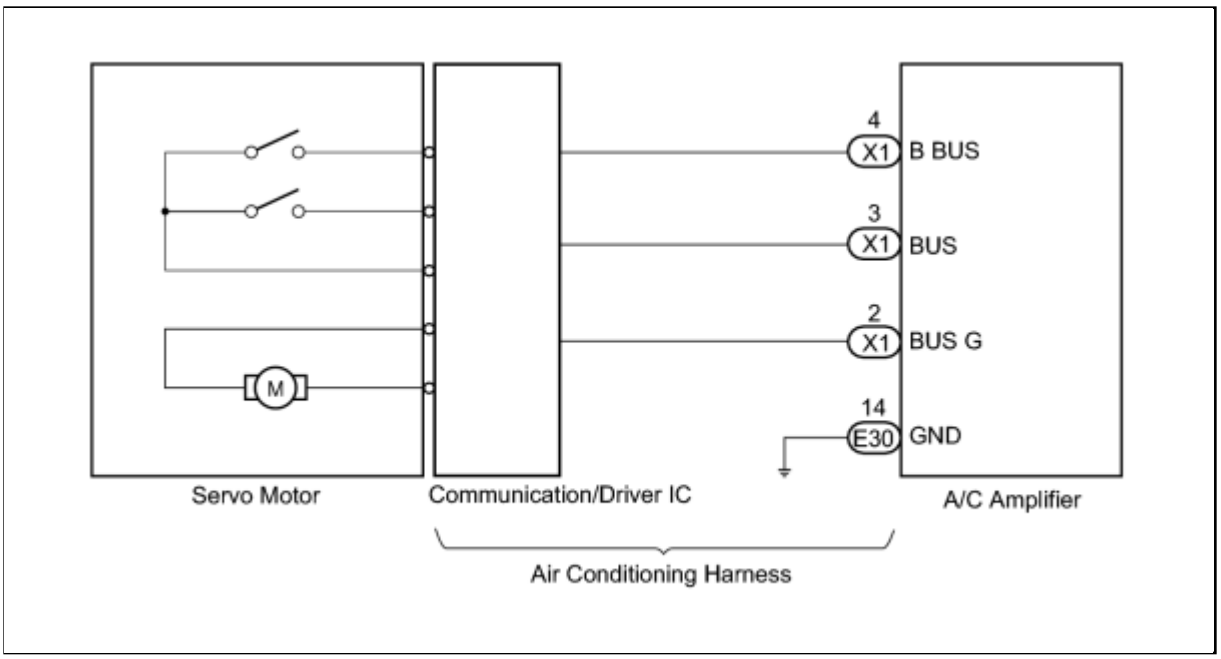

INSPECTION PROCEDURE

PROCEDURE

1.	CHECK HARNESS AND CONNECTOR

(a) Remove the A/C amplifier.

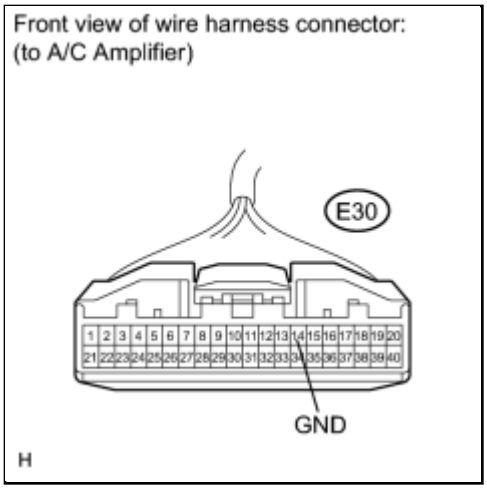

(b) Disconnect the connector from the A/C amplifier.

(c) Measure the resistance according to the value(s) in the table below.

Standard Resistance:

TESTER CONNECTION	CONDITION	SPECIFIED CONDITION
E30-14 (GND) - Body ground	Always	Below 1 Ω

NG ▶ **REPAIR OR REPLACE HARNESS OR CONNECTOR**

OK ▼

2.	INSPECT AIR CONDITIONING AMPLIFIER

(a) Reconnect the connector to the A/C amplifier.

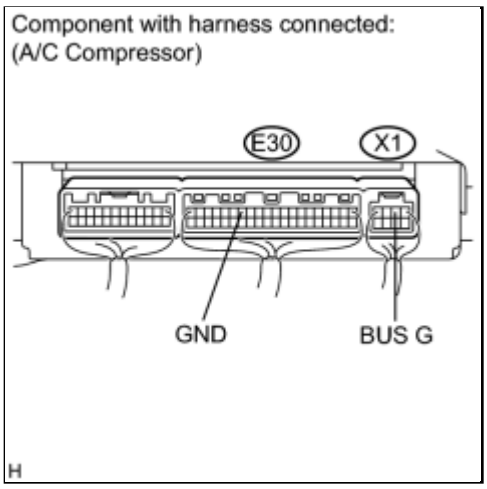

(b) Measure the resistance according to the value(s) in the table below.

Standard Resistance:

TESTER CONNECTION	CONDITION	SPECIFIED CONDITION
X1-2 (BUS G) - E30-14 (GND)	Always	Below 1 Ω

NG ▶ **REPLACE AIR CONDITIONING AMPLIFIER**

OK ▼

3.	**INSPECT AIR CONDITIONING AMPLIFIER**

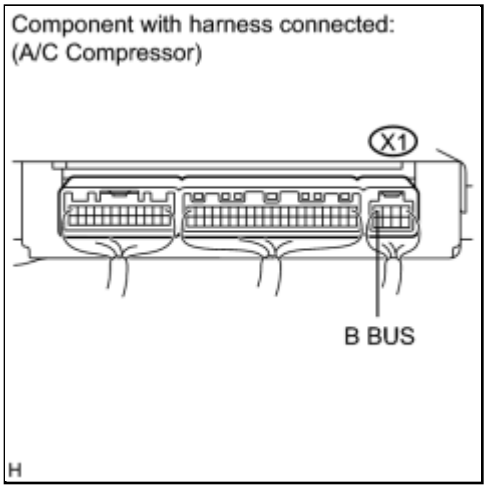

(a) Measure the voltage according to the value(s) in the table below.

Standard Voltage:

TESTER CONNECTION	SWITCH CONDITION	SPECIFIED CONDITION
X1-4 (B BUS) - Body ground	Ignition switch off	Below 1 V
X1-4 (B BUS) - Body ground	Ignition switch ON	11 to 14 V

NG ▶ **REPLACE AIR CONDITIONING AMPLIFIER**

OK

4.	REPLACE AIR CONDITIONING HARNESS

(a) Replace the air conditioning harness INFO .

HINT:

Since the air conditioning harness cannot be inspected while it is removed from the vehicle, replace the air conditioning harness with a known good one and check that the condition returns to normal.

(b) Check for DTCs.

Result:

RESULT	PROCEED TO
DTC B1497/97 is not output	A
DTC B1497/97 is output	B

B ▶ **REPLACE AIR CONDITIONING AMPLIFIER**

A ▶ **END**

Last Modified: 3-10-2010	6.4 J	**From:** 200901
Model Year: 2010	**Model:** Corolla	**Doc ID:** RM000000TS801UX
Title: HEATING / AIR CONDITIONING: AIR CONDITIONING SYSTEM (for Automatic Air Conditioning System): Blower Motor Circuit (2010 Corolla)		

Blower Motor Circuit

DESCRIPTION

The blower motor is operated by signals from the A/C amplifier. Blower motor speed signals are transmitted in accordance with changes in the duty ratio.

WIRING DIAGRAM

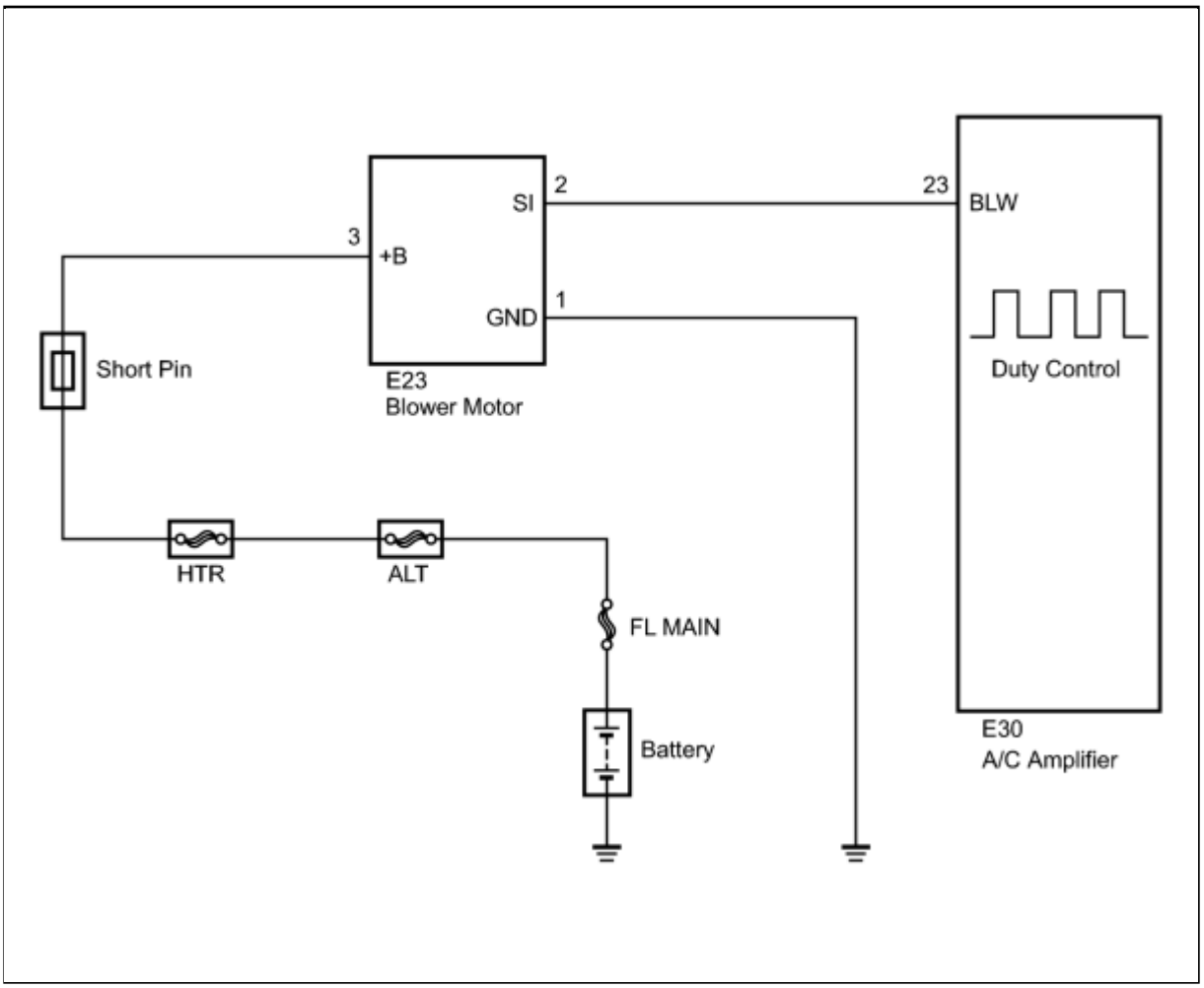

INSPECTION PROCEDURE

PROCEDURE

1.	PERFORM ACTIVE TEST USING TECHSTREAM

(a) Connect the Techstream to the DLC3.

(b) Turn the ignition switch to ON and turn the Techstream on.

(c) Select the item below in the Active Test and then check that the blower motor operates.

Active Test / Air Conditioner

TESTER DISPLAY	TEST PART	CONTROL RANGE	DIAGNOSTIC NOTE
Blower Motor (Blower Motor)	Blower motor	Min.: 0, Max.: 31	-

Result:

RESULT	PROCEED TO
OK	A
NG (blower motor does not operate)	B
NG (blower motor operates but does not change speed)	C

C ▶ **INSPECT BLOWER MOTOR**

B ▶ **INSPECT FUSE (HTR)**

A ▶ **PROCEED TO NEXT CIRCUIT INSPECTION SHOWN IN PROBLEM SYMPTOMS TABLE**

2.	INSPECT FUSE (HTR)

(a) Remove the HTR fuse from the engine room relay block and junction block.

(b) Measure the resistance of the fuse.

Standard Resistance:

TEST ITEM	CONDITION	SPECIFIED CONDITION
HTR fuse	Always	Below 1 Ω

NG ▶ **REPLACE FUSE (HTR)**

OK

3.	**CHECK HARNESS AND CONNECTOR (BLOWER MOTOR - BODY GROUND)**

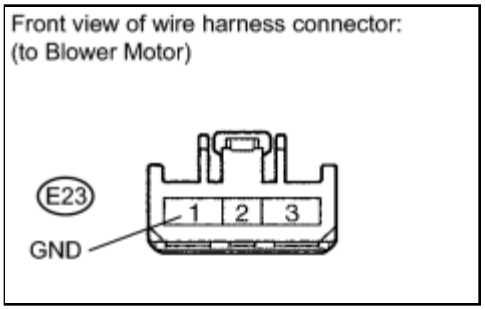

(a) Disconnect the blower motor connector.

(b) Measure the resistance according to the value(s) in the table below.

Standard Resistance:

TESTER CONNECTION	CONDITION	SPECIFIED CONDITION
E23-1 (GND) - Body ground	Always	Below 1 Ω

NG **REPAIR OR REPLACE HARNESS OR CONNECTOR**

OK

4.	**CHECK HARNESS AND CONNECTOR (BLOWER MOTOR - BATTERY)**

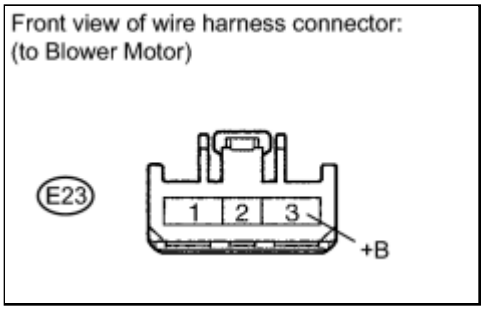

(a) Disconnect the blower motor connector.

(b) Measure the voltage according to the value(s) in the table below.

Standard Voltage:

TESTER CONNECTION	CONDITION	SPECIFIED CONDITION
E23-3 (+B) - Body ground	Always	11 to 14 V

NG ▶ **REPAIR OR REPLACE HARNESS OR CONNECTOR**

OK ▼

5.	CHECK HARNESS AND CONNECTOR (A/C AMPLIFIER - BLOWER MOTOR)

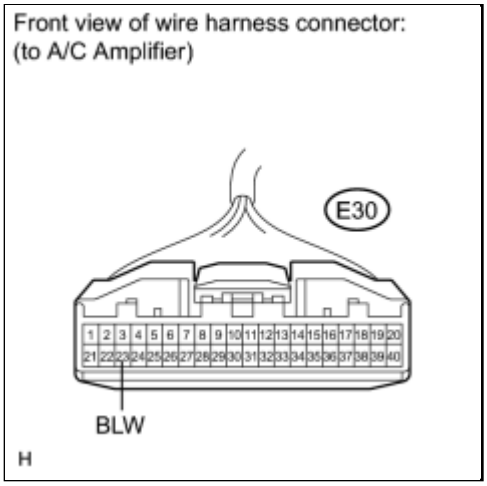

(a) Disconnect the A/C amplifier connector.

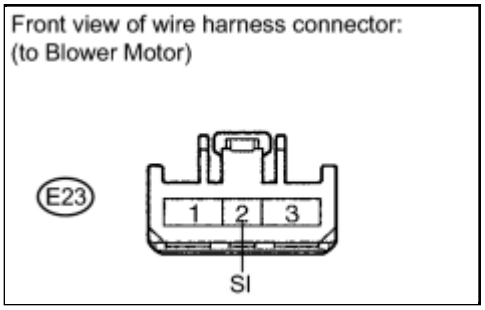

(b) Measure the resistance according to the value(s) in the table below.

Standard Resistance:

TESTER CONNECTION	CONDITION	SPECIFIED CONDITION
E23-2 (SI) - E30-23 (BLW)	Always	Below 1 Ω
E23-2 (SI) - Body ground	Always	10 kΩ or higher

NG ▶ **REPAIR OR REPLACE HARNESS OR CONNECTOR**

OK

6.	**INSPECT BLOWER MOTOR**

(a) Reconnect the connector to the blower motor.

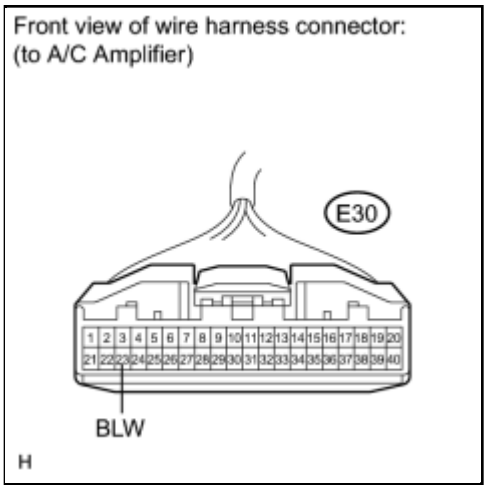

(b) Measure the voltage on the A/C amplifier connector side according to the value(s) in the table below.

Standard Voltage:

TESTER CONNECTION	SWITCH CONDITION	SPECIFIED CONDITION
E30-23 (BLW) - Body ground	Ignition switch ON	4.5 to 5.5 V

NG ▶ **REPLACE BLOWER MOTOR**

OK

7.	**INSPECT AIR CONDITIONING AMPLIFIER**

(a) Remove the A/C amplifier.

(b) Reconnect the connector to the A/C amplifier.

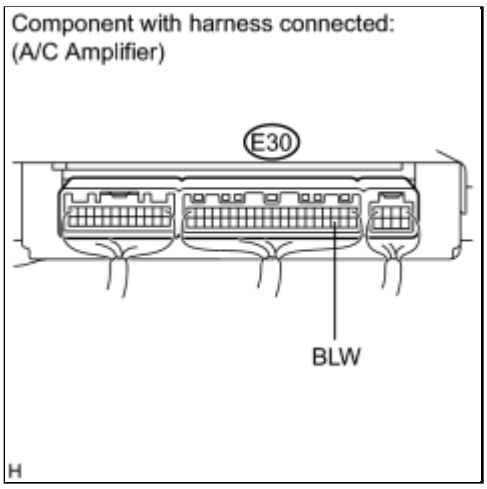

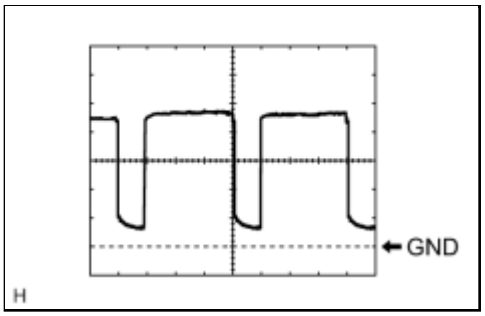

(c) Turn the ignition switch to ON.

(d) Turn the blower switch on.

(e) Measure the waveform between terminal E30-23 (BLW) of the A/C amplifier and body ground.

ITEM	CONTENT
Tool setting	1 V/DIV., 500 µs/DIV.
Vehicle condition	Ignition switch ON Blower switch: ON

OK:

Waveform is as shown in the illustration.

HINT:

Waveform varies with the blower level.

NG ▶ **REPLACE AIR CONDITIONING AMPLIFIER**

OK ▶ **PROCEED TO NEXT CIRCUIT INSPECTION SHOWN IN PROBLEM SYMPTOMS TABLE**

Last Modified: 3-10-2010	6.4 C	**From:** 200901
Model Year: 2010	**Model:** Corolla	**Doc ID:** RM0000017SQ02RX
Title: HEATING / AIR CONDITIONING: AIR CONDITIONING SYSTEM (for Automatic Air Conditioning System): B1499/99: Multiplex Communication Circuit (2010 Corolla)		

DTC	**B1499/99**	**Multiplex Communication Circuit**

DESCRIPTION

DTC NO.	DTC DETECTION CONDITION	TROUBLE AREA
B1499/99	Open in CAN communication circuit	CAN communication system

INSPECTION PROCEDURE

PROCEDURE

1.	**GO TO CAN COMMUNICATION SYSTEM**

(a) Refer to the CAN Communication System INFO .

NEXT **END**

Last Modified: 3-10-2010	6.4 J	**From:** 200901
Model Year: 2010	**Model:** Corolla	**Doc ID:** RM000002BRP00KX
Title: HEATING / AIR CONDITIONING: AIR CONDITIONING SYSTEM (for Automatic Air Conditioning System): PTC Heater Circuit (2010 Corolla)		

PTC Heater Circuit

DESCRIPTION

The PTC heater is installed in the heater unit and operates when the coolant temperature is low and normal heater operation is insufficient.

The A/C amplifier switches the circuit in the PTC relay and operates the PTC heater when the operating conditions (the coolant temperature is below 65°C (149°F), setting temperature is MAX. HOT, ambient temperature is below 10°C (50°F) and blower switch is not OFF) are met.

The PTC heater controls the number of the heater elements to be heated based on the electrical load and the amount of voltage generated. Therefore, when inspecting the PTC heater, be sure to turn off other electrical devices.

WIRING DIAGRAM

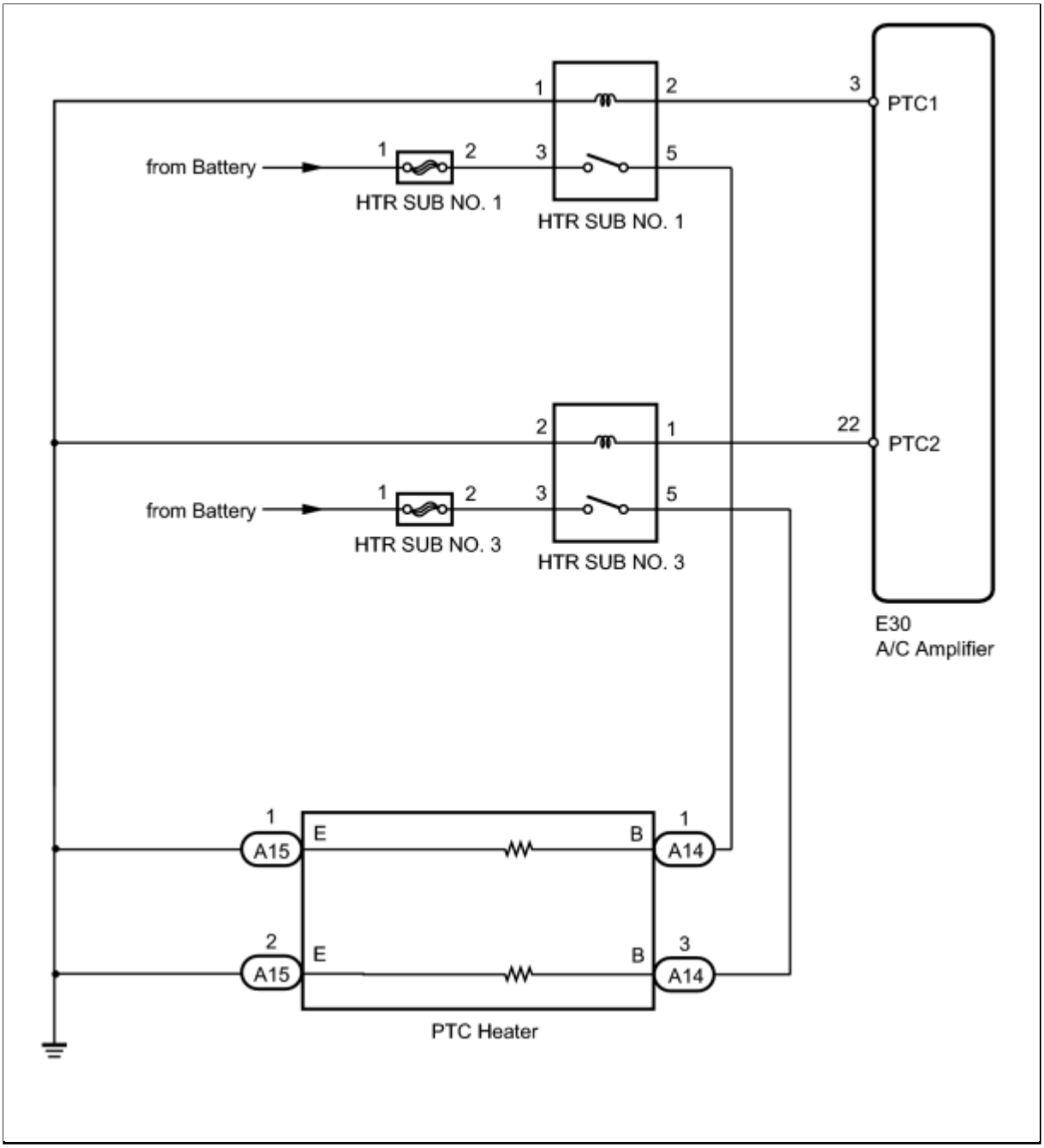

INSPECTION PROCEDURE

PROCEDURE

1.	**INSPECT FUSE (HTR SUB NO. 1, HTR SUB NO. 3)**

(a) Remove the HTR SUB No. 1 and HTR SUB No. 3 fuses from the engine room relay block and junction block.

(b) Measure the resistance according to the value(s) in the table below.

Standard Resistance:

TEST ITEM	CONDITION	SPECIFIED CONDITION
HTR SUB No. 1 fuse	Always	Below 1 Ω
HTR SUB No. 3 fuse	Always	Below 1 Ω

(c) Install the HTR SUB No. 1 and HTR SUB No. 3 fuses to the engine room relay block and junction block.

NG ▶ **REPLACE FUSE (HTR SUB NO. 1, HTR SUB NO. 3)**

OK ▼

2.	**INSPECT RELAY (HTR SUB NO. 1, HTR SUB NO. 3)**

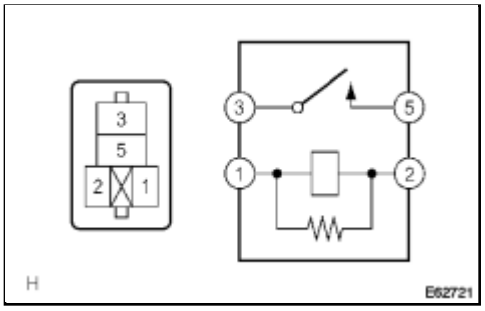

(a) Remove the HTR SUB No. 1 and HTR SUB No. 3 relays from the No. 7 relay block.

(b) Measure the resistance according to the value(s) in the table below.

Standard Resistance:

TESTER CONNECTION	SPECIFIED CONDITION
3 - 5	10 kΩ or higher
3 - 5	Below 1 Ω (When battery voltage applied to terminals 1 and 2)

(c) Install the HTR SUB No. 1 and HTR SUB No. 3 relays to the No. 7 relay block.

NG ▶ **REPLACE RELAY (HTR SUB NO. 1, HTR SUB NO. 3)**

OK

3.	**CHECK HARNESS AND CONNECTOR (NO. 7 RELAY BLOCK - A/C AMPLIFIER, BODY GROUND)**

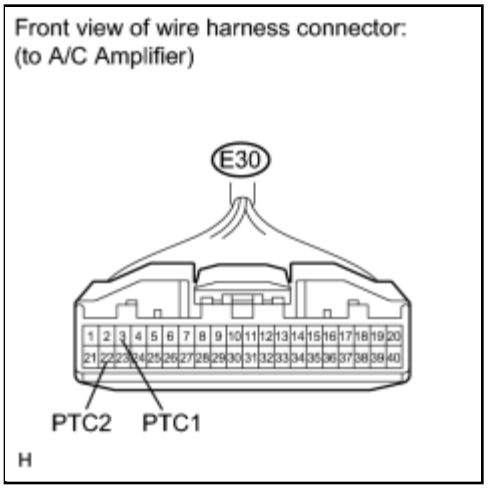

(a) Disconnect the connector from the A/C amplifier.

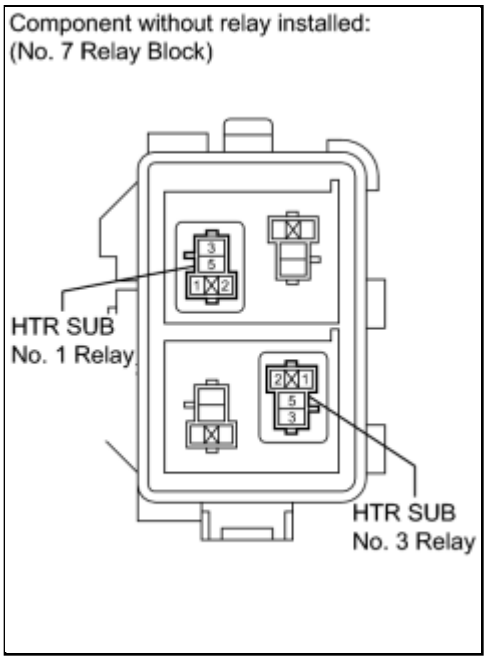

(b) Remove the HTR SUB No. 1 and HTR SUB No. 3 fuses from the No. 7 relay block.

(c) Measure the resistance according to the value(s) in the table below.

Standard Resistance:

TESTER CONNECTION	CONDITION	SPECIFIED CONDITION

TESTER CONNECTION	CONDITION	SPECIFIED CONDITION
E30-3 (PTC1) - HTR SUB No. 1 relay terminal 2	Always	Below 1 Ω
E30-22 (PTC2) - HTR SUB No. 3 relay terminal 1	Always	Below 1 Ω
E30-3 (PTC1) - Body ground	Always	10 kΩ or higher
E30-22 (PTC2) - Body ground	Always	10 kΩ or higher
HTR SUB No. 1 relay terminal 1 - Body ground	Always	Below 1 Ω
HTR SUB No. 3 relay terminal 2 - Body ground	Always	Below 1 Ω

NG ▶ **REPAIR OR REPLACE HARNESS OR CONNECTOR**

OK ▼

4.	**INSPECT AIR CONDITIONING AMPLIFIER**

(a) Reconnect the connector to the A/C amplifier.

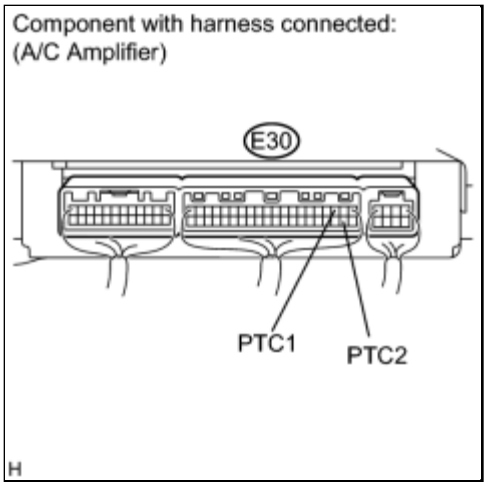

(b) Remove the A/C amplifier with the connectors still connected.

(c) Measure the voltage according to the value(s) in the table below.

Standard Voltage:

TESTER CONNECTION	CONDITION	SPECIFIED CONDITION
E30-3 (PTC1) - Body ground	Ignition switch: ON Temperature setting: MAX. HOT	Below 1 V

TESTER CONNECTION	CONDITION	SPECIFIED CONDITION
	Ambient temperature: 10°C (50°F) or lower Engine coolant temperature: 65°C (149°F) or lower Light control switch: OFF Blower switch: OFF	
E30-3 (PTC1) - Body ground	Engine running (1250 rpm or higher) Temperature setting: MAX. HOT Ambient temperature: 10°C (50°F) or lower Engine coolant temperature: 65°C (149°F) or lower Light control switch: OFF Blower switch: ON	11 to 14 V
E30-22 (PTC2) - Body ground	Ignition switch: ON Temperature setting: MAX. HOT Ambient temperature: 10°C (50°F) or lower Engine coolant temperature: 65°C (149°F) or lower Light control switch: OFF Blower switch: OFF	Below 1 V
E30-22 (PTC2) - Body ground	Engine running (1250 rpm or higher) Temperature setting: MAX. HOT Ambient temperature: 10°C (50°F) or lower Engine coolant temperature: 70°C (149°F) or lower Light control switch: OFF Blower switch: ON	11 to 14 V

NG ▶ **PROCEED TO NEXT CIRCUIT INSPECTION SHOWN IN PROBLEM SYMPTOMS TABLE**

OK ▼

5.	**INSPECT PTC HEATER**

(a) Disconnect the connector from the PTC heater.

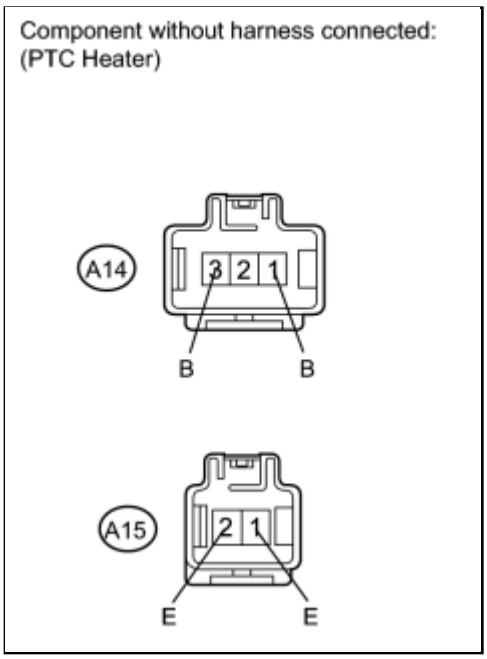

(b) Measure the resistance according to the value(s) in the table below.

Standard Resistance:

TESTER CONNECTION	CONDITION	SPECIFIED CONDITION
A14-1 (B) - A15-1 (E)	Always	Below 1 Ω
A14-3 (B) - A15-2 (E)	Always	Below 1 Ω

NG ▶ **REPLACE PTC HEATER**

OK ▼

6.	**CHECK HARNESS AND CONNECTOR (PTC HEATER - BATTERY)**

(a) Measure the voltage according to the value(s) in the table below.

Standard Voltage:

TESTER CONNECTION	CONDITION	SPECIFIED CONDITION
A14-1 (B) - Body ground	Ignition switch: ON Temperature setting:	Below 1 V

	MAX. HOT Ambient temperature: 10°C (50°F) or lower Engine coolant temperature: 65°C (149°F) or lower Light control switch: OFF Blower switch: OFF	
A14-1 (B) - Body ground	Engine running (1250 rpm or higher) Temperature setting: MAX. HOT Ambient temperature: 10°C (50°F) or lower Engine coolant temperature: 65°C (149°F) or lower Light control switch: OFF Blower switch: ON	11 to 14 V
A14-3 (B) - Body ground	Ignition switch: ON Temperature setting: MAX. HOT Ambient temperature: 10°C (50°F) or lower Engine coolant temperature: 65°C (149°F) or lower Light control switch: OFF Blower switch: OFF	Below 1 V
A14-3 (B) - Body ground	Engine running (1250 rpm or higher) Temperature setting: MAX. HOT Ambient temperature: 10°C (50°F) or lower Engine coolant temperature: 65°C (149°F) or lower Light control switch: OFF Blower switch: ON	11 to 14 V

Front view of wire harness connector: (to PTC Heater)

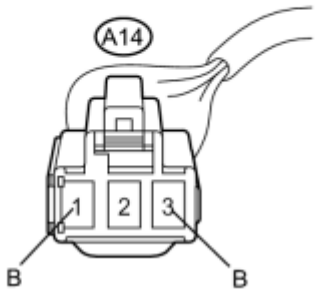

NG ▶ **REPAIR OR REPLACE HARNESS OR CONNECTOR**

OK ▶ REPAIR OR REPLACE HARNESS OR CONNECTOR (PTC HEATER - BODY GROUND)

Last Modified: 3-10-2010	6.4 J	**From:** 200901
Model Year: 2010	**Model:** Corolla	**Doc ID:** RM000001O7Q01GX
Title: HEATING / AIR CONDITIONING: AIR CONDITIONING SYSTEM (for Automatic Air Conditioning System): Heater Control Panel Power Source Circuit (2010 Corolla)		

Heater Control Panel Power Source Circuit

DESCRIPTION

Battery voltage is supplied to the A/C control assembly through the ECU-IG No. 2 fuse.

WIRING DIAGRAM

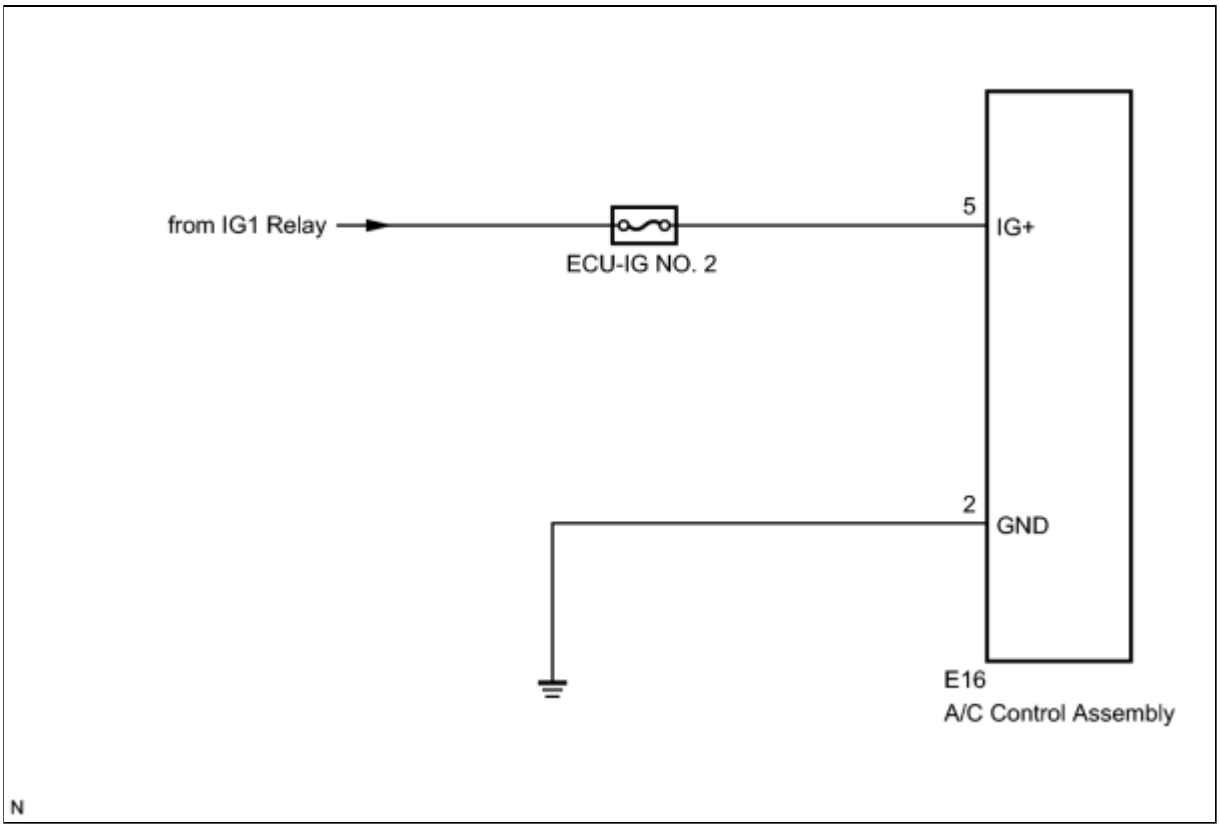

INSPECTION PROCEDURE

PROCEDURE

1.	**CHECK HARNESS AND CONNECTOR (IG+ - BODY GROUND)**

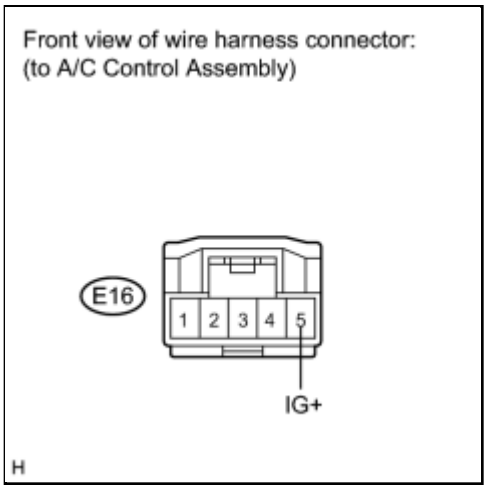

(a) Disconnect the connector from the A/C control assembly.

(b) Measure the voltage according to the value(s) in the table below.

Standard Voltage:

TESTER CONNECTION	SWITCH CONDITION	SPECIFIED CONDITION
E16-5 (IG+) - Body ground	Ignition switch ON	11 to 14 V
E16-5 (IG+) - Body ground	Ignition switch off	Below 1 V

NG ▶ **REPAIR OR REPLACE HARNESS OR CONNECTOR**

OK ▼

2.	**CHECK HARNESS AND CONNECTOR (GND - BODY GROUND)**

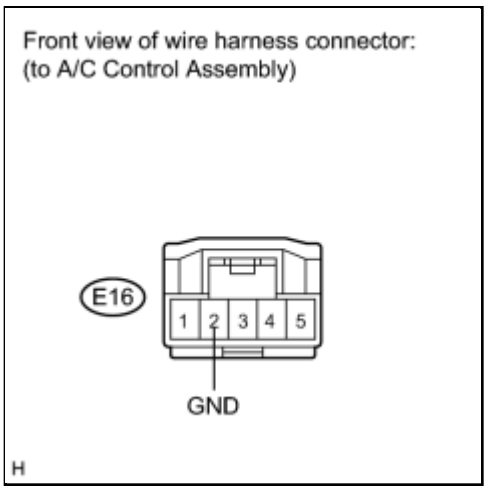

(a) Measure the resistance according to the value(s) in the table below.

Standard Resistance:

TESTER CONNECTION	CONDITION	SPECIFIED CONDITION
E16-2 (GND) - Body ground	Always	Below 1 Ω

NG ▶ REPAIR OR REPLACE HARNESS OR CONNECTOR

OK ▶ PROCEED TO NEXT CIRCUIT INSPECTION SHOWN IN PROBLEM SYMPTOMS TABLE

Last Modified: 3-10-2010	6.4 J	**From:** 200901
Model Year: 2010	**Model:** Corolla	**Doc ID:** RM000002Y1L00JX
Title: HEATING / AIR CONDITIONING: AIR CONDITIONING SYSTEM (for Automatic Air Conditioning System): Headlight Signal Circuit (2010 Corolla)		

Headlight Signal Circuit

DESCRIPTION

The A/C amplifier receives headlight operational signals to determine the electrical load. The electrical load signals are used for controlling the number of the PTC heater elements to be heated.

WIRING DIAGRAM

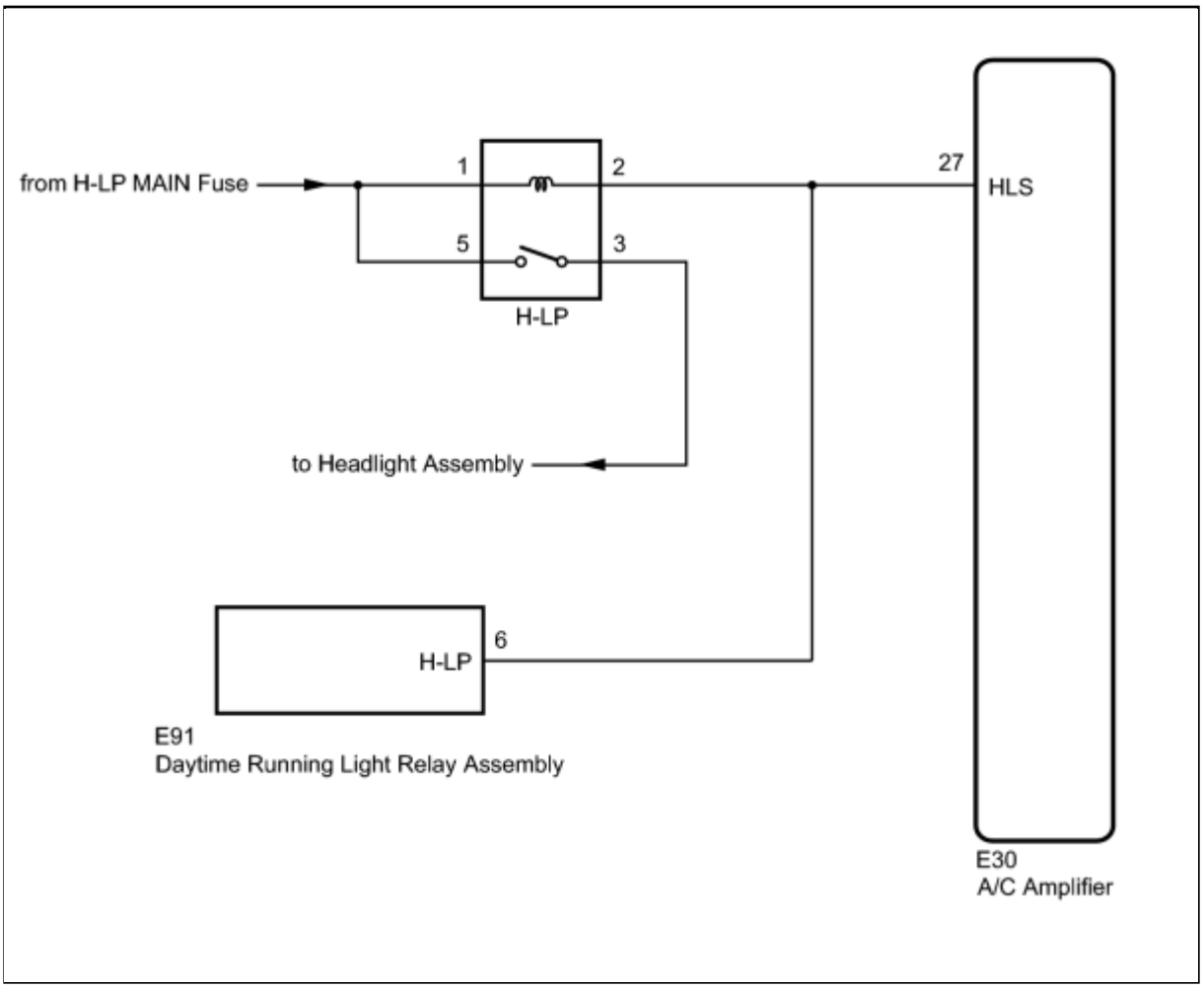

INSPECTION PROCEDURE

PROCEDURE

1.	INSPECT HEADLIGHT ASSEMBLY

(a) Check if the headlights come on when the light control switch is turned to the HEAD position.

OK:

The headlights come on.

NG ▶ GO TO LIGHTING SYSTEM

OK ▼

2.	CHECK HARNESS AND CONNECTOR (HEADLIGHT SIGNAL)

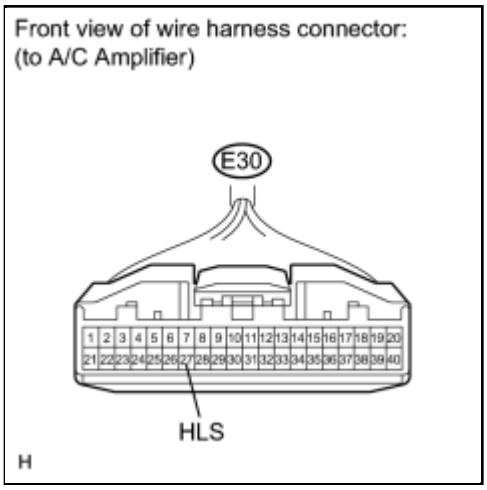

(a) Disconnect the connector from the A/C amplifier.

(b) Measure the voltage according to the value(s) in the table below.

Standard Voltage:

TESTER CONNECTION	SWITCH CONDITION	SPECIFIED CONDITION
E30-27 (HLS) - Body ground	Light control switch: OFF	11 to 14 V
E30-27 (HLS) - Body ground	Light control switch: HEAD	Below 1 V

NG ▶ REPAIR OR REPLACE HARNESS OR CONNECTOR

OK ▶ PROCEED TO NEXT CIRCUIT INSPECTION SHOWN IN PROBLEM SYMPTOMS TABLE

Last Modified: 3-10-2010	6.4 J	**From:** 200901
Model Year: 2010	**Model:** Corolla	**Doc ID:** RM000002Y8100JX
Title: HEATING / AIR CONDITIONING: AIR CONDITIONING SYSTEM (for Automatic Air Conditioning System): Generator Signal Circuit (2010 Corolla)		

Generator Signal Circuit

DESCRIPTION

When the engine is started, the generator rotates and a pulsed voltage signal is generated. This signal is used by the A/C amplifier. The generated voltage signals sent from the generator are used for controlling the number of the heater elements to be heated.

WIRING DIAGRAM

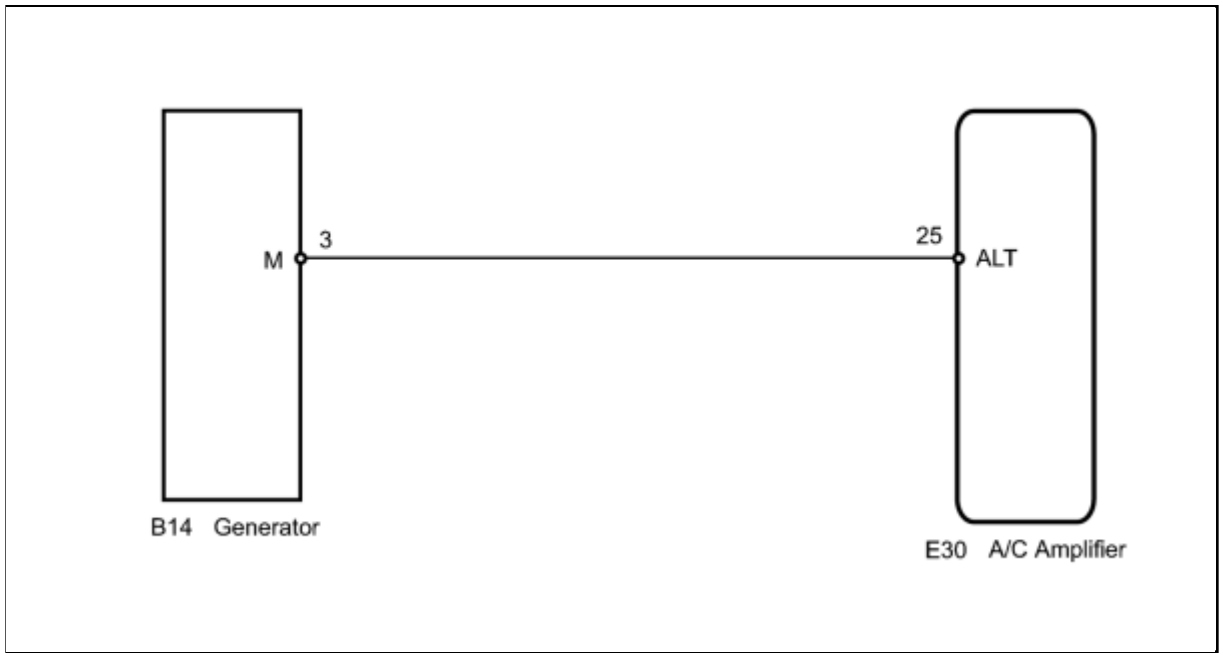

INSPECTION PROCEDURE

PROCEDURE

1.	**CHECK HARNESS AND CONNECTOR (A/C AMPLIFIER - GENERATOR)**

(a) Disconnect the connector from the A/C amplifier.

(b) Disconnect the connector from the generator.

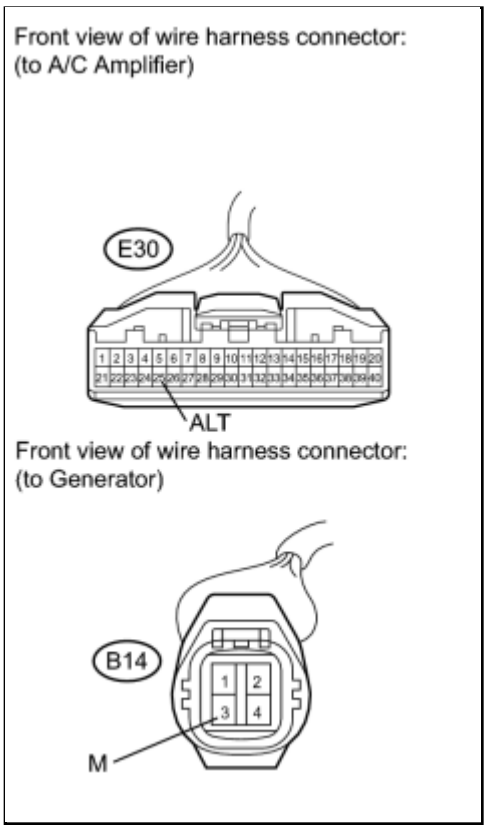

(c) Measure the resistance according to the value(s) in the table below.

Standard Resistance:

TESTER CONNECTION	CONDITION	SPECIFIED CONDITION
E30-25 (ALT) - B14-3 (M)	Always	Below 1 Ω
E30-25 (ALT) - Body ground	Always	10 kΩ or higher

NG ▶ **REPAIR OR REPLACE HARNESS OR CONNECTOR**

OK ▼

2.	**INSPECT GENERATOR**

(a) Inspect the generator.

(1) for 2AZ-FE:

Inspect the generator INFO for On-vehicle Inspection, INFO for Inspection).

(2) for 2ZR-FE:

Inspect the generator INFO for On-vehicle Inspection, INFO for Inspection).

Result:

RESULT	PROCEED TO
OK	A
NG (for 2AZ-FE)	B
NG (for 2ZR-FE)	C

C ▶ **REPLACE GENERATOR (for 2ZR-FE)**

B ▶ **REPLACE GENERATOR (for 2AZ-FE)**

A ▶ **PROCEED TO NEXT CIRCUIT INSPECTION SHOWN IN PROBLEM SYMPTOMS TABLE**

Last Modified: 3-10-2010	6.4 J	**From:** 200901
Model Year: 2010	**Model:** Corolla	**Doc ID:** RM000000TS6030X
Title: HEATING / AIR CONDITIONING: AIR CONDITIONING SYSTEM (for Automatic Air Conditioning System): IG Power Source Circuit (2010 Corolla)		

IG Power Source Circuit

DESCRIPTION

The main power source is supplied to the A/C amplifier when the ignition switch is ON.

The power source is used for operating the A/C amplifier and servo motor, etc.

WIRING DIAGRAM

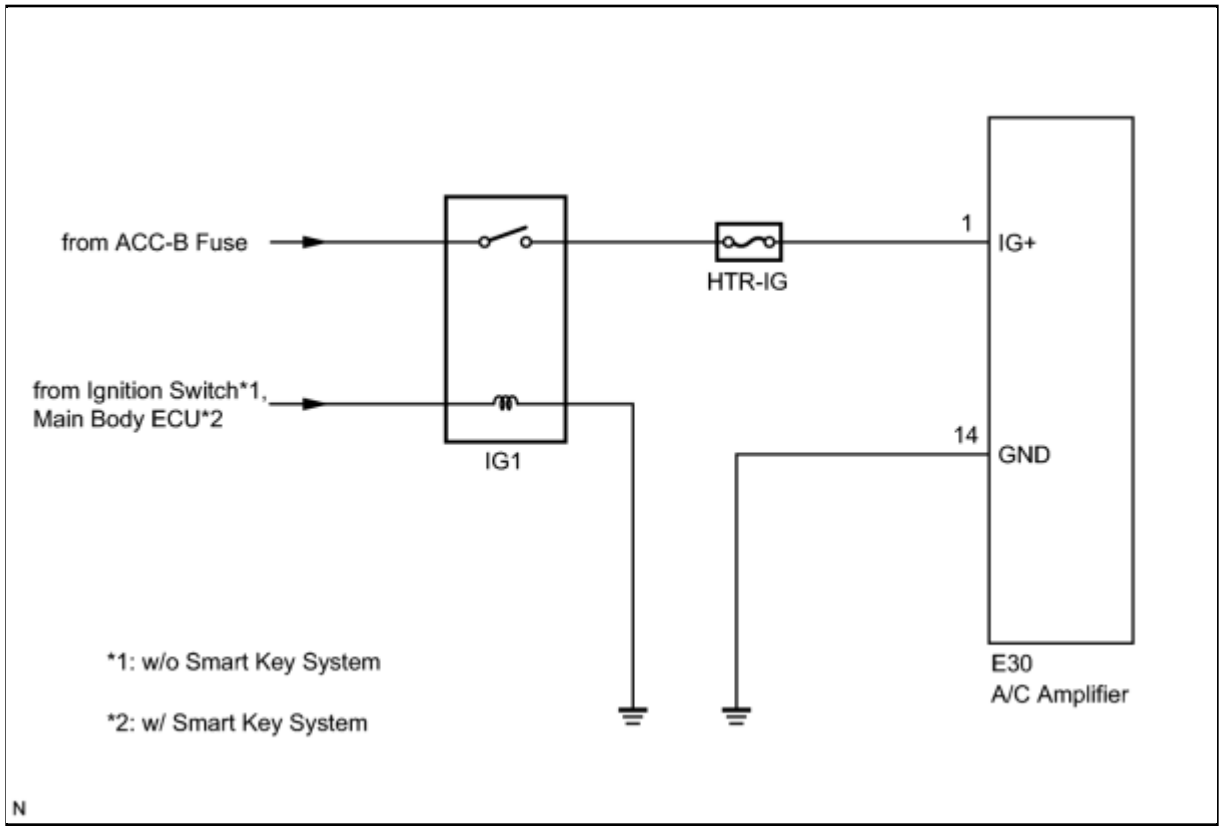

INSPECTION PROCEDURE

HINT:

Start the engine before inspection. Check the IG1 relay or battery if the engine does not start.

PROCEDURE

1.	INSPECT FUSE (HTR-IG)

(a) Remove the HTR-IG fuse from the instrument panel junction block.

(b) Measure the resistance according to the value(s) in the table below.

Standard Resistance:

TEST ITEM	CONDITION	SPECIFIED CONDITION
HTR-IG fuse	Always	Below 1 Ω

NG ▶ **REPLACE FUSE (HTR-IG)**

OK ▼

2.	INSPECT AIR CONDITIONING AMPLIFIER (IG+ - GND)

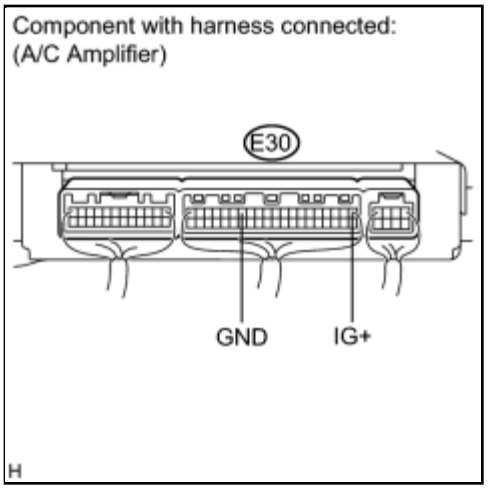

(a) Remove the A/C amplifier with its connectors still connected.

(b) Turn the ignition switch to ON.

(c) Measure the voltage according to the value(s) in the table below.

Standard Voltage:

TESTER CONNECTION	SWITCH CONDITION	SPECIFIED CONDITION
E30-1 (IG+) - E30-14 (GND)	Ignition switch ON	11 to 14 V

NG ▶ **CHECK HARNESS AND CONNECTOR (AIR CONDITIONING AMPLIFIER - BATTERY)**

OK ▶ **PROCEED TO NEXT CIRCUIT INSPECTION SHOWN IN PROBLEM SYMPTOMS TABLE**

3.	**CHECK HARNESS AND CONNECTOR (AIR CONDITIONING AMPLIFIER - BATTERY)**

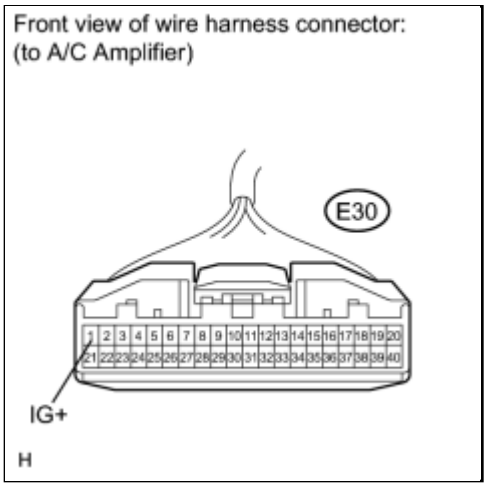

(a) Disconnect the connector from the A/C amplifier.

(b) Measure the voltage according to the value(s) in the table below.

Standard Voltage:

TESTER CONNECTION	SWITCH CONDITION	SPECIFIED CONDITION
E30-1 (IG+) - Body ground	Ignition switch off	Below 1 V
	Ignition switch ON	11 to 14 V

NG ▶ **REPAIR OR REPLACE HARNESS OR CONNECTOR**

OK ▼

4.	**CHECK HARNESS AND CONNECTOR (AIR CONDITIONING AMPLIFIER - BODY GROUND)**

(a) Measure the resistance according to the value(s) in the table below.

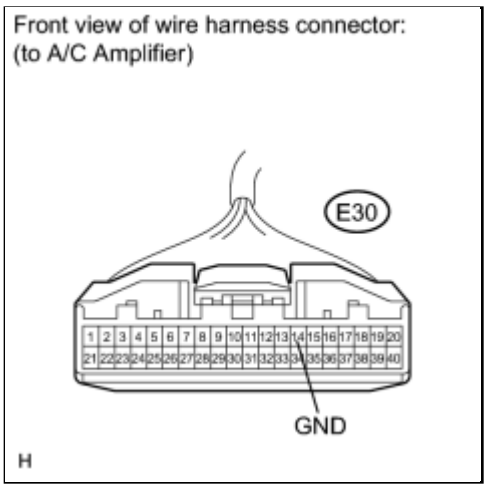

Standard Resistance:

TESTER CONNECTION	CONDITION	SPECIFIED CONDITION
E30-14 (GND) - Body ground	Always	Below 1 Ω

NG ▶ **REPAIR OR REPLACE HARNESS OR CONNECTOR**

OK ▶ **REPLACE AIR CONDITIONING AMPLIFIER**

Last Modified: 3-10-2010	6.4 J	**From:** 200901
Model Year: 2010	**Model:** Corolla	**Doc ID:** RM000000TS702GX
Title: HEATING / AIR CONDITIONING: AIR CONDITIONING SYSTEM (for Automatic Air Conditioning System): Back-up Power Source Circuit (2010 Corolla)		

Back-up Power Source Circuit

DESCRIPTION

The back-up power source circuit for the A/C amplifier is shown below. Power is supplied even when the ignition switch is off and is used for diagnostic trouble code memory, etc.

WIRING DIAGRAM

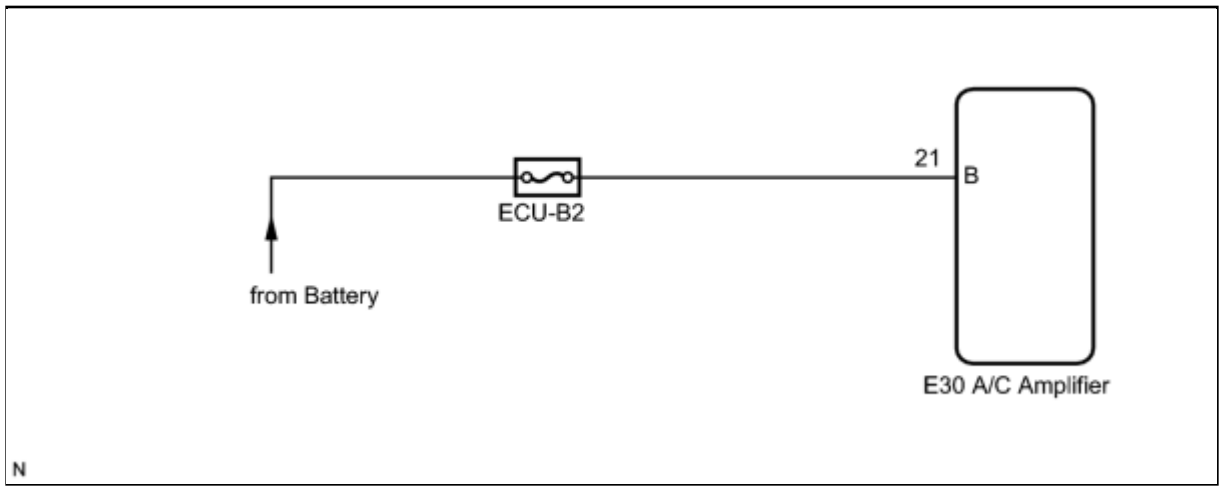

INSPECTION PROCEDURE

PROCEDURE

1.	**INSPECT FUSE (ECU-B2)**

(a) Remove the ECU-B2 fuse from the engine room relay block and junction block.

(b) Measure the resistance according to the value(s) in the table below.

Standard Resistance:

TEST ITEM	CONDITION	SPECIFIED CONDITION
ECU-B2 fuse	Always	Below 1 Ω

NG ▶ **REPLACE FUSE (ECU-B2)**

OK ▼

2.	**INSPECT AIR CONDITIONING AMPLIFIER (AIR CONDITIONING AMPLIFIER - BODY GROUND)**

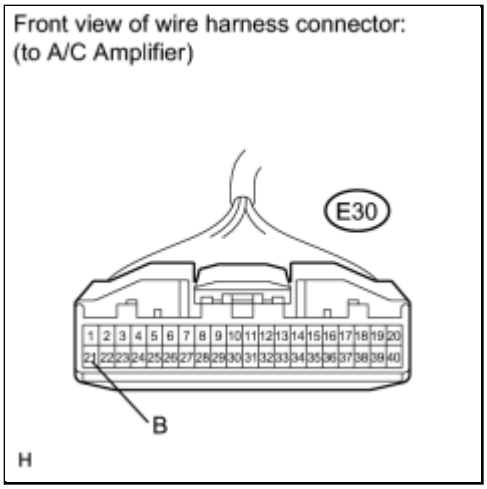

(a) Disconnect the connector from the A/C amplifier.

(b) Measure the voltage according to the value(s) in the table below.

Standard Voltage:

TESTER CONNECTION	CONDITION	SPECIFIED CONDITION
E30-21 (B) - Body ground	Always	11 to 14 V

NG ▶ **REPAIR OR REPLACE HARNESS OR CONNECTOR**

OK ▶ **PROCEED TO NEXT CIRCUIT INSPECTION SHOWN IN PROBLEM SYMPTOMS TABLE**

Last Modified: 3-10-2010	6.4 J	**From:** 200901
Model Year: 2010	**Model:** Corolla	**Doc ID:** RM000001O7R01HX
Title: HEATING / AIR CONDITIONING: AIR CONDITIONING SYSTEM (for Automatic Air Conditioning System): LIN Communication Circuit (2010 Corolla)		

LIN Communication Circuit

DESCRIPTION

Switch operational signals are exchanged between terminal LIN1 of the A/C control assembly and terminal LIN1 of the A/C amplifier.

WIRING DIAGRAM

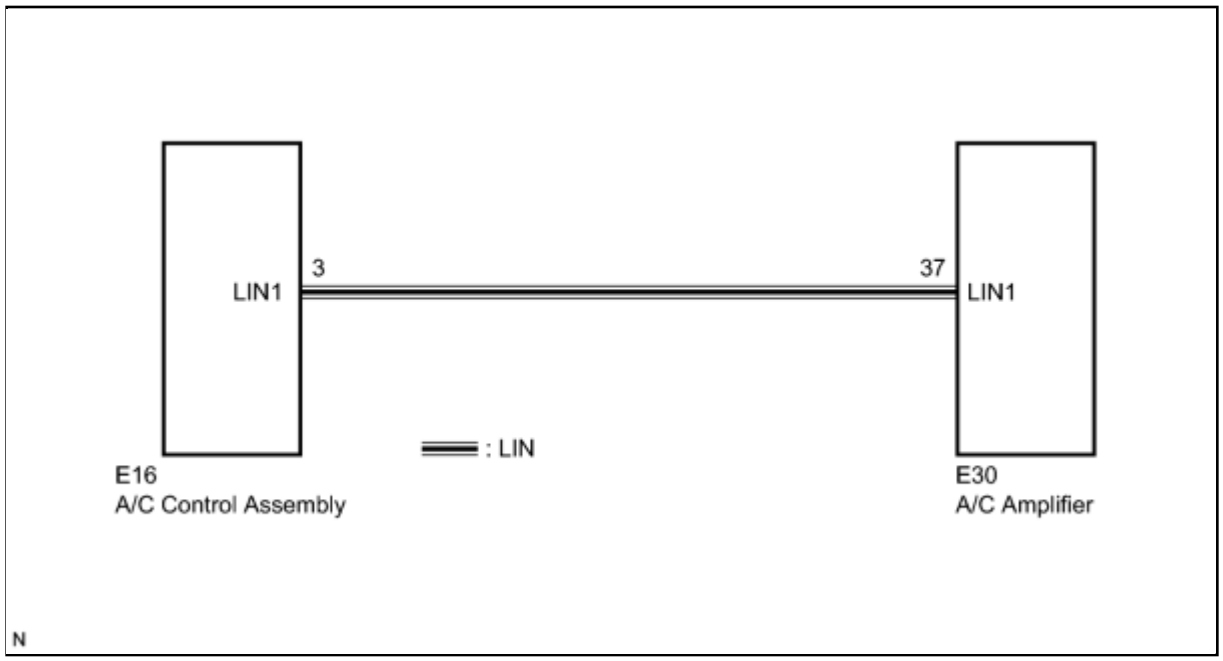

INSPECTION PROCEDURE

PROCEDURE

1.	**CHECK HARNESS AND CONNECTOR (A/C CONTROL ASSEMBLY - AIR CONDITIONING AMPLIFIER)**

(a) Disconnect the connector from the A/C control assembly.

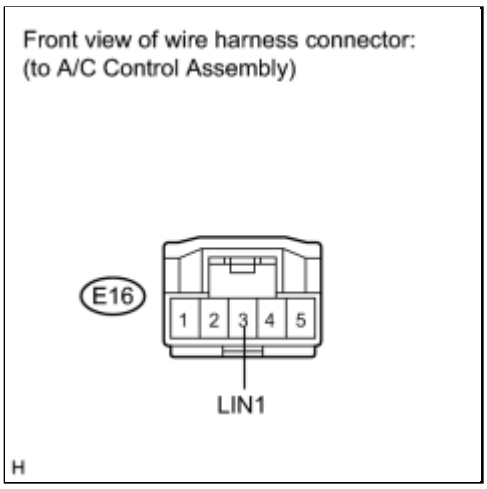

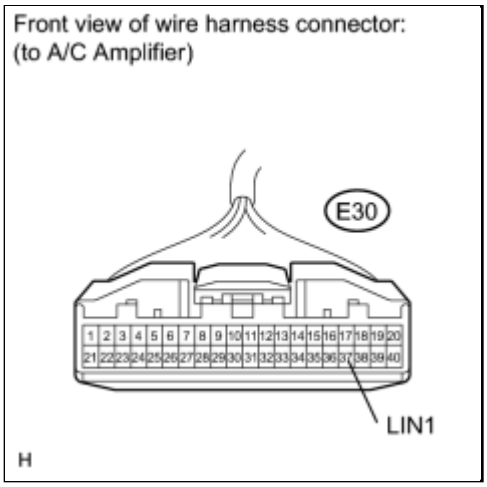

(b) Disconnect the connector from the A/C amplifier.

(c) Measure the resistance according to the value(s) in the table below.

Standard Resistance:

TESTER CONNECTION	CONDITION	SPECIFIED CONDITION
E30-37 (LIN1) - E16-3 (LIN1)	Always	Below 1 Ω
E30-37 (LIN1) - Body ground	Always	10 kΩ or higher

NG ▶ **REPAIR OR REPLACE HARNESS OR CONNECTOR**

OK ▶ **PROCEED TO NEXT CIRCUIT INSPECTION SHOWN IN PROBLEM SYMPTOMS TABLE**

Last Modified: 3-10-2010	6.4 K	**From:** 200901
Model Year: 2010	**Model:** Corolla	**Doc ID:** RM000002XV400EX
Title: INTERIOR PANELS / TRIM: FRONT CONSOLE BOX: COMPONENTS (2010 Corolla)		

COMPONENTS

ILLUSTRATION

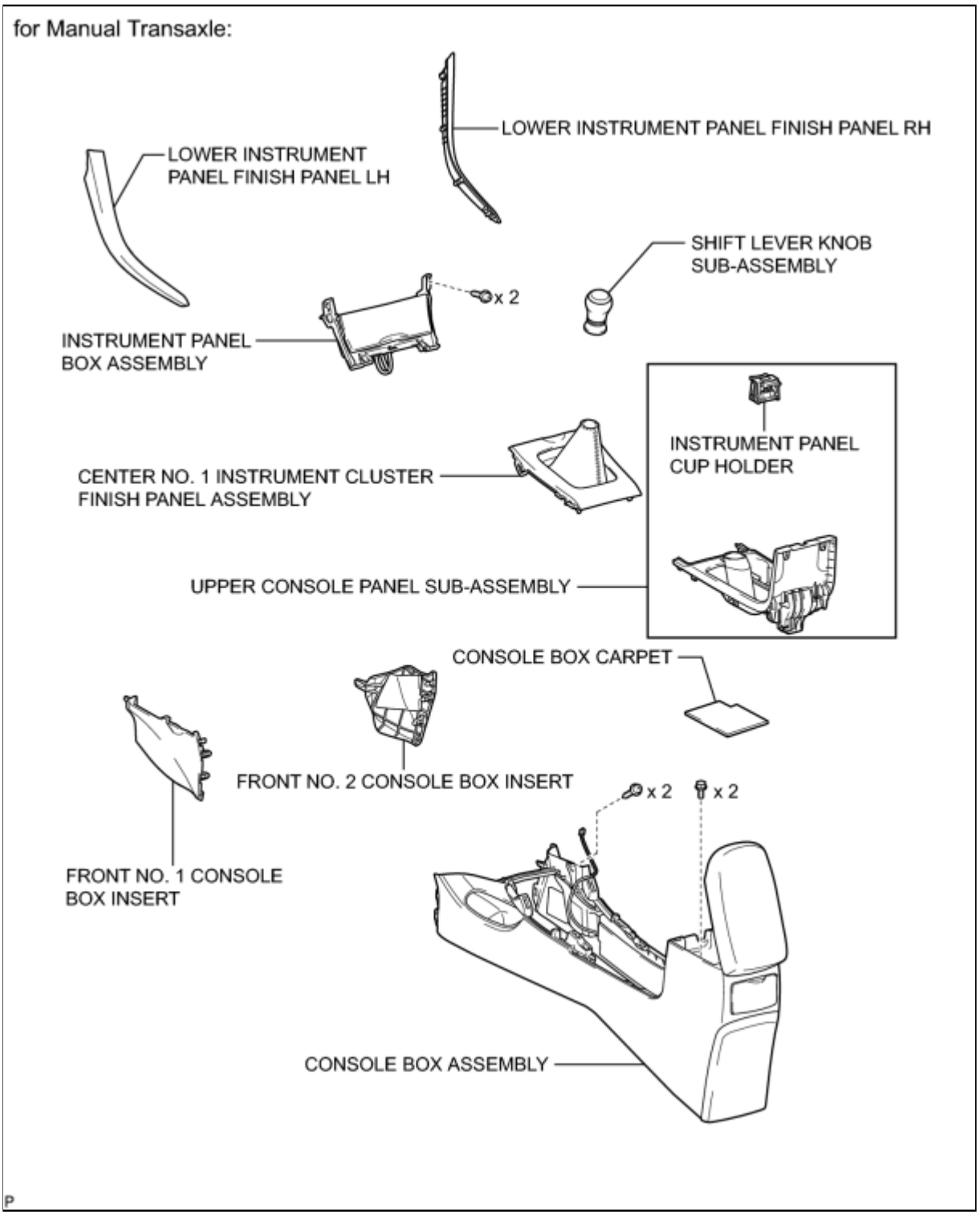

ILLUSTRATION

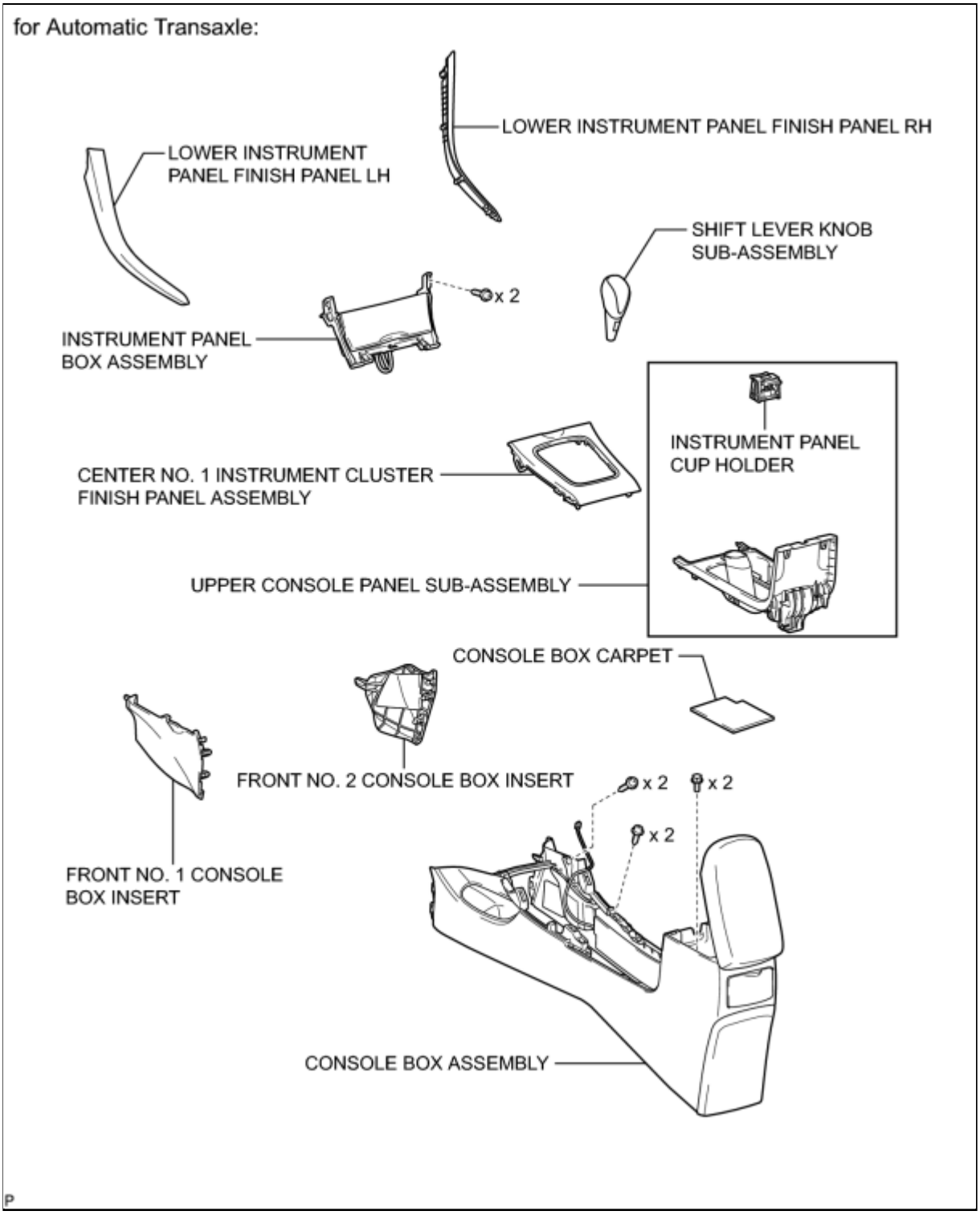

ILLUSTRATION

for TMC Made:

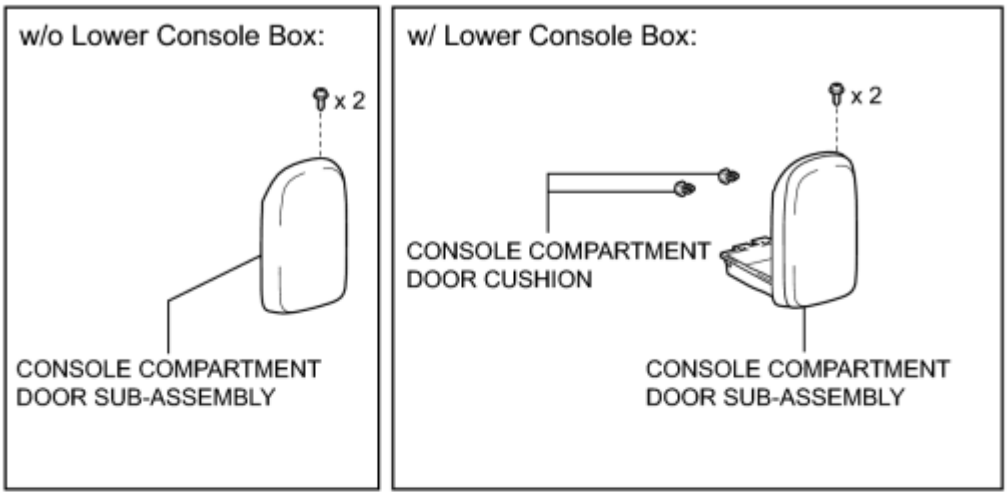

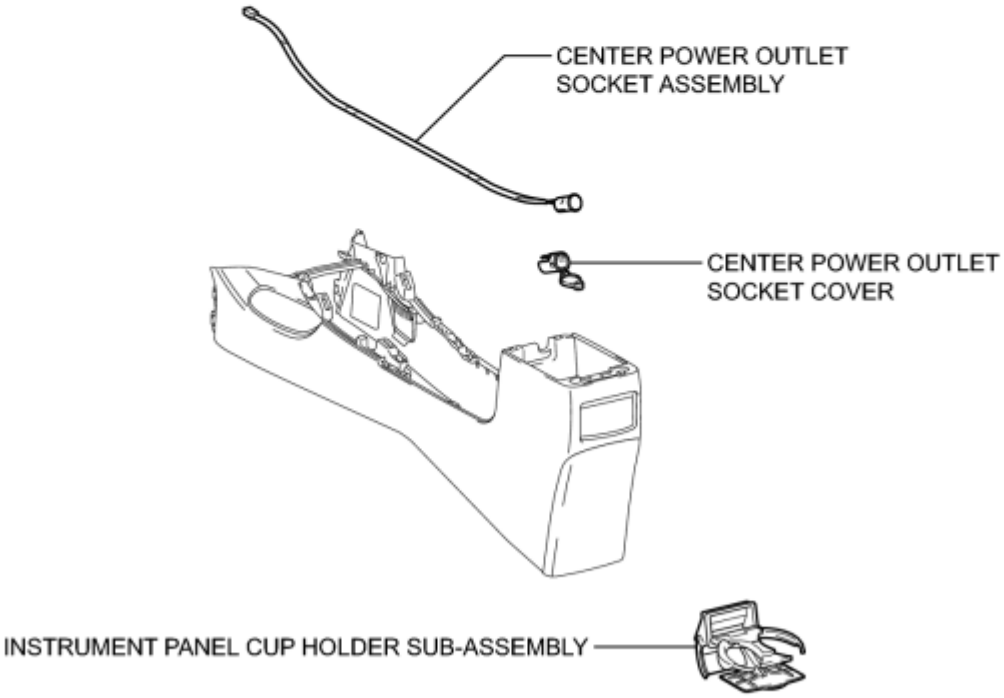

P

ILLUSTRATION

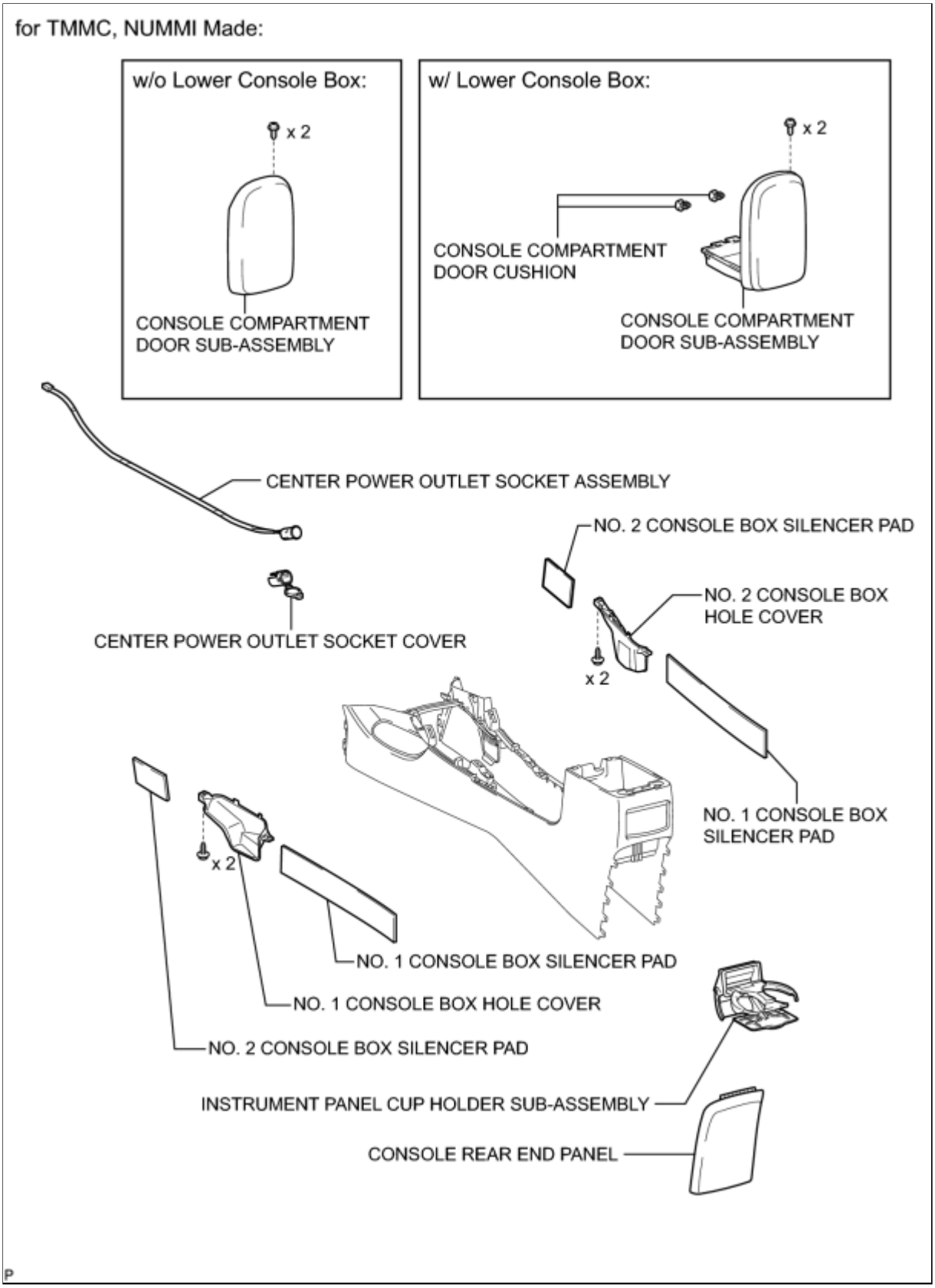

ILLUSTRATION

w/o Lower Console Box:

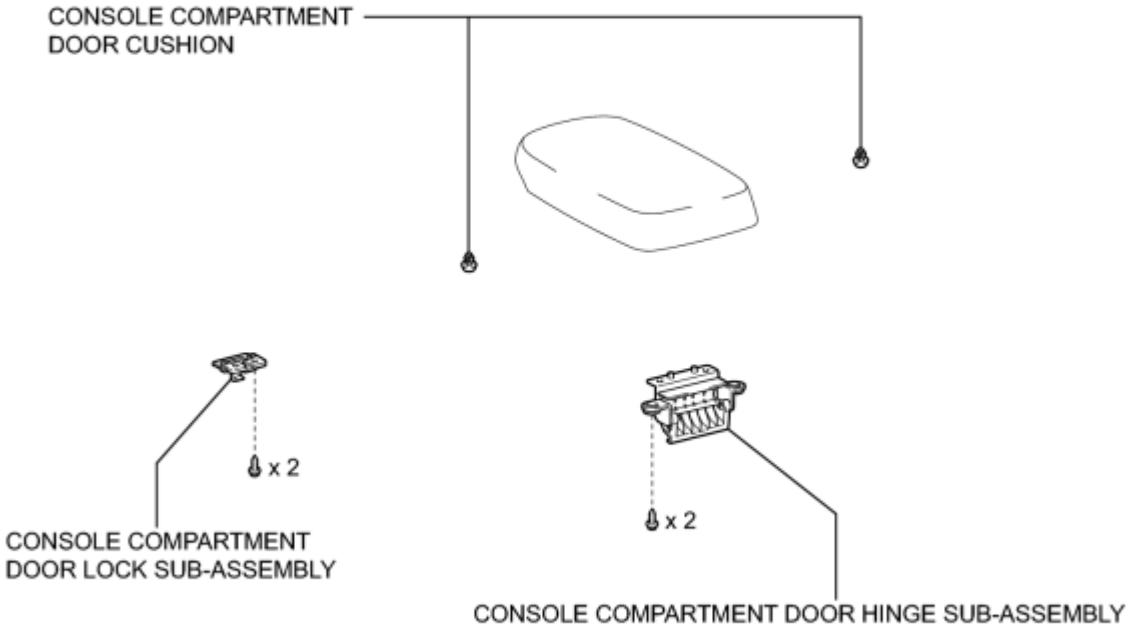

P

Last Modified: 3-10-2010	6.4 A	**From:** 200901
Model Year: 2010	**Model:** Corolla	**Doc ID:** RM000002XV500IX
Title: INTERIOR PANELS / TRIM: FRONT CONSOLE BOX: REMOVAL (2010 Corolla)		

REMOVAL

1. REMOVE LOWER INSTRUMENT PANEL FINISH PANEL LH INFO

2. REMOVE LOWER INSTRUMENT PANEL FINISH PANEL RH INFO

3. REMOVE SHIFT LEVER KNOB SUB-ASSEMBLY (for Manual Transaxle) INFO

4. REMOVE SHIFT LEVER KNOB SUB-ASSEMBLY (for Automatic Transaxle) INFO

5. REMOVE CENTER NO. 1 INSTRUMENT CLUSTER FINISH PANEL ASSEMBLY (for Manual Transaxle) INFO

6. REMOVE CENTER NO. 1 INSTRUMENT CLUSTER FINISH PANEL ASSEMBLY (for Automatic Transaxle) INFO

7. REMOVE INSTRUMENT PANEL BOX ASSEMBLY INFO

8. REMOVE FRONT NO. 1 CONSOLE BOX INSERT INFO

9. REMOVE FRONT NO. 2 CONSOLE BOX INSERT INFO

10. REMOVE UPPER CONSOLE PANEL SUB-ASSEMBLY

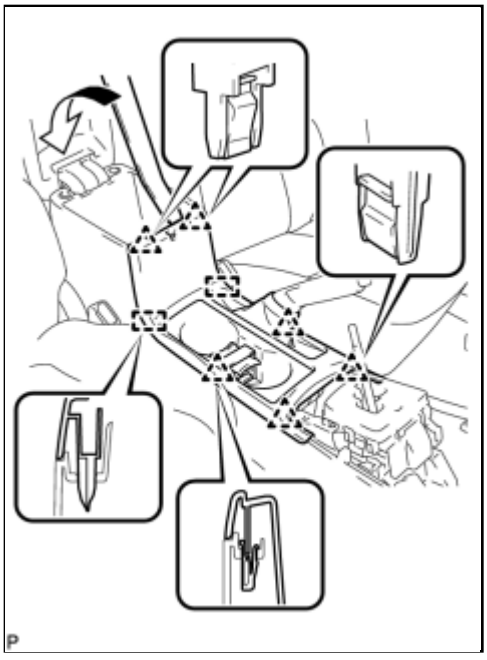

(a) Using a moulding remover, disengage the 6 clips and 2 guides, and remove the upper console panel sub-assembly.

11. REMOVE INSTRUMENT PANEL CUP HOLDER

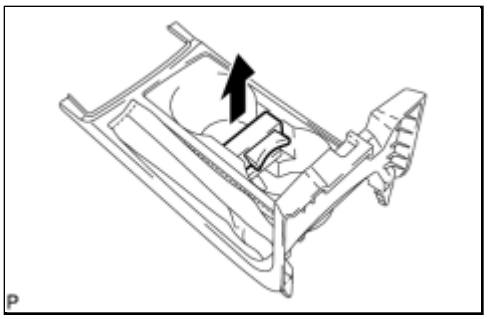

(a) Remove the instrument panel cup holder.

12. REMOVE CONSOLE BOX CARPET

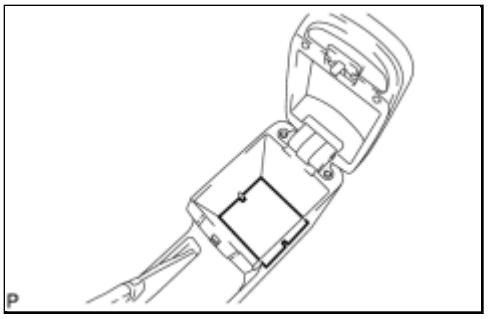

(a) Remove the console box carpet.

13. REMOVE CONSOLE BOX ASSEMBLY (for Manual Transaxle)

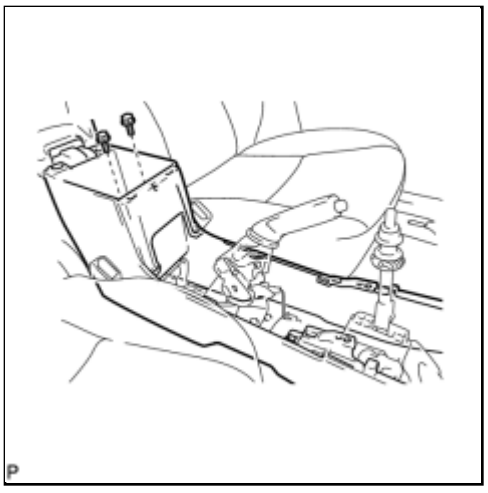

(a) Remove the 2 bolts.

(b) Disconnect the connector.

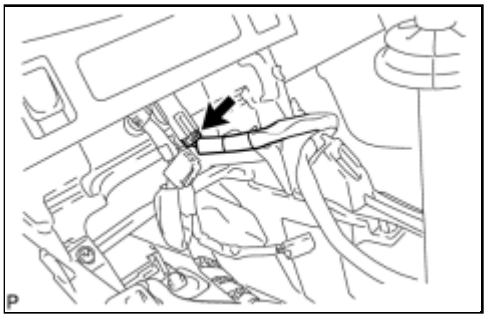

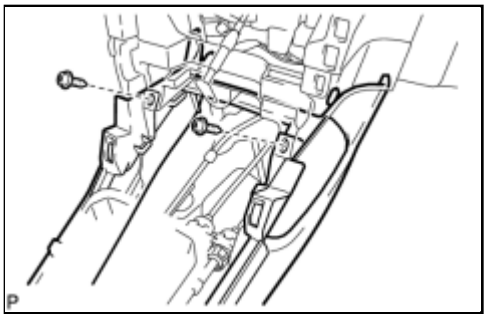

(c) Remove the 2 screws and the console box assembly.

14. REMOVE CONSOLE BOX ASSEMBLY (for Automatic Transaxle)

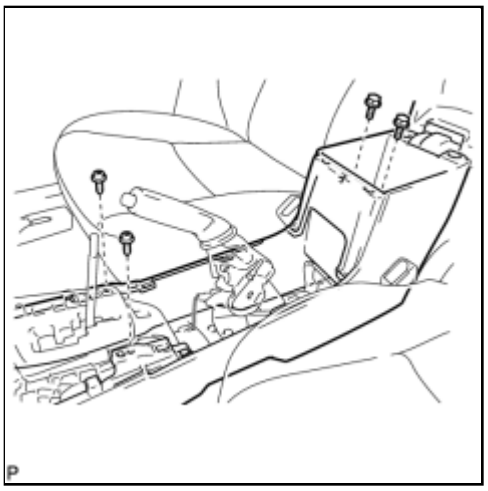

(a) Remove the 2 bolts and 2 screws.

(b) Disconnect the connector.

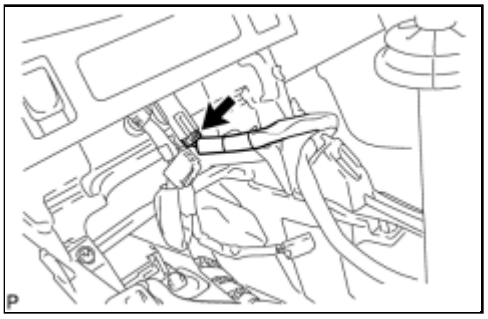

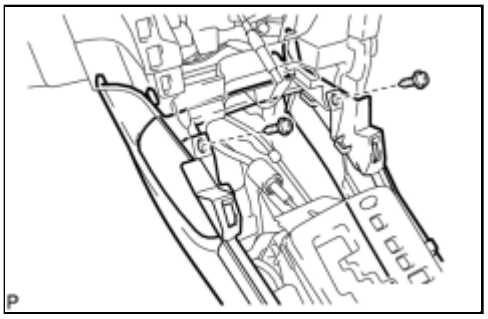

(c) Remove the 2 screws and the console box assembly.

Last Modified: 3-10-2010	6.4 A	**From:** 200901
Model Year: 2010	**Model:** Corolla	**Doc ID:** RM000002XV600EX
Title: INTERIOR PANELS / TRIM: FRONT CONSOLE BOX: DISASSEMBLY (2010 Corolla)		

DISASSEMBLY

1. REMOVE CONSOLE COMPARTMENT DOOR SUB-ASSEMBLY (w/o Lower Console Box)

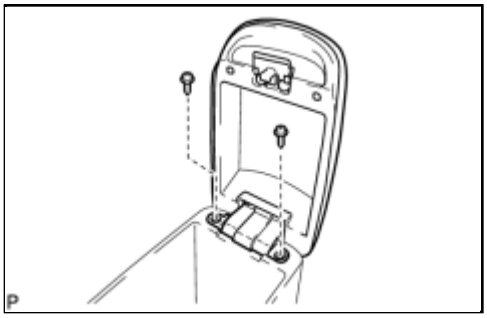

(a) Remove the 2 screws and the console compartment door sub-assembly.

2. REMOVE CONSOLE COMPARTMENT DOOR SUB-ASSEMBLY (w/ Lower Console Box)

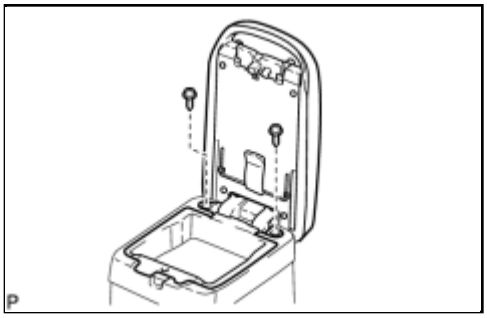

(a) Remove the 2 screws and the console compartment door sub-assembly.

3. REMOVE CONSOLE COMPARTMENT DOOR CUSHION

(a) Remove the 2 console compartment door cushions from the console compartment door.

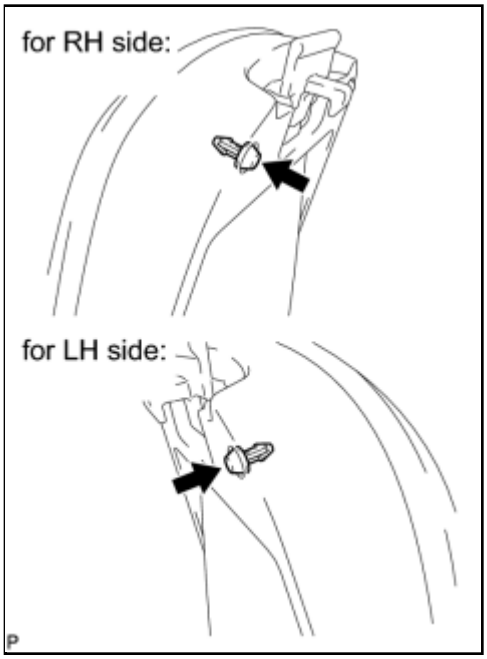

4. REMOVE CONSOLE COMPARTMENT DOOR LOCK SUB-ASSEMBLY (w/o Lower Console Box)

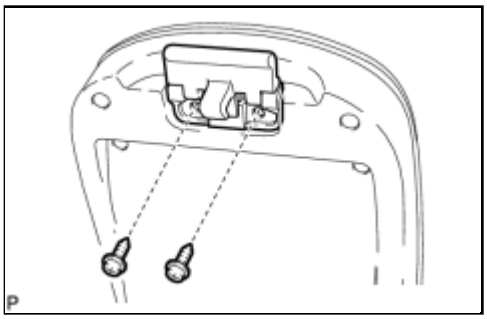

(a) Remove the 2 screws and the console compartment door lock sub-assembly.

5. REMOVE CONSOLE COMPARTMENT DOOR HINGE SUB-ASSEMBLY (w/o Lower Console Box)

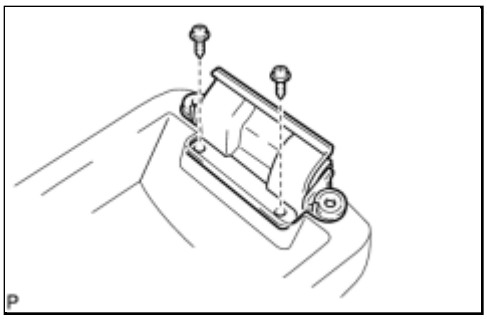

(a) Remove the 2 screws and the console compartment door hinge sub-assembly.

6. REMOVE INSTRUMENT PANEL CUP HOLDER SUB-ASSEMBLY

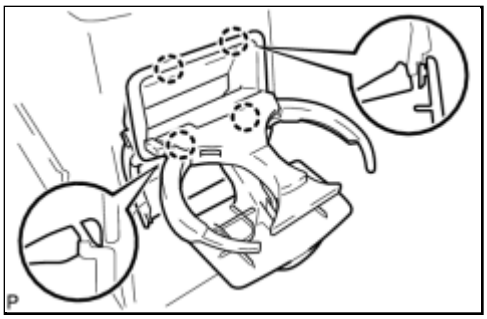

(a) Disengage the 4 claws and remove the instrument panel cup holder sub-assembly.

7. REMOVE CONSOLE REAR END PANEL (for TMMC, NUMMI Made)

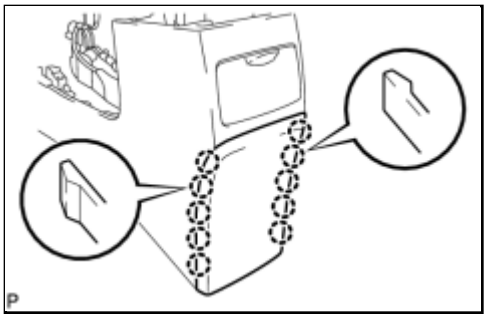

(a) Disengage the 10 claws and remove the console rear end panel.

8. REMOVE NO. 1 CONSOLE BOX HOLE COVER (for TMMC, NUMMI Made)

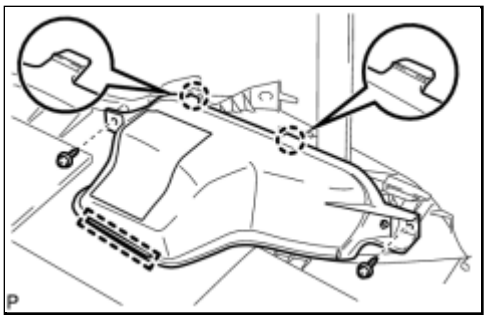

(a) Remove the 2 screws.

(b) Disengage the 2 claws and guide, and remove the No. 1 console box hole cover.

9. REMOVE NO. 2 CONSOLE BOX HOLE COVER (for TMMC, NUMMI Made)

(a) Remove the 2 screws.

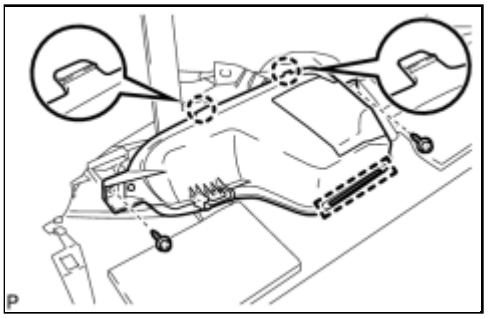

(b) Disengage the 2 claws and guide, and remove the No. 2 console box hole cover.

10. REMOVE NO. 1 CONSOLE BOX SILENCER PAD (for TMMC, NUMMI Made)

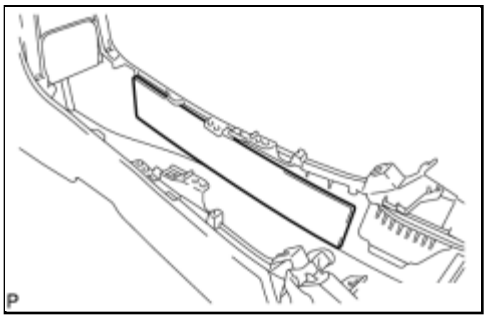

(a) Remove the No. 1 console box silencer pad.

HINT:

Use the same procedure for the RH side and LH side.

11. REMOVE NO. 2 CONSOLE BOX SILENCER PAD (for TMMC, NUMMI Made)

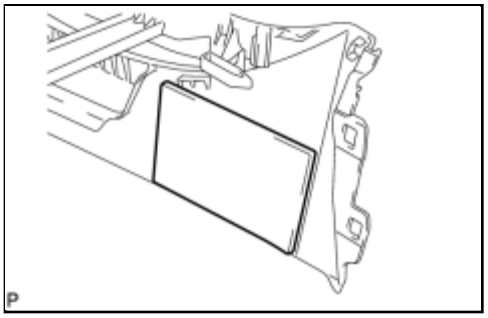

(a) Remove the No. 2 console box silencer pad.

HINT:

Use the same procedure for the RH side and LH side.

12. REMOVE CENTER POWER OUTLET SOCKET ASSEMBLY INFO

13. REMOVE CENTER POWER OUTLET SOCKET COVER

(a) Disengage the 2 claws and remove the center power outlet socket cover.

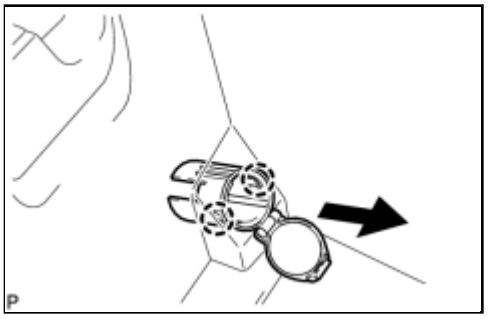
P

Last Modified: 3-10-2010	6.4 A	**From:** 200901
Model Year: 2010	**Model:** Corolla	**Doc ID:** RM000002XV700EX
Title: INTERIOR PANELS / TRIM: FRONT CONSOLE BOX: REASSEMBLY (2010 Corolla)		

REASSEMBLY

1. INSTALL CENTER POWER OUTLET SOCKET COVER

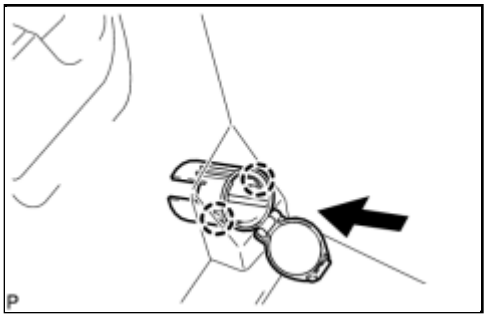

(a) Engage the 2 claws and install the center power outlet socket cover.

2. INSTALL CENTER POWER OUTLET SOCKET ASSEMBLY INFO

3. INSTALL NO. 1 CONSOLE BOX SILENCER PAD (for TMMC, NUMMI Made)

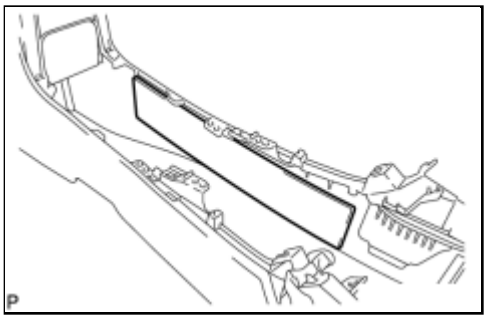

(a) Install the No. 1 console box silencer pad.

HINT:

Use the same procedure for the RH side and LH side.

4. INSTALL NO. 2 CONSOLE BOX SILENCER PAD (for TMMC, NUMMI Made)

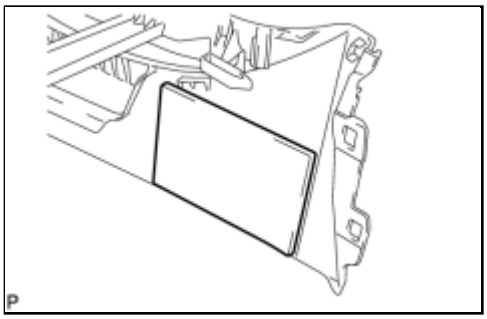

(a) Install the No. 2 console box silencer pad.

HINT:

Use the same procedure for the RH side and LH side.

5. INSTALL NO. 1 CONSOLE BOX HOLE COVER (for TMMC, NUMMI Made)

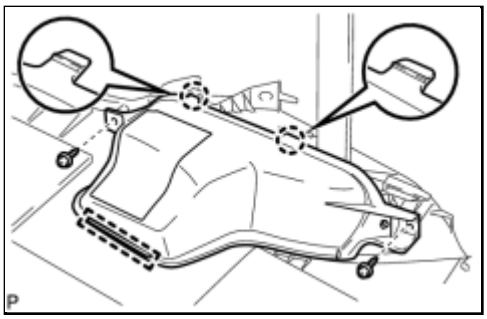

(a) Engage the 2 claws and guide.

(b) Install the No. 1 console box hole cover with the 2 screws.

6. INSTALL NO. 2 CONSOLE BOX HOLE COVER (for TMMC, NUMMI Made)

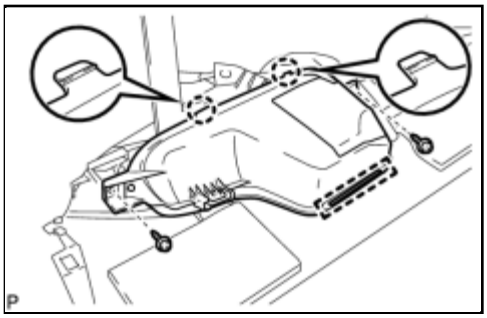

(a) Engage the 2 claws and guide.

(b) Install the No. 2 console box hole cover with the 2 screws.

7. INSTALL CONSOLE REAR END PANEL (for TMMC, NUMMI Made)

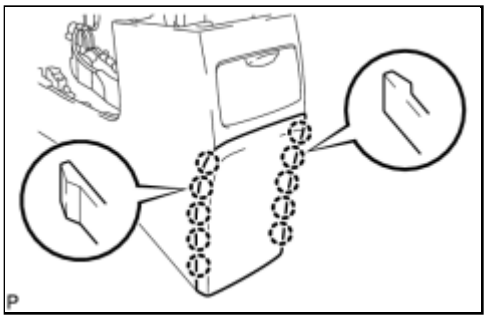

(a) Engage the 10 claws and install the console rear end panel.

8. INSTALL INSTRUMENT PANEL CUP HOLDER SUB-ASSEMBLY

(a) Engage the 4 claws and install the instrument panel cup holder sub-assembly.

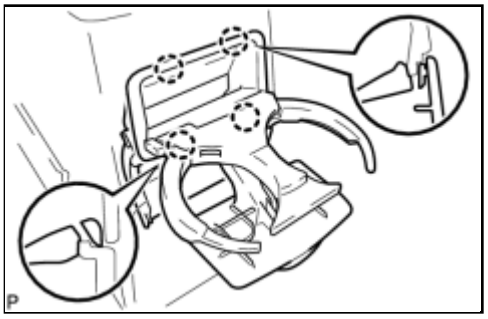

9. INSTALL CONSOLE COMPARTMENT DOOR HINGE SUB-ASSEMBLY (w/o Lower Console Box)

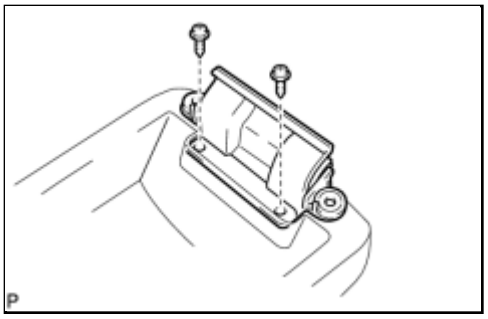

(a) Install the console compartment door hinge sub-assembly with the 2 screws.

10. INSTALL CONSOLE COMPARTMENT DOOR LOCK SUB-ASSEMBLY (w/o Lower Console Box)

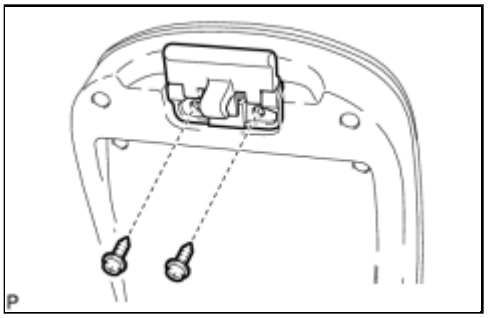

(a) Install the console compartment door lock sub-assembly with the 2 screws.

11. INSTALL CONSOLE COMPARTMENT DOOR CUSHION

(a) Install the 2 console compartment door cushions to the console compartment door.

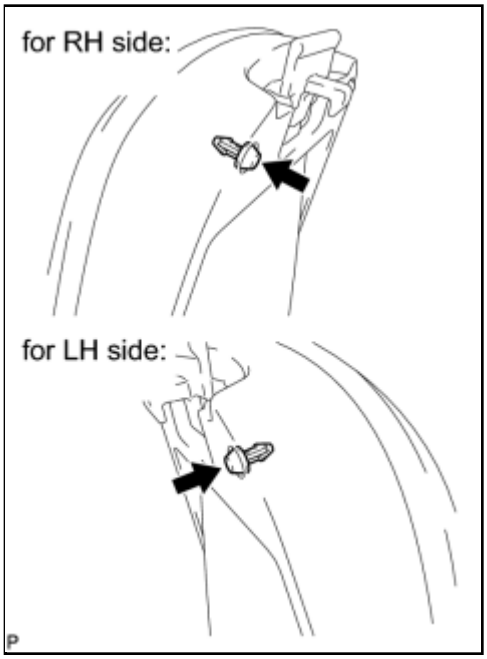

12. INSTALL CONSOLE COMPARTMENT DOOR SUB-ASSEMBLY (w/o Lower Console Box)

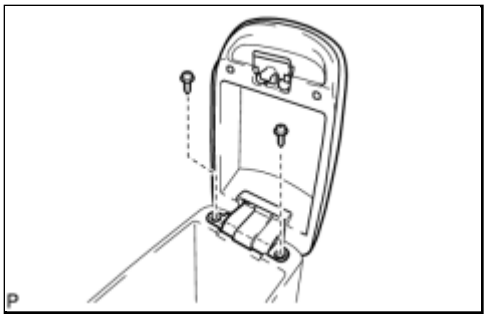

(a) Install the console compartment door sub-assembly with the 2 screws.

13. INSTALL CONSOLE COMPARTMENT DOOR SUB-ASSEMBLY (w/ Lower Console Box)

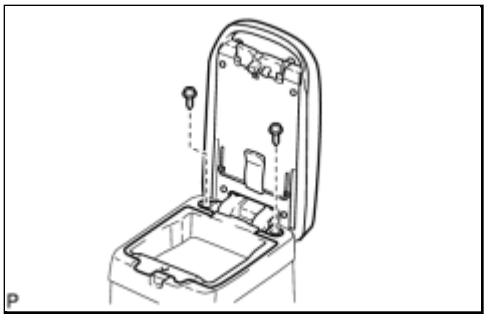

(a) Install the console compartment door sub-assembly with the 2 screws.

Last Modified: 3-10-2010	6.4 A	**From:** 200901
Model Year: 2010	**Model:** Corolla	**Doc ID:** RM000002XV300IX
Title: INTERIOR PANELS / TRIM: FRONT CONSOLE BOX: INSTALLATION (2010 Corolla)		

INSTALLATION

1. INSTALL CONSOLE BOX ASSEMBLY (for Automatic Transaxle)

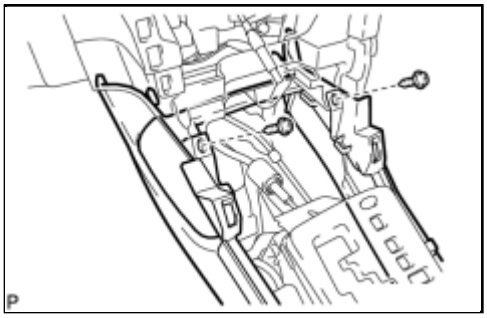

(a) Install the 2 screws.

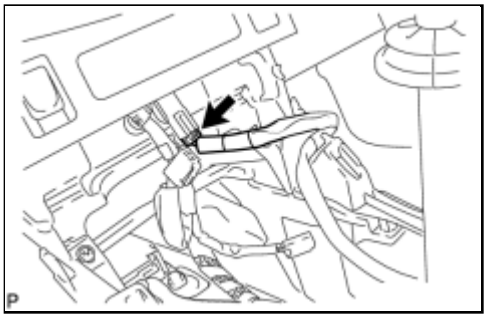

(b) Connect the connector.

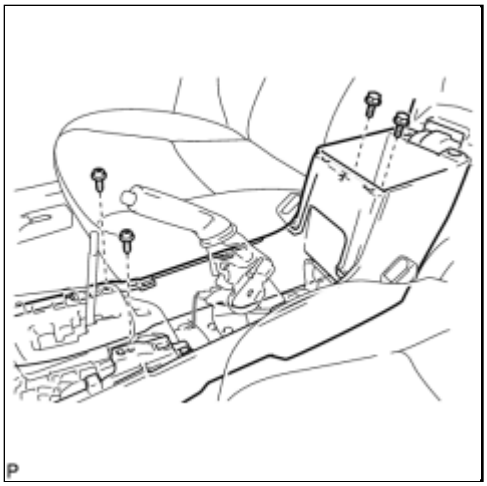

(c) Install the console box assembly with the 2 bolts and 2 screws.

2. INSTALL CONSOLE BOX ASSEMBLY (for Manual Transaxle)

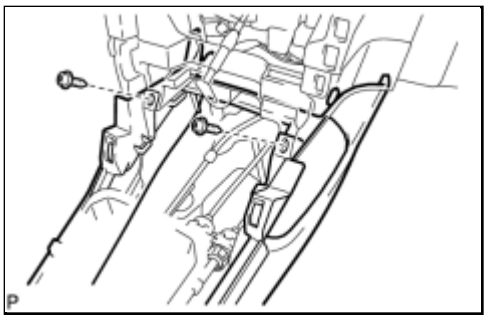

(a) Install the 2 screws.

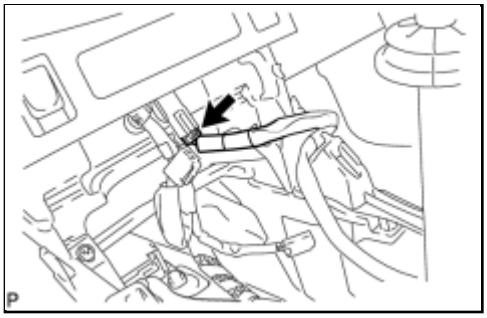

(b) Connect the connector.



(c) Install the console box assembly with the 2 bolts.

3. INSTALL CONSOLE BOX CARPET

(a) Install the console box carpet.

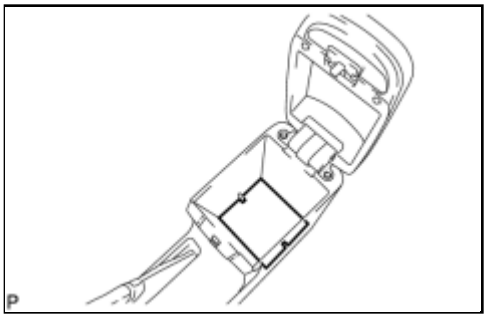

4. INSTALL INSTRUMENT PANEL CUP HOLDER

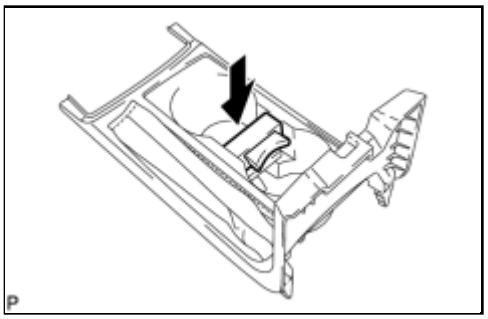

(a) Install the instrument panel cup holder.

5. INSTALL UPPER CONSOLE PANEL SUB-ASSEMBLY

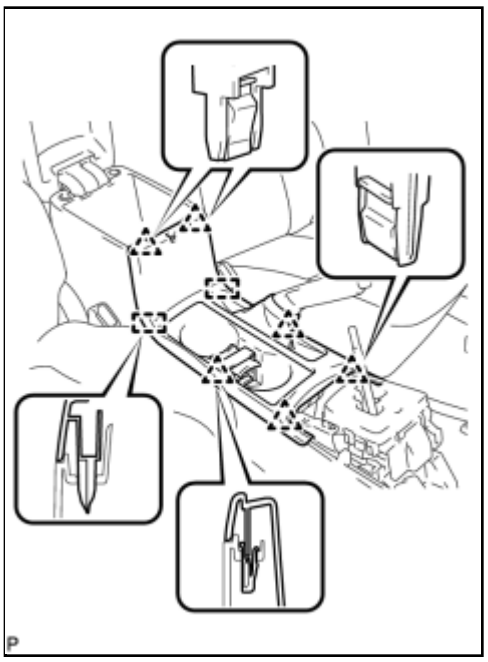

(a) Engage the 6 clips and 2 guides, to install the upper console panel sub-assembly.

6. INSTALL FRONT NO. 1 CONSOLE BOX INSERT INFO

7. INSTALL FRONT NO. 2 CONSOLE BOX INSERT INFO

8. INSTALL INSTRUMENT PANEL BOX ASSEMBLY INFO

9. INSTALL CENTER NO. 1 INSTRUMENT CLUSTER FINISH PANEL ASSEMBLY (for Automatic Transaxle) INFO

10. INSTALL CENTER NO. 1 INSTRUMENT CLUSTER FINISH PANEL ASSEMBLY (for Manual Transaxle) INFO

11. INSTALL SHIFT LEVER KNOB SUB-ASSEMBLY (for Automatic Transaxle) INFO

12. INSTALL SHIFT LEVER KNOB SUB-ASSEMBLY (for Manual Transaxle) INFO

13. INSTALL LOWER INSTRUMENT PANEL FINISH PANEL LH INFO

14. INSTALL LOWER INSTRUMENT PANEL FINISH PANEL RH INFO

Last Modified: 3-10-2010	6.4 A	**From:** 200901
Model Year: 2010	**Model:** Corolla	**Doc ID:** RM0000024DD03RX
Title: INTERIOR PANELS / TRIM: LOWER INSTRUMENT PANEL: REMOVAL (2010 Corolla)		

REMOVAL

1. PRECAUTION

INFO

2. DISCONNECT CABLE FROM NEGATIVE BATTERY TERMINAL

CAUTION:

Wait at least 90 seconds after disconnecting the cable from the negative (-) battery terminal to disable the SRS system.

3. REMOVE LOWER INSTRUMENT PANEL FINISH PANEL LH INFO

4. REMOVE LOWER INSTRUMENT PANEL FINISH PANEL RH INFO

5. REMOVE INSTRUMENT PANEL FINISH PANEL END LH INFO

6. REMOVE INSTRUMENT PANEL FINISH PANEL END RH INFO

7. REMOVE CENTER INSTRUMENT PANEL REGISTER ASSEMBLY INFO

8. REMOVE INSTRUMENT CLUSTER FINISH PANEL ASSEMBLY INFO

9. REMOVE COMBINATION METER ASSEMBLY INFO

10. REMOVE FRONT PILLAR GARNISH LH (w/o Curtain Shield Airbag) INFO

11. REMOVE FRONT PILLAR GARNISH LH (w/ Curtain Shield Airbag) INFO

12. REMOVE FRONT PILLAR GARNISH RH (w/o Curtain Shield Airbag)

HINT:

Use the same procedure for the RH side and LH side.

13. REMOVE FRONT PILLAR GARNISH RH (w/ Curtain Shield Airbag) INFO

14. REMOVE LOWER INSTRUMENT PANEL FINISH PANEL ASSEMBLY INFO

15. DISCONNECT FRONT DOOR OPENING TRIM WEATHERSTRIP LH INFO

16. REMOVE GLOVE COMPARTMENT DOOR ASSEMBLY INFO

17. REMOVE NO. 1 INSTRUMENT PANEL BOX DOOR SUB-ASSEMBLY INFO

18. DISCONNECT FRONT DOOR OPENING TRIM WEATHERSTRIP RH

HINT:

Use the same procedure for the RH side and LH side.

19. DISCONNECT INSTRUMENT PANEL WIRE ASSEMBLY INFO

20. REMOVE UPPER INSTRUMENT PANEL SUB-ASSEMBLY INFO

21. REMOVE RADIO RECEIVER WITH BRACKET (w/o Navigation System) INFO

22. REMOVE CENTER INSTRUMENT CLUSTER FINISH PANEL SUB-ASSEMBLY (w/ Navigation System)

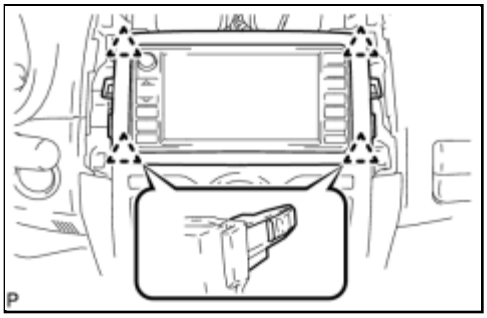

(a) Disengage the 4 clips and remove the center instrument cluster finish panel sub-assembly.

23. REMOVE NAVIGATION RECEIVER WITH BRACKET (w/ Navigation System) INFO

24. REMOVE SHIFT LEVER KNOB SUB-ASSEMBLY (for Manual Transaxle)

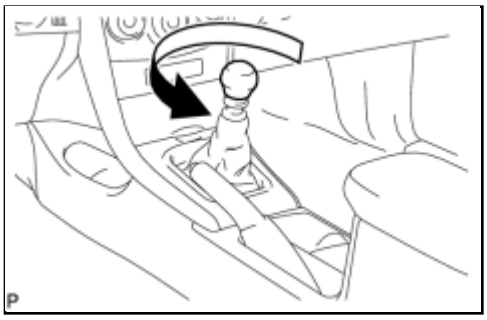

(a) Turn the shift lever knob counterclockwise and remove the shift lever knob sub-assembly.

25. REMOVE SHIFT LEVER KNOB SUB-ASSEMBLY (for Automatic Transaxle)

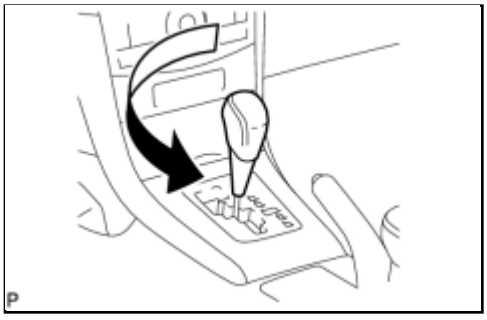

(a) Turn the shift lever knob counterclockwise and remove the shift lever knob sub-assembly.

26. REMOVE CENTER NO. 1 INSTRUMENT CLUSTER FINISH PANEL ASSEMBLY (for Manual

Transaxle)

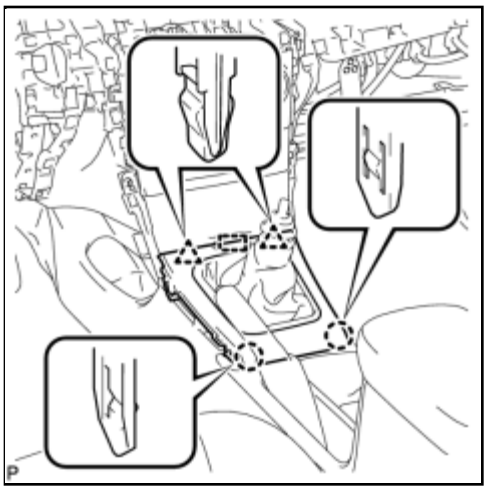

(a) Disengage the 2 claws and 2 clips.

(b) Disengage the guide and remove the center No.1 instrument cluster finish panel assembly.

27. REMOVE CENTER NO. 1 INSTRUMENT CLUSTER FINISH PANEL ASSEMBLY (for Automatic Transaxle)

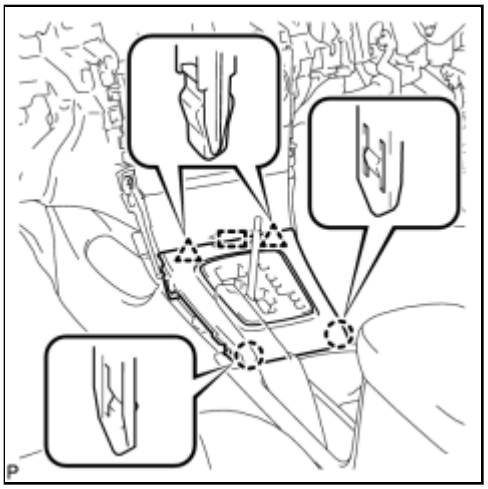

(a) Disengage the 2 claws and 2 clips.

(b) Disengage the guide and remove the center No.1 instrument cluster finish panel assembly.

28. REMOVE INSTRUMENT PANEL BOX ASSEMBLY

(a) Remove the 2 screws <B>.

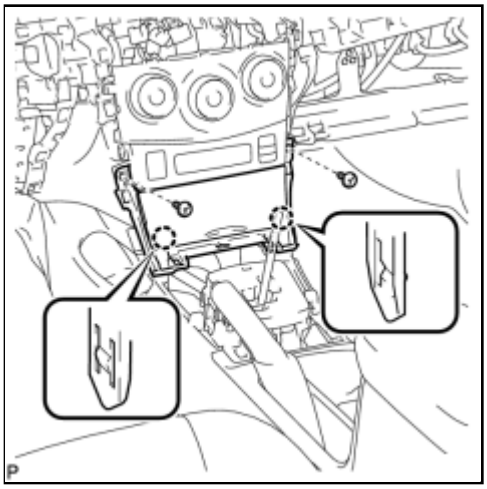

(b) Disengage the 2 claws.

(c) Disconnect the connector and remove the instrument panel box assembly.

29. REMOVE INSTRUMENT PANEL HOLE COVER

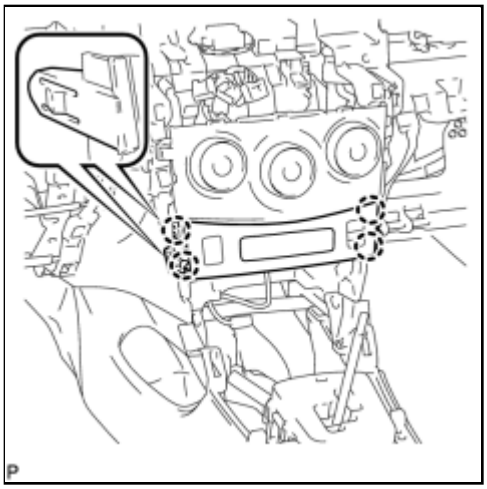

(a) Disengage the 4 claws.

(b) Disconnect each connector and remove the instrument panel hole cover.

30. REMOVE AIR CONDITIONING PANEL ASSEMBLY (for Manual Air Conditioning System) INFO

31. REMOVE AIR CONDITIONING CONTROL ASSEMBLY (for Automatic Air Conditioning System) INFO

32. REMOVE FRONT DOOR SCUFF PLATE LH INFO

33. REMOVE COWL SIDE TRIM BOARD LH INFO

34. REMOVE FRONT NO. 1 CONSOLE BOX INSERT

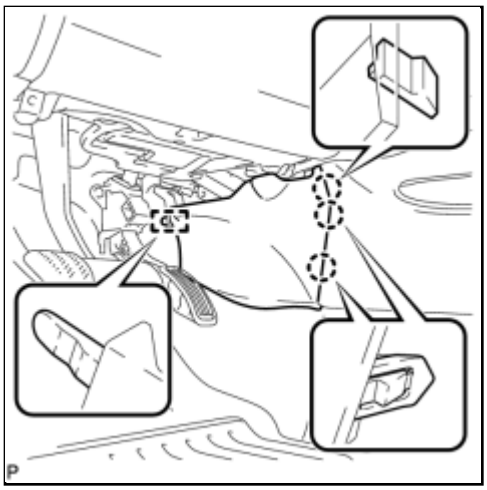

(a) Disengage the 3 claws.

(b) Disengage the guide and remove the front No. 1 console box insert.

35. REMOVE LOWER INSTRUMENT PANEL FINISH PANEL SUB-ASSEMBLY

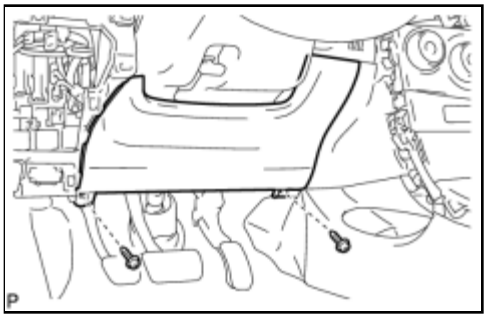

(a) Remove the 2 screws <B>.

(b) Disengage the 5 claws, 2 guides and 2 clips, and then remove the lower instrument panel finish panel sub-assembly.

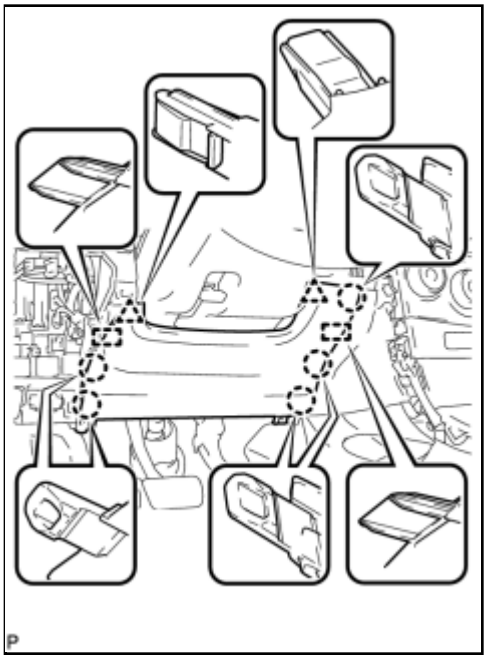

36. REMOVE NO. 1 SWITCH HOLE BASE (w/o Smart Key System)

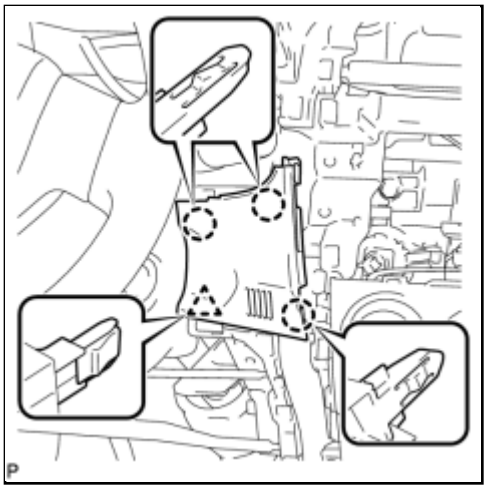

(a) Disengage the 3 claws and clip, and then remove the No. 1 switch hole base.

37. REMOVE NO. 1 SWITCH HOLE BASE (w/ Smart Key System)

(a) Disengage the 3 claws and clip.

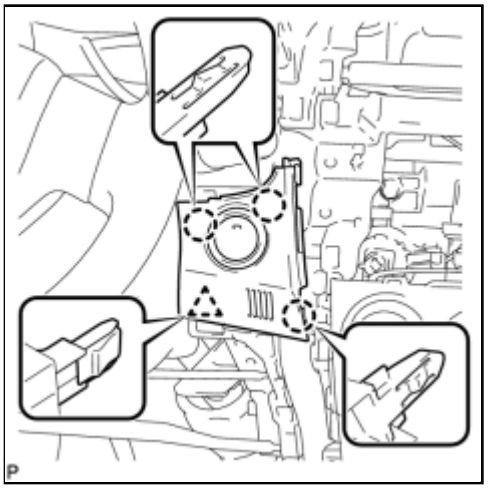

(b) Disconnect the connector and remove the No. 1 switch hole base.

38. REMOVE FRONT DOOR SCUFF PLATE RH

HINT:

Use the same procedure for the RH side and LH side.

39. REMOVE COWL SIDE TRIM BOARD RH

HINT:

Use the same procedure for the RH side and LH side.

40. REMOVE NO. 2 INSTRUMENT PANEL UNDER COVER SUB-ASSEMBLY (w/ Instrument Panel Under Cover)

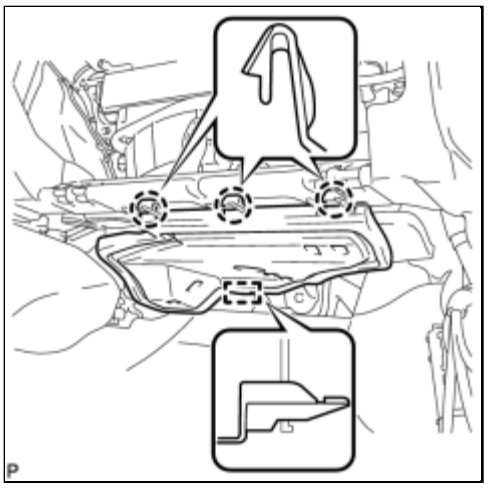

(a) Disengage the 3 claws.

(b) Disengage the guide and remove the No. 2 instrument panel under cover sub-assembly.

41. REMOVE FRONT NO. 2 CONSOLE BOX INSERT

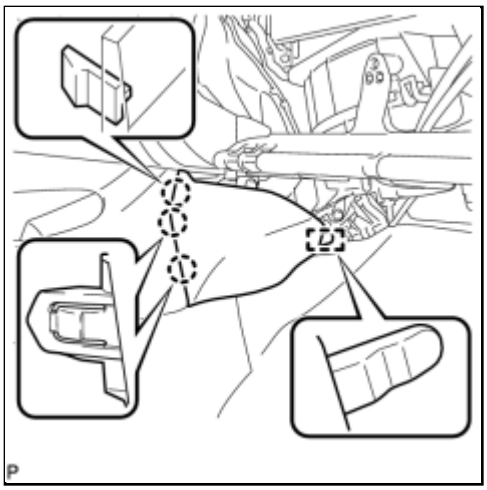

(a) Disengage the 3 claws.

(b) Disengage the guide and remove the front No. 2 console box insert.

42. REMOVE UPPER CONSOLE PANEL SUB-ASSEMBLY INFO

43. REMOVE CONSOLE BOX CARPET INFO

44. REMOVE CONSOLE BOX ASSEMBLY (for Manual Transaxle) INFO

45. REMOVE CONSOLE BOX ASSEMBLY (for Automatic Transaxle) INFO

46. REMOVE NO. 2 ANTENNA CORD SUB-ASSEMBLY INFO

47. REMOVE LOWER INSTRUMENT PANEL SUB-ASSEMBLY

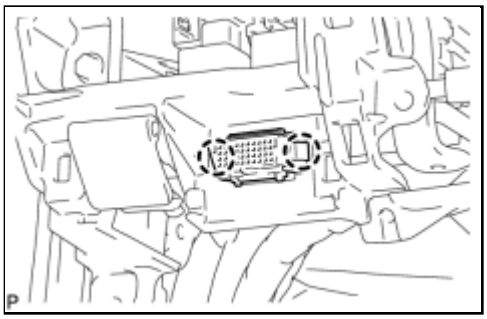

(a) Disengage the 2 claws and DLC3.

(b) Disengage the 3 claws and remove the hood lock control cable assembly.

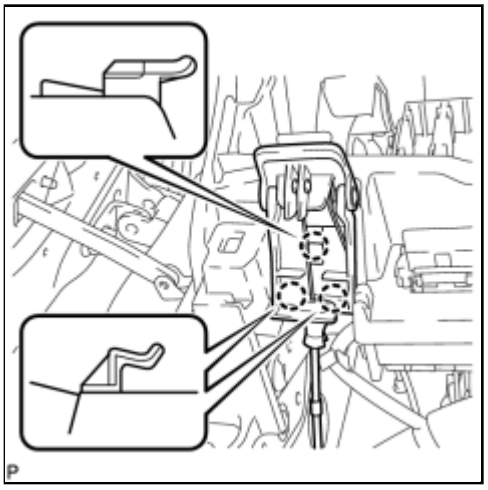

(c) Disengage each clamp.

(d) Disconnect each connector.

(e) Remove the 3 screws <F>.

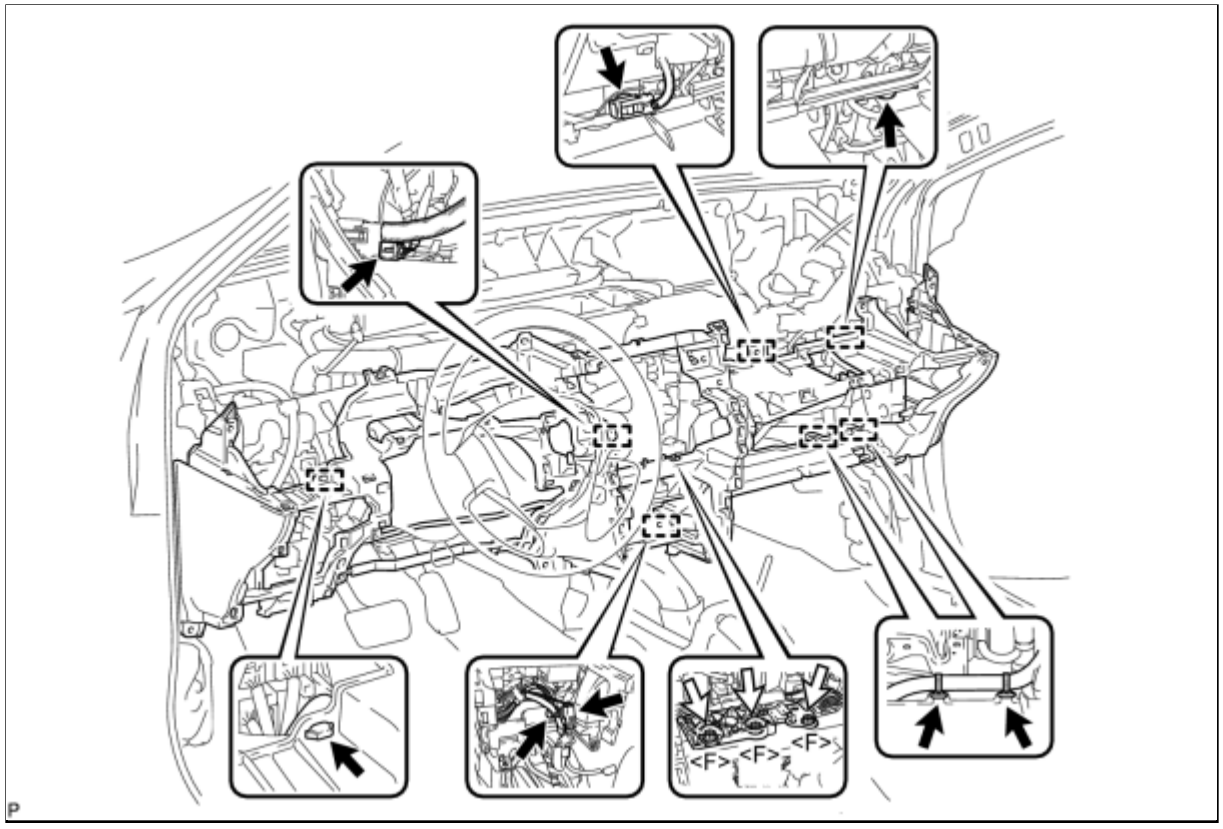

(f) Remove the screw <F>.

(g) Remove the 2 bolts <C>.

(h) Remove the 8 screws <D> or <E>.

(i) Disengage the 2 claws and remove the lower instrument panel sub-assembly.

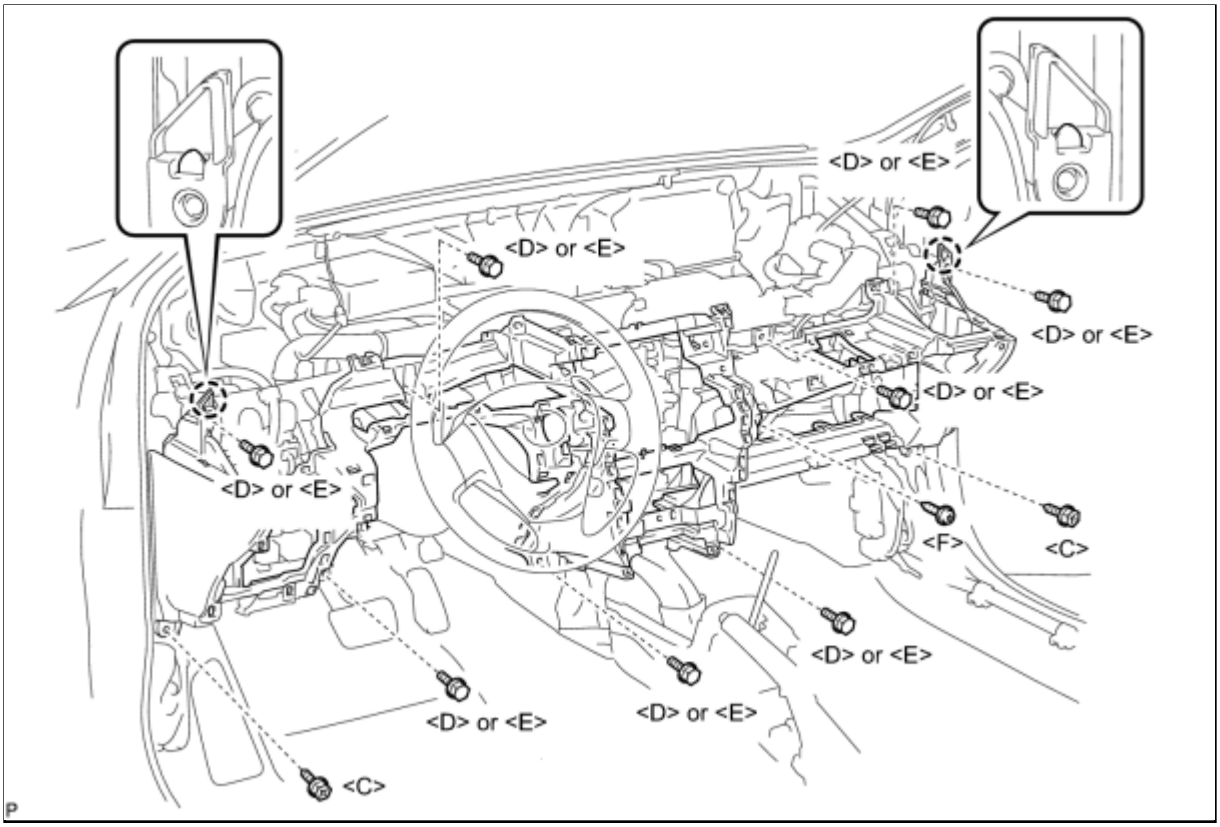
<D> or <E>
<D> or <E>
<D> or <E>
<D> or <E>
<D> or <E>
<F>
<C>
<D> or <E>
<D> or <E>
<D> or <E>
<C>
P

Last Modified: 3-10-2010	6.4 K	**From:** 200901
Model Year: 2010	**Model:** Corolla	**Doc ID:** RM0000024DC01RX
Title: INTERIOR PANELS / TRIM: LOWER INSTRUMENT PANEL: COMPONENTS (2010 Corolla)		

COMPONENTS

ILLUSTRATION

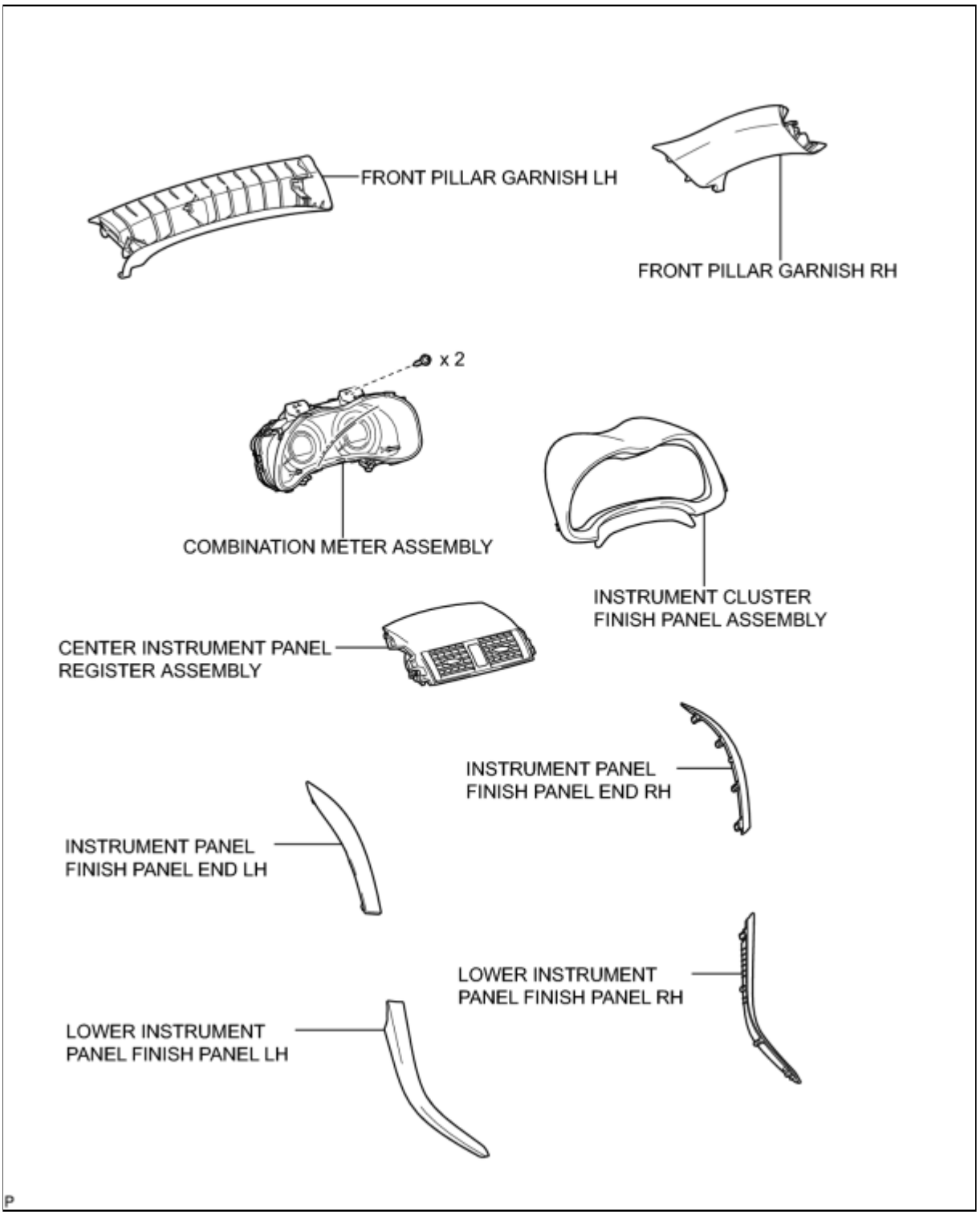

ILLUSTRATION

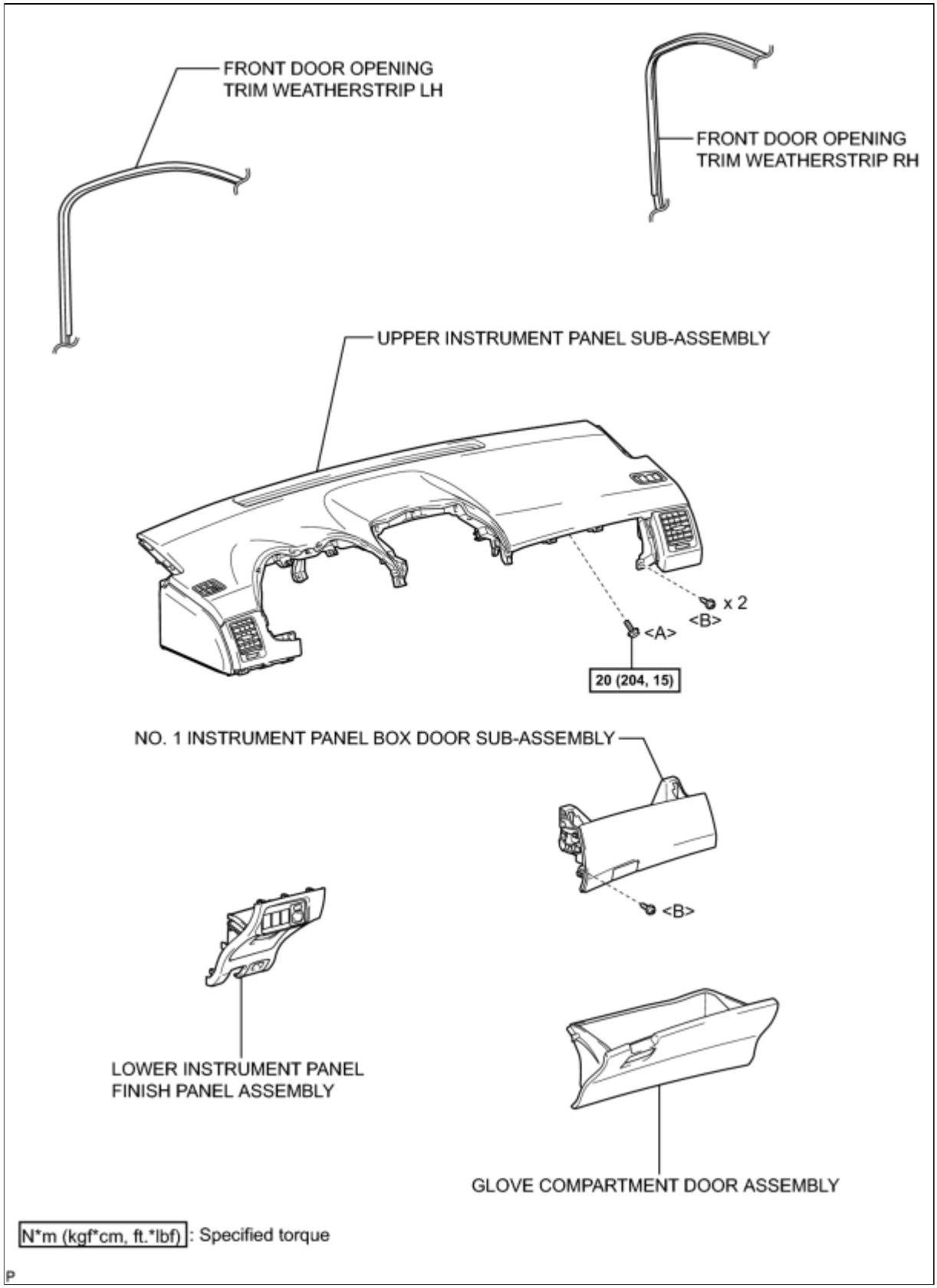

ILLUSTRATION

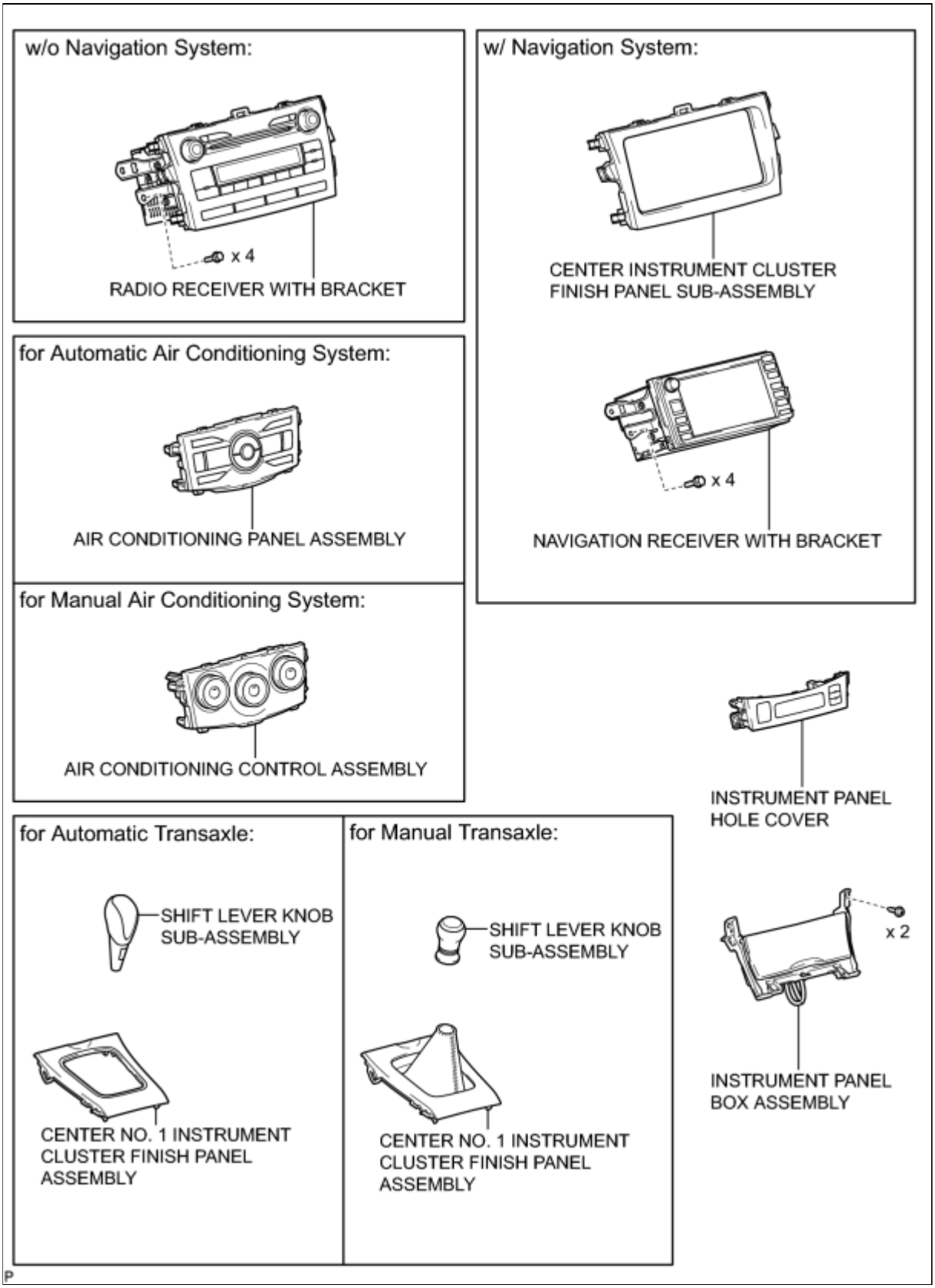

ILLUSTRATION

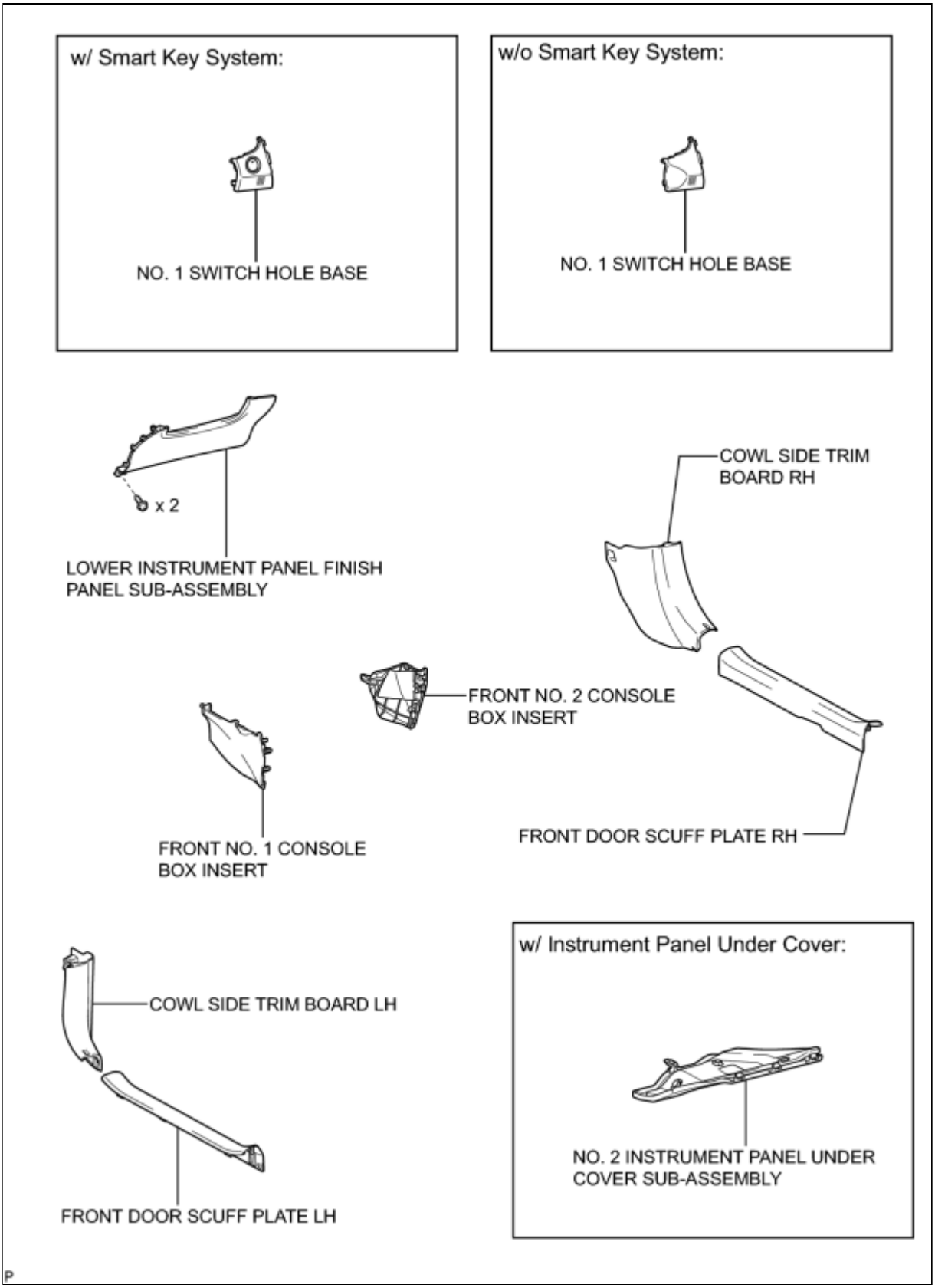

ILLUSTRATION

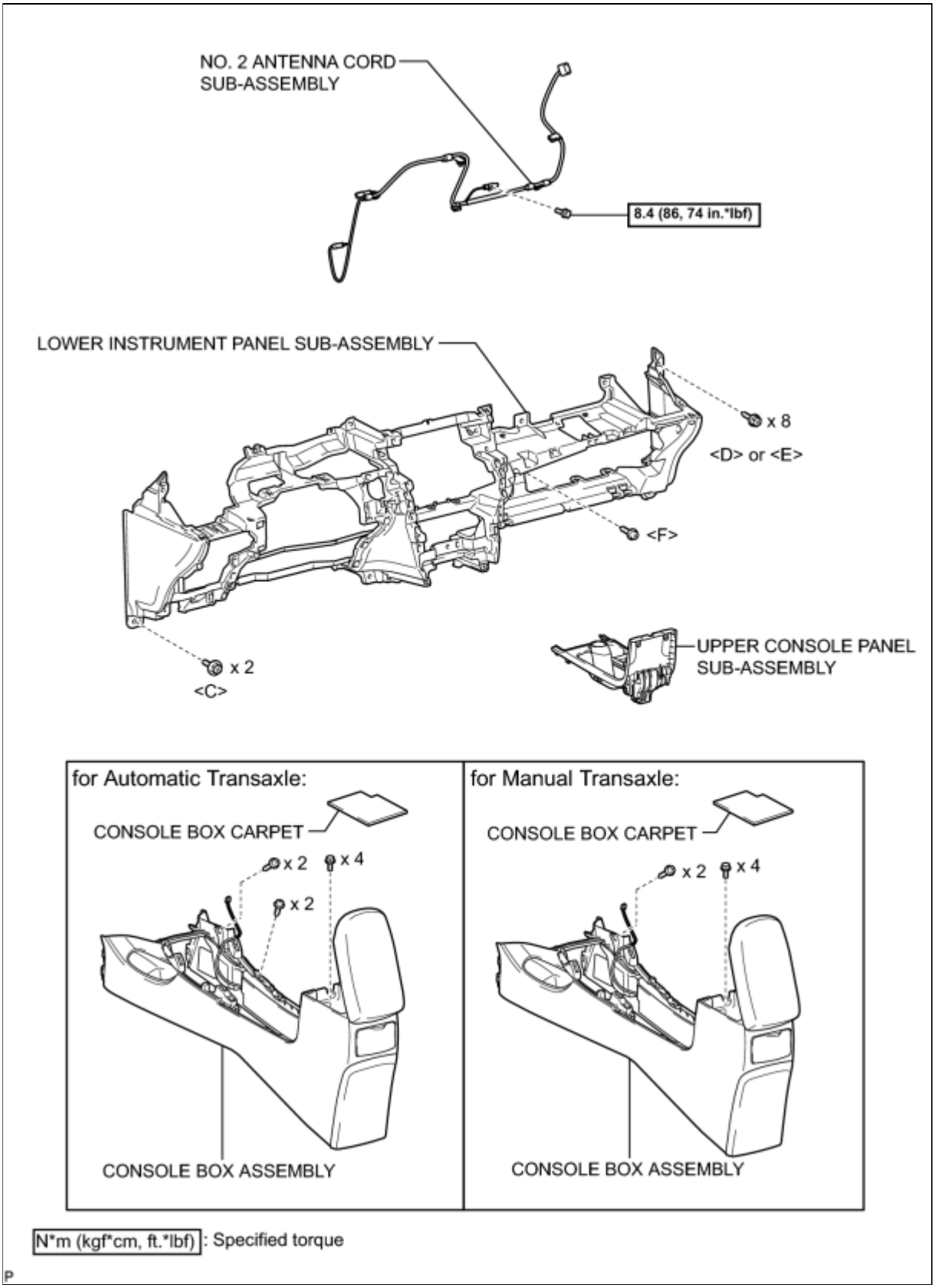

ILLUSTRATION

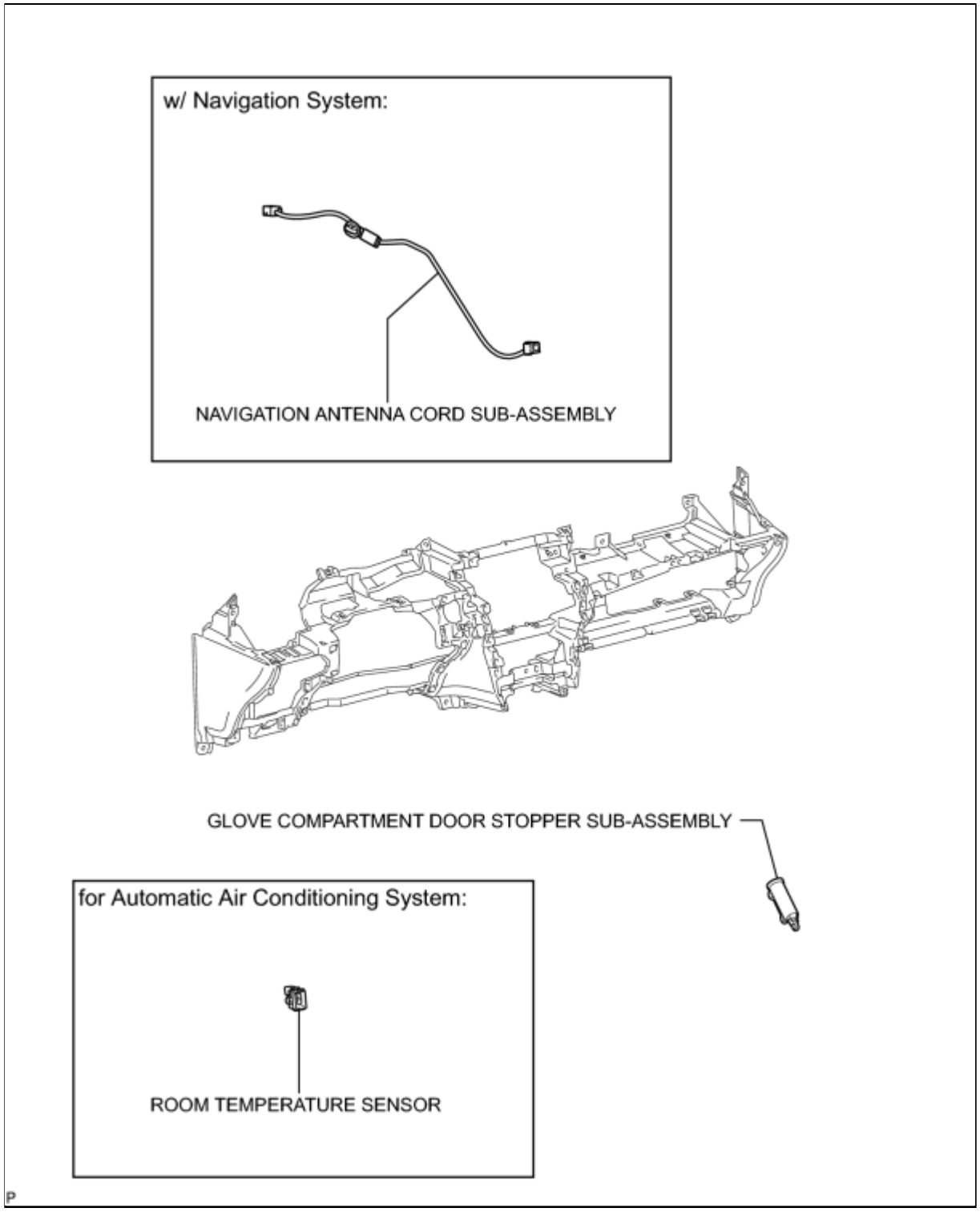

Last Modified: 3-10-2010	6.4 L	**From:** 200901
Model Year: 2010	**Model:** Corolla	**Doc ID:** RM000002DMC01HX
Title: INTERIOR PANELS / TRIM: LOWER INSTRUMENT PANEL: PRECAUTION (2010 Corolla)		

PRECAUTION

1. PRECAUTION FOR VEHICLE WITH SRS AIRBAG AND SEAT BELT PRETENSIONER

(a) Some operations in this section may affect the SRS airbags. Prior to performing the corresponding operations, read the precautions regarding the SRS airbags..

2. TABLE OF BOLT, SCREW AND NUT

CODE	SHAPE	SIZE
<A>	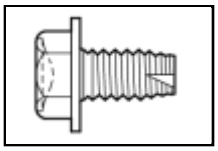	φ = 8 mm (0.315 in.) Length = 15 mm (0.591 in.)
<B>	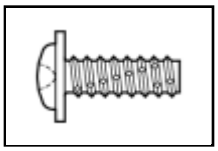	φ = 5 mm (0.197 in.) Length = 14 mm (0.551 in.)
<C>	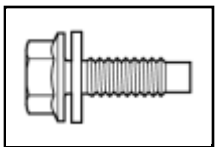	φ = 6 mm (0.236 in.) Length = 20 mm (0.787 in.)
<D>	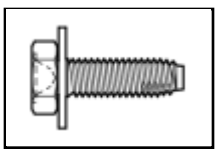	φ = 6 mm (0.236 in.) Length = 20 mm (0.787 in.)
<E>	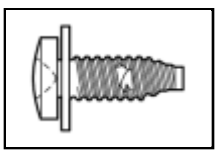	φ = 7 mm (0.276 in.) Length = 20 mm (0.787 in.)
<F>	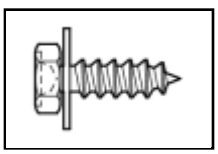	φ = 6 mm (0.236 in.) Length = 19 mm (0.748 in.)

Last Modified: 3-10-2010	6.4 A	**From:** 200901
Model Year: 2010	**Model:** Corolla	**Doc ID:** RM0000024DA03RX
Title: INTERIOR PANELS / TRIM: LOWER INSTRUMENT PANEL: INSTALLATION (2010 Corolla)		

INSTALLATION

1. INSTALL LOWER INSTRUMENT PANEL SUB-ASSEMBLY

(a) When using a new lower instrument panel sub-assembly:

(1) Immediately before installing the lower instrument panel sub-assembly, twist and cut off the portions shown in the illustration (joints for moulding).

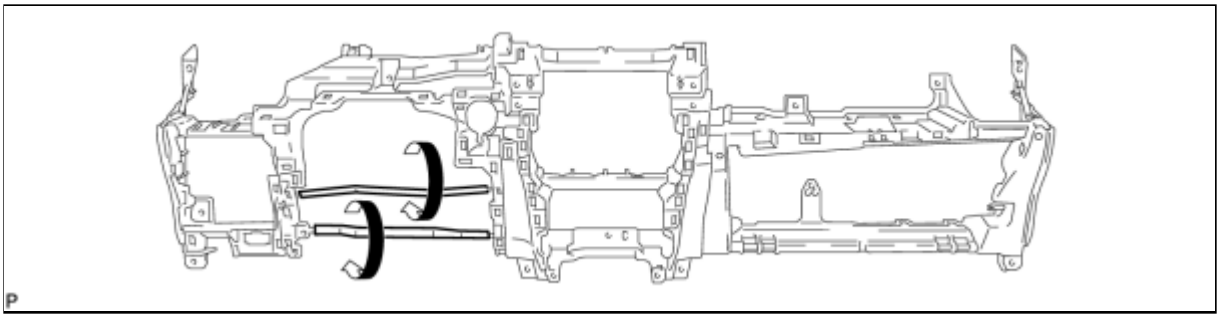

(b) Install the lower instrument panel sub-assembly and engage the 2 claws.

NOTICE:

Do not allow the wire harness to get caught in the claws.

(c) Install the screw <F>.

(d) Install the 2 bolts <C>.

(e) Install the 8 screws <D> or <E>.

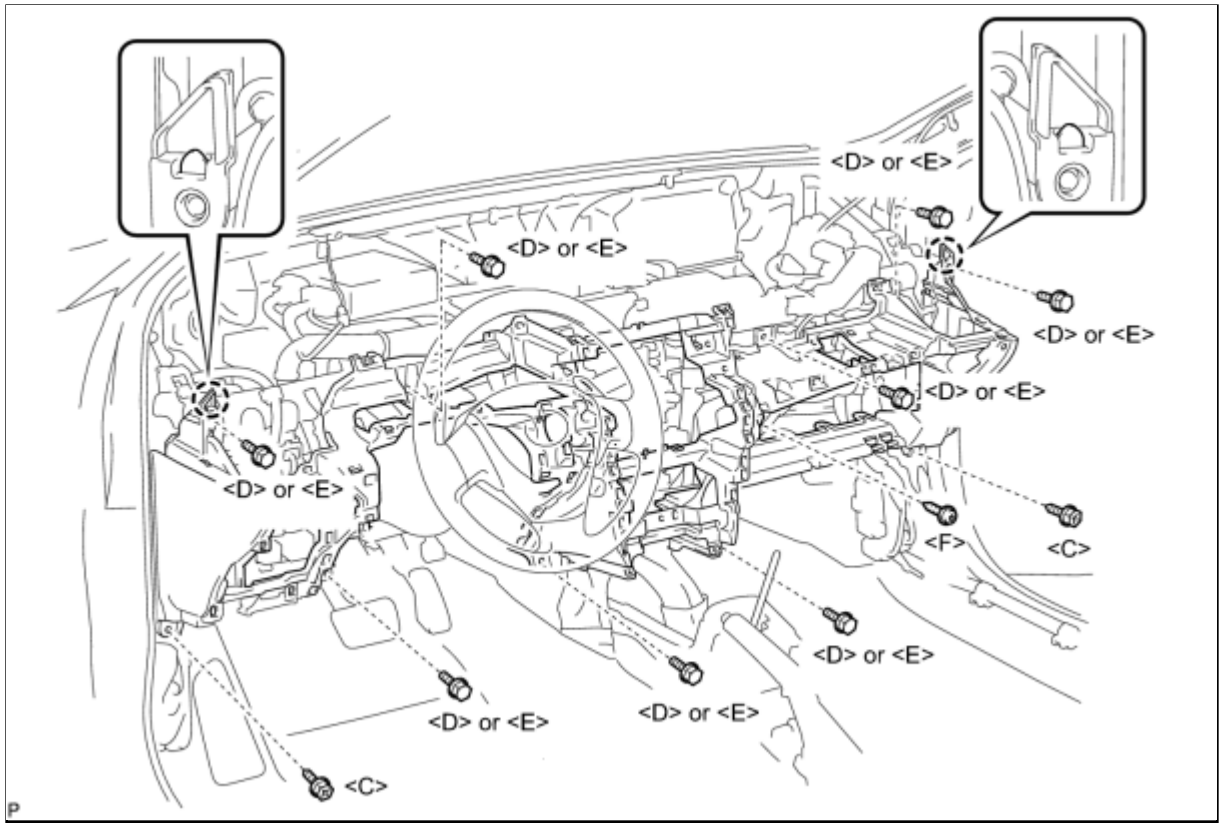

(f) Engage each clamp.

(g) Install the 3 screws <F>.

(h) Connect each connector.

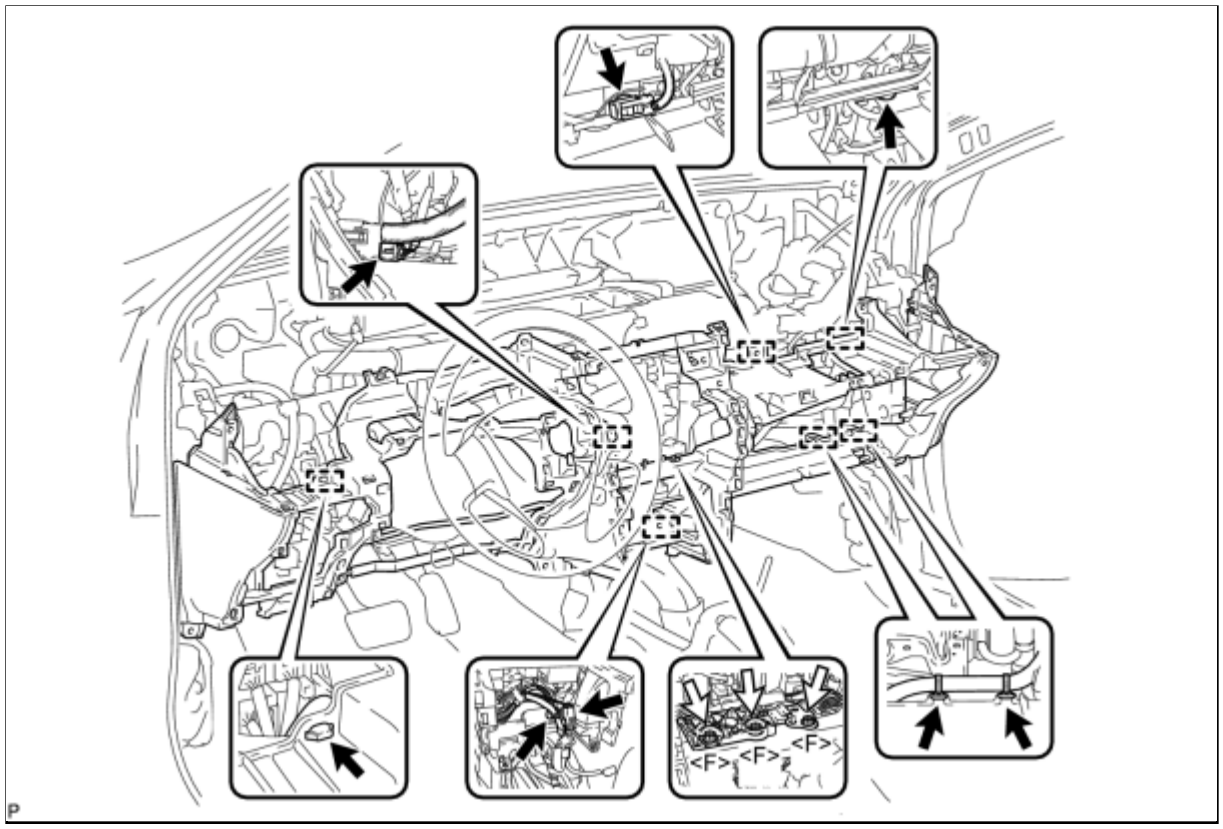

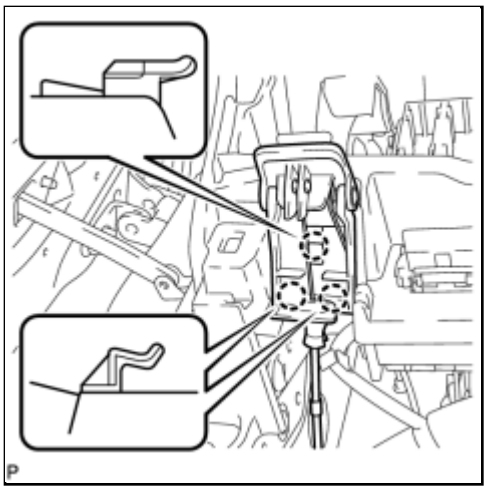

(i) Engage the 3 claws and install the hood lock control cable assembly.

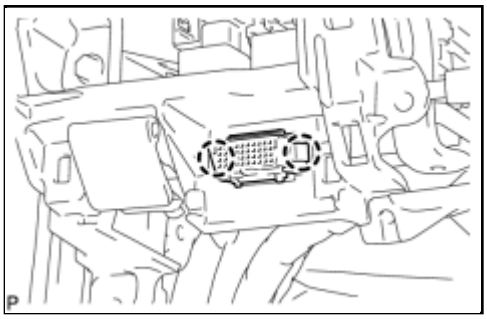

(j) Engage the 2 claws and install the DLC3.

2. INSTALL NO. 2 ANTENNA CORD SUB-ASSEMBLY INFO

3. INSTALL CONSOLE BOX ASSEMBLY (for Automatic Transaxle) INFO

4. INSTALL CONSOLE BOX ASSEMBLY (for Manual Transaxle) INFO

5. INSTALL CONSOLE BOX CARPET INFO

6. INSTALL UPPER CONSOLE PANEL SUB-ASSEMBLY INFO

7. INSTALL NO. 1 SWITCH HOLE BASE (w/o Smart Key System)

(a) Engage the 3 claws and clip, and install the No. 1 switch hole base.

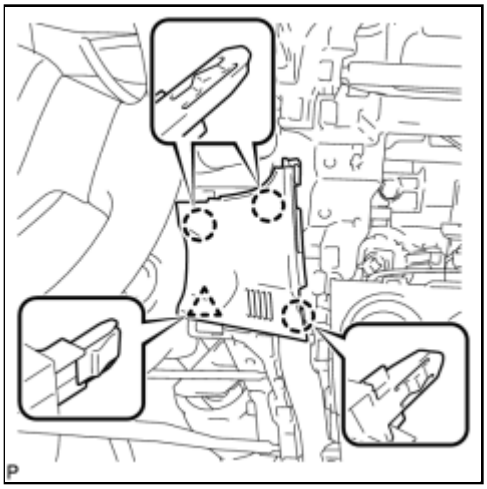

8. INSTALL NO. 1 SWITCH HOLE BASE (w/ Smart Key System)

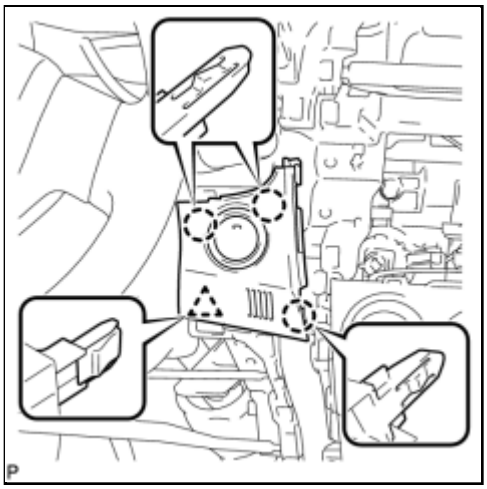

(a) Connect the connector.

(b) Engage the 3 claws and install the No. 1 switch hole base.

9. INSTALL LOWER INSTRUMENT PANEL FINISH PANEL SUB-ASSEMBLY

(a) Engage the 5 claws, 2 clips and 2 guides.

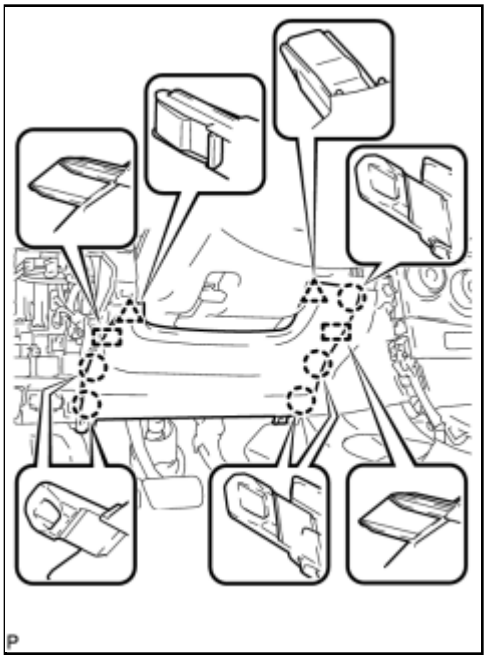

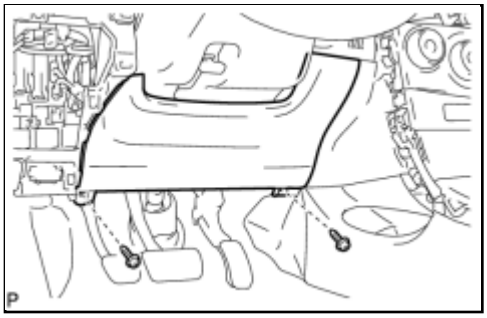

(b) Install the lower instrument panel finish panel sub-assembly with the 2 screws <B>.

10. INSTALL FRONT NO. 1 CONSOLE BOX INSERT

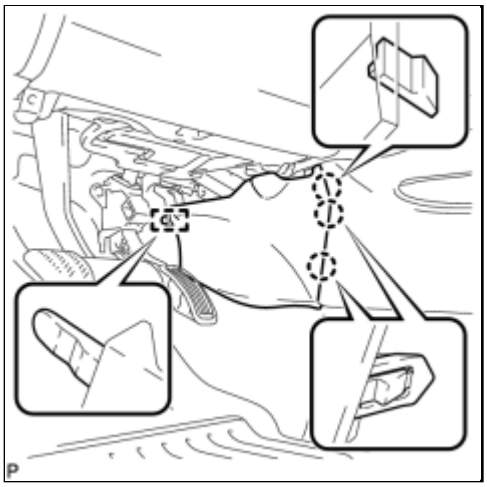

(a) Engage the guide.

(b) Engage the 3 claws and install the front No. 1 console box insert.

11. INSTALL COWL SIDE TRIM BOARD LH INFO

12. INSTALL FRONT DOOR SCUFF PLATE LH INFO

13. INSTALL FRONT NO. 2 CONSOLE BOX INSERT

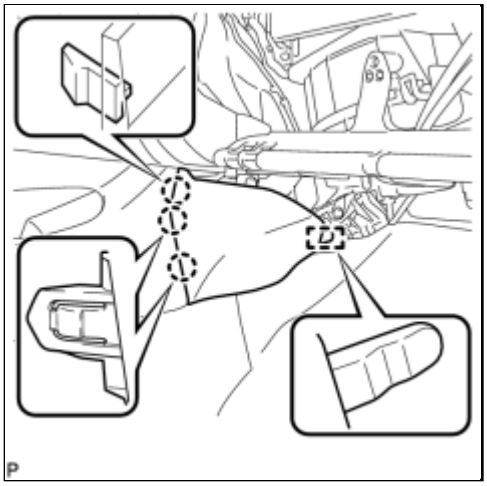

(a) Engage the guide.

(b) Engage the 3 claws and install the front No. 2 console box insert.

14. INSTALL NO. 2 INSTRUMENT PANEL UNDER COVER SUB-ASSEMBLY (w/ Instrument Panel Under Cover)

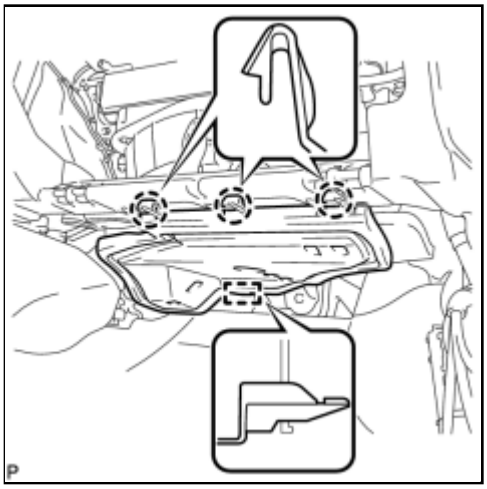

(a) Engage the guide.

(b) Engage the 3 claws and install the No. 2 instrument panel under cover sub-assembly.

15. INSTALL COWL SIDE TRIM BOARD RH

HINT:

Use the same procedure for the RH side and LH side.

16. INSTALL FRONT DOOR SCUFF PLATE RH

HINT:

Use the same procedure for the RH side and LH side.

17. INSTALL AIR CONDITIONING PANEL ASSEMBLY (for Manual Air Conditioning System)

INFO

18. INSTALL AIR CONDITIONING CONTROL ASSEMBLY (for Automatic Air Conditioning System)

INFO

19. INSTALL INSTRUMENT PANEL HOLE COVER

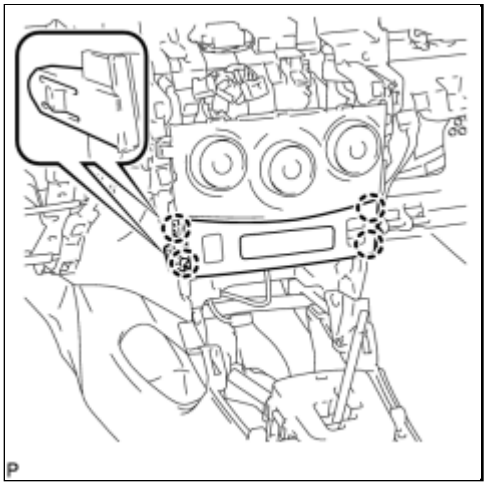

(a) Connect the each connector.

(b) Engage the 4 claws and install the instrument panel hole cover.

20. INSTALL INSTRUMENT PANEL BOX ASSEMBLY

(a) Connect the connector.

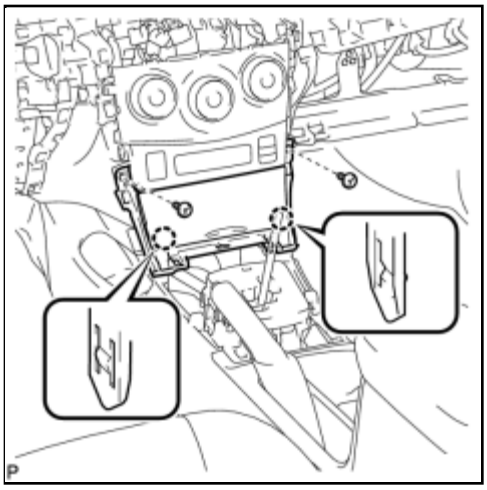

(b) Engage the 2 claws.

(c) Install the instrument panel box assembly with the 2 screws <B>.

21. INSTALL CENTER NO. 1 INSTRUMENT CLUSTER FINISH PANEL ASSEMBLY (for Manual

Transaxle)

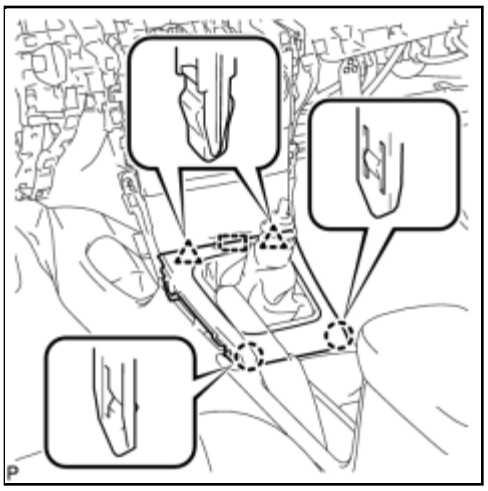

(a) Engage the guide.

(b) Engage the 2 claws and 2 clips, and install the center No.1 instrument cluster finish panel assembly.

22. INSTALL CENTER NO. 1 INSTRUMENT CLUSTER FINISH PANEL ASSEMBLY (for Automatic Transaxle)

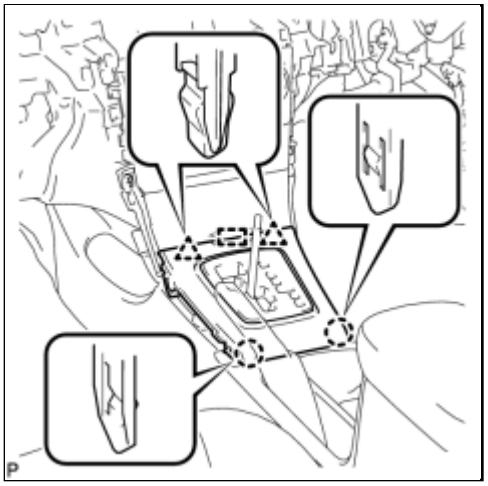

(a) Engage the guide.

(b) Engage the 2 claws and 2 clips, and install the center No.1 instrument cluster finish panel assembly.

23. INSTALL SHIFT LEVER KNOB SUB-ASSEMBLY (for Manual Transaxle)

(a) Turn the shift lever knob clockwise and install the shift lever knob sub-assembly.

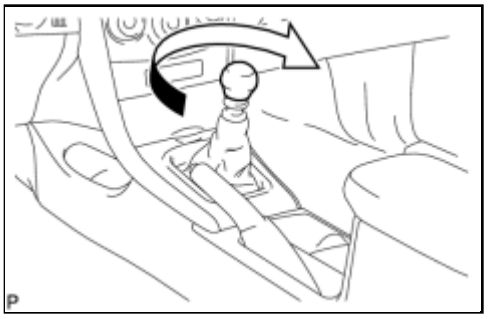

24. INSTALL SHIFT LEVER KNOB SUB-ASSEMBLY (for Automatic Transaxle)

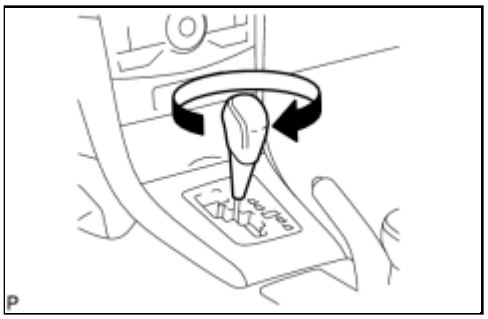

(a) Turn the shift lever knob clockwise and install the shift lever knob sub-assembly.

25. INSTALL RADIO RECEIVER WITH BRACKET (w/o Navigation System) INFO

26. INSTALL CENTER INSTRUMENT CLUSTER FINISH PANEL SUB-ASSEMBLY (w/ Navigation System)

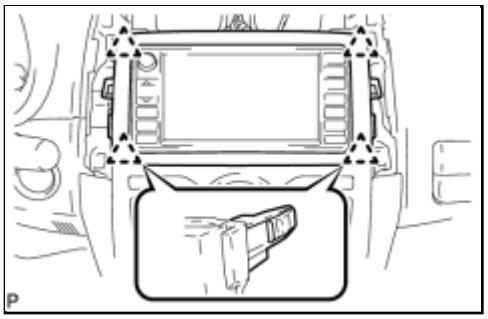

(a) Engage the 4 clips and install the center instrument cluster finish panel sub-assembly.

27. INSTALL NAVIGATION RECEIVER WITH BRACKET (w/ Navigation System) INFO

28. INSTALL UPPER INSTRUMENT PANEL SUB-ASSEMBLY INFO

29. CONNECT INSTRUMENT PANEL WIRE ASSEMBLY INFO

30. CONNECT FRONT DOOR OPENING TRIM WEATHERSTRIP LH INFO

31. INSTALL LOWER INSTRUMENT PANEL FINISH PANEL ASSEMBLY INFO

32. CONNECT FRONT DOOR OPENING TRIM WEATHERSTRIP RH

HINT:

Use the same procedure for the RH side and LH side.

33. INSTALL NO. 1 INSTRUMENT PANEL BOX DOOR SUB-ASSEMBLY INFO

34. INSTALL GLOVE COMPARTMENT DOOR ASSEMBLY INFO

35. INSTALL FRONT PILLAR GARNISH LH (w/ Curtain Shield Airbag) INFO

36. INSTALL FRONT PILLAR GARNISH LH (w/o Curtain Shield Airbag) INFO

37. INSTALL FRONT PILLAR GARNISH RH (w/ Curtain Shield Airbag) INFO

38. INSTALL FRONT PILLAR GARNISH RH (w/o Curtain Shield Airbag)

HINT:

Use the same procedure for the RH side and LH side.

39. INSTALL COMBINATION METER ASSEMBLY INFO

40. INSTALL INSTRUMENT CLUSTER FINISH PANEL ASSEMBLY INFO

41. INSTALL CENTER INSTRUMENT PANEL REGISTER ASSEMBLY INFO

42. INSTALL INSTRUMENT PANEL FINISH PANEL END LH INFO

43. INSTALL INSTRUMENT PANEL FINISH PANEL END RH INFO

44. INSTALL LOWER INSTRUMENT PANEL FINISH PANEL LH INFO

45. INSTALL LOWER INSTRUMENT PANEL FINISH PANEL RH INFO

46. CONNECT CABLE TO NEGATIVE BATTERY TERMINAL

47. INSPECT SRS WARNING LIGHT

INFO

Last Modified: 3-10-2010	6.4 A	**From:** 200901
Model Year: 2010	**Model:** Corolla	**Doc ID:** RM0000024DE02CX
Title: INTERIOR PANELS / TRIM: LOWER INSTRUMENT PANEL: DISASSEMBLY (2010 Corolla)		

DISASSEMBLY

1. REMOVE NAVIGATION ANTENNA CORD SUB-ASSEMBLY (w/ Navigation System) INFO

2. REMOVE ROOM TEMPERATURE SENSOR (for Automatic Air Conditioning System)

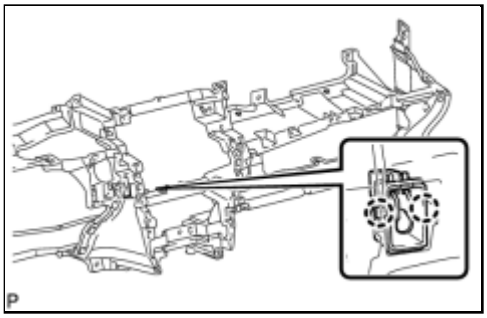

(a) Disengage the 2 claws and remove the room temperature sensor.

3. REMOVE GLOVE COMPARTMENT DOOR STOPPER SUB-ASSEMBLY

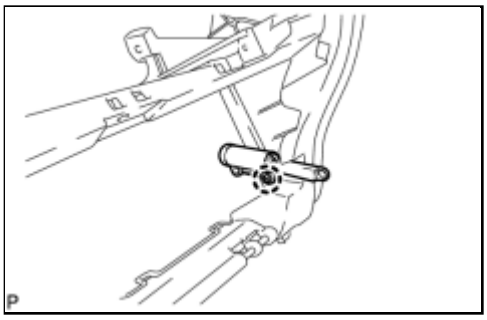

(a) Disengage the claw and remove the glove compartment door stopper sub-assembly.

Last Modified: 3-10-2010	6.4 A	**From:** 200901
Model Year: 2010	**Model:** Corolla	**Doc ID:** RM0000024DF02CX
Title: INTERIOR PANELS / TRIM: LOWER INSTRUMENT PANEL: REASSEMBLY (2010 Corolla)		

REASSEMBLY

1. INSTALL GLOVE COMPARTMENT DOOR STOPPER SUB-ASSEMBLY

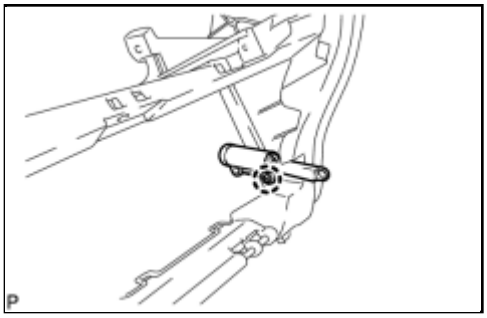

(a) Engage the claw and install the glove compartment door stopper sub-assembly.

2. INSTALL ROOM TEMPERATURE SENSOR (for Automatic Air Conditioning System)

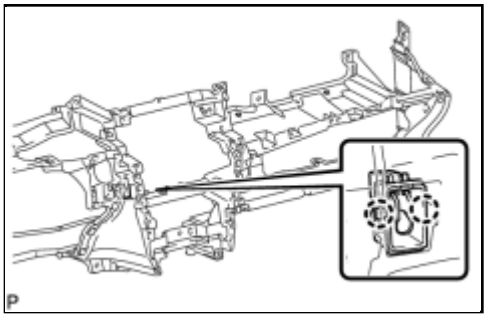

(a) Engage the 2 claws and install the room temperature sensor.

3. INSTALL NAVIGATION ANTENNA CORD SUB-ASSEMBLY (w/ Navigation System) INFO

Last Modified: 3-10-2010	6.4 A	**From:** 200901
Model Year: 2010	**Model:** Corolla	**Doc ID:** RM000002W9B00MX
Title: INTERIOR PANELS / TRIM: ROOF HEADLINING: REMOVAL (2010 Corolla)		

REMOVAL

1. **DISCONNECT CABLE FROM NEGATIVE BATTERY TERMINAL (for Manual Seat)**

CAUTION:

Wait at least 90 seconds after disconnecting the cable from the negative (-) battery terminal to disable the SRS system.

2. **REMOVE FRONT SEAT HEADREST ASSEMBLY (for Manual Seat)**

3. **REMOVE OUTER SEAT TRACK COVER LH (for Manual Seat)** INFO

4. **REMOVE INNER SEAT TRACK COVER LH (for Manual Seat)** INFO

5. **REMOVE FRONT SEAT ASSEMBLY LH (for Manual Seat)** INFO

6. **REMOVE FRONT SEAT HEADREST ASSEMBLY (for Power Seat)**

7. **REMOVE OUTER SEAT TRACK COVER LH (for Power Seat)** INFO

8. **REMOVE INNER SEAT TRACK COVER LH (for Power Seat)** INFO

9. **REMOVE FRONT SEAT ASSEMBLY LH (for Power Seat)** INFO

10. **REMOVE FRONT SEAT HEADREST ASSEMBLY (for Manual Seat)**

11. **REMOVE OUTER SEAT TRACK COVER RH (for Manual Seat)**

HINT:

Use the same procedure for the RH side and LH side INFO **.**

12. **REMOVE INNER SEAT TRACK COVER RH (for Manual Seat)**

HINT:

Use the same procedure for the RH side and LH side INFO **.**

13. **REMOVE FRONT SEAT ASSEMBLY RH (for Manual Seat)**

HINT:

Use the same procedure for the RH side and LH side INFO **.**

14. **REMOVE LOWER INSTRUMENT PANEL FINISH PANEL LH** INFO

15. **REMOVE LOWER INSTRUMENT PANEL FINISH PANEL RH** INFO

16. **REMOVE SHIFT LEVER KNOB SUB-ASSEMBLY (for Manual Transaxle)** INFO

17. **REMOVE SHIFT LEVER KNOB SUB-ASSEMBLY (for Automatic Transaxle)** INFO

18. REMOVE CENTER NO. 1 INSTRUMENT CLUSTER FINISH PANEL ASSEMBLY (for Manual Transaxle) INFO

19. REMOVE CENTER NO. 1 INSTRUMENT CLUSTER FINISH PANEL ASSEMBLY (for Automatic Transaxle) INFO

20. REMOVE INSTRUMENT PANEL BOX ASSEMBLY INFO

21. REMOVE FRONT NO. 1 CONSOLE BOX INSERT INFO

22. REMOVE FRONT NO. 2 CONSOLE BOX INSERT INFO

23. REMOVE UPPER CONSOLE PANEL SUB-ASSEMBLY INFO

24. REMOVE CONSOLE BOX CARPET INFO

25. REMOVE CONSOLE BOX ASSEMBLY (for Manual Transaxle) INFO

26. REMOVE CONSOLE BOX ASSEMBLY (for Automatic Transaxle) INFO

27. DISCONNECT TRANSMISSION CONTROL CABLE ASSEMBLY (for Manual Transaxle)

for C59: INFO

for E351: INFO

28. DISCONNECT TRANSMISSION CONTROL CABLE ASSEMBLY (for Automatic Transaxle)

for U250E: INFO

for U341E: INFO

29. REMOVE SHIFT LEVER ASSEMBLY (for Manual Transaxle)

for C59: INFO

for E351: INFO

30. REMOVE SHIFT LOCK CONTROL UNIT ASSEMBLY (for Automatic Transaxle)

for U250E: INFO

for U341E: INFO

31. REMOVE INSTRUMENT PANEL FINISH PANEL END LH INFO

32. REMOVE INSTRUMENT PANEL FINISH PANEL END RH INFO

33. REMOVE CENTER INSTRUMENT PANEL REGISTER ASSEMBLY INFO

34. REMOVE INSTRUMENT CLUSTER FINISH PANEL ASSEMBLY INFO

35. REMOVE COMBINATION METER ASSEMBLY INFO

36. REMOVE FRONT PILLAR GARNISH LH (w/o Curtain Shield Airbag)

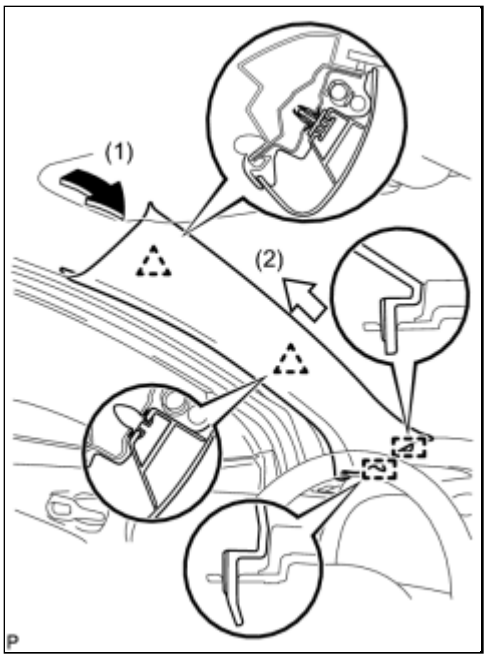

(a) Pull the upper part of the garnish toward the inside of the cabin and disengage the 2 clips.

(b) Disengage the 2 guides and remove the front pillar garnish LH.

37. REMOVE FRONT PILLAR GARNISH LH (w/ Curtain Shield Airbag)

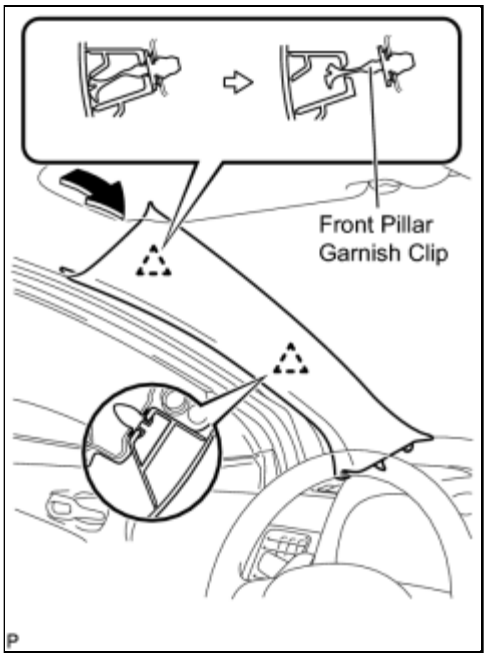

(a) Pull the upper part of the garnish toward the inside of the cabin and disengage the garnish from the base of 2 clips.

HINT:

Make the front pillar garnish LH hang down from the front pillar garnish clip.

(b) Turn the end of the front pillar garnish clip 90° with needle-nosed pliers and remove it from the front pillar garnish LH.

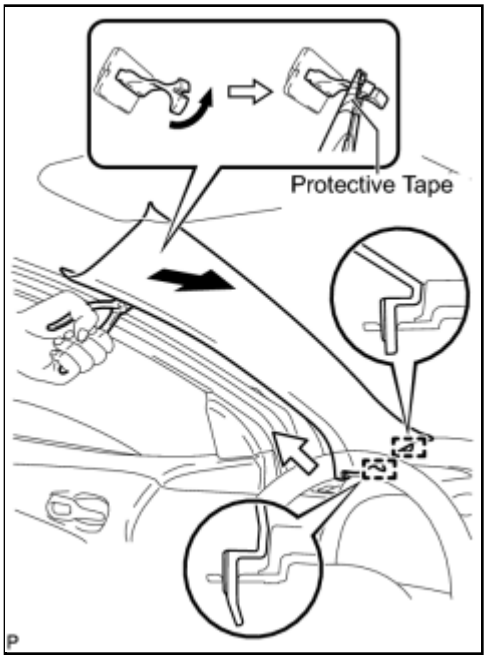

NOTICE:

- Front pillar garnish clips are reusable if they are not removed from the vehicle and have no damage.
- Replace the front pillar garnish clips with new ones if they are removed from the vehicle.

HINT:

Tape the tips of the needle-nosed pliers before use.

(c) Disengage the 2 guides at the front end of the front pillar garnish LH and remove it.

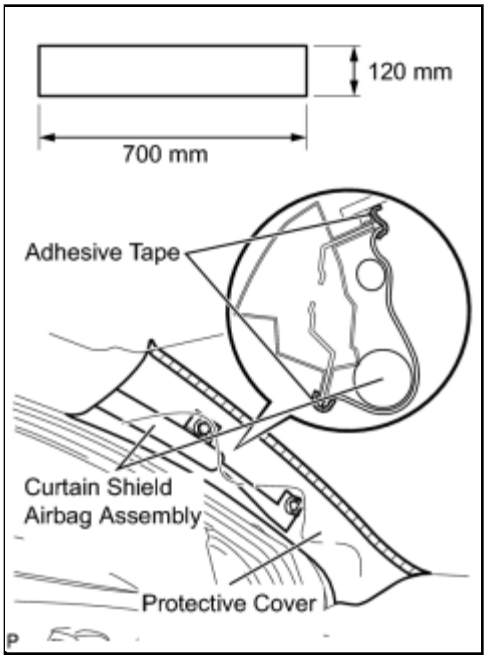

(d) Protect the curtain shield airbag assembly.

(1) Cover the airbag with a 700 mm (27.56 in.) x 120 mm (4.72 in.) cloth or piece of nylon and secure the ends of the cover with tape, as shown in the illustration.

NOTICE:

Cover the curtain shield airbag with a protective cover as soon as the front pillar garnish is removed.

38. REMOVE FRONT PILLAR GARNISH RH (w/o Curtain Shield Airbag)

HINT:

Use the same procedure for the RH side and LH side.

39. REMOVE FRONT PILLAR GARNISH RH (w/ Curtain Shield Airbag)

HINT:

Use the same procedure for the RH side and LH side.

40. REMOVE LOWER INSTRUMENT PANEL FINISH PANEL ASSEMBLY INFO

41. REMOVE FRONT DOOR SCUFF PLATE LH

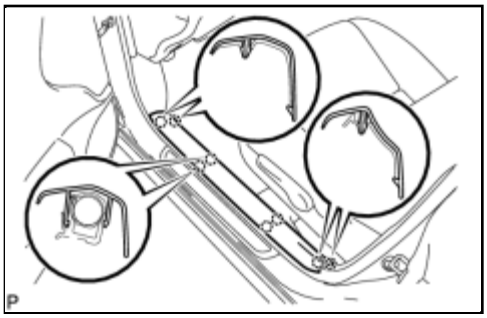

(a) Disengage the 8 claws and remove the front door scuff plate LH.

42. REMOVE COWL SIDE TRIM BOARD LH

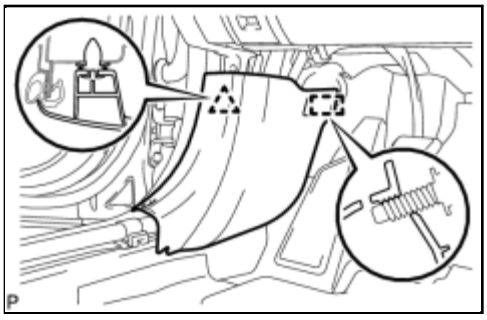

(a) Disengage the clip and guide, and remove the cowl side trim board LH.

43. REMOVE FRONT DOOR OPENING TRIM WEATHERSTRIP LH

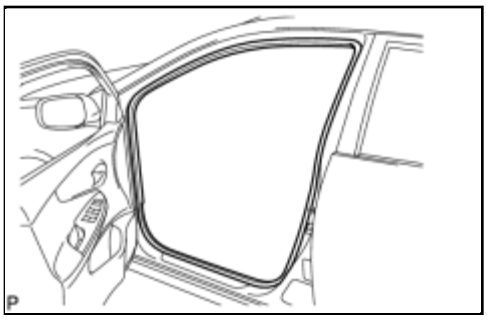

(a) Remove the front door opening trim weatherstrip LH.

44. REMOVE GLOVE COMPARTMENT DOOR ASSEMBLY INFO

45. REMOVE NO. 1 INSTRUMENT PANEL BOX DOOR SUB-ASSEMBLY INFO

46. REMOVE FRONT DOOR SCUFF PLATE RH

HINT:

Use the same procedure for the RH side and LH side.

47. REMOVE COWL SIDE TRIM BOARD RH

HINT:

Use the same procedure for the RH side and LH side.

48. REMOVE FRONT DOOR OPENING TRIM WEATHERSTRIP RH

HINT:

Use the same procedure for the RH side and LH side.

49. DISCONNECT INSTRUMENT PANEL WIRE ASSEMBLY INFO

50. REMOVE UPPER INSTRUMENT PANEL SUB-ASSEMBLY INFO

51. REMOVE REAR DOOR SCUFF PLATE LH

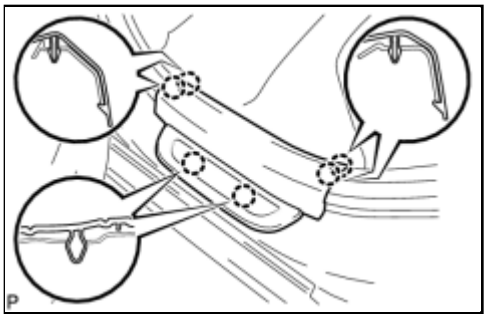

(a) Disengage the 6 claws and remove the rear door scuff plate LH.

52. REMOVE REAR DOOR OPENING TRIM WEATHERSTRIP LH

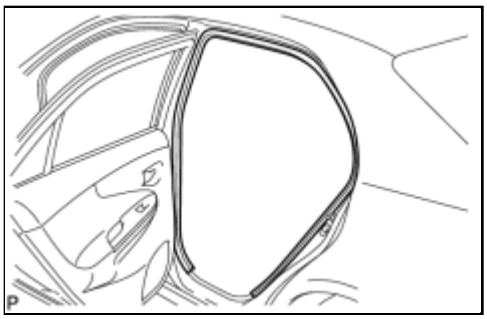

(a) Remove the rear door opening trim weatherstrip LH.

53. REMOVE LAP BELT OUTER ANCHOR COVER (for LH Side) INFO

54. DISCONNECT FRONT SEAT OUTER BELT ASSEMBLY LH INFO

55. REMOVE LOWER CENTER PILLAR GARNISH LH

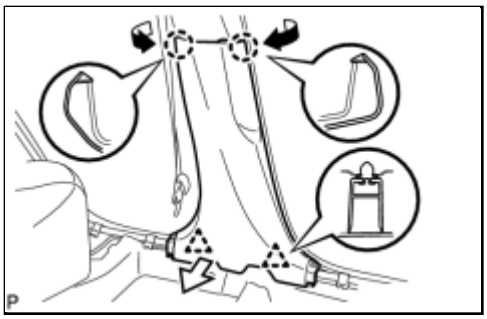

(a) Disengage the 2 claws and 2 clips, and remove the lower center pillar garnish LH.

56. REMOVE UPPER CENTER PILLAR GARNISH LH

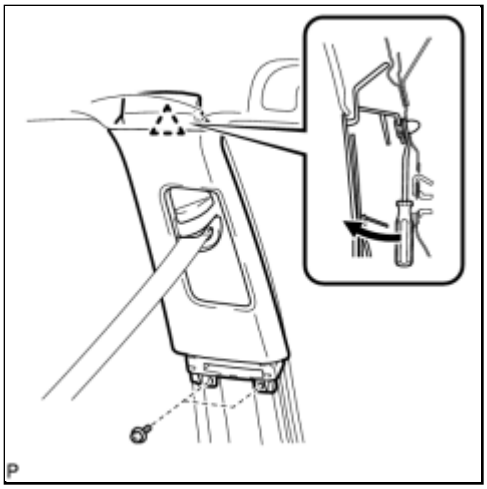

(a) Remove the 2 screws.

(b) Using a clip remover, disengage the clip, and remove the upper center pillar garnish LH.

57. REMOVE REAR DOOR SCUFF PLATE RH

HINT:

Use the same procedure for the RH side and LH side.

58. REMOVE REAR DOOR OPENING TRIM WEATHERSTRIP RH

HINT:

Use the same procedure for the RH side and LH side.

59. REMOVE LAP BELT OUTER ANCHOR COVER (for RH Side) INFO

60. REMOVE LOWER CENTER PILLAR GARNISH RH

HINT:

Use the same procedure for the RH side and LH side.

61. DISCONNECT FRONT SEAT OUTER BELT ASSEMBLY RH INFO

62. REMOVE UPPER CENTER PILLAR GARNISH RH

HINT:

Use the same procedure for the RH side and LH side.

63. REMOVE SPARE WHEEL COVER INFO

64. REMOVE REAR SEAT HEADREST ASSEMBLY LH

65. REMOVE REAR SEAT HEADREST ASSEMBLY RH

66. REMOVE REAR SEAT CENTER HEADREST ASSEMBLY

67. REMOVE REAR SEAT CUSHION ASSEMBLY INFO

68. REMOVE REAR SEATBACK ASSEMBLY LH INFO

69. REMOVE REAR SEATBACK ASSEMBLY RH INFO

70. REMOVE REAR SEAT SIDE GARNISH LH

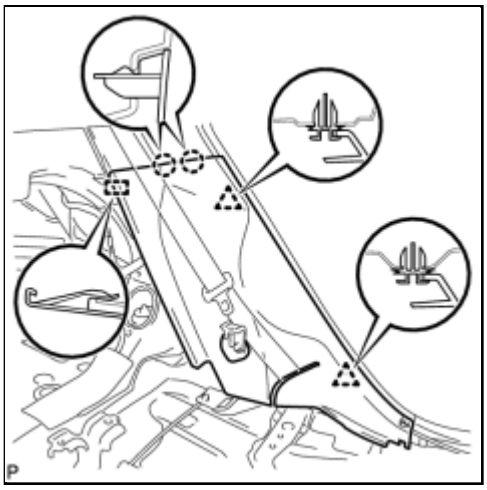

(a) Disengage the 2 claws, 2 clips and guide, and remove the rear seat side garnish LH.

71. REMOVE ROOF SIDE INNER GARNISH BOARD LH

(a) Disengage the 2 claws and 2 guides, and remove the roof side inner garnish board LH.

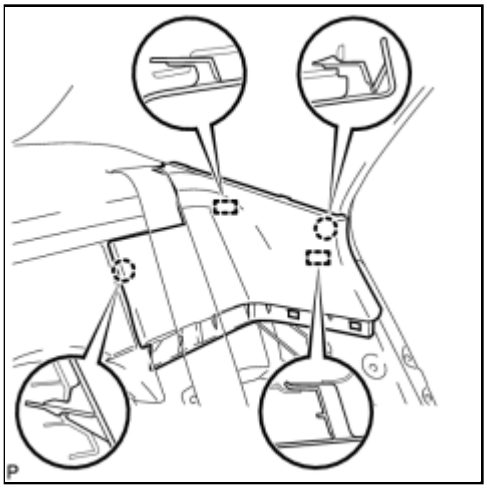

72. REMOVE ROOF SIDE INNER GARNISH ASSEMBLY LH

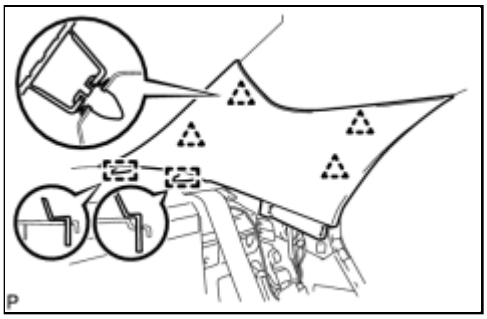

(a) Disengage the 4 clips and 2 guides, and remove the roof side inner garnish assembly LH.

73. REMOVE REAR SEAT SIDE GARNISH RH

HINT:

Use the same procedure for the RH side and LH side.

74. REMOVE ROOF SIDE INNER GARNISH BOARD RH

HINT:

Use the same procedure for the RH side and LH side.

75. REMOVE ROOF SIDE INNER GARNISH ASSEMBLY RH

HINT:

Use the same procedure for the RH side and LH side.

76. REMOVE MAP LIGHT ASSEMBLY (w/o Sliding Roof) INFO

77. REMOVE MAP LIGHT ASSEMBLY (w/ Sliding Roof) INFO

78. REMOVE VISOR ASSEMBLY LH

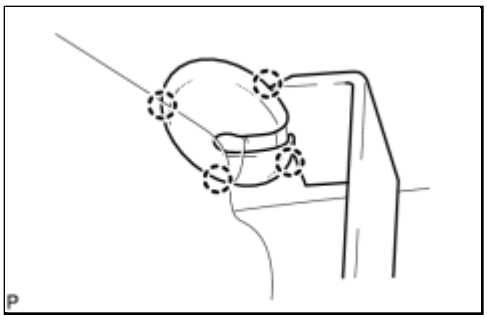

(a) Using a moulding remover, disengage the 4 claws and remove the visor bracket cover.

NOTICE:

Visor bracket cover cannot be reused.

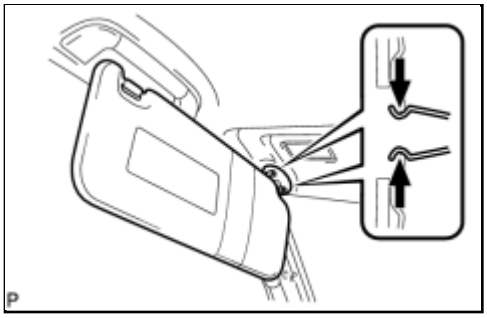

(b) Disengage the 2 clips and remove the visor assembly LH.

(c) Remove the 2 clips from the vehicle body.

79. REMOVE VISOR ASSEMBLY RH

HINT:

Use the same procedure for the RH side and LH side.

80. REMOVE FRONT ASSIST GRIP SUB-ASSEMBLY

(a) Using a moulding remover, disengage the 4 claws.

NOTICE:

Do not forcibly pry the assist grip covers to prevent them from being deformed.

HINT:

Gently pry on the assist grip covers as shown in the illustration to remove them.



(b) Pull off the 2 assist grip covers by hand.

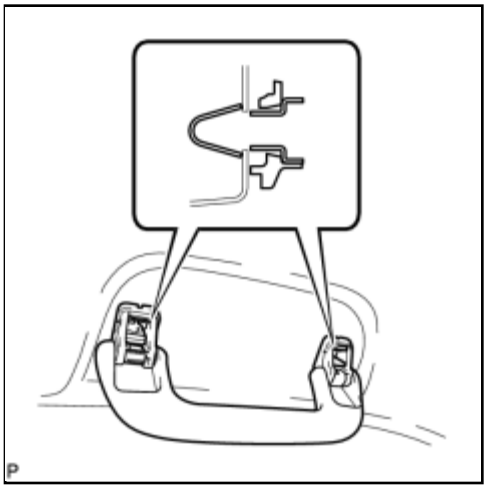

(c) Disengage the 2 clips and remove the front assist grip sub-assembly.

(d) Remove the 2 clips from the vehicle body.

HINT:

Use the same procedure for the RH side and LH side.

81. REMOVE REAR ASSIST GRIP SUB-ASSEMBLY

(a) Using a moulding remover, disengage the 4 claws.

NOTICE:

Do not forcibly pry the assist grip covers to prevent them from being deformed.



HINT:

Gently pry on the assist grip covers as shown in the illustration to remove them.

(b) Pull off the 2 assist grip covers by hand.

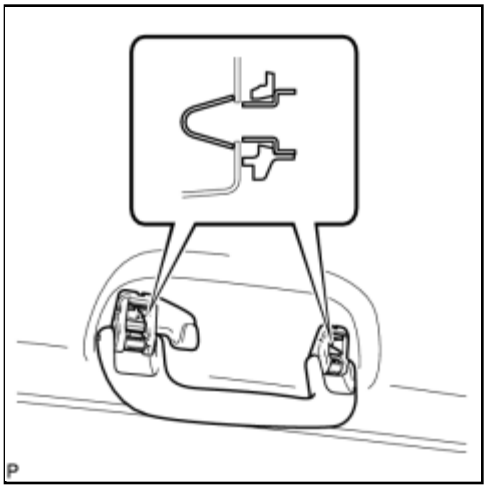

(c) Disengage the 2 clips and remove the rear assist grip sub-assembly.

(d) Remove the 2 clips from the vehicle body.

HINT:

Use the same procedure for the RH side and LH side.

82. REMOVE NO. 1 ROOM LIGHT ASSEMBLY INFO

83. REMOVE INNER REAR VIEW MIRROR COVER (w/ EC Mirror) INFO

84. REMOVE VISOR HOLDER

(a) Turn the visor holder approximately 45° and pull it out as

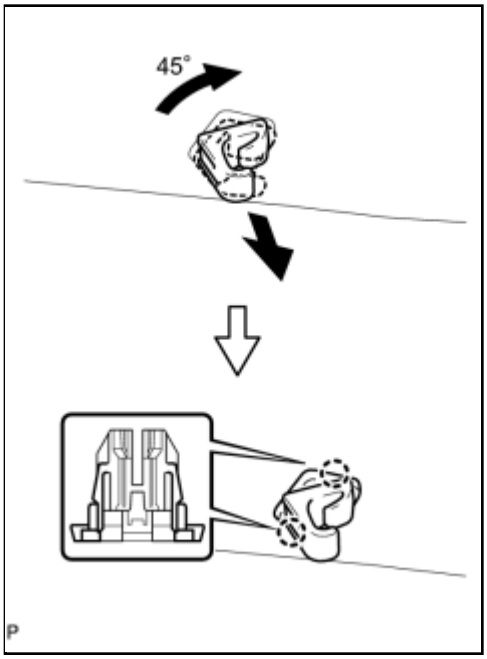

shown in the illustration.

(b) Disengage the 2 claws and remove the visor holder.

HINT:

Use the same procedure for the RH side and LH side.

85. REMOVE SUN ROOF OPENING TRIM MOULDING (w/ Sliding Roof)

(a) Remove the sun roof opening trim moulding.

86. REMOVE ROOF HEADLINING ASSEMBLY (w/o Sliding Roof)

(a) Disconnect the amplifier antenna assembly connector and disengage each clamp from the front pillar RH.

(b) Disconnect the amplifier antenna assembly connectors and disengage the clamp from the rear pillar RH.

(c) Remove the bolt and disconnect the amplifier antenna assembly from the rear pillar RH.

(d) Disconnect the No. 1 roof wire connector and disengage each clamp from the front pillar LH.

(e) Disconnect the No. 1 roof wire connector from the instrument panel junction block.

(f) Remove the 3 clips.

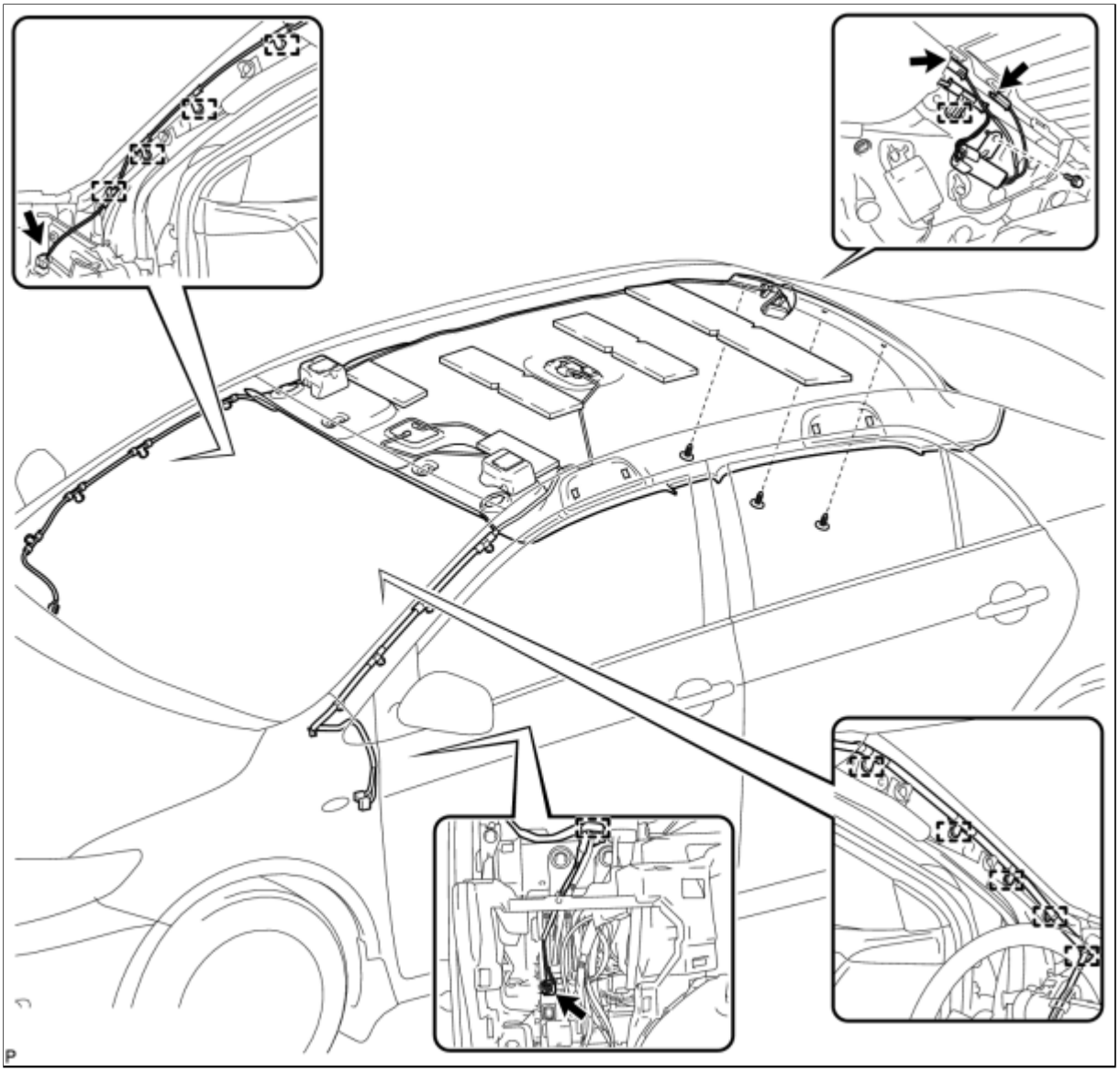

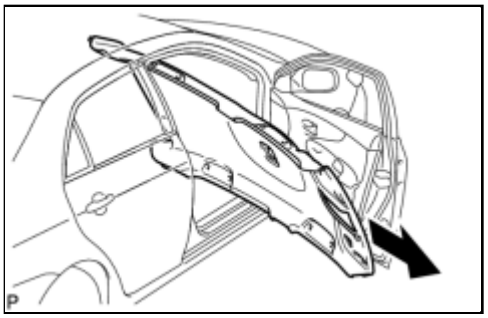

(g) Remove the roof headlining assembly from the cabin through the front passenger door.

NOTICE:

Do not damage the roof headlining assembly or body interior.

87. REMOVE ROOF HEADLINING ASSEMBLY (w/ Sliding Roof)

(a) w/ EC Mirror:

(1) Disconnect the connector.

(b) Disconnect the amplifier antenna assembly connector and disengage each clamp from the front pillar RH.

(c) Disconnect the amplifier antenna assembly connectors and disengage the clamp from the rear pillar RH.

(d) Remove the bolt and disconnect the amplifier antenna assembly from the rear pillar RH.

(e) Disconnect the No. 1 roof wire connector and disengage each clamp from the front pillar LH.

(f) Disconnect the No. 1 roof wire connectors from the instrument panel junction block.

(g) Disconnect the sliding roof drive gear connector.

(h) Remove the 3 clips.

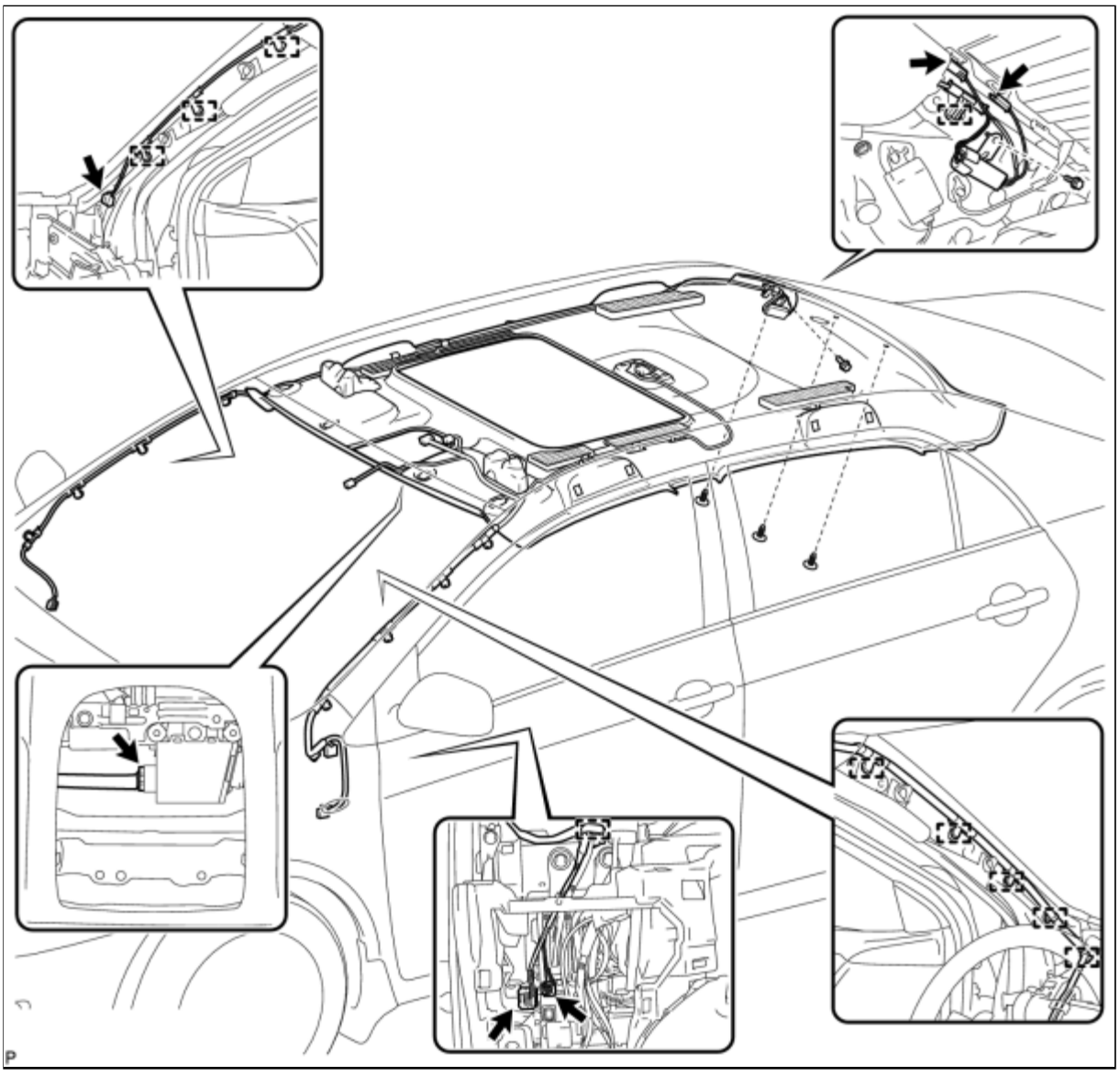

(i) Remove the roof headlining assembly from the cabin through the front passenger door.

NOTICE:

Do not damage the roof headlining assembly or body interior.

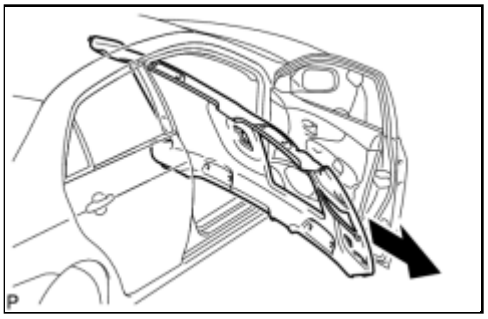

88. REMOVE NO. 1 ROOF SILENCER PAD (for TMC Made without Sliding Roof)

(a) Remove the 2 No. 1 roof silencer pads from the roof headlining assembly.

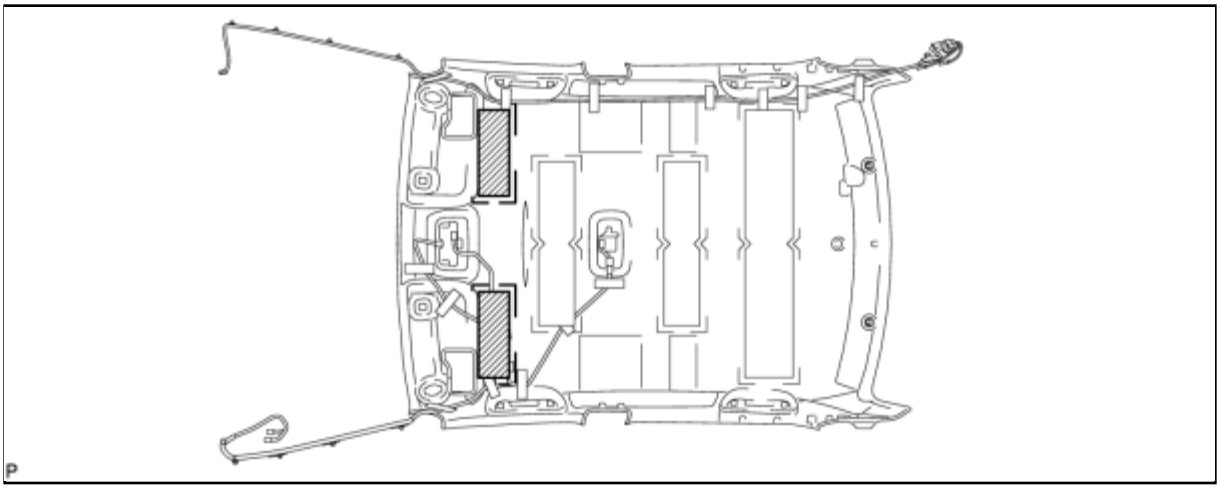

89. REMOVE NO. 1 ROOF SILENCER PAD (for TMMC, NUMMI Made without Sliding Roof)

(a) Remove the 2 No. 1 roof silencer pads from the roof headlining assembly.

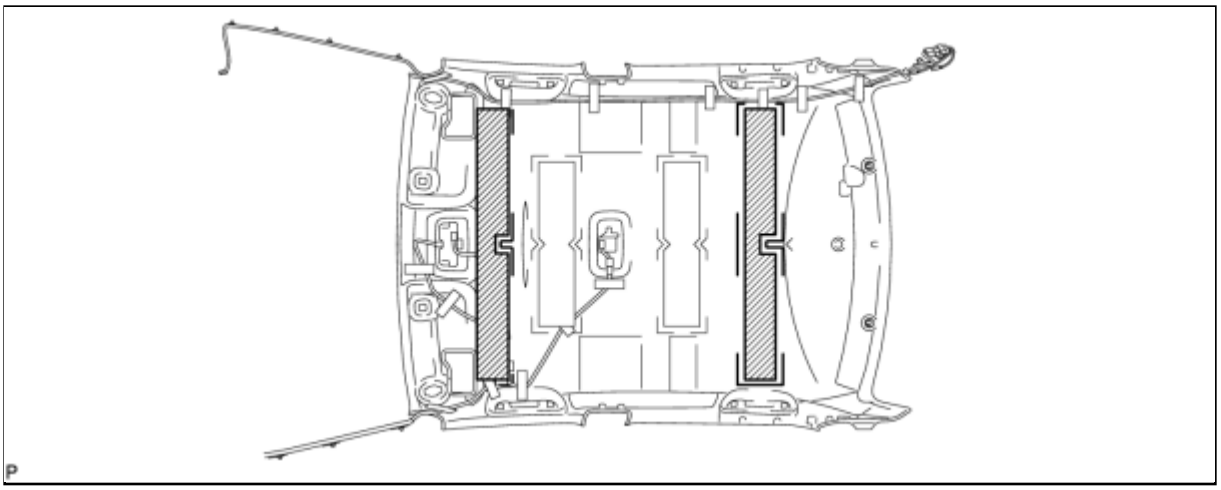

90. REMOVE NO. 2 ROOF SILENCER PAD (w/o Sliding Roof)

(a) Remove the 2 No. 2 roof silencer pads from the roof headlining assembly.

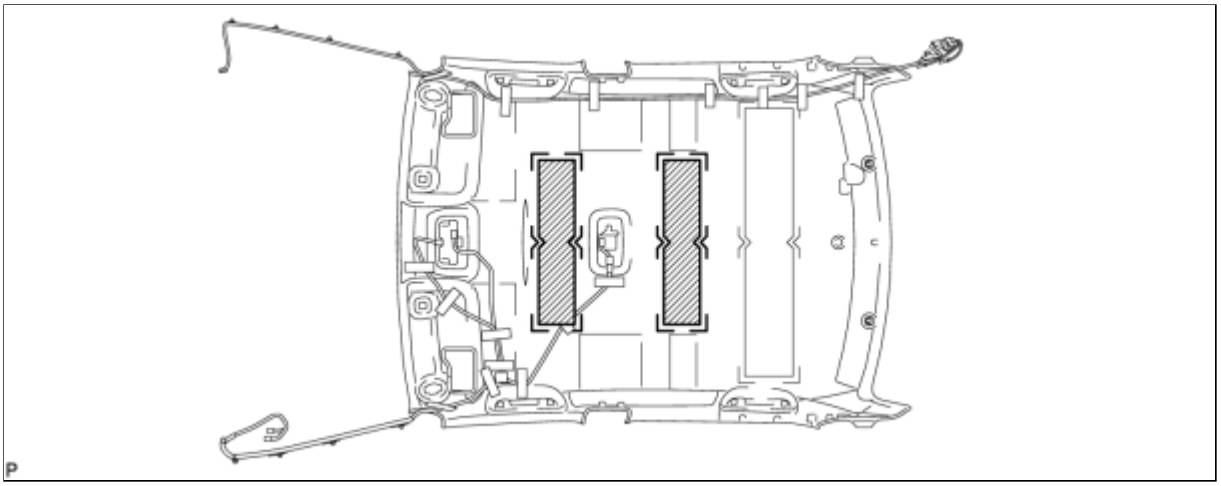

91. REMOVE NO. 3 ROOF SILENCER PAD (for TMC Made without Sliding Roof)

(a) Remove the No. 3 roof silencer pad from the roof headlining assembly.

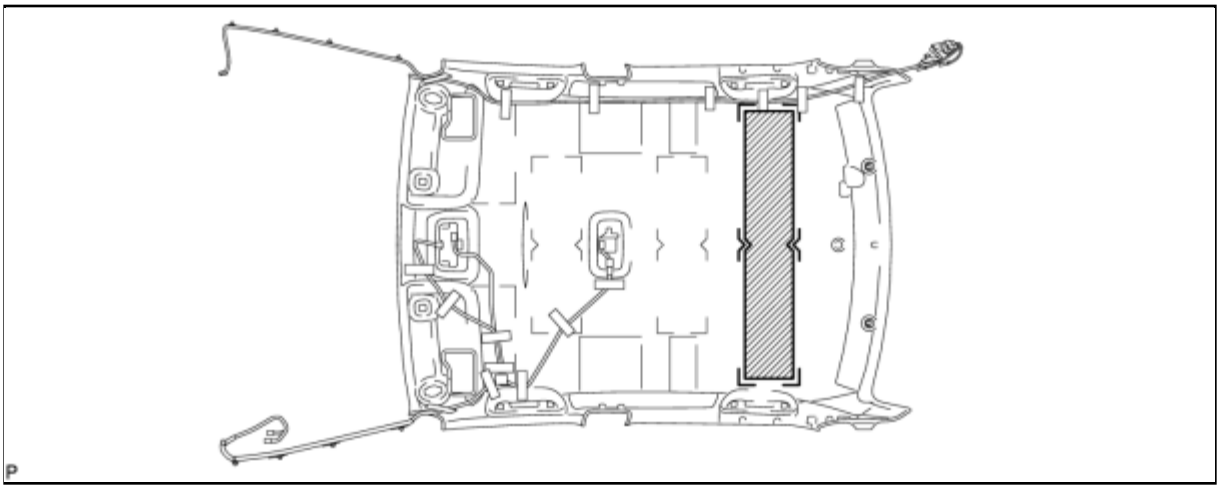

92. REMOVE ROOF SIDE RAIL SILENCER PAD LH (w/o Sliding Roof)

(a) Remove the roof side rail silencer pad LH from the roof headlining assembly.

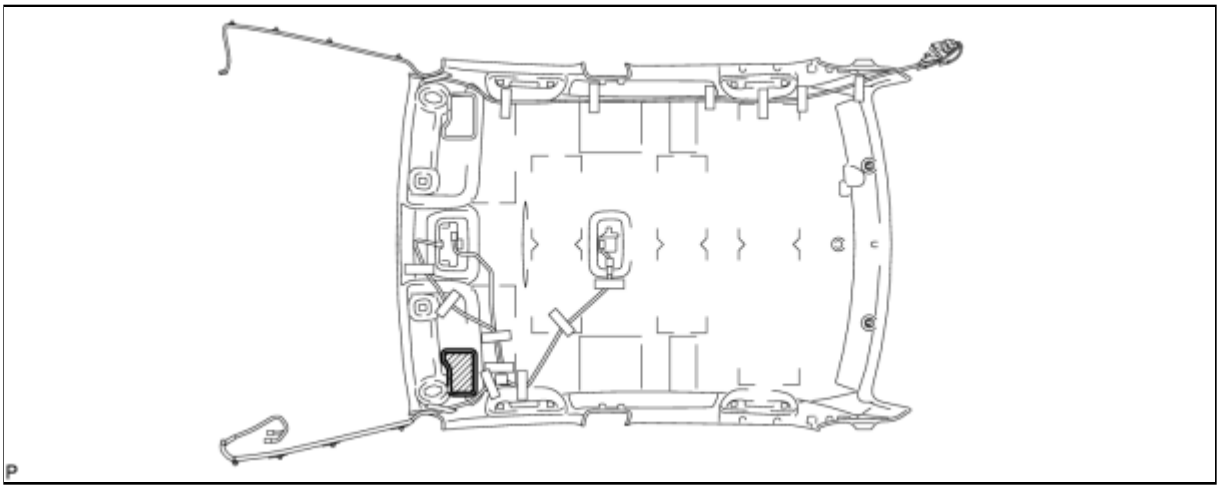

93. REMOVE ROOF SIDE RAIL SILENCER PAD RH (w/o Sliding Roof)

HINT:

Use the same procedure for the RH side and the LH side.

94. REMOVE ROOF SIDE RAIL SILENCER PAD LH (w/ Sliding Roof)

(a) Remove the roof side rail silencer pad LH from the roof headlining assembly.

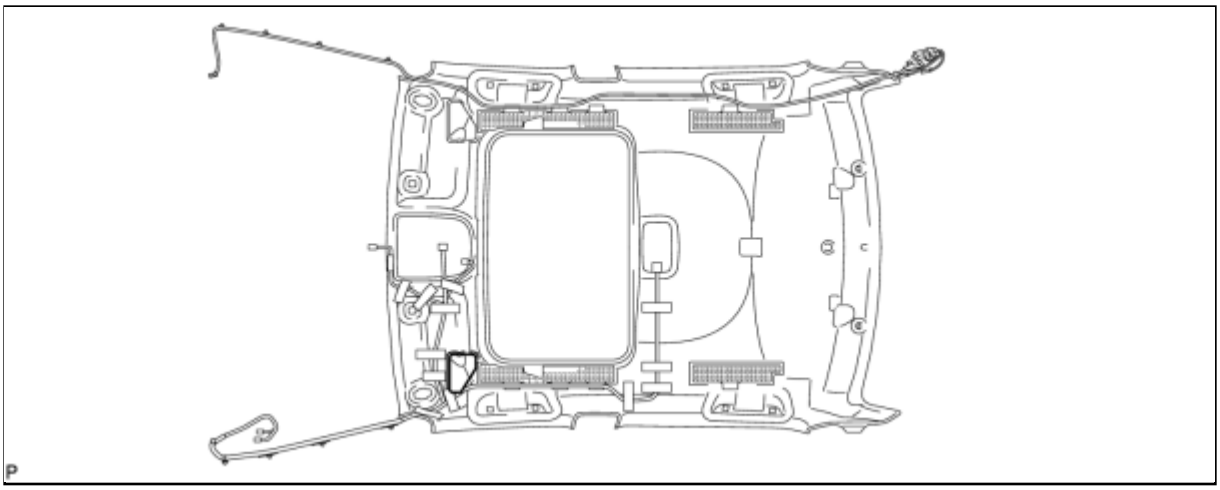

95. REMOVE ROOF SIDE RAIL SILENCER PAD RH (w/ Sliding Roof)

HINT:

Use the same procedure for the RH side and the LH side.

96. REMOVE AMPLIFIER ANTENNA ASSEMBLY (w/o Sliding Roof) INFO

97. REMOVE AMPLIFIER ANTENNA ASSEMBLY (w/ Sliding Roof) INFO

98. REMOVE NO. 1 ROOF WIRE (for TMC Made without Sliding Roof)

(a) Remove the adhesive tape from the roof headlining assembly.

(b) Remove the No. 1 roof wire from the roof headlining assembly.

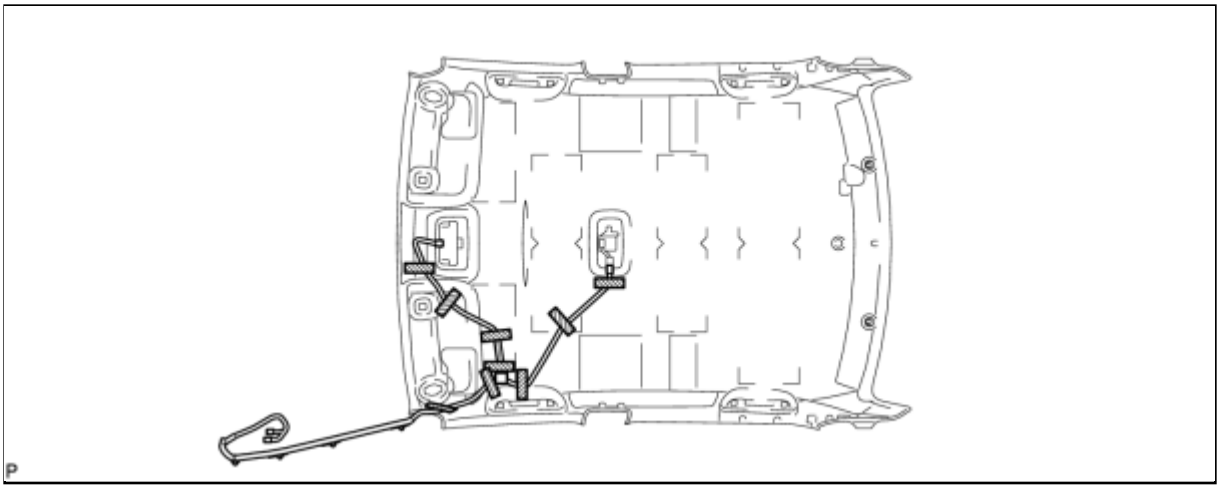

99. REMOVE NO. 1 ROOF WIRE (for TMMC, NUMMI Made without Sliding Roof)

(a) Remove the adhesive tape from the roof headlining assembly.

(b) Remove the No. 1 roof wire from the roof headlining assembly.

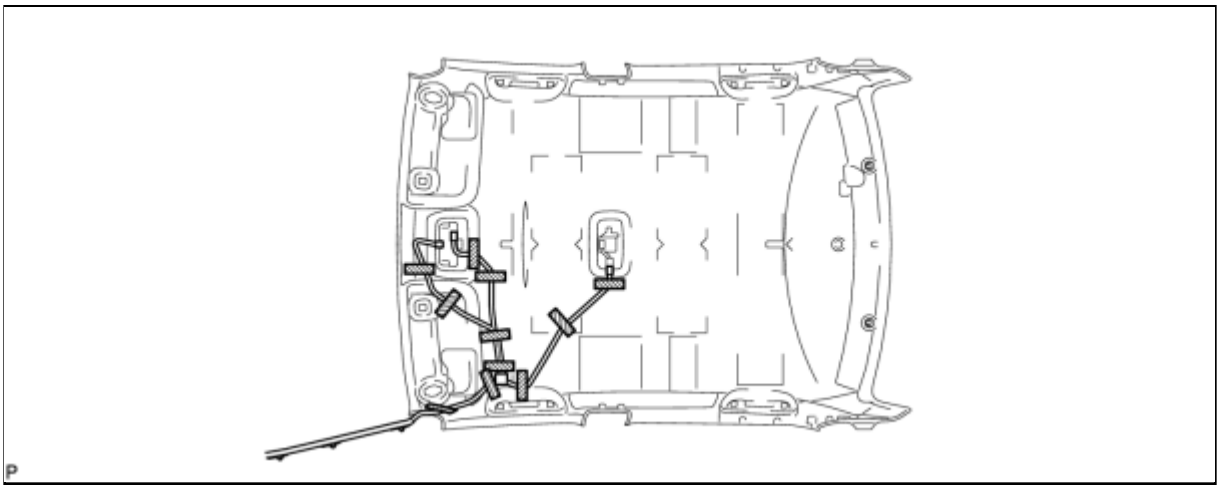

100. REMOVE NO. 1 ROOF WIRE (w/ Sliding Roof)

(a) Disengage the 3 clamps.

(b) Remove the adhesive tape from the roof headlining assembly.

(c) Remove the No. 1 roof wire from the roof headlining assembly.

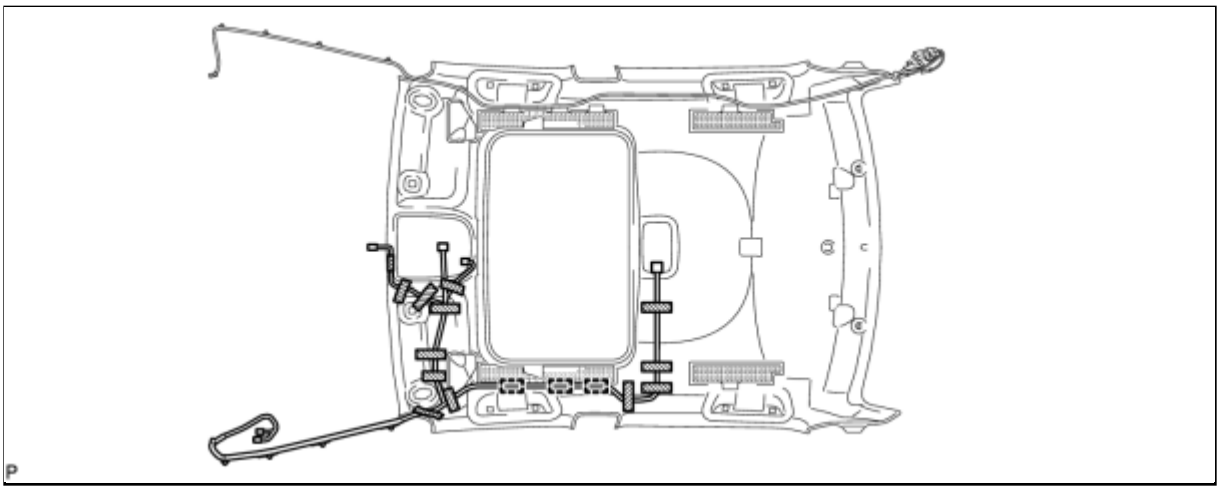

Last Modified: 3-10-2010	6.4 K	**From:** 200901
Model Year: 2010	**Model:** Corolla	**Doc ID:** RM000002X9V00DX
Title: INTERIOR PANELS / TRIM: ROOF HEADLINING: COMPONENTS (2010 Corolla)		

COMPONENTS

ILLUSTRATION

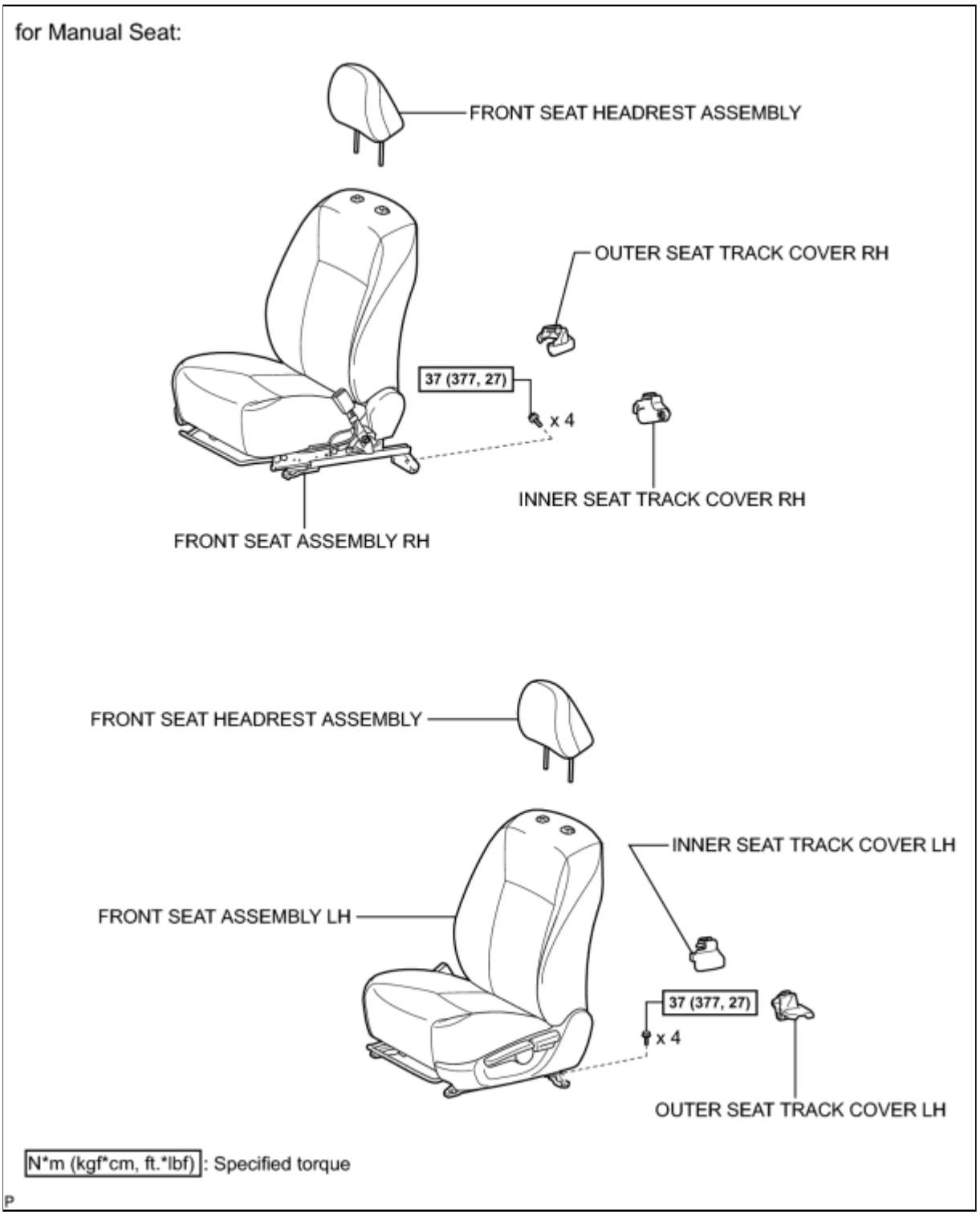

ILLUSTRATION

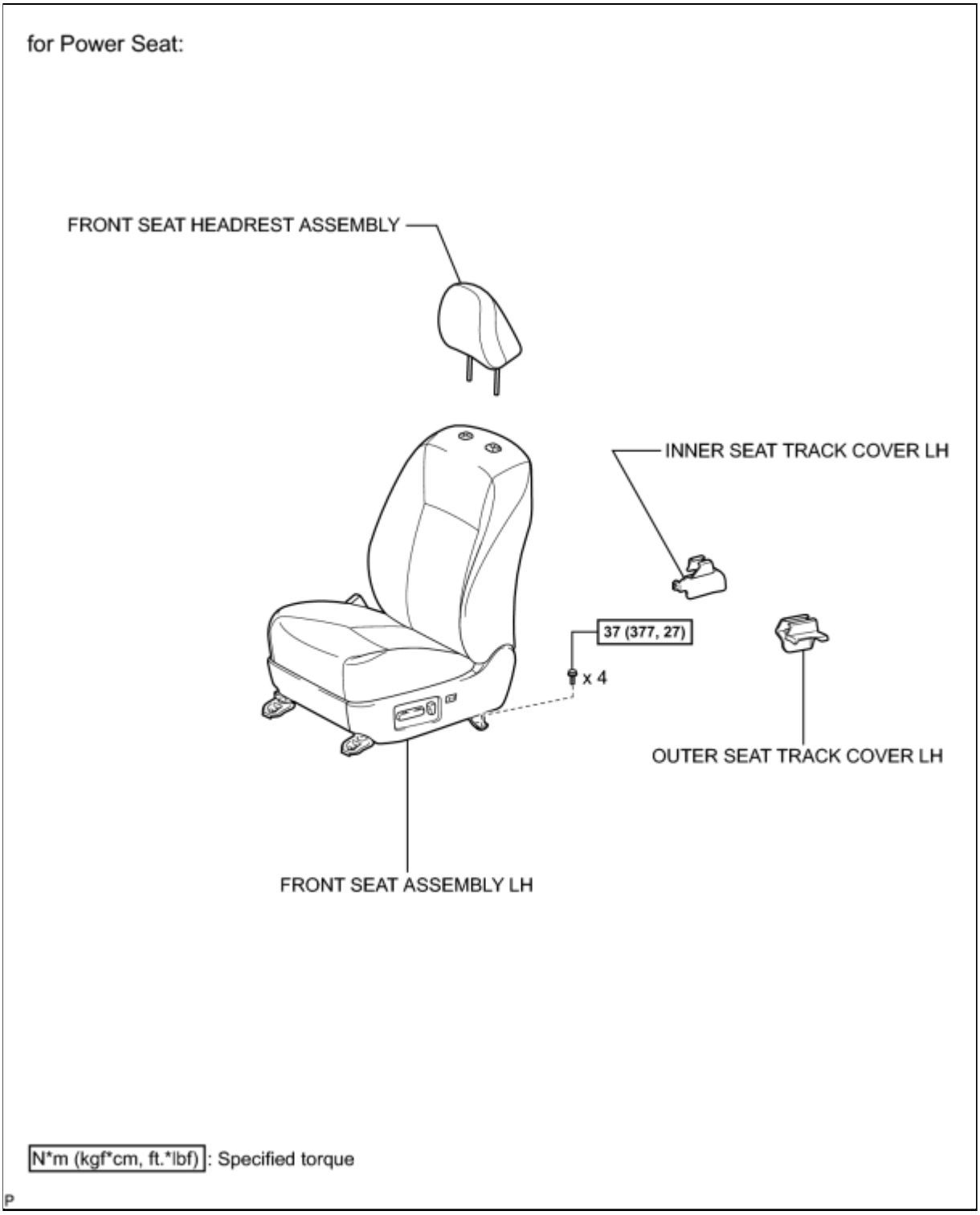

ILLUSTRATION

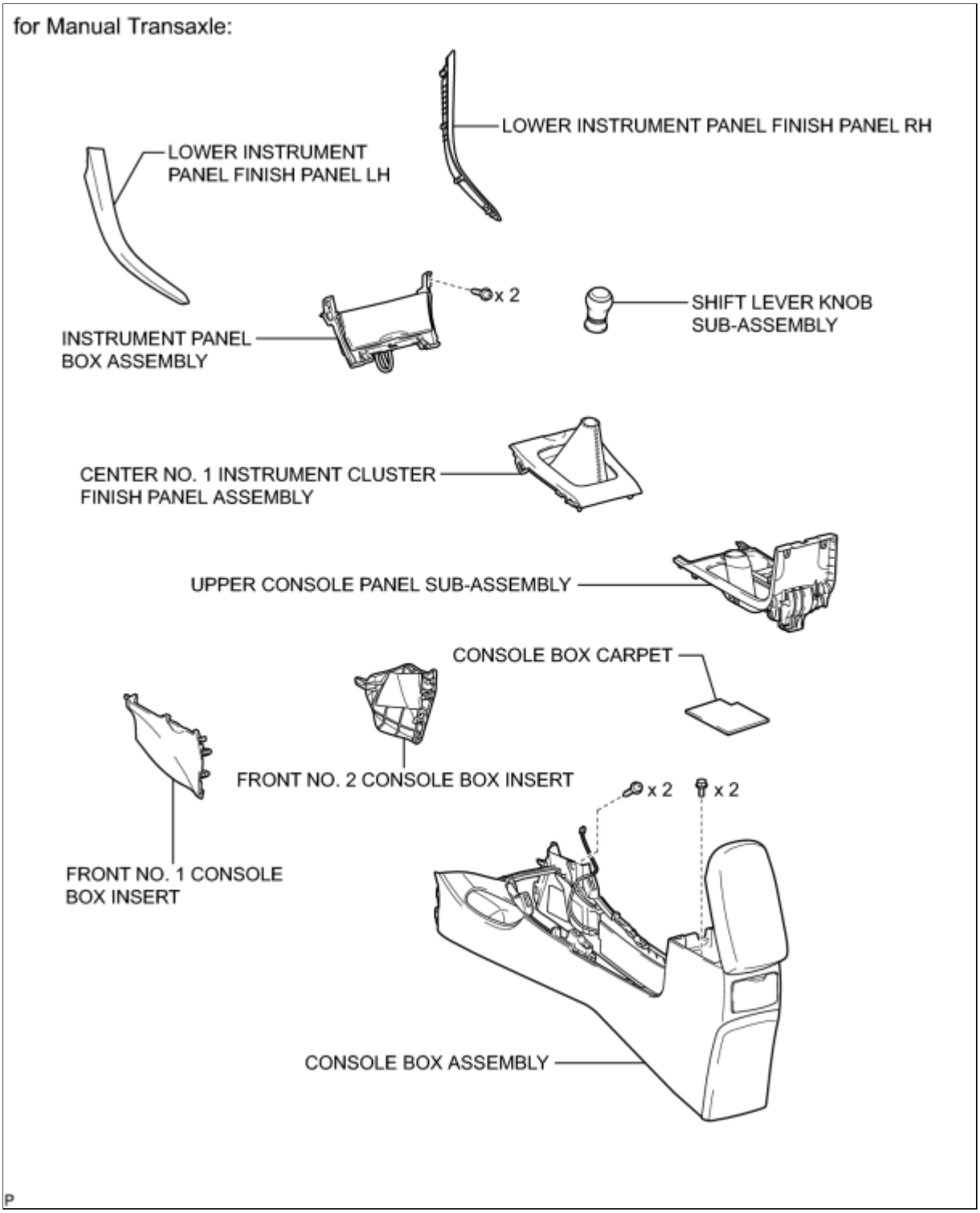

ILLUSTRATION

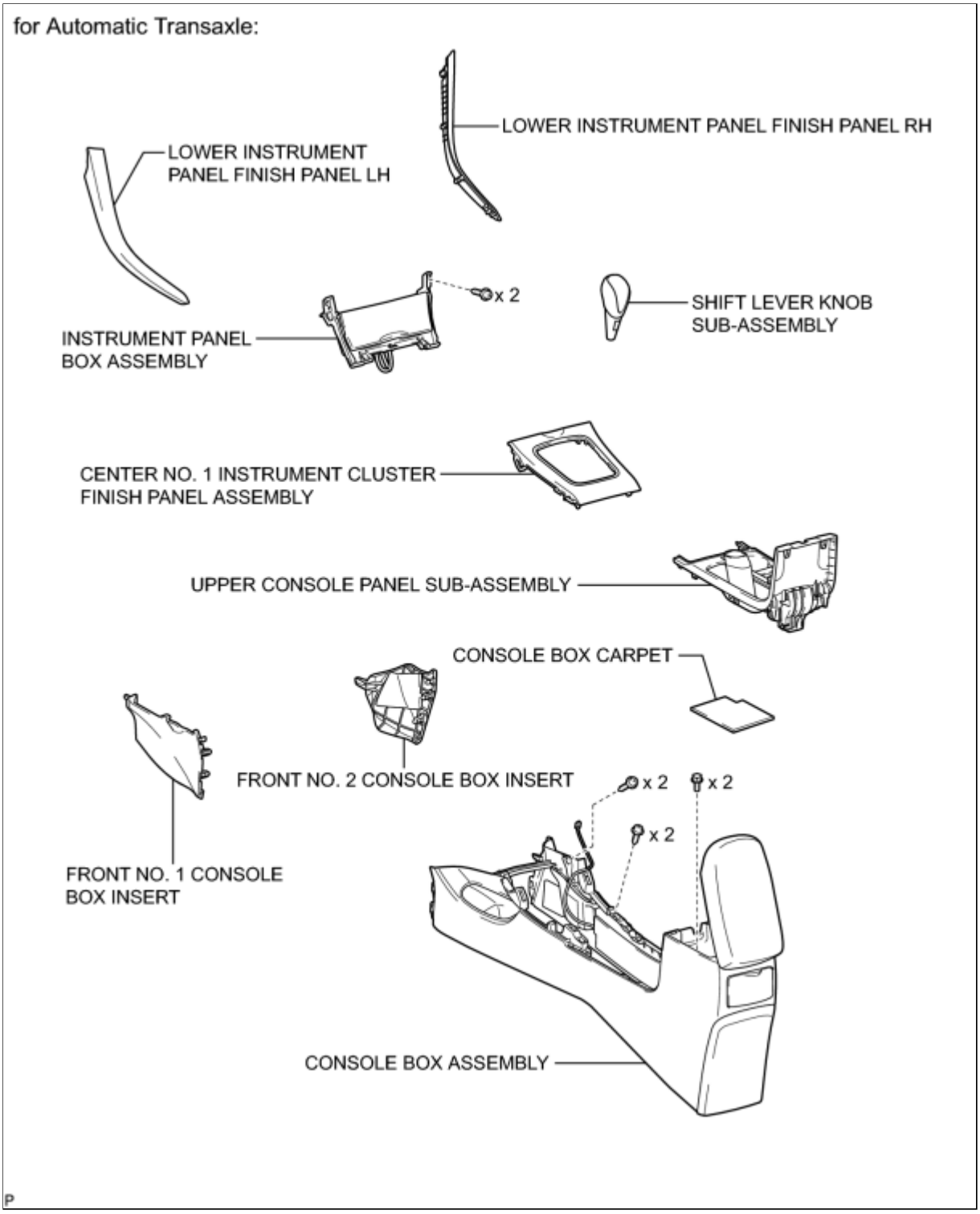

ILLUSTRATION

for Manual Transaxle:

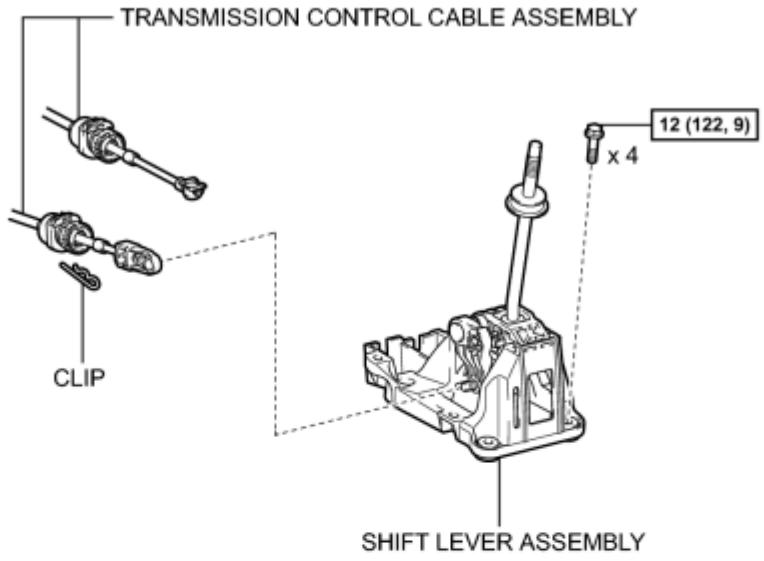

for Automatic Transaxle:

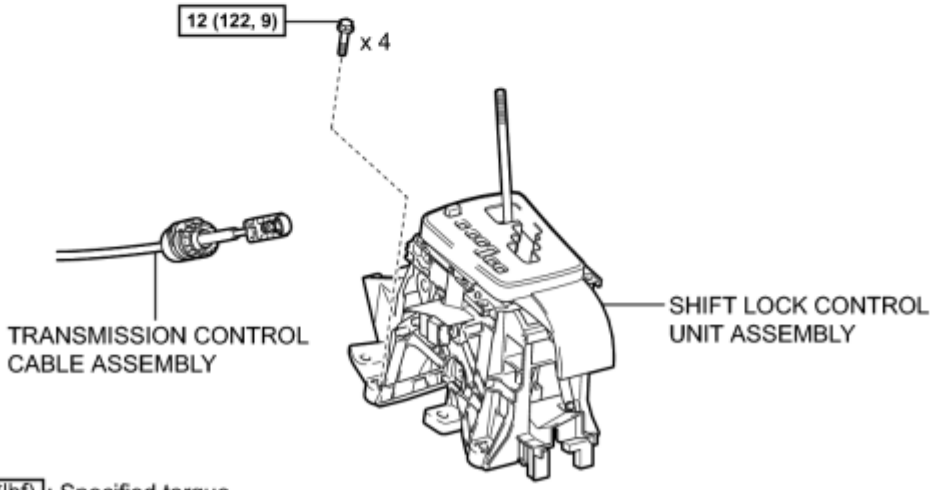

N*m (kgf*cm, ft.*lbf) : Specified torque

P

ILLUSTRATION

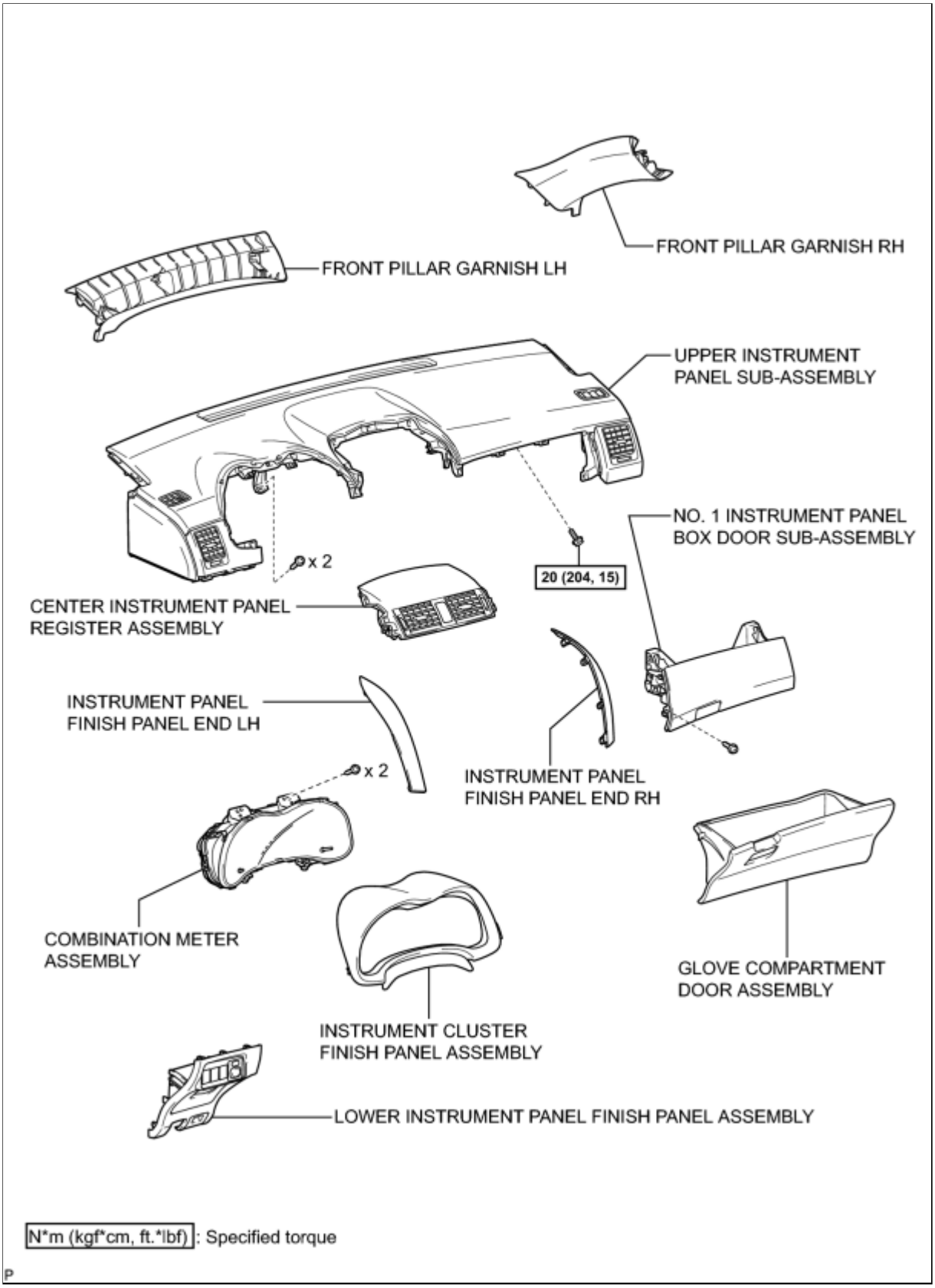

ILLUSTRATION

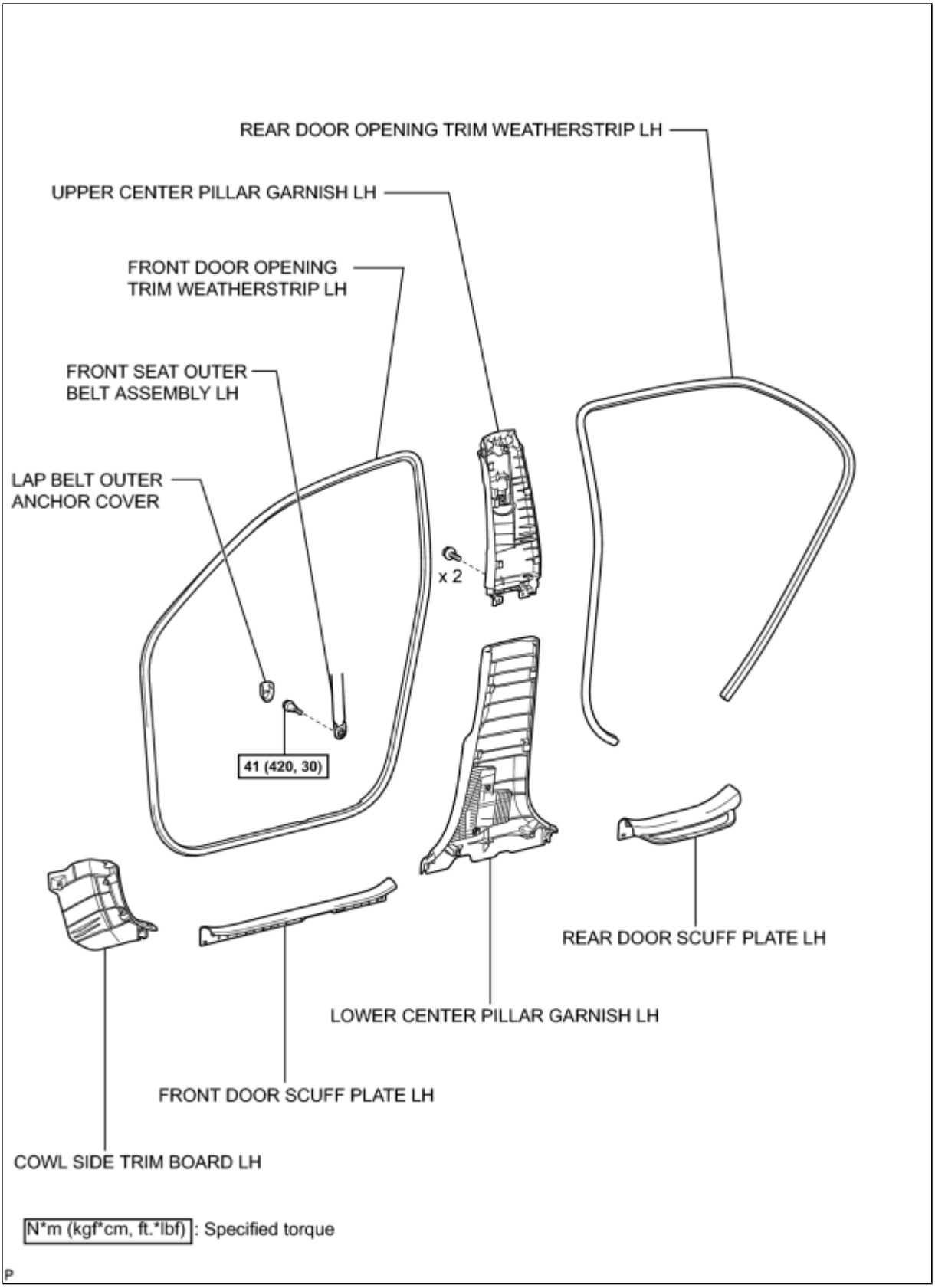

ILLUSTRATION

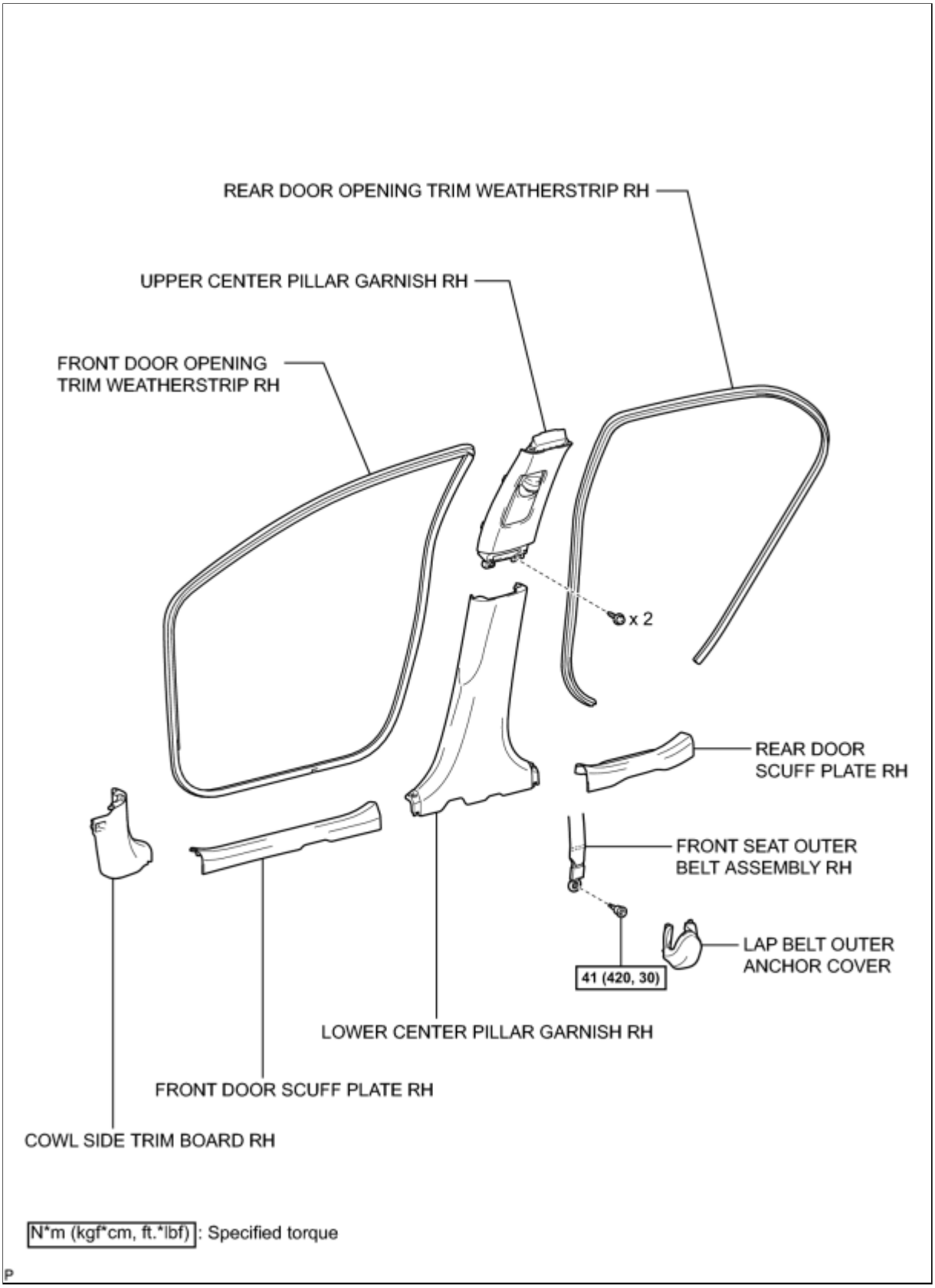

ILLUSTRATION

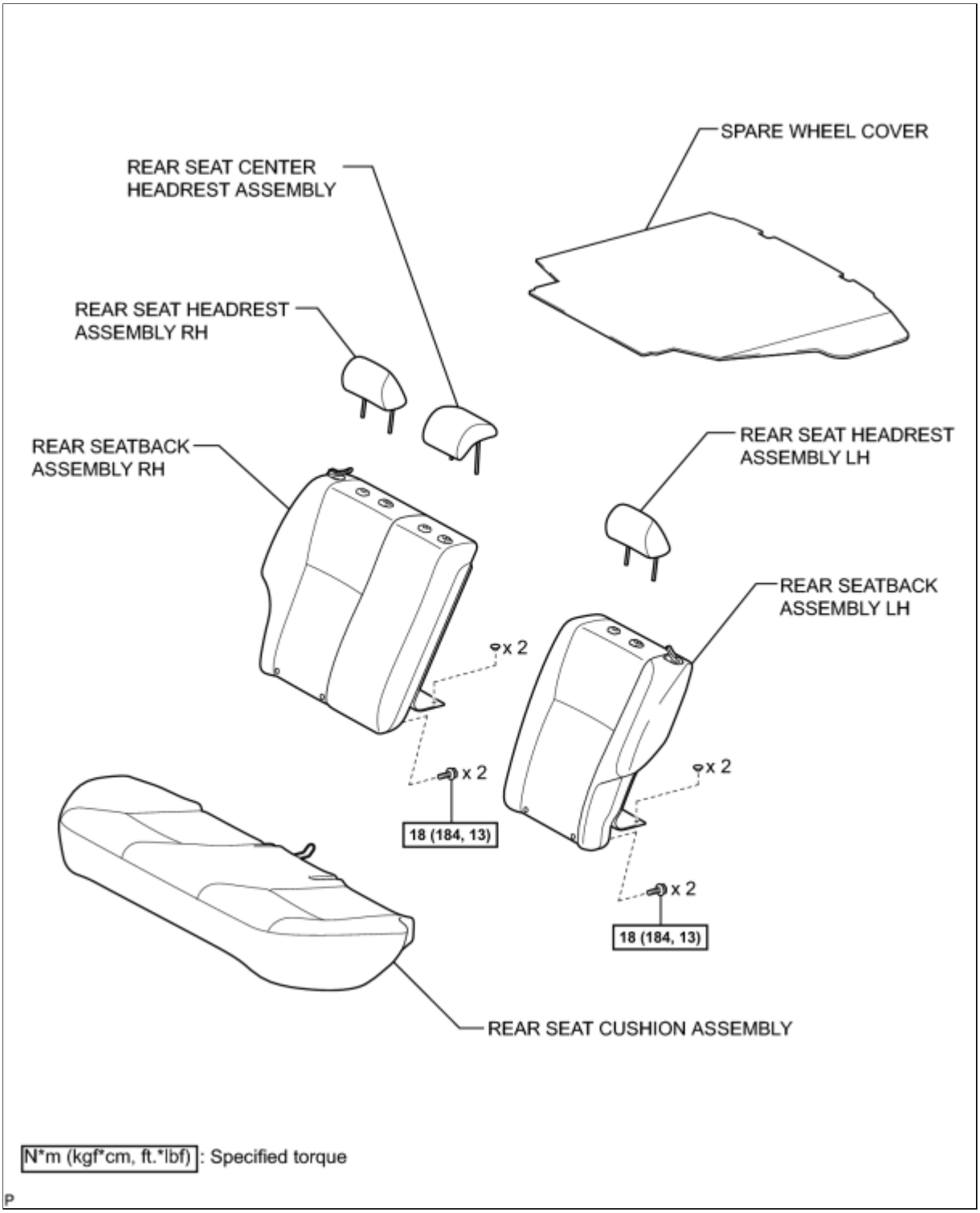

ILLUSTRATION

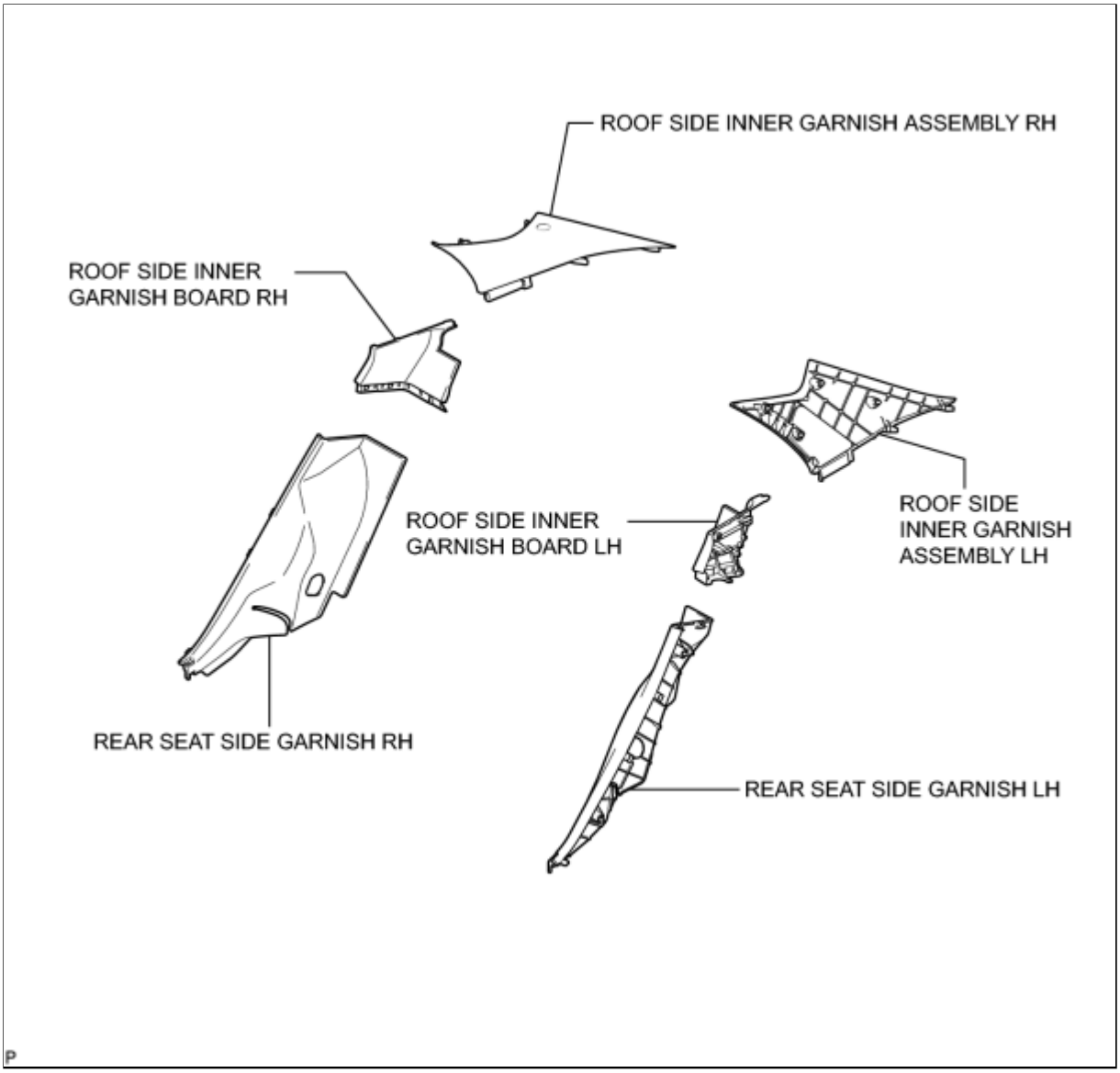

ILLUSTRATION

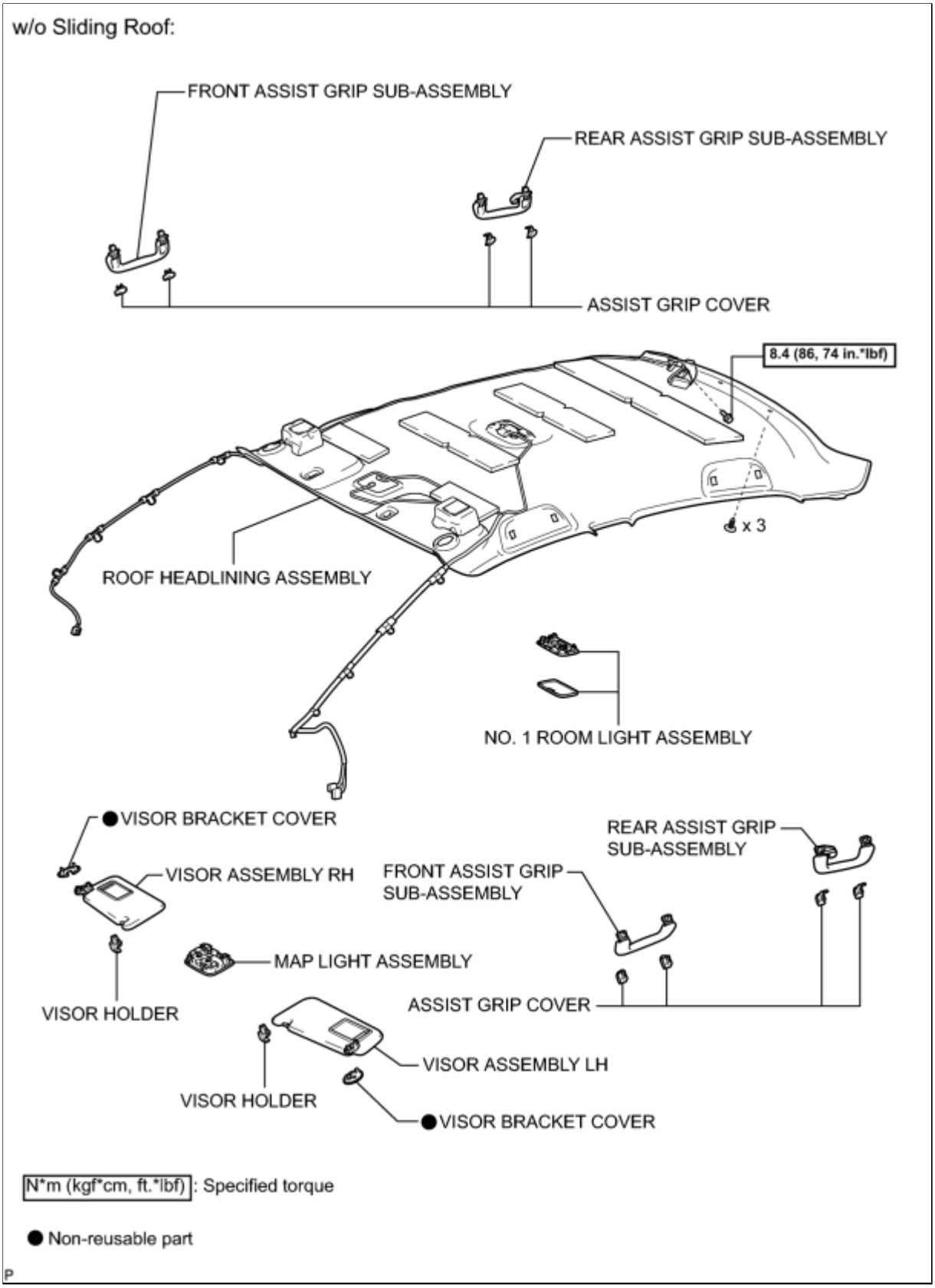

ILLUSTRATION

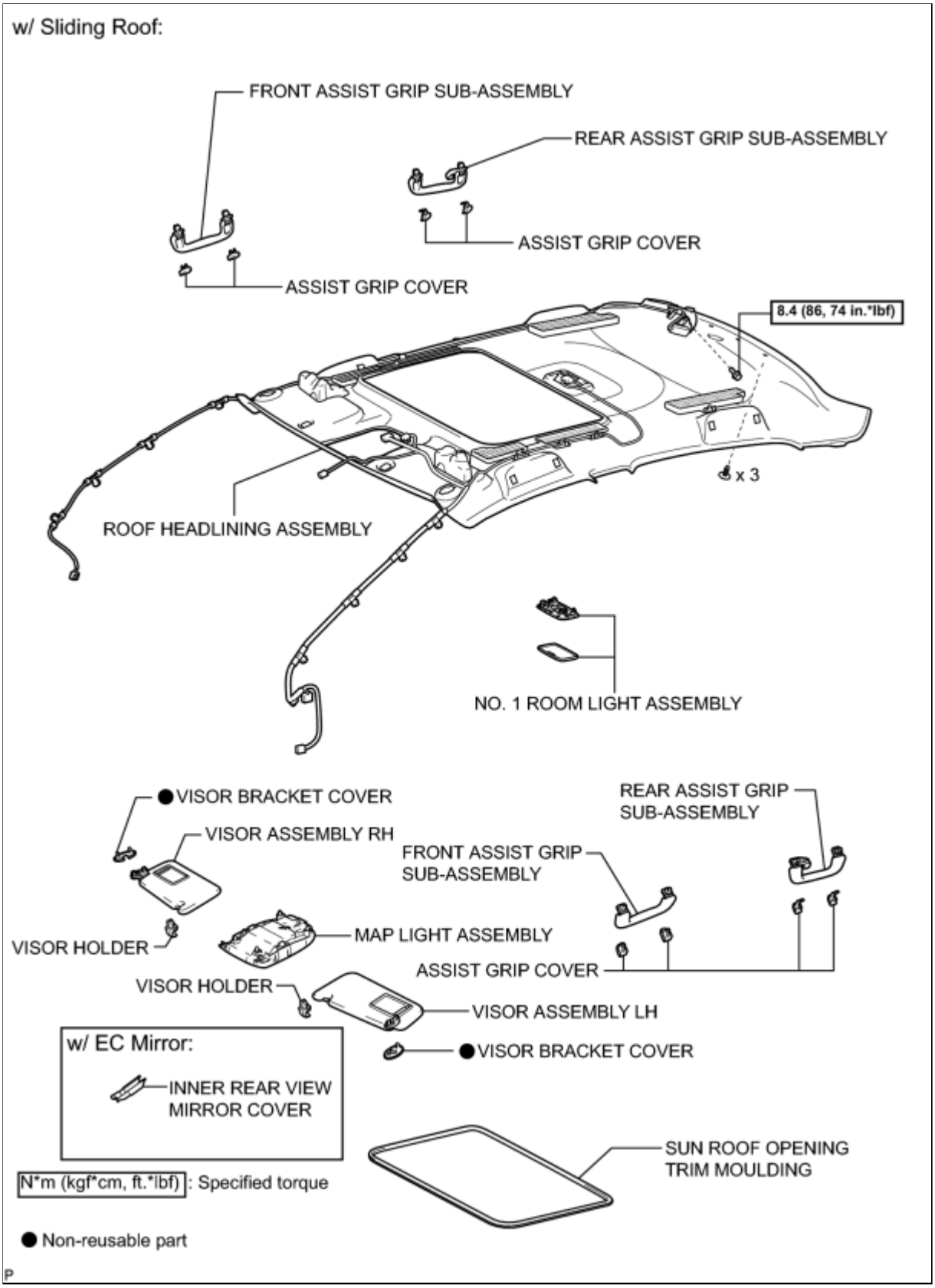

ILLUSTRATION

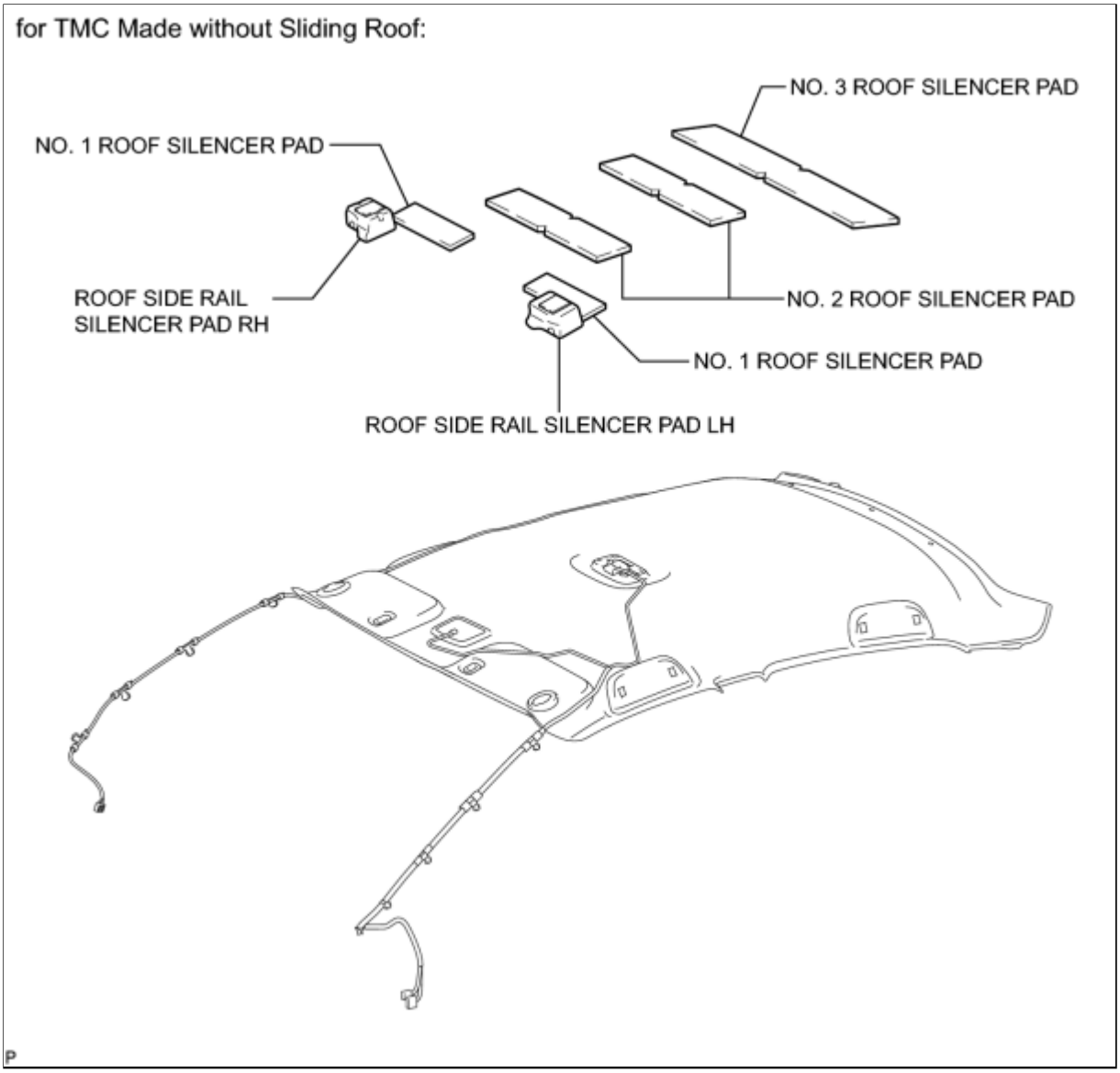

ILLUSTRATION

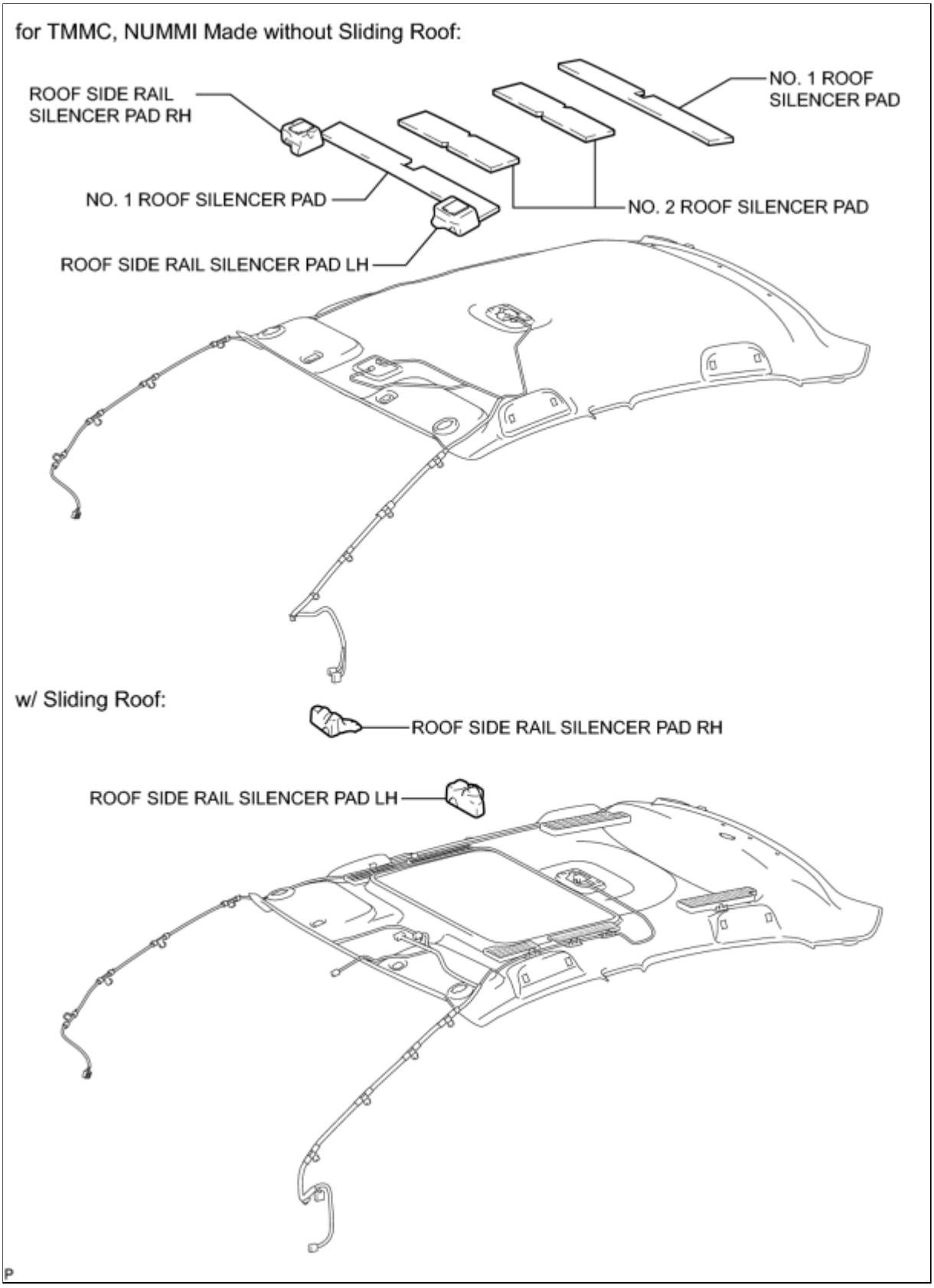

ILLUSTRATION

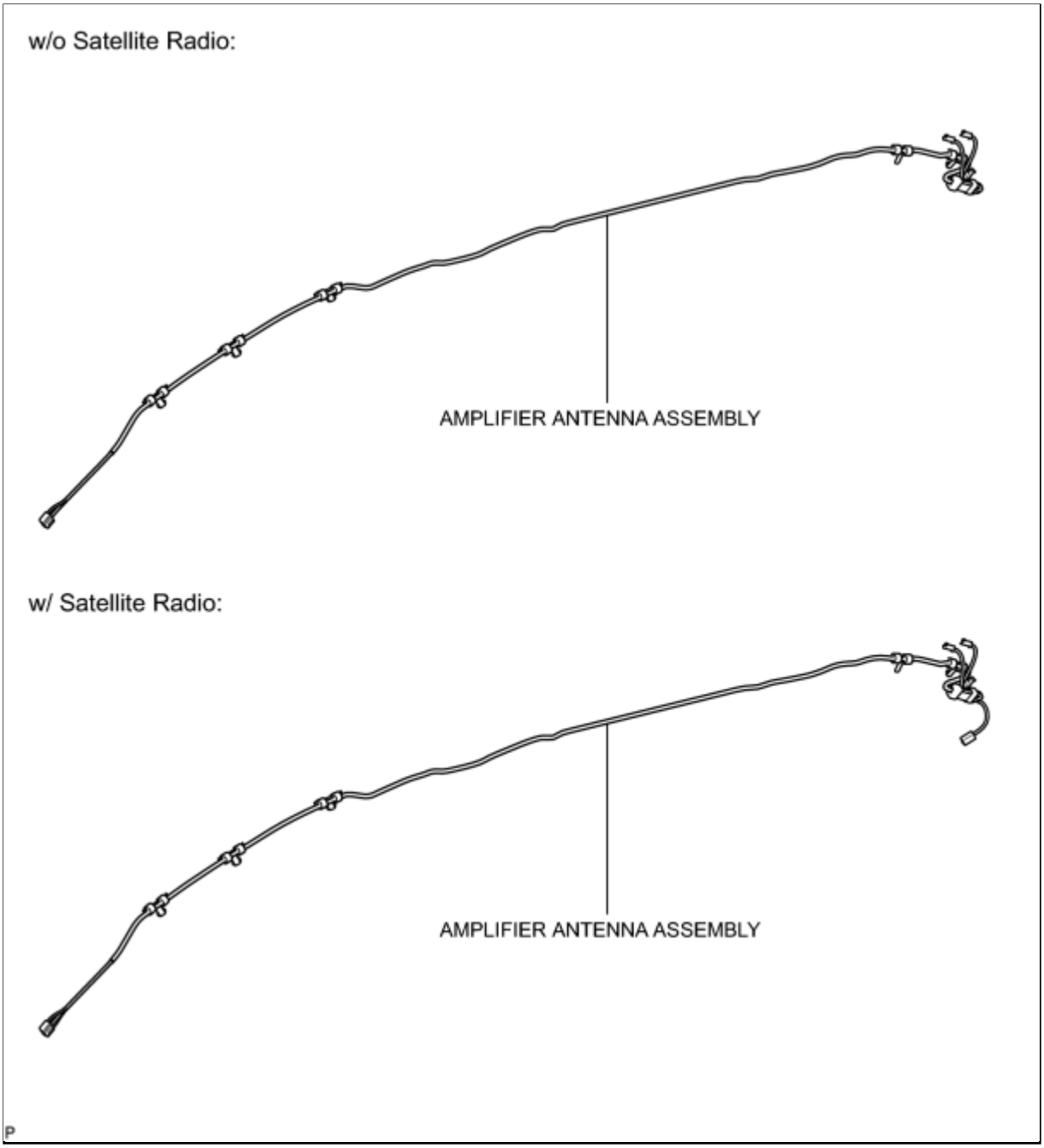

ILLUSTRATION

for TMC Made without Sliding Roof:

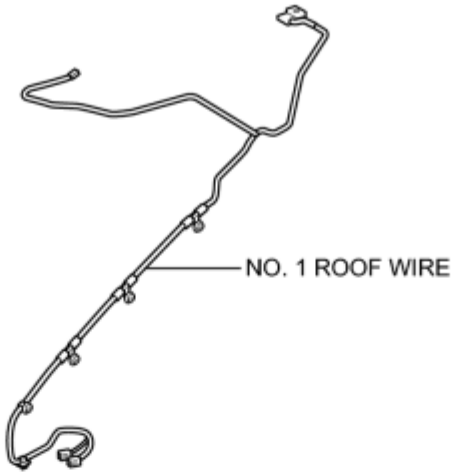

for TMMC, NUMMI Made without Sliding Roof:

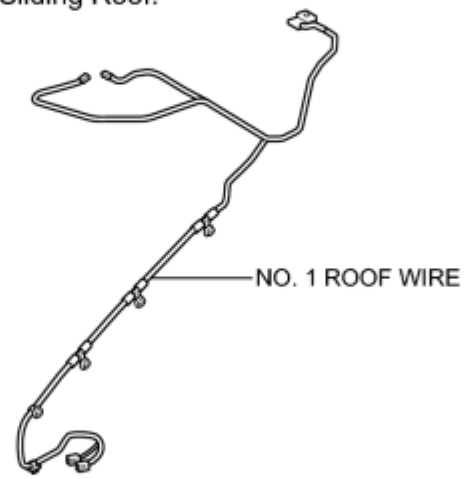

w/ Sliding Roof:

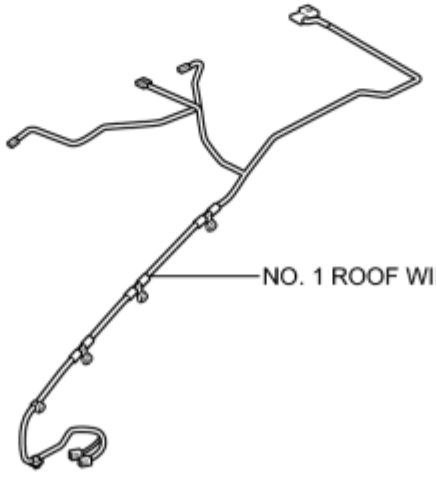

P

Last Modified: 3-10-2010	6.4 A	**From:** 200901
Model Year: 2010	**Model:** Corolla	**Doc ID:** RM000002X9U00MX
Title: INTERIOR PANELS / TRIM: ROOF HEADLINING: INSTALLATION (2010 Corolla)		

INSTALLATION

1. INSTALL NO. 1 ROOF WIRE (w/ Sliding Roof)

(a) Temporarily install the No. 1 roof wire aligned with the markings on the roof headlining assembly.

(b) Apply adhesive tape to the locations shown in the illustration.

(c) Engage the 3 clamps.

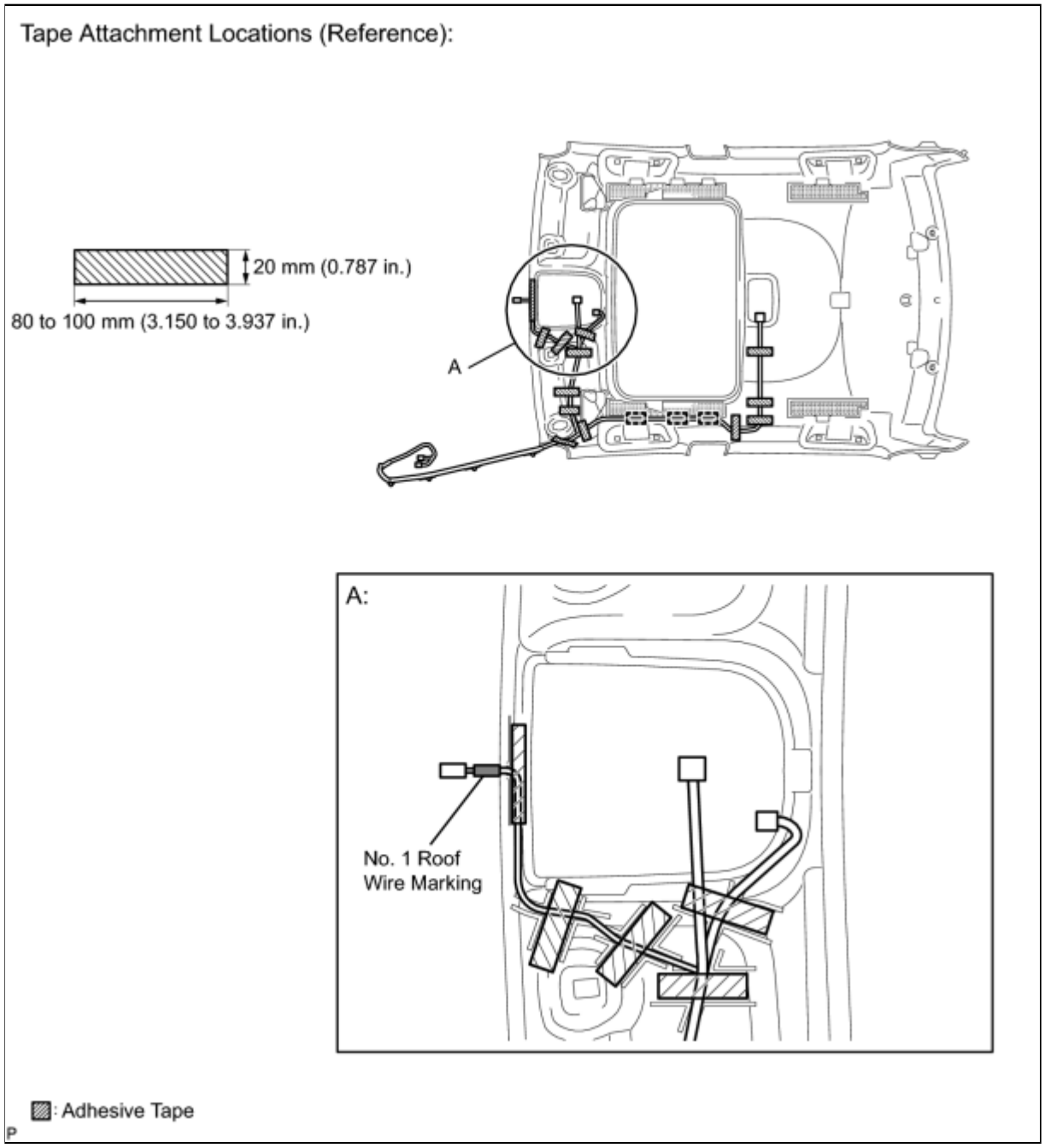

2. INSTALL NO. 1 ROOF WIRE (for TMMC, NUMMI Made without Sliding Roof)

(a) Temporarily install the No. 1 roof wire aligned with the markings on the roof headlining assembly.

(b) Apply adhesive tape to the locations shown in the illustration.

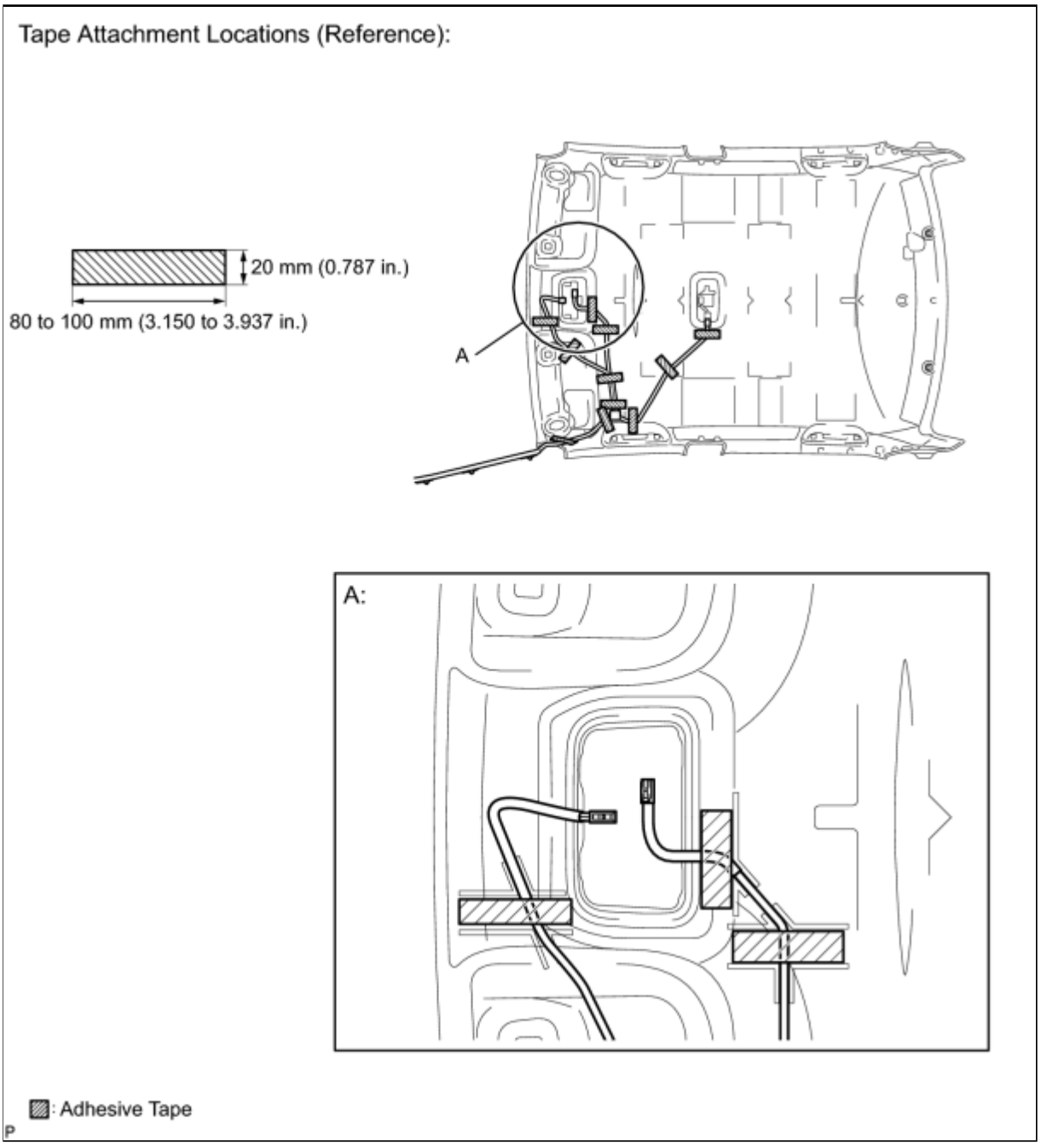

3. INSTALL NO. 1 ROOF WIRE (for TMC Made without Sliding Roof)

(a) Temporarily install the No. 1 roof wire aligned with the markings on the roof headlining assembly.

(b) Apply adhesive tape to the locations shown in the illustration.

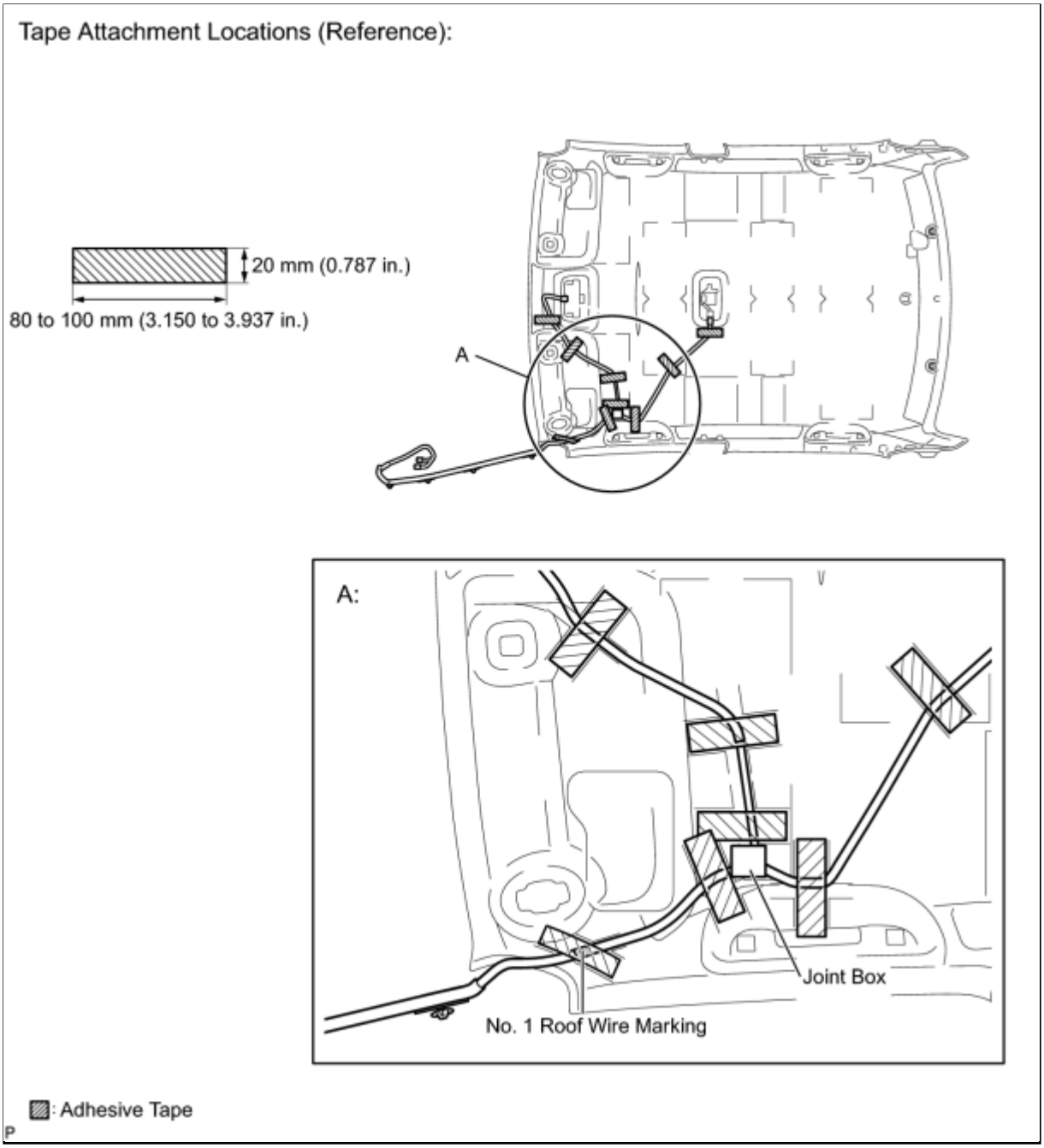

HINT:

- Align the No. 1 roof wire marking in area A in the illustration with the reference point on the roof headlining assembly.
- Align the joint box with the markings on the roof headlining assembly.

4. INSTALL AMPLIFIER ANTENNA ASSEMBLY (w/ Sliding Roof) INFO

5. INSTALL AMPLIFIER ANTENNA ASSEMBLY (w/o Sliding Roof) INFO

6. INSTALL ROOF SIDE RAIL SILENCER PAD LH (w/ Sliding Roof)

(a) Align the markings on the roof headlining assembly with the roof side rail silencer pad LH and install the silencer pad using hot-melt glue or double-sided tape as shown in the illustration.

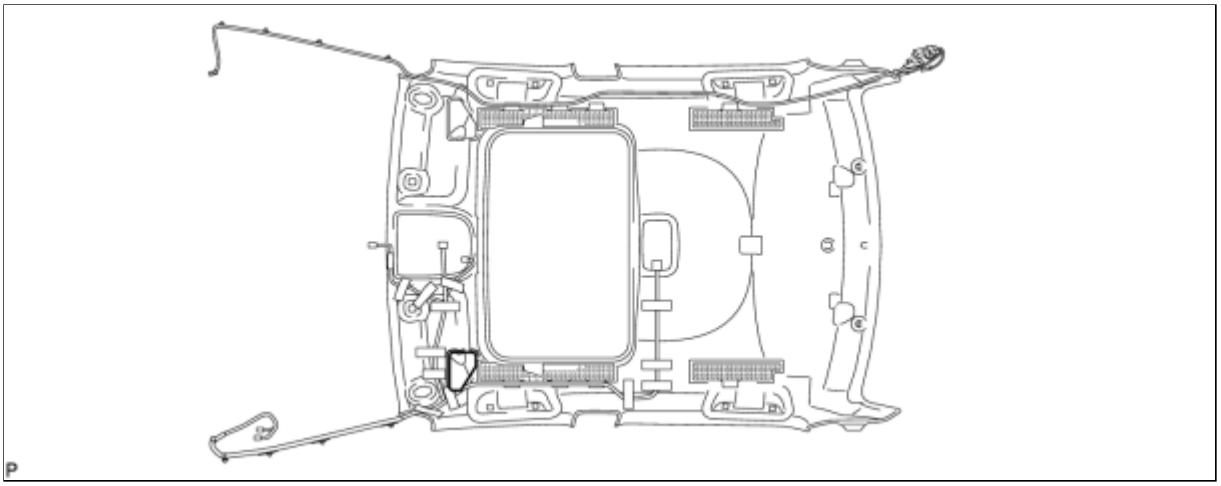

7. INSTALL ROOF SIDE RAIL SILENCER PAD RH (w/ Sliding Roof)

HINT:

Use the same procedure for the RH side and LH side.

8. INSTALL ROOF SIDE RAIL SILENCER PAD LH (w/o Sliding Roof)

(a) Align the markings on the roof headlining assembly with the roof side rail silencer pad LH and install the silencer pad using hot-melt glue or double-sided tape as shown in the illustration.

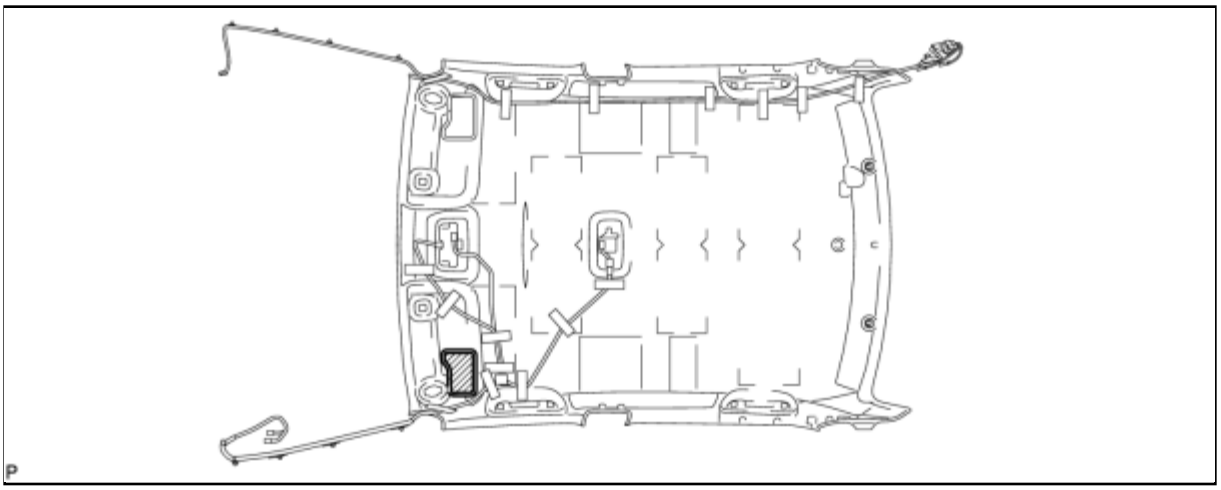

9. INSTALL ROOF SIDE RAIL SILENCER PAD RH (w/o Sliding Roof)

HINT:

Use the same procedure for the RH side and LH side.

10. INSTALL NO. 3 ROOF SILENCER PAD (for TMC Made without Sliding Roof)

(a) Align the markings on the roof headlining assembly with the No. 3 roof silencer pad and install the silencer pad using hot-melt glue or double-sided tape as shown in the illustration.

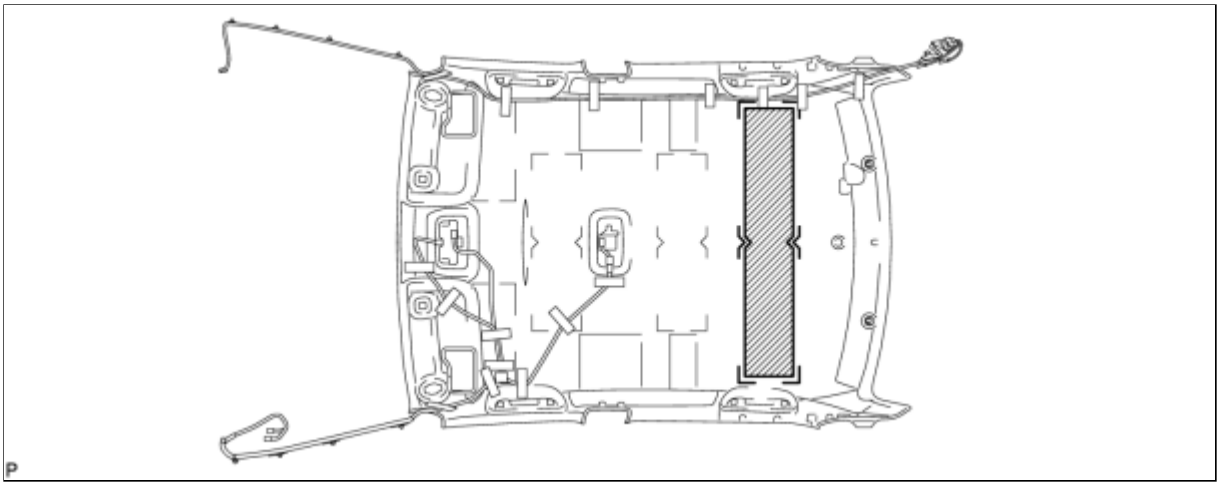

11. INSTALL NO. 2 ROOF SILENCER PAD (w/o Sliding Roof)

(a) Align the markings on the roof headlining assembly with the 2 No. 2 roof silencer pads and install the silencer pads using hot-melt glue or double-sided tape as shown in the illustration.

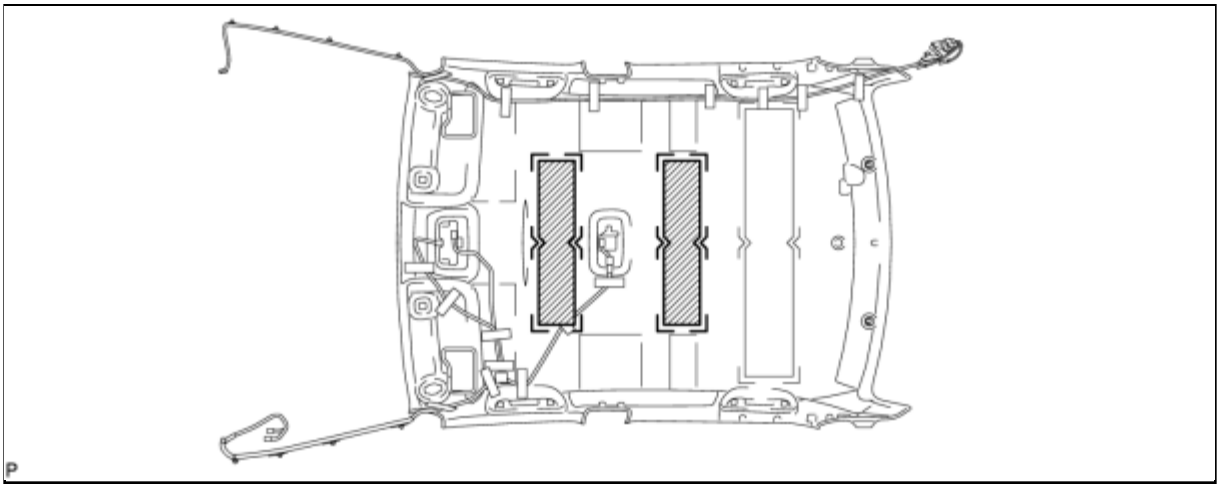

12. INSTALL NO. 1 ROOF SILENCER PAD (for TMC Made without Sliding Roof)

(a) Align the markings on the roof headlining assembly with the 2 No. 1 roof silencer pads and install the silencer pads using hot-melt glue or double-sided tape as shown in the illustration.

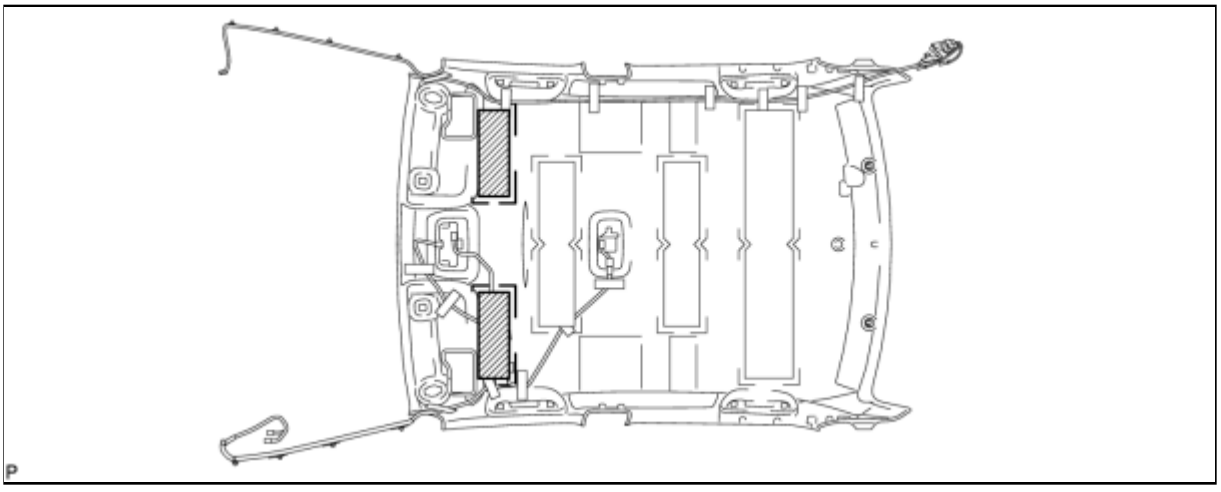

13. INSTALL NO. 1 ROOF SILENCER PAD (for TMMC, NUMMI Made without Sliding Roof)

(a) Align the markings on the roof headlining assembly with the 2 No. 1 roof silencer pads and install the silencer pads using hot-melt glue or double-sided tape as shown in the illustration.

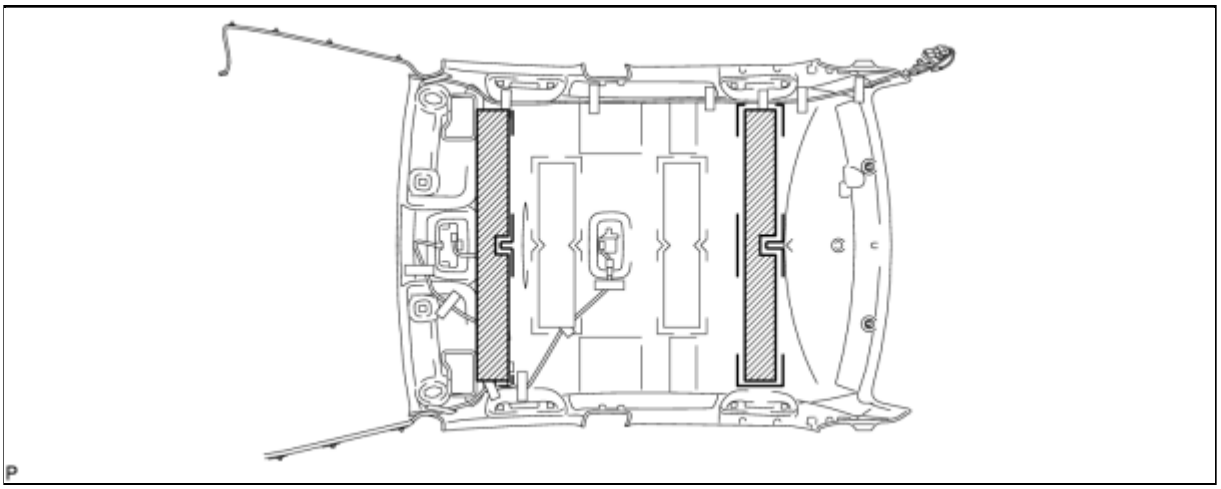

14. INSTALL ROOF HEADLINING ASSEMBLY (w/ Sliding Roof)

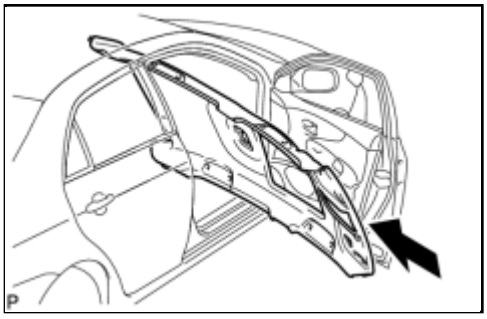

(a) Pass the roof headlining assembly into the vehicle through the front passenger door.

NOTICE:

Do not damage the roof headlining assembly or body interior.

(b) Install the 3 clips.

(c) Connect the sliding roof drive gear connector.

(d) Connect the amplifier antenna assembly and install the bolt to the rear pillar RH.

Torque: 8.4 N·m (86 kgf·cm, 74in·lbf)

(e) Connect the amplifier antenna assembly connectors and engage the clamp to the rear pillar RH.

(f) Connect the amplifier antenna assembly connector and engage each clamp to the front pillar RH.

(g) Connect the No. 1 roof wire connector and engage each clamp to the front pillar LH.

(h) Connect the No. 1 roof wire connectors to the instrument panel junction block.

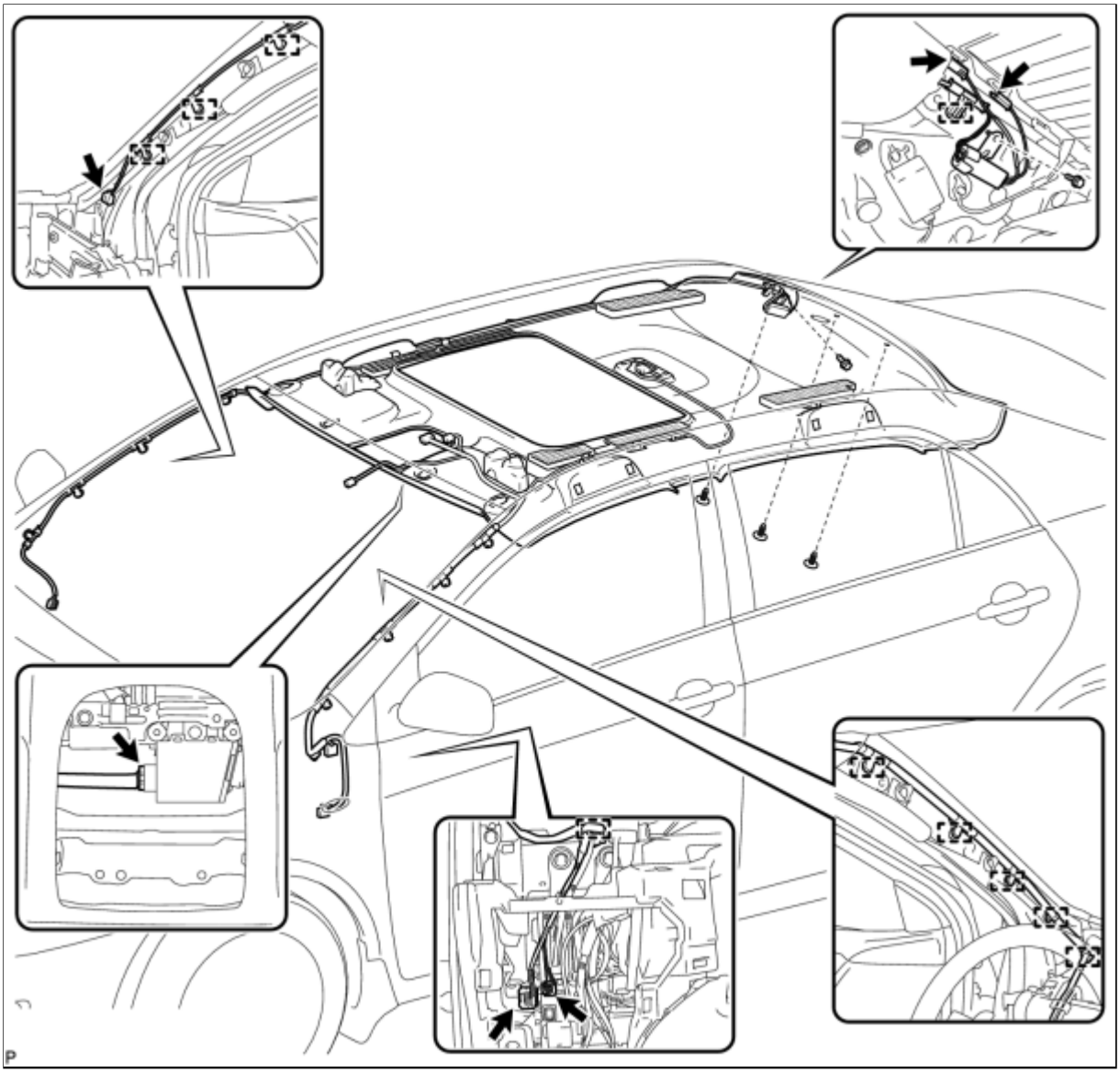

(i) w/ EC Mirror:

(1) Connect the connector.

15. INSTALL ROOF HEADLINING ASSEMBLY (w/o Sliding Roof)

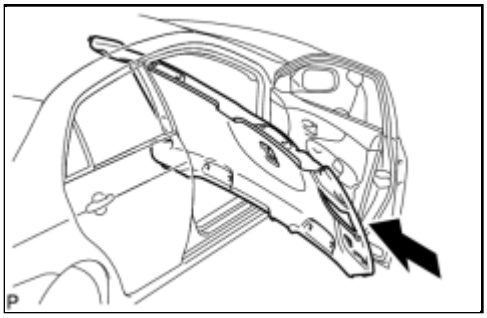

(a) Pass the roof headlining assembly into the vehicle through the front passenger door.

NOTICE:

Do not damage the roof headlining assembly or body interior.

(b) Install the 3 clips.

(c) Connect the amplifier antenna assembly and install the bolt to the rear pillar RH.

Torque: 8.4 N·m (86 kgf·cm, 74in·lbf)

(d) Connect the amplifier antenna assembly connectors and engage the clamp to the rear pillar RH.

(e) Connect the amplifier antenna assembly connector and engage each clamp to the front pillar RH.

(f) Connect the No. 1 roof wire connector and engage each clamp to the front pillar LH.

(g) Connect the No. 1 roof wire connectors to the instrument panel junction block.

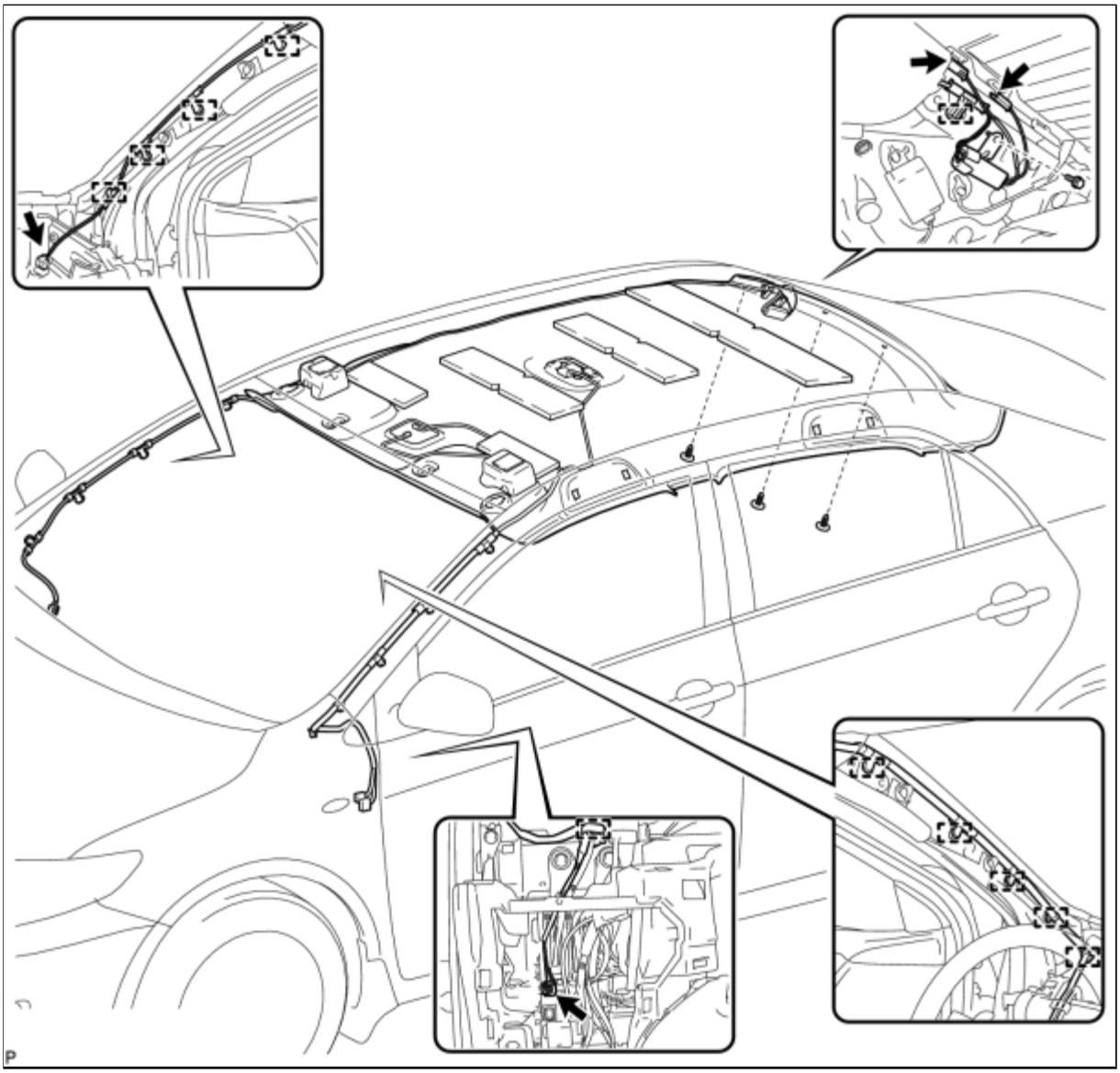

16. INSTALL SUN ROOF OPENING TRIM MOULDING (w/ Sliding Roof)

(a) Align the alignment mark on the inner surface of the opening trim moulding with the notch of the roof headlining, and install the sun roof opening trim moulding so that the alignment mark on the opening trim is on the right side of the vehicle as shown in the illustration.

NOTICE:

After installation, check that the corners fit correctly.

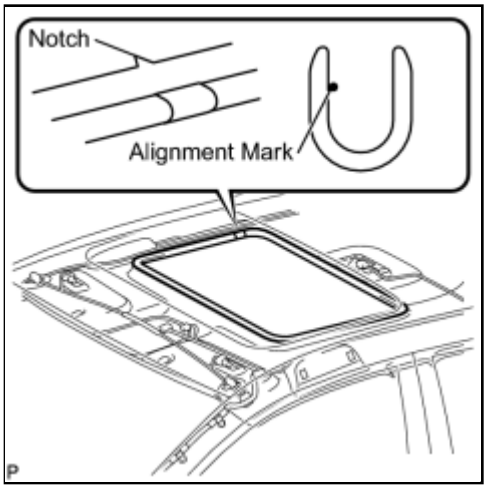

17. INSTALL VISOR HOLDER

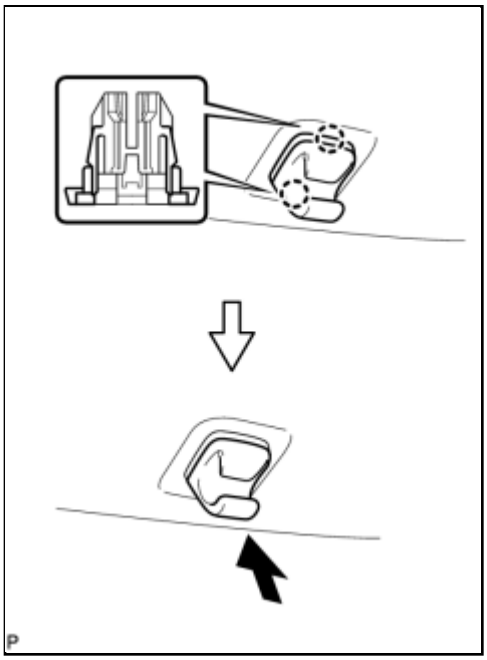

(a) Engage the 2 claws.

(b) Push in the visor holder as shown in the illustration.

HINT:

Use the same procedure for the RH side and LH side.

18. INSTALL INNER REAR VIEW MIRROR COVER (w/ EC Mirror) INFO

19. INSTALL NO. 1 ROOM LIGHT ASSEMBLY INFO

20. INSTALL REAR ASSIST GRIP SUB-ASSEMBLY

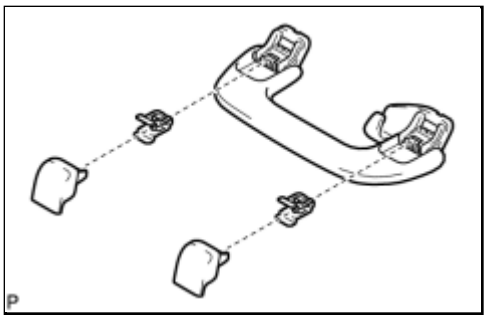

(a) Assemble the rear assist grip sub-assembly as shown in the illustration.

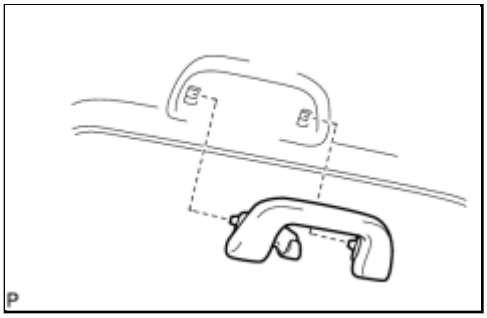

(b) Install the rear assist grip sub-assembly.

HINT:

Use the same procedure for the RH side and LH side.

21. INSTALL FRONT ASSIST GRIP SUB-ASSEMBLY

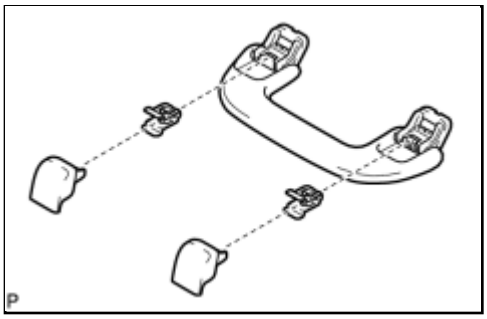

(a) Assemble the front assist grip sub-assembly as shown in the illustration.

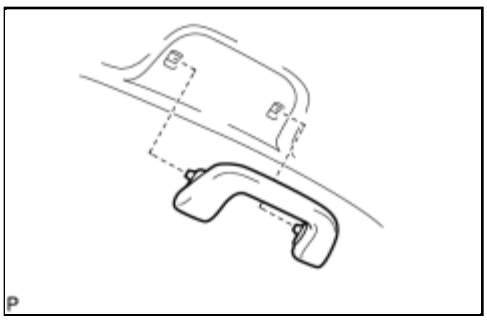

(b) Install the front assist grip sub-assembly.

HINT:

Use the same procedure for the RH side and LH side.

22. INSTALL VISOR ASSEMBLY LH

(a) Install the 2 clips to the visor assembly LH.

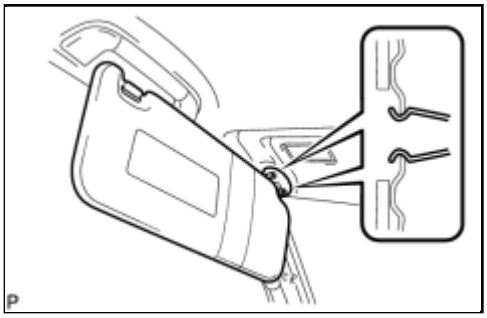

(b) Engage the 2 clips and install the visor assembly LH.

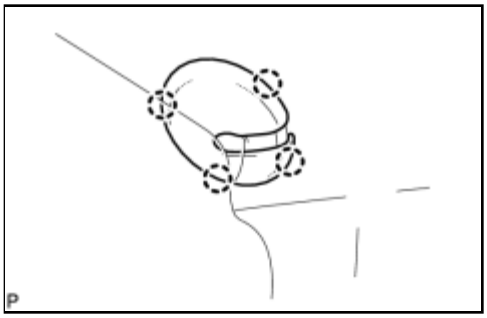

(c) Engage the 4 claws and install a new visor bracket cover.

23. INSTALL VISOR ASSEMBLY RH

HINT:

Use the same procedure for the RH side and LH side.

24. INSTALL MAP LIGHT ASSEMBLY (w/ Sliding Roof) INFO

25. INSTALL MAP LIGHT ASSEMBLY (w/o Sliding Roof) INFO

26. INSTALL ROOF SIDE INNER GARNISH ASSEMBLY LH

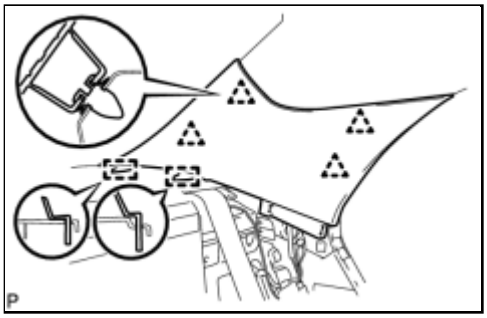

(a) Engage the 2 guides and 4 clips, and install the roof side inner garnish assembly LH.

27. INSTALL ROOF SIDE INNER GARNISH BOARD LH

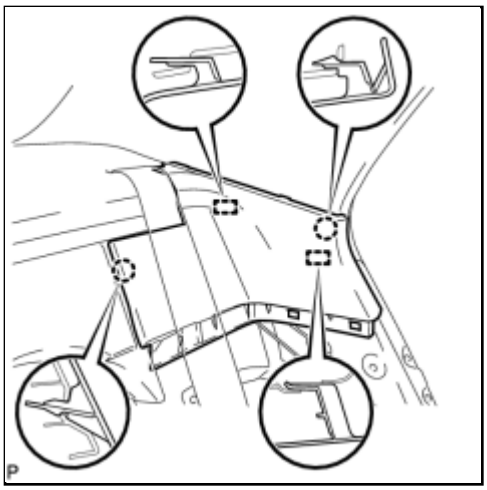

(a) Engage the 2 guides and 2 claws, and install the roof side inner garnish board LH.

28. INSTALL REAR SEAT SIDE GARNISH LH

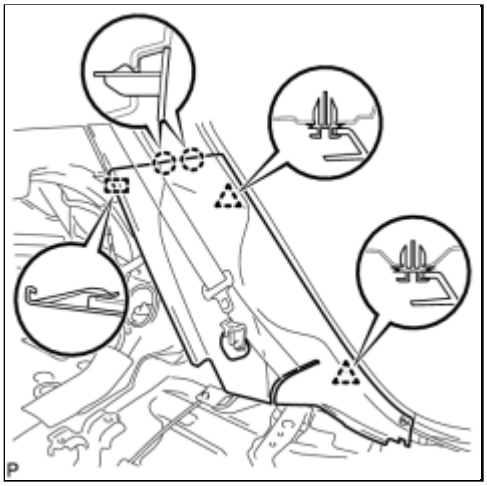

(a) Engage the 2 claws, 2 clips and guide, and install the rear seat side garnish LH.

29. INSTALL ROOF SIDE INNER GARNISH ASSEMBLY RH

HINT:

Use the same procedure for the RH side and LH side.

30. INSTALL ROOF SIDE INNER GARNISH BOARD RH

HINT:

Use the same procedure for the RH side and LH side.

31. INSTALL REAR SEAT SIDE GARNISH RH

HINT:

Use the same procedure for the RH side and LH side.

32. INSTALL REAR SEATBACK ASSEMBLY LH INFO

33. INSTALL REAR SEATBACK ASSEMBLY RH INFO

34. INSTALL REAR SEAT CUSHION ASSEMBLY INFO

35. INSTALL REAR SEAT CENTER HEADREST ASSEMBLY

36. INSTALL REAR SEAT HEADREST ASSEMBLY LH

37. INSTALL REAR SEAT HEADREST ASSEMBLY RH

38. INSTALL SPARE WHEEL COVER INFO

39. INSTALL UPPER CENTER PILLAR GARNISH LH

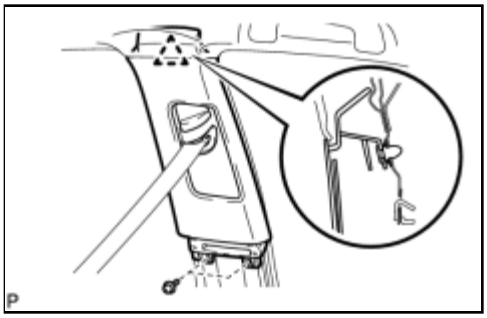

(a) Engage the clip.

(b) Install the upper center pillar garnish LH with the 2 screws.

40. INSTALL LOWER CENTER PILLAR GARNISH LH

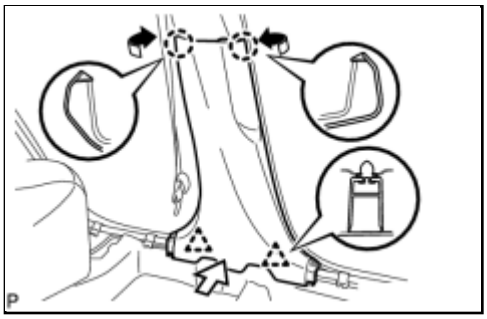

(a) Engage the 2 claws and 2 clips, and install the lower center pillar garnish LH.

41. CONNECT FRONT SEAT OUTER BELT ASSEMBLY LH INFO

42. INSTALL LAP BELT OUTER ANCHOR COVER (for LH Side) INFO

43. INSTALL REAR DOOR OPENING TRIM WEATHERSTRIP LH

(a) Align the alignment mark (pink) on the weatherstrip and the protruding portion on the body indicated by the arrow in the illustration, and install the rear door opening trim weatherstrip LH.

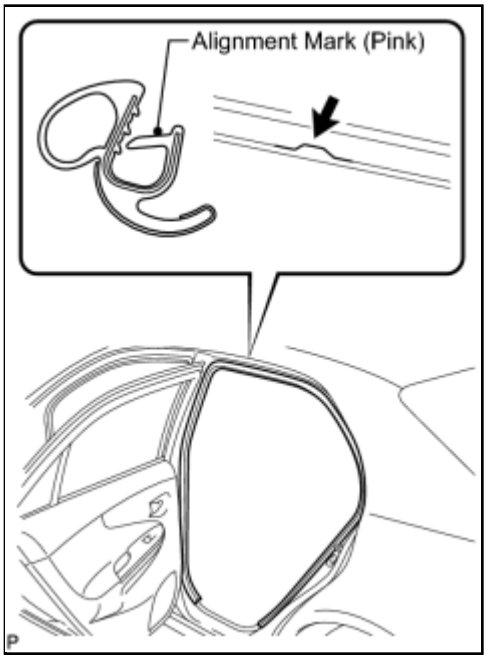

NOTICE:

After installation, check that the corners fit correctly.

44. INSTALL REAR DOOR SCUFF PLATE LH

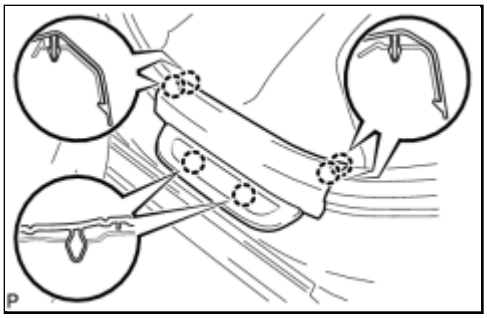

(a) Engage the 6 claws and install the rear door scuff plate LH.

45. INSTALL UPPER CENTER PILLAR GARNISH RH

HINT:

Use the same procedure for the RH side and LH side.

46. CONNECT FRONT SEAT OUTER BELT ASSEMBLY RH INFO

47. INSTALL LOWER CENTER PILLAR GARNISH RH

HINT:

Use the same procedure for the RH side and LH side.

48. INSTALL LAP BELT OUTER ANCHOR COVER (for RH Side) INFO

49. INSTALL REAR DOOR OPENING TRIM WEATHERSTRIP RH

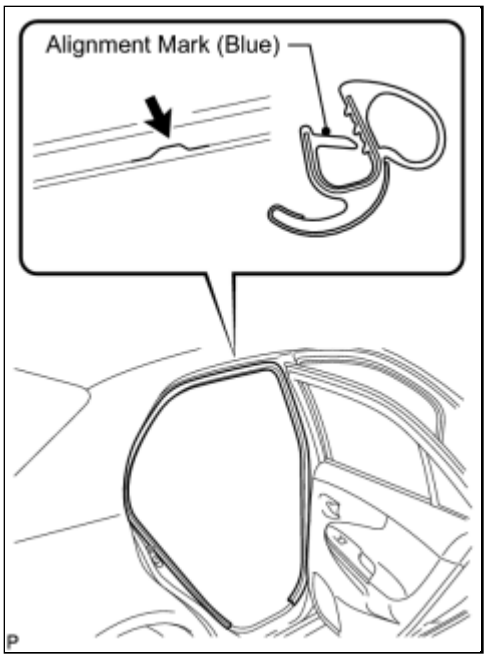

(a) Align the alignment mark (blue) on the weatherstrip and the protruding portion on the body indicated by the arrow in the illustration, and install the rear door opening trim weatherstrip RH.

NOTICE:

After installation, check that the corners fit correctly.

50. INSTALL REAR DOOR SCUFF PLATE RH

HINT:

Use the same procedure for the RH side and LH side.

51. INSTALL UPPER INSTRUMENT PANEL SUB-ASSEMBLY INFO

52. CONNECT INSTRUMENT PANEL WIRE ASSEMBLY INFO

53. INSTALL FRONT DOOR OPENING TRIM WEATHERSTRIP LH

(a) Align the alignment mark (yellow) on the weatherstrip and the protruding portion on the body indicated by the arrow in the illustration, and install the front door opening trim weatherstrip LH.

NOTICE:

After installation, check that the corners fit correctly.

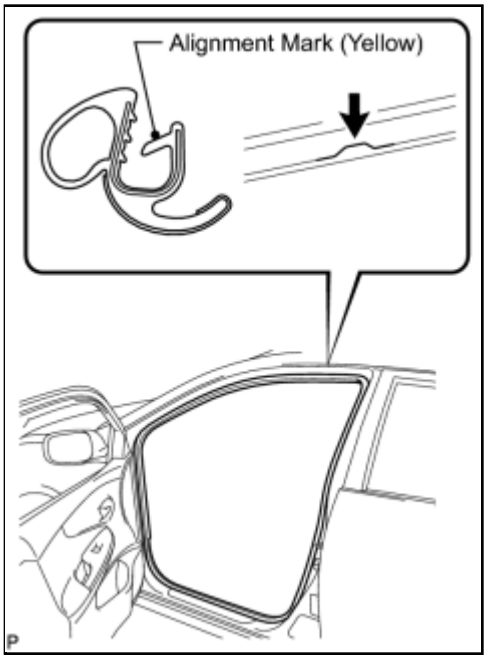

54. INSTALL COWL SIDE TRIM BOARD LH

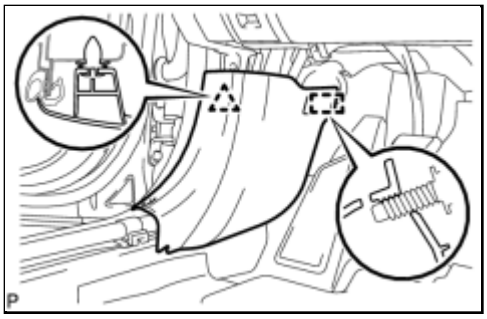

(a) Engage the guide and clip, and install the cowl side trim board LH.

55. INSTALL FRONT DOOR SCUFF PLATE LH

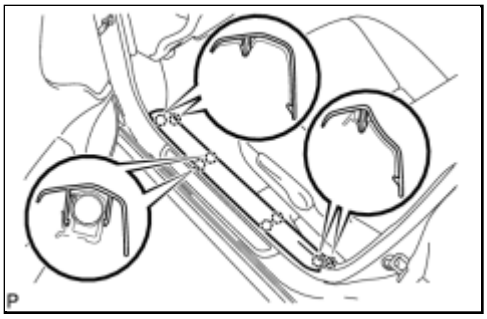

(a) Engage the 8 claws and install the front door scuff plate LH.

56. INSTALL LOWER INSTRUMENT PANEL FINISH PANEL ASSEMBLY INFO

57. INSTALL FRONT DOOR OPENING TRIM WEATHERSTRIP RH

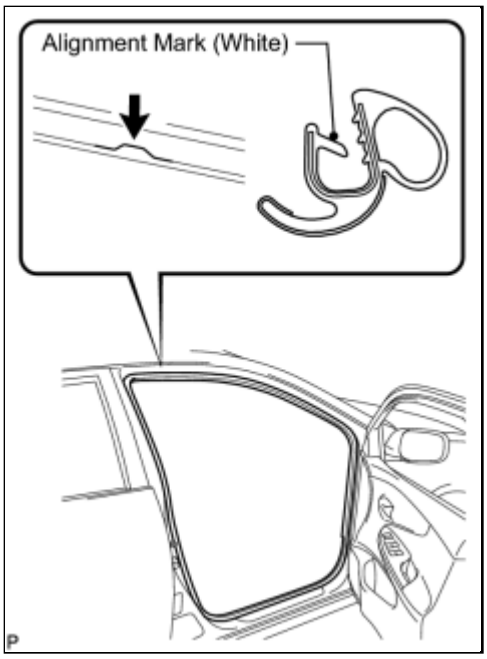

(a) Align the alignment mark (white) on the weatherstrip and the protruding portion on the body indicated by the arrow in the illustration, and install the front door opening trim weatherstrip RH.

NOTICE:

After installation, check that the corners fit correctly.

58. INSTALL COWL SIDE TRIM BOARD RH

HINT:

Use the same procedure for the RH side and LH side.

59. INSTALL FRONT DOOR SCUFF PLATE RH

HINT:

Use the same procedure for the RH side and LH side.

60. INSTALL NO. 1 INSTRUMENT PANEL BOX DOOR SUB-ASSEMBLY INFO

61. INSTALL GLOVE COMPARTMENT DOOR ASSEMBLY INFO

62. INSTALL FRONT PILLAR GARNISH LH (w/ Curtain Shield Airbag)

(a) Remove the protective cover.

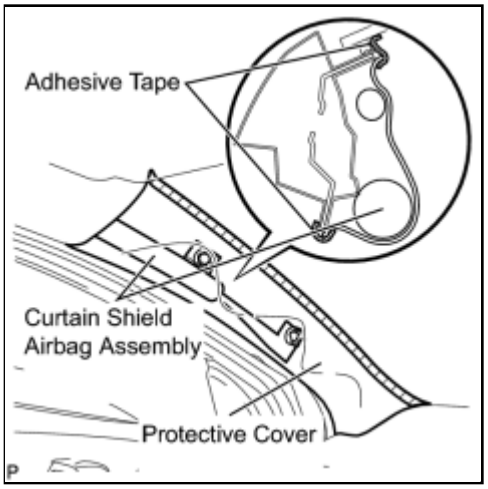

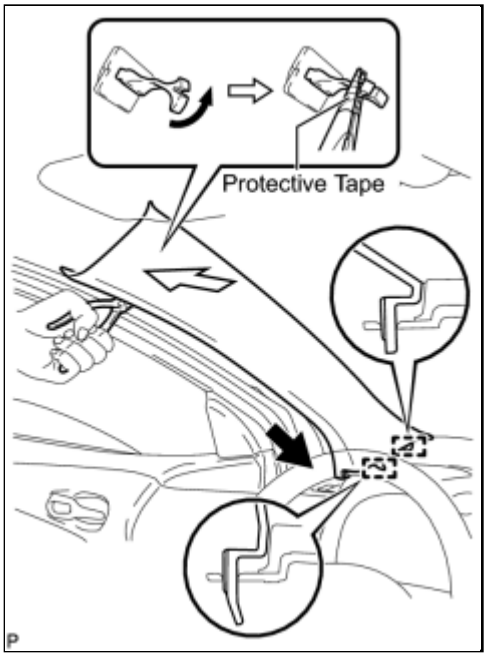

(b) Make sure that the front pillar garnish clip is not damaged.

NOTICE:

- If there is any damage, replace the garnish clip with a new one.
- When a garnish clip is being replaced, make sure to install it in the direction shown in the illustration.

(c) Engage the 2 guides.

(d) Turn the end of the front pillar garnish clip 90° with needle-nosed pliers and install it to the front pillar garnish LH.

HINT:

Tape the tips of the needle-nosed pliers before use.

(e) Engage the 2 clips to install the front pillar garnish LH.

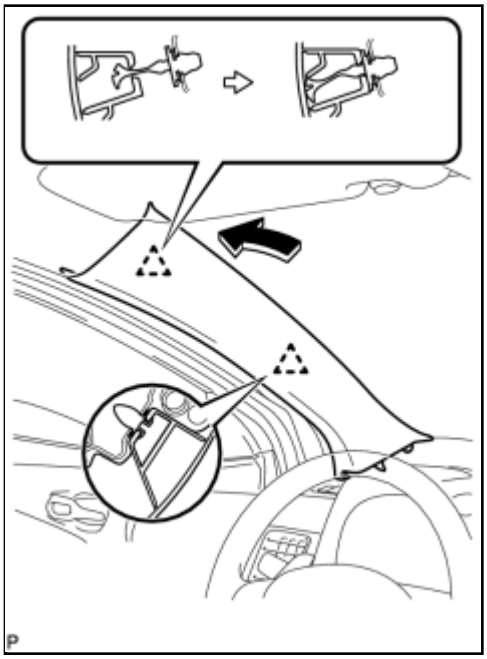

63. INSTALL FRONT PILLAR GARNISH LH (w/o Curtain Shield Airbag)

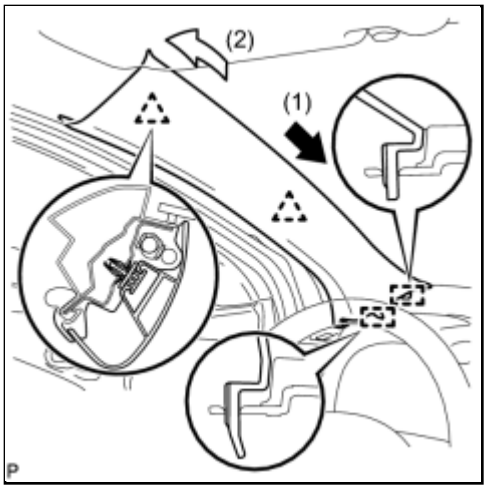

(a) Engage the 2 guides and 2 clips, and install the front pillar garnish LH.

64. INSTALL FRONT PILLAR GARNISH RH (w/ Curtain Shield Airbag)

HINT:

Use the same procedure for the RH side and LH side.

65. INSTALL FRONT PILLAR GARNISH RH (w/o Curtain Shield Airbag)

HINT:

Use the same procedure for the RH side and LH side.

66. INSTALL COMBINATION METER ASSEMBLY INFO

67. INSTALL INSTRUMENT CLUSTER FINISH PANEL ASSEMBLY INFO

68. INSTALL CENTER INSTRUMENT PANEL REGISTER ASSEMBLY INFO

69. INSTALL INSTRUMENT PANEL FINISH PANEL END LH INFO

70. INSTALL INSTRUMENT PANEL FINISH PANEL END RH INFO

71. INSTALL SHIFT LOCK CONTROL UNIT ASSEMBLY (for Automatic Transaxle)

for U250E: INFO

for U341E: INFO

72. INSTALL SHIFT LEVER ASSEMBLY (for Manual Transaxle)

for C59: INFO

for E351: INFO

73. CONNECT TRANSMISSION CONTROL CABLE ASSEMBLY (for Automatic Transaxle)

for U250E: INFO

for U341E: INFO

74. CONNECT TRANSMISSION CONTROL CABLE ASSEMBLY (for Manual Transaxle)

for C59: INFO

for E351: INFO

75. ADJUST TRANSMISSION CONTROL SELECT CABLE (for Manual Transaxle)

for C59: INFO

for E351: INFO

76. INSTALL CONSOLE BOX ASSEMBLY (for Automatic Transaxle) INFO

77. INSTALL CONSOLE BOX ASSEMBLY (for Manual Transaxle) INFO

78. INSTALL CONSOLE BOX CARPET INFO

79. INSTALL UPPER CONSOLE PANEL SUB-ASSEMBLY INFO

80. INSTALL FRONT NO. 1 CONSOLE BOX INSERT INFO

81. INSTALL FRONT NO. 2 CONSOLE BOX INSERT INFO

82. INSTALL INSTRUMENT PANEL BOX ASSEMBLY INFO

83. INSTALL CENTER NO. 1 INSTRUMENT CLUSTER FINISH PANEL ASSEMBLY (for Automatic Transaxle) INFO

84. INSTALL CENTER NO. 1 INSTRUMENT CLUSTER FINISH PANEL ASSEMBLY (for Manual

Transaxle) INFO

85. INSTALL SHIFT LEVER KNOB SUB-ASSEMBLY (for Automatic Transaxle) INFO

86. INSTALL SHIFT LEVER KNOB SUB-ASSEMBLY (for Manual Transaxle) INFO

87. INSTALL LOWER INSTRUMENT PANEL FINISH PANEL LH INFO

88. INSTALL LOWER INSTRUMENT PANEL FINISH PANEL RH INFO

89. INSTALL FRONT SEAT ASSEMBLY LH (for Manual Seat) INFO

90. INSPECT FRONT SEAT SLIDE ADJUSTER LOCK (for Manual Seat) INFO

91. INSTALL INNER SEAT TRACK COVER LH (for Manual Seat) INFO

92. INSTALL OUTER SEAT TRACK COVER LH (for Manual Seat) INFO

93. INSTALL FRONT SEAT HEADREST ASSEMBLY (for Manual Seat)

94. INSTALL FRONT SEAT ASSEMBLY LH (for Power Seat) INFO

95. INSTALL INNER SEAT TRACK COVER LH (for Power Seat) INFO

96. INSTALL OUTER SEAT TRACK COVER LH (for Power Seat) INFO

97. INSTALL FRONT SEAT HEADREST ASSEMBLY (for Power Seat)

98. INSTALL FRONT SEAT ASSEMBLY RH (for Manual Seat)

HINT:

Use the same procedure for the RH side and LH side INFO .

99. INSPECT FRONT SEAT SLIDE ADJUSTER LOCK (for Manual Seat) INFO

100. INSTALL INNER SEAT TRACK COVER RH (for Manual Seat)

HINT:

Use the same procedure for the RH side and LH side INFO .

101. INSTALL OUTER SEAT TRACK COVER RH (for Manual Seat)

HINT:

Use the same procedure for the RH side and LH side INFO .

102. INSTALL FRONT SEAT HEADREST ASSEMBLY (for Manual Seat)

103. CONNECT CABLE TO NEGATIVE BATTERY TERMINAL (for Manual Seat)

104. INSPECT SHIFT LEVER POSITION (for Automatic Transaxle)

for U250E: INFO

for U341E: INFO

105. ADJUST SHIFT LEVER POSITION (for Automatic Transaxle)

for U250E: INFO

for U341E: INFO

106. INSPECT SRS WARNING LIGHT

INFO

107. INSPECT FRONT SEAT ASSEMBLY (for Power Seat) INFO

Last Modified: 3-10-2010	6.4 A	**From:** 200901
Model Year: 2010	**Model:** Corolla	**Doc ID:** RM0000024DD03SX
Title: INTERIOR PANELS / TRIM: UPPER INSTRUMENT PANEL: REMOVAL (2010 Corolla)		

REMOVAL

1. PRECAUTION

INFO

2. DISCONNECT CABLE FROM NEGATIVE BATTERY TERMINAL

CAUTION:

Wait at least 90 seconds after disconnecting the cable from the negative (-) battery terminal to disable the SRS system.

3. REMOVE LOWER INSTRUMENT PANEL FINISH PANEL LH

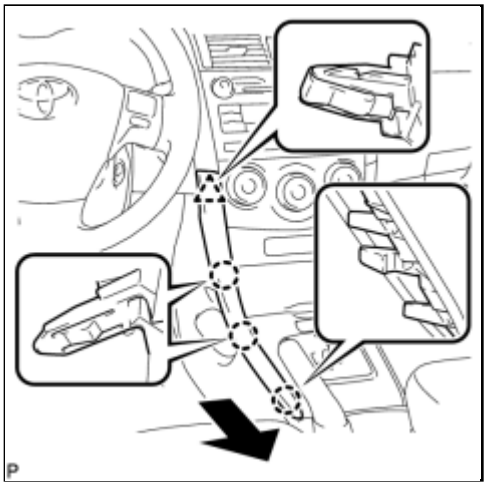

(a) Disengage the 3 claws and clip, and then remove the lower instrument panel finish panel LH.

4. REMOVE LOWER INSTRUMENT PANEL FINISH PANEL RH

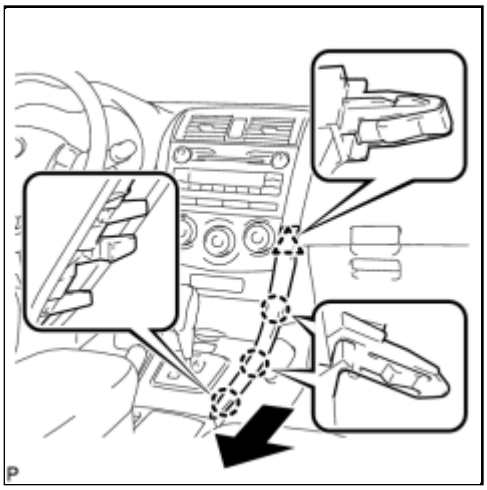

(a) Disengage the 3 claws and clip, and then remove the lower instrument panel finish panel RH.

5. REMOVE INSTRUMENT PANEL FINISH PANEL END LH

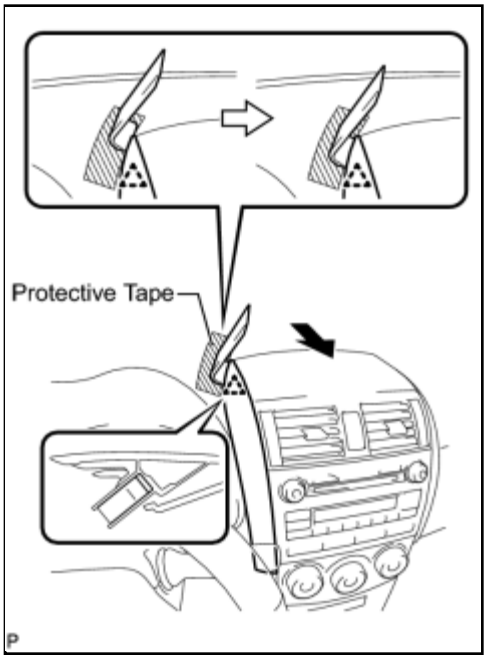

(a) Apply protective tape to the area shown in the illustration.

(b) Insert a roof moulding remover and slide it toward the clip.

(c) Pull the remover with both hands to disengage the clip as shown in the illustration.

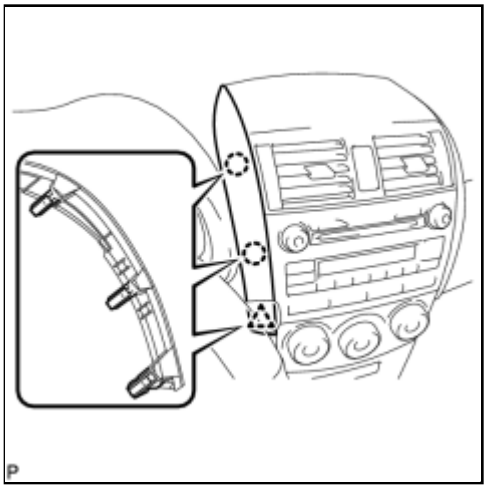

(d) Disengage the 2 claws and clip, and remove the instrument panel finish panel end LH.

6. REMOVE INSTRUMENT PANEL FINISH PANEL END RH

(a) Apply protective tape to the area shown in the illustration.

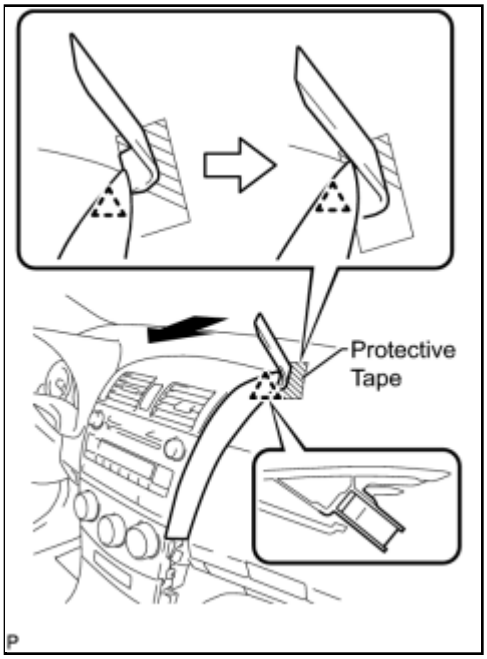

(b) Insert a roof moulding remover and slide it toward the clip.

(c) Pull the remover with both hands to disengage the clip as shown in the illustration.

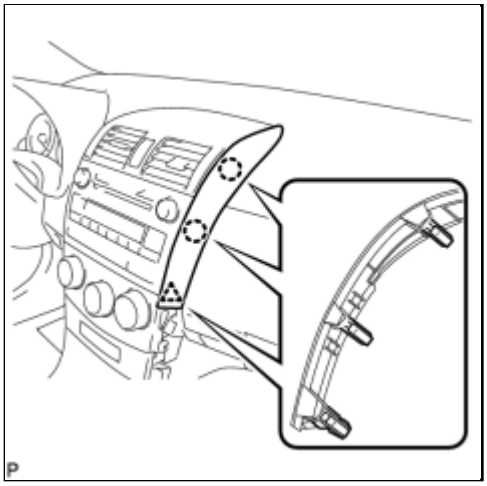

(d) Disengage the 2 claws and clip, and remove the instrument panel finish panel end RH.

7. REMOVE CENTER INSTRUMENT PANEL REGISTER ASSEMBLY

(a) Disengage the 2 claws, 4 clips, and 2 guides.

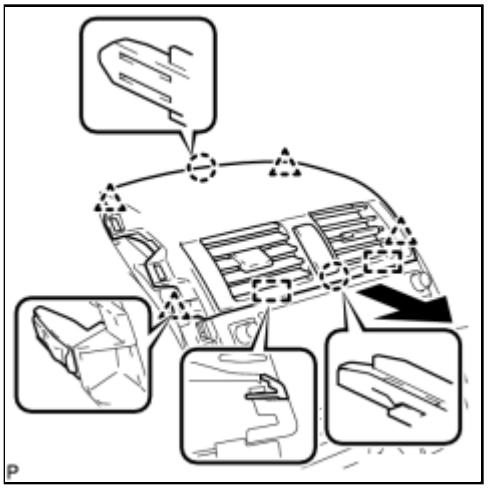

(b) Disconnect the connectors and remove the center instrument panel register assembly.

8. REMOVE INSTRUMENT CLUSTER FINISH PANEL ASSEMBLY INFO

9. REMOVE COMBINATION METER ASSEMBLY INFO

10. REMOVE FRONT PILLAR GARNISH LH (w/o Curtain Shield Airbag) INFO

11. REMOVE FRONT PILLAR GARNISH LH (w/ Curtain Shield Airbag) INFO

12. REMOVE FRONT PILLAR GARNISH RH (w/o Curtain Shield Airbag)

HINT:

Use the same procedure for the RH side and LH side.

13. REMOVE FRONT PILLAR GARNISH RH (w/ Curtain Shield Airbag) INFO

14. REMOVE LOWER INSTRUMENT PANEL FINISH PANEL ASSEMBLY

(a) Disengage the 6 claws and 3 clips.

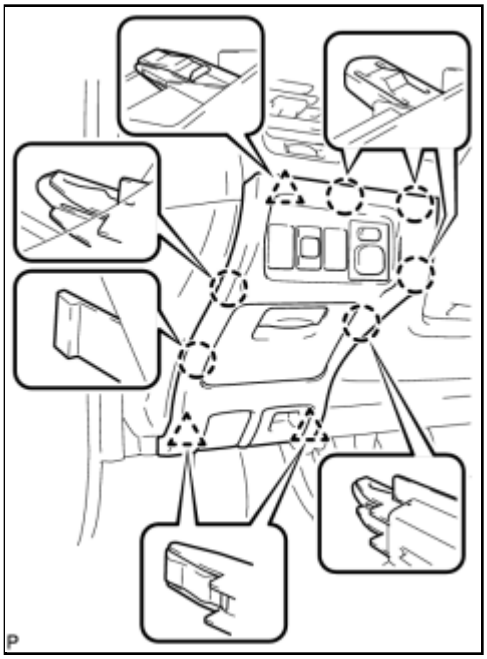

(b) Disconnect each connector and remove the lower instrument panel finish panel assembly.

15. DISCONNECT FRONT DOOR OPENING TRIM WEATHERSTRIP LH INFO

16. REMOVE GLOVE COMPARTMENT DOOR ASSEMBLY

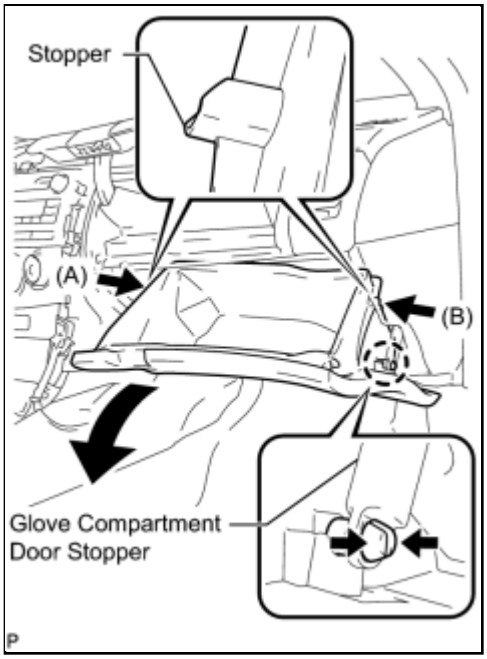

(a) Disengage the claw and release the glove compartment door stopper.

(b) Bend portions (A) and (B) in the direction indicated by the arrows in the illustration to release the 2 stoppers, and lower the glove compartment door assembly until the front of the door is level.

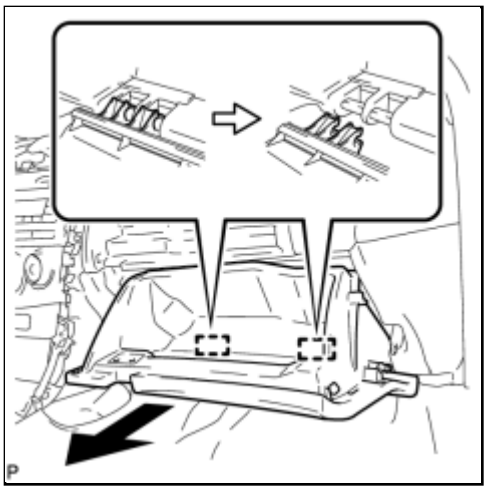

(c) Pull the glove compartment door assembly horizontally toward the rear of the vehicle to release the 2 hinges, and remove the glove compartment door assembly.

NOTICE:

Pulling the glove compartment door assembly upward to remove it will cause the hinges to deform. Be sure to pull out the compartment door horizontally.

17. REMOVE NO. 1 INSTRUMENT PANEL BOX DOOR SUB-ASSEMBLY

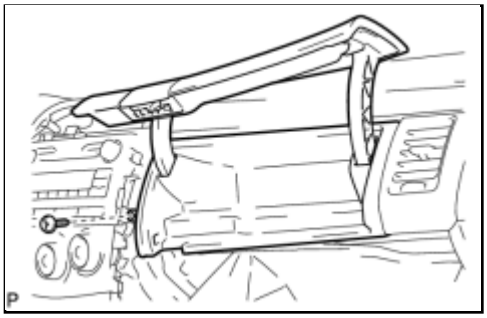

(a) Remove the screw <B>.

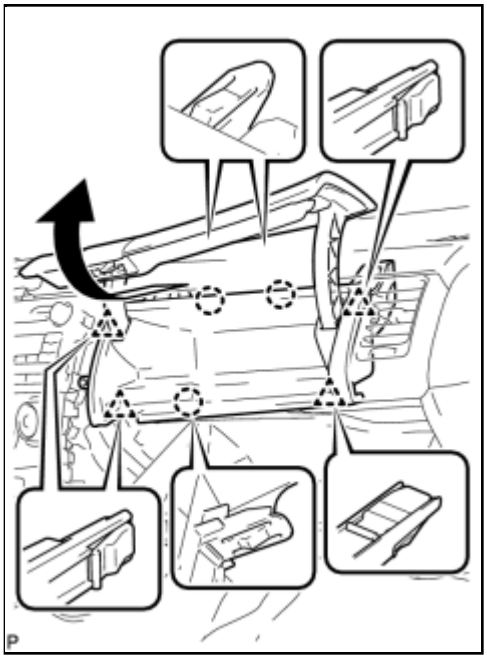

(b) Disengage the 3 claws and 4 clips, and then remove the No. 1 instrument panel box door sub-assembly.

18. DISCONNECT FRONT DOOR OPENING TRIM WEATHERSTRIP RH

HINT:

Use the same procedure for the RH side and LH side.

19. DISCONNECT INSTRUMENT PANEL WIRE ASSEMBLY INFO

20. REMOVE UPPER INSTRUMENT PANEL SUB-ASSEMBLY

(a) Operate the tilt lever to lower the steering wheel assembly.

(b) Disconnect each connector.

(c) Remove the 2 screws <B>.

(d) Remove the passenger airbag bolt <A>.

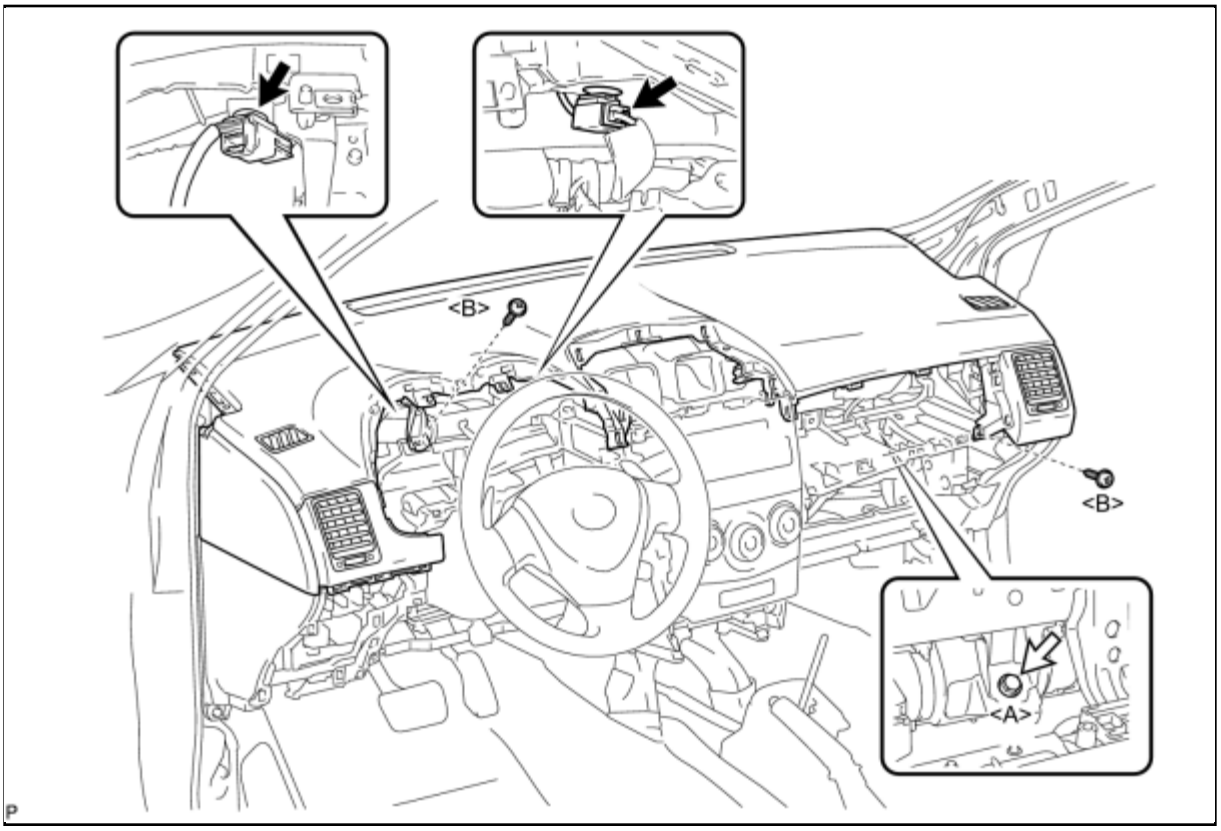

(e) Disengage the 5 clips and 4 guides.

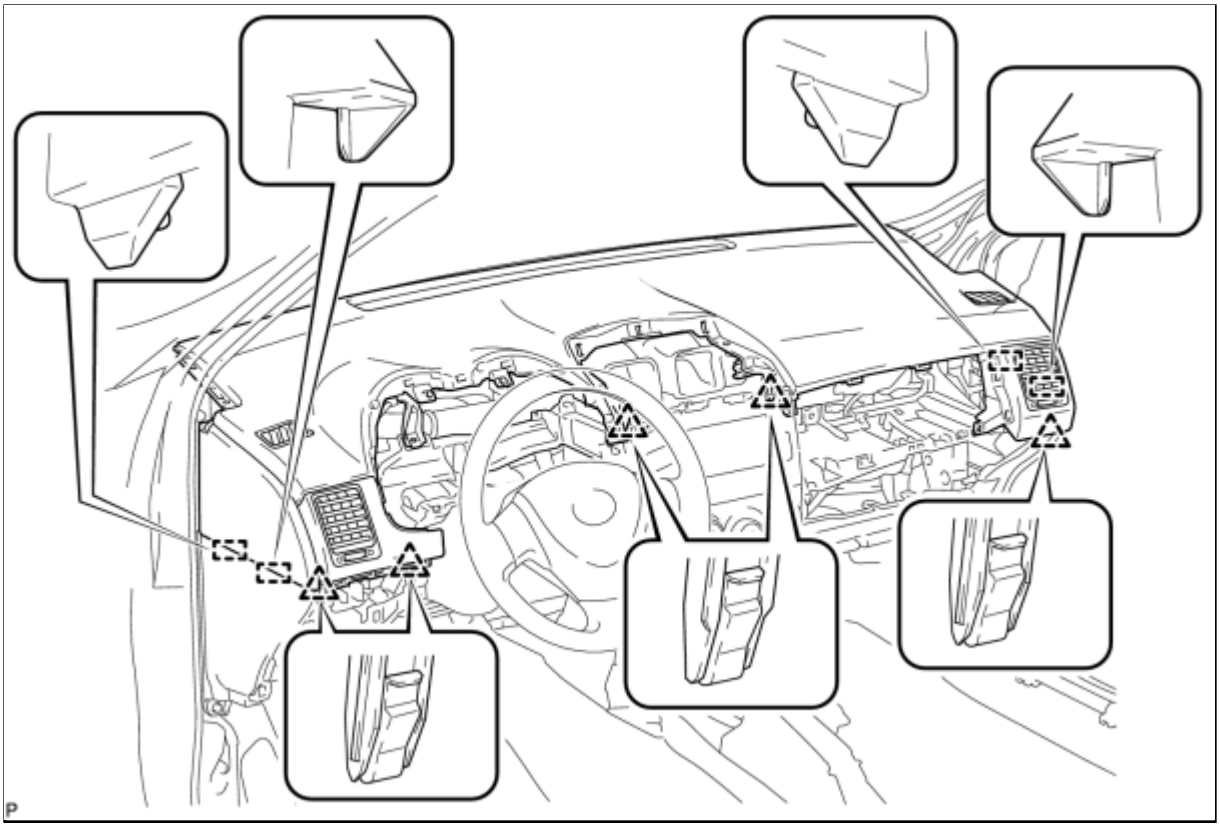

(f) Disengage the 5 claws and then remove the upper instrument panel sub-assembly.

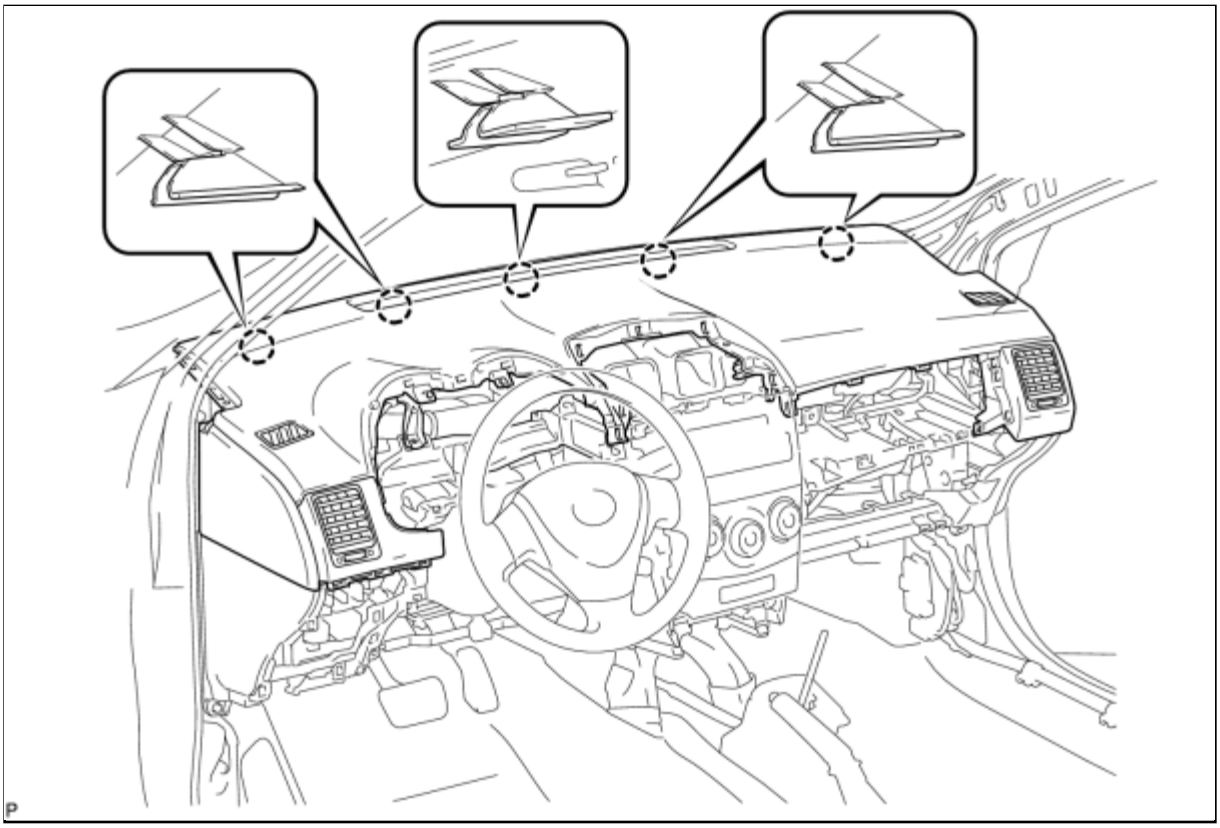

NOTICE:

When removing the upper instrument panel sub-assembly, be careful not to damage it or the steering wheel assembly.

Last Modified: 3-10-2010	6.4 K	**From:** 200901
Model Year: 2010	**Model:** Corolla	**Doc ID:** RM0000024DC01SX
Title: INTERIOR PANELS / TRIM: UPPER INSTRUMENT PANEL: COMPONENTS (2010 Corolla)		

COMPONENTS

ILLUSTRATION

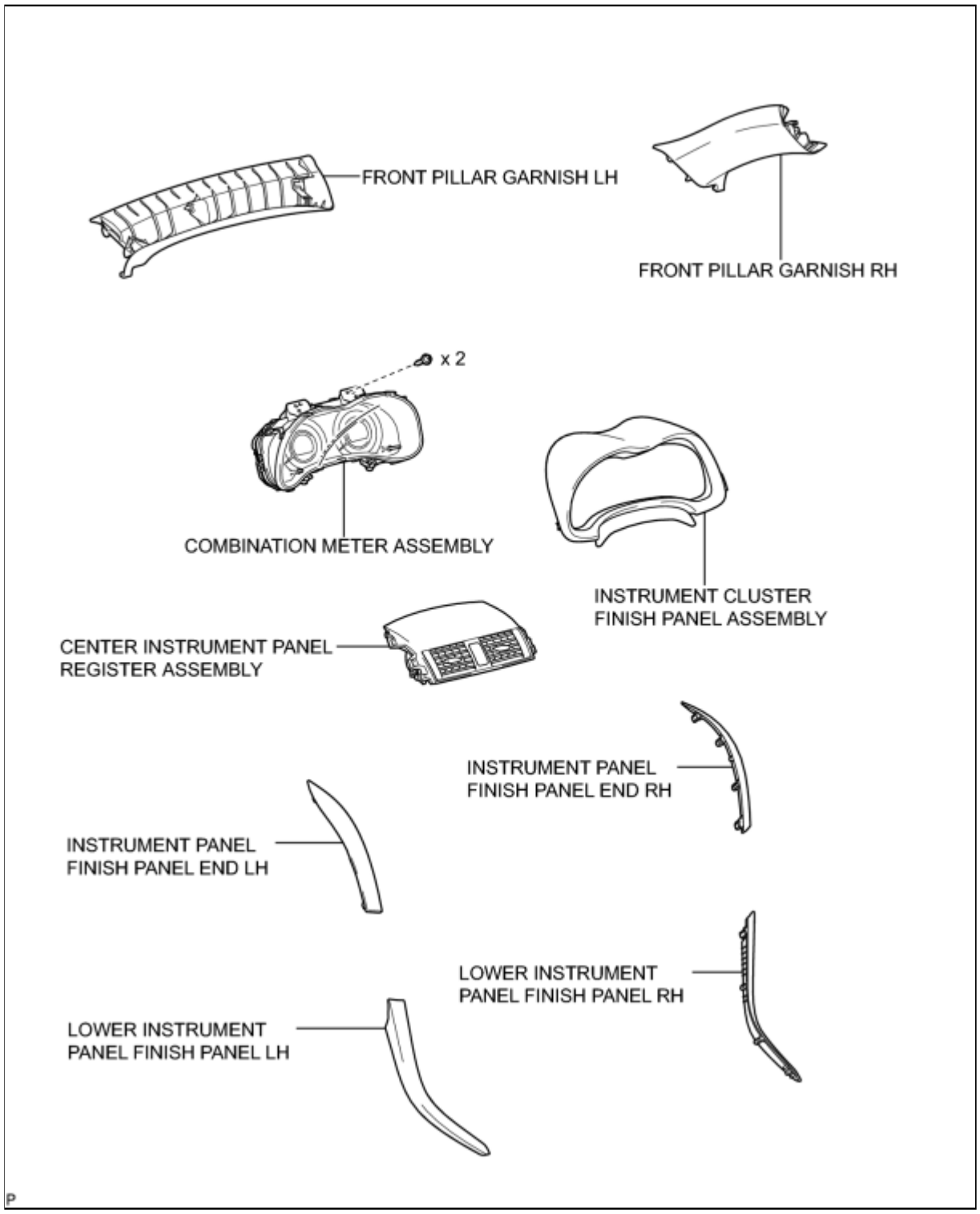

ILLUSTRATION

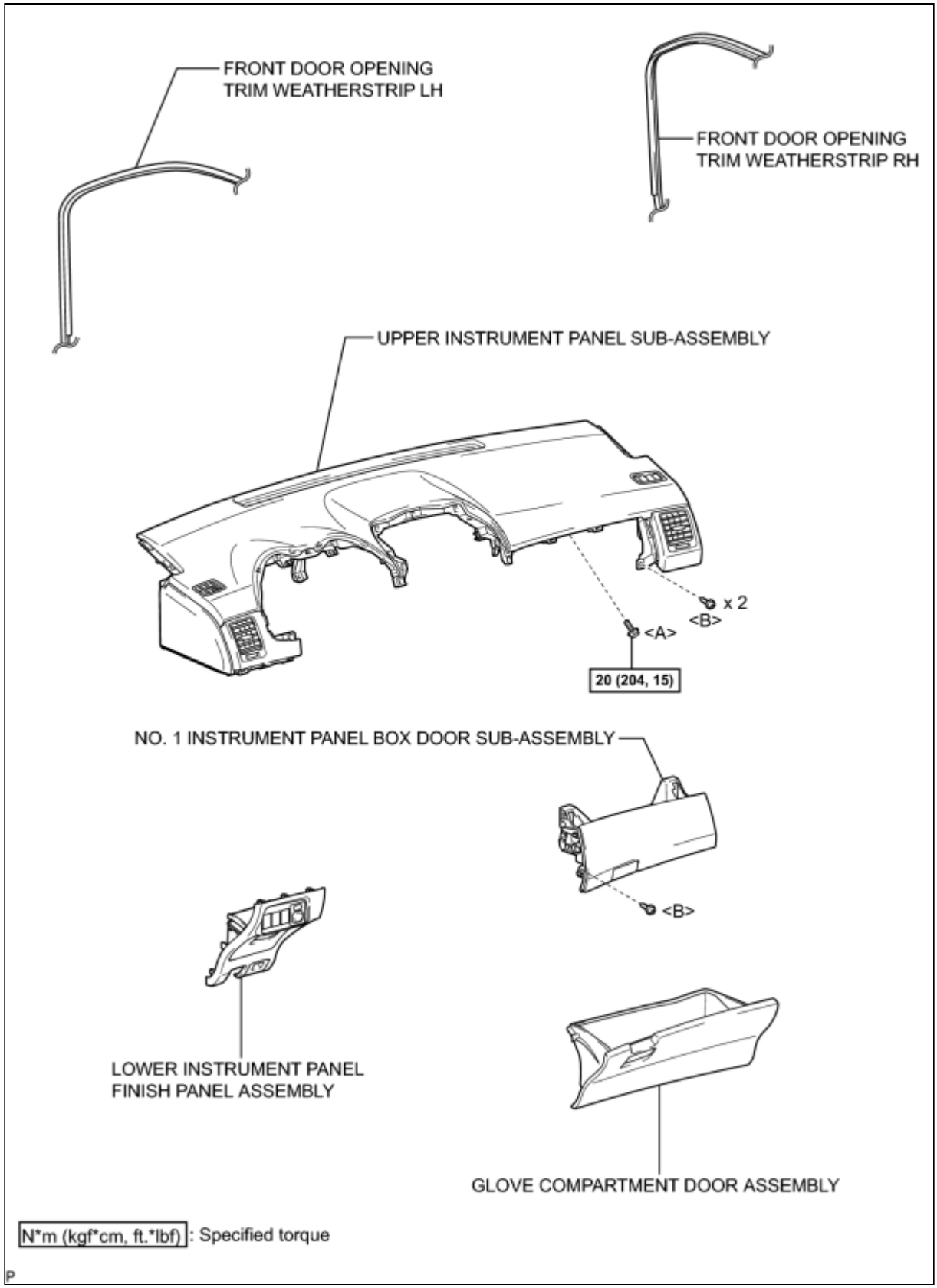

ILLUSTRATION

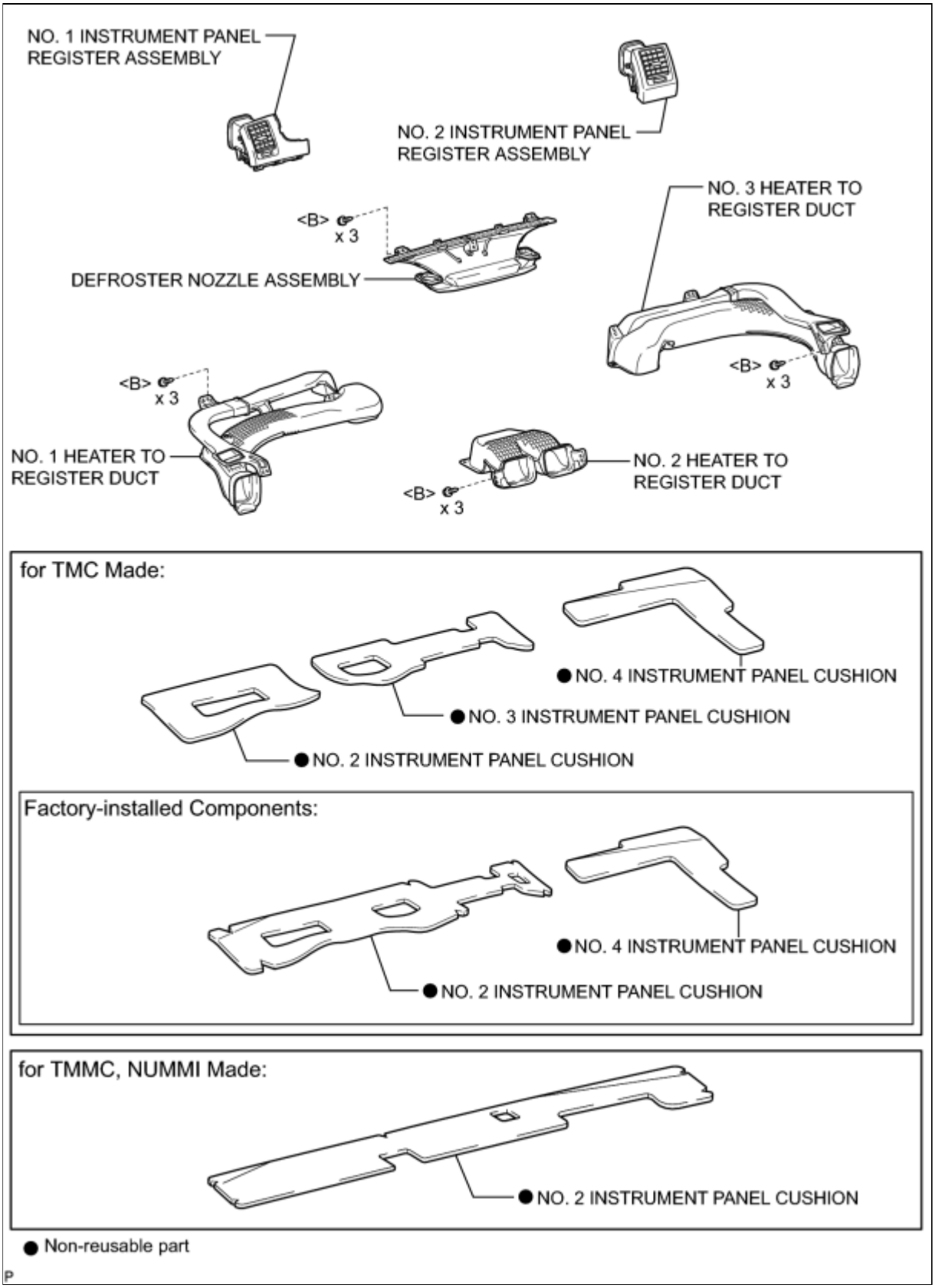

ILLUSTRATION

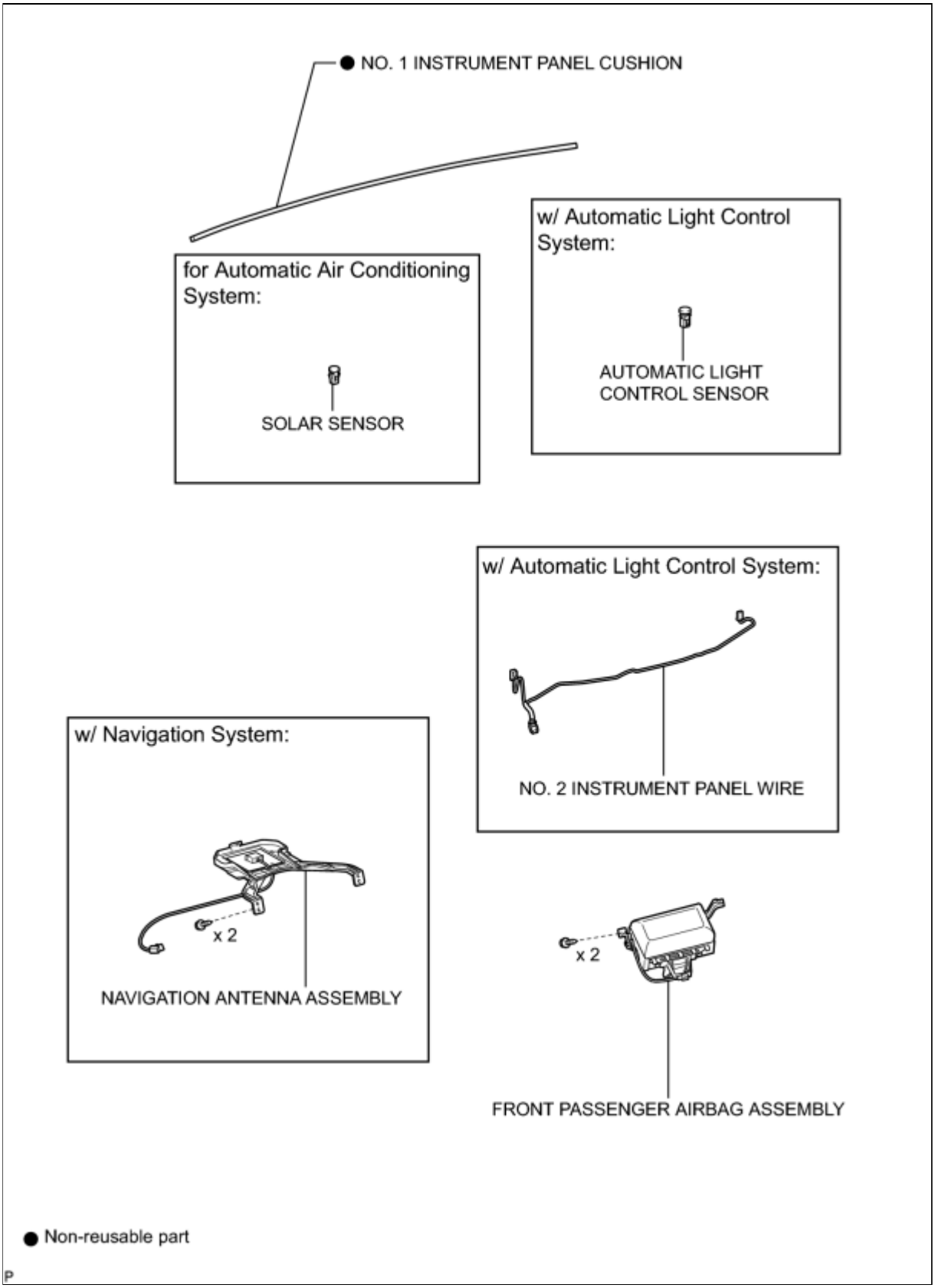

Last Modified: 3-10-2010	6.4 L	**From:** 200901
Model Year: 2010	**Model:** Corolla	**Doc ID:** RM000002DMC01IX
Title: INTERIOR PANELS / TRIM: UPPER INSTRUMENT PANEL: PRECAUTION (2010 Corolla)		

PRECAUTION

1. PRECAUTION FOR VEHICLE WITH SRS AIRBAG AND SEAT BELT PRETENSIONER

(a) Some operations in this section may affect the SRS airbags. Prior to performing the corresponding operations, read the precautions regarding the SRS airbags.

2. TABLE OF BOLT, SCREW AND NUT

CODE	SHAPE	SIZE
<A>	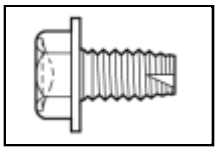	φ = 8 mm (0.315 in.) Length = 15 mm (0.591 in.)
<B>	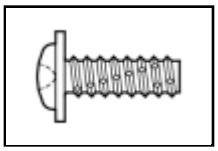	φ = 5 mm (0.197 in.) Length = 14 mm (0.551 in.)

Last Modified: 3-10-2010	6.4 A	**From:** 200901
Model Year: 2010	**Model:** Corolla	**Doc ID:** RM0000024DE02DX
Title: INTERIOR PANELS / TRIM: UPPER INSTRUMENT PANEL: DISASSEMBLY (2010 Corolla)		

DISASSEMBLY

1. REMOVE DEFROSTER NOZZLE ASSEMBLY

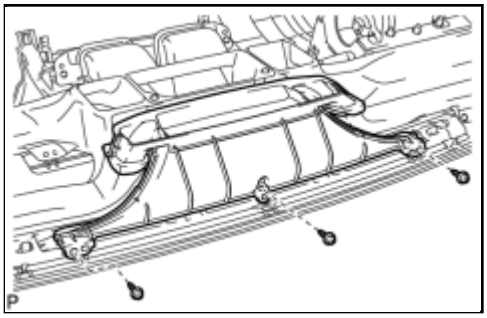

(a) Remove the 3 screws <B> and the defroster nozzle assembly.

2. REMOVE NO. 2 HEATER TO REGISTER DUCT

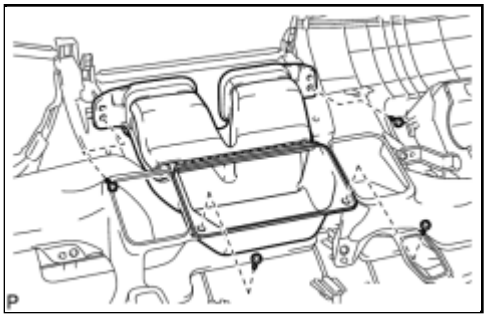

(a) Remove the 4 screws <B> and the No. 2 heater to register duct.

3. REMOVE NO. 1 HEATER TO REGISTER DUCT

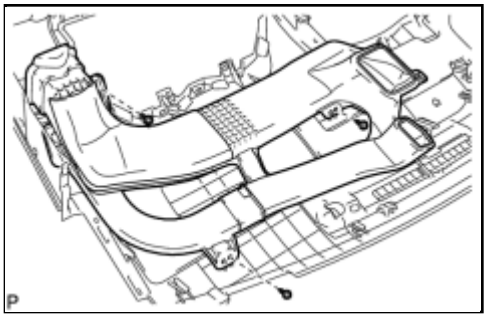

(a) Remove the 3 screws <B> and the No. 1 heater to register duct.

4. REMOVE NO. 3 HEATER TO REGISTER DUCT

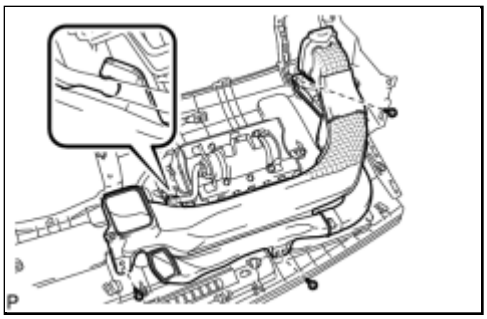

(a) Remove the 3 screws <B> and the No. 3 heater to register duct.

5. REMOVE NO. 1 INSTRUMENT PANEL REGISTER ASSEMBLY

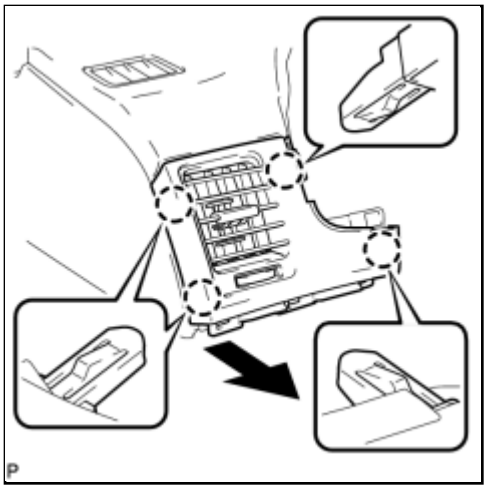

(a) Disengage the 4 claws and remove the No. 1 instrument panel register assembly.

6. REMOVE NO. 2 INSTRUMENT PANEL REGISTER ASSEMBLY

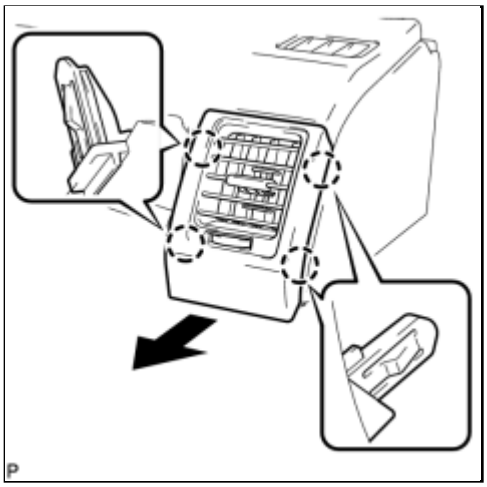

(a) Disengage the 4 claws and remove the No. 2 instrument panel register assembly.

7. REMOVE NO. 2 INSTRUMENT PANEL CUSHION (for TMC Made)

(a) Factory-installed components:

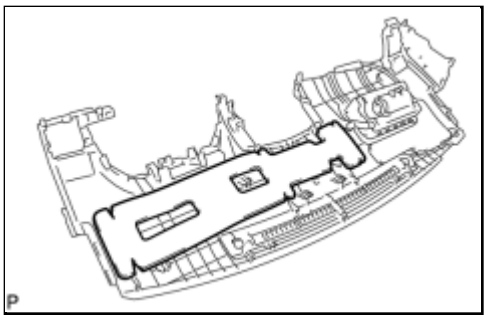

(1) Remove the No. 2 instrument panel cushion.

NOTICE:

Always replace the No. 2 instrument panel cushion with a new one.

(b) Except factory-installed components:

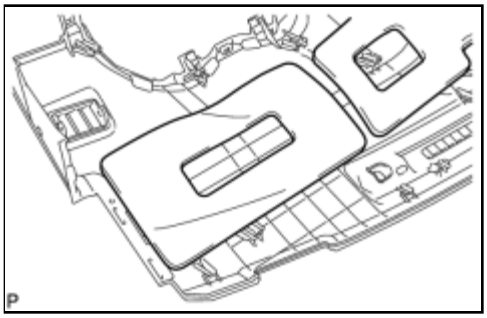

(1) Remove the No. 2 instrument panel cushion.

NOTICE:

Always replace the No. 2 instrument panel cushion with a new one.

8. REMOVE NO. 2 INSTRUMENT PANEL CUSHION (for TMMC, NUMMI Made)

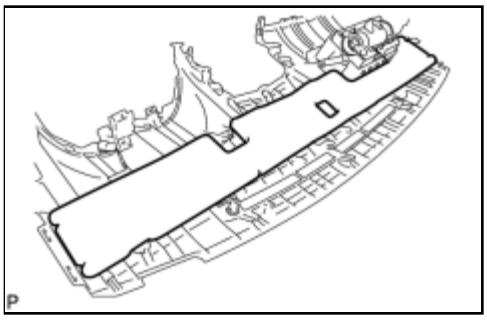

(a) Remove the No. 2 instrument panel cushion.

NOTICE:

Always replace the No. 2 instrument panel cushion with a new one.

9. REMOVE NO. 3 INSTRUMENT PANEL CUSHION (for TMC Made)

(a) Except factory-installed components:

(1) Remove the No. 3 instrument panel cushion.

NOTICE:

Always replace the No. 3 instrument panel cushion with a new one.

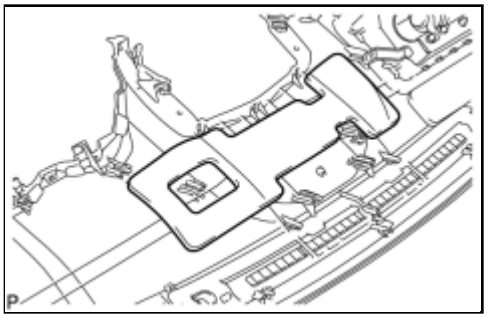

10. REMOVE NO. 4 INSTRUMENT PANEL CUSHION (for TMC Made)

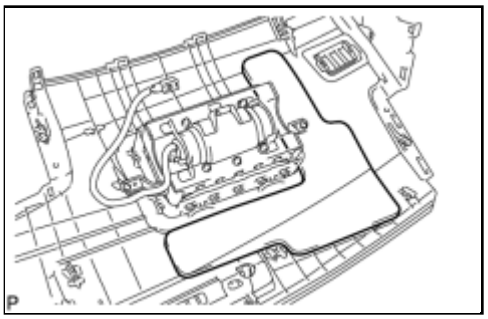

(a) Remove the No. 4 instrument panel cushion.

NOTICE:

Always replace the No. 4 instrument panel cushion with a new one.

11. REMOVE NAVIGATION ANTENNA ASSEMBLY (w/ Navigation System) INFO

12. REMOVE FRONT PASSENGER AIRBAG ASSEMBLY INFO

13. REMOVE NO. 2 INSTRUMENT PANEL WIRE (w/ Automatic Light Control System)

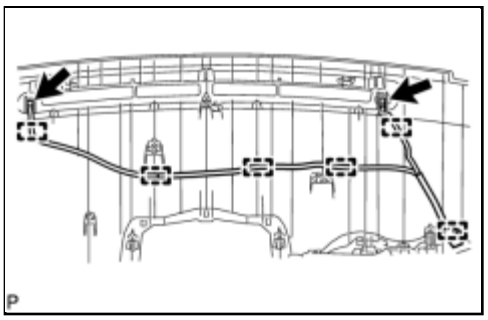

(a) Disconnect each connector.

(b) Disengage the 6 clamps and remove the No. 2 instrument panel wire.

14. REMOVE AUTOMATIC LIGHT CONTROL SENSOR (w/ Automatic Light Control System)

(a) Disengage the 2 claws and remove the automatic light control sensor.

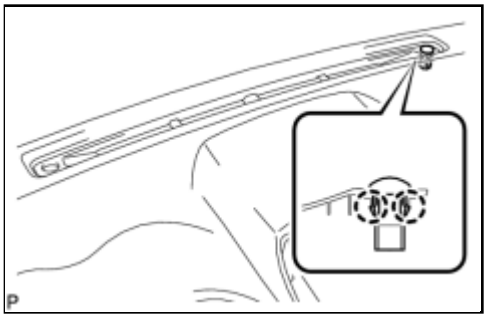

15. REMOVE SOLAR SENSOR (for Automatic Air Conditioning System)

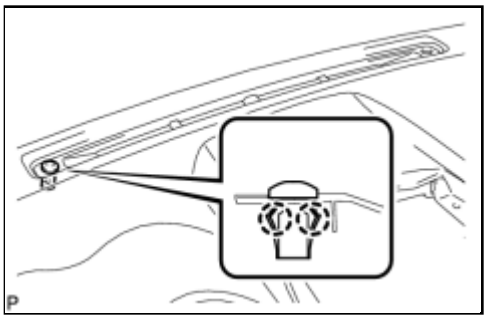

(a) Disengage the 2 claws and remove the solar sensor.

16. REMOVE NO. 1 INSTRUMENT PANEL CUSHION

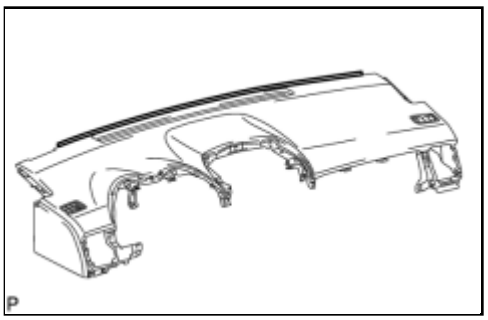

(a) Remove the No. 1 instrument panel cushion.

NOTICE:

Always replace the No. 1 instrument panel cushion with a new one.

Last Modified: 3-10-2010	6.4 A	**From:** 200901
Model Year: 2010	**Model:** Corolla	**Doc ID:** RM0000024DF02DX
Title: INTERIOR PANELS / TRIM: UPPER INSTRUMENT PANEL: REASSEMBLY (2010 Corolla)		

REASSEMBLY

1. INSTALL NO. 1 INSTRUMENT PANEL CUSHION

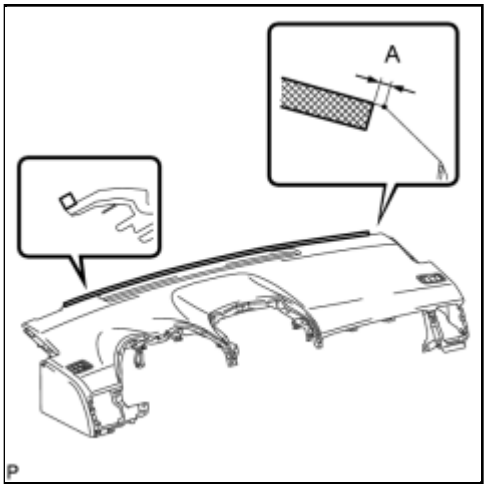

(a) Install a new No. 1 instrument panel cushion as shown in the illustration.

AREA	MEASUREMENT
A	0 to 10 mm (0 to 0.394 in.)

2. INSTALL SOLAR SENSOR (for Automatic Air Conditioning System)

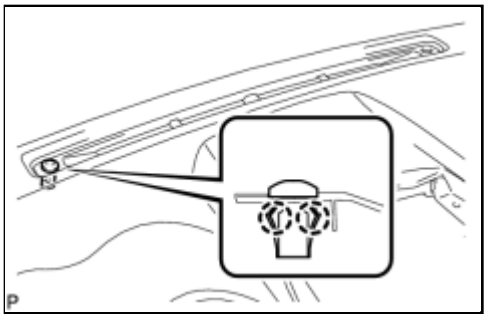

(a) Engage the 2 claws and install the solar sensor.

3. INSTALL AUTOMATIC LIGHT CONTROL SENSOR (w/ Automatic Light Control System)

(a) Engage the 2 claws and install the automatic light control sensor.

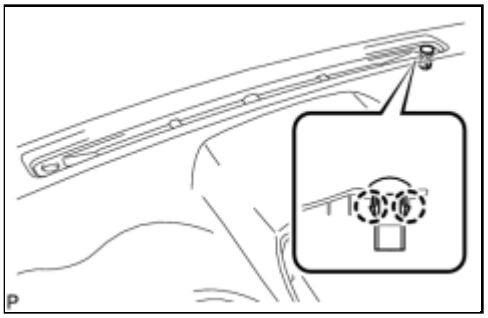

4. INSTALL NO. 2 INSTRUMENT PANEL WIRE (w/ Automatic Light Control System)

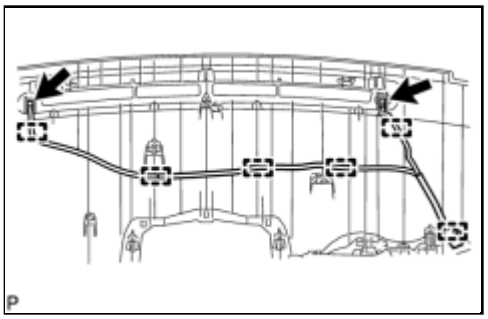

(a) Engage the 6 clamps.

(b) Connect each connector and install the No. 2 instrument panel wire.

5. INSTALL NO. 1 INSTRUMENT PANEL REGISTER ASSEMBLY

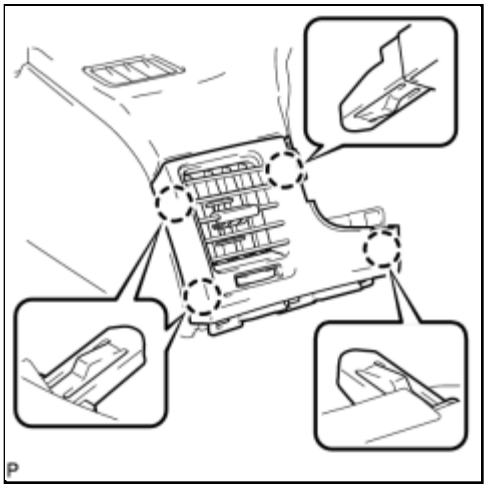

(a) Engage the 4 claws and install the No. 1 instrument panel register assembly.

6. INSTALL NO. 2 INSTRUMENT PANEL REGISTER ASSEMBLY

(a) Engage the 4 claws and install the No. 2 instrument panel register assembly.

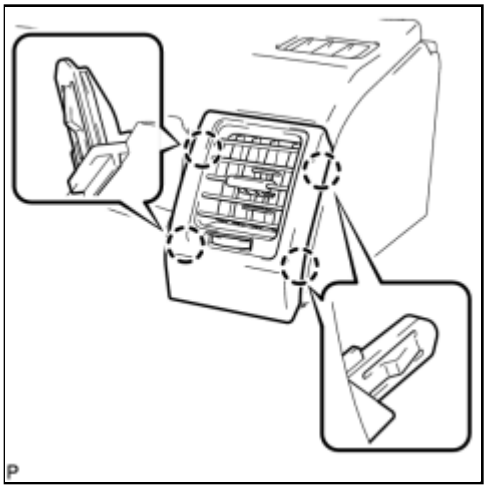

7. INSTALL FRONT PASSENGER AIRBAG ASSEMBLY INFO

8. INSTALL NAVIGATION ANTENNA ASSEMBLY (w/ Navigation System) INFO

9. INSTALL NO. 4 INSTRUMENT PANEL CUSHION (for TMC Made)

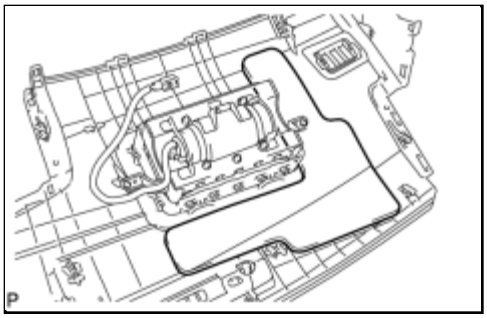

(a) Install a new No. 4 instrument panel cushion.

10. INSTALL NO. 3 INSTRUMENT PANEL CUSHION (for TMC Made)

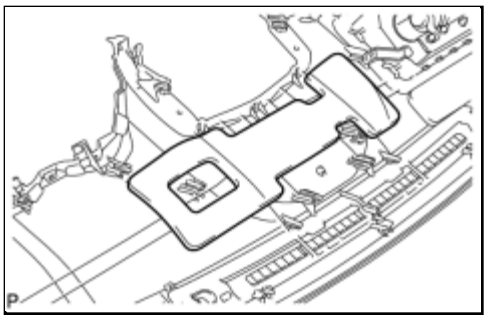

(a) Install a new No. 3 instrument panel cushion.

11. INSTALL NO. 2 INSTRUMENT PANEL CUSHION (for TMC Made)

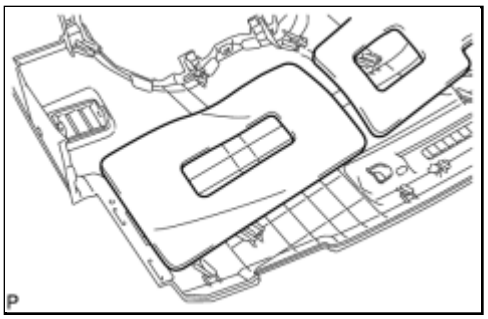

(a) Install a new No. 2 instrument panel cushion.

12. INSTALL NO. 2 INSTRUMENT PANEL CUSHION (for TMMC, NUMMI Made)

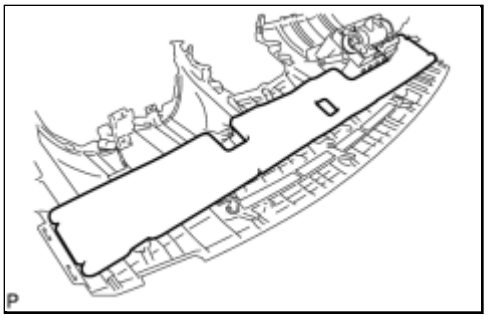

(a) Install a new No. 2 instrument panel cushion.

13. INSTALL NO. 3 HEATER TO REGISTER DUCT

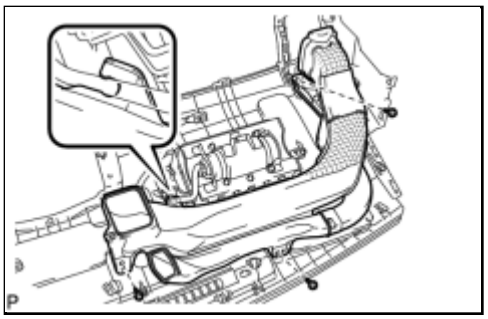

(a) Install the No. 3 heater to register duct with the 3 screws <B>.

14. INSTALL NO. 1 HEATER TO REGISTER DUCT

(a) Install the No. 1 heater to register duct with the 3 screws <B>.

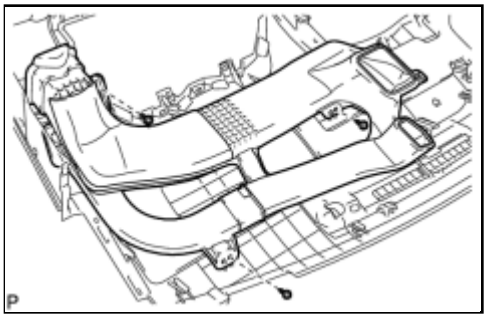

15. INSTALL NO. 2 HEATER TO REGISTER DUCT

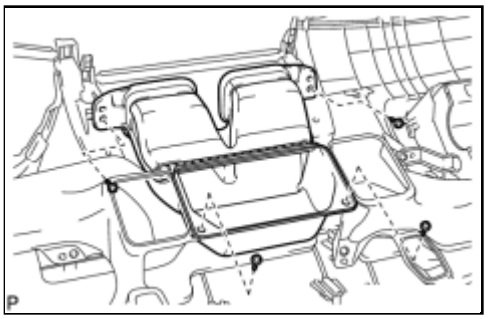

(a) Install the No. 2 heater to register duct with the 4 screws <B>.

16. INSTALL DEFROSTER NOZZLE ASSEMBLY

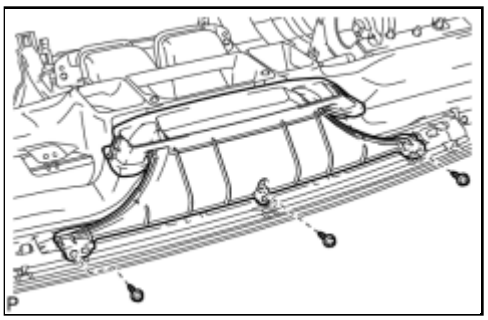

(a) Install the defroster nozzle assembly with the 3 screws <B>.

Last Modified: 3-10-2010	6.4 A	**From:** 200901
Model Year: 2010	**Model:** Corolla	**Doc ID:** RM0000024DA03SX
Title: INTERIOR PANELS / TRIM: UPPER INSTRUMENT PANEL: INSTALLATION (2010 Corolla)		

INSTALLATION

1. INSTALL UPPER INSTRUMENT PANEL SUB-ASSEMBLY

(a) When using a new upper instrument panel sub-assembly:

(1) Immediately before installing the upper instrument panel sub-assembly, twist and cut off the portions shown in the illustration (joints for moulding).

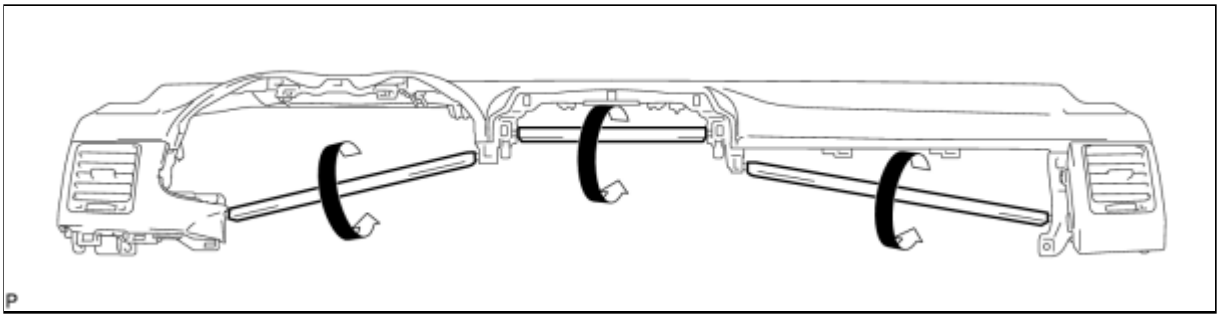

(b) Install the upper instrument panel sub-assembly and engage the 5 claws.

NOTICE:

- When installing the upper instrument panel sub-assembly, be careful not to damage it or the steering wheel assembly.
- Do not allow the wire harness to get caught in the claws.

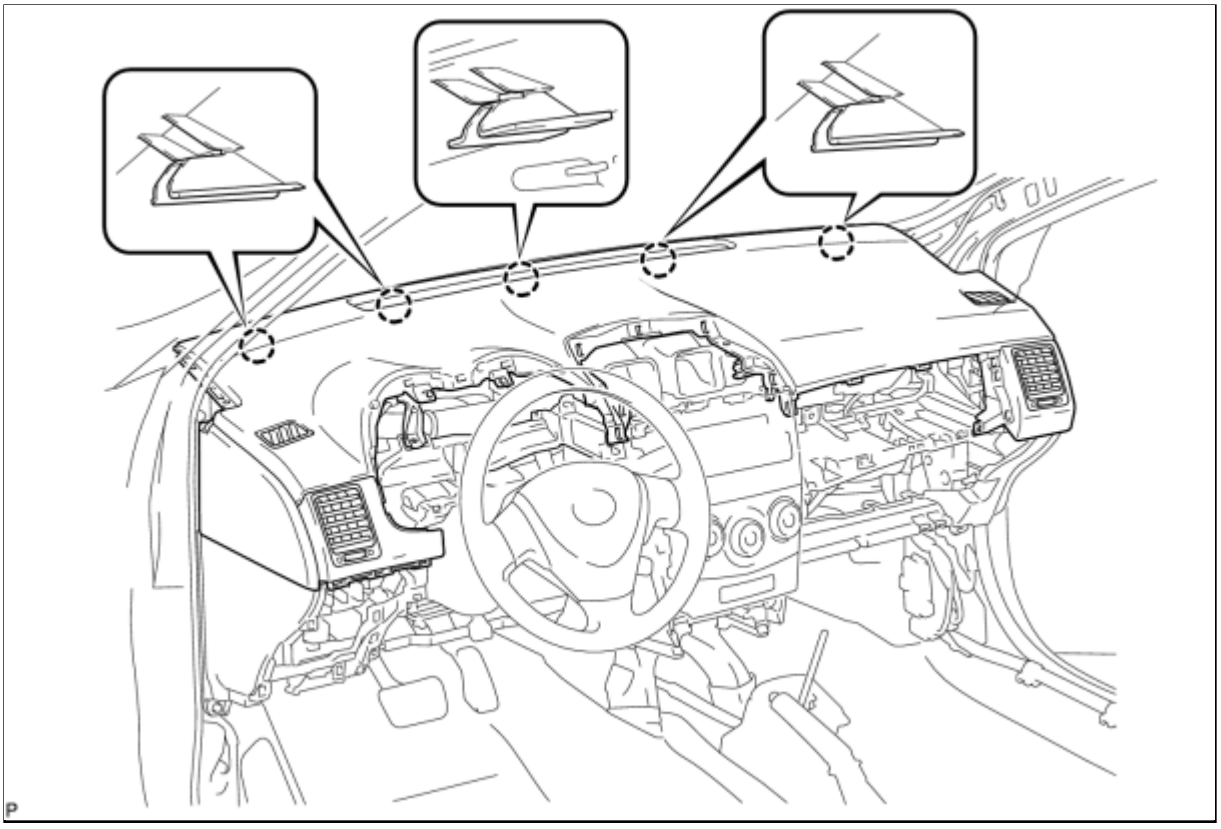

(c) Engage the 5 clips and 4 guides.

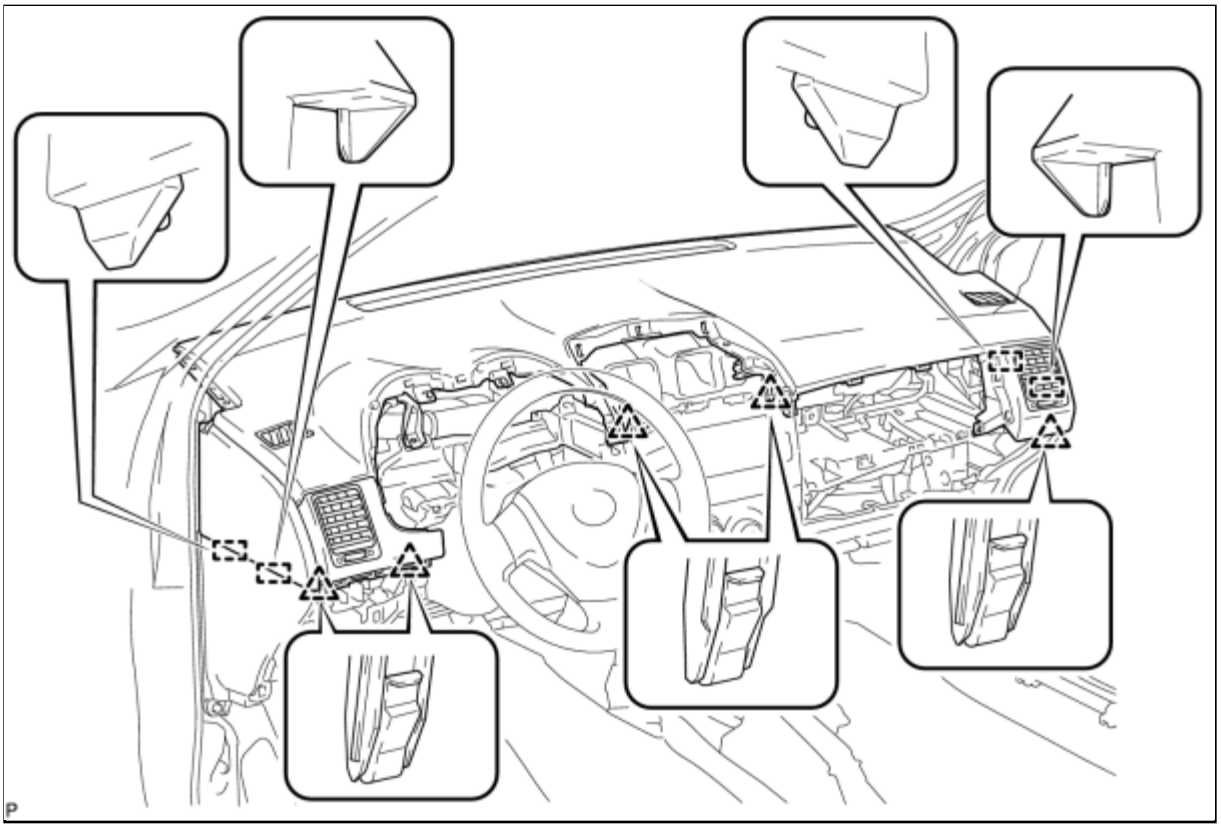

(d) Install the 2 screws <B>.

(e) Install the passenger airbag bolt <A>.

Torque: 20 N·m (204 kgf·cm, 15ft·lbf)

(f) Connect each connector.

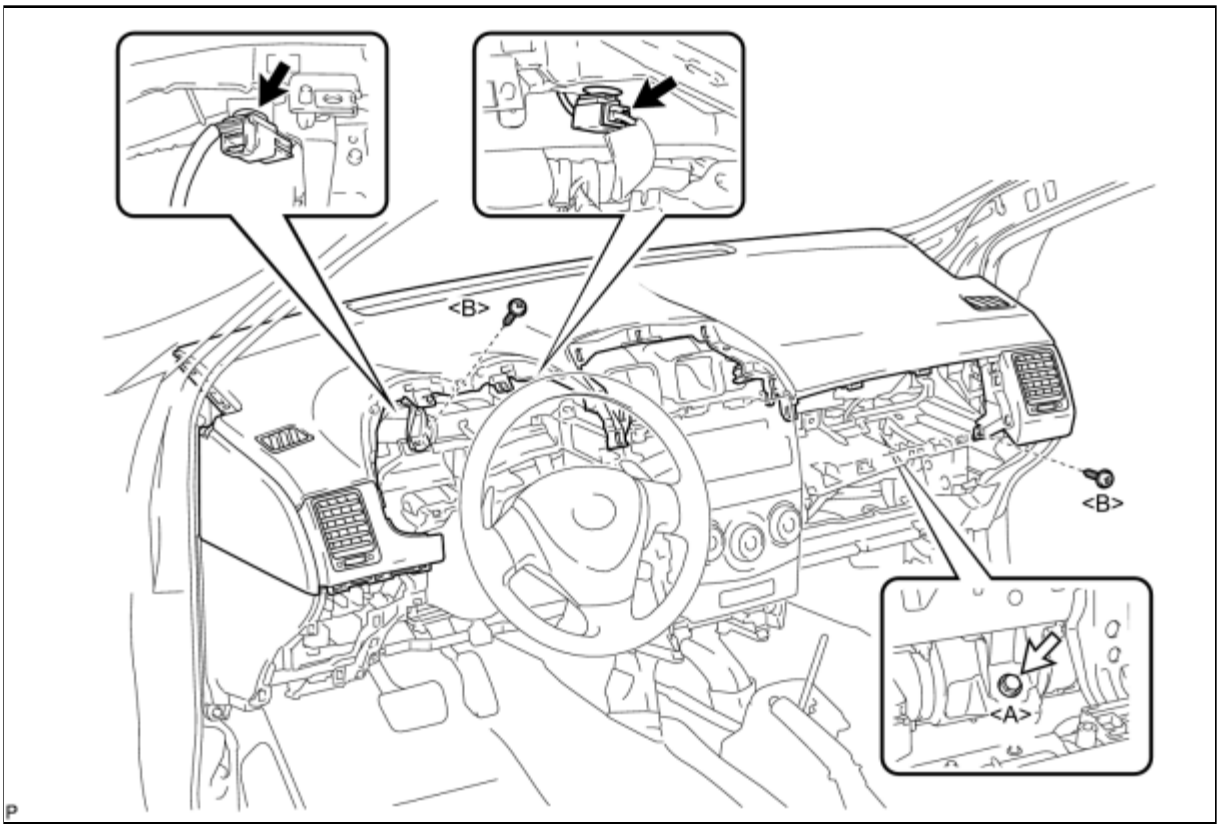

2. CONNECT INSTRUMENT PANEL WIRE ASSEMBLY INFO

3. CONNECT FRONT DOOR OPENING TRIM WEATHERSTRIP LH INFO

4. INSTALL LOWER INSTRUMENT PANEL FINISH PANEL ASSEMBLY

(a) Connect each connector.

(b) Engage the 6 claws and 3 clips to install the lower instrument panel finish panel assembly.

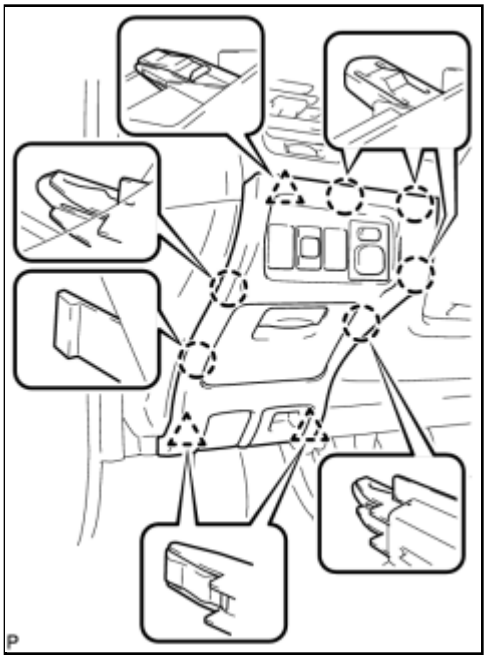

5. CONNECT FRONT DOOR OPENING TRIM WEATHERSTRIP RH

HINT:

Use the same procedure for the RH side and LH side.

6. INSTALL NO. 1 INSTRUMENT PANEL BOX DOOR SUB-ASSEMBLY

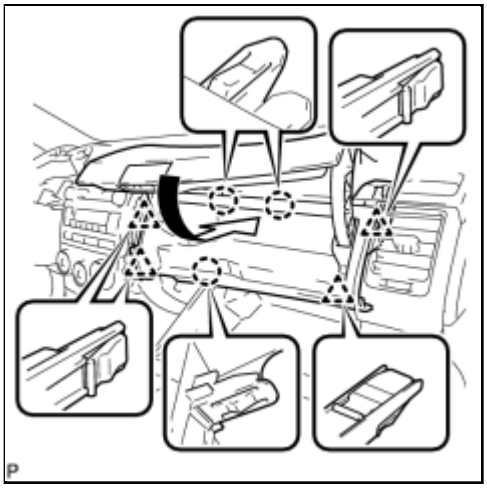

(a) Engage the 3 claws and 4 clips.

(b) Install the No. 1 instrument panel box door sub-assembly with the screw <B>.

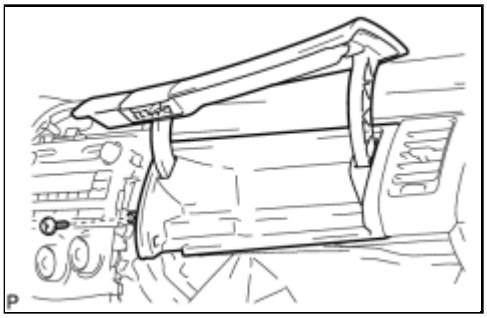

7. INSTALL GLOVE COMPARTMENT DOOR ASSEMBLY

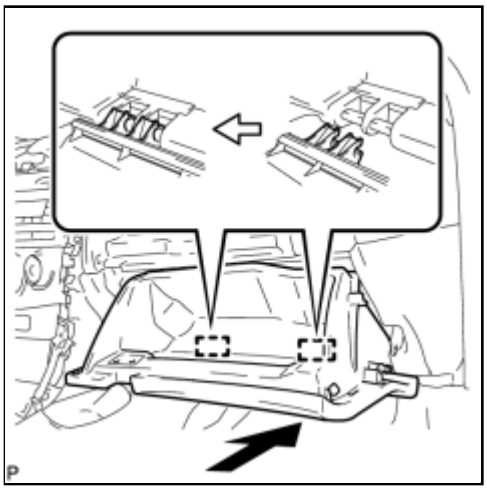

(a) Insert the glove compartment door assembly horizontally and engage the 2 hinges.

NOTICE:

Engaging the hinges from the above will deform the hinges. Be sure to install the glove compartment door assembly horizontally.

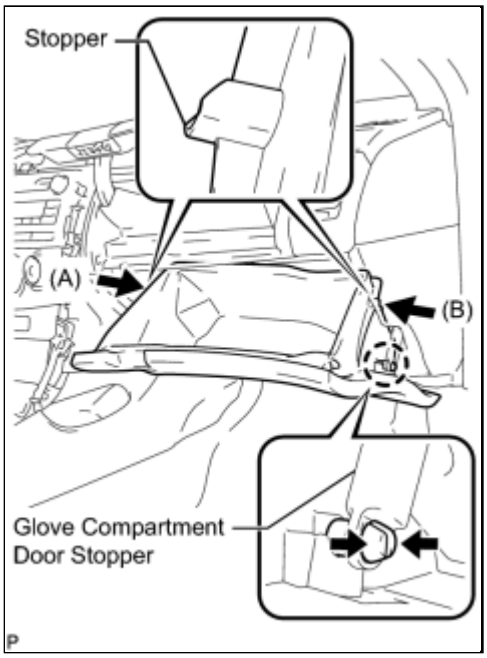

(b) Bend portions (A) and (B) in the direction indicated by the arrows in the illustration to engage the 2 stoppers.

(c) Engage the claw, connect the glove compartment door stopper, and install the glove compartment

door assembly.

8. INSTALL FRONT PILLAR GARNISH LH (w/ Curtain Shield Airbag) INFO

9. INSTALL FRONT PILLAR GARNISH LH (w/o Curtain Shield Airbag) INFO

10. INSTALL FRONT PILLAR GARNISH RH (w/ Curtain Shield Airbag) INFO

11. INSTALL FRONT PILLAR GARNISH RH (w/o Curtain Shield Airbag)

HINT:

Use the same procedure for the RH side and LH side.

12. INSTALL COMBINATION METER ASSEMBLY INFO

13. INSTALL INSTRUMENT CLUSTER FINISH PANEL ASSEMBLY INFO

14. INSTALL CENTER INSTRUMENT PANEL REGISTER ASSEMBLY

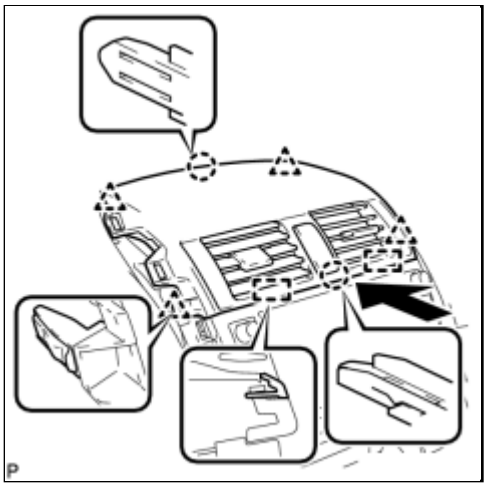

(a) Connect the connector.

(b) Engage the 2 guides, 2 claws and 4 clips, and install the center instrument panel register assembly.

15. INSTALL INSTRUMENT PANEL FINISH PANEL END LH

(a) Engage the 2 claws and 2 clips, and then install the instrument panel finish panel end LH.

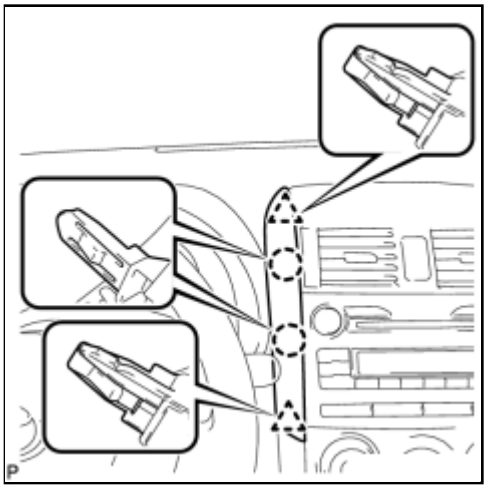

16. INSTALL INSTRUMENT PANEL FINISH PANEL END RH

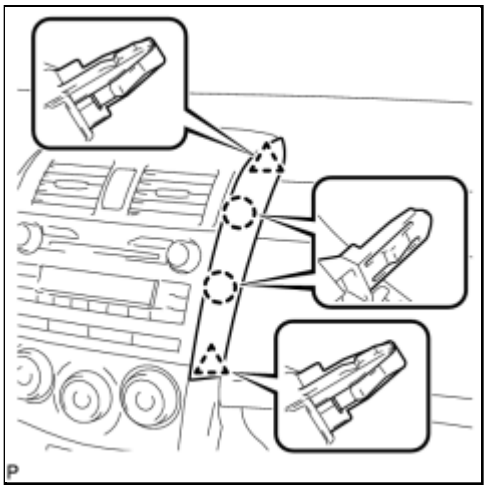

(a) Engage the 2 claws and 2 clips, and then install the instrument panel finish panel end RH.

17. INSTALL LOWER INSTRUMENT PANEL FINISH PANEL LH

(a) Engage the 3 claws and clip, and then install the lower instrument panel finish panel LH.

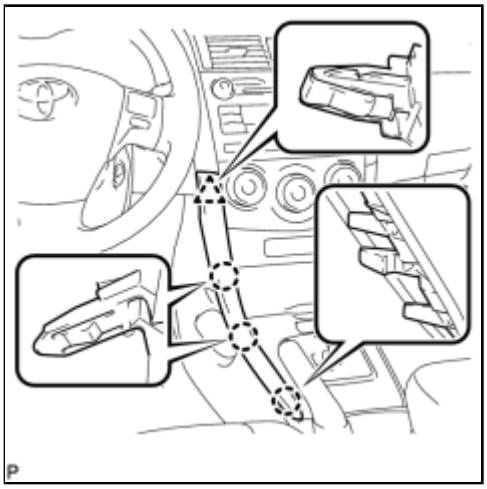

18. INSTALL LOWER INSTRUMENT PANEL FINISH PANEL RH

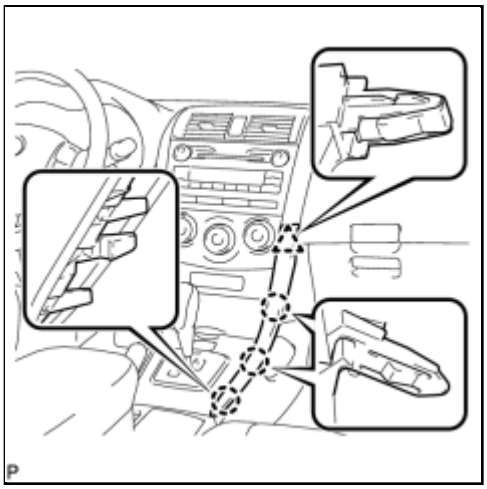

(a) Engage the 3 claws and clip, and then install the lower instrument panel finish panel RH.

19. CONNECT CABLE TO NEGATIVE BATTERY TERMINAL

20. INSPECT SRS WARNING LIGHT

INFO

Last Modified: 3-10-2010	6.4 K	**From:** 200901
Model Year: 2010	**Model:** Corolla	**Doc ID:** RM000002VR5009X
Title: LIGHTING (INT): BACK DOOR COURTESY SWITCH: COMPONENTS (2010 Corolla)		

COMPONENTS

ILLUSTRATION

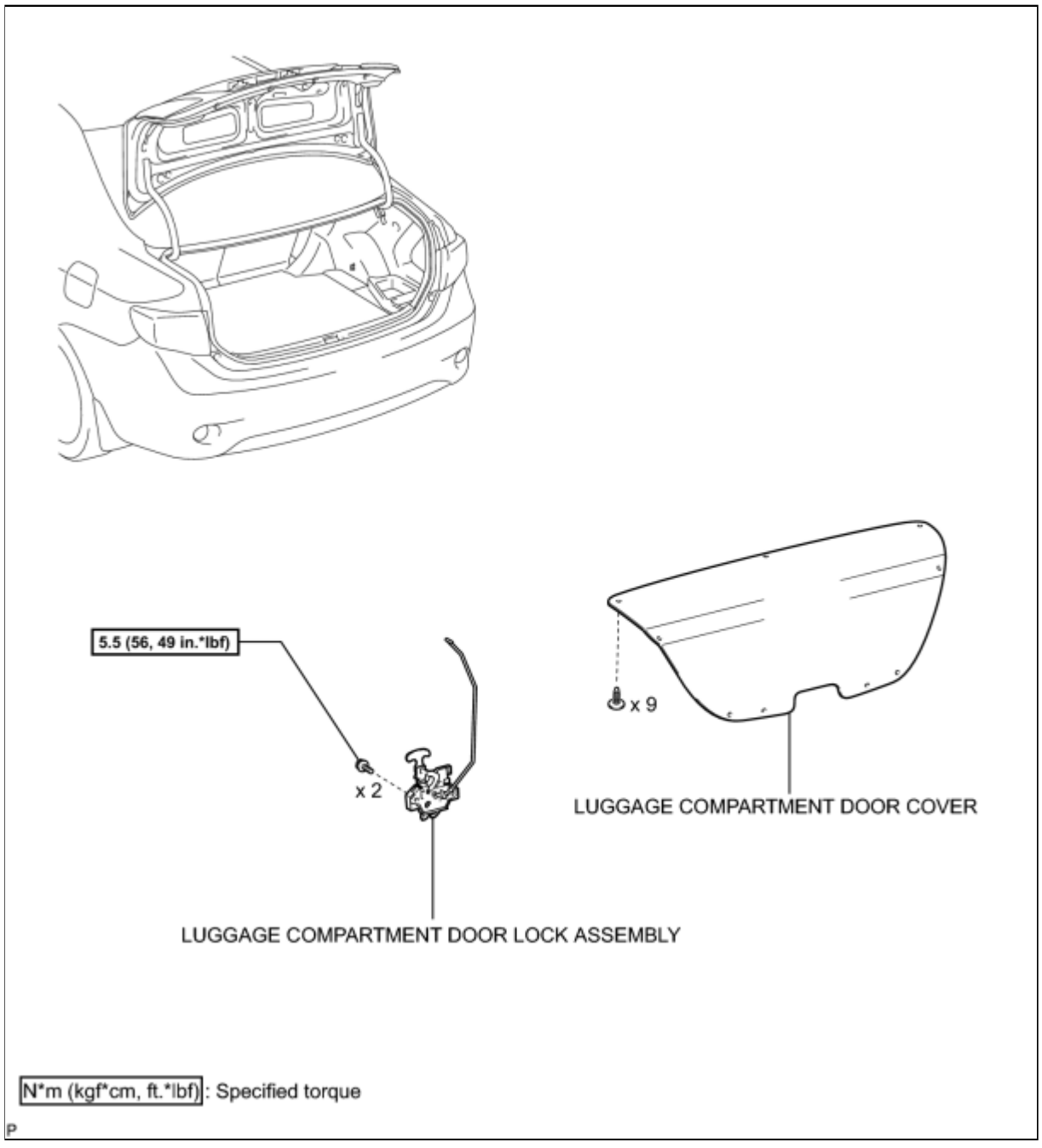

Last Modified: 3-10-2010	6.4 A	**From:** 200901
Model Year: 2010	**Model:** Corolla	**Doc ID:** RM000002VR6009X
Title: LIGHTING (INT): BACK DOOR COURTESY SWITCH: REMOVAL (2010 Corolla)		

REMOVAL

1. REMOVE LUGGAGE COMPARTMENT DOOR COVER INFO

2. REMOVE LUGGAGE COMPARTMENT DOOR LOCK ASSEMBLY (w/o Smart Key System)

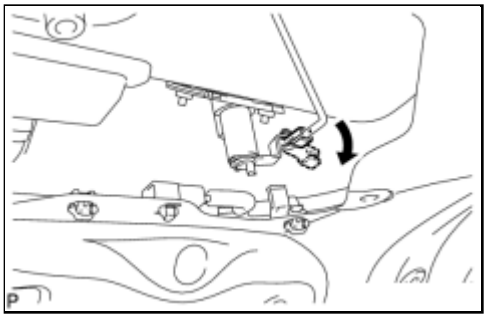

(a) Disconnect the rod as shown in the illustration.

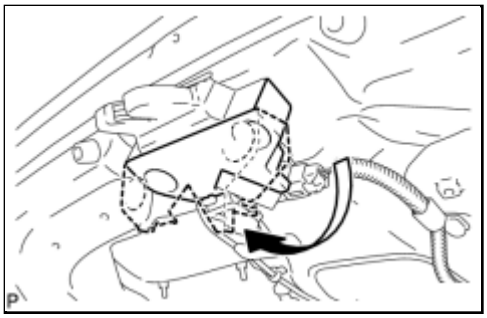

(b) Raise the cover of the luggage compartment door lock as shown in the illustration.

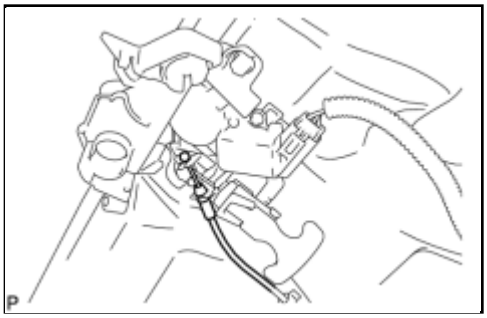

(c) Disconnect the luggage door lock control cable sub-assembly.

(d) Return the cover of the luggage compartment door lock to its original position.

(e) Disconnect the connector.

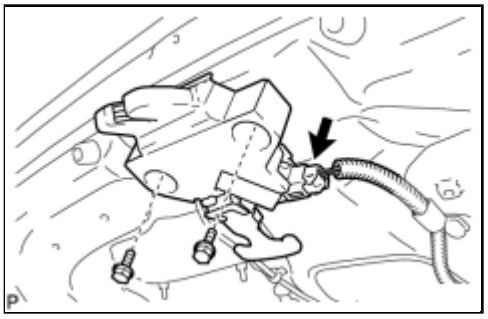

(f) Remove the 2 bolts and luggage compartment door lock assembly.

3. REMOVE LUGGAGE COMPARTMENT DOOR LOCK ASSEMBLY (w/ Smart Key System)

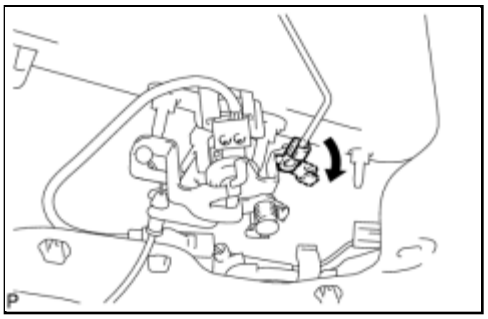

(a) Disconnect the rod as shown in the illustration.

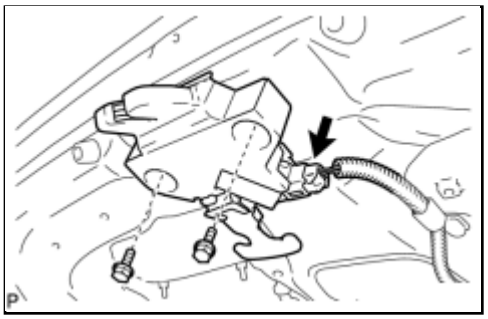

(b) Disconnect the connector.

(c) Remove the 2 bolts and luggage compartment door lock assembly.

Last Modified: 3-10-2010	6.4 G	**From:** 200901
Model Year: 2010	**Model:** Corolla	**Doc ID:** RM00000202P01EX
Title: LIGHTING (INT): BACK DOOR COURTESY SWITCH: INSPECTION (2010 Corolla)		

INSPECTION

1. INSPECT DOOR COURTESY SWITCH (LUGGAGE COMPARTMENT DOOR LOCK ASSEMBLY)

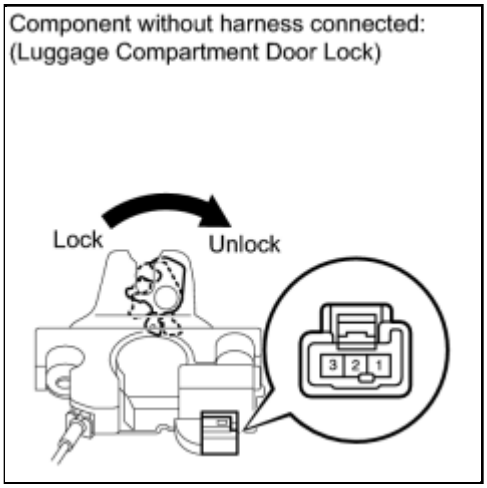

(a) Measure the resistance according to the value(s) in the table below.

Standard Resistance:

TESTER CONNECTION	CONDITION	SPECIFIED CONDITION
2 - 3	Unlock	Below 1 Ω
2 - 3	Lock	10 kΩ or higher

If the result is not as specified, replace the luggage compartment door lock assembly.

Last Modified: 3-10-2010	6.4 A	**From:** 200901
Model Year: 2010	**Model:** Corolla	**Doc ID:** RM000002VR4009X
Title: LIGHTING (INT): BACK DOOR COURTESY SWITCH: INSTALLATION (2010 Corolla)		

INSTALLATION

1. INSTALL LUGGAGE COMPARTMENT DOOR LOCK ASSEMBLY (w/o Smart Key System)

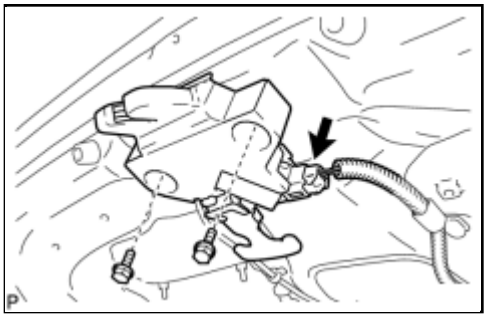

(a) Install the luggage compartment door lock assembly with the 2 bolts.

Torque: 5.5 N·m (56 kgf·cm, 49in·lbf)

(b) Connect the connector.

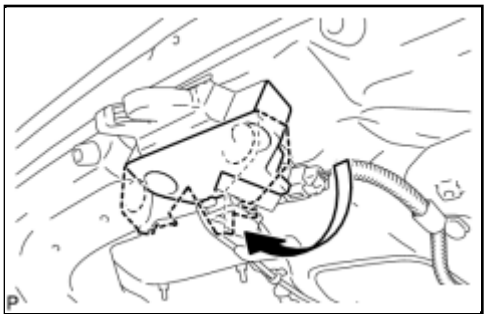

(c) Raise the cover of the luggage compartment door lock as shown in the illustration.

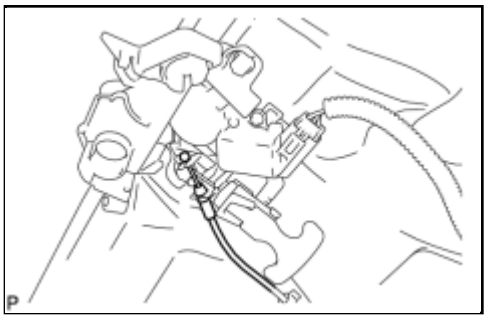

(d) Connect the luggage door lock control cable subassembly.

(e) Return the cover of the luggage compartment door lock to its original position.

(f) Connect the rod as shown in the illustration.

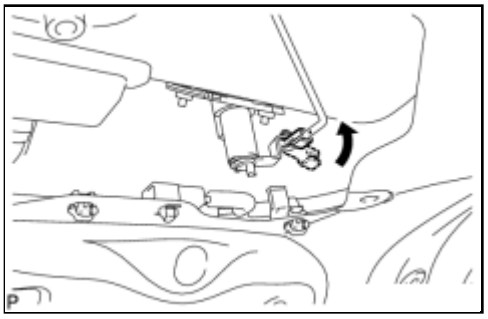

2. INSTALL LUGGAGE COMPARTMENT DOOR LOCK ASSEMBLY (w/ Smart Key System)

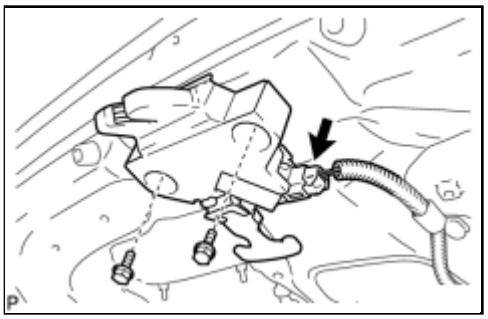

(a) Install the luggage compartment door lock assembly with the 2 bolts.

Torque: 5.5 N·m (56 kgf·cm, 49in·lbf)

(b) Connect the connector.

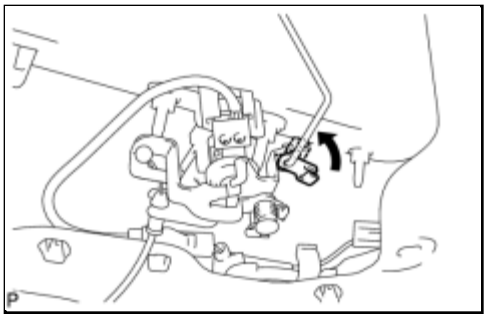

(c) Connect the rod as shown in the illustration.

3. INSTALL LUGGAGE COMPARTMENT DOOR COVER INFO

Last Modified: 3-10-2010	6.4 K	**From:** 200901
Model Year: 2010	**Model:** Corolla	**Doc ID:** RM0000033ZH009X
Title: LIGHTING (INT): FRONT DOOR COURTESY SWITCH: COMPONENTS (2010 Corolla)		

COMPONENTS

ILLUSTRATION

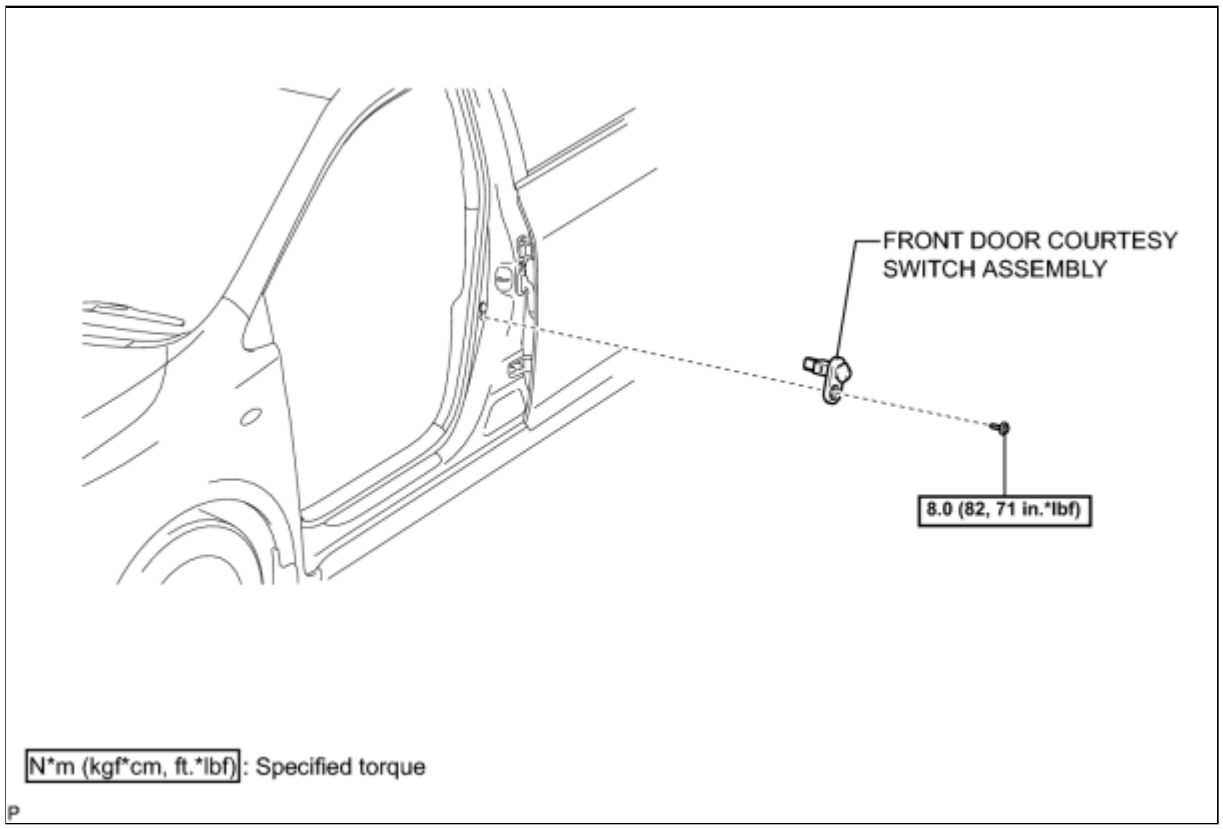

Last Modified: 3-10-2010	6.4 A	**From:** 200901
Model Year: 2010	**Model:** Corolla	**Doc ID:** RM000002VPS00CX
Title: LIGHTING (INT): FRONT DOOR COURTESY SWITCH: REMOVAL (2010 Corolla)		

REMOVAL

1. REMOVE FRONT DOOR COURTESY SWITCH ASSEMBLY

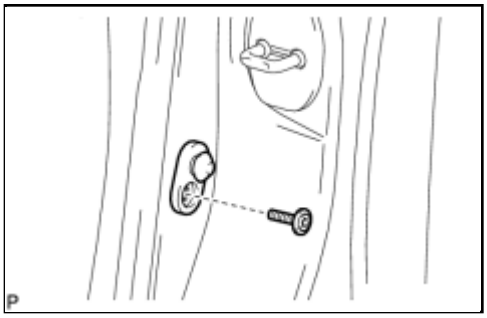

(a) Using a "TORX" Socket Wrench T-type T30, remove the "TORX" bolt.

(b) Disconnect the connector and remove the front door courtesy switch assembly.

Last Modified: 3-10-2010	6.4 G	**From:** 200901
Model Year: 2010	**Model:** Corolla	**Doc ID:** RM0000017MQ019X
Title: LIGHTING (INT): FRONT DOOR COURTESY SWITCH: INSPECTION (2010 Corolla)		

INSPECTION

1. INSPECT FRONT DOOR COURTESY SWITCH

(a) Measure the resistance according to the value(s) in the table below.

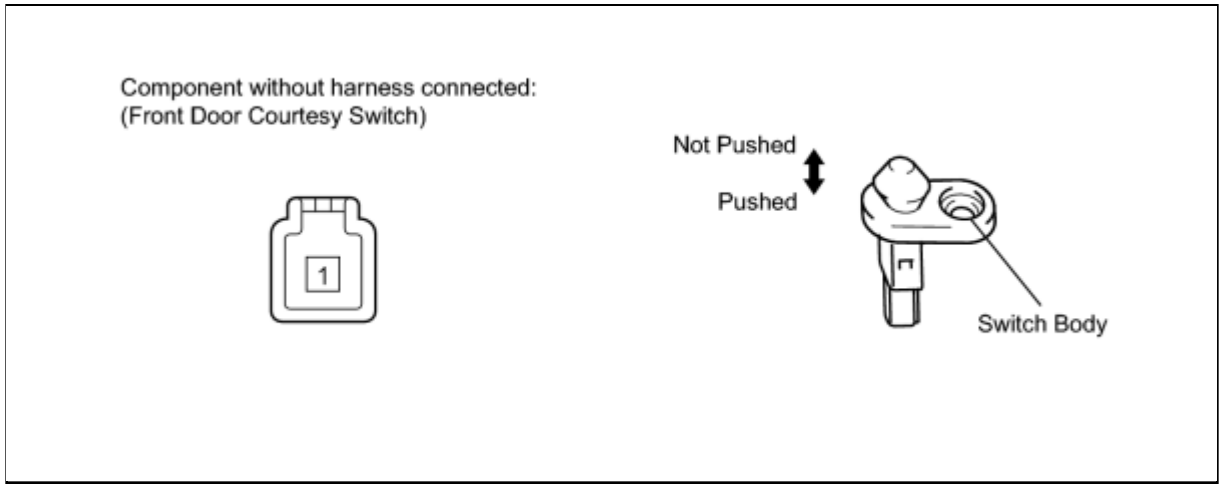

Standard Resistance:

TESTER CONNECTION	SWITCH CONDITION	SPECIFIED CONDITION
1 - Switch body	Not pushed (ON)	Below 1 Ω
	Pushed (OFF)	10 kΩ or higher

If the result is not as specified, replace the switch.

Last Modified: 3-10-2010	6.4 A	**From:** 200901
Model Year: 2010	**Model:** Corolla	**Doc ID:** RM000002VPQ00CX
Title: LIGHTING (INT): FRONT DOOR COURTESY SWITCH: INSTALLATION (2010 Corolla)		

INSTALLATION

1. INSTALL FRONT DOOR COURTESY SWITCH ASSEMBLY

(a) Connect the connector.

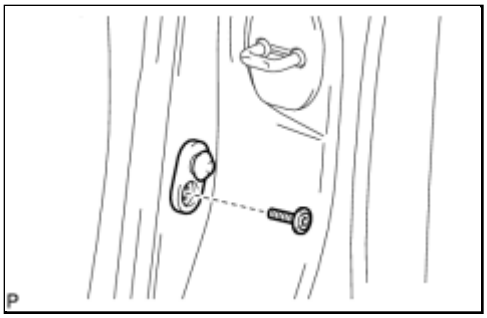

(b) Using a "TORX" Socket Wrench T-type T30, install the front door courtesy switch assembly with the "TORX" bolt.

Torque: 8.0 N·m (82 kgf·cm, 71in·lbf)

Last Modified: 3-10-2010	6.4 K	**From:** 200901
Model Year: 2010	**Model:** Corolla	**Doc ID:** RM00000340N009X
Title: LIGHTING (INT): PERSONAL LIGHT: COMPONENTS (2010 Corolla)		

COMPONENTS

ILLUSTRATION

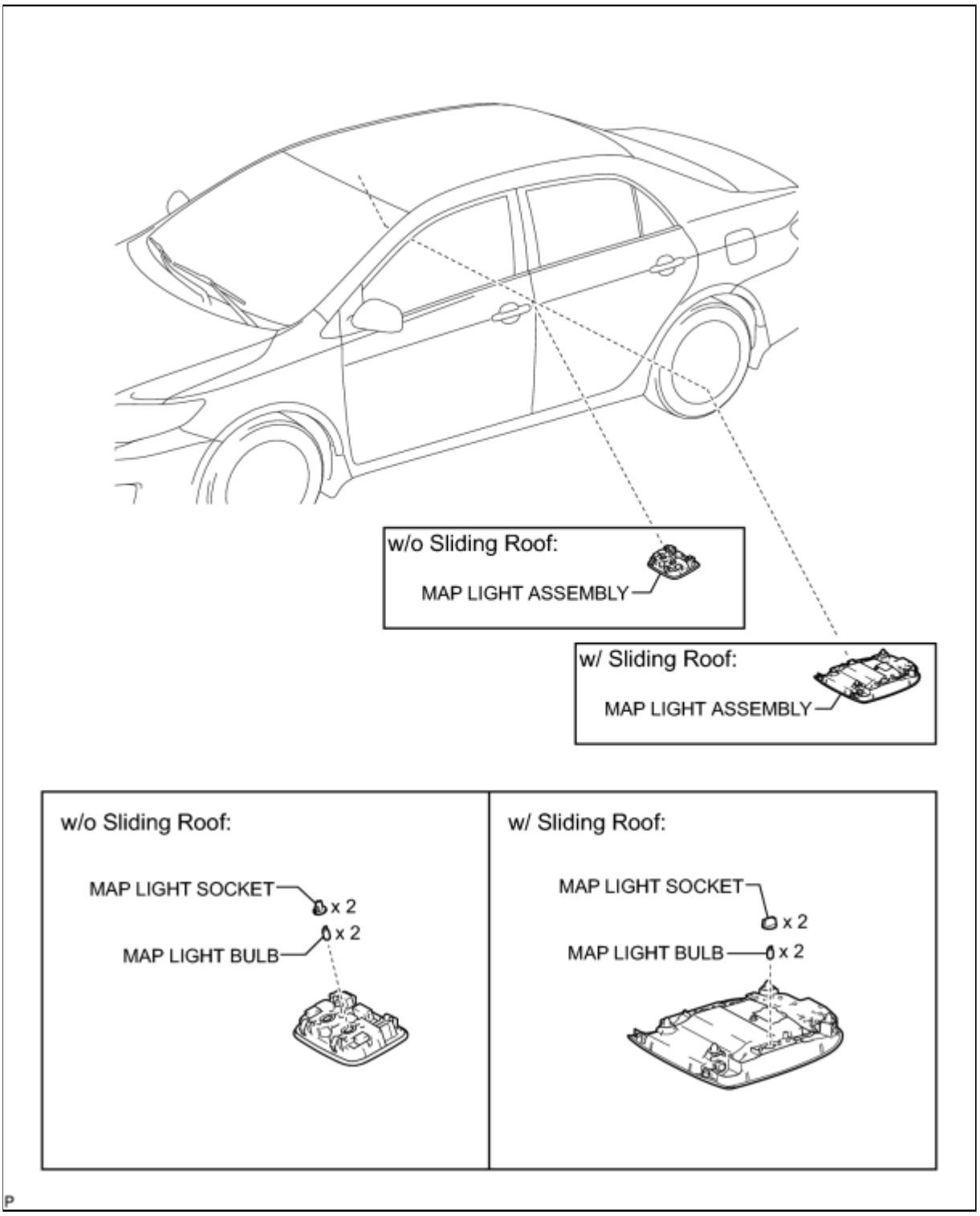

Last Modified: 3-10-2010	6.4 A	**From:** 200901
Model Year: 2010	**Model:** Corolla	**Doc ID:** RM0000034OO00BX
Title: LIGHTING (INT): PERSONAL LIGHT: REMOVAL (2010 Corolla)		

REMOVAL

1. REMOVE MAP LIGHT ASSEMBLY (w/o Sliding Roof)

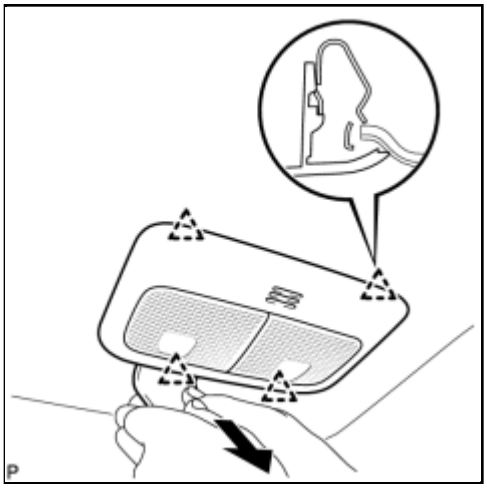

(a) Using a moulding remover, disengage the 4 clips.

(b) Disconnect the connector and remove the map light assembly.

2. REMOVE MAP LIGHT ASSEMBLY (w/ Sliding Roof)

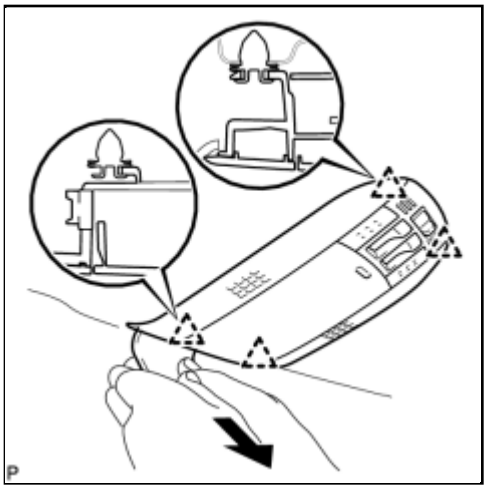

(a) Using a moulding remover, disengage the 4 clips.

(b) Disconnect the connector and remove the map light assembly.

3. REMOVE MAP LIGHT BULB (w/o Sliding Roof)

(a) Turn the 2 map light bulbs and the 2 map light sockets in

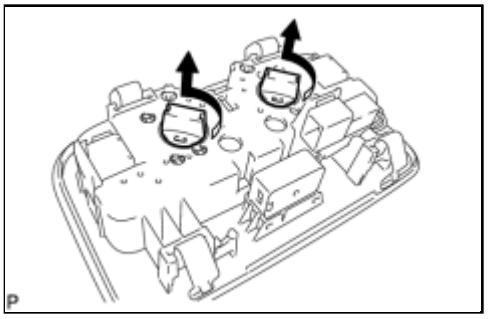

the direction indicated by the arrow and remove them as a unit.

(b) Remove the 2 map light bulbs from the 2 map light sockets.

4. REMOVE MAP LIGHT BULB (w/ Sliding Roof)

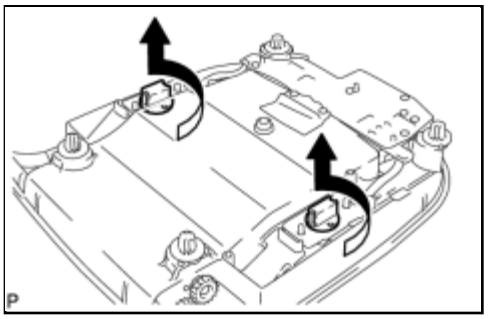

(a) Turn the 2 map light bulbs and the 2 map light sockets in the direction indicated by the arrow and remove them as a unit.

(b) Remove the 2 map light bulbs from the 2 map light sockets.

Last Modified: 3-10-2010	6.4 G	**From:** 200901
Model Year: 2010	**Model:** Corolla	**Doc ID:** RM00000197W01AX
Title: LIGHTING (INT): PERSONAL LIGHT: INSPECTION (2010 Corolla)		

INSPECTION

1. INSPECT MAP LIGHT ASSEMBLY (w/o Sliding Roof)

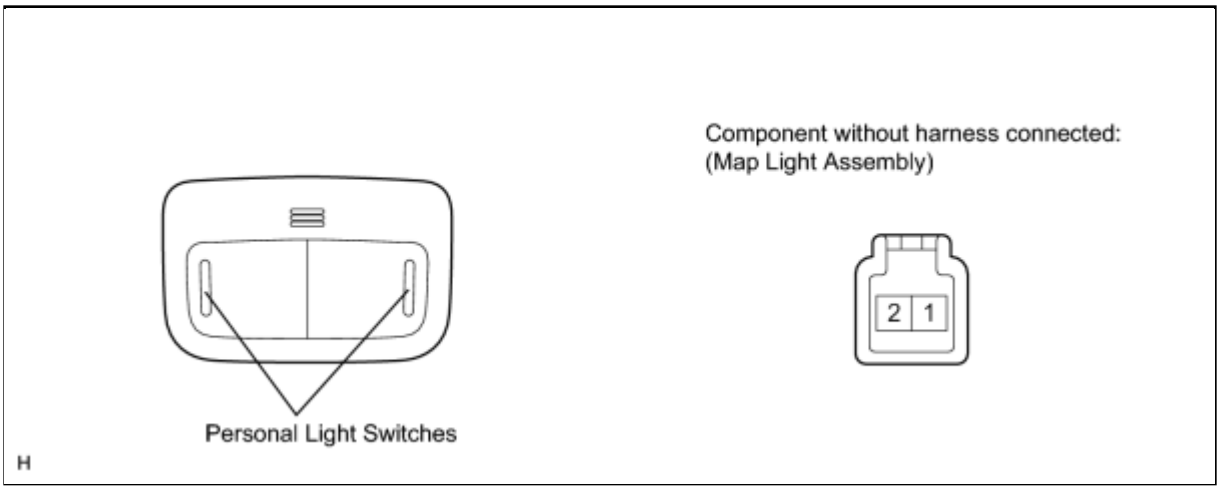

(a) Connect a positive (+) lead from the battery to terminal 1 and a negative (-) lead to terminal 2.

(b) Check that the personal lights come on.

OK:

CONDITION	SPECIFIED CONDITION
Personal light switch LH ON	Personal light LH comes on
Personal light switch LH OFF	Personal light LH does not come on
Personal light switch RH ON	Personal light RH comes on
Personal light switch RH OFF	Personal light RH does not come on

If the result is not as specified, replace the bulb or personal light assembly.

2. INSPECT MAP LIGHT ASSEMBLY (w/ Sliding Roof)

(a) Personal light switch operation

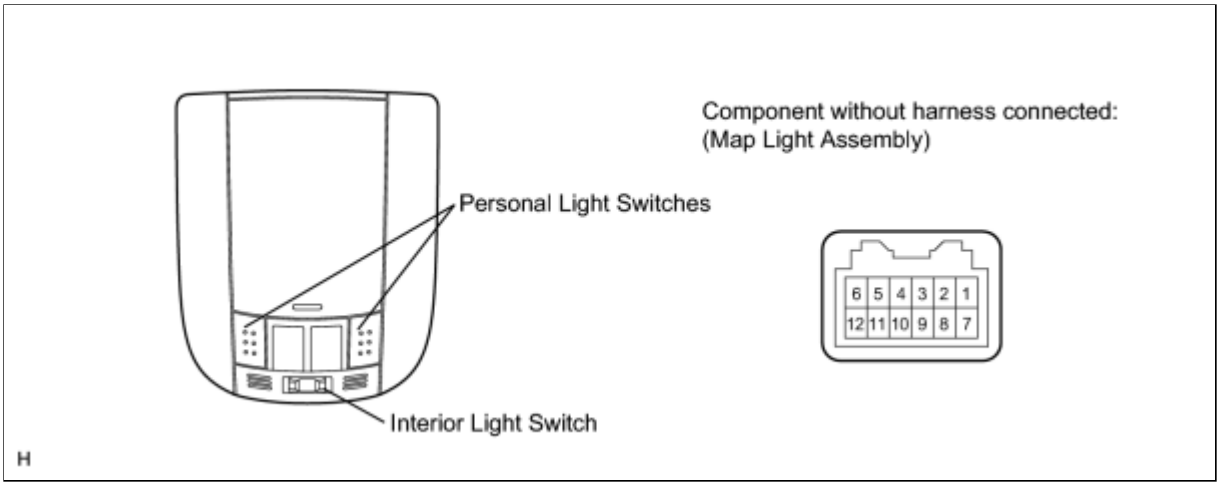

(1) Connect a positive (+) lead from the battery to terminal 6 and a negative (-) lead to terminal 7.

(2) Inspect the personal light operation while the interior light switch is off.

OK:

CONDITION	SPECIFIED CONDITION
Personal light switch LH ON	Personal light LH comes on
Personal light switch LH OFF	Personal light LH does not come on
Personal light switch RH ON	Personal light RH comes on
Personal light switch RH OFF	Personal light RH does not come on

If the result is not as specified, replace the bulb or map light assembly.

(b) Interior light switch operation

(1) Connect a positive (+) lead from the battery to terminal 6 and a negative (-) lead to both terminals 1 and 7.

(2) Inspect the personal light operation while both of the personal light switches (LH and RH) are off.

OK:

CONDITION	SPECIFIED CONDITION
Interior light switch is in OFF position	Personal lights (LH and RH) do not come on
Interior light switch is in ON position	Personal lights (LH and RH) come on
Interior light switch is in DOOR position	Personal lights (LH and RH) come on

If the result is not as specified, replace the bulb or map light assembly.

Last Modified: 3-10-2010	6.4 A	**From:** 200901
Model Year: 2010	**Model:** Corolla	**Doc ID:** RM00000340M00BX
Title: LIGHTING (INT): PERSONAL LIGHT: INSTALLATION (2010 Corolla)		

INSTALLATION

1. INSTALL MAP LIGHT BULB (w/o Sliding Roof)

(a) Install the 2 map light bulbs to the 2 map light sockets.

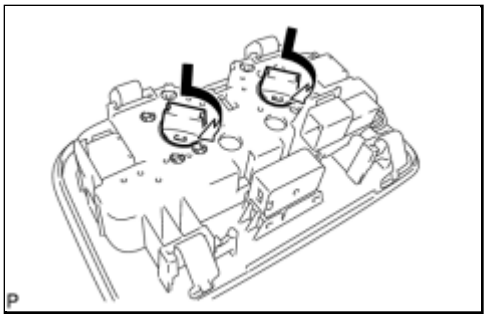

(b) Turn the 2 map light bulbs and the 2 map light sockets in the direction indicated by the arrow and install them as a unit.

2. INSTALL MAP LIGHT BULB (w/ Sliding Roof)

(a) Install the 2 map light bulbs to the 2 map light sockets.

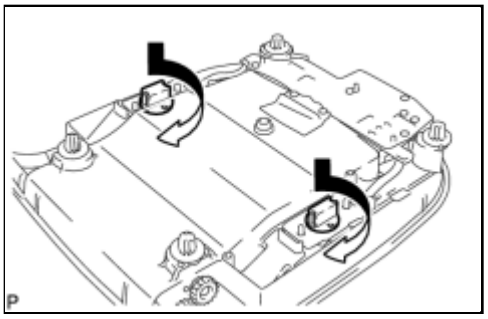

(b) Turn the 2 map light bulbs and the 2 map light sockets in the direction indicated by the arrow and install them as a unit.

3. INSTALL MAP LIGHT ASSEMBLY (w/o Sliding Roof)

(a) Connect the connector.

(b) Engage the 4 clips and install the map light assembly.

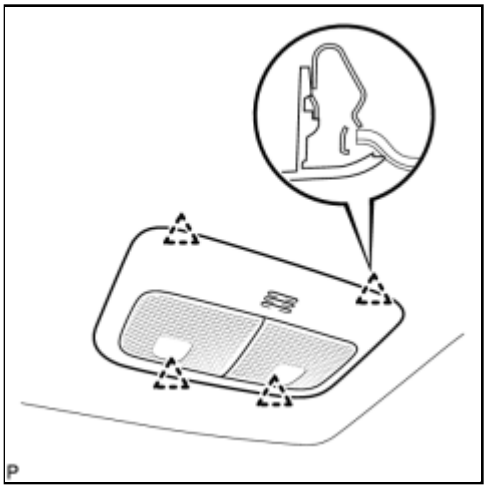

4. INSTALL MAP LIGHT ASSEMBLY (w/ Sliding Roof)

(a) Connect the connector.

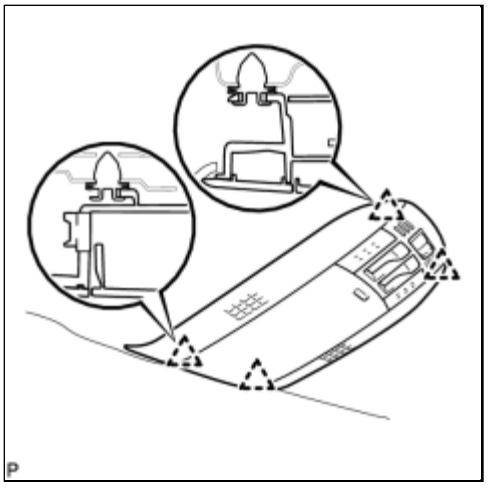

(b) Engage the 4 clips and install the map light assembly.

Last Modified: 3-10-2010	6.4 K	**From:** 200901
Model Year: 2010	**Model:** Corolla	**Doc ID:** RM0000033ZI009X
Title: LIGHTING (INT): REAR DOOR COURTESY SWITCH: COMPONENTS (2010 Corolla)		

COMPONENTS

ILLUSTRATION

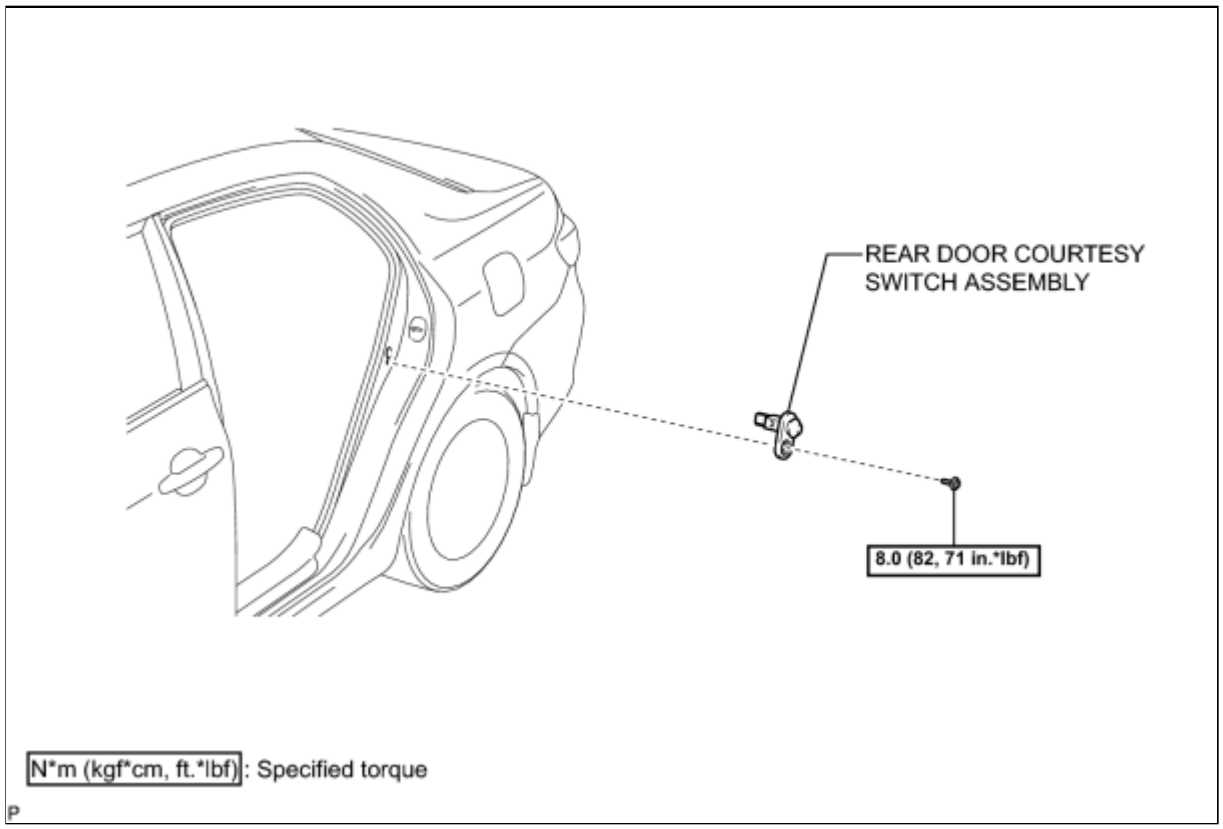

Last Modified: 3-10-2010	6.4 A	**From:** 200901
Model Year: 2010	**Model:** Corolla	**Doc ID:** RM000002VP800CX
Title: LIGHTING (INT): REAR DOOR COURTESY SWITCH: REMOVAL (2010 Corolla)		

REMOVAL

1. REMOVE REAR DOOR COURTESY SWITCH ASSEMBLY

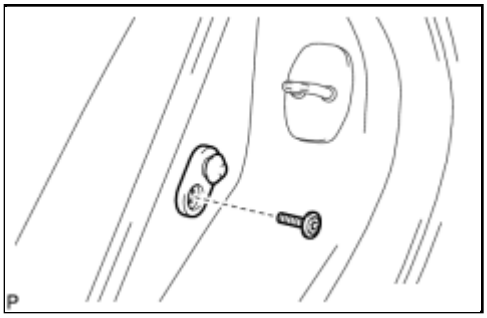

(a) Using a "TORX" Socket Wrench T-type T30, remove the "TORX" bolt.

(b) Disconnect the connector and remove the rear door courtesy switch assembly.

Last Modified: 3-10-2010	6.4 G	**From:** 200901
Model Year: 2010	**Model:** Corolla	**Doc ID:** RM0000017MO019X
Title: LIGHTING (INT): REAR DOOR COURTESY SWITCH: INSPECTION (2010 Corolla)		

INSPECTION

1. INSPECT REAR DOOR COURTESY SWITCH

(a) Measure the resistance according to the value(s) in the table below.

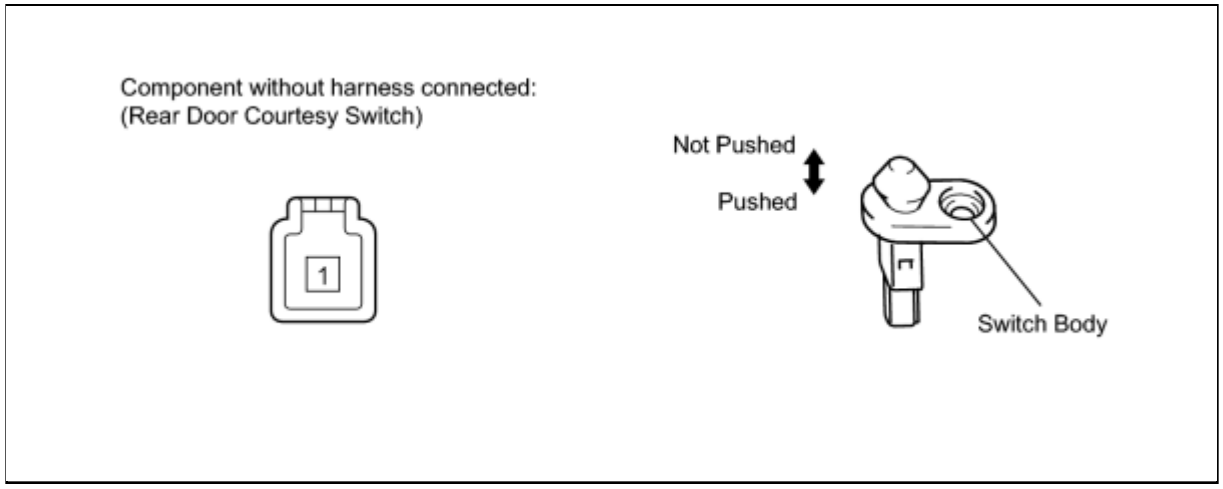

Standard Resistance:

TESTER CONNECTION	SWITCH CONDITION	SPECIFIED CONDITION
1 - Switch body	Not pushed (ON)	Below 1 Ω
	Pushed (OFF)	10 kΩ or higher

If the result is not as specified, replace the switch.

Last Modified: 3-10-2010	6.4 A	**From:** 200901
Model Year: 2010	**Model:** Corolla	**Doc ID:** RM000002VP600CX
Title: LIGHTING (INT): REAR DOOR COURTESY SWITCH: INSTALLATION (2010 Corolla)		

INSTALLATION

1. INSTALL REAR DOOR COURTESY SWITCH ASSEMBLY

(a) Connect the connector.

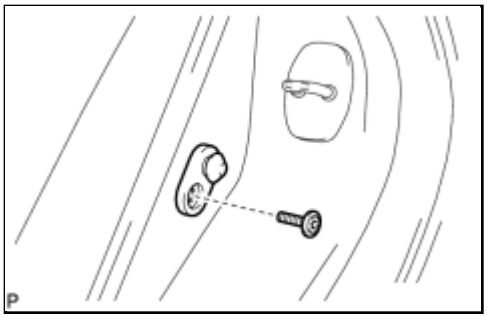

(b) Using a "TORX" Socket Wrench T-type T30, install the rear door courtesy switch assembly with the "TORX" bolt.

Torque: 8.0 N·m (82 kgf·cm, 71in·lbf)

Last Modified: 3-10-2010	6.4 K	**From:** 200901
Model Year: 2010	**Model:** Corolla	**Doc ID:** RM00000340Q009X
Title: LIGHTING (INT): ROOM LIGHT: COMPONENTS (2010 Corolla)		

COMPONENTS

ILLUSTRATION

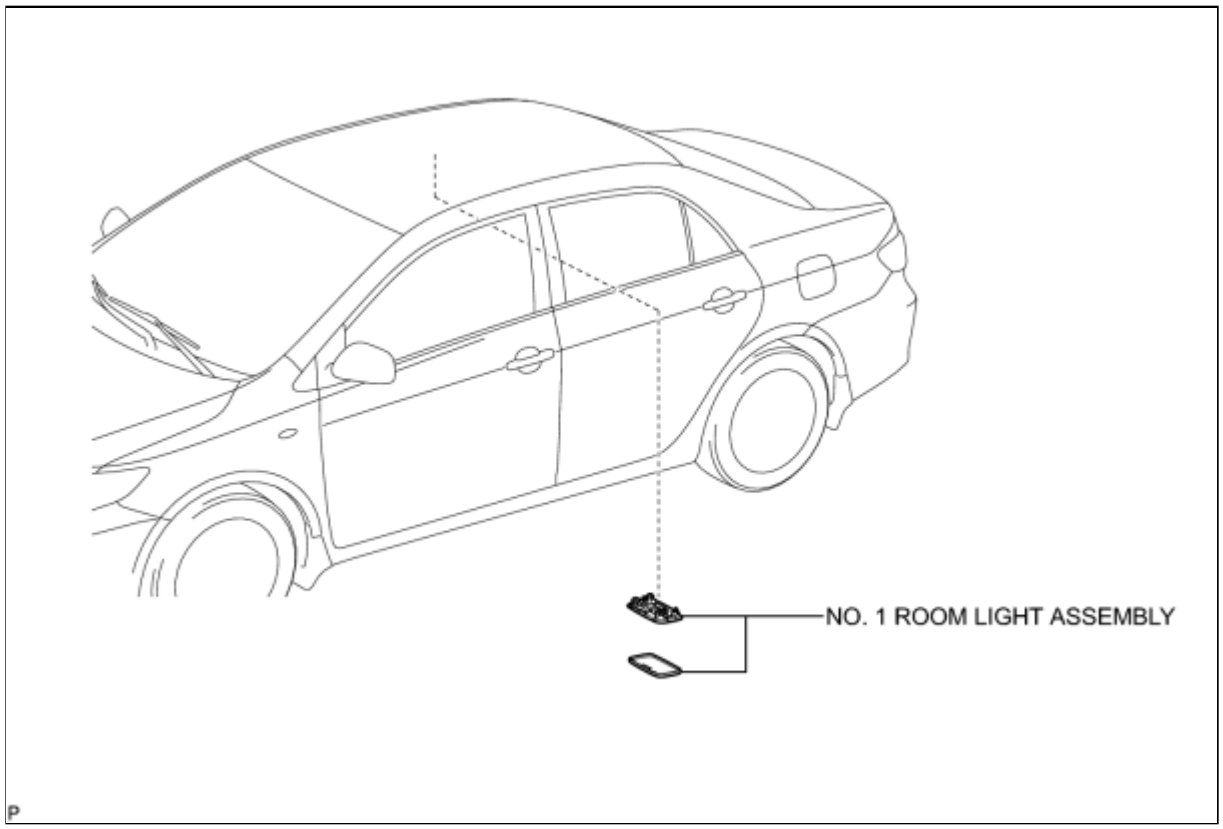

Last Modified: 3-10-2010	6.4 A	**From:** 200901
Model Year: 2010	**Model:** Corolla	**Doc ID:** RM00000340R00BX
Title: LIGHTING (INT): ROOM LIGHT: REMOVAL (2010 Corolla)		

REMOVAL

1. REMOVE NO. 1 ROOM LIGHT ASSEMBLY

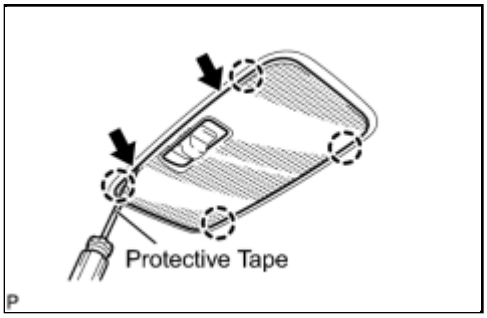

(a) Using a screwdriver, disengage the 4 claws and remove the lens cover.

HINT:

Tape the screwdriver tip before use.

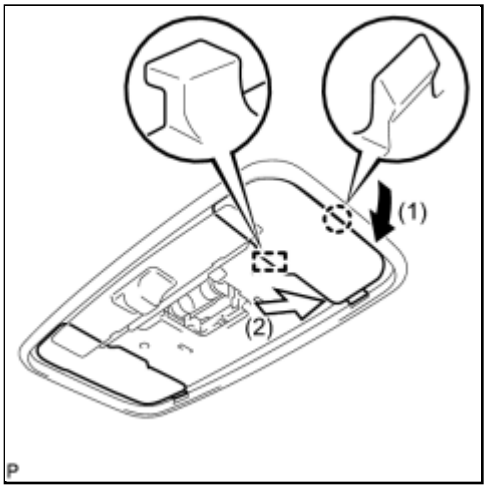

(b) Disengage the claw and guide in the order shown in the illustration, and remove the room light cover.

HINT:

Use the same procedure for the RH side and the LH side.

(c) Using a screwdriver, disengage the 2 claws <A> as shown in the illustration.

HINT:

Tape the screwdriver tip before use.

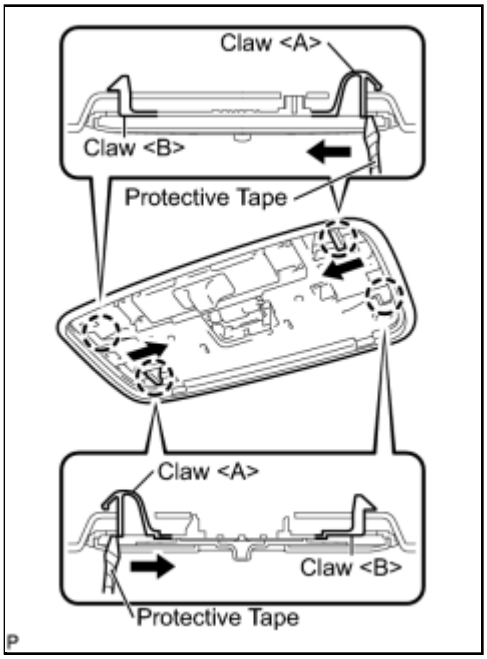

(d) Disengage the 2 claws <B>.

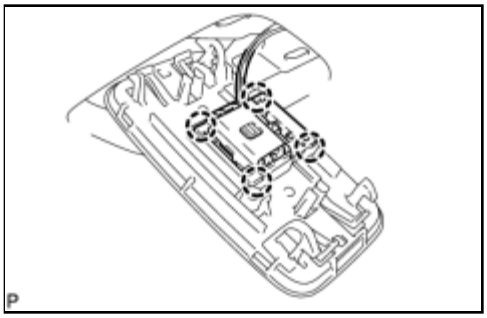

(e) Using a screwdriver, disengage the 4 claws and remove the No. 1 room light assembly.

Last Modified: 3-10-2010	6.4 G	**From:** 200901
Model Year: 2010	**Model:** Corolla	**Doc ID:** RM0000020 2I01NX
Title: LIGHTING (INT): ROOM LIGHT: INSPECTION (2010 Corolla)		

INSPECTION

1. INSPECT NO. 1 ROOM LIGHT ASSEMBLY

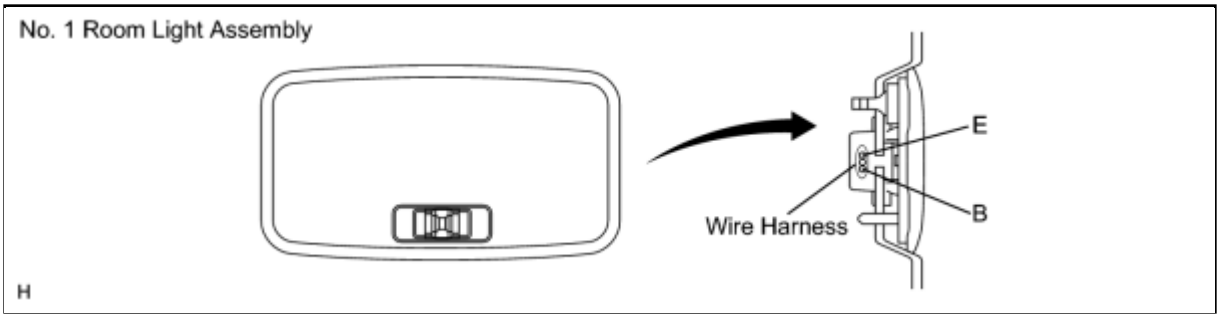

(a) Measure the resistance according to the value(s) in the table below.

Standard Resistance:

TESTER CONNECTION	CONDITION	SPECIFIED CONDITION
Terminal E - Body ground	Always	Below 1 Ω

If the result is not as specified, repair or replace harness or connector.

(b) Measure the voltage according to the value(s) in the table below.

Standard Voltage:

TESTER CONNECTION	CONDITION	SPECIFIED CONDITION
Terminal B - Body ground	Always	11 to 14 V

If the result is not as specified, repair or replace the harness or connector.

(c) Remove the wire harness from the room light assembly.

(d) Measure the resistance according to the value(s) in the table below.

Standard Resistance:

TESTER CONNECTION	CONDITION	SPECIFIED CONDITION
Terminal E - Light Busbar	Light switch OFF	10 kΩ or higher
	Light switch ON	Below 1 Ω

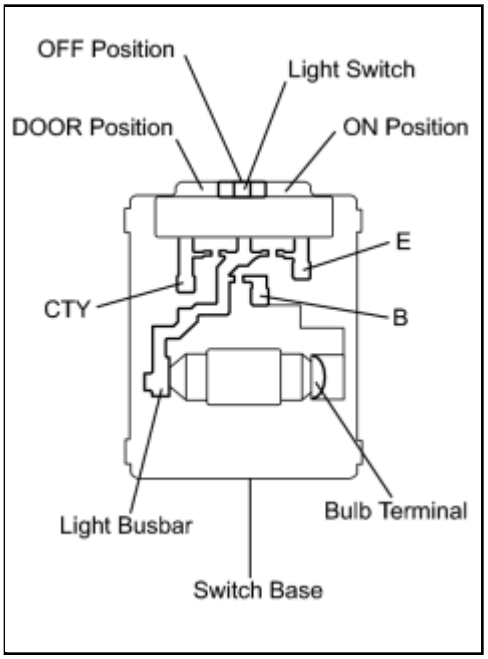

Terminal CTY - Light Busbar	Light switch OFF	10 kΩ or higher
	Light switch in DOOR	Below 1 Ω
Terminal B - Bulb Terminal	Always	Below 1 Ω

If the result is not as specified, replace the switch base.

(e) Connect a (+) lead from the battery to terminal B and a (-) lead to light busbar.

(f) Check that the light comes on.

OK:

The light comes on.

If the result is not as specified, replace the bulb.

Last Modified: 3-10-2010	6.4 A	**From:** 200901
Model Year: 2010	**Model:** Corolla	**Doc ID:** RM00000340P00BX
Title: LIGHTING (INT): ROOM LIGHT: INSTALLATION (2010 Corolla)		

INSTALLATION

1. INSTALL NO. 1 ROOM LIGHT ASSEMBLY

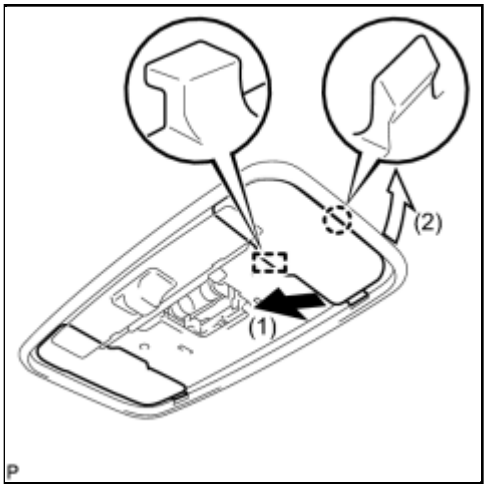

(a) Engage the guide and claw in the order shown in the illustration, and install the room light cover.

HINT:

Use the same procedure for the RH side and the LH side.

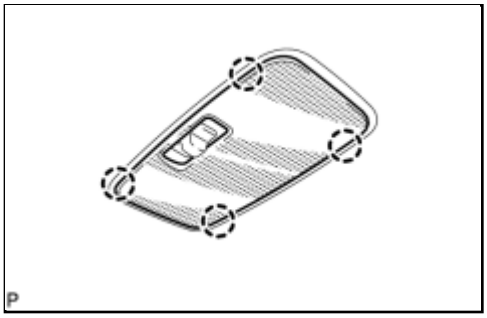

(b) Engage the 4 claws and install the lens cover.

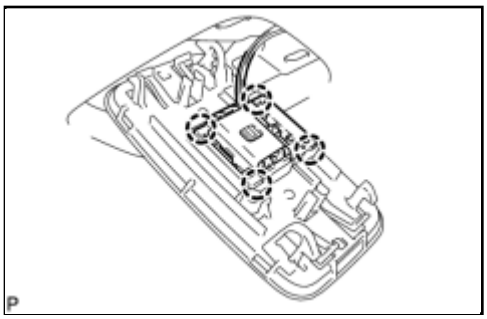

(c) Engage the 4 claws and install the room light switch base to the No. 1 room light assembly.

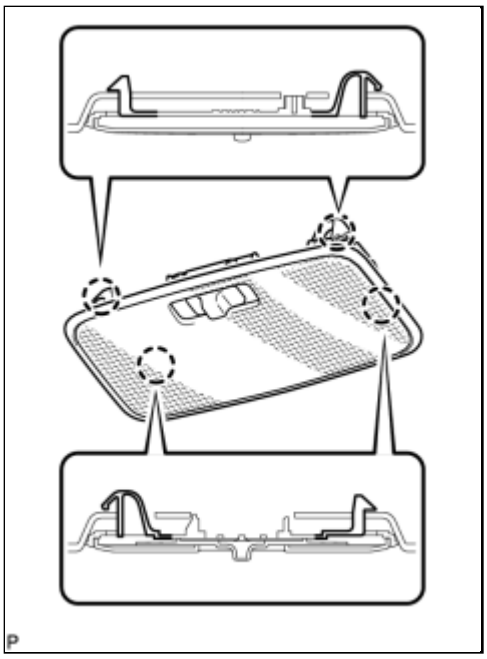

(d) Engage the 4 claws and install the No. 1 room light assembly.

Last Modified: 3-10-2010	6.4 K	**From:** 200901
Model Year: 2010	**Model:** Corolla	**Doc ID:** RM000002XFO00IX
Title: METER / GAUGE / DISPLAY: CLOCK: COMPONENTS (2010 Corolla)		

COMPONENTS

ILLUSTRATION

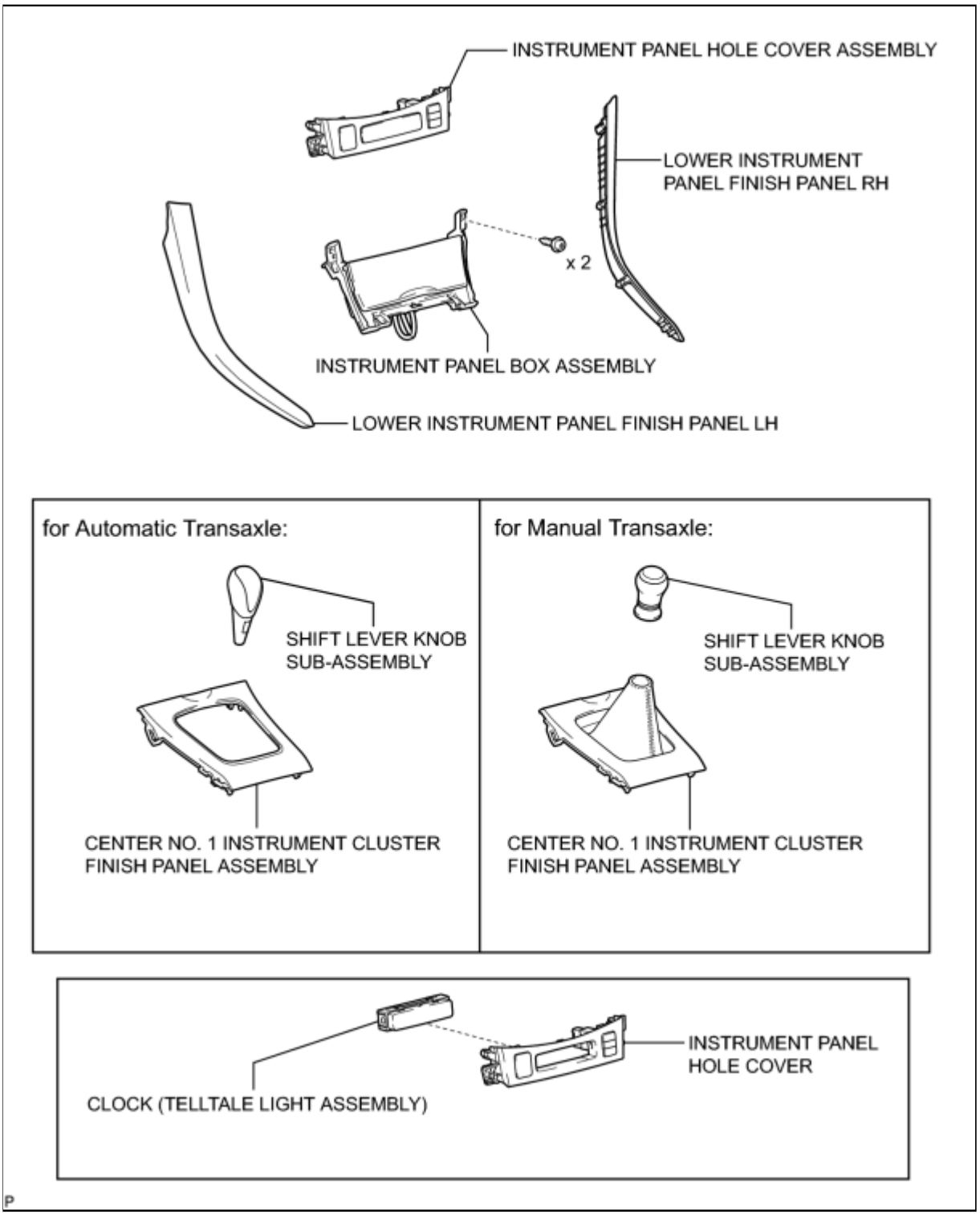

Last Modified: 3-10-2010	6.4 A	**From:** 200901
Model Year: 2010	**Model:** Corolla	**Doc ID:** RM000002XFP00IX
Title: METER / GAUGE / DISPLAY: CLOCK: REMOVAL (2010 Corolla)		

REMOVAL

1. **REMOVE LOWER INSTRUMENT PANEL FINISH PANEL LH** INFO
2. **REMOVE LOWER INSTRUMENT PANEL FINISH PANEL RH** INFO
3. **REMOVE SHIFT LEVER KNOB SUB-ASSEMBLY (for Manual Transaxle)** INFO
4. **REMOVE SHIFT LEVER KNOB SUB-ASSEMBLY (for Automatic Transaxle)** INFO
5. **REMOVE CENTER NO. 1 INSTRUMENT CLUSTER FINISH PANEL ASSEMBLY (for Manual Transaxle)** INFO
6. **REMOVE CENTER NO. 1 INSTRUMENT CLUSTER FINISH PANEL ASSEMBLY (for Automatic Transaxle)** INFO
7. **REMOVE INSTRUMENT PANEL BOX ASSEMBLY** INFO
8. **REMOVE INSTRUMENT PANEL HOLE COVER ASSEMBLY** INFO
9. **REMOVE CLOCK (TELLTALE LIGHT ASSEMBLY)**

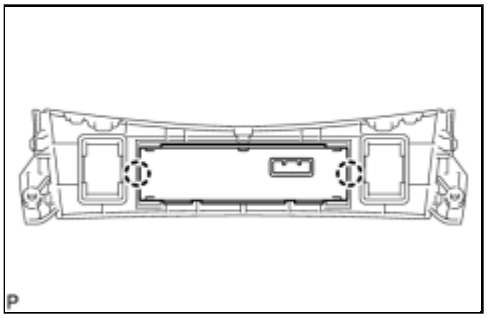

(a) Disengage the 2 claws and remove the clock (telltale light assembly).

Last Modified: 3-10-2010	6.4 A	**From:** 200901
Model Year: 2010	**Model:** Corolla	**Doc ID:** RM000002XFM00IX
Title: METER / GAUGE / DISPLAY: CLOCK: INSTALLATION (2010 Corolla)		

INSTALLATION

1. INSTALL CLOCK (TELLTALE LIGHT ASSEMBLY)

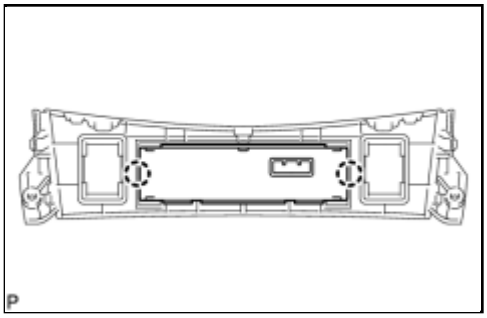

(a) Engage the 2 claws to install the clock (telltale light assembly).

2. INSTALL INSTRUMENT PANEL HOLE COVER ASSEMBLY INFO

3. INSTALL INSTRUMENT PANEL BOX ASSEMBLY INFO

4. INSTALL CENTER NO. 1 INSTRUMENT CLUSTER FINISH PANEL ASSEMBLY (for Manual Transaxle) INFO

5. INSTALL CENTER NO. 1 INSTRUMENT CLUSTER FINISH PANEL ASSEMBLY (for Automatic Transaxle) INFO

6. INSTALL SHIFT LEVER KNOB SUB-ASSEMBLY (for Manual Transaxle) INFO

7. INSTALL SHIFT LEVER KNOB SUB-ASSEMBLY (for Automatic Transaxle) INFO

8. INSTALL LOWER INSTRUMENT PANEL FINISH PANEL LH INFO

9. INSTALL LOWER INSTRUMENT PANEL FINISH PANEL RH INFO

Last Modified: 3-10-2010	6.4 R	**From:** 200901
Model Year: 2010	**Model:** Corolla	**Doc ID:** RM000002HC200JX
Title: METER / GAUGE / DISPLAY: CLOCK SYSTEM: PARTS LOCATION (2010 Corolla)		

PARTS LOCATION

ILLUSTRATION

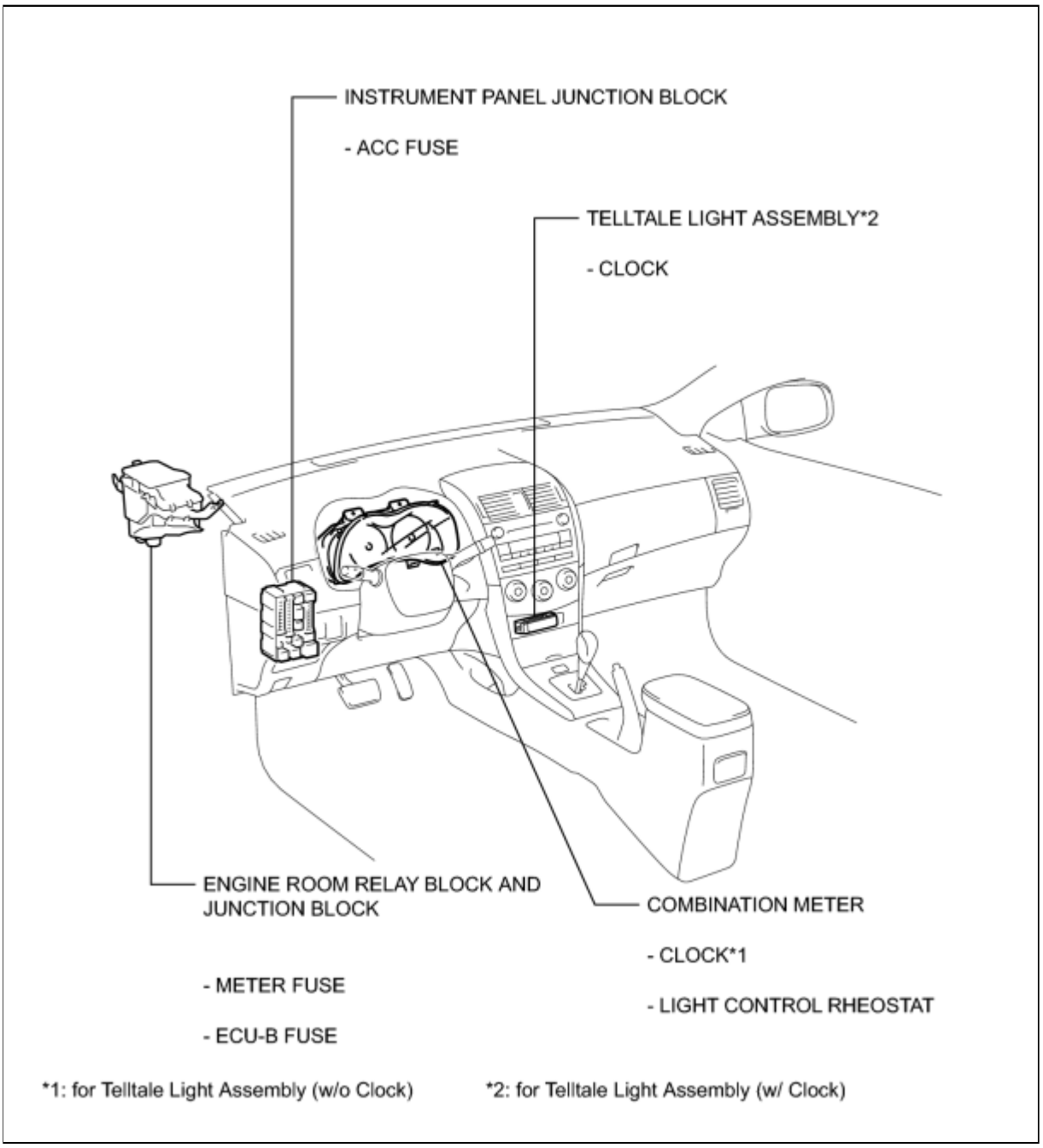

Last Modified: 3-10-2010	6.4 U	**From:** 200901
Model Year: 2010	**Model:** Corolla	**Doc ID:** RM0000012G402VX
Title: METER / GAUGE / DISPLAY: CLOCK SYSTEM: SYSTEM DIAGRAM (2010 Corolla)		

SYSTEM DIAGRAM

1. DIRECT LINE SIGNAL

(a) Clock (for Telltale Light Assembly (w/o Clock))

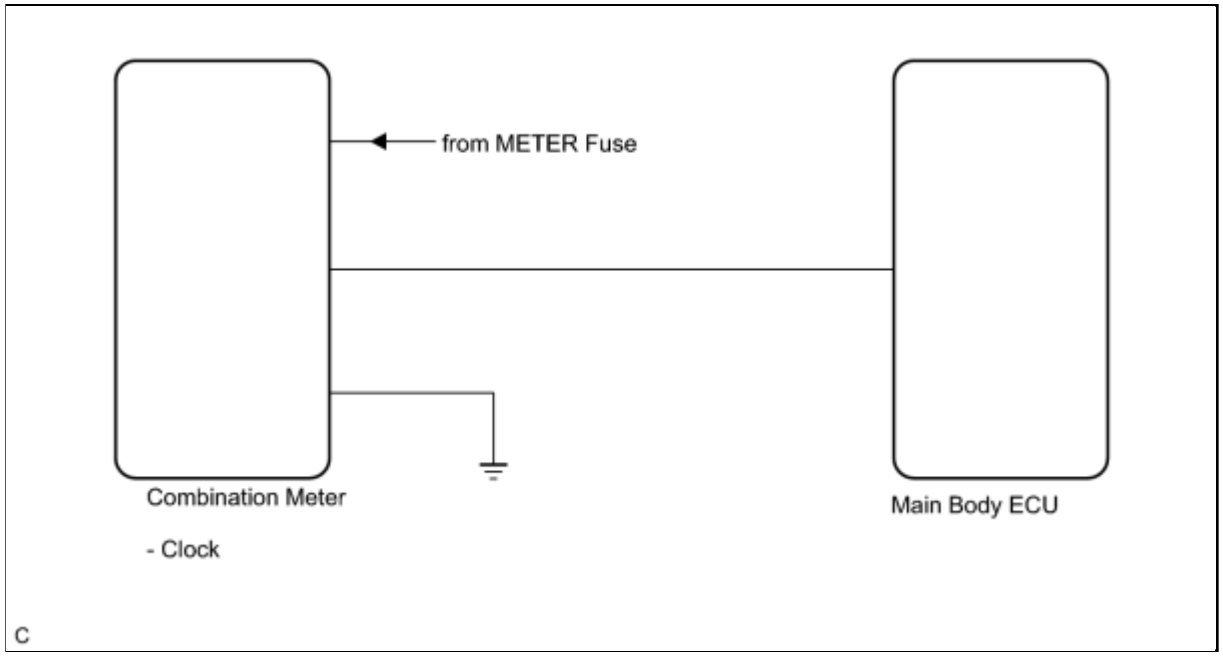

(b) Clock (for Telltale Light Assembly (w/ Clock))

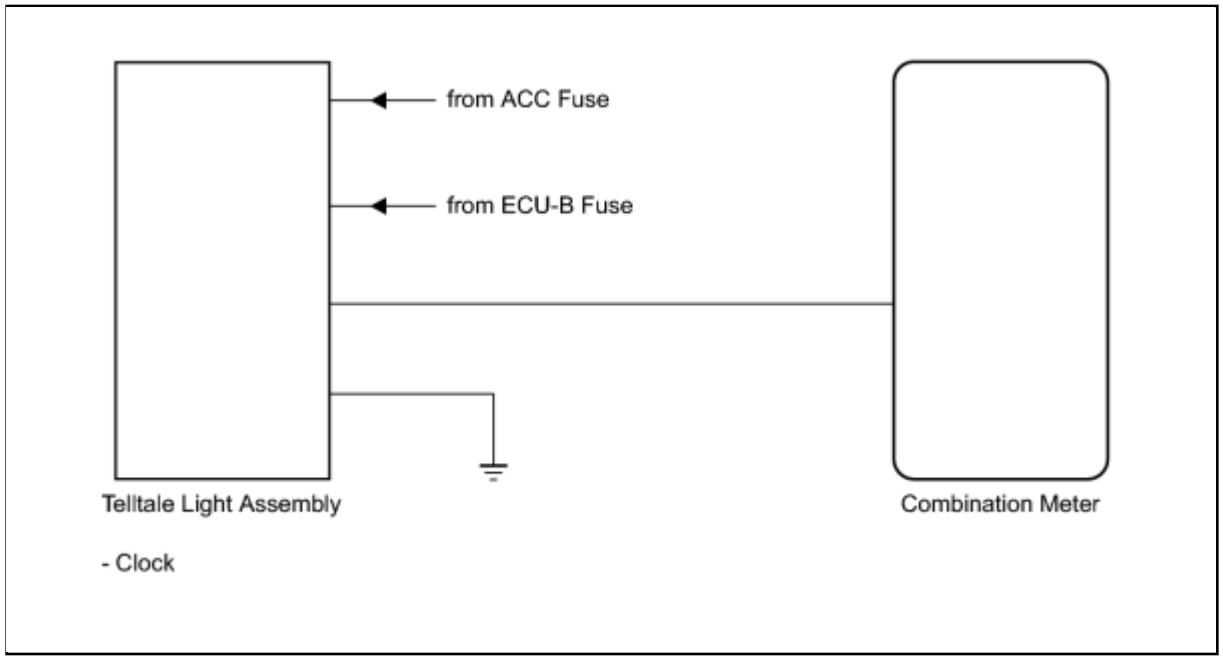

2. INPUT AND OUTPUT SIGNALS OF THE CLOCK

COMMUNICATION SIGNAL	SENDER	RECEIVER	COMMUNICATION LINE
Illumination*1	Main Body ECU	Combination Meter (Clock)	Direct Line
Illumination*2	Combination Meter	Telltale Light Assembly (Clock)	Direct Line

- *1: for Telltale Light Assembly (w/o Clock)
- *2: for Telltale Light Assembly (w/ Clock)

TOYOTA

Last Modified: 3-10-2010	6.4 D	**From:** 200901
Model Year: 2010	**Model:** Corolla	**Doc ID:** RM0000012G3032X
Title: METER / GAUGE / DISPLAY: CLOCK SYSTEM: SYSTEM DESCRIPTION (2010 Corolla)		

SYSTEM DESCRIPTION

1. COMBINATION METER (CLOCK)*1

ITEM	DETAIL
Clock display	The time is always displayed. In addition, the combination meter dims according to the signal from the main body ECU.

- *1: for Telltale Light Assembly (w/o Clock)

2. TELLTALE LIGHT ASSEMBLY (CLOCK)*2

ITEM	DETAIL
Clock display	The time is displayed. In addition, the telltale light assembly dims according to the signal from the combination meter.

- *2: for Telltale Light Assembly (w/ Clock)

Last Modified: 3-10-2010	6.4 D	**From:** 200901
Model Year: 2010	**Model:** Corolla	**Doc ID:** RM0000012G1049X
Title: METER / GAUGE / DISPLAY: CLOCK SYSTEM: HOW TO PROCEED WITH TROUBLESHOOTING (2010 Corolla)		

HOW TO PROCEED WITH TROUBLESHOOTING

1.	**VEHICLE BROUGHT TO WORKSHOP**

NEXT

2.	**CUSTOMER PROBLEM ANALYSIS**

NEXT

3.	**PROBLEM SYMPTOM CONFIRMATION**

NEXT

4.	**PROBLEM SIMULATION**

NEXT

5.	**PROBLEM SYMPTOMS TABLE**

(a) Refer to Problem Symptoms Table INFO .

NEXT

6.	**CIRCUIT INSPECTION**

NEXT

7.	**REPAIR OR REPLACE**

NEXT

8.	**CONFIRMATION TEST**

NEXT **END**

Last Modified: 3-10-2010	6.4 T	**From:** 200901
Model Year: 2010	**Model:** Corolla	**Doc ID:** RM000001R3A01TX
Title: METER / GAUGE / DISPLAY: CLOCK SYSTEM: PROBLEM SYMPTOMS TABLE (2010 Corolla)		

PROBLEM SYMPTOMS TABLE

HINT:

Use the table below to help determine the cause of problem symptoms. If multiple suspected areas are listed, the potential causes of the symptoms are listed in order of probability in the "Suspected Area" column of the table. Check each symptom by checking the suspected areas in the order they are listed. Replace parts as necessary.

Clock (for Telltale Light Assembly (w/o Clock))

SYMPTOM	SUSPECTED AREA	SEE PAGE
Clock does not operate at all.	Fuse (METER)	-
	Power Source Circuit	INFO
Clock display illumination malfunction	Combination Meter (Clock)	INFO
Clock loses or gains time.	Combination Meter (Clock)	INFO

Clock (for Telltale Light Assembly (w/ Clock))

SYMPTOM	SUSPECTED AREA	SEE PAGE
Clock does not operate at all.	Fuse (ACC, ECU-B)	-
	Telltale Light Assembly (w/ Clock)	INFO
Clock display illumination malfunction	Wire Harness or Connector	-
	Combination Meter	INFO
	Telltale Light Assembly (w/ Clock)	INFO
Clock loses or gains time.	Telltale Light Assembly (w/ Clock)	INFO

Last Modified: 3-10-2010	6.4 K	**From:** 200901
Model Year: 2010	**Model:** Corolla	**Doc ID:** RM0000024D6018X
Title: METER / GAUGE / DISPLAY: COMBINATION METER: COMPONENTS (2010 Corolla)		

COMPONENTS

ILLUSTRATION

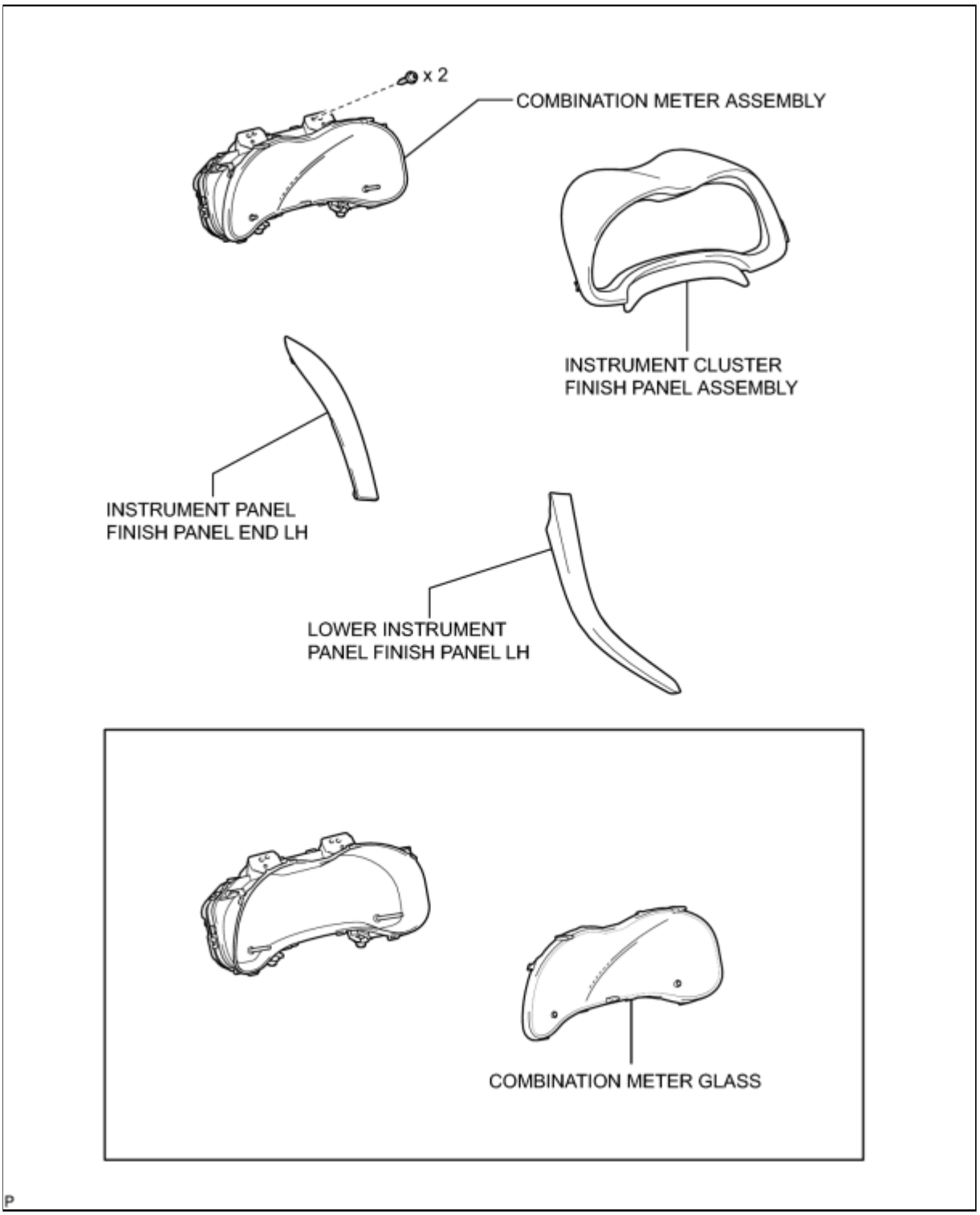

Last Modified: 3-10-2010	6.4 A	**From:** 200901
Model Year: 2010	**Model:** Corolla	**Doc ID:** RM0000024D701HX
Title: METER / GAUGE / DISPLAY: COMBINATION METER: REMOVAL (2010 Corolla)		

REMOVAL

1. REMOVE LOWER INSTRUMENT PANEL FINISH PANEL LH INFO

2. REMOVE INSTRUMENT PANEL FINISH PANEL END LH INFO

3. REMOVE INSTRUMENT CLUSTER FINISH PANEL ASSEMBLY

(a) Operate the tilt lever to lower the steering wheel assembly.

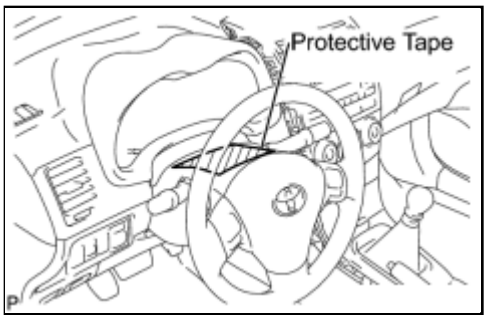

(b) Apply protective tape to the area shown in the illustration.

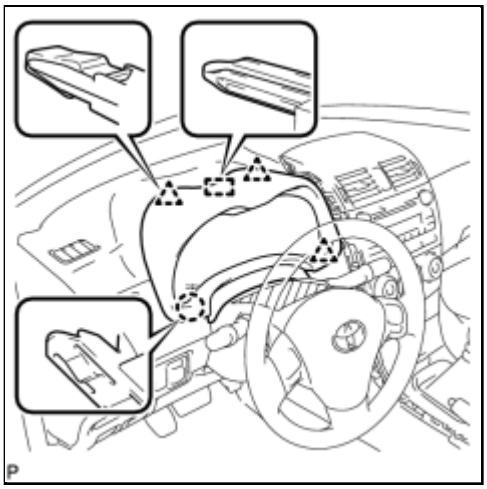

(c) Disengage the guide, claw and 3 clips, and then remove the instrument cluster finish panel assembly.

4. REMOVE COMBINATION METER ASSEMBLY

(a) Remove the 2 screws.

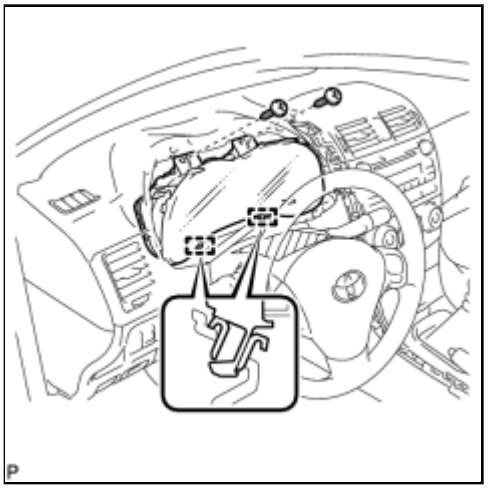

(b) Disengage the 2 guides.

NOTICE:

When removing the combination meter assembly, be careful not to break the guide.

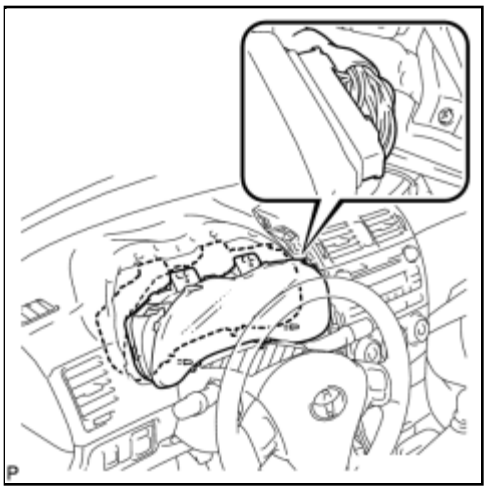

(c) Pull the combination meter assembly, disconnect the connector, and remove the combination meter assembly.

NOTICE:

When removing the combination meter assembly, do not damage the upper instrument panel sub-assembly or combination meter assembly.

Last Modified: 3-10-2010	6.4 A	**From:** 200901
Model Year: 2010	**Model:** Corolla	**Doc ID:** RM0000024D8018X
Title: METER / GAUGE / DISPLAY: COMBINATION METER: DISASSEMBLY (2010 Corolla)		

DISASSEMBLY

1. REMOVE COMBINATION METER GLASS

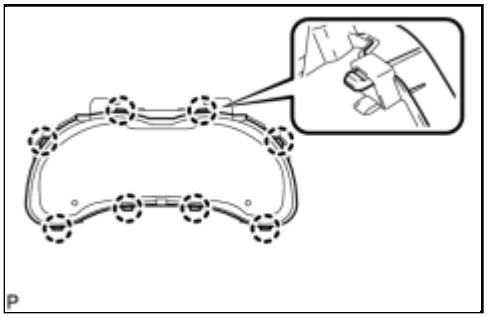

(a) Disengage the 8 claws and remove the combination meter glass.

Last Modified: 3-10-2010	6.4 A	**From:** 200901
Model Year: 2010	**Model:** Corolla	**Doc ID:** RM0000024D9018X
Title: METER / GAUGE / DISPLAY: COMBINATION METER: REASSEMBLY (2010 Corolla)		

REASSEMBLY

1. INSTALL COMBINATION METER GLASS

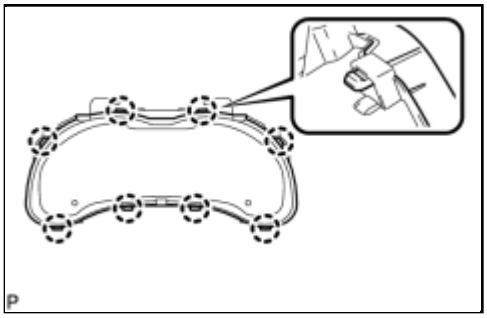

(a) Engage the 8 claws and install the combination meter glass.

NOTICE:

When installing the combination meter glass, be careful of invasion of dust or a foreign substance.

Last Modified: 3-10-2010	6.4 A	**From:** 200901
Model Year: 2010	**Model:** Corolla	**Doc ID:** RM0000024D501HX
Title: METER / GAUGE / DISPLAY: COMBINATION METER: INSTALLATION (2010 Corolla)		

INSTALLATION

1. INSTALL COMBINATION METER ASSEMBLY

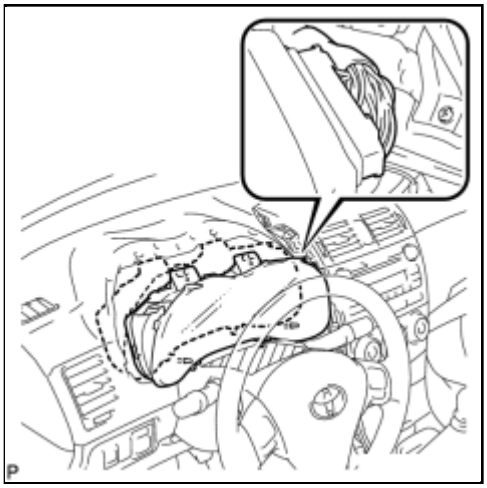

(a) Connect the connector and temporarily install the combination meter assembly.

NOTICE:

When installing the combination meter assembly, do not damage the upper instrument panel sub-assembly or combination meter assembly.

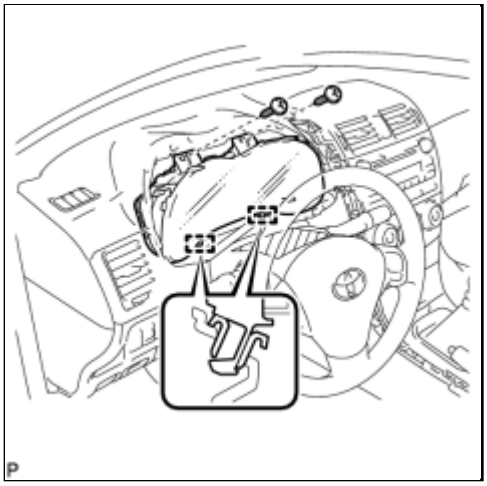

(b) Engage the 2 guides.

NOTICE:

- When installing the combination meter assembly, be careful not to break the guide.
- When installing the combination meter assembly, insert the guides securely into the holes on the upper instrument panel sub-assembly.

(c) Install the combination meter assembly with the 2 screws.

2. INSTALL INSTRUMENT CLUSTER FINISH PANEL ASSEMBLY

(a) Engage the guide, claw and 3 clips, and install the instrument cluster finish panel assembly.

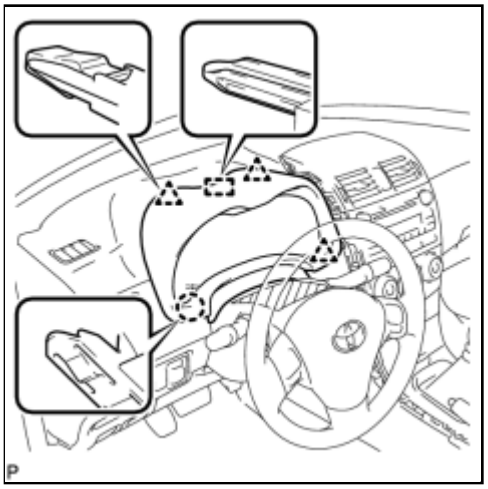

(b) Remove the applied protective tape on the steering column cover.

3. INSTALL INSTRUMENT PANEL FINISH PANEL END LH INFO

4. INSTALL LOWER INSTRUMENT PANEL FINISH PANEL LH INFO

Last Modified: 3-10-2010	6.4 L	**From:** 200901
Model Year: 2010	**Model:** Corolla	**Doc ID:** RM000000XFT04MX
Title: METER / GAUGE / DISPLAY: METER / GAUGE SYSTEM: PRECAUTION (2010 Corolla)		

PRECAUTION

1. EXPRESSIONS OF IGNITION SWITCH

The type of ignition switch used on this model differs according to the specifications of the vehicle. The expressions listed in the table below are used in this section.

EXPRESSION	SWITCH TYPE	
	IGNITION SWITCH (POSITION)	ENGINE SWITCH (CONDITION)
Ignition Switch off	LOCK	Off
Ignition Switch ON	ON	On (IG)
Ignition Switch ACC	ACC	On (ACC)
Engine Start	START	Start

Last Modified: 3-10-2010	6.4 R	**From:** 200901
Model Year: 2010	**Model:** Corolla	**Doc ID:** RM0000012G201XX
Title: METER / GAUGE / DISPLAY: METER / GAUGE SYSTEM: PARTS LOCATION (2010 Corolla)		

PARTS LOCATION

ILLUSTRATION

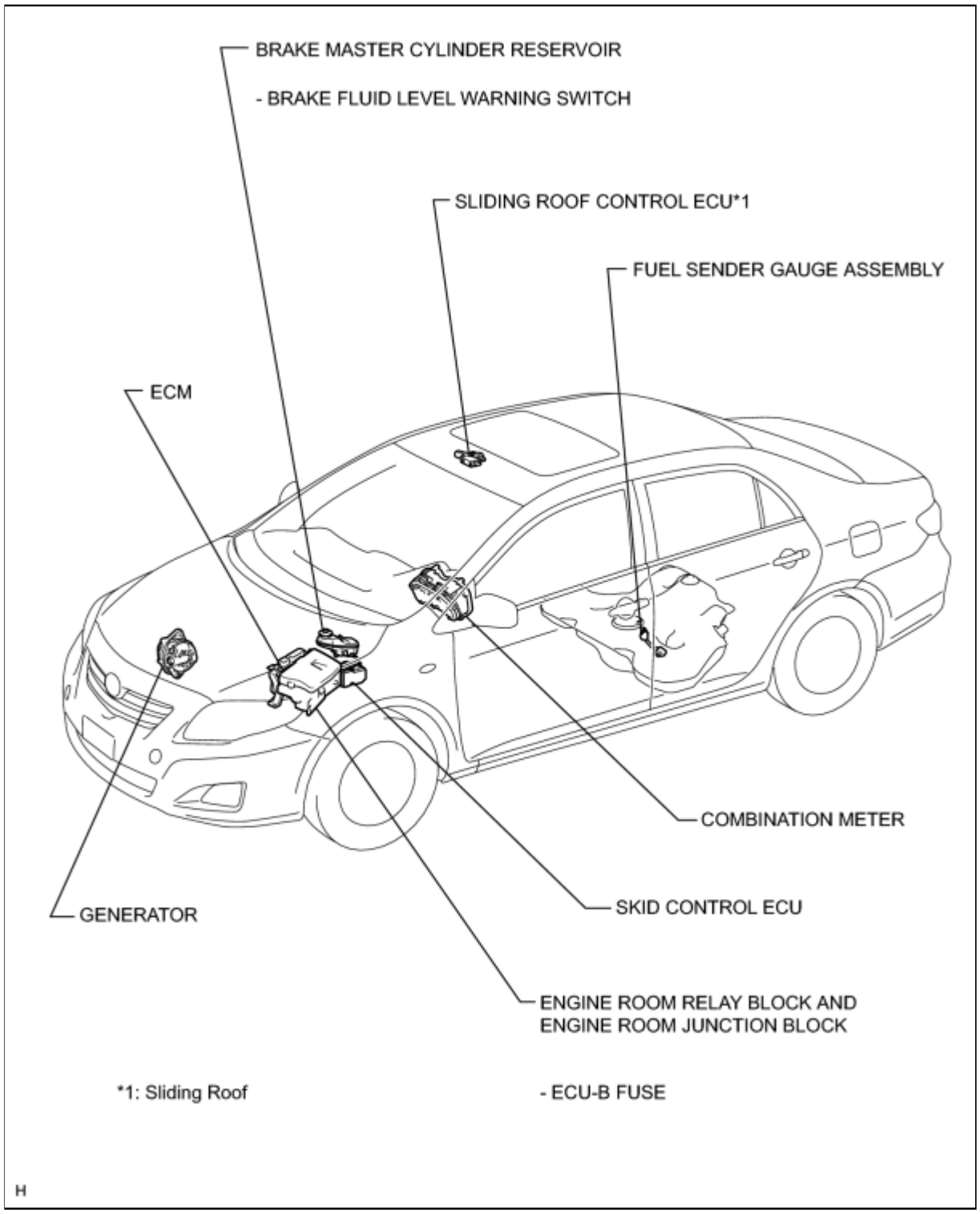

ILLUSTRATION

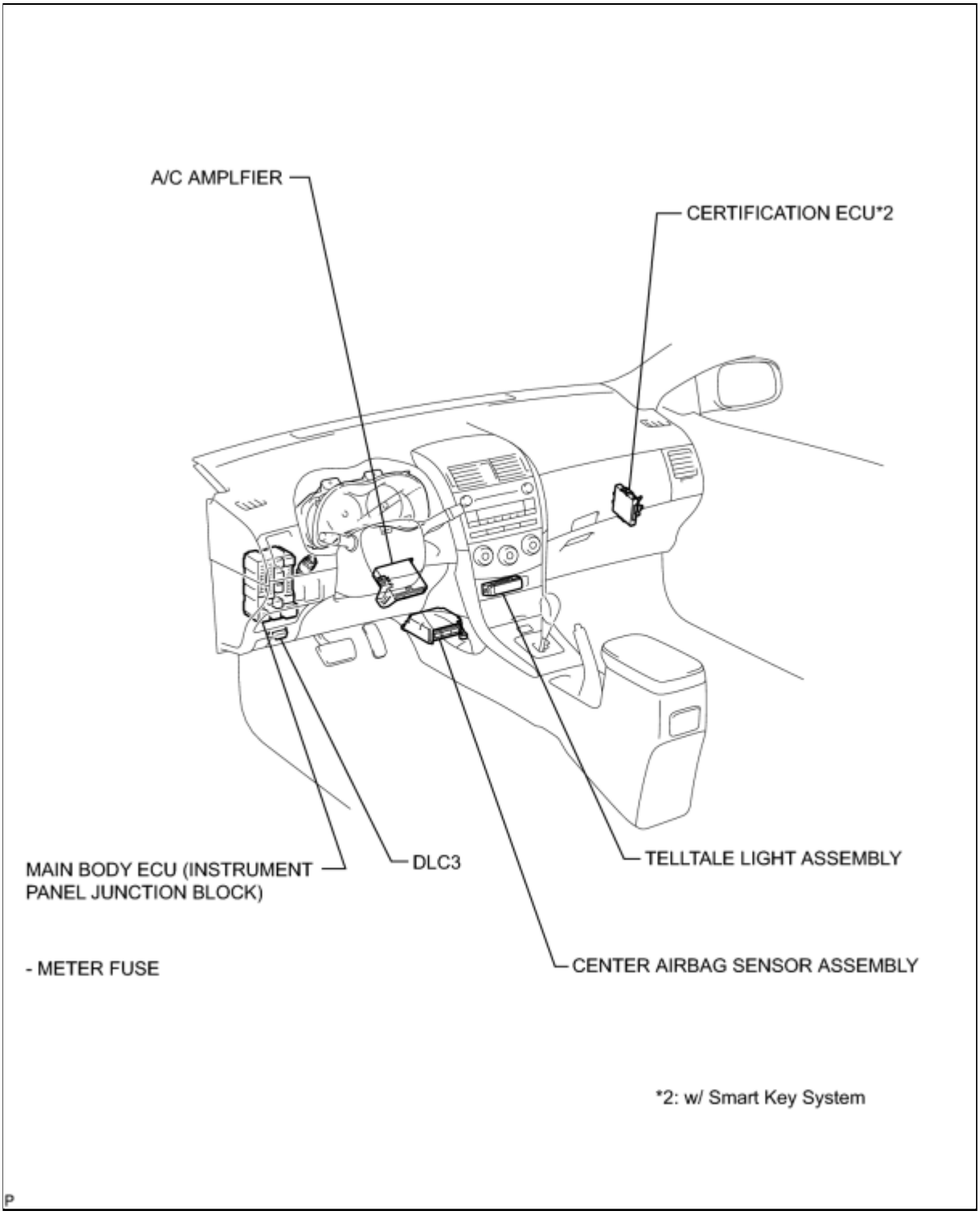

ILLUSTRATION

for 2AZ-FE:

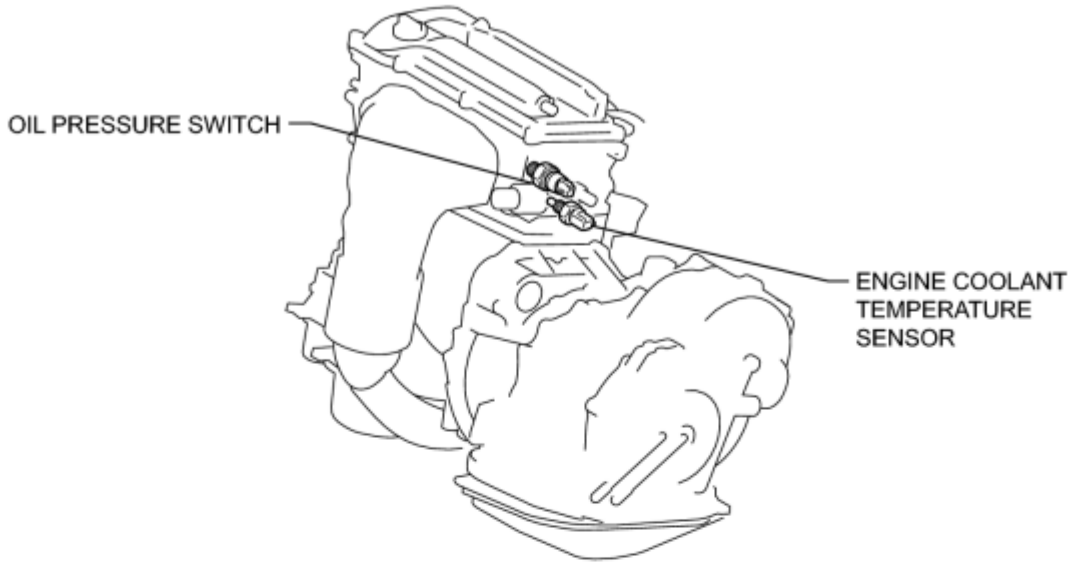

for 2ZR-FE:

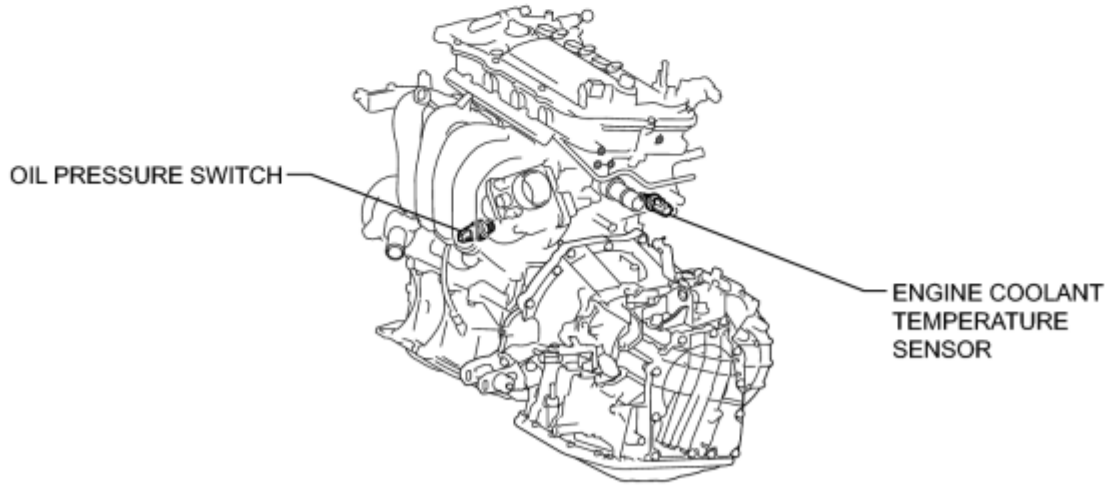

Last Modified: 3-10-2010	6.4 U	**From:** 200901
Model Year: 2010	**Model:** Corolla	**Doc ID:** RM0000012G402UX
Title: METER / GAUGE / DISPLAY: METER / GAUGE SYSTEM: SYSTEM DIAGRAM (2010 Corolla)		

SYSTEM DIAGRAM

1. CAN SIGNAL

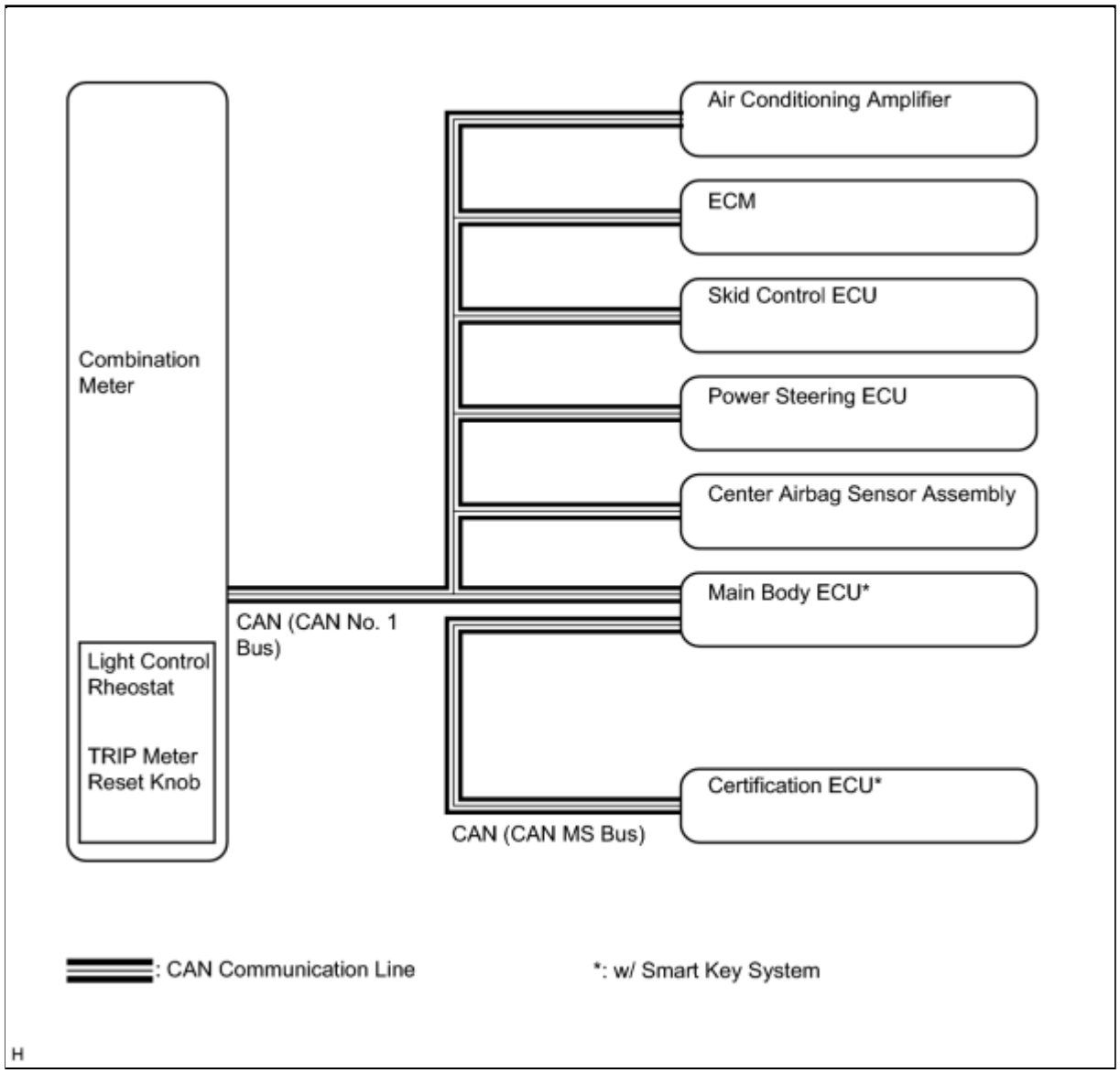

2. DIRECT LINE SIGNAL

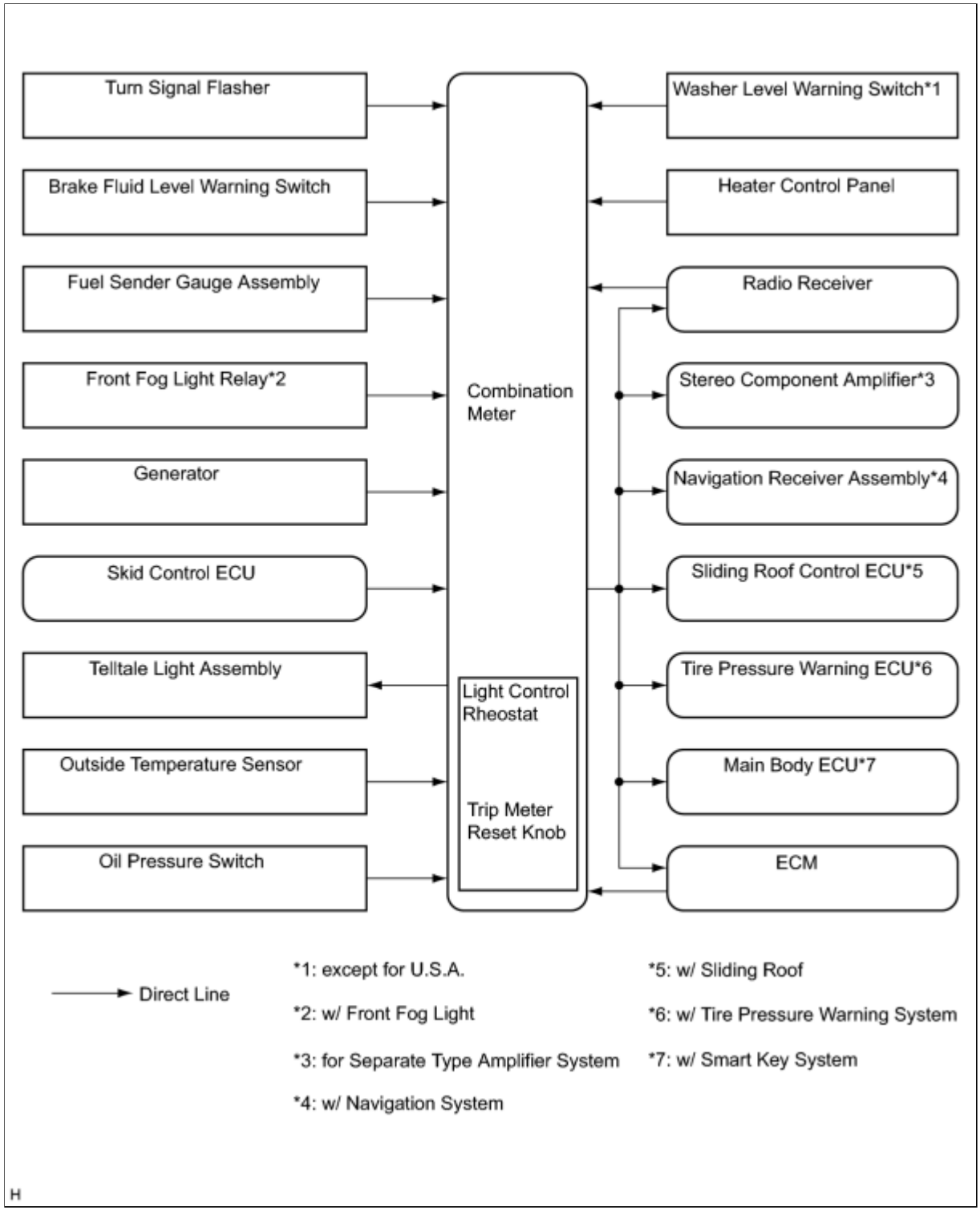

3. INPUT AND OUTPUT SIGNALS OF THE COMBINATION METER

COMMUNICATION SIGNAL	SENDER	RECEIVER	COMMUNICATION LINE
MIL (Check engine warning light)	ECM	Combination Meter	Direct Line
Starter			CAN (CAN No. 1 Bus)

COMMUNICATION SIGNAL	SENDER	RECEIVER	COMMUNICATION LINE
Test mode			
Tachometer			
Engine coolant temperature			
Cruise indicator light			
Cruise control warning			
Sports shift reject buzzer request			
A/T shift position			
Engine type information			
Vehicle speed	Skid Control ECU	Combination Meter	Direct Line and CAN (CAN No. 1 Bus)
ABS warning light			CAN (CAN No. 1 Bus)
Brake warning light			
Slip indicator light*1			
VSC off indicator light*1			
Parking brake			
Each door courtesy switch	Main Body ECU	Combination Meter	CAN (CAN No. 1 Bus)
Driver side seat belt buckle switch			
Parking brake switch			
Wireless buzzer			
Sliding roof*4			
Sliding roof warning buzzer request*4			
Front passenger side seat belt buckle switch	Center Airbag Sensor Assembly	Combination Meter	CAN (CAN No. 1 Bus)
SRS warning light			
Front passenger side seat condition			
Diagnosis information	Center Airbag Sensor Assembly	Combination Meter	CAN (CAN No. 1 Bus)
	ECM		
	Skid Control ECU		
	Power Steering ECU		
EPS warning light	Power Steering ECU	Combination Meter	CAN (CAN No. 1 Bus)

COMMUNICATION SIGNAL	SENDER	RECEIVER	COMMUNICATION LINE
Vehicle speed	Combination Meter	Air Conditioning Amplifier	CAN (CAN No. 1 Bus)
		Certification ECU	
		Power Steering ECU	
		Center Airbag Sensor Assembly	
		ECM	Direct Line
		Radio Receiver	
		Sliding Roof Control ECU*4	
		Tire Pressure Warning ECU*6	
		Main Body ECU*7	
		Navigation Receiver Assembly*8	
		Stereo Component Amplifier*9	
Illumination	Combination Meter	Main Body ECU	CAN (CAN No. 1 Bus)
Vehicle specification	Combination Meter	Air Conditioning Amplifier	CAN (CAN No. 1 Bus)
Smart key indicator light*7	Certification ECU	Combination Meter	
Fuel level	Fuel Sender Gauge Assembly	Combination Meter	Direct Line
Turn indicator light	Turn Signal Flasher	Combination Meter	Direct Line
High beam indicator light	H-LP HI Fuse	Combination Meter	Direct Line
Head indicator light*2	DRL Relay	Combination Meter	Direct Line
Tail indicator light*3	TAIL Relay	Combination Meter	Direct Line
Front fog indicator light*5	FR Fog Relay	Combination Meter	Direct Line
Outside temperature	Outside Temperature Sensor	Combination Meter	Direct Line
Brake fluid level	Brake Fluid Level Warning Switch	Combination Meter	Direct Line
Charge warning light	Generator	Combination Meter	Direct Line
Oil pressure warning light	Oil Pressure Switch	Combination Meter	Direct Line
Washer level warning light*3	Washer Level Warning Switch	Combination Meter	Direct Line

COMMUNICATION SIGNAL	SENDER	RECEIVER	COMMUNICATION LINE
Tire pressure warning light*6	Tire Pressure Warning ECU	Combination Meter	Direct Line
Front passenger side seat belt warning light	Combination Meter	Telltale Light Assembly	Direct Line

- *1: w/ VSC
- *2: for U.S.A.
- *3: except for U.S.A.
- *4: w/ Sliding Roof
- *5: w/ Front Fog Light
- *6: w/ Tire Pressure Warning System
- *7: w/ Smart Key System
- *8: w/ Navigation System
- *9: for Separate Type Amplifier System

Last Modified: 3-10-2010	6.4 D	**From:** 200901
Model Year: 2010	**Model:** Corolla	**Doc ID:** RM0000012G3031X
Title: METER / GAUGE / DISPLAY: METER / GAUGE SYSTEM: SYSTEM DESCRIPTION (2010 Corolla)		

SYSTEM DESCRIPTION

1. OUTLINE OF THE COMBINATION METER

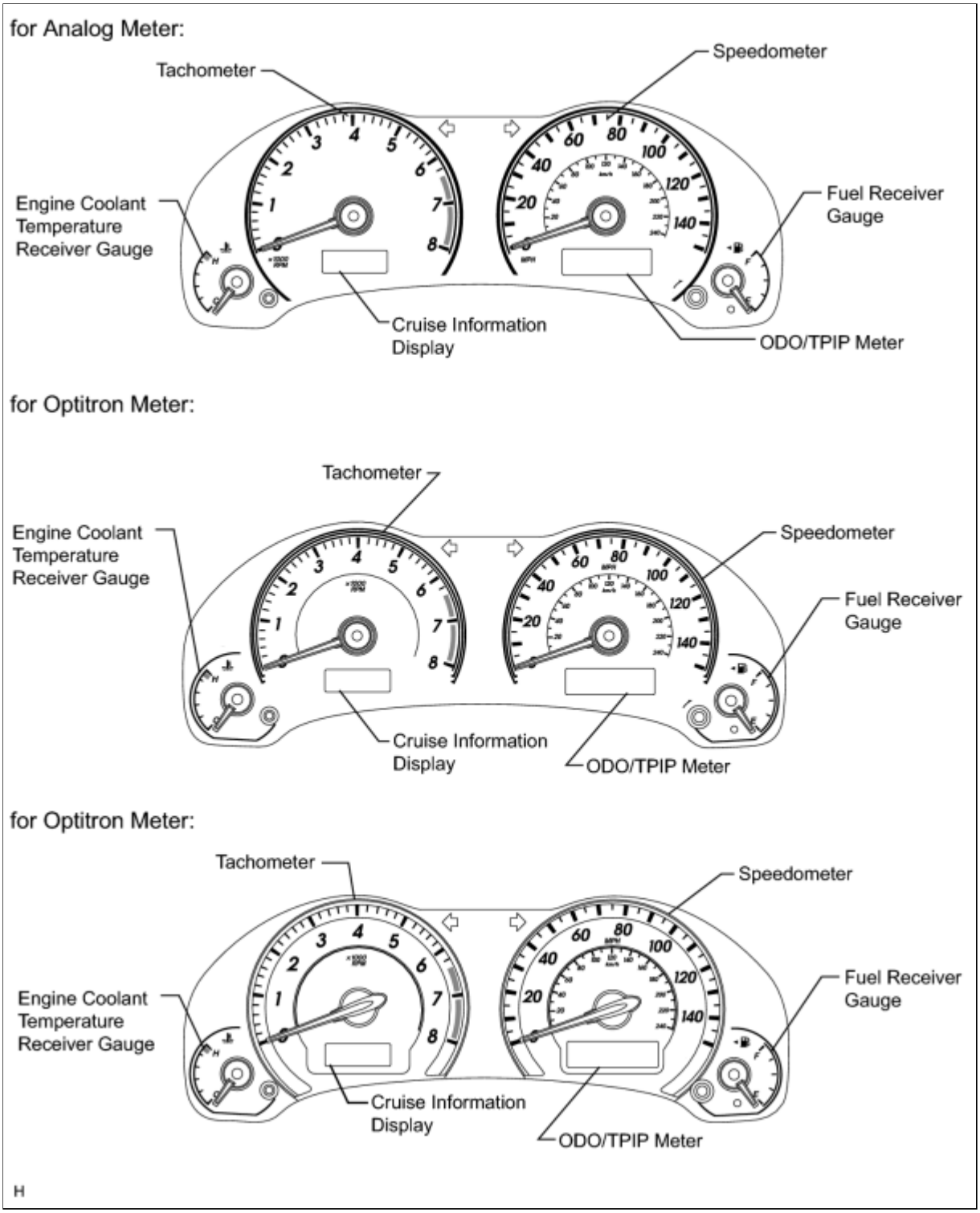

(a) Meter/Gauge

ITEM	DETAIL
Speedometer	Indicates the vehicle speed based on a signal from the skid control ECU. (CAN (CAN No. 1 Bus))
Tachometer	Indicates the engine speed based on a signal received from the ECM. (CAN (CAN No. 1 Bus))

ITEM	DETAIL
Engine Coolant Temperature Receiver Gauge	Indicates the engine coolant temperature based on a signal received from the ECM. (CAN (CAN No. 1 Bus))
Fuel Receiver Gauge	Indicates the fuel level based on a fuel level signal received from the fuel sender gauge (Direct Line)

(b) Warning/Indicator

ITEM	DETAIL
Turn	Receives a turn signal from the turn signal flasher. (Direct Line)
High beam	Receives a high beam indicator light signal from the H-LP RH HI Fuse. (Direct Line)
Charge	Receives a charge indicator light signal from the generator. (Direct Line)
MIL (Check engine)	Receives a check engine warning light signal from the ECM. (Direct Line)
Door	Open door warning light comes on receiving a door condition signal from the main body ECU. (CAN (CAN MS Bus))
Driver side seat belt	Receives a driver side seat belt signal from the center airbag sensor assembly. (CAN (CAN No. 1 Bus))
Front passenger side seat belt	Receives a front passenger side seat belt signal from the center airbag sensor assembly (CAN (CAN No. 1 Bus)) and transmits a passenger side seat belt condition signal to the telltale light assembly. (Direct Line)
Head*2	Receives a head*2 indicator light signal from the DRL relay. (Direct Line)
Tail*3	Receives a tail*3 indicator light signal from TAIL fuse. (Direct Line)
Front fog*4	Receives a front fog indicator light signal from the FR FOG relay. (Direct Line)
A/T shift	Receives an A/T shift condition signal from park/neutral switch and the ECM. (CAN (CAN No. 1 Bus))
Fuel	Receives a fuel signal from the fuel sender gauge. (Direct Line)
ABS	Receives an ABS signal from the skid control ECU. (CAN (CAN No. 1 Bus))
Slip*1	Receives a slip signal from the skid control ECU. (CAN (CAN No. 1 Bus))
Brake	Receives a brake signal from the brake fluid level warning switch (Direct Line) and the skid control ECU. (CAN (CAN No. 1 Bus))
Cruise	Receives a cruise signal from the ECM. (CAN (CAN No. 1 Bus))
SRS	Receives an SRS signal from the center airbag sensor assembly. (CAN (CAN No. 1 Bus))
VSC OFF*1	Receives an VSC off signal from the skid control ECU. (CAN (CAN No. 1 Bus))
EPS	Receives an EPS signal from the power steering ECU. (CAN (CAN No. 1 Bus))
Oil pressure	Receives an oil pressure signal from the oil pressure switch. (Direct Line)

ITEM	DETAIL
Washer*3	Receives an washer signal from the washer level warning switch. (Direct Line)
Tire pressure*5	Receives a tire pressure signal from the tire pressure warning ECU. (Direct Line)
Smart key indicator*6	Receives a smart key indicator light signal from the certification ECU. (CAN (CAN No. 1 Bus))
Oil maintenance reminder*2	An oil change reminder light comes on/blinks to remind the driver to change the engine oil depending on the vehicle driving distance.

- *1: w/ VSC
- *2: for U.S.A.
- *3: except for U.S.A.
- *4: w/ Front Fog Light
- *5 w/ Tire Pressure Warning System
- *6 w/ Smart Key System

(c) Cruise Information Display

ITEM	DETAIL	
Cruise information display	Outside temperature	Seven types of information (outside temperature, average fuel consumption, instantaneous fuel consumption, average vehicle speed, driving distance, driving time, and clock) can be displayed.
	Average fuel consumption	
	Instantaneous fuel consumption	
	Average vehicle speed	
	Driving distance	
	Driving time	
	Clock*	

*: for Telltale Light Assembly w/o Clock.

2. LED INITIAL CHECK

(a) The illumination function of the warning, indicator, or reminder light listed below can be confirmed when turning the ignition switch to ON.

OK:

INDICATOR/WARNING LIGHT	SPECIFIED CONDITION
Brake, ABS, Slip*1, EPS, VSC OFF*1, Tire pressure warning*2	Indicator/Warning light comes on for about 3 seconds after turning the ignition switch to ON.

INDICATOR/WARNING LIGHT	SPECIFIED CONDITION
Airbag	Warning light comes on for about 6 seconds after turning the ignition switch to ON.
Charge, Oil pressure	Indicator/Warning light comes on after turning the ignition switch to ON.
MIL (Check engine)	Warning light comes on while turning the ignition switch to ON and engine does not start.
Oil maintenance reminder*3	Indicator light comes on for about 3 seconds after turning the ignition switch to ON.

- *1: w/ VSC
- *2: w/ Tire Pressure Warning System
- *3: for U.S.A.

Last Modified: 3-10-2010	6.4 D	**From:** 200901
Model Year: 2010	**Model:** Corolla	**Doc ID:** RM0000012G1048X
Title: METER / GAUGE / DISPLAY: METER / GAUGE SYSTEM: HOW TO PROCEED WITH TROUBLESHOOTING (2010 Corolla)		

HOW TO PROCEED WITH TROUBLESHOOTING

1.	**VEHICLE BROUGHT TO WORKSHOP**

NEXT

2.	**CUSTOMER PROBLEM ANALYSIS**

NEXT

3.	**CHECK CAN COMMUNICATION SYSTEM**

(a) Check for DTC output INFO .

Result:

RESULT	PROCEED TO
No CAN DTC output	A
CAN DTC output	B

B INFO **GO TO CAN COMMUNICATION SYSTEM**

A

4.	**PROBLEM SYMPTOM CONFIRMATION**

NEXT

5.	**SYMPTOM SIMULATION**

NEXT

6.	**PROBLEM SYMPTOMS TABLE**

(a) Refer to Problem Symptoms Table INFO .

NEXT

7.	**CIRCUIT INSPECTION**

NEXT

8.	**REPAIR OR REPLACE**

NEXT

9.	CONFIRMATION TEST

NEXT END

Last Modified: 3-10-2010	6.4 U	**From:** 200901
Model Year: 2010	**Model:** Corolla	**Doc ID:** RM0000012GA03UX
Title: METER / GAUGE / DISPLAY: METER / GAUGE SYSTEM: TERMINALS OF ECU (2010 Corolla)		

TERMINALS OF ECU

1. COMBINATION METER

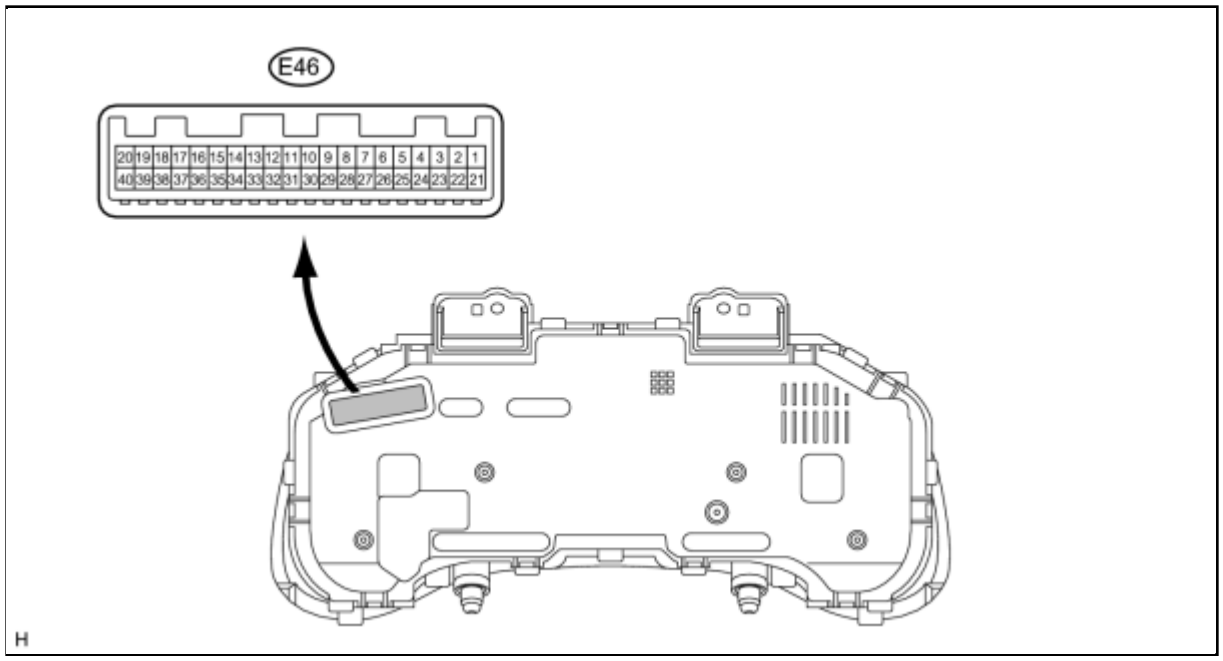

(a) Measure the voltage according to the value(s) in the table below.

TERMINAL NO. (SYMBOL)	WIRING COLOR	TERMINAL DESCRIPTION	CONDITION	SPECIFIED CONDITION
E46-1 (WRNP) - Body ground	O*1 or W*2 - Body ground	Front passenger side seat belt warning light signal	Front passenger seat occupied, ignition switch ON, front passenger side seat belt warning light OFF	11 to 14 V
			Front passenger seat occupied, ignition switch ON, front passenger side seat belt warning light is blinking	Below 1 V ⟷ 11 to 14 V
E46-2 (WLVL)*3 - Body ground	BE - Body ground	Washer level warning light signal	Ignition switch ON, washer level warning light OFF	11 to 14 V
			Ignition switch ON, washer level warning light ON	Below 1 V
E46-3 (-) - Body ground	L - Body ground	Headlight Hi-beam indicator light signal	Always	Below 1 V
E46-4 (+) -	R - Body	Headlight Hi-beam	Hi-beam switch OFF	11 to 14 V

TERMINAL NO. (SYMBOL)	WIRING COLOR	TERMINAL DESCRIPTION	CONDITION	SPECIFIED CONDITION
Body ground	ground	indicator light signal	Hi-beam switch ON	Below 1 V
E46-5 (B) - Body ground	L - Body ground	Turn indicator light signal	Ignition switch ON, turn signal RH indicator light OFF	Below 1 V
			Ignition switch ON, turn signal RH indicator light ON	11 to 14 V
E46-6 (B) - Body ground	Y - Body ground	Turn indicator light signal	Ignition switch ON, turn signal LH indicator light OFF	Below 1 V
			Ignition switch ON, turn signal LH indicator light ON	11 to 14 V
E46-7 (TIRE) - Body ground	P - Body ground	Tire pressure warning light signal	Ignition switch ON, tire pressure warning light OFF	3.2 V or more
			Ignition switch ON, tire pressure warning light ON	0.9 to 3.2 V
E46-9 (TX1+) - Body ground	G*1 or LG*2 - Body ground	Outside temperature signal	Ignition switch ON	5 V or less
E46-10 (E) - Body ground	BR - Body ground	Ground (Fuel ground)	Always	Below 1 V
E46-11 (EP) - Body ground	W-B - Body ground	Ground (Illumination ground)	Always	Below 1 V
E46-13 (TX-) - Body ground	W - Body ground	CAN communication signal	Ignition switch ON	Pulse generation
E46-14 (TX1-) - Body ground	G - Body ground	CAN communication signal	Ignition switch ON	Pulse generation
E46-16 (FOG)*4 - Body ground	P - Body ground	Front fog indicator light signal	Front fog light switch off, front fog indicator light OFF	Below 1 V
			Front fog light switch on, front fog indicator light ON	11 to 14 V
E46-17 (HEAD)*5 - Body ground	GR - Body ground	Head indicator light signal	Ignition switch ON, head indicator light OFF	11 to 14 V
			Ignition switch ON, head indicator light ON	Below 1 V
E46-20 (EFI) - Body ground	P*1 or R*2 - Body ground	MIL (Check engine warning light) signal	Ignition switch ON, MIL OFF	11 to 14 V
			Ignition switch ON, MIL ON	Below 3 V
E46-23 (TEMP) - Body ground	W*1 or GR*2 - Body	Outside temperature signal	Ignition switch ON, outside temperature 25°C (77°F)	Approximately 1.3 V

TERMINAL NO. (SYMBOL)	WIRING COLOR	TERMINAL DESCRIPTION	CONDITION	SPECIFIED CONDITION
	ground			
E46-24 (ILL+) - Body ground	V*1 or G*2 - Body ground	Tail indicator light signal	Headlight dimmer switch off, tail indicator light OFF	Below 1 V
			Headlight dimmer switch is at the TAIL position, tail indicator light ON	11 to 14 V
E46-25 (L) - Body ground	Y*1 or P*2 - Body ground	Fuel signal	Ignition switch ON, fuel level is EMPTY	3 to 7 V
			Ignition switch ON, fuel level is FULL	Below 1 V
E46-26 (ILL-) - Body ground	V*1 or W*2 - Body ground	Illumination signal	Ignition switch ON, headlight dimmer switch OFF	Below 1 V
			Ignition switch ON, headlight dimmer switch is at the TAIL or HEAD position	Below 1 V ←→ 11 to 14 V
E46-27 (CANH) - E46-28 (CANL)	G - W	CAN communication signal	Ignition switch ON	Pulse generation
E46-28 (CANL) - E46-27 (CANH)	W - G	CAN communication signal	Ignition switch ON	Pulse generation
E46-29 (ILL-) - Body ground	O*1 or W*2 - Body ground	Illumination signal	Ignition switch ON, headlight dimmer switch OFF	Below 1 V
			Ignition switch ON, headlight dimmer switch TAIL or HEAD position	Below 1 V ←→ 11 to 14 V
E46-30 (ET) - Body ground	BR - Body ground	Ground (Signal ground)	Always	Below 1 V
E46-32 (B) - Body ground	W*1 or R*2 - Body ground	Battery	Always	11 to 14 V
E46-33 (IG+) - Body ground	P*1 or B*2 - Body ground	Ignition switch signal	Ignition switch off	Below 1 V
			Ignition switch ON	11 to 14 V
E46-35 (SI) - Body ground	V*1 or LG*2 - Body ground	Speed signal for other systems (Input)	Ignition switch ON, wheel turned slowly	Pulse generation (See waveform)

TERMINAL NO. (SYMBOL)	WIRING COLOR	TERMINAL DESCRIPTION	CONDITION	SPECIFIED CONDITION
E46-36 (+S) - Body ground	V - Body ground	Speed signal for other systems (Output)	Wheel turned slowly	Pulse generation (See waveform)
E46-38 (S) - Body ground	Y*1 or G*2 - Body ground	Engine oil pressure warning light signal	Ignition switch ON, engine oil pressure warning light OFF	11 to 14 V
			Ignition switch ON, engine oil pressure warning light ON	Below 1 V
E46-39 (CHG-) - Body ground	Y - Body ground	Charge warning light signal	Ignition switch ON, charge warning light OFF	11 to 14 V
			Ignition switch ON, charge warning light ON	Below 1 V
E46-40 (SW) - Body ground	O*1 or BE*2 - Body ground	Brake fluid level warning light signal	Ignition switch ON, brake warning light OFF	11 to 14 V
			Ignition switch ON, brake warning light ON	Below 1 V

- *1: for TMC Made
- *2: except TMC Made
- *3: except for U.S.A.
- *4: w/ Front Fog Light
- *5: for U.S.A.

2. COMBINATION METER INNER CIRCUIT

(a) Combination Meter Inner Circuit

(b) Waveform (Reference): Using oscilloscope:

ITEM	CONDITION
Tool setting	5 V/DIV., 20 ms./DIV.
Vehicle condition	Driving at approximately 12 mph (20 km/h)

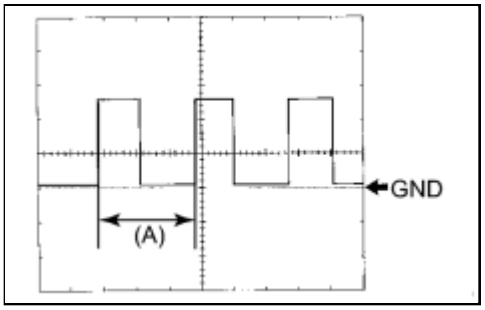

HINT:

- Vehicle speed signal that has been received and transmitted via the direct line is used for another system, and is not used for combination meter operation.
- When the system is functioning normally, one wheel revolution generates 4 pulses. As the vehicle speed increases, the width indicated by (A) in the illustration narrows.

HINT:

When the system is functioning normally, one wheel revolution generates 4 pulses. As the vehicle speed increases, the width indicated by (A) in the illustration narrows.

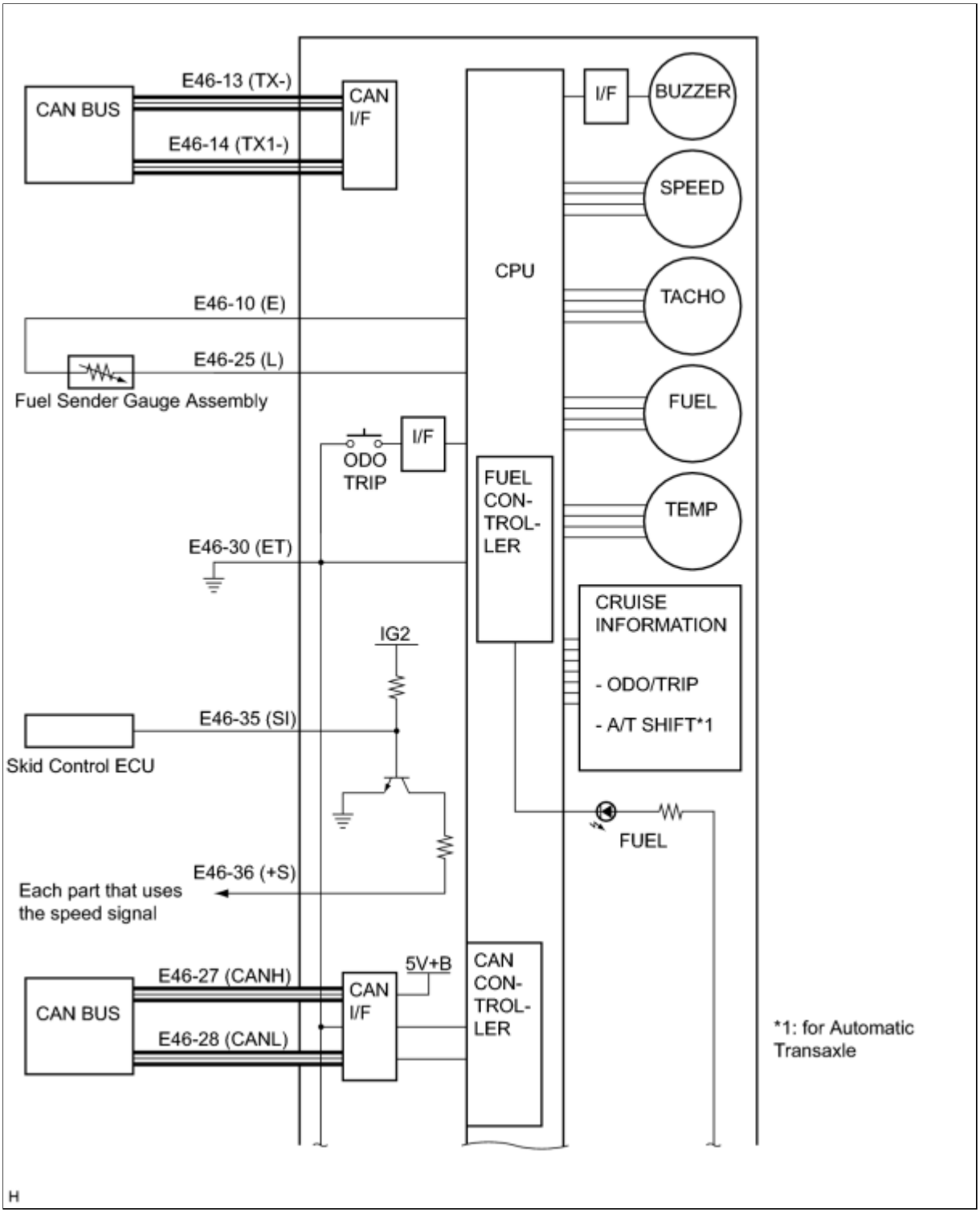
CAN BUS
E46-13 (TX-)
E46-14 (TX1-)
CAN I/F
CPU
I/F
BUZZER
SPEED
TACHO
FUEL
TEMP
E46-10 (E)
E46-25 (L)
Fuel Sender Gauge Assembly
ODO TRIP
I/F
FUEL CON-TROL-LER
E46-30 (ET)
CRUISE INFORMATION
- ODO/TRIP
- A/T SHIFT*1
IG2
E46-35 (SI)
Skid Control ECU
FUEL
E46-36 (+S)
Each part that uses the speed signal
5V+B
CAN BUS
E46-27 (CANH)
E46-28 (CANL)
CAN I/F
CAN CON-TROL-LER
*1: for Automatic Transaxle
H

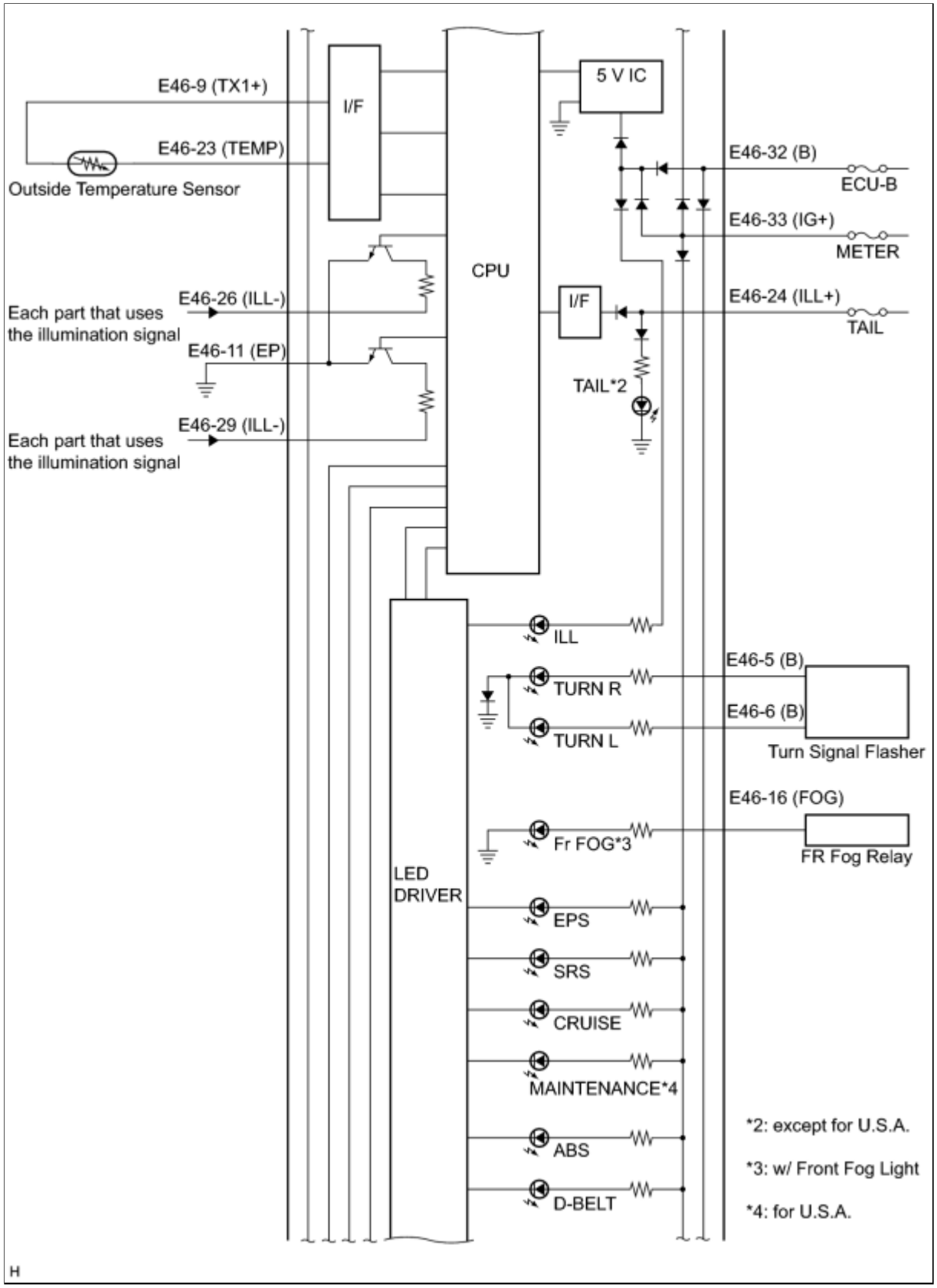
E46-9 (TX1+)
E46-23 (TEMP)
Outside Temperature Sensor
I/F
CPU
5 V IC
E46-32 (B)
ECU-B
E46-33 (IG+)
METER
E46-26 (ILL-)
Each part that uses the illumination signal
E46-11 (EP)
I/F
E46-24 (ILL+)
TAIL
TAIL*2
E46-29 (ILL-)
Each part that uses the illumination signal
ILL
E46-5 (B)
TURN R
E46-6 (B)
TURN L
Turn Signal Flasher
E46-16 (FOG)
Fr FOG*3
FR Fog Relay
LED DRIVER
EPS
SRS
CRUISE
MAINTENANCE*4
ABS
D-BELT
*2: except for U.S.A.
*3: w/ Front Fog Light
*4: for U.S.A.
H

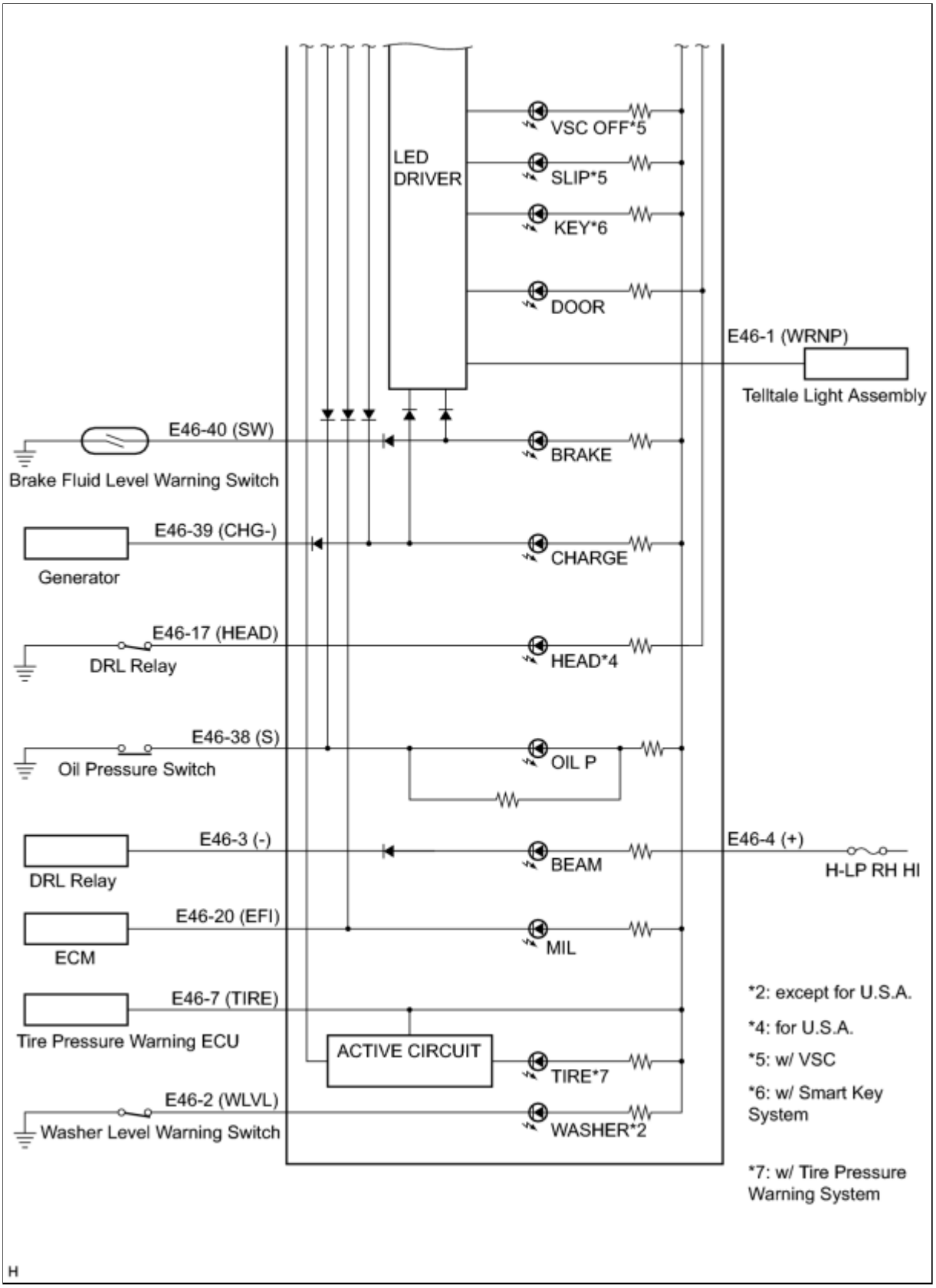

TERMINAL NO.		WIRE HARNESS SIDE (SYMBOL)
E46	1	Front Passenger Seat Belt Warning Light (WRNP)

TERMINAL NO.	WIRE HARNESS SIDE (SYMBOL)
2	Washer Level Warning Switch (WLVL)*1
3	DRL Relay
4	H-LP RH HI Fuse (+)
5	Turn Signal Flasher (B)
6	Turn Signal Flasher (B)
7	Tire Pressure Warning ECU (TIRE)
8	-
9	Outside Temperature Sensor (TX1+)
10	Fuel Sender Gauge Assembly (E)
11	Ground (EP)
12	-
13	CAN Communication Line (TX-)
14	CAN Communication Line (TX1-)
15	-
16	FR FOG Relay (FOG)*2
17	DRL Relay (HEAD)
18	-
19	-
20	ECM (EFI)
21	-
22	-
23	Outside Temperature Sensor (TEMP)
24	TAIL Fuse (ILL+)
25	Fuel Sender Gauge Assembly (L)
26	Each part that uses the illumination signal (ILL-)
27	CAN Communication Line (CANH)
28	CAN Communication Line (CANL)
29	Each part that uses the illumination signal (ILL-)
30	Ground (ET)
31	-
32	ECU-B Fuse (B)
33	METER Fuse (IG+)

TERMINAL NO.	WIRE HARNESS SIDE (SYMBOL)
34	-
35	Skid Control ECU (SI)
36	Each part that uses the speed signal (+S)
37	-
38	Oil Pressure Switch (S)
39	Alternator L Terminal (CHG-)
40	Brake Fluid Level Warning Switch (SW)

- *1: except for U.S.A.
- *2: w/ Front Fog Light

3. TELLTALE LIGHT ASSEMBLY (w/ Clock)

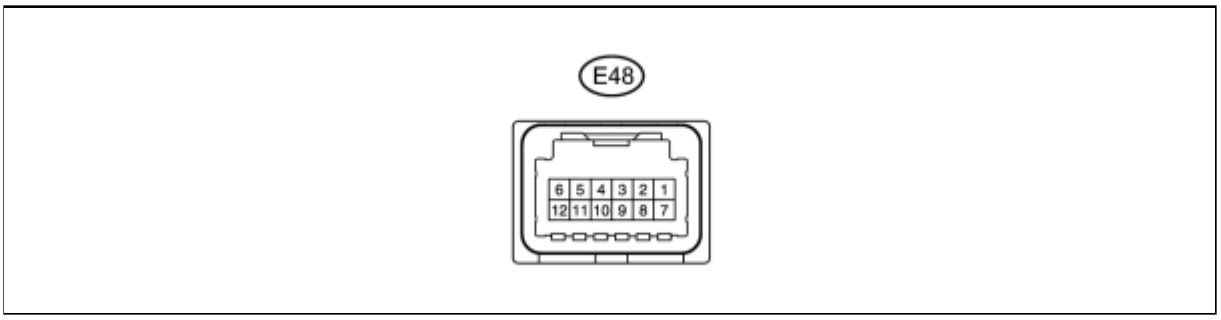

(a) Measure the voltage and resistance according to the value(s) in the table below.

TERMINAL NO. (SYMBOL)	WIRING COLOR	TERMINAL DESCRIPTION	CONDITION	SPECIFIED CONDITION
E48-1 (B) - Body ground	W - Body ground	Battery	Ignition switch OFF	11 to 14 V
E48-2 (ACC) - Body ground	B - Body ground	Ignition switch (ACC) signal	Ignition switch OFF	Below 1 V
			Ignition switch ON (ACC)	11 to 14 V
E48-4 (ILL+) - Body ground	G - Body ground	Illumination signal	Ignition switch ON and light control switch off	Below 1 V
			Ignition switch ON and light control switch tail or head position	4 to 6 V
E48-12 (E) - Body ground	W-B - Body ground	Ground	Always	Below 1 Ω

Last Modified: 3-10-2010	6.4 D	**From:** 200901
Model Year: 2010	**Model:** Corolla	**Doc ID:** RM0000012G802UX
Title: METER / GAUGE / DISPLAY: METER / GAUGE SYSTEM: CUSTOMIZE PARAMETERS (2010 Corolla)		

CUSTOMIZE PARAMETERS

1. COMBINATION METER

NOTICE:

Be sure to record the current value before customizing.

HINT:

The following items can be customized using the Techstream.

Combination Meter

TESTER DISPLAY	DEFAULT	CONTENT	SETTING
Driver Side Seatbelt Warning Buzzer*	On	Function to change the setting of the seat belt warning buzzer.	On, Off
Front Passenger Side Seatbelt Warning Buzzer*	On	Function to change the setting of the seat belt warning buzzer.	On, Off

- *: This setting is only valid for the buzzer which sounds at 20 km/h (12 mph) or more.

Last Modified: 3-10-2010	6.4 T	**From:** 200901
Model Year: 2010	**Model:** Corolla	**Doc ID:** RM0000012GB036X
Title: METER / GAUGE / DISPLAY: METER / GAUGE SYSTEM: PROBLEM SYMPTOMS TABLE (2010 Corolla)		

PROBLEM SYMPTOMS TABLE

HINT:

- Use the table below to help determine the cause of problem symptoms. If multiple suspected areas are listed, the potential causes of the symptoms are listed in order of probability in the "Suspected Area" column of the table. Check each symptoms by checking the suspected areas in the order they are listed. Replace parts as necessary.
- Inspect the fuses and relays related to this system before inspecting the suspected areas below.

Entire System

SYMPTOM	SUSPECTED AREA	SEE PAGE
Entire combination meter does not operate.	Power Source Circuit	INFO

Meter/Gauge

SYMPTOM	SUSPECTED AREA	SEE PAGE
Speedometer malfunction	Speedometer Circuit	INFO
Tachometer malfunction	Tachometer Circuit	INFO
Fuel receiver gauge malfunction	Fuel Receiver Gauge Circuit	INFO
Engine coolant temperature malfunction	Engine Coolant Temperature Receiver Gauge Circuit	INFO

Warning Lights

SYMPTOM	SUSPECTED AREA	SEE PAGE
MIL (Check engine warning light) malfunction	MIL Circuit (for 2AZ-FE)	INFO
	MIL Circuit (for 2ZR-FE)	INFO
	Combination Meter	INFO
Charge warning light does not come on.	Combination Meter (LED)	INFO
	Wire Harness or Connector	-
	Generator (for 2AZ-FE)	INFO
	Generator (for 2ZR-FE)	INFO

SYMPTOM	SUSPECTED AREA	SEE PAGE
	Combination Meter	INFO
Brake warning light does not come on.	Combination Meter (LED)	INFO
	Wire Harness or Connector	-
	Brake Warning Light Circuit (w/o VSC)	INFO
	Brake Warning Light Circuit (w/ VSC)	INFO
	Combination Meter	INFO
Brake warning light does not go off.	Combination Meter (LED)	INFO
	Wire Harness or Connector	-
	Brake Warning Light Circuit (w/o VSC)	INFO
	Brake Warning Light Circuit (w/ VSC)	INFO
	Combination Meter	INFO
ABS warning light does not come on.	Combination Meter (LED)	INFO
	ABS Warning Light Circuit (w/o VSC)	INFO
	ABS Warning Light Circuit (w/ VSC)	INFO
	Combination Meter	INFO
ABS warning light does not go off.	Combination Meter (LED)	INFO
	ABS Warning Light Circuit (w/o VSC)	INFO
	ABS Warning Light Circuit (w/ VSC)	INFO
	Combination Meter	INFO
SRS warning light does not come on.	Combination Meter (LED)	INFO
	SRS Warning Light Circuit	INFO
	Combination Meter	INFO
SRS warning light does not go off.	Combination Meter (LED)	INFO
	SRS Warning Light Circuit	INFO
	Combination Meter	INFO

SYMPTOM	SUSPECTED AREA	SEE PAGE
Open door warning light does not come on.	Combination Meter (LED)	INFO
	Front Door Courtesy Switch	INFO
	Main Body ECU	-
	Combination Meter	INFO
Fuel level warning light does not come on.	Combination Meter (LED)	INFO
	Wire Harness or Connector	-
	Fuel Sender Gauge Assembly (for 2AZ-FE)	INFO
	Fuel Sender Gauge Assembly (for 2ZR-FE)	INFO
	Combination Meter	INFO
Driver side seat belt warning light does not come on.	Combination Meter (LED)	INFO
	Driver Seat Belt Warning Light Circuit	INFO
	Combination Meter	INFO
Tire pressure warning light does not come on. (w/ Tire Pressure Warning System)	Combination Meter (LED)	INFO
	Tire Pressure Warning System	-
	Combination Meter	INFO
EPS warning light malfunction	Combination Meter (LED)	INFO
	EPS Warning Light Circuit	-
	Combination Meter	INFO
Washer level warning light malfunction (except for U.S.A.)	Combination Meter (LED)	INFO
	Wire Harness or Connector	-
	Washer Level Warning Switch	INFO
	Combination Meter	INFO
Low oil pressure warning light malfunction	Combination Meter (LED)	INFO
	Wire Harness or Connector	-
	Oil Pressure Switch (for 2AZ-FE)	INFO
	Oil Pressure Switch (for 2ZR-FE)	INFO

SYMPTOM	SUSPECTED AREA	SEE PAGE
	Combination Meter	INFO

Indicator Lights

SYMPTOM	SUSPECTED AREA	SEE PAGE
Shift indicator light does not come on. (for Automatic transaxle)	Combination Meter (LED)	INFO
	Park/Neutral Position Switch (for U341E)	INFO
	Park/Neutral Position Switch (for U250E)	INFO
	Transmission Control Switch Circuit (for U341E)	INFO
	Transmission Control Switch Circuit (for U250E)	INFO
	ECM (for 2AZ-FE)	INFO
	ECM (for 2ZR-FE)	INFO
	Combination Meter	INFO
Turn indicator light malfunction	Headlight Dimmer Switch	INFO
	Wire Harness or Connector	-
	Combination Meter	INFO
Slip indicator light does not come on. (w/ VSC)	Combination Meter (LED)	INFO
	Slip Indicator Light Circuit	INFO
	Combination Meter	INFO
Slip indicator light does not go off. (w/ VSC)	Combination Meter (LED)	INFO
	Slip Indicator Light Circuit	INFO
	Combination Meter	INFO
VSC OFF indicator light does not come on. (w/ VSC)	Combination Meter (LED)	INFO
	VSC OFF Indicator Light Circuit	INFO
	Combination Meter	INFO
VSC OFF indicator light does not go off. (w/ VSC)	Combination Meter (LED)	INFO
	VSC OFF Indicator Light Circuit	INFO

SYMPTOM	SUSPECTED AREA	SEE PAGE
	Combination Meter	INFO
Cruise indicator light does not come on.	Combination Meter (LED)	INFO
	Cruise Main Indicator Light Circuit	INFO
	Combination Meter	INFO
High beam indicator light does not come on.	Wire Harness or Connector	-
	High Beam Indicator Light Circuit	INFO
	Combination Meter	INFO
Head indicator light does not come on. (for U.S.A.)	Combination Meter (LED)	INFO
	Headlight Circuit	INFO
	Combination Meter	INFO
Tail indicator light does not come on. (except for U.S.A.)	Combination Meter (LED)	INFO
	Taillight Relay Circuit	INFO
	Combination Meter	INFO
Front fog indicator light does not come on. (w/ Front Fog Light)	Combination Meter (LED)	INFO
	Wire Harness or Connector	-
	Front Fog Light Circuit	INFO
	Combination Meter	INFO
Smart key indicator light malfunction (w/ Smart Key System)	Combination Meter (LED)	INFO
	Smart Key System	INFO
	Combination Meter	INFO
Oil maintenance reminder light malfunction	Combination Meter (LED)	INFO
	Oil Maintenance Reminder Reset Procedure Undone	INFO
	Combination Meter	INFO

Cruise Information Display

SYMPTOM	SUSPECTED AREA	SEE PAGE
Outside temperature display malfunction	Outside Temperature Sensor Circuit (for Manual Air Conditioning System)	INFO

SYMPTOM	SUSPECTED AREA	SEE PAGE
	Outside Temperature Sensor Circuit (for Automatic Air Conditioning System)	INFO
	Combination Meter	INFO
Instantaneous fuel consumption display malfunction	ECM (for 2AZ-FE)	-
	ECM (for 2GR-FE)	-
	Combination Meter	INFO
Average fuel consumption display malfunction	ECM (for 2AZ-FE)	-
	ECM (for 2GR-FE)	-
	Combination Meter	INFO
Clock display malfunction (for Telltale Light Assembly w/o Clock)	Combination Meter	INFO
Average vehicle speed display malfunction	Skid Control ECU (w/o VSC)	-
	Skid Control ECU (w/ VSC)	-
	Combination Meter	INFO
Driving distance display malfunction	ECM (for 2AZ-FE)	-
	ECM (for 2ZR-FE)	-
	Combination Meter	INFO
Driving time display malfunction	Combination Meter	INFO

Others

SYMPTOM	SUSPECTED AREA	SEE PAGE
Front passenger side seat belt warning light does not come on.	Combination Meter (LED)	INFO
	Front Passenger Side Seat Belt Warning Light Circuit	INFO
	Combination Meter	INFO
	Telltale Light Assembly	INFO
Other system that uses speed signal does not operate normally.	Speed Signal Circuit	INFO

Last Modified: 3-10-2010	6.4 D	**From:** 200901
Model Year: 2010	**Model:** Corolla	**Doc ID:** RM000000XCW01WX
Title: METER / GAUGE / DISPLAY: METER / GAUGE SYSTEM: INITIALIZATION (2010 Corolla)		

INITIALIZATION

1. OIL MAINTENANCE REMINDER RESET PROCEDURE

HINT:

- The TRIP meter reset knob is located below the speedometer.
- This reset operation is required only for U.S.A..

(a) Turn the ignition switch to ON.

(b) Press the ODO/TRIP switch until the TRIP A meter appears.

(c) Turn the ignition switch off.

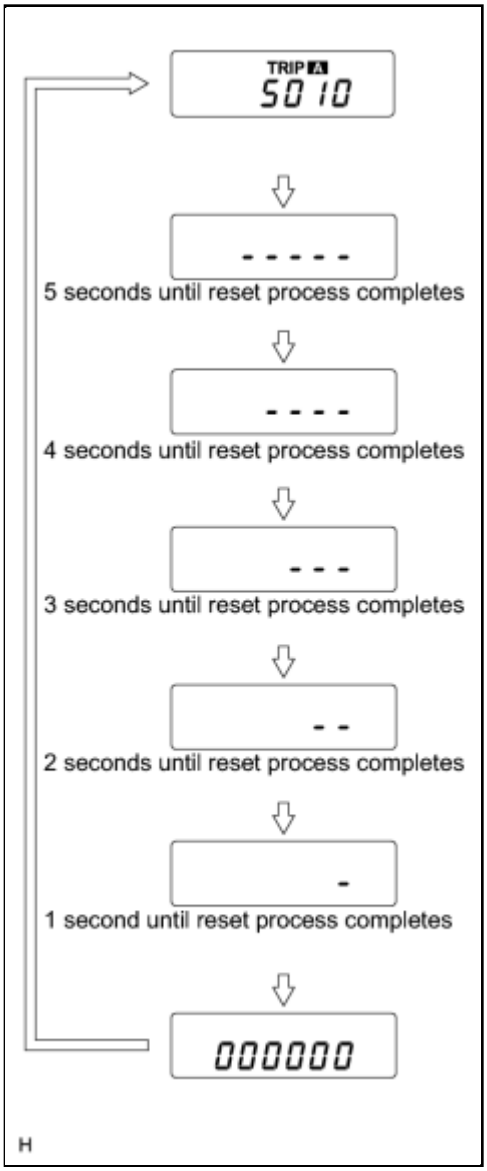

(d) Turn the ignition switch to ON while pressing and holding the TRIP meter reset knob. Hold the TRIP meter reset knob until the following conditions are met and 5 seconds have passed.

HINT:

When oil maintenance reminder light turns off, the reset is complete.

Last Modified: 3-10-2010	6.4 D	**From:** 200901
Model Year: 2010	**Model:** Corolla	**Doc ID:** RM0000012G6028X
Title: METER / GAUGE / DISPLAY: METER / GAUGE SYSTEM: DIAGNOSIS SYSTEM (2010 Corolla)		

DIAGNOSIS SYSTEM

1. CHECK DLC3

(a) Check the DLC3 INFO .

Last Modified: 3-10-2010	6.4 U	**From:** 200901
Model Year: 2010	**Model:** Corolla	**Doc ID:** RM0000012G704EX
Title: METER / GAUGE / DISPLAY: METER / GAUGE SYSTEM: DATA LIST / ACTIVE TEST (2010 Corolla)		

DATA LIST / ACTIVE TEST

1. DATA LIST

Using the Techstream to read the Data List allows the values or states of switches, sensors, actuators and other items to be read without removing any parts. This non-intrusive inspection can be very useful because intermittent conditions or signals may be discovered before parts or wiring is disturbed. Reading the Data List information early in troubleshooting is one way to save diagnostic time.

(a) Warm up the engine.

(b) Turn the ignition switch off.

(c) Connect the Techstream to the DLC3.

(d) Turn the ignition switch to ON.

(e) Turn the Techstream on.

(f) Enter the following menus:

(1) for Combination Meter: Body Electrical / Combination Meter / Data List.

(2) for ABS/TRAC/VSC: Chassis / ABS/VSC/TRAC / Data List.

(3) for Engine and ECT: Powertrain / Engine and ECT / Data List.

(g) Check values by referring to the table below.

Combination Meter

TESTER DISPLAY	MEASUREMENT ITEM/RANGE	NORMAL CONDITION	DIAGNOSTIC NOTE
Tail Relay SW	Headlight dimmer switch is OFF or ON	OFF: Headlight dimmer switch is off	-
		ON: Headlight dimmer switch is TAIL	
Tail Cancel SW	Tail cancel switch / OFF or ON	OFF: Turn the light control rheostat knob is not fully clockwise	-
		ON: Turn the light control rheostat knob fully clockwise	-
ODO/TRIP Change SW	ODO/TRIP switch / OFF or ON	OFF: Switch is released	-
		ON: Switch is pushed	-
Vehicle Speed Meter	Vehicle speed/Min.: 0 km/h (0 mph), Max.: 255 km/h (158 mph)	Almost the same as actual vehicle speed (When driving)	-

TESTER DISPLAY	MEASUREMENT ITEM/RANGE	NORMAL CONDITION	DIAGNOSTIC NOTE
Engine Rpm	Engine speed/Min.: 0 rpm, Max.: 12750 rpm	Almost the same as actual engine speed (When engine is running)	-
Coolant Temperature	Engine coolant temperature: 0°C (32°F) to 127.5°C (261.5°F)	After warming up: 80 to 100°C (176 to 212°F)	-
+B Voltage Value	Battery voltage/Min.: 0 V, Max.: 25.5 V	11 to 14 V	-
Integrated value for Oil Maintenance*1	Oil maintenance warning value / Min.: 0, Max.: 25500 (mile)	The driving distance after performing oil maintenance resetting procedure is displayed	If the value is 5000 (miles) or more, perform the oil maintenance resetting procedure after changing the oil
Fuel Input	Fuel input signal / Min.: 0, Max.: 127.5	Fuel gauge indicates (E): 5.5 (L)	-
		Fuel gauge indicates (1/2): 27.5 (L)	-
		Fuel gauge indicates (F): 49.5 (L)	-
Ambient Temperature	Outside temperature / Min.: -40°C (-40°F) to 50°C (122°F)	Almost the same as actual outside temperature	The temperature displayed on the multi-information display is -40 to 50°C (-40 to 122°F)
Rheostat value	Light Control Rheostat/Min.: 0%, Max.: 100%	Light control rheostat switch is Dark (0%) → Bright (100%)	-
Quantity of Outside Light	Quantity of outside light/Min.: 0%, Max.: 100%	Outside light is Dark (0%) → Bright (100%)	-
TPMS Operation State*2	The condition of the tire pressure initial switch	OFF: Switch is not pressed	-
		ON: Switch is pressed	-
Communication ECM/Meter DTC 1	Communication error history	Unrecorded: No error has occurred	-
		Recorded: The output DTC has detected	
ECM ODO (History 1)	Distance when DTC is output / Min.: 0, Max.:	Unrecorded: No error has occurred	-

TESTER DISPLAY	MEASUREMENT ITEM/RANGE	NORMAL CONDITION	DIAGNOSTIC NOTE
	999999	Recorded: The value when the DTC has detected is displayed by 0 to 999999	
Communication ECM/Meter DTC 2	Communication error history	Unrecorded: No error has occurred Recorded: The output DTC has detected	-
ECM ODO (History 2)	Distance when DTC is output / Min.: 0, Max.: 999999	Unrecorded: No error has occurred Recorded: The value when the DTC has detected is displayed by 0 to 999999	-
Communication ECM/Meter DTC 3	Communication error history	Unrecorded: No error has occurred Recorded: The output DTC has detected	-
ECM ODO (History 3)	Distance when DTC is output / Min.: 0, Max.: 999999	Unrecorded: No error has occurred Recorded: The value when the DTC has detected is displayed by 0 to 999999	-
Communication ABS/Meter DTC 1	Communication error / not occurred/occurred	Unrecorded: No error has occurred Recorded: The output DTC has detected	-
ABS/VSC ODO (History 1)	Distance when DTC is output / Min.: 0, Max.: 999999	Unrecorded: No error has occurred Recorded: The value when the DTC has detected is displayed by 0 to 999999	-
Communication ABS/Meter DTC 2	Communication error / not occurred/occurred	Unrecorded: No error has occurred Recorded: The output DTC has detected	-
ABS/VSC ODO (History 2)	Distance when DTC is output / Min.: 0, Max.: 999999	Unrecorded: No error has occurred Recorded: The value when the DTC has detected is displayed by 0 to 999999	-

TESTER DISPLAY	MEASUREMENT ITEM/RANGE	NORMAL CONDITION	DIAGNOSTIC NOTE
Communication ABS/Meter DTC 3	Communication error / not occurred/occurred	Unrecorded: No error has occurred	-
		Recorded: The output DTC has detected	
ABS/VSC ODO (History 3)	Distance when DTC is output / Min.: 0, Max.: 999999	Unrecorded: No error has occurred	-
		Recorded: The value when the DTC has detected is displayed by 0 to 999999	
Driver Side Seatbelt Warning Buzzer	The condition of the driver side seat belt warning buzzer / OFF or ON	ON: The driver side seat belt warning buzzer sounds at the vehicle speed is 12 mph (20 km/h) or more when the driver side seat belt is unfastened	The current setting of the driver side seat belt warning buzzer is displayed.
		OFF: The driver side seat belt warning buzzer does not sound at the vehicle speed is 12 mph (20 km/h) or more when the driver side seat belt is unfastened	
Front Passenger Side Seatbelt Warning Buzzer	The condition of the front passenger side seat belt warning buzzer / OFF or ON	ON: The front passenger side seat belt warning buzzer sounds at the vehicle speed is 12 mph (20 km/h) or more when the front passenger side seat belt is unfastened	The current setting of the front passenger side seat belt warning buzzer is displayed.
		OFF: The front passenger side seat belt warning buzzer does not sound at the vehicle speed is 12 mph (20 km/h) or more when the front passenger side seat belt is unfastened	
Number of Trouble Code	The number of the DTC which is currently output	0	-

- *1: for U.S.A.
- *2: w/ Tire Pressure Warning System

ABS/VSC/TRAC

TESTER	MEASUREMENT ITEM/RANGE	NORMAL CONDITION	DIAGNOSTIC

DISPLAY			NOTE
FR Wheel Speed	Vehicle speed/Min.: 0 mph (0 km/h), Max.: 202 mph (326 km/h)	Almost the same as actual vehicle speed (When driving)	-
FL Wheel Speed	Vehicle speed/Min.: 0 mph (0 km/h), Max.: 202 mph (326 km/h)	Almost the same as actual vehicle speed (When driving)	-
RR Wheel Speed	Vehicle speed/Min.: 0 mph (0 km/h), Max.: 202 mph (326 km/h)	Almost the same as actual vehicle speed (When driving)	-
RL Wheel Speed	Vehicle speed/Min.: 0 mph (0 km/h), Max.: 202 mph (326 km/h)	Almost the same as actual vehicle speed (When driving)	-
Vehicle Speed	Vehicle speed/Min.: 0 mph (0 km/h), Max.: 202 mph (326 km/h)	Almost the same as actual vehicle speed (When driving)	-

Engine and ECT

TESTER DISPLAY	MEASUREMENT ITEM/RANGE	NORMAL CONDITION	DIAGNOSTIC NOTE
Engine Speed	Vehicle speed/Min.: 0 rpm, Max.: 16383.75 rpm	Almost the same as actual engine speed (When engine running)	-
Coolant Temp	Engine coolant temperature: Min.: -40°F (-40°C), Max: 284°F (140°C)	176 to 212°F (80 to 100°C): After warming up	• If -40°F (-40°C): sensor circuit open • If 284°F (140°C) or more: sensor circuit shorted

2. ACTIVE TEST

Using the Techstream to perform Active Tests allows the relays, VSVs, actuators and other items to be operated without removing any parts. This non-intrusive functional inspection can be very useful because intermittent operation may be discovered before parts or wiring is disturbed. Performing Active Tests early in trouble shooting is one way to save diagnostic time. Data List information can be displayed while performing Active Tests.

(a) Connect the Techstream to the DLC3.

(b) Turn the ignition switch to ON.

(c) Turn the Techstream on.

(d) Enter the following menus: Body Electrical / Combination Meter / Active Test.

(e) Check the operation by referring to the table below.

Combination Meter

TESTER DISPLAY	TEST PART	CONTROL RANGE	DIAGNOSTIC NOTE
Speed Meter	Speedometer	0, 40, 80, 120 mph*1	Confirm that the vehicle

TESTER DISPLAY	TEST PART	CONTROL RANGE	DIAGNOSTIC NOTE
Operation		0, 40, 80, 120, 160, 200, 240 km/h*2	is stopped, engine idling
Tacho Meter Operation	Tachometer	0, 1000, 2000, 3000, 4000, 5000, 6000, 7000 (rpm)	Confirm that the vehicle is stopped, engine idling
Fuel Meter Operation	Fuel receiver gauge	EMPTY, 1/2, FULL	Confirm that the vehicle is stopped, engine idling
Water Temperature Meter Operation	Engine coolant temperature receiver gauge	Low, Normal, High	Confirm that the vehicle is stopped, engine idling
A/T Indicator Operation*1	A/T shift indicator S, 5	OFF or ON	Confirm that the vehicle is stopped, engine idling
Meter Display 1	All the dots in the multi-information display	OFF or ON	Confirm that the vehicle is stopped, engine idling
Meter Display 2	The segments in the A/T shift indicator display	OFF or ON	Confirm that the vehicle is stopped, engine idling
Indicat. Lamp Airbag	Airbag warning light	OFF or ON	Confirm that the vehicle is stopped, engine idling
Indicat. Lamp Doors All Open	Open door indicator light	OFF or ON	Confirm that the vehicle is stopped, engine idling
Front Passenger Side Seat Belt	Front passenger side seat belt warning light	OFF or ON	Confirm that the vehicle is stopped, engine idling
Driver Side Seat Belt	Driver side seat belt warning light	OFF or ON	Confirm that the vehicle is stopped, engine idling
Indicat. Lamp ABS	ABS warning light	OFF or ON	Confirm that the vehicle is stopped, engine idling
Indicat. Lamp Charge	Charge warning light	OFF or ON	Confirm that the vehicle is stopped, engine idling
Indicat. Lamp VSC*2	VSC off indicator light	OFF or ON	Confirm that the vehicle is stopped, engine idling
Indicat. Lamp Slip*2	Slip indicator light	OFF or ON	Confirm that the vehicle is stopped, engine idling
Indicat. Lamp Fuel	Low fuel warning light	OFF or ON	Confirm that the vehicle is stopped, engine idling
Indicat. Tire Pressure Warning System	Tire pressure warning light	OFF or ON	Confirm that the vehicle is stopped, engine idling
Indicat. Lamp Cruise	Cruise indicator light	OFF or ON	Confirm that the vehicle is stopped, engine idling

TESTER DISPLAY	TEST PART	CONTROL RANGE	DIAGNOSTIC NOTE
Indicat. Lamp Brake	Brake warning light	OFF or ON	Confirm that the vehicle is stopped, engine idling
Indicat. EPS	EPS warning light	OFF or ON	Confirm that the vehicle is stopped, engine idling
Indicat. KEY*3	Key indicator light	OFF or ON	Confirm that the vehicle is stopped, engine idling
Indicat. Oil Maintenance*4	Oil maintenance reminder light	OFF or ON	Confirm that the vehicle is stopped, engine idling

- *1: for Automatic Transaxle
- *2: w/ VSC
- *3: w/ Smart Key System
- *4: for U.S.A.

Last Modified: 3-10-2010	6.4 D	**From:** 200901
Model Year: 2010	**Model:** Corolla	**Doc ID:** RM0000029Z901LX
Title: METER / GAUGE / DISPLAY: METER / GAUGE SYSTEM: DTC CHECK / CLEAR (2010 Corolla)		

DTC CHECK / CLEAR

1. CHECK DTC

(a) Connect the Techstream to the DLC3.

(b) Turn the ignition switch to ON and turn the Techstream on.

(c) Enter the following menus: Body Electrical / Trouble Codes.

(d) Check for DTCs.

2. CLEAR DTC

(a) Connect the Techstream to the DLC3.

(b) Turn the ignition switch to ON and turn the Techstream on.

(c) Enter the following menus: Body Electrical / Combination Meter / Trouble Codes.

(d) Clear the DTCs.

Last Modified: 3-10-2010	6.4 U	**From:** 200901
Model Year: 2010	**Model:** Corolla	**Doc ID:** RM0000012G902BX
Title: METER / GAUGE / DISPLAY: METER / GAUGE SYSTEM: FAIL-SAFE CHART (2010 Corolla)		

FAIL-SAFE CHART

Engine Coolant Temperature Receiver Gauge

CONDITION	RESPONSE	RECOVERY
Engine coolant temperature data is interrupted for 3.1 seconds.	The gauge needle indicates below C.	Normal data is received.

Shift Indicator*1

CONDITION	RESPONSE	RECOVERY
Shift position data is interrupted for 3.1 seconds.	All indicator lights go off.	Normal data is received.

ABS, EBD, BA, TRAC, and VSC

CONDITION	RESPONSE	RECOVERY
ABS, brake, or slip*2 data are interrupted for 1 second.	The warning light comes on.	Normal data is received.

Door

CONDITION	RESPONSE	RECOVERY
Each door condition data is interrupted for 10 seconds.	The data received most recently remains indicated.	Normal data is received.

Driver Side Seat Belt

CONDITION	RESPONSE	RECOVERY
Driver side front seat inner belt assembly data is interrupted for 6 seconds.	The data received most recently remains indicated.	Normal data is received.

Tire Pressure*3

CONDITION	RESPONSE	RECOVERY
Tire pressure data is interrupted for 6 seconds.	The tire pressure indicator light blinks for 60 to 64 seconds, then comes on.	Ignition switch to ON, the terminal voltage is 0.9 V or more for 3 seconds or more.

Maintenance*4

CONDITION	RESPONSE	RECOVERY
The meter CPU is unable to verify at what mileage the oil maintenance reminder light resetting procedure was last performed, resulting in the CPU assuming the mileage to be 0.	Oil maintenance reminder light comes on/blinks.	The meter CPU is able to verify at what mileage the oil maintenance reminder light resetting procedure was last performed.
The meter ECU is unable to verify the current driving distance.	Oil maintenance reminder light comes on/blinks.	The meter ECU is able to verify the current driving distance.

Airbag

CONDITION	RESPONSE	RECOVERY
Airbag data is interrupted for 10 seconds or there is a malfunction in the combination meter (meter CPU).	The warning light comes on.	Normal data is received.

Front Passenger Side Seat Belt

CONDITION	RESPONSE	RECOVERY
Regular data is interrupted.	The data received most recently remains indicated.	Normal data is received.

EPS

CONDITION	RESPONSE	RECOVERY
Regular data is interrupted for 1 second.	The warning light comes on.	Normal data is received.

- *1: for Automatic Transaxle
- *2: w/ VSC
- *3: w/ Tire Pressure Warning System
- *4: for U.S.A.

Last Modified: 3-10-2010	6.4 S	**From:** 200901
Model Year: 2010	**Model:** Corolla	**Doc ID:** RM0000029ZC01WX
Title: METER / GAUGE / DISPLAY: METER / GAUGE SYSTEM: DIAGNOSTIC TROUBLE CODE CHART (2010 Corolla)		

DIAGNOSTIC TROUBLE CODE CHART

Meter/Gauge System

DTC CODE	DETECTION ITEM	TROUBLE AREA	SEE PAGE
U0129	Lost Communication with Skid Control ECU	1. Skid control ECU 2. CAN communication system	INFO
U0100	Lost Communication with ECM / PCM "A"	1. ECM 2. CAN communication system	INFO
B1500	Fuel Sender Open Detected	1. Harness or connector 2. Combination meter 3. Fuel sender gauge assembly	INFO

Last Modified: 3-10-2010	6.4 C	**From:** 200901
Model Year: 2010	**Model:** Corolla	**Doc ID:** RM000002S2T01AX
Title: METER / GAUGE / DISPLAY: METER / GAUGE SYSTEM: B1500: Fuel Sender Open Detected (2010 Corolla)		

DTC	**B1500**	**Fuel Sender Open Detected**

DESCRIPTION

This DTC is output when the combination meter detects the fuel sender gauge malfunction via the direct line.

DTC CODE	DTC DETECTION CONDITION	TROUBLE AREA
B1500	When either of the following conditions is detected: • 10 seconds have elapsed since the engine started and IG voltage is 10.5 V or more • Fuel sender gauge operation malfunction	• Harness or connector • Combination meter • Fuel sender gauge assembly

WIRING DIAGRAM

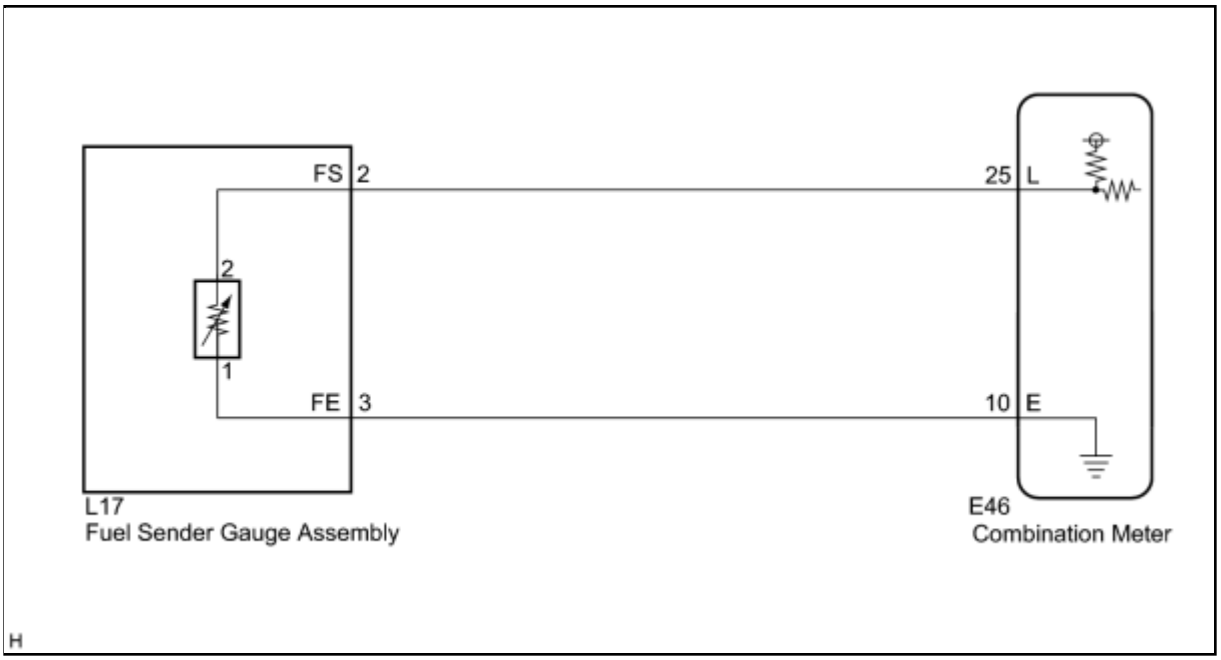

INSPECTION PROCEDURE

PROCEDURE

1.	**INSPECT COMBINATION METER**

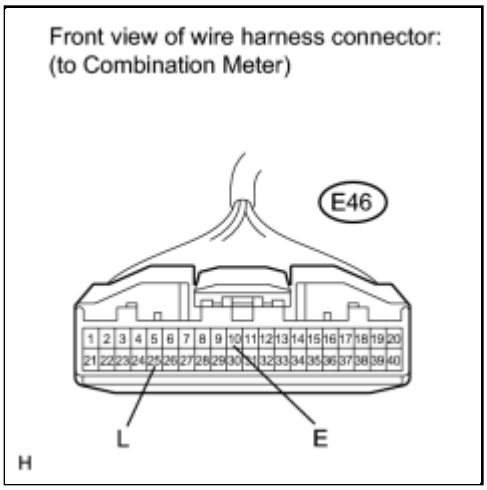

(a) Disconnect the E46 connector.

(b) Measure the resistance according to the value(s) in the table below.

Standard Resistance:

TESTER CONNECTION	CONDITION	SPECIFIED CONDITION
E46-10 (E) - E46-25 (L)	Always	13.5 to 414.5 Ω

NG ▶ **CHECK HARNESS AND CONNECTOR (COMBINATION METER - FUEL SENDER GAUGE ASSEMBLY)**

OK ▶ **REPLACE COMBINATION METER**

2.	**CHECK HARNESS AND CONNECTOR (COMBINATION METER - FUEL SENDER GAUGE ASSEMBLY)**

(a) Disconnect the L17 connector.

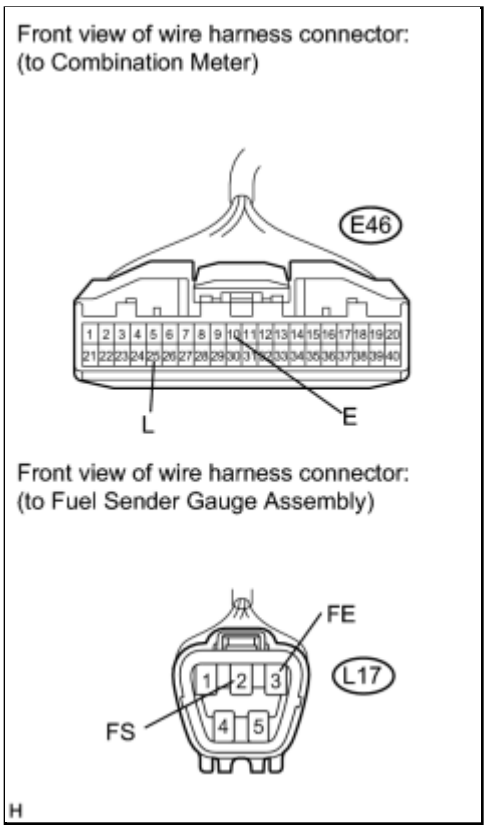

(b) Measure the resistance according to the value(s) in the table below.

Standard Resistance:

TESTER CONNECTION	CONDITION	SPECIFIED CONDITION
E46-10 (E) - L17-3 (FE)	Always	Below 1 Ω
L17-3 (FE) - Body ground	Always	10 kΩ or higher
E46-25 (L) - L17-2 (FS)	Always	Below 1 Ω
E46-25 (L) - Body ground	Always	10 kΩ or higher

NG ▶ **REPAIR OR REPLACE HARNESS OR CONNECTOR**

OK ▼

3.	**INSPECT FUEL SENDER GAUGE ASSEMBLY**

(a) Remove the fuel sender gauge assembly.

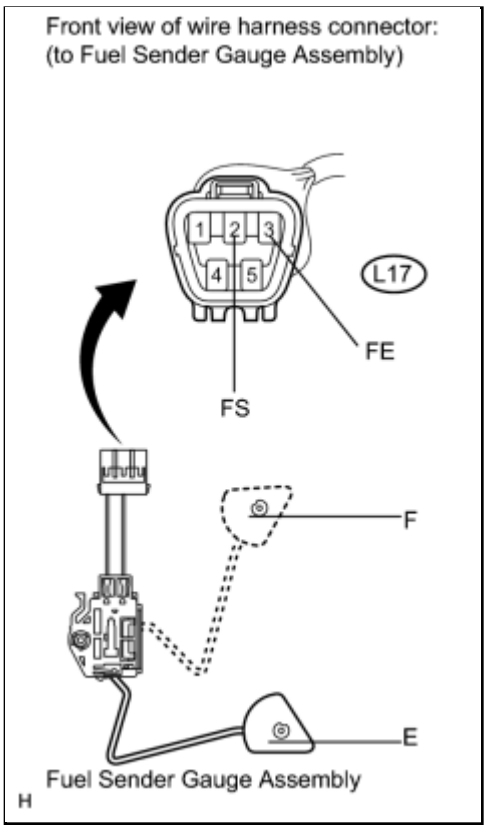

(b) Check that the float moves smoothly between E and F.

(c) Measure the resistance according to the value(s) in the table below.

Standard Resistance:

TESTER CONNECTION	CONDITION	SPECIFIED CONDITION
L17-2 (FS) - L17-3 (FE)	Float level is F (upper)	13.5 to 16.5 Ω
L17-2 (FS) - L17-3 (FE)	Float level is between F (upper) and E (lower)	13.5 to 414.5 Ω (Gradually changes)
L17-2 (FS) - L17-3 (FE)	Float level is E (lower)	405.5 to 414.5 Ω

Result:

RESULT	PROCEED TO
OK	A
NG (for 2AZ-FE)	B
NG (for 2ZR-FE)	C

C ▶ **REPLACE FUEL SENDER GAUGE ASSEMBLY (for 2ZR-FE)**

B ▶ REPLACE FUEL SENDER GAUGE ASSEMBLY (for 2AZ-FE)

A ▶ REPLACE COMBINATION METER

Last Modified: 3-10-2010	6.4 G	**From:** 200901
Model Year: 2010	**Model:** Corolla	**Doc ID:** RM0000014WB031X
Title: METER / GAUGE / DISPLAY: METER / GAUGE SYSTEM: ON-VEHICLE INSPECTION (2010 Corolla)		

ON-VEHICLE INSPECTION

1. INSPECT SPEEDOMETER

(a) Check the operation.

(1) Using a speedometer tester (calibrated chassis dynamometer), check the speedometer indication according to the table below.

Reference: mph (for U.S.A.)

CHASSIS DYNAMOMETER INDICATION (MPH)	ACCEPTABLE RANGE (MPH)
20	20.0 to 23.0
40	40.0 to 43.5
60	60.0 to 64.0
80	80.0 to 84.5
100	100.0 to 105.0
120	120.0 to 125.5
140	140.0 to 146.0

Reference: km/h (except for U.S.A.)

CHASSIS DYNAMOMETER INDICATION (KM/H)	ACCEPTABLE RANGE (KM/H) DATA IN ( ) IS FOR REFERENCE
20	(17.5 to 21.5)
40	38.0 to 42.0
60	58.0 to 63.0
80	78.0 to 84.0
100	98.5 to 104.5
120	119.0 to 125.0
140	139.0 to 146.0
160	159.0 to 167.0
180	179.0 to 188.0
200	199.0 to 209.0
220	219.0 to 230.0
240	239.0 to 251.0

NOTICE:

Tire wear as well as over or under inflation will cause errors.

(2) Check the deviation of the speedometer indication from the acceptable range.

Reference:
Less than 0.5 km/h (0.3 mph)

HINT:

If the indication is not as specified, go to Problem Symptoms Table INFO **.**

2. INSPECT TACHOMETER

(a) Connect the Techstream, and start the engine.

(b) Compare the test results with the tachometer indications.

DC 13.5 V, at 25°C (77°F)

TECHSTREAM INDICATION (RPM)	ACCEPTABLE RANGE (RPM) DATA IN ( ) IS FOR REFERENCE
700	630 to 770
1,000	(900 to 1100)
2,000	(1850 to 2150)
3,000	2800 to 3200
4,000	(3800 to 4200)
5,000	4800 to 5200
6,000	(5750 to 6250)
7,000	6700 to 7300
8,000	(7700 to 8300)

HINT:

If the indication is not as specified, go to Problem Symptoms Table INFO **.**

Last Modified: 3-10-2010	6.4 C	**From:** 200901
Model Year: 2010	**Model:** Corolla	**Doc ID:** RM0000029ZA01QX
Title: METER / GAUGE / DISPLAY: METER / GAUGE SYSTEM: U0100: Lost Communication with ECM / PCM "A" (2010 Corolla)		

DTC	**U0100**	**Lost Communication with ECM / PCM "A"**

DESCRIPTION

The combination meter communicates with the ECM via the CAN communication line (CAN No. 1 Bus).

DTC NO.	DTC DETECTION CONDITION	TROUBLE AREA
U0100	When either of the following conditions is detected: 1. Vehicle speed 5 km/h (3.1 mph) or more and IG voltage 10.5 V or more 2. No communication with ECM continues for 3 seconds or more (No communication to ECM and skid control ECU continues for 60 seconds or more)	• CAN communication system • ECM

WIRING DIAGRAM

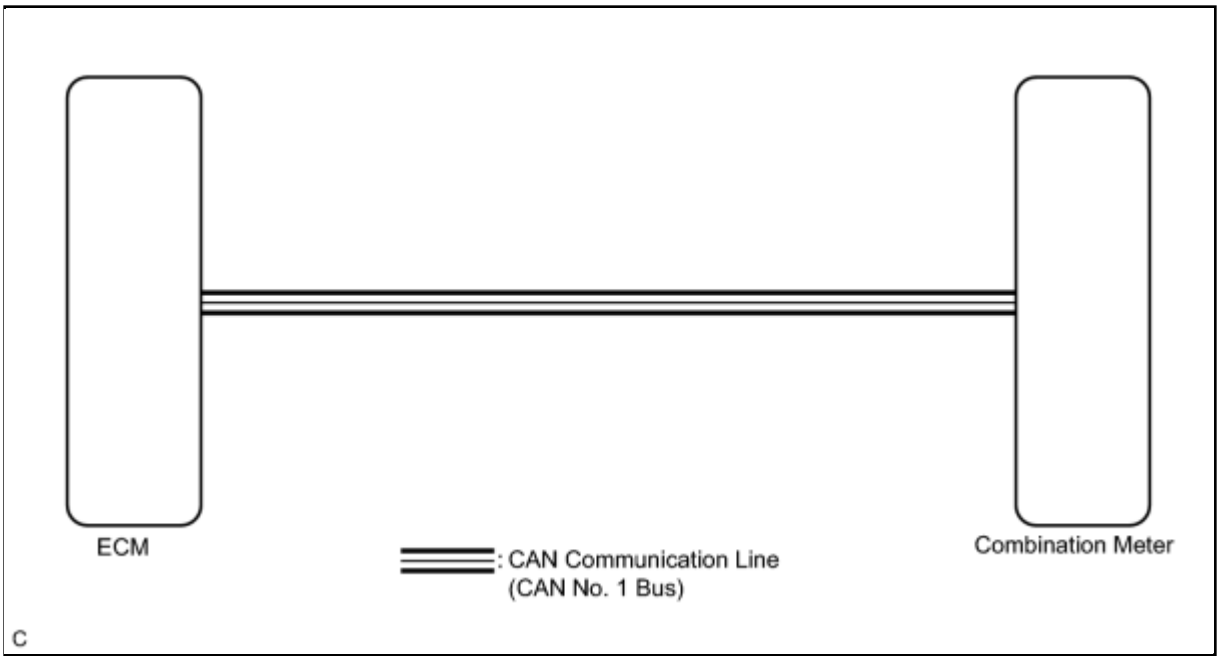

INSPECTION PROCEDURE

PROCEDURE

1.	CONFIRM DTC OUTPUT

(a) Connect the Techstream to the DLC3.

(b) Turn the ignition switch to ON.

(c) Turn the tester on.

(d) Clear the stored DTCs by entering the following menus on the Techstream: Body Electrical / Trouble Codes.

(e) Drive the vehicle at more than 5 km/h (3.1 mph) for at least 60 seconds.

(f) Stop the vehicle.

(g) Check for DTCs INFO .

Result:

RESULT	PROCEED TO
DTC is output.	A
DTC is not output.	B

HINT:

If the CAN communication system DTC U0100 and another DTC are output at the same time, perform troubleshooting for the CAN communication system DTC U0100 first.

B ▶ **USE SIMULATION METHOD TO CHECK**

A ▶ **GO TO CAN COMMUNICATION SYSTEM**

Last Modified: 3-10-2010	6.4 C	**From:** 200901
Model Year: 2010	**Model:** Corolla	**Doc ID:** RM0000029ZB01CX
Title: METER / GAUGE / DISPLAY: METER / GAUGE SYSTEM: U0129: Lost Communication with Skid Control ECU (2010 Corolla)		

DTC	**U0129**	**Lost Communication with Skid Control ECU**

DESCRIPTION

The combination meter communicates with the skid control ECU via the CAN communication system (CAN No. 1 Bus).

DTC NO.	DTC DETECTION CONDITION	TROUBLE AREA
U0129	When either of the following conditions is detected: 1. 15 seconds have elapsed since engine started and IG voltage 10.5 V or more 2. No communication with skid control ECU continues for 3 seconds or more (No communication with ECM and skid control ECU continues for 60 seconds or more)	• Skid control ECU • CAN communication system

WIRING DIAGRAM

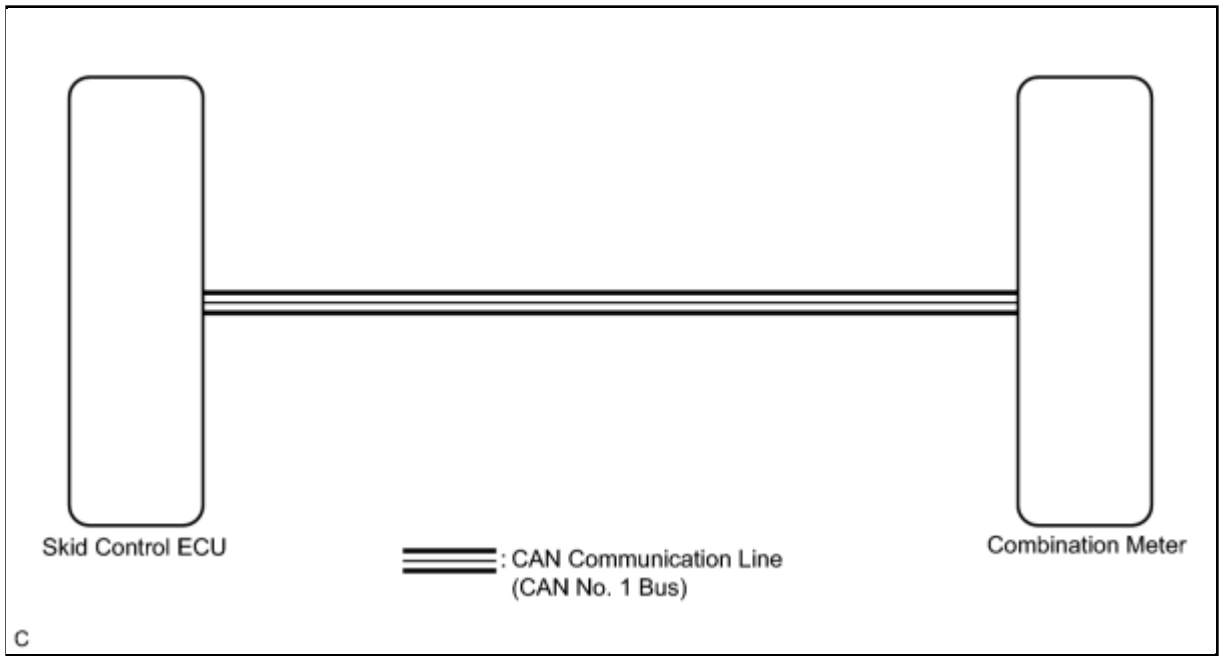

INSPECTION PROCEDURE

PROCEDURE

1.	**CONFIRM DTC OUTPUT**

(a) Connect the Techstream to the DLC3.

(b) Turn the ignition switch to ON.

(c) Turn the Techstream on.

(d) Clear the stored DTCs by entering the following menus on the Techstream: Body Electrical / Trouble Codes.

(e) Drive the vehicle at more than 5 km/h (3.1 mph) for at least 60 seconds.

(f) Stop the vehicle.

(g) Check for DTCs INFO .

Result:

RESULT	PROCEED TO
DTC is output.	A
DTC is not output.	B

HINT:

If the CAN communication system DTC U0129 and another DTC are output at the same time, perform troubleshooting for the CAN communication system DTC U0129 first.

B ▶ **USE SIMULATION METHOD TO CHECK**

A ▶ **GO TO CAN COMMUNICATION SYSTEM**

Last Modified: 3-10-2010	6.4 J	**From:** 200901
Model Year: 2010	**Model:** Corolla	**Doc ID:** RM0000012GC02NX
Title: METER / GAUGE / DISPLAY: METER / GAUGE SYSTEM: Entire Combination Meter does not Operate (2010 Corolla)		

Entire Combination Meter does not Operate

DESCRIPTION

This circuit is the power source circuit for the meter. This circuit provides two types of power sources; one is a constant power source mainly used as a backup power source, and the other is a power source mainly used for signal transmission. The constant power source is mainly used as a backup power source of the meter CPU, however, it is also used for communication. If a voltage of 12 V is not applied to terminal IG+ when the ignition switch is turned to ON, the indicator will not operate.

WIRING DIAGRAM

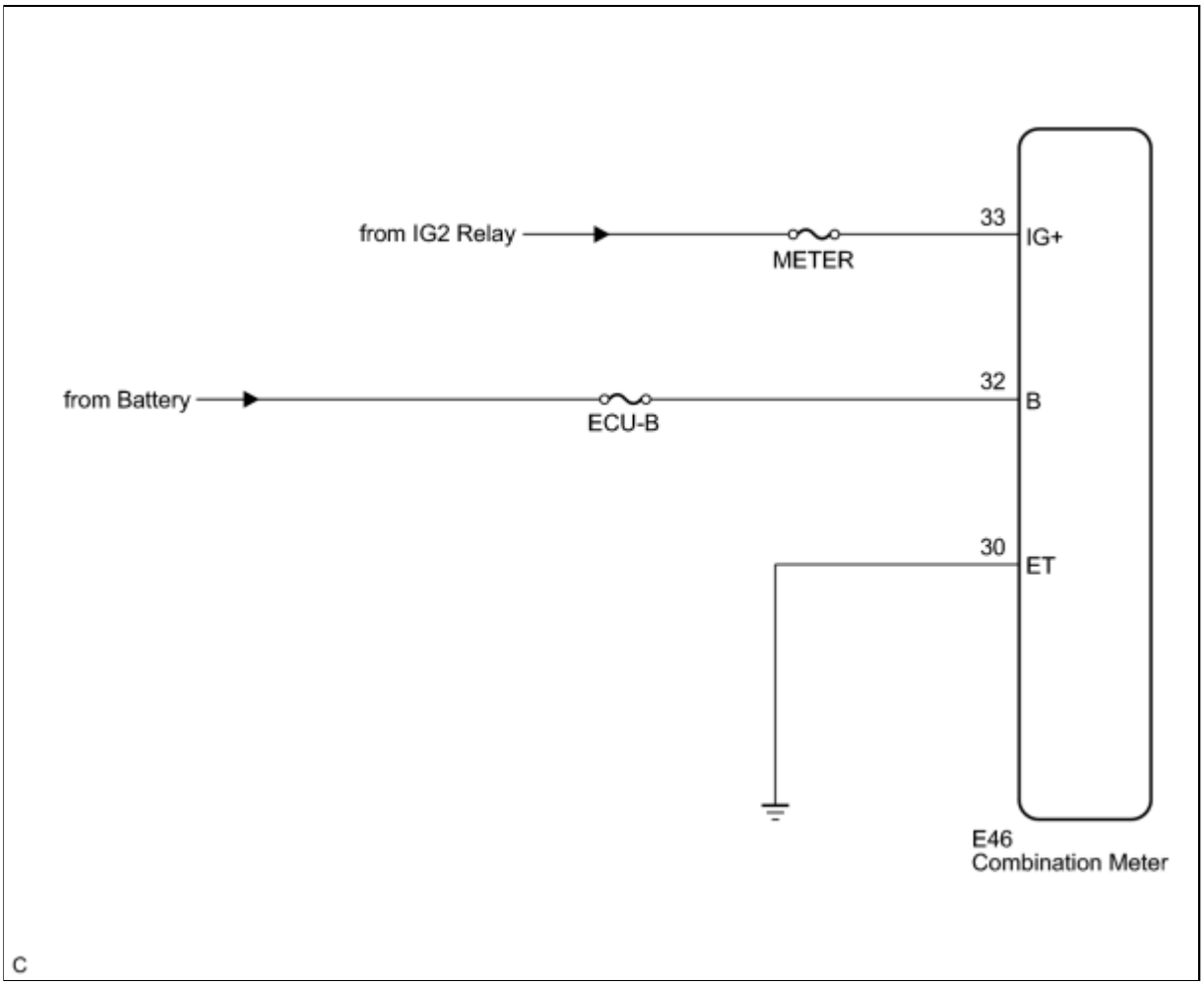

INSPECTION PROCEDURE

PROCEDURE

1.	**INSPECT COMBINATION METER**

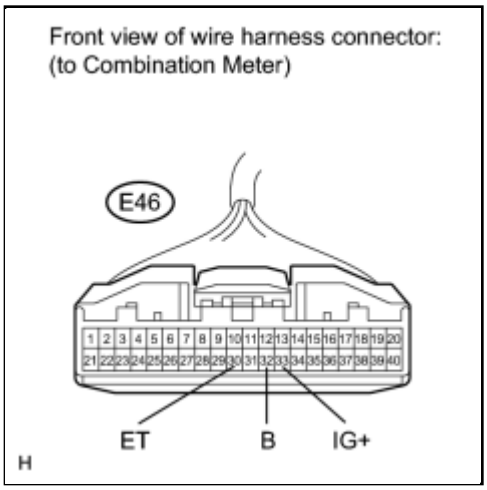

(a) Disconnect the E46 connector.

(b) Measure the resistance according to the value(s) in the table below.

Standard Resistance:

TESTER CONNECTION	CONDITION	SPECIFIED CONDITION
E46-30 (ET) - Body ground	Always	Below 1 Ω

(c) Measure the voltage according to the value(s) in the table below.

Standard Voltage:

TESTER CONNECTION	CONDITION	SPECIFIED CONDITION
E46-32 (B) - Body ground	Always	11 to 14 V
E46-33 (IG+) - Body ground	Ignition switch ON	11 to 14 V

NG ▶ **REPAIR OR REPLACE HARNESS OR CONNECTOR**

OK ▶ **REPLACE COMBINATION METER**

Last Modified: 3-10-2010	6.4 J	**From:** 200901
Model Year: 2010	**Model:** Corolla	**Doc ID:** RM0000012GD02TX
Title: METER / GAUGE / DISPLAY: METER / GAUGE SYSTEM: Speedometer Malfunction (2010 Corolla)		

Speedometer Malfunction

DESCRIPTION

The meter CPU receives vehicle speed signals from the skid control ECU via the CAN communication line (CAN No. 1 Bus). The vehicle speed sensor detects the voltage that varies according to the vehicle speed. The skid control ECU supplies power to the vehicle speed sensor. The skid control ECU detects vehicle speed signals based on the pulses of the voltage.

HINT:

If the vehicle speed sensor circuit has a malfunction, the skid control ECU outputs the DTCs. Perform troubleshooting with the Brake Control System INFO (w/o VSC), INFO (w/ VSC)).

WIRING DIAGRAM

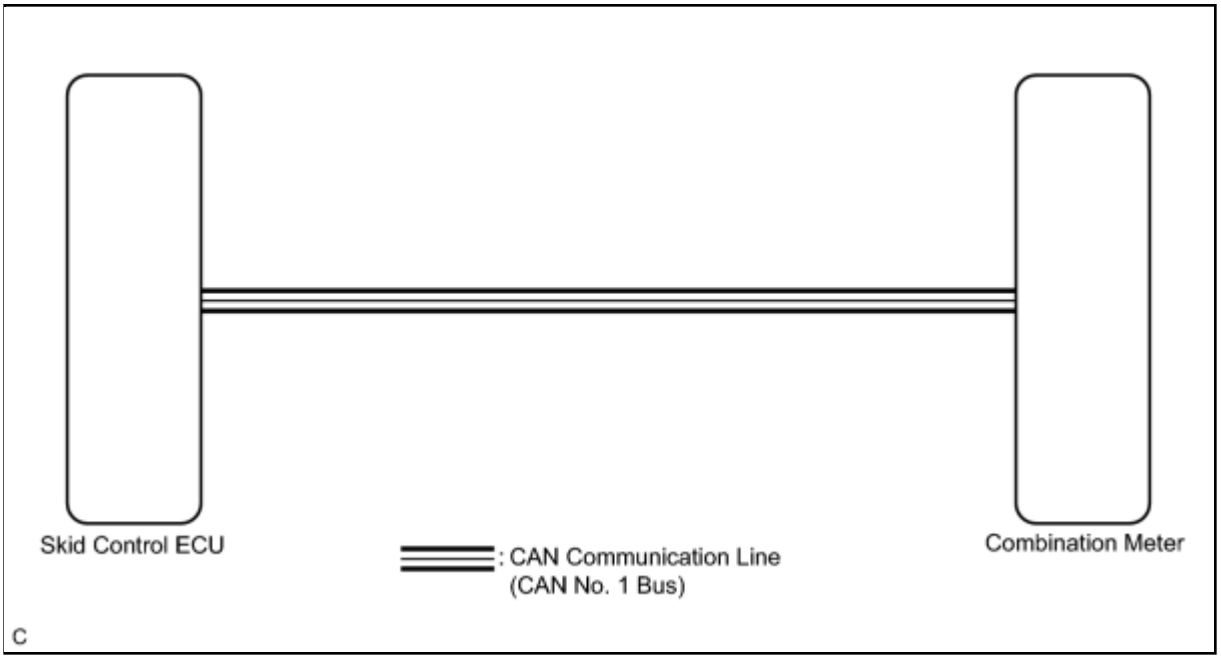

INSPECTION PROCEDURE

PROCEDURE

1.	**CHECK CAN COMMUNICATION SYSTEM**

(a) Check if CAN communication DTC is output INFO.

Result:

RESULT	PROCEED TO
CAN communication DTC is not output.	A
CAN communication DTC is output.	B

B ▶ **GO TO CAN COMMUNICATION SYSTEM**

A
▼

2.	PERFORM ACTIVE TEST USING TECHSTREAM (SPEED METER OPERATION)

(a) Connect the Techstream to the DLC3.

(b) Turn the ignition switch to ON.

(c) Turn the Techstream on.

(d) Enter the following menus: Body Electrical / Combination Meter / Active Test.

(e) Check the operation by referring to the values in the table below.

Combination Meter

TESTER DISPLAY	TEST PART	CONTROL RANGE	DIAGNOSTIC NOTE
Speed Meter Operation	Speedometer	0, 40, 80, 120 mph*1	Confirm that the vehicle is stopped, engine idling
		0, 40, 80, 120, 160, 200, 240 km/h*2	

- *1: for U.S.A.
- *2: except for U.S.A.

OK:

Speedometer indication is normal.

NG ▶ **REPLACE COMBINATION METER**

OK
▼

3.	READ VALUE USING TECHSTREAM (VEHICLE SPEED METER)

(a) Connect the Techstream to the DLC3.

(b) Turn the ignition switch to ON.

(c) Turn the Techstream on.

(d) Enter the following menus: Body Electrical / Combination Meter / Data List.

(e) Check the values by referring to the values in the table below.

Combination Meter

TESTER DISPLAY	MEASUREMENT ITEM/RANGE	NORMAL CONDITION	DIAGNOSTIC NOTE
Vehicle Speed Meter	Vehicle speed/Min.: 0 km/h (0 mph), Max.: 255 km/h (158 mph)	Almost same as actual speed (When driving)	-

OK:

Vehicle speed displayed on the Techstream is almost the same as the actual vehicle speed measured using a speedometer tester (calibrated chassis dynamometer).

NG ▶ **READ VALUE USING TECHSTREAM (FR/FL/RR/RL WHEEL SPEED)**

OK ▶ **REPLACE COMBINATION METER**

4.	READ VALUE USING TECHSTREAM (FR/FL/RR/RL WHEEL SPEED)

(a) Connect the Techstream to the DLC3.

(b) Turn the ignition switch to ON.

(c) Turn the Techstream on.

(d) Enter the following menus: Chassis / ABS/VSC/TRAC / Data List.

(e) Check the values by referring to the table below.

ABS/VSC/TRAC

TESTER DISPLAY	MEASUREMENT ITEM/RANGE	NORMAL CONDITION	DIAGNOSTIC NOTE
FR Wheel Speed	Vehicle speed/Min.: 0 km/h (0 mph), Max.: 326 km/h (202 mph)	Almost same as actual speed (When driving)	-

TESTER DISPLAY	MEASUREMENT ITEM/RANGE	NORMAL CONDITION	DIAGNOSTIC NOTE
FL Wheel Speed	Vehicle speed/Min.: 0 km/h (0 mph), Max.: 326 km/h (202 mph)	Almost same as actual speed (When driving)	-
RR Wheel Speed	Vehicle speed/Min.: 0 km/h (0 mph), Max.: 326 km/h (202 mph)	Almost same as actual speed (When driving)	-
RL Wheel Speed	Vehicle speed/Min.: 0 km/h (0 mph), Max.: 326 km/h (202 mph)	Almost same as actual speed (When driving)	-

OK:

Vehicle speed displayed on the Techstream is almost the same as the actual vehicle speed measured using a speedometer tester (calibrated chassis dynamometer).

Result:

RESULT	PROCEED TO
OK	A
NG (w/o VSC)	B
NG (w/ VSC)	C

C ▶ **GO TO BRAKE CONTROL SYSTEM (w/ VSC)**

B ▶ **GO TO BRAKE CONTROL SYSTEM (w/o VSC)**

A

▼

5.	REPLACE SKID CONTROL ECU

(a) Replace the skid control ECU with a new or a known good one INFO (w/o VSC), INFO (w/ VSC)).

OK:

The operation of the speedometer returns to normal.

NG ▶ **REPLACE COMBINATION METER**

OK ▶ **END**

Last Modified: 3-10-2010	6.4 J	**From:** 200901
Model Year: 2010	**Model:** Corolla	**Doc ID:** RM000000V7U03CX
Title: METER / GAUGE / DISPLAY: METER / GAUGE SYSTEM: Tachometer Malfunction (2010 Corolla)		

Tachometer Malfunction

DESCRIPTION

In this circuit, the meter CPU receives engine revolution signals from the ECM using the CAN communication line (CAN No. 1 Bus). The meter CPU displays engine revolution data that is calculated based on the data received from the ECM.

WIRING DIAGRAM

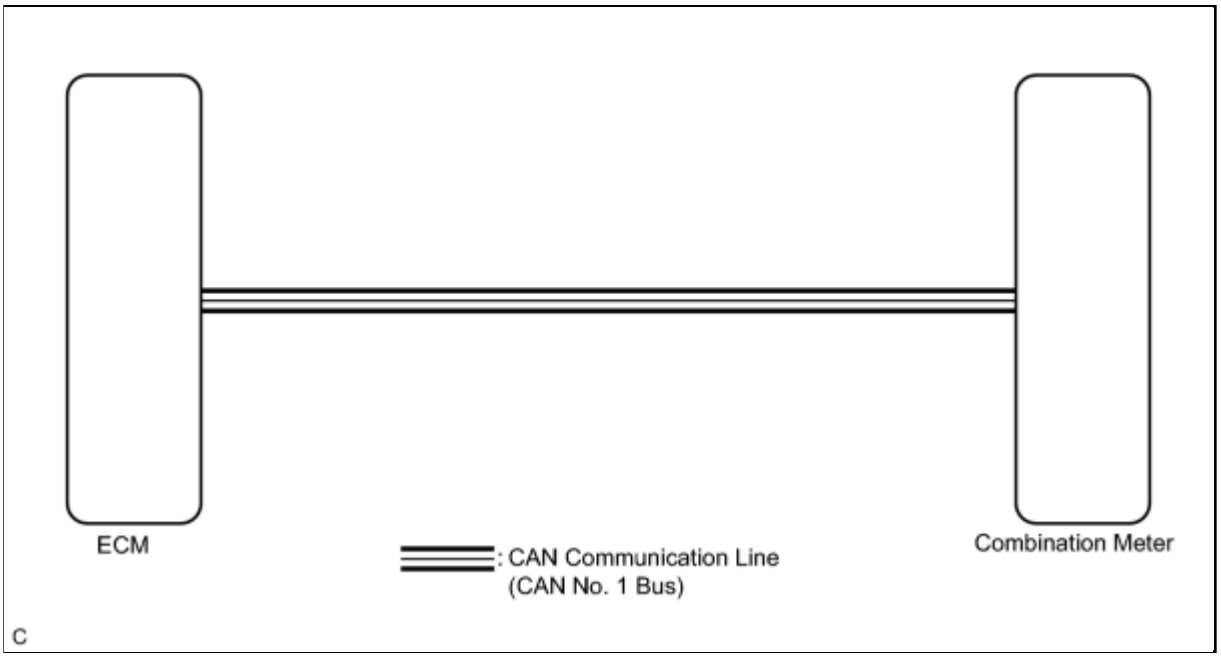

INSPECTION PROCEDURE

PROCEDURE

1.	**CHECK CAN COMMUNICATION SYSTEM**

(a) Check if CAN communication DTC is output INFO.

Result:

RESULT	PROCEED TO
CAN communication DTC is not output.	A
CAN communication DTC is output.	B

B ▶ **GO TO CAN COMMUNICATION SYSTEM**

A
▼

2.	PERFORM ACTIVE TEST USING TECHSTREAM (TACHO METER OPERATION)

(a) Connect the Techstream to the DLC3.

(b) Turn the ignition switch to ON.

(c) Turn the Techstream on.

(d) Enter the following menus: Body Electrical / Combination Meter / Active Test.

(e) Check the operation by referring to the values in the table below.

Combination Meter

TESTER DISPLAY	TEST PART	CONTROL RANGE	DIAGNOSTIC NOTE
Tacho Meter Operation	Tachometer	0, 1000, 2000, 3000, 4000, 5000, 6000, 7000 (rpm)	Confirm that the vehicle is stopped, engine idling

OK:
Tachometer indication is normal.

NG ▶ **REPLACE COMBINATION METER**

OK
▼

3.	READ VALUE USING TECHSTREAM (ENGINE RPM)

(a) Connect the Techstream to the DLC3.

(b) Turn the ignition switch on.

(c) Turn the Techstream on.

(d) Enter the following menus: Body Electrical / Combination Meter / Data List.

(e) Check the values by referring to the values in the table below.

Combination Meter

TESTER DISPLAY	MEASUREMENT ITEM/RANGE	NORMAL CONDITION	DIAGNOSTIC NOTE
Engine Rpm	Engine speed/Min.: 0 rpm, Max.: 12750 rpm	Almost same as actual engine speed (Tachometer indication)	If data received from the ECM exceeds the range that can be displayed on the meter, the meter continues to display the maximum value of the range.

Result:

RESULT	PROCEED TO
Tachometer indication is differ from the Techstream indication.	A
Tachometer indication is the same as the Techstream indication.	B

B ▶ **READ VALUE USING TECHSTREAM (ENGINE SPEED)**

A ▶ **REPLACE COMBINATION METER**

4.	**READ VALUE USING TECHSTREAM (ENGINE SPEED)**

(a) Connect the Techstream to the DLC3.

(b) Turn the ignition switch to ON.

(c) Turn the Techstream ON.

(d) Enter the following menus: Powertrain / Engine and ECT / Data List.

(e) Check the values by referring to the table below.

Engine and ECT

TESTER DISPLAY	MEASUREMENT ITEM/RANGE	NORMAL CONDITION	DIAGNOSTIC NOTE
Engine Speed	Engine speed/Min.: 0 rpm, Max.: 16383.75 rpm	Almost same as actual engine speed (Tachometer indication)	-

OK:

Engine speed displayed on the Techstream is almost the same as the tachometer indication.

Result:

RESULT	PROCEED TO
OK	A
NG (for 2AZ-FE)	B
NG (for 2ZR-FE)	C

C ▶ **GO TO SFI SYSTEM (for 2ZR-FE)**

B ▶ **GO TO SFI SYSTEM (for 2AZ-FE)**

A ▼

5.	**REPLACE ECM**

(a) Replace the ECM with a new or a known good one INFO for 2AZ-FE, INFO for 2ZR-FE).

OK:

The operation of the tachometer returns to normal.

NG ▶ **REPLACE COMBINATION METER**

OK ▶ **END**

Last Modified: 3-10-2010	6.4 J	**From:** 200901
Model Year: 2010	**Model:** Corolla	**Doc ID:** RM0000012GE02WX
Title: METER / GAUGE / DISPLAY: METER / GAUGE SYSTEM: Fuel Receiver Gauge Malfunction (2010 Corolla)		

Fuel Receiver Gauge Malfunction

DESCRIPTION

The meter CPU uses the fuel sender gauge assembly to determine the level of the fuel in the fuel tank. The resistance of the fuel sender gauge will vary between approximately 15.0 Ω with the float at the full position, and 410.0 Ω with the float at the empty position. The meter outputs battery voltage through two 820 Ω resistors that are mounted in parallel inside the meter CPU. The meter CPU measures the voltage between the variable resistor in the fuel sender gauge and the two resistors mounted in parallel in the meter. Voltage measured at this point will vary as the float of the fuel sender gauge is moved. The highest voltage observed should be approximately half of battery voltage.

HINT:

The fuel level warning light will come on when the fuel level is below 7.5 liters (2.0 gallons).

WIRING DIAGRAM

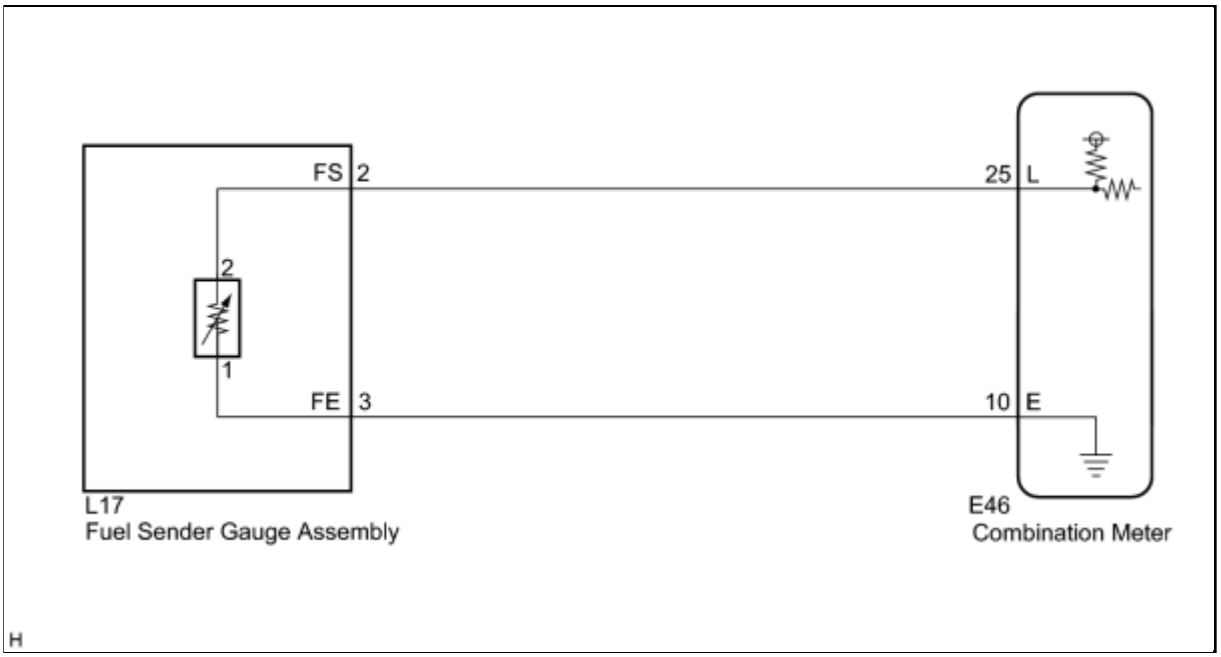

INSPECTION PROCEDURE

PROCEDURE

1.	**PERFORM ACTIVE TEST USING TECHSTREAM (FUEL METER OPERATION)**

(a) Connect the Techstream to the DLC3.

(b) Turn the ignition switch to ON.

(c) Turn the Techstream on.

(d) Enter following menus: Body Electrical / Combination Meter / Active Test.

(e) Check the operation by referring to the table below.

Combination Meter

TESTER DISPLAY	TEST PART	CONTROL RANGE	DIAGNOSTIC NOTE
Fuel Meter Operation	Fuel receiver gauge	EMPTY, 1/2, FULL	Confirm that the vehicle is stopped, engine idling

OK:
Gauge indication is normal.

NG ▶ **REPLACE COMBINATION METER**

OK ▼

2.	**READ VALUE USING TECHSTREAM (FUEL INPUT)**

(a) Connect the Techstream to the DLC3.

(b) Turn the ignition switch to ON.

(c) Turn the Techstream on.

(d) Enter following menus: Body Electrical / Combination Meter / Data List.

(e) Check the values by referring to the table below.

Combination Meter

TESTER DISPLAY	MEASUREMENT ITEM/RANGE	NORMAL CONDITION	DIAGNOSTIC NOTE
Fuel Input	Fuel input signal Min.: 0, Max.:	Fuel gauge indicates (E): 5.5	-

TESTER DISPLAY	MEASUREMENT ITEM/RANGE	NORMAL CONDITION	DIAGNOSTIC NOTE
	127.5	(L)	
		Fuel gauge indicates (1/2): 27.5 (L)	
		Fuel gauge indicates (F): 49.5 (L)	

OK:
Fuel value signal displayed on the Techstream is almost the same as fuel receiver gauge indication.

NG ▶ **REPLACE COMBINATION METER**

OK ▼

3.	**CHECK HARNESS AND CONNECTOR (COMBINATION METER - FUEL SENDER GAUGE ASSEMBLY)**

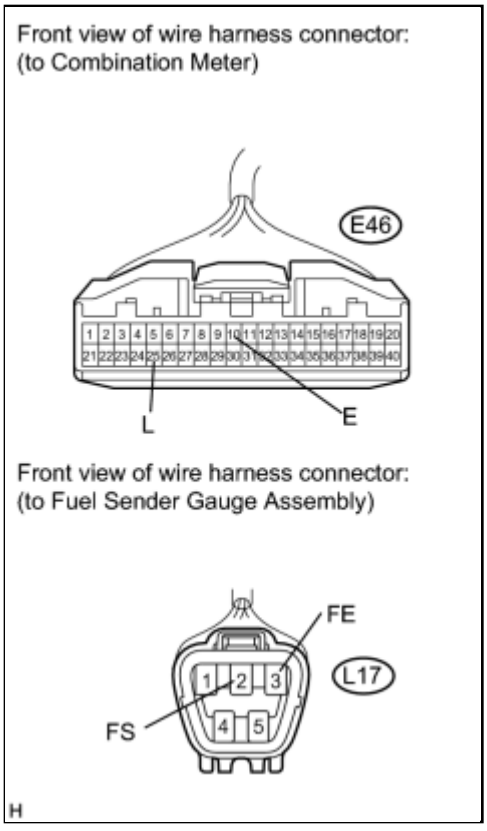

(a) Disconnect the E46 and L17 connectors.

(b) Measure the resistance according to the value(s) in the table below.

Standard Resistance:

TESTER CONNECTION	CONDITION	SPECIFIED CONDITION
E46-10 (E) - L17-3 (FE)	Always	Below 1 Ω
L17-3 (FE) - Body ground	Always	10 kΩ or higher
E46-25 (L) - L17-2 (FS)	Always	Below 1 Ω
E46-25 (L) - Body ground	Always	10 kΩ or higher

NG ▶ **REPAIR OR REPLACE HARNESS OR CONNECTOR**

OK ▼

4.	**INSPECT FUEL SENDER GAUGE ASSEMBLY**

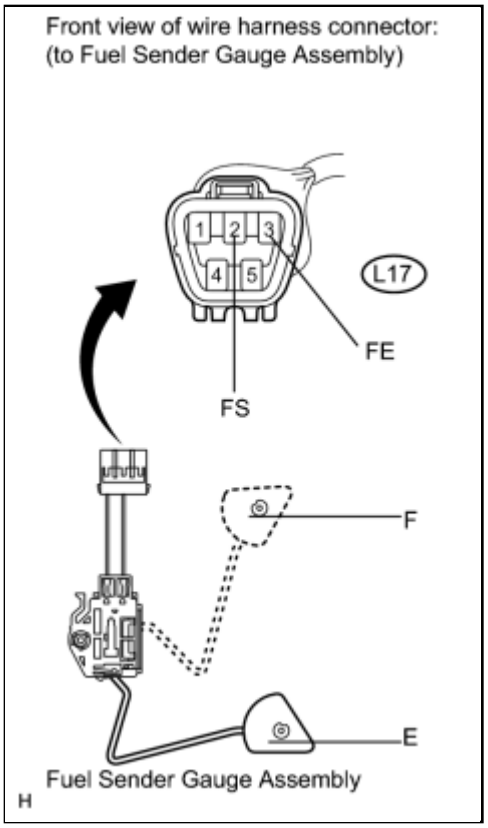

(a) Remove the fuel sender gauge assembly.

(b) Check that the float moves smoothly between E and F.

(c) Measure the resistance according to the value(s) in the table below.

Standard Resistance:

TESTER CONNECTION	CONDITION	SPECIFIED CONDITION
L17-2 (FE) - L17-3 (FE)	Float level is F (upper)	13.5 to 16.5 Ω
L17-2 (FE) - L17-3 (FE)	Float level is between F (upper) and E (lower)	13.5 to 414.5 Ω (Gradually changes)
L17-2 (FE) - L17-3 (FE)	Float level is E (lower)	405.5 to 414.5 Ω

Result:

RESULT	PROCEED TO
OK	A
NG (for 2AZ-FE)	B
NG (for 2ZR-FE)	C

C ▶ **REPLACE FUEL SENDER GAUGE ASSEMBLY (for 2ZR-FE)**

B ▶ **REPLACE FUEL SENDER GAUGE ASSEMBLY (for 2AZ-FE)**

A ▶ **REPLACE COMBINATION METER**

Last Modified: 3-10-2010	6.4 J	**From:** 200901
Model Year: 2010	**Model:** Corolla	**Doc ID:** RM000002UD701MX
Title: METER / GAUGE / DISPLAY: METER / GAUGE SYSTEM: Speed Signal Circuit (2010 Corolla)		

Speed Signal Circuit

DESCRIPTION

The combination meter receives the vehicle speed signal from this circuit. The wheel speed sensors produce an output that varies according to the vehicle speed. The wheel speed sensor output is received by the skid control ECU which uses this information to create the vehicle speed sensor signal*. The vehicle speed sensor signal consists of pulses sent to the combination meter from the skid control ECU. To create this signal, 12 V is output from IG2 which is behind a resistor in the combination meter. This voltage is sent to the skid control ECU. The pulse signal is created by switching the transistor in the skid control ECU on and off, making the voltage on the wire drop to 0 V. A similar system is used for the output of this signal from the combination meter via terminal +S. A voltage of 12 V or 5 V is applied to terminal +S from each ECU or relay that is connected to this terminal. The transistor in the combination meter is controlled by the signal from the skid control ECU. When this transistor is turned on, this transistor makes the voltage supplied by the various ECUs (via their respective internal resistors) drop to 0 V. Each ECU connected to terminal +S of the combination meter controls its respective system based on the pulse signal.

- *: This vehicle speed sensor signal is created by the skid control ECU. There is no actual component that is referred to as the vehicle speed sensor. In addition, for some other systems, vehicle speed information may be exchanged using CAN communication.

HINT:

This circuit is used for the systems connected to terminal +S. This signal is not used for combination meter operation. Combination meter components such as the speedometer operate using data received via CAN communication.

WIRING DIAGRAM

1. except TMC Made 2ZR-FE

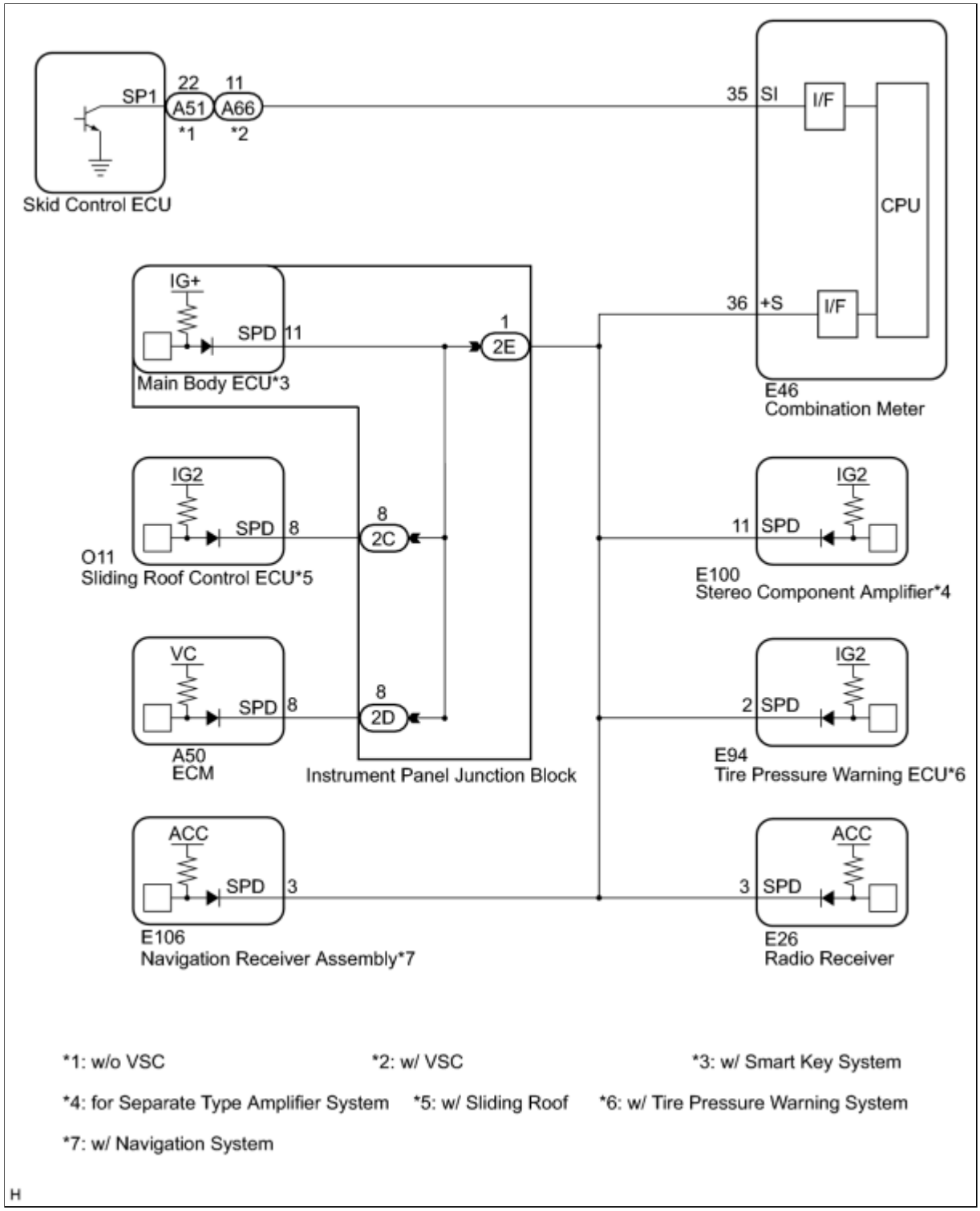

2. for TMC Made 2ZR-FE

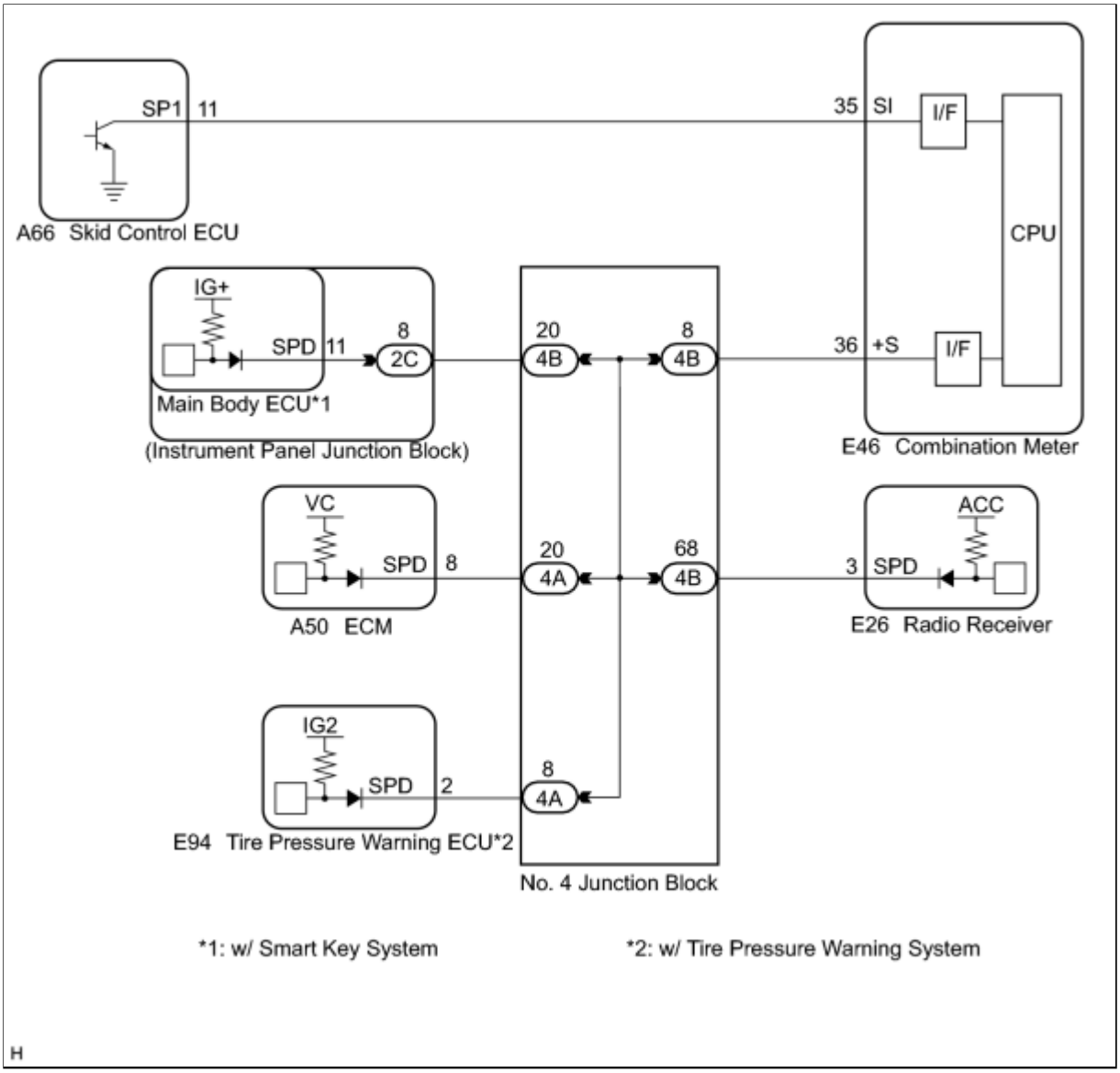

3. except TMC Made 2AZ-FE

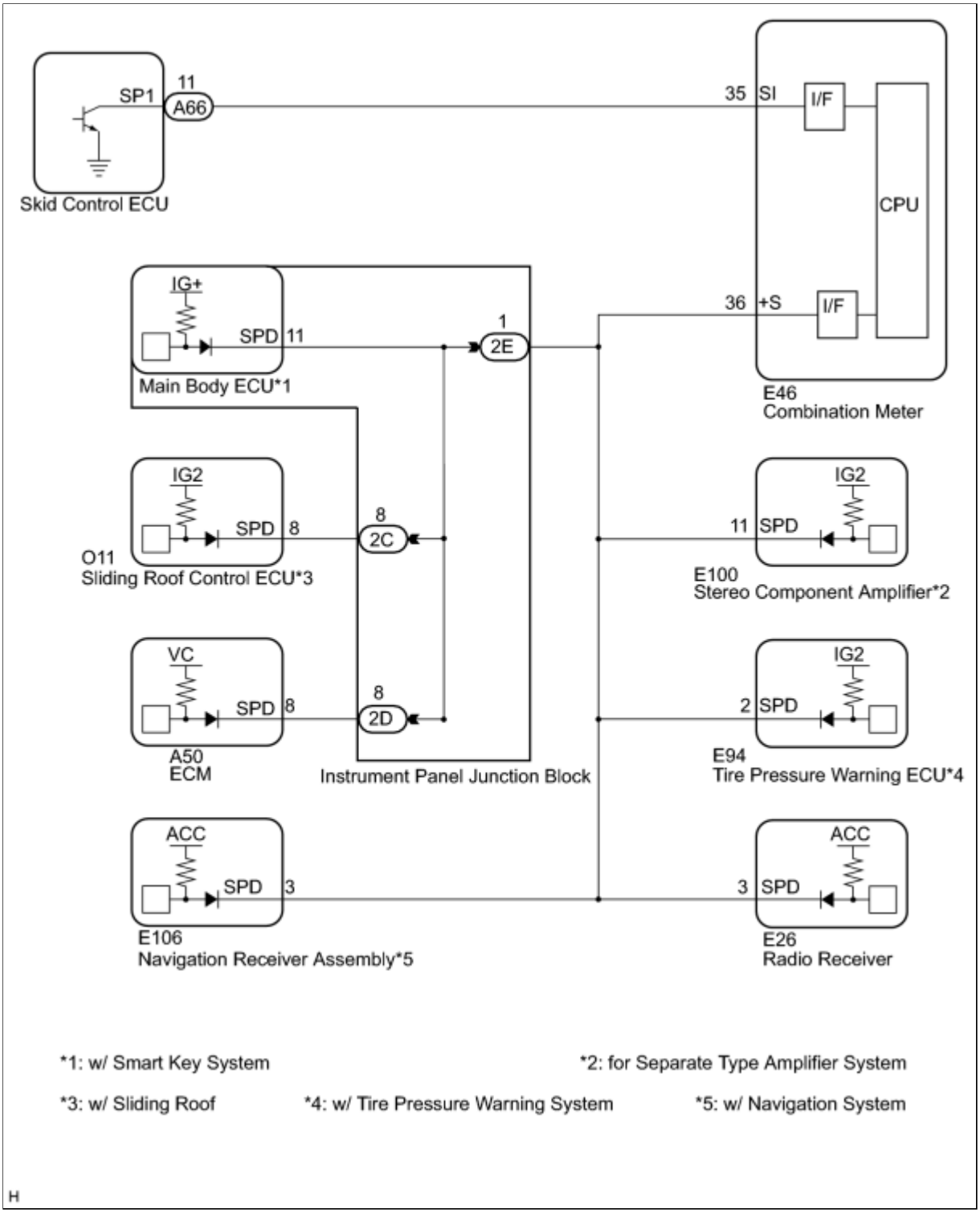

INSPECTION PROCEDURE

PROCEDURE

1.	**INSPECT ECU TERMINAL VOLTAGE (INPUT VOLTAGE)**

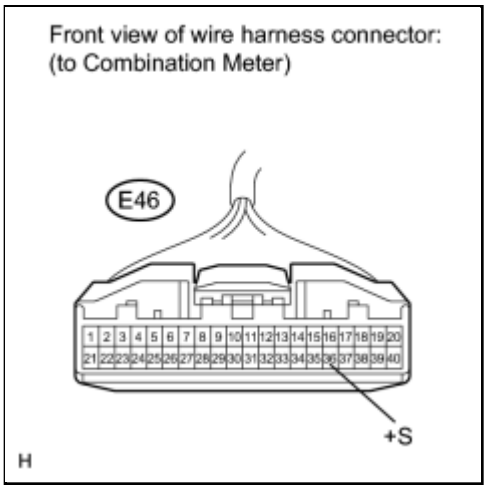

(a) Disconnect the E46 connector.

(b) Measure the voltage according to the value(s) in the table below.

Standard Voltage:

TESTER CONNECTION	CONDITION	SPECIFIED CONDITION
E46-36 (+S) - Body ground	Ignition switch ON	4.5 to 14 V

HINT:

If any of the ECUs specified in the wiring diagram supplied power to the combination meter, the combination meter will output a waveform.

Result:

RESULT	PROCEED TO
OK	A
NG (for TMC Made)	B
NG (except for TMC Made)	C

C ▶ **CHECK HARNESS AND CONNECTOR**

B ▶ **CHECK HARNESS AND CONNECTOR (COMBINATION METER - NO. 4 JUNCTION BLOCK)**

A ▼

2.	**INSPECT COMBINATION METER (OUTPUT VOLTAGE)**

(a) Reconnect the E46 connector.

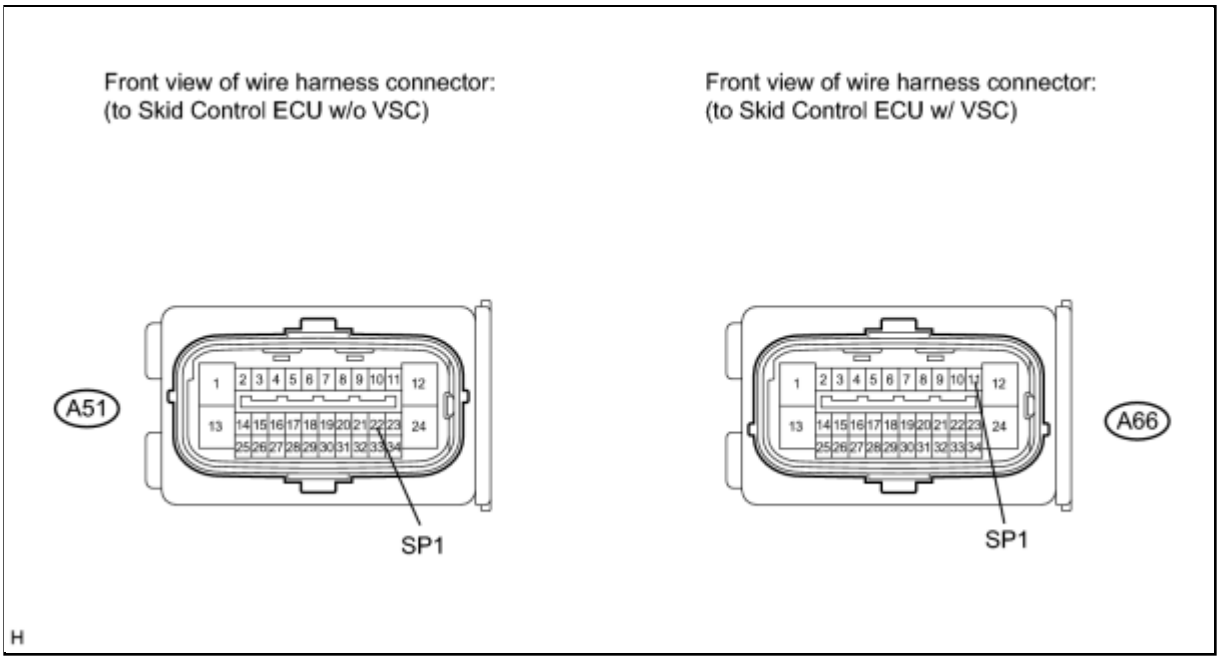

(b) Disconnect the A51*1 or A66*2 connector.

(c) Measure the voltage according to the value(s) in the table below.

Standard Voltage:

TESTER CONNECTION	CONDITION	SPECIFIED CONDITION
A51-22 (SP1)*1 - Body ground	Ignition switch ON	11 to 14 V
A66-11 (SP1)*2 - Body ground	Ignition switch ON	11 to 14 V

- *1: w/o VSC
- *2: w/ VSC

NG ▶ **CHECK HARNESS AND CONNECTOR (COMBINATION METER - SKID CONTROL ECU)**

OK ▼

3.	**INSPECT SKID CONTROL ECU (INPUT WAVEFORM)**

(a) Check the input waveform.

(1) Reconnect the A51*1 or A66*2 connector.

- *1: w/o VSC
- *2: w/ VSC

(2) Remove the combination meter with the connector(s) still connected.

(3) Connect the oscilloscope to terminals E46-35 (SI) and body ground.

(4) Turn the ignition switch to ON.

(5) Turn the wheel slowly.

(6) Check the signal waveform according to the condition(s) in the table below.

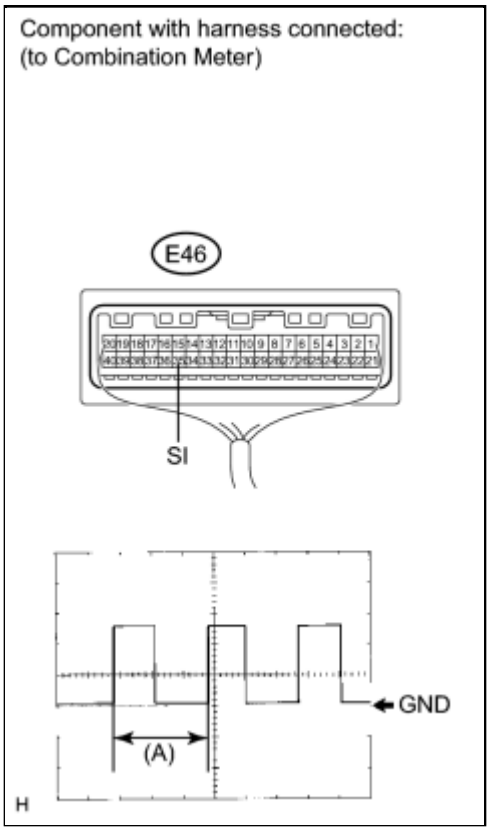

ITEM	CONDITION
Tool setting	5 V/DIV., 20 ms./DIV.
Vehicle condition	Driving at approximately 12 mph (20 km/h)

OK:

The waveform is displayed as shown in the illustration.

HINT:

When the system is functioning normally, one wheel revolution generates 4 pulses. As the vehicle speed increases, the width indicated by (A) in the illustration narrows.

Result:

RESULT	PROCEED TO
OK	A
NG (w/o VSC)	B
NG (w/ VSC)	C

C ▶ **REPLACE SKID CONTROL ECU (w/ VSC)**

B ▶ **REPLACE SKID CONTROL ECU (w/o VSC)**

A ▶ **REPLACE COMBINATION METER**

4.	**CHECK HARNESS AND CONNECTOR (COMBINATION METER - SKID CONTROL ECU)**

(a) Disconnect the E46 connector.

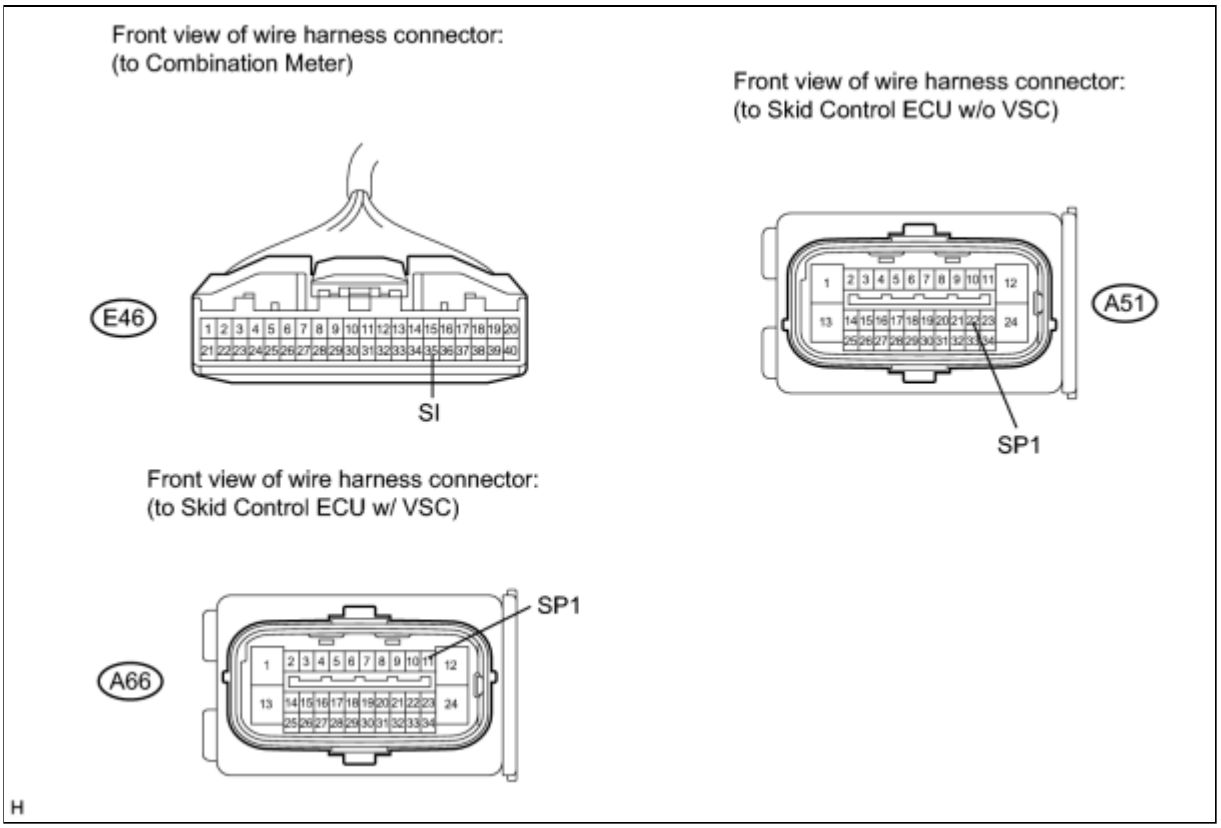

(b) Measure the resistance according to the value(s) in the table below.

Standard Resistance:

TESTER CONNECTION	CONDITION	SPECIFIED CONDITION
A51-22 (SP1)*1 - E46-35 (SI)	Always	Below 1 Ω
A51-22 (SP1)*1 - Body ground	Always	10 kΩ or higher
A66-11 (SP1)*2 - E46-35 (SI)	Always	Below 1 Ω
A66-11 (SP1)*2 - Body ground	Always	10 kΩ or higher

- *1: w/o VSC
- *2: w/ VSC

NG ▶ **REPAIR OR REPLACE HARNESS OR CONNECTOR**

OK ▶ **REPLACE COMBINATION METER**

5.	**CHECK HARNESS AND CONNECTOR (COMBINATION METER - NO. 4 JUNCTION BLOCK)**

(a) Disconnect the 4B connector.

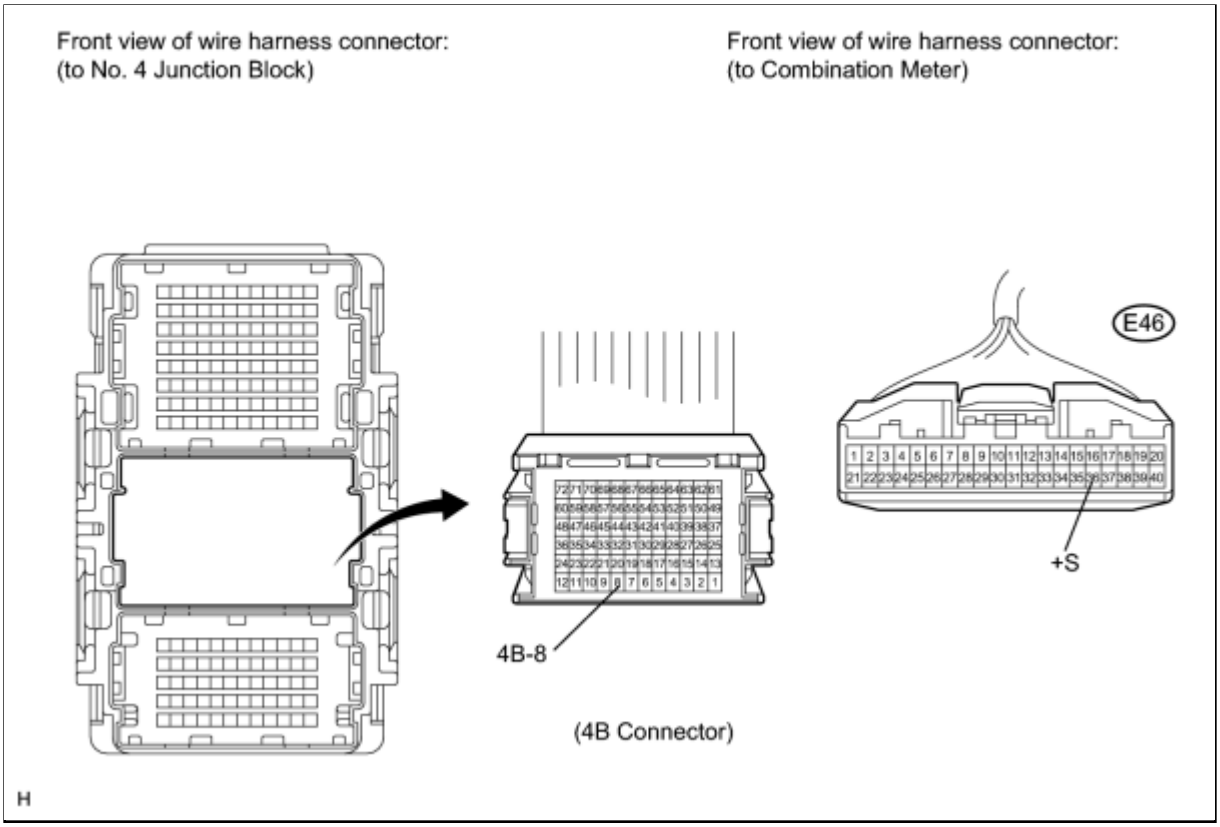

(b) Measure the voltage according to the value(s) in the table below.

Standard Resistance:

TESTER CONNECTION	CONDITION	SPECIFIED CONDITION
E46-36 (+S) - 4B-8	Always	Below 1 Ω
4B-8 - Body ground	Always	10 kΩ or higher

NG ▶ **REPAIR OR REPLACE HARNESS OR CONNECTOR**

OK ▼

6.	**CHECK HARNESS AND CONNECTOR (NO. 4 JUNCTION BLOCK)**

(a) Inspect for a short in the circuit that is connected to the combination meter shown in the wiring diagram.

HINT:

If voltage is not present, the circuit (ECU) was possibly the malfunctioning circuit. This is the circuit that will be diagnosed by following the A step that follows.

(1) Disconnect 4A connector.

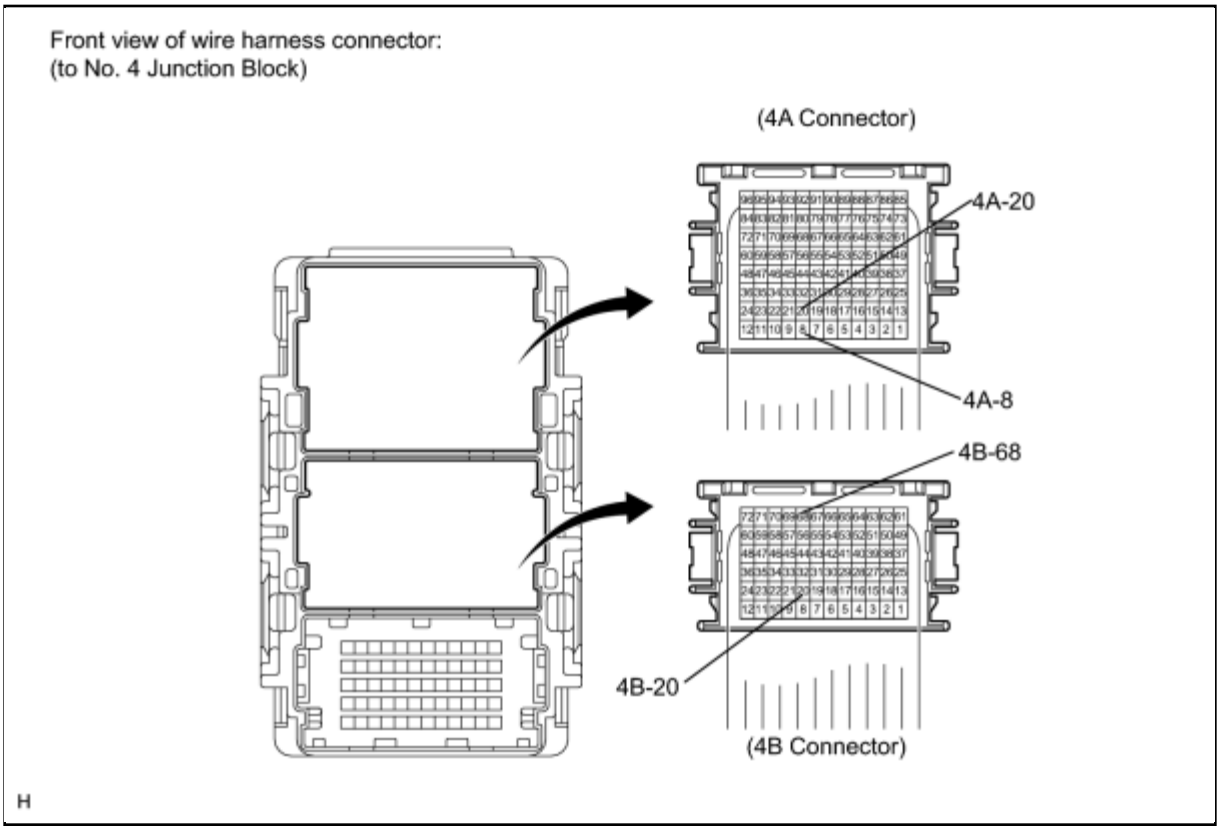

(2) Measure the voltage according to the value(s) in the table below.

Standard Voltage:

TESTER CONNECTION	CONDITION	SPECIFIED CONDITION
4A-8*1 - Body ground	Ignition switch ON	4.5 to 14 V
4A-20 - Body ground	Ignition switch ON	4.5 to 14 V
4B-20*2 - Body ground	Ignition switch ON	4.5 to 14 V
4B-68 - Body ground	Ignition switch ON	4.5 to 14 V

- *1: w/ Tire Pressure Warning System
- *2: w/ Smart Key System

Result:

RESULT	PROCEED TO
Voltage is not present in one circuit.	A
Voltage is present in all the circuits.	B

NG ▶ **REPAIR OR REPLACE HARNESS OR CONNECTOR (NO. 4 JUNCTION BLOCK)**

OK

7.	SYSTEM CHECK

(a) Select the circuit that did not present the voltage in the step 6.

Result:

TESTER CONNECTION	SYSTEM THAT USES THE CIRCUIT	PROCEED TO
4A-8*1 - Body ground	Tire pressure warning System	A
4A-20 - Body ground	SFI System	B
4B-20*2 - Body ground	Starting System	C
4B-68 - Body ground	Audio/visual System	D

- *1: w/ Tire Pressure Warning System
- *2: w/ Smart Key System

D ▶ **CHECK HARNESS AND CONNECTOR (RADIO RECEIVER CIRCUIT)**

C ▶ **CHECK HARNESS AND CONNECTOR (MAIN BODY ECU CIRCUIT)**

B ▶ **CHECK HARNESS AND CONNECTOR (ECM CIRCUIT)**

A

8.	CHECK HARNESS AND CONNECTOR (TIRE PRESSURE WARNING ECU CIRCUIT)

(a) Disconnect the E94 connector.

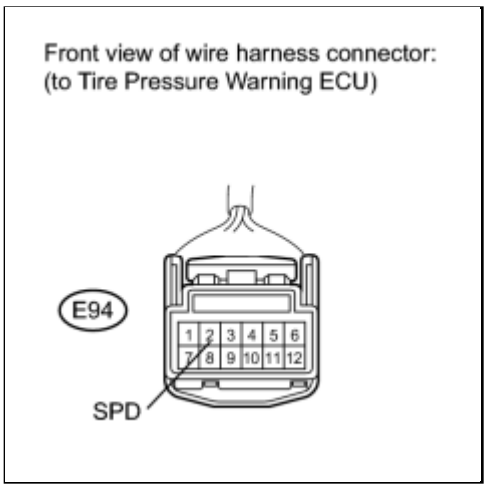

(b) Measure the resistance according to the value(s) in the table below.

Standard Resistance:

TESTER CONNECTION	CONDITION	SPECIFIED CONDITION
E94-2 (SPD)* - Body ground	Always	10 kΩ or higher

- *: w/ Tire Pressure Warning System

NG ▶ **REPAIR OR REPLACE HARNESS OR CONNECTOR**

OK ▶ **REPLACE TIRE PRESSURE WARNING ECU**

9.	**CHECK HARNESS AND CONNECTOR (ECM CIRCUIT)**

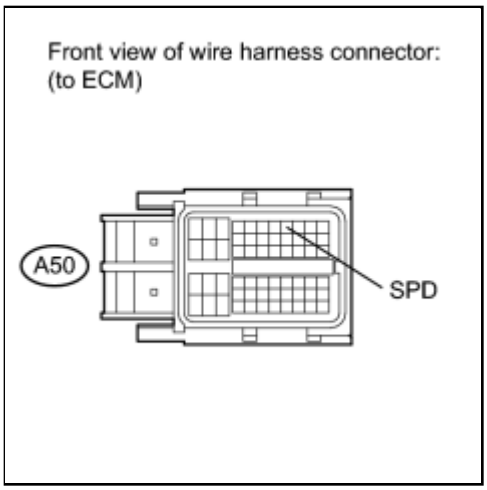

(a) Disconnect the A50 connector.

(b) Measure the resistance according to the value(s) in the table below.

Standard Resistance:

TESTER CONNECTION	CONDITION	SPECIFIED CONDITION
A50-8 (SPD) - Body ground	Always	10 kΩ or higher

Result:

RESULT	PROCEED TO
OK (for 2AZ-FE)	A
OK (for 2ZR-FE)	B
NG	C

C ▶ **REPAIR OR REPLACE HARNESS OR CONNECTOR**

B ▶ **REPLACE ECM (for 2ZR-FE)**

A ▶ **REPLACE ECM (for 2AZ-FE)**

10.	CHECK HARNESS AND CONNECTOR (MAIN BODY ECU CIRCUIT)

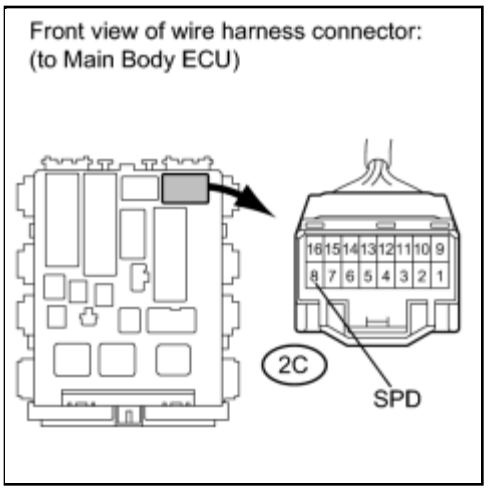

(a) Disconnect the 2C connector.

(b) Measure the resistance according to the value(s) in the table below.

Standard Resistance:

TESTER CONNECTION	CONDITION	SPECIFIED CONDITION
2C-8 (SPD)* - Body ground	Always	10 kΩ or higher

- *: w/ Smart Key System

NG ▶ **REPAIR OR REPLACE HARNESS OR CONNECTOR**

OK ▶ **REPLACE MAIN BODY ECU**

11.	CHECK HARNESS AND CONNECTOR (RADIO RECEIVER CIRCUIT)

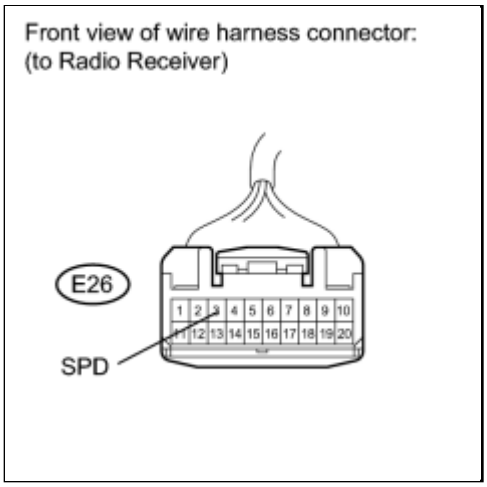

(a) Disconnect the E26 connector.

(b) Measure the resistance according to the value(s) in the table below.

Standard Resistance:

TESTER CONNECTION	CONDITION	SPECIFIED CONDITION
E26-3 (SPD) - Body ground	Always	10 kΩ or higher

NG ▶ **REPAIR OR REPLACE HARNESS OR CONNECTOR**

OK ▶ **REPLACE RADIO RECEIVER**

12.	CHECK HARNESS AND CONNECTOR

(a) Inspect for a short in the circuit that is connected to the combination meter shown in the wiring diagram.

HINT:

If voltage is not present, the circuit (ECU) was possibly the malfunctioning circuit.

(1) Disconnect the E26, E94*1, E100*2, E106*3, and 2E connectors.

- *1: w/ Tire Pressure Warning System
- *2: for Separate Type Amplifier System
- *3: w/ Navigation System

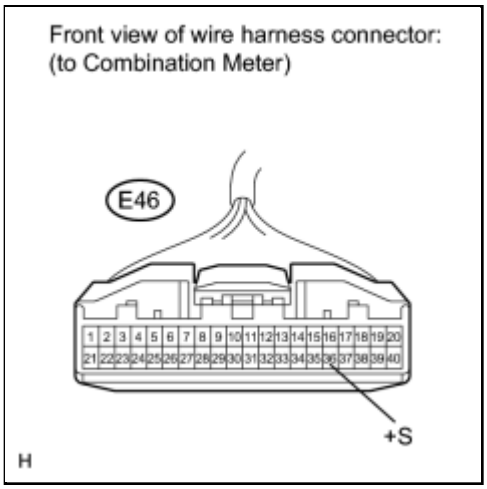

(2) Measure the resistance according to the value(s) in the table below.

Standard Resistance:

TESTER CONNECTION	CONDITION	SPECIFIED CONDITION
E46-36 (+S) - Body ground	Always	10 kΩ or higher

NG ▶ **REPAIR OR REPLACE HARNESS OR CONNECTOR**

OK ▼

13.	INSPECT RADIO RECEIVER (CHECK FOR A SHORT)

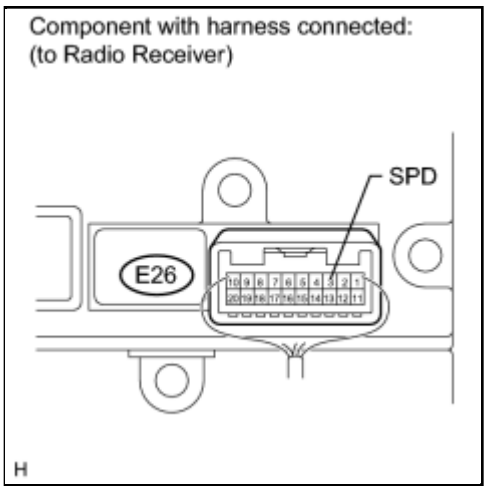

(a) Disconnect the E26 connector.

(b) Measure the voltage according to the value(s) in the table below.

Standard Resistance:

TESTER CONNECTION	CONDITION	SPECIFIED CONDITION
E26-3 (SPD) - Body ground	Always	10 kΩ or higher

NG ▶ **REPLACE RADIO RECEIVER**

OK

14.	**INSPECT TIRE PRESSURE WARNING ECU (CHECK FOR A SHORT)**

HINT:

If the vehicle does not equipped with the tire pressure warning system, proceed to the next step.

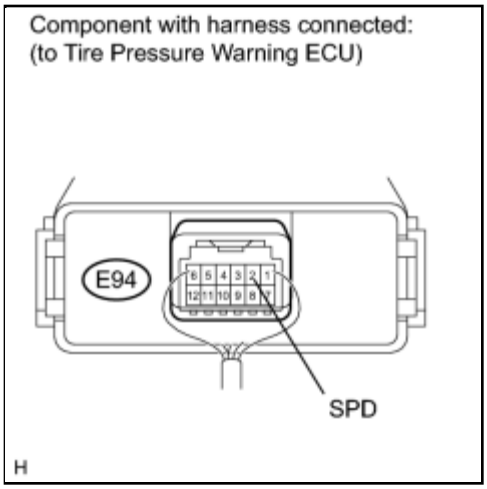

(a) Disconnect the E94 connector.

(b) Measure the resistance according to the value(s) in the table below.

Standard Resistance:

TESTER CONNECTION	CONDITION	SPECIFIED CONDITION
E94-2 (SPD)* - Body ground	Always	10 kΩ or higher

- *: w/ Tire Pressure Warning System

NG ▶ **REPLACE TIRE PRESSURE WARNING ECU**

OK

15.	**INSPECT STEREO COMPONENT AMPLIFIER (CHECK FOR A SHORT)**

HINT:

If the vehicle does not equipped with the stereo component amplifier, proceed to the next step.

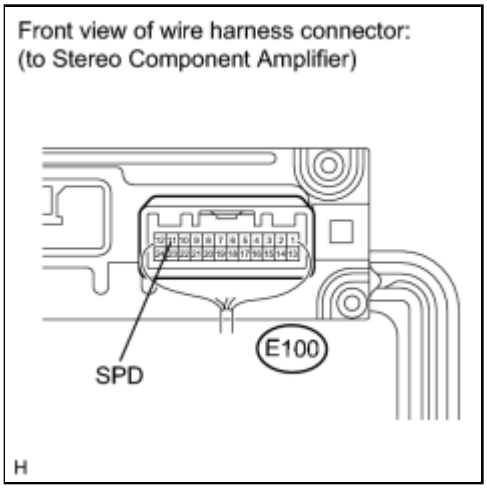

(a) Disconnect the E100 connector.

(b) Measure the resistance according to the value(s) in the table below.

Standard Resistance:

TESTER CONNECTION	CONDITION	SPECIFIED CONDITION
E100-11 (SPD)* - Body ground	Always	10 kΩ or higher

- *: for Separate Type Amplifier System

NG ▶ **REPLACE STEREO COMPONENT AMPLIFIER**

OK ▼

16.	**INSPECT NAVIGATION RECEIVER ASSEMBLY (CHECK FOR A SHORT)**

HINT:

If the vehicle does not equipped with the navigation system, proceed to the next step.

(a) Disconnect the E106 connector.

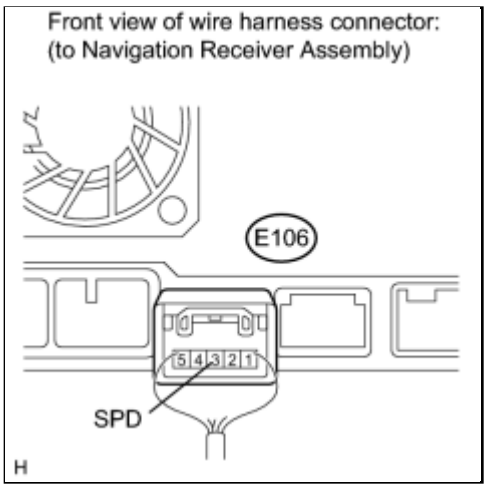

(b) Measure the resistance according to the value(s) in the table below.

Standard Resistance:

TESTER CONNECTION	CONDITION	SPECIFIED CONDITION
E106-3 (SPD)* - Body ground	Always	10 kΩ or higher

- *: w/ Navigation System

NG ▶ **REPLACE NAVIGATION RECEIVER ASSEMBLY**

OK ▼

17.	**CHECK HARNESS AND CONNECTOR (INSTRUMENT PANEL JUNCTION BLOCK)**

(a) Inspect for a short in the circuit that is connected to the combination meter shown in the wiring diagram.

HINT:

If voltage is not present, the circuit (ECU) was possibly the malfunctioning circuit. This is the circuit that will be diagnosed by following the A step that follows.

(1) Disconnect 2C, 2D, and 2Econnector.

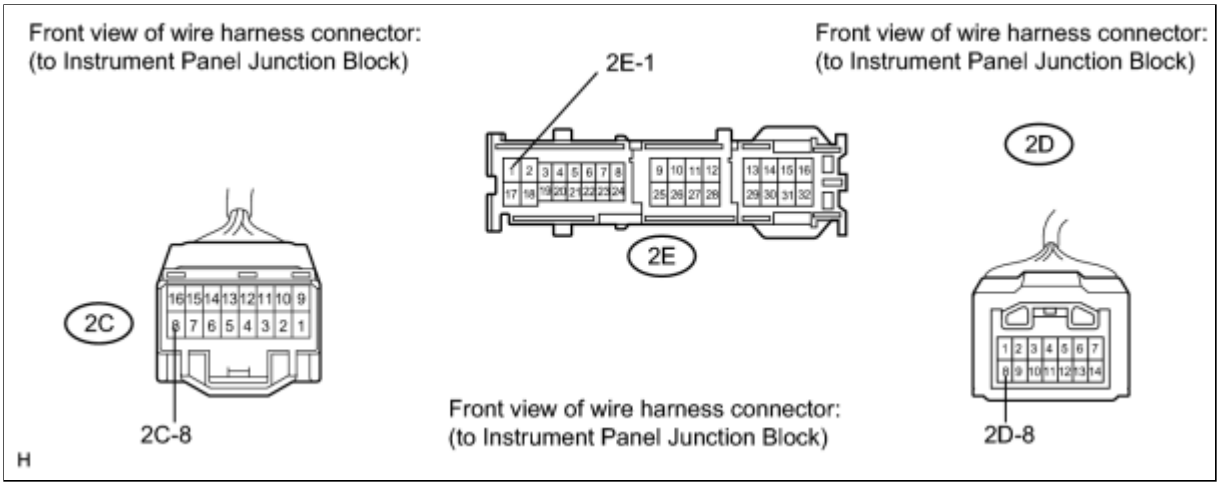

(2) Measure the voltage according to the value(s) in the table below.

Standard Voltage:

TESTER CONNECTION	CONDITION	SPECIFIED CONDITION
2C-8*2 - Body ground	Ignition switch ON	4.5 to 14 V
2D-8 - Body ground	Ignition switch ON	4.5 to 14 V
2E-1*1 - Body ground	Ignition switch ON	4.5 to 14 V

- *1: w/ Smart Key System
- *2: w/ Sliding Roof

Result:

RESULT	PROCEED TO
Voltage is not present in one circuit.	A
Voltage is present in all the circuits.	B

B ▶ **REPAIR OR REPLACE HARNESS OR CONNECTOR (INSTRUMENT PANEL JUNCTION BLOCK)**

A ▼

18.	**SYSTEM CHECK**

(a) Select the circuit that did not present the voltage in the step 17.

Result:

TESTER CONNECTION	SYSTEM THAT USES THE CIRCUIT	PROCEED TO
2D-8 - Body ground	SFI System	A
2E-1*1 - Body ground	Starting System	B
2C-8*2 - Body ground	Sliding Roof Control System	C

- *1: w/ Smart Key System
- *2: w/ Sliding Roof

C **CHECK HARNESS AND CONNECTOR (SLIDING ROOF CONTROL ECU CIRCUIT)**

B **CHECK HARNESS AND CONNECTOR (MAIN BODY ECU CIRCUIT)**

A

19.	CHECK HARNESS AND CONNECTOR (ECM CIRCUIT)

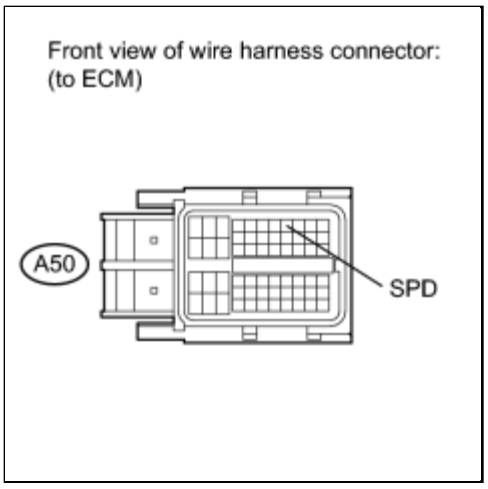

(a) Disconnect the A50 connector.

(b) Measure the resistance according to the value(s) in the table below.

Standard Resistance:

TESTER CONNECTION	CONDITION	SPECIFIED CONDITION
A50-8 (SPD) - Body ground	Always	10 kΩ or higher

Result:

RESULT	PROCEED TO
OK (for 2AZ-FE)	A
OK (for 2ZR-FE)	B
NG	C

C ▶ **REPAIR OR REPLACE HARNESS OR CONNECTOR**

B ▶ **REPLACE ECM (for 2ZR-FE)**

A ▶ **REPLACE ECM (for 2AZ-FE)**

20.	CHECK HARNESS AND CONNECTOR (MAIN BODY ECU CIRCUIT)

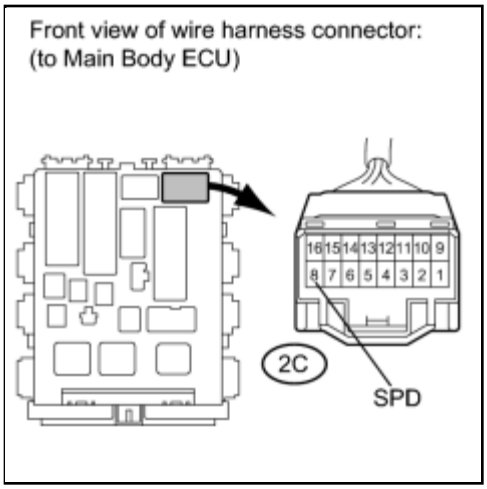

(a) Disconnect the 2C connector.

(b) Measure the resistance according to the value(s) in the table below.

Standard Resistance:

TESTER CONNECTION	CONDITION	SPECIFIED CONDITION
2C-8 (SPD)* - Body ground	Always	10 kΩ or higher

- *: w/ Smart Key System

NG ▶ **REPAIR OR REPLACE HARNESS OR CONNECTOR**

OK ▶ **REPLACE MAIN BODY ECU**

21.	CHECK HARNESS AND CONNECTOR (SLIDING ROOF CONTROL ECU CIRCUIT)

(a) Disconnect the O11 connector.

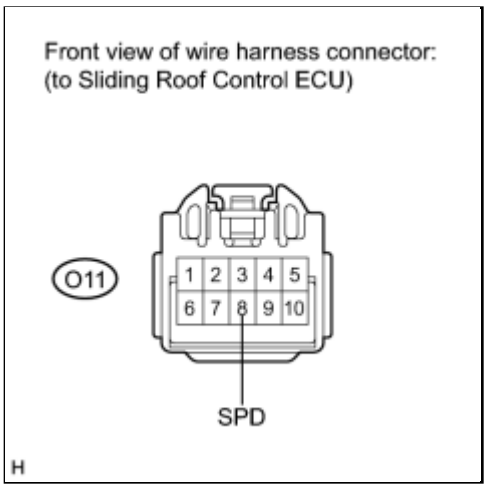

(b) Measure the resistance according to the value(s) in the table below.

Standard Resistance:

TESTER CONNECTION	CONDITION	SPECIFIED CONDITION
O11-8 (SPD)* - Body ground	Always	10 kΩ or higher

- *: w/ Sliding Roof

NG ▶ **REPAIR OR REPLACE HARNESS OR CONNECTOR**

OK ▶ **REPLACE SLIDING ROOF CONTROL ECU**

Last Modified: 3-10-2010	6.4 J	**From:** 200901
Model Year: 2010	**Model:** Corolla	**Doc ID:** RM0000012GF02YX
Title: METER / GAUGE / DISPLAY: METER / GAUGE SYSTEM: Engine Coolant Temperature Receiver Gauge Malfunction (2010 Corolla)		

Engine Coolant Temperature Receiver Gauge Malfunction

DESCRIPTION

In this circuit, the meter CPU receives engine coolant temperature signals from the ECM using the CAN communication line (CAN No. 1 Bus). The meter CPU displays engine coolant temperature that is calculated based on the data received from the ECM.

WIRING DIAGRAM

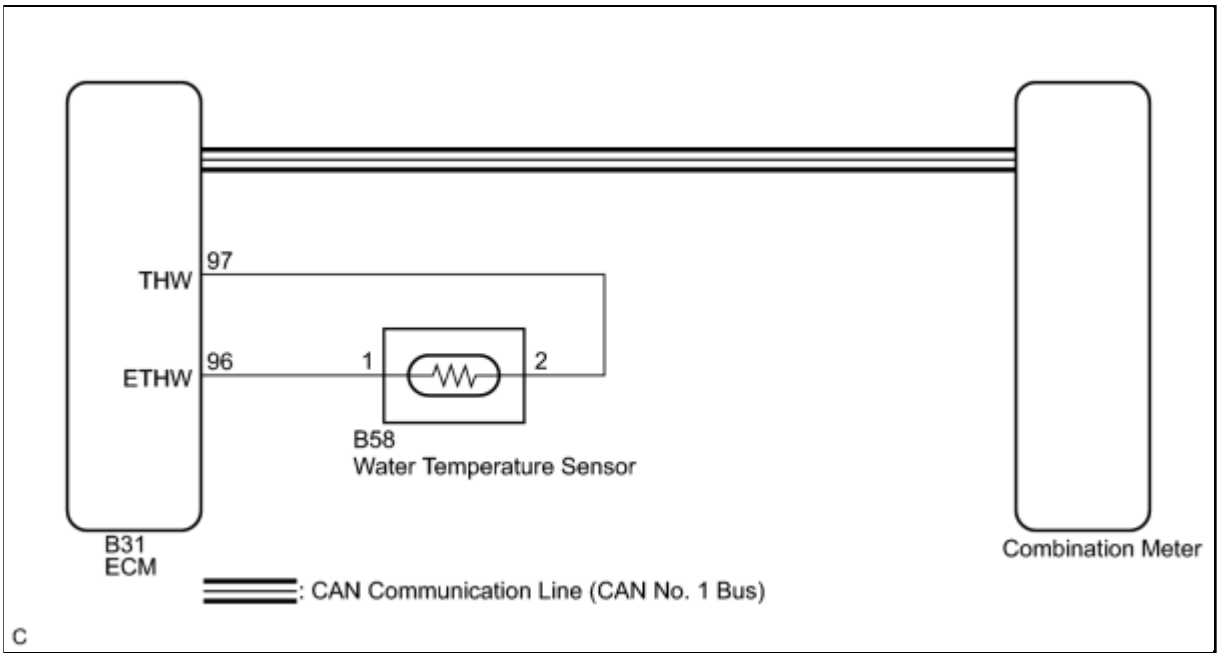

INSPECTION PROCEDURE

HINT:

If there is an open or short in the engine coolant temperature sensor circuit, the ECM outputs the DTCs.

Perform troubleshooting with the SFI System INFO (for 2AZ-FE), INFO (for 2ZR-FE)).

PROCEDURE

1.	**CHECK CAN COMMUNICATION SYSTEM**

(a) Check if CAN communication DTC is output INFO .

Result:

RESULT	PROCEED TO
CAN communication DTC is not output.	A
CAN communication DTC is output.	B

B ▶ **GO TO CAN COMMUNICATION SYSTEM**

A

▼

2.	**PERFORM ACTIVE TEST USING TECHSTREAM (WATER TEMPERATURE METER OPERATION)**

(a) Connect the Techstream to the DLC3.

(b) Turn the ignition switch to ON.

(c) Turn the Techstream on.

(d) Enter the following menus: Body Electrical / Combination Meter / Active Test.

(e) Check the operation by referring to the values in the table below.

Combination Meter

TESTER DISPLAY	TEST PART	CONTROL RANGE	DIAGNOSTIC NOTE
Water Temperature Meter Operation	Engine coolant temperature receiver gauge	Low, Normal, Hi	Confirm that the vehicle is stopped, engine idling

OK:

Gauge indication is normal.

NG ▶ **REPLACE COMBINATION METER**

OK

▼

3.	READ VALUE USING TECHSTREAM (COOLANT TEMPERATURE)

(a) Connect the Techstream to the DLC3.

(b) Turn the ignition switch to ON.

(c) Turn the Techstream on.

(d) Enter the following menus: Body Electrical / Combination Meter / Data List.

(e) Check the values by referring to the values in the table below.

Combination Meter

TESTER DISPLAY	MEASUREMENT ITEM/RANGE	NORMAL CONDITION	DIAGNOSTIC NOTE
Coolant Temp	Engine coolant temperature/Min.: -40°C (-40°F), Max.: 140°C (284°F)	After warming up: 80 to 100°C (176 to 212°F)	-

Result:

RESULT	PROCEED TO
The engine coolant temperature receiver gauge indication is almost the same as the Techstream indication.	A
The engine coolant temperature receiver indication is differ from the Techstream indication.	B

B ▶ **REPLACE COMBINATION METER**

A ▼

4.	READ VALUE USING TECHSTREAM (COOLANT TEMP)

(a) Connect the Techstream to the DLC3.

(b) Turn the ignition switch to ON.

(c) Turn the Techstream on.

(d) Enter the following menus: Powertrain / Engine and ECT / Data List.

(e) Check the values by referring to the values in the table below.

Engine and ECT

TESTER DISPLAY	MEASUREMENT ITEM/RANGE	NORMAL CONDITION	DIAGNOSTIC NOTE
Coolant Temp	Engine coolant temperature/Min.: -40°C (-40°F), Max.: 140°C (284°F)	After warming up: 80 to 100°C (176 to 212°F)	-

Result:

RESULT	PROCEED TO
The engine coolant temperature receiver gauge indication is almost the same as the actual engine coolant temperature.	A
The engine coolant temperature receiver gauge indication is differ from the actual engine coolant temperature. (for 2AZ-FE)	B
The engine coolant temperature receiver gauge indication is differ from the actual engine coolant temperature. (for 2ZR-FE)	C

C ▶ **GO TO SFI SYSTEM (for 2ZR-FE)**

B ▶ **GO TO SFI SYSTEM (for 2AZ-FE)**

A ▼

5.	**REPLACE COMBINATION METER**

(a) Replace the combination meter with a new or a known good one INFO .

OK:

The operation of the combination meter returns to normal.

Result:

RESULT	PROCEED TO
OK	A
NG (for 2AZ-FE)	B
NG (for 2ZR-FE)	C

C ▶ REPLACE ECM (for 2ZR-FE)

B ▶ REPLACE ECM (for 2AZ-FE)

A ▶ END

Last Modified: 3-10-2010	6.4 K	**From:** 200901
Model Year: 2010	**Model:** Corolla	**Doc ID:** RM000001PGH01HX
Title: MIRROR (INT): INNER REAR VIEW MIRROR (w/ EC Mirror): COMPONENTS (2010 Corolla)		

COMPONENTS

ILLUSTRATION

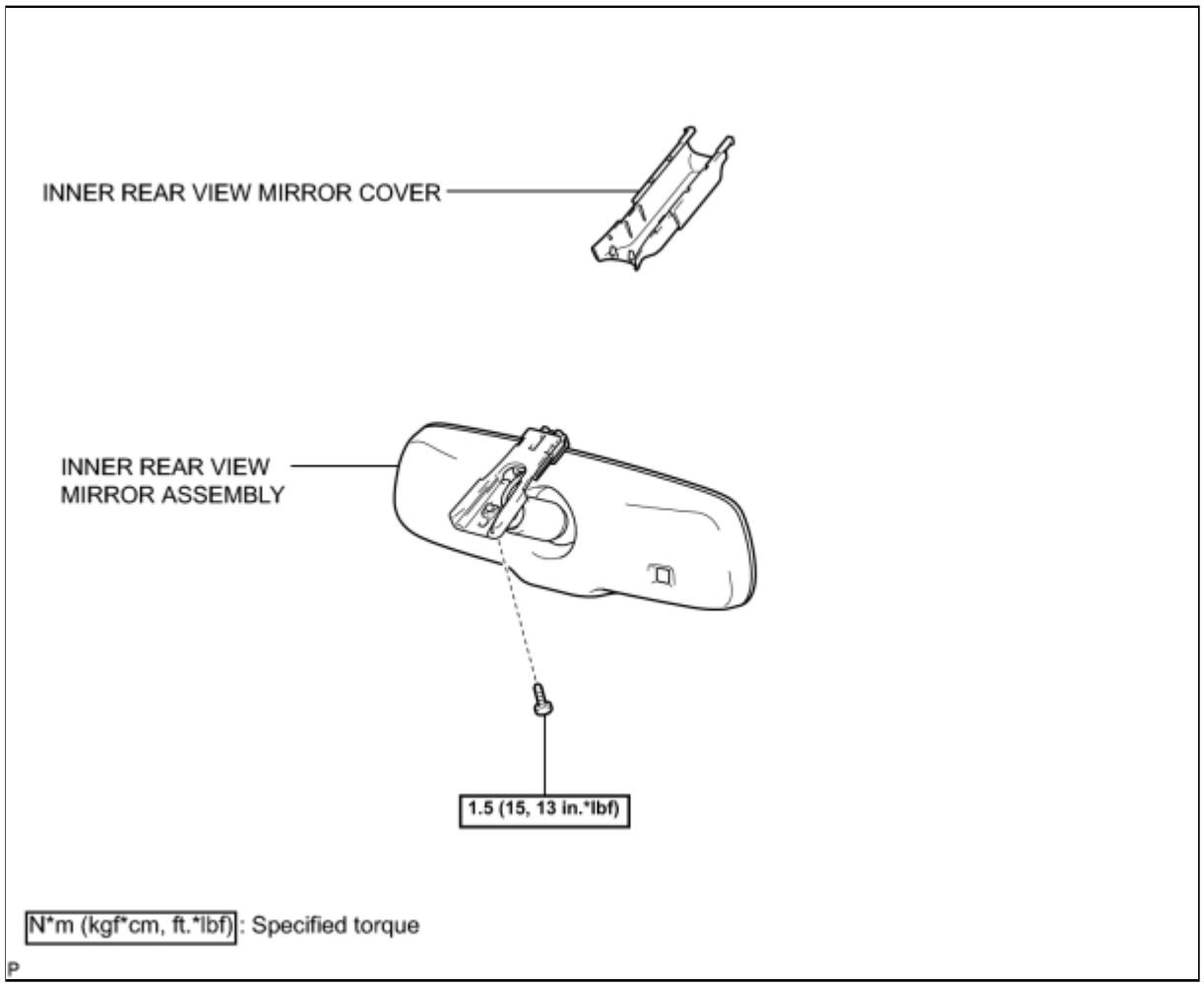

Last Modified: 3-10-2010	6.4 D	**From:** 200901
Model Year: 2010	**Model:** Corolla	**Doc ID:** RM000003H7X002X
Title: MIRROR (INT): INNER REAR VIEW MIRROR (w/ EC Mirror): CALIBRATION (2010 Corolla)		

CALIBRATION

1. SELECT COMPASS DISPLAY MODE

(a) The AUTO switch allows you to select whether or not the compass is displayed.

2. SET ZONE

(a) The compass indicates the direction that the vehicle is heading by detecting the direction and strength of the earth's magnetic field (magnetic north). However, there is a difference between magnetic north and actual north that depends on the location of the vehicle. To compensate for this difference, depending on the location, it is necessary to set the zone in which the vehicle will be used (Refer to Compass Zone Map). The zone setting can be changed using the AUTO switch of the inner mirror.

3. PERFORM CALIBRATION

(a) Because each vehicle has its own magnetic field, calibration should be performed. The calibration function is used to compensate for the residual magnetism of the vehicle.

4. WHEN COMPASS IS MAGNETIZED

(a) The compass or vehicle may become magnetized while the vehicle is being shipped. As a result, it is necessary to perform calibration for the compass before the vehicle is delivered to the customer. If calibration cannot be performed successfully (calibration cannot be completed in spite of driving around several times), it may be caused by excessive magnetization of the vehicle. Demagnetize the vehicle using a demagnetizer and perform calibration again.

5. SET COMPASS

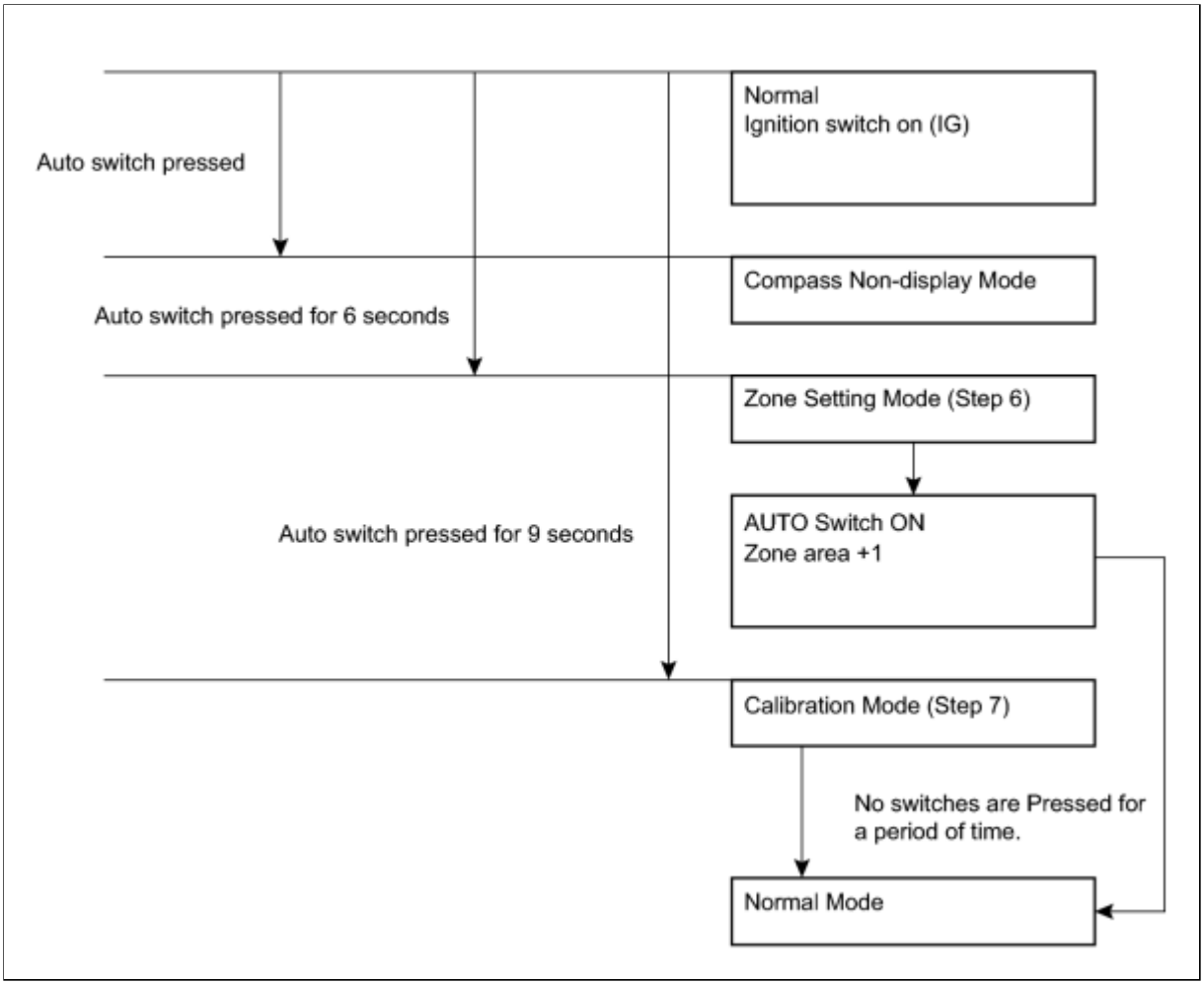

6. ZONE SETTING MODE

(a) When the compass is in normal mode, pressing the AUTO switch for 6 seconds will activate the zone setting mode. A number from 1 to 15 will be displayed on the compass display.

HINT:

When the initial zone setting has not been changed, 8 will be displayed.

(b) The displayed number increases by 1 every time the AUTO switch is pressed. Referring to the map, check the number for the area where the vehicle will be used and set the zone number.

(c) Leave the mirror untouched for several seconds after setting the zone. Check that the compass display shows a direction (N, NE, E, SE, S, SW, W, or NW). In some cases, the compass may display "C".

7. CALIBRATION MODE

(a) When the compass is in normal mode, pressing the AUTO switch for 9 seconds will activate the calibration mode.

(b) Drive the vehicle in a circle at a speed of 8 km/h (5 mph) or less.

(c) After driving around in a circle 1 to 3 times, the direction (N, NE, E, SE, S, SW, W, or NW) will be displayed on the compass display. This indicates that calibration has finished.

HINT:

After calibration is performed, it is not necessary to repeat the calibration procedure unless the magnetic field

of the vehicle changes drastically. If the magnetic field changes drastically, this will be indicated by the compass display changing to "C".

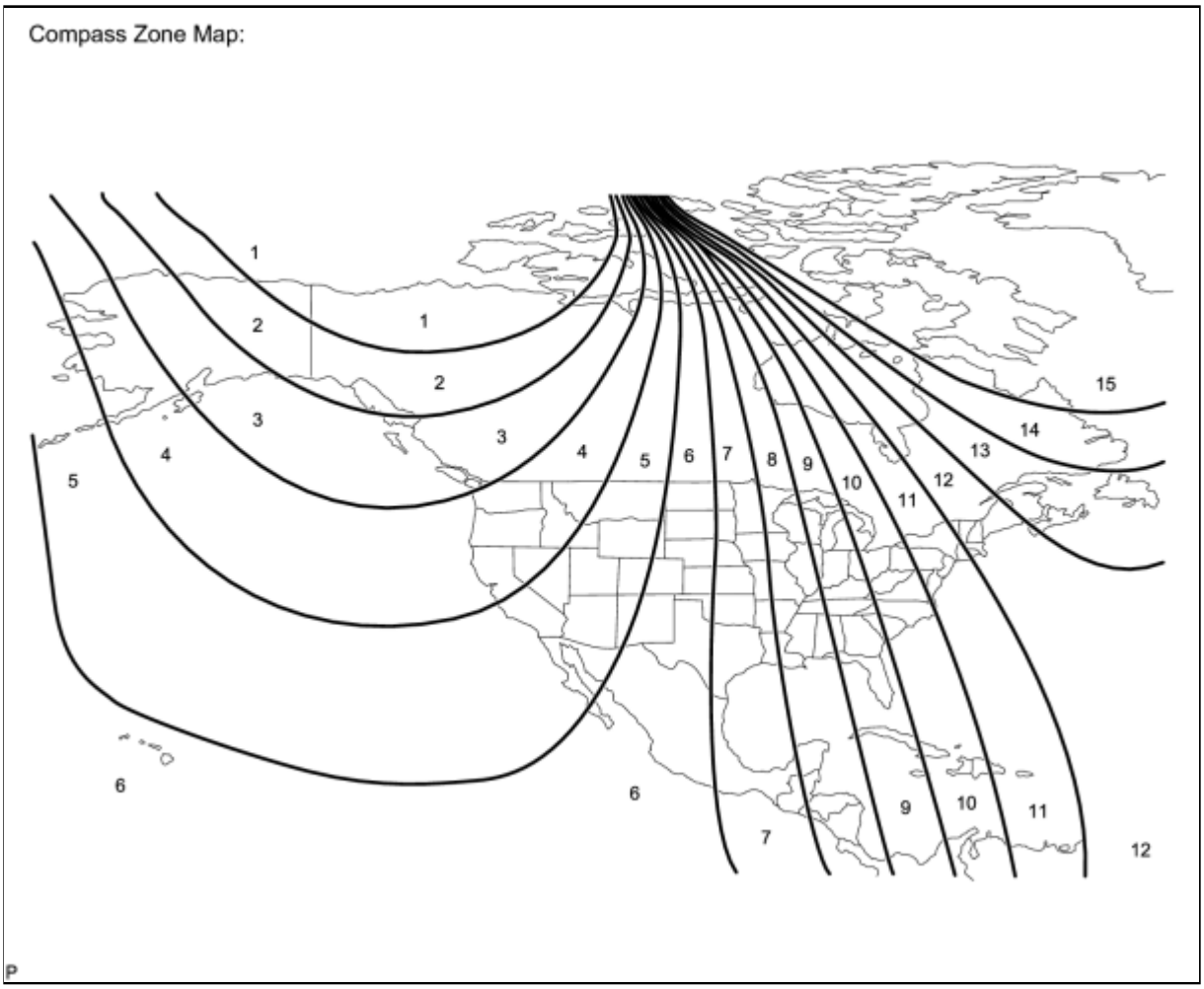

Last Modified: 3-10-2010	6.4 T	**From:** 200901
Model Year: 2010	**Model:** Corolla	**Doc ID:** RM000003H7W002X
Title: MIRROR (INT): INNER REAR VIEW MIRROR (w/ EC Mirror): PROBLEM SYMPTOMS TABLE (2010 Corolla)		

PROBLEM SYMPTOMS TABLE

HINT:

- Use the table below to help determine the cause of problem symptoms. If multiple suspected areas are listed, the potential causes of the symptoms are listed in order of probability in the "Suspected Area" column of the table. Check each symptom by checking the suspected areas in the order they are listed. Replace parts as necessary.

Automatic Glare-resistant EC Mirror

SYMPTOM	SUSPECTED AREA	SEE PAGE
Automatic glare-resistant EC mirror does not operate	ECU-IG NO. 2 fuse	-
	Inner rear view mirror	INFO
	Wire harness	-

Last Modified: 3-10-2010	6.4 A	**From:** 200901
Model Year: 2010	**Model:** Corolla	**Doc ID:** RM000001PGI01RX
Title: MIRROR (INT): INNER REAR VIEW MIRROR (w/ EC Mirror): REMOVAL (2010 Corolla)		

REMOVAL

1. REMOVE INNER REAR VIEW MIRROR COVER

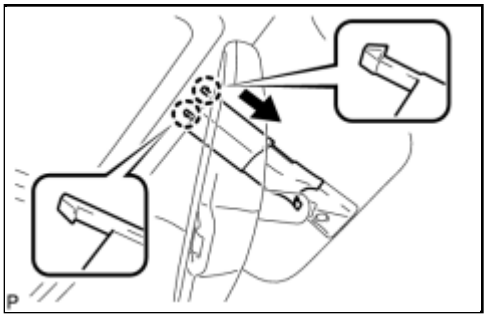

(a) Disengage the 2 claws and slide the inner rear view mirror cover as shown in the illustration.

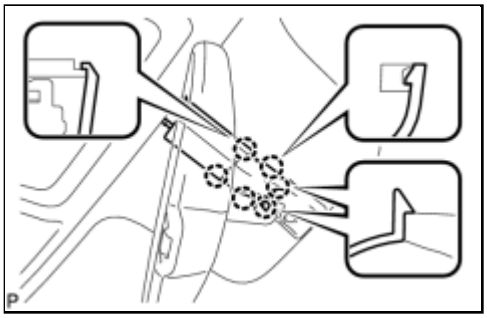

(b) Disengage the 6 claws and remove the inner rear view mirror cover.

2. REMOVE INNER REAR VIEW MIRROR ASSEMBLY

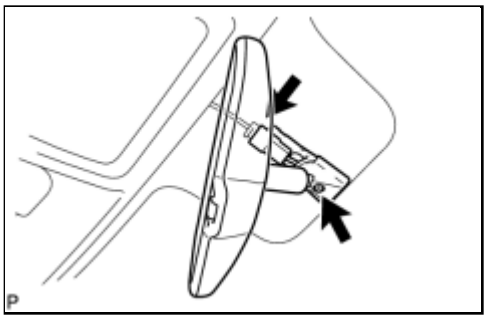

(a) Disconnect the connector.

(b) Using a "TORX" socket wrench (T20), remove the from and the inner rear view mirror.

(c) Slide the inner rear view mirror assembly in the direction

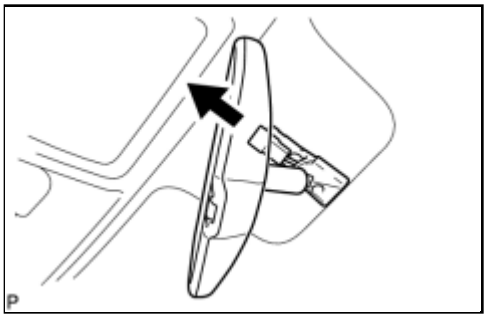

indicated by the arrow shown in the illustration to remove it.

Last Modified: 3-10-2010	6.4 G	**From:** 200901
Model Year: 2010	**Model:** Corolla	**Doc ID:** RM000002WLW00IX
Title: MIRROR (INT): INNER REAR VIEW MIRROR (w/ EC Mirror): INSPECTION (2010 Corolla)		

INSPECTION

1. INSPECT INNER REAR VIEW MIRROR ASSEMBLY

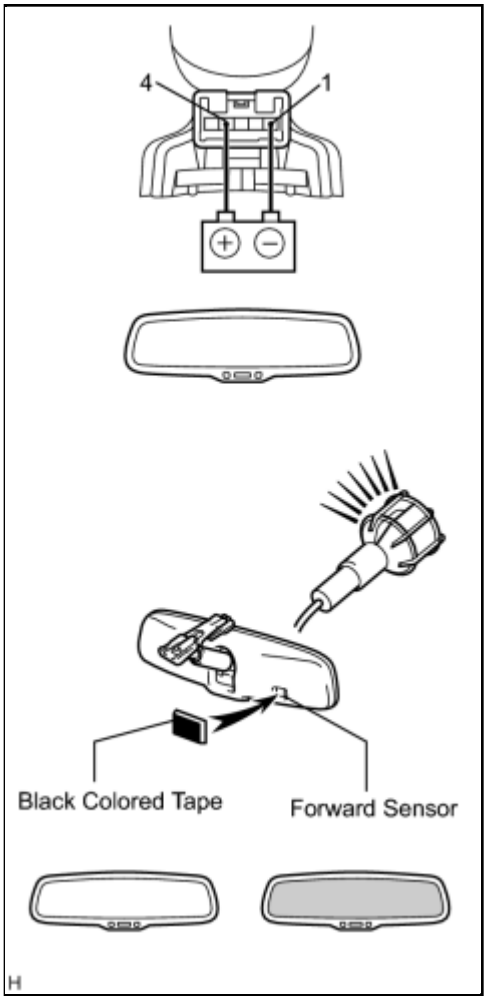

(a) Inspect operation of the electrochromic inner mirror.

(1) Connect a positive (+) lead from the battery to terminal 4 and a negative (-) lead to terminal 1.

(2) Attach black colored tape to the forward sensor to prevent it from sensing.

(3) Light up the mirror with an electric light, and check that the mirror surface changes from bright to dark.

OK:

Mirror surface changes from bright to dark.

If the result is not as specified, replace the mirror assembly.

Last Modified: 3-10-2010	6.4 A	**From:** 200901
Model Year: 2010	**Model:** Corolla	**Doc ID:** RM000001PGG01RX
Title: MIRROR (INT): INNER REAR VIEW MIRROR (w/ EC Mirror): INSTALLATION (2010 Corolla)		

INSTALLATION

1. INSTALL INNER REAR VIEW MIRROR ASSEMBLY

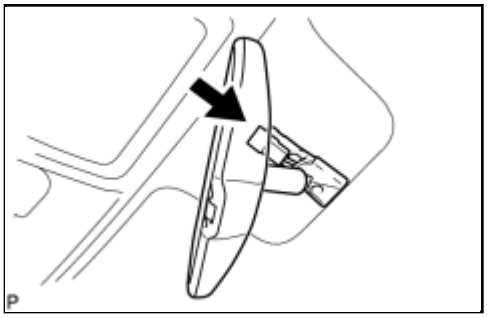

(a) Slide the inner rear view mirror assembly in the direction indicated by the arrow shown in the illustration to install it.

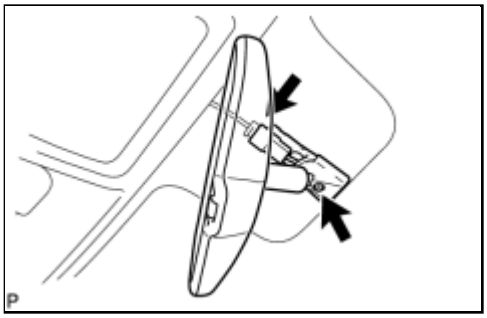

(b) Using a "TORX" socket wrench (T20), install the inner rear view mirror with the screw.

Torque: 1.5 N·m (15 kgf·cm, 13in·lbf)

(c) Connect the connector.

2. INSTALL INNER REAR VIEW MIRROR COVER

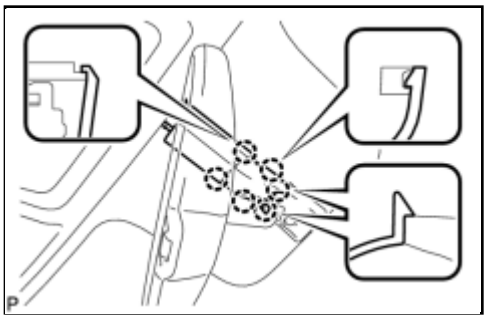

(a) Engage the 6 claws and temporarily install the inner rear view mirror cover.

(b) Slide the inner rear view mirror cover and engage the 2 claws as shown in the illustration to install the cover.

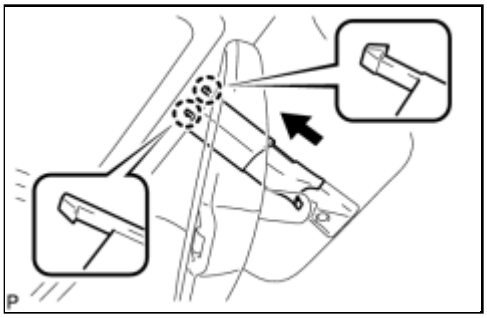
P

Last Modified: 3-10-2010	6.4 K	**From:** 200901
Model Year: 2010	**Model:** Corolla	**Doc ID:** RM000001PGH01GX
Title: MIRROR (INT): INNER REAR VIEW MIRROR (w/o EC Mirror): COMPONENTS (2010 Corolla)		

COMPONENTS

ILLUSTRATION

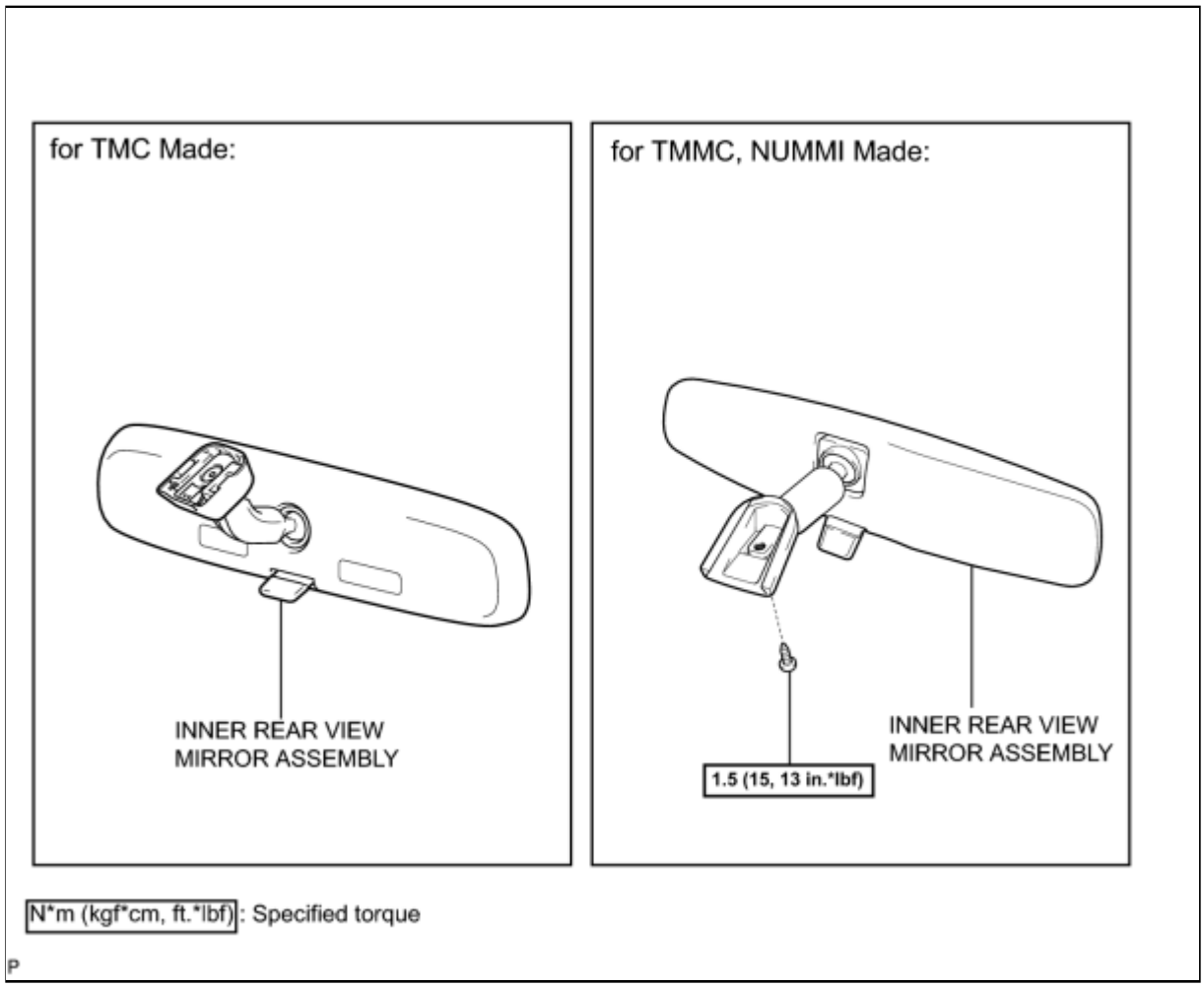

Last Modified: 3-10-2010	6.4 A	**From:** 200901
Model Year: 2010	**Model:** Corolla	**Doc ID:** RM000001PGI01QX
Title: MIRROR (INT): INNER REAR VIEW MIRROR (w/o EC Mirror): REMOVAL (2010 Corolla)		

REMOVAL

1. REMOVE INNER REAR VIEW MIRROR ASSEMBLY (for TMC Made)

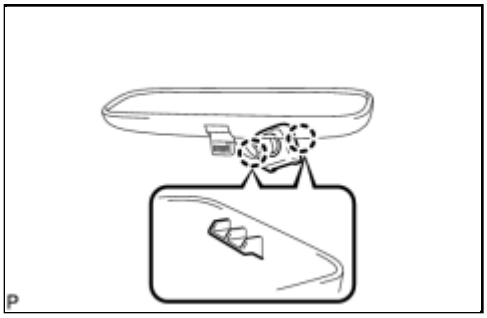

(a) Disengage the 2 claws and the cover.

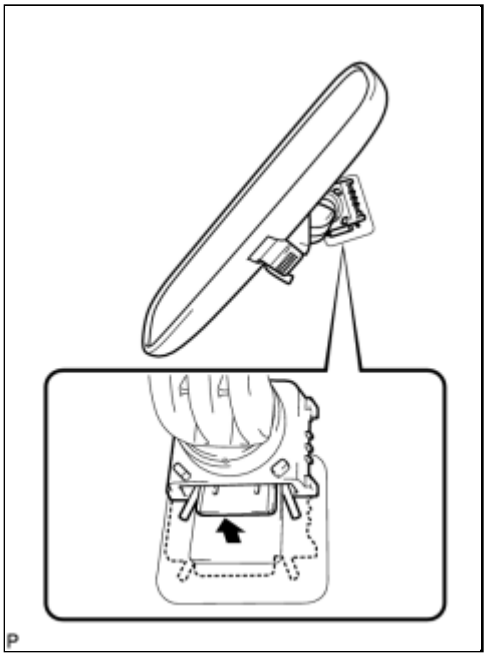

(b) Pull the lever in the direction indicated by the arrow shown in the illustration and slide the inner rear view mirror assembly upward to remove it.

2. REMOVE INNER REAR VIEW MIRROR ASSEMBLY (for TMMC, NUMMI Made)

(a) Remove the screw.

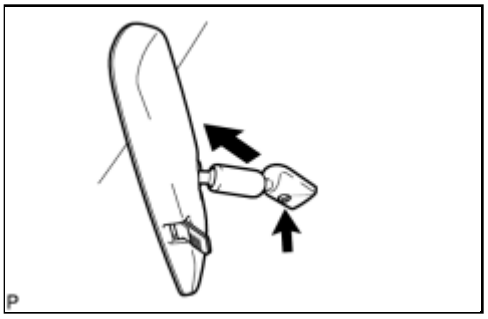

(b) Slide the inner rear view mirror assembly in the direction indicated by the arrow shown in the illustration to remove it.

Last Modified: 3-10-2010	6.4 A	**From:** 200901
Model Year: 2010	**Model:** Corolla	**Doc ID:** RM000001PGG01QX
Title: MIRROR (INT): INNER REAR VIEW MIRROR (w/o EC Mirror): INSTALLATION (2010 Corolla)		

INSTALLATION

1. INSTALL INNER REAR VIEW MIRROR ASSEMBLY (for TMC Made)

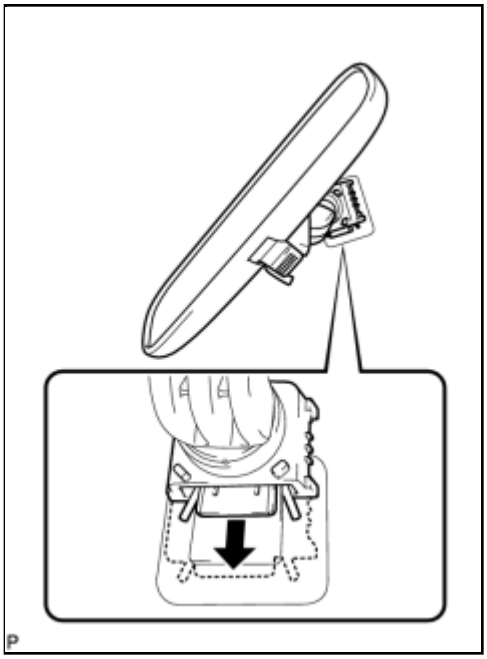

(a) Slide the inner rear view mirror assembly in the direction indicated by the arrow shown in the illustration to install it.

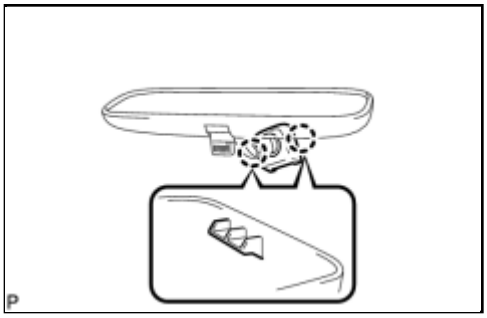

(b) Engage the 2 claws and install the cover.

2. INSTALL INNER REAR VIEW MIRROR ASSEMBLY (for TMMC, NUMMI Made)

(a) Slide the inner rear view mirror assembly in the direction indicated by the arrow shown in the illustration to install it.

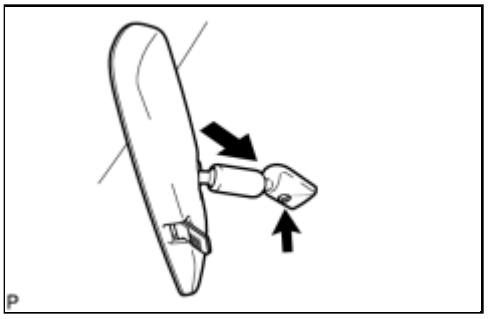

(b) Using a "TORX" socket wrench (T20), install the inner rear view mirror with the screw.

Torque: 1.5 N·m (15 kgf·cm, 13in·lbf)

Last Modified: 3-10-2010	6.4 K	**From:** 200901
Model Year: 2010	**Model:** Corolla	**Doc ID:** RM000002XFK008X
Title: SEAT BELT: CHILD RESTRAINT SEAT ANCHOR BRACKET: COMPONENTS (2010 Corolla)		

COMPONENTS

ILLUSTRATION

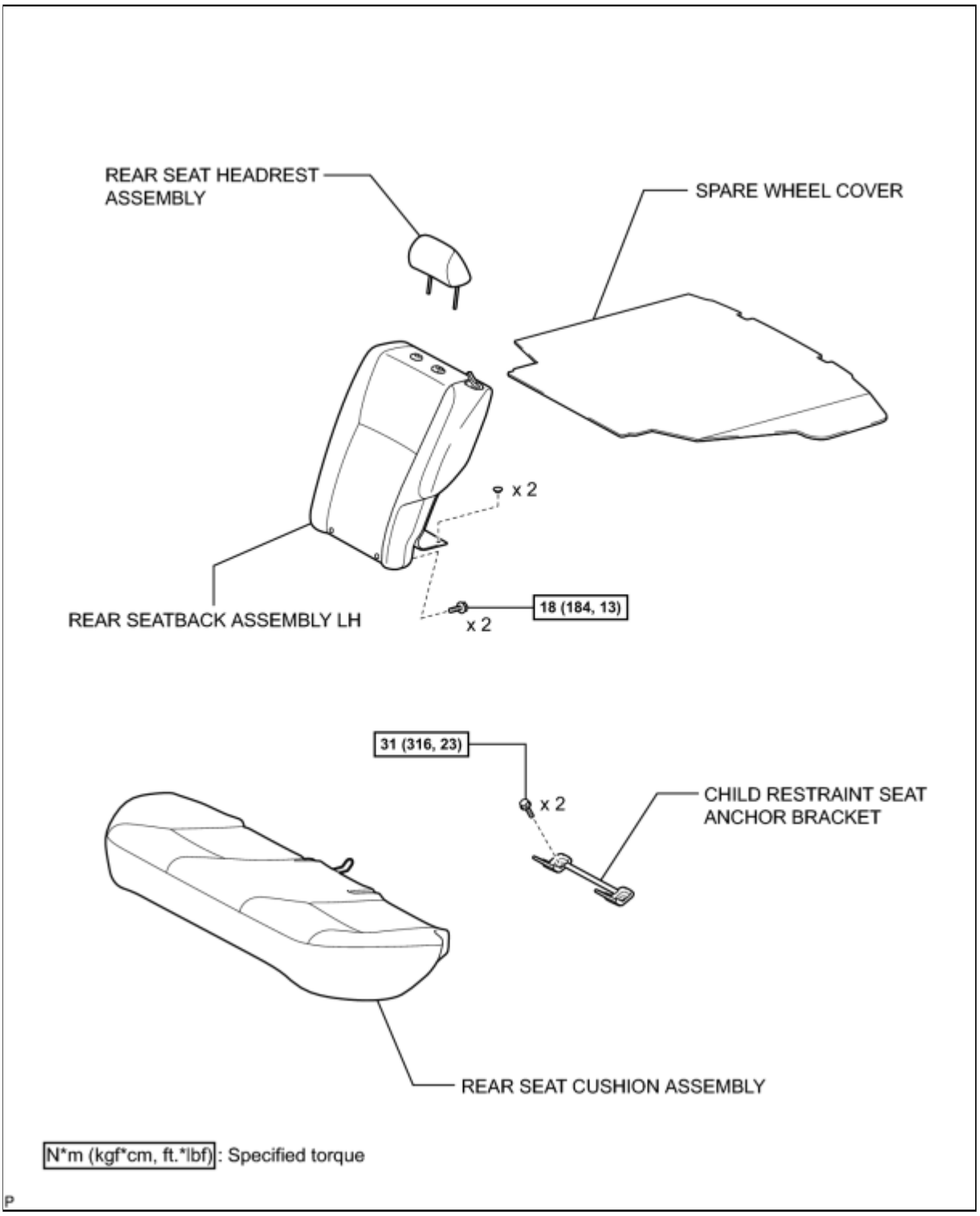

Last Modified: 3-10-2010	6.4 A	**From:** 200901
Model Year: 2010	**Model:** Corolla	**Doc ID:** RM000002XFL008X
Title: SEAT BELT: CHILD RESTRAINT SEAT ANCHOR BRACKET: REMOVAL (2010 Corolla)		

REMOVAL

1. **REMOVE SPARE WHEEL COVER** INFO
2. **REMOVE REAR SEAT HEADREST ASSEMBLY**
3. **REMOVE REAR SEAT CUSHION ASSEMBLY** INFO
4. **REMOVE REAR SEATBACK ASSEMBLY LH** INFO
5. **REMOVE CHILD RESTRAINT SEAT ANCHOR BRACKET**

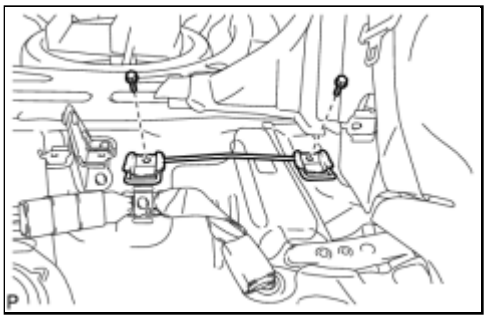

(a) Remove the 2 bolts and child restraint seat anchor bracket.

Last Modified: 3-10-2010	6.4 A	**From:** 200901
Model Year: 2010	**Model:** Corolla	**Doc ID:** RM000002XFJ008X
Title: SEAT BELT: CHILD RESTRAINT SEAT ANCHOR BRACKET: INSTALLATION (2010 Corolla)		

INSTALLATION

1. INSTALL CHILD RESTRAINT SEAT ANCHOR BRACKET

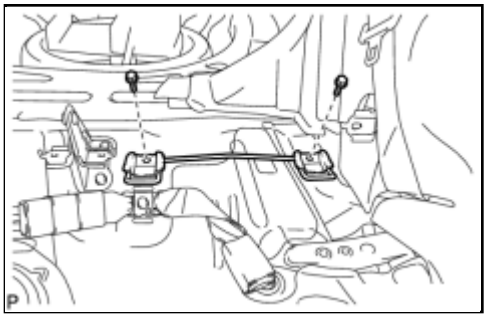

(a) Install the child restraint seat anchor bracket with the 2 bolts.

Torque: 31 N·m (316 kgf·cm, 23ft·lbf)

2. INSTALL REAR SEATBACK ASSEMBLY LH INFO

3. INSTALL REAR SEAT CUSHION ASSEMBLY INFO

4. INSTALL REAR SEAT HEADREST ASSEMBLY

5. INSTALL SPARE WHEEL COVER INFO

Last Modified: 3-10-2010	6.4 K	**From:** 200901
Model Year: 2010	**Model:** Corolla	**Doc ID:** RM000002XFH007X
Title: SEAT BELT: CHILD RESTRAINT SEAT TETHER ANCHOR: COMPONENTS (2010 Corolla)		

COMPONENTS

ILLUSTRATION

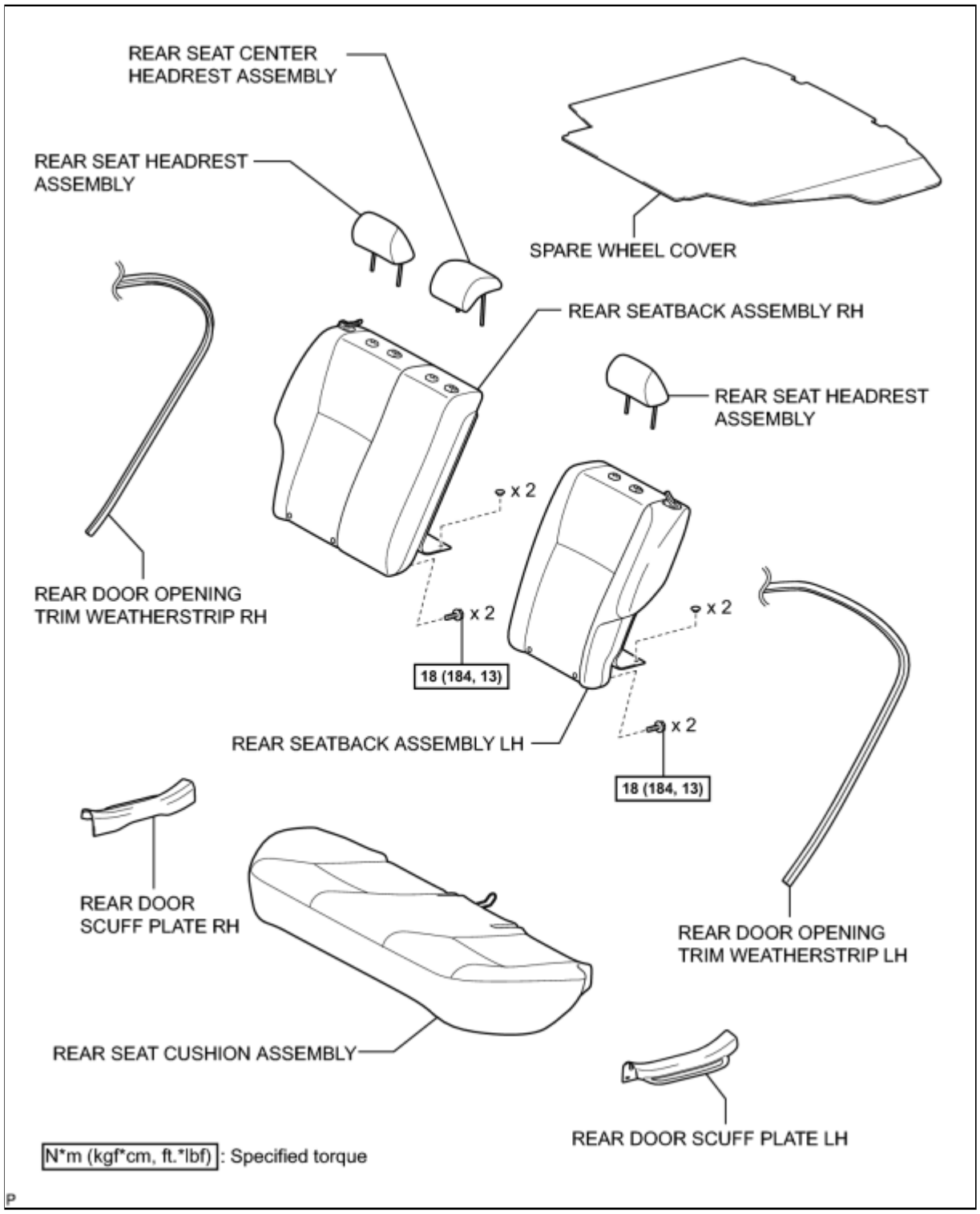

ILLUSTRATION

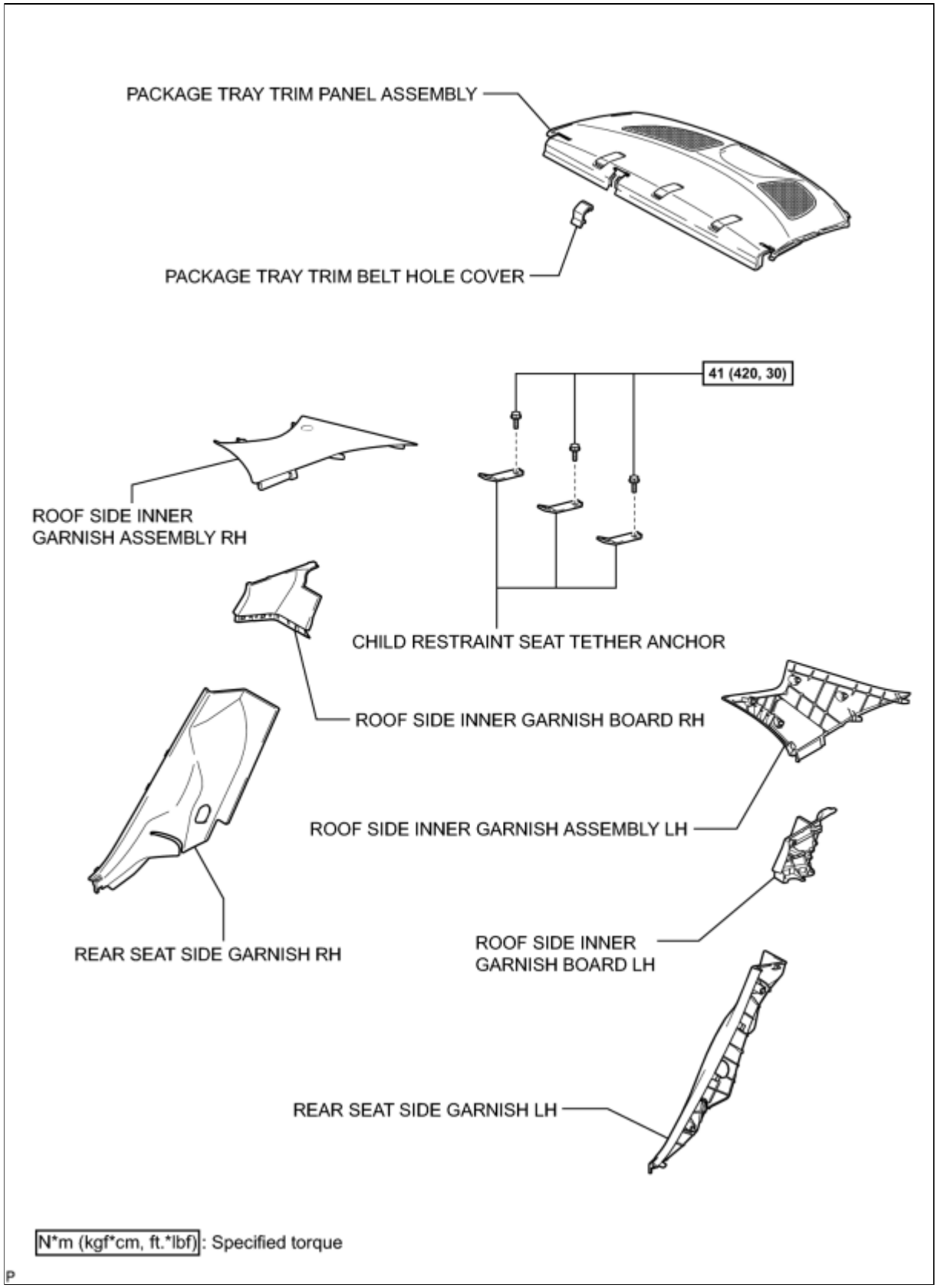

Last Modified: 3-10-2010	6.4 A	**From:** 200901
Model Year: 2010	**Model:** Corolla	**Doc ID:** RM000002XFI007X
Title: SEAT BELT: CHILD RESTRAINT SEAT TETHER ANCHOR: REMOVAL (2010 Corolla)		

REMOVAL

1. **REMOVE SPARE WHEEL COVER** INFO
2. **REMOVE REAR SEAT HEADREST ASSEMBLY**
3. **REMOVE REAR SEAT CENTER HEADREST ASSEMBLY**
4. **REMOVE REAR SEAT CUSHION ASSEMBLY** INFO
5. **REMOVE REAR SEATBACK ASSEMBLY LH** INFO
6. **REMOVE REAR SEATBACK ASSEMBLY RH** INFO
7. **REMOVE REAR DOOR SCUFF PLATE LH** INFO
8. **DISCONNECT REAR DOOR OPENING TRIM WEATHERSTRIP LH**
9. **REMOVE REAR SEAT SIDE GARNISH LH** INFO
10. **REMOVE ROOF SIDE INNER GARNISH BOARD LH** INFO
11. **REMOVE ROOF SIDE INNER GARNISH ASSEMBLY LH** INFO
12. **REMOVE REAR DOOR SCUFF PLATE RH**

HINT:

Use the same procedure for the RH side and the LH side.

13. **DISCONNECT REAR DOOR OPENING TRIM WEATHERSTRIP RH**
14. **REMOVE REAR SEAT SIDE GARNISH RH**

HINT:

Use the same procedure for the RH side and the LH side.

15. **REMOVE ROOF SIDE INNER GARNISH BOARD RH**

HINT:

Use the same procedure for the RH side and the LH side.

16. **REMOVE ROOF SIDE INNER GARNISH ASSEMBLY RH**

HINT:

Use the same procedure for the RH side and the LH side.

17. **REMOVE PACKAGE TRAY TRIM BELT HOLE COVER** INFO
18. **REMOVE PACKAGE TRAY TRIM PANEL ASSEMBLY (w/o Rear Spoiler)** INFO

19. REMOVE PACKAGE TRAY TRIM PANEL ASSEMBLY (w/ Rear Spoiler) INFO

20. REMOVE CHILD RESTRAINT SEAT TETHER ANCHOR

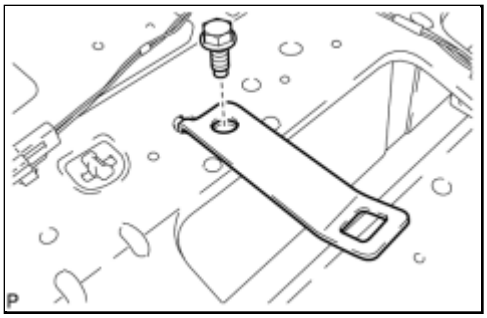

(a) Remove the bolt and child restraint seat tether anchor.

Last Modified: 3-10-2010	6.4 A	**From:** 200901
Model Year: 2010	**Model:** Corolla	**Doc ID:** RM000002XFG007X
Title: SEAT BELT: CHILD RESTRAINT SEAT TETHER ANCHOR: INSTALLATION (2010 Corolla)		

INSTALLATION

1. INSTALL CHILD RESTRAINT SEAT TETHER ANCHOR

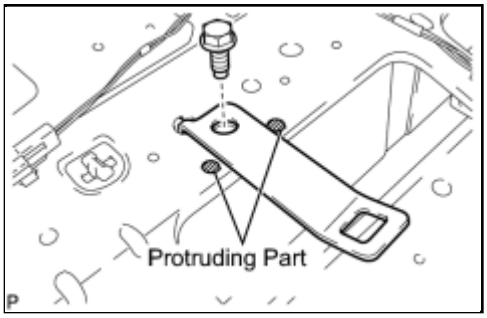

(a) Install the child restraint seat tether anchor with the bolt.

Torque: 41 N·m (420 kgf·cm, 30ft·lbf)

NOTICE:

Do not allow the anchor part of the child restraint seat tether anchor to overlap the protruding parts of the upper panel.

2. INSTALL PACKAGE TRAY TRIM PANEL ASSEMBLY (w/o Rear Spoiler) INFO

3. INSTALL PACKAGE TRAY TRIM PANEL ASSEMBLY (w/ Rear Spoiler) INFO

4. INSTALL PACKAGE TRAY TRIM BELT HOLE COVER INFO

5. INSTALL ROOF SIDE INNER GARNISH ASSEMBLY LH INFO

6. INSTALL ROOF SIDE INNER GARNISH BOARD LH INFO

7. INSTALL REAR SEAT SIDE GARNISH LH INFO

8. INSTALL REAR DOOR OPENING TRIM WEATHERSTRIP LH INFO

9. INSTALL REAR DOOR SCUFF PLATE LH INFO

10. INSTALL ROOF SIDE INNER GARNISH ASSEMBLY RH

HINT:

Use the same procedure for the RH side and the LH side.

11. INSTALL ROOF SIDE INNER GARNISH BOARD RH

HINT:

Use the same procedure for the RH side and the LH side.

12. INSTALL REAR SEAT SIDE GARNISH RH

HINT:

Use the same procedure for the RH side and the LH side.

13. INSTALL REAR DOOR OPENING TRIM WEATHERSTRIP RH INFO

14. INSTALL REAR DOOR SCUFF PLATE RH

HINT:

Use the same procedure for the RH side and the LH side.

15. INSTALL REAR SEATBACK ASSEMBLY LH INFO

16. INSTALL REAR SEATBACK ASSEMBLY RH INFO

17. INSTALL REAR SEAT CUSHION ASSEMBLY INFO

18. INSTALL REAR SEAT CENTER HEADREST ASSEMBLY

19. INSTALL REAR SEAT HEADREST ASSEMBLY

20. INSTALL SPARE WHEEL COVER INFO

Last Modified: 3-10-2010	6.4 K	**From:** 200901
Model Year: 2010	**Model:** Corolla	**Doc ID:** RM000002XFO00DX
Title: SEAT BELT: FRONT PASSENGER SEAT BELT WARNING LIGHT: COMPONENTS (2010 Corolla)		

COMPONENTS

ILLUSTRATION

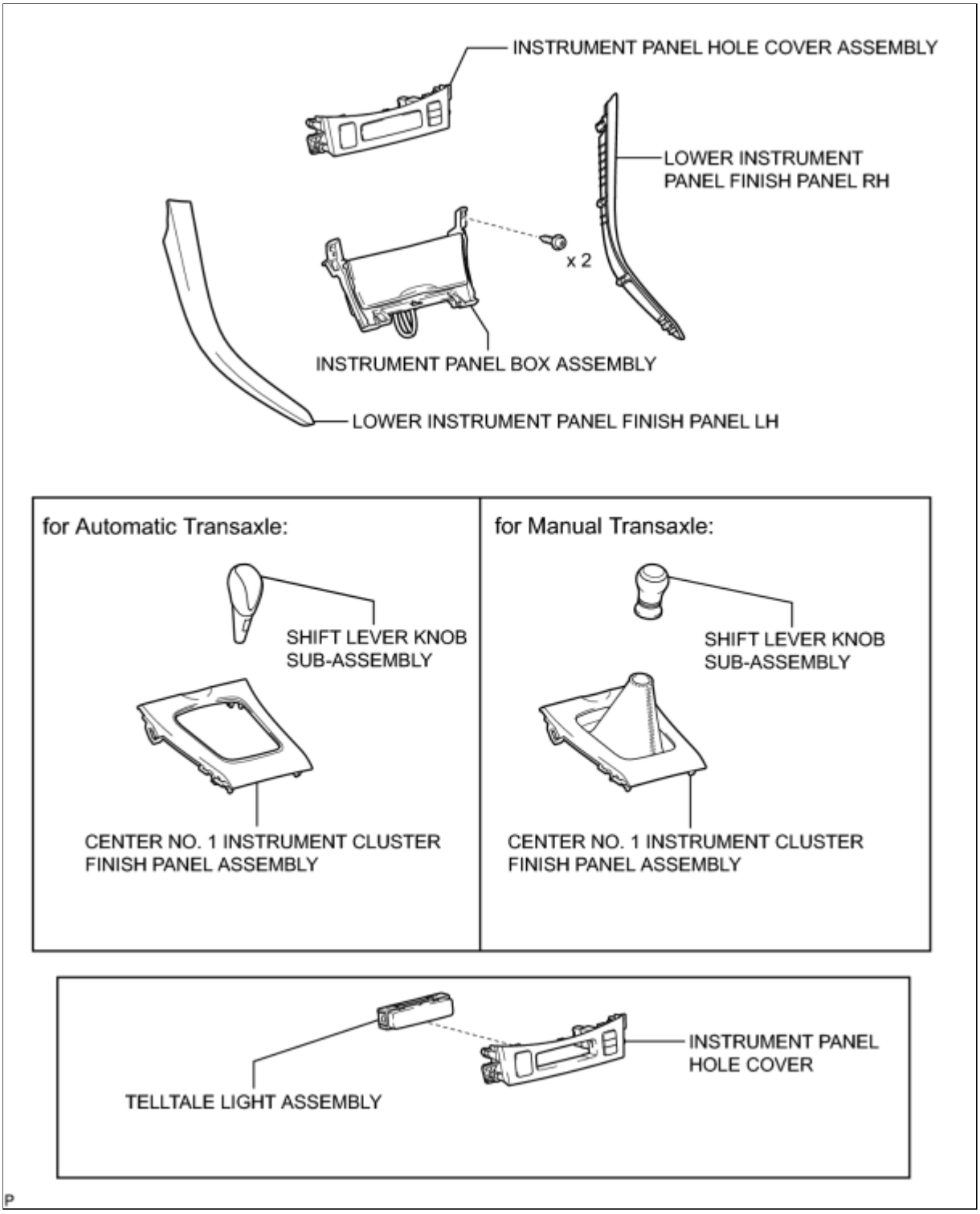
INSTRUMENT PANEL HOLE COVER ASSEMBLY
LOWER INSTRUMENT PANEL FINISH PANEL RH
x 2
INSTRUMENT PANEL BOX ASSEMBLY
LOWER INSTRUMENT PANEL FINISH PANEL LH
for Automatic Transaxle:
SHIFT LEVER KNOB SUB-ASSEMBLY
CENTER NO. 1 INSTRUMENT CLUSTER FINISH PANEL ASSEMBLY
for Manual Transaxle:
SHIFT LEVER KNOB SUB-ASSEMBLY
CENTER NO. 1 INSTRUMENT CLUSTER FINISH PANEL ASSEMBLY
INSTRUMENT PANEL HOLE COVER
TELLTALE LIGHT ASSEMBLY

P

Last Modified: 3-10-2010	6.4 A	**From:** 200901
Model Year: 2010	**Model:** Corolla	**Doc ID:** RM000002XFP00DX
Title: SEAT BELT: FRONT PASSENGER SEAT BELT WARNING LIGHT: REMOVAL (2010 Corolla)		

REMOVAL

1. **REMOVE LOWER INSTRUMENT PANEL FINISH PANEL LH** INFO
2. **REMOVE LOWER INSTRUMENT PANEL FINISH PANEL RH** INFO
3. **REMOVE SHIFT LEVER KNOB SUB-ASSEMBLY (for Manual Transaxle)** INFO
4. **REMOVE SHIFT LEVER KNOB SUB-ASSEMBLY (for Automatic Transaxle)** INFO
5. **REMOVE CENTER NO. 1 INSTRUMENT CLUSTER FINISH PANEL ASSEMBLY (for Manual Transaxle)** INFO
6. **REMOVE CENTER NO. 1 INSTRUMENT CLUSTER FINISH PANEL ASSEMBLY (for Automatic Transaxle)** INFO
7. **REMOVE INSTRUMENT PANEL BOX ASSEMBLY** INFO
8. **REMOVE INSTRUMENT PANEL HOLE COVER ASSEMBLY** INFO
9. **REMOVE TELLTALE LIGHT ASSEMBLY**

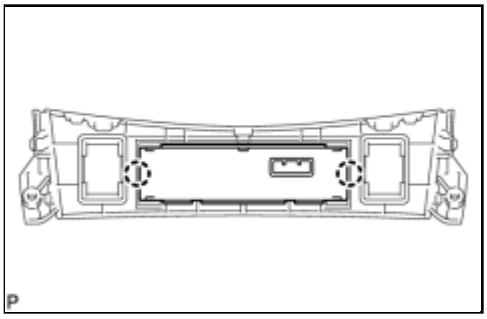

(a) Disengage the 2 claws and remove the telltale light assembly.

Last Modified: 3-10-2010	6.4 G	**From:** 200901
Model Year: 2010	**Model:** Corolla	**Doc ID:** RM000002XFN00EX
Title: SEAT BELT: FRONT PASSENGER SEAT BELT WARNING LIGHT: INSPECTION (2010 Corolla)		

INSPECTION

1. INSPECT TELLTALE LIGHT ASSEMBLY

(a) Check the telltale light assembly (front passenger seat belt warning light) condition.

(b) for Telltale Light (w/o Clock):

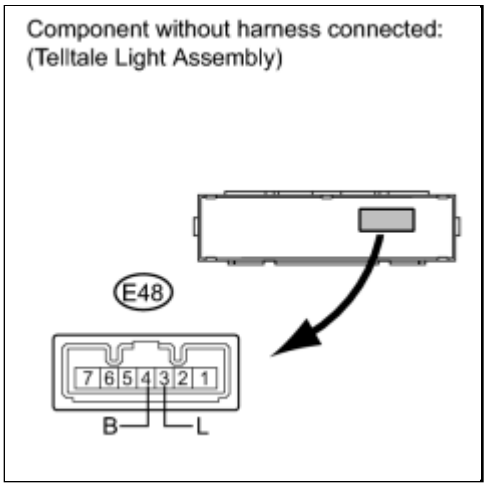

(1) Apply battery voltage to the connector according to the table below.

OK:

TESTER CONNECTION	CONDITION	SPECIFIED CONDITION
Battery positive (+) → E48-4 (B) Battery negative (-) → E48-3 (L)	Always	Seat belt warning light comes on

(c) for Telltale Light (w/ Clock):

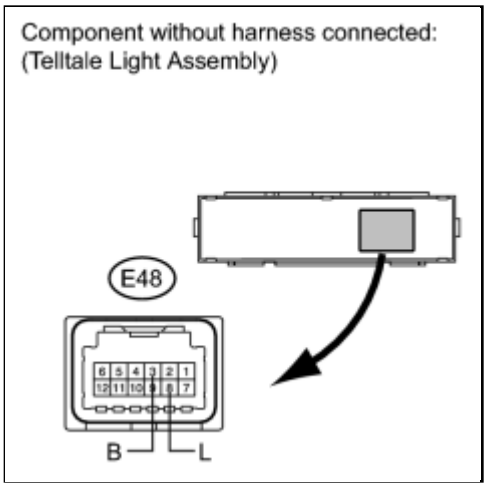

(1) Apply battery voltage to the connector according to the table below.

OK:

TESTER CONNECTION	CONDITION	SPECIFIED CONDITION
Battery positive (+) → E48-3 (B) Battery negative (-) → E48-8 (L)	Always	Seat belt warning light comes on

Last Modified: 3-10-2010	6.4 A	**From:** 200901
Model Year: 2010	**Model:** Corolla	**Doc ID:** RM000002XFM00DX
Title: SEAT BELT: FRONT PASSENGER SEAT BELT WARNING LIGHT: INSTALLATION (2010 Corolla)		

INSTALLATION

1. INSTALL TELLTALE LIGHT ASSEMBLY

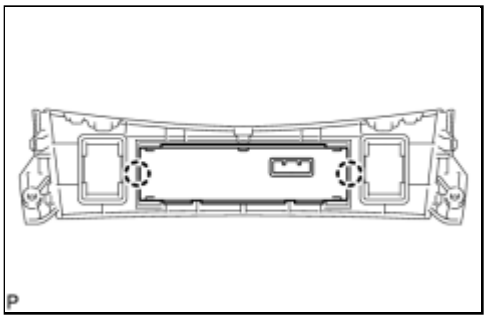

(a) Engage the 2 claws and install the telltale light assembly.

2. INSTALL INSTRUMENT PANEL HOLE COVER ASSEMBLY INFO

3. INSTALL INSTRUMENT PANEL BOX ASSEMBLY INFO

4. INSTALL CENTER NO. 1 INSTRUMENT CLUSTER FINISH PANEL ASSEMBLY (for Manual Transaxle) INFO

5. INSTALL CENTER NO. 1 INSTRUMENT CLUSTER FINISH PANEL ASSEMBLY (for Automatic Transaxle) INFO

6. INSTALL SHIFT LEVER KNOB SUB-ASSEMBLY (for Manual Transaxle) INFO

7. INSTALL SHIFT LEVER KNOB SUB-ASSEMBLY (for Automatic Transaxle) INFO

8. INSTALL LOWER INSTRUMENT PANEL FINISH PANEL LH INFO

9. INSTALL LOWER INSTRUMENT PANEL FINISH PANEL RH INFO

Last Modified: 3-10-2010	6.4 K	**From:** 200901
Model Year: 2010	**Model:** Corolla	**Doc ID:** RM000002102010X
Title: SEAT BELT: FRONT SEAT INNER BELT ASSEMBLY: COMPONENTS (2010 Corolla)		

COMPONENTS

ILLUSTRATION

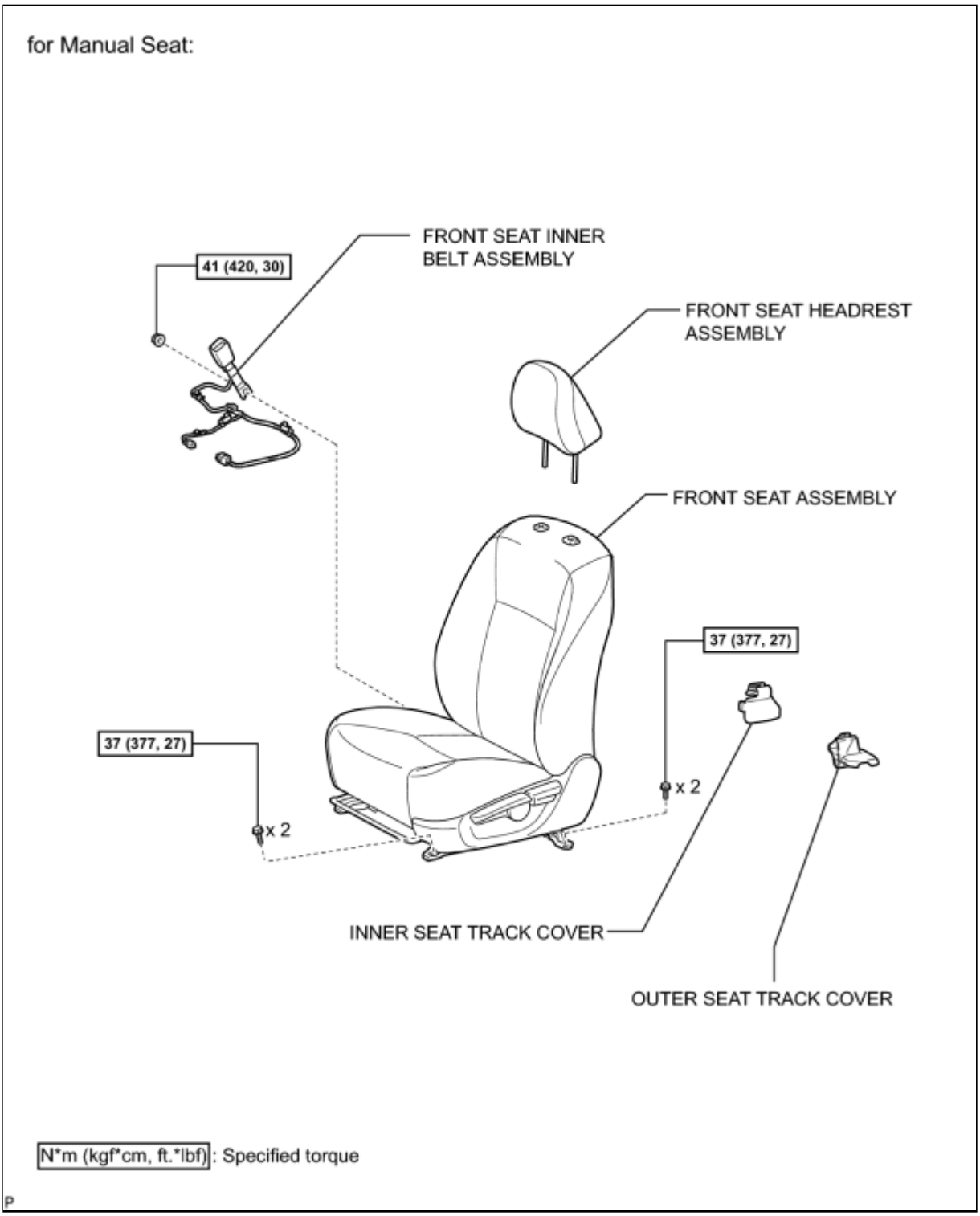

ILLUSTRATION

for Power Seat:

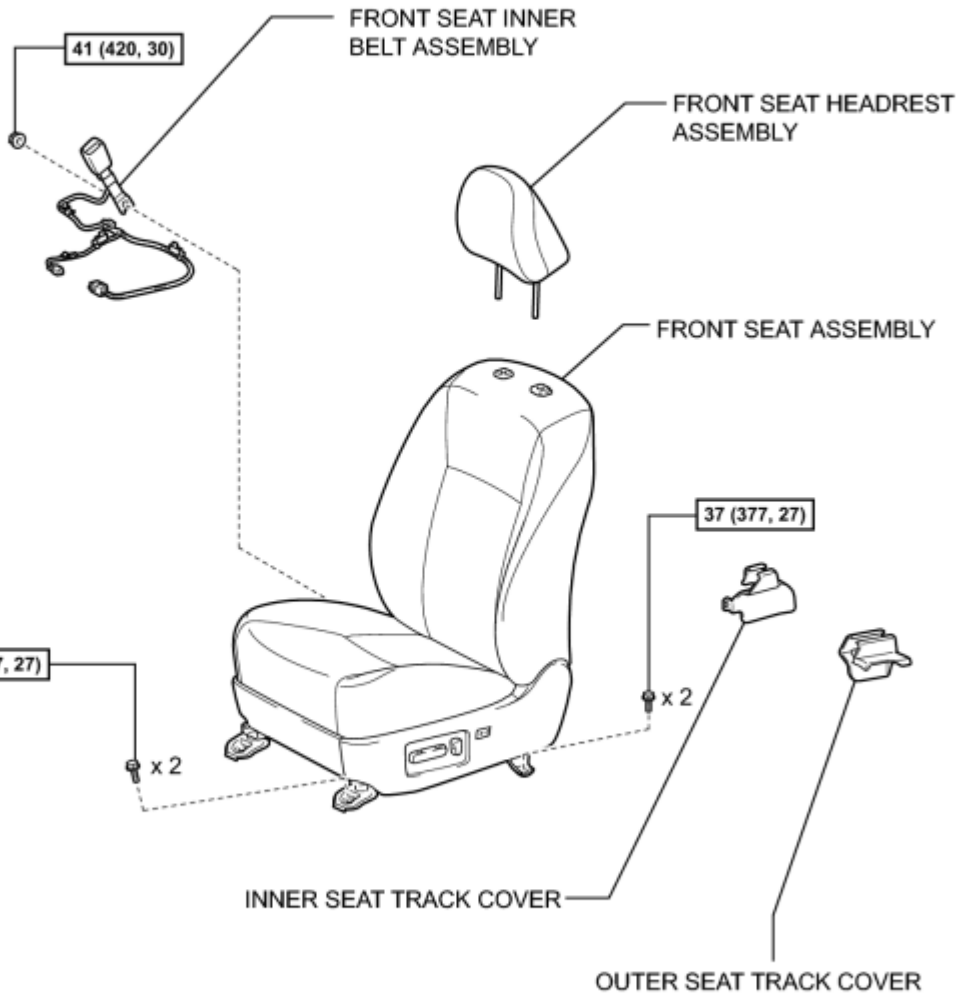

N*m (kgf*cm, ft.*lbf): Specified torque

P

Last Modified: 3-10-2010	6.4 A	**From:** 200901
Model Year: 2010	**Model:** Corolla	**Doc ID:** RM00000122H025X
Title: SEAT BELT: FRONT SEAT INNER BELT ASSEMBLY: REMOVAL (2010 Corolla)		

REMOVAL

1. DISCONNECT CABLE FROM NEGATIVE BATTERY TERMINAL (for Manual Seat)

CAUTION:

Wait at least 90 seconds after disconnecting the cable from the negative (-) battery terminal to disable the SRS system INFO **.**

2. REMOVE FRONT SEAT HEADREST ASSEMBLY (for Manual Seat)

3. REMOVE OUTER SEAT TRACK COVER (for Manual Seat) INFO

4. REMOVE INNER SEAT TRACK COVER (for Manual Seat) INFO

5. REMOVE FRONT SEAT ASSEMBLY (for Manual Seat) INFO

6. REMOVE FRONT SEAT HEADREST ASSEMBLY (for Power Seat)

7. REMOVE OUTER SEAT TRACK COVER (for Power Seat) INFO

8. REMOVE INNER SEAT TRACK COVER (for Power Seat) INFO

9. REMOVE FRONT SEAT ASSEMBLY (for Power Seat) INFO

10. REMOVE FRONT SEAT INNER BELT ASSEMBLY (for Driver Seat)

(a) Disconnect each connector and clamp.

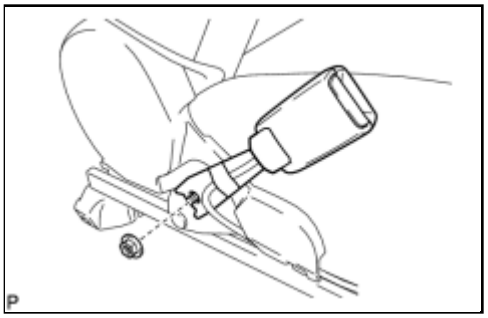

(b) Remove the nut and the front seat inner belt assembly.

Last Modified: 3-10-2010	6.4 A	**From:** 200901
Model Year: 2010	**Model:** Corolla	**Doc ID:** RM00000122F024X
Title: SEAT BELT: FRONT SEAT INNER BELT ASSEMBLY: INSTALLATION (2010 Corolla)		

INSTALLATION

1. INSTALL FRONT SEAT INNER BELT ASSEMBLY

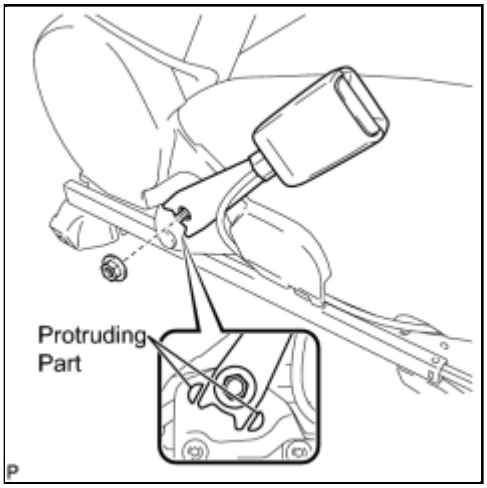

(a) Install the front seat inner belt assembly with the nut.

Torque: 41 N·m (420 kgf·cm, 30ft·lbf)

NOTICE:

Do not overlap the anchor part of the seat belt and protruding part of the seat adjuster.

(b) Connect each connector and clamp.

2. INSTALL FRONT SEAT ASSEMBLY (for Manual Seat) INFO

3. INSPECT FRONT SEAT SLIDE ADJUSTER LOCK (for Manual Seat) INFO

4. INSTALL OUTER SEAT TRACK COVER (for Manual Seat) INFO

5. INSTALL INNER SEAT TRACK COVER (for Manual Seat) INFO

6. INSTALL FRONT SEAT HEADREST ASSEMBLY (for Manual Seat)

7. INSTALL FRONT SEAT ASSEMBLY (for Power Seat) INFO

8. INSTALL OUTER SEAT TRACK COVER (for Power Seat) INFO

9. INSTALL INNER SEAT TRACK COVER (for Power Seat) INFO

10. INSTALL FRONT SEAT HEADREST ASSEMBLY (for Power Seat)

11. CONNECT CABLE TO NEGATIVE BATTERY TERMINAL (for Manual Seat)

12. INSPECT SRS WARNING LIGHT (w/ Front Seat Side Airbag)

INFO

13. INSPECT FRONT SEAT ASSEMBLY (for Power Seat) INFO

Last Modified: 3-10-2010	6.4 L	**From:** 200901
Model Year: 2010	**Model:** Corolla	**Doc ID:** RM00000122801WX
Title: SEAT BELT: FRONT SEAT OUTER BELT ASSEMBLY: PRECAUTION (2010 Corolla)		

PRECAUTION

CAUTION:

Replace the faulty parts of the seat belt systems (outer belt, inner belt, bolts, nuts, adjustable shoulder anchor, tether anchor hardware and other related parts). When inspecting a vehicle that was in a collision, be sure to check all of the seat belt systems regardless of whether or not the system was activated in the collision. Replace any damaged or malfunctioning systems.

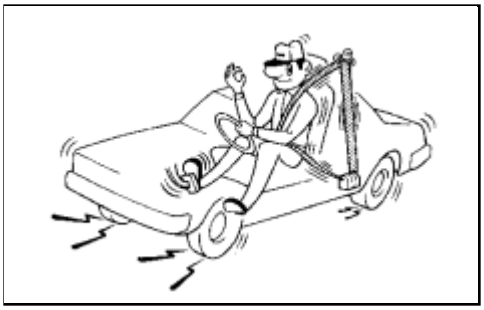

1. RUNNING TEST (IN SAFE AREA)

CAUTION:

Conduct this test in a safe area.

(a) Fasten the front seat belt.

(b) Drive the vehicle at 16 km/h (10 mph) and firmly depress the brake pedal. Check that the belt locks and cannot be extended at this time.

If the belt does not lock, replace the seat belt assembly INFO .

HINT:

Inspect the seat belt assembly before installing it INFO **.**

Last Modified: 3-10-2010	6.4 K	**From:** 200901
Model Year: 2010	**Model:** Corolla	**Doc ID:** RM00000209Q011X
Title: SEAT BELT: FRONT SEAT OUTER BELT ASSEMBLY: COMPONENTS (2010 Corolla)		

COMPONENTS

ILLUSTRATION

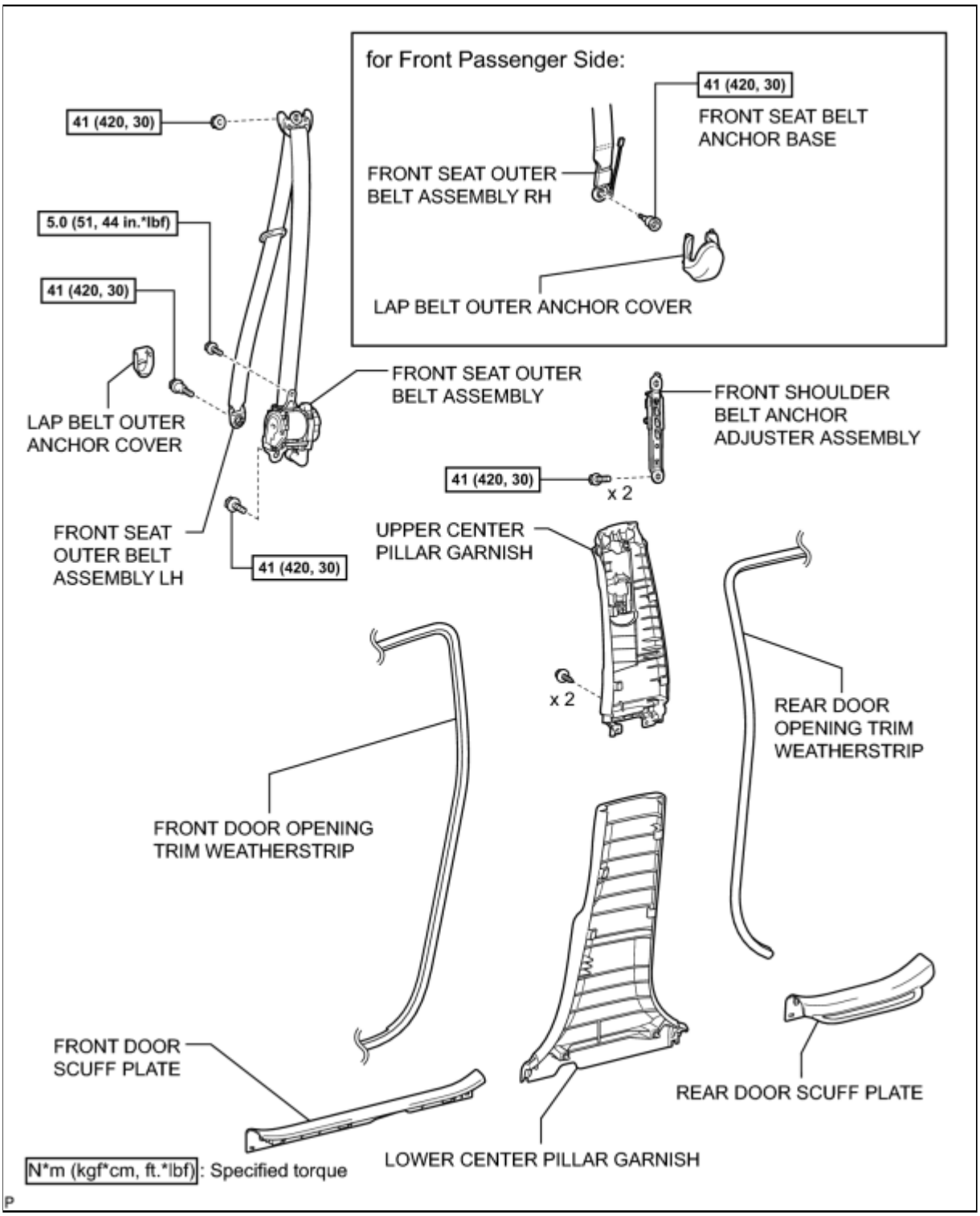

Last Modified: 3-10-2010	6.4 A	**From:** 200901
Model Year: 2010	**Model:** Corolla	**Doc ID:** RM00000120B01RX
Title: SEAT BELT: FRONT SEAT OUTER BELT ASSEMBLY: REMOVAL (2010 Corolla)		

REMOVAL

1. DISCONNECT CABLE FROM NEGATIVE BATTERY TERMINAL

CAUTION:

Wait at least 90 seconds after disconnecting the cable from the negative (-) battery terminal to disable the SRS system INFO **.**

2. REMOVE FRONT DOOR SCUFF PLATE INFO

3. REMOVE REAR DOOR SCUFF PLATE INFO

4. DISCONNECT FRONT DOOR OPENING TRIM WEATHERSTRIP

5. DISCONNECT REAR DOOR OPENING TRIM WEATHERSTRIP

6. REMOVE LAP BELT OUTER ANCHOR COVER (for Driver Side)

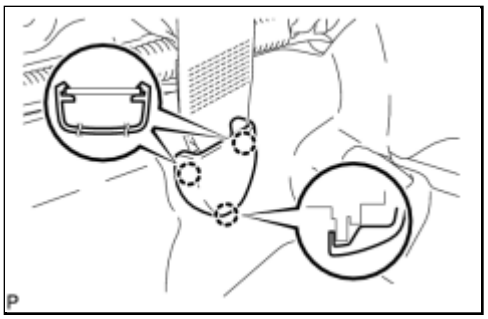

(a) Disengage the 3 claws and remove the lap belt outer anchor cover.

7. REMOVE LAP BELT OUTER ANCHOR COVER (for Front Passenger Side)

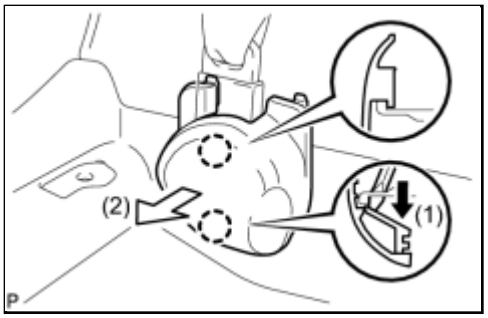

(a) Disengage the 2 claws as shown in the illustration.

(b) Disengage the 2 guides and remove the lap belt outer anchor cover.

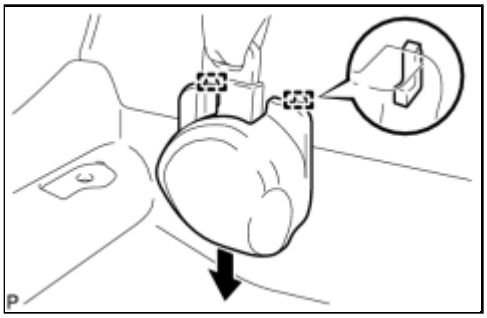

8. DISCONNECT FRONT SEAT OUTER BELT ASSEMBLY LH (for Driver Side)

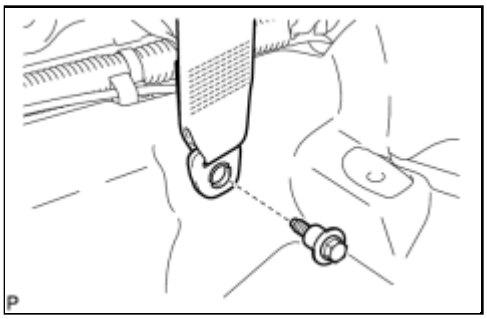

(a) Remove the bolt and disconnect the floor end of the front seat outer belt assembly LH.

9. DISCONNECT FRONT SEAT OUTER BELT ASSEMBLY RH (for Front Passenger Side)

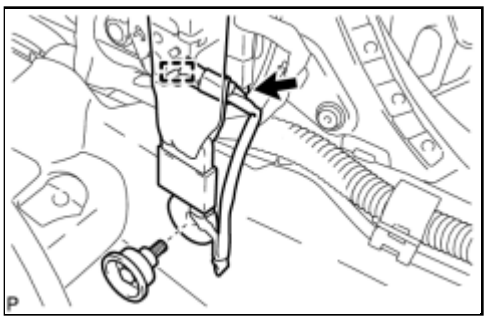

(a) Disconnect the connector.

(b) Disengage the clamp.

(c) Remove the front seat belt anchor base and disconnect the floor end of the front seat outer belt assembly.

10. REMOVE LOWER CENTER PILLAR GARNISH INFO

11. REMOVE UPPER CENTER PILLAR GARNISH INFO

12. REMOVE FRONT SEAT OUTER BELT ASSEMBLY

(a) Remove the nut and disconnect the shoulder anchor of the

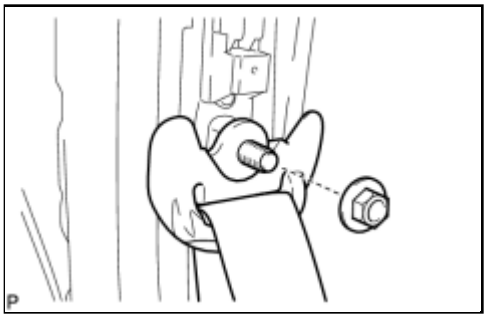

front seat outer belt assembly.

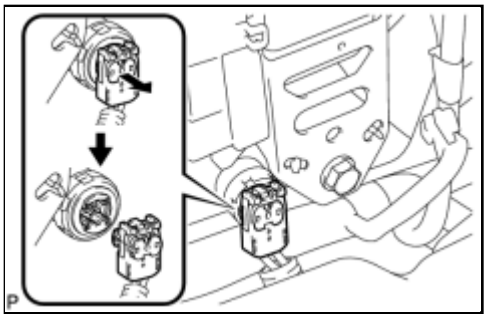

(b) Using a screwdriver, pull out the locking button in the direction shown by the arrow to release the lock, and disconnect the pretensioner connector as shown in the illustration.

HINT:

Tape the screwdriver tip before use.

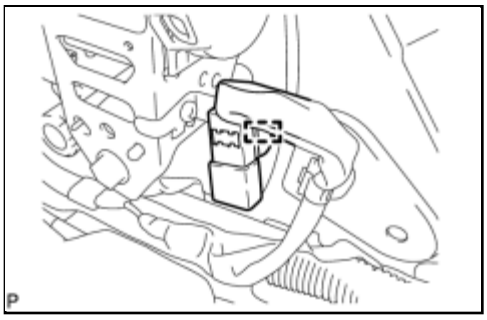

(c) for Front Passenger Side:

(1) Disengage the clamp.

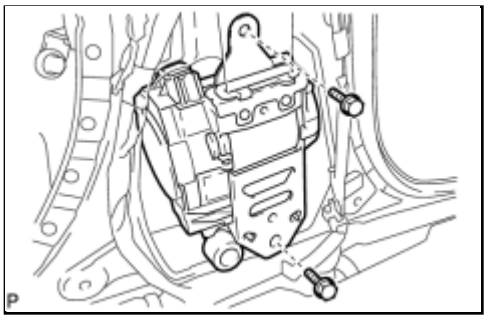

(d) Remove the 2 bolts and front seat outer belt assembly.

13. REMOVE FRONT SHOULDER BELT ANCHOR ADJUSTER ASSEMBLY

(a) Remove the 2 bolts and front shoulder belt anchor adjuster

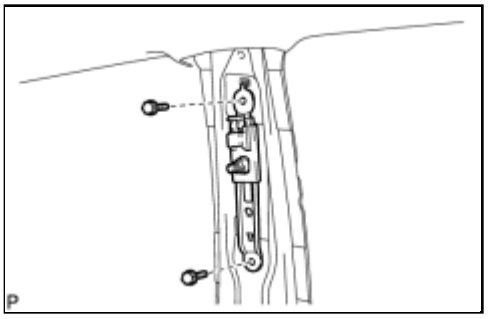

assembly.

Last Modified: 3-10-2010	6.4 N	**From:** 200901
Model Year: 2010	**Model:** Corolla	**Doc ID:** RM0000011CX02JX
Title: SEAT BELT: FRONT SEAT OUTER BELT ASSEMBLY: DISPOSAL (2010 Corolla)		

DISPOSAL

HINT:

When scrapping vehicles equipped with a seat belt pretensioner or disposing of a front seat outer belt (with a seat belt pretensioner), always deploy the seat belt pretensioner first in accordance with the procedures described below. If any abnormality occurs during deployment of the seat belt pretensioner, contact the service dept. of the distributor.

1. DISPOSE OF FRONT SEAT OUTER BELT ASSEMBLY (WHEN INSTALLED IN VEHICLE)

NOTICE:

- Never dispose of a front seat outer belt assembly with a pretensioner that has not been deployed.
- The seat belt pretensioner produces an exploding sound when it deploys, so perform the operation outdoors where it will not disturb local residents.
- When deploying a front seat outer belt (with a seat belt pretensioner), perform the operation at least 10 m (33 ft.) away from the front seat outer belt.
- Use gloves and safety glasses when handling a front seat belt with a deployed pretensioner.
- Always wash your hands with water after completing the operation.
- Do not apply water, etc. to a front seat outer belt with a deployed pretensioner.
- When deploying the seat belt pretensioner, always use the specified SST (SRS airbag deployment tool). Perform the operation in a place away from electrical interference.
- Be sure to follow the procedures listed below when deploying the seat belt pretensioner.

(a) Check the function of SST.

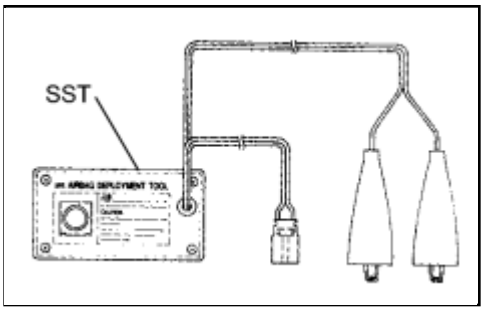

SST: 09082-00700
SST: 09082-00770

CAUTION:

When deploying the seat belt pretensioner, always use the specified SST.

(1) Connect the red clip of SST to the battery positive (+) terminal and the black clip to the battery negative (-) terminal.

HINT:

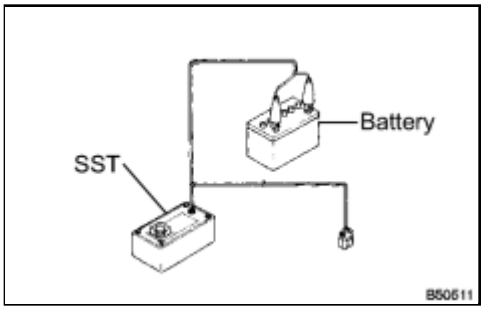

At this time, do not connect the yellow connector that will later be connected to the seat belt pretensioner.

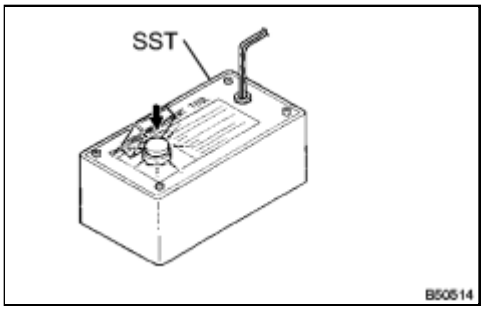

(2) Press the SST deployment switch and check that the LED of the SST deployment switch lights up.

CAUTION:

If the LED is lit when the deployment switch is not pressed, SST may be malfunctioning. Therefore, do not use SST.

(b) Connect SST.

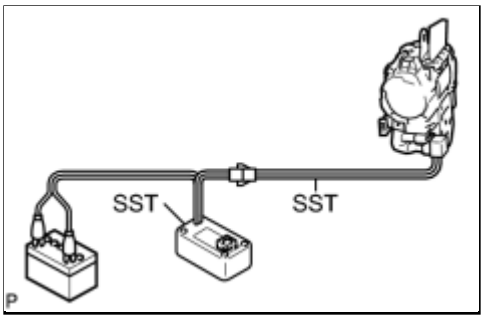

(1) Connect SST, and then connect them to the front seat outer belt pretensioner.

SST: 09082-00700

SST: 09082-00770

NOTICE:

To avoid damaging the SST connector and wire harness, do not lock the secondary lock of the pretensioner connector.

(2) Move SST at least 10 m (33 ft.) away from the front of the vehicle.

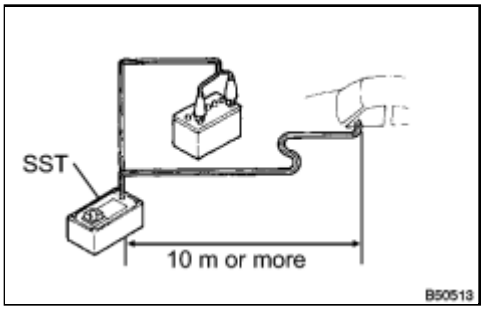

(3) Close all the doors and windows of the vehicle.

NOTICE:

Do not damage the SST wire harness.

(c) Deploy the front seat outer belt pretensioner.

(1) Confirm that no one is inside the vehicle or within a 10 m (33 ft.) radius of the vehicle.

(2) Connect the red clip of SST to the battery positive (+) terminal and the black clip to the negative (-) terminal.

(3) Press the SST deployment switch to deploy the front seat outer belt pretensioner.

HINT:

The seat belt pretensioner will deploy at the same time as the LED of SST illuminates.

(d) Dispose of the front seat outer belt assembly.

(1) Remove the front seat outer belt assembly and SST.

(2) Place the outer belt in a plastic bag, tie the end tightly, and dispose of it in the same way as other general parts.

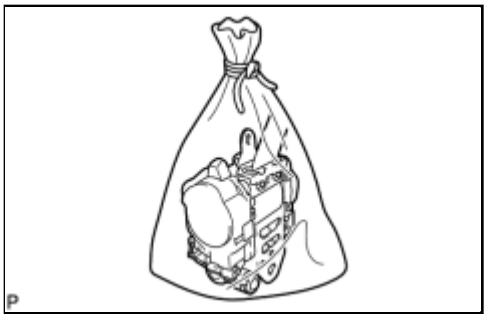

CAUTION:

- The outer belt becomes very hot when the front seat outer belt pretensioner is deployed, so leave it untouched for at least 30 minutes after it has been deployed.
- Use gloves and safety glasses when handling an outer belt with a pretensioner that has been deployed.
- Always wash your hands with water after completing the operation.
- Do not apply water, etc. to a front seat outer belt assembly with a pretensioner that has been deployed.

HINT:

When scrapping a vehicle, deploy the front seat outer belt pretensioners, and then scrap the vehicle with the deployed outer belt installed.

2. DISPOSE OF FRONT SEAT OUTER BELT ASSEMBLY (WHEN NOT INSTALLED IN VEHICLE)

NOTICE:

- Never dispose of a front seat outer belt assembly with a pretensioner that has not been deployed.
- The seat belt pretensioner produces an exploding sound when it deploys, so perform the operation outdoors where it will not disturb local residents.
- When deploying a front seat outer belt (with a seat belt pretensioner), perform the operation at least 10 m (33 ft.) away from the front seat outer belt.
- Use gloves and safety glasses when handling a front seat belt with a deployed pretensioner.
- Always wash your hands with water after completing the operation.
- Do not apply water, etc. to a front seat outer belt with a deployed pretensioner.
- When disposing of a pretensioner equipped front seat outer belt, never deploy the belt in the customer's vehicle.
- Be sure to follow the procedure listed below when deploying the seat belt pretensioner.

(a) Check the function of SST.

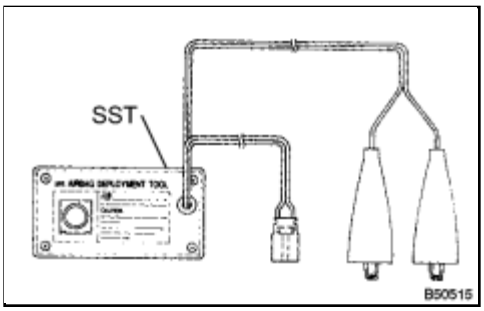

SST: 09082-00700

SST: 09082-00770

CAUTION:

When deploying the seat belt pretensioner, always use the specified SST.

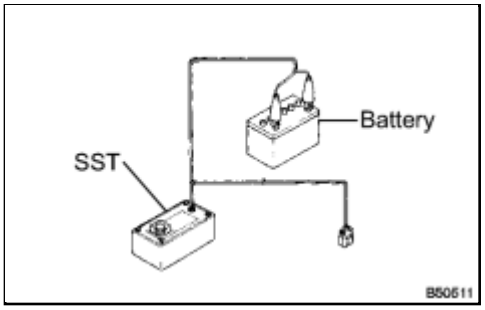

(1) Connect the red clip of SST to the battery positive (+) terminal and the black clip to the battery negative (-) terminal.

HINT:

At this time, do not connect the yellow connector that will later be connected to the seat belt pretensioner.

(2) Press the SST deployment switch and check that the LED of the SST deployment switch lights up.

CAUTION:

If the LED is lit when the deployment switch is not pressed, SST may be malfunctioning. Therefore, do not use SST.

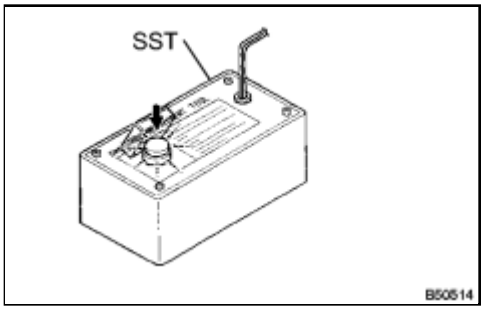

(b) Connect SST.

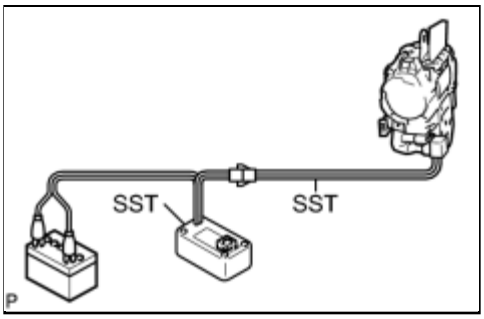

(1) Connect SST, and then connect them to the front seat outer belt pretensioner.

SST: 09082-00700

SST: 09082-00770

NOTICE:

To avoid damaging the SST connector and wire harness, do not lock the secondary lock of the pretensioner connector.

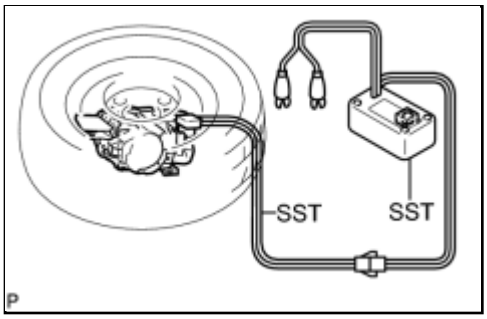

(2) Place the outer belt on the ground and cover it with a tire and wheel assembly.

NOTICE:

Position the front seat outer belt assembly as shown in the illustration.

(3) Position and hold SST at least 10 m (33 ft.) away from the wheel.

NOTICE:

Do not damage the SST wire harness.

(c) Deploy the front seat outer belt pretensioner.

(1) Check that no one is within a 10 m (33 ft.) radius of the wheel.

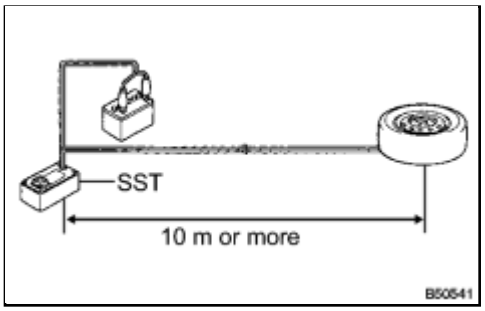

(2) Connect the red clip of SST to the battery positive (+) terminal and the black clip to the battery negative (-) terminal.

(3) Press the SST deployment switch to deploy the front seat outer belt pretensioner.

HINT:

The seat belt pretensioner will deploy at the same time as the LED of SST illuminates.

(d) Dispose of the front seat outer belt assembly.

(1) Remove the wheel and SST.

(2) Place the outer belt in a plastic bag, tie the end tightly, and dispose of it in the same way as other general parts.

CAUTION:

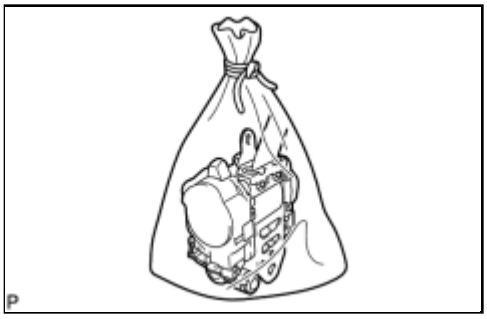

- The outer belt becomes very hot when the front seat outer belt pretensioner is deployed, so leave it untouched for at least 30 minutes after it has been deployed.
- Use gloves and safety glasses when handling an outer belt with a pretensioner that has been deployed.
- Always wash your hands with water after completing the operation.
- Do not apply water, etc. to a front seat outer belt assembly with a pretensioner that has been deployed.

HINT:

When scrapping a vehicle, deploy the front seat outer belt pretensioners, and then scrap the vehicle with the deployed outer belt installed.

Last Modified: 3-10-2010	6.4 G	**From:** 200901
Model Year: 2010	**Model:** Corolla	**Doc ID:** RM00000129201UX
Title: SEAT BELT: FRONT SEAT OUTER BELT ASSEMBLY: INSPECTION (2010 Corolla)		

INSPECTION

1. INSPECT FRONT SEAT OUTER BELT ASSEMBLY

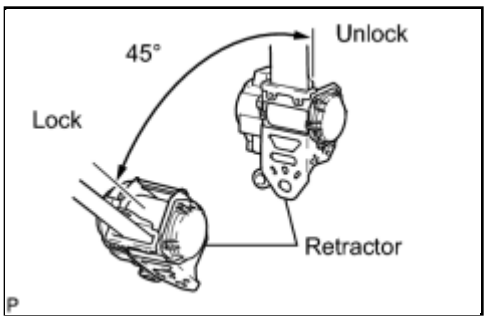

NOTICE:

Do not disassemble the retractor.

(a) Before installing the outer belt, check the ELR.

(1) When the inclination of the retractor is 15° or less, check that the belt can be pulled from the retractor. When the inclination of the retractor is over 45°, check that the belt locks.

If the result is not as specified, replace the outer belt assembly.

Last Modified: 3-10-2010	6.4 A	**From:** 200901
Model Year: 2010	**Model:** Corolla	**Doc ID:** RM000000120901TX
Title: SEAT BELT: FRONT SEAT OUTER BELT ASSEMBLY: INSTALLATION (2010 Corolla)		

INSTALLATION

1. INSTALL FRONT SHOULDER BELT ANCHOR ADJUSTER ASSEMBLY

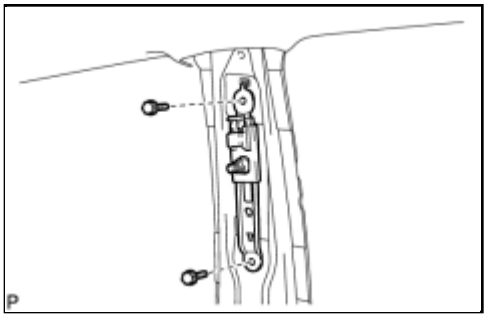

(a) Engage the adjuster positioning hole with the claw and install the front shoulder belt anchor adjuster assembly with the 2 bolts.

Torque: 41 N·m (420 kgf·cm, 30ft·lbf)

2. INSTALL FRONT SEAT OUTER BELT ASSEMBLY

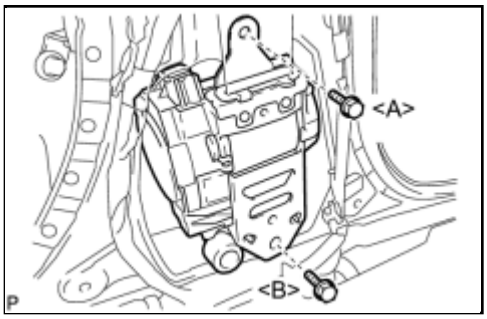

(a) Install the front seat outer belt assembly with the 2 bolts.

Bolt A - Torque: 5.0 N·m (51 kgf·cm, 44in·lbf)
Bolt B - Torque: 41 N·m (420 kgf·cm, 30ft·lbf)

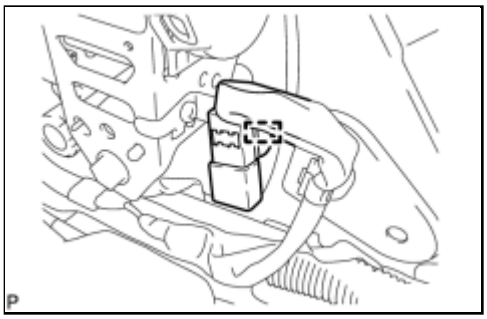

(b) for Front Passenger Side:

(1) Engage the clamp.

(c) Connect the connector and lock the locking button as shown in the illustration.

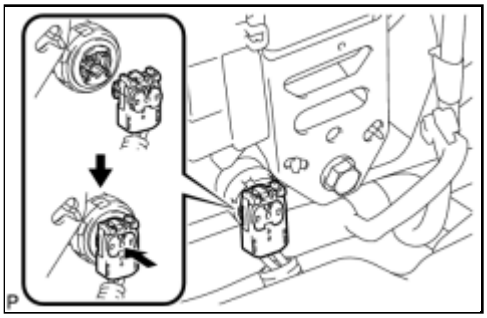

NOTICE:

Securely lock the locking button.

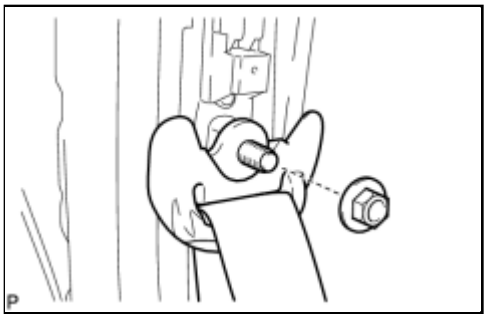

(d) Connect the shoulder anchor of the front seat outer belt assembly with the nut.

Torque: 41 N·m (420 kgf·cm, 30ft·lbf)

3. INSTALL UPPER CENTER PILLAR GARNISH INFO

4. INSTALL LOWER CENTER PILLAR GARNISH INFO

5. CONNECT FRONT SEAT OUTER BELT ASSEMBLY LH (for Driver Side)

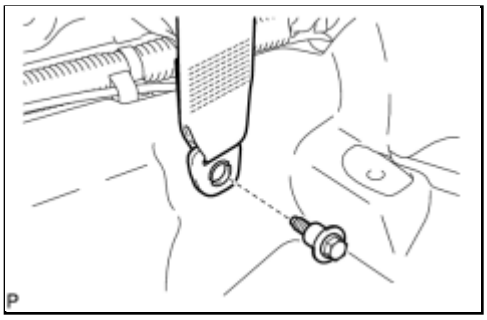

(a) Install the floor end of the front seat outer belt assembly with the bolt.

Torque: 41 N·m (420 kgf·cm, 30ft·lbf)

(b) Check if the ELR locks.

NOTICE:

The check should be performed with the outer belt assembly installed.

(1) With the belt assembly installed, check that the belt locks when it is pulled out quickly.

6. CONNECT FRONT SEAT OUTER BELT ASSEMBLY RH (for Front Passenger Side)

(a) Install the floor end of the front seat outer belt assembly with the front seat belt anchor base.

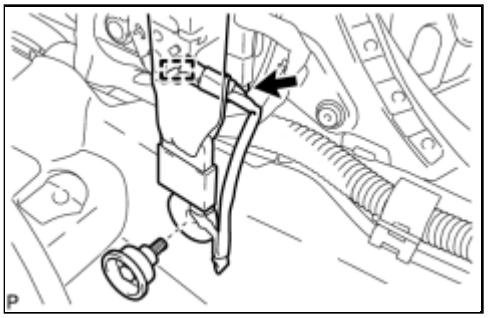

Torque: 41 N·m (420 kgf·cm, 30ft·lbf)

(b) Engage the clamp.

(c) Connect the connector.

(d) Check if the ELR locks.

NOTICE:

The check should be performed with the outer belt assembly installed.

(1) With the belt assembly installed, check that the belt locks when it is pulled out quickly.

7. INSTALL LAP BELT OUTER ANCHOR COVER (for Driver Side)

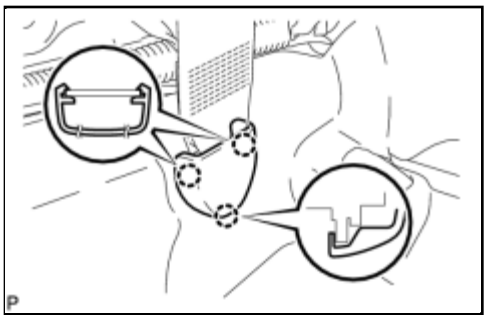

(a) Engage the 3 claws and install the lap belt outer anchor cover.

8. INSTALL LAP BELT OUTER ANCHOR COVER (for Front Passenger Side)

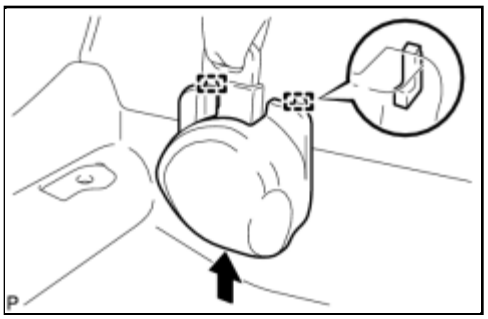

(a) Engage the 2 guides.

(b) Engage the 2 claws and install the lap belt outer anchor cover.

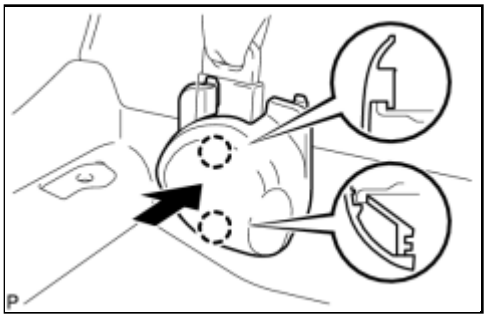

9. INSTALL REAR DOOR OPENING TRIM WEATHERSTRIP INFO

10. INSTALL FRONT DOOR OPENING TRIM WEATHERSTRIP INFO

11. INSTALL REAR DOOR SCUFF PLATE INFO

12. INSTALL FRONT DOOR SCUFF PLATE INFO

13. CONNECT CABLE TO NEGATIVE BATTERY TERMINAL

14. INSPECT SRS WARNING LIGHT

INFO

Last Modified: 3-10-2010	6.4 K	**From:** 200901
Model Year: 2010	**Model:** Corolla	**Doc ID:** RM000002XFU00JX
Title: SEAT BELT: REAR SEAT INNER BELT ASSEMBLY: COMPONENTS (2010 Corolla)		

COMPONENTS

ILLUSTRATION

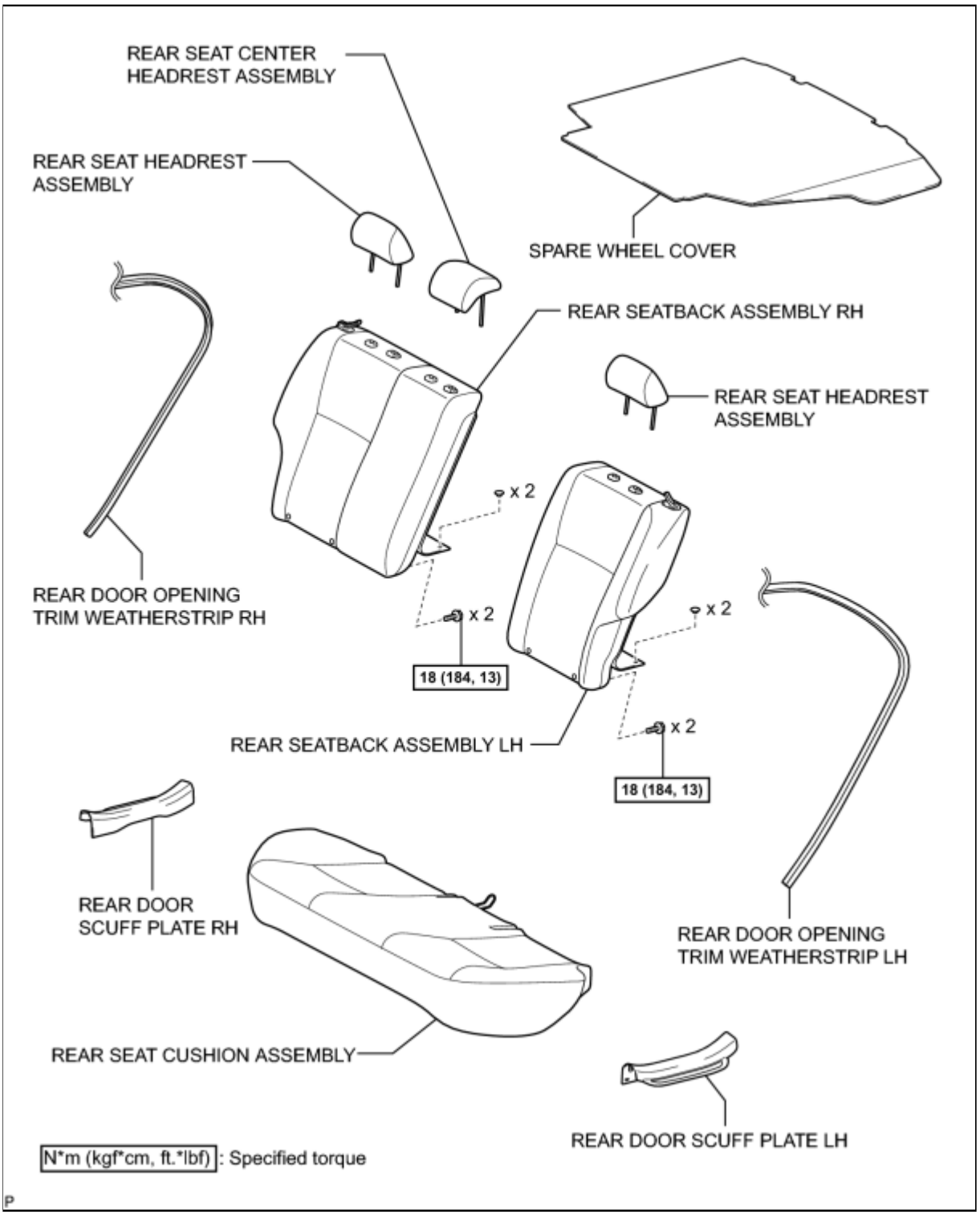

ILLUSTRATION

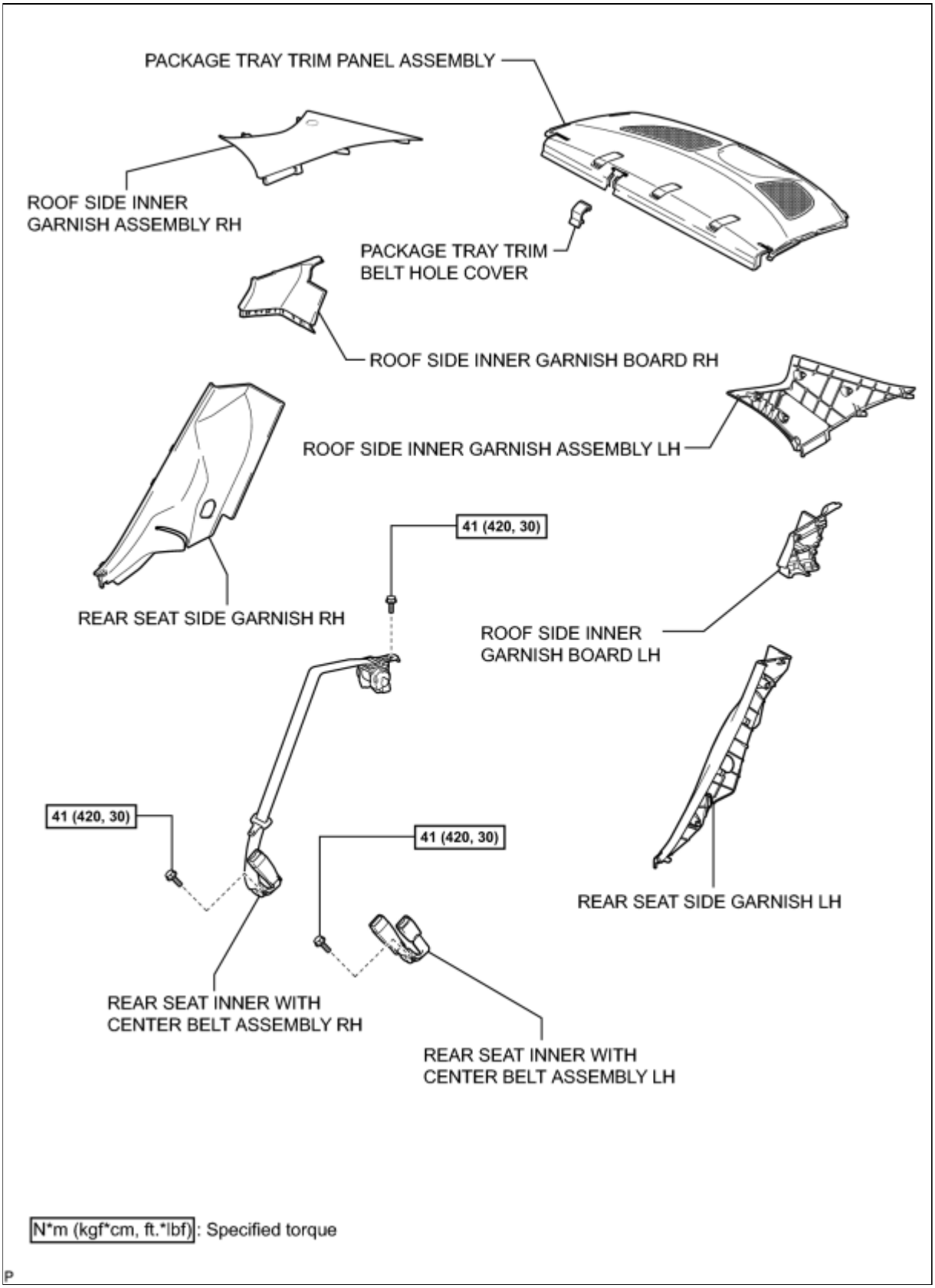

Last Modified: 3-10-2010	6.4 A	**From:** 200901
Model Year: 2010	**Model:** Corolla	**Doc ID:** RM000002XFV00LX
Title: SEAT BELT: REAR SEAT INNER BELT ASSEMBLY: REMOVAL (2010 Corolla)		

REMOVAL

1. **REMOVE SPARE WHEEL COVER** INFO
2. **REMOVE REAR SEAT HEADREST ASSEMBLY**
3. **REMOVE REAR SEAT CENTER HEADREST ASSEMBLY**
4. **REMOVE REAR SEAT CUSHION ASSEMBLY** INFO
5. **REMOVE REAR SEAT INNER WITH CENTER BELT ASSEMBLY LH**

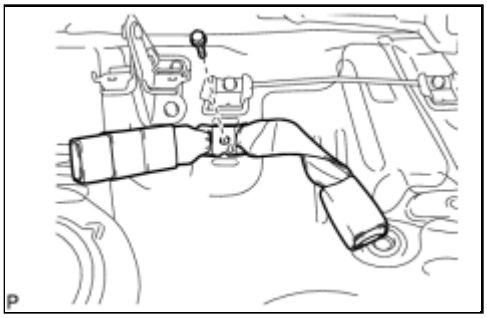

(a) Remove the bolt and the rear seat inner with center belt assembly LH.

6. **REMOVE REAR SEATBACK ASSEMBLY LH** INFO
7. **REMOVE REAR SEATBACK ASSEMBLY RH** INFO
8. **REMOVE REAR DOOR SCUFF PLATE LH** INFO
9. **DISCONNECT REAR DOOR OPENING TRIM WEATHERSTRIP LH**
10. **REMOVE REAR SEAT SIDE GARNISH LH** INFO
11. **REMOVE ROOF SIDE INNER GARNISH BOARD LH** INFO
12. **REMOVE ROOF SIDE INNER GARNISH ASSEMBLY LH** INFO
13. **REMOVE REAR DOOR SCUFF PLATE RH**

HINT:

Use the same procedure for the RH side and the LH side.

14. **DISCONNECT REAR DOOR OPENING TRIM WEATHERSTRIP RH**
15. **REMOVE REAR SEAT SIDE GARNISH RH**

HINT:

Use the same procedure for the RH side and the LH side.

16. REMOVE ROOF SIDE INNER GARNISH BOARD RH

HINT:

Use the same procedure for the RH side and the LH side.

17. REMOVE ROOF SIDE INNER GARNISH ASSEMBLY RH

HINT:

Use the same procedure for the RH side and the LH side.

18. REMOVE PACKAGE TRAY TRIM BELT HOLE COVER

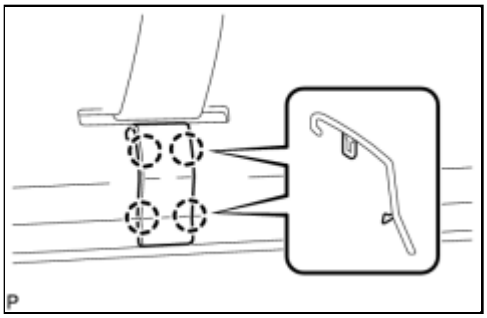

(a) Disengage the 4 claws and remove the package tray trim belt hole cover.

19. REMOVE PACKAGE TRAY TRIM PANEL ASSEMBLY (w/o Rear Spoiler)

(a) Disconnect the connector.

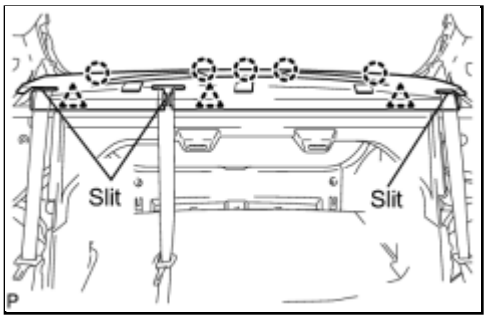

(b) Disengage the 3 clips and the 5 claws.

(c) Pull out the belts from the slits and then remove the package tray trim panel assembly.

20. REMOVE PACKAGE TRAY TRIM PANEL ASSEMBLY (w/ Rear Spoiler)

(a) Disengage the 3 clips and the 5 claws.

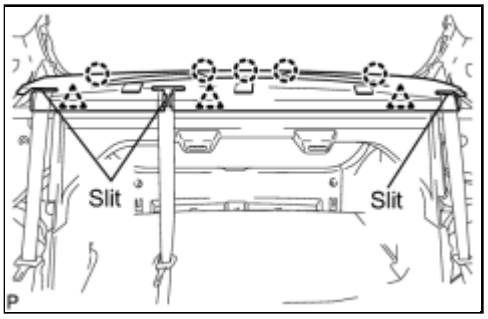

(b) Pull out the belts from the slits and then remove the package tray trim panel assembly.

21. REMOVE REAR SEAT INNER WITH CENTER BELT ASSEMBLY RH

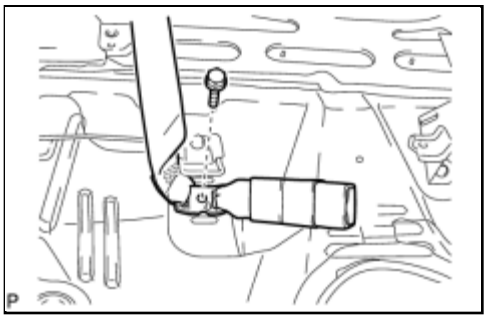

(a) Remove the bolt and disconnect the floor end of the rear seat inner with center belt assembly RH.

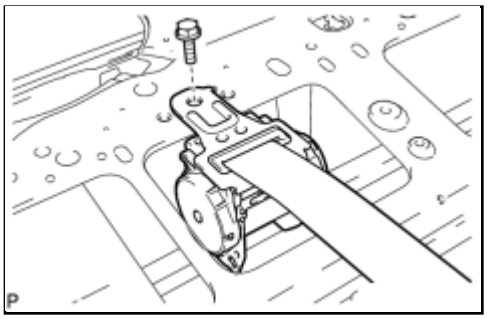

(b) Remove the bolt and the rear seat inner with center belt assembly RH.

Last Modified: 3-10-2010	6.4 A	**From:** 200901
Model Year: 2010	**Model:** Corolla	**Doc ID:** RM000002XFT00LX
Title: SEAT BELT: REAR SEAT INNER BELT ASSEMBLY: INSTALLATION (2010 Corolla)		

INSTALLATION

1. INSTALL REAR SEAT INNER WITH CENTER BELT ASSEMBLY RH

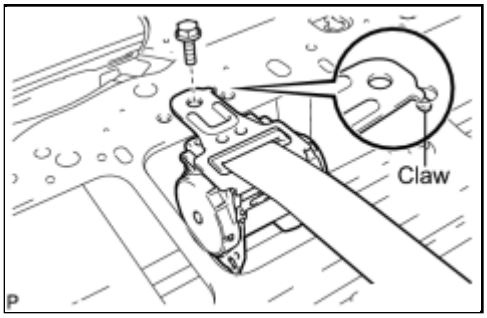

(a) Align the claw with the seat belt positioning hole and install the rear seat inner with center belt assembly RH with the bolt.

Torque: 41 N·m (420 kgf·cm, 30ft·lbf)

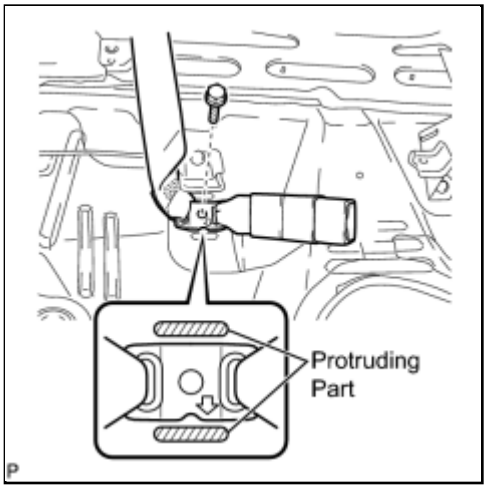

(b) Install the floor end of the rear seat inner with center belt assembly RH with the bolt.

Torque: 41 N·m (420 kgf·cm, 30ft·lbf)

NOTICE:

Do not allow the anchor part of the rear seat inner with center belt assembly RH to overlap the protruding parts of the floor panel.

2. INSTALL PACKAGE TRAY TRIM PANEL ASSEMBLY (w/o Rear Spoiler)

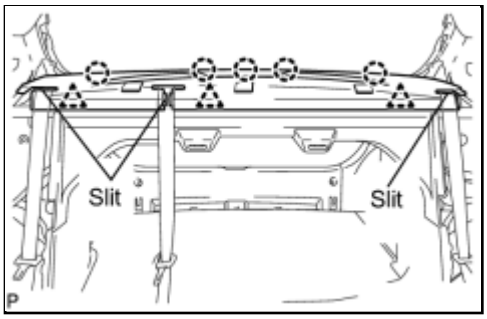

(a) Put the 3 belts through the slits.

(b) Engage the 3 clips and 5 claws, and install the package tray trim panel assembly.

(c) Connect the connector.

3. INSTALL PACKAGE TRAY TRIM PANEL ASSEMBLY (w/ Rear Spoiler)

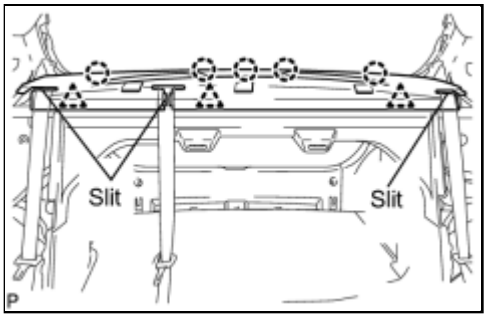

(a) Put the 3 belts through the slits.

(b) Engage the 3 clips and 5 claws, and install the package tray trim panel assembly.

4. INSTALL PACKAGE TRAY TRIM BELT HOLE COVER

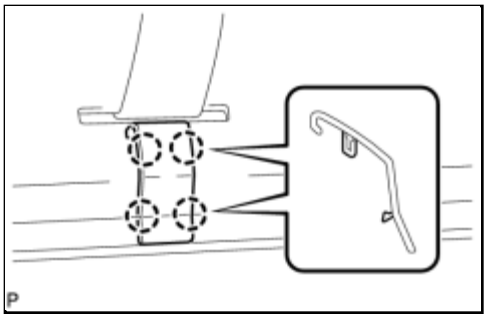

(a) Engage the 4 claws and install the package tray trim belt hole cover.

5. INSTALL ROOF SIDE INNER GARNISH ASSEMBLY LH INFO

6. INSTALL ROOF SIDE INNER GARNISH BOARD LH INFO

7. INSTALL REAR SEAT SIDE GARNISH LH INFO

8. INSTALL REAR DOOR OPENING TRIM WEATHERSTRIP LH INFO

9. INSTALL REAR DOOR SCUFF PLATE LH INFO

10. INSTALL ROOF SIDE INNER GARNISH ASSEMBLY RH

HINT:

Use the same procedure for the RH side and the LH side.

11. INSTALL ROOF SIDE INNER GARNISH BOARD RH

HINT:

Use the same procedure for the RH side and the LH side.

12. INSTALL REAR SEAT SIDE GARNISH RH

HINT:

Use the same procedure for the RH side and the LH side.

13. INSTALL REAR DOOR OPENING TRIM WEATHERSTRIP RH INFO

14. INSTALL REAR DOOR SCUFF PLATE RH

HINT:

Use the same procedure for the RH side and the LH side.

15. INSTALL REAR SEATBACK ASSEMBLY LH INFO

16. INSTALL REAR SEATBACK ASSEMBLY RH INFO

17. INSTALL REAR SEAT INNER WITH CENTER BELT ASSEMBLY LH

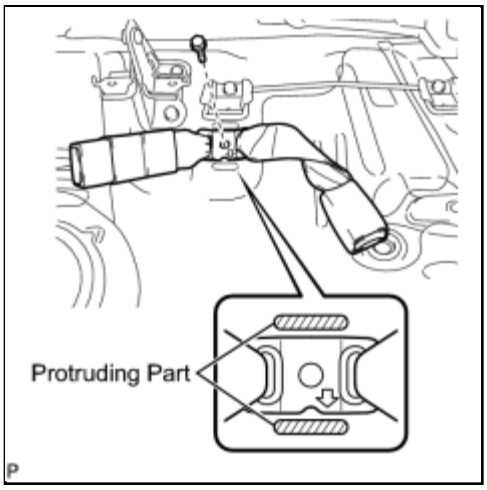

(a) Install the rear seat inner with center belt assembly LH with the bolt.

Torque: 41 N·m (420 kgf·cm, 30ft·lbf)

NOTICE:

Do not allow the anchor part of the rear seat inner with center belt assembly LH to overlap the protruding parts of the floor panel.

18. INSTALL REAR SEAT CUSHION ASSEMBLY INFO

19. INSTALL REAR SEAT CENTER HEADREST ASSEMBLY

20. INSTALL REAR SEAT HEADREST ASSEMBLY

21. INSTALL SPARE WHEEL COVER INFO

Last Modified: 3-10-2010	6.4 K	**From:** 200901
Model Year: 2010	**Model:** Corolla	**Doc ID:** RM000002XFX00EX
Title: SEAT BELT: REAR SEAT OUTER BELT ASSEMBLY: COMPONENTS (2010 Corolla)		

COMPONENTS

ILLUSTRATION

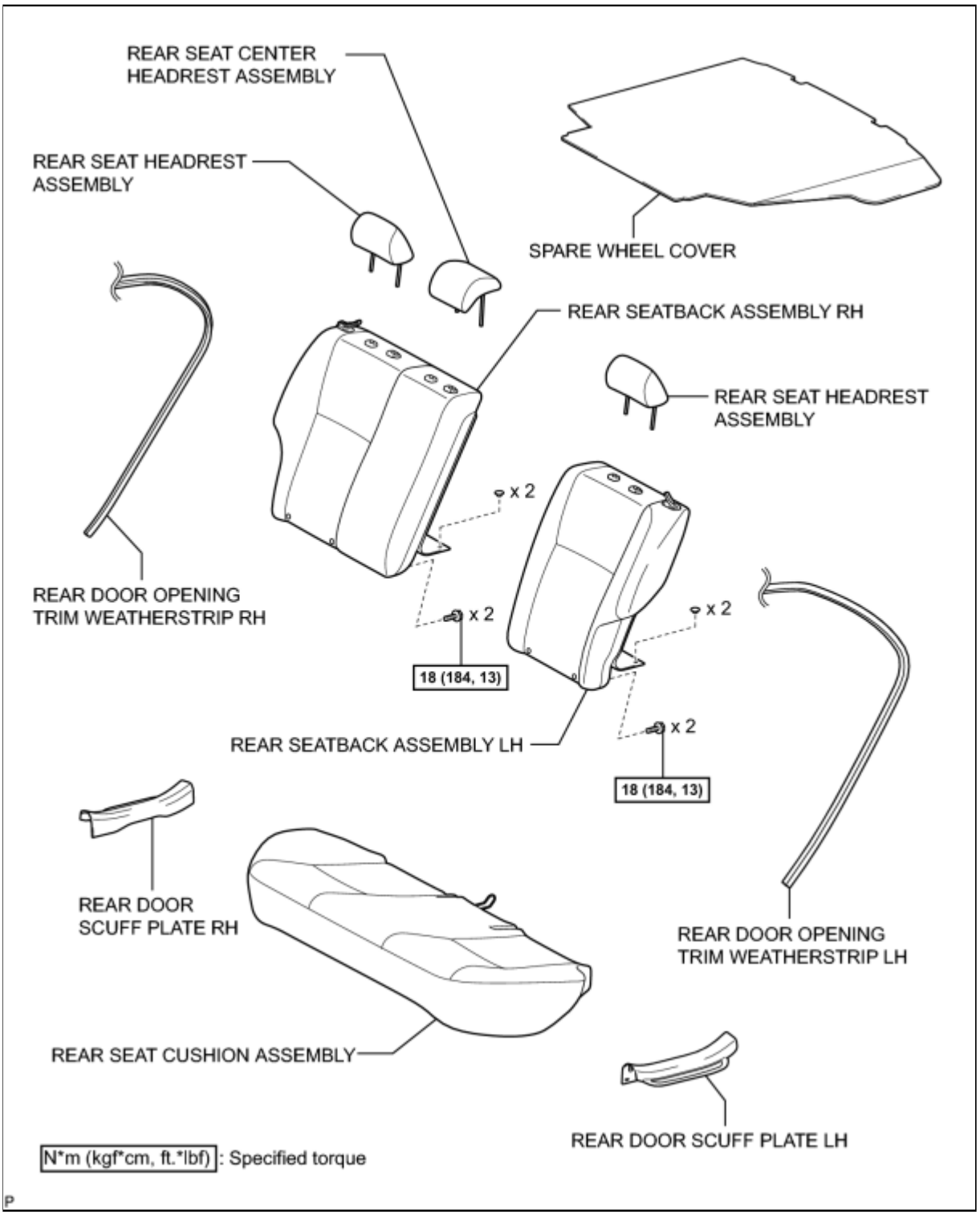

ILLUSTRATION

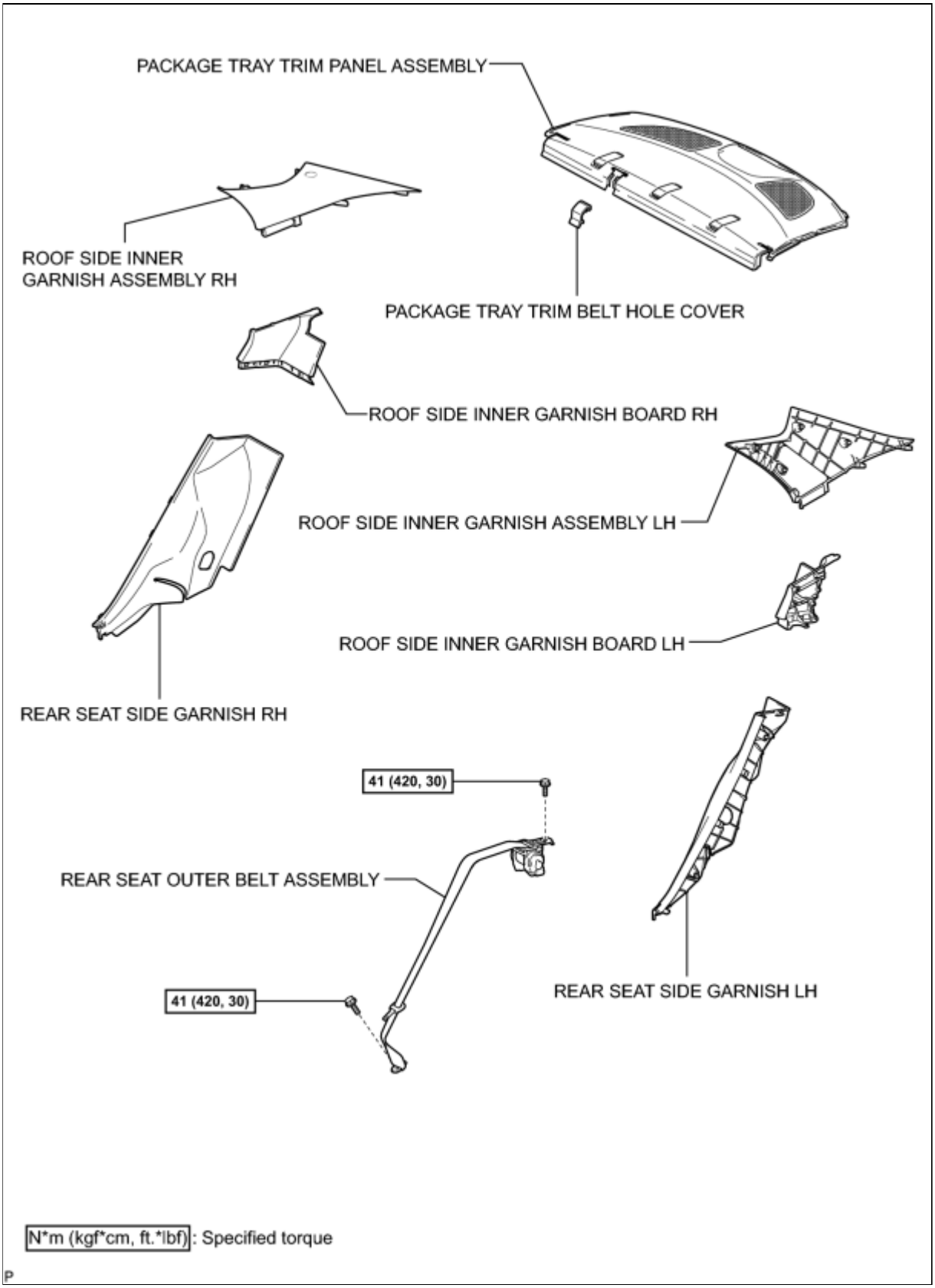

Last Modified: 3-10-2010	6.4 A	**From:** 200901
Model Year: 2010	**Model:** Corolla	**Doc ID:** RM000002XFY00GX
Title: SEAT BELT: REAR SEAT OUTER BELT ASSEMBLY: REMOVAL (2010 Corolla)		

REMOVAL

1. **REMOVE SPARE WHEEL COVER** INFO
2. **REMOVE REAR SEAT HEADREST ASSEMBLY**
3. **REMOVE REAR SEAT CENTER HEADREST ASSEMBLY**
4. **REMOVE REAR SEAT CUSHION ASSEMBLY** INFO
5. **REMOVE REAR SEATBACK ASSEMBLY LH** INFO
6. **REMOVE REAR SEATBACK ASSEMBLY RH** INFO
7. **REMOVE REAR DOOR SCUFF PLATE LH** INFO
8. **DISCONNECT REAR DOOR OPENING TRIM WEATHERSTRIP LH**
9. **REMOVE REAR SEAT SIDE GARNISH LH** INFO
10. **REMOVE ROOF SIDE INNER GARNISH BOARD LH** INFO
11. **REMOVE ROOF SIDE INNER GARNISH ASSEMBLY LH** INFO
12. **REMOVE REAR DOOR SCUFF PLATE RH**

HINT:

Use the same procedure for the RH side and the LH side.

13. **DISCONNECT REAR DOOR OPENING TRIM WEATHERSTRIP RH**
14. **REMOVE REAR SEAT SIDE GARNISH RH**

HINT:

Use the same procedure for the RH side and the LH side.

15. **REMOVE ROOF SIDE INNER GARNISH BOARD RH**

HINT:

Use the same procedure for the RH side and the LH side.

16. **REMOVE ROOF SIDE INNER GARNISH ASSEMBLY RH**

HINT:

Use the same procedure for the RH side and the LH side.

17. **REMOVE PACKAGE TRAY TRIM BELT HOLE COVER** INFO
18. **REMOVE PACKAGE TRAY TRIM PANEL ASSEMBLY (w/o Rear Spoiler)** INFO

19. REMOVE PACKAGE TRAY TRIM PANEL ASSEMBLY (w/ Rear Spoiler) INFO

20. REMOVE REAR SEAT OUTER BELT ASSEMBLY

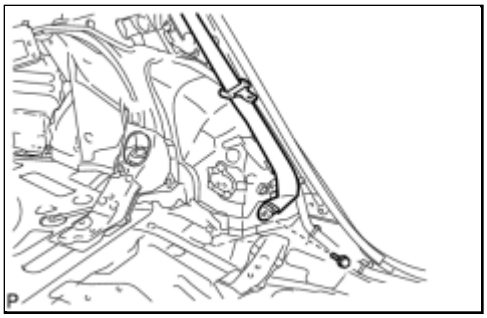

(a) Remove the bolt and disconnect the floor end of the rear seat outer belt assembly.

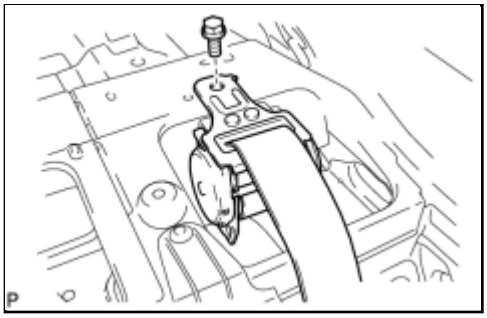

(b) Remove the bolt and the rear seat outer belt assembly.

Last Modified: 3-10-2010	6.4 A	**From:** 200901
Model Year: 2010	**Model:** Corolla	**Doc ID:** RM000002XFW00GX
Title: SEAT BELT: REAR SEAT OUTER BELT ASSEMBLY: INSTALLATION (2010 Corolla)		

INSTALLATION

1. INSTALL REAR SEAT OUTER BELT ASSEMBLY

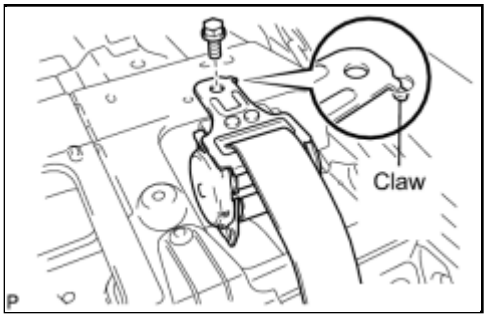

(a) Align the claw with the seat belt positioning hole and install the rear seat outer belt assembly with the bolt.

Torque: 41 N·m (420 kgf·cm, 30ft·lbf)

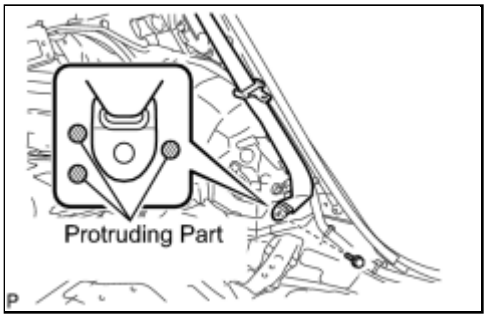

(b) Install the floor end of the rear seat outer belt assembly with the bolt.

Torque: 41 N·m (420 kgf·cm, 30ft·lbf)

NOTICE:

Do not allow the anchor part of the rear seat outer belt assembly to overlap the protruding parts of the floor panel.

2. INSTALL PACKAGE TRAY TRIM PANEL ASSEMBLY (w/o Rear Spoiler) INFO

3. INSTALL PACKAGE TRAY TRIM PANEL ASSEMBLY (w/ Rear Spoiler) INFO

4. INSTALL PACKAGE TRAY TRIM BELT HOLE COVER INFO

5. INSTALL ROOF SIDE INNER GARNISH ASSEMBLY LH INFO

6. INSTALL ROOF SIDE INNER GARNISH BOARD LH INFO

7. INSTALL REAR SEAT SIDE GARNISH LH INFO

8. INSTALL REAR DOOR OPENING TRIM WEATHERSTRIP LH INFO

9. INSTALL REAR DOOR SCUFF PLATE LH INFO

10. INSTALL ROOF SIDE INNER GARNISH ASSEMBLY RH

HINT:

Use the same procedure for the RH side and the LH side.

11. INSTALL ROOF SIDE INNER GARNISH BOARD RH

HINT:

Use the same procedure for the RH side and the LH side.

12. INSTALL REAR SEAT SIDE GARNISH RH

HINT:

Use the same procedure for the RH side and the LH side.

13. INSTALL REAR DOOR OPENING TRIM WEATHERSTRIP RH INFO

14. INSTALL REAR DOOR SCUFF PLATE RH

HINT:

Use the same procedure for the RH side and the LH side.

15. INSTALL REAR SEATBACK ASSEMBLY LH INFO

16. INSTALL REAR SEATBACK ASSEMBLY RH INFO

17. INSTALL REAR SEAT CUSHION ASSEMBLY INFO

18. INSTALL REAR SEAT CENTER HEADREST ASSEMBLY

19. INSTALL REAR SEAT HEADREST ASSEMBLY

20. INSTALL SPARE WHEEL COVER INFO

Last Modified: 3-10-2010	6.4 L	**From:** 200901
Model Year: 2010	**Model:** Corolla	**Doc ID:** RM000003INP001X
Title: SEAT BELT: SEAT BELT WARNING SYSTEM: PRECAUTION (2010 Corolla)		

PRECAUTION

1. EXPRESSIONS OF IGNITION SWITCH

(a) The type of ignition switch used on this model differs according to the specifications of the vehicle.

The expressions listed in the table below are used in this section.

EXPRESSION	SWITCH TYPE	
	IGNITION SWITCH (POSITION)	ENGINE SWITCH (CONDITION)
Ignition Switch off	LOCK	Off
Ignition Switch ON	ON	On (IG)
Ignition Switch ACC	ACC	On (ACC)
Engine Start	START	Start

Last Modified: 3-10-2010	6.4 R	**From:** 200901
Model Year: 2010	**Model:** Corolla	**Doc ID:** RM00000148X02DX
Title: SEAT BELT: SEAT BELT WARNING SYSTEM: PARTS LOCATION (2010 Corolla)		

PARTS LOCATION

ILLUSTRATION

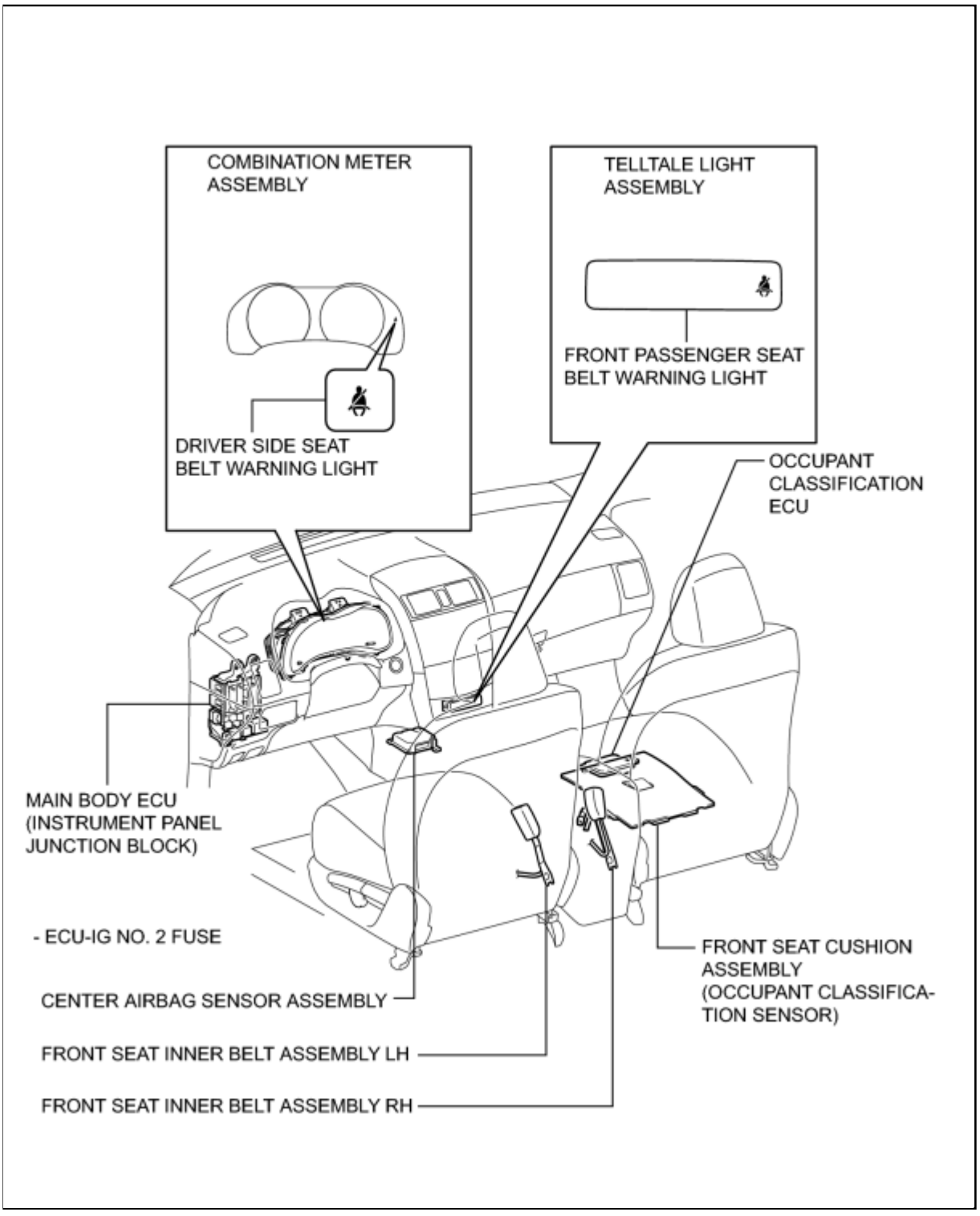

Last Modified: 3-10-2010	6.4 U	**From:** 200901
Model Year: 2010	**Model:** Corolla	**Doc ID:** RM000001OC702FX
Title: SEAT BELT: SEAT BELT WARNING SYSTEM: SYSTEM DIAGRAM (2010 Corolla)		

SYSTEM DIAGRAM

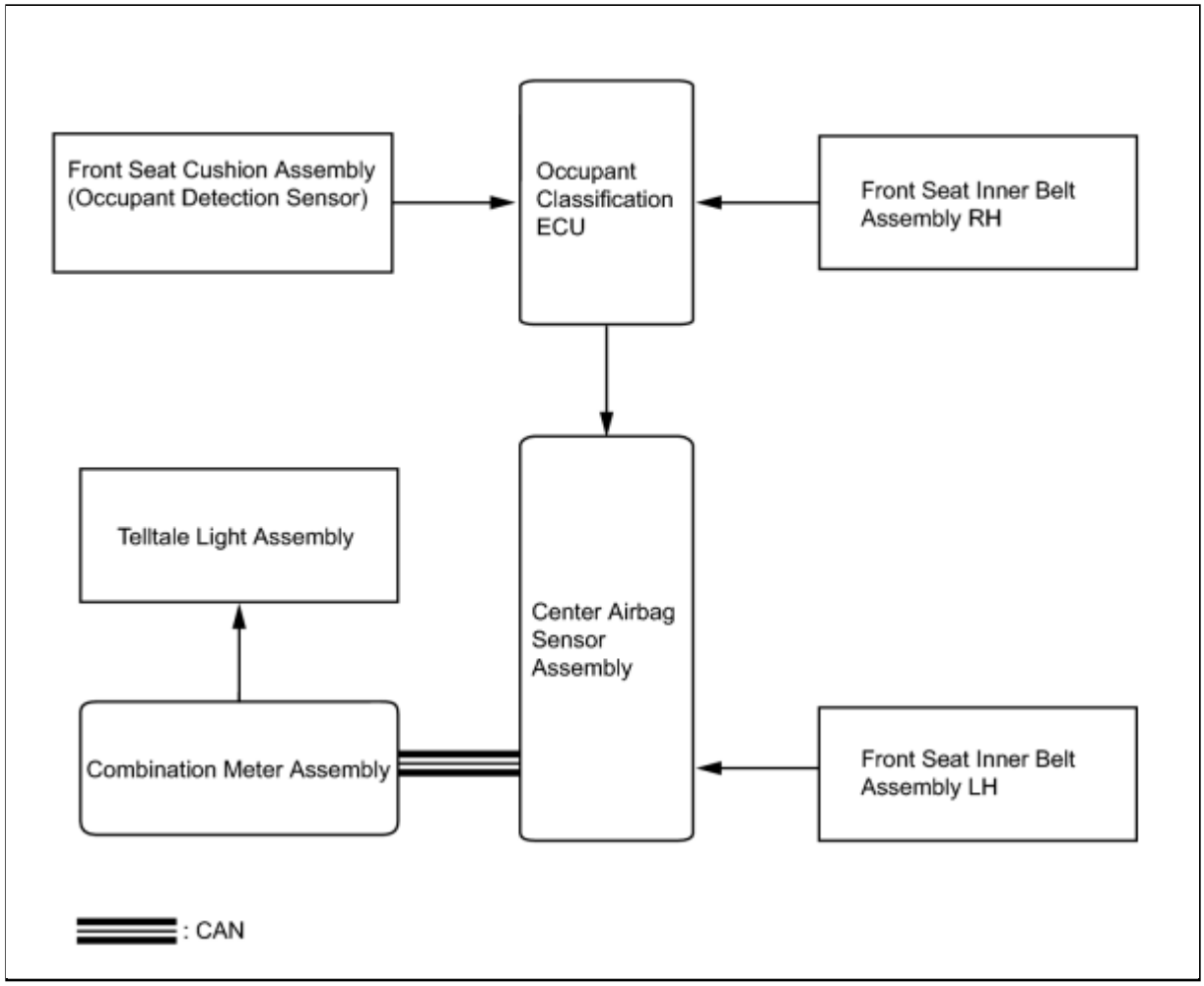

Last Modified: 3-10-2010	6.4 D	**From:** 200901
Model Year: 2010	**Model:** Corolla	**Doc ID:** RM000001OKO02JX
Title: SEAT BELT: SEAT BELT WARNING SYSTEM: SYSTEM DESCRIPTION (2010 Corolla)		

SYSTEM DESCRIPTION

1. DRIVER SEAT BELT WARNING LIGHT

(a) When the driver seat belt is not fastened with the ignition switch ON, the driver seat belt warning light on the combination meter assembly comes on to inform the driver. The center airbag assembly detects the driver seat belt condition and sends signals to the body ECU and the meter assembly via CAN communication.

2. PASSENGER SEAT BELT WARNING

(a) When the passenger seat belt is not fastened with ignition switch ON and the passenger seat occupied, check that the passenger seat belt warning light on telltale light blinks. The occupant detection sensor detects if the passenger seat is occupied and sends signals to the combination meter assembly. The inner belt detects the passenger seat belt condition and sends signals to the combination meter assembly. After receiving the signals from the occupant detection sensor and inner belt, the meter assembly sends signals to telltale light to request the passenger seat belt warning light to blink or go off.

Last Modified: 3-10-2010	6.4 D	**From:** 200901
Model Year: 2010	**Model:** Corolla	**Doc ID:** RM000000Y5I041X
Title: SEAT BELT: SEAT BELT WARNING SYSTEM: HOW TO PROCEED WITH TROUBLESHOOTING (2010 Corolla)		

HOW TO PROCEED WITH TROUBLESHOOTING

HINT:

- Use the following procedure to troubleshoot the seat belt warning system.
- *: Use the Techstream.

1.	**VEHICLE BROUGHT TO WORKSHOP**

NEXT

2.	**INSPECT BATTERY VOLTAGE**

Standard voltage:
11 to 14 V

If the voltage is below 11 V, recharge or replace the battery before proceeding to the next step.

NEXT

3.	**CHECK CAN COMMUNICATION SYSTEM***

(a) Use the Techstream to check if the CAN communication system is functioning normally.

Result:

RESULT	PROCEED TO
CAN DTC is not output	A
CAN DTC is output	B

B ▶ INFO GO TO CAN COMMUNICATION SYSTEM

A ▼

4.	PROBLEM SYMPTOMS TABLE

HINT: INFO .

NEXT ▼

5.	OVERALL ANALYSIS AND TROUBLESHOOTING*

(a) Data List / Active Test INFO .

(b) Terminals of ECU INFO .

(c) On-vehicle Inspection INFO .

NEXT ▼

6.	REPAIR OR REPLACE

NEXT ▼

7.	CONFIRMATION TEST


TOYOTA

Last Modified: 3-10-2010	6.4 D	**From:** 200901
Model Year: 2010	**Model:** Corolla	**Doc ID:** RM000003JA700AX
Title: SEAT BELT: SEAT BELT WARNING SYSTEM: CUSTOMIZE PARAMETERS (2010 Corolla)		

CUSTOMIZE PARAMETERS

1. COMBINATION METER

NOTICE:

- Be sure to record the current value before customizing.
- These buzzers should be on for safe driving. Perform these procedures only if it is necessary to set the buzzer off (disabled).

HINT:

The following items can be customized using the Techstream.

Combination Meter

TESTER DISPLAY	DEFAULT	CONTENT	SETTING
Driver Side Seatbelt Warning Buzzer*	On	Function to change the seat belt warning buzzer.	On, Off
Front Passenger Side Seatbelt Warning Buzzer*	On	Function to change the seat belt warning buzzer.	On, Off

HINT:

***: This setting is only valid for the buzzer which sounds at 20 km/h (12 mph) or more.**

Last Modified: 3-10-2010	6.4 T	**From:** 200901
Model Year: 2010	**Model:** Corolla	**Doc ID:** RM00000148Y033X
Title: SEAT BELT: SEAT BELT WARNING SYSTEM: PROBLEM SYMPTOMS TABLE (2010 Corolla)		

PROBLEM SYMPTOMS TABLE

HINT:

Use the table below to help determine the cause of problem symptoms. If multiple suspected areas are listed, the potential causes of the symptoms are listed in order of probability in the "Suspected Area" column of the table. Check each symptom by checking the suspected areas in the order they are listed. Replace parts as necessary.

Seat Belt Warning System

SYMPTOM	SUSPECTED AREA	SEE PAGE
Driver side seat belt warning light does not operate	Front seat inner belt assembly LH	INFO
	Center airbag sensor assembly	-
	Combination meter assembly	-
	Wire harness or connector	-
	Main body ECU (Instrument panel junction block)	-
Front passenger seat belt warning light does not operate	Front seat inner belt assembly RH	INFO
	Occupant detection ECU	-
	Road sensor	-
	Center airbag sensor assembly	-
	Combination meter	-
	Telltale light assembly	INFO
	Wire harness or connector	-

Last Modified: 3-10-2010	6.4 U	**From:** 200901
Model Year: 2010	**Model:** Corolla	**Doc ID:** RM0000014DJ02QX
Title: SEAT BELT: SEAT BELT WARNING SYSTEM: TERMINALS OF ECU (2010 Corolla)		

TERMINALS OF ECU

1. TELLTALE LIGHT ASSEMBLY

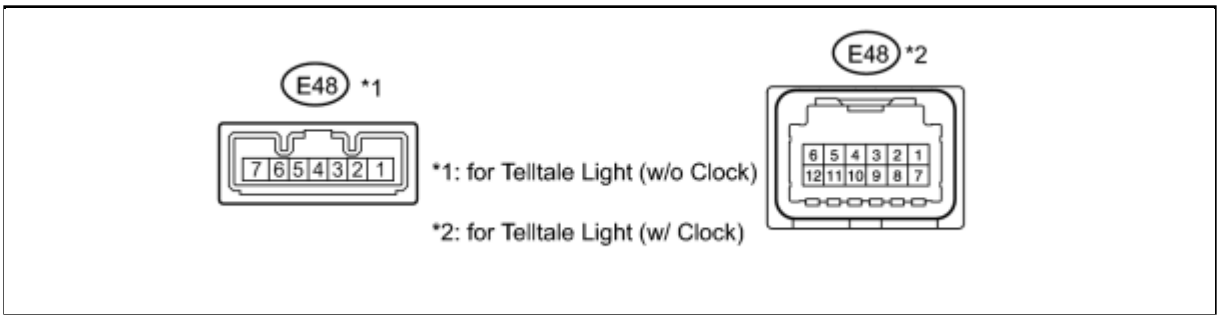

Standard Voltage:

TERMINAL NO. (SYMBOL)	WIRING COLOR	TERMINAL DESCRIPTION	CONDITION	SPECIFIED CONDITION
E48-4 (B) - Body ground*3 E48-3 (B) - Body ground*4	B*1 or V*2 - Body ground	Power source	Always	11 to 14 V
E48-3 (L) - Body ground*3 E48-8 (L) - Body ground*4	O*1 or W*2 - Body ground	Front passenger side seat belt warning light signal	Front passenger seat occupied, ignition switch ON, front passenger side seat belt warning light OFF	11 to 14 V
			Front passenger seat occupied, ignition switch ON, front passenger side seat belt warning light is blinking	Below 1 V ⟷ 11 to 14 V

*1: for TMC Made
*2: except for TMC Made
*3: for Telltale Light (w/o Clock)
*4: for Telltale Light (w/ Clock)

Last Modified: 3-10-2010	6.4 D	**From:** 200901
Model Year: 2010	**Model:** Corolla	**Doc ID:** RM0000012GX04KX
Title: SEAT BELT: SEAT BELT WARNING SYSTEM: DIAGNOSIS SYSTEM (2010 Corolla)		

DIAGNOSIS SYSTEM

1. DESCRIPTION

(a) The seat belt warning system data can be read from the Data Link Connector 3 (DLC3) of the vehicle. When the system seems to be malfunctioning, use the Techstream to check for malfunctions and perform repairs.

2. CHECK DLC3

(a) Check DLC3 INFO .

3. INSPECT BATTERY VOLTAGE

Standard voltage:
11 to 14 V

If the voltage is below 11 V, recharge or replace the battery before proceeding.

Last Modified: 3-10-2010	6.4 U	**From:** 200901
Model Year: 2010	**Model:** Corolla	**Doc ID:** RM0000012G704FX
Title: SEAT BELT: SEAT BELT WARNING SYSTEM: DATA LIST / ACTIVE TEST (2010 Corolla)		

DATA LIST / ACTIVE TEST

1. ACTIVE TEST

HINT:

Using the Techstream to perform Active Tests allows relays, VSVs, actuators and other items to be operated without removing any parts. This non-intrusive functional inspection can be very useful because intermittent operation may be discovered before parts or wiring is disturbed. Performing Active Tests early in trouble shooting is one way to save diagnostic time. Data List information can be displayed while performing Active Tests.

(a) Connect the Techstream to the DLC3.

(b) Turn the ignition switch to ON.

(c) Turn the Techstream on.

(d) Enter the following menus: Body Electrical / Combination Meter / Active Test.

(e) Perform Active Test according to the display on the Techstream.

HINT:

The ignition switch must be turned to ON to proceed with the Active Test using the Techstream.

Combination Meter

TESTER DISPLAY	TEST PART	CONTROL RANGE	DIAGNOSTIC NOTE
Front Passenger Side Seat Belt	Front passenger side seat belt warning light	Front passenger side seat belt warning light is OFF / ON	Confirm that the vehicle is stopped, engine idling
Driver Side Seat Belt	Driver side seat belt warning light	Driver side seat belt warning light is OFF / ON	Confirm that the vehicle is stopped, engine idling

Last Modified: 3-10-2010	6.4 G	**From:** 200901
Model Year: 2010	**Model:** Corolla	**Doc ID:** RM000001OKS020X
Title: SEAT BELT: SEAT BELT WARNING SYSTEM: ON-VEHICLE INSPECTION (2010 Corolla)		

ON-VEHICLE INSPECTION

1. INSPECT DRIVER SIDE SEAT BELT WARNING

(a) Turn the ignition switch to ON.

(b) When the driver seat belt is not fastened, check that the driver seat belt warning light on the combination meter blinks.

(c) When the driver seat belt is fastened, check that the driver seat belt warning light on the combination meter is off.

2. INSPECT PASSENGER SIDE SEAT BELT WARNING

(a) Turn the ignition switch to ON.

(b) When the front passenger seat belt is not fastened with the passenger seat occupied, check that the front passenger seat belt warning light on the telltale light assembly blinks.

(c) When the front passenger seat belt is fastened with the passenger seat occupied, check that the front passenger seat belt warning light on the telltale light is off.

Last Modified: 3-10-2010	6.4 J	**From:** 200901
Model Year: 2010	**Model:** Corolla	**Doc ID:** RM0000014DK03HX
Title: SEAT BELT: SEAT BELT WARNING SYSTEM: Driver Side Seat Belt Warning Light does not Operate (2010 Corolla)		

Driver Side Seat Belt Warning Light does not Operate

DESCRIPTION

When the ignition switch is on (IG), the center airbag sensor assembly transmits front seat inner belt status signals to the combination meter assembly through CAN. If the driver seat belt is not fastened, the combination meter assembly blinks the driver seat belt warning light. If the seat belt is fastened, the warning light goes off.

WIRING DIAGRAM

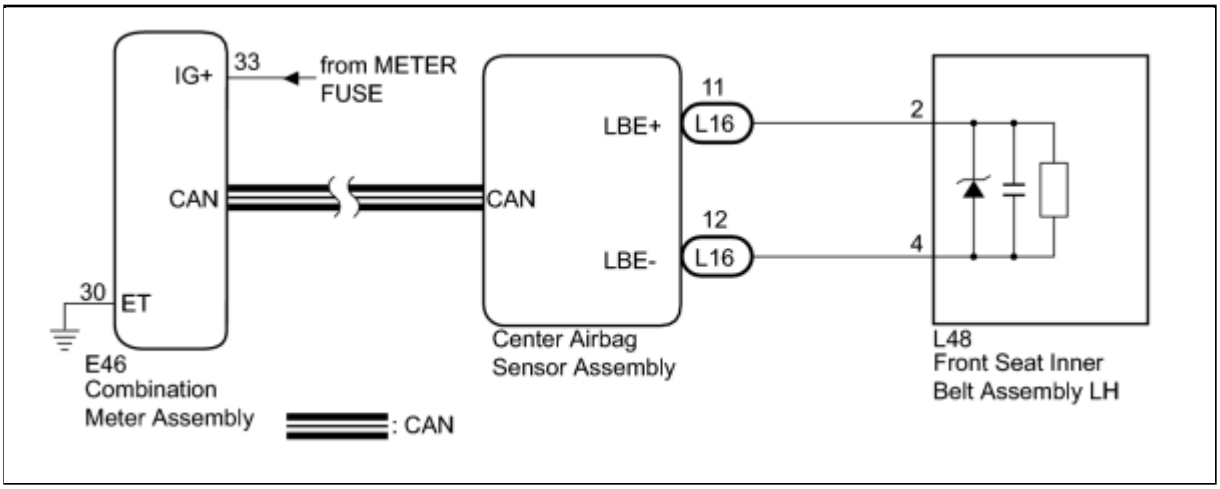

INSPECTION PROCEDURE

NOTICE:

The seat belt warning system uses CAN. Before troubleshooting the seat belt warning system, perform Communication Function Check by following How to Proceed with Troubleshooting to confirm that the communication systems are normal.

PROCEDURE

1.	**CHECK FOR DTC**

(a) Check for DTCs.

Result:

RESULT	PROCEED TO
CAN communication system DTC is output	A
Airbag system DTC is output	B
DTC is not output	C

B ▶ **GO TO AIRBAG SYSTEM**

A ▶ **GO TO CAN COMMUNICATION SYSTEM**

C ▼

2.	**PERFORM ACTIVE TEST USING TECHSTREAM**

(a) Connect the Techstream to the DLC3.

(b) Turn the ignition switch to ON.

(c) Turn the Techstream on.

(d) Enter the following menus: Body Electrical / Combination Meter / Active Test.

(e) Check the Driver side seat belt warning light by performing the Active Test.

Combination Meter:

TESTER DISPLAY	TEST PART	CONTROL RANGE	DIAGNOSTIC NOTE
Driver Side Seat Belt	Driver side seat belt warning light	Driver side seat belt warning light is OFF / ON	Confirm that the vehicle is stopped, engine idling

OK:

Switch condition (ON/OFF) can be switched by Active Test.

NG ▶ **REPLACE COMBINATION METER**

OK ▶ **REPLACE CENTER AIRBAG SENSOR ASSEMBLY**

Last Modified: 3-10-2010	6.4 J	**From:** 200901
Model Year: 2010	**Model:** Corolla	**Doc ID:** RM0000014DL02XX
Title: SEAT BELT: SEAT BELT WARNING SYSTEM: Front Passenger Side Seat Belt Warning Light Malfunction (2010 Corolla)		

Front Passenger Side Seat Belt Warning Light Malfunction

DESCRIPTION

The occupant detection ECU detects the state of the front seat inner belt assembly RH and road sensor when the front passenger seat is occupied with the ignition switch on (IG). If the front passenger seat belt is not fastened, the front seat belt warning light on the telltale light assembly blinks. If the seat belt is fastened, the warning light goes off.

WIRING DIAGRAM

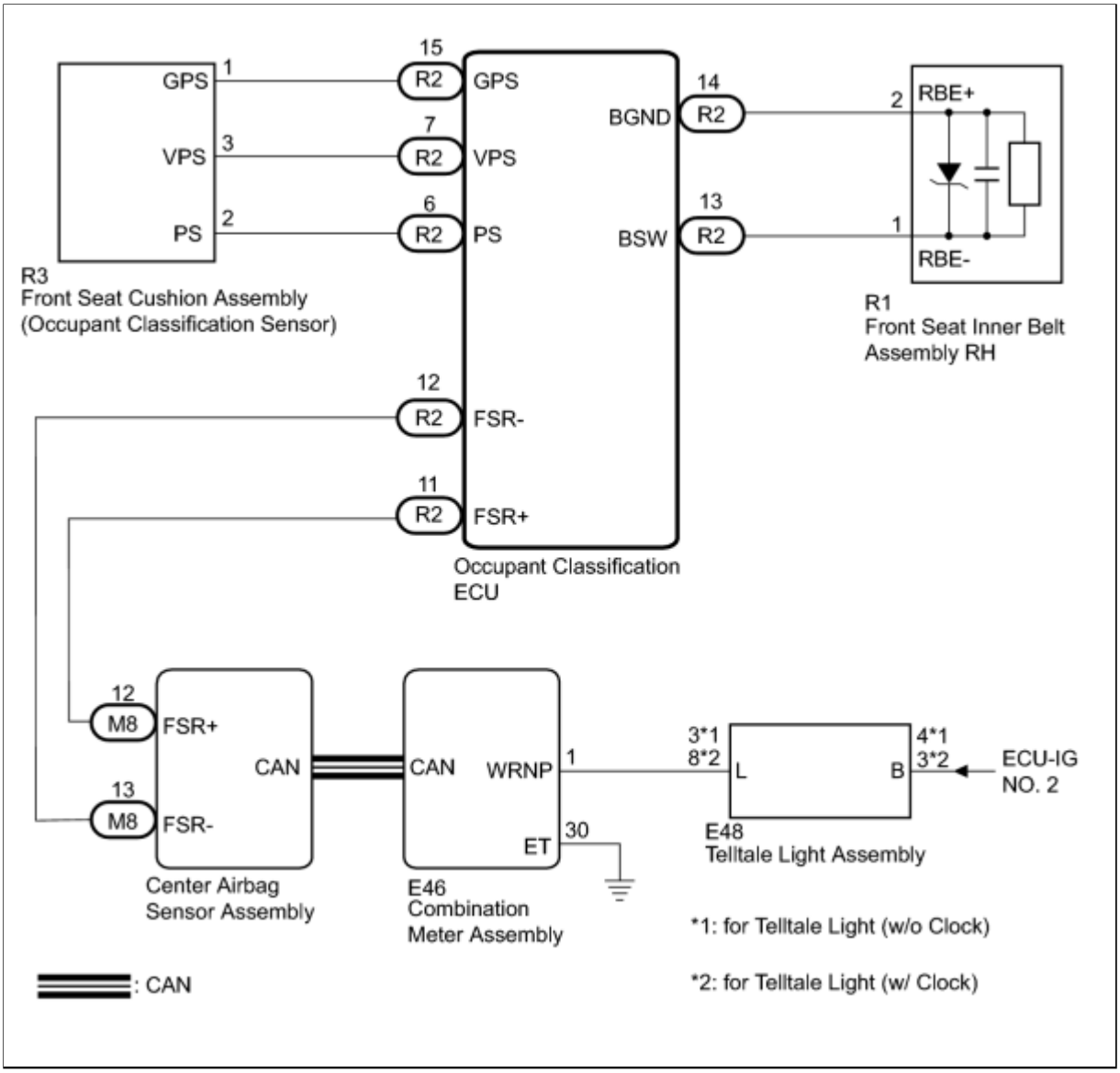

INSPECTION PROCEDURE

NOTICE:

The seat belt warning system uses CAN. Before troubleshooting the seat belt warning system, perform Communication Function Check by following How to Proceed with Troubleshooting to confirm that the communication systems are normal.

PROCEDURE

1.	**CHECK FOR DTC**

(a) Check for DTCs.

Result:

RESULT	PROCEED TO

RESULT	PROCEED TO
DTC is not output	A
CAN communication system DTC is output	B
Occupant detection system DTC is output	C

C ▶ **GO TO OCCUPANT CLASSIFICATION SYSTEM**

B ▶ **GO TO CAN COMMUNICATION SYSTEM**

A ▼

2.	**PERFORM ACTIVE TEST USING TECHSTREAM**

(a) Connect the Techstream to the DLC3.

(b) Turn the ignition switch to ON.

(c) Turn the Techstream on.

(d) Enter the following menus: Body Electrical / Combination Meter / Active Test.

(e) Check the Front passenger side seat belt warning light by performing the Active Test.

Combination Meter

TESTER DISPLAY	TEST PART	CONTROL RANGE	DIAGNOSTIC NOTE
Front Passenger Side Seat Belt	Front passenger side seat belt warning light	Front passenger side seat belt warning light is OFF / ON	Confirm that the vehicle is stopped, engine idling

OK:
Switch condition (ON/OFF) can be switched by Active Test.

NG ▶ **CHECK WIRE HARNESS (BATTERY POSITIVE AND BODY GROUND)**

OK ▶ **REPLACE CENTER AIRBAG SENSOR ASSEMBLY**

3.	**CHECK WIRE HARNESS (BATTERY POSITIVE AND BODY GROUND)**

(a) Disconnect the E48 connector.

(b) for Telltale Light (w/o Clock):

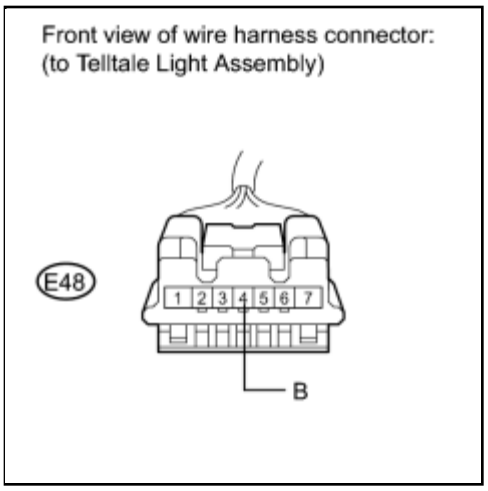

(1) Measure the voltage according to the value(s) in the table below.

Standard Voltage:

TESTER CONNECTION	SWITCH CONDITION	SPECIFIED CONDITION
E48-4 (B) - Body ground	Ignition switch on (IG)	11 to 14 V

(c) for Telltale Light (w/ Clock):

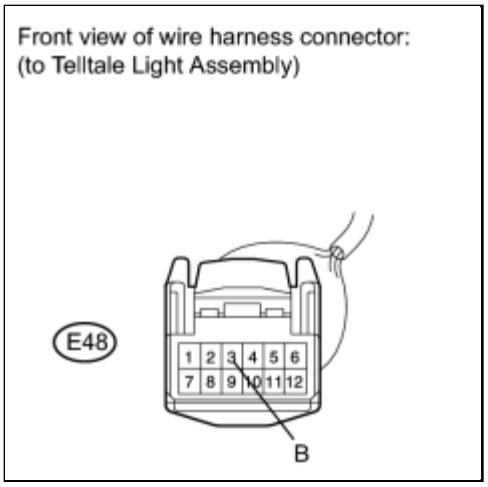

(1) Measure the voltage according to the value(s) in the table below.

Standard Voltage:

TESTER CONNECTION	SWITCH CONDITION	SPECIFIED CONDITION
E48-3 (B) - Body ground	Ignition switch on (IG)	11 to 14 V

NG ▶ **REPAIR OR REPLACE HARNESS OR CONNECTOR, OR REPLACE FUSE**

OK
▼

4.	**CHECK HARNESS OR CONNECTOR (TELLTALE LIGHT ASSEMBLY - COMBINATION METER)**

(a) Disconnect the E46 connector.

(b) for Telltale Light (w/o Clock):

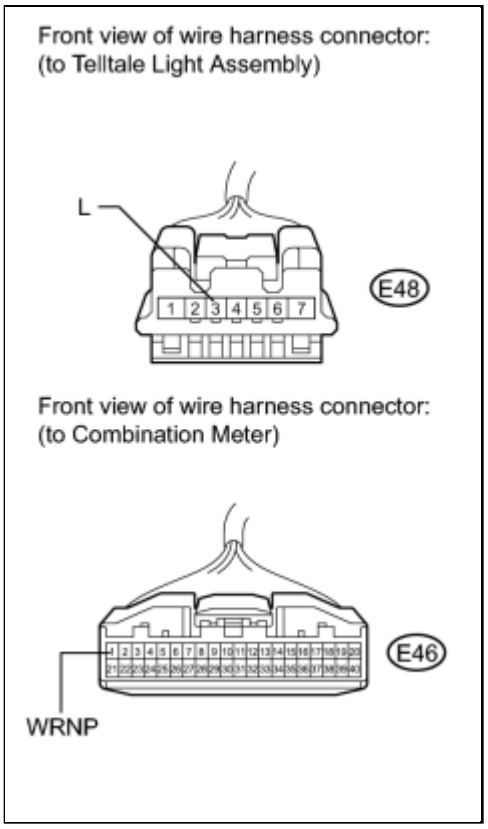

(1) Measure the resistance according to the value(s) in the table below.

Standard Resistance:

TESTER CONNECTION	CONDITION	SPECIFIED CONDITION
E48-3 (L) - E46-1 (WRNP)	Always	Below 1 Ω
E46-3 (L) or E46-1 (WRNP) - Body ground	Always	10 kΩ or higher

(c) for Telltale Light (w/ Clock):

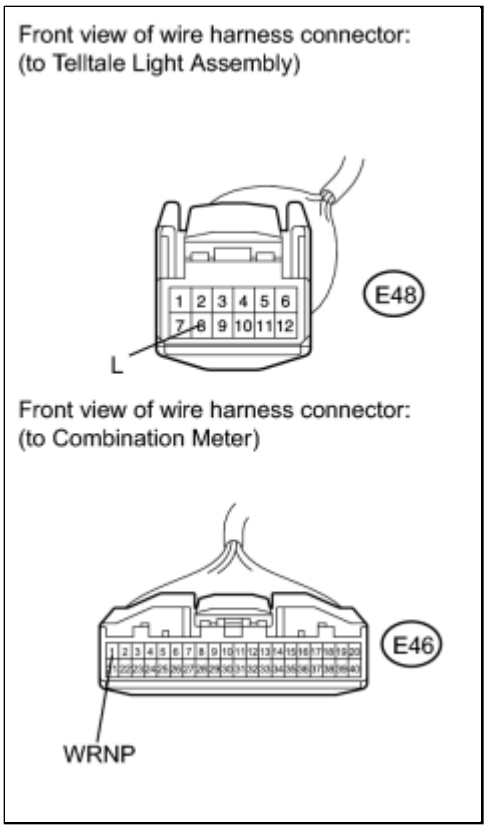

(1) Measure the resistance according to the value(s) in the table below.

Standard Resistance:

TESTER CONNECTION	CONDITION	SPECIFIED CONDITION
E48-8 (L) - E46-1 (WRNP)	Always	Below 1 Ω
E46-8 (L) or E46-1 (WRNP) - Body ground	Always	10 kΩ or higher

NG ▶ **REPAIR OR REPLACE HARNESS OR CONNECTOR**

OK ▼

5.	**INSPECT TELLTALE LIGHT ASSEMBLY**

(a) Check the telltale light assembly (front passenger seat belt warning light) condition.

(b) for Telltale Light (w/o Clock):

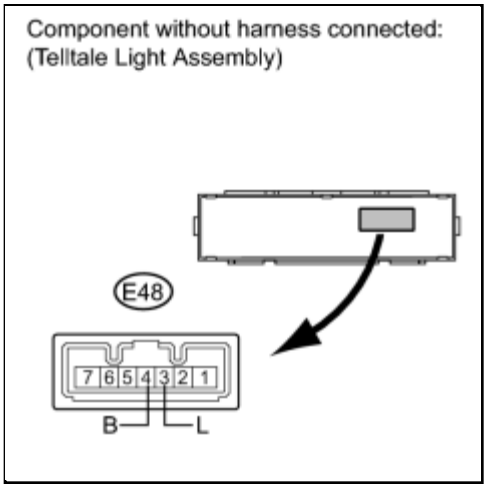

(1) Apply battery voltage to the connector according to the table below.

OK:

TESTER CONNECTION	CONDITION	SPECIFIED CONDITION
Battery positive (+) → E48-4 (B) Battery negative (-) → E48-3 (L)	Always	Seat belt warning light comes on

(c) for Telltale Light (w/ Clock):

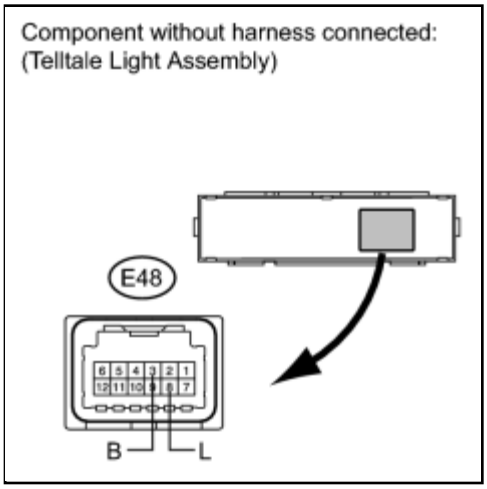

(1) Apply battery voltage to the connector according to the table below.

OK:

TESTER CONNECTION	CONDITION	SPECIFIED CONDITION
Battery positive (+) → E48-3 (B) Battery negative (-) → E48-8 (L)	Always	Seat belt warning light comes on

NG ▶ **REPLACE TELLTALE LIGHT ASSEMBLY**

OK ▶ REPLACE COMBINATION METER ASSEMBLY

Last Modified: 3-10-2010	6.4 L	**From:** 200901
Model Year: 2010	**Model:** Corolla	**Doc ID:** RM000003INQ002X
Title: SEAT: FRONT POWER SEAT CONTROL SYSTEM: PRECAUTION (2010 Corolla)		

PRECAUTION

1. EXPRESSIONS OF IGNITION SWITCH

(a) The type of ignition switch used on this model differs according to the specifications of the vehicle.

The expressions listed in the table below are used in this section.

EXPRESSION	SWITCH TYPE	
	IGNITION SWITCH (POSITION)	ENGINE SWITCH (CONDITION)
Ignition Switch off	LOCK	Off
Ignition Switch ON	ON	On (IG)
Ignition Switch ACC	ACC	On (ACC)
Engine Start	START	Start

Last Modified: 3-10-2010	6.4 R	**From:** 200901
Model Year: 2010	**Model:** Corolla	**Doc ID:** RM000000X0101SX
Title: SEAT: FRONT POWER SEAT CONTROL SYSTEM: PARTS LOCATION (2010 Corolla)		

PARTS LOCATION

ILLUSTRATION

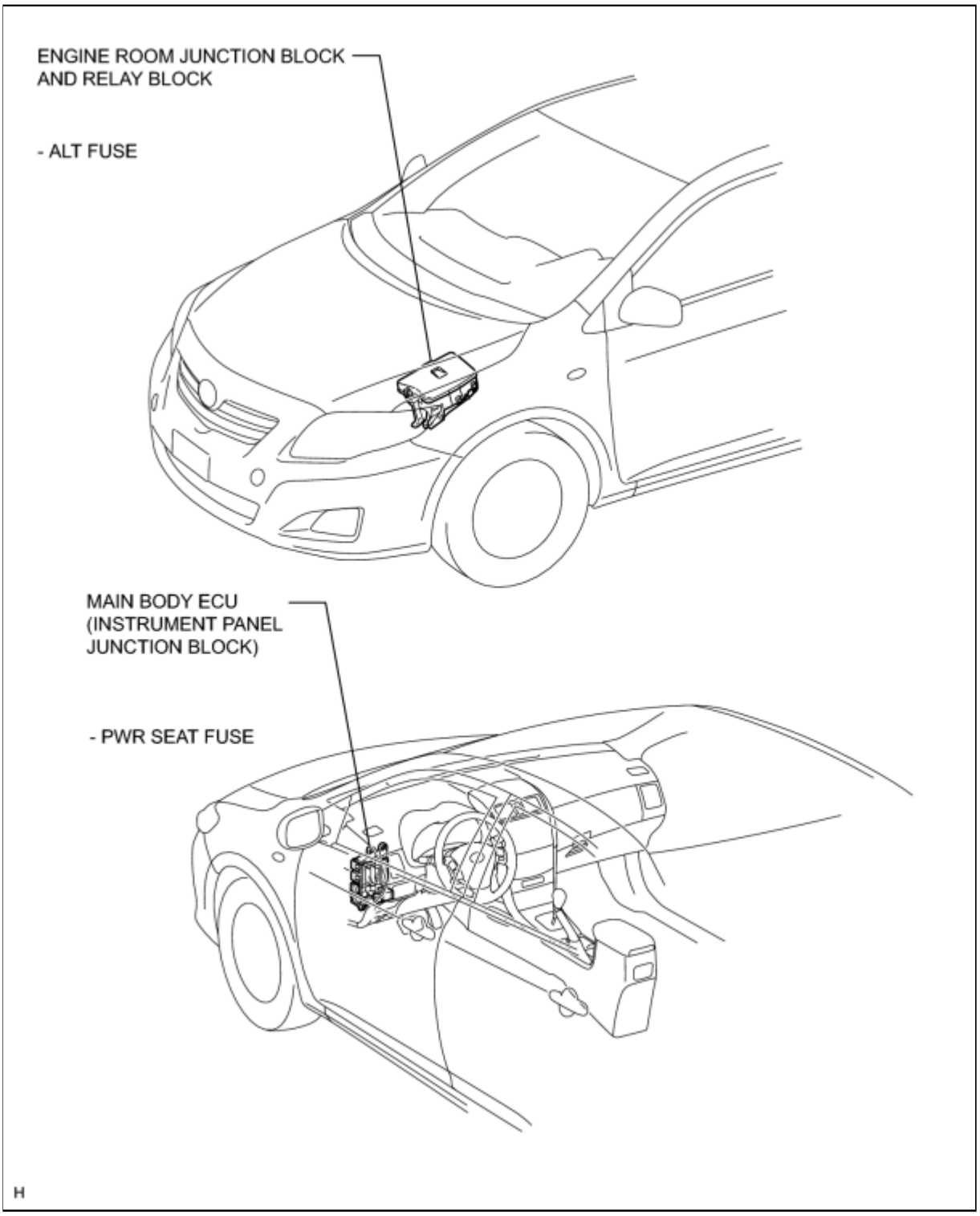

ILLUSTRATION

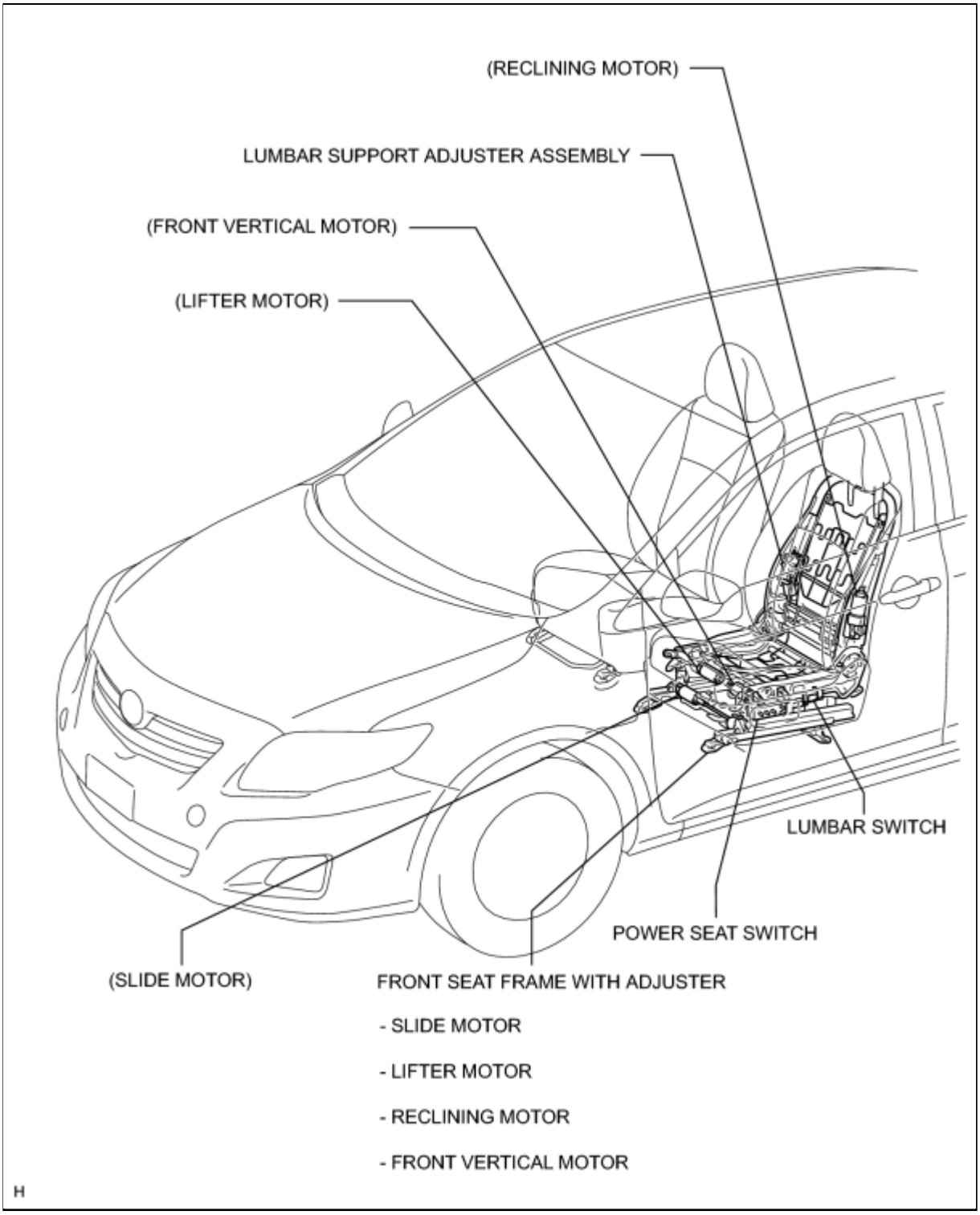

Last Modified: 3-10-2010	6.4 U	**From:** 200901
Model Year: 2010	**Model:** Corolla	**Doc ID:** RM000000X0301SX
Title: SEAT: FRONT POWER SEAT CONTROL SYSTEM: SYSTEM DIAGRAM (2010 Corolla)		

SYSTEM DIAGRAM

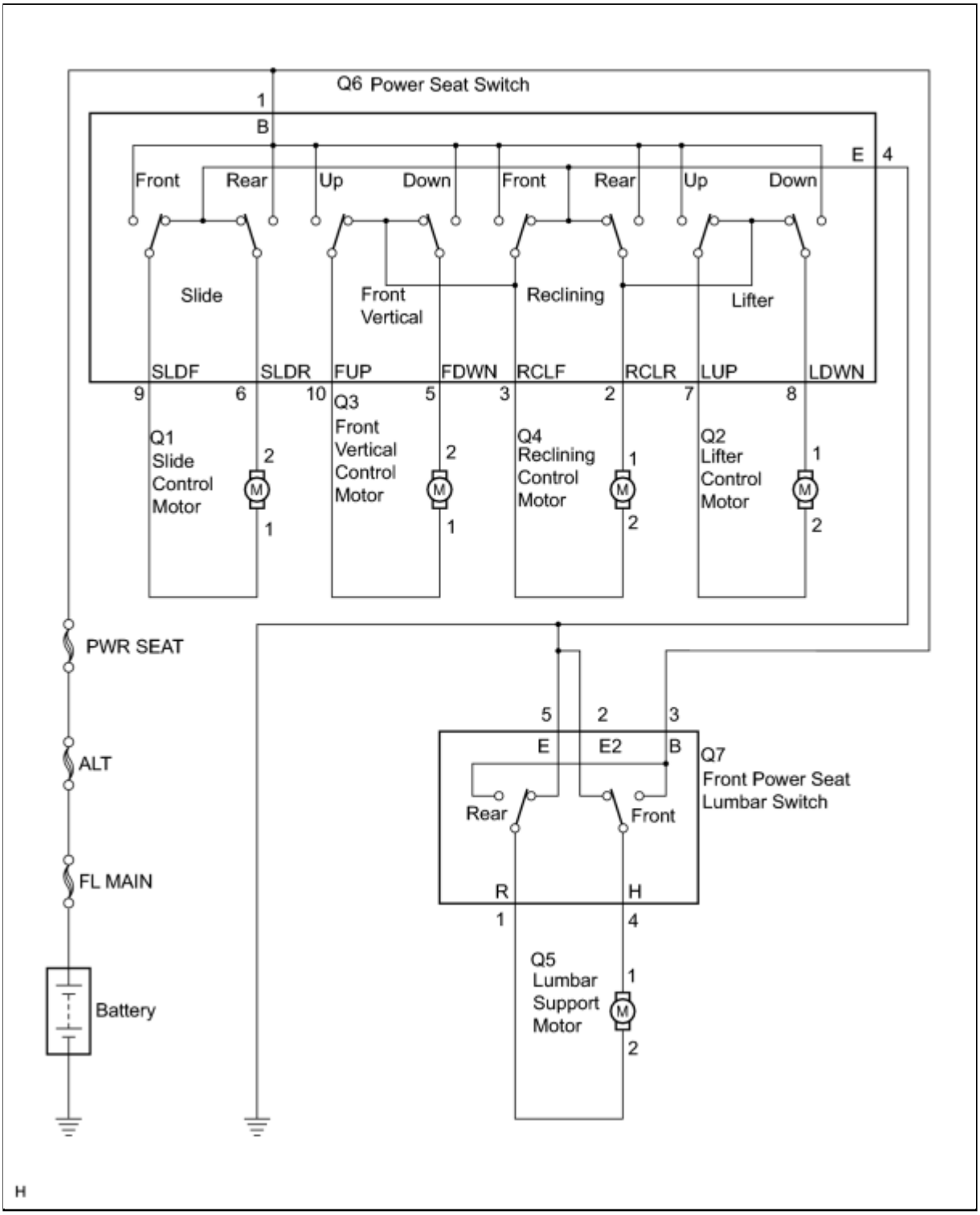

Last Modified: 3-10-2010	6.4 D	**From:** 200901
Model Year: 2010	**Model:** Corolla	**Doc ID:** RM000000T5G01JX
Title: SEAT: FRONT POWER SEAT CONTROL SYSTEM: SYSTEM DESCRIPTION (2010 Corolla)		

SYSTEM DESCRIPTION

1. FRONT POWER SEAT CONTROL SYSTEM DESCRIPTION

The driver seat is equipped with slide, reclining, lifter, front vertical and lumbar support adjustment functions.

2. FUNCTION OF MAIN COMPONENTS

The following functions are available:

COMPONENTS	FUNCTION
Front seat assembly (slide motor)	Activated based on a signal from the power seat switch, a motor is activated and slides the seat forward and rearward.
Front seat assembly (reclining motor)	Activated based on a signal from the power seat switch, a motor is activated and tilts and reclines the seat.
Power seat motor assembly (front vertical motor)	Activated based on a signal from the power seat switch and raises and lowers the seat cushion front vertically.
Front seat assembly (lifter motor)	Activated based on a signal from the power seat switch and raises and lowers the seat vertically.
Lumbar support adjuster assembly	Activated based on a signal from the front power seat lumbar switch and adjusts lumbar support.
Front power seat lumbar switch	Based on switches operated, the seat is adjusted accordingly.

Last Modified: 3-10-2010	6.4 K	**From:** 200901
Model Year: 2010	**Model:** Corolla	**Doc ID:** RM000003D4R003X
Title: SEAT: FRONT SEAT ASSEMBLY (for Manual Seat): COMPONENTS (2010 Corolla)		

COMPONENTS

ILLUSTRATION

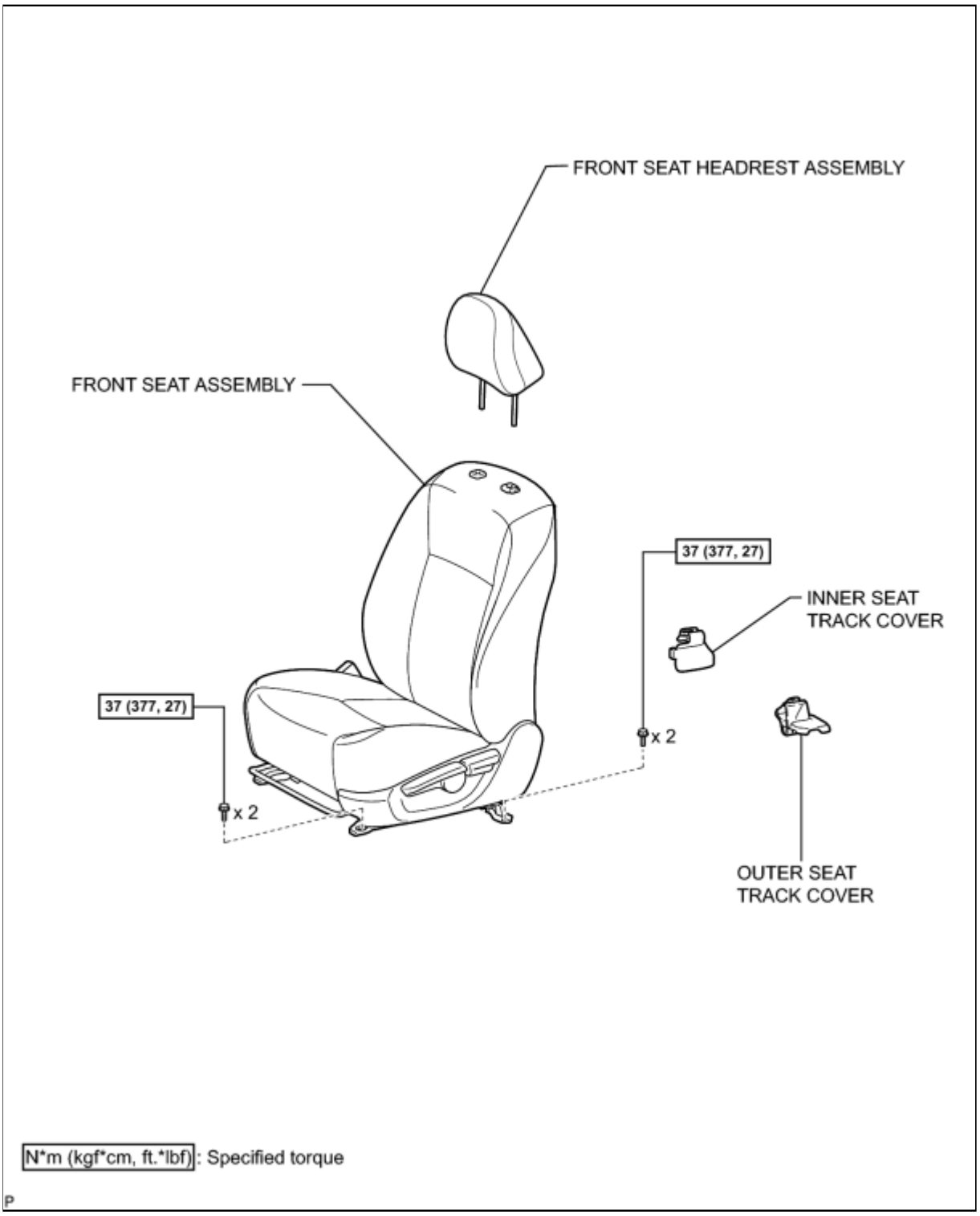

ILLUSTRATION

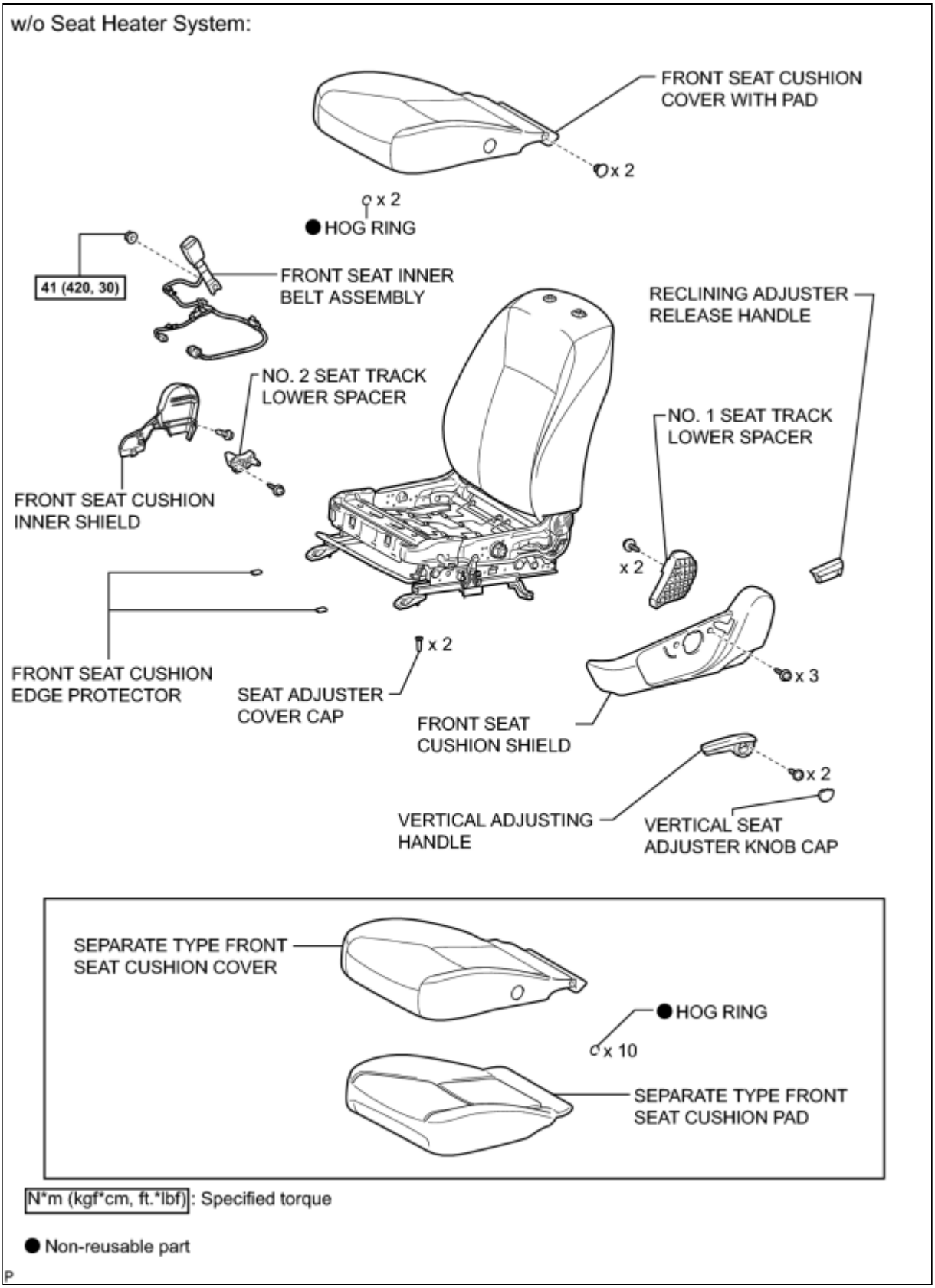

ILLUSTRATION

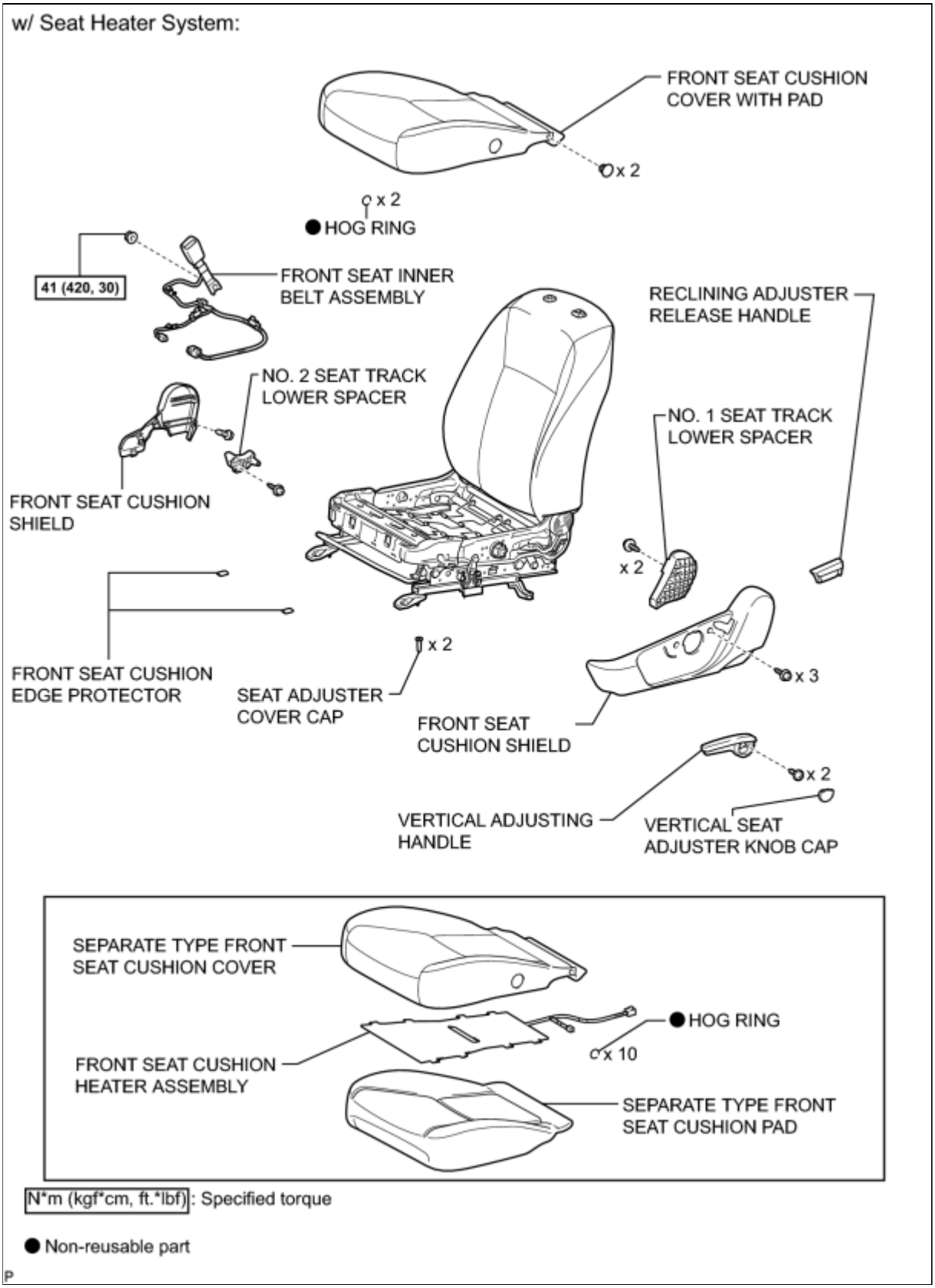

ILLUSTRATION

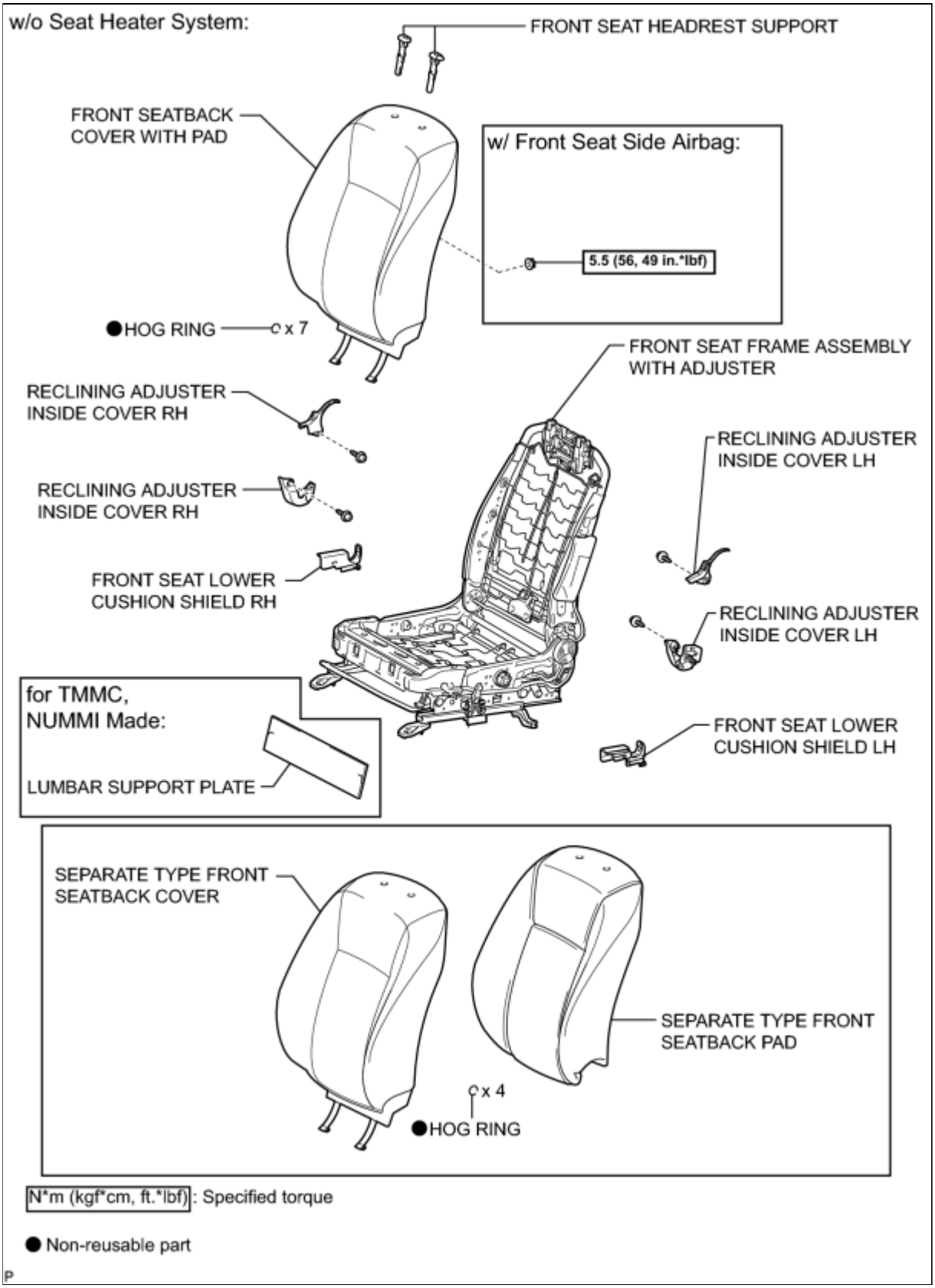

ILLUSTRATION

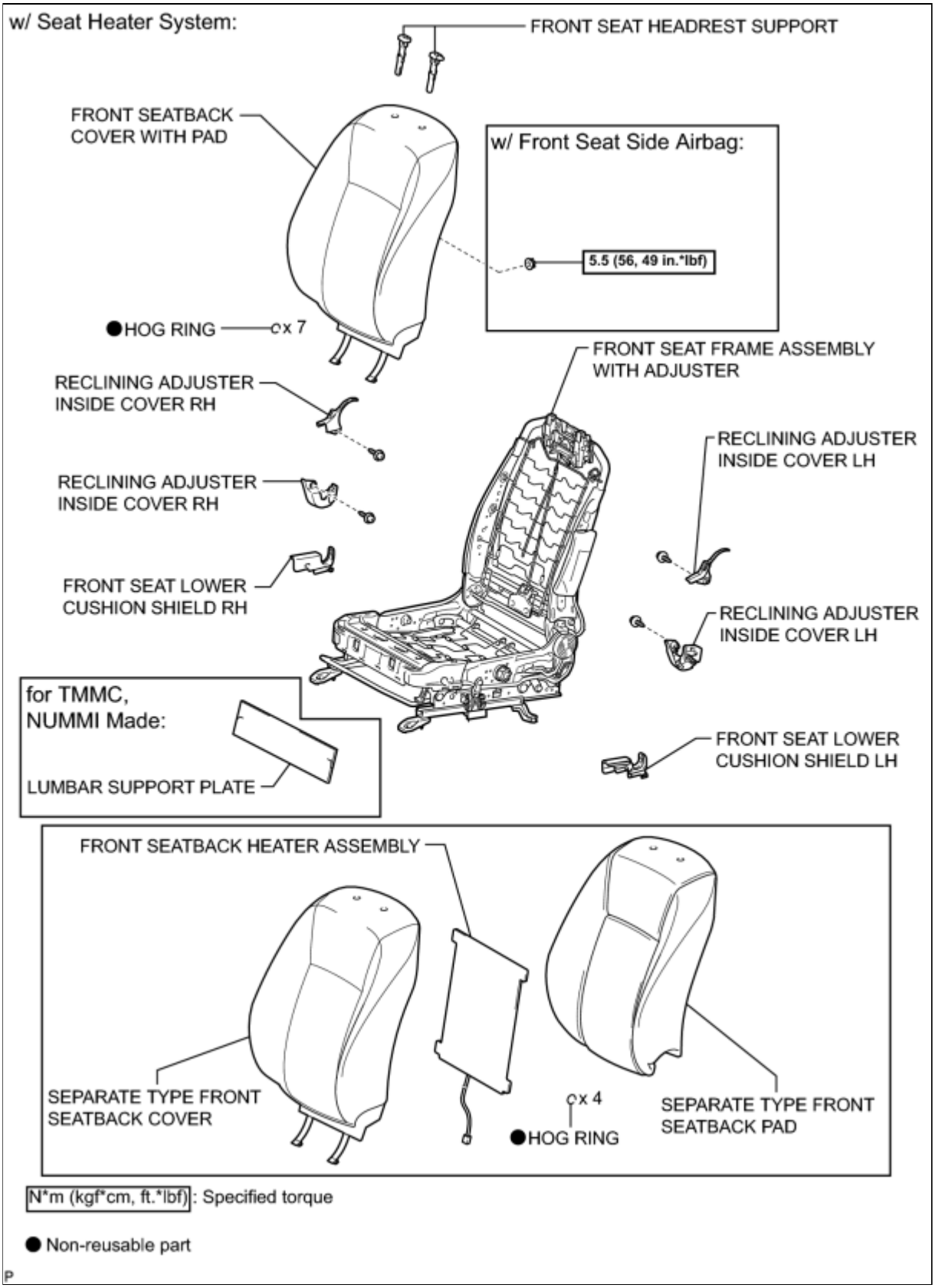

ILLUSTRATION

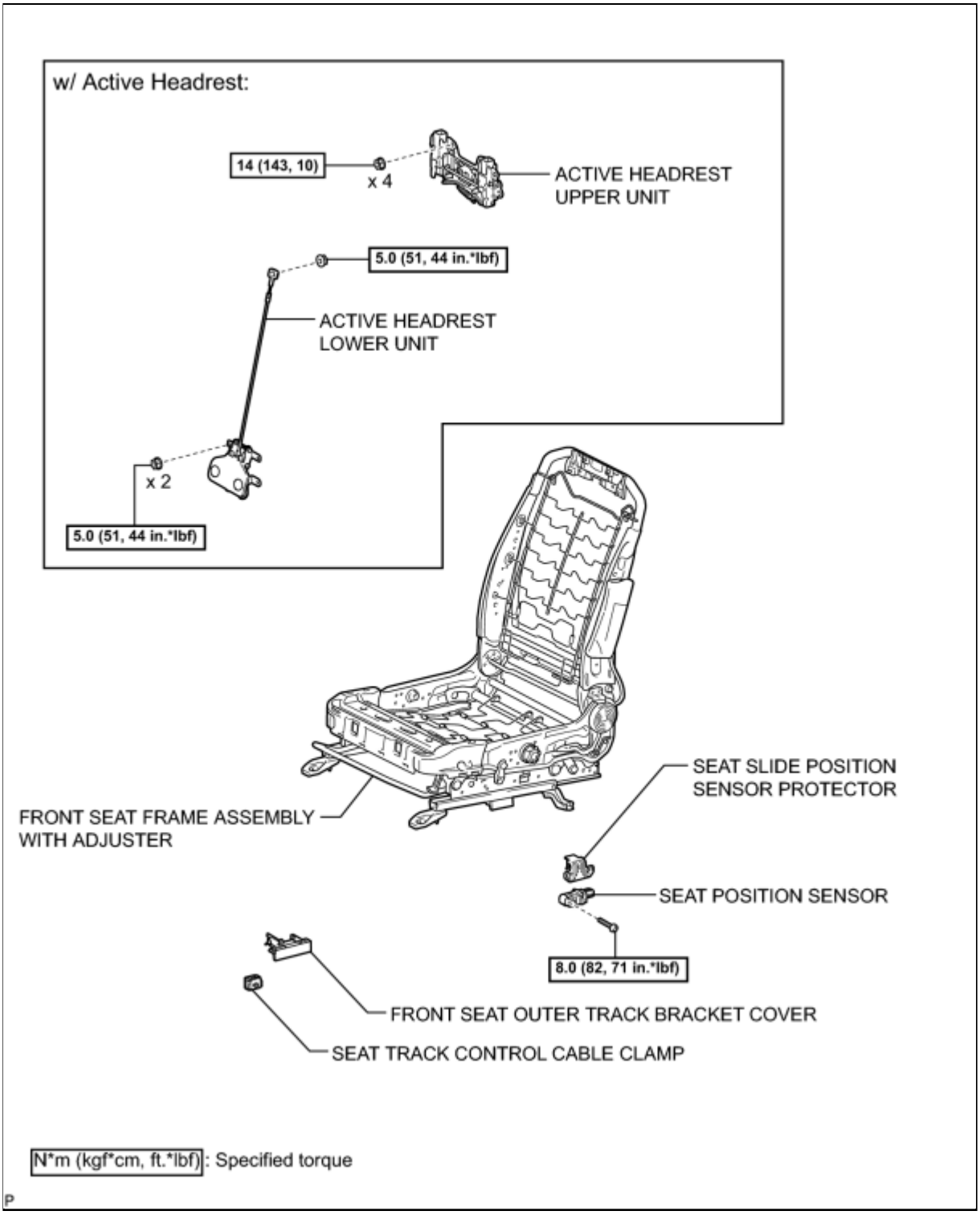

ILLUSTRATION

for Front Passenger Side:

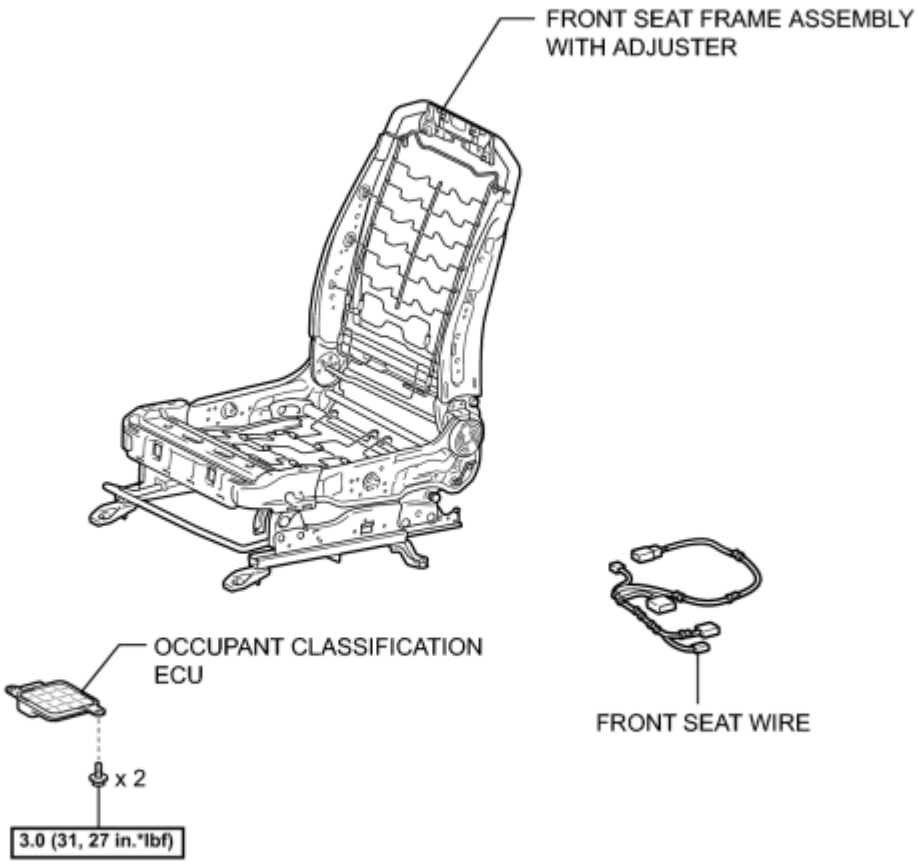

N*m (kgf*cm, ft.*lbf): Specified torque

P

Last Modified: 3-10-2010	6.4 A	**From:** 200901
Model Year: 2010	**Model:** Corolla	**Doc ID:** RM000000VBH03MX
Title: SEAT: FRONT SEAT ASSEMBLY (for Manual Seat): DISASSEMBLY (2010 Corolla)		

DISASSEMBLY

1. REMOVE SEAT ADJUSTER COVER CAP

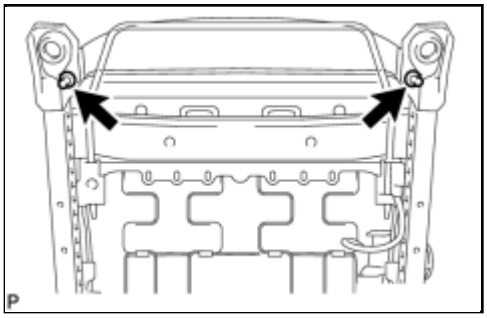

(a) Remove the 2 seat adjuster cover caps.

2. REMOVE RECLINING ADJUSTER RELEASE HANDLE

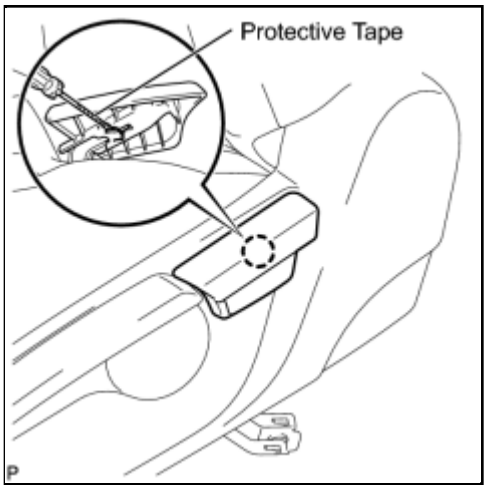

(a) Using a screwdriver wrapped with protective tape, disengage the claw and remove the reclining adjuster release handle.

3. REMOVE VERTICAL SEAT ADJUSTER KNOB CAP

(a) Using a screwdriver wrapped with protective tape, disengage the 2 claws and remove the vertical seat adjuster knob cap.



4. REMOVE VERTICAL ADJUSTING HANDLE

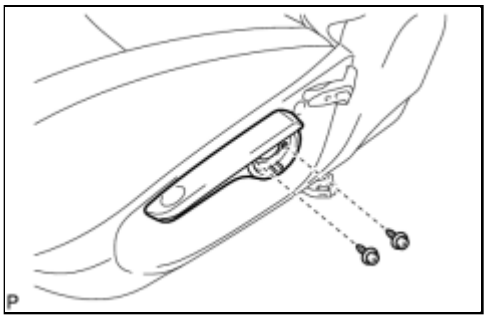

(a) Remove the 2 screws and the vertical adjusting handle.

5. REMOVE FRONT SEAT CUSHION SHIELD

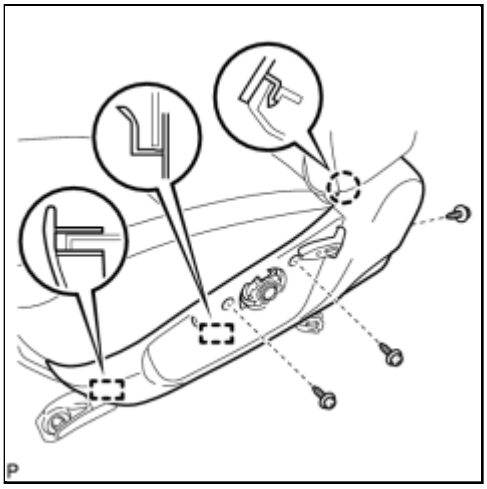

(a) Remove the 3 screws.

(b) Disengage the claw.

(c) Disengage the 2 guides and remove the front seat cushion shield.

6. REMOVE NO. 1 SEAT TRACK LOWER SPACER

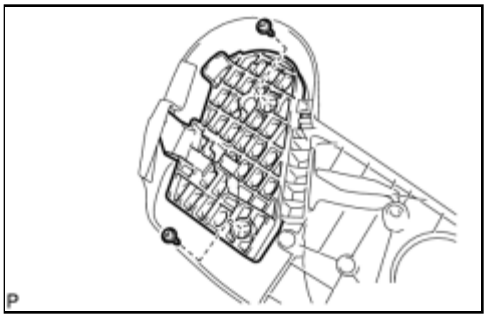

(a) Remove the 2 screws and the No. 1 seat track lower spacer.

7. REMOVE FRONT SEAT INNER BELT ASSEMBLY INFO

8. REMOVE FRONT SEAT CUSHION INNER SHIELD



(a) Remove the screw.

(b) Disengage the claw.

(c) Separate the guide and remove the front seat cushion inner shield as shown in the illustration.

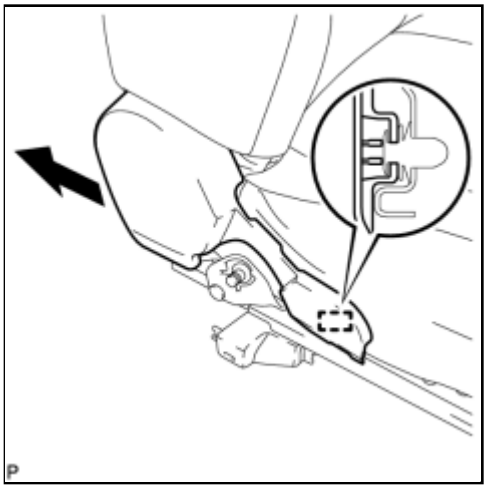

9. REMOVE NO. 2 SEAT TRACK LOWER SPACER

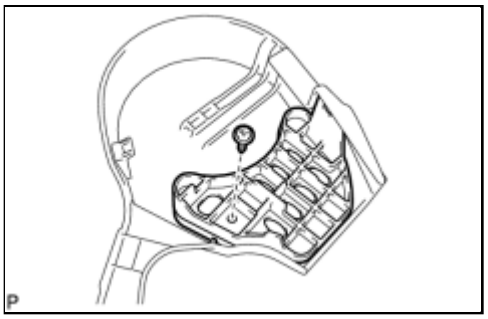

(a) Remove the screw and the No. 2 seat track lower spacer.

10. REMOVE FRONT SEAT CUSHION COVER WITH PAD

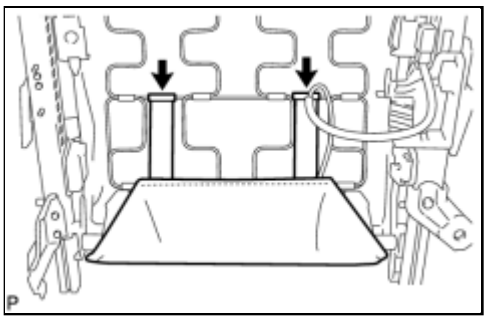

(a) Disengage the 2 hooks.

(b) Remove the 2 hog rings.

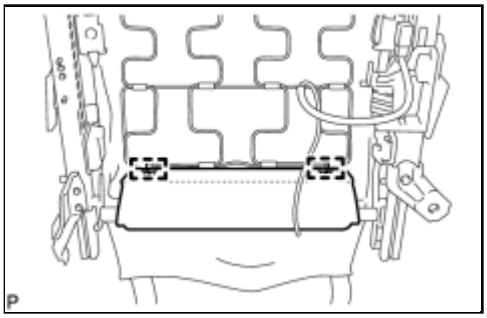

(c) Using a clip remover, remove the 2 clips.

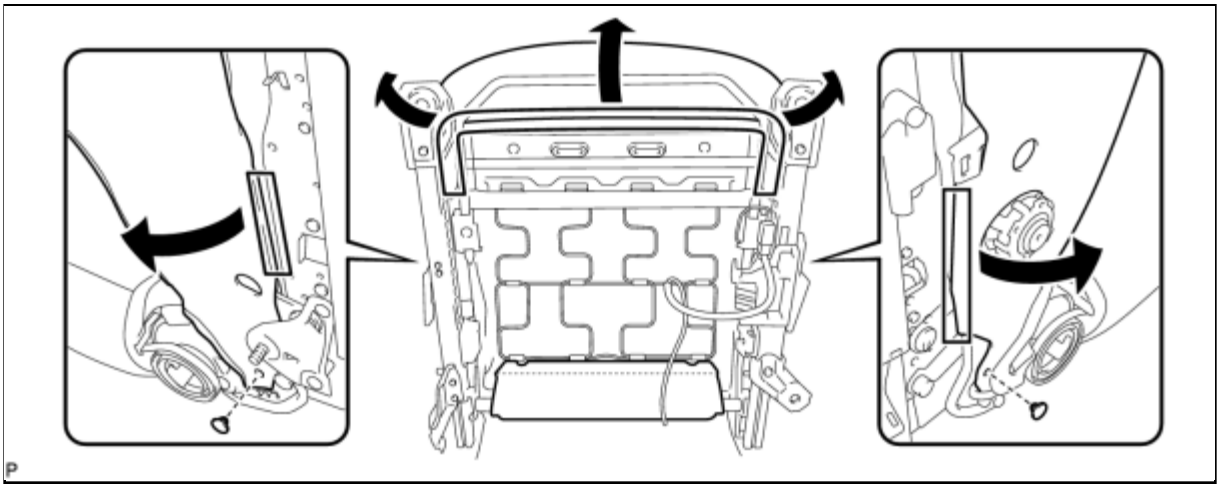

(d) Disengage the hooks and remove the front seat cushion cover with pad as shown in the illustration.

11. REMOVE FRONT SEAT CUSHION EDGE PROTECTOR

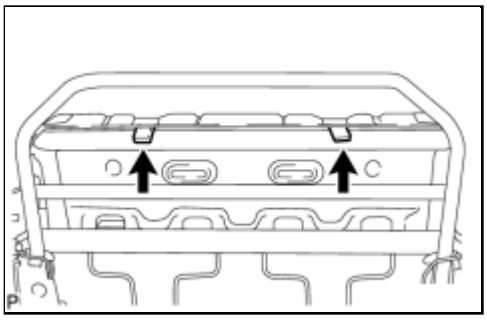

(a) Remove the 2 front seat cushion edge protectors.

12. REMOVE SEPARATE TYPE FRONT SEAT CUSHION COVER

(a) Remove the 10 hog rings and the separate type front seat cushion cover.

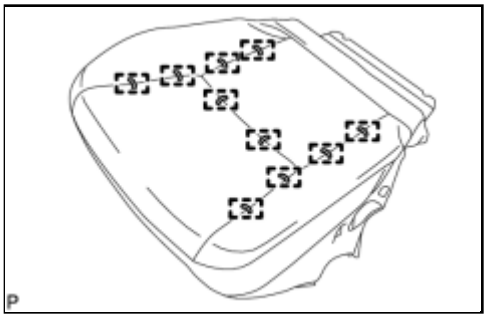

13. REMOVE FRONT SEAT CUSHION HEATER ASSEMBLY (w/ Seat Heater System)

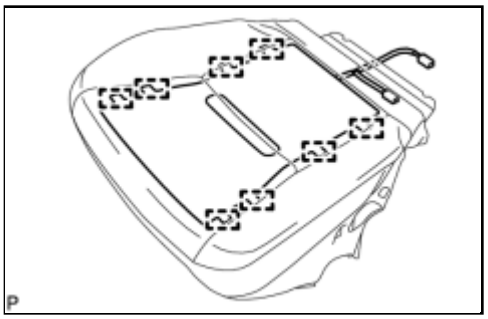

(a) Cut off the 8 tack pins and remove the front seat cushion heater assembly.

14. REMOVE FRONT SEATBACK COVER WITH PAD

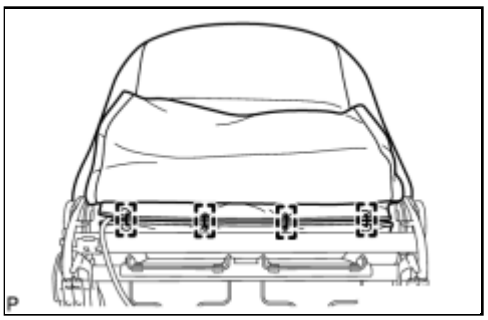

(a) Remove the 4 hog rings.

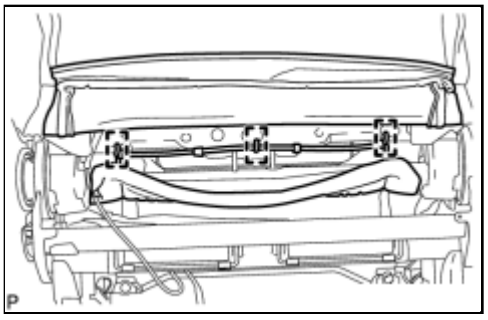

(b) Remove the 3 hog rings.

(c) w/ Front Seat Side Airbag:

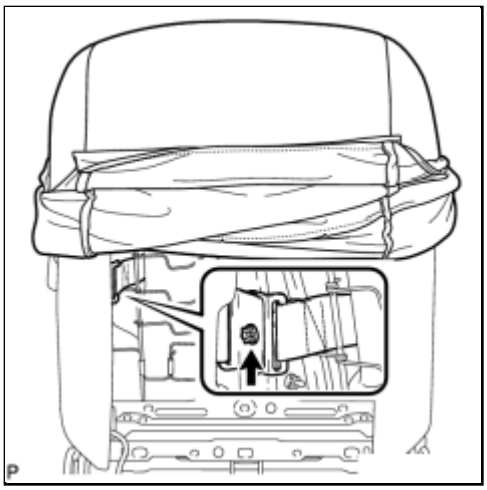

(1) Turn back the separate type front seatback cover to remove the nut, and separate the bracket of the separate type front seatback cover.

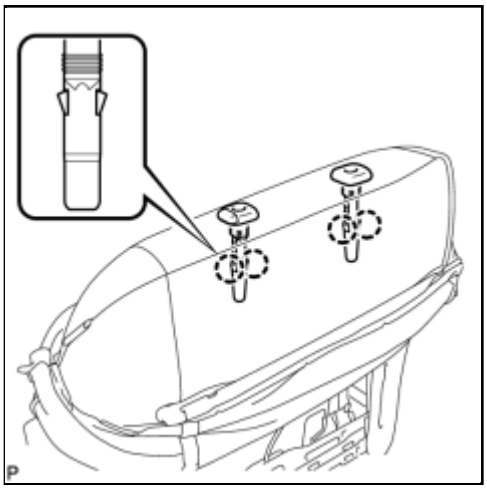

(d) Disengage the 4 claws and remove the 2 front seat headrest supports.

(e) Remove the front seatback cover with pad from the front seat frame assembly with adjuster.

15. REMOVE SEPARATE TYPE FRONT SEATBACK COVER

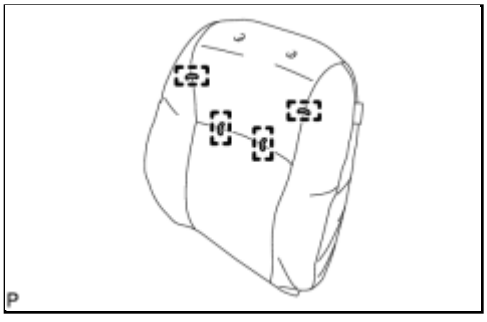

(a) Remove the 4 hog rings and the separate type front seatback cover.

16. REMOVE FRONT SEATBACK HEATER ASSEMBLY (w/ Seat Heater System)

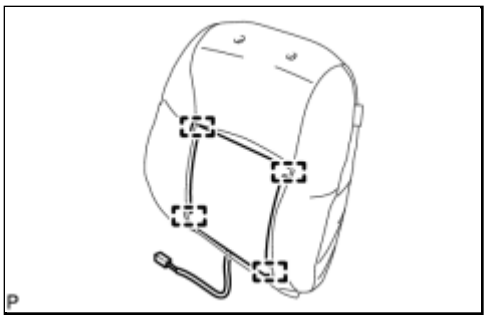

(a) Cut off the 4 tack pins and remove the front seatback heater assembly.

17. REMOVE LUMBAR SUPPORT PLATE (for TMMC, NUMMI Made)

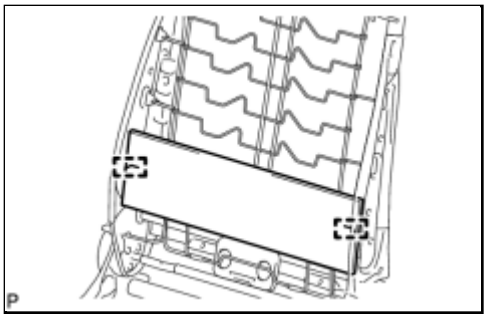

(a) Disengage the 2 hooks and remove the lumbar support plate.

18. REMOVE RECLINING ADJUSTER INSIDE COVER LH

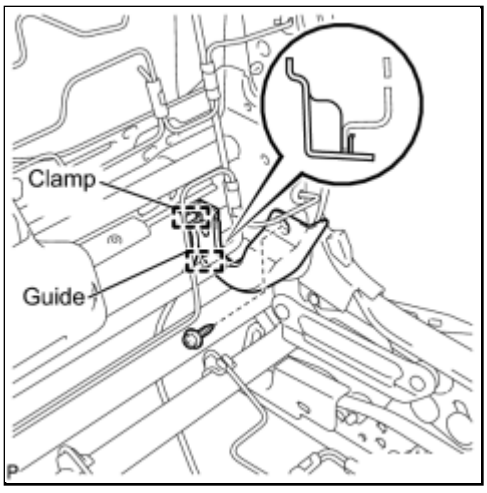

(a) Remove the screw.

(b) Disengage the guide.

(c) w/ Front Seat Side Airbag:

(1) Disengage the clamp and remove the reclining adjuster inside cover LH.

19. REMOVE RECLINING ADJUSTER INSIDE COVER LH

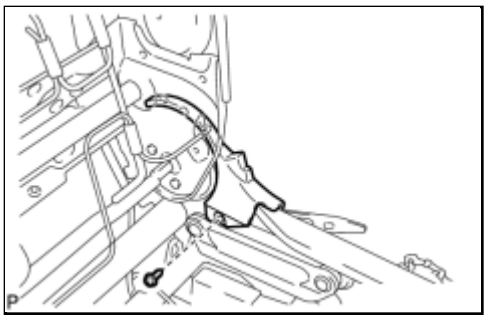

(a) Remove the screw and the reclining adjuster inside cover LH.

20. REMOVE RECLINING ADJUSTER INSIDE COVER RH

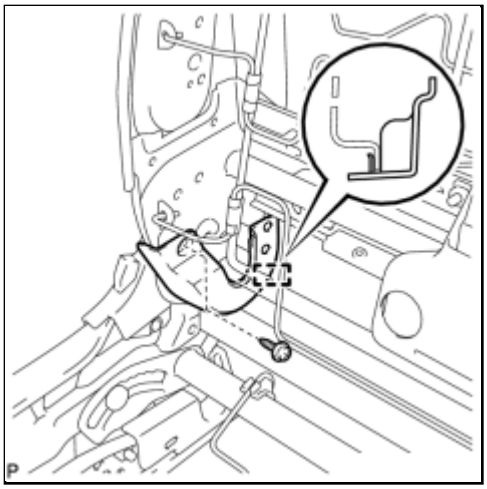

(a) Remove the screw.

(b) Disengage the guide and remove the reclining adjuster inside cover RH.

21. REMOVE RECLINING ADJUSTER INSIDE COVER RH

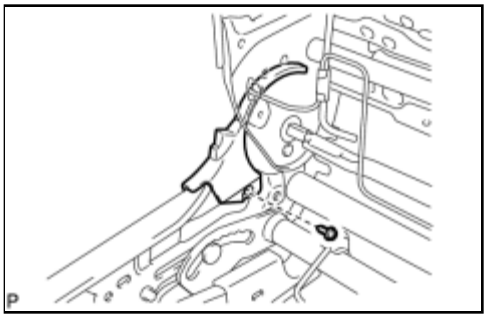

(a) Remove the screw and the reclining adjuster inside cover RH.

22. REMOVE FRONT SEAT LOWER CUSHION SHIELD LH

(a) Disengage the claw and remove the front seat lower cushion shield LH as shown in the illustration.

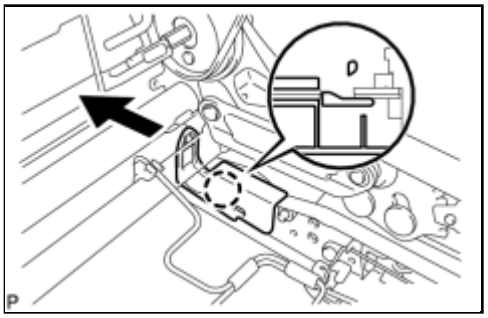

23. REMOVE FRONT SEAT LOWER CUSHION SHIELD RH

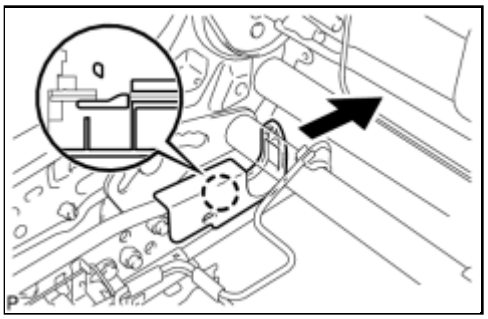

(a) Disengage the claw and remove the front seat lower cushion shield RH as shown in the illustration.

24. REMOVE SEAT TRACK CONTROL CABLE CLAMP

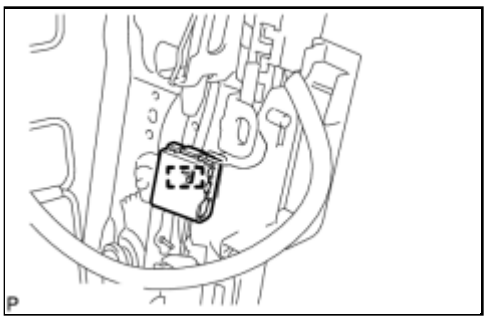

(a) Disengage the clamp and remove the seat track control cable clamp.

25. REMOVE FRONT SEAT OUTER TRACK BRACKET COVER

(a) Disengage the claw as shown in the illustration.

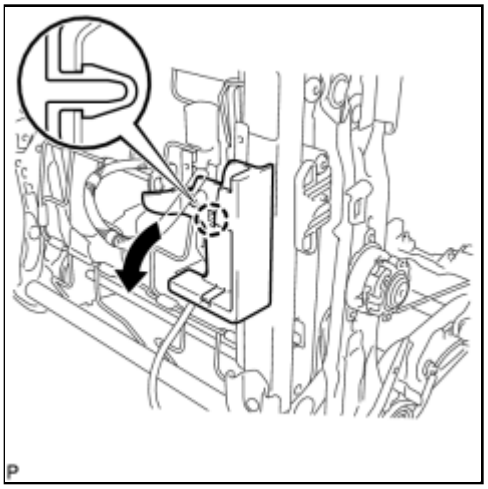

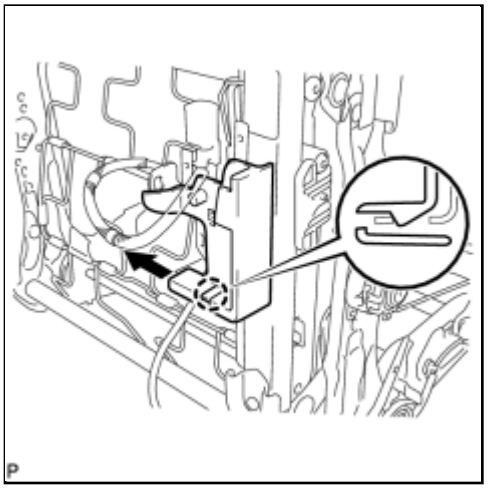

(b) Disengage the claw and remove the front seat outer track bracket cover as shown in the illustration.

26. REMOVE ACTIVE HEADREST UPPER UNIT (w/ Active Headrest)

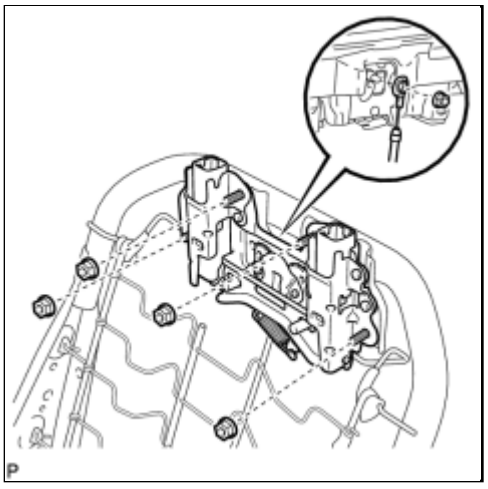

(a) Remove the nut and disconnect the cable from the active headrest upper unit as shown in the illustration.

(b) Remove the 4 nuts and the active headrest upper unit.

27. REMOVE ACTIVE HEADREST LOWER UNIT (w/ Active Headrest)

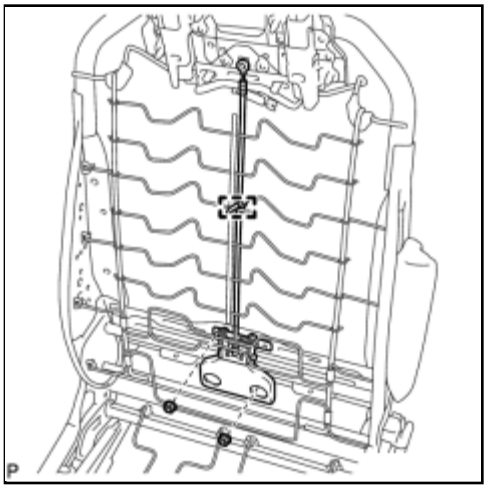

(a) Remove the clamp.

(b) Remove the 2 nuts and the active headrest lower unit.

28. REMOVE OCCUPANT CLASSIFICATION ECU (for Front Passenger Side) INFO

29. REMOVE SEAT POSITION SENSOR INFO

30. REMOVE FRONT SEAT WIRE (for Front Passenger Side)

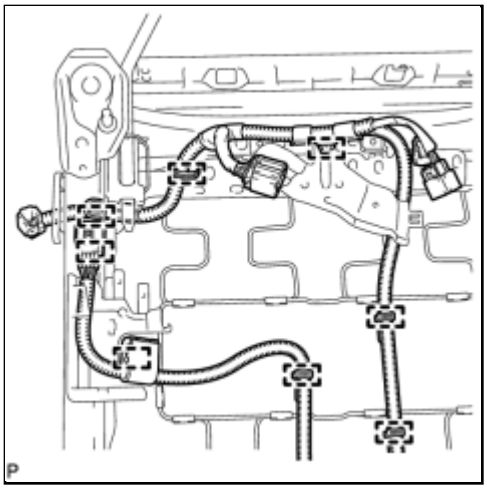

(a) Disengage the 8 clamps and remove the front seat wire.

Last Modified: 3-10-2010	6.4 D	**From:** 200901
Model Year: 2010	**Model:** Corolla	**Doc ID:** RM000001R8S012X
Title: SEAT: FRONT POWER SEAT CONTROL SYSTEM: OPERATION CHECK (2010 Corolla)		

OPERATION CHECK

1. CHECK POWER SEAT FUNCTION

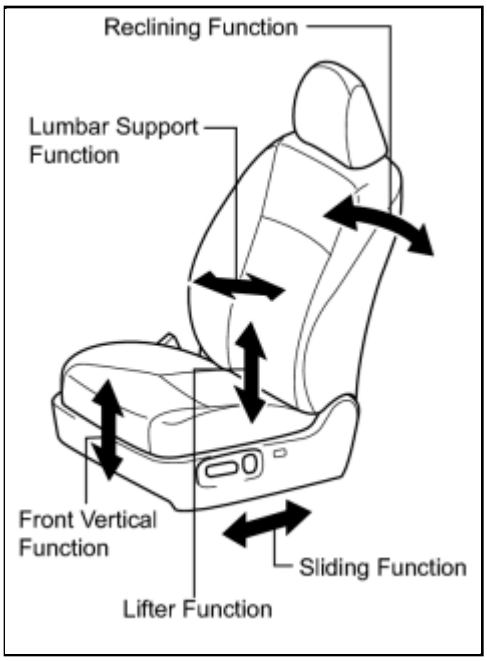

(a) Check the basic functions.

(1) Operate the power seat switches and check that the following functions work:

- Sliding
- Reclining
- Front vertical
- Lumbar support
- Lifter

Last Modified: 3-10-2010	6.4 A	**From:** 200901
Model Year: 2010	**Model:** Corolla	**Doc ID:** RM000000VBI03RX
Title: SEAT: FRONT SEAT ASSEMBLY (for Manual Seat): REASSEMBLY (2010 Corolla)		

REASSEMBLY

1. INSTALL FRONT SEAT WIRE (for Front Passenger Side)

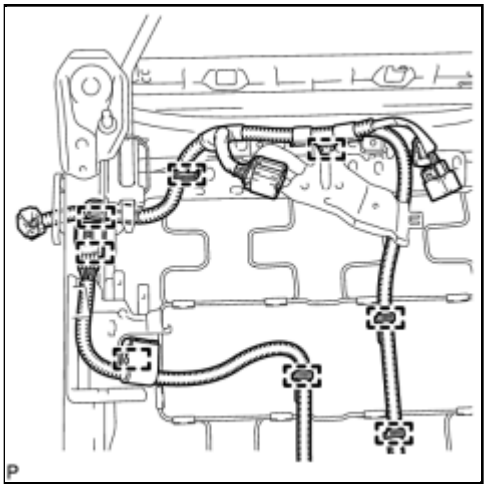

(a) Engage the 8 clamps and install the front seat wire.

2. INSTALL SEAT POSITION SENSOR INFO

3. INSTALL OCCUPANT CLASSIFICATION ECU (for Front Passenger Side) INFO

4. INSTALL ACTIVE HEADREST LOWER UNIT (w/ Active Headrest)

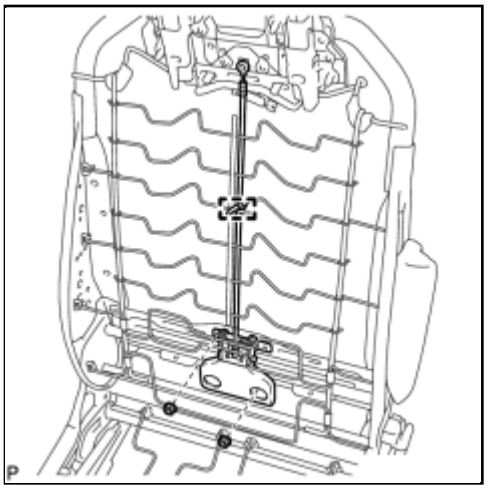

(a) Install the 2 nuts.

Torque: 5.0 N·m (51 kgf·cm, 44in·lbf)

(b) Install the active headrest lower unit with the new clamp.

5. INSTALL ACTIVE HEADREST UPPER UNIT (w/ Active Headrest)

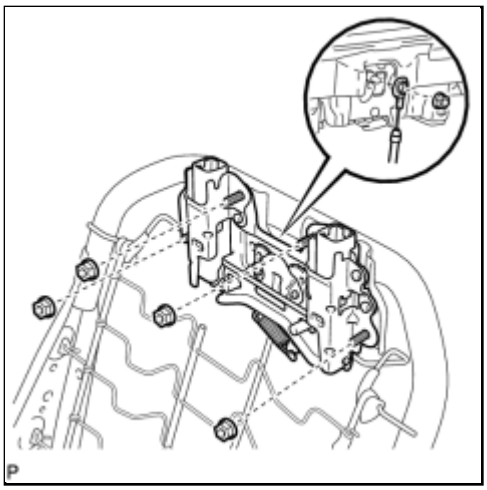

(a) Install the active headrest upper unit with the 4 nuts.

Torque: 14 N·m (143 kgf·cm, 10ft·lbf)

(b) Connect the cable to the active headrest upper unit with the nut as shown in the illustration.

Torque: 5.0 N·m (51 kgf·cm, 44in·lbf)

6. INSTALL FRONT SEAT OUTER TRACK BRACKET COVER

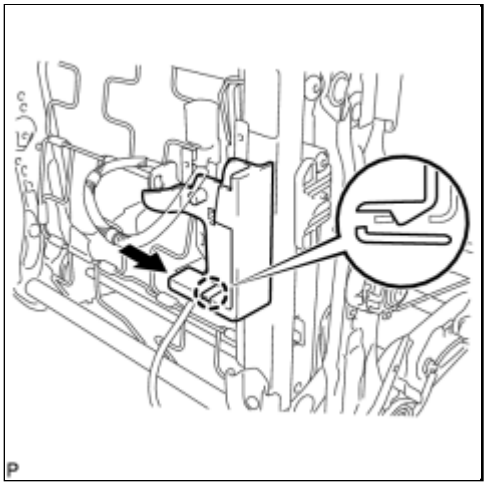

(a) Engage the claw as shown in the illustration.

(b) Engage the claw and install the front seat outer track bracket cover as shown in the illustration.

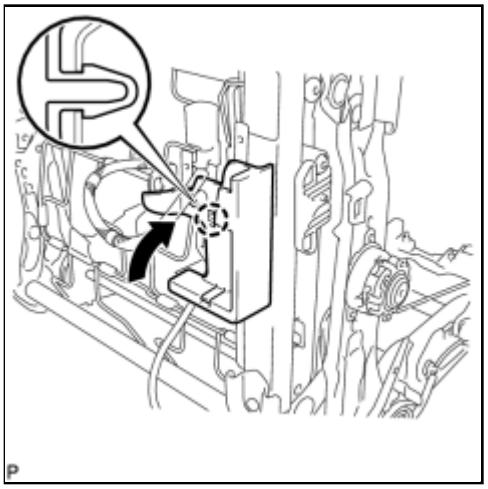

7. INSTALL SEAT TRACK CONTROL CABLE CLAMP

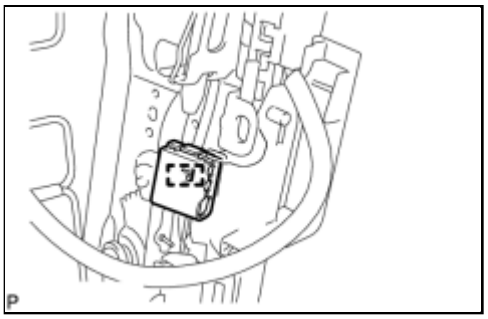

(a) Engage the clamp and install the seat track control cable clamp.

8. INSTALL FRONT SEAT LOWER CUSHION SHIELD RH

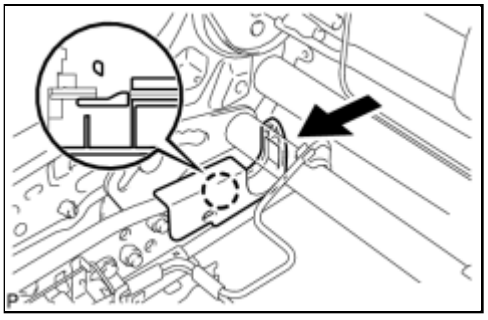

(a) Engage the claw and install the front seat lower cushion shield RH as shown in the illustration.

9. INSTALL FRONT SEAT LOWER CUSHION SHIELD LH

(a) Engage the claw and install the front seat lower cushion shield LH as shown in the illustration.

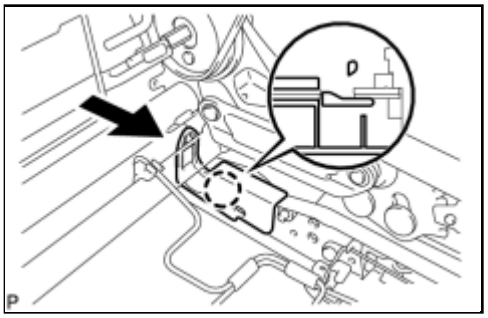

10. INSTALL RECLINING ADJUSTER INSIDE COVER RH

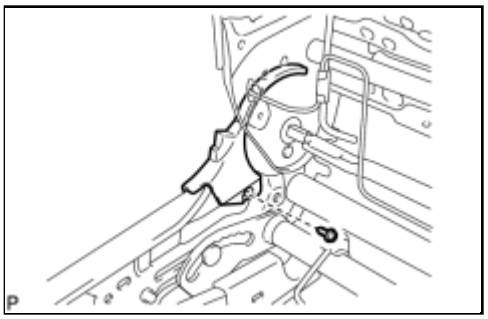

(a) Install the reclining adjuster inside cover RH with the screw.

11. INSTALL RECLINING ADJUSTER INSIDE COVER RH

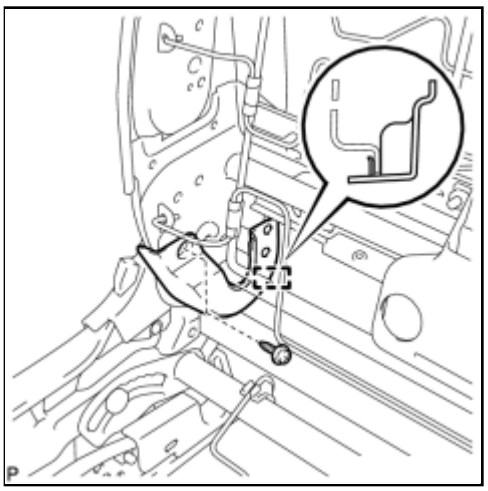

(a) Engage the guide.

(b) Install the reclining adjuster inside cover RH with the screw.

12. INSTALL RECLINING ADJUSTER INSIDE COVER LH

(a) Install the reclining adjuster inside cover LH with the screw.

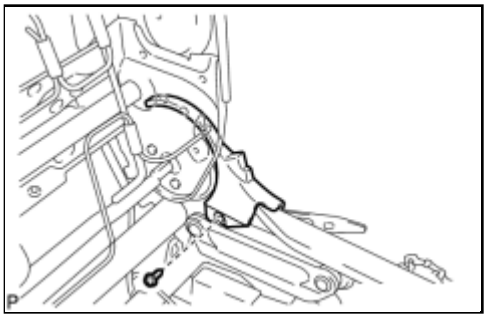

13. INSTALL RECLINING ADJUSTER INSIDE COVER LH

(a) w/ Front Seat Side Airbag:

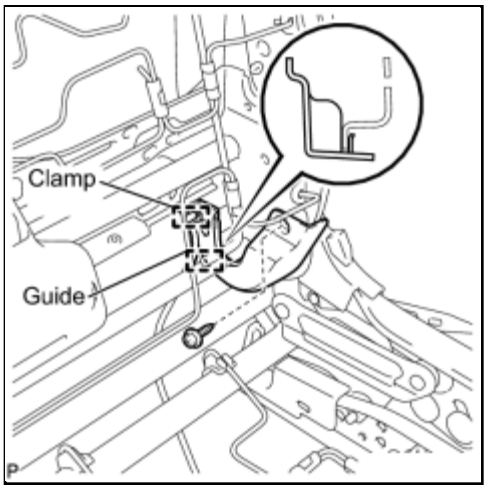

(1) Engage the clamp.

(b) Engage the guide.

(c) Install the reclining adjuster inside cover LH with the screw.

14. INSTALL LUMBAR SUPPORT PLATE (for TMMC, NUMMI Made)

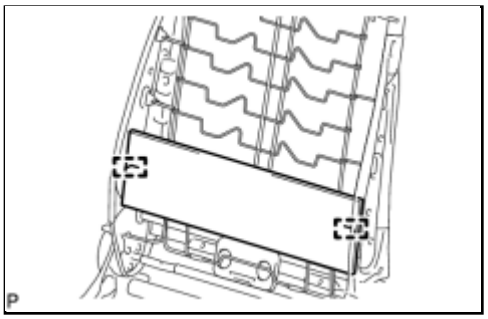

(a) Engage the 2 hooks and install the lumbar support plate.

15. INSTALL FRONT SEATBACK HEATER ASSEMBLY (w/ Seat Heater System)

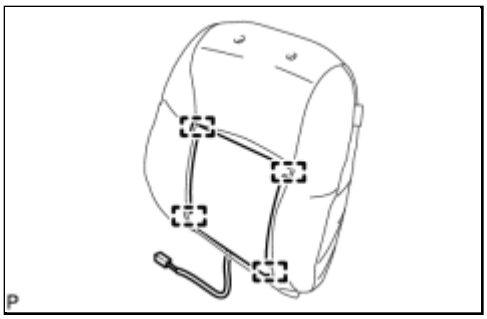

(a) Using a tacker, install the front seatback heater assembly to the end of the seatback cover with the 4 tack pins.

16. INSTALL SEPARATE TYPE FRONT SEATBACK COVER

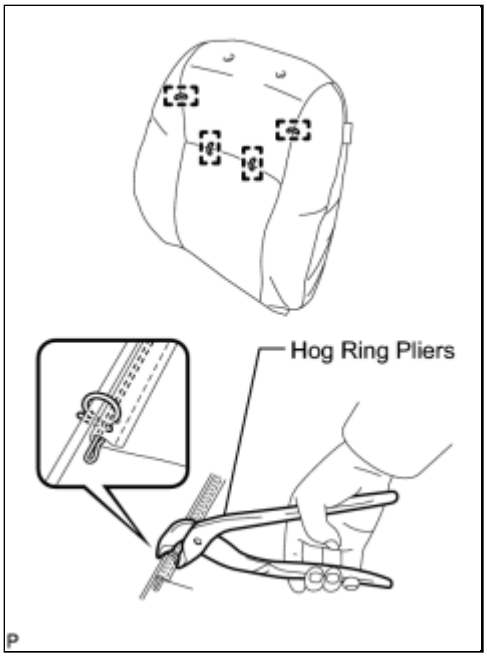

(a) Using hog ring pliers, install the separate type front seatback cover with 4 new hog rings.

NOTICE:

- Be careful not to damage the cover.
- When installing the hog rings, take care to minimize wrinkles as much as possible.

17. INSTALL FRONT SEATBACK COVER WITH PAD

(a) Temporarily install the front seatback cover with pad to the front seat frame assembly with adjuster.

(b) Engage the 4 claws and install the 2 front seat headrest supports.

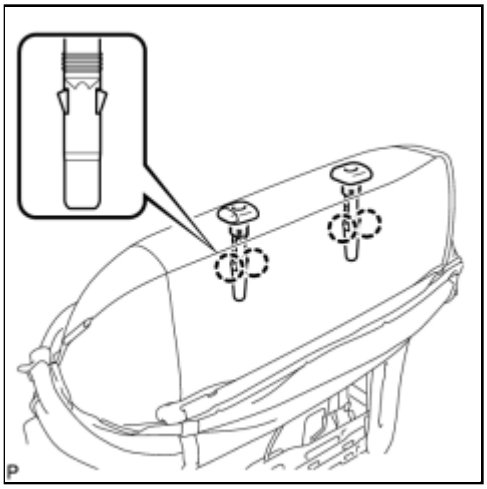

(c) w/ Front Seat Side Airbag:

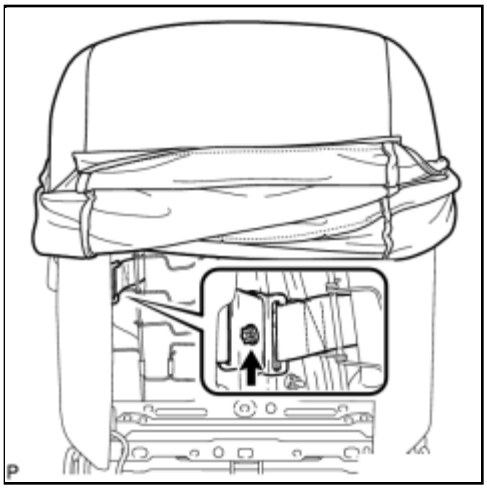

(1) Install the front seatback cover bracket with the nut.

Torque: 5.5 N·m (56 kgf·cm, 49in·lbf)

NOTICE:

- For vehicles with side airbags, the side airbags may not be activated normally unless the front seatback cover is securely installed.
- Check that the strap is not twisted after installing the bracket.
- Install the bracket securely.

(d) Using hog ring pliers, install 3 new hog rings.

NOTICE:

- Be careful not to damage the cover.
- When installing the hog rings, take care to minimize wrinkles as much as possible.

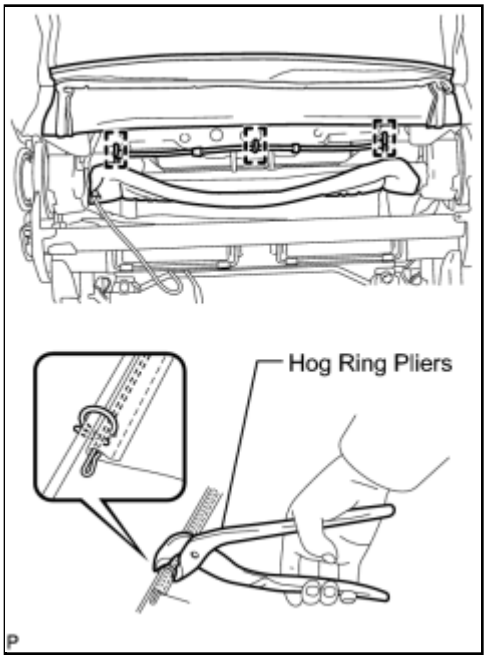

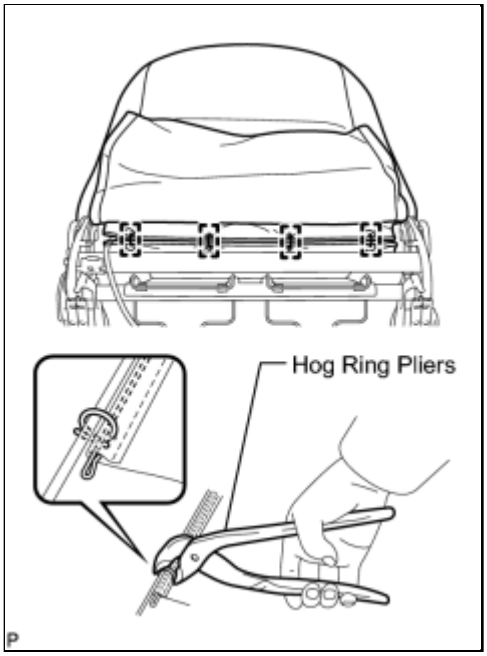

(e) Using hog ring pliers, install the front seatback cover with pad with 4 new hog rings.

NOTICE:

- Be careful not to damage the cover.
- When installing the hog rings, take care to minimize wrinkles as much as possible.

18. INSTALL FRONT SEAT CUSHION HEATER ASSEMBLY (w/ Seat Heater System)

(a) Using a tacker, install the front seat cushion heater assembly to the end of the seat cushion cover with the 8 tack pins.

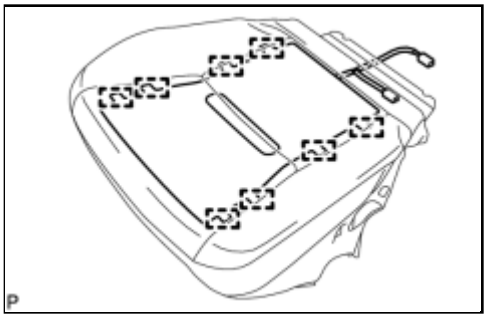

19. INSTALL SEPARATE TYPE FRONT SEAT CUSHION COVER

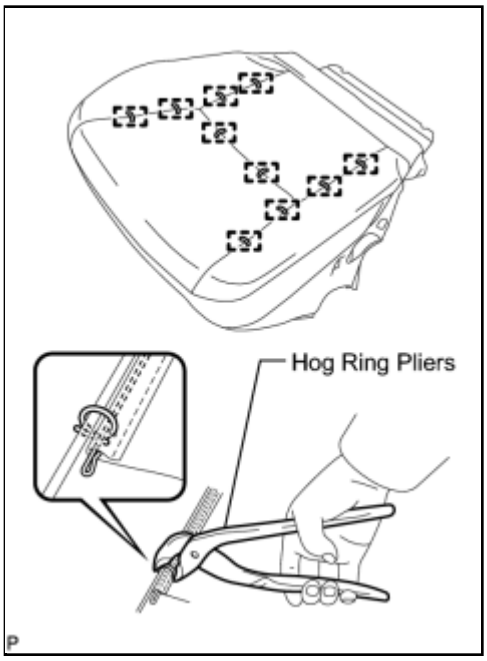

(a) Using hog ring pliers, install the separate type front seat cushion cover with 10 new hog rings.

NOTICE:

- Be careful not to damage the cover.
- When installing the hog rings, take care to minimize wrinkles as much as possible.

20. INSTALL FRONT SEAT CUSHION EDGE PROTECTOR

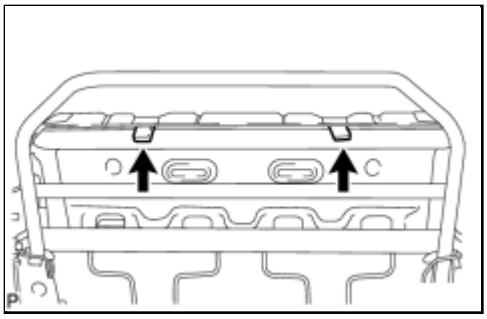

(a) Install the 2 front seat cushion edge protectors.

21. INSTALL FRONT SEAT CUSHION COVER WITH PAD

(a) Temporarily install the front seat cushion cover with pad to the front seat frame assembly with adjuster.

(b) Engage the hooks.

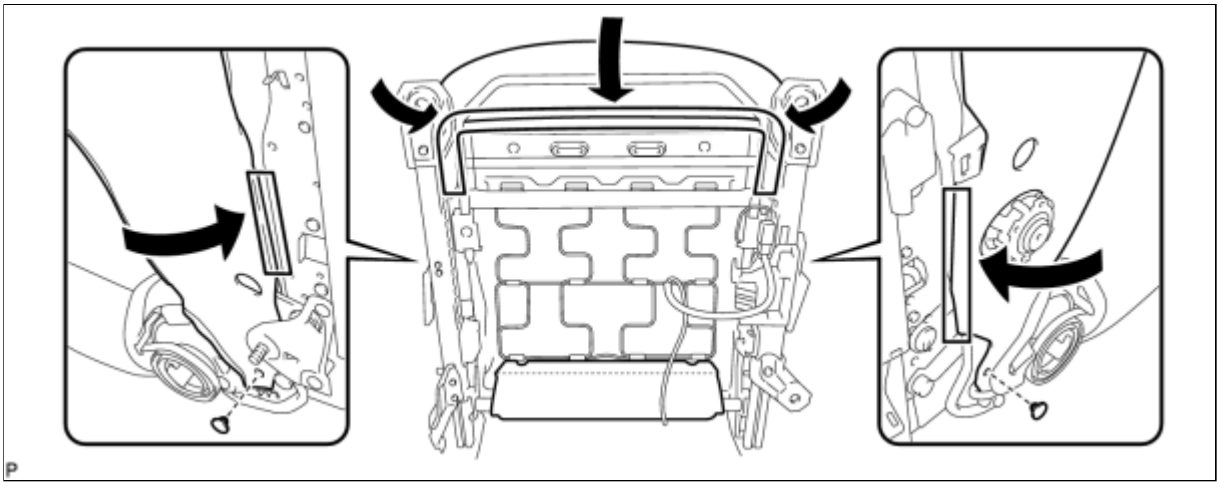

(c) Install the front seat cushion cover with pad with the 2 clips.

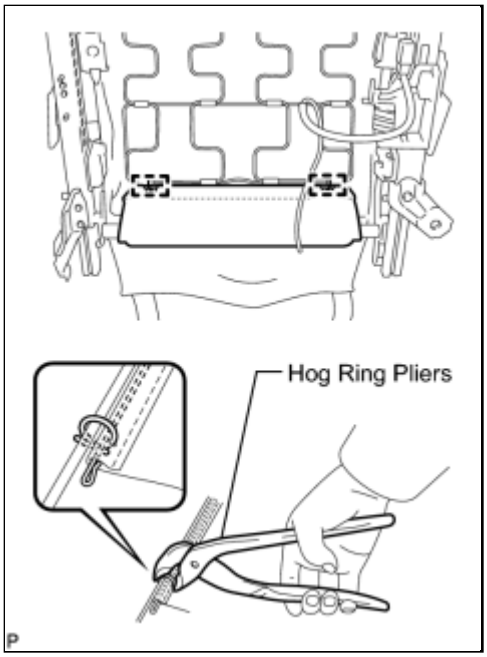

(d) Using hog ring pliers, install 2 new hog rings.

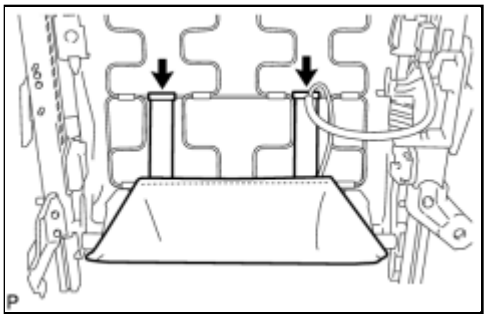

(e) Engage the 2 hooks.

22. INSTALL NO. 2 SEAT TRACK LOWER SPACER

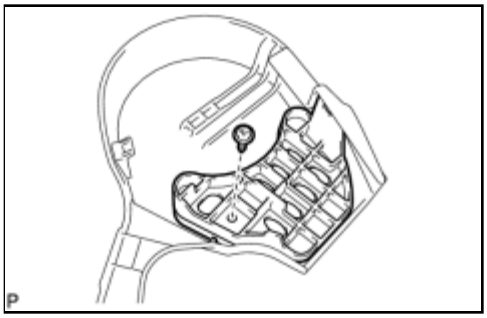

(a) Install the No. 2 seat track lower spacer with the screw.

23. INSTALL FRONT SEAT CUSHION INNER SHIELD

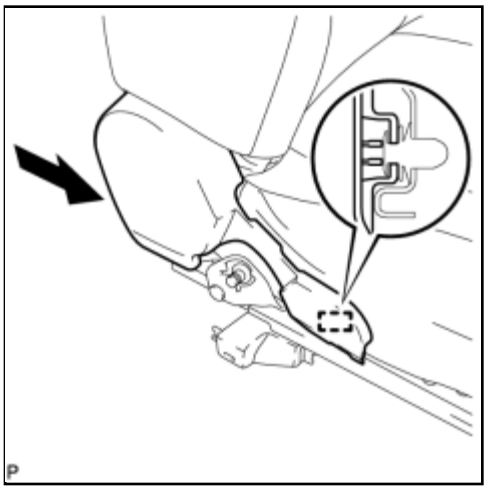

(a) Insert the guide and temporarily install the front seat cushion inner shield as shown in the illustration.

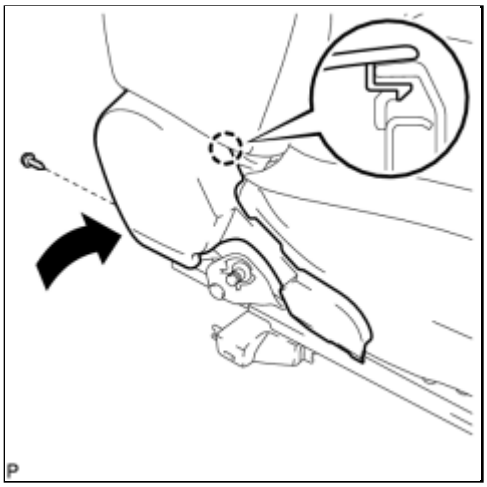

(b) Engage the claw.

(c) Install the front seat cushion inner shield with the screw.

24. INSTALL FRONT SEAT INNER BELT ASSEMBLY INFO

25. INSTALL NO. 1 SEAT TRACK LOWER SPACER

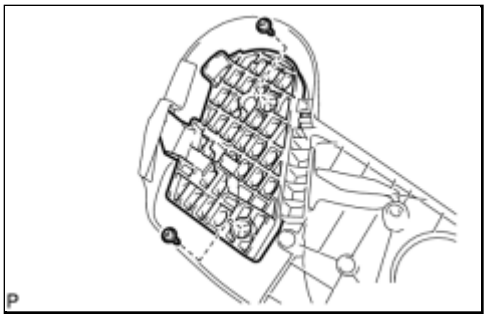

(a) Install the No. 1 seat track lower spacer with the 2 screws.

26. INSTALL FRONT SEAT CUSHION SHIELD

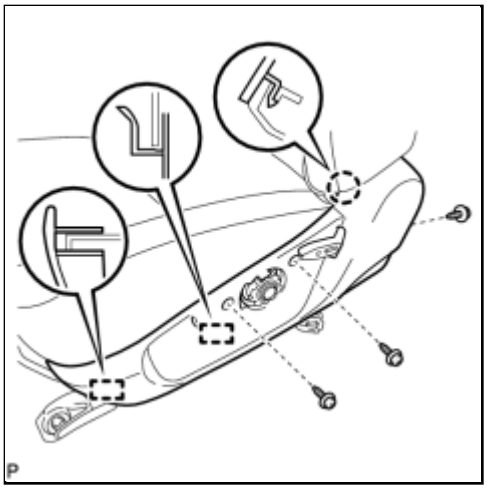

(a) Engage the 2 guides.

(b) Engage the claw.

(c) Install the front seat cushion shield with the 3 screws.

27. INSTALL VERTICAL ADJUSTING HANDLE

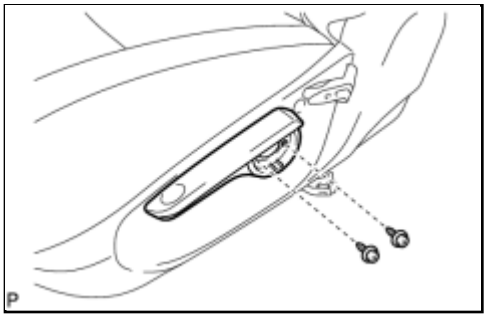

(a) Install the vertical adjusting handle with the 2 screws.

28. INSTALL VERTICAL SEAT ADJUSTER KNOB CAP

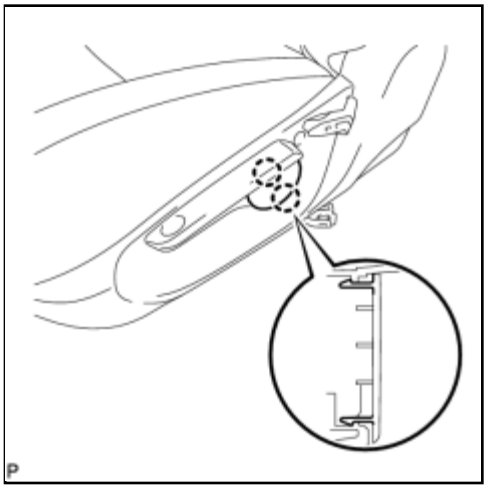

(a) Engage the 2 claws and install the vertical adjuster knob cap.

29. INSTALL RECLINING ADJUSTER RELEASE HANDLE

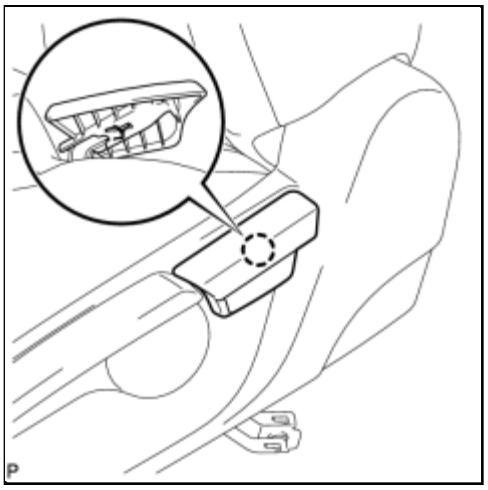

(a) Engage the claw and install the reclining adjuster release handle.

30. INSTALL SEAT ADJUSTER COVER CAP

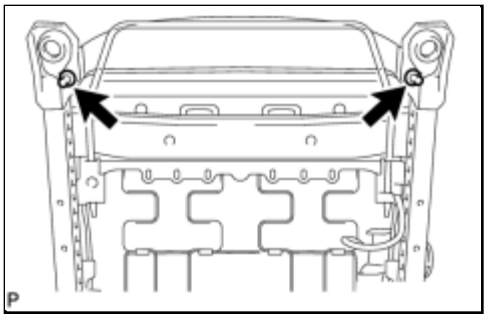

(a) Install the 2 seat adjuster cover caps.

Last Modified: 3-10-2010	6.4 T	**From:** 200901
Model Year: 2010	**Model:** Corolla	**Doc ID:** RM000000X0201XX
Title: SEAT: FRONT POWER SEAT CONTROL SYSTEM: PROBLEM SYMPTOMS TABLE (2010 Corolla)		

PROBLEM SYMPTOMS TABLE

HINT:

- Use the table below to help determine the cause of problem symptoms. If multiple suspected areas are listed, the potential causes of the symptoms are listed in order of probability in the "Suspected Area" column of the table. Check each symptom by checking the suspected areas in the order they are listed. Replace parts as necessary.

Front Power Seat Control System

SYMPTOM	SUSPECTED AREA	SEE PAGE
Power seat does not operate (slide, lifter, reclining, front vertical).	PWR SEAT fuse	-
	Power seat switch	INFO
	Wire harness or connector	-
Only slide operation function does not operate.	Power seat switch	INFO
	Front seat assembly (slide motor)	INFO
	Wire harness or connector	-
Only lifter operation function does not operate.	Power seat switch	INFO
	Front seat assembly (lifter motor)	INFO
	Wire harness or connector	-
Only reclining operation function does not operate.	Power seat switch	INFO
	Front seat assembly (reclining motor)	INFO
	Wire harness or connector	-
Only front vertical operation does not operate.	Power seat switch	INFO
	Front seat assembly (front vertical motor)	INFO
	Wire harness or connector	-
Only lumbar support operation function does not operate.	Front power seat lumbar switch	INFO
	Lumbar support adjuster assembly	INFO
	Wire harness or connector	-

Last Modified: 3-10-2010	6.4 A	**From:** 200901
Model Year: 2010	**Model:** Corolla	**Doc ID:** RM000000Z8U02UX
Title: SEAT: FRONT SEAT ASSEMBLY (for Manual Seat): REMOVAL (2010 Corolla)		

REMOVAL

1. PRECAUTION

CAUTION:

Be sure to read Precaution thoroughly before servicing INFO .

NOTICE:

When replacing the occupant classification ECU, perform registration INFO .

2. DISCONNECT CABLE FROM NEGATIVE BATTERY TERMINAL (w/ Front Seat Side Airbag)

CAUTION:

Wait at least 90 seconds after disconnecting the cable from the negative (-) battery terminal to disable the SRS system INFO .

3. REMOVE FRONT SEAT HEADREST ASSEMBLY

4. REMOVE OUTER SEAT TRACK COVER

(a) Lift up the seat track adjusting handle and move the seat to the foremost position.

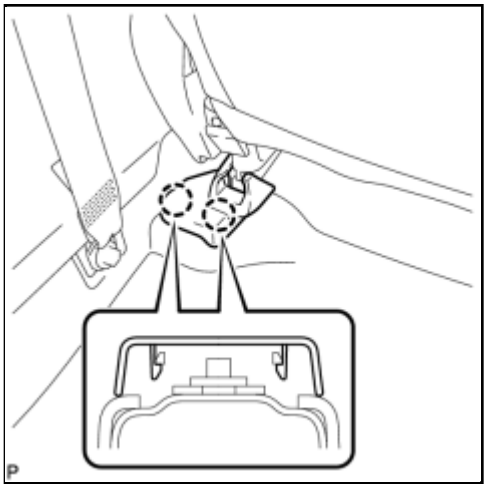

(b) Disengage the 2 claws and remove the outer seat track cover.

5. REMOVE INNER SEAT TRACK COVER

(a) Disengage the 2 claws and remove the inner seat track cover.

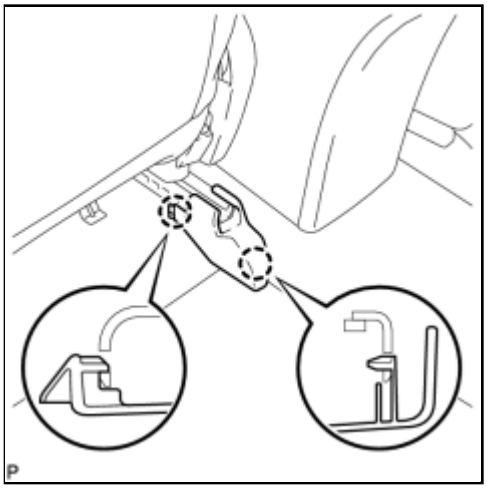

6. REMOVE FRONT SEAT ASSEMBLY



(a) Remove the 2 bolts on the rear side of the seat.

(b) Lift up the seat track adjusting handle and move the seat to the rearmost position.

(c) Remove the 2 bolts on the front side of the seat.

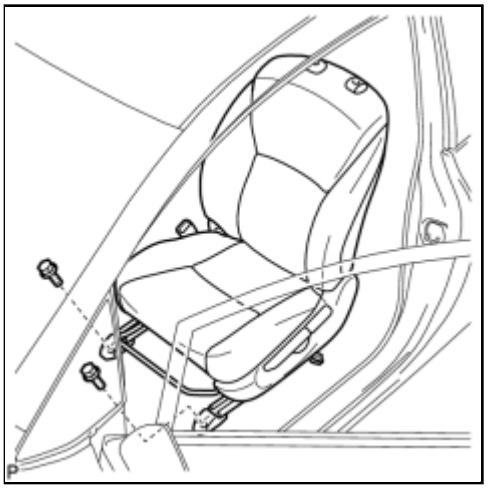

(d) Lift up the seat track adjusting handle and move the seat to the center position. Also, operate the reclining adjuster release handle and move the seatback to the upright position.

(e) Disconnect the connectors under the front seat assembly.

(f) Remove the front seat assembly.

NOTICE:

Be careful not to damage the vehicle body.

Last Modified: 3-10-2010	6.4 A	**From:** 200901
Model Year: 2010	**Model:** Corolla	**Doc ID:** RM000000ARA00EX
Title: SEAT: FRONT SEAT ASSEMBLY (for Power Seat): DISASSEMBLY (2010 Corolla)		

DISASSEMBLY

1. REMOVE SEAT ADJUSTER COVER CAP

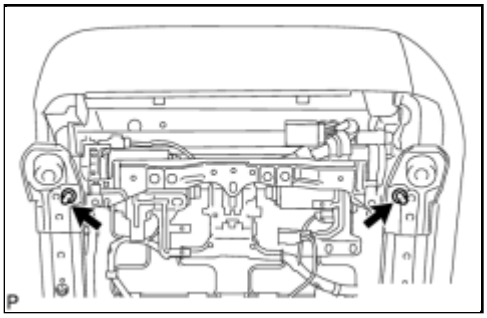

(a) Remove the 2 seat adjuster cover caps.

2. REMOVE RECLINING POWER SEAT SWITCH KNOB

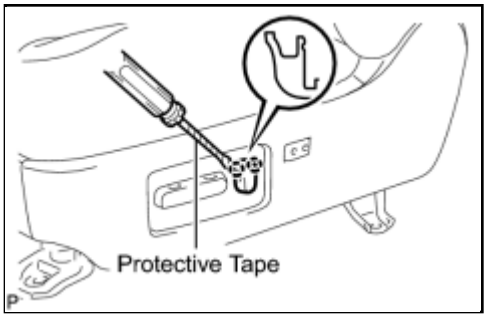

(a) Using a screwdriver with the tip taped, disengage the 2 claws and remove the reclining power seat switch knob.

3. REMOVE SLIDE AND VERTICAL POWER SEAT SWITCH KNOB

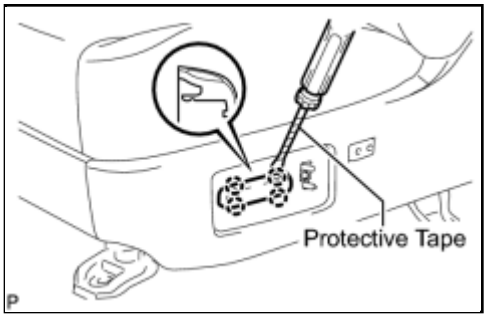

(a) Using a screwdriver with the tip taped, disengage the 4 claws and remove the slide and vertical power seat switch knob.

4. REMOVE FRONT SEAT CUSHION SHIELD ASSEMBLY

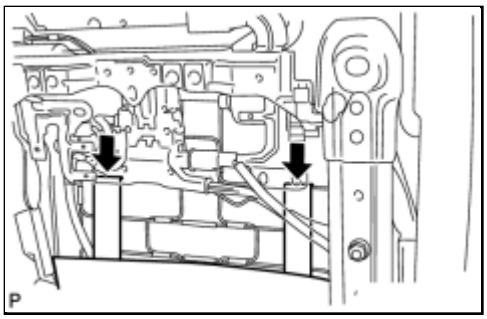

(a) Remove the 2 hooks.

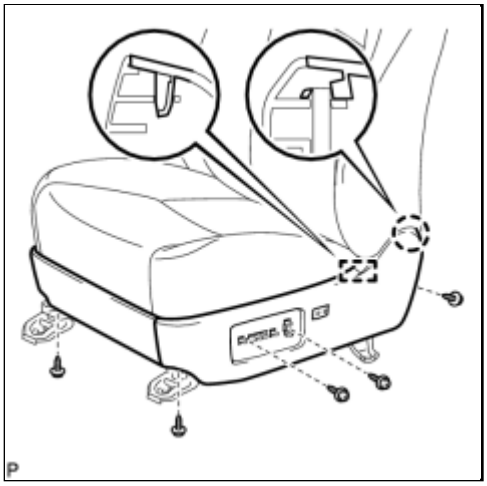

(b) Remove the 5 screws.

(c) Disengage the claw and the guide and remove the front seat cushion shield assembly.

5. REMOVE NO. 1 FRONT SEAT CUSHION INNER SHIELD

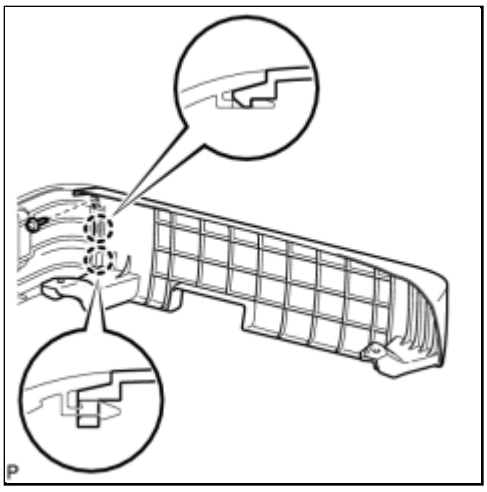

(a) Remove the screw.

(b) Disengage the 2 claws and remove the No. 1 front seat cushion inner shield.

6. REMOVE LUMBAR SWITCH

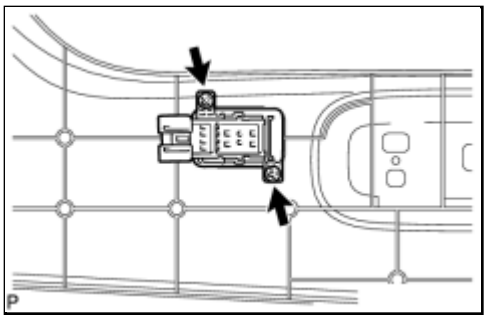

(a) Remove the 2 screws and the lumbar switch.

7. REMOVE NO. 1 SEAT TRACK LOWER SPACER

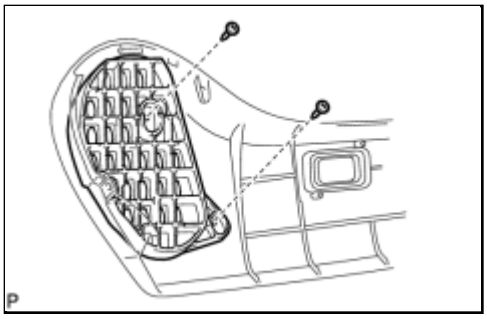

(a) Remove the 2 screws and the No. 1 seat track lower spacer.

8. REMOVE POWER SEAT SWITCH

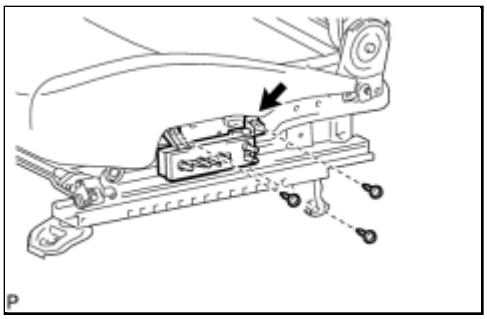

(a) Remove the 3 screws.

(b) Disconnect the connector and remove the power seat switch.

9. REMOVE FRONT SEAT INNER BELT ASSEMBLY INFO

10. REMOVE FRONT SEAT CUSHION INNER SHIELD

(a) Remove the screw.

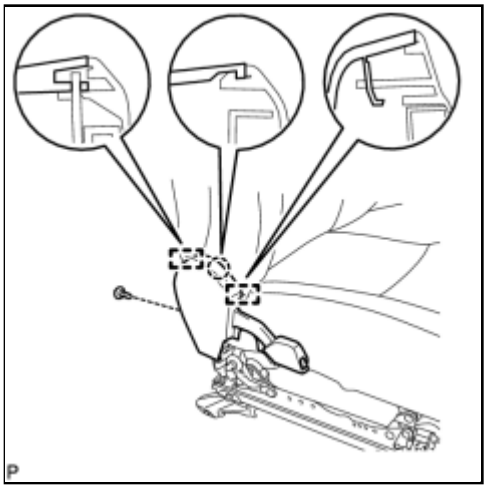

(b) Disengage the claw and the 2 guides.

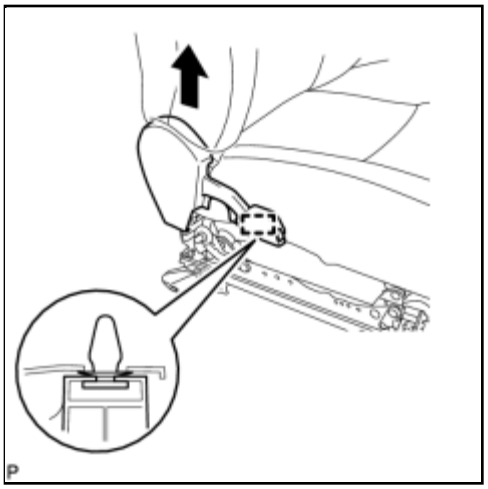

(c) Separate the guide and remove the front seat cushion inner shield as shown in the illustration.

11. REMOVE NO. 2 SEAT TRACK LOWER SPACER

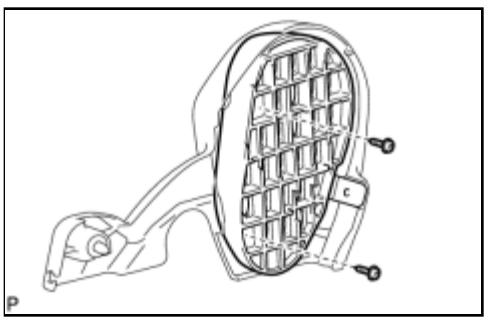

(a) Remove the 2 screws and the No. 2 seat track lower spacer.

12. REMOVE FRONT SEAT CUSHION COVER WITH PAD

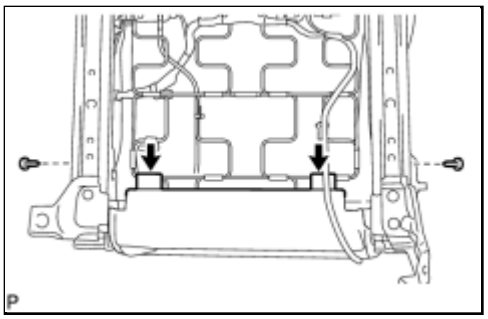

(a) Remove the 2 clips.

(b) Disengage the 2 hooks.

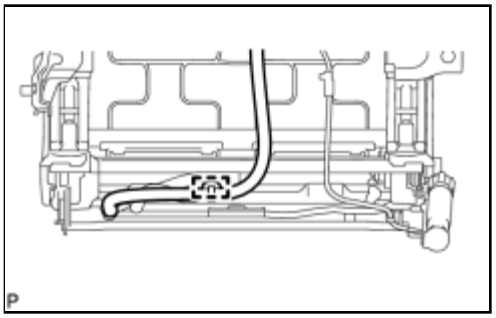

(c) Disengage the clamp.

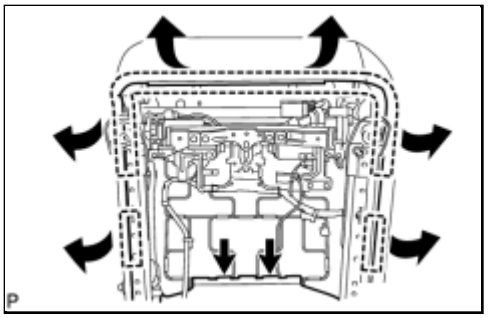

(d) Disengage the hooks and the front seat cushion cover with pad.

13. REMOVE FRONT SEAT CUSHION EDGE PROTECTOR

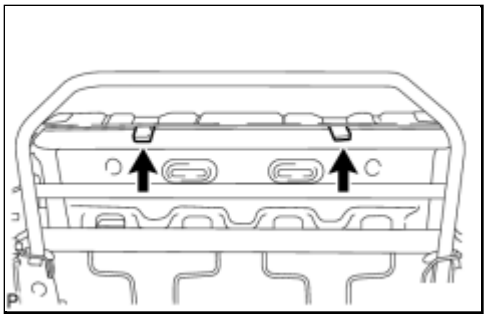

(a) Remove the 2 front seat cushion edge protectors.

14. REMOVE SEPARATE TYPE FRONT SEAT CUSHION COVER

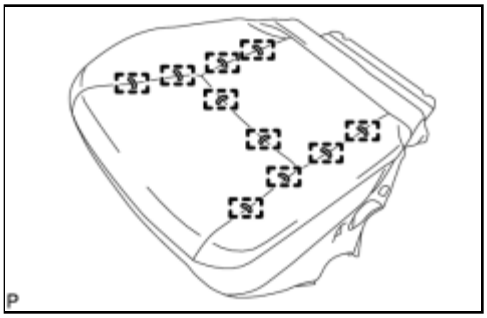

(a) Remove the 10 hog rings and the separate type front seat cushion cover.

15. REMOVE FRONT SEATBACK COVER WITH PAD

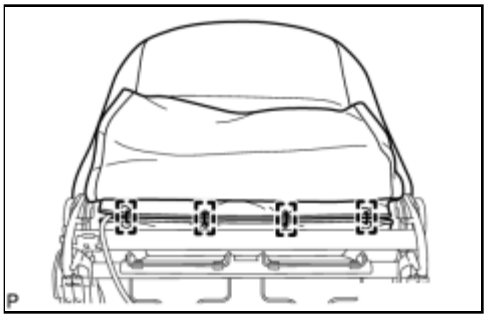

(a) Remove the 4 hog rings.

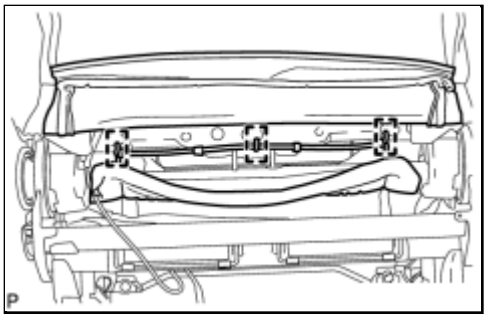

(b) Remove the 3 hog rings.

(c) Turn back the separate type front seatback cover to remove the nut, and separate the bracket of the separate type front seatback cover RH.

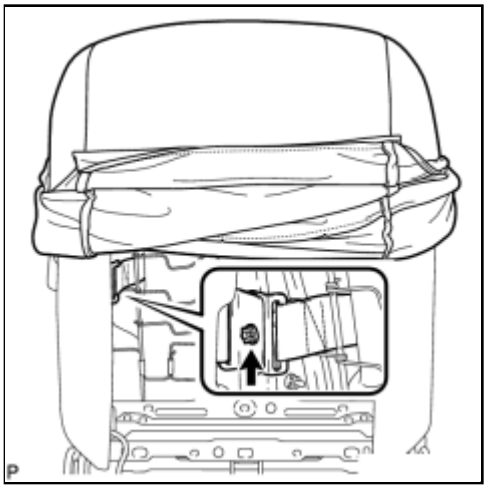

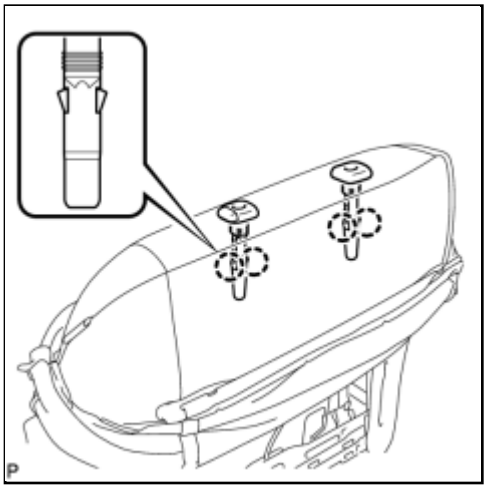

(d) Disengage the 4 claws and remove the 2 front seat headrest supports.

(e) Remove the separate type front seatback cover with pad from the front seat frame assembly with adjuster.

16. REMOVE SEPARATE TYPE FRONT SEATBACK COVER

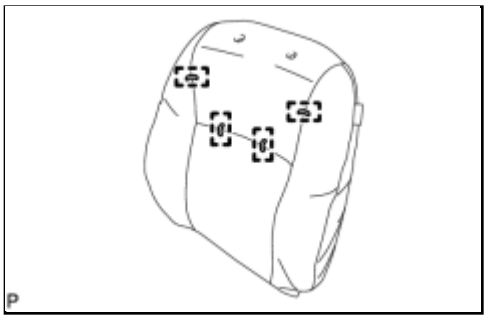

(a) Remove the 4 hog rings and the separate type front seatback cover.

17. REMOVE LUMBAR SUPPORT ADJUSTER ASSEMBLY

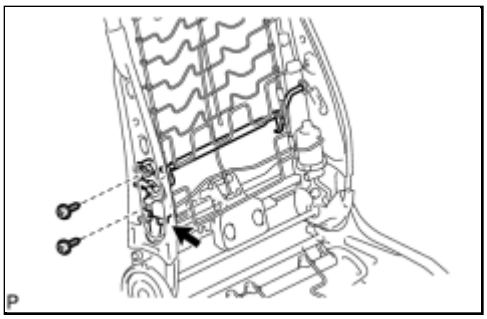

(a) Disconnect the connector.

(b) Remove the 2 screws and the lumbar support adjuster assembly.

18. REMOVE RECLINING ADJUSTER INSIDE COVER LH

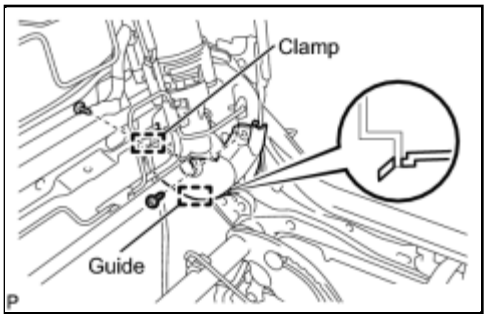

(a) Remove the 2 screws.

(b) Disengage the guide.

(c) Disengage the clamp and remove the reclining adjuster inside cover LH.

19. REMOVE RECLINING ADJUSTER INSIDE COVER LH

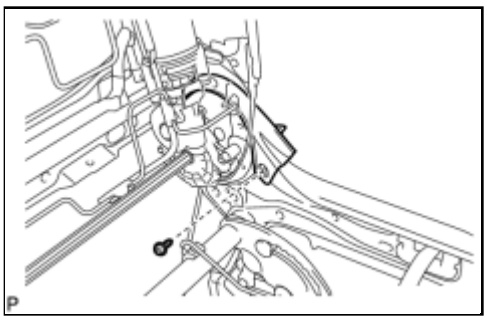

(a) Remove the screw and the reclining adjuster inside cover LH.

20. REMOVE RECLINING ADJUSTER INSIDE COVER RH

(a) Remove the 2 screws.

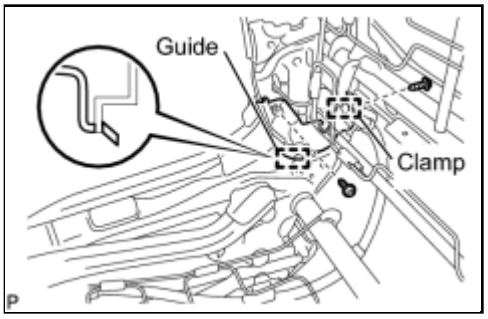

(b) Disengage the guide.

(c) Disengage the clamp and remove the reclining adjuster inside cover RH.

21. REMOVE RECLINING ADJUSTER INSIDE COVER RH

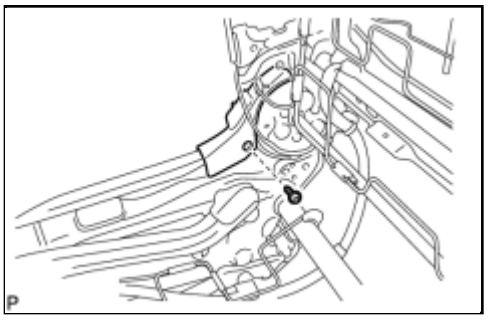

(a) Remove the screw and the reclining adjuster inside cover RH.

22. REMOVE FRONT SEAT LOWER CUSHION SHIELD LH

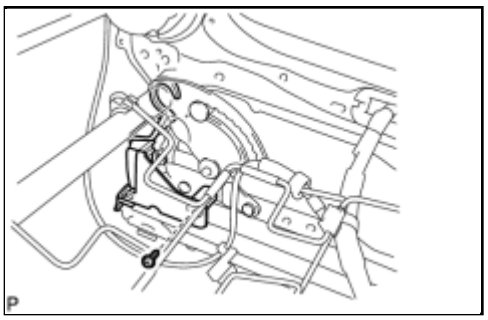

(a) Remove the screw and the front seat lower cushion shield LH.

23. REMOVE FRONT SEAT LOWER CUSHION SHIELD RH

(a) Remove the screw and the front seat lower cushion shield RH.

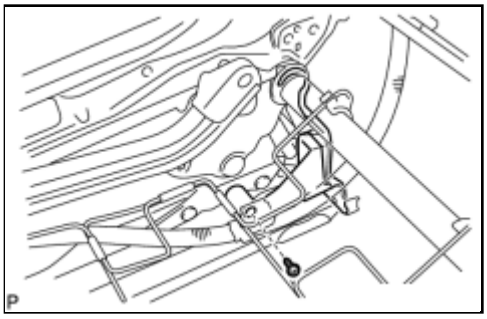

24. REMOVE ACTIVE HEADREST UPPER UNIT

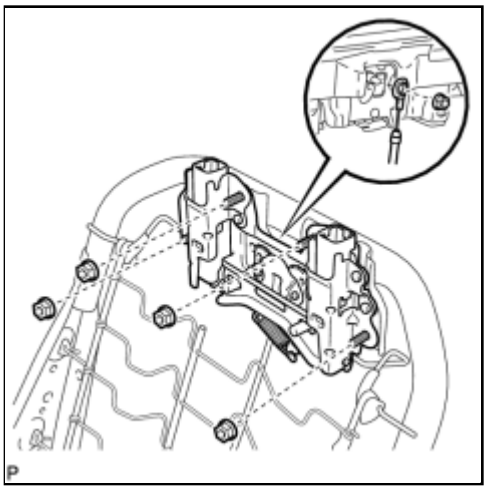

(a) Remove the nut and disconnect the cable from the active headrest upper unit as shown in the illustration.

(b) Remove the 4 nuts and the active headrest upper unit.

25. REMOVE ACTIVE HEADREST LOWER UNIT

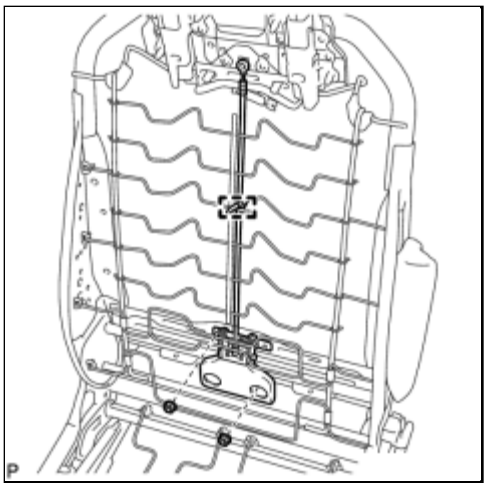

(a) Remove the clamp.

(b) Remove the 2 nuts and the active headrest lower unit.

26. REMOVE SEAT POSITION SENSOR

27. REMOVE FRONT SEAT WIRE

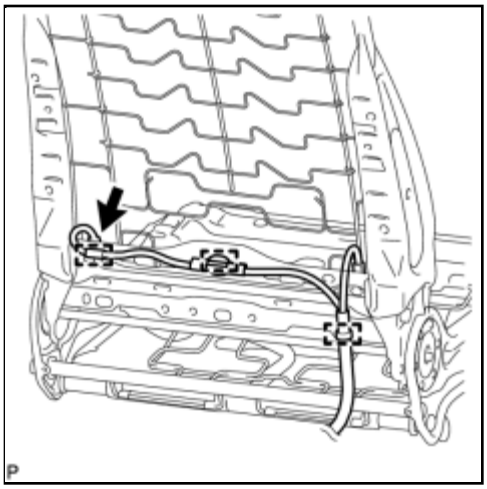

(a) Disconnect the connector.

(b) Disengage the 3 clamps.

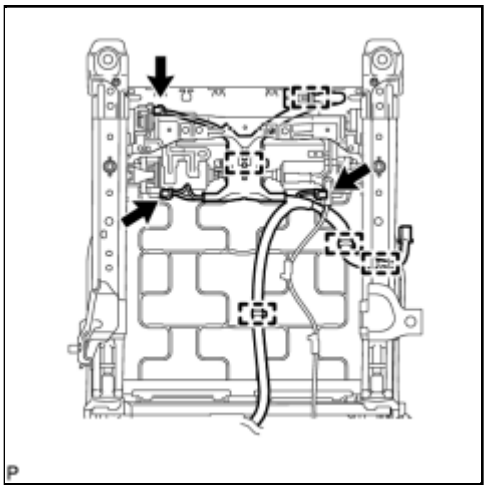

(c) Disconnect the 3 connectors.

(d) Disengage the 5 clamps and remove the front seat wire.

Last Modified: 3-10-2010	6.4 A	**From:** 200901
Model Year: 2010	**Model:** Corolla	**Doc ID:** RM000000Z8T03CX
Title: SEAT: FRONT SEAT ASSEMBLY (for Manual Seat): INSTALLATION (2010 Corolla)		

INSTALLATION

1. INSTALL FRONT SEAT ASSEMBLY

(a) Place the front seat assembly in the cabin.

NOTICE:

Be careful not to damage the vehicle body.

(b) Connect the connectors under the seat.

(c) Temporarily install the front seat assembly with the 4 bolts.

(d) Lift up the seat track adjusting handle and move the seat to the rearmost position.

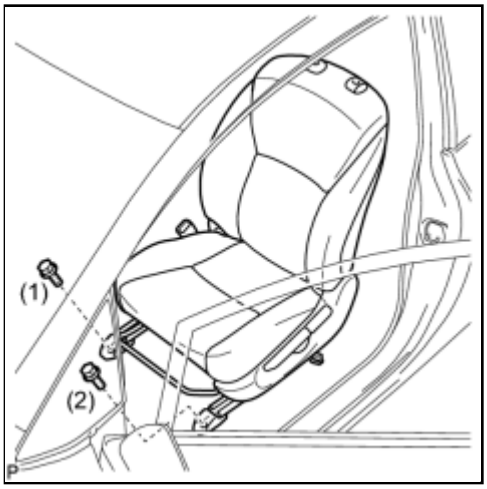

(e) Tighten the 2 bolts on the front side of the seat.

Torque: 37 N·m (377 kgf·cm, 27ft·lbf)

HINT:

Tighten the bolts in the order indicated in the illustration.

(f) Lift up the seat track adjusting handle and move the seat to the foremost position.

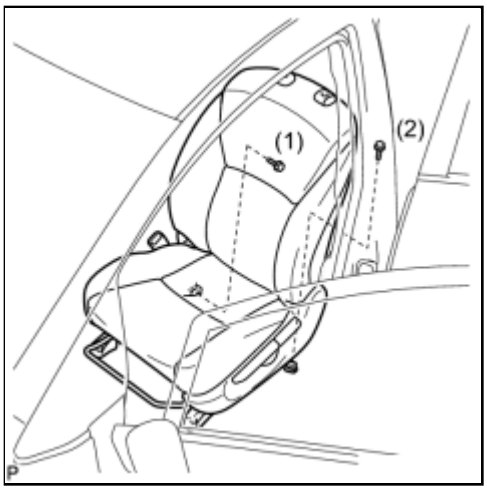

(g) Tighten the 2 bolts on the rear side of the seat.

Torque: 37 N·m (377 kgf·cm, 27ft·lbf)

HINT:

Tighten the bolts in the order indicated in the illustration.

2. INSPECT FRONT SEAT SLIDE ADJUSTER LOCK

(a) While sliding the front seat, check that the left and right adjusters move together smoothly and lock simultaneously.

If the seat adjusters do not lock simultaneously, loosen the bolts securing the seat to adjust the adjuster position.

3. INSTALL INNER SEAT TRACK COVER

(a) Lift up the seat track adjusting handle and move the seat to the rearmost position.

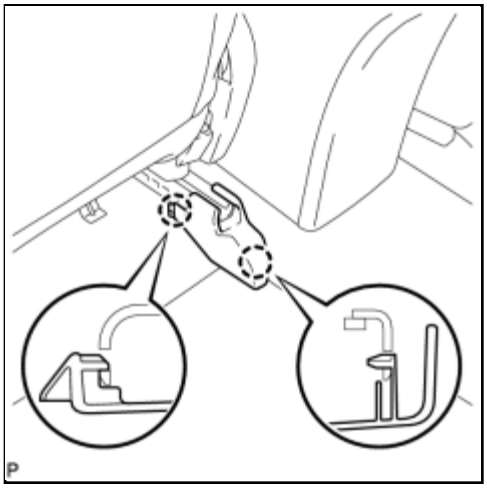

(b) Engage the 2 claws and install the inner seat track cover.

4. INSTALL OUTER SEAT TRACK COVER

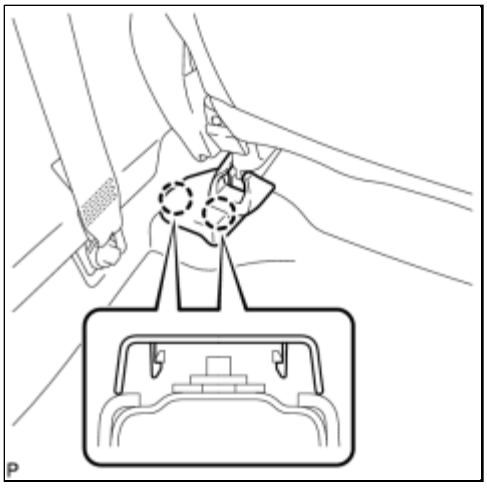

(a) Engage the 2 claws and install the outer seat track cover.

5. INSTALL FRONT SEAT HEADREST ASSEMBLY

6. CONNECT CABLE TO NEGATIVE BATTERY TERMINAL (w/ Front Seat Side Airbag)

7. PERFORM REGISTRATION

HINT:

If the occupant classification ECU has been replaced, perform registration INFO .

8. ZERO POINT CALIBRATION AND SENSITIVITY CHECK

HINT:

If the occupant classification ECU has been replaced, perform zero point calibration and sensitivity check INFO .

9. INSPECT SRS WARNING LIGHT (w/ Front Seat Side Airbag)

HINT:

Inspect the SRS warning light INFO .

Last Modified: 3-10-2010	6.4 A	**From:** 200901
Model Year: 2010	**Model:** Corolla	**Doc ID:** RM000000ARB00EX
Title: SEAT: FRONT SEAT ASSEMBLY (for Power Seat): REASSEMBLY (2010 Corolla)		

REASSEMBLY

1. INSTALL FRONT SEAT WIRE

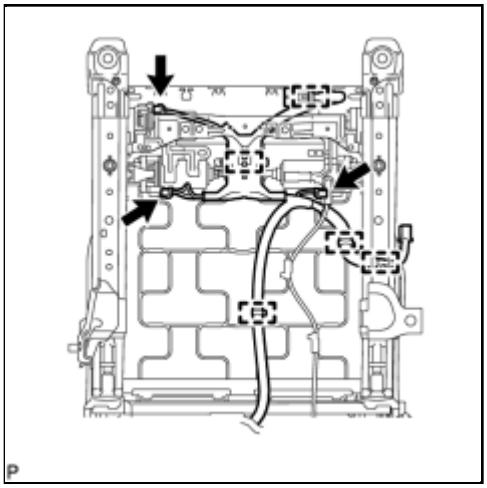

(a) Engage the 5 clamps.

(b) Connect the 3 connectors.

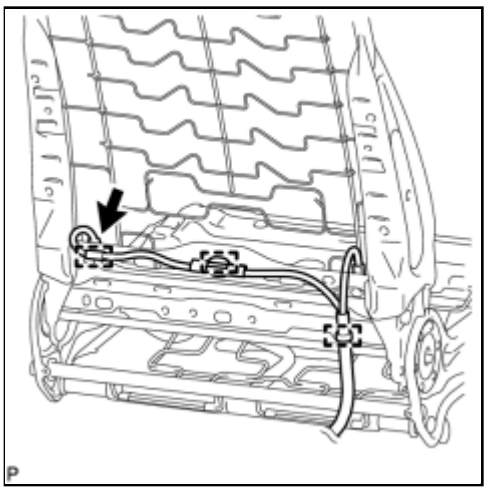

(c) Engage the 3 clamps and install the front seat wire.

(d) Connect the connector.

2. INSTALL SEAT POSITION SENSOR

3. INSTALL ACTIVE HEADREST LOWER UNIT

(a) Install the 2 nuts.

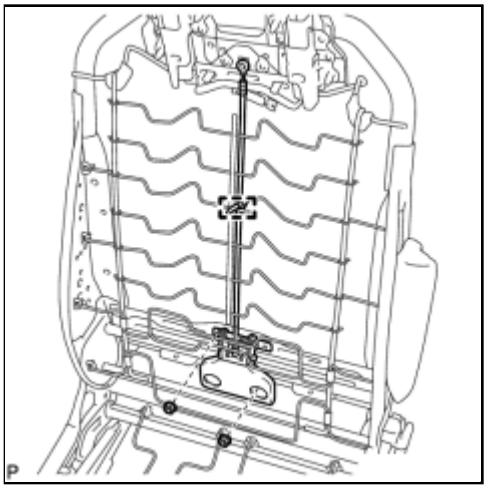

Torque: 5.0 N·m (51 kgf·cm, 44in·lbf)

(b) Install the active headrest lower unit with new clamp.

4. INSTALL ACTIVE HEADREST UPPER UNIT

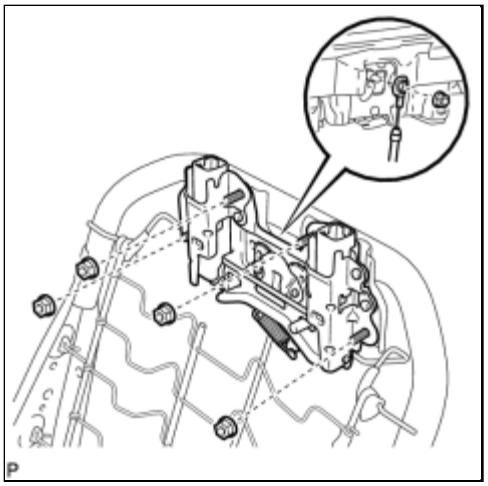

(a) Install the 4 nuts and the active headrest upper unit.

Torque: 14 N·m (143 kgf·cm, 10ft·lbf)

(b) Install the nut and connect the cable to the active headrest upper unit as shown in the illustration.

Torque: 5.0 N·m (51 kgf·cm, 44in·lbf)

5. INSTALL FRONT SEAT LOWER CUSHION SHIELD RH

(a) Install the front seat lower cushion shield RH with the screw.

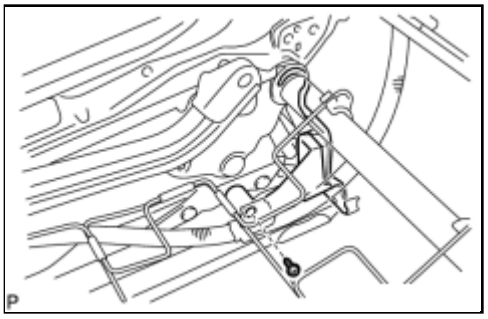

6. INSTALL FRONT SEAT LOWER CUSHION SHIELD LH

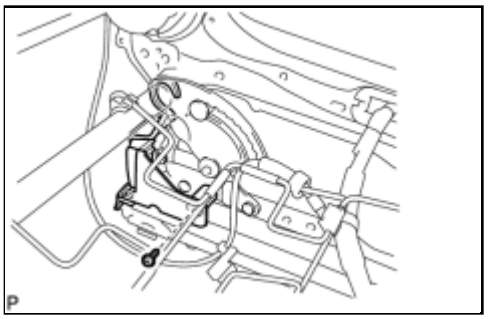

(a) Install the front seat lower cushion shield LH with the screw.

7. INSTALL RECLINING ADJUSTER INSIDE COVER RH

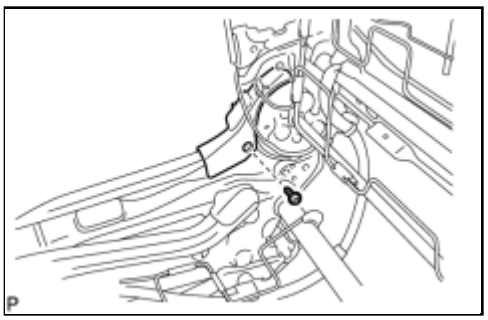

(a) Install the reclining adjuster inside cover RH with the screw.

8. INSTALL RECLINING ADJUSTER INSIDE COVER RH

(a) Engage the guide.

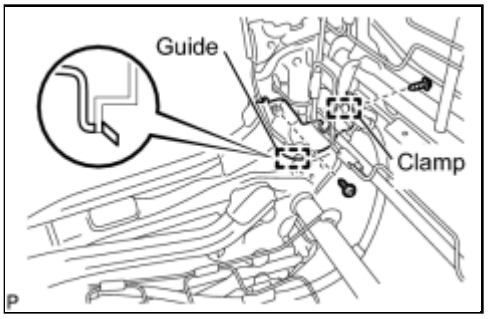

(b) Install the reclining adjuster inside cover RH with the 2 screws.

(c) Engage the clamp.

9. INSTALL RECLINING ADJUSTER INSIDE COVER LH

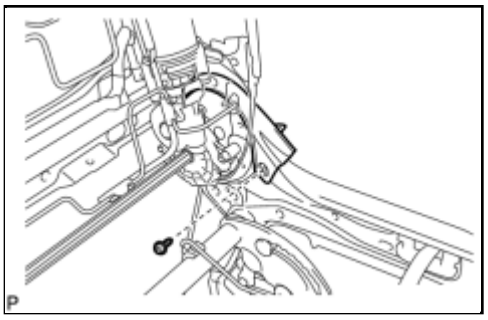

(a) Install the reclining adjuster inside cover LH with the screw.

10. INSTALL RECLINING ADJUSTER INSIDE COVER LH

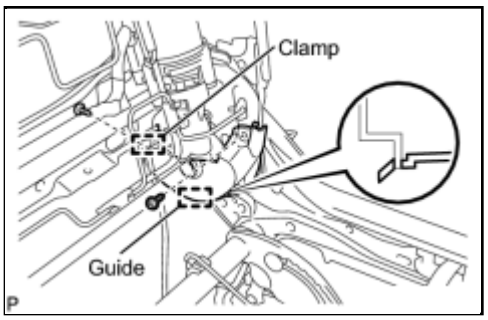

(a) Engage the guide.

(b) Install the reclining adjuster inside cover LH with the 2 screws.

(c) Engage the clamp.

11. INSTALL LUMBAR SUPPORT ADJUSTER ASSEMBLY

(a) Install the lumbar support adjuster assembly with the 2 screws.

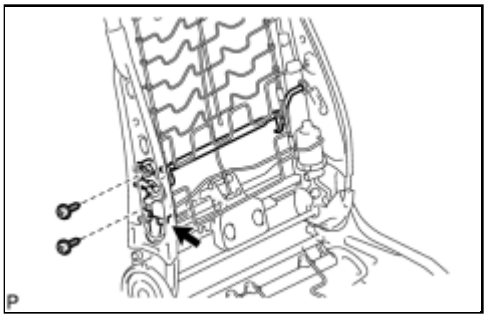

(b) Connect the connector.

12. INSTALL SEPARATE TYPE FRONT SEATBACK COVER

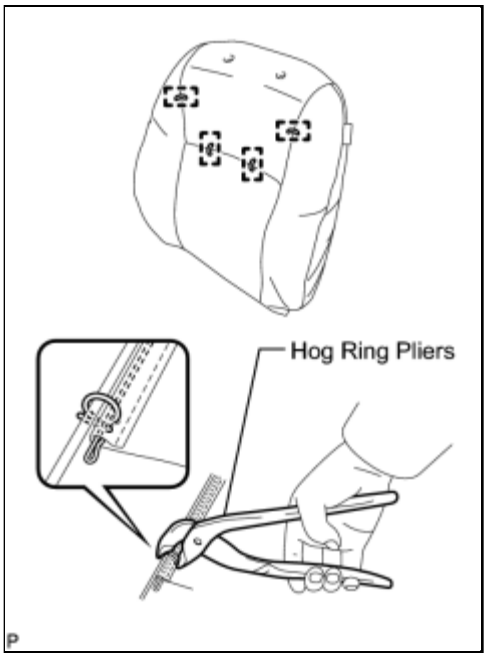

(a) Using hog ring pliers, install the separate type front seatback cover with 4 new hog rings.

NOTICE:

- Be careful not to damage the cover.
- When installing the hog rings, take care to minimize wrinkles as much as possible.

13. INSTALL FRONT SEATBACK COVER WITH PAD

(a) Temporarily install the front seatback cover with pad to the front seat frame assembly with adjuster.

(b) Engage the 4 claws and install the 2 front seat headrest supports.

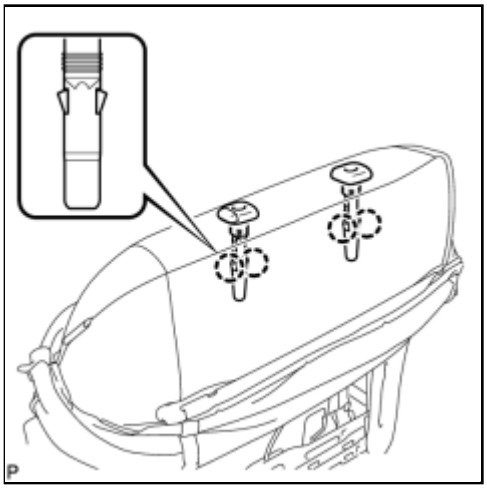

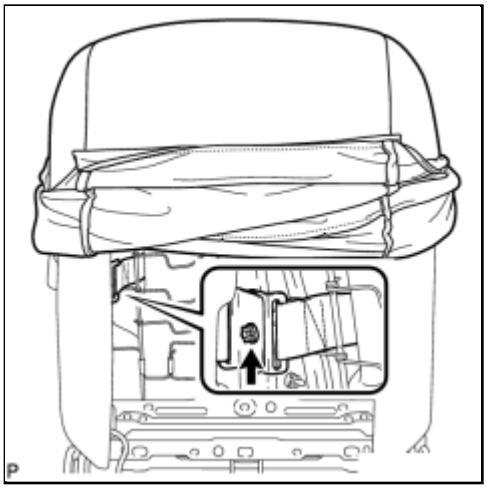

(c) Install the front seatback cover bracket with the nut.

Torque: 5.5 N·m (56 kgf·cm, 49in·lbf)

NOTICE:

- For vehicles with side airbags, the side airbags may not be activated normally unless the front seatback cover is securely installed.
- Check that the strap is not twisted after installing the bracket.
- Install the bracket securely.

(d) Using hog ring pliers, install 3 new hog rings.

NOTICE:

- Be careful not to damage the cover.
- When installing the hog rings, take care to minimize wrinkles as much as possible.

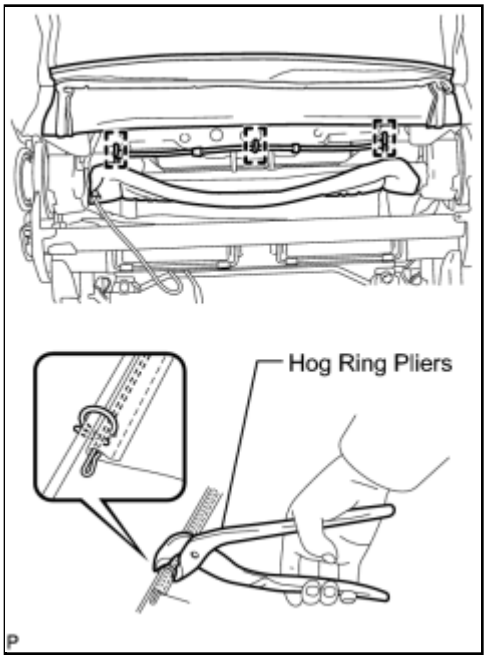

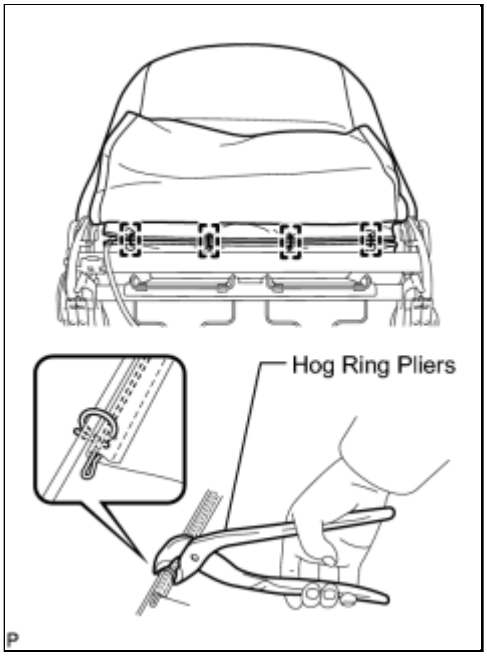

(e) Using hog ring pliers, install 4 new hog rings.

NOTICE:

- Be careful not to damage the cover.
- When installing the hog rings, take care to minimize wrinkles as much as possible.

14. INSTALL SEPARATE TYPE FRONT SEAT CUSHION COVER

(a) Using hog ring pliers, install the separate type front seat cushion cover with 10 new hog rings.

NOTICE:

- Be careful not to damage the cover.
- When installing the hog rings, take care to minimize

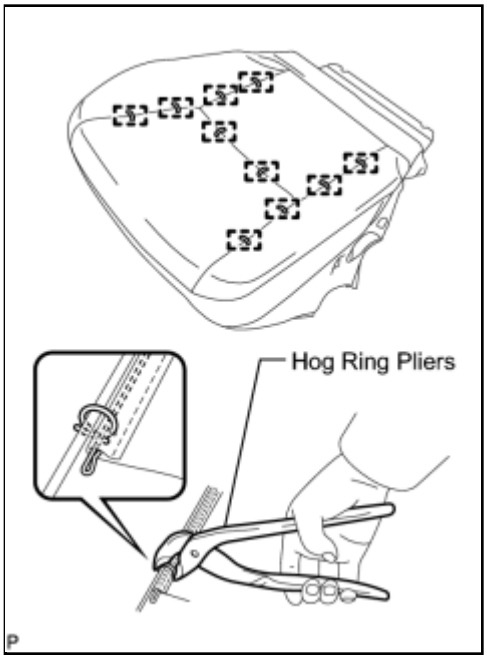

wrinkles as much as possible.

15. INSTALL FRONT SEAT CUSHION EDGE PROTECTOR

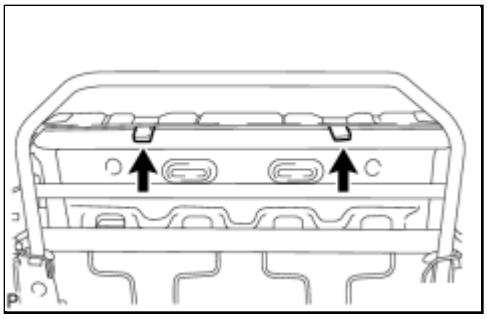

(a) Install the 2 front seat cushion edge protectors.

16. INSTALL FRONT SEAT CUSHION COVER WITH PAD

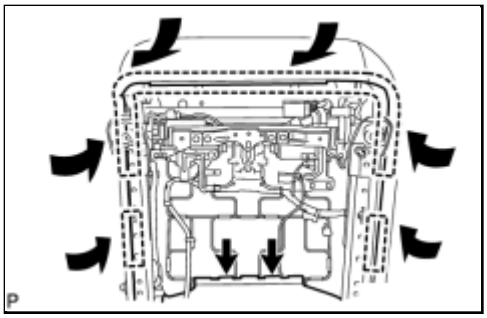

(a) Engage the hooks.

(b) Engage the clamp.

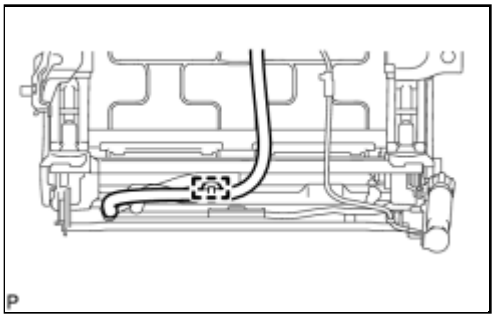

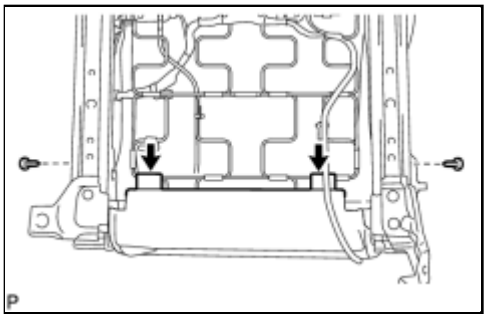

(c) Engage the 2 hooks.

(d) Install the 2 clips and the front seat cushion cover with pad.

17. INSTALL NO. 2 SEAT TRACK LOWER SPACER

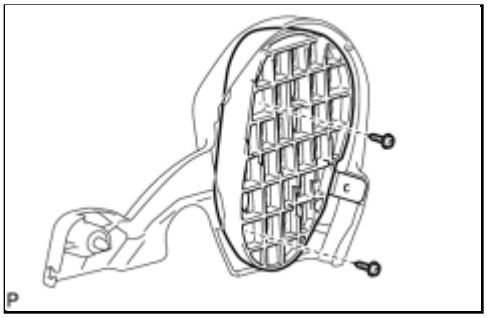

(a) Install the 2 screws and the No. 2 seat track lower spacer.

18. INSTALL FRONT SEAT CUSHION INNER SHIELD

(a) Insert the guide and temporarily install the front seat cushion inner shield as shown in the illustration.

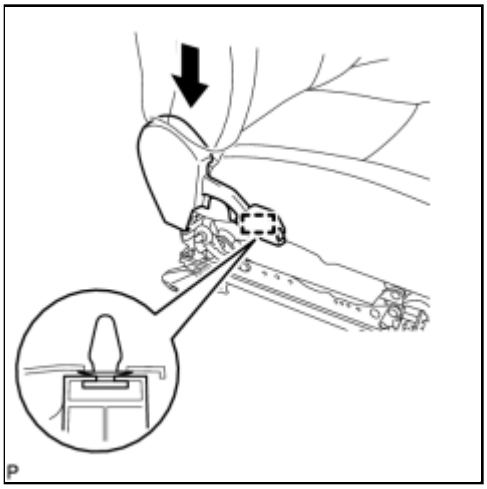

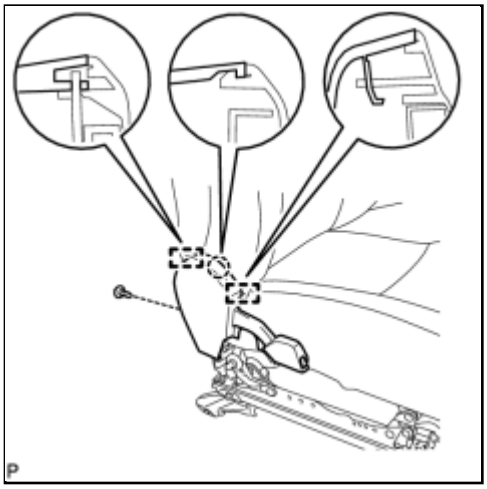

(b) Engage the claw and the 2 guides.

(c) Install the front seat cushion inner shield with the screw.

19. INSTALL FRONT SEAT INNER BELT ASSEMBLY INFO

20. INSTALL POWER SEAT SWITCH

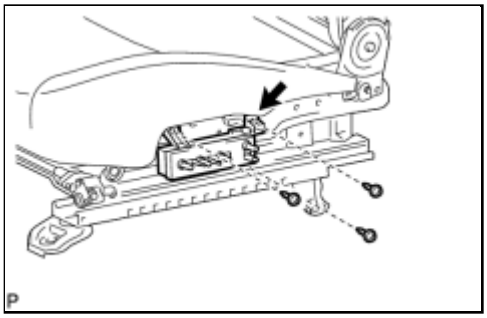

(a) Connect the connector.

(b) Install the power seat switch with the 3 screws.

21. INSTALL NO. 1 SEAT TRACK LOWER SPACER

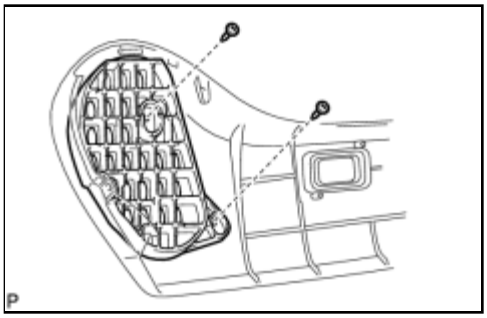

(a) Install the 2 screws and the No. 1 seat track lower spacer.

22. INSTALL LUMBAR SWITCH

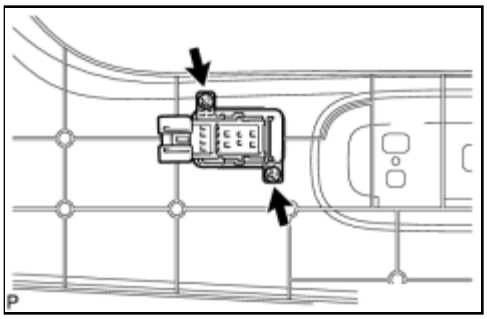

(a) Install the lumbar switch with the 2 screws.

23. INSTALL NO. 1 FRONT SEAT CUSHION INNER SHIELD

(a) Engage the 2 claws.

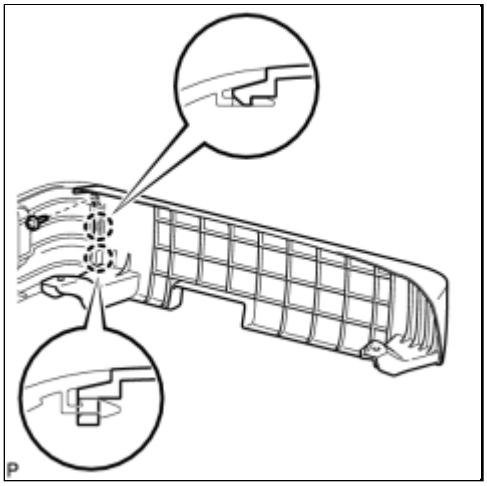

(b) Install the No. 1 front seat cushion inner shield with the screw.

24. INSTALL FRONT SEAT CUSHION SHIELD ASSEMBLY

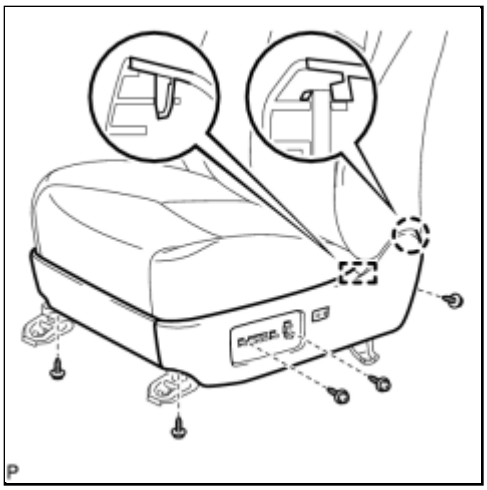

(a) Connect the connector to the front power seat lumbar switch.

(b) Engage the claw and the guide.

(c) Install the front seat cushion shield assembly with the 5 screws.

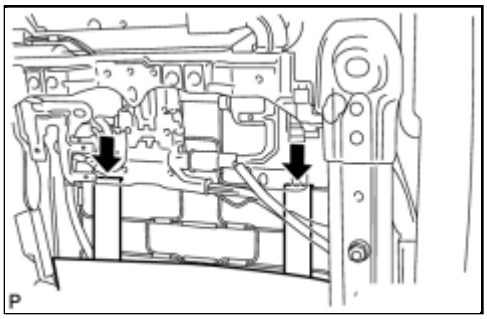

(d) Install the 2 hooks.

25. INSTALL SLIDE AND VERTICAL POWER SEAT SWITCH KNOB

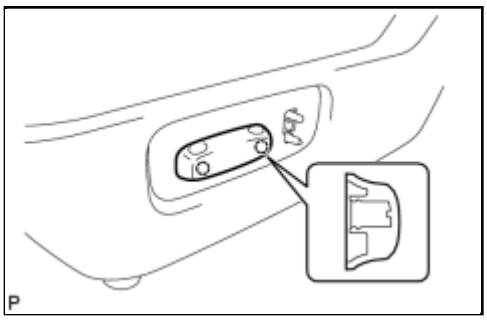

(a) Engage the 2 claws and install the slide and vertical power seat switch knob.

26. INSTALL RECLINING POWER SEAT SWITCH KNOB

(a) Engage the 2 claws and install the reclining power seat switch knob.

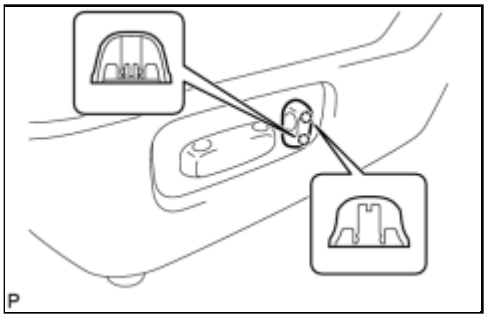

27. INSTALL SEAT ADJUSTER COVER CAP

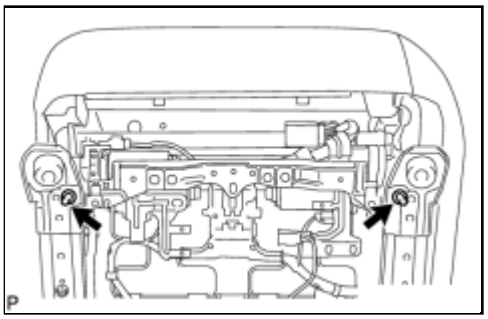

(a) Install the 2 seat adjuster cover caps.

Last Modified: 3-10-2010	6.4 K	**From:** 200901
Model Year: 2010	**Model:** Corolla	**Doc ID:** RM000000AR800EX
Title: SEAT: FRONT SEAT ASSEMBLY (for Power Seat): COMPONENTS (2010 Corolla)		

COMPONENTS

ILLUSTRATION

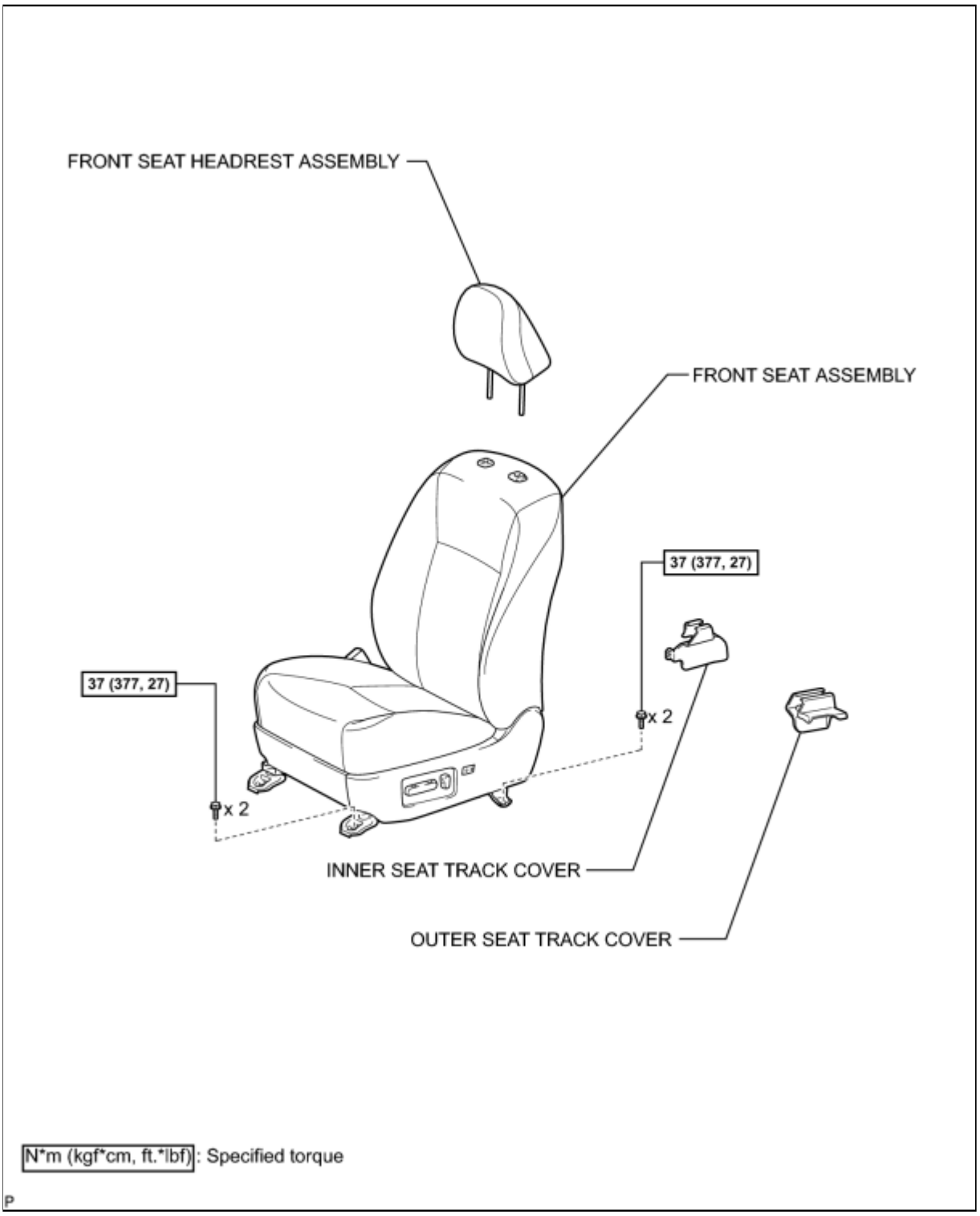

ILLUSTRATION

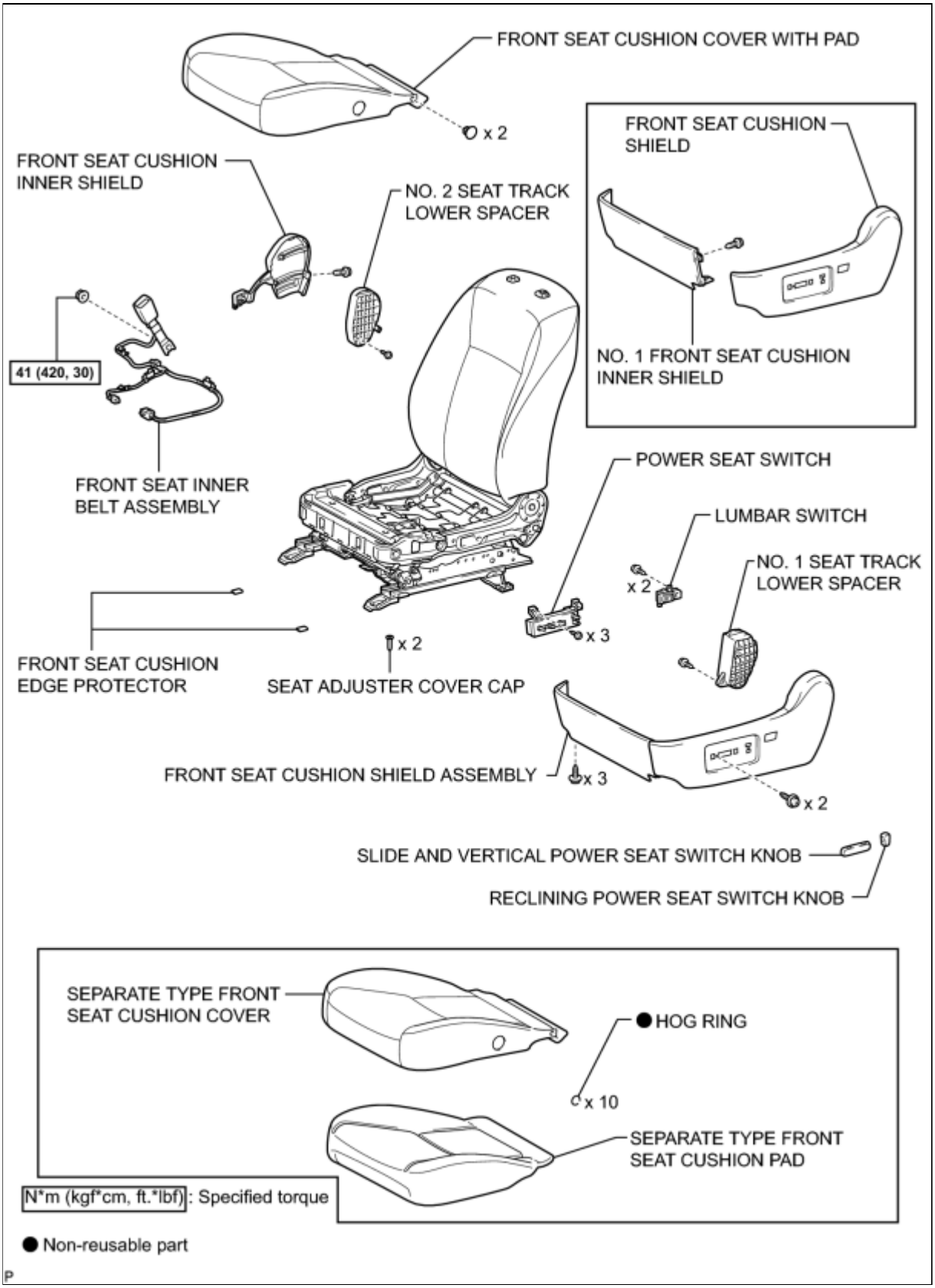

ILLUSTRATION

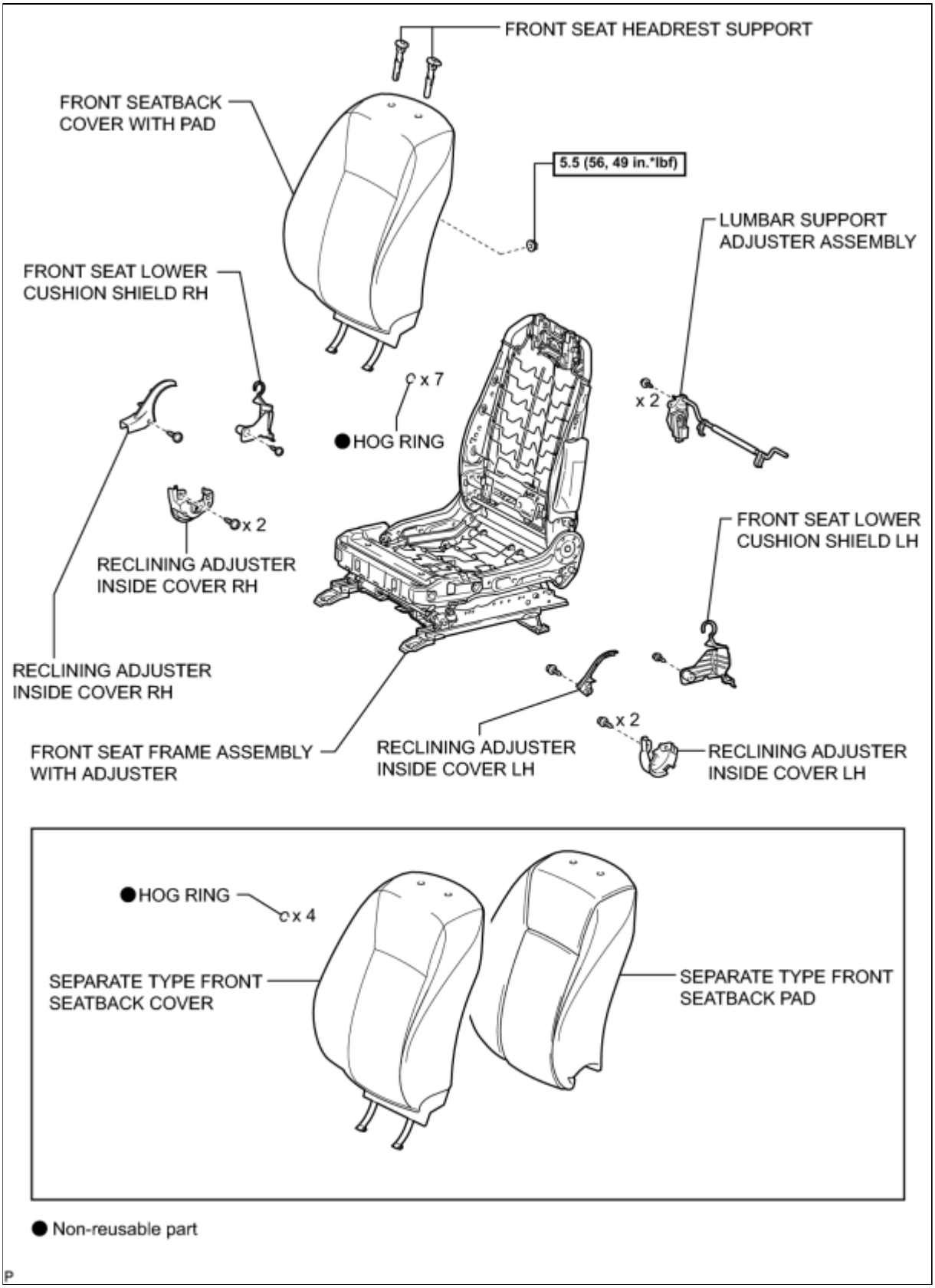

ILLUSTRATION

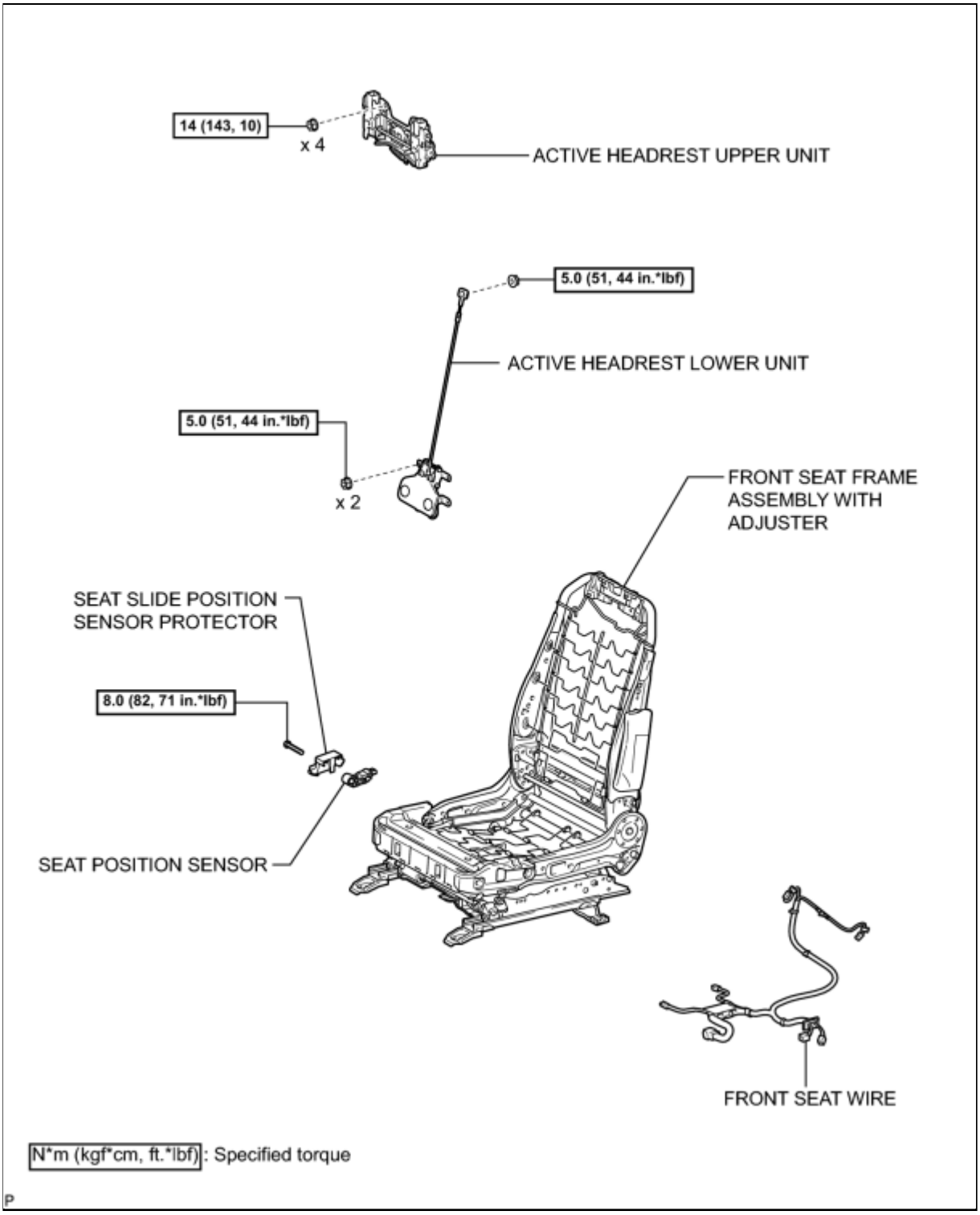

Last Modified: 3-10-2010	6.4 A	**From:** 200901
Model Year: 2010	**Model:** Corolla	**Doc ID:** RM000000AR900VX
Title: SEAT: FRONT SEAT ASSEMBLY (for Power Seat): REMOVAL (2010 Corolla)		

REMOVAL

1. REMOVE FRONT SEAT HEADREST ASSEMBLY

2. REMOVE OUTER SEAT TRACK COVER

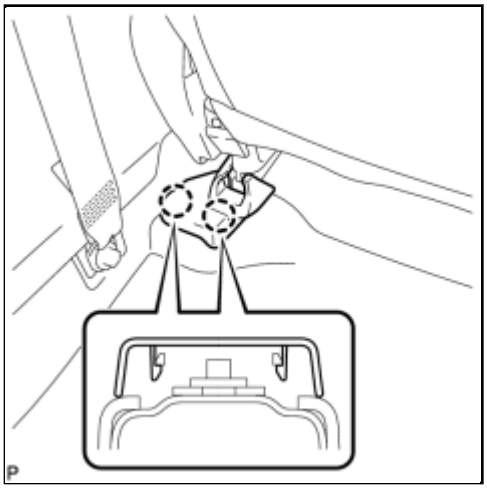

(a) Operate the power seat switch knob and move the seat to the foremost position.

(b) Disengage the 2 claws and remove the outer seat track cover.

3. REMOVE INNER SEAT TRACK COVER

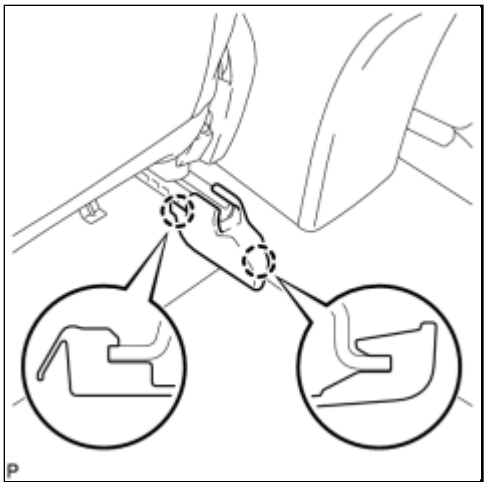

(a) Disengage the 2 claws and remove the inner seat track cover.

4. REMOVE FRONT SEAT ASSEMBLY

(a) Remove the 2 bolts on the rear side of the seat.

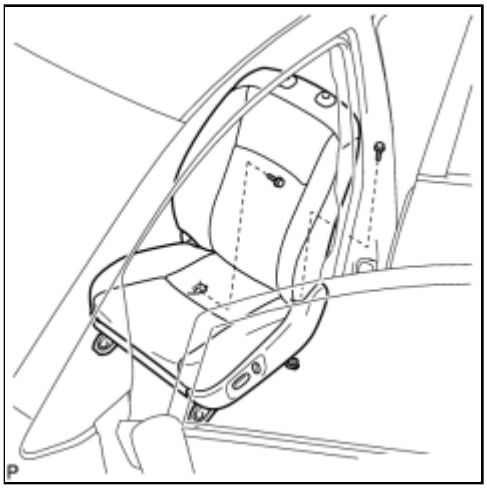

(b) Operate the power seat switch knob and move the seat to the rearmost position.



(c) Remove the 2 bolts on the front side of the seat.

(d) Operate the power seat switch knob and move the seat to the center position. Also, operate the power seat switch knob and move the seatback to the upright position.

(e) Disconnect the cable from the negative (-) battery terminal.

CAUTION:

Wait at least 90 seconds after disconnecting the cable from the negative (-) battery terminal to disable the SRS system INFO **.**

(f) Disconnect the connectors under the seat.

(g) Remove the seat.

NOTICE:

Be careful not to damage the vehicle body.

Last Modified: 3-10-2010	6.4 A	**From:** 200901
Model Year: 2010	**Model:** Corolla	**Doc ID:** RM000000Z8T03BX
Title: SEAT: FRONT SEAT ASSEMBLY (for Power Seat): INSTALLATION (2010 Corolla)		

INSTALLATION

1. INSTALL FRONT SEAT ASSEMBLY

(a) Place the front seat assembly in the cabin.

NOTICE:

Be careful not to damage the vehicle body.

(b) Connect the connectors under the seat.

(c) Connect the cable to the negative (-) battery terminal.

(d) Temporarily install the front seat assembly with the 4 bolts.

(e) Operate the power seat switch knob and move the seat to the rearmost position.

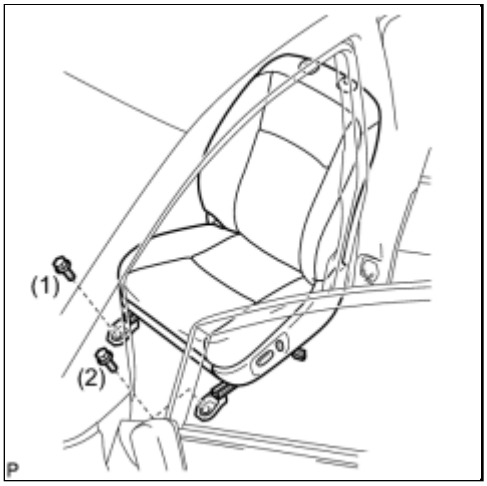

(f) Tighten the 2 bolts on the front side of the seat.

Torque: 37 N·m (377 kgf·cm, 27ft·lbf)

HINT:

Tighten the bolts in the order indicated in the illustration.

(g) Operate the power seat switch knob and move the seat to the foremost position.

(h) Tighten the 2 bolts on the rear side of the seat.

Torque: 37 N·m (377 kgf·cm, 27ft·lbf)

HINT:

Tighten the bolts in the order indicated in the illustration.

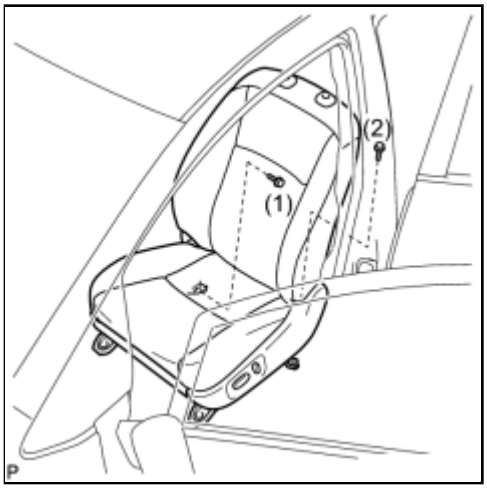

2. INSTALL INNER SEAT TRACK COVER

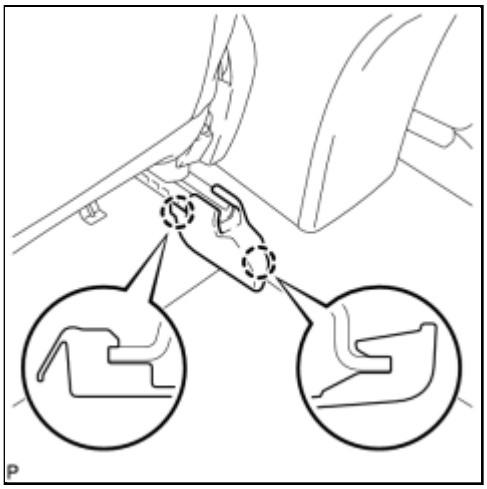

(a) Engage the 2 claws and install the inner seat track cover.

3. INSTALL OUTER SEAT TRACK COVER

(a) Engage the 2 claws and install the outer seat track cover.

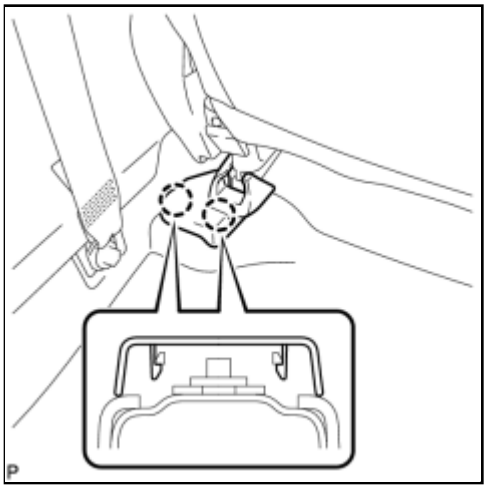

4. INSTALL FRONT SEAT HEADREST ASSEMBLY

5. INSPECT FRONT SEAT ASSEMBLY

(a) Inspect the power seat operation.

6. INSPECT SRS WARNING LIGHT

HINT:

Inspect the SRS warning light INFO **.**

Last Modified: 3-10-2010	6.4 K	**From:** 200901
Model Year: 2010	**Model:** Corolla	**Doc ID:** RM000003GVP001X
Title: SEAT: FRONT SEAT CUSHION HEATER: COMPONENTS (2010 Corolla)		

COMPONENTS

ILLUSTRATION

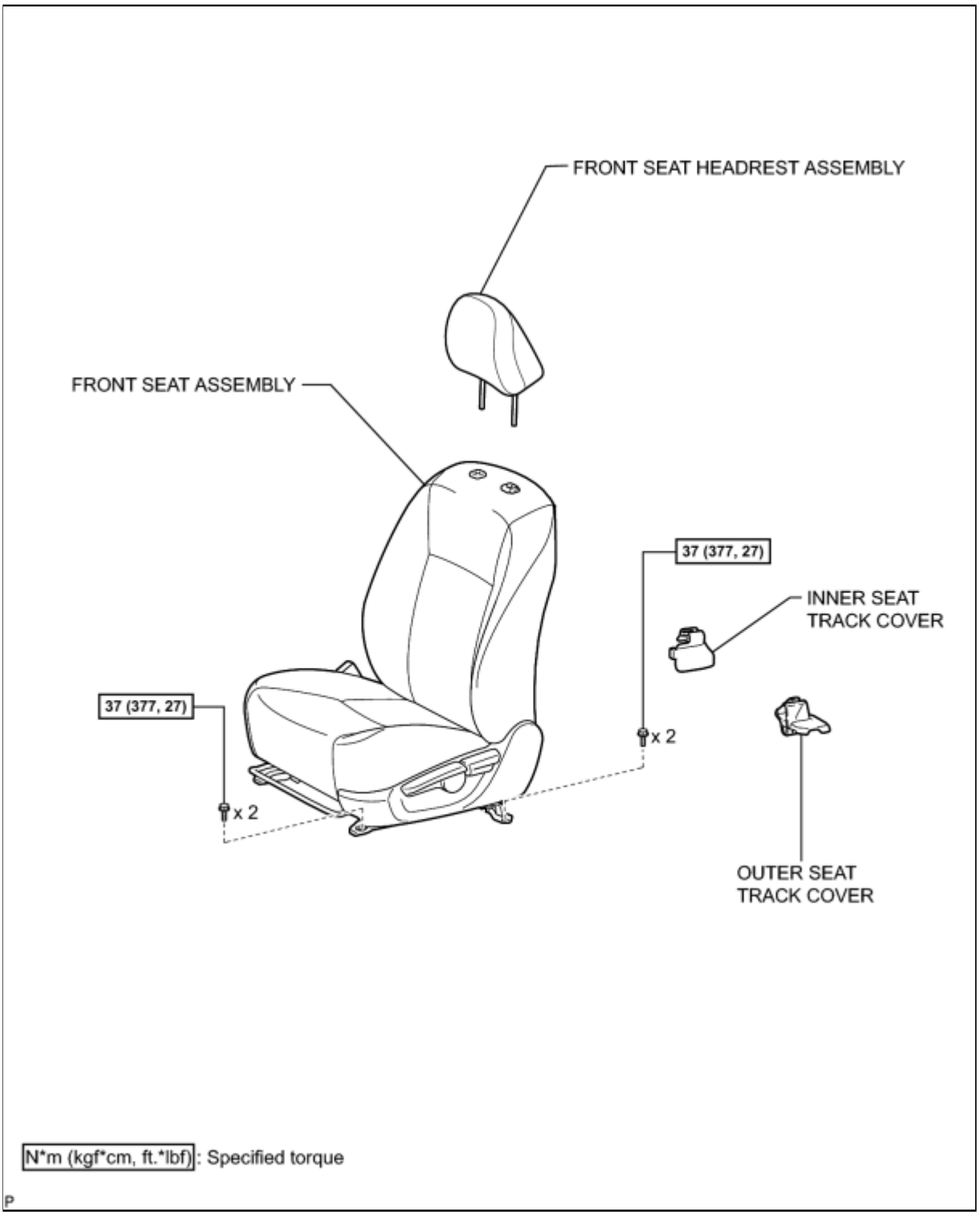

ILLUSTRATION

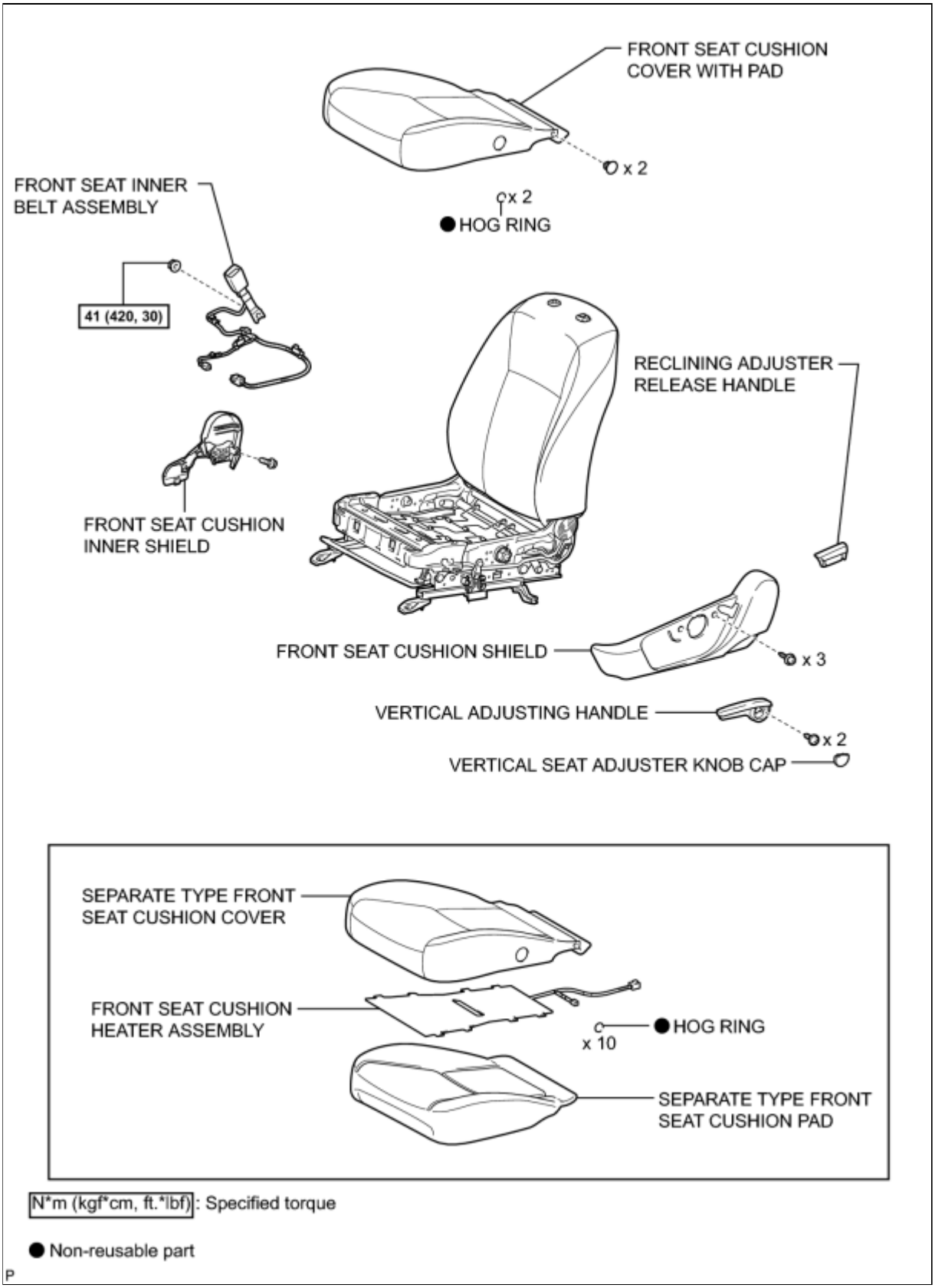

P

Last Modified: 3-10-2010	6.4 A	**From:** 200901
Model Year: 2010	**Model:** Corolla	**Doc ID:** RM000000VBH03OX
Title: SEAT: FRONT SEAT CUSHION HEATER: REMOVAL (2010 Corolla)		

REMOVAL

1. DISCONNECT CABLE FROM NEGATIVE BATTERY TERMINAL (w/ Front Seat Side Airbag)

NOTICE:

Wait at least 90 seconds after disconnecting the cable from the negative (-) battery terminal to disable the SRS system INFO **.**

2. REMOVE FRONT SEAT HEADREST ASSEMBLY

3. REMOVE OUTER SEAT TRACK COVER INFO

4. REMOVE INNER SEAT TRACK COVER INFO

5. REMOVE FRONT SEAT ASSEMBLY INFO

6. REMOVE RECLINING ADJUSTER RELEASE HANDLE INFO

7. REMOVE VERTICAL SEAT ADJUSTER KNOB CAP INFO

8. REMOVE VERTICAL ADJUSTING HANDLE INFO

9. REMOVE FRONT SEAT CUSHION SHIELD INFO

10. REMOVE FRONT SEAT INNER BELT ASSEMBLY INFO

11. REMOVE FRONT SEAT CUSHION INNER SHIELD INFO

12. REMOVE FRONT SEAT CUSHION COVER WITH PAD INFO

13. REMOVE SEPARATE TYPE FRONT SEAT CUSHION COVER INFO

14. REMOVE FRONT SEAT CUSHION HEATER ASSEMBLY

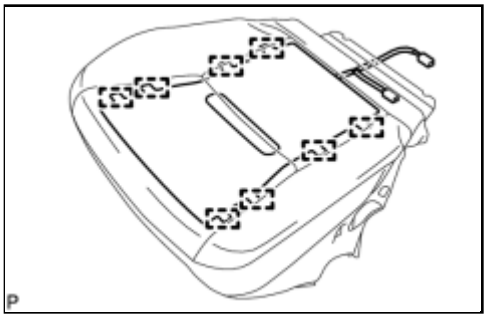

(a) Cut off the 8 tack pins and remove the front seat cushion heater assembly.

Last Modified: 3-10-2010	6.4 G	**From:** 200901
Model Year: 2010	**Model:** Corolla	**Doc ID:** RM000003H5A001X
Title: SEAT: FRONT SEAT CUSHION HEATER: INSPECTION (2010 Corolla)		

INSPECTION

1. INSPECT FRONT SEAT CUSHION HEATER LH

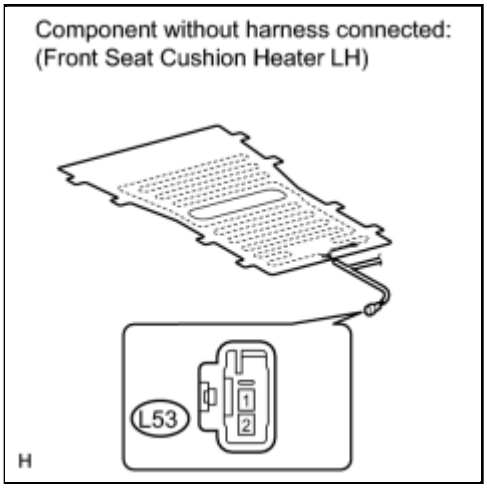

(a) Check the seat cushion heater.

(1) Connect the front seatback heater LH connector.

(2) Apply battery voltage and check the seat cushion heater.

OK:

CONNECTION	CONDITION	SPECIFIED CONDITION
Battery positive (+) → L53-1 Battery negative (-) → L53-2	Always	Seat cushion heater becomes warm

NOTICE:

Immediately after confirming that the seat heater is functioning normally, remove the battery leads. Failing to do so may cause the seat heater to overheat.

If the result is not as specified, replace the seat cushion heater.

2. INSPECT FRONT SEAT CUSHION HEATER RH

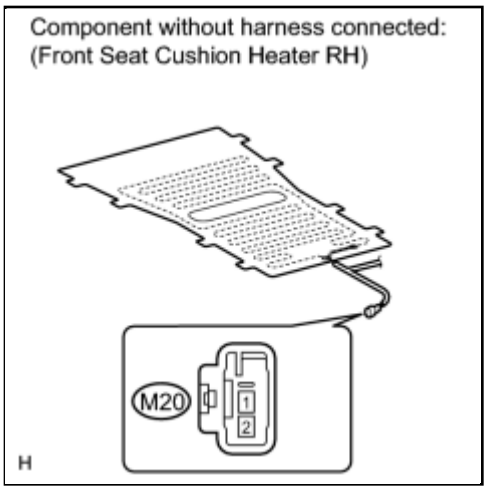

(a) Check the seat cushion heater.

(1) Connect the front seatback heater RH connector.

(2) Apply battery voltage and check the seat cushion heater.

OK:

CONNECTION	CONDITION	SPECIFIED CONDITION
Battery positive (+) → M20-1 Battery negative (-) → M20-2	Always	Seat cushion heater becomes warm

NOTICE:

Immediately after confirming that the seat heater is functioning normally, remove the battery leads. Failing to do so may cause the seat heater to overheat.

If the result is not as specified, replace the seat cushion heater.

Last Modified: 3-10-2010	6.4 A	**From:** 200901
Model Year: 2010	**Model:** Corolla	**Doc ID:** RM000000VBI03TX
Title: SEAT: FRONT SEAT CUSHION HEATER: INSTALLATION (2010 Corolla)		

INSTALLATION

1. INSTALL FRONT SEAT CUSHION HEATER ASSEMBLY

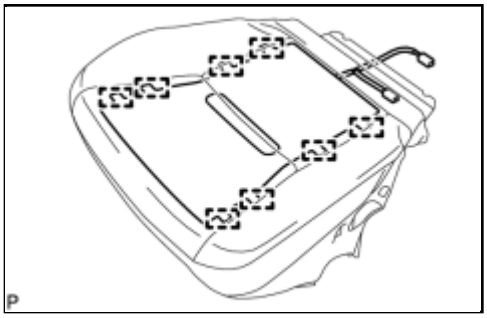

(a) Using a tacker, install the front seat cushion heater assembly to the end of the seat cushion cover with the 8 tack pins.

2. INSTALL SEPARATE TYPE FRONT SEAT CUSHION COVER INFO

3. INSTALL FRONT SEAT CUSHION COVER WITH PAD INFO

4. INSTALL FRONT SEAT CUSHION INNER SHIELD INFO

5. INSTALL FRONT SEAT INNER BELT ASSEMBLY INFO

6. INSTALL FRONT SEAT CUSHION SHIELD INFO

7. INSTALL VERTICAL ADJUSTING HANDLE INFO

8. INSTALL VERTICAL SEAT ADJUSTER KNOB CAP INFO

9. INSTALL RECLINING ADJUSTER RELEASE HANDLE INFO

10. INSTALL FRONT SEAT ASSEMBLY INFO

11. INSPECT FRONT SEAT SLIDE ADJUSTER LOCK INFO

12. INSTALL INNER SEAT TRACK COVER INFO

13. INSTALL OUTER SEAT TRACK COVER INFO

14. INSTALL FRONT SEAT HEADREST ASSEMBLY

15. CONNECT CABLE TO NEGATIVE BATTERY TERMINAL (w/ Front Seat Side Airbag)

16. INSPECT SRS WARNING LIGHT (w/ Front Seat Side Airbag)

HINT:

Inspect the SRS warning light INFO **.**

Last Modified: 3-10-2010	6.4 G	**From:** 200901
Model Year: 2010	**Model:** Corolla	**Doc ID:** RM000000WGS029X
Title: SEAT: FRONT SEAT FRAME WITH ADJUSTER: INSPECTION (2010 Corolla)		

INSPECTION

1. INSPECT FRONT SEAT FRAME WITH ADJUSTER

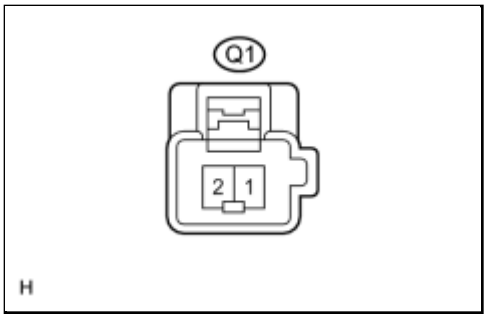

(a) Check the operation of the seat frame (slide motor).

(1) Check if the seat frame operates smoothly when the battery voltage is applied to the slide motor connector terminals.

OK:

MEASUREMENT CONDITION	OPERATIONAL DIRECTION
Battery positive (+) → Q1-1 Battery negative (-) → Q1-2	Forward
Battery positive (+) → Q1-2 Battery negative (-) → Q1-1	Backward

If the result is not as specified, replace the seat frame with adjuster.

(b) Check the operation of the seat frame (front vertical motor).

(1) Check if the seat frame operates smoothly when the battery voltage is applied to the front vertical motor connector terminals.

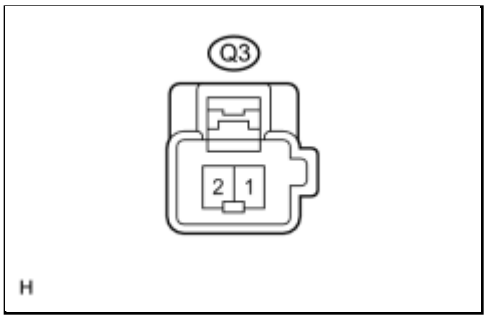

OK:

MEASUREMENT CONDITION	OPERATIONAL DIRECTION
Battery positive (+) → Q3-1 Battery negative (-) → Q3-2	Upward
Battery positive (+) → Q3-2 Battery negative (-) → Q3-1	Downward

If the result is not as specified, replace the seat frame with adjuster.

(c) Check the operation of the seat frame (reclining motor).

(1) Check if the seat frame operates smoothly when the battery voltage is applied to the reclining motor connector terminals.

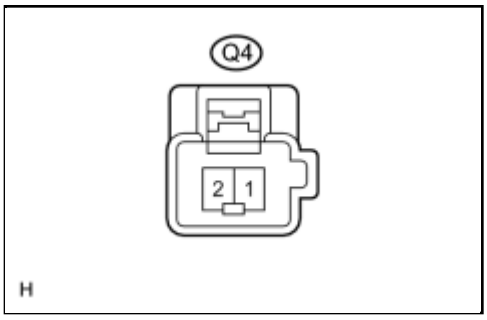

OK:

MEASUREMENT CONDITION	OPERATIONAL DIRECTION
Battery positive (+) → Q4-2 Battery negative (-) → Q4-1	Forward
Battery positive (+) → Q4-1 Battery negative (-) → Q4-2	Backward

If the result is not as specified, replace the seat frame with adjuster.

(d) Check the operation of the seat frame (lifter motor).

(1) Check if the seat frame operates smoothly when the battery voltage is applied to the lifter motor connector terminals.

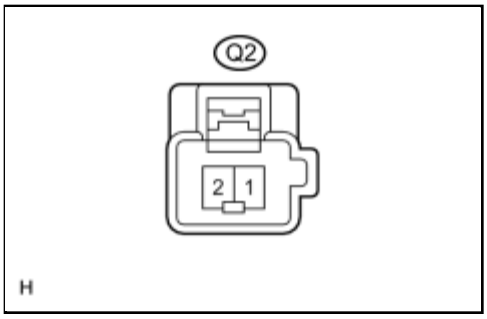

OK:

MEASUREMENT CONDITION	OPERATIONAL DIRECTION
Battery positive (+) → Q2-2 Battery negative (-) → Q2-1	Upward
Battery positive (+) → Q2-1 Battery negative (-) → Q2-2	Downward

If the result is not as specified, replace the seat frame with adjuster.

Last Modified: 3-10-2010	6.4 K	**From:** 200901
Model Year: 2010	**Model:** Corolla	**Doc ID:** RM000003GVO001X
Title: SEAT: FRONT SEATBACK HEATER: COMPONENTS (2010 Corolla)		

COMPONENTS

ILLUSTRATION

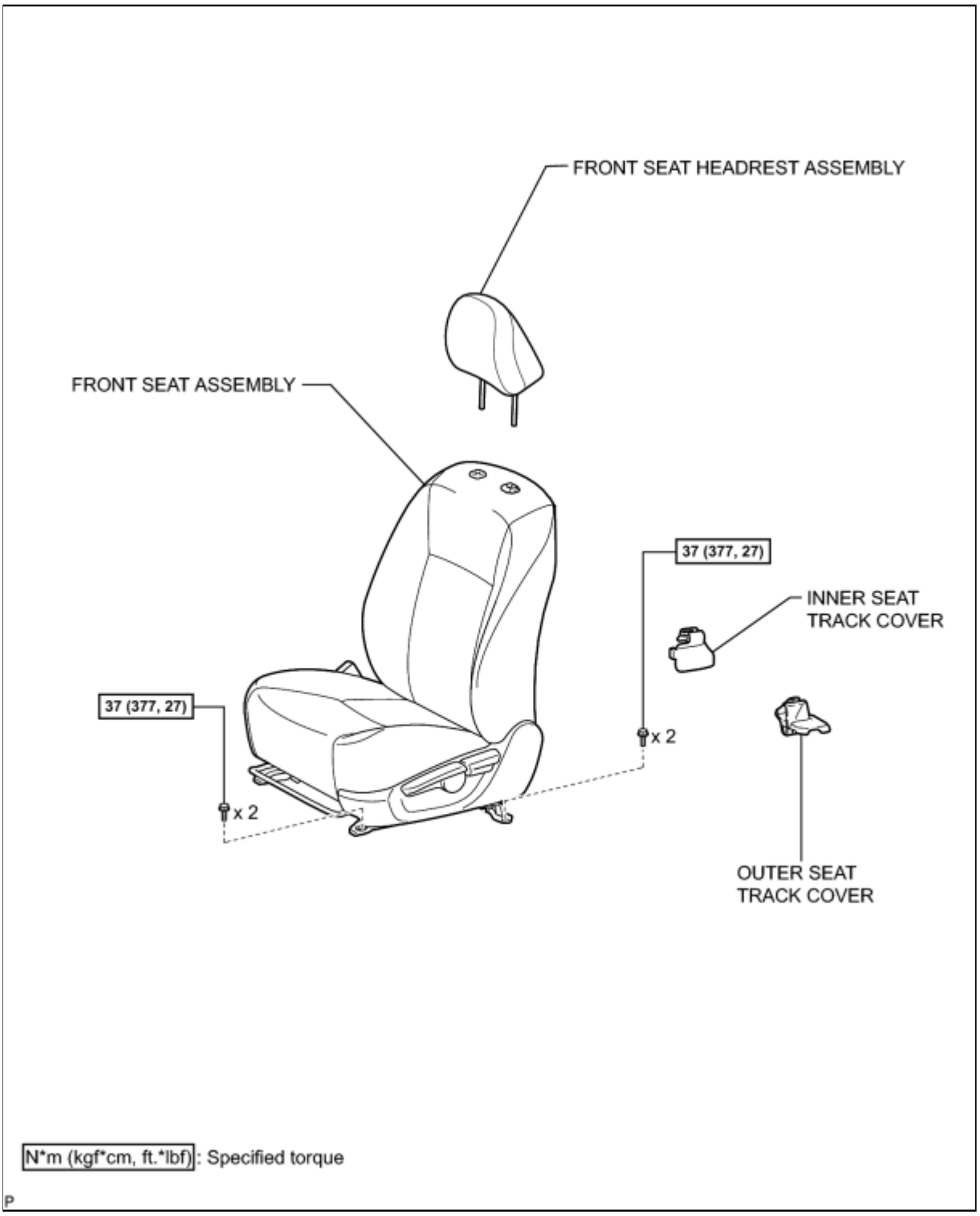

ILLUSTRATION

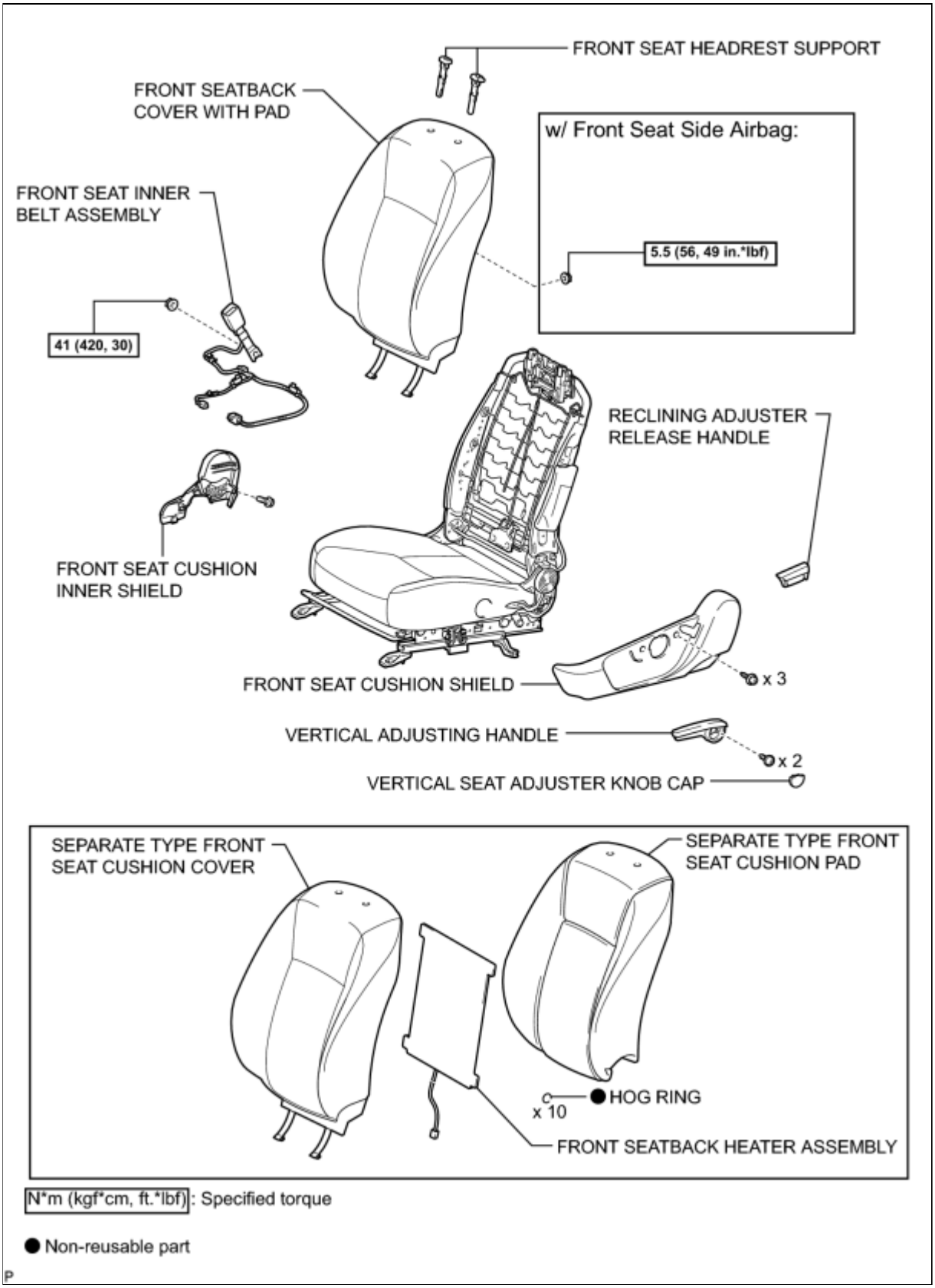

Last Modified: 3-10-2010	6.4 A	**From:** 200901
Model Year: 2010	**Model:** Corolla	**Doc ID:** RM000000VBH03NX
Title: SEAT: FRONT SEATBACK HEATER: REMOVAL (2010 Corolla)		

REMOVAL

1. DISCONNECT CABLE FROM NEGATIVE BATTERY TERMINAL (w/ Front Seat Side Airbag)

NOTICE:

Wait at least 90 seconds after disconnecting the cable from the negative (-) battery terminal to disable the SRS system INFO **.**

2. REMOVE FRONT SEAT HEADREST ASSEMBLY

3. REMOVE OUTER SEAT TRACK COVER INFO

4. REMOVE INNER SEAT TRACK COVER INFO

5. REMOVE FRONT SEAT ASSEMBLY INFO

6. REMOVE RECLINING ADJUSTER RELEASE HANDLE INFO

7. REMOVE VERTICAL SEAT ADJUSTER KNOB CAP INFO

8. REMOVE VERTICAL ADJUSTING HANDLE INFO

9. REMOVE FRONT SEAT CUSHION SHIELD INFO

10. REMOVE FRONT SEAT INNER BELT ASSEMBLY INFO

11. REMOVE FRONT SEAT CUSHION INNER SHIELD INFO

12. REMOVE FRONT SEATBACK COVER WITH PAD INFO

13. REMOVE SEPARATE TYPE FRONT SEATBACK COVER INFO

14. REMOVE FRONT SEATBACK HEATER ASSEMBLY

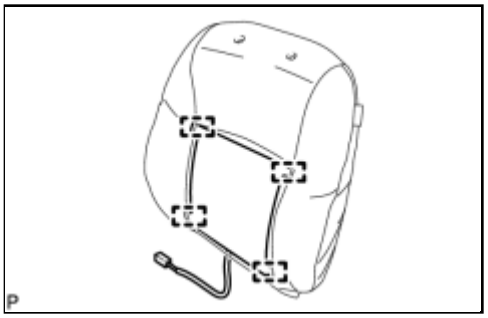

(a) Cut off the 4 tack pins and remove the front seatback heater assembly.

Last Modified: 3-10-2010	6.4 G	**From:** 200901
Model Year: 2010	**Model:** Corolla	**Doc ID:** RM000003H59001X
Title: SEAT: FRONT SEATBACK HEATER: INSPECTION (2010 Corolla)		

INSPECTION

1. INSPECT FRONT SEAT BACK HEATER LH

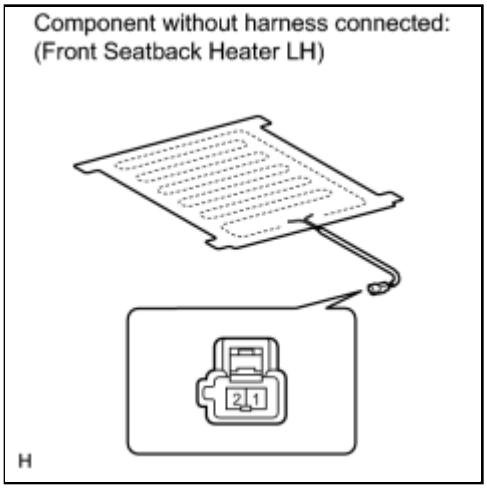

(a) Apply battery voltage and check the seatback heater.

OK:

CONNECTION	CONDITION	SPECIFIED CONDITION
Battery positive (+) → Terminal 2 Battery negative (-) → Terminal 1	Always	Seatback heater becomes warm

NOTICE:

Immediately after confirming that the seat heater is functioning normally, remove the battery leads. Failing to do so may cause the seat heater to overheat.

If the result is not as specified, replace the front seatback heater.

2. INSPECT FRONT SEAT BACK HEATER RH

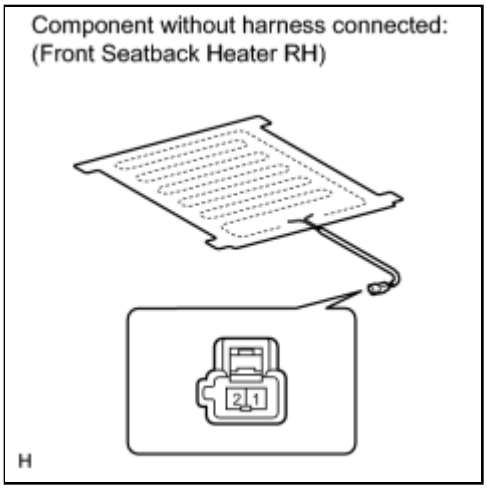

(a) Apply battery voltage and check the seatback heater.

OK:

CONNECTION	CONDITION	SPECIFIED CONDITION
Battery positive (+) → Terminal 2 Battery negative (-) → Terminal 1	Always	Seatback heater becomes warm

NOTICE:

Immediately after confirming that the seat heater is functioning normally, remove the battery leads. Failing to do so may cause the seat heater to overheat.

If the result is not as specified, replace the front seatback heater.

Last Modified: 3-10-2010	6.4 A	**From:** 200901
Model Year: 2010	**Model:** Corolla	**Doc ID:** RM000000VBI03SX
Title: SEAT: FRONT SEATBACK HEATER: INSTALLATION (2010 Corolla)		

INSTALLATION

1. INSTALL FRONT SEATBACK HEATER ASSEMBLY

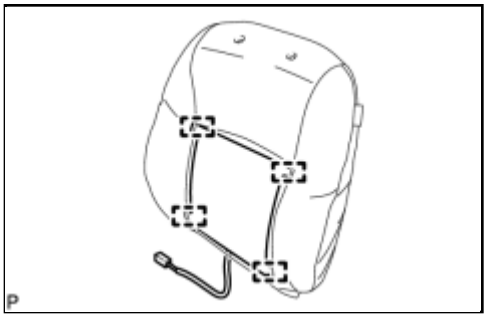

(a) Using a tacker, install the front seatback heater assembly to the end of the seatback cover with the 4 tack pins.

2. INSTALL SEPARATE TYPE FRONT SEATBACK COVER INFO

3. INSTALL FRONT SEATBACK COVER WITH PAD INFO

4. INSTALL FRONT SEAT CUSHION INNER SHIELD INFO

5. INSTALL FRONT SEAT INNER BELT ASSEMBLY INFO

6. INSTALL FRONT SEAT CUSHION SHIELD INFO

7. INSTALL VERTICAL ADJUSTING HANDLE INFO

8. INSTALL VERTICAL SEAT ADJUSTER KNOB CAP INFO

9. INSTALL RECLINING ADJUSTER RELEASE HANDLE INFO

10. INSTALL FRONT SEAT ASSEMBLY INFO

11. INSPECT FRONT SEAT SLIDE ADJUSTER LOCK INFO

12. INSTALL INNER SEAT TRACK COVER INFO

13. INSTALL OUTER SEAT TRACK COVER INFO

14. INSTALL FRONT SEAT HEADREST ASSEMBLY

15. CONNECT CABLE TO NEGATIVE BATTERY TERMINAL (w/ Front Seat Side Airbag)

16. INSPECT SRS WARNING LIGHT (w/ Front Seat Side Airbag)

HINT:

Inspect the SRS warning light INFO **.**

Last Modified: 3-10-2010	6.4 K	**From:** 200901
Model Year: 2010	**Model:** Corolla	**Doc ID:** RM000003GV7001X
Title: SEAT: LUMBAR SUPPORT ADJUSTER ASSEMBLY: COMPONENTS (2010 Corolla)		

COMPONENTS

ILLUSTRATION

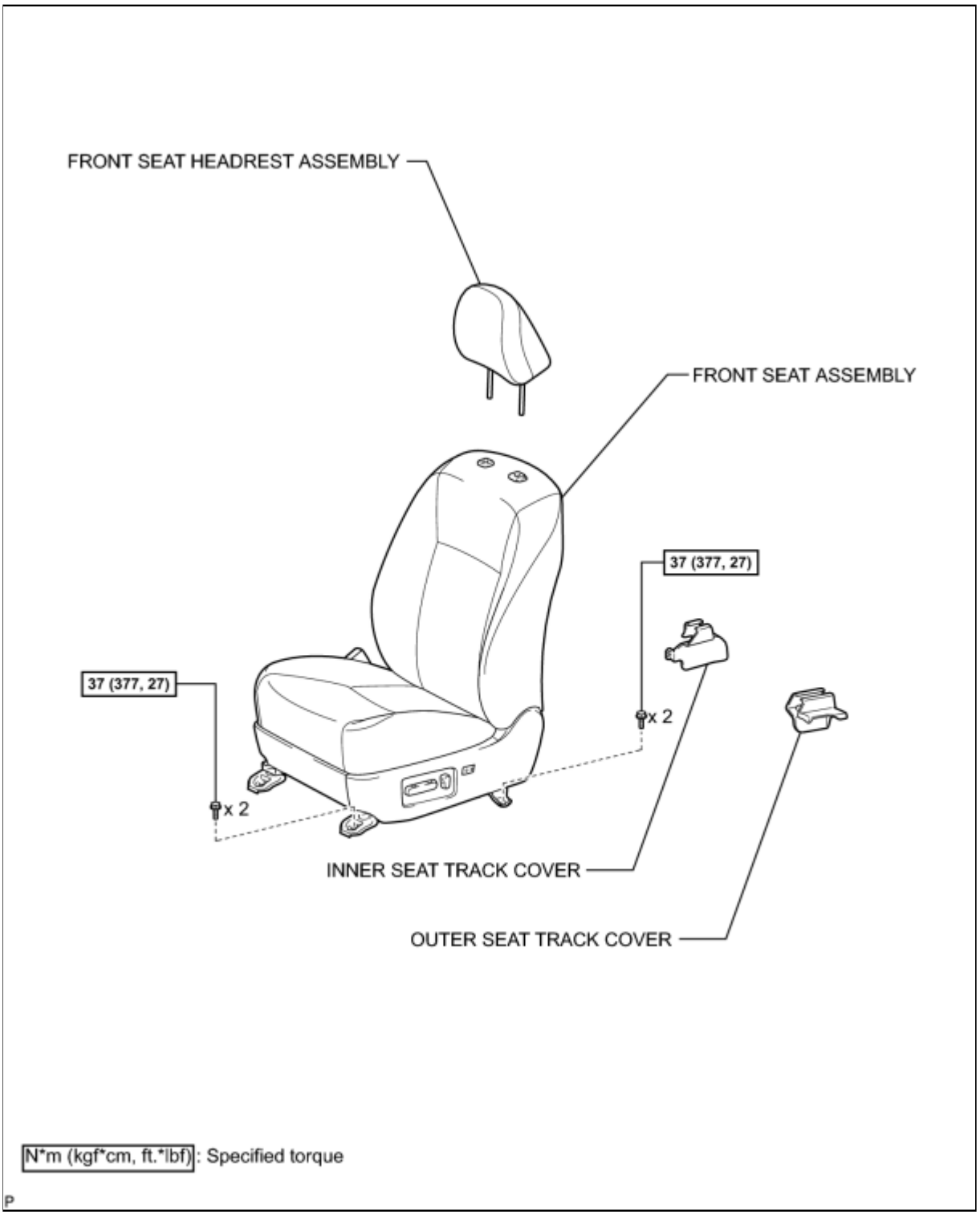

ILLUSTRATION

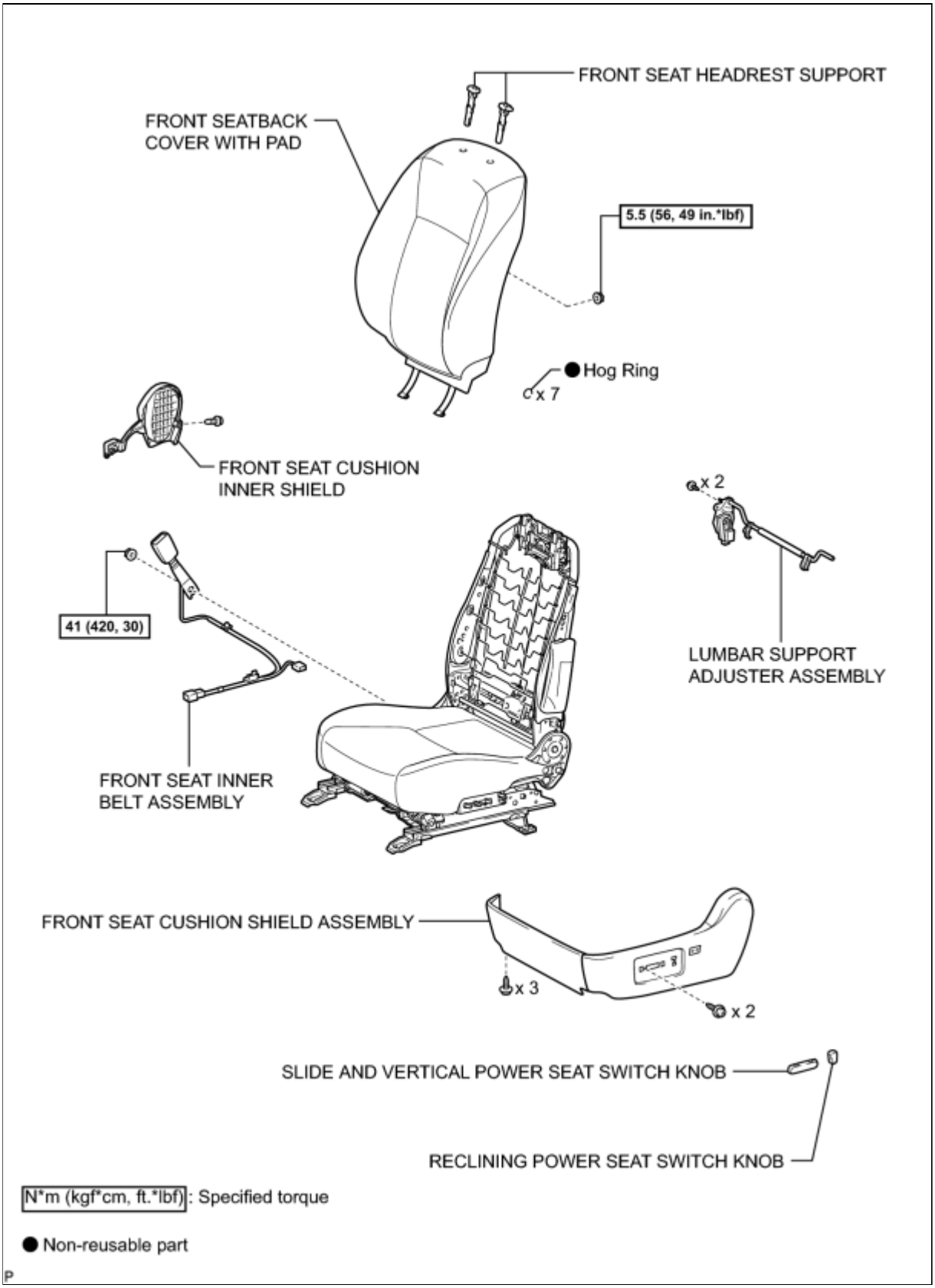

Last Modified: 3-10-2010	6.4 A	**From:** 200901
Model Year: 2010	**Model:** Corolla	**Doc ID:** RM000000AR900YX
Title: SEAT: LUMBAR SUPPORT ADJUSTER ASSEMBLY: REMOVAL (2010 Corolla)		

REMOVAL

1. REMOVE FRONT SEAT HEADREST ASSEMBLY

2. REMOVE OUTER SEAT TRACK COVER INFO

3. REMOVE INNER SEAT TRACK COVER INFO

4. REMOVE FRONT SEAT ASSEMBLY INFO

5. REMOVE RECLINING POWER SEAT SWITCH KNOB INFO

6. REMOVE SLIDE AND VERTICAL POWER SEAT SWITCH KNOB INFO

7. REMOVE FRONT SEAT CUSHION SHIELD ASSEMBLY INFO

8. REMOVE FRONT SEAT INNER BELT ASSEMBLY INFO

9. REMOVE FRONT SEAT CUSHION INNER SHIELD INFO

10. REMOVE FRONT SEATBACK COVER WITH PAD INFO

11. REMOVE LUMBAR SUPPORT ADJUSTER ASSEMBLY

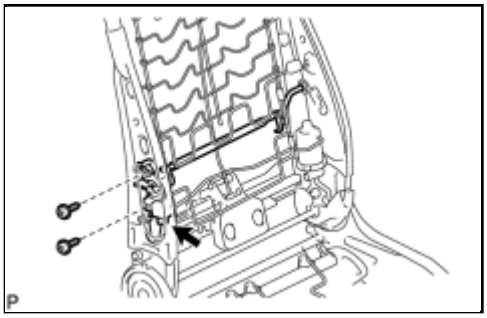

(a) Disconnect the connector.

(b) Remove the 2 screws and the lumbar support adjuster assembly.

Last Modified: 3-10-2010	6.4 G	**From:** 200901
Model Year: 2010	**Model:** Corolla	**Doc ID:** RM000003GZT001X
Title: SEAT: LUMBAR SUPPORT ADJUSTER ASSEMBLY: INSPECTION (2010 Corolla)		

INSPECTION

1. INSPECT LUMBAR SUPPORT ADJUSTER ASSEMBLY

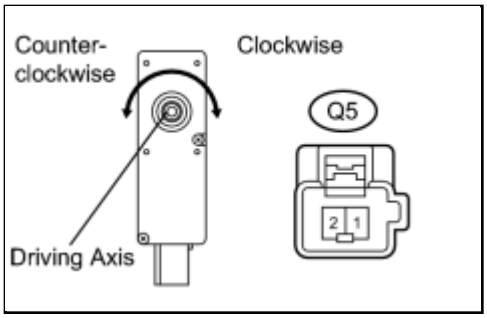

(a) Check the operation of the lumbar support adjuster.

(1) Check if the lumbar support adjuster operates smoothly when the battery voltage is applied to the lumbar support adjuster motor connector terminals.

OK:

CONDITION	OPERATION DIRECTION
Battery positive (+) → Q5-2 Battery negative (-) → Q5-1	Clockwise
Battery positive (+) → Q5-1 Battery negative (-) → Q5-2	Counterclockwise

If the result is not as specified, replace the lumbar support adjuster.

Last Modified: 3-10-2010	6.4 A	**From:** 200901
Model Year: 2010	**Model:** Corolla	**Doc ID:** RM000000Z8T03FX
Title: SEAT: LUMBAR SUPPORT ADJUSTER ASSEMBLY: INSTALLATION (2010 Corolla)		

INSTALLATION

1. INSTALL LUMBAR SUPPORT ADJUSTER ASSEMBLY

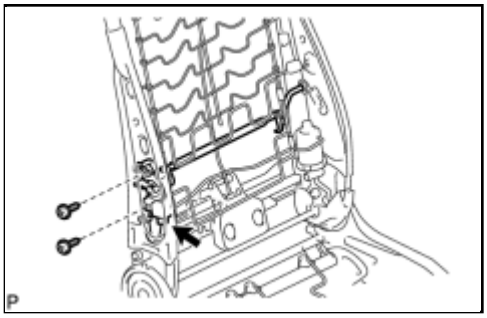

(a) Install the lumbar support adjuster assembly with the 2 screws.

(b) Connect the connector.

2. INSTALL FRONT SEATBACK COVER WITH PAD INFO

3. INSTALL FRONT SEAT CUSHION INNER SHIELD INFO

4. INSTALL FRONT SEAT INNER BELT ASSEMBLY INFO

5. INSTALL FRONT SEAT CUSHION SHIELD ASSEMBLY INFO

6. INSTALL SLIDE AND VERTICAL POWER SEAT SWITCH KNOB INFO

7. INSTALL RECLINING POWER SEAT SWITCH KNOB INFO

8. INSTALL FRONT SEAT ASSEMBLY INFO

9. INSTALL INNER SEAT TRACK COVER INFO

10. INSTALL OUTER SEAT TRACK COVER INFO

11. INSTALL FRONT SEAT HEADREST ASSEMBLY

12. INSPECT FRONT SEAT ASSEMBLY INFO

13. INSPECT SRS WARNING LIGHT

HINT:

Inspect the SRS warning light INFO **.**

Last Modified: 3-10-2010	6.4 K	**From:** 200901
Model Year: 2010	**Model:** Corolla	**Doc ID:** RM000003GV6001X
Title: SEAT: LUMBAR SWITCH: COMPONENTS (2010 Corolla)		

COMPONENTS

ILLUSTRATION

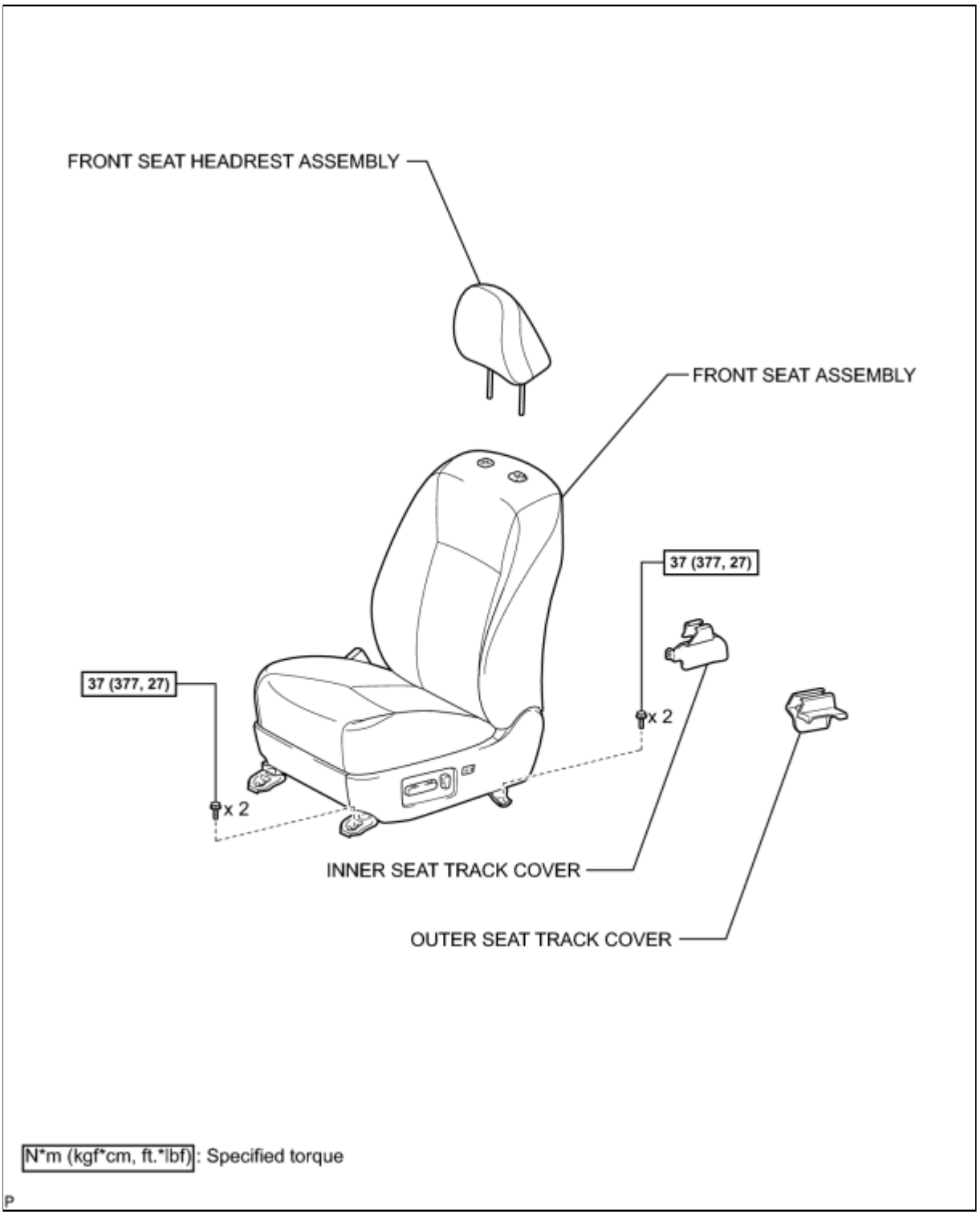

ILLUSTRATION

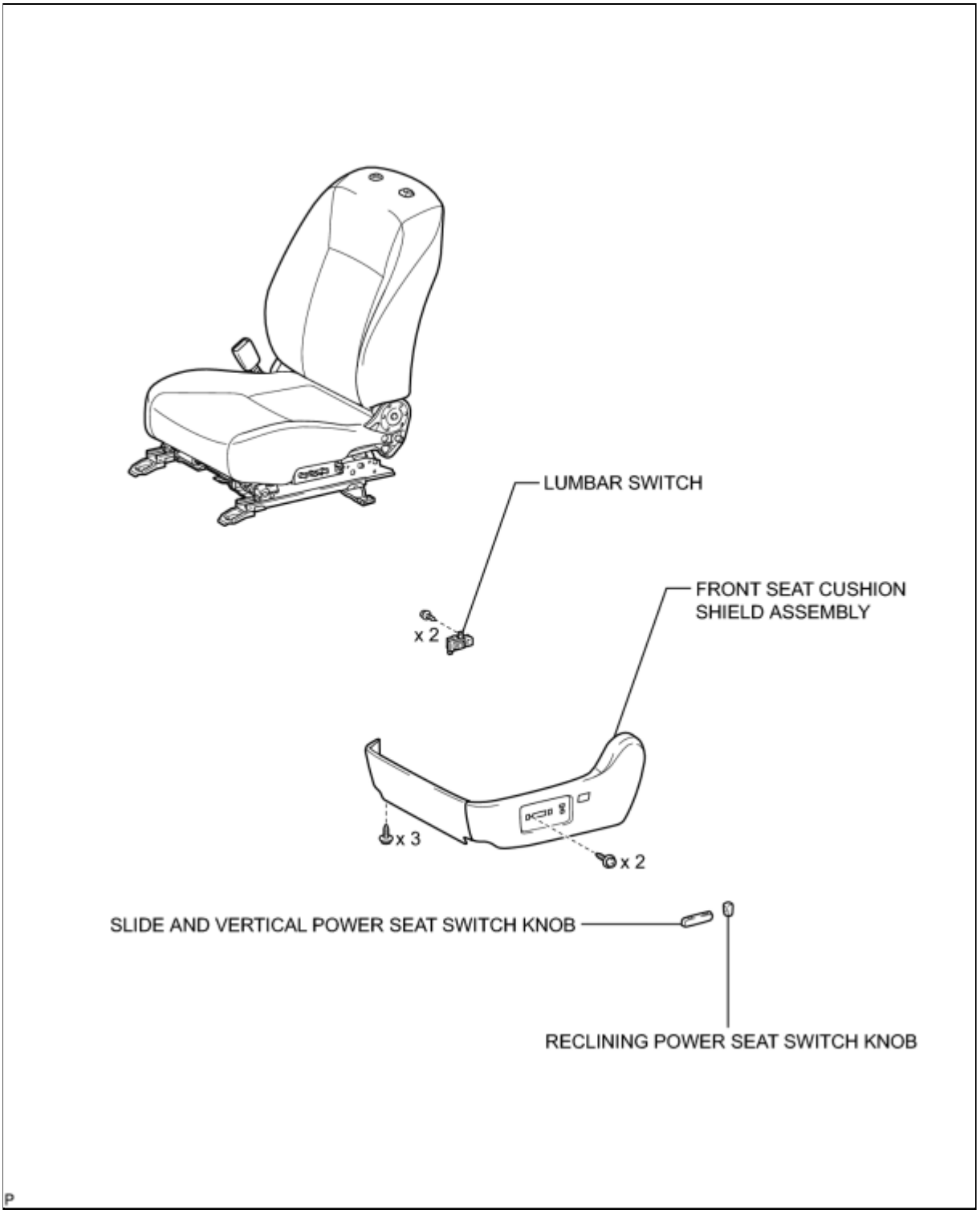

Last Modified: 3-10-2010	6.4 A	**From:** 200901
Model Year: 2010	**Model:** Corolla	**Doc ID:** RM000000AR900XX
Title: SEAT: LUMBAR SWITCH: REMOVAL (2010 Corolla)		

REMOVAL

1. **REMOVE FRONT SEAT HEADREST ASSEMBLY**
2. **REMOVE OUTER SEAT TRACK COVER** INFO
3. **REMOVE INNER SEAT TRACK COVER** INFO
4. **REMOVE FRONT SEAT ASSEMBLY** INFO
5. **REMOVE RECLINING POWER SEAT SWITCH KNOB** INFO
6. **REMOVE SLIDE AND VERTICAL POWER SEAT SWITCH KNOB** INFO
7. **REMOVE FRONT SEAT CUSHION SHIELD ASSEMBLY** INFO
8. **REMOVE LUMBAR SWITCH**

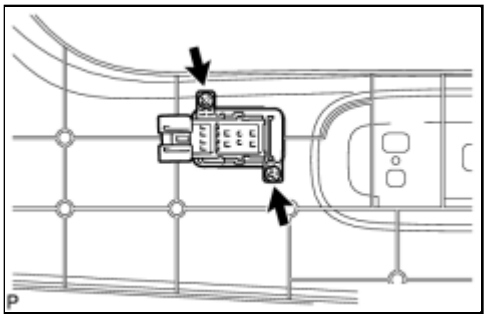

(a) Remove the 2 screws and remove the lumbar switch.

Last Modified: 3-10-2010	6.4 G	**From:** 200901
Model Year: 2010	**Model:** Corolla	**Doc ID:** RM000003GZS001X
Title: SEAT: LUMBAR SWITCH: INSPECTION (2010 Corolla)		

INSPECTION

1. INSPECT FRONT POWER SEAT LUMBAR SWITCH

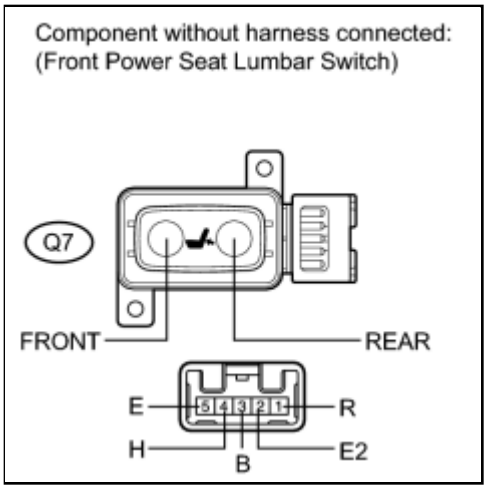

(a) Measure the resistance between the terminals when the switch is operated.

Standard Resistance:

TESTER CONNECTION	SWITCH CONDITION	SPECIFIED CONDITION
Q7-1 (R) - Q7-2 (E2)	FRONT	Below 1 Ω
Q7-3 (B) - Q7-4 (H)	FRONT	Below 1 Ω
Q7-1 (R) - Q7-2 (E2)	OFF	Below 1 Ω
Q7-4 (H) - Q7-5 (E)	OFF	Below 1 Ω
Q7-1 (R) - Q7-3 (B)	REAR	Below 1 Ω
Q7-4 (H) - Q7-5 (E)	REAR	Below 1 Ω

If the result is not as specified, replace the switch.

Last Modified: 3-10-2010	6.4 A	**From:** 200901
Model Year: 2010	**Model:** Corolla	**Doc ID:** RM000000Z8T03EX
Title: SEAT: LUMBAR SWITCH: INSTALLATION (2010 Corolla)		

INSTALLATION

1. INSTALL LUMBAR SWITCH

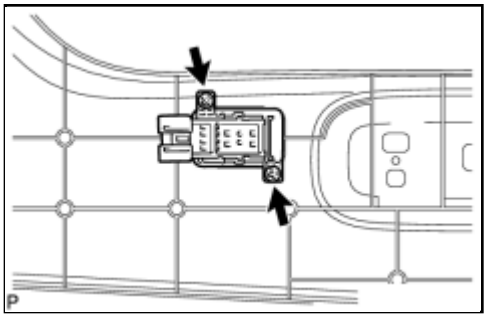

(a) Install the lumbar switch with the 2 screws.

2. INSTALL FRONT SEAT CUSHION SHIELD ASSEMBLY INFO

3. INSTALL SLIDE AND VERTICAL POWER SEAT SWITCH KNOB INFO

4. INSTALL RECLINING POWER SEAT SWITCH KNOB INFO

5. INSTALL FRONT SEAT ASSEMBLY INFO

6. INSTALL INNER SEAT TRACK COVER INFO

7. INSTALL OUTER SEAT TRACK COVER INFO

8. INSTALL FRONT SEAT HEADREST ASSEMBLY

9. INSPECT FRONT SEAT ASSEMBLY INFO

10. INSPECT SRS WARNING LIGHT

HINT:

Inspect the SRS warning light INFO **.**

Last Modified: 3-10-2010	6.4 K	**From:** 200901
Model Year: 2010	**Model:** Corolla	**Doc ID:** RM000003GV5001X
Title: SEAT: POWER SEAT SWITCH: COMPONENTS (2010 Corolla)		

COMPONENTS

ILLUSTRATION

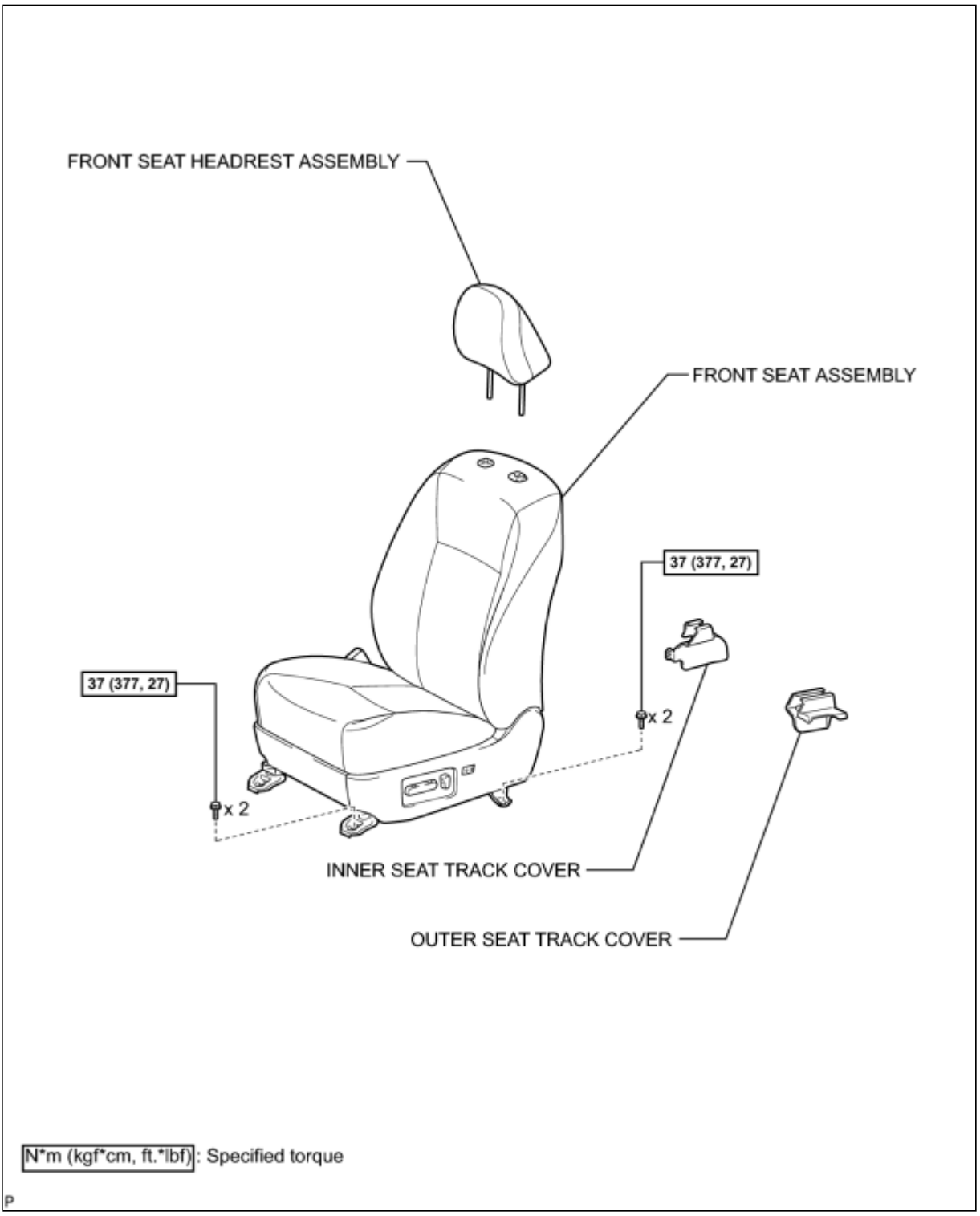

ILLUSTRATION

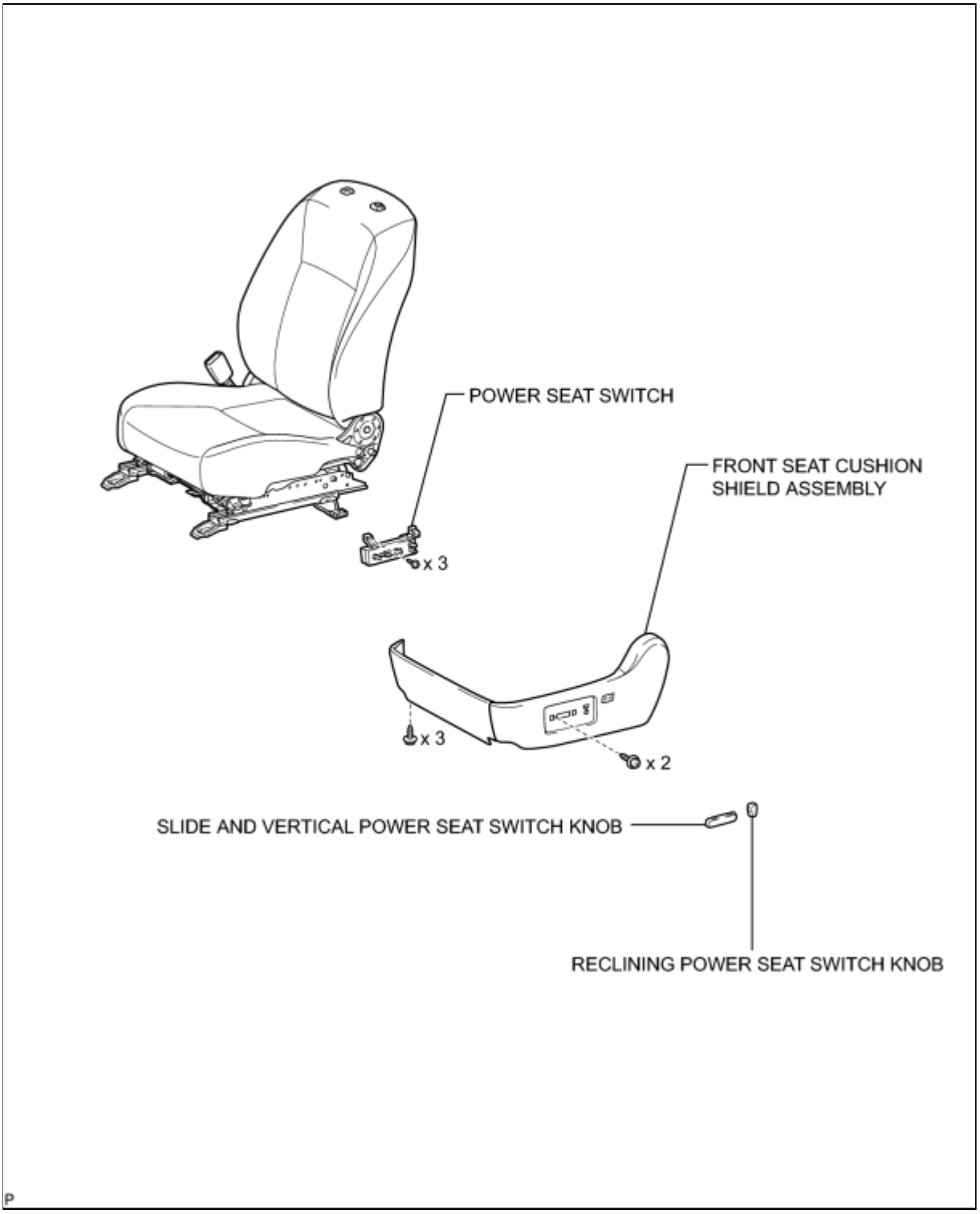

Last Modified: 3-10-2010	6.4 A	**From:** 200901
Model Year: 2010	**Model:** Corolla	**Doc ID:** RM000000AR900WX
Title: SEAT: POWER SEAT SWITCH: REMOVAL (2010 Corolla)		

REMOVAL

1. REMOVE FRONT SEAT HEADREST ASSEMBLY

2. REMOVE OUTER SEAT TRACK COVER INFO

3. REMOVE INNER SEAT TRACK COVER INFO

4. REMOVE FRONT SEAT ASSEMBLY INFO

5. REMOVE RECLINING POWER SEAT SWITCH KNOB INFO

6. REMOVE SLIDE AND VERTICAL POWER SEAT SWITCH KNOB INFO

7. REMOVE FRONT SEAT CUSHION SHIELD ASSEMBLY INFO

8. REMOVE POWER SEAT SWITCH

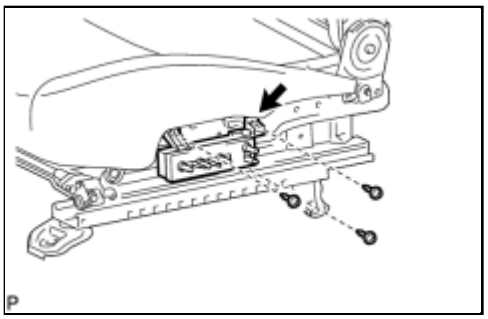

(a) Remove the 3 screws.

(b) Disconnect the connector and remove the power seat switch.

Last Modified: 3-10-2010	6.4 G	**From:** 200901
Model Year: 2010	**Model:** Corolla	**Doc ID:** RM000003GZU002X
Title: SEAT: POWER SEAT SWITCH: INSPECTION (2010 Corolla)		

INSPECTION

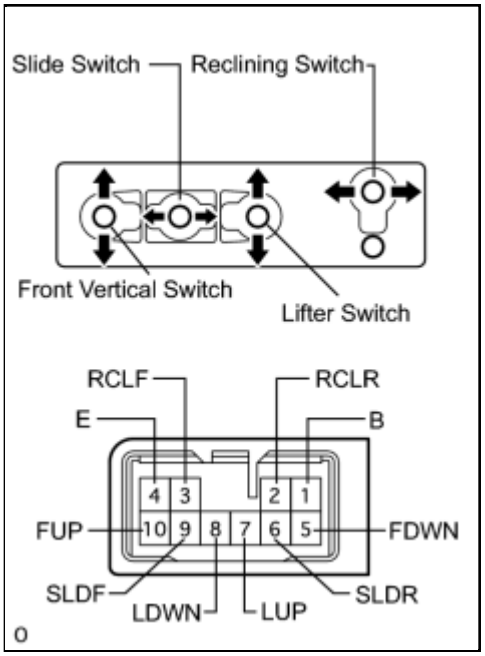

1. INSPECT POWER SEAT SWITCH

(a) Measure the resistance between the terminals when each switch is operated.

Standard Resistance (Slide Switch):

TESTER CONNECTION	SWITCH CONDITION	SPECIFIED CONDITION
1 (B) - 9 (SLDF)	FRONT	Below 1 Ω
4 (E) - 6 (SLDR)	FRONT	Below 1 Ω
4 (E) - 6 (SLDR)	OFF	Below 1 Ω
4 (E) - 9 (SLDF)	OFF	Below 1 Ω
1 (B) - 6 (SLDR)	REAR	Below 1 Ω
4 (E) - 9 (SLDF)	REAR	Below 1 Ω

Standard Resistance (Front Vertical Switch):

TESTER CONNECTION	SWITCH CONDITION	SPECIFIED CONDITION
1 (B) - 10 (FUP)	UP	Below 1 Ω
4 (E) - 5 (FDWN)	UP	Below 1 Ω
4 (E) - 10 (FUP)	OFF	Below 1 Ω
4 (E) - 5 (FDWN)	OFF	Below 1 Ω
1 (B) - 10 (FUP)	DOWN	Below 1 Ω
1 (B) - 5 (FDWN)	DOWN	Below 1 Ω

Standard Resistance (Lifter Switch):

TESTER CONNECTION	SWITCH CONDITION	SPECIFIED CONDITION
1 (B) - 7 (LUP)	UP	Below 1 Ω
4 (E) - 8 (LDWN)	UP	Below 1 Ω
4 (E) - 8 (LDWN)	OFF	Below 1 Ω

4 (E) - 7 (LUP)	OFF	Below 1 Ω
1 (B) - 8 (LDWN)	DOWN	Below 1 Ω
4 (E) - 7 (LUP)	DOWN	Below 1 Ω

Standard Resistance (Reclining Switch):

TESTER CONNECTION	SWITCH CONDITION	SPECIFIED CONDITION
1 (B) - 3 (RCLF)	FRONT	Below 1 Ω
2 (RCLR) - 4 (E)	FRONT	Below 1 Ω
2 (RCLR) - 4 (E)	OFF	Below 1 Ω
3 (RCLF) - 4 (E)	OFF	Below 1 Ω
1 (B) - 2 (RCLR)	REAR	Below 1 Ω
3 (RCLF) - 4 (E)	REAR	Below 1 Ω

If the result is not as specified, replace the switch.

Last Modified: 3-10-2010	6.4 K	**From:** 200901
Model Year: 2010	**Model:** Corolla	**Doc ID:** RM000002XNV00EX
Title: SEAT: REAR SEAT ASSEMBLY: COMPONENTS (2010 Corolla)		

COMPONENTS

ILLUSTRATION

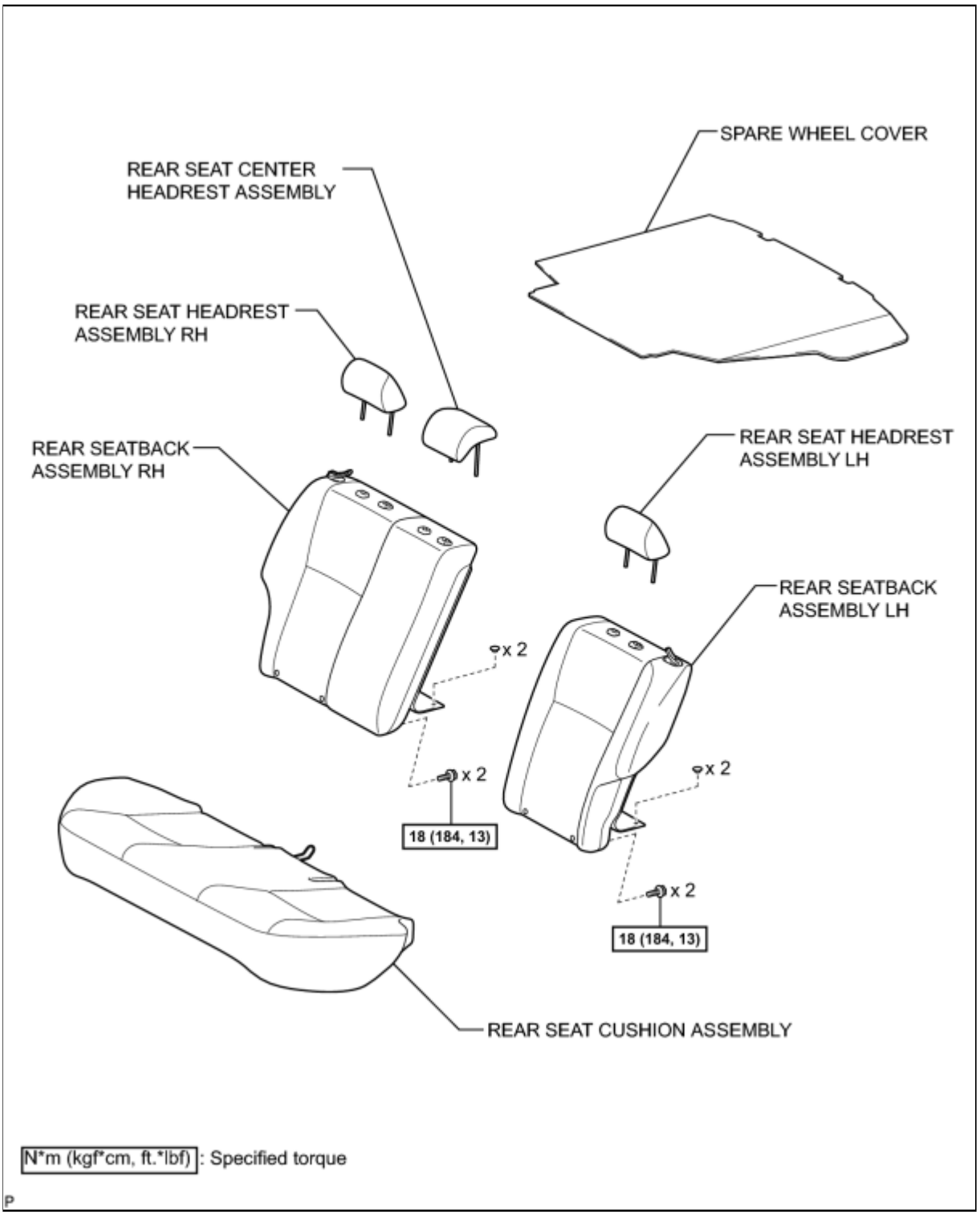

ILLUSTRATION

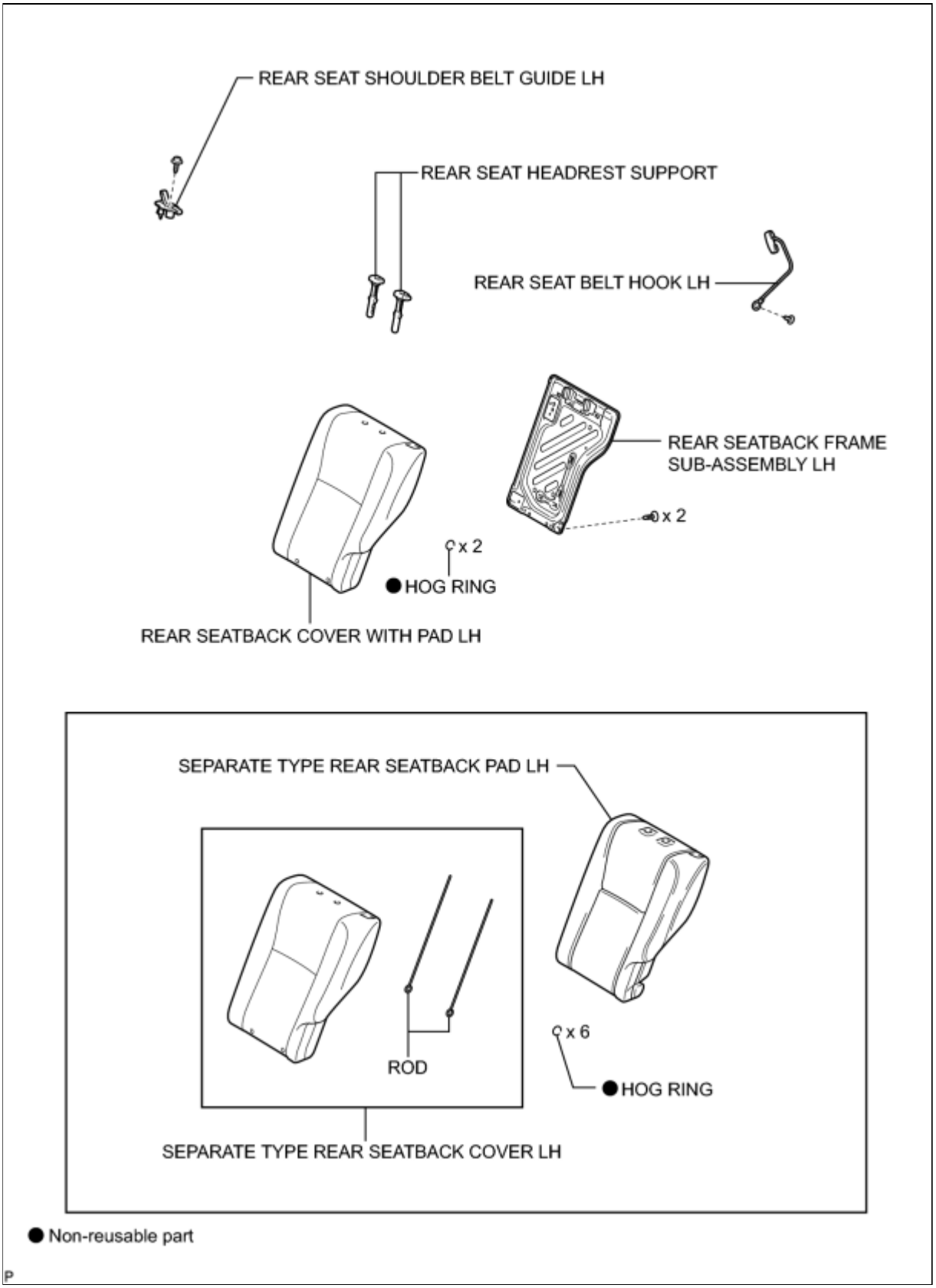

ILLUSTRATION

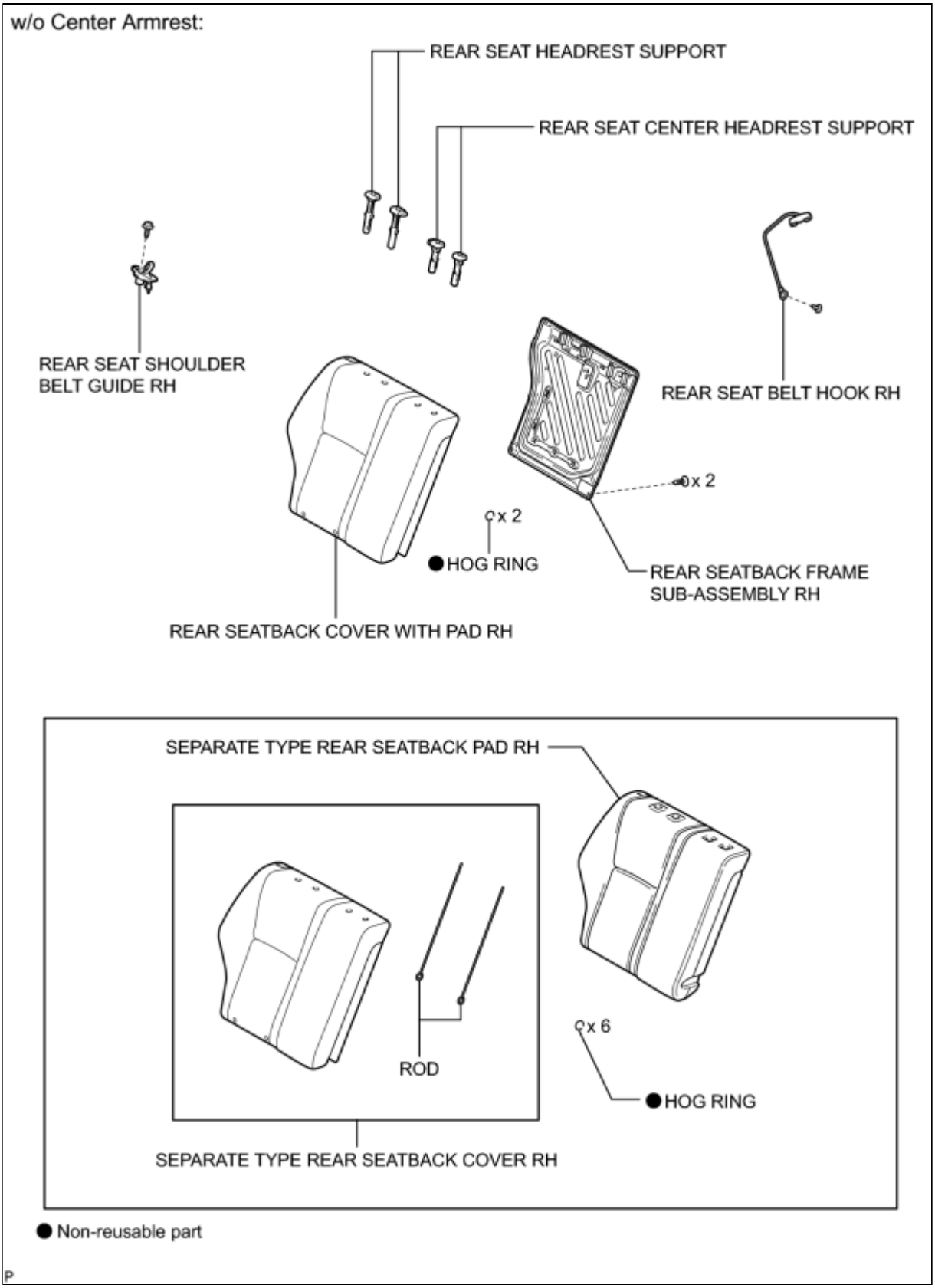

ILLUSTRATION

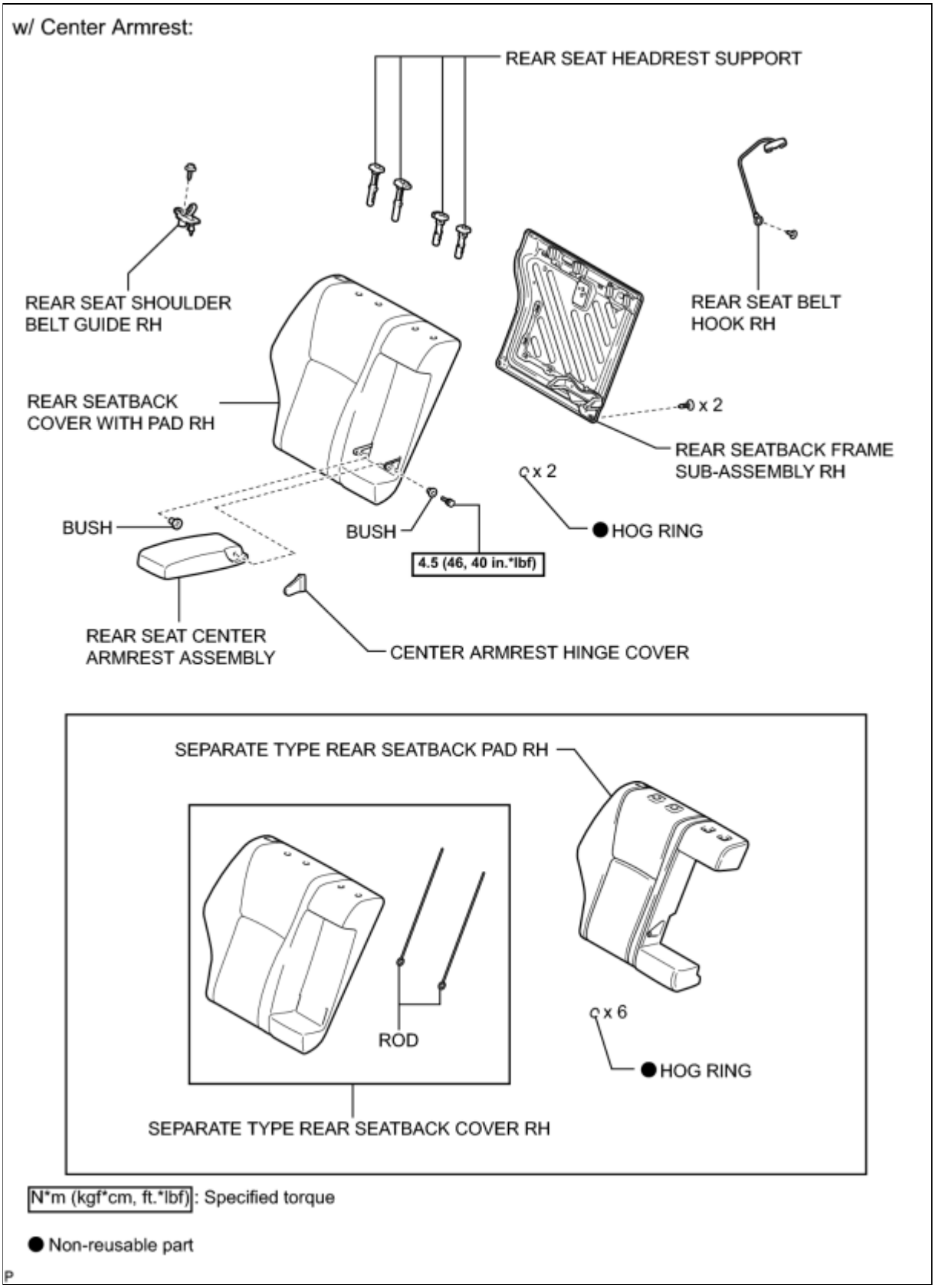

ILLUSTRATION

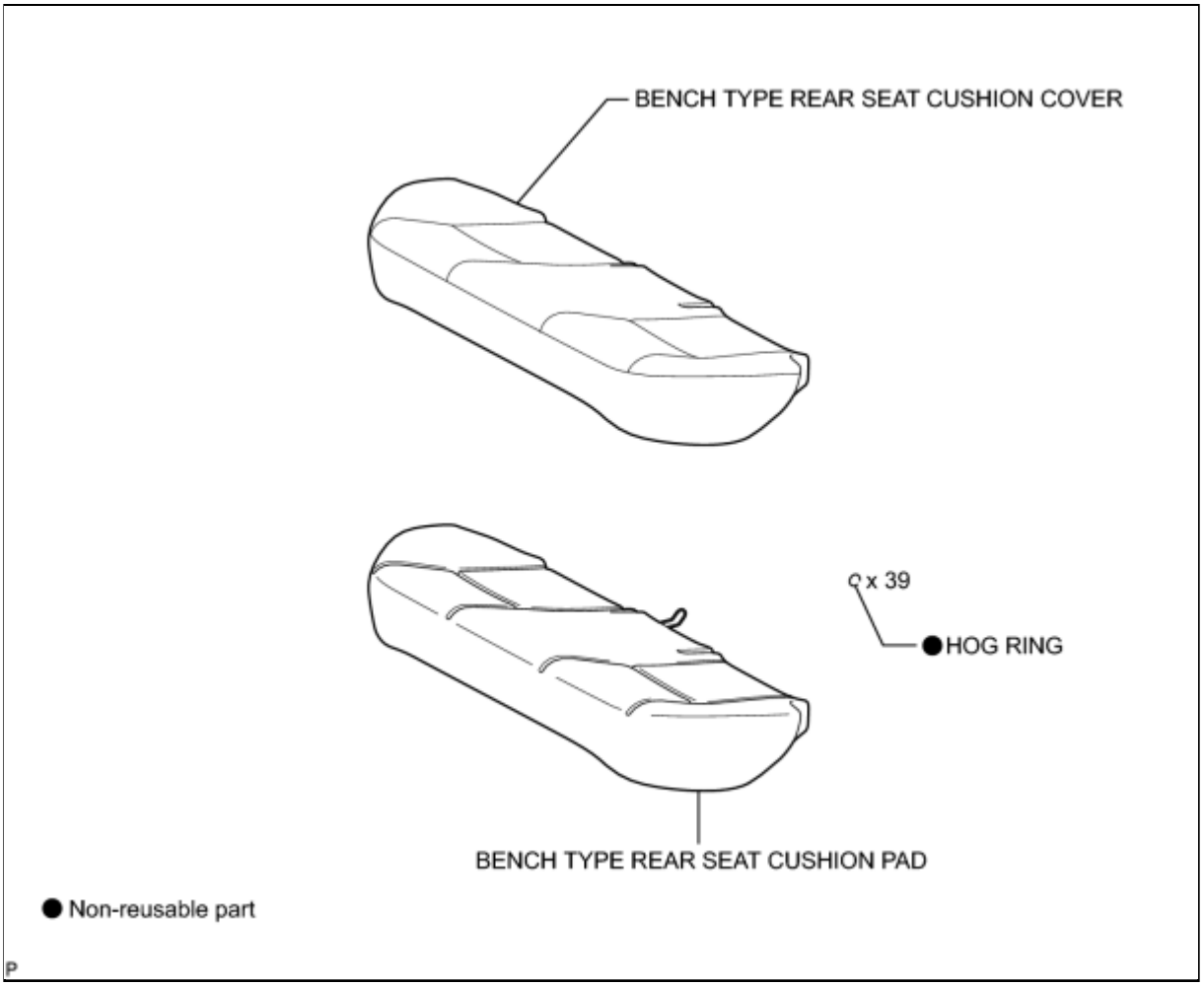

Last Modified: 3-10-2010	6.4 A	**From:** 200901
Model Year: 2010	**Model:** Corolla	**Doc ID:** RM000000Z8T03DX
Title: SEAT: POWER SEAT SWITCH: INSTALLATION (2010 Corolla)		

INSTALLATION

1. INSTALL POWER SEAT SWITCH

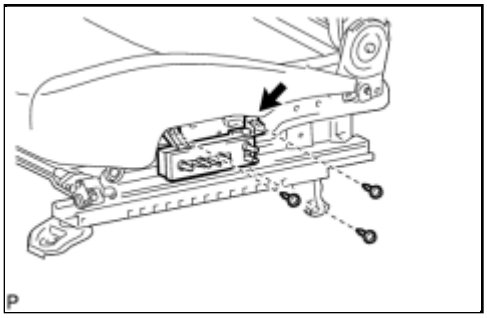

(a) Connect the connector.

(b) Install the power seat switch with the 3 screws.

2. INSTALL FRONT SEAT CUSHION SHIELD ASSEMBLY INFO

3. INSTALL SLIDE AND VERTICAL POWER SEAT SWITCH KNOB INFO

4. INSTALL RECLINING POWER SEAT SWITCH KNOB INFO

5. INSTALL FRONT SEAT ASSEMBLY INFO

6. INSTALL INNER SEAT TRACK COVER INFO

7. INSTALL OUTER SEAT TRACK COVER INFO

8. INSTALL FRONT SEAT HEADREST ASSEMBLY

9. INSPECT FRONT SEAT ASSEMBLY INFO

10. INSPECT SRS WARNING LIGHT

HINT:

Inspect the SRS warning light INFO .

Last Modified: 3-10-2010	6.4 A	**From:** 200901
Model Year: 2010	**Model:** Corolla	**Doc ID:** RM000002XNX00GX
Title: SEAT: REAR SEAT ASSEMBLY: DISASSEMBLY (2010 Corolla)		

DISASSEMBLY

1. REMOVE REAR SEATBACK COVER WITH PAD LH

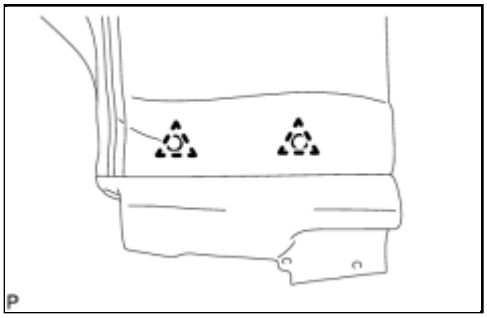

(a) Using a clip remover, remove the 2 clips.

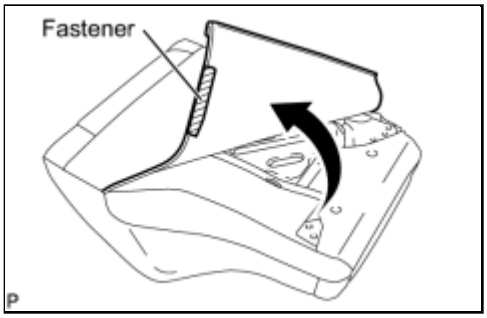

(b) Unfasten and flip back the rear seatback cover with pad LH as shown in the illustration.

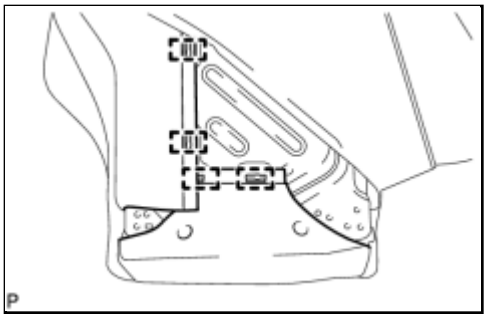

(c) Disengage the 4 hooks.

(d) Remove the 2 hog rings.

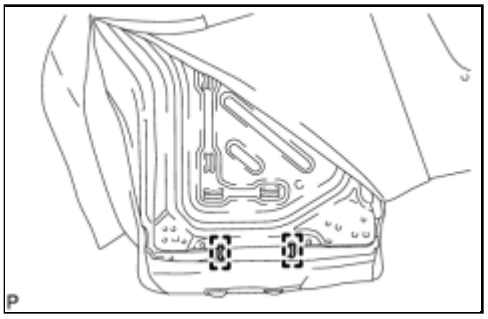

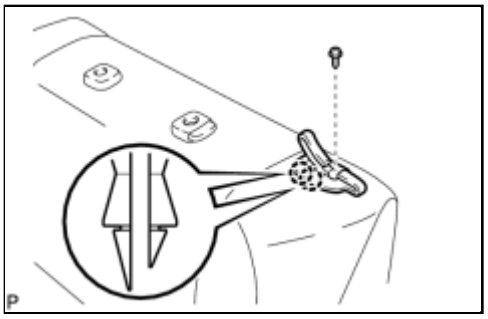

(e) Remove the screw.

(f) Disengage the 2 claws and remove the rear seat shoulder belt guide LH.

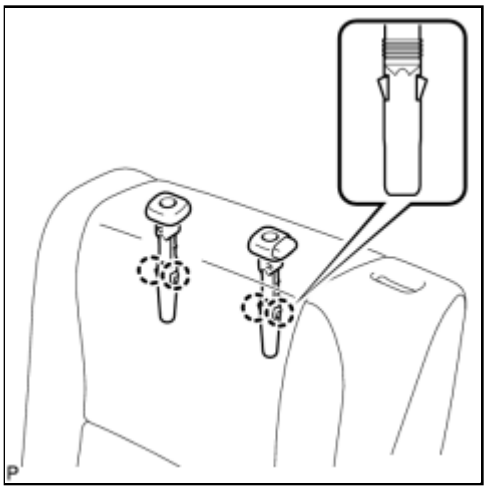

(g) Disengage the 4 claws and remove the 2 rear seat headrest supports.

(h) Remove the rear seatback cover with pad LH from the rear seatback frame sub-assembly LH.

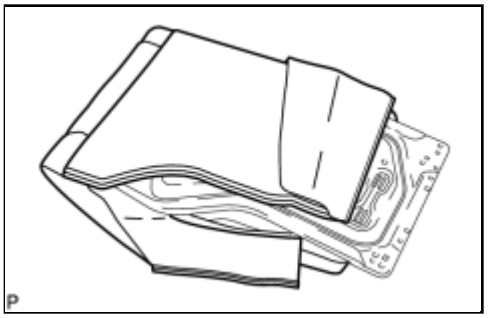

2. REMOVE SEPARATE TYPE REAR SEATBACK COVER LH

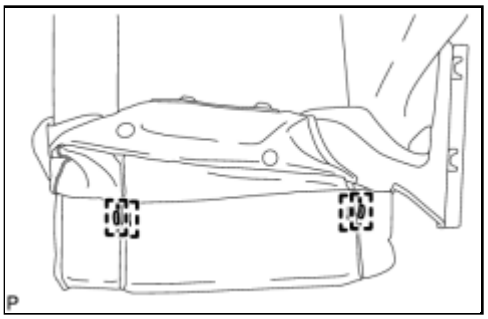

(a) Remove the 4 hog rings.

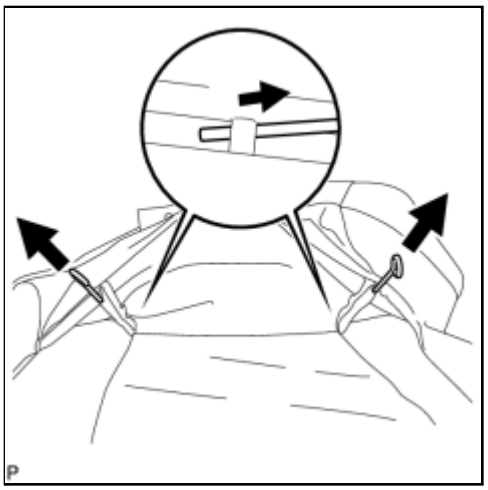

(b) Remove the rod from the separate type rear seatback cover LH as shown in the illustration.

(c) Remove the 2 hog rings and the separate type rear seatback cover LH.

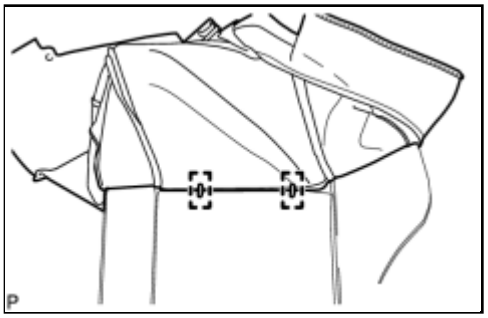

3. REMOVE REAR SEAT BELT HOOK LH

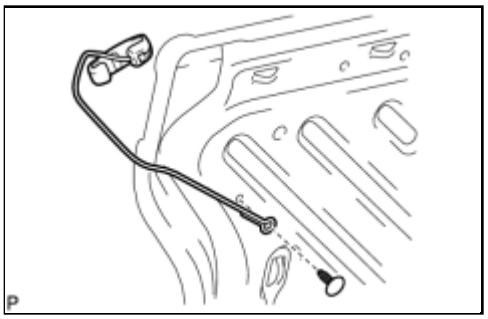

(a) Remove the clip and the rear seat belt hook LH.

4. REMOVE CENTER ARMREST HINGE COVER (w/ Center Armrest)

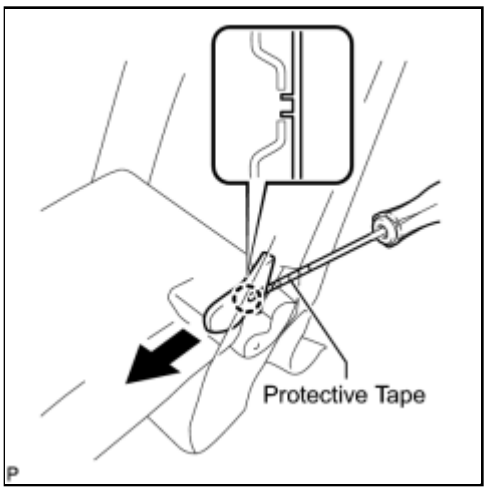

(a) Using a screwdriver with the tip taped, disengage the claw and remove the center armrest hinge cover as shown in the illustration.

5. REMOVE REAR SEAT CENTER ARMREST ASSEMBLY (w/ Center Armrest)

(a) Remove the bolt and bush.

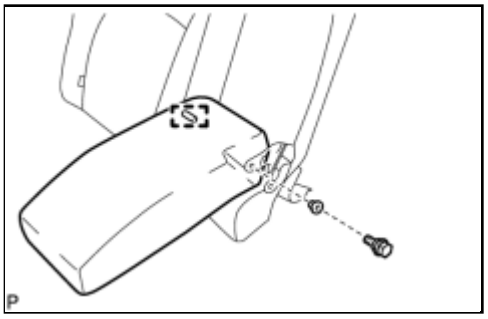

(b) Separate the pin and remove the center armrest assembly.

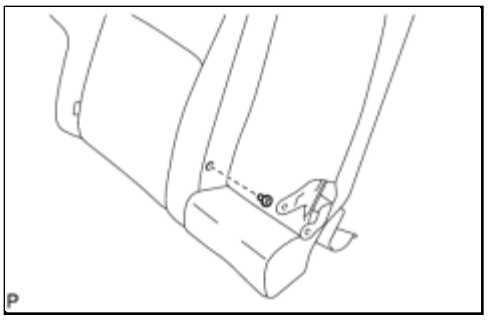

(c) Remove the bush.

6. REMOVE REAR SEATBACK COVER WITH PAD RH

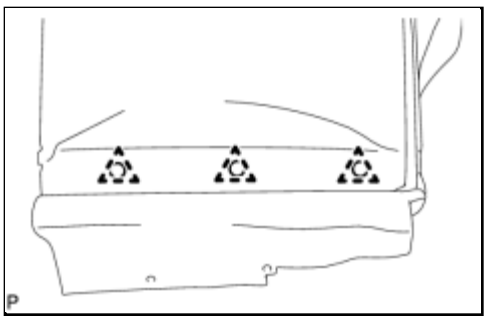

(a) Using a clip remover, remove the 3 clips.

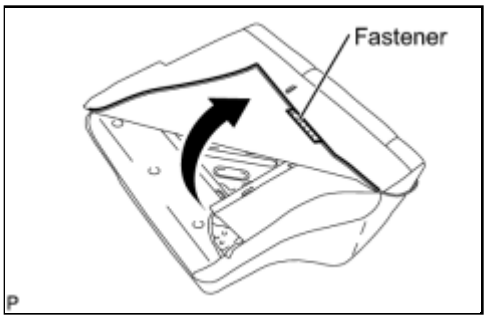

(b) Unfasten and flip back the rear seatback cover with pad LH as shown in the illustration.

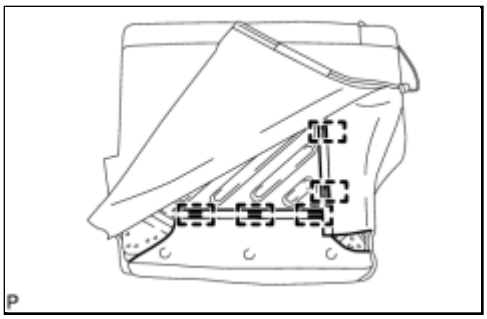

(c) Disengage the 5 hooks.

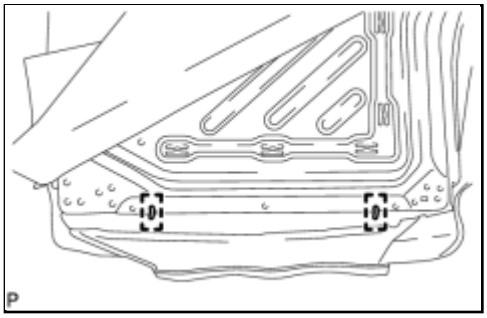

(d) Remove the 2 hog rings.

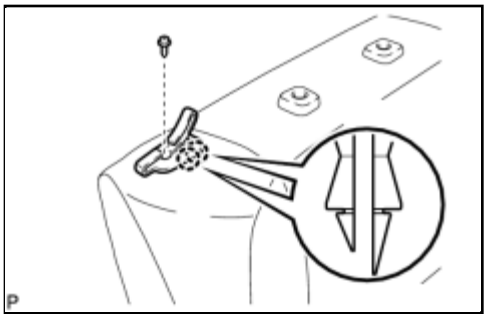

(e) Remove the screw.

(f) Disengage the 2 claws and remove the rear seat shoulder belt guide RH.

(g) Disengage the 4 claws and remove the 2 rear seat headrest supports.

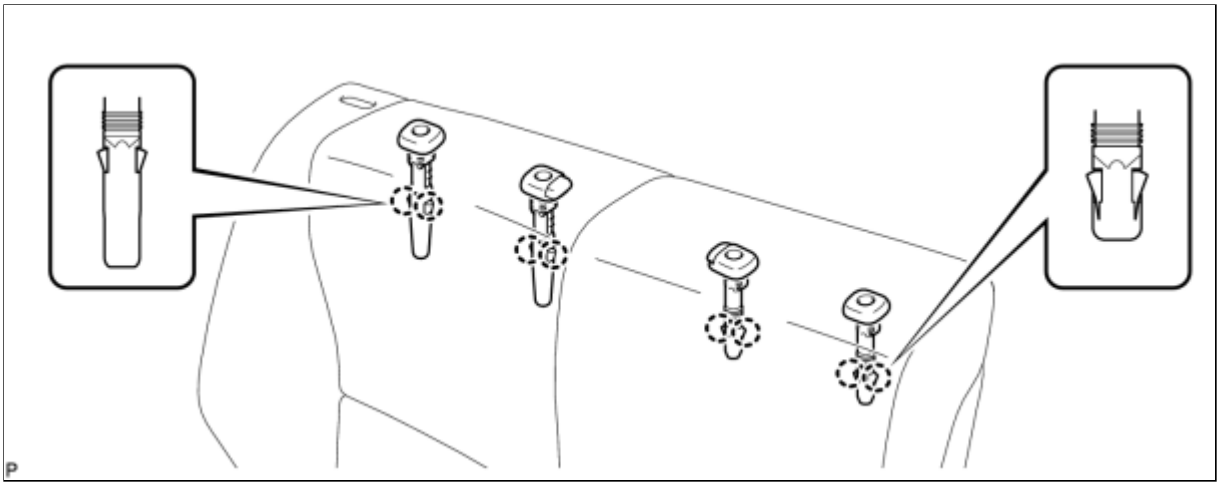

(h) Disengage the 4 claws and remove the 2 rear seat center headrest supports.

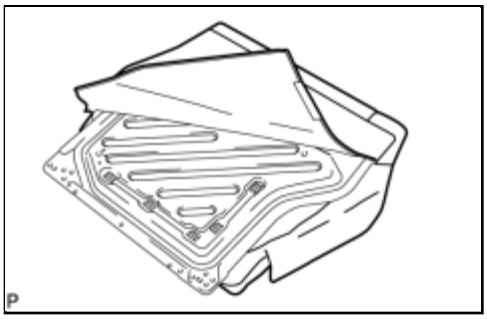

(i) Remove the rear seatback cover with pad RH from the rear seatback frame sub-assembly RH.

7. REMOVE SEPARATE TYPE REAR SEATBACK COVER RH

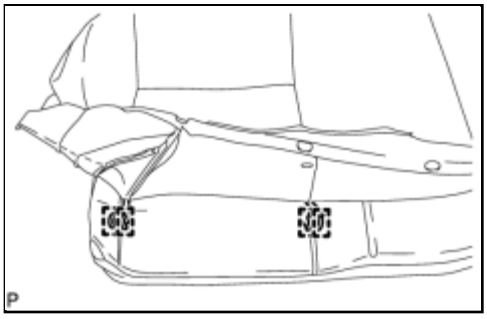

(a) Remove the 4 hog rings.

(b) Remove the rod from the separate type rear seatback cover RH as shown in the illustration.

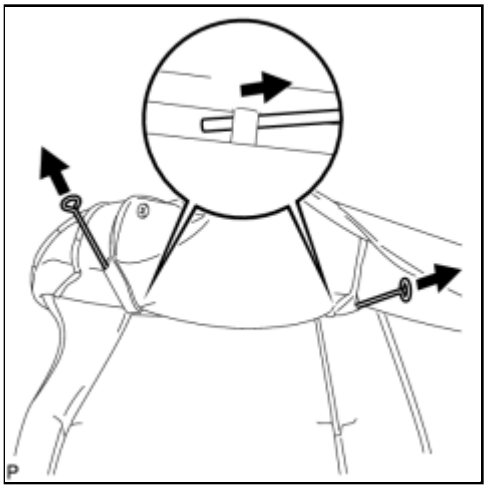

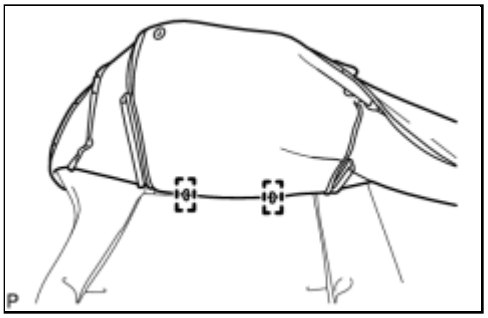

(c) Remove the 2 hog rings and the separate type rear seatback cover RH.

8. REMOVE REAR SEAT BELT HOOK RH

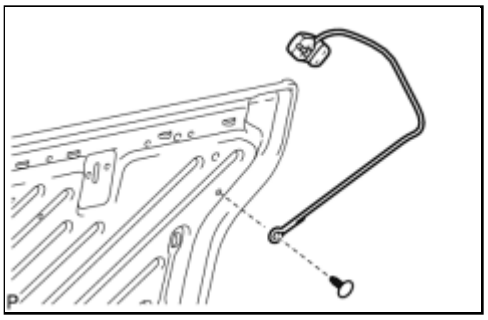

(a) Remove the clip and the rear seat belt hook RH.

9. REMOVE BENCH TYPE REAR SEAT CUSHION COVER

(a) Remove the 27 hog rings.

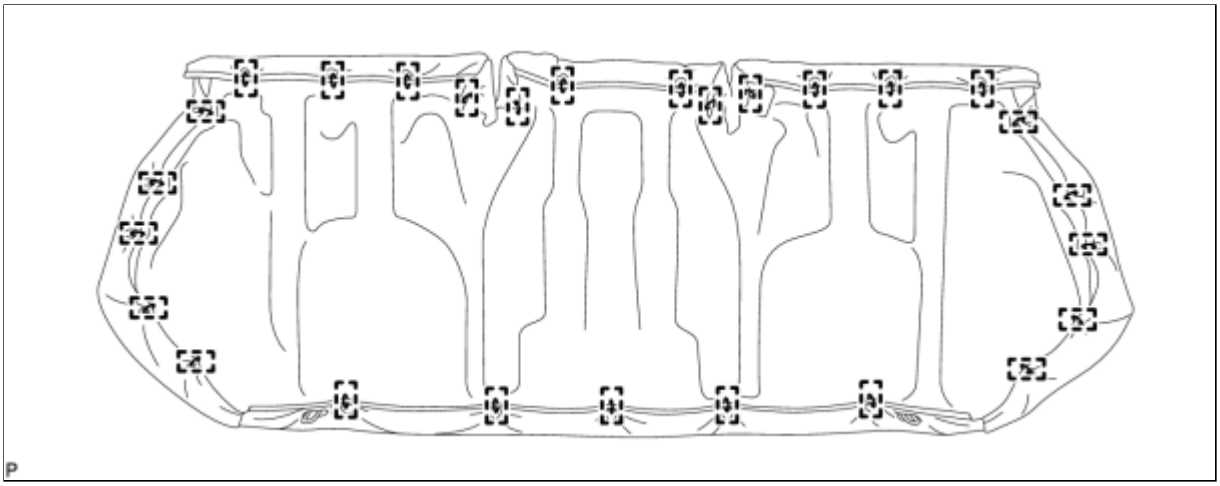

(b) Remove the 12 hog rings and the rear seat cushion cover sub-assembly.

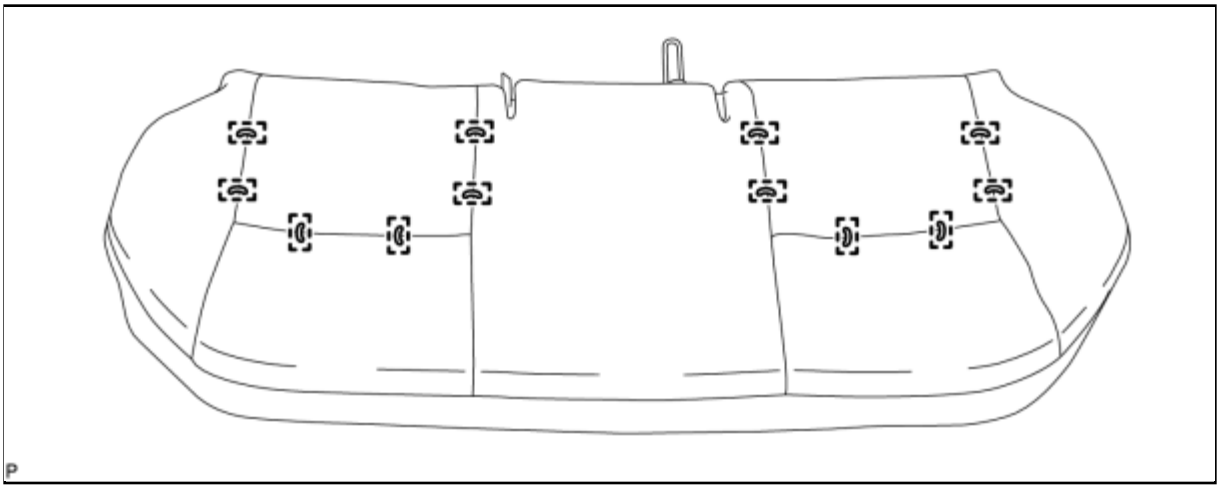

Last Modified: 3-10-2010	6.4 A	**From:** 200901
Model Year: 2010	**Model:** Corolla	**Doc ID:** RM000002XNY00GX
Title: SEAT: REAR SEAT ASSEMBLY: REASSEMBLY (2010 Corolla)		

REASSEMBLY

1. INSTALL BENCH TYPE REAR SEAT CUSHION COVER

(a) Using hog ring pliers, install the rear seat cushion cover sub-assembly with 12 new hog rings.

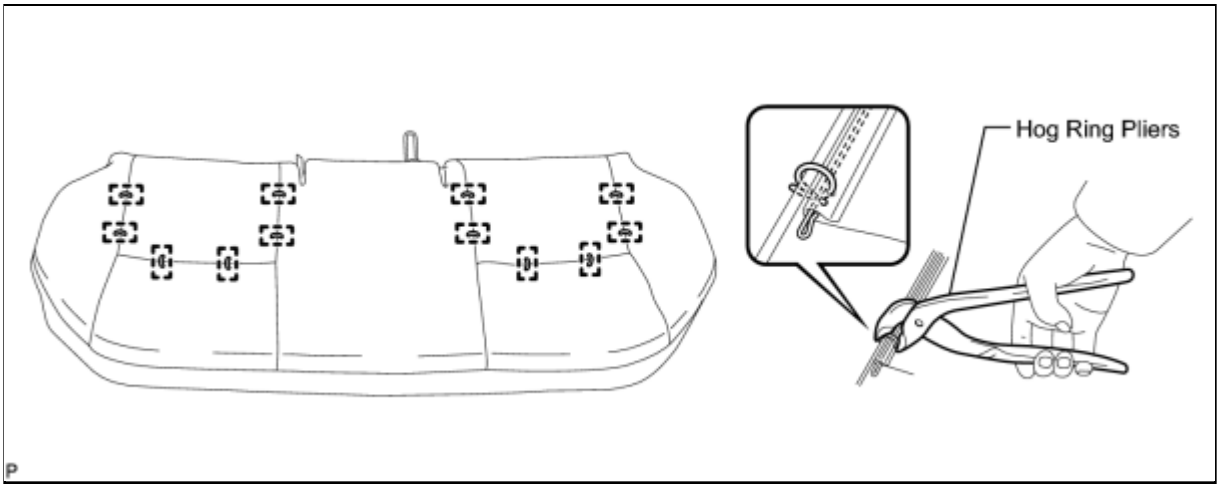

NOTICE:

- Be careful not to damage the cover.
- When installing the hog rings, take care to minimize wrinkles as much as possible.

(b) Using hog ring pliers, install the rear seat cushion cover sub-assembly with 27 new hog rings.

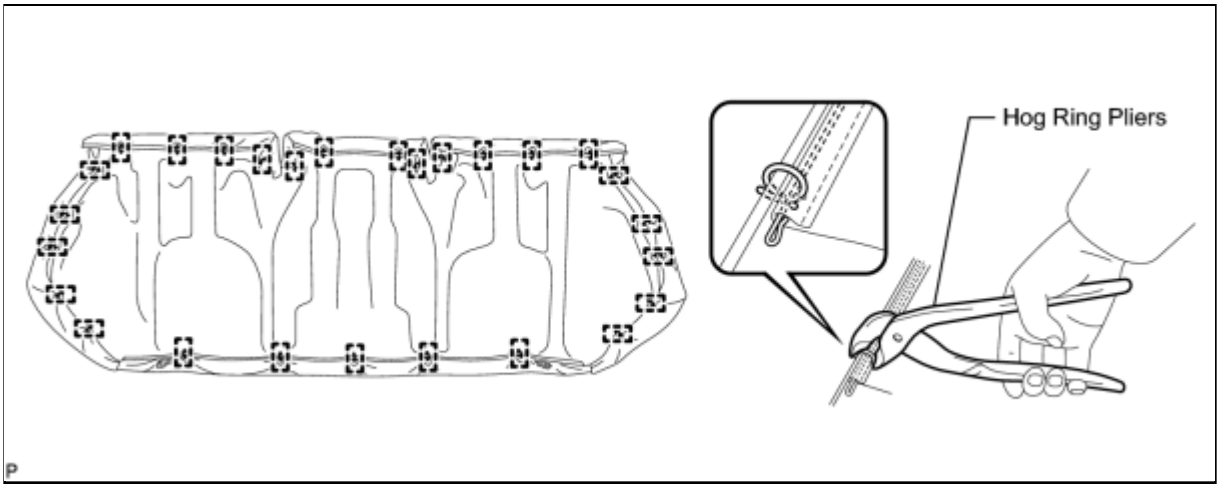

NOTICE:

- Be careful not to damage the cover.
- When installing the hog rings, take care to minimize wrinkles as much as possible.

2. INSTALL REAR SEAT BELT HOOK RH

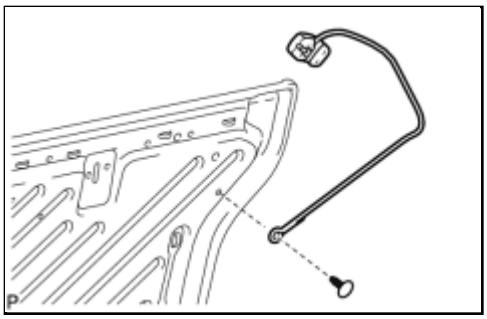

(a) Install the rear seat belt hook RH with the clip.

3. INSTALL SEPARATE TYPE REAR SEATBACK COVER RH

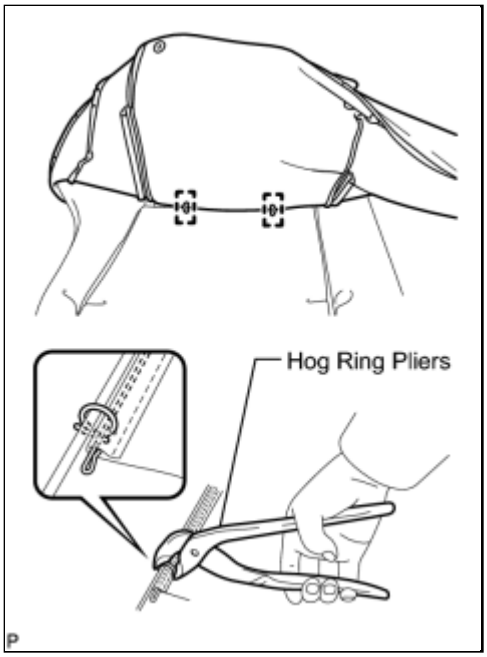

(a) Using hog ring pliers, install the separate type rear seatback cover RH to the separate type rear seatback pad RH with 2 new hog rings.

NOTICE:

- Be careful not to damage the cover.
- When installing the hog rings, take care to minimize wrinkles as much as possible.

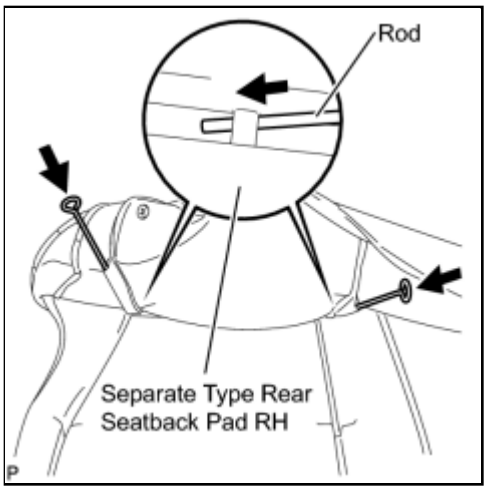

(b) Install the rod to the separate type rear seatback cover RH.

(c) Insert the rod to the separate type rear seatback pad RH as shown in the illustration.

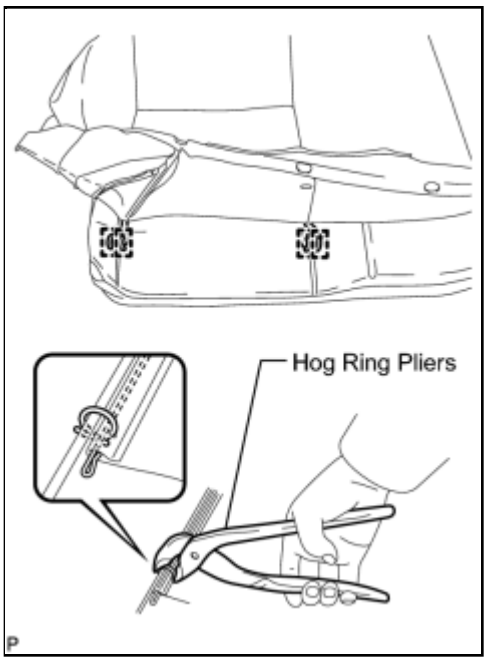

(d) Using hog ring pliers, install the separate type rear seatback cover RH to the separate type rear seatback pad RH with 4 new hog rings.

NOTICE:

- Be careful not to damage the cover.
- When installing the hog rings, take care to minimize wrinkles as much as possible.

4. INSTALL REAR SEATBACK COVER WITH PAD RH

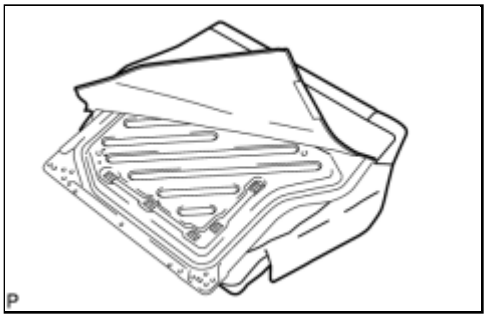

(a) Temporarily install the rear seatback cover with pad RH to the rear seatback frame sub-assembly RH.

(b) Engage the 4 claws and install the 2 rear seat center headrest supports.

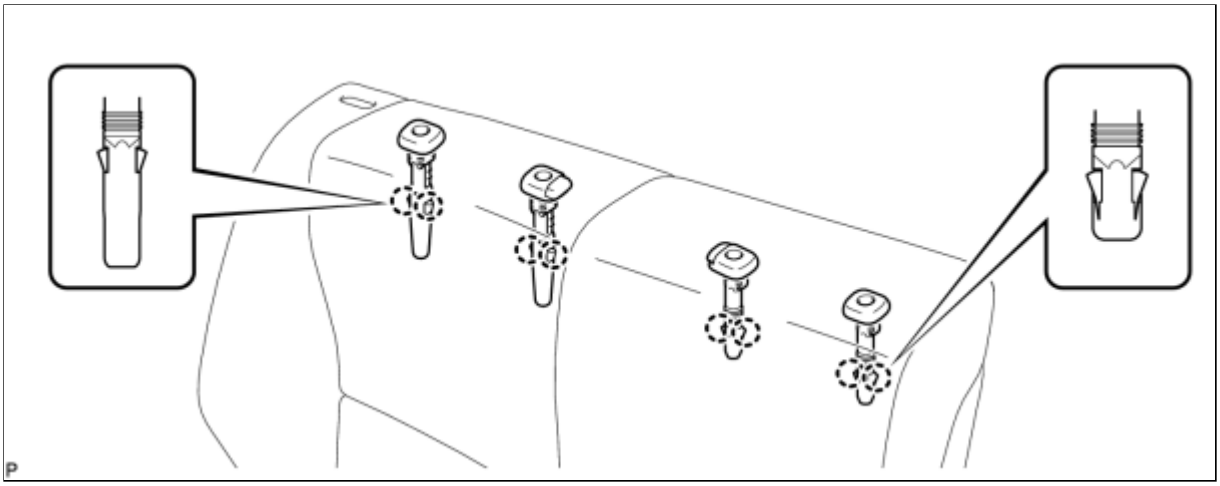

(c) Engage the 4 claws and install the 2 rear seat headrest supports.

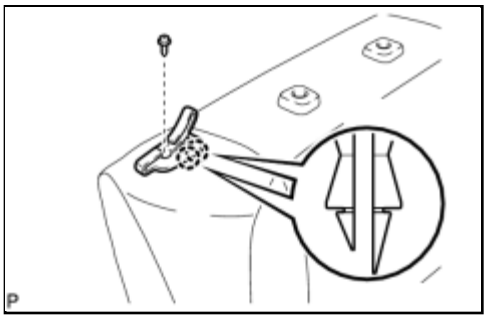

(d) Engage the 2 claws.

(e) Install the rear seat shoulder belt guide RH with the screw.

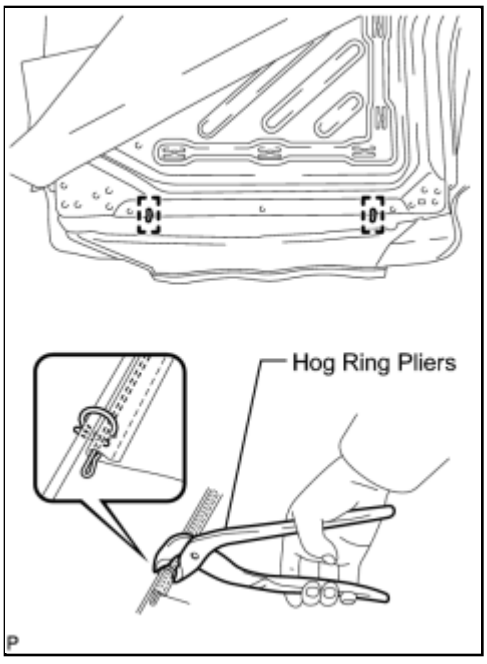

(f) Using hog ring pliers, install 2 new hog rings.

NOTICE:

- Be careful not to damage the cover.
- When installing the hog rings, take care to minimize wrinkles as much as possible.

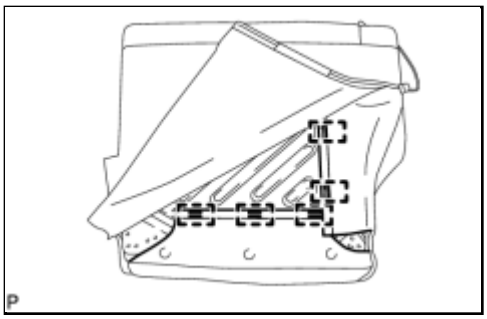

(g) Engage the 5 hooks.

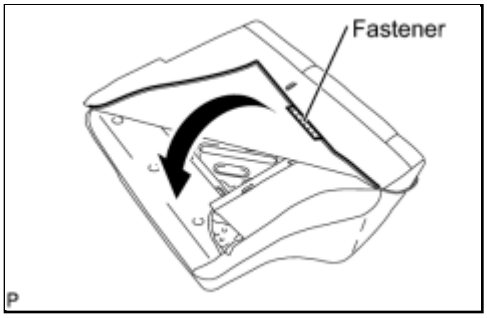

(h) Fasten the rear seatback cover with pad RH.

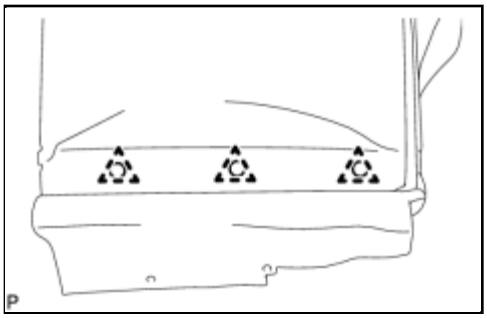

(i) Install the 3 clips.

5. INSTALL REAR SEAT CENTER ARMREST ASSEMBLY (w/ Center Armrest)

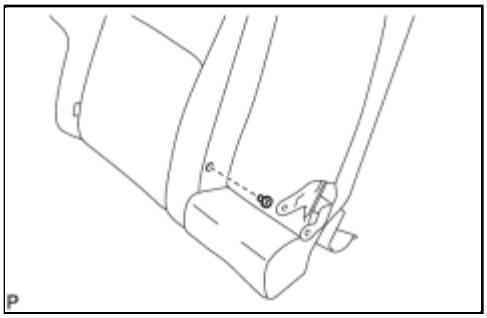

(a) Install the bush.

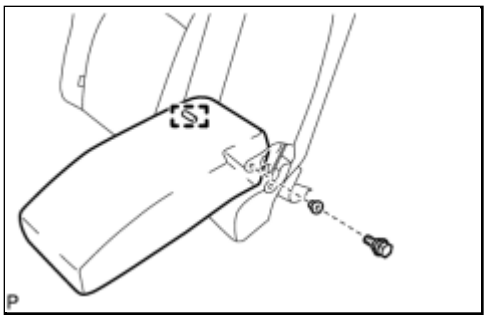

(b) Insert the pin into the rear seatback.

Torque: 4.5 N·m (46 kgf·cm, 40in·lbf)

(c) Install the rear seat center armrest assembly with the bolt and bush.

6. INSTALL CENTER ARMREST HINGE COVER (w/ Center Armrest)

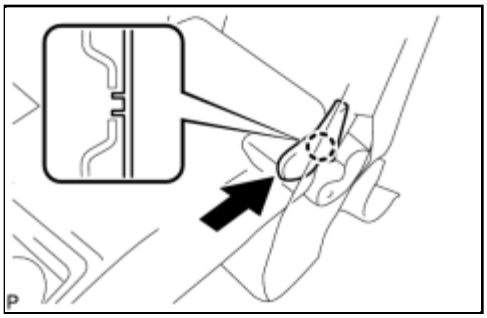

(a) Engage the claw and install the center armrest hinge cover as shown in the illustration.

7. INSTALL REAR SEAT BELT HOOK LH

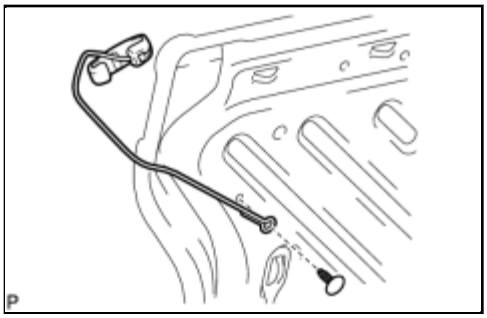

(a) Install the rear seat belt hook LH with the clip.

8. INSTALL SEPARATE TYPE REAR SEATBACK COVER LH

(a) Using hog ring pliers, install the separate type rear seatback cover LH to the separate type rear seatback pad LH with 2 new hog rings.

NOTICE:

- Be careful not to damage the cover.

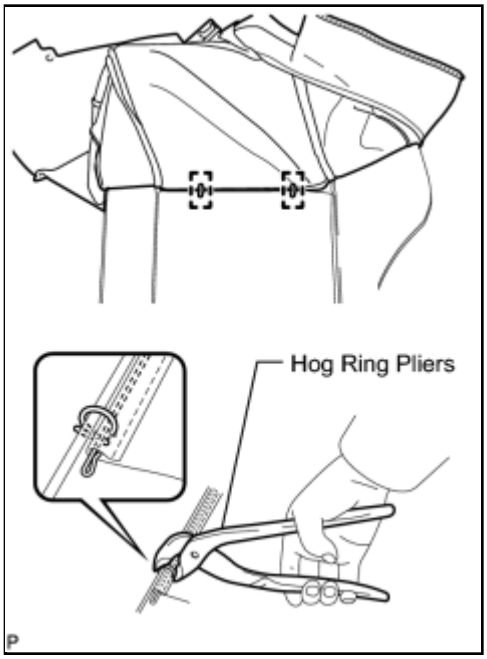

- When installing the hog rings, take care to minimize wrinkles as much as possible.

(b) Install the rod to the separate type rear seatback cover LH.

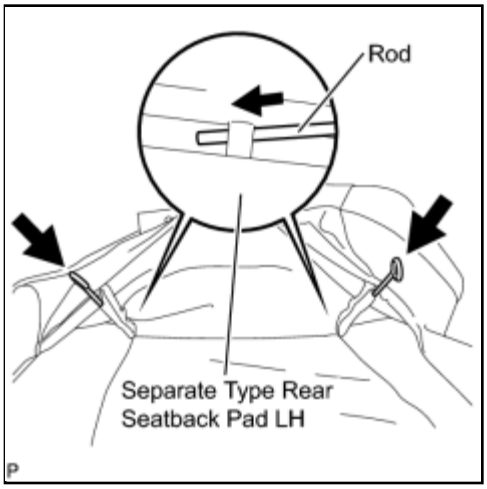

(c) Insert the rod to the separate type rear seatback pad LH as shown in the illustration.

(d) Using hog ring pliers, install the separate type rear seatback cover LH to the separate type rear seatback pad LH with 4 new hog rings.

NOTICE:

- Be careful not to damage the cover.
- When installing the hog rings, take care to minimize wrinkles as much as possible.

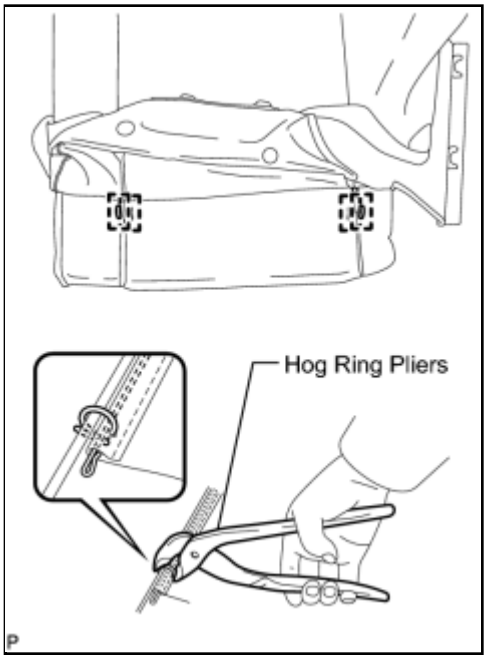

9. INSTALL REAR SEATBACK COVER WITH PAD LH

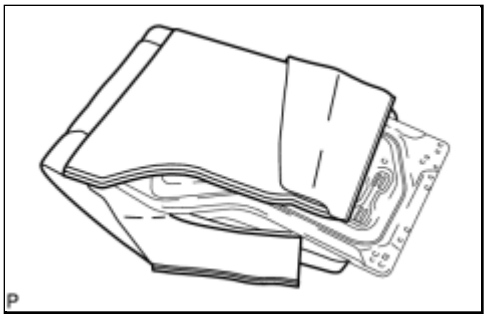

(a) Temporarily install the rear seatback cover with pad LH to the rear seatback frame sub-assembly LH.

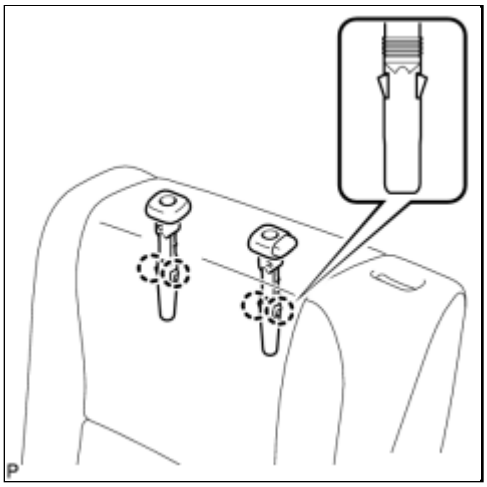

(b) Engage the 4 claws and install the 2 rear seat headrest supports.

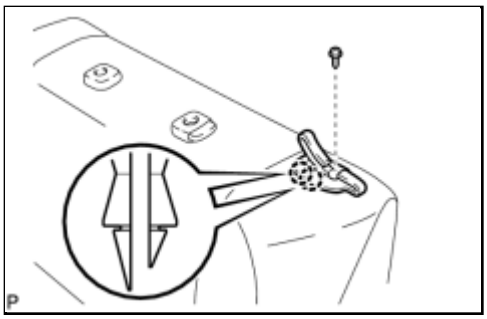

(c) Engage the 2 claws.

(d) Install the rear seat shoulder belt guide LH with the screw.

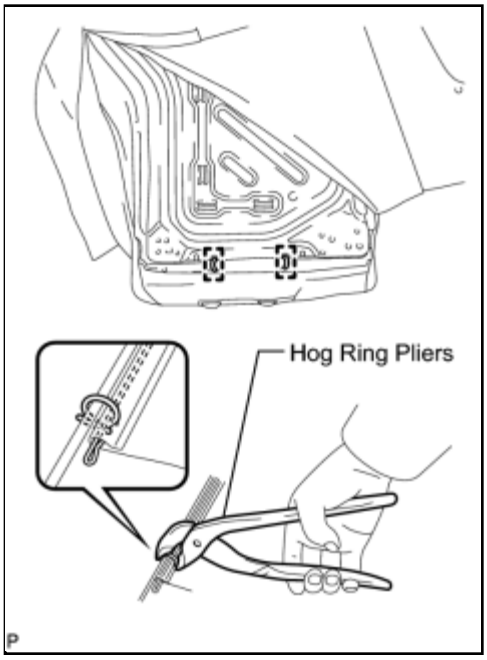

(e) Using hog ring pliers, install 2 new hog rings.

NOTICE:

- Be careful not to damage the cover.
- When installing the hog rings, take care to minimize wrinkles as much as possible.

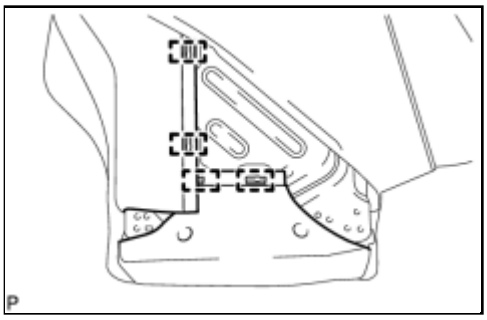

(f) Engage the 4 hooks.

(g) Fasten the rear seatback cover with pad LH.

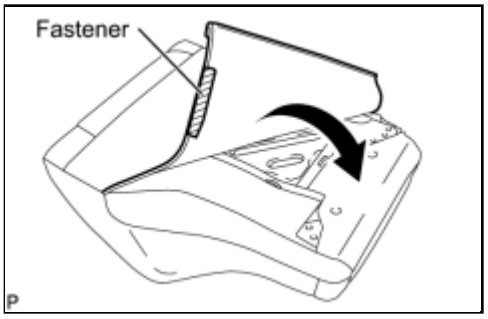

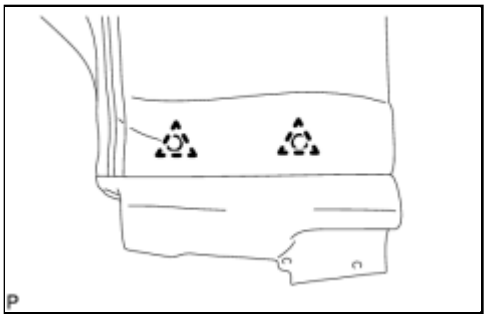

(h) Install the 2 clips.

Last Modified: 3-10-2010	6.4 A	**From:** 200901
Model Year: 2010	**Model:** Corolla	**Doc ID:** RM000002XNW00GX
Title: SEAT: REAR SEAT ASSEMBLY: REMOVAL (2010 Corolla)		

REMOVAL

1. REMOVE SPARE WHEEL COVER INFO

2. REMOVE REAR SEAT HEADREST ASSEMBLY LH

3. REMOVE REAR SEAT HEADREST ASSEMBLY RH

4. REMOVE REAR SEAT CENTER HEADREST ASSEMBLY

5. REMOVE REAR SEAT CUSHION ASSEMBLY

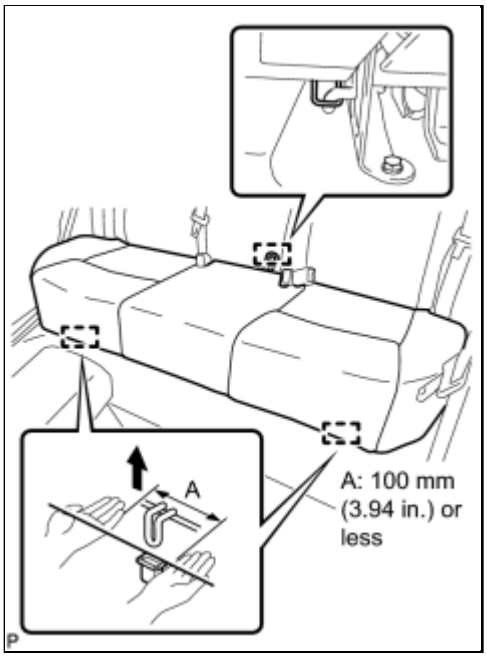

(a) Detach the 2 front hooks of the seat cushion from the vehicle body as shown in the illustration.

NOTICE:

Follow the instructions below carefully as the cushion frame deforms easily.

(1) Choose a hook to detach first. Place your hands near the hook as shown in the illustration. Then lift the seat cushion to detach the hook.

(2) Repeat the above procedure for the other hook.

(b) Detach the rear hook of the seat cushion from the seatback.

(c) Remove the rear seat cushion assembly.

6. REMOVE REAR SEATBACK ASSEMBLY LH

(a) Using a clip remover, remove the 2 rear seat back clips.

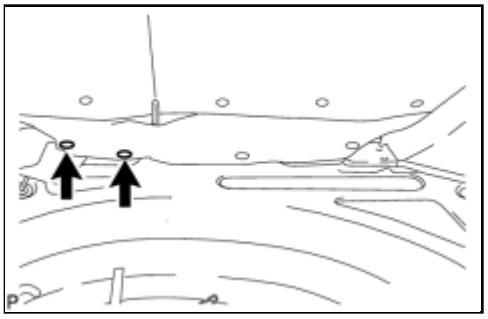

(b) Fold the rear seatback assembly LH forward.

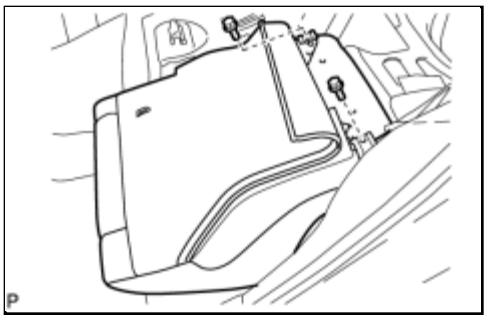

(c) Remove the 2 bolts and the rear seatback assembly LH.

7. REMOVE REAR SEATBACK ASSEMBLY RH

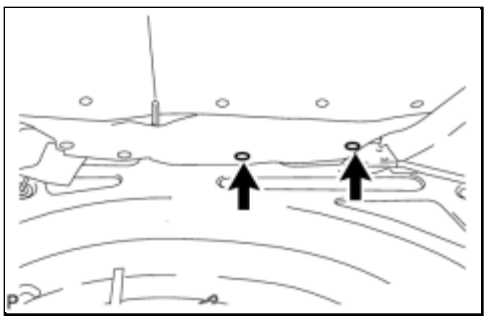

(a) Using a clip remover, remove the 2 rear seat back clips.

(b) Fold the rear seatback assembly RH forward.

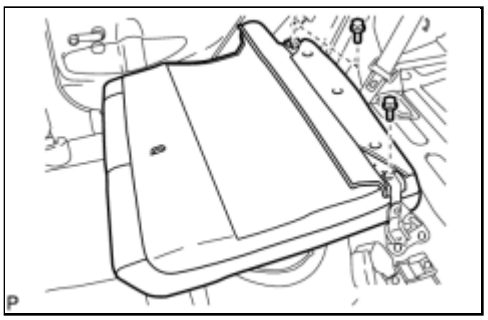

(c) Remove the 2 bolts and the rear seatback assembly RH.

Last Modified: 3-10-2010	6.4 A	**From:** 200901
Model Year: 2010	**Model:** Corolla	**Doc ID:** RM000002XNU00GX
Title: SEAT: REAR SEAT ASSEMBLY: INSTALLATION (2010 Corolla)		

INSTALLATION

1. INSTALL REAR SEATBACK ASSEMBLY RH

(a) Place the rear seatback assembly RH in the cabin.

NOTICE:

Be careful not to damage the vehicle body.

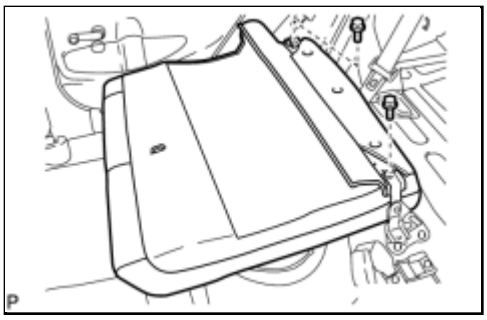

(b) Install the rear seatback assembly RH with the 2 bolts.

Torque: 18 N·m (184 kgf·cm, 13ft·lbf)

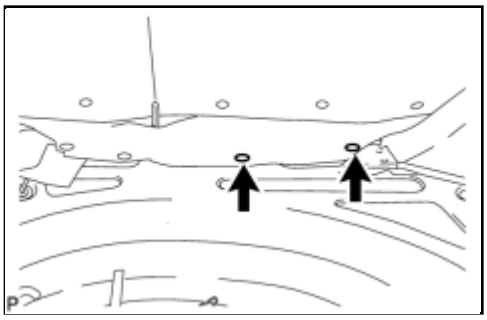

(c) Install the 2 rear seatback clips.

2. INSTALL REAR SEATBACK ASSEMBLY LH

(a) Place the rear seatback assembly LH in the cabin.

NOTICE:

Be careful not to damage the vehicle body.

(b) Install the rear seatback assembly LH with the 2 bolts.

Torque: 18 N·m (184 kgf·cm, 13ft·lbf)

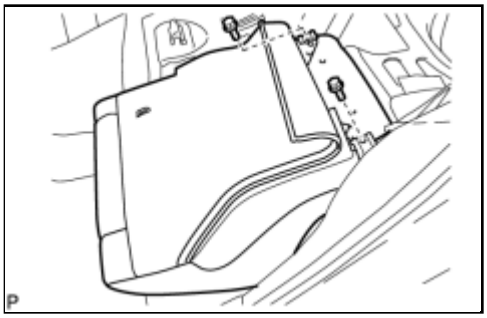

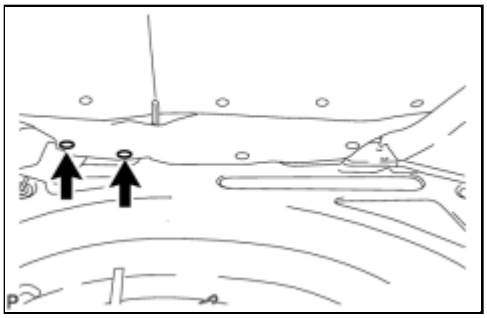

(c) Install the 2 rear seatback clips.

3. INSTALL REAR SEAT CUSHION ASSEMBLY

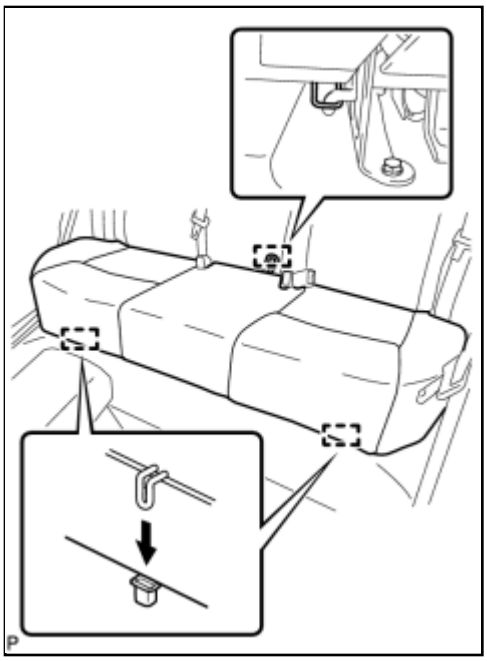

(a) Attach the rear hook of the seat cushion to the seatback.

(b) Attach the 2 front hooks of the seat cushion to the vehicle body.

(c) Confirm that the seat cushion is firmly installed.

NOTICE:

When installing the seat cushion, make sure that the seat belt buckle is not under the seat cushion.

4. INSTALL REAR SEAT CENTER HEADREST ASSEMBLY

5. INSTALL REAR SEAT HEADREST ASSEMBLY RH

6. INSTALL REAR SEAT HEADREST ASSEMBLY LH

7. INSTALL SPARE WHEEL COVER INFO

Last Modified: 3-10-2010	6.4 K	**From:** 200901
Model Year: 2010	**Model:** Corolla	**Doc ID:** RM000003GVS001X
Title: SEAT: SEAT HEATER SWITCH: COMPONENTS (2010 Corolla)		

COMPONENTS

ILLUSTRATION

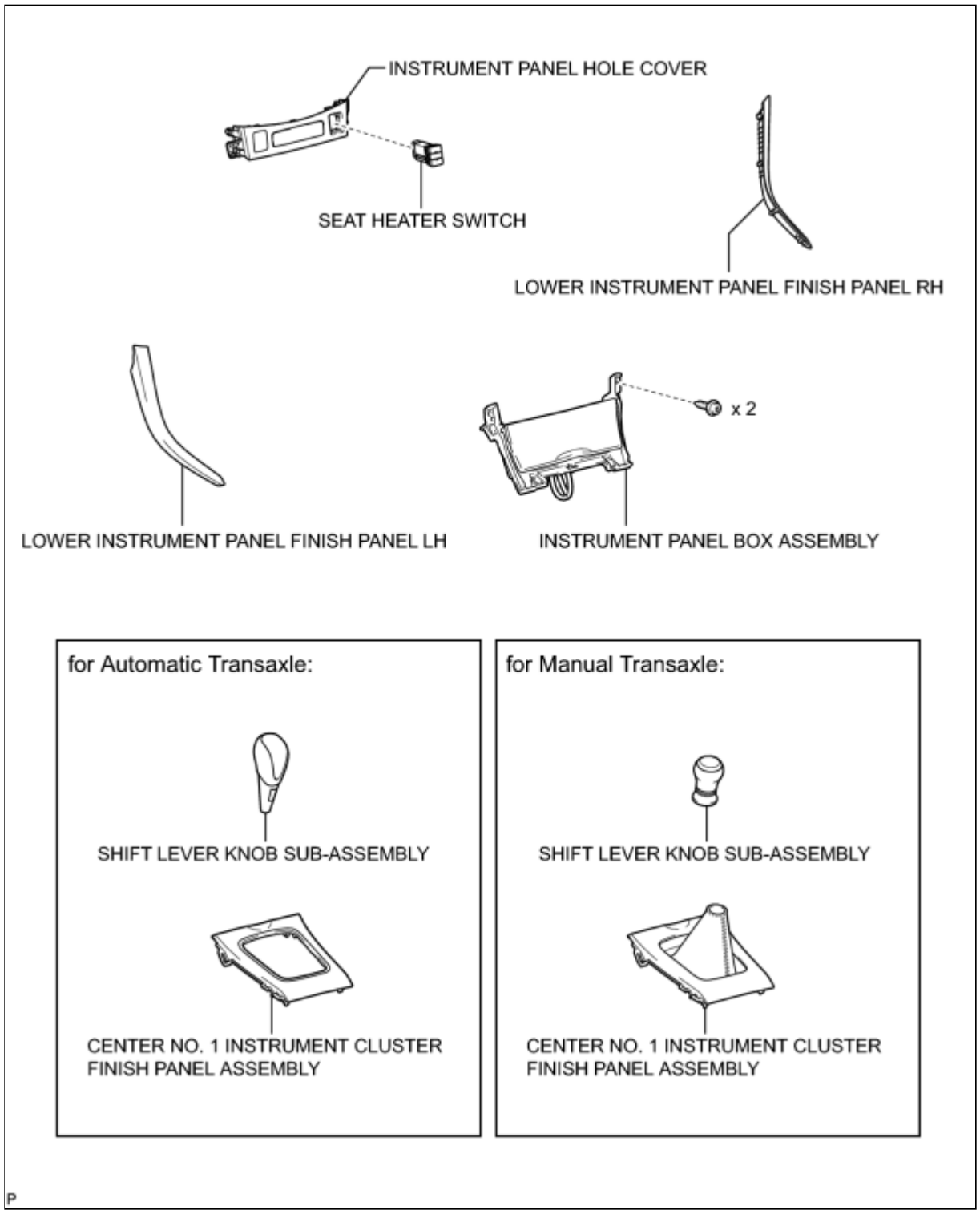

Last Modified: 3-10-2010	6.4 A	**From:** 200901
Model Year: 2010	**Model:** Corolla	**Doc ID:** RM000002XO6004X
Title: SEAT: SEAT HEATER SWITCH: REMOVAL (2010 Corolla)		

REMOVAL

1. **REMOVE LOWER INSTRUMENT PANEL FINISH PANEL LH** INFO
2. **REMOVE LOWER INSTRUMENT PANEL FINISH PANEL RH** INFO
3. **REMOVE SHIFT LEVER KNOB SUB-ASSEMBLY (for Manual Transaxle)** INFO
4. **REMOVE SHIFT LEVER KNOB SUB-ASSEMBLY (for Automatic Transaxle)** INFO
5. **REMOVE CENTER NO. 1 INSTRUMENT CLUSTER FINISH PANEL ASSEMBLY (for Manual Transaxle)** INFO
6. **REMOVE CENTER NO. 1 INSTRUMENT CLUSTER FINISH PANEL ASSEMBLY (for Automatic Transaxle)** INFO
7. **REMOVE INSTRUMENT PANEL BOX ASSEMBLY** INFO
8. **REMOVE INSTRUMENT PANEL HOLE COVER** INFO
9. **REMOVE SEAT HEATER SWITCH**

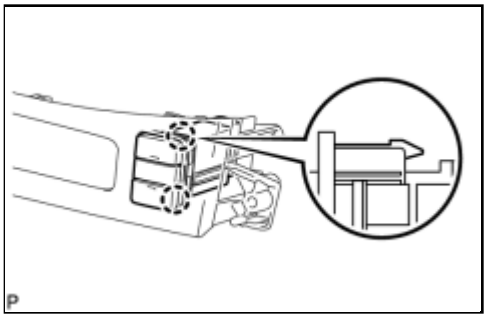

(a) Disengage the 2 claws and remove the seat heater switch.

Last Modified: 3-10-2010	6.4 G	**From:** 200901
Model Year: 2010	**Model:** Corolla	**Doc ID:** RM000003H56001X
Title: SEAT: SEAT HEATER SWITCH: INSPECTION (2010 Corolla)		

INSPECTION

1. INSPECT SEAT HEATER SWITCH

(a) Measure the resistance according to the value(s) in the table below.

Standard Resistance:

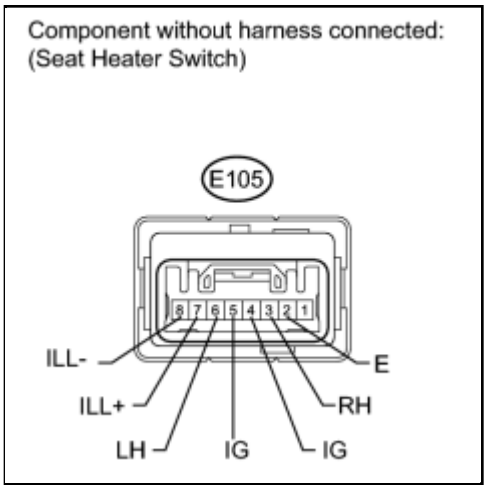

LH Side

TESTER CONNECTION	SWITCH CONDITION	SPECIFIED CONDITION
E105-5 (IG) - E105-6 (LH)	OFF	10 kΩ or higher
E105-5 (IG) - E105-6 (LH)	ON	Below 1 Ω

RH Side

TESTER CONNECTION	SWITCH CONDITION	SPECIFIED CONDITION
E105-4 (IG) - E105-3 (RH)	OFF	10 kΩ or higher
E105-4 (IG) - E105-3 (RH)	ON	Below 1 Ω

If the result is not as specified, replace the seat heater switch.

(b) Turn the seat heater switch on and check if the seat heater switch indicator comes on.

OK:

LH Side

CONNECTION	SWITCH CONDITION	SPECIFIED CONDITION
Battery positive (+) → E105-5 (IG) Battery negative (-) → E105-2 (E)	ON	Comes on

RH Side

CONNECTION	SWITCH CONDITION	SPECIFIED CONDITION
Battery positive (+) → E105-4 (IG) Battery negative (-) → E105-2 (E)	ON	Comes on

If the result is not as specified, replace the seat heater switch.

(c) Check if the seat heater switch comes on.

OK:

CONNECTION	SWITCH CONDITION	SPECIFIED CONDITION
Battery positive (+) → E105-7 (ILL+) Battery negative (-) → E105-8 (ILL-)	Always	Comes on

If the result is not as specified, replace the seat heater switch.



Last Modified: 3-10-2010	6.4 A	**From:** 200901
Model Year: 2010	**Model:** Corolla	**Doc ID:** RM000002XO4004X
Title: SEAT: SEAT HEATER SWITCH: INSTALLATION (2010 Corolla)		

INSTALLATION

1. INSTALL SEAT HEATER SWITCH

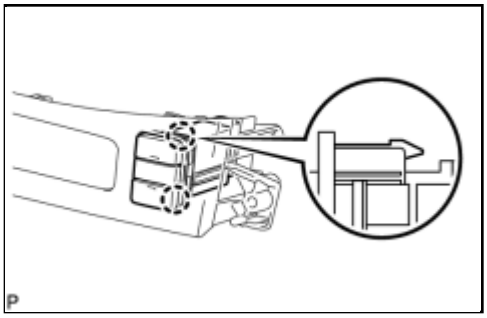

(a) Engage the 2 claws and install the seat heater switch.

2. INSTALL INSTRUMENT PANEL HOLE COVER INFO

3. INSTALL INSTRUMENT PANEL BOX ASSEMBLY INFO

4. INSTALL CENTER NO. 1 INSTRUMENT CLUSTER FINISH PANEL ASSEMBLY (for Manual Transaxle) INFO

5. INSTALL CENTER NO. 1 INSTRUMENT CLUSTER FINISH PANEL ASSEMBLY (for Automatic Transaxle) INFO

6. INSTALL SHIFT LEVER KNOB SUB-ASSEMBLY (for Manual Transaxle) INFO

7. INSTALL SHIFT LEVER KNOB SUB-ASSEMBLY (for Automatic Transaxle) INFO

8. INSTALL LOWER INSTRUMENT PANEL FINISH PANEL RH INFO

9. INSTALL LOWER INSTRUMENT PANEL FINISH PANEL LH INFO

Last Modified: 3-10-2010	6.4 L	**From:** 200901
Model Year: 2010	**Model:** Corolla	**Doc ID:** RM000003INR002X
Title: SEAT: SEAT HEATER SYSTEM: PRECAUTION (2010 Corolla)		

PRECAUTION

1. EXPRESSIONS OF IGNITION SWITCH

(a) The type of ignition switch used on this model differs according to the specifications of the vehicle.

The expressions listed in the table below are used in this section.

EXPRESSION	SWITCH TYPE	
	IGNITION SWITCH (POSITION)	ENGINE SWITCH (CONDITION)
Ignition Switch off	LOCK	Off
Ignition Switch ON	ON	On (IG)
Ignition Switch ACC	ACC	On (ACC)
Engine Start	START	Start

Last Modified: 3-10-2010	6.4 R	**From:** 200901
Model Year: 2010	**Model:** Corolla	**Doc ID:** RM000001M2600JX
Title: SEAT: SEAT HEATER SYSTEM: PARTS LOCATION (2010 Corolla)		

PARTS LOCATION

ILLUSTRATION

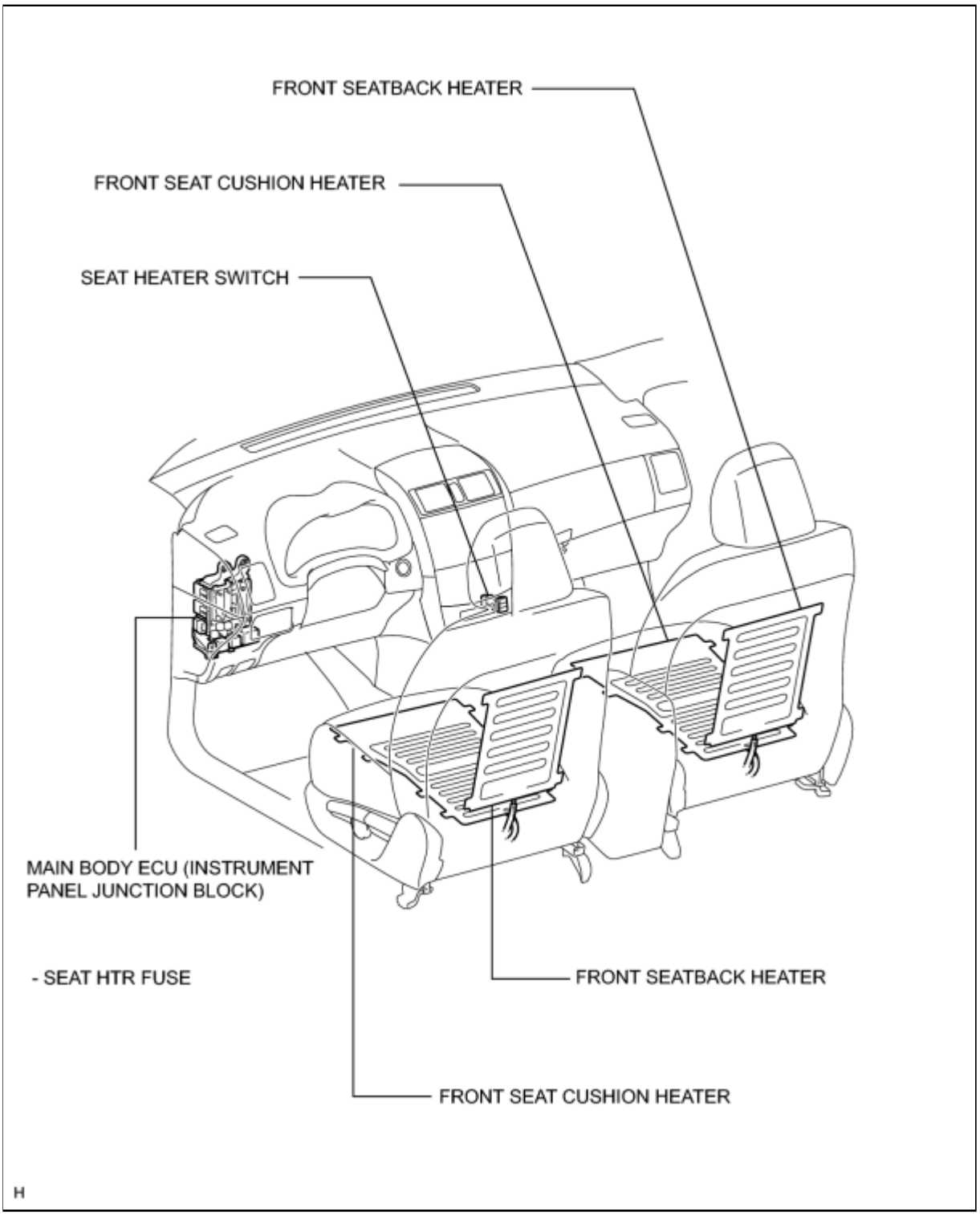

Last Modified: 3-10-2010	6.4 U	**From:** 200901
Model Year: 2010	**Model:** Corolla	**Doc ID:** RM000001M2800JX
Title: SEAT: SEAT HEATER SYSTEM: SYSTEM DIAGRAM (2010 Corolla)		

SYSTEM DIAGRAM

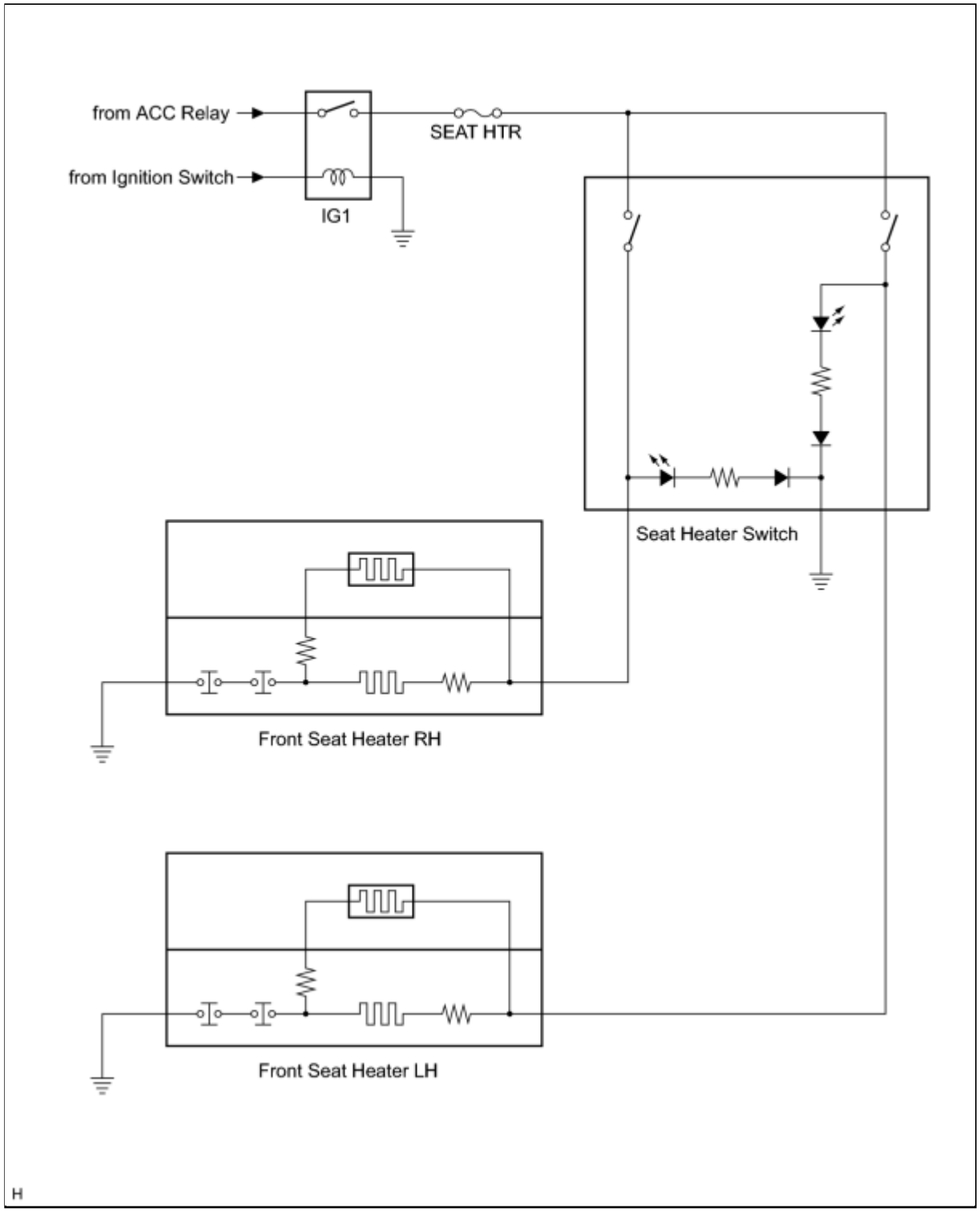

Last Modified: 3-10-2010	6.4 T	**From:** 200901
Model Year: 2010	**Model:** Corolla	**Doc ID:** RM000001M7S00KX
Title: SEAT: SEAT HEATER SYSTEM: PROBLEM SYMPTOMS TABLE (2010 Corolla)		

PROBLEM SYMPTOMS TABLE

HINT:

- Use the table below to help determine the cause of problem symptoms. If multiple suspected areas are listed, the potential causes of the symptoms are listed in order of probability in the "Suspected Area" column of the table. Check each symptom by checking the suspected areas in the order they are listed. Replace parts as necessary.

Seat Heater System

SYMPTOM	SUSPECTED AREA	SEE PAGE
Driver side and front passenger side seat heater do not operate.	SEAT HTR fuse	-
	Wire harness or connector	-
Driver side seat heater does not warm up.	Seat heater switch (driver side switch)	INFO
	Front seat cushion heater (driver side switch)	INFO
	Front seatback heater (driver side switch)	INFO
	Wire harness or connector	-
Passenger side seat heater does not warm up.	Seat heater switch (passenger side switch)	INFO
	Front seat cushion heater (passenger side switch)	INFO
	Front seatback heater (passenger side switch)	INFO
	Wire harness or connector	-

Last Modified: 3-10-2010	6.4 L	**From:** 200901
Model Year: 2010	**Model:** Corolla	**Doc ID:** RM000000KT1074X
Title: SUPPLEMENTAL RESTRAINT SYSTEMS: AIRBAG SYSTEM: PRECAUTION (2010 Corolla)		

PRECAUTION

HINT:

- In the airbag system, the center airbag sensor assembly, front airbag sensors LH and RH, side airbag sensors LH* and RH*, and rear airbag sensors LH* and RH* are collectively referred to as the airbag sensors.

  The steering pad, front passenger airbag assembly, front seat side airbag assembly*, curtain shield airbag assembly*, center airbag sensor assembly, front airbag sensor, side airbag sensor*, rear airbag sensor*, seat position airbag sensor, front seat inner belt assembly or front seat outer belt assembly are collectively referred to as the SRS parts.

- *: For vehicles equipped with the front seat side airbags and curtain shield airbags.

CAUTION:

- The vehicle is equipped with a Supplemental Restraint System (SRS). It consists of a driver airbag, front passenger airbag, center airbag sensor, front seat side airbags*, curtain shield airbags*, front seat belt pretensioners, seat position airbag sensor, seat belt buckle switch, front airbag sensors, side airbag sensors* and rear airbag sensors*. Failure to carry out service operations in the correct sequence could cause the SRS to unexpectedly deploy during servicing, possibly leading to a serious accident. Further, if a mistake is made when servicing the SRS, it is possible that the SRS may fail to operate when required. Before performing servicing (including removal or installation of parts, inspection or replacement), be sure to read the following items carefully, then follow the procedures exactly as indicated in the repair manual.
- Wait at least 90 seconds after the ignition switch is turned off and the cable is disconnected from the negative (-) battery terminal before starting the operation.

  (The SRS is equipped with a backup power source, so if work is started within 90 seconds after disconnecting the cable from the negative (-) battery terminal, the SRS may be deployed.)
- Do not expose any of the SRS parts directly to hot air or flames.

NOTICE:

- Malfunction symptoms of the SRS are difficult to confirm, so DTCs are the most important source of information when troubleshooting. When troubleshooting the SRS, always inspect DTCs before disconnecting the battery.
- Even in the case of a minor collision that does not cause the SRS to deploy, the SRS parts should be inspected.
- Before beginning repairs, remove the airbag sensors if any kind of shock is likely to occur to the airbag sensors during the operation.
- Never use SRS parts from another vehicle. When replacing parts, replace them with new ones.
- Never disassemble or repair any of the SRS parts in order to reuse them. If any of these parts have been dropped, or any defect is found (e.g. cracks, dents or any other defects) in any of the housings, brackets or connectors, replace the part with a new one.
- Use a volt/ohmmeter with high impedance (10 kΩ/V minimum) for troubleshooting the electrical circuits.
- Information labels are attached near the SRS parts. Follow the instructions noted in the caution.
- After work on the SRS is completed, perform an SRS warning light check 

.

- When the cable is disconnected from the negative (-) battery terminal, the memory will be cleared. Because of this, be sure to make a record of the contents memorized in each system before starting work. When work is finished, adjust each system to its previous state. Never use a backup power supply for the purpose of retaining the memory of vehicle electronic systems.
- If the vehicle is equipped with a mobile communication system, refer to the precautions in the INTRODUCTION section.

1. HANDLING PRECAUTIONS FOR AIRBAG SENSORS

(a) Before starting the following operations, wait for at least 90 seconds after disconnecting the cable from the negative (-) battery terminal:

(1) Replacement of the airbag sensors.

(2) Adjustment of the front/rear doors of a vehicle equipped with front seat side airbags and curtain shield airbags (fitting adjustment).

(b) When connecting or disconnecting the airbag sensor connectors, ensure that each sensor is installed in the vehicle.

(c) Do not use airbag sensors which have been dropped.

(d) Do not disassemble the airbag sensors.

2. INSPECTION PROCEDURE FOR VEHICLE INVOLVED IN ACCIDENT

(a) If any of the airbags have not deployed, confirm the DTCs by checking the SRS warning light. If there is any malfunction in the SRS airbag system, perform troubleshooting.

(b) If any of the airbags deployed, replace the airbag sensors and check the installation condition.

3. EXPRESSIONS OF IGNITION SWITCH

(a) The type of ignition switch used on this model differs according to the specifications of the vehicle. The expressions listed in the table below are used in this section.

EXPRESSION	SWITCH TYPE	
	IGNITION SWITCH (POSITION)	ENGINE SWITCH (CONDITION)
Ignition Switch off	LOCK	Off
Ignition Switch ON	ON	On (IG)
Ignition Switch ACC	ACC	On (ACC)
Engine Start	START	Start

4. FUNCTION OF SRS CONNECTORS

(a) SRS connectors are located as shown in the following illustration.

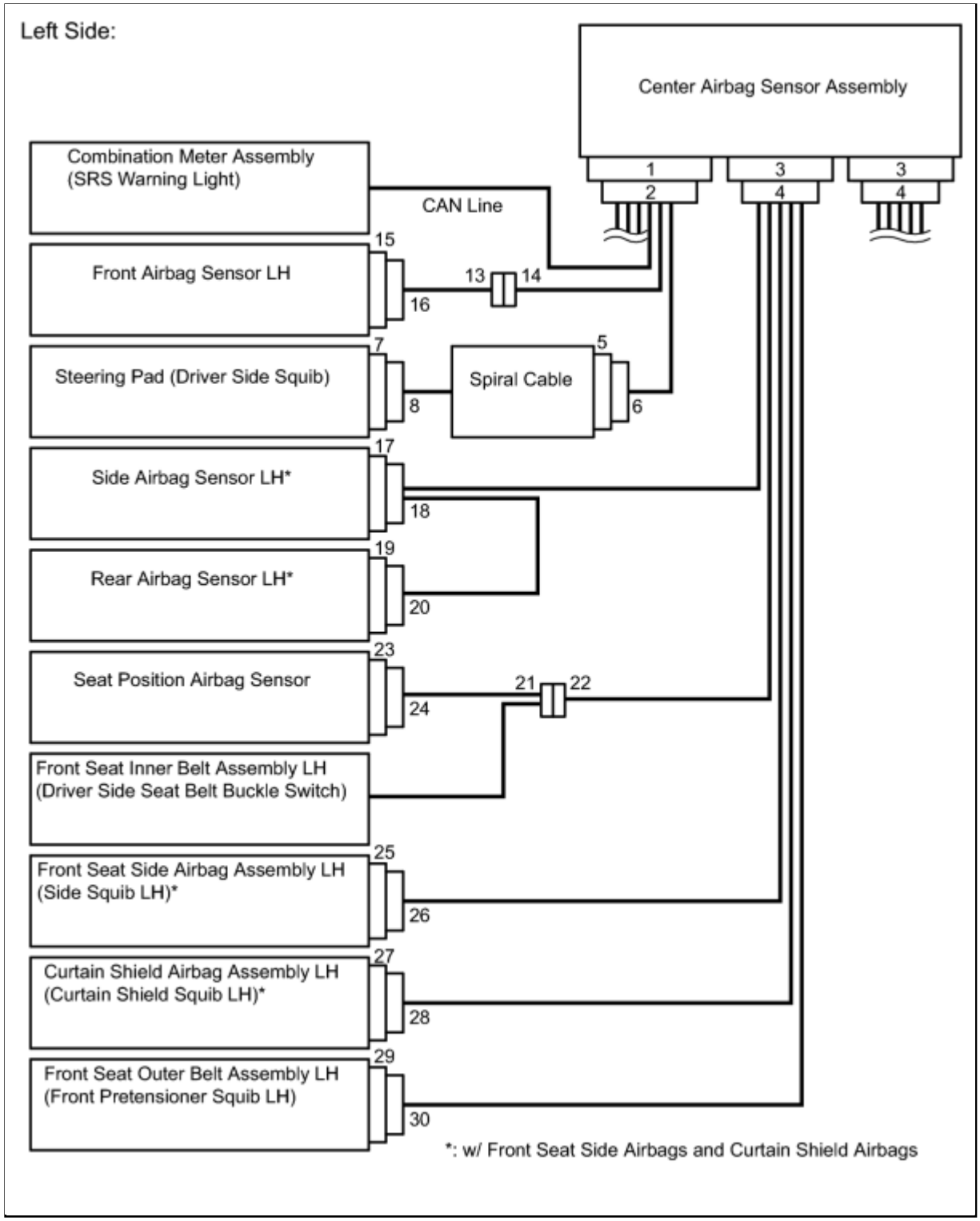
Left Side:
Center Airbag Sensor Assembly
1
2
3
4
3
4
Combination Meter Assembly
(SRS Warning Light)
CAN Line
15
Front Airbag Sensor LH
13
14
16
7
Steering Pad (Driver Side Squib)
8
Spiral Cable
5
6
17
Side Airbag Sensor LH*
18
19
Rear Airbag Sensor LH*
20
23
Seat Position Airbag Sensor
21
22
24
Front Seat Inner Belt Assembly LH
(Driver Side Seat Belt Buckle Switch)
25
Front Seat Side Airbag Assembly LH
(Side Squib LH)*
26
27
Curtain Shield Airbag Assembly LH
(Curtain Shield Squib LH)*
28
29
Front Seat Outer Belt Assembly LH
(Front Pretensioner Squib LH)
30
*: w/ Front Seat Side Airbags and Curtain Shield Airbags

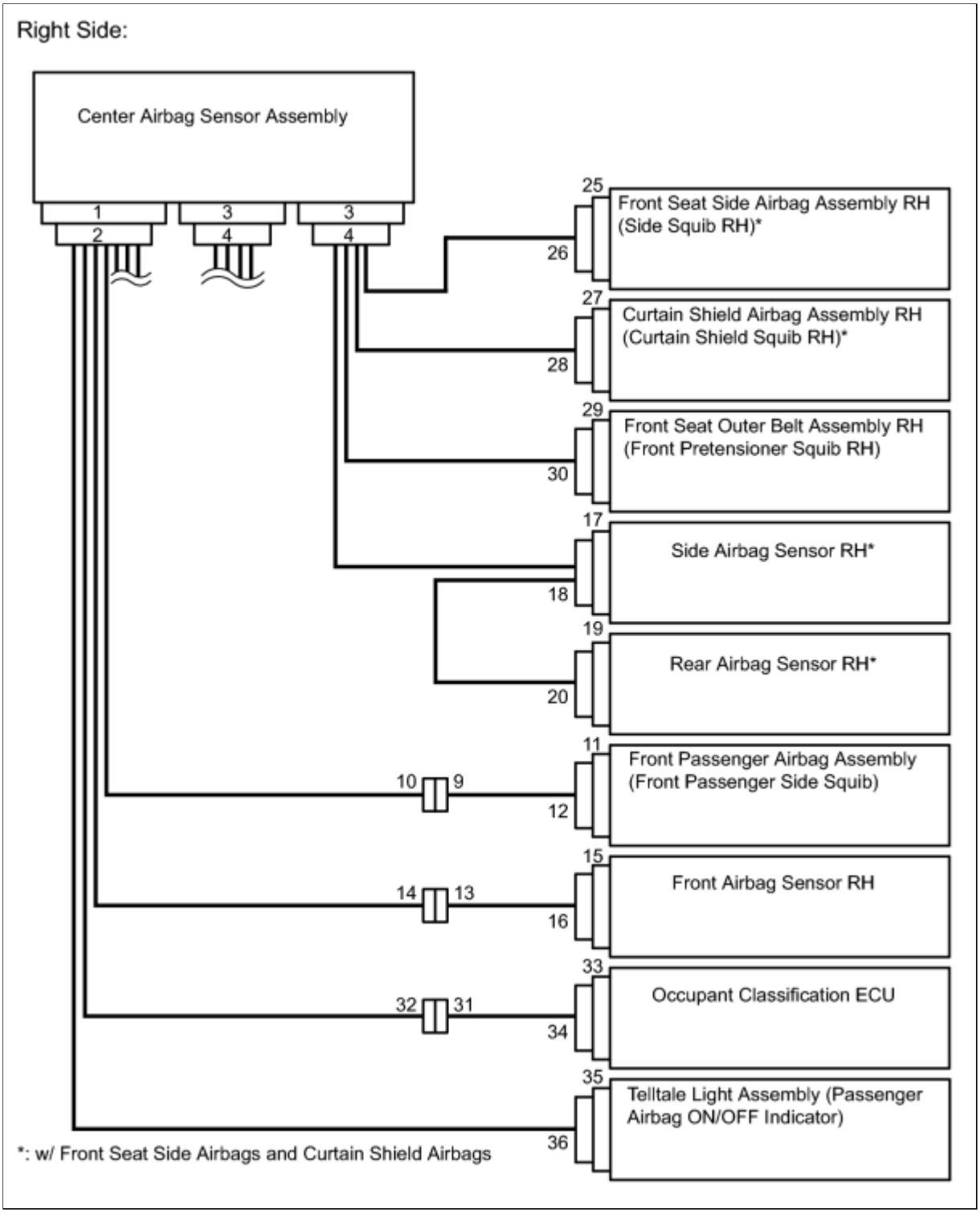

NO.	CONNECTOR TYPE	APPLICATION
(1)	Terminal Twin-Lock Mechanism	Connectors 5, 6, 9, 10, 13, 14, 18, 20
(2)	Activation Prevention Mechanism	Connectors 2, 4, 5, 7, 9, 11, 25, 27, 29
(3)	Half Connection Prevention Mechanism	Connectors 6, 10, 13, 18, 20
(4)	Connector Position Assurance Mechanism	Connectors 16, 26

NO.	CONNECTOR TYPE	APPLICATION
(5)	Connector Lock Mechanism (1)	Connectors 8, 12, 26, 28
(6)	Connector Lock Mechanism (2)	Connectors 2, 4
(7)	Improper Connection Prevention Lock Mechanism	Connectors 1, 3

(b) Connectors in the SRS are colored yellow to distinguish them from other connectors. These connectors have special functions, and are specially designed for the SRS. All SRS connectors use durable gold-plated terminals, and are placed in the locations shown on the previous page to ensure high reliability.

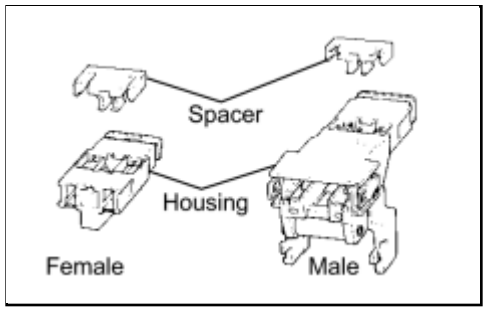

(1) Terminal twin-lock mechanism:

All connectors with a terminal twin-lock mechanism have a two-piece component consisting of a housing and a spacer. This design enables the terminal to be locked securely by two locking devices (the retainer and the lance) to prevent terminals from coming out.

(2) Activation prevention mechanism:

All connectors with an activation prevention mechanism contain a short spring plate. When these connectors are disconnected, the short spring plate creates a short circuit by automatically connecting the positive (+) and negative (-) terminals of the squib.

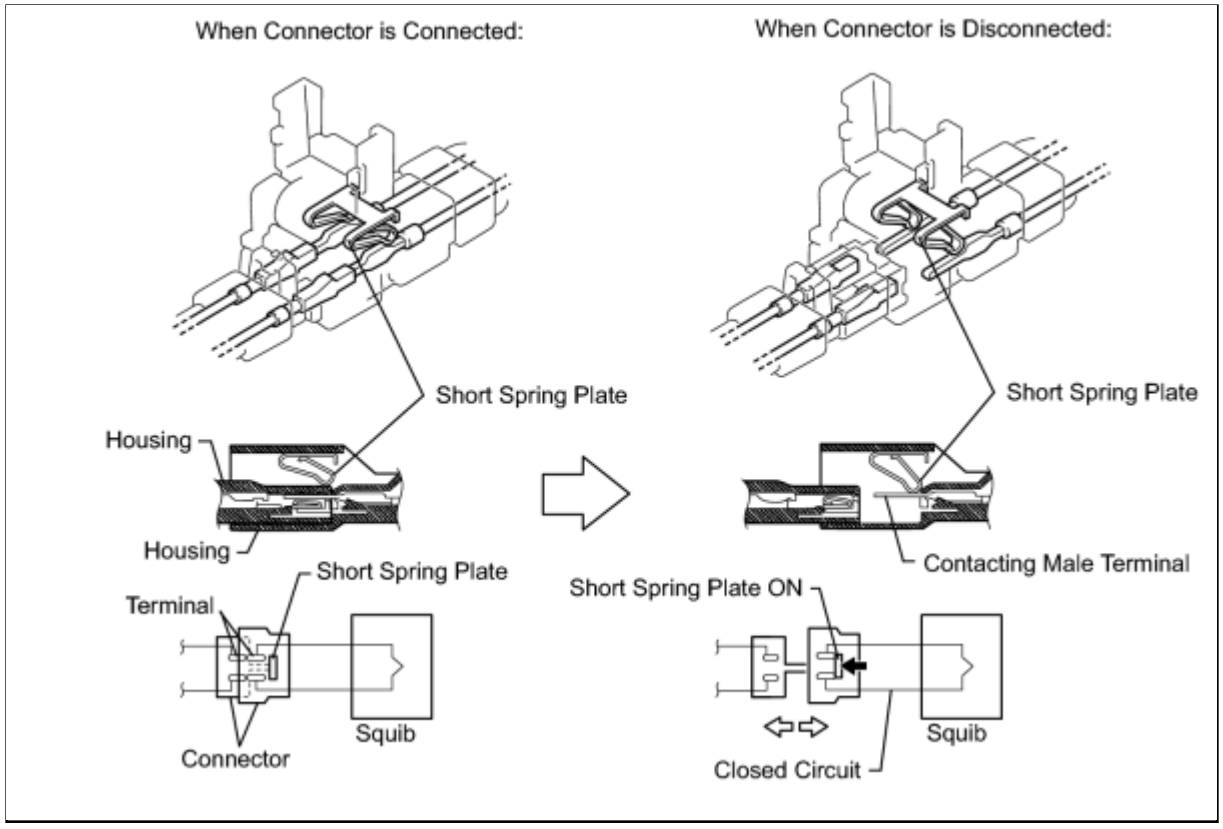

(3) Half connection prevention mechanism:

If the connector is not completely connected, the connector is disconnected due to the spring force so that no continuity exists.

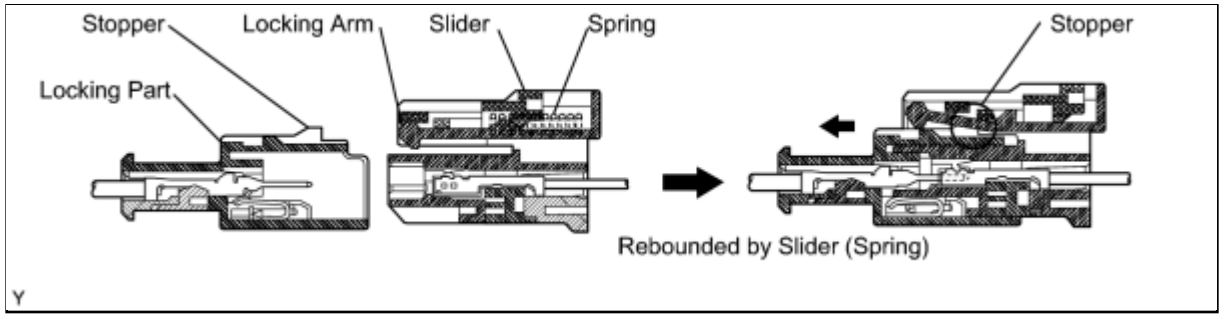

(4) Connector position assurance mechanism:

Only when the housing lock (white part) is completely engaged, the CPA (yellow part) slides, which completes the connector engagement.

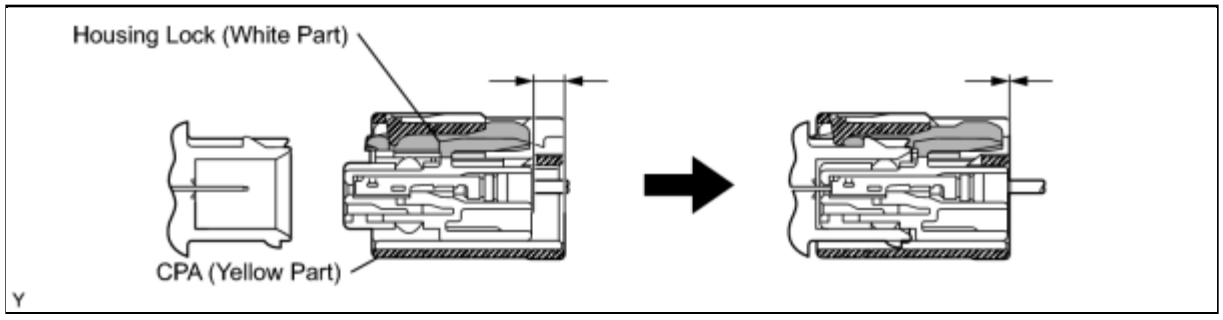

(5) Connector lock mechanism (1):

Locking the connector lock button connects the connector securely.

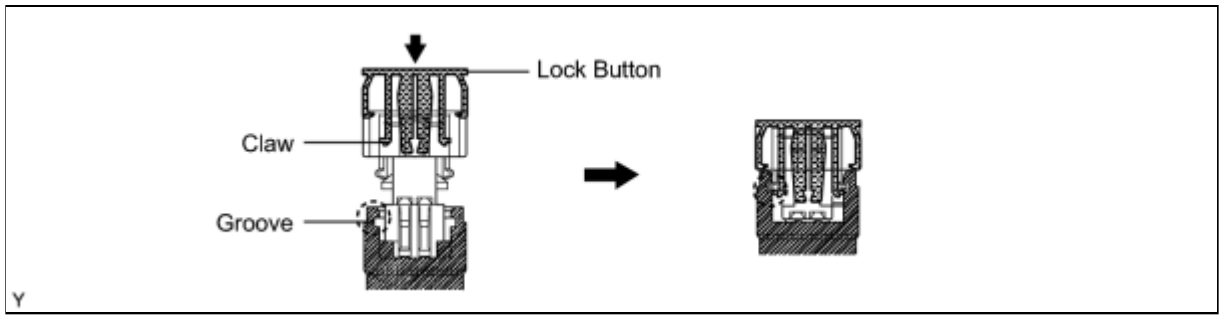

(6) Connector lock mechanism (2):

Both the primary lock with holder lances and the secondary lock with retainer prevent the connectors from becoming disconnected.

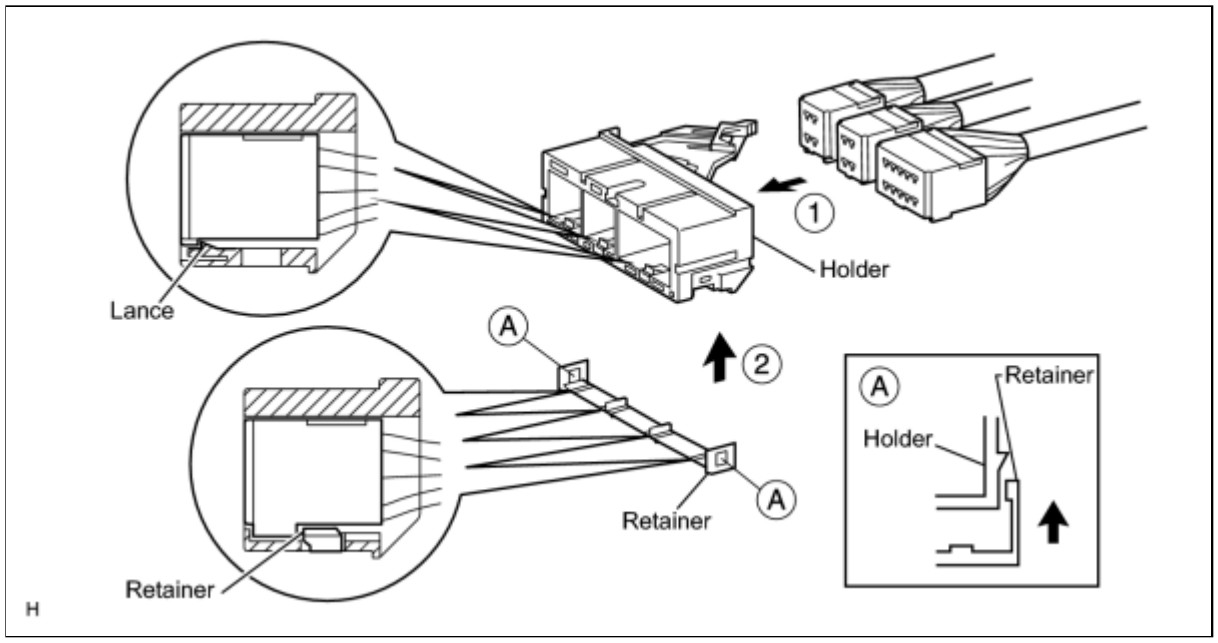

(7) Improper connection prevention lock mechanism:

When the holder is connected, the lever is pushed into the end by rotating around the A axis to lock the holder securely.

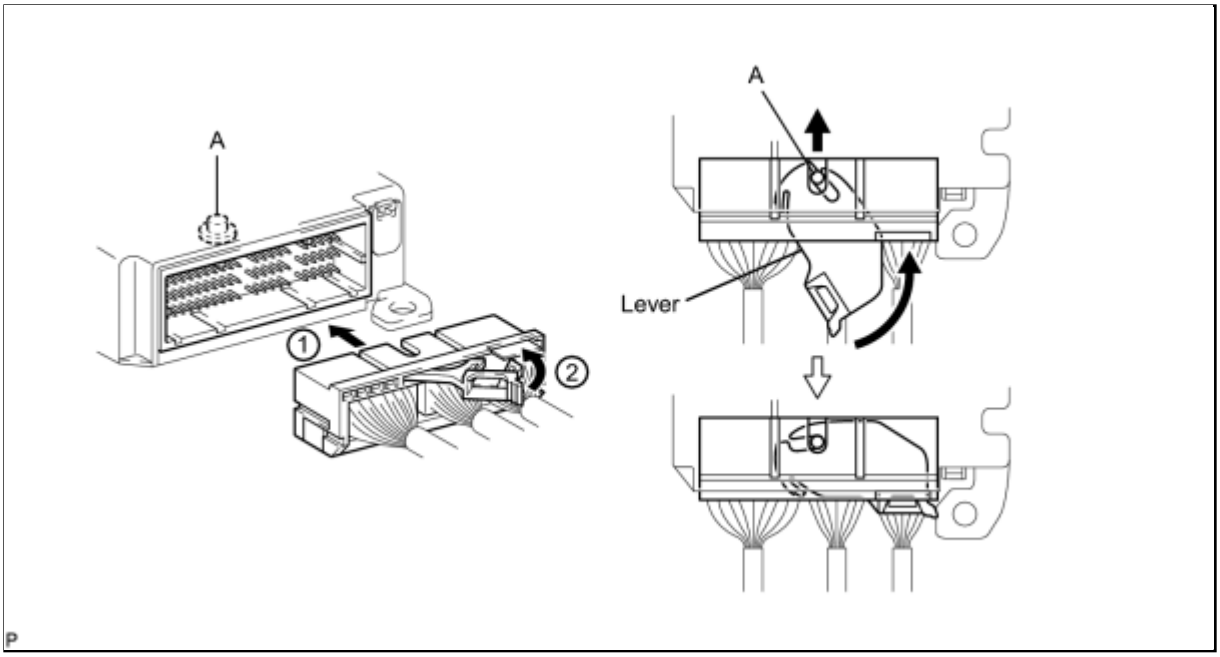

5. DISCONNECTION OF CONNECTORS FOR STEERING PAD, FRONT PASSENGER AIRBAG ASSEMBLY (SQUIB SIDE), CURTAIN SHIELD AIRBAG ASSEMBLY, AND FRONT SEAT OUTER BELT ASSEMBLY

HINT:

Tape the screwdriver tip before use.

(a) Release the lock button (yellow part) of the connector using a screwdriver.

(b) Insert the screwdriver tip between the connector and the base, and then raise the connector.

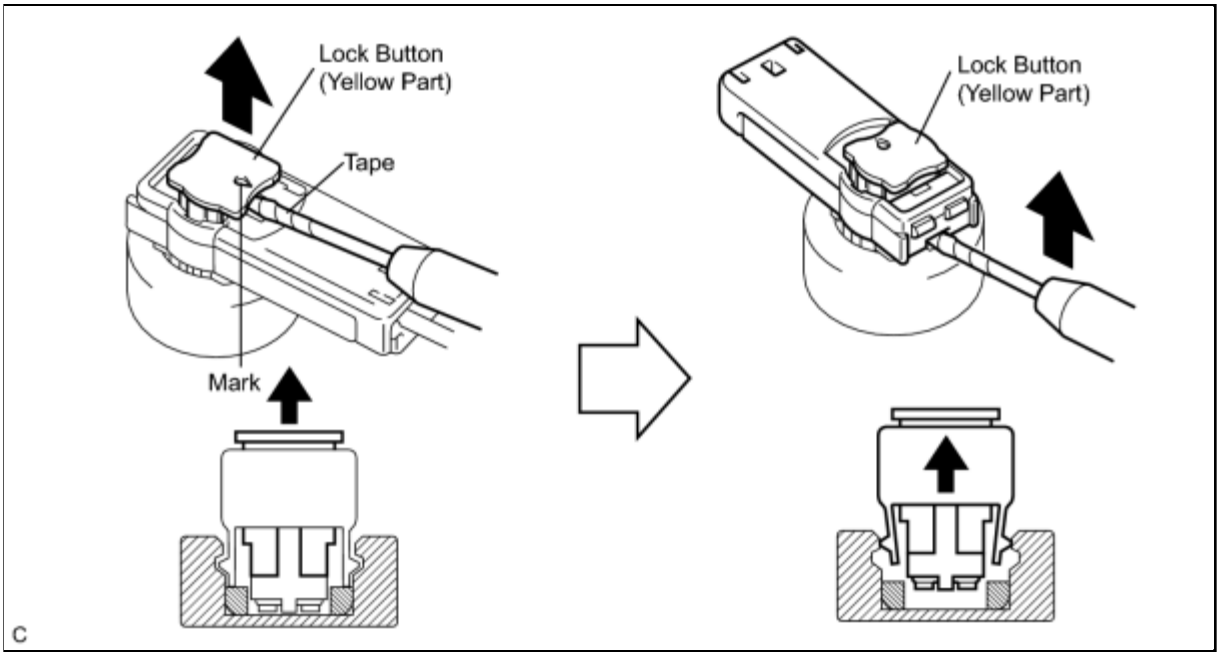

6. CONNECTION OF CONNECTORS FOR STEERING PAD, FRONT PASSENGER AIRBAG ASSEMBLY (SQUIB SIDE), CURTAIN SHIELD AIRBAG ASSEMBLY, AND FRONT SEAT OUTER BELT ASSEMBLY

(a) Connect the connector.

(b) Push down securely on the lock button (yellow part) of the connector. (When locked, a click sound can be heard.)

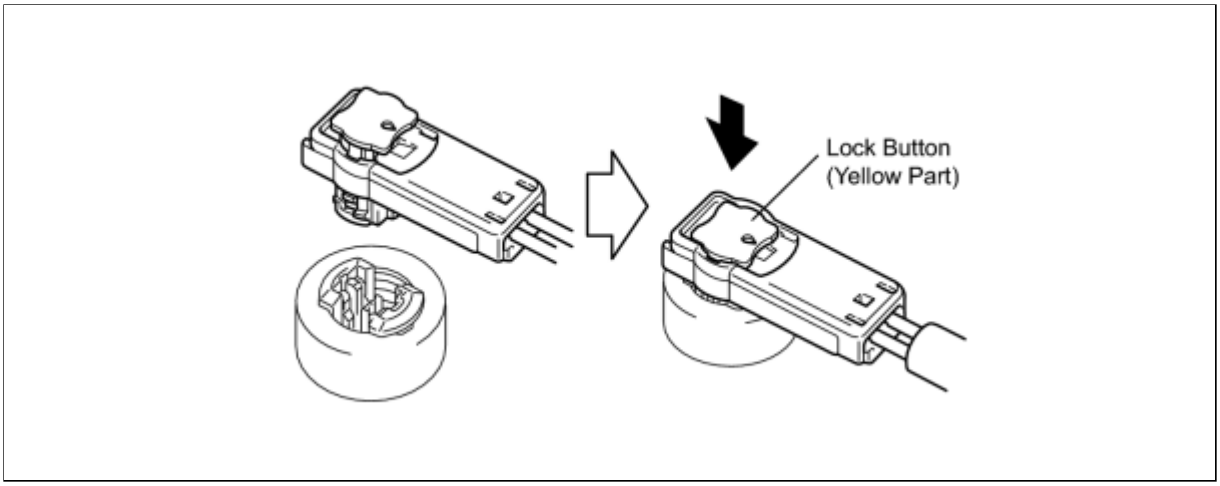

7. DISCONNECTION OF CONNECTOR FOR SPIRAL CABLE (INSTRUMENT PANEL WIRE SIDE)

(a) Slide the slider to release the lock, and then disconnect the connector.

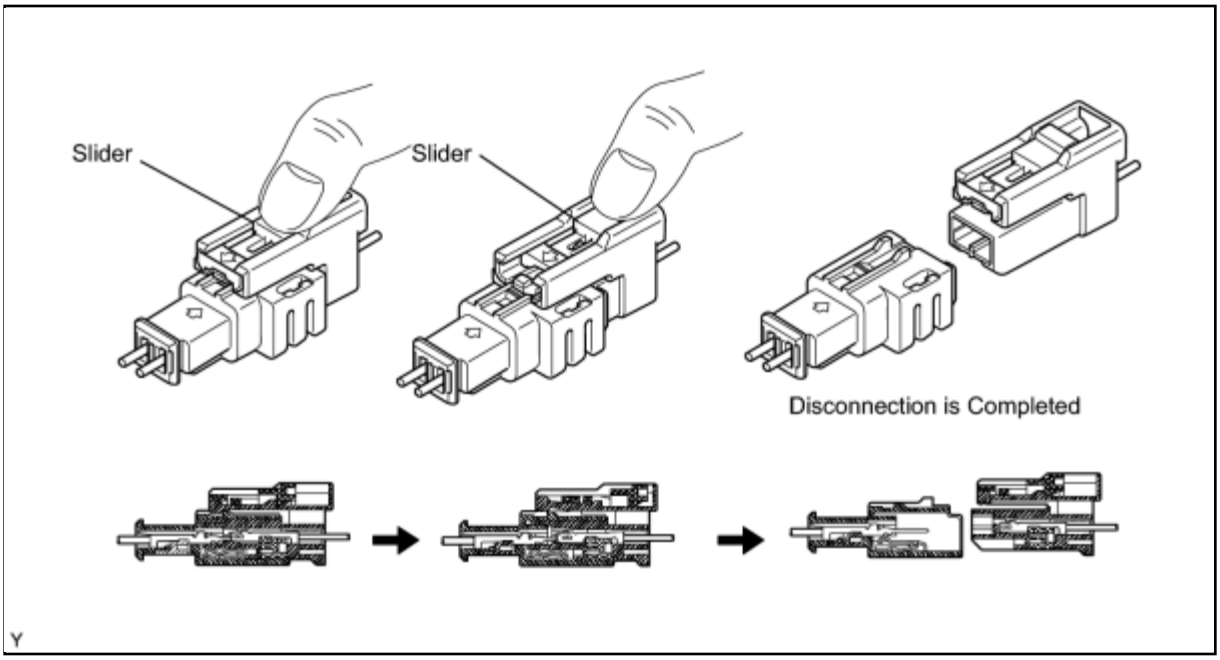

8. CONNECTION OF CONNECTOR FOR SPIRAL CABLE (INSTRUMENT PANEL WIRE SIDE)

(a) Connect the connector as shown in the illustration. (When locking, make sure that the slider returns to its original position and a click sound can be heard.)

HINT:

When connected, the slider will slide. Be sure not to touch the slider while connecting, as it may result in an insecure fit.

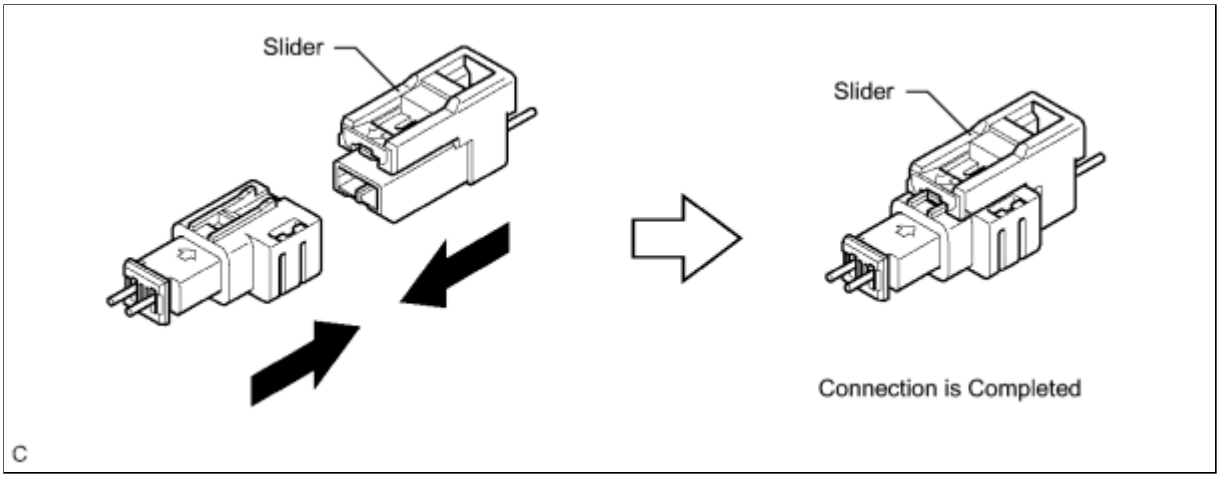

9. DISCONNECTION OF CONNECTOR FOR CENTER AIRBAG SENSOR ASSEMBLY

(a) Pull the lever by pushing part A as shown in the illustration and disconnect the holder (with connectors).

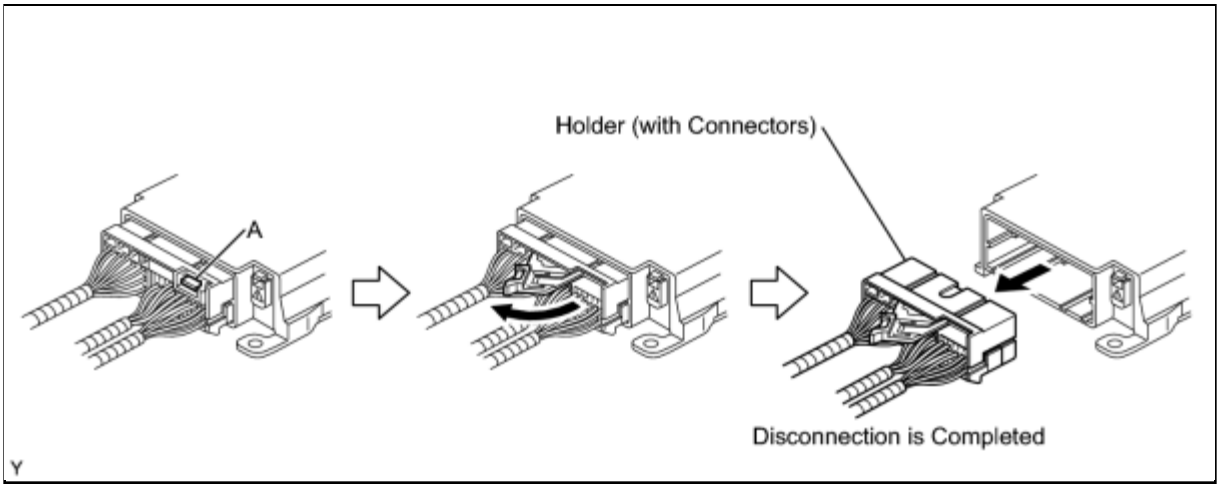

HINT:

Perform the following procedures when replacing the holder.

(b) Remove the holder.

(1) Using a screwdriver, unlock the retainer.

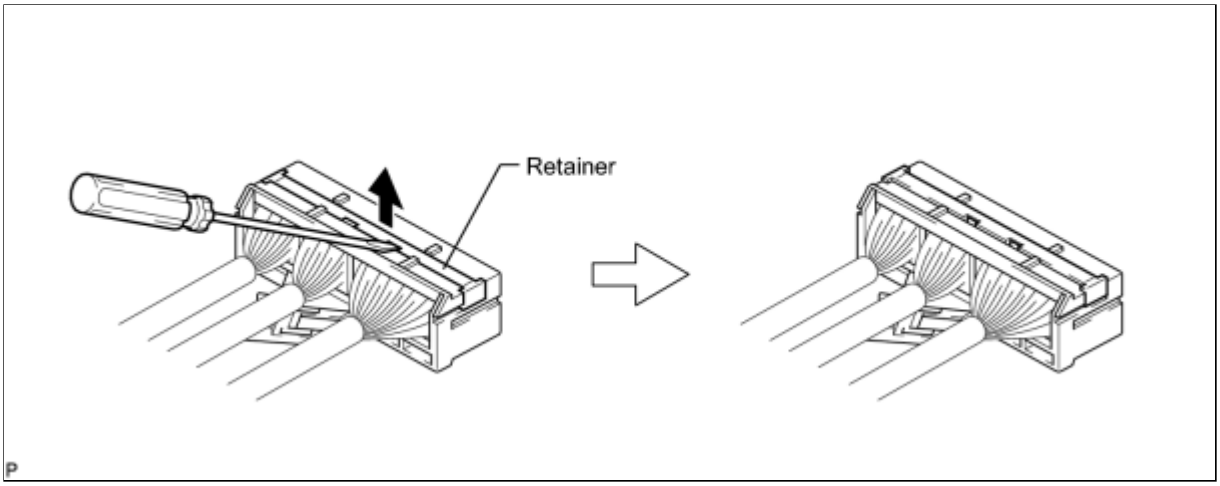

(2) Release the fitting lances and remove the holder.

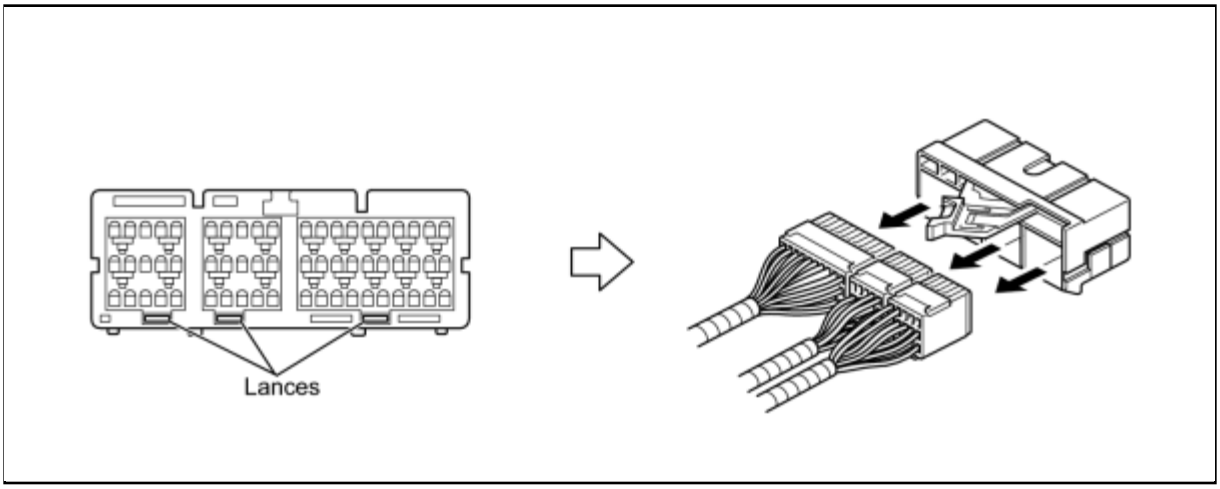

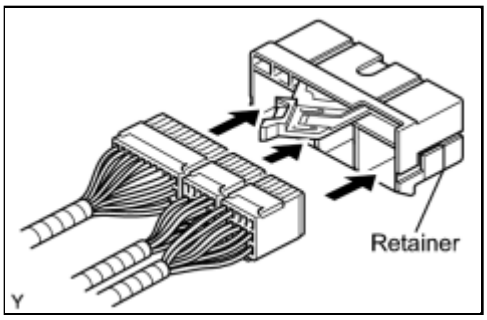

(c) Install the holder.

(1) Install the connectors to the holder. (When locked, a click sound can be heard.)

HINT:

The retainer is locked when the holder is connected.

10. CONNECTION OF CONNECTOR FOR CENTER AIRBAG SENSOR ASSEMBLY

(a) Firmly insert the holder (with connectors) into the center airbag sensor assembly until it cannot be pushed any further.

(b) Push the lever to connect the holder (with connectors). (When locked, a click sound can be heard.)

HINT:

The holder slides into the center airbag sensor assembly when it is being connected. Be sure not to hold the holder while connecting, as it may result in an insecure fit.

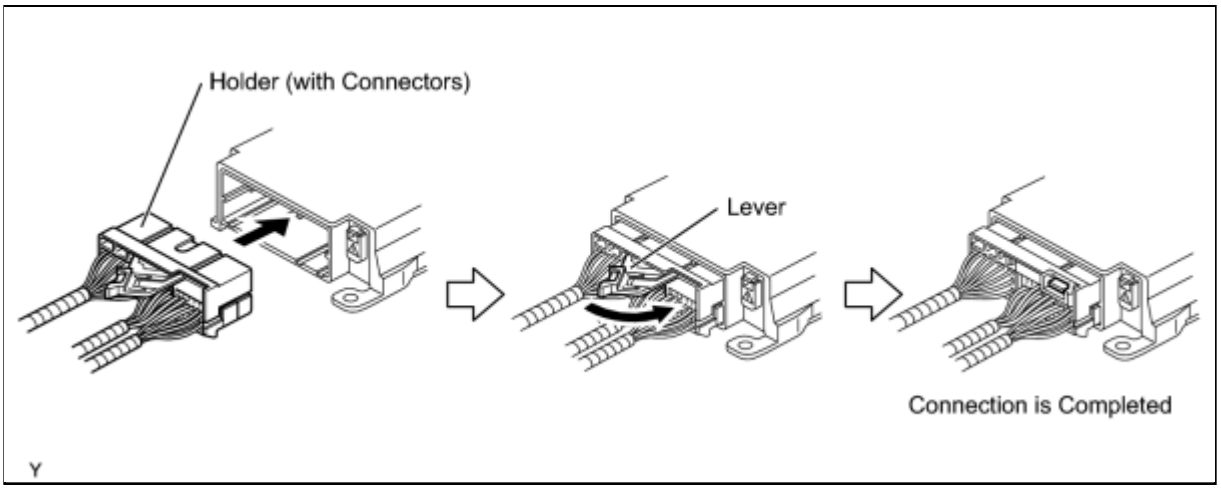

11. DISCONNECTION OF CONNECTORS FOR FRONT AIRBAG SENSOR AND FRONT SEAT SIDE AIRBAG ASSEMBLY

(a) Push down the housing lock (white part) and slide the CPA (yellow part). (At this time, the connector cannot be disconnected yet.)

(b) Push down the housing lock (white part) again and disconnect the connector.

HINT:

Do not push down part A shown in the illustration when disconnecting.

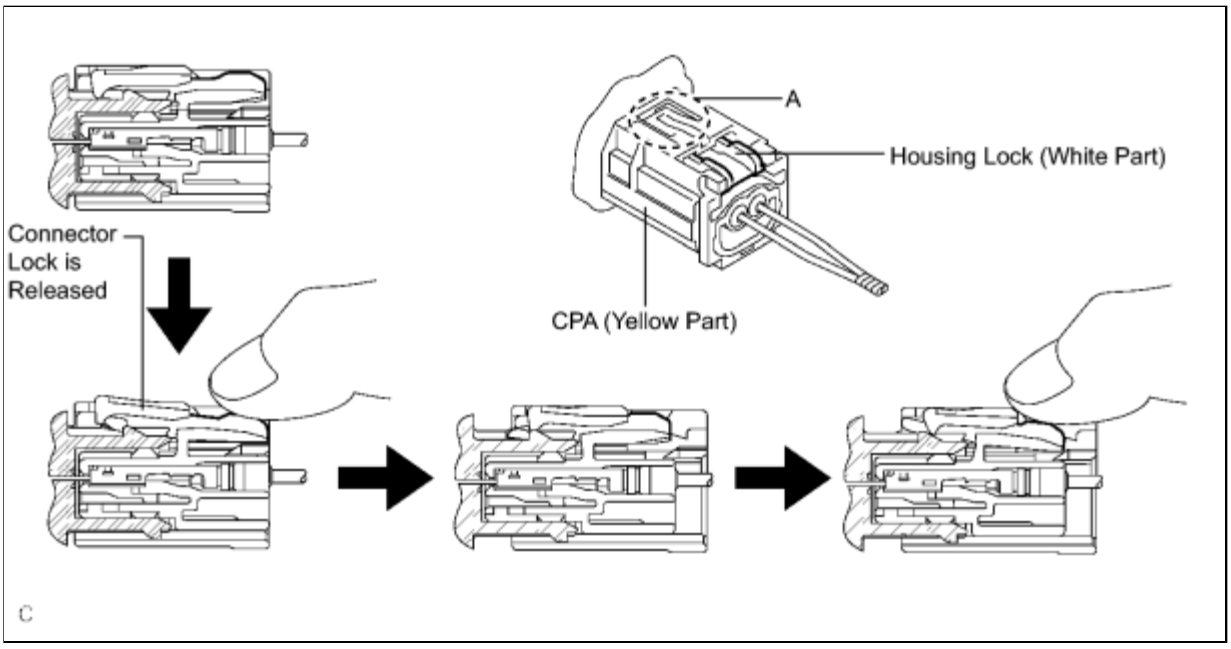

(c) After disconnecting the connector, check that the position of the housing lock (white part) is as shown in the illustration.

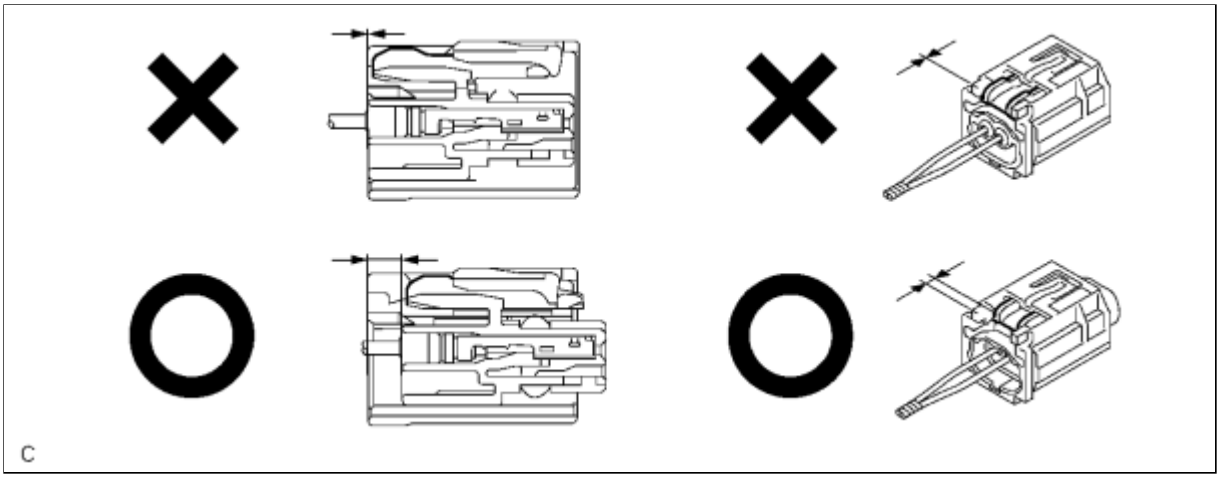

12. CONNECTION OF CONNECTOR FOR FRONT AIRBAG SENSOR AND FRONT SEAT SIDE AIRBAG ASSEMBLY

(a) Before connecting the connectors, check that the position of the housing lock (white part) is as shown in the illustration.

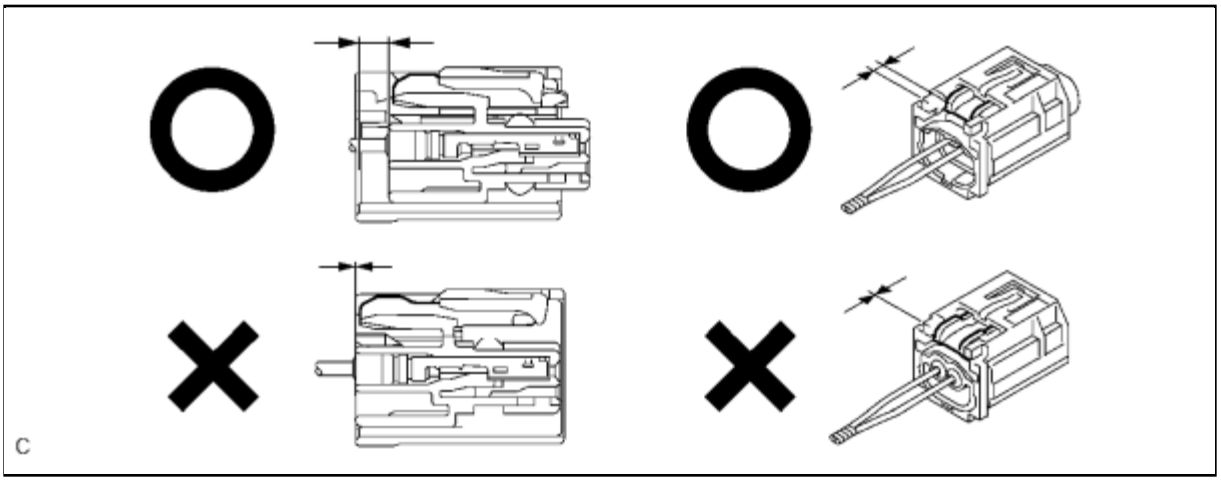

(b) Be sure to engage the connectors until they are locked. (When locking, make sure that a click sound can be heard.)

HINT:

When engaged, the housing lock (white part) will slide. Be sure not to hold the housing lock (white part) and part A, as it may result in an insecure fit.

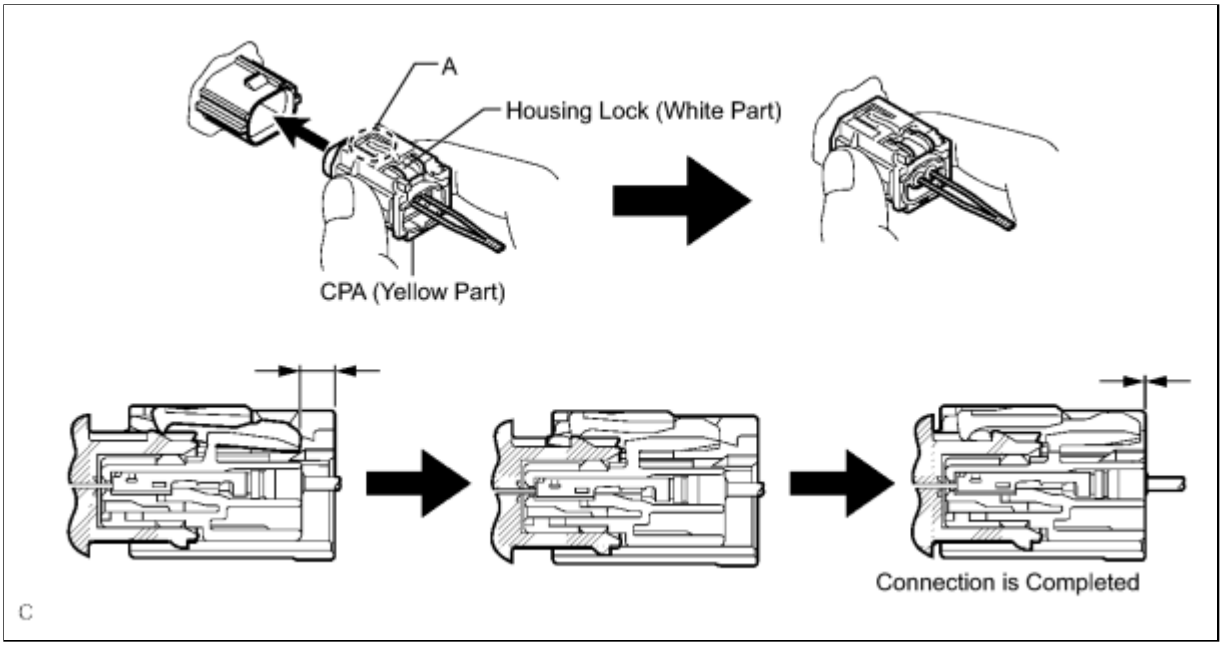

13. DISCONNECTION OF CONNECTORS FOR SIDE AIRBAG SENSOR AND REAR AIRBAG SENSOR

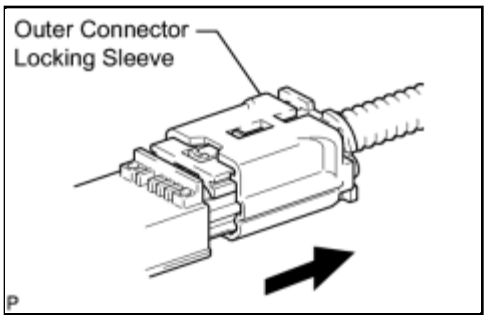

(a) While holding the sides of the outer connector locking sleeve, slide the outer in the direction shown by the arrow.

(b) When the connector lock is released, the connectors can be disconnected.

HINT:

Be sure to hold both outer flank sides. Holding the top and bottom will make disconnection difficult.

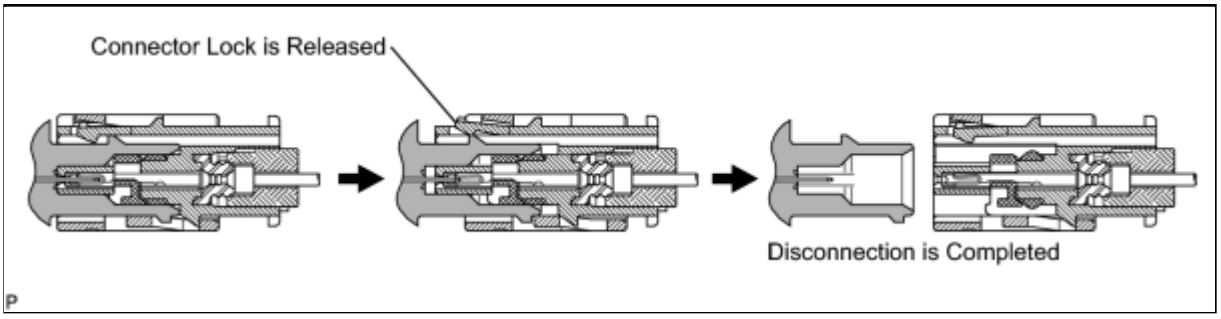

14. CONNECTION OF CONNECTORS FOR SIDE AIRBAG SENSOR AND REAR AIRBAG SENSOR

(a) Connect the connector as shown in the illustration (When locking, make sure that the outer

returns to its original position and a click sound can be heard).

HINT:

When connected, the outer will slide. Be sure not to hold the outer while connecting, as it may result in an insecure fit.

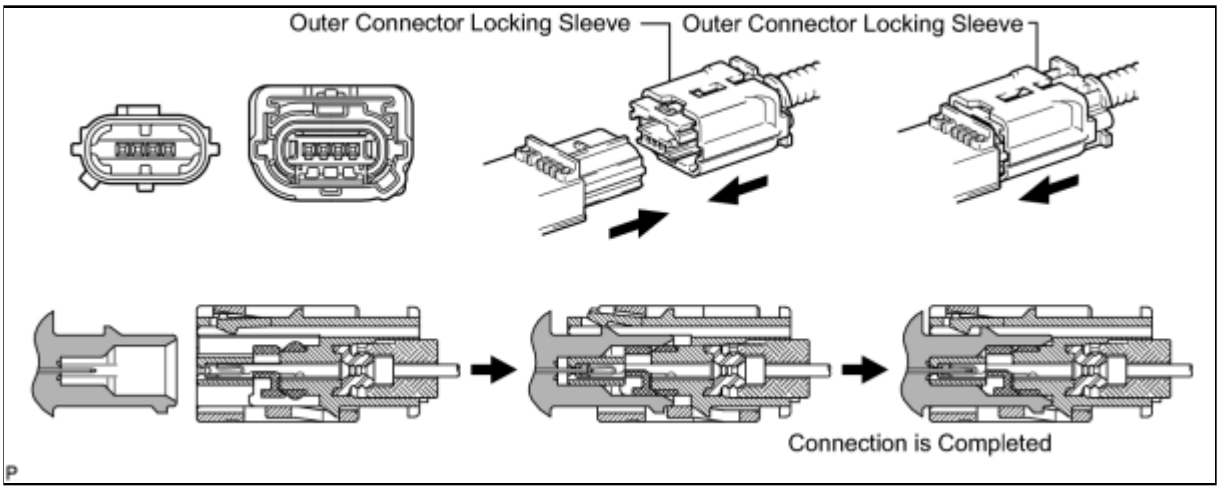

Last Modified: 3-10-2010	6.4 R	**From:** 200901
Model Year: 2010	**Model:** Corolla	**Doc ID:** RM000000XF8031X
Title: SUPPLEMENTAL RESTRAINT SYSTEMS: AIRBAG SYSTEM: PARTS LOCATION (2010 Corolla)		

PARTS LOCATION

ILLUSTRATION

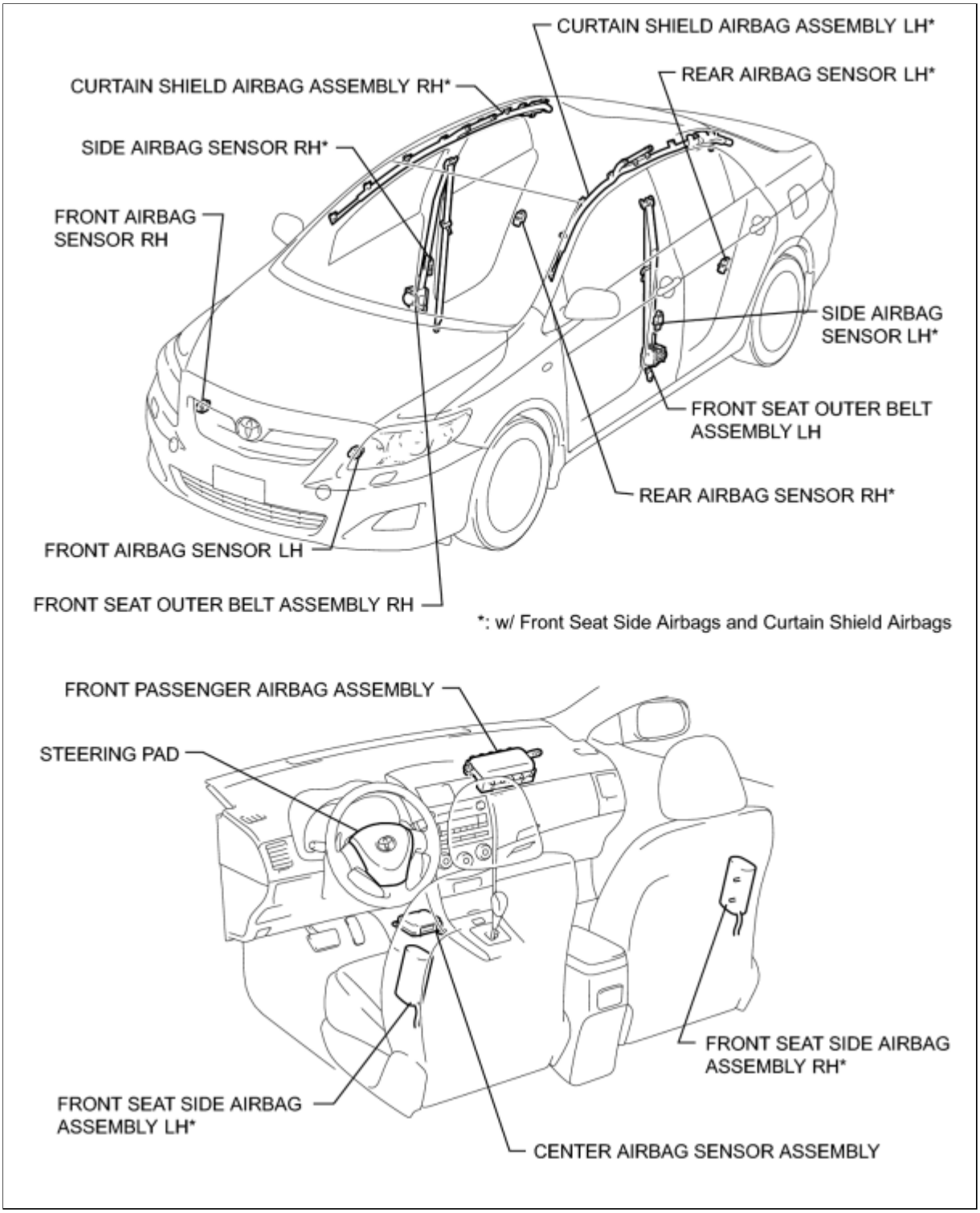

ILLUSTRATION

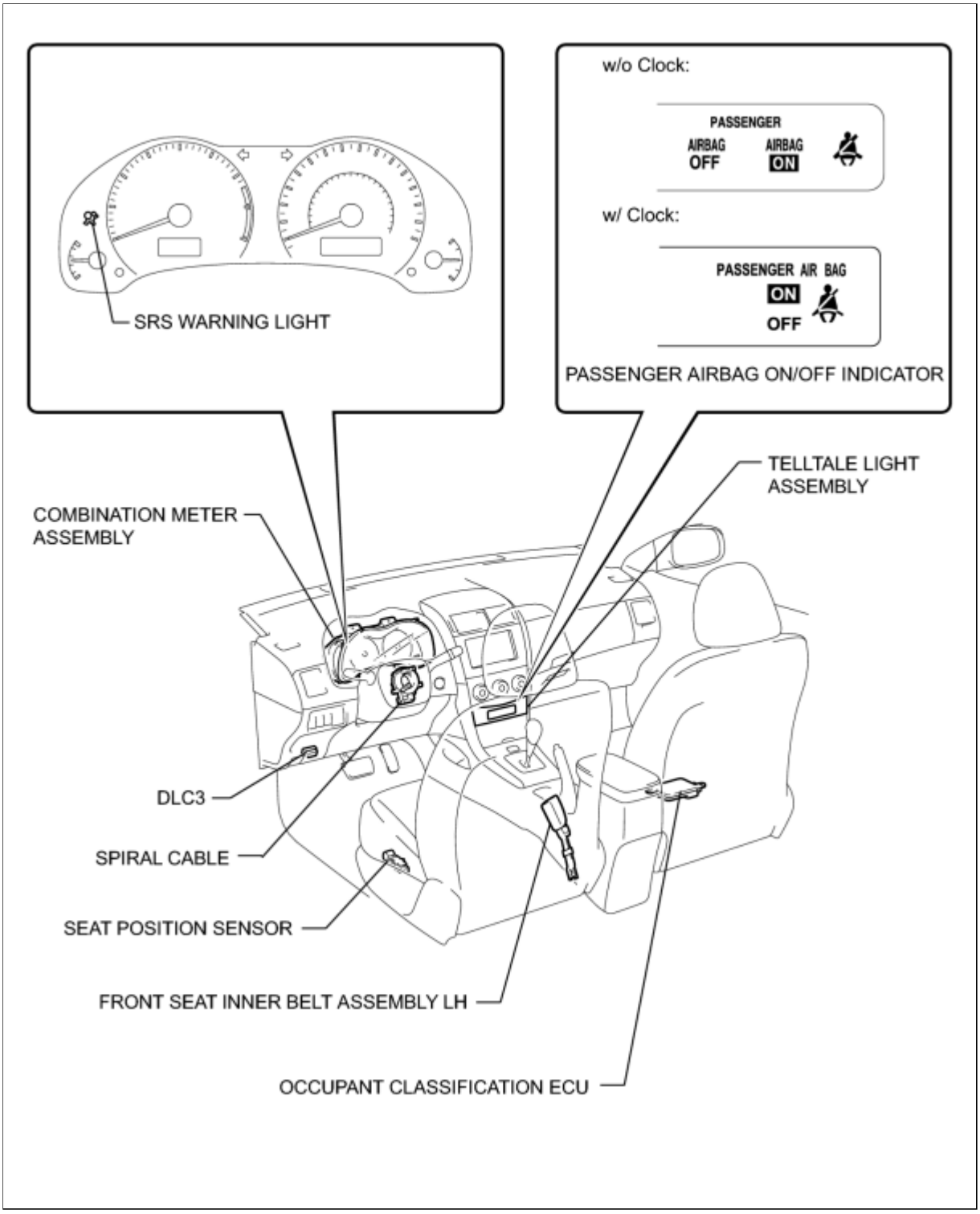
SRS WARNING LIGHT
w/o Clock:
PASSENGER
AIRBAG OFF
AIRBAG ON
w/ Clock:
PASSENGER AIR BAG
ON
OFF
PASSENGER AIRBAG ON/OFF INDICATOR
TELLTALE LIGHT ASSEMBLY
COMBINATION METER ASSEMBLY
DLC3
SPIRAL CABLE
SEAT POSITION SENSOR
FRONT SEAT INNER BELT ASSEMBLY LH
OCCUPANT CLASSIFICATION ECU

Last Modified: 3-10-2010	6.4 U	**From:** 200901
Model Year: 2010	**Model:** Corolla	**Doc ID:** RM000000XFG053X
Title: SUPPLEMENTAL RESTRAINT SYSTEMS: AIRBAG SYSTEM: SYSTEM DIAGRAM (2010 Corolla)		

SYSTEM DIAGRAM

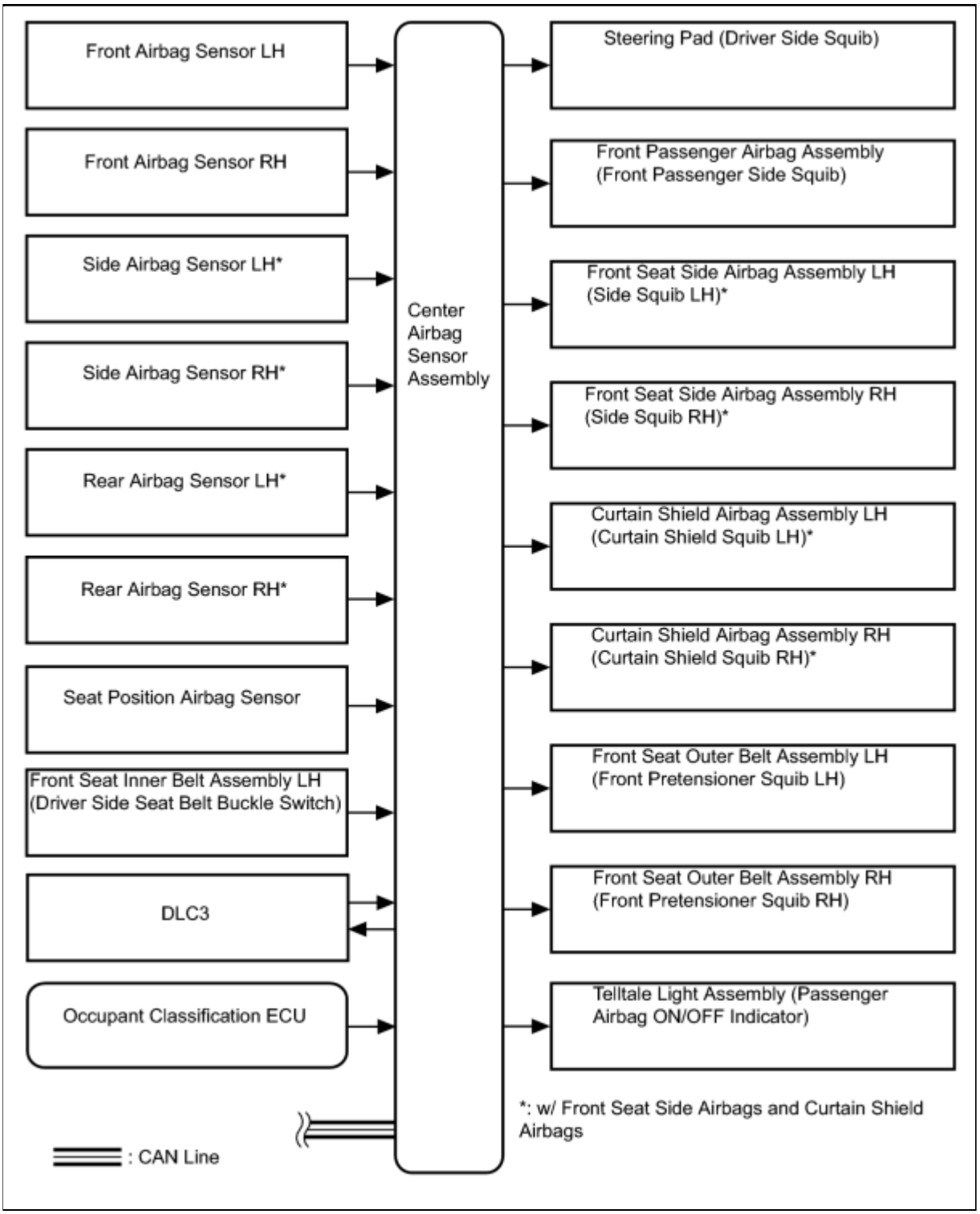

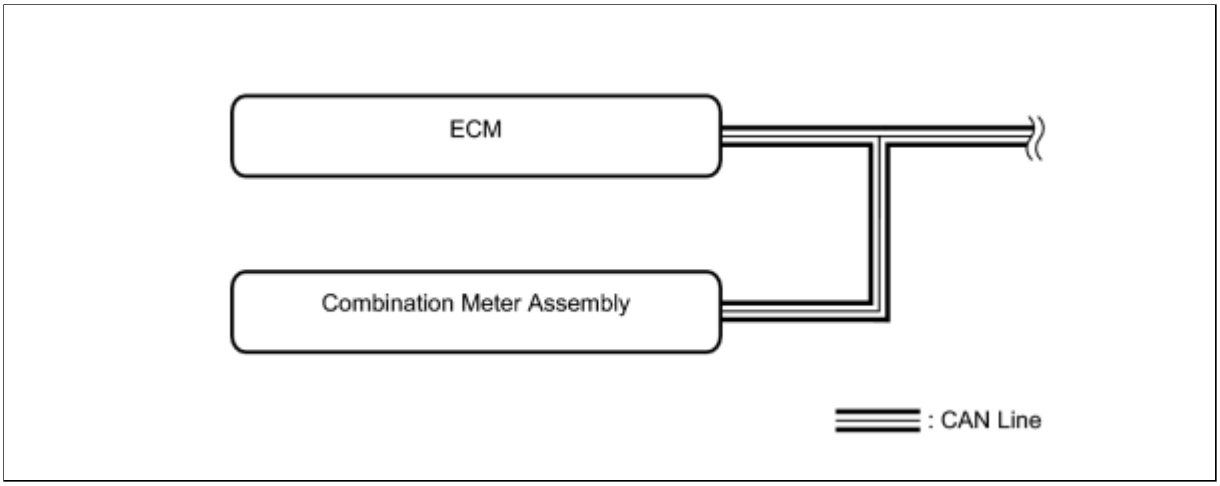

TRANSMITTING ECU (TRANSMITTER)	RECEIVING ECU	SIGNAL	COMMUNICATION METHOD
Center Airbag Sensor Assembly	ECM	Crash detection signal	CAN
Center Airbag Sensor Assembly	Combination Meter Assembly	• SRS warning light ON demand signal • SRS warning light blink demand signal • Passenger seat occupant detection signal • Passenger seat buckle switch signal • Diagnosis signal (DTC)	
Combination Meter Assembly	Center Airbag Sensor Assembly	• Vehicle speed signal • Meter diagnosis polling signal	
ECM	Center Airbag Sensor Assembly	• Engine speed signal • Accelerator opening angle information • Accelerator opening angle signal • Shift position signal • Test mode signal • Stop signal	

Last Modified: 3-10-2010	6.4 D	**From:** 200901
Model Year: 2010	**Model:** Corolla	**Doc ID:** RM000000XFC05RX
Title: SUPPLEMENTAL RESTRAINT SYSTEMS: AIRBAG SYSTEM: SYSTEM DESCRIPTION (2010 Corolla)		

SYSTEM DESCRIPTION

1. GENERAL

(a) FRONTAL COLLISION

(1) The driver airbag and front passenger airbag are designed to supplement seat belts in the event of a frontal collision in order to help reduce shock to the head and chest.

(2) Frontal collisions are detected by the center airbag sensor and two front airbag sensors. The driver airbag, front passenger airbag and seat belt pretensioners then operate simultaneously.

(b) SIDE COLLISION

(1) The front seat side airbags and curtain shield airbags are designed to help reduce shock to the driver, front passenger and rear outer passengers in the event of a side collision.

(2) Side collisions are detected by the side airbag sensor installed in the bottom of the center pillar and the rear airbag sensor installed in the bottom of the rear pillar.

(3) Front side collisions are detected by the side airbag sensor, causing the front seat side airbag and curtain shield airbag to deploy simultaneously. Rear side collisions are detected by the rear airbag sensor to deploy only the curtain shield airbag.

2. CONSTRUCTION AND OPERATION

(a) FRONT AIRBAG SENSOR

(1) The front airbag sensors are installed on the right and left radiator supports respectively.

(2) The front airbag sensor uses an electrical type deceleration sensor.

(3) The deceleration sensor is built into the front airbag sensor, and the distortion that is created in the sensor is converted into an electric signal based on the vehicle deceleration rate during a frontal collision. Accordingly, the extent of the initial collision can be detected in detail.

(b) SIDE AIRBAG SENSOR

(1) The side airbag sensors are installed on the bottom of the right and left center pillars respectively.

(2) The side airbag sensor uses an electrical type deceleration sensor.

(3) The deceleration sensor is built into the side airbag sensor, and the distortion that is created in the sensor is converted into an electric signal based on the vehicle deceleration rate during a front side collision. Accordingly, the extent of the initial collision can be detected in detail.

(c) REAR AIRBAG SENSOR

(1) The rear airbag sensors are installed on the right and left rear pillars respectively.

(2) The rear airbag sensor uses an electrical type deceleration sensor.

(3) The deceleration sensor is built into the rear airbag sensor, and the distortion that is created in the sensor is converted into an electric signal based on the vehicle deceleration rate during a rear side collision. Accordingly, the extent of the initial collision can be detected in detail.

(d) CENTER AIRBAG SENSOR

(1) General

- The center airbag sensor is installed on the center floor under the instrument panel.
- The center airbag sensor consists of a deceleration sensor, safing sensor, ignition control circuit, and diagnostic circuit, etc.
- The center airbag sensor receives signals from the deceleration sensor and safing sensor built into the center airbag sensor and front airbag sensor, and determines whether the driver airbag, front passenger airbag, and front seat belt pretensioner should be activated. In addition, the center airbag sensor diagnoses system malfunctions.
- The center airbag sensor receives signals from the deceleration sensor and the safing sensor built into the center airbag sensor, the side airbag sensor and the rear airbag sensor, and determines whether the front seat side airbag and the curtain shield airbag should be activated. In addition, the center airbag sensor diagnoses system malfunctions.
- The center airbag sensor sends the airbag deployment signal to the ECM through CAN (Controller Area Network) to operate the fuel pump control.

(2) Deceleration sensor and ignition control circuit

- The deceleration sensor is built into the center airbag sensor, front airbag sensor, side airbag sensor and rear airbag sensor, and the distortion created based on the deceleration of the vehicle during a frontal, front side or rear side collision is converted into an electric signal.
- The ignition control circuit performs calculations based on the signal output from the deceleration sensors of the center airbag sensor, front airbag sensor, side airbag sensor and rear airbag sensor. If the calculated values are greater than the specified values, it activates an ignition operation.

(3) Safing sensor

The safing sensor is built into the center airbag sensor. When a frontal, side or rear collision occurs, the sensor turns on and outputs an ON signal to the center airbag sensor if the deceleration rate sent to the safing sensor is greater than the specified value.

(4) Backup power source

The backup power source consists of a power supply capacitor and a DC-DC converter. When the power system does not function during a collision, the power supply capacitor discharges and supplies electric power to the system. The DC-DC converter operates as a boosting transformer when the battery voltage falls below a predetermined level.

(5) Diagnostic circuit

This circuit constantly diagnoses system malfunctions. When a malfunction is detected, it turns on the SRS warning light on the combination meter assembly to inform the driver.

(6) Memory circuit

When a malfunction is detected in the diagnostic circuit, it is coded and stored in the memory circuit.

(e) SRS WARNING LIGHT

(1) The SRS warning light is located on the combination meter assembly. It comes on to inform the driver of system trouble when a malfunction is detected in self-diagnosis of the center airbag sensor. Under normal operating conditions, when the ignition switch is turned to ON, it comes on for approximately 6 seconds and then goes off.

3. DEPLOYMENT CONDITION

If the vehicle collides and the shock is greater than the specified value, the SRS is activated

automatically. The center airbag sensor assembly includes the safing sensor and deceleration sensor. The safing sensor is designed to turn on at a lower deceleration rate than the deceleration sensor.

(a) The center airbag sensor assembly determines whether ignition is necessary based on signals from the deceleration sensor and the front airbag sensor*1. If the safing sensor turns on simultaneously, current flows to the squibs to deploy the SRS as shown in the illustration below.

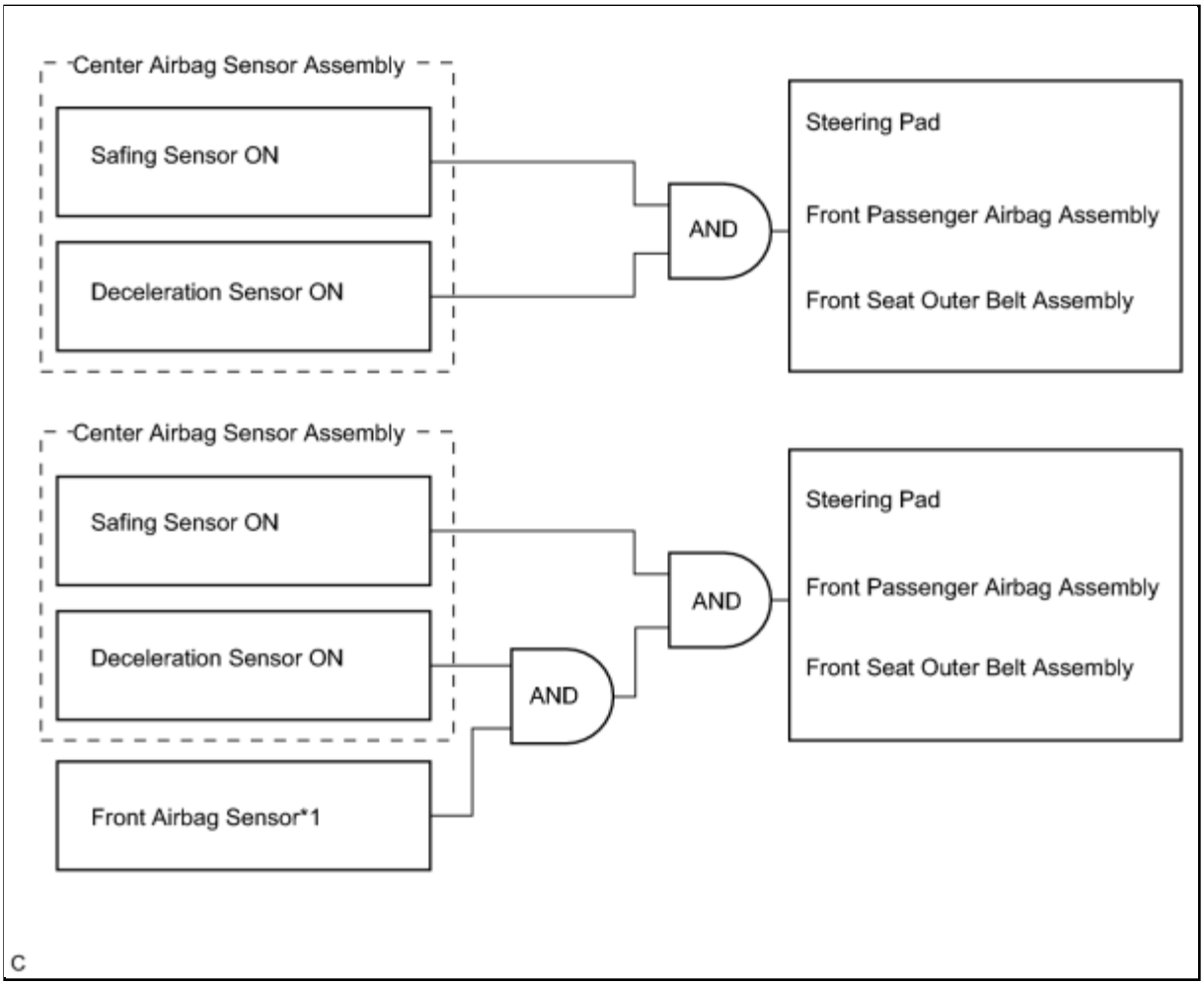

HINT:

***1: In case of frontal collision, the ignition signal could be output with the deceleration sensor ON signal even without a signal from the front airbag sensor.**

(b) The center airbag sensor assembly determines whether ignition is necessary based on signals from the side airbag sensor. If the safing sensor turns on simultaneously, current flows to the squib to deploy the SRS as shown in the illustration below.

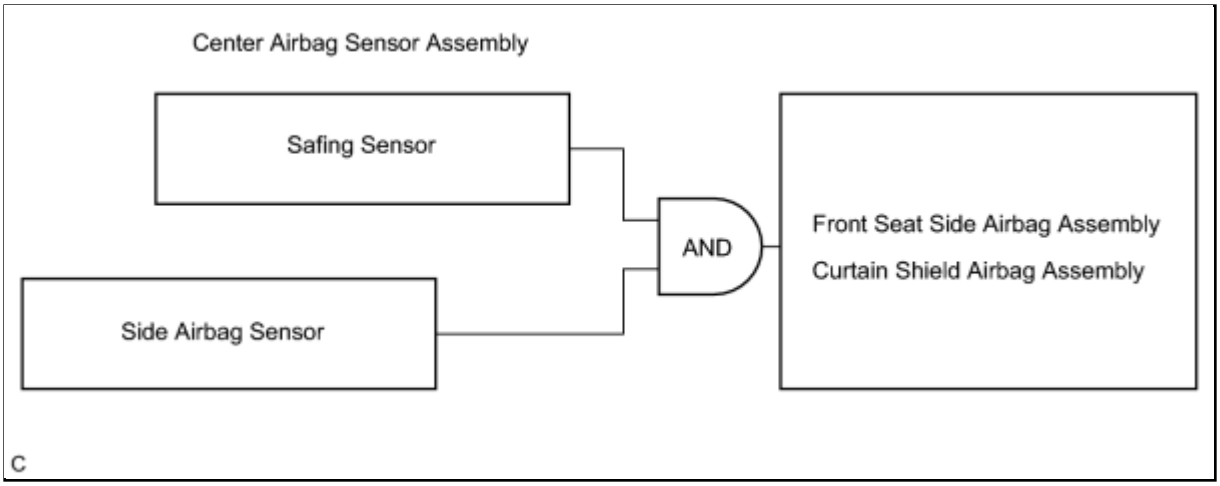

(c) The center airbag sensor assembly determines whether ignition is necessary based on signals from the rear airbag sensor. If the safing sensor turns on simultaneously, current flows to the squib to deploy the SRS as shown in the illustration below*1.

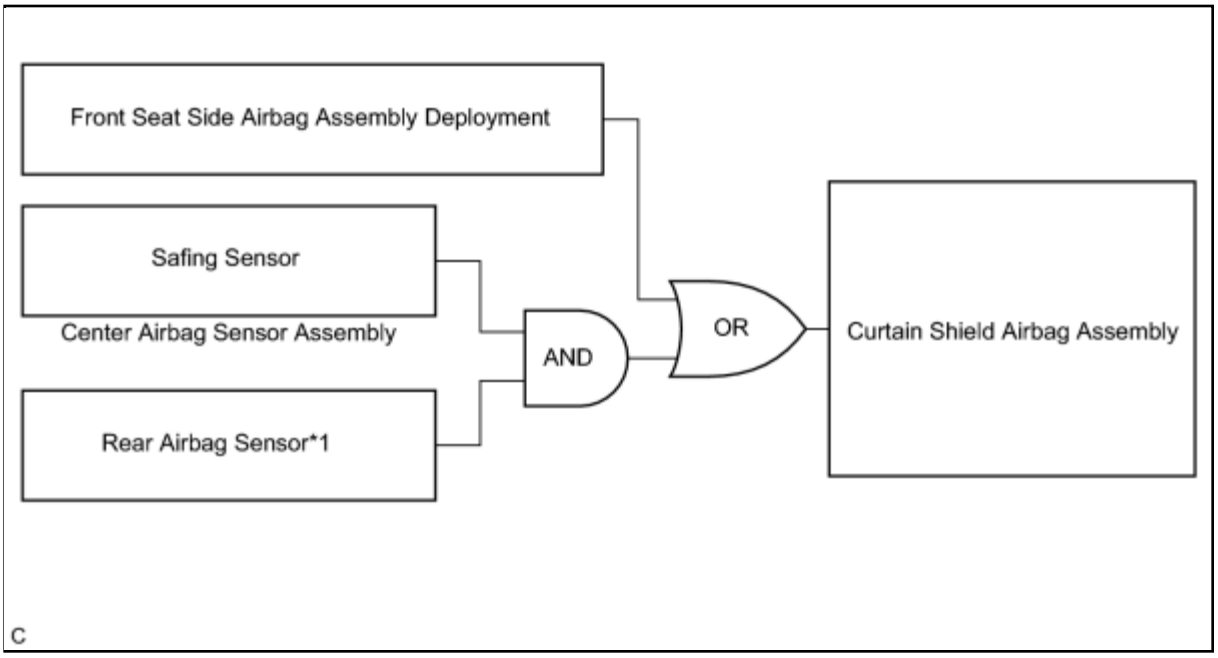

HINT:

***1: If the front seat side airbag assembly deploys, the curtain shield airbag assembly will also deploy, regardless of whether the signal is output from the rear airbag sensor.**

Last Modified: 3-10-2010	6.4 D	**From:** 200901
Model Year: 2010	**Model:** Corolla	**Doc ID:** RM000000XF606DX
Title: SUPPLEMENTAL RESTRAINT SYSTEMS: AIRBAG SYSTEM: HOW TO PROCEED WITH TROUBLESHOOTING (2010 Corolla)		

HOW TO PROCEED WITH TROUBLESHOOTING

HINT:

***: Use the Techstream.**

1.	**VEHICLE BROUGHT TO WORKSHOP**

NEXT

2.	**CUSTOMER PROBLEM ANALYSIS**

(a) Confirm problem symptoms INFO .

NEXT

3.	**CHECK CAN COMMUNICATION SYSTEM***

(a) Use the Techstream to check if the CAN communication system is functioning normally.

HINT:

Refer to Bus Check for the CAN communication system INFO .

The center airbag sensor assembly is connected to the CAN communication system. Therefore, before starting troubleshooting, make sure to check that there is no trouble in the CAN communication system.

Result:

RESULT	PROCEED TO

RESULT	PROCEED TO
CAN communication DTC is not output.	A
CAN communication DTC is output.	B

B ▶ INFO **INSPECT CAN COMMUNICATION CIRCUIT**

A ▼

4.	SRS WARNING LIGHT CHECK

(a) Proceed to Diagnosis System INFO .

NEXT ▼

5.	CHECK FOR DTC*

(a) Proceed to DTC Check / Clear INFO .

Result:

RESULT	PROCEED TO
DTC is output.	A
DTC is not output.	B

B ▶ **GO TO STEP 7**

A ▼

6.	DIAGNOSTIC TROUBLE CODE CHART

(a) Proceed to Diagnostic Trouble Code Chart INFO .

NEXT GO TO STEP 9

7.	SYMPTOM SIMULATION

(a) Proceed to Diagnosis System INFO .

NEXT

8.	PROBLEM SYMPTOMS TABLE

(a) Proceed to Problem Symptoms Table INFO .

NEXT

9.	CIRCUIT INSPECTION*

NEXT

10.	IDENTIFICATION OF PROBLEM

NEXT

11.	REPAIR OR REPLACEMENT

NEXT

12.	CONFIRMATION TEST

NEXT END

Last Modified: 3-10-2010	6.4 D	**From:** 200901
Model Year: 2010	**Model:** Corolla	**Doc ID:** RM000000XFD06XX
Title: SUPPLEMENTAL RESTRAINT SYSTEMS: AIRBAG SYSTEM: DIAGNOSIS SYSTEM (2010 Corolla)		

DIAGNOSIS SYSTEM

1. CHECK DLC3

(a) Check the DLC3 INFO .

2. SYMPTOM SIMULATION

HINT:

The most difficult case in troubleshooting is when no symptoms occur. In such cases, a thorough customer problem analysis must be carried out. Then the same or similar conditions and the environment in which the problem occurred in the customer's vehicle should be reproduced. No matter how experienced or skilled a technician may be, if he/she proceeds to troubleshooting without confirming the problem symptoms, he/she will likely overlook something important and make a wrong guess at some points in the repair operation.

This leads to a standstill in troubleshooting.

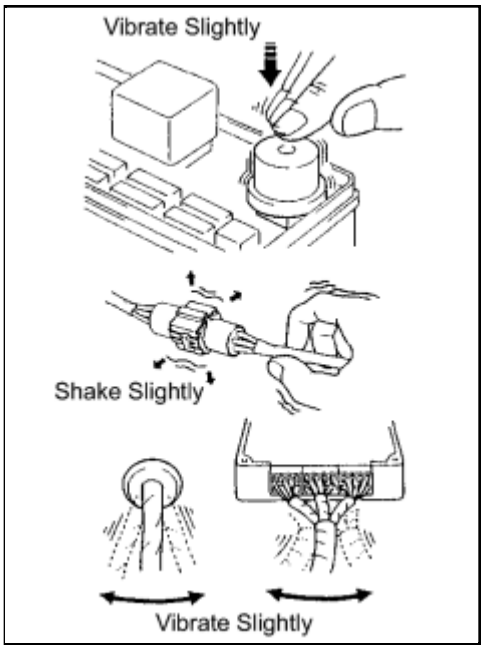

(a) Vibration method: When vibration seems to be the major cause.

HINT:

Perform the simulation method only during the primary check period of approximately 6 seconds after the ignition switch is turned to ON.

(1) Slightly vibrate the part of the sensor considered to be the problem cause with your fingers and check whether the malfunction occurs.

HINT:

Shaking the relays too strongly may result in open relays.

(2) Slightly shake the connector vertically and horizontally.

(3) Slightly shake the wire harness vertically and horizontally.

The connector joint and fulcrum of the vibration are the major areas to be checked thoroughly.

3. FUNCTION OF SRS WARNING LIGHT

(a) Primary check

(1) Turn the ignition switch off. Wait for at least 2 seconds, then turn the ignition switch to ON. The SRS warning light comes on for approximately 6 seconds and the diagnosis of the airbag system (including the seat belt pretensioners) is performed.

HINT:

If trouble is detected during the primary check, the SRS warning light remains on even after the primary check

period of approximately 6 seconds.

(b) Constant check

(1) After the primary check, the center airbag sensor assembly constantly monitors the airbag system for trouble.

HINT:

If trouble is detected during the constant check, the center airbag sensor assembly functions as follows:

- The SRS warning light comes on.
- The SRS warning light goes off, and then comes on. This blinking pattern indicates a source voltage drop. The SRS warning light goes off 10 seconds after the source voltage returns to normal.

(c) Review

(1) When the airbag system is normal:

The SRS warning light comes on only during the primary check period of approximately 6 seconds after the ignition switch is turned to ON.

(2) When the airbag system has trouble:

- The SRS warning light remains on even after the primary check period.
- The SRS warning light goes off after the primary check, but comes on again during the constant check.
- The SRS warning light does not come on when turning the ignition switch from off to ON.

HINT:

The center airbag sensor assembly functions to keep the SRS warning light on if the airbag has been deployed.

4. SRS WARNING LIGHT CHECK

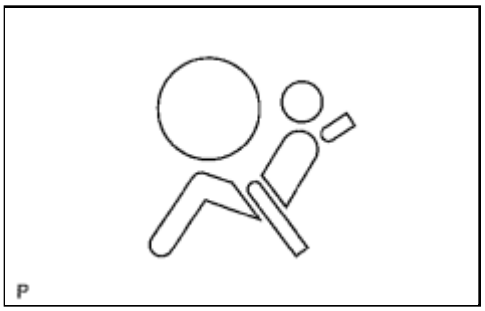

(a) Turn the ignition switch to ON, and check that the SRS warning light comes on for approximately 6 seconds (primary check).

(b) Check that the SRS warning light goes off approximately 6 seconds after the ignition switch is turned to ON (constant check).

HINT:

When any of the following symptoms occur, refer to Problem Symptoms Table INFO **.**

- The SRS warning light comes on occasionally after the primary check period.
- The SRS warning light comes on, but a DTC is not output.
- The ignition switch is turned from off to ON, but the SRS warning light does not come on.

5. FUNCTION OF PASSENGER AIRBAG ON/OFF INDICATOR

(a) Initial check

(1) Turn the ignition switch to ON.

(2) The passenger airbag ON/OFF indicator comes on for approximately 4 seconds, then goes off for approximately 2 seconds.

(3) Approximately 6 seconds after the ignition switch is turned to ON, the passenger airbag ON/OFF indicator will be ON/OFF depending on the conditions listed below.

FRONT PASSENGER SEAT CONDITION	PASSENGER AIRBAG ON/OFF INDICATOR		SRS WARNING LIGHT
	ON INDICATOR	OFF INDICATOR	
Vacant	OFF	OFF	OFF
Adult is seated.	ON	OFF	OFF
Child is seated.	OFF	ON	OFF
Child restraint system is set.	OFF	ON	OFF
Front passenger occupant classification failure	OFF	ON	ON

HINT:

- The passenger airbag ON/OFF indicator is based on the timing chart below in order to check the indicator light circuit.
- When the occupant classification system has trouble, both the SRS warning light and the passenger airbag ON/OFF indicator ("OFF") come on. In this case, check the DTCs in the airbag system first. Then troubleshoot the occupant classification system if DTC B1650/32 is detected, and troubleshoot the passenger airbag ON/OFF indicator if DTC B1660/43 is detected.

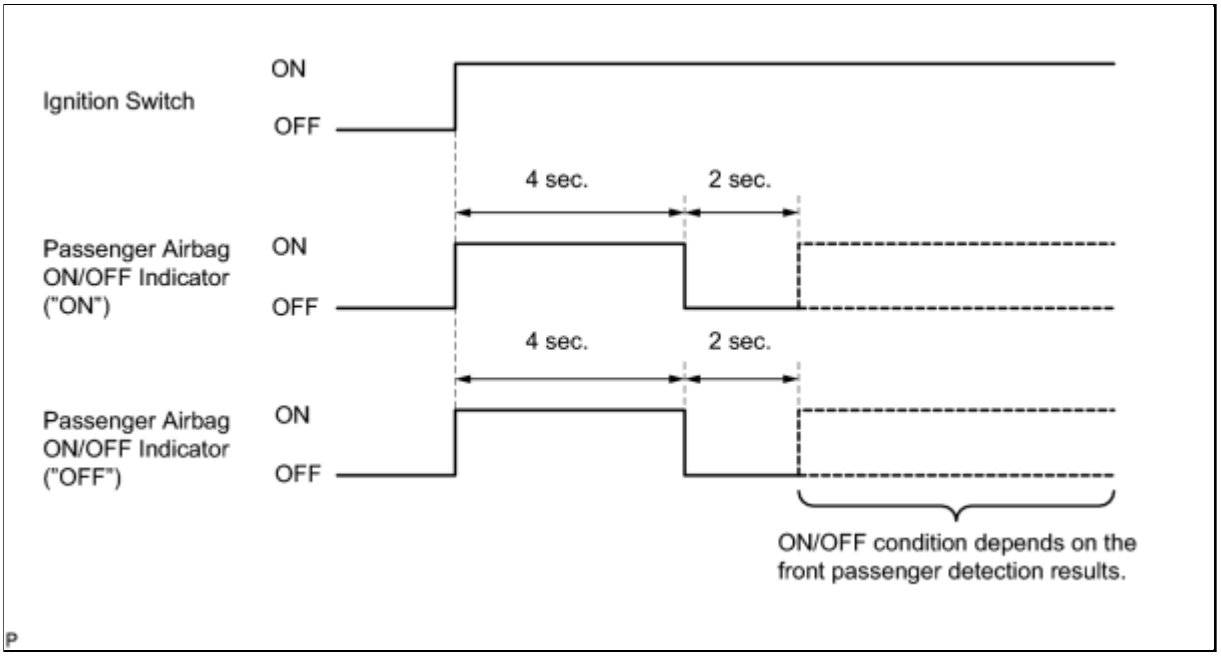

6. PASSENGER AIRBAG ON/OFF INDICATOR CHECK

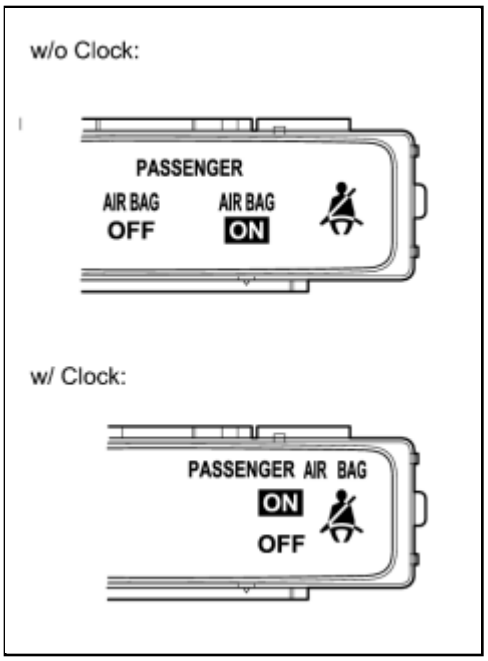

(a) Turn the ignition switch to ON.

(b) Check that the passenger airbag ON/OFF indicator ("ON" and "OFF") comes on for approximately 4 seconds, then goes off for approximately 2 seconds.

HINT:

Refer to the table in step 5 regarding the passenger airbag ON/OFF indicator when the ignition switch is turned to ON and approximately 6 seconds pass.

7. ACTIVATION PREVENTION MECHANISM

(a) FUNCTION OF ACTIVATION PREVENTION MECHANISM

(1) An activation prevention mechanism is built into the connector (on the center airbag sensor assembly side) of the airbag system squib circuit to prevent accidental airbag activation.

(2) This mechanism closes the circuit when the connector is disconnected by bringing the short spring into contact with the terminals and insulating the circuit from external power sources to prevent accidental airbag activation.

(b) RELEASING OF ACTIVATION PREVENTION MECHANISM

(1) To release the activation prevention mechanism, insert a piece of paper with the same thickness as the male terminal (approximately 0.5 mm (0.0197 in.)) between the terminals and the short spring to break the connection.

(2) Refer to the following illustrations concerning connectors utilizing the activation prevention mechanism and its release method.

CAUTION:

Never release the activation prevention mechanism on the squib connector even when inspecting with the squib disconnected.

NOTICE:

- Do not release the activation prevention mechanism unless specially directed by the troubleshooting procedure.
- To prevent the terminal and the short spring from being damaged, always use a piece of paper with the same thickness as the male terminal.

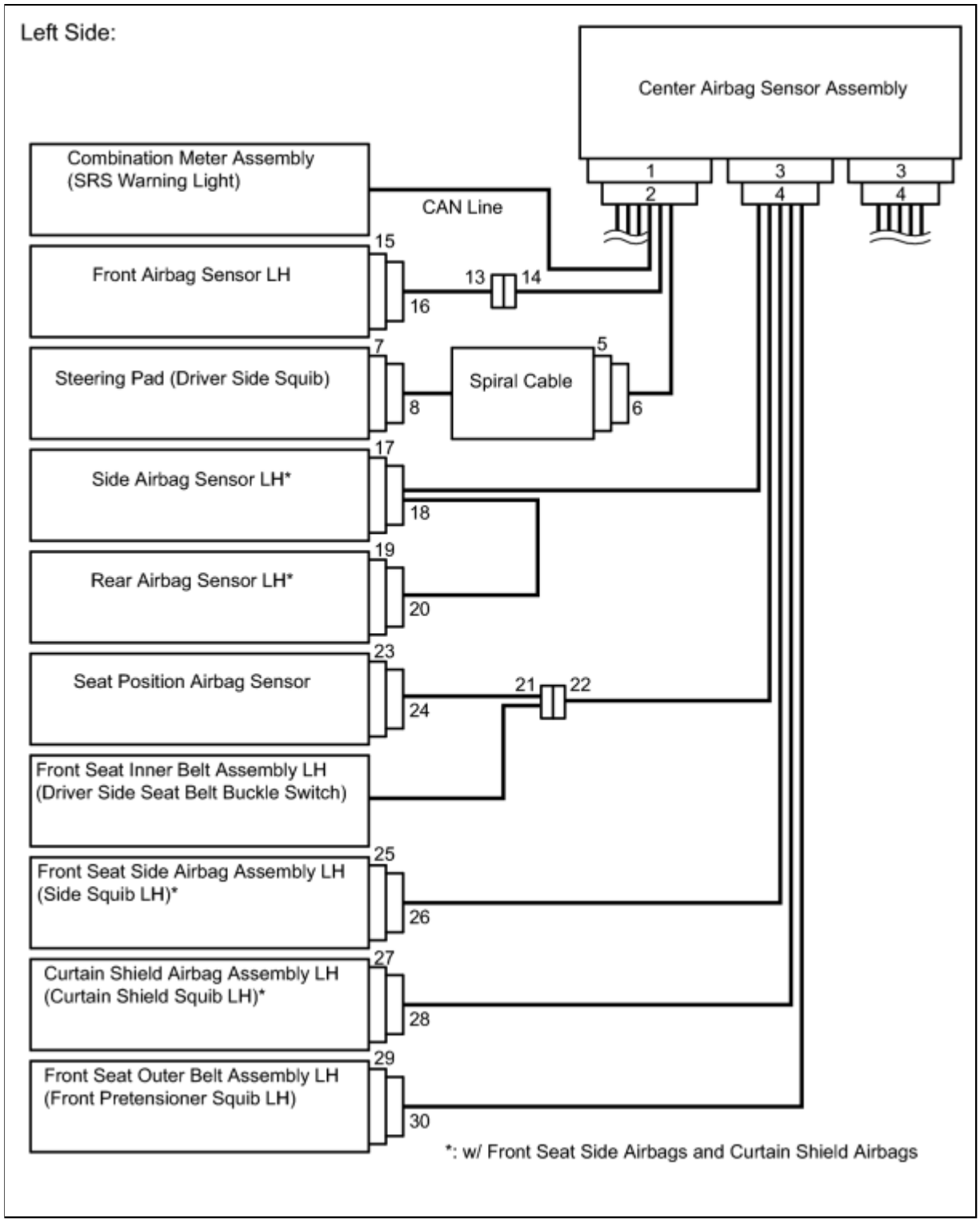
Left Side:
Center Airbag Sensor Assembly
1
2
3
4
3
4
Combination Meter Assembly
(SRS Warning Light)
CAN Line
Front Airbag Sensor LH
15
16
13
14
Steering Pad (Driver Side Squib)
7
8
Spiral Cable
5
6
Side Airbag Sensor LH*
17
18
Rear Airbag Sensor LH*
19
20
Seat Position Airbag Sensor
23
24
21
22
Front Seat Inner Belt Assembly LH
(Driver Side Seat Belt Buckle Switch)
Front Seat Side Airbag Assembly LH
(Side Squib LH)*
25
26
Curtain Shield Airbag Assembly LH
(Curtain Shield Squib LH)*
27
28
Front Seat Outer Belt Assembly LH
(Front Pretensioner Squib LH)
29
30
*: w/ Front Seat Side Airbags and Curtain Shield Airbags

Right Side:

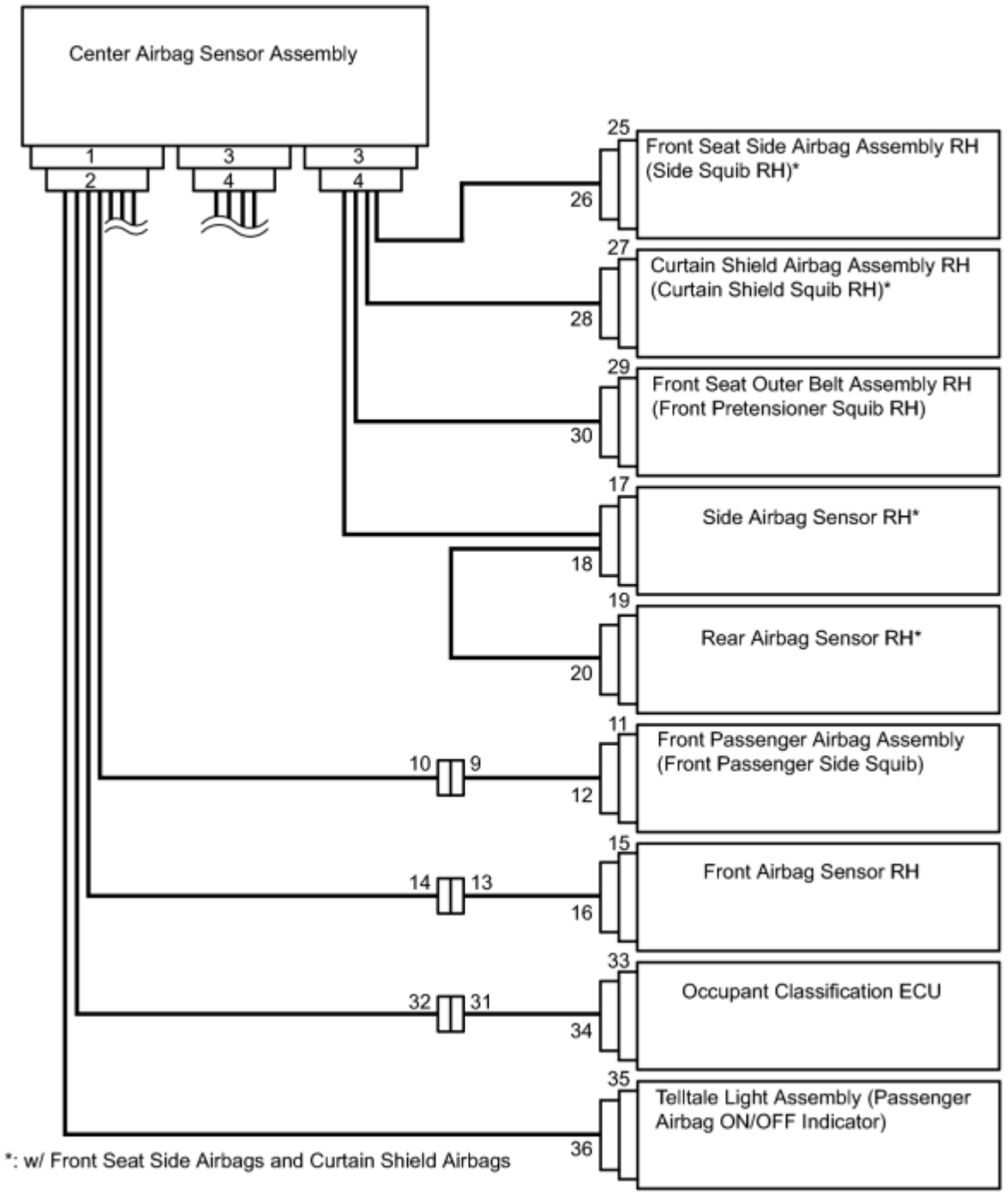
Center Airbag Sensor Assembly
1
2
3
4
3
4
25
Front Seat Side Airbag Assembly RH (Side Squib RH)*
26
27
Curtain Shield Airbag Assembly RH (Curtain Shield Squib RH)*
28
29
Front Seat Outer Belt Assembly RH (Front Pretensioner Squib RH)
30
17
Side Airbag Sensor RH*
18
19
Rear Airbag Sensor RH*
20
11
Front Passenger Airbag Assembly (Front Passenger Side Squib)
10
9
12
15
Front Airbag Sensor RH
14
13
16
33
Occupant Classification ECU
32
31
34
35
Telltale Light Assembly (Passenger Airbag ON/OFF Indicator)
36
*: w/ Front Seat Side Airbags and Curtain Shield Airbags

Center Airbag Sensor Assembly Connector:

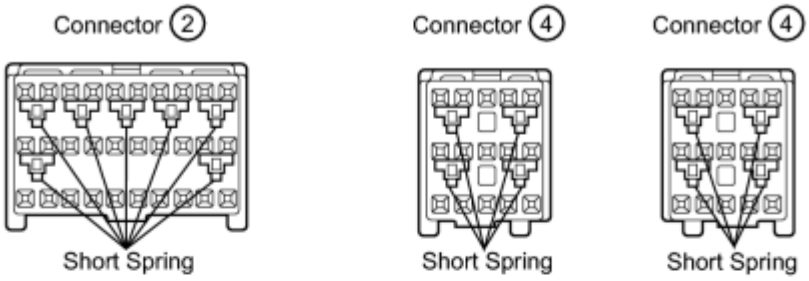

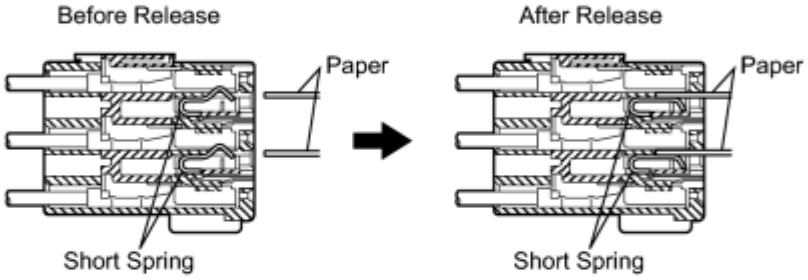

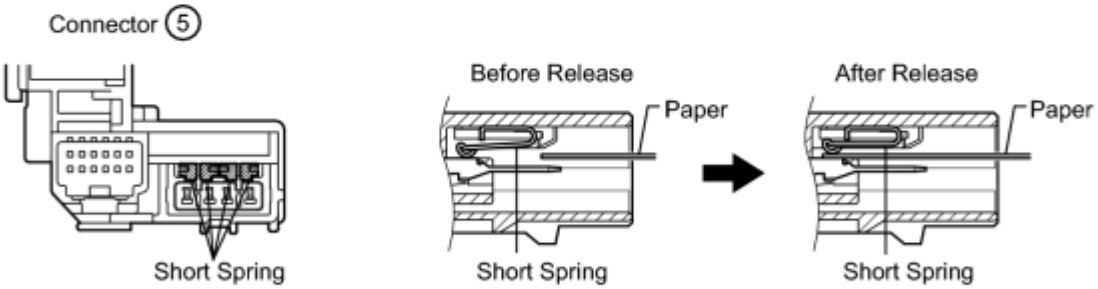

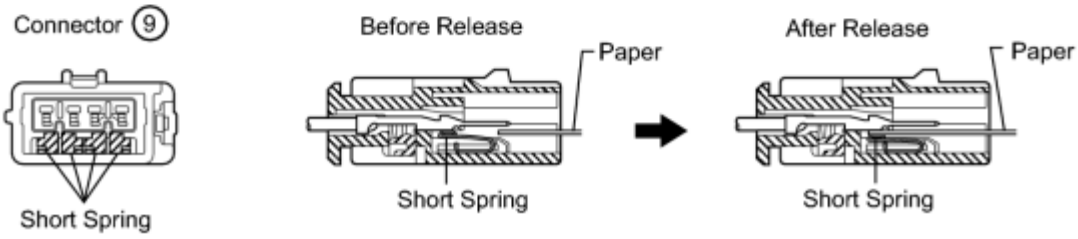

Last Modified: 3-10-2010	6.4 T	**From:** 200901
Model Year: 2010	**Model:** Corolla	**Doc ID:** RM000000XFA047X
Title: SUPPLEMENTAL RESTRAINT SYSTEMS: AIRBAG SYSTEM: PROBLEM SYMPTOMS TABLE (2010 Corolla)		

PROBLEM SYMPTOMS TABLE

HINT:

- Use the table below to help determine the cause of problem symptoms. If multiple suspected areas are listed, the potential causes of the symptoms are listed in order of probability in the "Suspected Area" column of the table. Check each symptom by checking the suspected areas in the order they are listed. Replace parts as necessary.
- Inspect the fuses and relays related to this system before inspecting the suspected areas below.

Airbag System

SYMPTOM	SUSPECTED AREA	SEE PAGE
The SRS warning light goes off after the primary check, but then comes on.	SRS Warning Light Remains ON	INFO
When the ignition switch is turned to ON, the SRS warning light sometimes comes on after approximately 6 seconds.	SRS Warning Light Remains ON	INFO
The SRS warning light always comes on even when DTC is not output.	SRS Warning Light Remains ON	INFO
When the ignition switch is turned to ON, the SRS warning light does not come on.	SRS Warning Light does not Come ON	INFO
Although the SRS warning light operates normally, DTC or a normal system code is not displayed.	TC and CG Terminal Circuit	INFO
Although terminals TC and CG of DLC3 are not connected, DTC or a normal system code is displayed.	TC and CG Terminal Circuit	INFO

Last Modified: 3-10-2010	6.4 U	**From:** 200901
Model Year: 2010	**Model:** Corolla	**Doc ID:** RM000000XF904EX
Title: SUPPLEMENTAL RESTRAINT SYSTEMS: AIRBAG SYSTEM: TERMINALS OF ECU (2010 Corolla)		

TERMINALS OF ECU

1. CENTER AIRBAG SENSOR ASSEMBLY

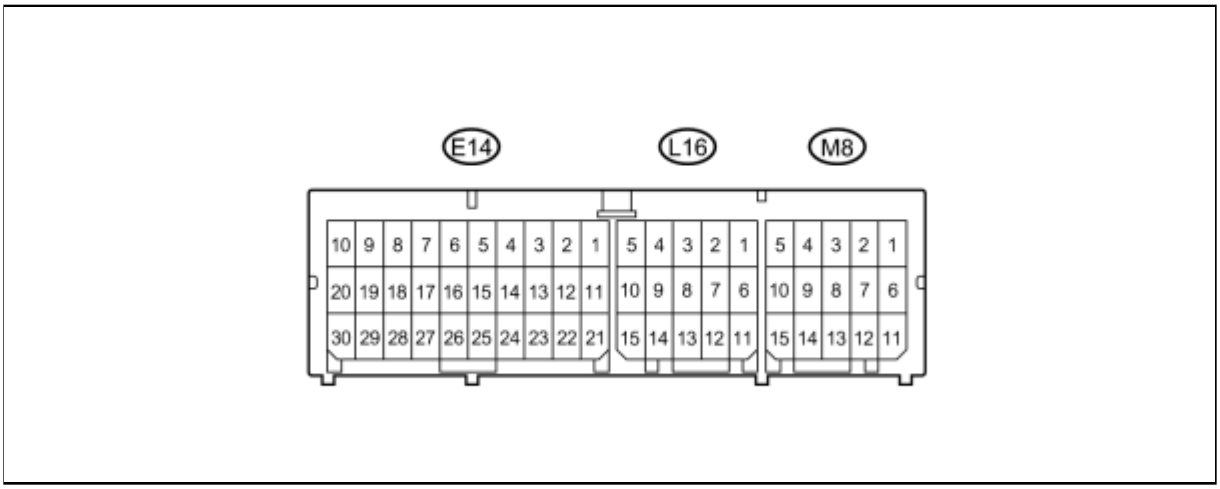

TERMINAL NO.	TERMINAL SYMBOL	DESTINATION
E14-1	P2+	Front passenger airbag assembly (Front passenger side squib 2nd step)
E14-2	P2-	Front passenger airbag assembly (Front passenger side squib 2nd step)
E14-3	P-	Front passenger airbag assembly (Front passenger side squib)
E14-4	P+	Front passenger airbag assembly (Front passenger side squib)
E14-5	D+	Steering pad (Driver side squib)
E14-6	D-	Steering pad (Driver side squib)
E14-7	D2-	Steering pad (Driver side squib 2nd step)
E14-8	D2+	Steering pad (Driver side squib 2nd step)
E14-13	CANH	CAN communication line
E14-16	SIL	DLC3
E14-17	P-AB	Telltale light assembly (Passenger airbag ON/OFF indicator)
E14-21	IG2	IGN fuse
E14-22	CANL	CAN communication line
E14-23	PAON	Telltale light assembly (Passenger airbag ON/OFF indicator)

TERMINAL NO.	TERMINAL SYMBOL	DESTINATION
E14-25	E1	Ground
E14-26	E2	Ground
E14-27	-SR	Front airbag sensor RH
E14-28	-SL	Front airbag sensor LH
E14-29	+SR	Front airbag sensor RH
E14-30	+SL	Front airbag sensor LH
L16-1	PL-	Front seat outer belt assembly LH (Front pretensioner squib LH)
L16-2	PL+	Front seat outer belt assembly LH (Front pretensioner squib LH)
L16-6*	ICL-	Curtain shield airbag assembly LH (Curtain shield squib LH)
L16-7*	ICL+	Curtain shield airbag assembly LH (Curtain shield squib LH)
L16-8*	BBL+	Side airbag sensor LH
L16-9*	SFL+	Front seat side airbag assembly LH (Side squib LH)
L16-10*	SFL-	Front seat side airbag assembly LH (Side squib LH)
L16-11	LBE+	Front seat inner belt assembly LH (Seat belt buckle switch LH)
L16-12	LBE-	Front seat inner belt assembly LH (Seat belt buckle switch LH)
L16-13	LSP-	Seat position airbag sensor
L16-14	LSP+	Seat position airbag sensor
L16-15*	BBL-	Side airbag sensor LH
M8-4	PR+	Front seat outer belt assembly RH (Front pretensioner squib RH)
M8-5	PR-	Front seat outer belt assembly RH (Front pretensioner squib RH)
M8-6*	SFR-	Front seat side airbag assembly RH (Side squib RH)
M8-7*	SFR+	Front seat side airbag assembly RH (Side squib RH)
M8-8*	BBR+	Side airbag sensor RH
M8-9*	ICR+	Curtain shield airbag assembly RH (Curtain shield squib RH)
M8-10*	ICR-	Curtain shield airbag assembly RH (Curtain shield squib RH)
M8-11*	BBR-	Side airbag sensor RH
M8-12	FSR+	Occupant classification ECU
M8-13	FSR-	Occupant classification ECU

HINT:

***: w/ Front seat side airbags and curtain shield airbags**

Last Modified: 3-10-2010	6.4 D	**From:** 200901
Model Year: 2010	**Model:** Corolla	**Doc ID:** RM000000XFE076X
Title: SUPPLEMENTAL RESTRAINT SYSTEMS: AIRBAG SYSTEM: DTC CHECK / CLEAR (2010 Corolla)		

DTC CHECK / CLEAR

1. DTC CHECK (USING SST CHECK WIRE)

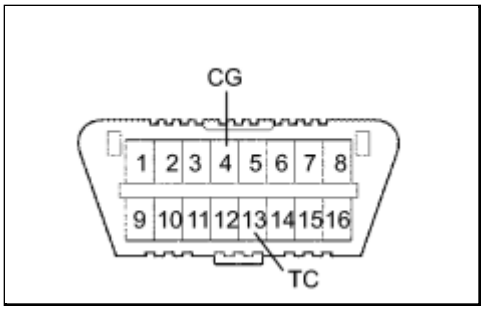

(a) Check the DTCs (Present trouble code).

(1) Turn the ignition switch to ON, and wait for approximately 60 seconds.

(2) Using SST, connect terminals TC and CG of the DLC3.

SST: 09843-18040

NOTICE:

Connect the terminals to the correct positions to avoid a malfunction.

(b) Check the DTCs (Past trouble code).

(1) Using SST, connect terminals TC and CG of the DLC3.

SST: 09843-18040

NOTICE:

Connect the terminals to the correct positions to avoid a malfunction.

(2) Turn the ignition switch to ON, and wait for approximately 60 seconds.

(c) Read the DTCs.

(1) Read the blinking patterns of the DTCs. As examples, the blinking patterns for the normal system code and trouble codes 11 and 31 are shown in the illustration.

- Normal system code indication (without past trouble code)

  The light blinks twice per second.
- Normal system code indication (with past trouble code)

  When the past trouble code is stored in the center airbag sensor assembly, the light blinks only once per second.
- Trouble code indication

  The first blinks indicate the first DTC. The second blinks occur after a 1.5-second pause.

If there is more than 1 code, there will be a 2.5-second pause between each code. After all codes are shown,

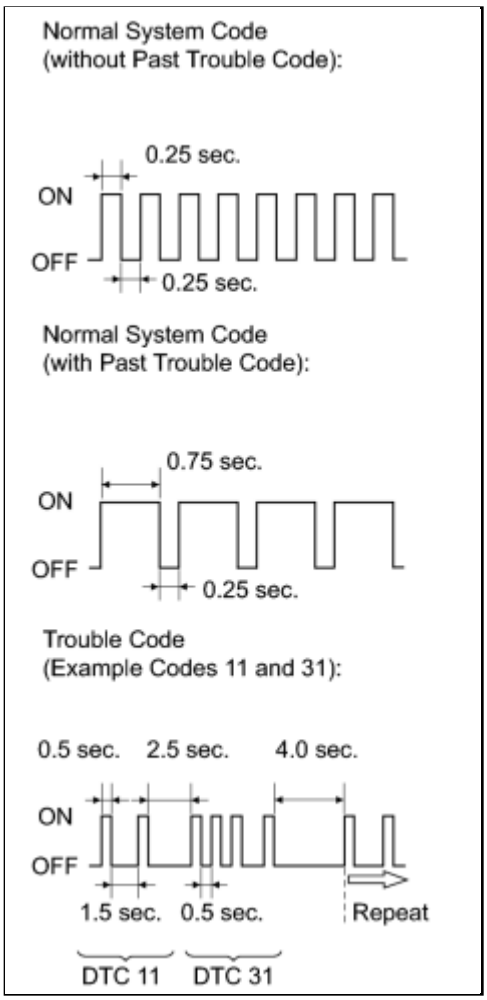

there will be a 4.0-second pause, and then all codes will be repeated.

HINT:

- If 2 or more malfunctions are found, the indication begins with the smaller-numbered code.
- If DTCs are indicated without connecting the terminals, proceed to TC and CG Terminal Circuit INFO .

2. DTC CLEAR (USING SST CHECK WIRE)

(a) Clear the DTCs.

(1) When the ignition switch is turned off, the DTCs are cleared.

HINT:

Depending on the DTC, the code may not be cleared by turning off the ignition switch. In this case, proceed to the next procedure.

(2) Using SST, connect terminals TC and CG of the DLC3, and then turn the ignition switch to ON.

SST: 09843-18040

(3) Disconnect terminal TC of the DLC3 within 3 to 10 seconds after the DTCs are output, and check if the SRS warning light comes on after 3 seconds.

(4) Within 2 to 4 seconds after the SRS warning light comes on, connect terminals TC and CG of the DLC3.

(5) The SRS warning light should go off within 2 to 4 seconds after connecting terminals TC and CG of the DLC3. Then, disconnect terminal TC within 2 to 4 seconds after the SRS warning light goes off.

(6) The SRS warning light comes on again within 2 to 4 seconds after disconnecting terminal TC. Then, reconnect terminals TC and CG within 2 to 4 seconds after the SRS warning light comes on.

(7) Check if the SRS warning light goes off within 2 to 4 seconds after connecting terminals TC and CG of the DLC3. Also check if the normal system code is output within 1 second after the SRS warning light goes off.

If DTCs are not cleared, repeat this procedure until the codes are cleared.

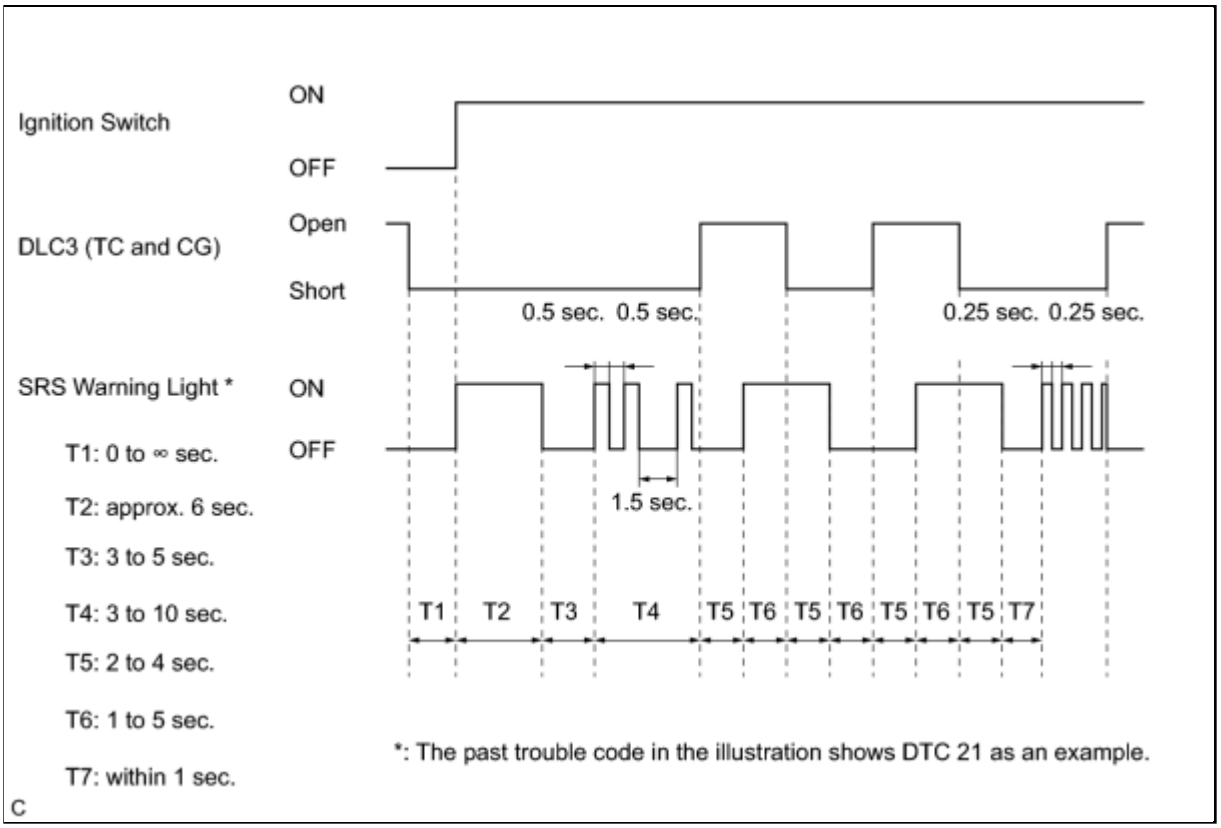

3. DTC CHECK (USING TECHSTREAM)

(a) Turn the ignition switch off.

(b) Connect the Techstream to the DLC3.

(c) Turn the ignition switch to ON and turn the Techstream on.

(d) Enter the following menus: Body Electrical / SRS Airbag / Trouble Code.

(e) Check the DTCs by following the prompts on the Techstream screen.

HINT:

Refer to the Techstream operator's manual for further details.

4. DTC CLEAR (USING TECHSTREAM)

(a) Turn the ignition switch off.

(b) Connect the Techstream to the DLC3.

(c) Turn the ignition switch to ON and turn the Techstream on.

(d) Enter the following menus: Body Electrical / SRS Airbag / Trouble Code.

(e) Clear the DTCs by following the prompts on the Techstream screen.

HINT:

Refer to the Techstream operator's manual for further details.



Last Modified: 3-10-2010	6.4 D	**From:** 200901
Model Year: 2010	**Model:** Corolla	**Doc ID:** RM000000XFF05UX
Title: SUPPLEMENTAL RESTRAINT SYSTEMS: AIRBAG SYSTEM: CHECK MODE PROCEDURE (2010 Corolla)		

CHECK MODE PROCEDURE

1. CHECK MODE (SIGNAL CHECK): DTC CHECK

(a) Turn the ignition switch off.

(b) Connect the Techstream to the DLC3.

(c) Turn the ignition switch to ON and turn the Techstream on.

(d) Enter the following menus: Body Electrical / SRS Airbag / Utility / Signal Check.

(e) Select Signal Check, and proceed with checking using the Techstream.

NOTICE:

Select Signal Check from the Trouble Code screen displayed on the Techstream to clear the output DTCs (both present and past).

HINT:

- DTCs can be detected more sensitively in check mode than in a normal diagnosis.
- Perform check mode inspection when a malfunction in each squib circuit is suspected even after the normal system code is output through a normal diagnosis inspection.

Last Modified: 3-10-2010	6.4 C	**From:** 200901
Model Year: 2010	**Model:** Corolla	**Doc ID:** RM000000YTM03LX
Title: SUPPLEMENTAL RESTRAINT SYSTEMS: AIRBAG SYSTEM: B1610/13: Front Airbag Sensor RH Circuit Malfunction (2010 Corolla)		

DTC	**B1610/13**	**Front Airbag Sensor RH Circuit Malfunction**

DESCRIPTION

The front airbag sensor RH circuit consists of the center airbag sensor assembly and front airbag sensor RH.

The front airbag sensor RH detects impacts to the vehicle and sends signals to the center airbag sensor assembly to determine if the airbag should be deployed.

DTC B1610/13 is recorded when a malfunction is detected in the front airbag sensor RH circuit.

DTC NO.	DTC DETECTING CONDITION	TROUBLE AREA
B1610/13	• The center airbag sensor assembly receives a short circuit signal, an open circuit signal, a short circuit to ground signal or a short circuit to B+ signal in the front airbag sensor RH circuit for 2 seconds. • Front airbag sensor RH malfunction • Center airbag sensor assembly malfunction	• Instrument panel wire • Engine room main wire • Front airbag sensor RH • Center airbag sensor assembly

WIRING DIAGRAM

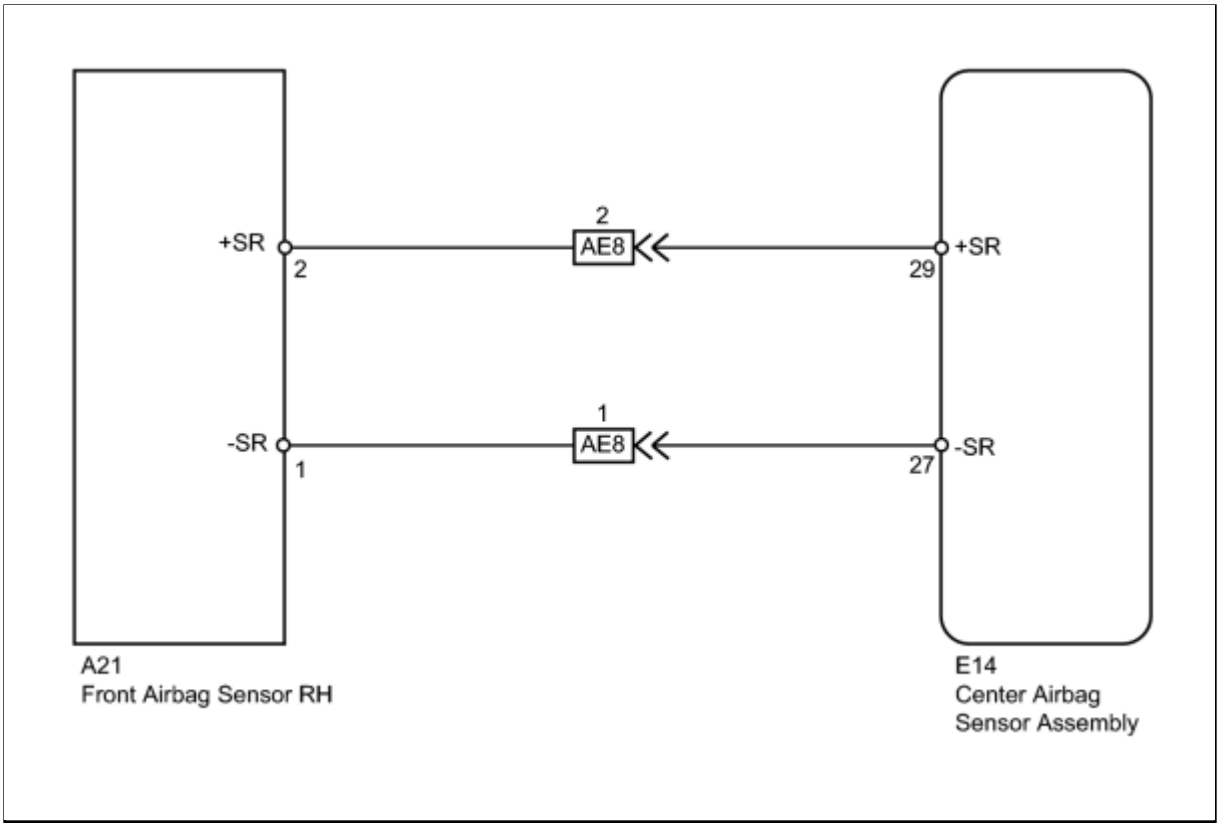

INSPECTION PROCEDURE

PROCEDURE

1.	**CHECK CONNECTORS**

(a) Turn the ignition switch off.

(b) Disconnect the cable from the negative (-) battery terminal, and wait for at least 90 seconds.

(c) Check that the connectors are properly connected to the center airbag sensor assembly and the front airbag sensor RH. Also check that the connectors that link the engine room main wire and instrument panel wire are properly connected.

OK:

The connectors are properly connected.

HINT:

If the connectors are not connected securely, reconnect the connectors and proceed to the next inspection.

(d) Disconnect the connectors from the center airbag sensor assembly and the front airbag sensor RH. Also disconnect the connectors that link the engine room main wire and instrument panel wire.

(e) Check that the terminals of the connectors are not damaged.

OK:

The terminals are not deformed or damaged.

NG ▶ **REPLACE WIRE HARNESS**

OK ▼

2.	**CHECK FRONT AIRBAG SENSOR RH CIRCUIT (OPEN)**

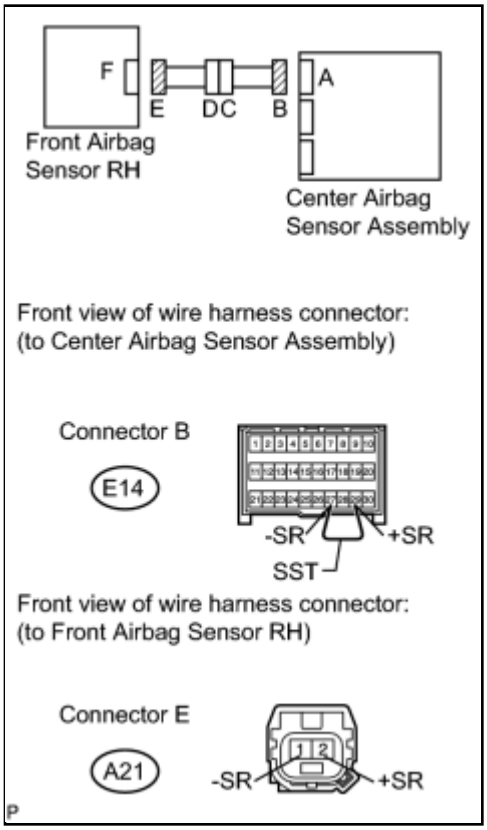

(a) Connect the connectors that link the engine room main wire and instrument panel wire.

(b) Using SST, connect terminals 29 (+SR) and 27 (-SR) of connector B.

NOTICE:

Do not forcibly insert SST into the terminals of the connector when connecting.

SST: 09843-18040

(c) Measure the resistance according to the value(s) in the table below.

Standard Resistance:

TESTER CONNECTION	CONDITION	SPECIFIED CONDITION
A21-2 (+SR) - A21-1 (-SR)	Always	Below 1 Ω

NG ▶ CHECK INSTRUMENT PANEL WIRE (OPEN)

OK ▼

3.	CHECK FRONT AIRBAG SENSOR RH CIRCUIT (SHORT)

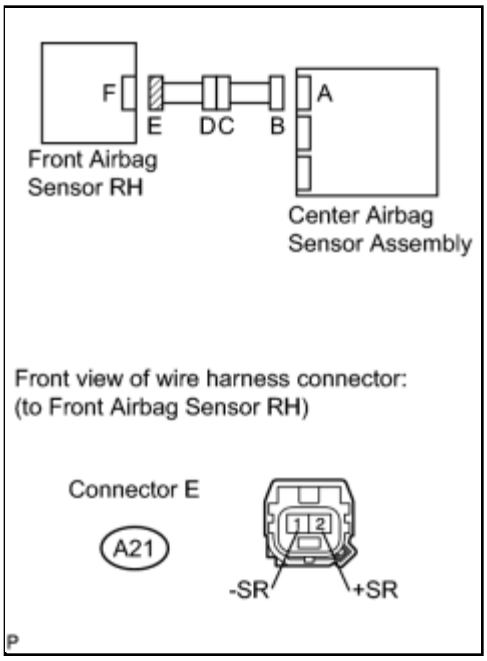

(a) Disconnect SST from connector B.

(b) Measure the resistance according to the value(s) in the table below.

Standard Resistance:

TESTER CONNECTION	CONDITION	SPECIFIED CONDITION
A21-2 (+SR) - A21-1 (-SR)	Always	1 MΩ or higher

NG ▶ CHECK INSTRUMENT PANEL WIRE (SHORT)

OK ▼

4.	CHECK FRONT AIRBAG SENSOR RH CIRCUIT (SHORT TO B+)

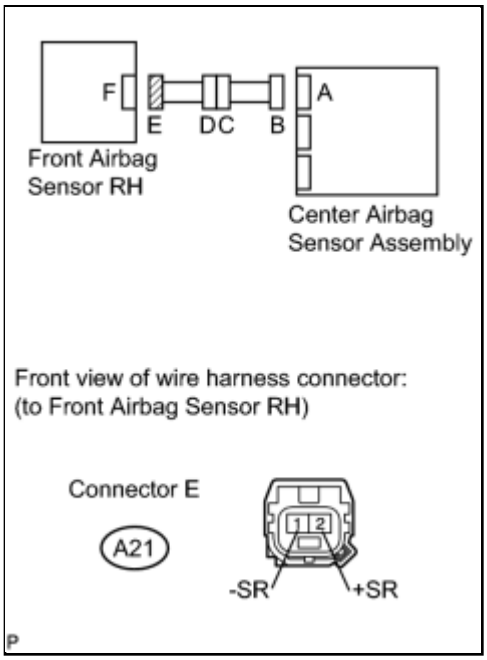

(a) Connect the cable to the negative (-) battery terminal.

(b) Turn the ignition switch to ON.

(c) Measure the voltage according to the value(s) in the table below.

Standard Voltage:

TESTER CONNECTION	SWITCH CONDITION	SPECIFIED CONDITION
A21-2 (+SR) - Body ground	Ignition switch ON	Below 1 V
A21-1 (-SR) - Body ground	Ignition switch ON	Below 1 V

NG ▶ **CHECK INSTRUMENT PANEL WIRE (SHORT TO B+)**

OK ▼

5.	**CHECK FRONT AIRBAG SENSOR RH CIRCUIT (SHORT TO GROUND)**

(a) Turn the ignition switch off.

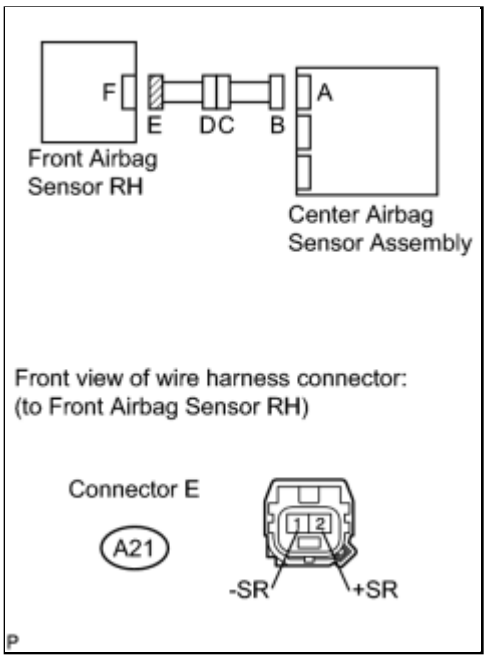

(b) Disconnect the cable from the negative (-) battery terminal, and wait for at least 90 seconds.

(c) Measure the resistance according to the value(s) in the table below.

Standard Resistance:

TESTER CONNECTION	CONDITION	SPECIFIED CONDITION
A21-2 (+SR) - Body ground	Always	1 MΩ or higher
A21-1 (-SR) - Body ground	Always	1 MΩ or higher

NG ▶ **CHECK INSTRUMENT PANEL WIRE (SHORT TO GROUND)**

OK ▼

6.	**CHECK FRONT AIRBAG SENSOR RH**

(a) Connect the connector to the center airbag sensor assembly.

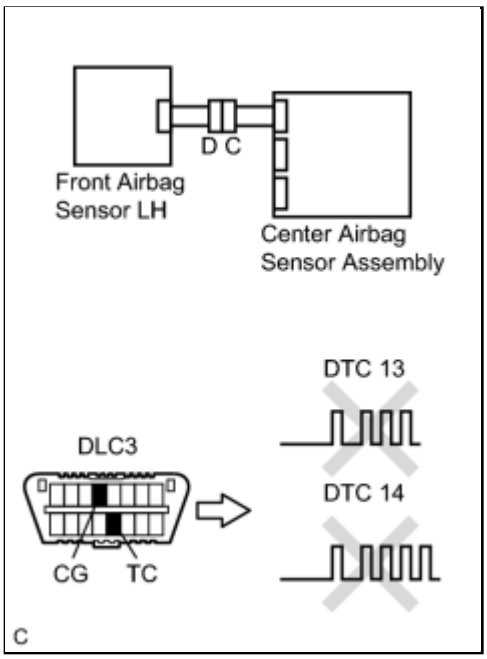

(b) Interchange the front airbag sensor LH with RH and connect the connectors.

(c) Connect the cable to the negative (-) battery terminal.

(d) Turn the ignition switch to ON, and wait for at least 60 seconds.

(e) Clear the DTCs stored in the memory INFO .

(f) Turn the ignition switch off.

(g) Turn the ignition switch to ON, and wait for at least 60 seconds.

(h) Check for DTCs INFO .

Result:

RESULT	PROCEED TO
DTC B1610/13 and B1615/14 are not output.	A
DTC B1610/13 is output.	B
DTC B1615/14 is output.	C

HINT:

Codes other than DTC B1610/13 and B1615/14 may be output at this time, but they are not related to this check.

C ▶ **REPLACE FRONT AIRBAG SENSOR RH**

B ▶ **REPLACE CENTER AIRBAG SENSOR ASSEMBLY**

A ▶ **USE SIMULATION METHOD TO CHECK**

7.	CHECK INSTRUMENT PANEL WIRE (OPEN)

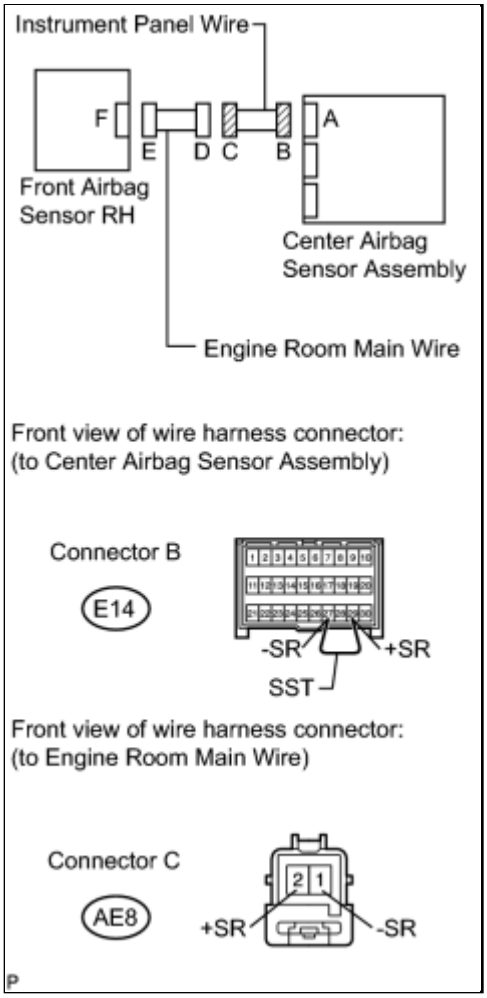

(a) Disconnect the instrument panel wire connector from the engine room main wire.

HINT:

SST has already been inserted into connector B.

(b) Measure the resistance according to the value(s) in the table below.

Standard Resistance:

TESTER CONNECTION	CONDITION	SPECIFIED CONDITION
AE8-2 (+SR) - AE8-1 (-SR)	Always	Below 1 Ω

NG ▶ **REPLACE INSTRUMENT PANEL WIRE**

OK ▶ **REPLACE ENGINE ROOM MAIN WIRE**

8.	CHECK INSTRUMENT PANEL WIRE (SHORT)

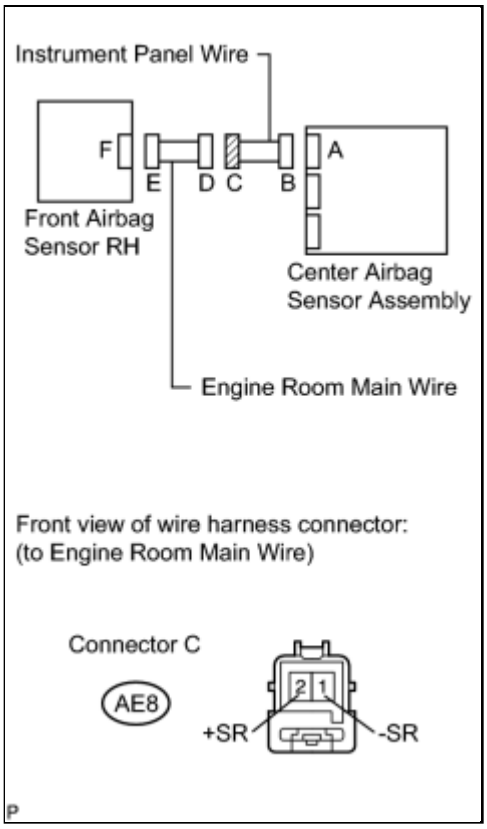

(a) Disconnect the instrument panel wire connector from the engine room main wire.

(b) Measure the resistance according to the value(s) in the table below.

Standard Resistance:

TESTER CONNECTION	CONDITION	SPECIFIED CONDITION
AE8-2 (+SR) - AE8-1 (-SR)	Always	1 MΩ or higher

NG ▶ **REPLACE INSTRUMENT PANEL WIRE**

OK ▶ **REPLACE ENGINE ROOM MAIN WIRE**

9.	**CHECK INSTRUMENT PANEL WIRE (SHORT TO B+)**

(a) Turn the ignition switch off.

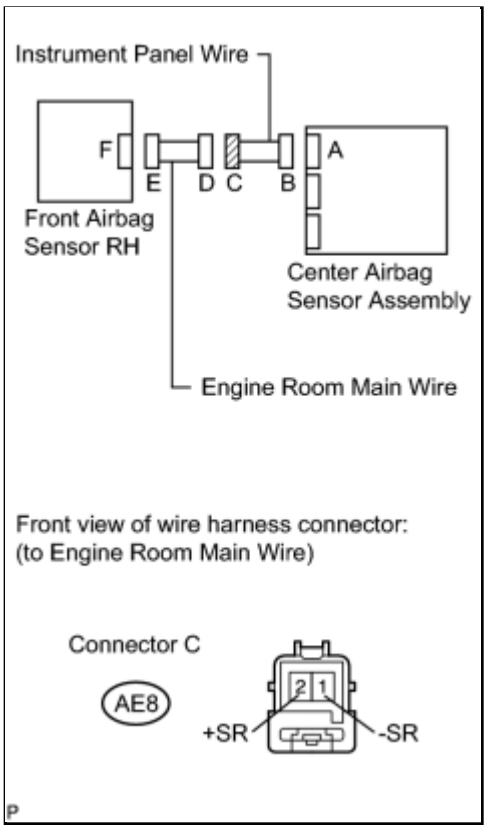

(b) Disconnect the cable from the negative (-) battery terminal, and wait for at least 90 seconds.

(c) Disconnect the instrument panel wire connector from the engine room main wire.

(d) Connect the cable to the negative (-) battery terminal.

(e) Turn the ignition switch to ON.

(f) Measure the voltage according to the value(s) in the table below.

Standard Voltage:

TESTER CONNECTION	SWITCH CONDITION	SPECIFIED CONDITION
AE8-2 (+SR) - Body ground	Ignition switch ON	Below 1 V
AE8-1 (-SR) - Body ground	Ignition switch ON	Below 1 V

NG ▶ **REPLACE INSTRUMENT PANEL WIRE**

OK ▶ **REPLACE ENGINE ROOM MAIN WIRE**

10.	**CHECK INSTRUMENT PANEL WIRE (SHORT TO GROUND)**

(a) Disconnect the instrument panel wire connector from

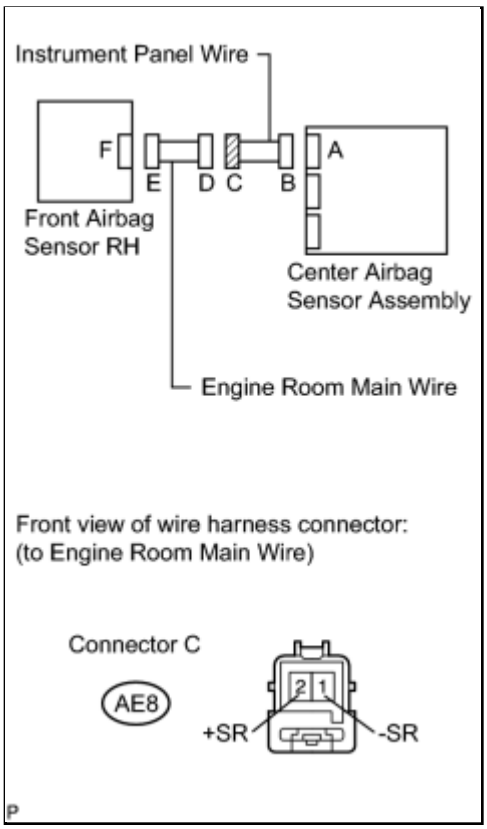

the engine room main wire.

(b) Measure the resistance according to the value(s) in the table below.

Standard Resistance:

TESTER CONNECTION	CONDITION	SPECIFIED CONDITION
AE8-2 (+SR) - Body ground	Always	1 MΩ or higher
AE8-1 (-SR) - Body ground	Always	1 MΩ or higher

NG ▶ **REPLACE INSTRUMENT PANEL WIRE**

OK ▶ **REPLACE ENGINE ROOM MAIN WIRE**

Last Modified: 3-10-2010	6.4 C	**From:** 200901
Model Year: 2010	**Model:** Corolla	**Doc ID:** RM000000YTN03EX
Title: SUPPLEMENTAL RESTRAINT SYSTEMS: AIRBAG SYSTEM: B1615/14: Front Airbag Sensor LH Circuit Malfunction (2010 Corolla)		

DTC	**B1615/14**	**Front Airbag Sensor LH Circuit Malfunction**

DESCRIPTION

The front airbag sensor LH circuit consists of the center airbag sensor assembly and front airbag sensor LH.

The front airbag sensor LH detects impacts to the vehicle and sends signals to the center airbag sensor assembly to determine if the airbag should be deployed.

DTC B1615/14 is recorded when a malfunction is detected in the front airbag sensor LH circuit.

DTC NO.	DTC DETECTING CONDITION	TROUBLE AREA
B1615/14	• The center airbag sensor assembly receives a short circuit signal, an open circuit signal, a short circuit to ground signal or a short circuit to B+ signal in the front airbag sensor LH circuit for 2 seconds. • Front airbag sensor LH malfunction • Center airbag sensor assembly malfunction	• Instrument panel wire • Engine room main wire • Front airbag sensor LH • Center airbag sensor assembly

WIRING DIAGRAM

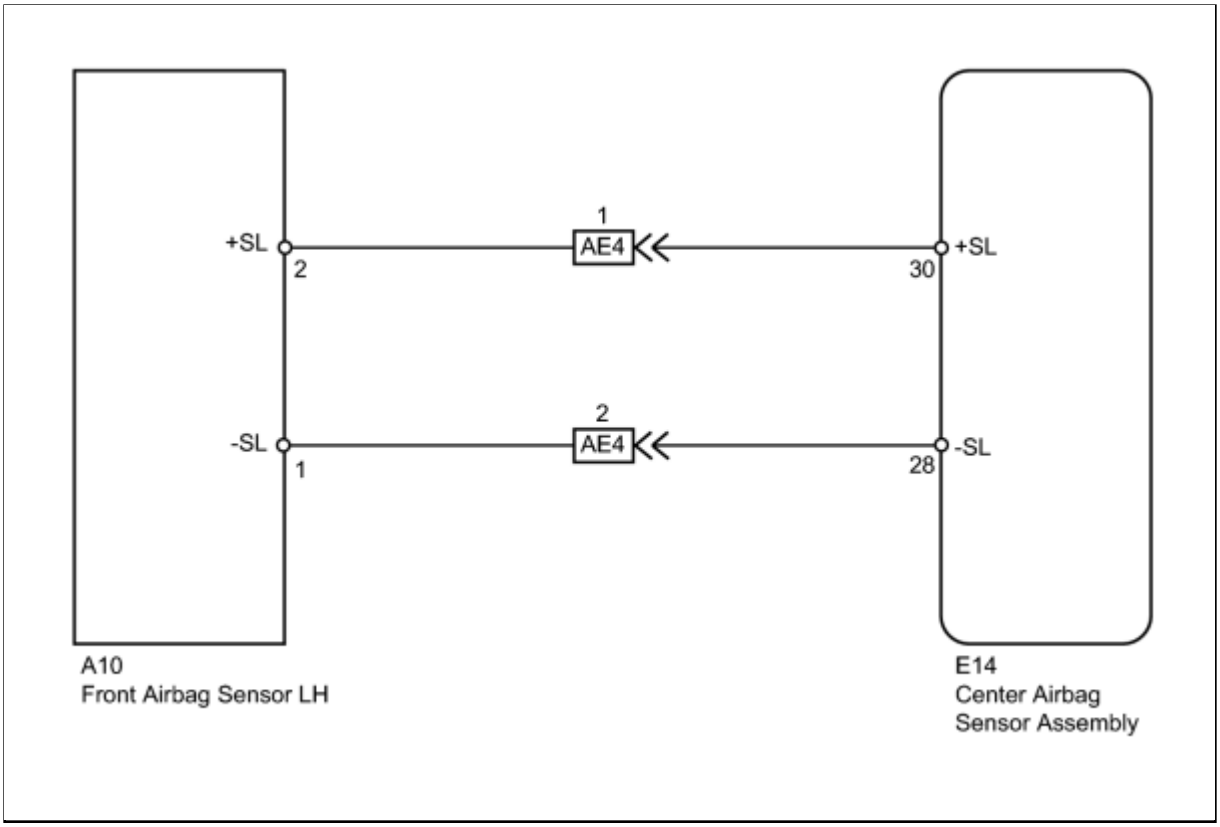

INSPECTION PROCEDURE

PROCEDURE

1.	**CHECK CONNECTORS**

(a) Turn the ignition switch off.

(b) Disconnect the cable from the negative (-) battery terminal, and wait for at least 90 seconds.

(c) Check that the connectors are properly connected to the center airbag sensor assembly and the front airbag sensor LH. Also check that the connectors that link the engine room main wire and instrument panel wire are properly connected.

OK:

The connectors are properly connected.

HINT:

If the connectors are not connected securely, reconnect the connectors and proceed to the next inspection.

(d) Disconnect the connectors from the center airbag sensor assembly and the front airbag sensor LH. Also disconnect the connectors that link the engine room main wire and instrument panel wire.

(e) Check that the terminals of the connectors are not damaged.

OK:

The terminals are not deformed or damaged.

NG ▶ **REPLACE WIRE HARNESS**

OK ▼

2.	**CHECK FRONT AIRBAG SENSOR LH CIRCUIT (OPEN)**

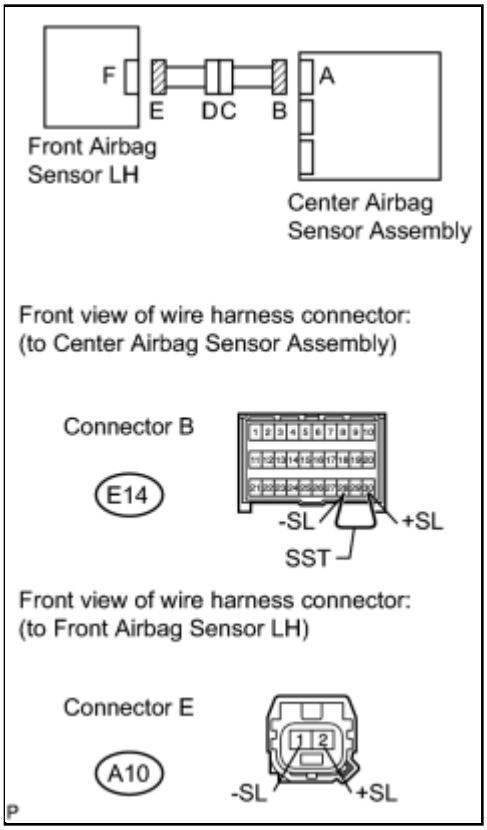

(a) Connect the connectors that link the engine room main wire and instrument panel wire.

(b) Using SST, connect connectors 30 (+SL) and 28 (-SL) of connector B.

NOTICE:

Do not forcibly insert SST into the terminals of the connector when connecting.

SST: 09843-18040

(c) Measure the resistance according to the value(s) in the table below.

Standard Resistance:

TESTER CONNECTION	CONDITION	SPECIFIED CONDITION
A10-2 (+SL) - A10-1 (-SL)	Always	Below 1 Ω

NG ▶ CHECK INSTRUMENT PANEL WIRE (OPEN)

OK ▼

3.	CHECK FRONT AIRBAG SENSOR LH CIRCUIT (SHORT)

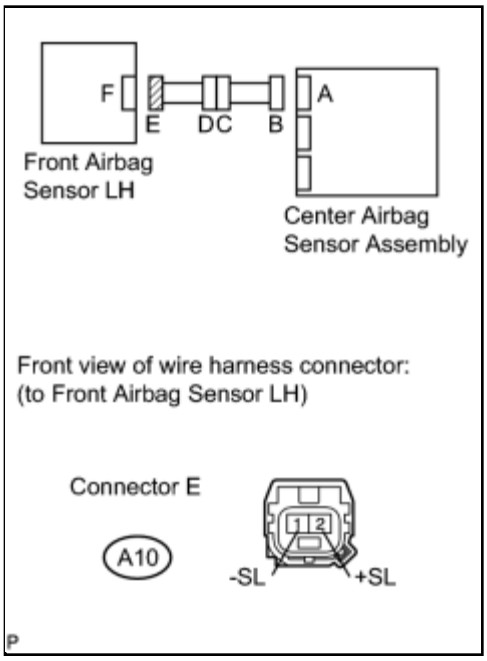

(a) Disconnect SST from connector B.

(b) Measure the resistance according to the value(s) in the table below.

Standard Resistance:

TESTER CONNECTION	CONDITION	SPECIFIED CONDITION
A10-2 (+SL) - A10-1 (-SL)	Always	1 MΩ or higher

NG ▶ CHECK INSTRUMENT PANEL WIRE (SHORT)

OK ▼

4.	CHECK FRONT AIRBAG SENSOR LH CIRCUIT (SHORT TO B+)

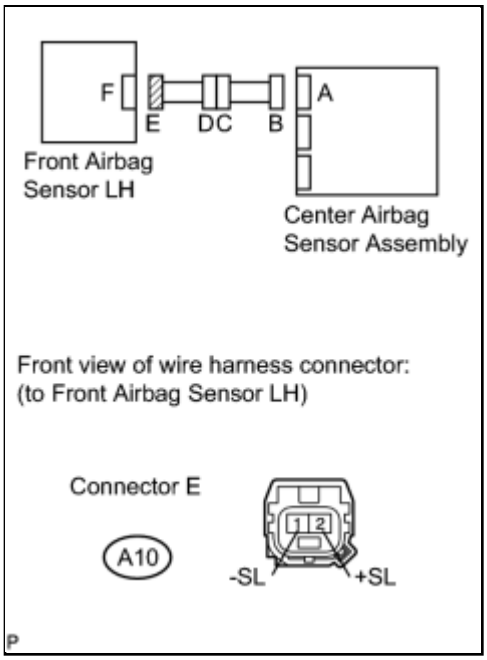

(a) Connect the cable to the negative (-) battery terminal.

(b) Turn the ignition switch to ON.

(c) Measure the voltage according to the value(s) in the table below.

Standard Voltage:

TESTER CONNECTION	SWITCH CONDITION	SPECIFIED CONDITION
A10-2 (+SL) - Body ground	Ignition switch ON	Below 1 V
A10-1 (-SL) - Body ground	Ignition switch ON	Below 1 V

NG ▶ **CHECK INSTRUMENT PANEL WIRE (SHORT TO B+)**

OK ▼

5.	**CHECK FRONT AIRBAG SENSOR LH CIRCUIT (SHORT TO GROUND)**

(a) Turn the ignition switch off.

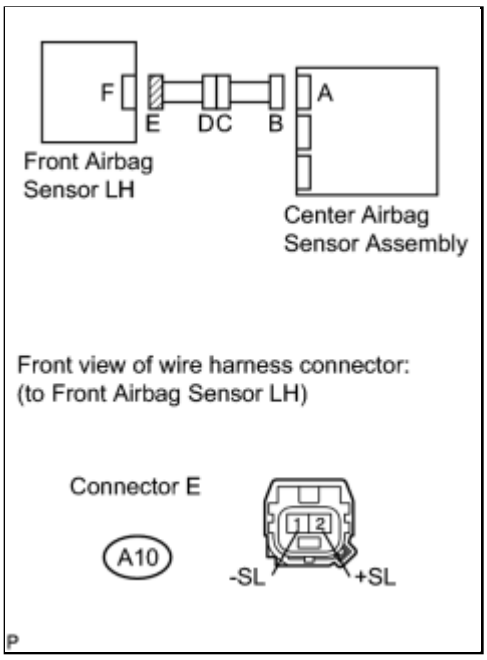

(b) Disconnect the cable from the negative (-) battery terminal, and wait for at least 90 seconds.

(c) Measure the resistance according to the value(s) in the table below.

Standard Resistance:

TESTER CONNECTION	CONDITION	SPECIFIED CONDITION
A10-2 (+SL) - Body ground	Always	1 MΩ or higher
A10-1 (-SL) - Body ground	Always	1 MΩ or higher

NG ▶ **CHECK INSTRUMENT PANEL WIRE (SHORT TO GROUND)**

OK ▼

6.	**CHECK FRONT AIRBAG SENSOR LH**

(a) Connect the connector to the center airbag sensor assembly.

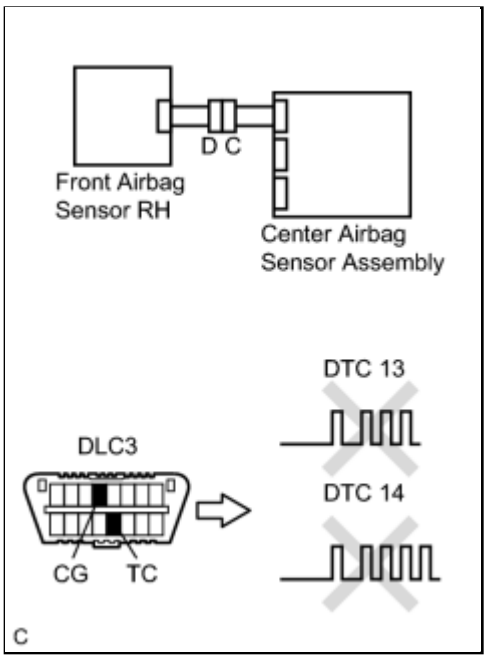

(b) Interchange the front airbag sensor RH with LH and connect the connectors.

(c) Connect the cable to the negative (-) battery terminal.

(d) Turn the ignition switch to ON, and wait for at least 60 seconds.

(e) Clear the DTCs stored in the memory INFO .

(f) Turn the ignition switch off.

(g) Turn the ignition switch to ON, and wait for at least 60 seconds.

(h) Check for DTCs INFO .

Result:

RESULT	PROCEED TO
DTC B1610/13 and B1615/14 are not output.	A
DTC B1610/13 is output.	B
DTC B1615/14 is output.	C

HINT:

Codes other than DTC B1610/13 and B1615/14 may be output at this time, but they are not related to this check.

C ▶ **REPLACE CENTER AIRBAG SENSOR ASSEMBLY**

B ▶ **REPLACE FRONT AIRBAG SENSOR LH**

A ▶ **USE SIMULATION METHOD TO CHECK**

7.	CHECK INSTRUMENT PANEL WIRE (OPEN)

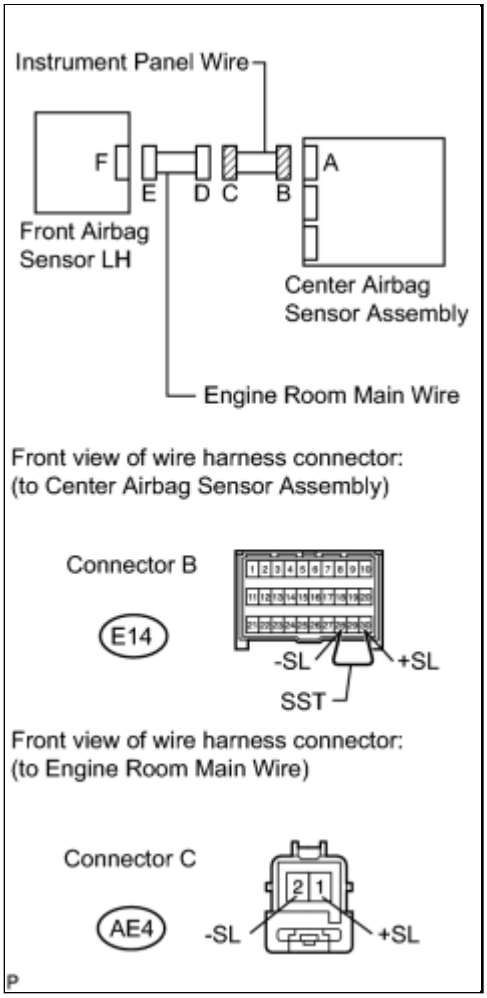

(a) Disconnect the instrument panel wire connector from the engine room main wire.

HINT:

SST has already been inserted into connector B.

(b) Measure the resistance according to the value(s) in the table below.

Standard Resistance:

TESTER CONNECTION	CONDITION	SPECIFIED CONDITION
AE4-1 (+SL) - AE4-2 (-SL)	Always	Below 1 Ω

NG ▶ **REPLACE INSTRUMENT PANEL WIRE**

OK ▶ **REPLACE ENGINE ROOM MAIN WIRE**

8.	CHECK INSTRUMENT PANEL WIRE (SHORT)

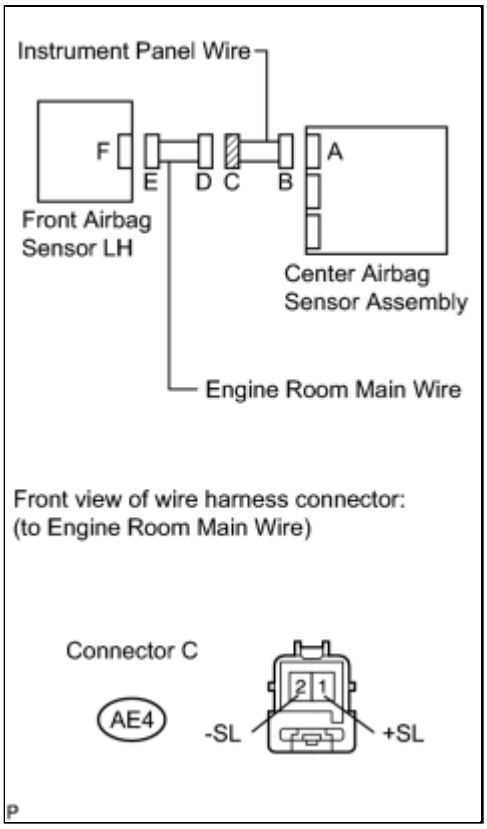

(a) Disconnect the instrument panel wire connector from the engine room main wire.

(b) Measure the resistance according to the value(s) in the table below.

Standard Resistance:

TESTER CONNECTION	CONDITION	SPECIFIED CONDITION
AE4-1 (+SL) - AE4-2 (-SL)	Always	1 MΩ or higher

NG ▶ **REPLACE INSTRUMENT PANEL WIRE**

OK ▶ **REPLACE ENGINE ROOM MAIN WIRE**

9.	**CHECK INSTRUMENT PANEL WIRE (SHORT TO B+)**

(a) Turn the ignition switch off.

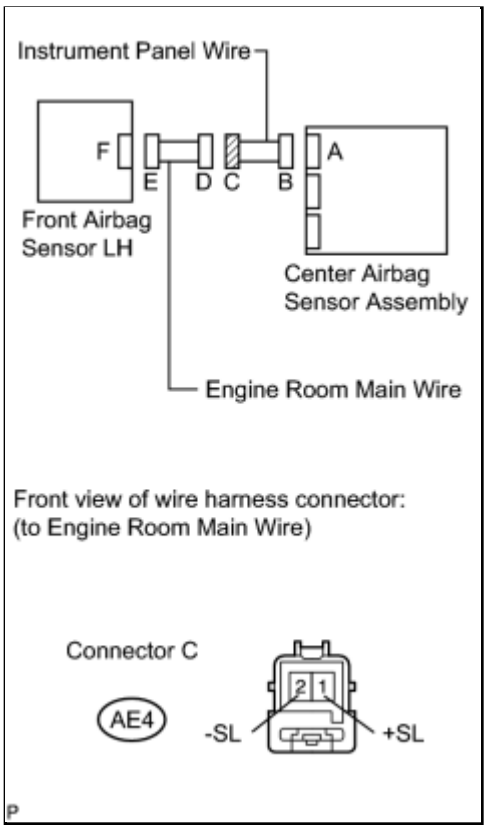

(b) Disconnect the cable from the negative (-) battery terminal, and wait for at least 90 seconds.

(c) Disconnect the instrument panel wire connector from the engine room main wire.

(d) Connect the cable to the negative (-) battery terminal.

(e) Turn the ignition switch to ON.

(f) Measure the voltage according to the value(s) in the table below.

Standard Voltage:

TESTER CONNECTION	SWITCH CONDITION	SPECIFIED CONDITION
AE4-1 (+SL) - Body ground	Ignition switch ON	Below 1 V
AE4-2 (-SL) - Body ground	Ignition switch ON	Below 1 V

NG ▶ **REPLACE INSTRUMENT PANEL WIRE**

OK ▶ **REPLACE ENGINE ROOM MAIN WIRE**

10.	**CHECK INSTRUMENT PANEL WIRE (SHORT TO GROUND)**

(a) Disconnect the instrument panel wire connector from

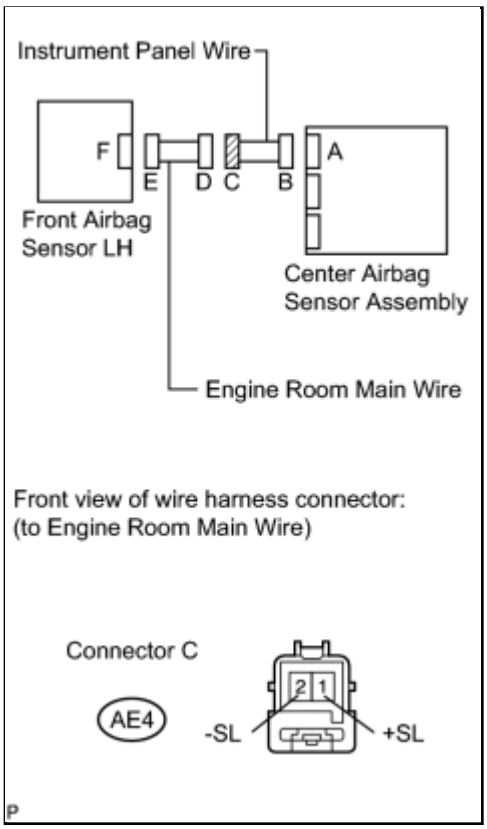

the engine room main wire.

(b) Measure the resistance according to the value(s) in the table below.

Standard Resistance:

TESTER CONNECTION	CONDITION	SPECIFIED CONDITION
AE4-1 (+SL) - Body ground	Always	1 MΩ or higher
AE4-2 (-SL) - Body ground	Always	1 MΩ or higher

NG ▶ **REPLACE INSTRUMENT PANEL WIRE**

OK ▶ **REPLACE ENGINE ROOM MAIN WIRE**

Last Modified: 3-10-2010	6.4 S	**From:** 200901
Model Year: 2010	**Model:** Corolla	**Doc ID:** RM000000XF7042X
Title: SUPPLEMENTAL RESTRAINT SYSTEMS: AIRBAG SYSTEM: DIAGNOSTIC TROUBLE CODE CHART (2010 Corolla)		

DIAGNOSTIC TROUBLE CODE CHART

If a trouble code is displayed during the DTC check, check the circuit listed for the code in the table below (refer to the appropriate page).

HINT:

- When the SRS warning light remains on and the DTC output is the normal system code, a voltage source drop is likely to occur. This malfunction is not stored in the memory by the center airbag sensor assembly. If the power source voltage returns to normal, the SRS warning light will automatically go off.
- When 2 or more codes are indicated, the code with the lower number appears first.
- If a code is not listed on the display chart, the center airbag sensor assembly may have failed.
- In the case of any malfunction concerning an open circuit, short to ground, or short to B+ due to a squib, other trouble codes may not be detected. In this case, repair the malfunction currently indicated and then perform malfunction diagnosis again.
- Mark in the check mode column:

  *1: DTC does not correspond to check mode.

  *2: DTC corresponds to check mode.
- DTCs marked *3 are output only on vehicles equipped with the front seat side airbags and curtain shield airbags.

Airbag System

DTC CODE	DETECTION ITEM	TROUBLE AREA	CHECK MODE	SEE PAGE
B1000/31	Center Airbag Sensor Assembly Malfunction	Center airbag sensor assembly	*1	INFO
B1610/13	Front Airbag Sensor RH Circuit Malfunction	1. Instrument panel wire 2. Engine room main wire 3. Front airbag sensor RH 4. Center airbag sensor assembly	*1	INFO
B1615/14	Front Airbag Sensor LH Circuit Malfunction	1. Instrument panel wire 2. Engine room main wire 3. Front airbag sensor LH 4. Center airbag sensor assembly	*1	INFO
B1620/21 *3	Side Airbag Sensor RH Circuit Malfunction	1. No. 2 floor wire 2. Side airbag sensor RH 3. Rear airbag sensor RH 4. Center airbag sensor assembly	*1	INFO

DTC CODE	DETECTION ITEM	TROUBLE AREA	CHECK MODE	SEE PAGE
B1625/22 *3	Side Airbag Sensor LH Circuit Malfunction	1. Floor wire 2. Side airbag sensor LH 3. Rear airbag sensor LH 4. Center airbag sensor assembly	*1	INFO
B1630/23 *3	Rear Airbag Sensor RH Circuit Malfunction	1. No. 2 floor wire 2. Rear airbag sensor RH 3. Side airbag sensor RH 4. Center airbag sensor assembly	*1	INFO
B1635/24 *3	Rear Airbag Sensor LH Circuit Malfunction	1. Floor wire 2. Rear airbag sensor LH 3. Side airbag sensor LH 4. Center airbag sensor assembly	*1	INFO
B1650/32	Occupant Classification System Malfunction	1. No. 2 floor wire 2. Front seat wire RH 3. Occupant classification system 4. Center airbag sensor assembly	*1	INFO
B1653/35	Seat Position Airbag Sensor Circuit Malfunction	1. Floor wire 2. Front seat inner belt assembly LH 3. Seat position airbag sensor 4. Center airbag sensor assembly	*1	INFO
B1655/37	Driver Side Seat Belt Buckle Switch Circuit Malfunction	1. Floor wire 2. Front seat inner belt assembly LH (Driver side seat belt buckle switch) 3. Center airbag sensor assembly	*1	INFO
B1660/43	Passenger Airbag ON/OFF Indicator Circuit Malfunction	1. Instrument panel wire 2. Telltale light assembly (Passenger airbag ON/OFF indicator) 3. Center airbag sensor assembly	*1	INFO
B1800/51	Short in Driver Side Squib Circuit	1. Instrument panel wire 2. Spiral cable 3. Steering pad (Driver side squib) 4. Center airbag sensor assembly	*2	INFO
B1801/51	Open in Driver Side Squib Circuit	Same as DTC B1800/51	*2	INFO
B1802/51	Short to GND in Driver Side Squib Circuit	Same as DTC B1800/51	*2	INFO
B1803/51	Short to B+ in Driver Side Squib Circuit	Same as DTC B1800/51	*2	INFO

DTC CODE	DETECTION ITEM	TROUBLE AREA	CHECK MODE	SEE PAGE
B1805/52	Short in Front Passenger Side Squib Circuit	1. Instrument panel wire 2. Instrument panel wire assembly 3. Front passenger airbag assembly (Front passenger side squib) 4. Center airbag sensor assembly	*2	INFO
B1806/52	Open in Front Passenger Side Squib Circuit	Same as DTC B1805/52	*2	INFO
B1807/52	Short to GND in Front Passenger Side Squib Circuit	Same as DTC B1805/52	*2	INFO
B1808/52	Short to B+ in Front Passenger Side Squib Circuit	Same as DTC B1805/52	*2	INFO
B1810/53	Short in Driver Side Squib 2nd Step Circuit	1. Instrument panel wire 2. Spiral cable 3. Steering pad (Driver side squib 2nd step) 4. Center airbag sensor assembly	*2	INFO
B1811/53	Open in Driver Side Squib 2nd Step Circuit	Same as DTC B1810/53	*2	INFO
B1812/53	Short to GND in Driver Side Squib 2nd Step Circuit	Same as DTC B1810/53	*2	INFO
B1813/53	Short to B+ in Driver Side Squib 2nd Step Circuit	Same as DTC B1810/53	*2	INFO
B1815/54	Short in Front Passenger Side Squib 2nd Step Circuit	1. Instrument panel wire 2. Instrument panel wire assembly 3. Front passenger airbag assembly (Front passenger side squib 2nd step) 4. Center airbag sensor assembly	*2	INFO
B1816/54	Open in Front Passenger Side Squib 2nd Step Circuit	Same as DTC B1815/54	*2	INFO
B1817/54	Short to GND in Front Passenger Side Squib 2nd Step Circuit	Same as DTC B1815/54	*2	INFO
B1818/54	Short to B+ in Front Passenger Side Squib 2nd Step Circuit	Same as DTC B1815/54	*2	INFO
B1820/55 *3	Short in Side Squib RH Circuit	1. No. 2 floor wire 2. Front seat side airbag assembly RH (Side squib RH) 3. Center airbag sensor assembly	*2	INFO

DTC CODE	DETECTION ITEM	TROUBLE AREA	CHECK MODE	SEE PAGE
B1821/55 *3	Open in Side Squib RH Circuit	Same as DTC B1820/55	*2	INFO
B1822/55 *3	Short to GND in Side Squib RH Circuit	Same as DTC B1820/55	*2	INFO
B1823/55 *3	Short to B+ in Side Squib RH Circuit	Same as DTC B1820/55	*2	INFO
B1825/56 *3	Short in Side Squib LH Circuit	1. Floor wire 2. Front seat side airbag assembly LH (Side squib LH) 3. Center airbag sensor assembly	*2	INFO
B1826/56 *3	Open in Side Squib LH Circuit	Same as DTC B1825/56	*2	INFO
B1827/56 *3	Short to GND in Side Squib LH Circuit	Same as DTC B1825/56	*2	INFO
B1828/56 *3	Short to B+ in Side Squib LH Circuit	Same as DTC B1825/56	*2	INFO
B1830/57 *3	Short in Curtain Shield Squib RH Circuit	1. No. 2 floor wire 2. Curtain shield airbag assembly RH (Curtain shield squib RH) 3. Center airbag sensor assembly	*2	INFO
B1831/57 *3	Open in Curtain Shield Squib RH Circuit	Same as DTC B1830/57	*2	INFO
B1832/57 *3	Short to GND in Curtain Shield Squib RH Circuit	Same as DTC B1830/57	*2	INFO
B1833/57 *3	Short to B+ in Curtain Shield Squib RH Circuit	Same as DTC B1830/57	*2	INFO
B1835/58 *3	Short in Curtain Shield Squib LH Circuit	1. Floor wire 2. Curtain shield airbag assembly LH (Curtain shield squib LH) 3. Center airbag sensor assembly	*2	INFO
B1836/58 *3	Open in Curtain Shield Squib LH Circuit	Same as DTC B1835/58	*2	INFO
B1837/58 *3	Short to GND in Curtain Shield Squib LH Circuit	Same as DTC B1835/58	*2	INFO
B1838/58 *3	Short to B+ in Curtain Shield Squib LH Circuit	Same as DTC B1835/58	*2	INFO
B1900/73	Short in Front Pretensioner Squib RH Circuit	1. No. 2 floor wire 2. Front seat outer belt assembly RH (Front pretensioner squib RH)	*2	INFO

DTC CODE	DETECTION ITEM	TROUBLE AREA	CHECK MODE	SEE PAGE
		3. Center airbag sensor assembly		
B1901/73	Open in Front Pretensioner Squib RH Circuit	Same as DTC B1900/73	*2	INFO
B1902/73	Short to GND in Front Pretensioner Squib RH Circuit	Same as DTC B1900/73	*2	INFO
B1903/73	Short to B+ in Front Pretensioner Squib RH Circuit	Same as DTC B1900/73	*2	INFO
B1905/74	Short in Front Pretensioner Squib LH Circuit	1. Floor wire 2. Front seat outer belt assembly LH (Front pretensioner squib LH) 3. Center airbag sensor assembly	*2	INFO
B1906/74	Open in Front Pretensioner Squib LH Circuit	Same as DTC B1905/74	*2	INFO
B1907/74	Short to GND in Front Pretensioner Squib LH Circuit	Same as DTC B1905/74	*2	INFO
B1908/74	Short to B+ in Front Pretensioner Squib LH Circuit	Same as DTC B1905/74	*2	INFO

Last Modified: 3-10-2010	6.4 C	**From:** 200901
Model Year: 2010	**Model:** Corolla	**Doc ID:** RM000001NZU01WX
Title: SUPPLEMENTAL RESTRAINT SYSTEMS: AIRBAG SYSTEM: B1620/21: Side Airbag Sensor RH Circuit Malfunction (2010 Corolla)		

DTC	**B1620/21**	**Side Airbag Sensor RH Circuit Malfunction**

DESCRIPTION

The side airbag sensor RH circuit consists of the center airbag sensor assembly, side airbag sensor RH and rear airbag sensor RH.

The side airbag sensor RH and rear airbag sensor RH detect impacts to the vehicle and send signals to the center airbag sensor assembly to determine if the airbag should be deployed.

DTC B1620/21 is recorded when a malfunction is detected in the side airbag sensor RH circuit.

DTC NO.	DTC DETECTION CONDITION	TROUBLE AREA
B1620/21	• The center airbag sensor assembly receives a short circuit signal, an open circuit signal, a short circuit to ground signal or a short circuit to B+ signal in the side airbag RH sensor circuit for 2 seconds. • Side airbag sensor RH malfunction • Rear airbag sensor RH malfunction • Center airbag sensor assembly malfunction	• No. 2 floor wire • Side airbag sensor RH • Rear airbag sensor RH • Center airbag sensor assembly

WIRING DIAGRAM

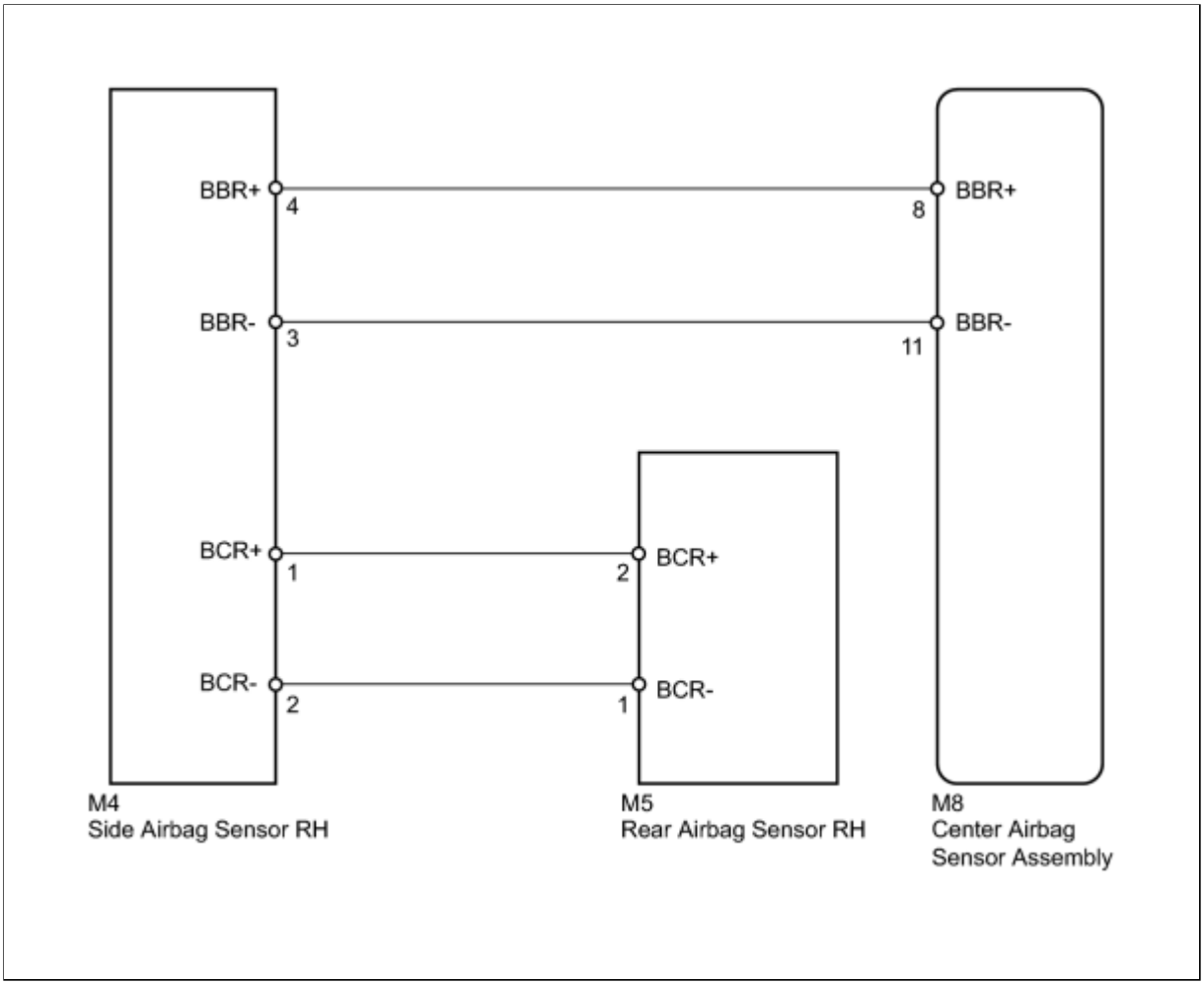

INSPECTION PROCEDURE

PROCEDURE

1.	**CHECK CONNECTORS**

(a) Turn the ignition switch off.

(b) Disconnect the cable from the negative (-) battery terminal, and wait for at least 90 seconds.

(c) Check that the connectors are properly connected to the center airbag sensor assembly, side airbag sensor RH and rear airbag sensor RH.

OK:

The connectors are properly connected.

HINT:

If the connectors are not connected securely, reconnect the connectors and proceed to the next inspection.

(d) Disconnect the connectors from the center airbag sensor assembly, side airbag sensor

RH and rear airbag sensor RH.

(e) Check that the terminals of the connectors are not damaged.

OK:

The terminals are not deformed or damaged.

NG ▶ **REPLACE NO. 2 FLOOR WIRE**

OK ▼

2.	**CHECK NO. 2 FLOOR WIRE (OPEN)**

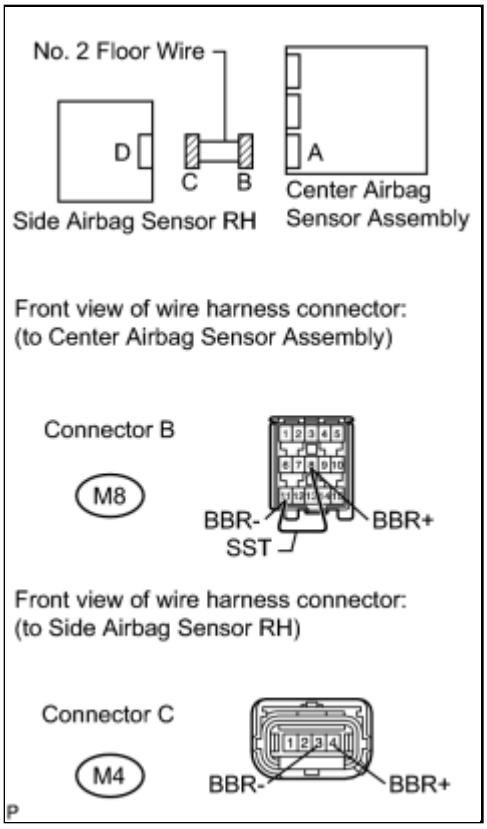

(a) Using SST, connect terminals 8 (BBR+) and 11 (BBR-) of connector B.

NOTICE:

Do not forcibly insert SST into the terminals of the connector when connecting.

SST: 09843-18040

(b) Measure the resistance according to the value(s) in the table below.

Standard Resistance:

TESTER CONNECTION	CONDITION	SPECIFIED CONDITION
M4-4 (BBR+) - M4-3 (BBR-)	Always	Below 1 Ω

NG ▶ REPLACE NO. 2 FLOOR WIRE

OK ▼

3.	CHECK NO. 2 FLOOR WIRE (SHORT)

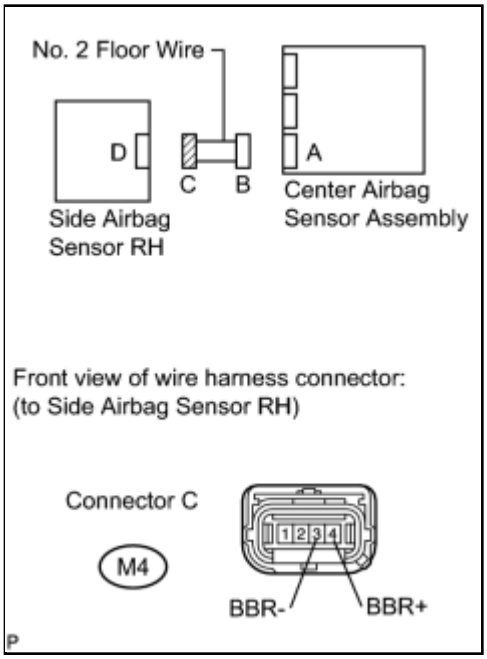

(a) Disconnect SST from connector B.

(b) Measure the resistance according to the value(s) in the table below.

Standard Resistance:

TESTER CONNECTION	CONDITION	SPECIFIED CONDITION
M4-4 (BBR+) - M4-3 (BBR-)	Always	1 MΩ or higher

NG ▶ REPLACE NO. 2 FLOOR WIRE

OK ▼

4.	CHECK NO. 2 FLOOR WIRE (SHORT TO B+)

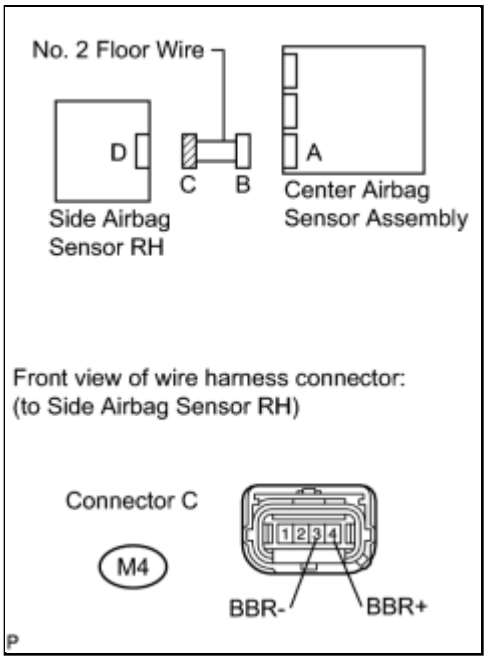

(a) Connect the cable to the negative (-) battery terminal.

(b) Turn the ignition switch to ON.

(c) Measure the voltage according to the value(s) in the table below.

Standard Voltage:

TESTER CONNECTION	SWITCH CONDITION	SPECIFIED CONDITION
M4-4 (BBR+) - Body ground	Ignition switch ON	Below 1 V
M4-3 (BBR-) - Body ground	Ignition switch ON	Below 1 V

NG ▶ **REPLACE NO. 2 FLOOR WIRE**

OK ▼

5.	**CHECK NO. 2 FLOOR WIRE (SHORT TO GROUND)**

(a) Turn the ignition switch off.

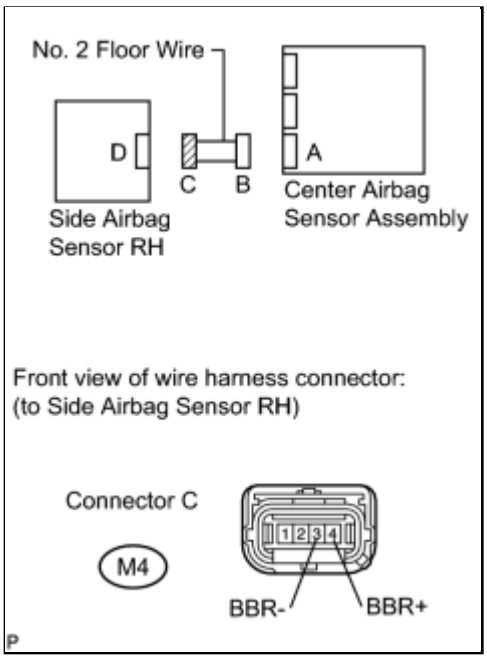

(b) Disconnect the cable from the negative (-) battery terminal, and wait for at least 90 seconds.

(c) Measure the resistance according to the value(s) in the table below.

Standard Resistance:

TESTER CONNECTION	CONDITION	SPECIFIED CONDITION
M4-4 (BBR+) - Body ground	Always	1 MΩ or higher
M4-3 (BBR-) - Body ground	Always	1 MΩ or higher

NG ▶ **REPLACE NO. 2 FLOOR WIRE**

OK ▼

6.	**CHECK NO. 2 FLOOR WIRE (OPEN)**

(a) Using SST, connect terminals 2 (BCR+) and 1 (BCR-) of connector C.

NOTICE:

Do not forcibly insert SST into the terminals of the connector when connecting.

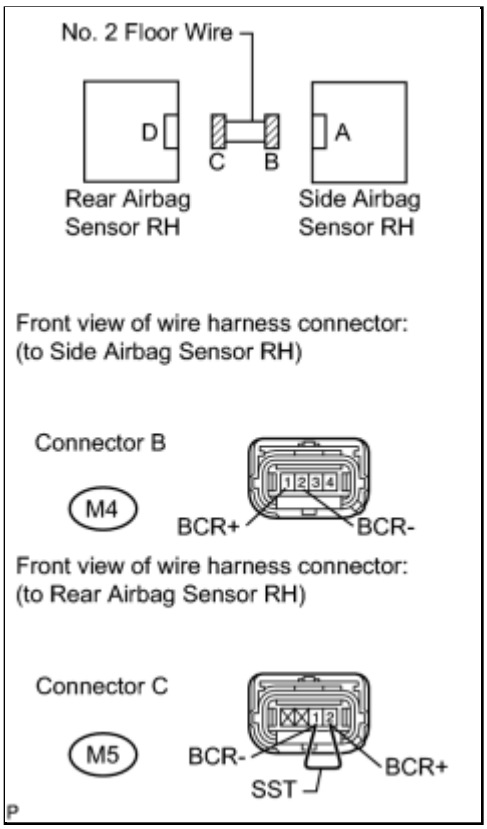

SST: 09843-18040

(b) Measure the resistance according to the value(s) in the table below.

Standard Resistance:

TESTER CONNECTION	CONDITION	SPECIFIED CONDITION
M4-1 (BCR+) - M4-2 (BCR-)	Always	Below 1 Ω

NG ▶ **REPLACE NO. 2 FLOOR WIRE**

OK ▼

7.	**CHECK NO. 2 FLOOR WIRE (SHORT)**

(a) Disconnect SST from connector C.

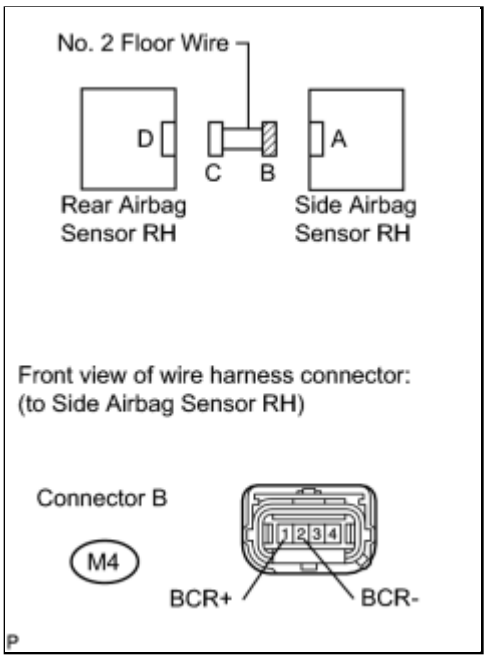

(b) Measure the resistance according to the value(s) in the table below.

Standard Resistance:

TESTER CONNECTION	CONDITION	SPECIFIED CONDITION
M4-1 (BCR+) - M4-2 (BCR-)	Always	1 MΩ or higher

NG ▶ **REPLACE NO. 2 FLOOR WIRE**

OK ▼

8.	**CHECK NO. 2 FLOOR WIRE (SHORT TO B+)**

(a) Connect the cable to the negative (-) battery terminal.

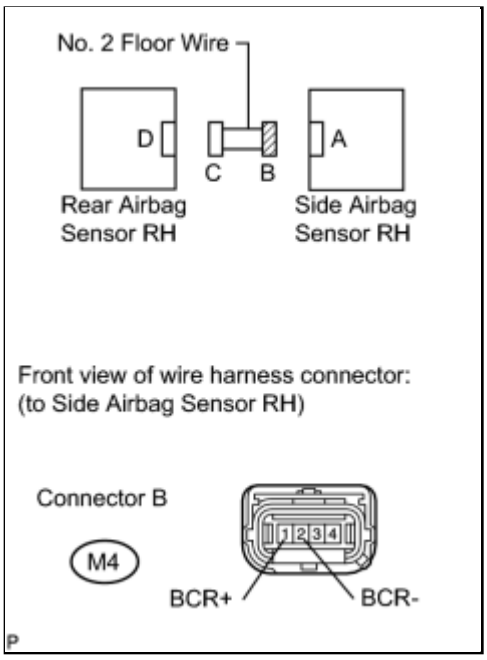

(b) Turn the ignition switch to ON.

(c) Measure the voltage according to the value(s) in the table below.

Standard Voltage:

TESTER CONNECTION	SWITCH CONDITION	SPECIFIED CONDITION
M4-1 (BCR+) - Body ground	Ignition switch ON	Below 1 V
M4-2 (BCR-) - Body ground	Ignition switch ON	Below 1 V

NG ▶ **REPLACE NO. 2 FLOOR WIRE**

OK ▼

9.	**CHECK NO. 2 FLOOR WIRE (SHORT TO GROUND)**

(a) Turn the ignition switch off.

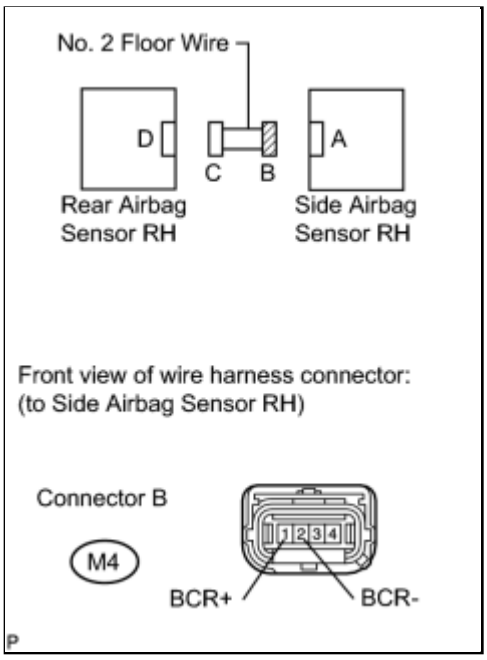

(b) Disconnect the cable from the negative (-) battery terminal, and wait for at least 90 seconds.

(c) Measure the resistance according to the value(s) in the table below.

Standard Resistance:

TESTER CONNECTION	CONDITION	SPECIFIED CONDITION
M4-1 (BCR+) - Body ground	Always	1 MΩ or higher
M4-2 (BCR-) - Body ground	Always	1 MΩ or higher

NG ▶ **REPLACE NO. 2 FLOOR WIRE**

OK ▼

10.	**CHECK SIDE AIRBAG SENSOR RH**

(a) Connect the connectors to the center airbag sensor assembly and rear airbag sensor RH.

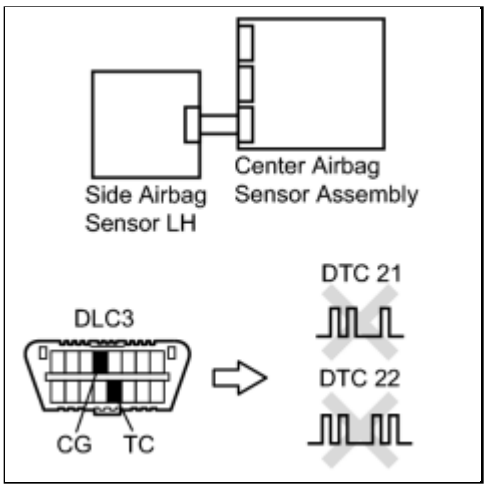

(b) Interchange the side airbag sensor LH with RH and connect the connectors.

(c) Connect the cable to the negative (-) battery terminal.

(d) Turn the ignition switch to ON, and wait for at least 60 seconds.

(e) Clear the DTCs stored in the memory INFO .

(f) Turn the ignition switch off.

(g) Turn the ignition switch to ON, and wait for at least 60 seconds.

(h) Check for DTCs INFO .

Result:

RESULT	PROCEED TO
DTC B1620/21 is output.	A
DTC B1625/22 is output.	B
DTC B1620/21 and B1625/22 are not output.	C

HINT:

Codes other than DTC B1620/21 and B1625/22 may be output at this time, but they are not related to this check.

C ▶ **USE SIMULATION METHOD TO CHECK**

B ▶ **REPLACE SIDE AIRBAG SENSOR RH**

A ▼

11.	CHECK REAR AIRBAG SENSOR RH

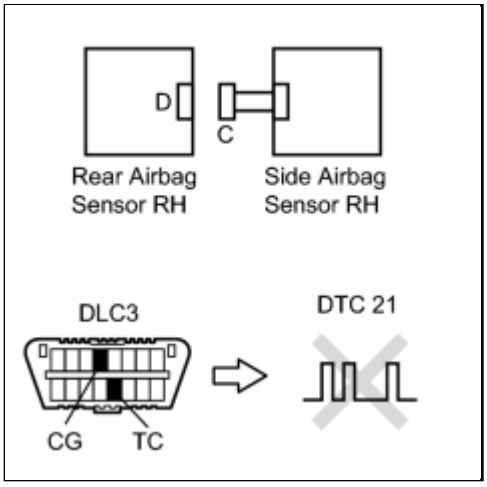

(a) Turn the ignition switch off.

(b) Disconnect the cable from the negative (-) battery terminal, and wait for at least 90 seconds.

(c) Return the side airbag sensors LH and RH to their original positions and connect the connectors.

(d) Disconnect the connector from the rear airbag sensor RH.

(e) Connect the cable to the negative (-) battery terminal.

(f) Turn the ignition switch to ON, and wait for at least 60 seconds.

(g) Clear the DTCs stored in the memory INFO .

(h) Turn the ignition switch off.

(i) Turn the ignition switch to ON, and wait for at least 60 seconds.

(j) Check for DTCs INFO .

OK:
DTC B1620/21 is not output.

HINT:

Codes other than DTC B1620/21 may be output at this time, but they are not related to this check.

NG ▶ **REPLACE CENTER AIRBAG SENSOR ASSEMBLY**

OK ▶ **REPLACE REAR AIRBAG SENSOR RH**

Last Modified: 3-10-2010	6.4 U	**From:** 200901
Model Year: 2010	**Model:** Corolla	**Doc ID:** RM000000XFH059X
Title: SUPPLEMENTAL RESTRAINT SYSTEMS: AIRBAG SYSTEM: DATA LIST / ACTIVE TEST (2010 Corolla)		

DATA LIST / ACTIVE TEST

HINT:

Using the Techstream to read the Data List allows the values or states of switches, sensors, actuators and other items to be read without removing any parts. This non-intrusive inspection can be very useful because intermittent conditions or signals may be discovered before parts or wiring is disturbed. Reading the Data List information early in troubleshooting is one way to save diagnostic time.

NOTICE:

In the table below, the values listed under "Normal Condition" are reference values. Do not depend solely on these reference values when deciding whether a part is faulty or not.

1. DATA LIST FOR CENTER AIRBAG SENSOR ASSEMBLY

(a) Turn the ignition switch off.

(b) Connect the Techstream to the DLC3.

(c) Turn the ignition switch to ON and turn the Techstream on.

(d) Enter the following menus: Body Electrical / SRS Airbag / Data List.

(e) Check the values by referring to the table below.

Data List

TESTER DISPLAY	MEASUREMENT ITEM/RANGE	NORMAL CONDITION	DIAGNOSTIC NOTE
Driver Seat Position	Driver Seat Position/ Forward: Seat position is forward Bkward: Seat position is backward FAIL: Failure detected	Forward/Bkward	-
Passenger Classification	Passenger Classification/ NG: Data is not determined OFF: Vacant CHILD: Child (less than 36 kg (79.3 lb)) is seated AF05: Adult (36 to 54 kg (79.3 to 119.0 lb) is seated AM50: Adult (more than 54 kg (119.0 lb)) is seated	OFF/CHILD /AF05/AM50	-
Left Side Buckle SW	Left Side Buckle SW/ Unset: The seat belt is not fastened Set: The seat belt is fastened NG: Data is not determined	Unset/Set	-

TESTER DISPLAY	MEASUREMENT ITEM/RANGE	NORMAL CONDITION	DIAGNOSTIC NOTE
Right Side Buckle SW	Right Side Buckle SW/ Unset: The seat belt is not fastened Set: The seat belt is fastened NG: Data is not determined	Unset/Set	-
Number of Past DTC	Number of Past DTC/ Min.: 0, Max.: 255	0	-
Display Type Information	Display Type Information/ LR: The display is indicated by LH/RH DP: The display is indicated by Driver/Passenger	LR	-

Last Modified: 3-10-2010	6.4 C	**From:** 200901
Model Year: 2010	**Model:** Corolla	**Doc ID:** RM000001NZV01WX
Title: SUPPLEMENTAL RESTRAINT SYSTEMS: AIRBAG SYSTEM: B1625/22: Side Airbag Sensor LH Circuit Malfunction (2010 Corolla)		

DTC	**B1625/22**	**Side Airbag Sensor LH Circuit Malfunction**

DESCRIPTION

The side airbag sensor LH circuit consists of the center airbag sensor assembly, side airbag sensor LH and rear airbag sensor LH.

The side airbag sensor LH and rear airbag sensor LH detect impacts to the vehicle and send signals to the center airbag sensor assembly to determine if the airbag should be deployed.

DTC B1625/22 is recorded when a malfunction is detected in the side airbag sensor LH circuit.

DTC NO.	DTC DETECTION CONDITION	TROUBLE AREA
B1625/22	• The center airbag sensor assembly receives a short circuit signal, an open circuit signal, a short circuit to ground signal or a short circuit to B+ signal in the side airbag sensor LH circuit for 2 seconds. • Side airbag sensor LH malfunction • Rear airbag sensor LH malfunction • Center airbag sensor assembly malfunction	• Floor wire • Side airbag sensor LH • Rear airbag sensor LH • Center airbag sensor assembly

WIRING DIAGRAM

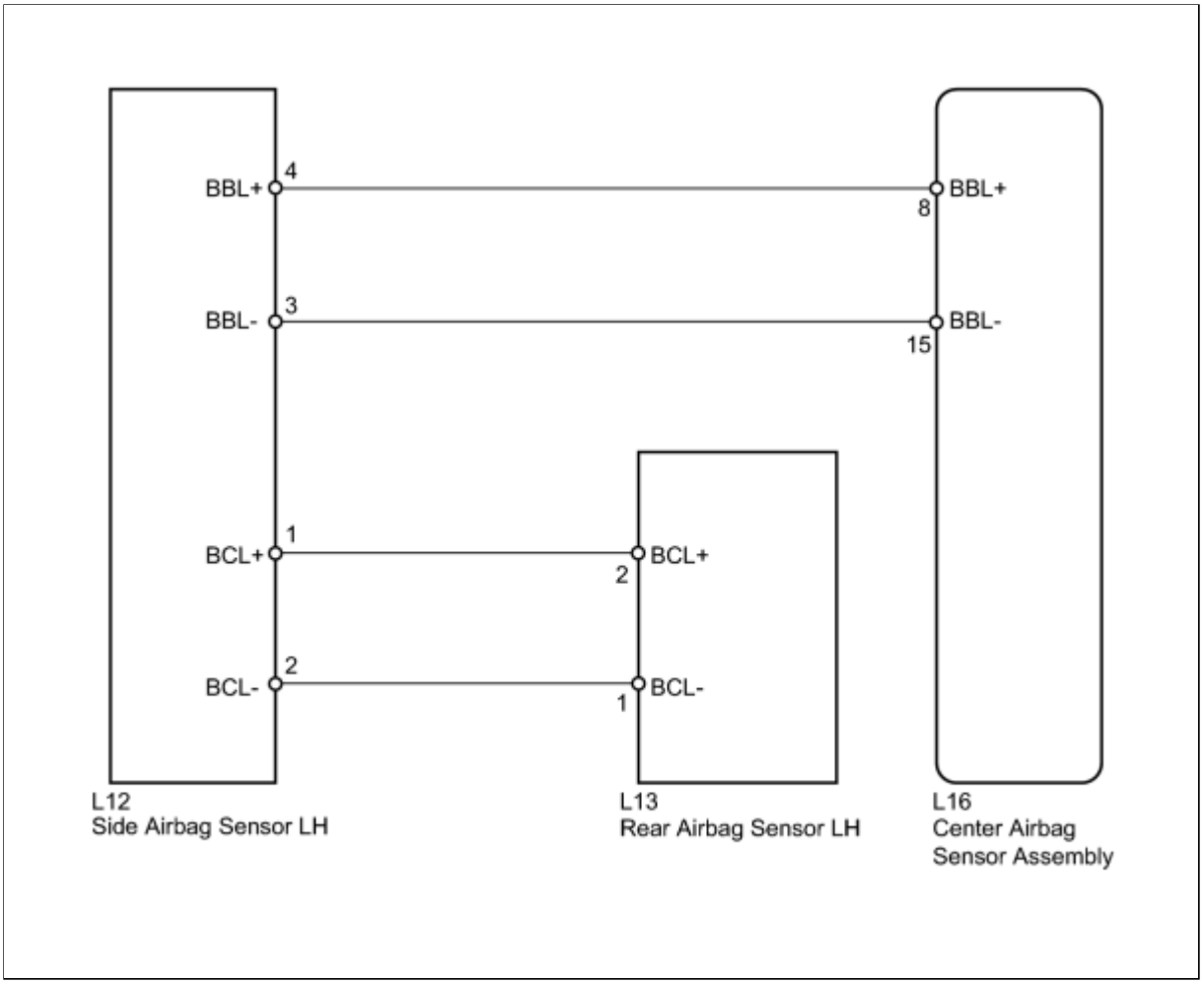

INSPECTION PROCEDURE

PROCEDURE

1.	**CHECK CONNECTORS**

(a) Turn the ignition switch off.

(b) Disconnect the cable from the negative (-) battery terminal, and wait for at least 90 seconds.

(c) Check that the connectors are properly connected to the center airbag sensor assembly, side airbag sensor LH and rear airbag sensor LH.

OK:

The connectors are properly connected.

HINT:

If the connectors are not connected securely, reconnect the connectors and proceed to the next inspection.

(d) Disconnect the connectors from the center airbag sensor assembly, side airbag sensor

LH and rear airbag sensor LH.

(e) Check that the terminals of the connectors are not damaged.

OK:

The terminals are not deformed or damaged.

NG ▶ **REPLACE FLOOR WIRE**

OK ▼

2.	**CHECK FLOOR WIRE (OPEN)**

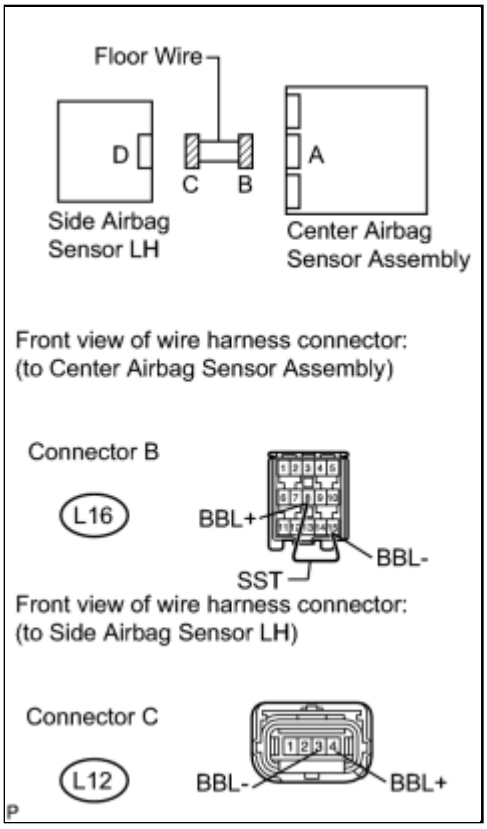

(a) Using SST, connect terminals 8 (BBL+) and 15 (BBL-) of connector B.

NOTICE:

Do not forcibly insert SST into the terminals of the connector when connecting.

SST: 09843-18040

(b) Measure the resistance according to the value(s) in the table below.

Standard Resistance:

TESTER CONNECTION	CONDITION	SPECIFIED CONDITION
L12-4 (BBL+) - L12-3 (BBL-)	Always	Below 1 Ω

NG ▶ **REPLACE FLOOR WIRE**

OK ▼

3.	**CHECK FLOOR WIRE (SHORT)**

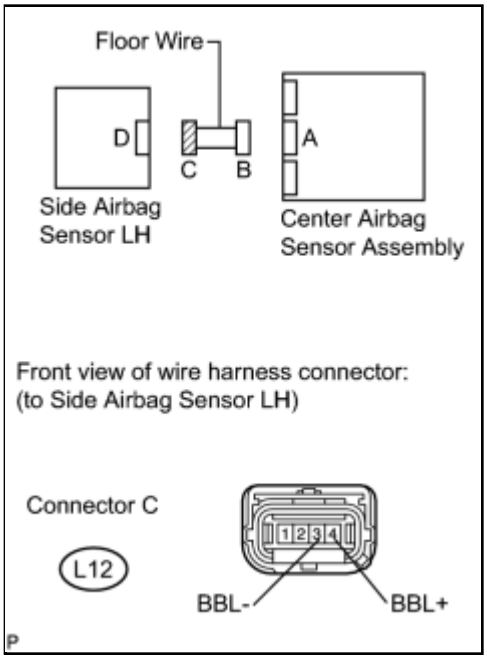

(a) Disconnect SST from connector B.

(b) Measure the resistance according to the value(s) in the table below.

Standard Resistance:

TESTER CONNECTION	CONDITION	SPECIFIED CONDITION
L12-4 (BBL+) - L12-3 (BBL-)	Always	1 MΩ or higher

NG ▶ **REPLACE FLOOR WIRE**

OK ▼

4.	**CHECK FLOOR WIRE (SHORT TO B+)**

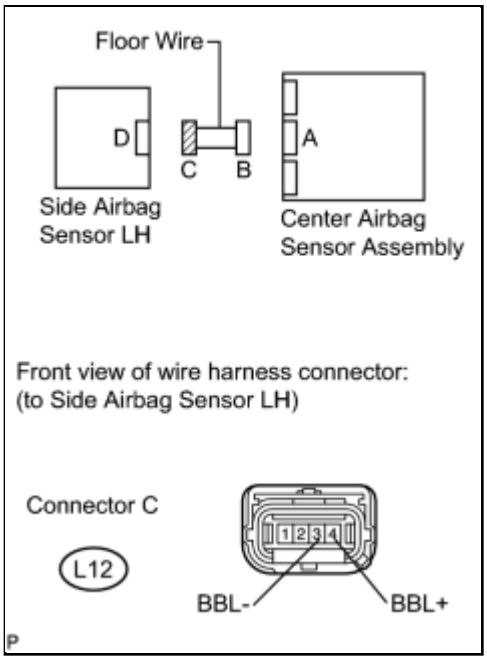

(a) Connect the cable to the negative (-) battery terminal.

(b) Turn the ignition switch to ON.

(c) Measure the voltage according to the value(s) in the table below.

Standard Voltage:

TESTER CONNECTION	SWITCH CONDITION	SPECIFIED CONDITION
L12-4 (BBL+) - Body ground	Ignition switch ON	Below 1 V
L12-3 (BBL-) - Body ground	Ignition switch ON	Below 1 V

NG ▶ **REPLACE FLOOR WIRE**

OK ▼

5.	**CHECK FLOOR WIRE (SHORT TO GROUND)**

(a) Turn the ignition switch off.

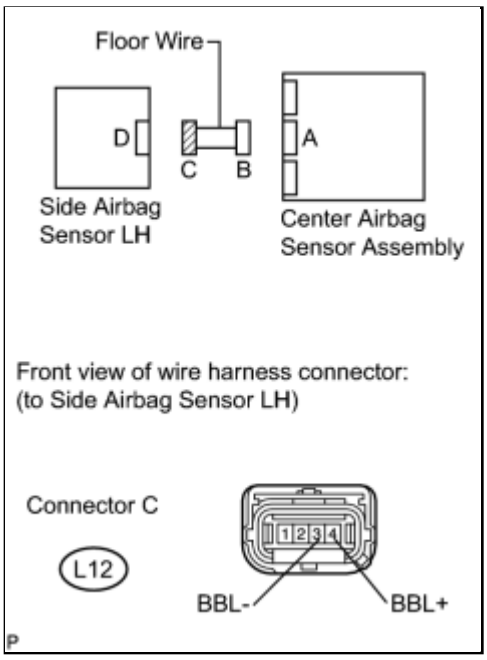

(b) Disconnect the cable from the negative (-) battery terminal, and wait for at least 90 seconds.

(c) Measure the resistance according to the value(s) in the table below.

Standard Resistance:

TESTER CONNECTION	CONDITION	SPECIFIED CONDITION
L12-4 (BBL+) - Body ground	Always	1 MΩ or higher
L12-3 (BBL-) - Body ground	Always	1 MΩ or higher

NG ▶ **REPLACE FLOOR WIRE**

OK ▼

6.	**CHECK FLOOR WIRE (OPEN)**

(a) Using SST, connect terminals 2 (BCL+) and 1 (BCL-) of connector C.

NOTICE:

Do not forcibly insert SST into the terminals of the connector when connecting.

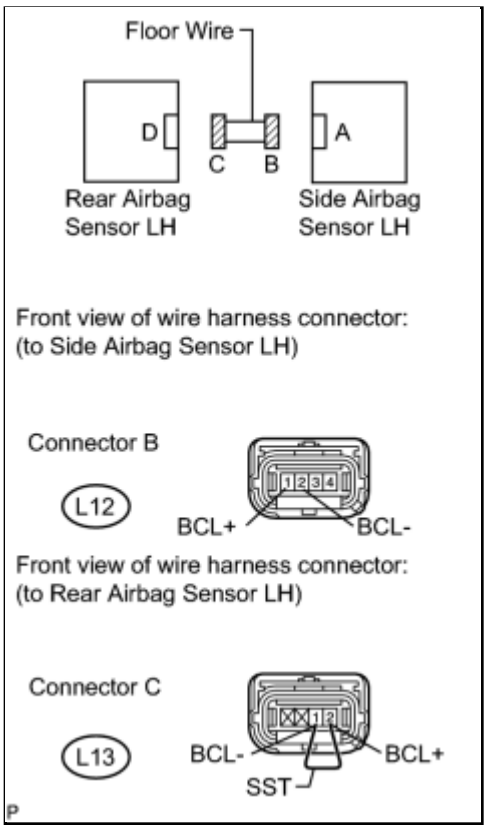

SST: 09843-18040

(b) Measure the resistance according to the value(s) in the table below.

Standard Resistance:

TESTER CONNECTION	CONDITION	SPECIFIED CONDITION
L12-1 (BCL+) - L12-2 (BCL-)	Always	Below 1 Ω

NG ▶ **REPLACE FLOOR WIRE**

OK ▼

7.	**CHECK FLOOR WIRE (SHORT)**

(a) Disconnect SST from connector C.

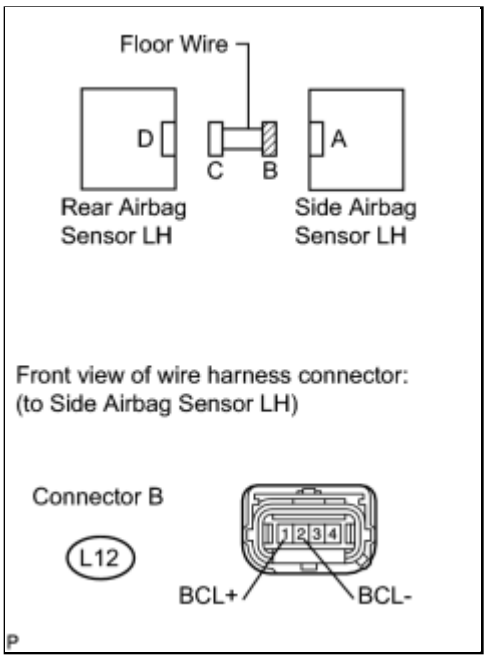

(b) Measure the resistance according to the value(s) in the table below.

Standard Resistance:

TESTER CONNECTION	CONDITION	SPECIFIED CONDITION
L12-1 (BCL+) - L12-2 (BCL-)	Always	1 MΩ or higher

NG ▶ **REPLACE FLOOR WIRE**

OK ▼

8.	**CHECK FLOOR WIRE (SHORT TO B+)**

(a) Connect the cable to the negative (-) battery terminal.

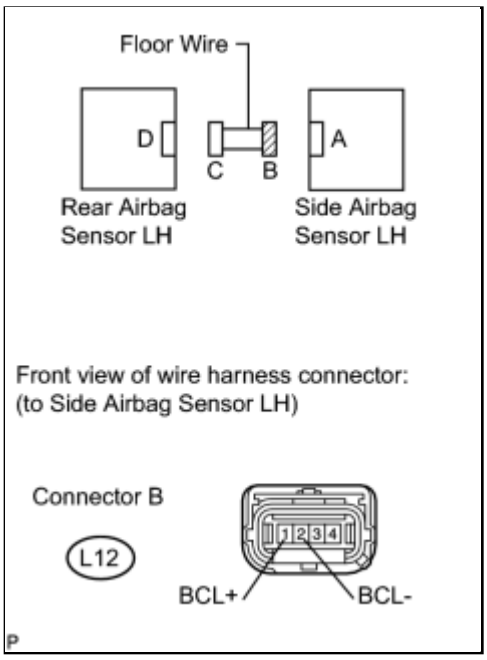

(b) Turn the ignition switch to ON.

(c) Measure the voltage according to the value(s) in the table below.

Standard Voltage:

TESTER CONNECTION	SWITCH CONDITION	SPECIFIED CONDITION
L12-1 (BCL+) - Body ground	Ignition switch ON	Below 1 V
L12-2 (BCL-) - Body ground	Ignition switch ON	Below 1 V

NG ▶ **REPLACE FLOOR WIRE**

OK ▼

9.	**CHECK FLOOR WIRE (SHORT TO GROUND)**

(a) Turn the ignition switch off.

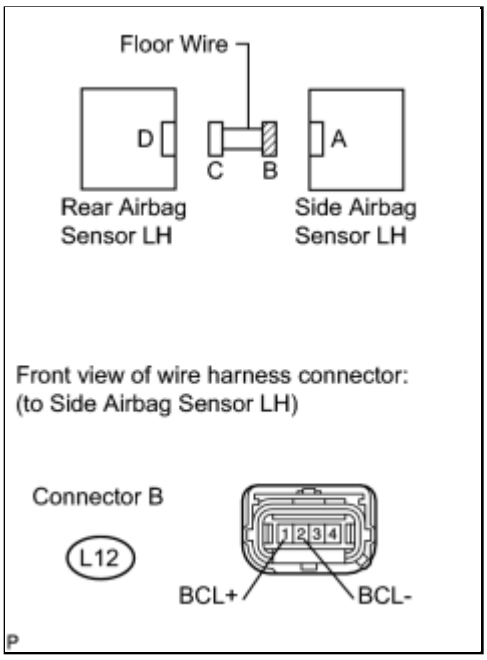

(b) Disconnect the cable from the negative (-) battery terminal, and wait for at least 90 seconds.

(c) Measure the resistance according to the value(s) in the table below.

Standard Resistance:

TESTER CONNECTION	CONDITION	SPECIFIED CONDITION
L12-1 (BCL+) - Body ground	Always	1 MΩ or higher
L12-2 (BCL-) - Body ground	Always	1 MΩ or higher

NG ▶ **REPLACE FLOOR WIRE**

OK ▼

10.	**CHECK SIDE AIRBAG SENSOR LH**

(a) Connect the connectors to the center airbag sensor assembly and the rear airbag sensor LH.

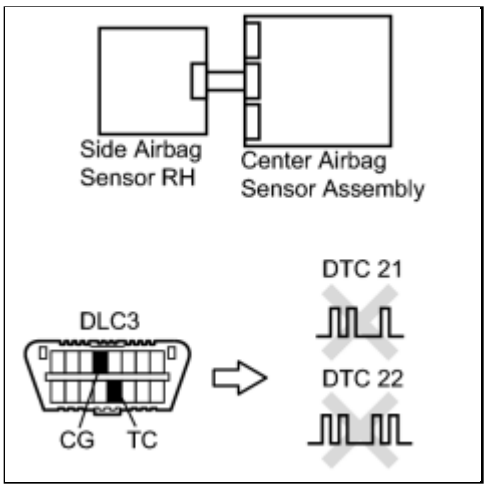

(b) Interchange the side airbag sensor RH with LH and connect the connectors.

(c) Connect the cable to the negative (-) battery terminal.

(d) Turn the ignition switch to ON, and wait for at least 60 seconds.

(e) Clear the DTCs stored in the memory INFO .

(f) Turn the ignition switch off.

(g) Turn the ignition switch to ON, and wait for at least 60 seconds.

(h) Check for DTCs INFO .

Result:

RESULT	PROCEED TO
DTC B1625/22 is output.	A
DTC B1620/21 is output.	B
DTC B1620/21 and B1625/22 are not output.	C

HINT:

Codes other than DTC B1620/21 and B1625/22 may be output at this time, but they are not related to this check.

C ▶ **USE SIMULATION METHOD TO CHECK**

B ▶ **REPLACE SIDE AIRBAG SENSOR LH**

A ▼

11.	CHECK REAR AIRBAG SENSOR LH

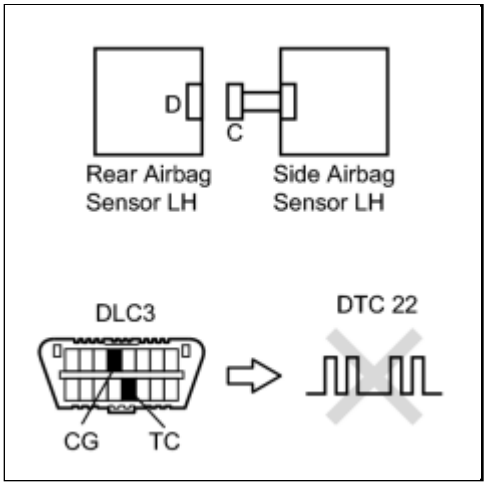

(a) Turn the ignition switch off.

(b) Disconnect the cable from the negative (-) battery terminal, and wait for at least 90 seconds.

(c) Return the side airbag sensors RH and LH to their original positions and connect the connectors.

(d) Disconnect the connector from the rear airbag sensor LH.

(e) Connect the cable to the negative (-) battery terminal.

(f) Turn the ignition switch to ON, and wait for at least 60 seconds.

(g) Clear the DTCs stored in the memory INFO .

(h) Turn the ignition switch off.

(i) Turn the ignition switch to ON, and wait for at least 60 seconds.

(j) Check for DTCs INFO .

OK:
DTC B1625/22 is not output.

HINT:

Codes other than DTC B1625/22 may be output at this time, but they are not related to this check.

NG ▶ **REPLACE CENTER AIRBAG SENSOR ASSEMBLY**

OK ▶ **REPLACE REAR AIRBAG SENSOR LH**

Last Modified: 3-10-2010	6.4 C	**From:** 200901
Model Year: 2010	**Model:** Corolla	**Doc ID:** RM000000YTI05UX
Title: SUPPLEMENTAL RESTRAINT SYSTEMS: AIRBAG SYSTEM: B1000/31: Center Airbag Sensor Assembly Malfunction (2010 Corolla)		

DTC	**B1000/31**	**Center Airbag Sensor Assembly Malfunction**

DESCRIPTION

The center airbag sensor assembly consists of the deceleration sensor, the safing sensor, the drive circuit, the diagnosis circuit, the ignition control, etc.

If the center airbag sensor assembly receives signals from the deceleration sensor, it determines whether the airbag squib and pretensioner squib should be activated.

DTC B1000/31 is recorded when a malfunction is detected in the center airbag sensor assembly.

DTC NO.	DTC DETECTING CONDITION	TROUBLE AREA
B1000/31	Center airbag sensor assembly malfunction	Center airbag sensor assembly

INSPECTION PROCEDURE

HINT:

When a trouble code is output simultaneously with B1000/31, repair the malfunction indicated by this code (except B1000/31) first.

PROCEDURE

1.	**CHECK CENTER AIRBAG SENSOR ASSEMBLY**

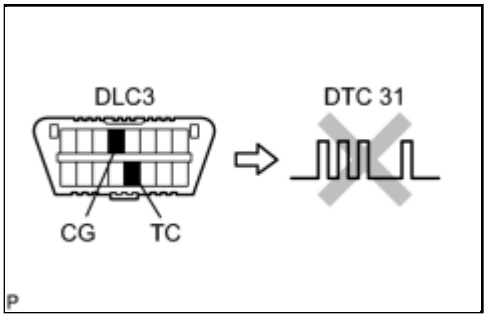

(a) Turn the ignition switch to ON, and wait for at least 60 seconds.

(b) Clear the DTCs stored in the memory INFO.

(c) Turn the ignition switch off.

(d) Turn the ignition switch to ON, and wait for at least 60 seconds.

(e) Check for DTCs INFO .

OK:

DTC B1000/31 is not output.

NG ▶ **REPLACE CENTER AIRBAG SENSOR ASSEMBLY**

OK ▶ **USE SIMULATION METHOD TO CHECK**

Last Modified: 3-10-2010	6.4 C	**From:** 200901
Model Year: 2010	**Model:** Corolla	**Doc ID:** RM000001NZW01PX
Title: SUPPLEMENTAL RESTRAINT SYSTEMS: AIRBAG SYSTEM: B1630/23: Rear Airbag Sensor RH Circuit Malfunction (2010 Corolla)		

DTC	**B1630/23**	**Rear Airbag Sensor RH Circuit Malfunction**

DESCRIPTION

The rear airbag sensor RH circuit consists of the center airbag sensor assembly, rear airbag sensor RH, and side airbag sensor RH.

The side airbag sensor RH and rear airbag sensor RH detect impacts to the vehicle and send signals to the center airbag sensor assembly to determine if the airbag should be deployed.

DTC B1630/23 is recorded when a malfunction is detected in the rear airbag sensor RH circuit.

DTC NO.	DTC DETECTION CONDITION	TROUBLE AREA
B1630/23	• The center airbag sensor assembly receives an open circuit signal, a short circuit to ground or a short circuit to B+ signal in the rear airbag sensor RH circuit for 2 seconds. • Rear airbag sensor RH malfunction • Side airbag sensor RH malfunction • Center airbag sensor assembly malfunction	• No. 2 floor wire • Rear airbag sensor RH • Side airbag sensor RH • Center airbag sensor assembly

WIRING DIAGRAM

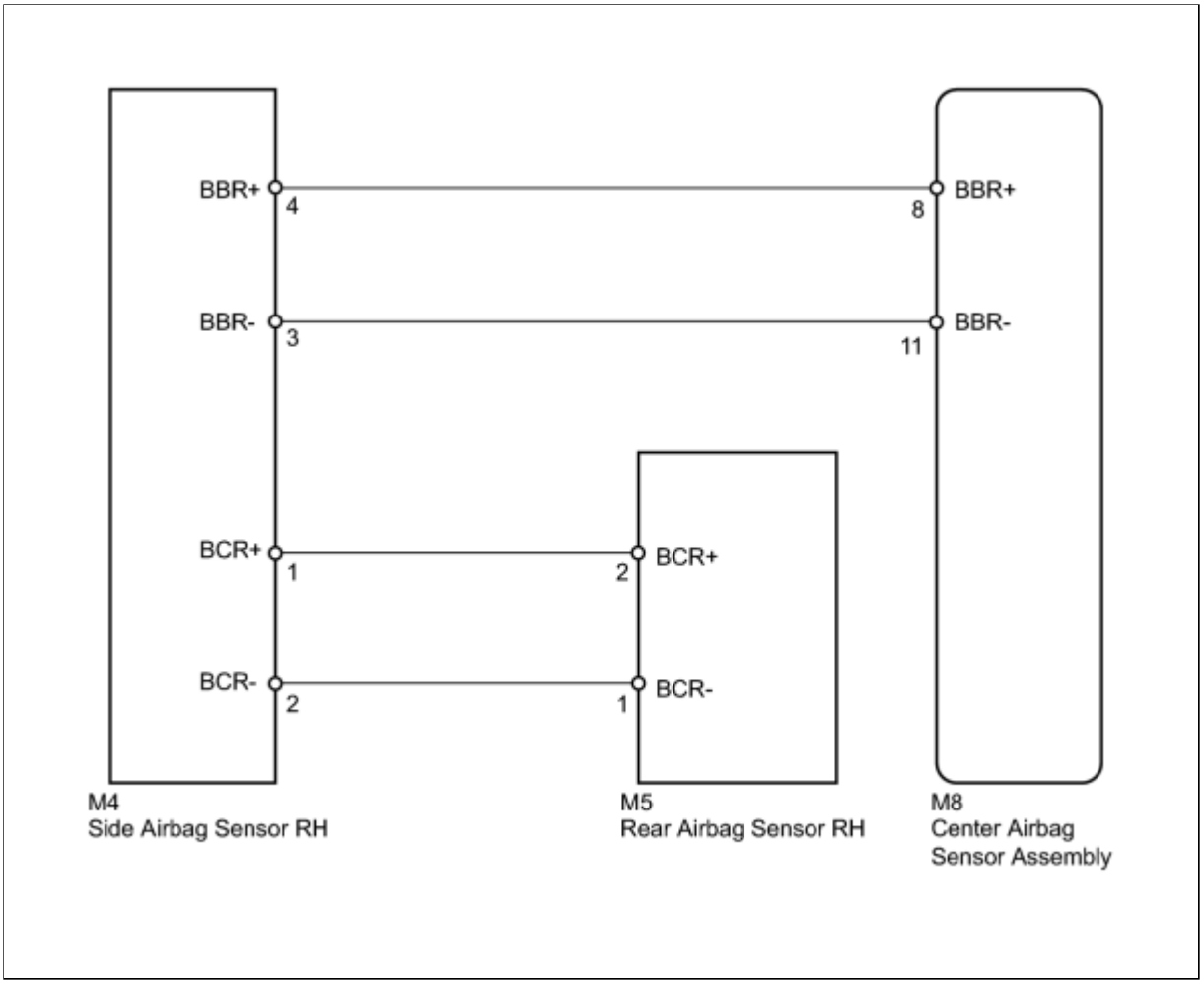

INSPECTION PROCEDURE

PROCEDURE

1.	**CHECK CONNECTORS**

(a) Turn the ignition switch off.

(b) Disconnect the cable from the negative (-) battery terminal, and wait for at least 90 seconds.

(c) Check that the connectors are properly connected to the side airbag sensor RH and the rear airbag sensor RH.

OK:

The connectors are properly connected.

HINT:

If the connectors are not connected securely, reconnect the connectors and proceed to the next inspection.

(d) Disconnect the connectors from the side airbag sensor RH and rear airbag sensor RH.

(e) Check that the terminals of the connectors are not damaged.

OK:

The terminals are not deformed or damaged.

NG ▶ **REPLACE NO. 2 FLOOR WIRE**

OK ▼

2.	CHECK NO. 2 FLOOR WIRE (OPEN)

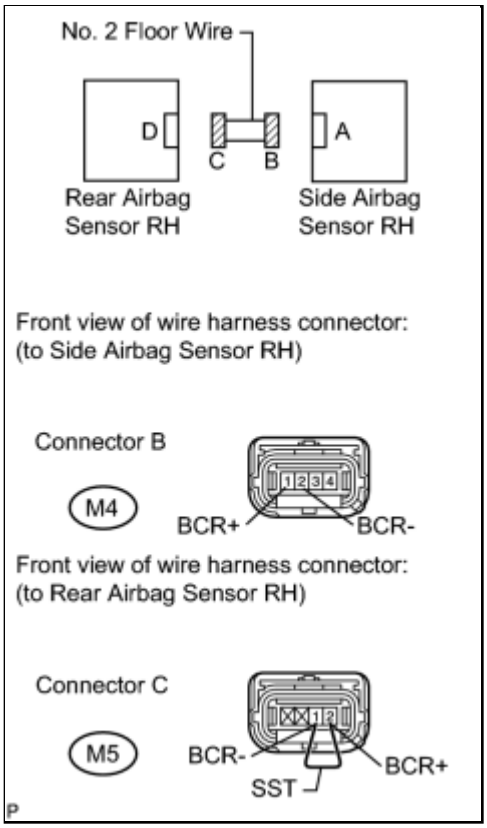

(a) Using SST, connect terminals 2 (BCR+) and 1 (BCR-) of connector C.

NOTICE:

Do not forcibly insert SST into the terminals of the connector when connecting.

SST: 09843-18040

(b) Measure the resistance according to the value(s) in the table below.

Standard Resistance:

TESTER CONNECTION	CONDITION	SPECIFIED CONDITION
M4-1 (BCR+) - M4-2 (BCR-)	Always	Below 1 Ω

NG ▶ **REPLACE NO. 2 FLOOR WIRE**

OK

3.	**CHECK NO. 2 FLOOR WIRE (SHORT TO B+)**

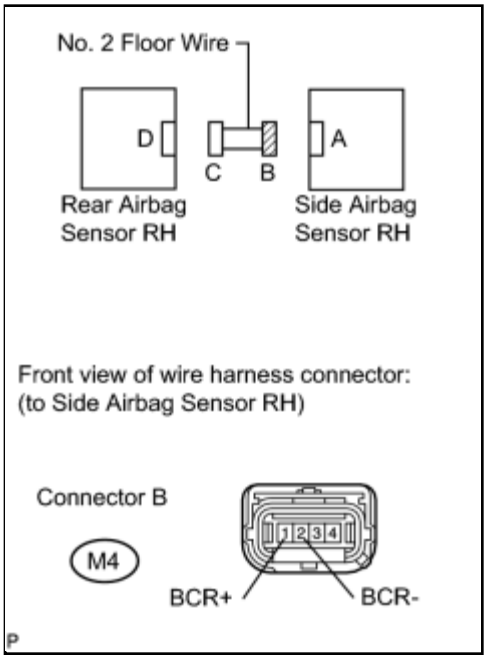

(a) Disconnect SST from connector C.

(b) Connect the cable to the negative (-) battery terminal.

(c) Turn the ignition switch to ON.

(d) Measure the voltage according to the value(s) in the table below.

Standard Voltage:

TESTER CONNECTION	SWITCH CONDITION	SPECIFIED CONDITION
M4-1 (BCR+) - Body ground	Ignition switch ON	Below 1 V
M4-2 (BCR-) - Body ground	Ignition switch ON	Below 1 V

NG ▶ **REPLACE NO. 2 FLOOR WIRE**

OK

4.	CHECK NO. 2 FLOOR WIRE (SHORT TO GROUND)

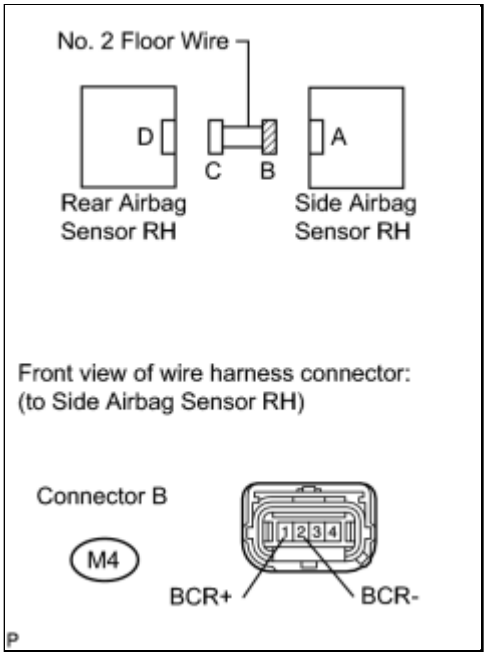

(a) Turn the ignition switch off.

(b) Disconnect the cable from the negative (-) battery terminal, and wait for at least 90 seconds.

(c) Measure the resistance according to the value(s) in the table below.

Standard Resistance:

TESTER CONNECTION	CONDITION	SPECIFIED CONDITION
M4-1 (BCR+) - Body ground	Always	1 MΩ or higher
M4-2 (BCR-) - Body ground	Always	1 MΩ or higher

NG ▶ **REPLACE NO. 2 FLOOR WIRE**

OK ▼

5.	CHECK REAR AIRBAG SENSOR RH

(a) Connect the connector to the side airbag sensor RH.

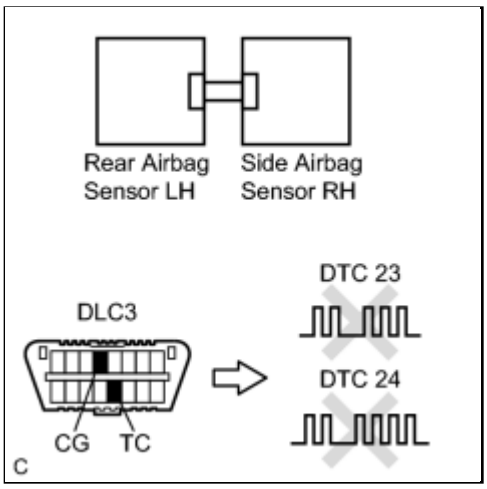

(b) Interchange the rear airbag sensor LH with RH and connect the connectors.

(c) Connect the cable to the negative (-) battery terminal.

(d) Turn the ignition switch to ON, and wait for at least 60 seconds.

(e) Clear the DTCs stored in the memory INFO .

(f) Turn the ignition switch off.

(g) Turn the ignition switch to ON, and wait for at least 60 seconds.

(h) Check for DTCs INFO .

Result:

RESULT	PROCEED TO
DTC B1630/23 is output.	A
DTC B1635/24 is output.	B
DTC B1630/23 and B1635/24 are not output.	C

HINT:

Codes other than DTC B1630/23 and B1635/24 may be output at this time, but they are not related to this check.

C ▶ **USE SIMULATION METHOD TO CHECK**

B ▶ **REPLACE REAR AIRBAG SENSOR RH**

A ▼

6.	CHECK SIDE AIRBAG SENSOR RH

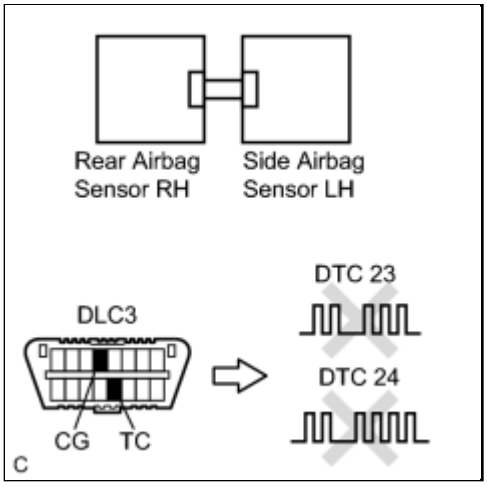

(a) Turn the ignition switch off.

(b) Disconnect the cable from the negative (-) battery terminal, and wait for at least 90 seconds.

(c) Return the rear airbag sensors LH and RH to their original positions and connect the connectors.

(d) Interchange the side airbag sensor LH with RH and connect the connectors.

(e) Connect the cable to the negative (-) battery terminal.

(f) Turn the ignition switch to ON, and wait for at least 60 seconds.

(g) Clear the DTCs stored in the memory INFO .

(h) Turn the ignition switch off.

(i) Turn the ignition switch to ON, and wait for at least 60 seconds.

(j) Check for DTCs INFO .

Result:

RESULT	PROCEED TO
DTC B1630/23 and B1635/24 are not output.	A
DTC B1630/23 is output.	B
DTC B1635/24 is output.	C

HINT:

Codes other than DTC B1630/23 and B1635/24 may be output at this time, but they are not related to this check.

C ▶ REPLACE SIDE AIRBAG SENSOR RH

B ▶ REPLACE CENTER AIRBAG SENSOR ASSEMBLY

A ▶ USE SIMULATION METHOD TO CHECK

Last Modified: 3-10-2010	6.4 C	**From:** 200901
Model Year: 2010	**Model:** Corolla	**Doc ID:** RM000001NZX01PX
Title: SUPPLEMENTAL RESTRAINT SYSTEMS: AIRBAG SYSTEM: B1635/24: Rear Airbag Sensor LH Circuit Malfunction (2010 Corolla)		

DTC	**B1635/24**	**Rear Airbag Sensor LH Circuit Malfunction**

DESCRIPTION

The rear airbag sensor LH circuit consists of the center airbag sensor assembly, rear airbag sensor LH, and side airbag sensor LH.

The side airbag sensor LH and rear airbag sensor LH detect impacts to the vehicle and send signals to the center airbag sensor assembly to determine if the airbag should be deployed.

DTC B1635/24 is recorded when a malfunction is detected in the rear airbag sensor LH circuit.

DTC NO.	DTC DETECTION CONDITION	TROUBLE AREA
B1635/24	• The center airbag sensor assembly receives an open circuit signal, a short circuit to ground or a short to B+ signal in the rear airbag sensor LH circuit for 2 seconds. • Rear airbag sensor LH malfunction • Side airbag sensor LH malfunction • Center airbag sensor assembly malfunction	• Floor wire • Rear airbag sensor LH • Side airbag sensor LH • Center airbag sensor assembly

WIRING DIAGRAM

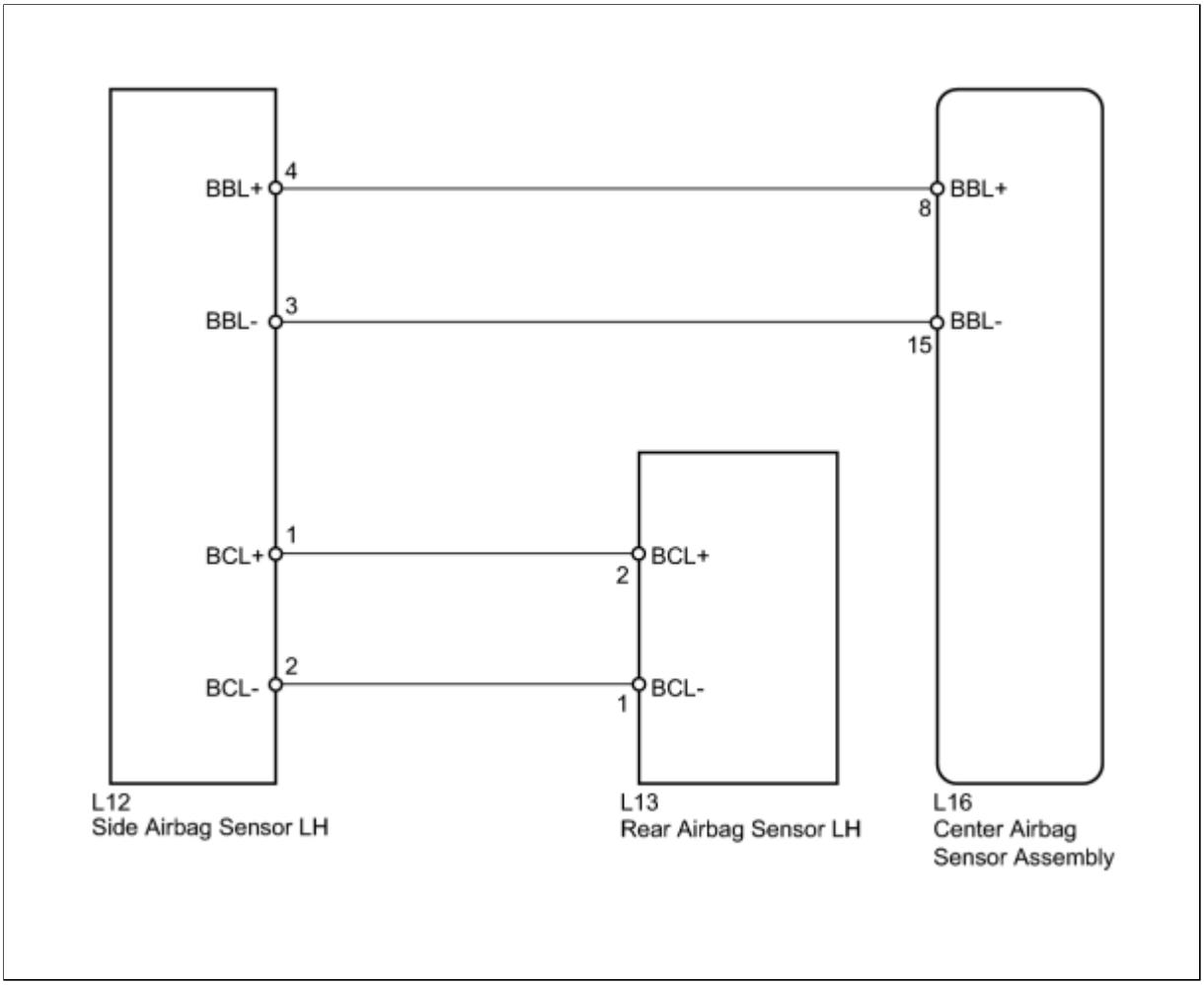

INSPECTION PROCEDURE

PROCEDURE

1.	**CHECK CONNECTORS**

(a) Turn the ignition switch off.

(b) Disconnect the cable from the negative (-) battery terminal, and wait for at least 90 seconds.

(c) Check that the connectors are properly connected to the side airbag sensor LH and the rear airbag sensor LH.

OK:

The connectors are properly connected.

HINT:

If the connectors are not connected securely, reconnect the connectors and proceed to the next inspection.

(d) Disconnect the connectors from the side airbag sensor LH and rear airbag sensor LH.

(e) Check that the terminals of the connectors are not damaged.

OK:

The terminals are not deformed or damaged.

NG ▶ **REPLACE FLOOR WIRE**

OK ▼

2.	CHECK FLOOR WIRE (OPEN)

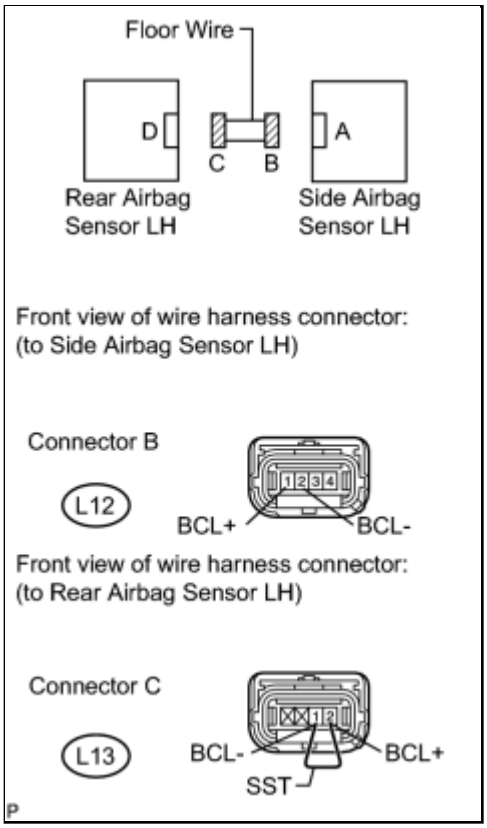

(a) Using SST, connect terminals 2 (BCL+) and 1 (BCL-) of connector C.

NOTICE:

Do not forcibly insert SST into the terminals of the connector when connecting.

SST: 09843-18040

(b) Measure the resistance according to the value(s) in the table below.

Standard Resistance:

TESTER CONNECTION	CONDITION	SPECIFIED CONDITION
L12-1 (BCL+) - L12-2 (BCL-)	Always	Below 1 Ω

NG ▶ **REPLACE FLOOR WIRE**

OK

3.	**CHECK FLOOR WIRE (SHORT TO B+)**

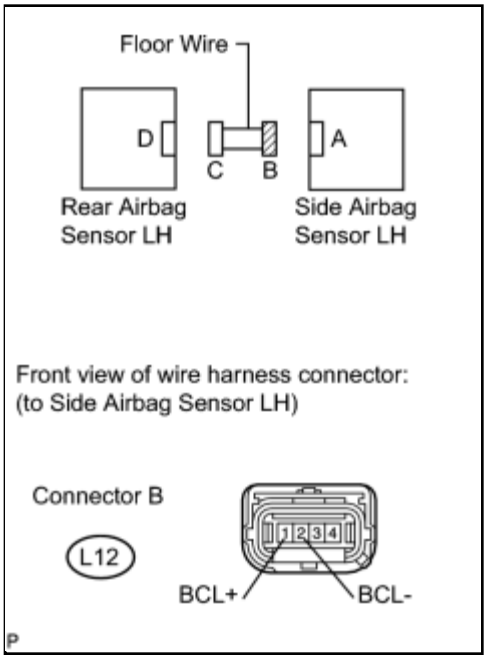

(a) Disconnect SST from connector C.

(b) Connect the cable to the negative (-) battery terminal.

(c) Turn the ignition switch to ON.

(d) Measure the voltage according to the value(s) in the table below.

Standard Voltage:

TESTER CONNECTION	SWITCH CONDITION	SPECIFIED CONDITION
L12-1 (BCL+) - Body ground	Ignition switch ON	Below 1 V
L12-2 (BCL-) - Body ground	Ignition switch ON	Below 1 V

NG ▶ **REPLACE FLOOR WIRE**

OK

4.	CHECK FLOOR WIRE (SHORT TO GROUND)

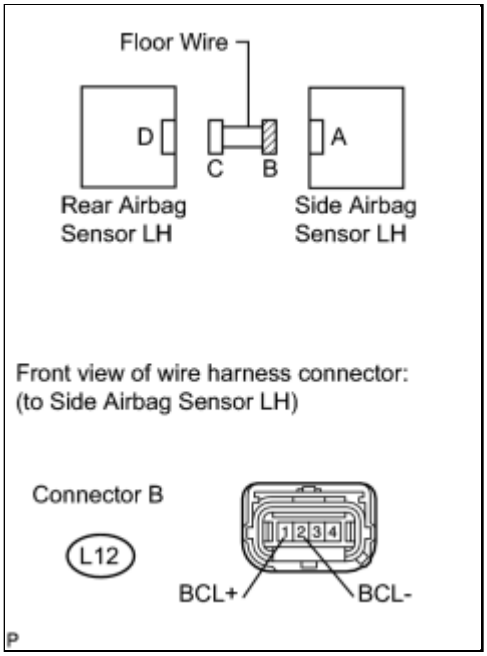

(a) Turn the ignition switch off.

(b) Disconnect the cable from the negative (-) battery terminal, and wait for at least 90 seconds.

(c) Measure the resistance according to the value(s) in the table below.

Standard Resistance:

TESTER CONNECTION	CONDITION	SPECIFIED CONDITION
L12-1 (BCL+) - Body ground	Always	1 MΩ or higher
L12-2 (BCL-) - Body ground	Always	1 MΩ or higher

NG ▶ **REPLACE FLOOR WIRE**

OK ▼

5.	CHECK REAR AIRBAG SENSOR LH

(a) Connect the connector to the side airbag sensor LH.

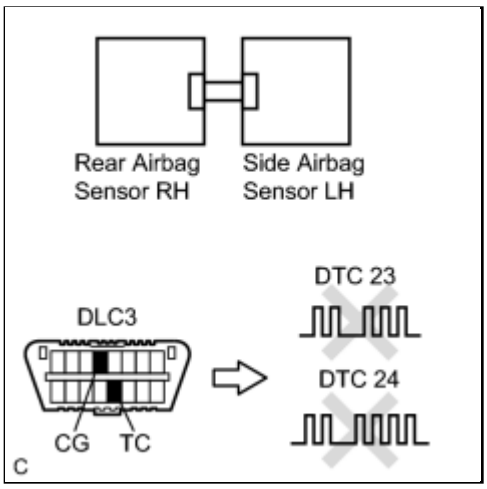

(b) Interchange the rear airbag sensor RH with LH and connect the connectors.

(c) Connect the cable to the negative (-) battery terminal.

(d) Turn the ignition switch to ON, and wait for at least 60 seconds.

(e) Clear the DTCs stored in the memory INFO .

(f) Turn the ignition switch off.

(g) Turn the ignition switch to ON, and wait for at least 60 seconds.

(h) Check for DTCs INFO .

Result:

RESULT	PROCEED TO
DTC B1635/24 is output.	A
DTC B1630/23 is output.	B
DTC B1630/23 and B1635/24 are not output.	C

HINT:

Codes other than DTC B1630/23 and B1635/24 may be output at this time, but they are not related to this check.

C ▶ **USE SIMULATION METHOD TO CHECK**

B ▶ **REPLACE REAR AIRBAG SENSOR LH**

A ▼

6.	CHECK SIDE AIRBAG SENSOR LH

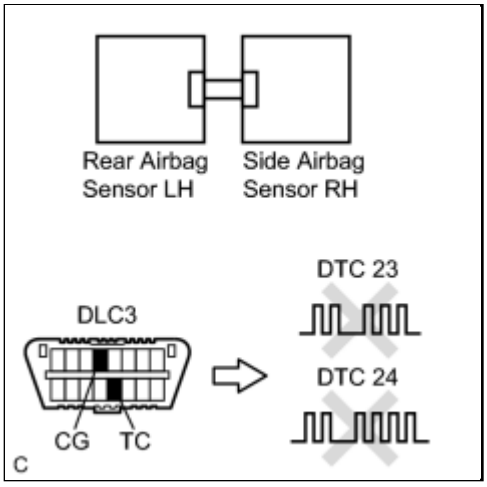

(a) Turn the ignition switch off.

(b) Disconnect the cable from the negative (-) battery terminal, and wait for at least 90 seconds.

(c) Return the rear airbag sensors RH and LH to their original positions and connect the connectors.

(d) Interchange the side airbag sensor RH with LH and connect the connectors.

(e) Connect the cable to the negative (-) battery terminal.

(f) Turn the ignition switch to ON, and wait for at least 60 seconds.

(g) Clear the DTCs stored in the memory INFO .

(h) Turn the ignition switch off.

(i) Turn the ignition switch to ON, and wait for at least 60 seconds.

(j) Check for DTCs INFO .

Result:

RESULT	PROCEED TO
DTC B1630/23 and B1635/24 are not output.	A
DTC B1635/24 is output.	B
DTC B1630/23 is output.	C

HINT:

Codes other than DTC B1630/23 and B1635/24 may be output at this time, but they are not related to this check.

C ▶ REPLACE SIDE AIRBAG SENSOR LH

B ▶ REPLACE CENTER AIRBAG SENSOR ASSEMBLY

A ▶ USE SIMULATION METHOD TO CHECK

Last Modified: 3-10-2010	6.4 C	**From:** 200901
Model Year: 2010	**Model:** Corolla	**Doc ID:** RM0000016WN02BX
Title: SUPPLEMENTAL RESTRAINT SYSTEMS: AIRBAG SYSTEM: B1650/32: Occupant Classification System Malfunction (2010 Corolla)		

DTC	**B1650/32**	**Occupant Classification System Malfunction**

DESCRIPTION

The occupant classification system circuit consists of the center airbag sensor assembly and the occupant classification ECU.

If the center airbag sensor assembly receives signals from the occupant classification ECU, it determines whether the front passenger airbag, the front seat side airbag RH and front seat belt pretensioner RH should be operated.

DTC B1650/32 is recorded when a malfunction is detected in the occupant classification system circuit.

DTC NO.	DTC DETECTION CONDITION	TROUBLE AREA
B1650/32	• The center airbag sensor assembly receives a short circuit signal, an open circuit signal, a short circuit to ground signal or a short circuit to B+ signal in the occupant classification system circuit for 2 seconds. • Occupant classification ECU malfunction • Center airbag sensor assembly malfunction	• No. 2 floor wire • Front seat wire RH • Occupant classification system • Center airbag sensor assembly

WIRING DIAGRAM

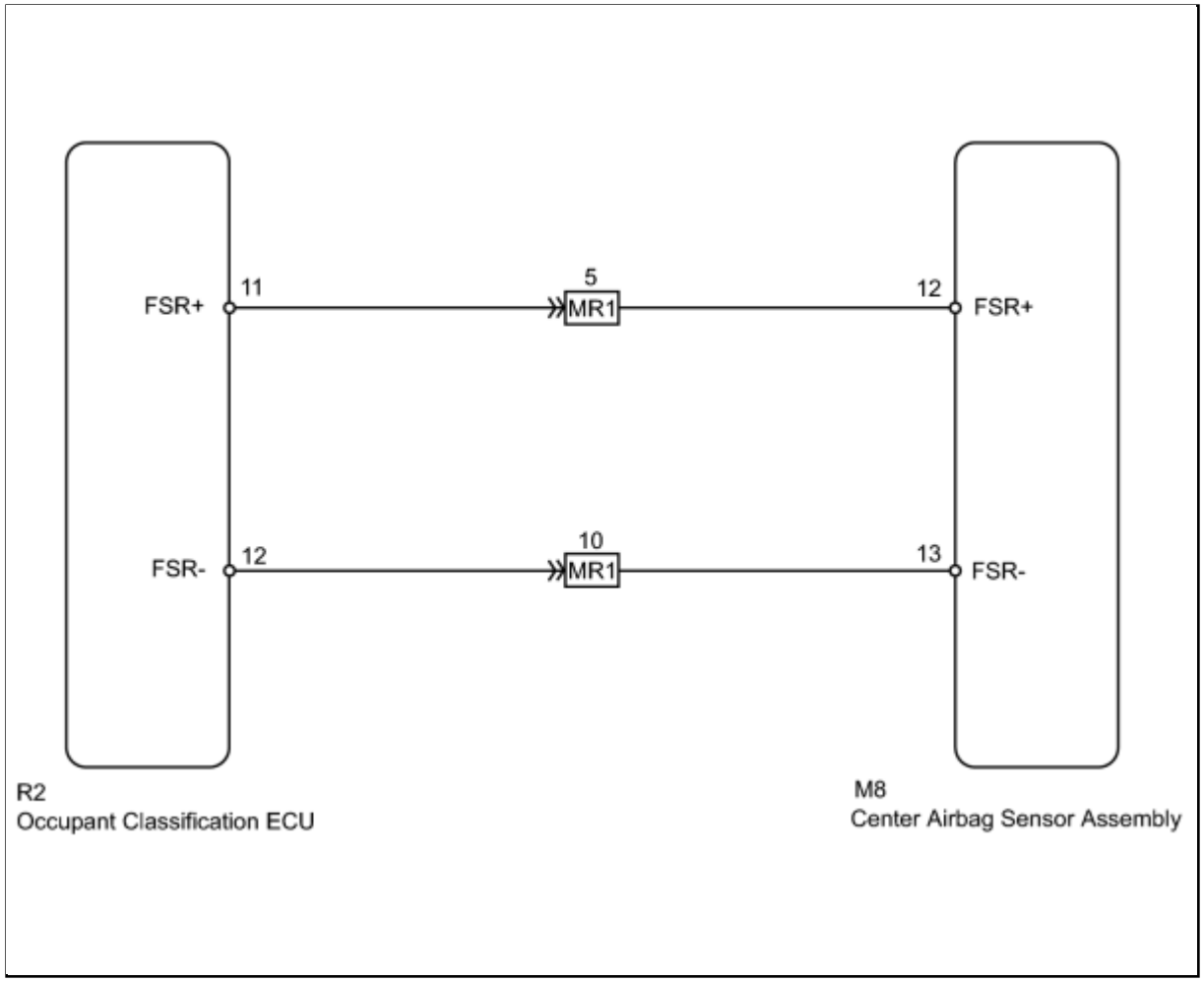

INSPECTION PROCEDURE

PROCEDURE

1.	**CHECK FOR DTC (OCCUPANT CLASSIFICATION ECU)**

(a) Turn the ignition switch to ON.

(b) Using the Techstream, check for occupant classification ECU DTCs INFO .

NG ▶ **REPAIR CIRCUITS INDICATED BY OUTPUT DTCS**

OK ▼

2.	CHECK CONNECTORS

(a) Turn the ignition switch off.

(b) Disconnect the cable from the negative (-) battery terminal, and wait for at least 90 seconds.

(c) Check that the connectors are properly connected to the center airbag sensor assembly and the occupant classification ECU. Also check that the connectors that link the front seat wire RH and No. 2 floor wire are properly connected.

OK:

The connectors are properly connected.

HINT:

If the connectors are not connected securely, reconnect the connectors and proceed to the next inspection.

(d) Disconnect the connectors from the center airbag sensor assembly and the occupant classification ECU. Also disconnect the connectors that link the front seat wire RH and No. 2 floor wire.

(e) Check that the terminals of the connectors are not damaged.

OK:

The terminals are not deformed or damaged.

NG ▶ **REPLACE WIRE HARNESS**

OK ▼

3.	CHECK OCCUPANT CLASSIFICATION SYSTEM CIRCUIT (OPEN)

(a) Connect the connectors that link the front seat wire RH and No. 2 floor wire.

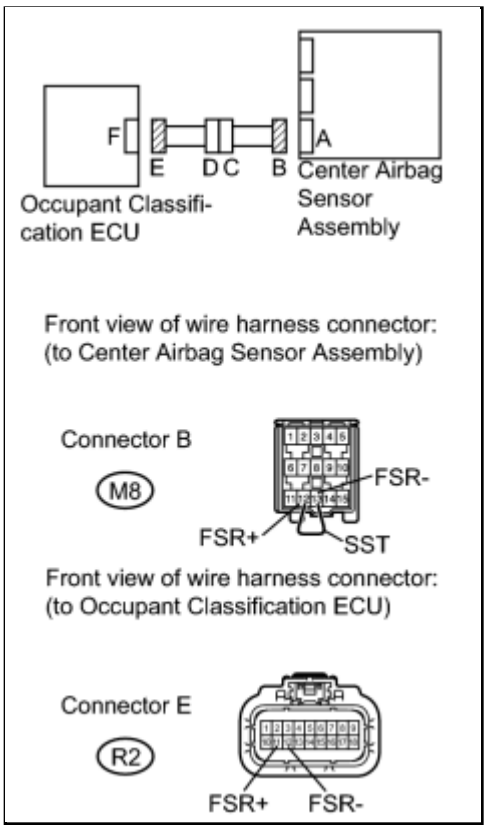

(b) Using SST, connect terminals 12 (FSR+) and 13 (FSR-) of connector B.

NOTICE:

Do not forcibly insert SST into the terminals of the connector when connecting the wire.

SST: 09843-18040

(c) Measure the resistance according to the value(s) in the table below.

Standard Resistance:

TESTER CONNECTION	CONDITION	SPECIFIED CONDITION
R2-11 (FSR+) - R2-12 (FSR-)	Always	Below 1 Ω

NG ▶ **CHECK NO. 2 FLOOR WIRE (OPEN)**

OK ▼

4.	**CHECK OCCUPANT CLASSIFICATION SYSTEM CIRCUIT (SHORT)**

(a) Disconnect SST from connector B.

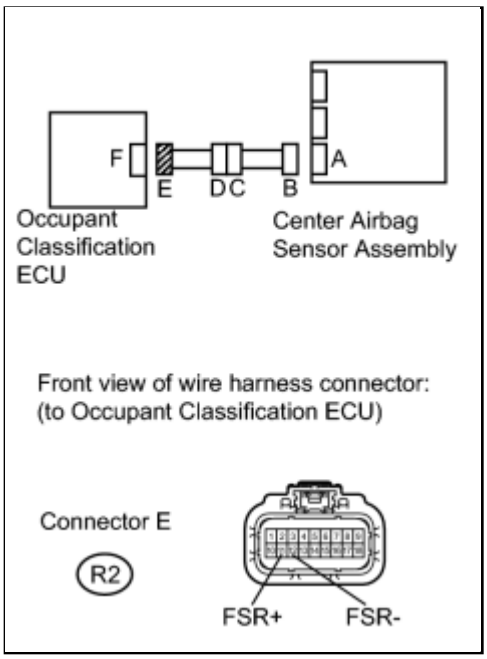

(b) Measure the resistance according to the value(s) in the table below.

Standard Resistance:

TESTER CONNECTION	CONDITION	SPECIFIED CONDITION
R2-11 (FSR+) - R2-12 (FSR-)	Always	1 MΩ or higher

NG ▶ **CHECK NO. 2 FLOOR WIRE (SHORT)**

OK ▼

5.	**CHECK OCCUPANT CLASSIFICATION SYSTEM CIRCUIT (SHORT TO B+)**

(a) Connect the cable to the negative (-) battery terminal.

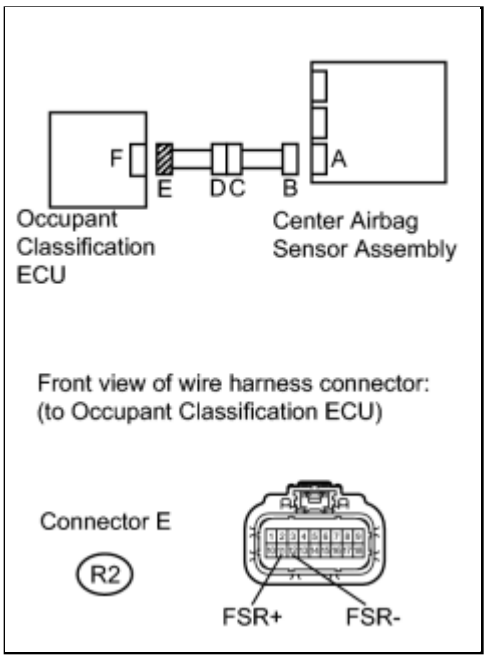

(b) Turn the ignition switch to ON.

(c) Measure the voltage according to the value(s) in the table below.

Standard Voltage:

TESTER CONNECTION	SWITCH CONDITION	SPECIFIED CONDITION
R2-11 (FSR+) - Body ground	Ignition switch ON	Below 1 V
R2-12 (FSR-) - Body ground	Ignition switch ON	Below 1 V

NG ▶ **CHECK NO. 2 FLOOR WIRE (SHORT TO B+)**

OK ▼

6.	**CHECK OCCUPANT CLASSIFICATION SYSTEM CIRCUIT (SHORT TO GROUND)**

(a) Turn the ignition switch off.

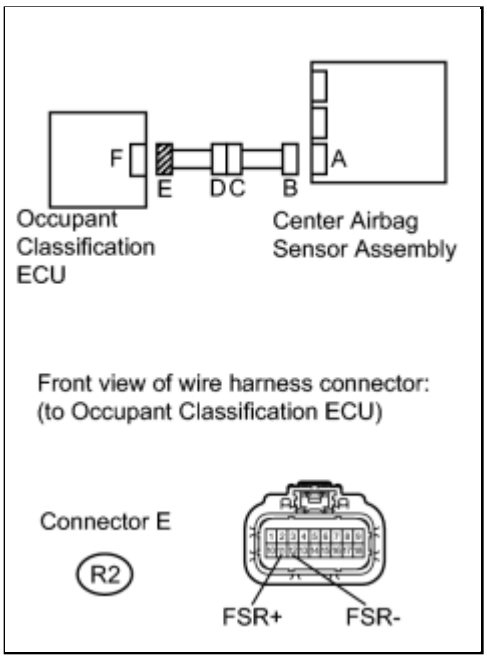

(b) Disconnect the cable from the negative (-) battery terminal, and wait for at least 90 seconds.

(c) Measure the resistance according to the value(s) in the table below.

Standard Resistance:

TESTER CONNECTION	CONDITION	SPECIFIED CONDITION
R2-11 (FSR+) - Body ground	Always	1 MΩ or higher
R2-12 (FSR-) - Body ground	Always	1 MΩ or higher

HINT:

After replacing the center airbag sensor assembly, check for DTCs of the center airbag sensor assembly. If DTC B1650/32 is detected, replace the occupant classification ECU INFO and perform the zero point calibration and sensitivity check of the occupant classification system INFO .

NG ▶ CHECK NO. 2 FLOOR WIRE (SHORT TO GROUND)

OK ▶ REPLACE CENTER AIRBAG SENSOR ASSEMBLY

7.	**CHECK NO. 2 FLOOR WIRE (OPEN)**

(a) Disconnect the front seat wire RH connector from the No. 2 floor wire.

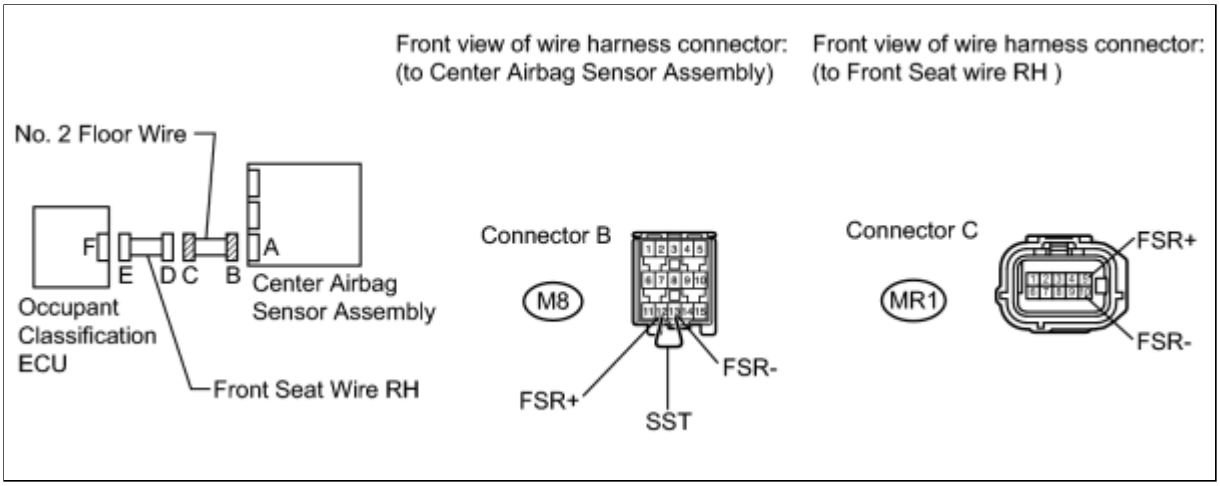

HINT:

SST has already been inserted into connector B.

(b) Measure the resistance according to the value(s) in the table below.

Standard Resistance:

TESTER CONNECTION	CONDITION	SPECIFIED CONDITION
MR1-5 (FSR+) - MR1-10 (FSR-)	Always	Below 1 Ω

NG ▶ **REPLACE NO. 2 FLOOR WIRE**

OK ▶ **REPLACE FRONT SEAT WIRE RH**

8.	**CHECK NO. 2 FLOOR WIRE (SHORT)**

(a) Disconnect the front seat wire RH connector from the No. 2 floor wire.

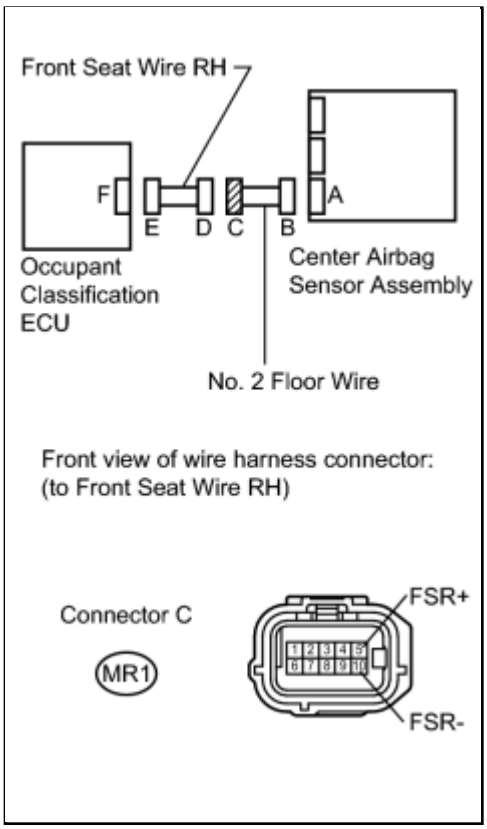

(b) Measure the resistance according to the value(s) in the table below.

Standard Resistance:

TESTER CONNECTION	CONDITION	SPECIFIED CONDITION
MR1-5 (FSR+) - MR1-10 (FSR-)	Always	1 MΩ or higher

NG ▶ **REPLACE NO. 2 FLOOR WIRE**

OK ▶ **REPLACE FRONT SEAT WIRE RH**

9.	**CHECK NO. 2 FLOOR WIRE (SHORT TO B+)**

(a) Turn the ignition switch off.

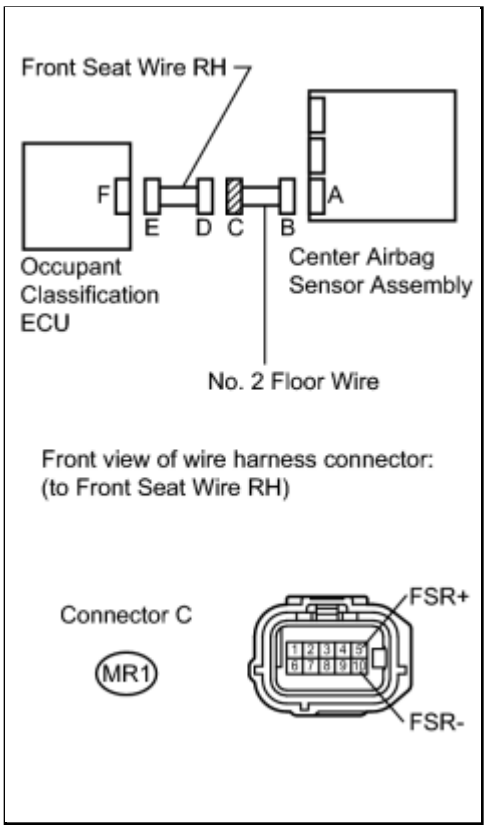

(b) Disconnect the cable from the negative (-) battery terminal, and wait for at least 90 seconds.

(c) Disconnect the front seat wire RH connector from the No. 2 floor wire.

(d) Connect the cable to the negative (-) battery terminal.

(e) Turn the ignition switch to ON.

(f) Measure the voltage according to the value(s) in the table below.

Standard Voltage:

TESTER CONNECTION	SWITCH CONDITION	SPECIFIED CONDITION
MR1-5 (FSR+) - Body ground	Ignition switch ON	Below 1 V
MR1-10 (FSR-) - Body ground	Ignition switch ON	Below 1 V

NG ▶ **REPLACE NO. 2 FLOOR WIRE**

OK ▶ **REPLACE FRONT SEAT WIRE RH**

10.	**CHECK NO. 2 FLOOR WIRE (SHORT TO GROUND)**

(a) Disconnect the front seat wire RH connector from the

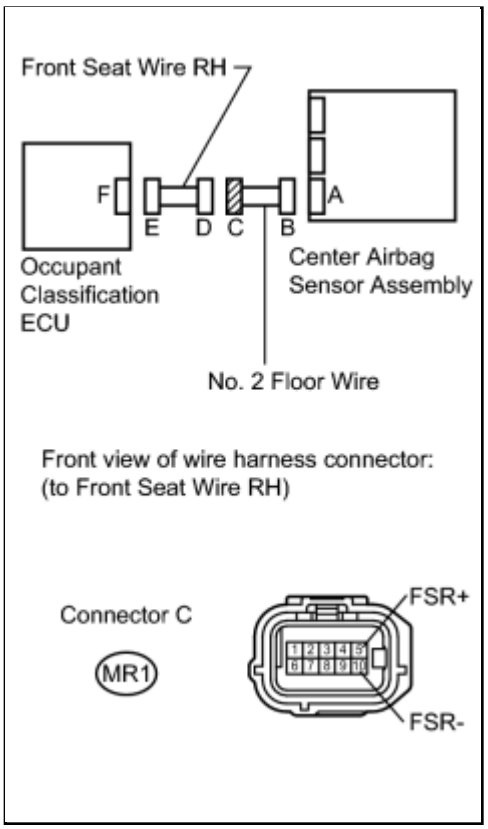

No. 2 floor wire.

(b) Measure the resistance according to the value(s) in the table below.

Standard Resistance:

TESTER CONNECTION	CONDITION	SPECIFIED CONDITION
MR1-5 (FSR+) - Body ground	Always	1 MΩ or higher
MR1-10 (FSR-) - Body ground	Always	1 MΩ or higher

NG ▶ **REPLACE NO. 2 FLOOR WIRE**

OK ▶ **REPLACE FRONT SEAT WIRE RH**

Last Modified: 3-10-2010	6.4 C	**From:** 200901
Model Year: 2010	**Model:** Corolla	**Doc ID:** RM000000YTS04PX
Title: SUPPLEMENTAL RESTRAINT SYSTEMS: AIRBAG SYSTEM: B1653/35: Seat Position Airbag Sensor Circuit Malfunction (2010 Corolla)		

DTC	**B1653/35**	**Seat Position Airbag Sensor Circuit Malfunction**

DESCRIPTION

The seat position airbag sensor circuit consists of the center airbag sensor assembly, front seat inner belt assembly LH and the seat position airbag sensor.

DTC B1653/35 is recorded when a malfunction is detected in the seat position airbag sensor circuit.

DTC NO.	DTC DETECTION CONDITION	TROUBLE AREA
B1653/35	• The center airbag sensor assembly receives a short circuit signal, an open circuit signal, a short circuit to ground signal or a short circuit to B+ signal in the seat position airbag sensor circuit for 2 seconds. • Front seat inner belt assembly LH malfunction • Seat position airbag sensor malfunction • Center airbag sensor assembly malfunction	• Floor wire • Front seat inner belt assembly LH • Seat position airbag sensor • Center airbag sensor assembly

WIRING DIAGRAM

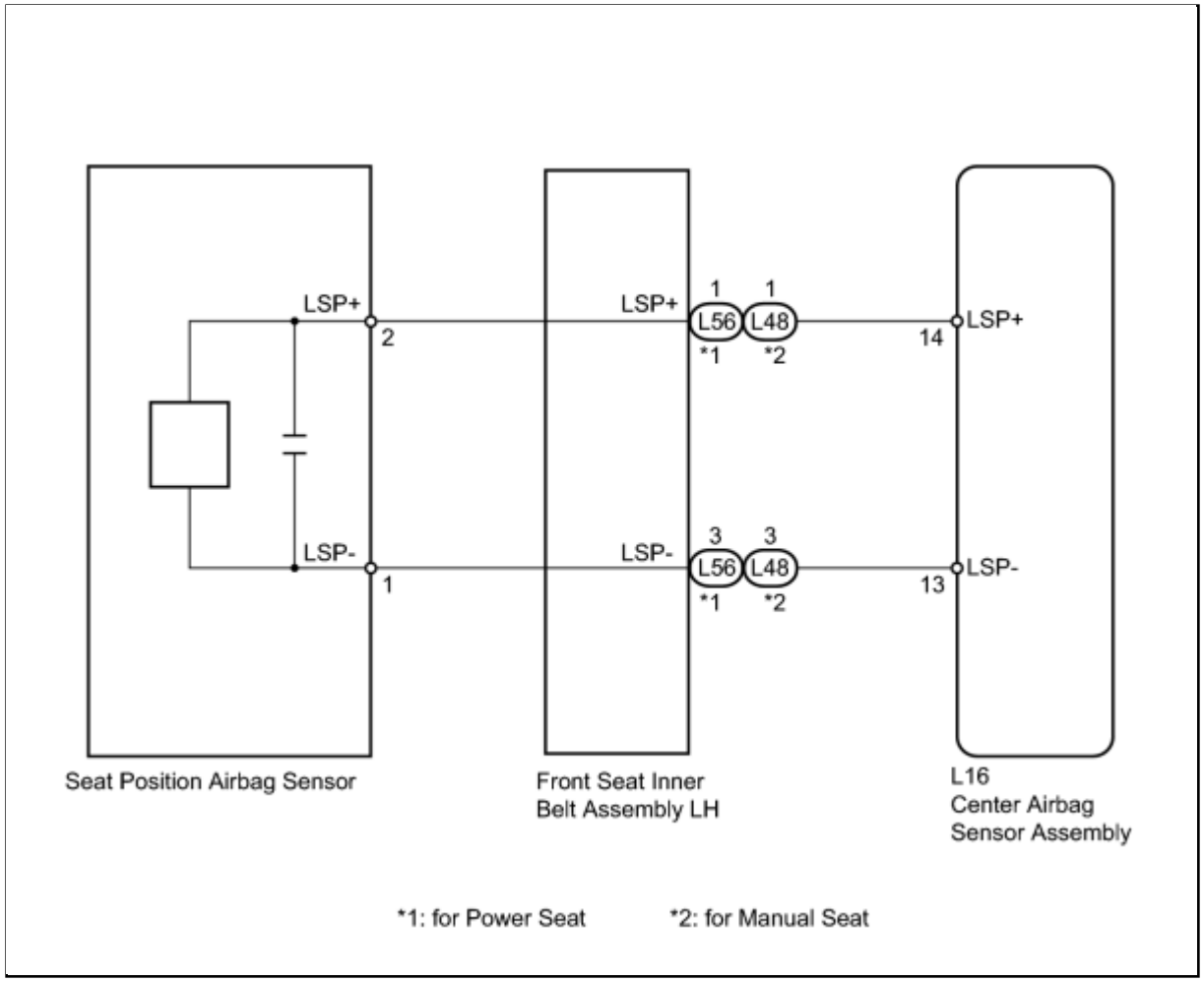

INSPECTION PROCEDURE

PROCEDURE

1.	**CHECK CONNECTORS**

(a) Turn the ignition switch off.

(b) Disconnect the cable from the negative (-) battery terminal, and wait for at least 90 seconds.

(c) Check that the connectors are properly connected to the center airbag sensor assembly, front seat inner belt assembly LH and the seat position airbag sensor.

OK:

The connectors are properly connected.

HINT:

If the connectors are not connected securely, reconnect the connectors and proceed to the next inspection.

(d) Disconnect the connectors from the center airbag sensor assembly, front seat inner belt

assembly LH and the seat position airbag sensor.

(e) Check that the connector terminals are not damaged.

OK:

The terminals are not deformed or damaged.

NG ▶ **REPLACE WIRE HARNESS**

OK ▼

2.	**CHECK SEAT POSITION AIRBAG SENSOR CIRCUIT (OPEN)**

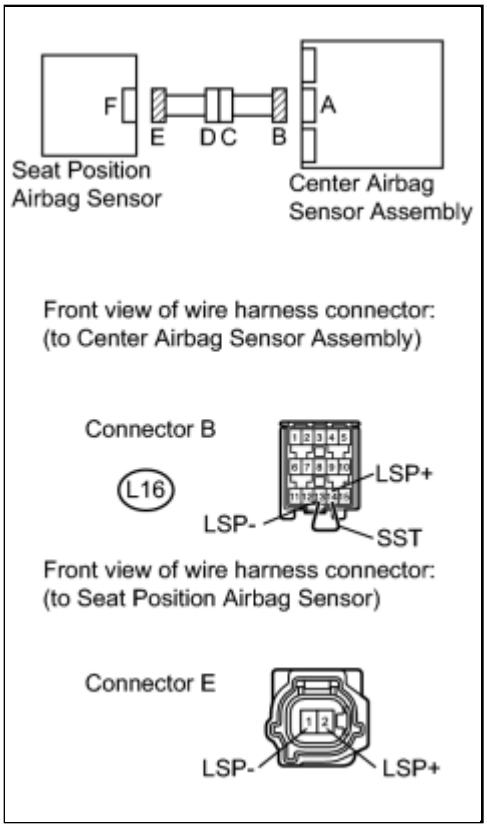

(a) Connect the connectors to the front seat inner belt assembly LH and floor wire.

(b) Using SST, connect terminals 14 (LSP+) and 13 (LSP-) of connector B.

NOTICE:

Do not forcibly insert SST into the terminals of the connector when connecting the wire.

SST: 09843-18040

(c) Measure the resistance according to the value(s) in the table below.

Standard Resistance:

TESTER CONNECTION	CONDITION	SPECIFIED CONDITION
2 (LSP+) - 1 (LSP-)	Always	Below 1 Ω

NG ▶ **CHECK FLOOR WIRE (OPEN)**

OK ▼

3.	CHECK SEAT POSITION AIRBAG SENSOR CIRCUIT (SHORT)

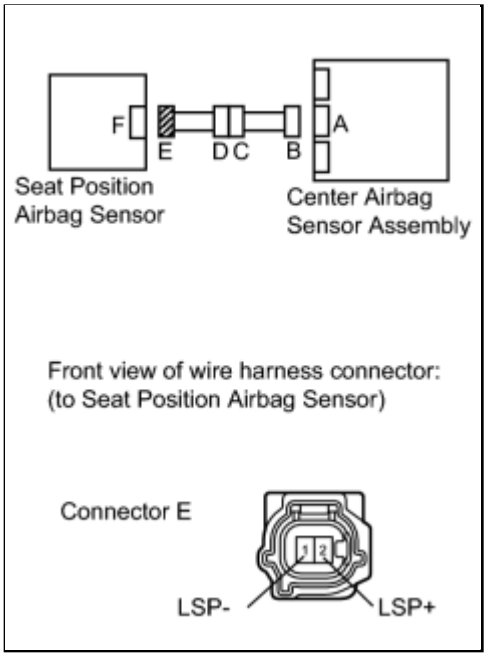

(a) Disconnect SST from connector B.

(b) Measure the resistance according to the value(s) in the table below.

Standard Resistance:

TESTER CONNECTION	CONDITION	SPECIFIED CONDITION
2 (LSP+) - 1 (LSP-)	Always	1 MΩ or higher

NG ▶ **CHECK FLOOR WIRE (SHORT)**

OK

4.	CHECK SEAT POSITION AIRBAG SENSOR CIRCUIT (SHORT TO B+)

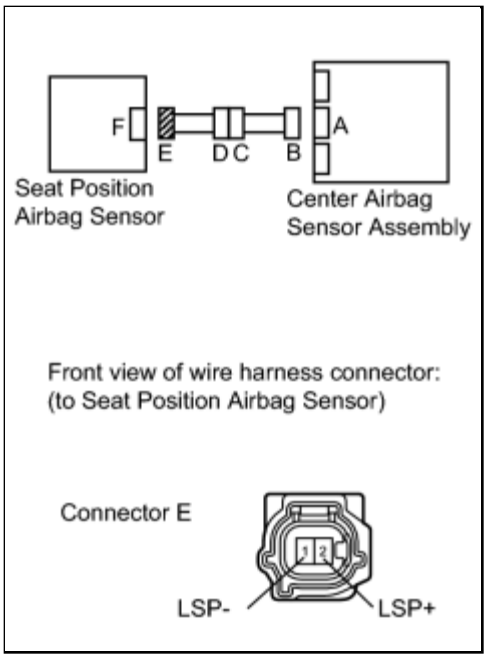

(a) Connect the cable to the negative (-) battery terminal.

(b) Turn the ignition switch to ON.

(c) Measure the voltage according to the value(s) in the table below.

Standard Voltage:

TESTER CONNECTION	SWITCH CONDITION	SPECIFIED CONDITION
2 (LSP+) - Body ground	Ignition switch ON	Below 1 V
1 (LSP-) - Body ground	Ignition switch ON	Below 1 V

NG ▶ **CHECK FLOOR WIRE (SHORT TO B+)**

OK

5.	CHECK SEAT POSITION AIRBAG SENSOR CIRCUIT (SHORT TO GROUND)

(a) Turn the ignition switch off.

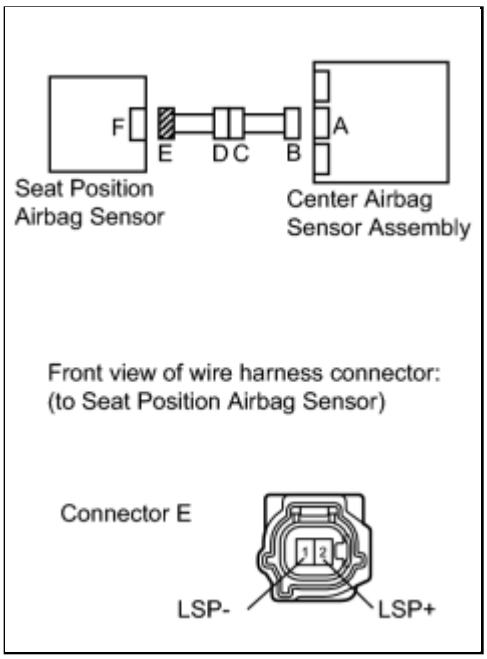

(b) Disconnect the cable from the negative (-) battery terminal, and wait for at least 90 seconds.

(c) Measure the resistance according to the value(s) in the table below.

Standard Resistance:

TESTER CONNECTION	CONDITION	SPECIFIED CONDITION
2 (LSP+) - Body ground	Always	1 MΩ or higher
1 (LSP-) - Body ground	Always	1 MΩ or higher

NG ▶ **CHECK FLOOR WIRE (SHORT TO GROUND)**

OK ▼

6.	**CHECK SEAT POSITION AIRBAG SENSOR**

(a) Connect the connectors to the center airbag sensor assembly and the seat position airbag sensor.

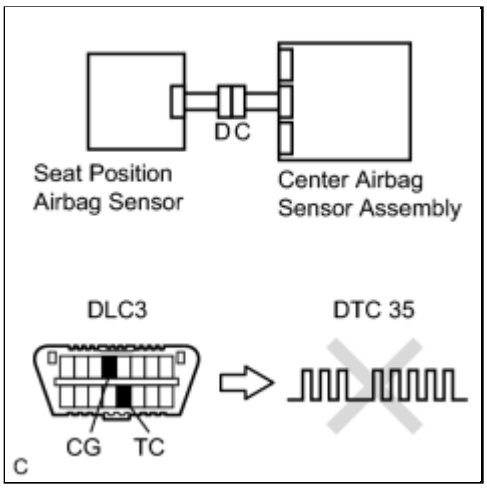

(b) Connect the cable to the negative (-) battery terminal.

(c) Turn the ignition switch to ON, and wait for at least 60 seconds.

(d) Clear the DTCs stored in the memory INFO .

(e) Turn the ignition switch off.

(f) Turn the ignition switch to ON, and wait for at least 60 seconds.

(g) Check for DTCs INFO .

OK:

DTC B1653/35 is not output.

HINT:

Codes other than DTC B1653/35 may be output at this time, but they are not related to this check.

NG ▶ **REPLACE SEAT POSITION AIRBAG SENSOR**

OK ▶ **USE SIMULATION METHOD TO CHECK**

7.	**REPLACE SEAT POSITION AIRBAG SENSOR**

(a) Turn the ignition switch off.

(b) Disconnect the cable from the negative (-) battery terminal, and wait for at least 90 seconds.

(c) Replace the seat position airbag sensor with a known good part INFO .

HINT:

Perform the following inspection using known good parts from another vehicle if possible.

NEXT

8.	CHECK CENTER AIRBAG SENSOR ASSEMBLY

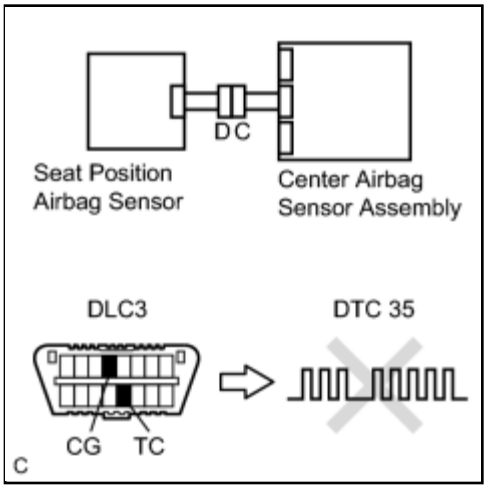

(a) Connect the cable to the negative (-) battery terminal.

(b) Turn the ignition switch to ON, and wait for at least 60 seconds.

(c) Clear the DTCs stored in the memory INFO .

(d) Turn the ignition switch off.

(e) Turn the ignition switch to ON, and wait for at least 60 seconds.

(f) Check for DTCs INFO .

OK:
DTC B1653/35 is not output.

HINT:

Codes other than DTC B1653/35 may be output at this time, but they are not related to this check.

NG ▶ **REPLACE CENTER AIRBAG SENSOR ASSEMBLY**

OK ▶ **END**

9.	CHECK FLOOR WIRE (OPEN)

(a) Disconnect the floor wire from the front seat inner belt assembly LH.

HINT:

SST has already been inserted into connector B.

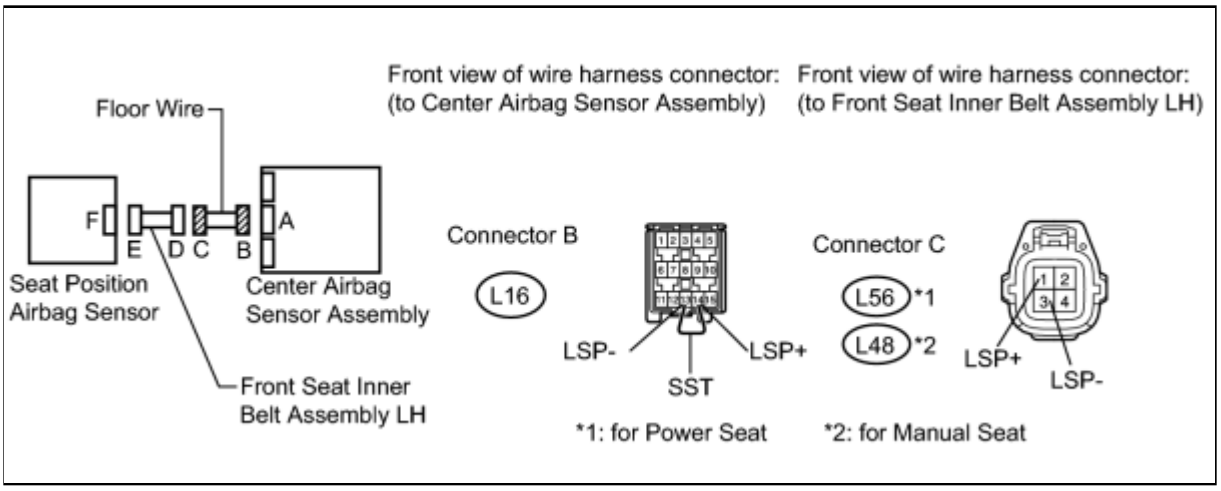

(b) Measure the resistance according to the value(s) in the table below.

Standard Resistance:

for Power Seat

for Manual Seat

TESTER CONNECTION	CONDITION	SPECIFIED CONDITION
L56-1 (LSP+) - L56-3 (LSP-)	Always	Below 1 Ω

TESTER CONNECTION	CONDITION	SPECIFIED CONDITION
L48-1 (LSP+) - L48-3 (LSP-)	Always	Below 1 Ω

NG ▶ **REPLACE FLOOR WIRE**

OK ▶ **REPLACE FRONT SEAT INNER BELT ASSEMBLY LH**

10.	**CHECK FLOOR WIRE (SHORT)**

(a) Disconnect the floor wire from the front seat belt inner belt assembly LH.

(b) Measure the resistance according to the value(s) in the table below.

Standard Resistance:

for Power Seat

for Manual Seat

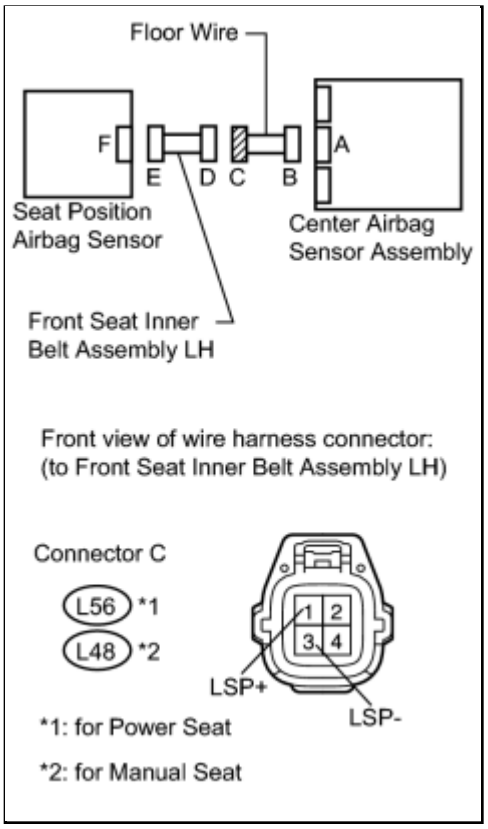

TESTER CONNECTION	CONDITION	SPECIFIED CONDITION
L56-1 (LSP+) - L56-3 (LSP-)	Always	1 MΩ or higher

TESTER CONNECTION	CONDITION	SPECIFIED CONDITION
L48-1 (LSP+) - L48-3 (LSP-)	Always	1 MΩ or higher

NG ▶ **REPLACE FLOOR WIRE**

OK ▶ **REPLACE FRONT SEAT INNER BELT ASSEMBLY LH**

11.	**CHECK FLOOR WIRE (SHORT TO B+)**

(a) Turn the ignition switch off.

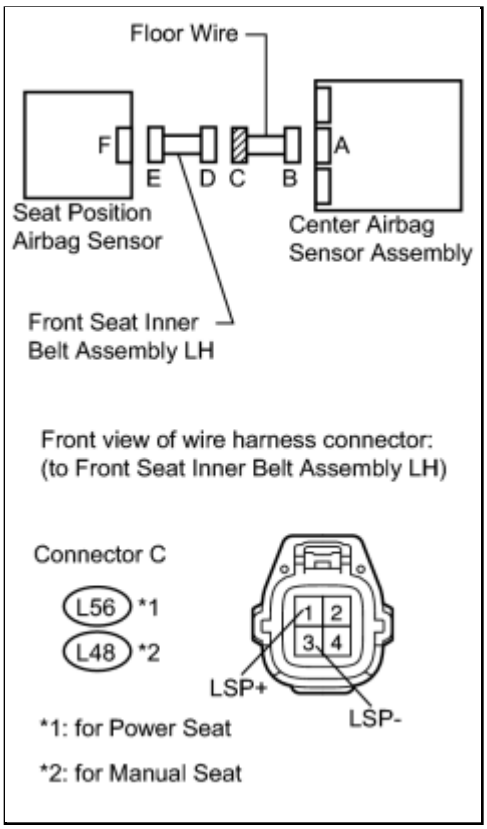

(b) Disconnect the cable from the negative (-) battery terminal, and wait for at least 90 seconds.

(c) Disconnect the floor wire from the front seat inner belt assembly LH.

(d) Connect the cable to the negative (-) battery terminal.

(e) Turn the ignition switch to ON.

(f) Measure the voltage according to the value(s) in the table below.

Standard Voltage:

for Power Seat

for Manual Seat

TESTER CONNECTION	SWITCH CONDITION	SPECIFIED CONDITION
L56-1 (LSP+) - Body ground	Ignition switch ON	Below 1 V
L56-3 (LSP-) - Body ground	Ignition switch ON	Below 1 V

TESTER CONNECTION	SWITCH CONDITION	SPECIFIED CONDITION
L48-1 (LSP+) - Body ground	Ignition switch ON	Below 1 V
L48-3 (LSP-) - Body ground	Ignition switch ON	Below 1 V

NG ▶ **REPLACE FLOOR WIRE**

OK ▶ REPLACE FRONT SEAT INNER BELT ASSEMBLY LH

12.	CHECK FLOOR WIRE (SHORT TO GROUND)

(a) Disconnect the floor wire from the front seat inner belt assembly LH.

(b) Measure the resistance according to the value(s) in the table below.

Standard Resistance:

for Power Seat

for Manual Seat

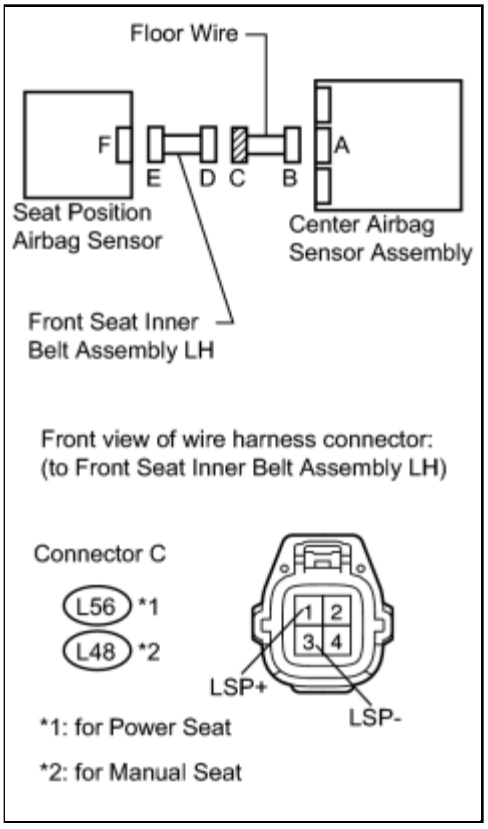

TESTER CONNECTION	CONDITION	SPECIFIED CONDITION
L56-1 (LSP+) - Body ground	Always	1 MΩ or higher
L56-3 (LSP-) - Body ground	Always	1 MΩ or higher

TESTER CONNECTION	CONDITION	SPECIFIED CONDITION
L48-1 (LSP+) - Body ground	Always	1 MΩ or higher
L48-3 (LSP-) - Body ground	Always	1 MΩ or higher

NG ▶ **REPLACE FLOOR WIRE**

OK ▶ **REPLACE FRONT SEAT INNER BELT ASSEMBLY LH**

Last Modified: 3-10-2010	6.4 C	**From:** 200901
Model Year: 2010	**Model:** Corolla	**Doc ID:** RM000001W28033X
Title: SUPPLEMENTAL RESTRAINT SYSTEMS: AIRBAG SYSTEM: B1660/43: Passenger Airbag ON/OFF Indicator Circuit Malfunction (2010 Corolla)		

DTC	**B1660/43**	**Passenger Airbag ON/OFF Indicator Circuit Malfunction**

DESCRIPTION

The passenger airbag ON/OFF indicator circuit consists of the center airbag sensor assembly and the telltale light assembly.

The passenger airbag ON/OFF indicator indicates the operation condition of the front passenger airbag, the front seat side airbag RH and front seat belt pretensioner RH.

DTC B1660/43 is recorded when a malfunction is detected in the passenger airbag ON/OFF indicator circuit.

DTC NO.	DTC DETECTING CONDITION	TROUBLE AREA
B1660/43	• The center airbag sensor assembly receives an open circuit signal, a short circuit to ground signal or a short circuit to B+ signal in the passenger airbag ON/OFF indicator circuit for 2 seconds. • Telltale light assembly malfunction • Center airbag sensor assembly malfunction	• Instrument panel wire • Telltale light assembly (Passenger airbag ON/OFF indicator) • Center airbag sensor assembly

WIRING DIAGRAM

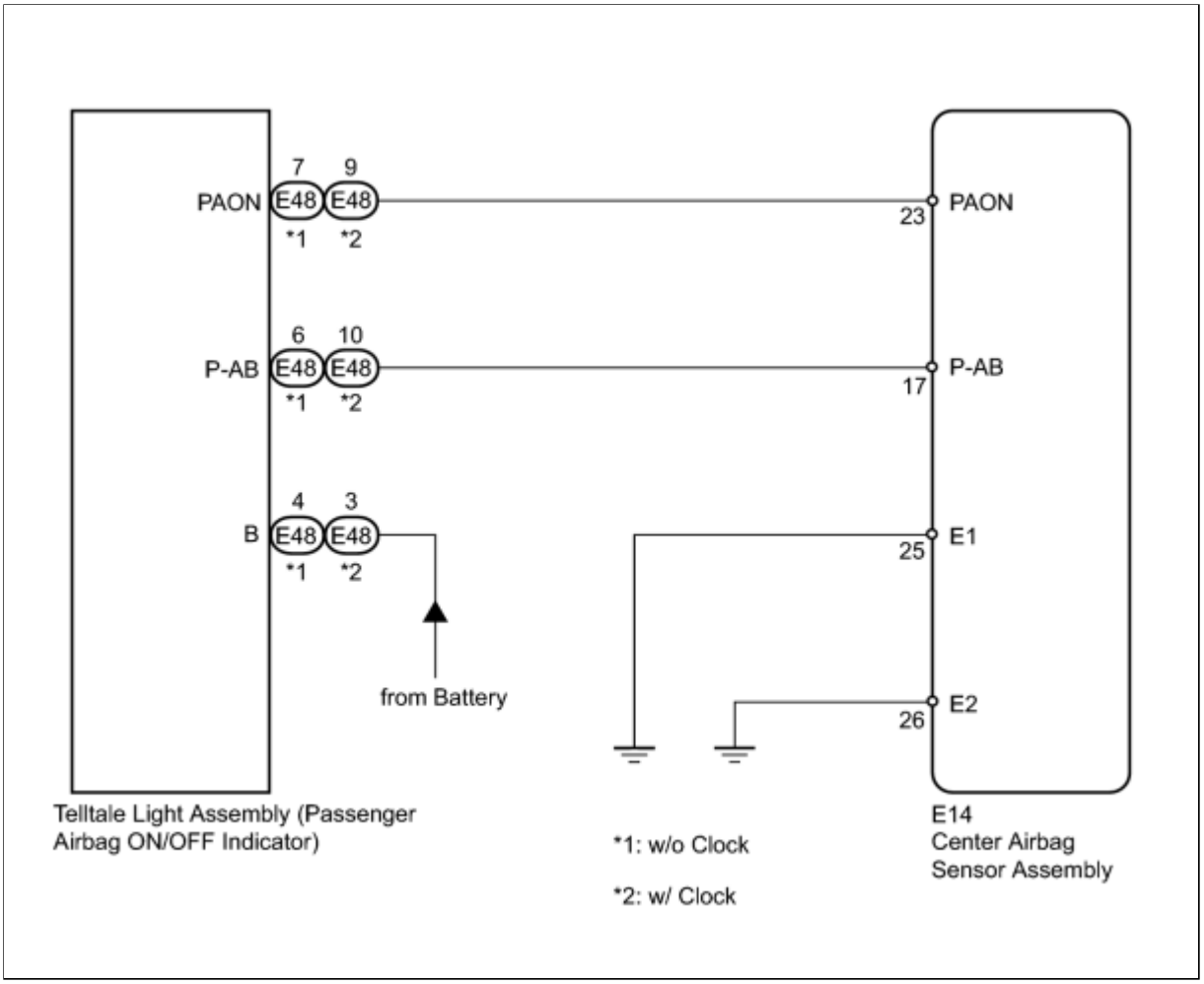

INSPECTION PROCEDURE

PROCEDURE

1.	**CHECK PASSENGER AIRBAG ON/OFF INDICATOR CONDITION**

(a) Turn the ignition switch to ON.

(b) Check the passenger airbag ON/OFF indicator operation.

HINT:

Refer to the normal condition of the passenger airbag ON/OFF indicator INFO .

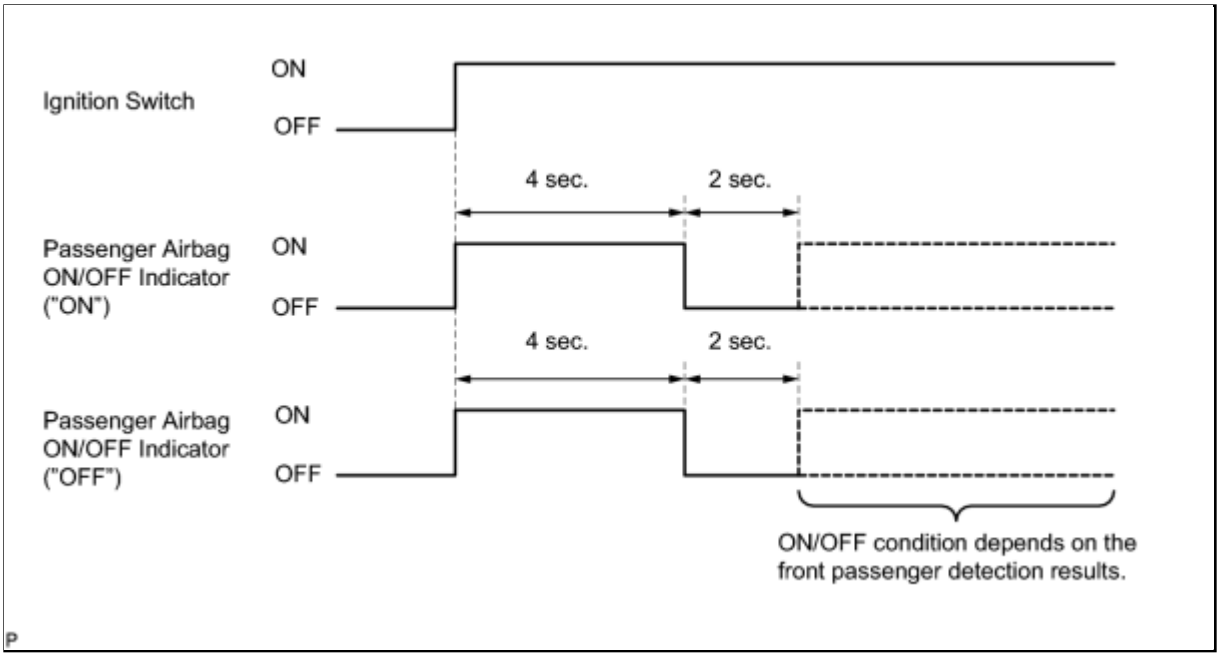

Result:

ON/OFF INDICATOR ILLUMINATION	PROCEED TO
Always ON	A
OFF	B

B ▶ CHECK CONNECTORS

A ▼

2.	**CHECK CONNECTOR**

(a) Turn the ignition switch off.

(b) Disconnect the cable from the negative (-) battery terminal, and wait for at least 90 seconds.

(c) Check that the connector is properly connected to the center airbag sensor assembly.

OK:

The connector is properly connected.

HINT:

If the connector is not connected securely, reconnect the connector and proceed to the next inspection.

(d) Disconnect the connector from the center airbag sensor assembly.

(e) Check that the terminal of the connector is not damaged.

OK:

The terminal is not deformed or damaged.

NG ▶ **REPLACE INSTRUMENT PANEL WIRE**

OK ▼

3.	**CHECK PASSENGER AIRBAG ON/OFF INDICATOR**

(a) Connect the cable to the negative (-) battery terminal.

(b) Turn the ignition switch to ON.

(c) Check the passenger airbag ON/OFF indicator operation.

OK:

The passenger airbag ON/OFF indicator does not come on.

NG ▶ **CHECK CONNECTOR**

OK ▼

4.	**CHECK CENTER AIRBAG SENSOR ASSEMBLY**

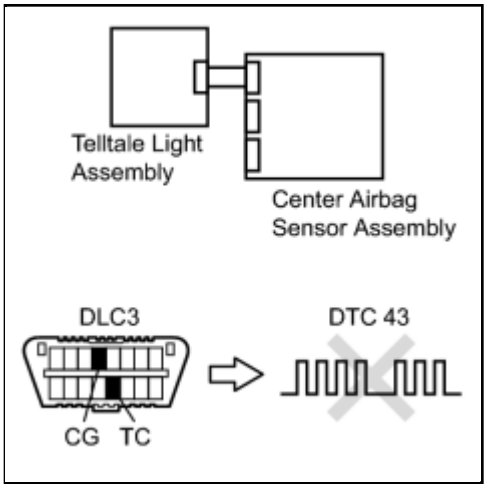

(a) Turn the ignition switch off.

(b) Disconnect the cable from the negative (-) battery terminal, and wait for at least 90 seconds.

(c) Connect the connector to the center airbag sensor assembly.

(d) Connect the cable to the negative (-) battery terminal.

(e) Turn the ignition switch to ON, and wait for at least 60 seconds.

(f) Clear the DTCs stored in the memory INFO .

(g) Turn the ignition switch off.

(h) Turn the ignition switch to ON, and wait for at least 60 seconds.

(i) Check for DTCs INFO .

OK:

DTC B1660/43 is not output.

HINT:

Codes other than DTC B1660/43 may be output at this time, but they are not related to this check.

NG ▶ **REPLACE CENTER AIRBAG SENSOR ASSEMBLY**

OK ▶ **USE SIMULATION METHOD TO CHECK**

5.	**CHECK CONNECTOR**

(a) Turn the ignition switch off.

(b) Disconnect the cable from the negative (-) battery terminal, and wait for at least 90 seconds.

(c) Check that the connector is properly connected to the telltale light assembly.

OK:

The connector is properly connected.

HINT:

If the connector is not connected securely, reconnect the connector and proceed to the next inspection.

(d) Disconnect the connector from the telltale light assembly.

(e) Check that the terminal of the connector is not damaged.

OK:

The terminal is not deformed or damaged.

NG ▶ **REPLACE INSTRUMENT PANEL WIRE**

OK

6.	CHECK INSTRUMENT PANEL WIRE (OPEN)

(a) Using SST, connect terminals 23 (PAON) and 17 (P-AB) of connector B.

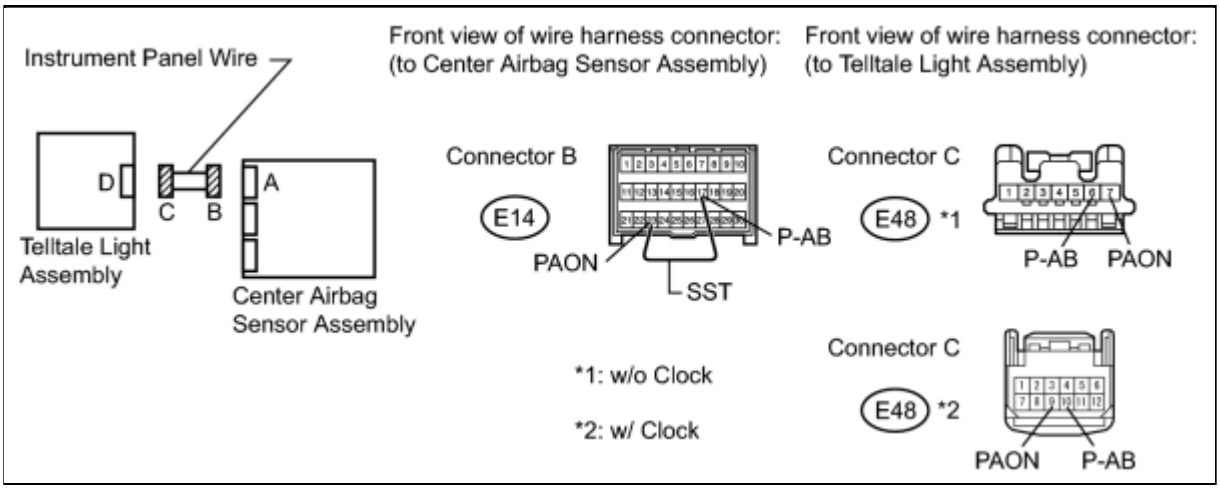

NOTICE:

Do not forcibly insert SST into the terminals of the connector when connecting.

SST: 09843-18040

(b) Measure the resistance according to the value(s) in the table below.

Standard Resistance:

w/o Clock

w/ Clock

TESTER CONNECTION	CONDITION	SPECIFIED CONDITION
E48-7 (PAON) - E48-6 (P-AB)	Always	Below 1 Ω

TESTER CONNECTION	CONDITION	SPECIFIED CONDITION
E48-9 (PAON) - E48-10 (P-AB)	Always	Below 1 Ω

NG **REPLACE INSTRUMENT PANEL WIRE**

OK

7.	CHECK INSTRUMENT PANEL WIRE (SHORT TO GROUND)

(a) Disconnect SST from connector B.

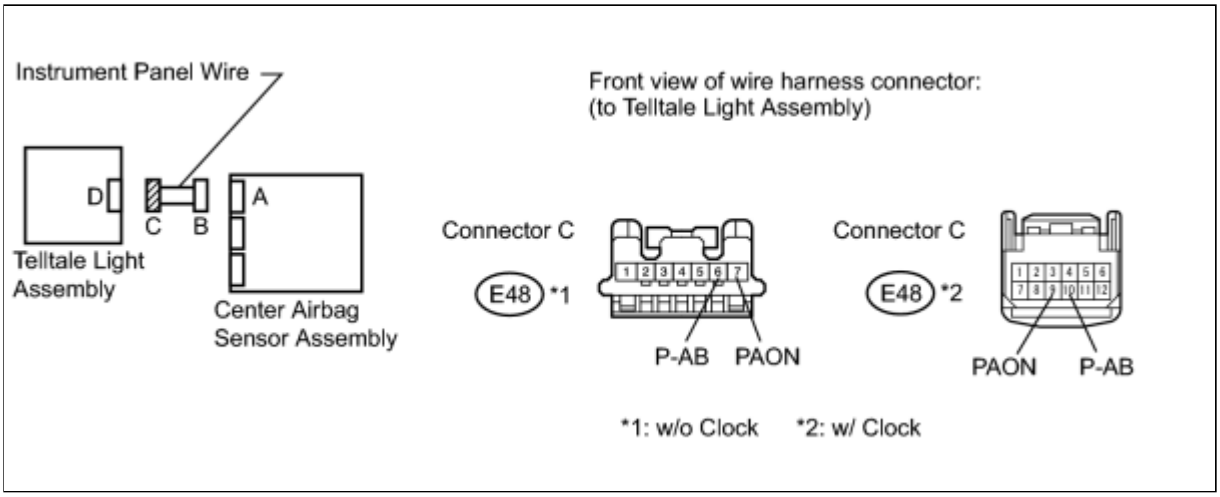

(b) Measure the resistance according to the value(s) in the table below.

Standard Resistance:

w/o Clock

w/ Clock

TESTER CONNECTION	CONDITION	SPECIFIED CONDITION
E48-7 (PAON) - Body ground	Always	1 MΩ or higher
E48-6 (P-AB) - Body ground	Always	1 MΩ or higher

TESTER CONNECTION	CONDITION	SPECIFIED CONDITION
E48-9 (PAON) - Body ground	Always	1 MΩ or higher
E48-10 (P-AB) - Body ground	Always	1 MΩ or higher

NG ▶ **REPLACE INSTRUMENT PANEL WIRE**

OK

8.	CHECK INSTRUMENT PANEL WIRE (SHORT TO B+)

(a) Connect the cable to the negative (-) battery terminal.

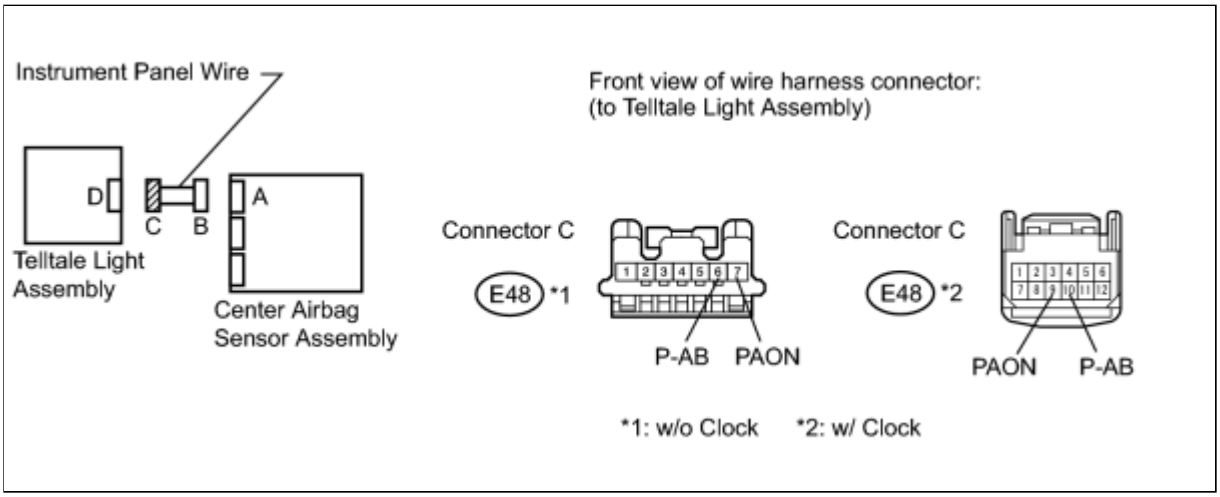

(b) Turn the ignition switch to ON.

(c) Measure the voltage according to the value(s) in the table below.

Standard Voltage:

w/o Clock

w/ Clock

TESTER CONNECTION	SWITCH CONDITION	SPECIFIED CONDITION
E48-7 (PAON) - Body ground	Ignition switch ON	Below 1 V
E48-6 (P-AB) - Body ground	Ignition switch ON	Below 1 V

TESTER CONNECTION	SWITCH CONDITION	SPECIFIED CONDITION
E48-9 (PAON) - Body ground	Ignition switch ON	Below 1 V
E48-10 (P-AB) - Body ground	Ignition switch ON	Below 1 V

NG ▶ **REPLACE INSTRUMENT PANEL WIRE**

OK ▶ **REPLACE TELLTALE LIGHT ASSEMBLY**

9.	CHECK CONNECTORS

(a) Turn the ignition switch off.

(b) Disconnect the cable from the negative (-) battery terminal, and wait for at least 90 seconds.

(c) Check that the connectors are properly connected to the center airbag sensor assembly and the telltale light assembly.

OK:

The connectors are properly connected.

HINT:

If the connectors are not connected securely, reconnect the connectors and proceed to the next inspection.

(d) Disconnect the connectors from the center airbag sensor assembly and the telltale light assembly.

(e) Check that the terminals of the connectors are not damaged.

OK:

The terminals are not deformed or damaged.

NG ▶ **REPLACE INSTRUMENT PANEL WIRE**

OK ▼

10.	CHECK INSTRUMENT PANEL WIRE (OPEN)

(a) Using SST, connect terminals 23 (PAON) and 17 (P-AB) of connector B.

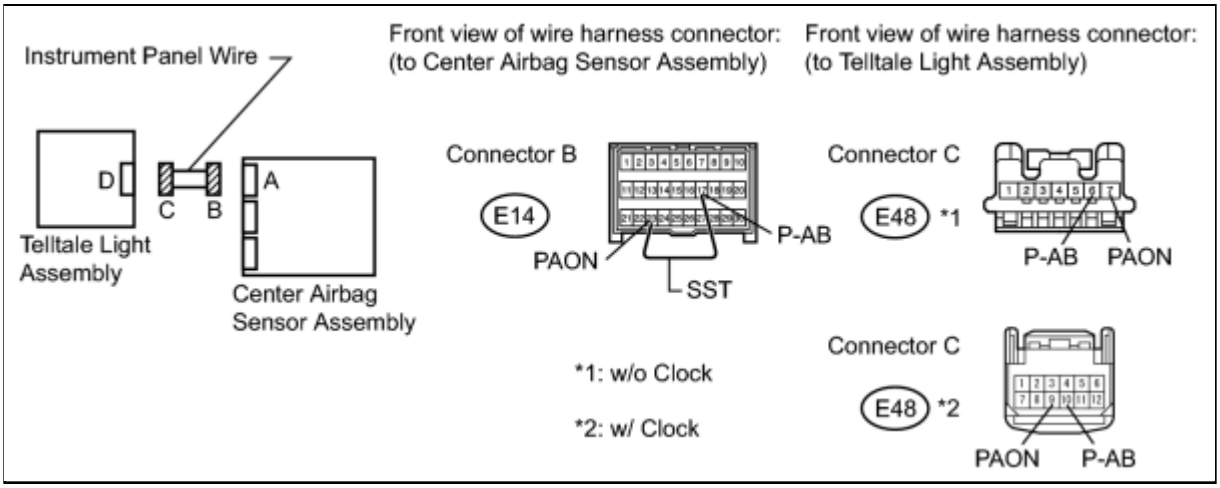

NOTICE:

Do not forcibly insert SST into the terminals of the connector when connecting.

SST: 09843-18040

(b) Measure the resistance according to the value(s) in the table below.

Standard Resistance:

w/o Clock

w/ Clock

TESTER CONNECTION	CONDITION	SPECIFIED CONDITION
E48-7 (PAON) - E48-6 (P-AB)	Always	Below 1 Ω

TESTER CONNECTION	CONDITION	SPECIFIED CONDITION
E48-9 (PAON) - E48-10 (P-AB)	Always	Below 1 Ω

NG ▶ **REPLACE INSTRUMENT PANEL WIRE**

OK ▼

11.	**CHECK INSTRUMENT PANEL WIRE (SHORT TO GROUND)**

(a) Disconnect SST from connector B.

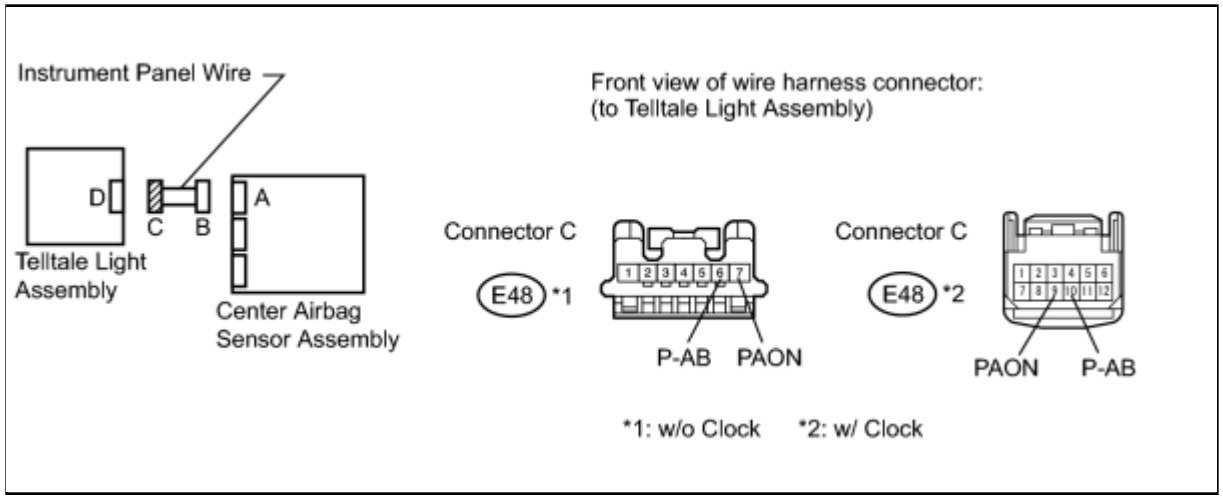

(b) Measure the resistance according to the value(s) in the table below.

Standard Resistance:

w/o Clock

w/ Clock

TESTER CONNECTION	CONDITION	SPECIFIED CONDITION

TESTER CONNECTION	CONDITION	SPECIFIED CONDITION
E48-7 (PAON) - Body ground	Always	1 MΩ or higher
E48-6 (P-AB) - Body ground	Always	1 MΩ or higher

TESTER CONNECTION	CONDITION	SPECIFIED CONDITION
E48-9 (PAON) - Body ground	Always	1 MΩ or higher
E48-10 (P-AB) - Body ground	Always	1 MΩ or higher

NG ▶ **REPLACE INSTRUMENT PANEL WIRE**

OK ▼

12.	CHECK INSTRUMENT PANEL WIRE (SHORT TO B+)

(a) Connect the cable to the negative (-) battery terminal.

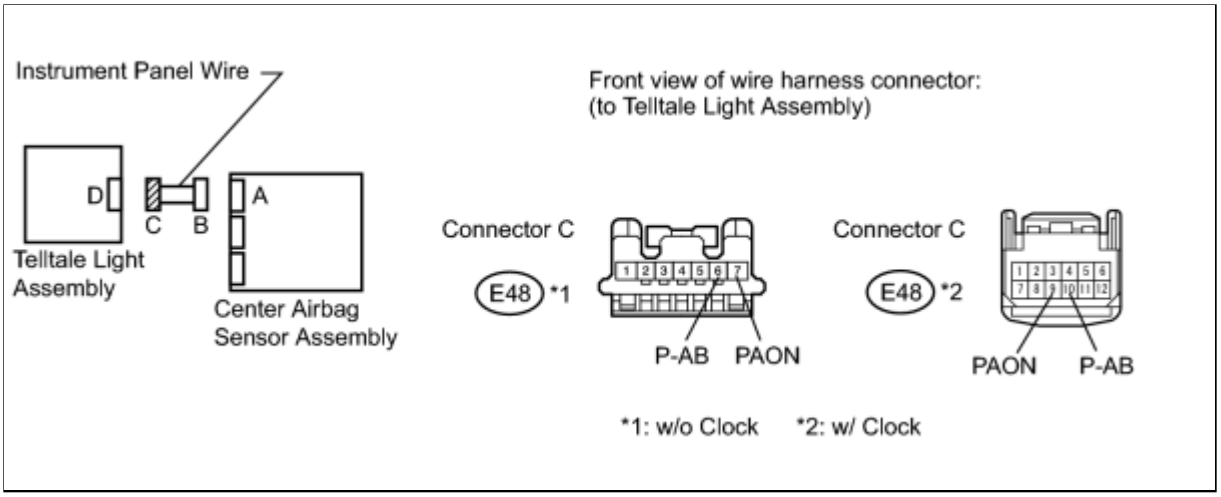

(b) Turn the ignition switch to ON.

(c) Measure the voltage according to the value(s) in the table below.

Standard Voltage:

w/o Clock

w/ Clock

TESTER CONNECTION	SWITCH CONDITION	SPECIFIED CONDITION

TESTER CONNECTION	SWITCH CONDITION	SPECIFIED CONDITION
E48-7 (PAON) - Body ground	Ignition switch ON	Below 1 V
E48-6 (P-AB) - Body ground	Ignition switch ON	Below 1 V

TESTER CONNECTION	SWITCH CONDITION	SPECIFIED CONDITION
E48-9 (PAON) - Body ground	Ignition switch ON	Below 1 V
E48-10 (P-AB) - Body ground	Ignition switch ON	Below 1 V

NG ▶ **REPLACE INSTRUMENT PANEL WIRE**

OK ▼

13.	**CHECK TELLTALE LIGHT ASSEMBLY (SOURCE VOLTAGE)**

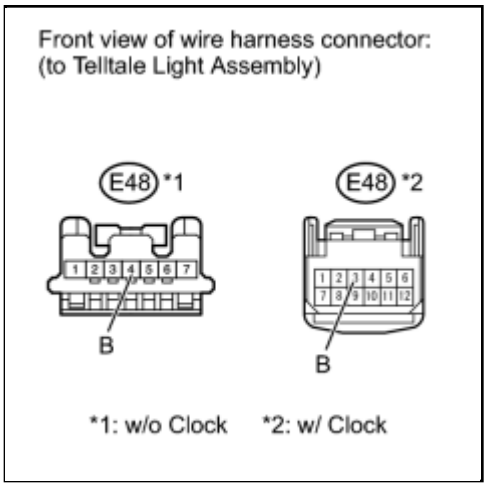

(a) Connect the connector to the center airbag sensor assembly.

(b) Connect the cable to the negative (-) battery terminal.

(c) Turn the ignition switch to ON.

(d) Measure the voltage according to the value(s) in the table below.

Standard Voltage:

w/o Clock

w/ Clock

TESTER CONNECTION	SWITCH CONDITION	SPECIFIED CONDITION

TESTER CONNECTION	SWITCH CONDITION	SPECIFIED CONDITION
E48-4 (B) - Body ground	Ignition switch ON	10 to 16V

TESTER CONNECTION	SWITCH CONDITION	SPECIFIED CONDITION
E48-3 (B) - Body ground	Ignition switch ON	10 to 16V

NG ▶ **REPLACE WIRE HARNESS OR BATTERY**

OK ▼

14.	**CHECK PASSENGER AIRBAG ON/OFF INDICATOR**

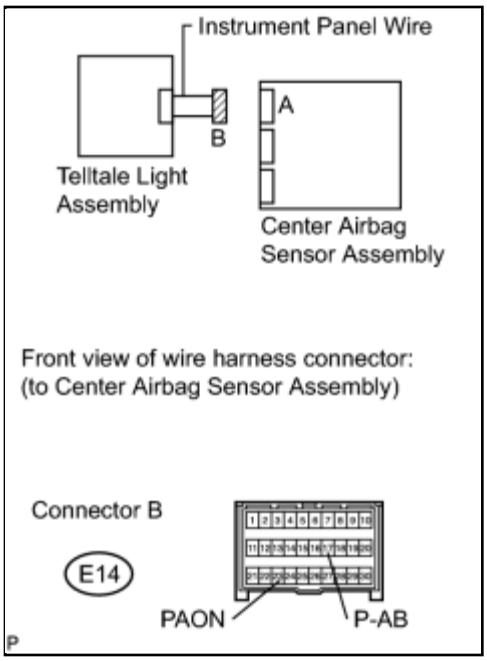

(a) Turn the ignition switch off.

(b) Disconnect the cable from the negative (-) battery terminal, and wait for at least 90 seconds.

(c) Connect the connector to the telltale light assembly.

(d) Disconnect the connector from the center airbag sensor assembly.

(e) Connect the cable to the negative (-) battery terminal.

(f) Turn the ignition switch to ON.

(g) Check the indicator according to the conditions in the table below.

Indicator Condition:

TESTER CONNECTION	SWITCH CONDITION	PASSENGER AIRBAG ON/OFF INDICATOR
E14-23 (PAON) - Body ground	Ignition switch ON	"ON" comes on
E14-17 (P-AB) - Body ground	Ignition switch ON	"OFF" comes on

NG ▶ **REPLACE TELLTALE LIGHT ASSEMBLY**

OK ▼

15.	CHECK CENTER AIRBAG SENSOR ASSEMBLY

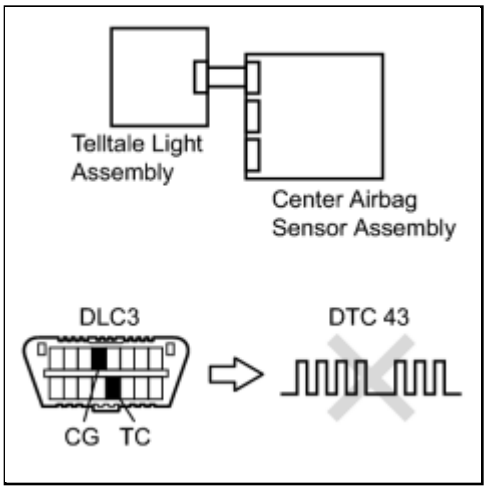

(a) Turn the ignition switch off.

(b) Disconnect the cable from the negative (-) battery terminal, and wait for at least 90 seconds.

(c) Connect the connector to the center airbag sensor assembly.

(d) Connect the cable to the negative (-) battery terminal.

(e) Turn the ignition switch to ON, and wait for at least 60 seconds.

(f) Clear the DTCs stored in the memory INFO .

(g) Turn the ignition switch off.

(h) Turn the ignition switch to ON, and wait for at least 60 seconds.

(i) Check for DTCs INFO .

OK:

DTC B1660/43 is not output.

HINT:

Codes other than DTC B1660/43 may be output at this time, but they are not related to this check.

NG ▶ **REPLACE CENTER AIRBAG SENSOR ASSEMBLY**

OK ▶ **USE SIMULATION METHOD TO CHECK**

Last Modified: 3-10-2010	6.4 C	**From:** 200901
Model Year: 2010	**Model:** Corolla	**Doc ID:** RM000001NZY025X
Title: SUPPLEMENTAL RESTRAINT SYSTEMS: AIRBAG SYSTEM: B1655/37: Driver Side Seat Belt Buckle Switch Circuit Malfunction (2010 Corolla)		

DTC	**B1655/37**	**Driver Side Seat Belt Buckle Switch Circuit Malfunction**

DESCRIPTION

The driver side seat belt buckle switch circuit consists of the center airbag sensor assembly and the front seat inner belt assembly LH.

DTC B1655/37 is recorded when a malfunction is detected in the driver side seat belt buckle switch circuit.

DTC NO.	DTC DETECTION CONDITION	TROUBLE AREA
B1655/37	• The center airbag sensor assembly receives a short circuit signal, an open circuit signal, a short circuit to ground signal or a short circuit to B+ signal in the driver side seat belt buckle switch circuit for 2 seconds. • Front seat inner belt assembly LH malfunction • Center airbag sensor assembly malfunction	• Floor wire • Front seat inner belt assembly LH (Driver side seat belt buckle switch) • Center airbag sensor assembly

WIRING DIAGRAM

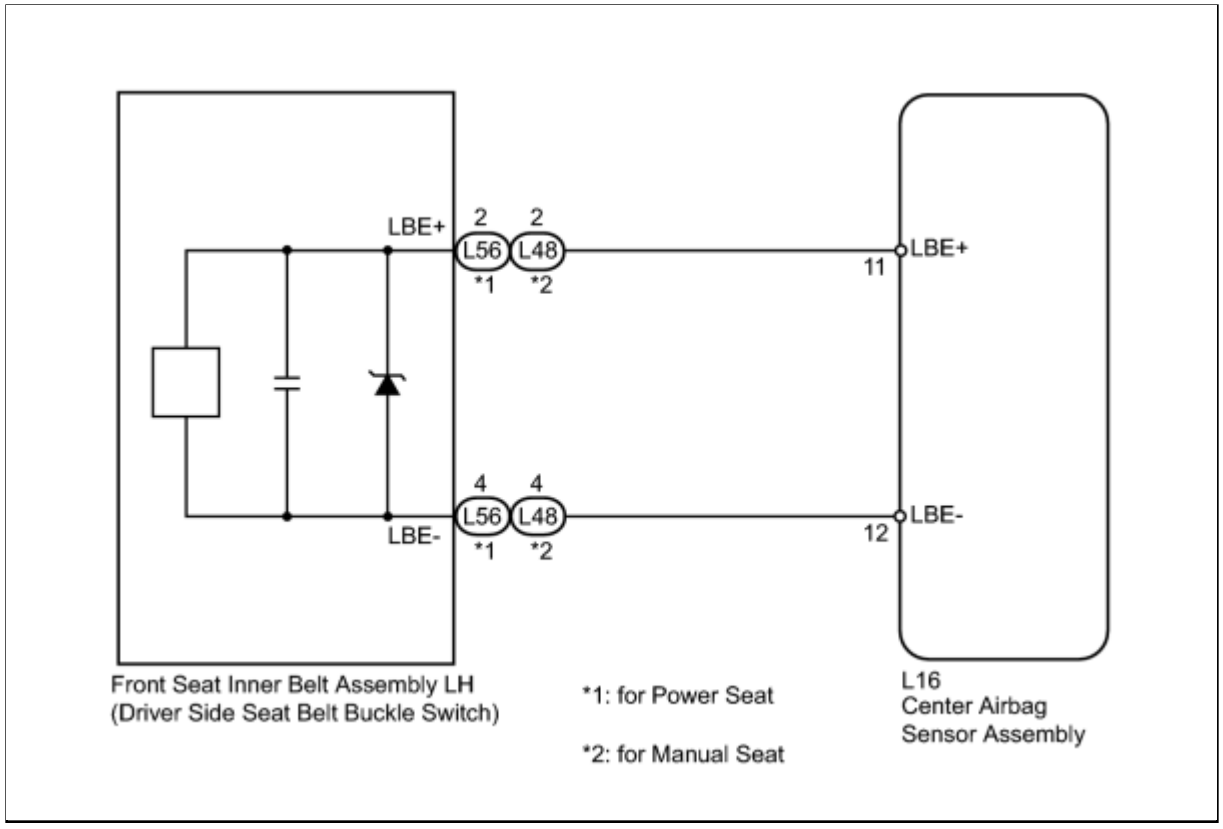

INSPECTION PROCEDURE

PROCEDURE

1.	**CHECK CONNECTORS**

(a) Turn the ignition switch off.

(b) Disconnect the cable from the negative (-) battery terminal, and wait for at least 90 seconds.

(c) Check that the connectors are properly connected to the center airbag sensor assembly and front seat inner belt assembly LH.

OK:

The connectors are properly connected.

HINT:

If the connectors are not connected securely, reconnect the connectors and proceed to the next inspection.

(d) Disconnect the connectors from the center airbag sensor assembly and the front seat inner belt assembly LH.

(e) Check that the terminals of the connectors are not damaged.

OK:

The terminals are not deformed or damaged.

NG ▶ REPLACE FLOOR WIRE

OK ▼

2.	CHECK FLOOR WIRE (OPEN)

(a) Using SST, connect terminals 11 (LBE+) and 12 (LBE-) of connector B.

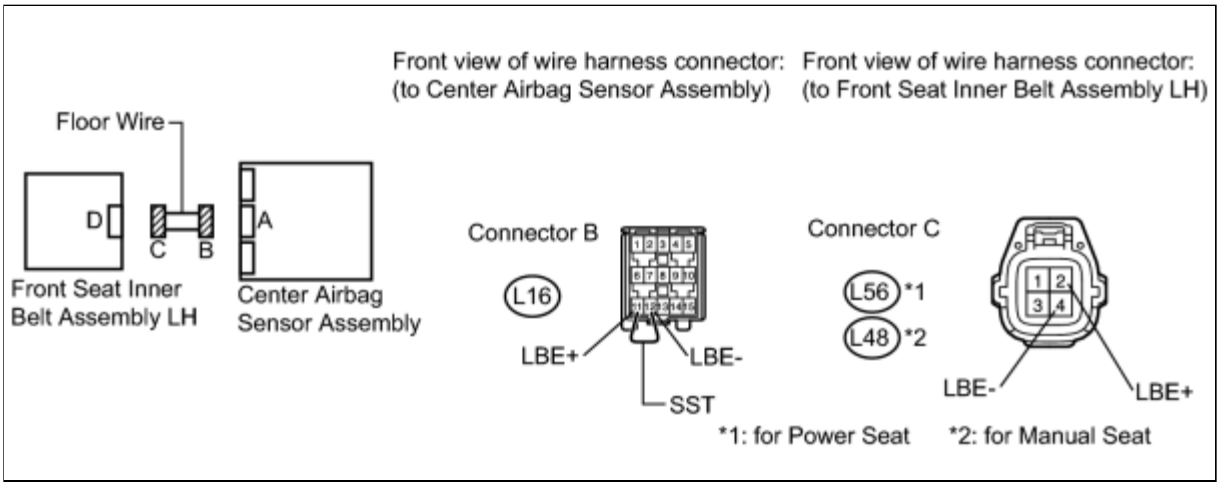

NOTICE:

Do not forcibly insert SST into the terminals of the connector when connecting the wire.

SST: 09843-18040

(b) Measure the resistance according to the value(s) in the table below.

Standard Resistance:

for Power Seat

for Manual Seat

TESTER CONNECTION	CONDITION	SPECIFIED CONDITION
L56-2 (LBE+) - L56-4 (LBE-)	Always	Below 1 Ω

TESTER CONNECTION	CONDITION	SPECIFIED CONDITION
L48-2 (LBE+) - L48-4 (LBE-)	Always	Below 1 Ω

NG ▶ REPLACE FLOOR WIRE

OK

3.	CHECK FLOOR WIRE (SHORT)

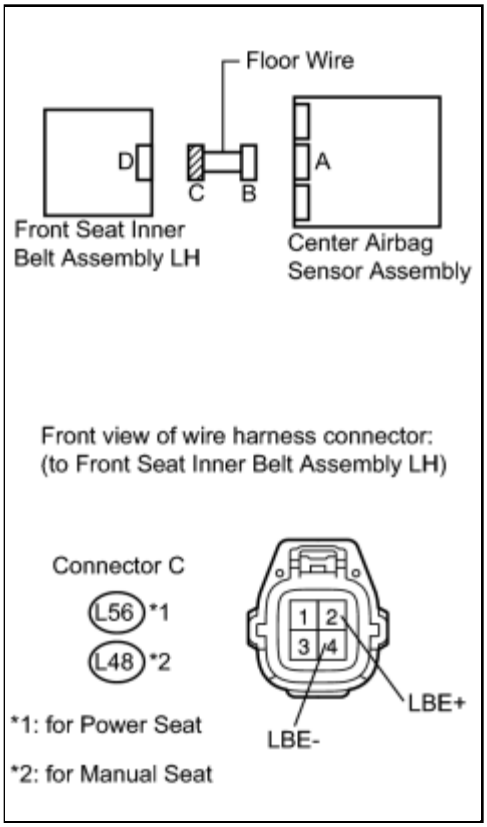

(a) Disconnect SST from connector B.

(b) Measure the resistance according to the value(s) in the table below.

Standard Resistance:

for Power Seat

for Manual Seat

TESTER CONNECTION	CONDITION	SPECIFIED CONDITION
L56-2 (LBE+) - L56-4 (LBE-)	Always	1 MΩ or higher

TESTER CONNECTION	CONDITION	SPECIFIED CONDITION
L48-2 (LBE+) - L48-4 (LBE-)	Always	1 MΩ or higher

NG ▶ **REPLACE FLOOR WIRE**

OK

4.	CHECK FLOOR WIRE (SHORT TO B+)

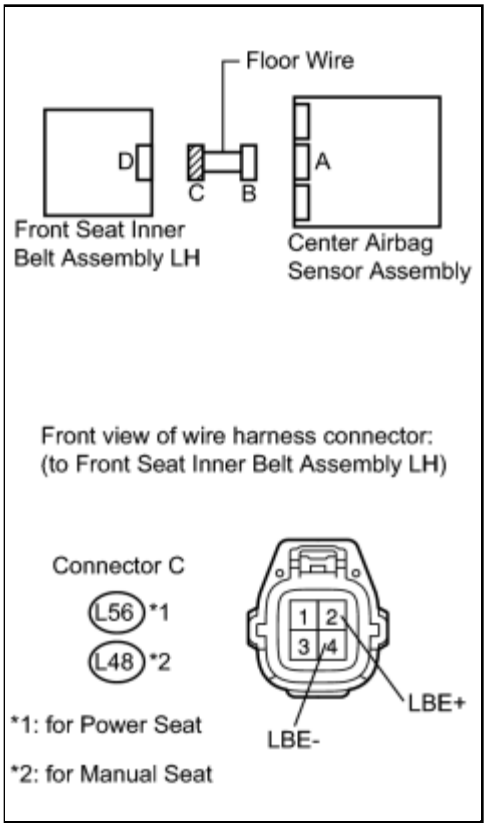

(a) Connect the cable to the negative (-) battery terminal.

(b) Turn the ignition switch to ON.

(c) Measure the voltage according to the value(s) in the table below.

Standard Voltage:

for Power Seat

for Manual Seat

TESTER CONNECTION	SWITCH CONDITION	SPECIFIED CONDITION
L56-2 (LBE+) - Body ground	Ignition switch ON	Below 1 V
L56-4 (LBE-) - Body ground	Ignition switch ON	Below 1 V

TESTER CONNECTION	SWITCH CONDITION	SPECIFIED CONDITION

TESTER CONNECTION	SWITCH CONDITION	SPECIFIED CONDITION
L48-2 (LBE+) - Body ground	Ignition switch ON	Below 1 V
L48-4 (LBE-) - Body ground	Ignition switch ON	Below 1 V

NG ▶ **REPLACE FLOOR WIRE**

OK ▼

5.	**CHECK FLOOR WIRE (SHORT TO GROUND)**

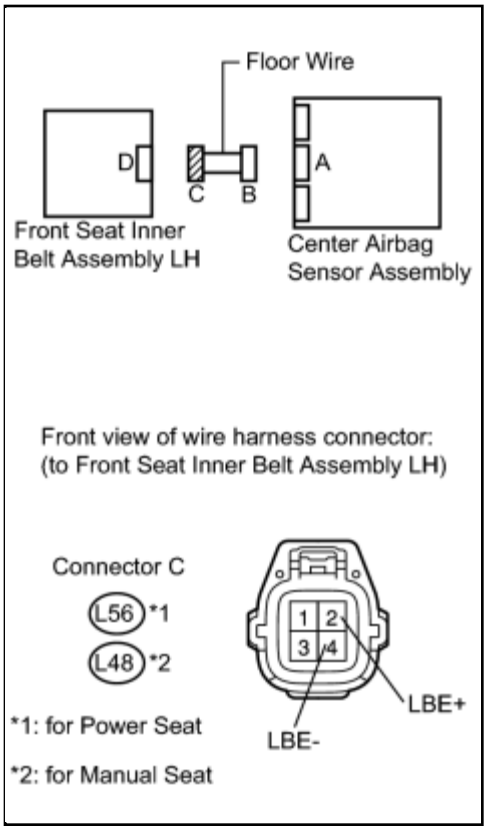

(a) Turn the ignition switch off.

(b) Disconnect the cable from the negative (-) battery terminal, and wait for at least 90 seconds.

(c) Measure the resistance according to the value(s) in the table below.

Standard Resistance:

for Power Seat

for Manual Seat

TESTER CONNECTION	CONDITION	SPECIFIED CONDITION
L56-2 (LBE+) - Body ground	Always	1 MΩ or higher
L56-4 (LBE-) - Body ground	Always	1 MΩ or higher

TESTER CONNECTION	CONDITION	SPECIFIED CONDITION
L48-2 (LBE+) - Body ground	Always	1 MΩ or higher
L48-4 (LBE-) - Body ground	Always	1 MΩ or higher

NG ▶ **REPLACE FLOOR WIRE**

OK ▼

6.	**CHECK FRONT SEAT INNER BELT ASSEMBLY LH**

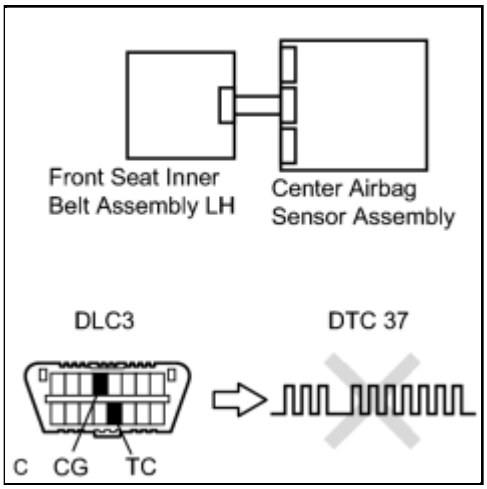

(a) Connect the connectors to the center airbag sensor assembly and the front seat inner belt assembly LH.

(b) Connect the cable to the negative (-) battery terminal.

(c) Turn the ignition switch to ON, and wait for at least 60 seconds.

(d) Clear the DTCs stored in the memory INFO .

(e) Turn the ignition switch off.

(f) Turn the ignition switch to ON, and wait for at least 60 seconds.

(g) Check for DTCs INFO .

OK:

DTC B1655/37 is not output.

HINT:

Codes other than DTC B1655/37 may be output at this time, but they are not related to this check.

NG ▶ **REPLACE FRONT SEAT INNER BELT ASSEMBLY LH**

OK ▶ **USE SIMULATION METHOD TO CHECK**

7.	REPLACE FRONT SEAT INNER BELT ASSEMBLY LH

(a) Turn the ignition switch off.

(b) Disconnect the cable from the negative (-) battery terminal, and wait for at least 90 seconds.

(c) Replace the front seat inner belt assembly LH with a known good part INFO .

HINT:

Perform the following inspection using known good parts from another vehicle if possible.

NEXT

8.	CHECK CENTER AIRBAG SENSOR ASSEMBLY

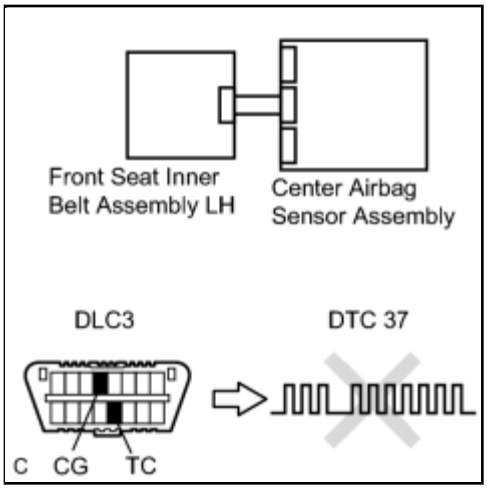

(a) Connect the cable to the negative (-) battery terminal.

(b) Turn the ignition switch to ON, and wait for at least 60 seconds.

(c) Clear the DTCs stored in the memory INFO .

(d) Turn the ignition switch off.

(e) Turn the ignition switch to ON, and wait for at least 60 seconds.

(f) Check for DTCs INFO .

OK:

DTC B1655/37 is not output.

HINT:

Codes other than DTC B1655/37 may be output at this time, but they are not related to this check.

NG ▶ **REPLACE CENTER AIRBAG SENSOR ASSEMBLY**

OK ▶ **END**

Last Modified: 3-10-2010	6.4 C	**From:** 200901
Model Year: 2010	**Model:** Corolla	**Doc ID:** RM000000XFI06GX
Title: SUPPLEMENTAL RESTRAINT SYSTEMS: AIRBAG SYSTEM: B1800/51-B1803/51: Short in Driver Side Squib Circuit (2010 Corolla)		

DTC	**B1800/51**	**Short in Driver Side Squib Circuit**

DTC	**B1801/51**	**Open in Driver Side Squib Circuit**

DTC	**B1802/51**	**Short to GND in Driver Side Squib Circuit**

DTC	**B1803/51**	**Short to B+ in Driver Side Squib Circuit**

DESCRIPTION

The driver side squib circuit consists of the center airbag sensor assembly, the spiral cable and the steering pad.
The circuit instructs the SRS to deploy when deployment conditions are met.
These DTCs are recorded when a malfunction is detected in the driver side squib circuit.

DTC NO.	DTC DETECTING CONDITION	TROUBLE AREA
B1800/51	• The center airbag sensor assembly receives a short circuit signal 5 times in the driver side squib circuit during primary check. • Driver side squib malfunction • Spiral cable malfunction • Center airbag sensor assembly malfunction	• Instrument panel wire • Spiral cable • Steering pad (Driver side squib) • Center airbag sensor assembly
B1801/51	• The center airbag sensor assembly receives an open circuit signal in the driver side squib circuit for 2 seconds. • Driver side squib malfunction • Spiral cable malfunction • Center airbag sensor assembly malfunction	• Instrument panel wire • Spiral cable • Steering pad (Driver side squib) • Center airbag sensor assembly

DTC NO.	DTC DETECTING CONDITION	TROUBLE AREA
B1802/51	• The center airbag sensor assembly receives a short circuit to ground signal in the driver side squib circuit for 0.5 seconds. • Driver side squib malfunction • Spiral cable malfunction • Center airbag sensor assembly malfunction	• Instrument panel wire • Spiral cable • Steering pad (Driver side squib) • Center airbag sensor assembly
B1803/51	• The center airbag sensor assembly receives a short circuit to B+ signal in the driver side squib circuit for 0.5 seconds. • Driver side squib malfunction • Spiral cable malfunction • Center airbag sensor assembly malfunction	• Instrument panel wire • Spiral cable • Steering pad (Driver side squib) • Center airbag sensor assembly

WIRING DIAGRAM

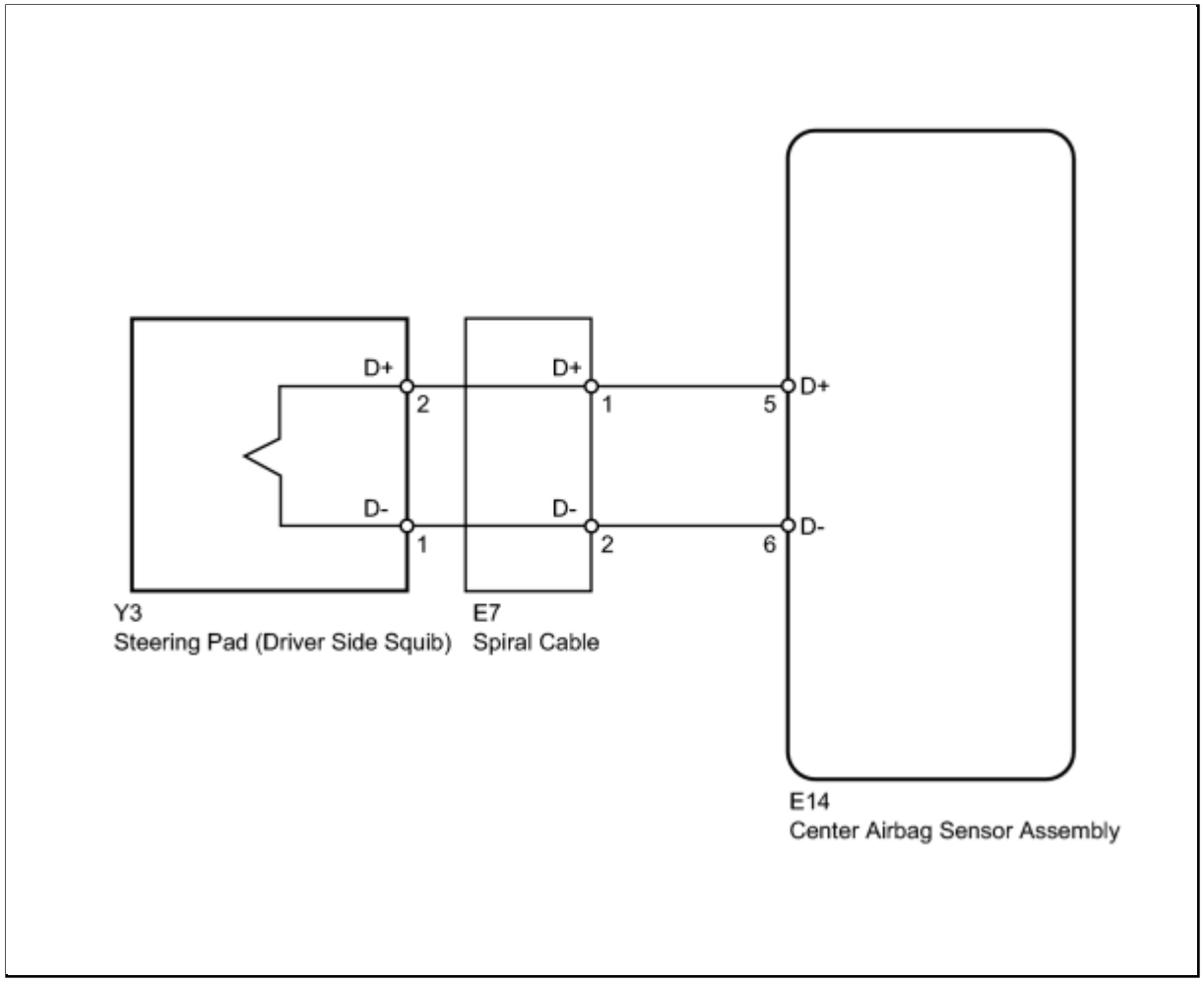

INSPECTION PROCEDURE

HINT:

- Perform the simulation method by selecting Check Mode (signal check) using the Techstream INFO .
- After selecting Check Mode (signal check), perform the simulation method by wiggling each connector of the airbag system or driving the vehicle on a city or rough road INFO .

PROCEDURE

1.	**CHECK CONNECTORS**

(a) Turn the ignition switch off.

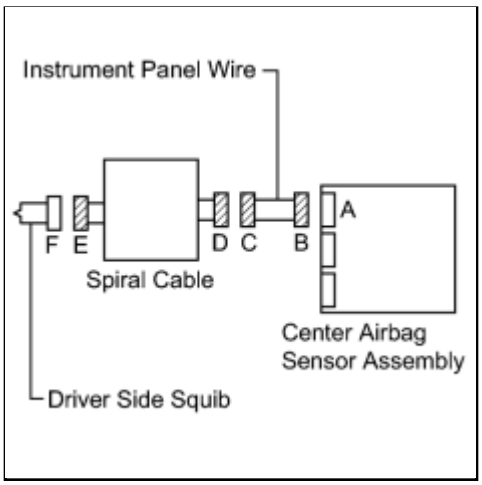

(b) Disconnect the cable from the negative (-) battery terminal, and wait for at least 90 seconds.

(c) Check that the connectors are properly connected to the steering pad, spiral cable and center airbag sensor assembly.

OK:

The connectors are properly connected.

HINT:

If the connectors are not connected securely, reconnect the connectors and proceed to the next inspection.

(d) Disconnect the connectors from the steering pad, spiral cable and center airbag sensor assembly.

(e) Check that the terminals of the connectors are not damaged.

OK:

The terminals are not deformed or damaged.

(f) Check that the spiral cable connector (on the steering pad side) is not damaged.

OK:

The lock button is not disengaged, or the claw of the lock is not deformed or damaged.

(g) Check that the short springs for the instrument panel wire and spiral cable with the activation prevention mechanism are not deformed or damaged.

OK:

The short springs are not deformed or damaged.

NG ▶ **REPLACE WIRE HARNESS**

OK ▼

2.	CHECK STEERING PAD (DRIVER SIDE SQUIB)

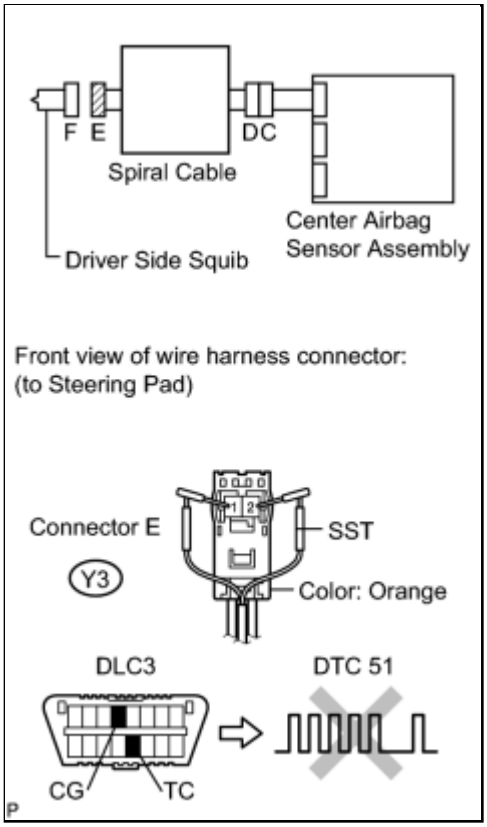

(a) Connect the instrument panel wire to the center airbag sensor assembly and spiral cable.

(b) Connect SST (resistance 2.1 Ω) to connector E (orange connector).

CAUTION:

Never connect the tester to the steering pad (driver side squib) for measurement, as this may lead to a serious injury due to airbag deployment.

NOTICE:

- Do not forcibly insert SST into the terminals of the connector when connecting.
- Insert SST straight into the terminals of the connector.

SST: 09843-18061

(c) Connect the cable to the negative (-) battery terminal.

(d) Turn the ignition switch to ON, and wait for at least 60 seconds.

(e) Clear the DTCs stored in the memory INFO .

(f) Turn the ignition switch off.

(g) Turn the ignition switch to ON, and wait for at least 60 seconds.

(h) Check for DTCs INFO .

OK:

DTC B1800, B1801, B1802, B1803, or 51 is not output.

HINT:

Codes other than DTC B1800, B1801, B1802, B1803, and 51 may be output at this time, but they are not related to this check.

NG ▶ **CHECK DRIVER SIDE SQUIB CIRCUIT**

OK ▶ **REPLACE STEERING PAD**

3.	CHECK DRIVER SIDE SQUIB CIRCUIT

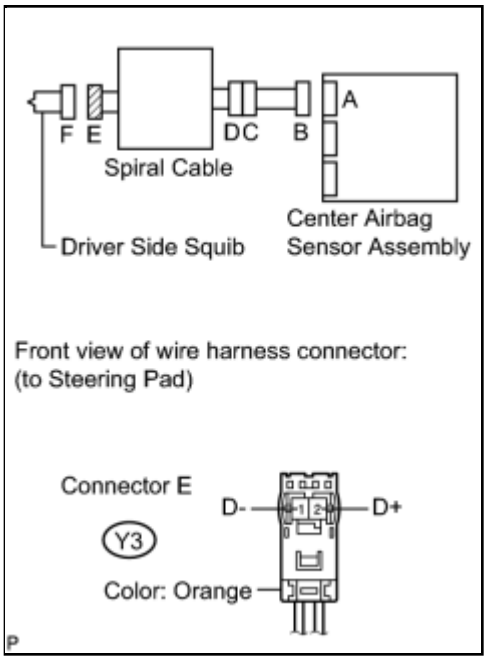

(a) Turn the ignition switch off.

(b) Disconnect the cable from the negative (-) battery terminal, and wait for at least 90 seconds.

(c) Disconnect SST from connector E.

(d) Disconnect the instrument panel wire from the center airbag sensor assembly.

(e) Check for a short to B+ in the circuit.

(1) Connect the cable to the negative (-) battery terminal.

(2) Turn the ignition switch to ON.

(3) Measure the voltage according to the value(s) in the table below.

Standard Voltage:

TESTER CONNECTION	SWITCH CONDITION	SPECIFIED CONDITION

TESTER CONNECTION	SWITCH CONDITION	SPECIFIED CONDITION
Y3-2 (D+) - Body ground	Ignition switch ON	Below 1 V
Y3-1 (D-) - Body ground	Ignition switch ON	Below 1 V

(f) Check for an open in the circuit.

(1) Turn the ignition switch off.

(2) Disconnect the cable from the negative (-) battery terminal, and wait for at least 90 seconds.

(3) Measure the resistance according to the value(s) in the table below.

Standard Resistance:

TESTER CONNECTION	CONDITION	SPECIFIED CONDITION
Y3-2 (D+) - Y3-1 (D-)	Always	Below 1 Ω

(g) Check for a short to ground in the circuit.

(1) Measure the resistance according to the value(s) in the table below.

Standard Resistance:

TESTER CONNECTION	CONDITION	SPECIFIED CONDITION
Y3-2 (D+) - Body ground	Always	1 MΩ or higher
Y3-1 (D-) - Body ground	Always	1 MΩ or higher

(h) Check for a short in the circuit.

(1) Release the activation prevention mechanism built into connector B INFO .

(2) Measure the resistance according to the value(s) in the table below.

Standard Resistance:

TESTER CONNECTION	CONDITION	SPECIFIED CONDITION
Y3-2 (D+) - Y3-1 (D-)	Always	1 MΩ or higher

NG ▶ **CHECK INSTRUMENT PANEL WIRE**

OK ▼

4.	CHECK CENTER AIRBAG SENSOR ASSEMBLY

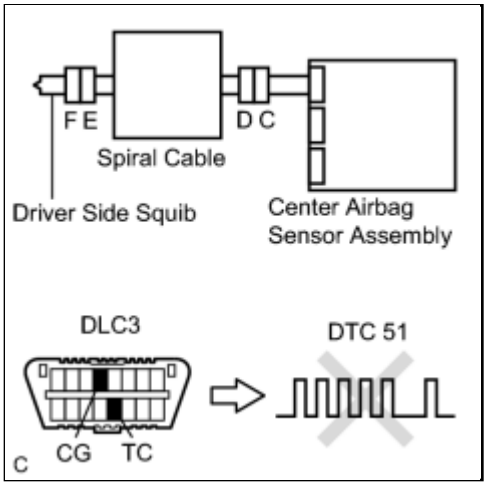

(a) Restore the released activation prevention mechanism of connector B to the original condition.

(b) Connect the connectors to the steering pad and the center airbag sensor assembly.

(c) Connect the cable to the negative (-) battery terminal.

(d) Turn the ignition switch to ON, and wait for at least 60 seconds.

(e) Clear the DTCs stored in the memory INFO .

(f) Turn the ignition switch off.

(g) Turn the ignition switch to ON, and wait for at least 60 seconds.

(h) Check for DTCs INFO .

OK:
DTC B1800, B1801, B1802, B1803, or 51 is not output.

HINT:

Codes other than DTC B1800, B1801, B1802, B1803, and 51 may be output at this time, but they are not related to this check.

NG ▶ **REPLACE CENTER AIRBAG SENSOR ASSEMBLY**

OK ▶ **USE SIMULATION METHOD TO CHECK**

5.	CHECK INSTRUMENT PANEL WIRE

(a) Restore the released activation prevention mechanism of connector B to the original condition.

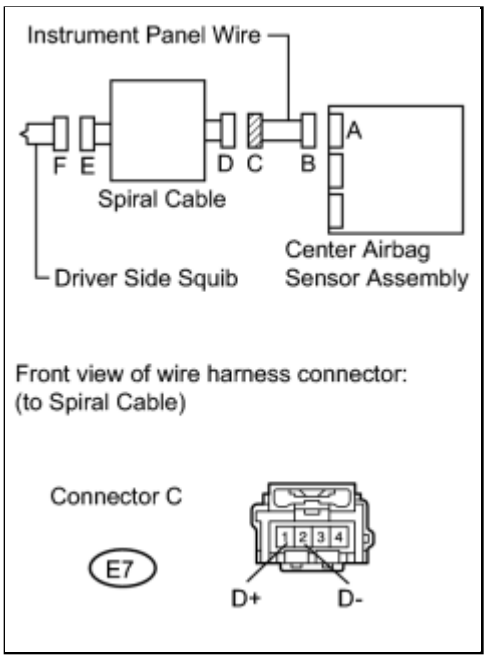

(b) Disconnect the instrument panel wire from the spiral cable.

(c) Check for a short to B+ in the circuit.

(1) Connect the cable to the negative (-) battery terminal.

(2) Turn the ignition switch to ON.

(3) Measure the voltage according to the value(s) in the table below.

Standard Voltage:

TESTER CONNECTION	SWITCH CONDITION	SPECIFIED CONDITION
E7-1 (D+) - Body ground	Ignition switch ON	Below 1 V
E7-2 (D-) - Body ground	Ignition switch ON	Below 1 V

(d) Check for an open in the circuit.

(1) Turn the ignition switch off.

(2) Disconnect the cable from the negative (-) battery terminal, and wait for at least 90 seconds.

(3) Measure the resistance according to the value(s) in the table below.

Standard Resistance:

TESTER CONNECTION	CONDITION	SPECIFIED CONDITION
E7-1 (D+) - E7-2 (D-)	Always	Below 1 Ω

(e) Check for a short to ground in the circuit.

(1) Measure the resistance according to the value(s) in the table below.

Standard Resistance:

TESTER CONNECTION	CONDITION	SPECIFIED CONDITION
E7-1 (D+) - Body ground	Always	1 MΩ or higher
E7-2 (D-) - Body ground	Always	1 MΩ or higher

(f) Check for a short in the circuit.

(1) Release the activation prevention mechanism built into connector B INFO .

(2) Measure the resistance according to the value(s) in the table below.

Standard Resistance:

TESTER CONNECTION	CONDITION	SPECIFIED CONDITION
E7-1 (D+) - E7-2 (D-)	Always	1 MΩ or higher

NG ▶ **REPLACE INSTRUMENT PANEL WIRE**

OK ▼

6.	**CHECK SPIRAL CABLE**

(a) Check for a short to B+ in the circuit.

(1) Connect the cable to the negative (-) battery terminal.

(2) Turn the ignition switch to ON.

(3) Measure the voltage according to the value(s) in the table below.

Standard Voltage:

TESTER CONNECTION	SWITCH CONDITION	SPECIFIED CONDITION
Y3-2 (D+) - Body ground	Ignition switch ON	Below 1 V

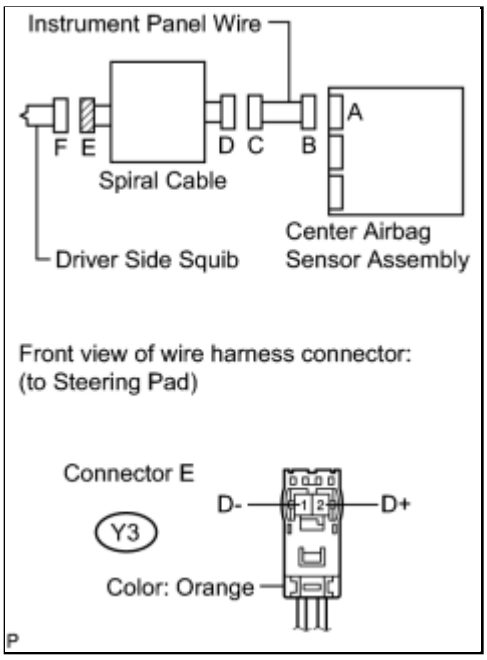

Y3-1 (D-) - Body ground	Ignition switch ON	Below 1 V

(b) Check for an open in the circuit.

(1) Turn the ignition switch off.

(2) Disconnect the cable from the negative (-) battery terminal, and wait for at least 90 seconds.

(3) Measure the resistance according to the value(s) in the table below.

Standard Resistance:

TESTER CONNECTION	CONDITION	SPECIFIED CONDITION
Y3-2 (D+) - Y3-1 (D-)	Always	Below 1 Ω

(c) Check for a short to ground in the circuit.

(1) Measure the resistance according to the value(s) in the table below.

Standard Resistance:

TESTER CONNECTION	CONDITION	SPECIFIED CONDITION
Y3-2 (D+) - Body ground	Always	1 MΩ or higher
Y3-1 (D-) - Body ground	Always	1 MΩ or higher

(d) Check for a short in the circuit.

(1) Release the activation prevention mechanism built into connector D INFO .

(2) Measure the resistance according to the value(s) in the table below.

Standard Resistance:

TESTER CONNECTION	CONDITION	SPECIFIED CONDITION
Y3-2 (D+) - Y3-1 (D-)	Always	1 MΩ or higher

NG ▶ **REPLACE SPIRAL CABLE**

OK ▶ **USE SIMULATION METHOD TO CHECK**

Last Modified: 3-10-2010	6.4 C	**From:** 200901
Model Year: 2010	**Model:** Corolla	**Doc ID:** RM000000XFJ06IX
Title: SUPPLEMENTAL RESTRAINT SYSTEMS: AIRBAG SYSTEM: B1805/52-B1808/52: Short in Front Passenger Side Squib Circuit (2010 Corolla)		

DTC	**B1805/52**	**Short in Front Passenger Side Squib Circuit**

DTC	**B1806/52**	**Open in Front Passenger Side Squib Circuit**

DTC	**B1807/52**	**Short to GND in Front Passenger Side Squib Circuit**

DTC	**B1808/52**	**Short to B+ in Front Passenger Side Squib Circuit**

DESCRIPTION

The front passenger side squib circuit consists of the center airbag sensor assembly and the front passenger airbag assembly.

The circuit instructs the SRS to deploy when deployment conditions are met.

These DTCs are recorded when a malfunction is detected in the front passenger side squib circuit.

DTC NO.	DTC DETECTION CONDITION	TROUBLE AREA
B1805/52	• The center airbag sensor assembly receives a short circuit signal 5 times in the front passenger side squib circuit during primary check. • Front passenger side squib malfunction • Center airbag sensor assembly malfunction	• Instrument panel wire • Instrument panel wire assembly • Front passenger airbag assembly (Front passenger side squib) • Center airbag sensor assembly
B1806/52	• The center airbag sensor assembly receives an open circuit signal in the front passenger side squib circuit for 2 seconds. • Front passenger side squib malfunction • Center airbag sensor assembly malfunction	• Instrument panel wire • Instrument panel wire assembly • Front passenger airbag assembly (Front passenger side squib)

DTC NO.	DTC DETECTION CONDITION	TROUBLE AREA
		• Center airbag sensor assembly
B1807/52	• The center airbag sensor assembly receives a short circuit to ground signal in the front passenger side squib circuit for 0.5 seconds. • Front passenger side squib malfunction • Center airbag sensor assembly malfunction	• Instrument panel wire • Instrument panel wire assembly • Front passenger airbag assembly (Front passenger side squib) • Center airbag sensor assembly
B1808/52	• The center airbag sensor assembly receives a short circuit to B+ signal in the front passenger side squib circuit for 0.5 seconds. • Front passenger side squib malfunction • Center airbag sensor assembly malfunction	• Instrument panel wire • Instrument panel wire assembly • Front passenger airbag assembly (Front passenger side squib) • Center airbag sensor assembly

WIRING DIAGRAM

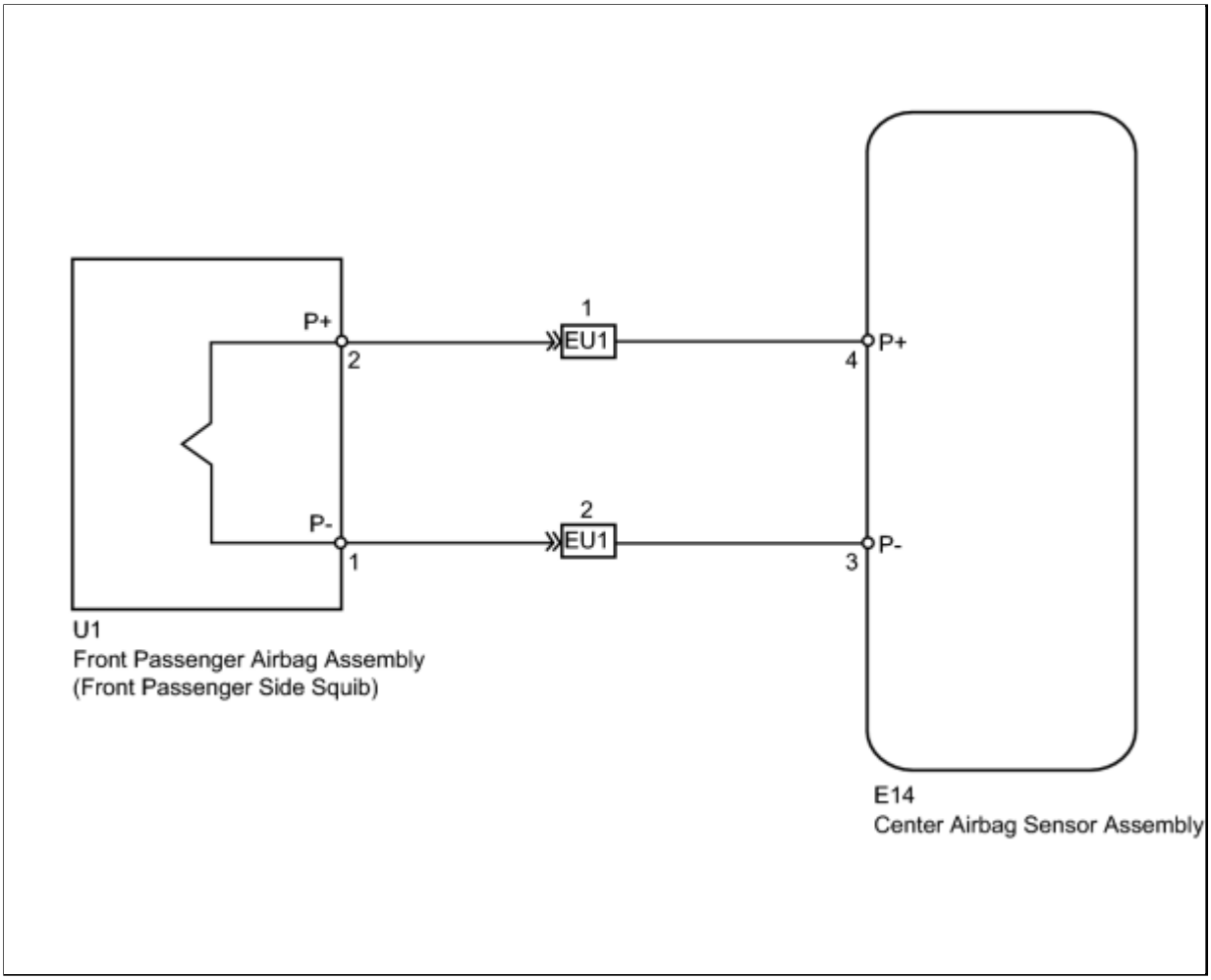

INSPECTION PROCEDURE

HINT:

- Perform the simulation method by selecting Check Mode (signal check) using the Techstream INFO .
- After selecting Check Mode (signal check), perform the simulation method by wiggling each connector of the airbag system or driving the vehicle on a city or rough road INFO .

PROCEDURE

1.	**CHECK CONNECTOR**

(a) Turn the ignition switch off.

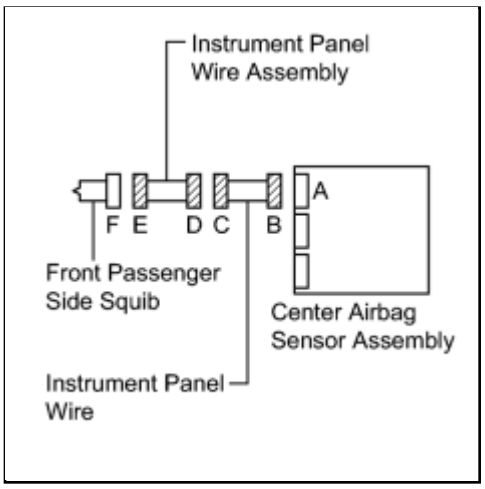

(b) Disconnect the cable from the negative (-) battery terminal, and wait for at least 90 seconds.

(c) Check that the connectors are properly connected to the front passenger airbag assembly and center airbag sensor assembly. Also check that the connectors that link the instrument panel wire assembly and instrument panel wire are properly connected.

OK:

The connectors are properly connected.

HINT:

If the connectors are not connected securely, reconnect the connectors and proceed to the next inspection.

(d) Disconnect the connectors from the front passenger airbag assembly and center airbag sensor assembly. Also disconnect the instrument panel wire from the instrument panel wire assembly.

(e) Check that the terminals of the connectors are not damaged.

OK:

The terminals are not deformed or damaged.

(f) Check that the instrument panel wire assembly connector (on the front passenger airbag assembly side) is not damaged.

OK:

The lock button is not disengaged, or the claw of the lock is not deformed or damaged.

(g) Check that the short springs for the instrument panel wire and instrument panel wire assembly with the activation prevention mechanism are not deformed or damaged.

OK:

The short springs are not deformed or damaged.

NG ▶ **REPLACE WIRE HARNESS**

OK ▼

2.	CHECK FRONT PASSENGER AIRBAG ASSEMBLY (FRONT PASSENGER SIDE SQUIB)

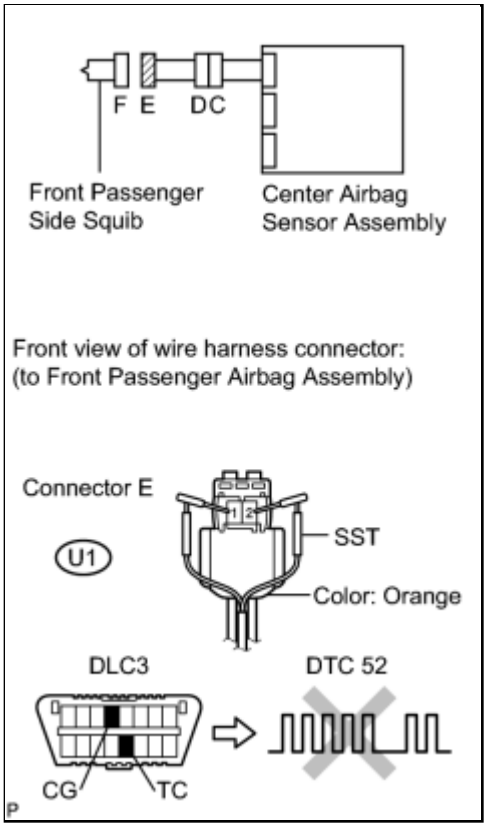

(a) Connect the instrument panel wire to the instrument panel wire assembly and center airbag sensor assembly.

(b) Connect SST (resistance 2.1 Ω) to connector E (orange connector).

CAUTION:

Never connect the tester to the front passenger airbag assembly (front passenger side squib) for measurement, as this may lead to a serious injury due to airbag deployment.

NOTICE:

- Do not forcibly insert SST into the terminals of the connector when connecting.
- Insert SST straight into the terminals of the connector.

SST: 09843-18061

(c) Connect the cable to the negative (-) battery terminal.

(d) Turn the ignition switch to ON, and wait for at least 60 seconds.

(e) Clear the DTCs stored in the memory INFO .

(f) Turn the ignition switch off.

(g) Turn the ignition switch to ON, and wait for at least 60 seconds.

(h) Check for DTCs INFO .

OK:

DTC B1805, B1806, B1807, B1808, or 52 is not output.

HINT:

Codes other than DTC B1805, B1806, B1807, B1808, and 52 may be output at this time, but they are not related to this check.

NG ▶ **CHECK FRONT PASSENGER SIDE SQUIB CIRCUIT**

OK ▶ **REPLACE FRONT PASSENGER AIRBAG ASSEMBLY**

3.	**CHECK FRONT PASSENGER SIDE SQUIB CIRCUIT**

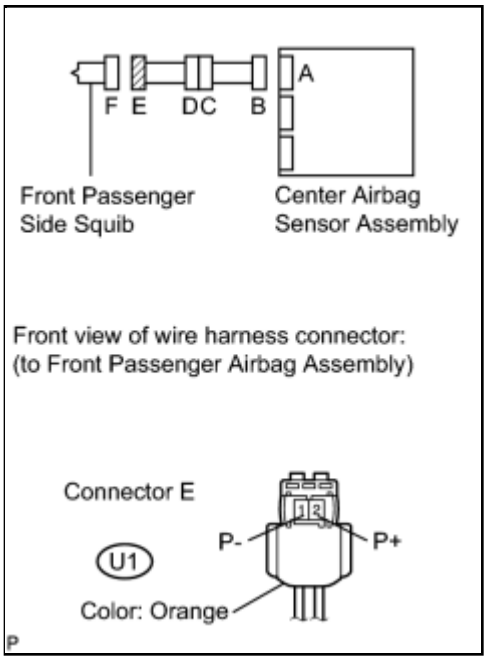

(a) Turn the ignition switch off.

(b) Disconnect the cable from the negative (-) battery terminal, and wait for at least 90 seconds.

(c) Disconnect SST from connector E.

(d) Disconnect the instrument panel wire from the center airbag sensor assembly.

(e) Check for a short to B+ in the circuit.

(1) Connect the cable to the negative (-) battery terminal.

(2) Turn the ignition switch to ON.

(3) Measure the voltage according to the value(s) in the table below.

Standard Voltage:

TESTER CONNECTION	SWITCH CONDITION	SPECIFIED CONDITION

TESTER CONNECTION	SWITCH CONDITION	SPECIFIED CONDITION
U1-2 (P+) - Body ground	Ignition switch ON	Below 1 V
U1-1 (P-) - Body ground	Ignition switch ON	Below 1 V

(f) Check for an open in the circuit.

(1) Turn the ignition switch off.

(2) Disconnect the cable from the negative (-) battery terminal, and wait for at least 90 seconds.

(3) Measure the resistance according to the value(s) in the table below.

Standard Resistance:

TESTER CONNECTION	CONDITION	SPECIFIED CONDITION
U1-2 (P+) - U1-1 (P-)	Always	Below 1 Ω

(g) Check for a short to ground in the circuit.

(1) Measure the resistance according to the value(s) in the table below.

Standard Resistance:

TESTER CONNECTION	CONDITION	SPECIFIED CONDITION
U1-2 (P+) - Body ground	Always	1 MΩ or higher
U1-1 (P-) - Body ground	Always	1 MΩ or higher

(h) Check for a short in the circuit.

(1) Release the activation prevention mechanism built into connector B INFO .

(2) Measure the resistance according to the value(s) in the table below.

Standard Resistance:

TESTER CONNECTION	CONDITION	SPECIFIED CONDITION
U1-2 (P+) - U1-1 (P-)	Always	1 MΩ or higher

NG ▶ **CHECK INSTRUMENT PANEL WIRE**

OK ▼

4.	CHECK CENTER AIRBAG SENSOR ASSEMBLY

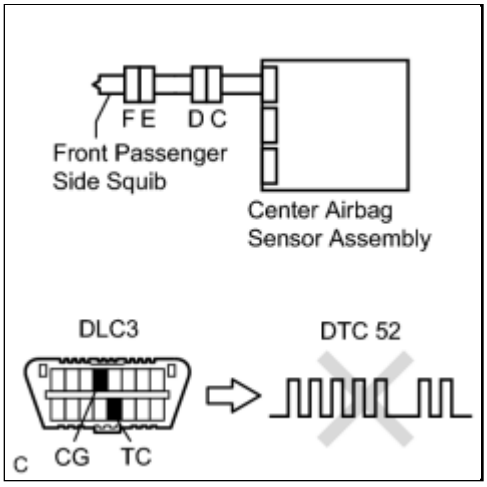

(a) Restore the released activation prevention mechanism of connector B to the original condition.

(b) Connect the connectors to the front passenger airbag assembly and the center airbag sensor assembly.

(c) Connect the cable to the negative (-) battery terminal.

(d) Turn the ignition switch to ON, and wait for at least 60 seconds.

(e) Clear the DTCs stored in the memory INFO .

(f) Turn the ignition switch off.

(g) Turn the ignition switch to ON, and wait for at least 60 seconds.

(h) Check for DTCs INFO .

OK:

DTC B1805, B1806, B1807, B1808, or 52 is not output.

HINT:

Codes other than DTC B1805, B1806, B1807, B1808, and 52 may be output at this time, but they are not related to this check.

NG ▶ **REPLACE CENTER AIRBAG SENSOR ASSEMBLY**

OK ▶ **USE SIMULATION METHOD TO CHECK**

5.	CHECK INSTRUMENT PANEL WIRE

(a) Restore the released activation prevention

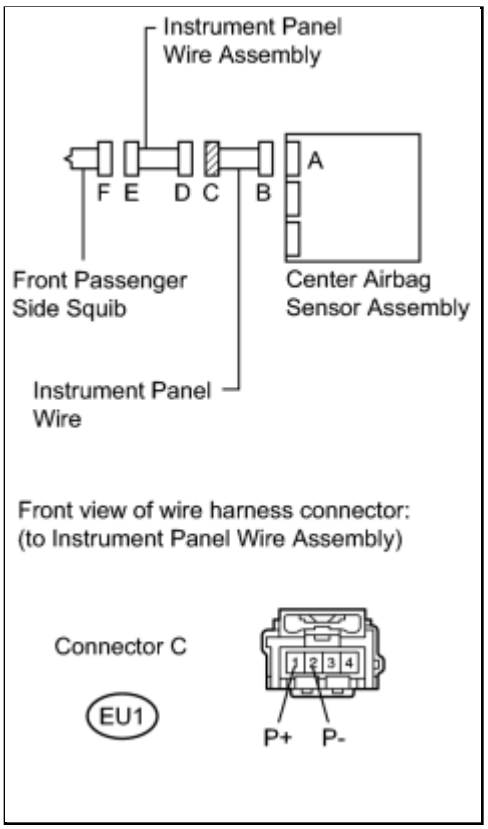

mechanism of connector B to the original condition.

(b) Check for a short to B+ in the circuit.

(1) Connect the cable to the negative (-) battery terminal.

(2) Turn the ignition switch to ON.

(3) Measure the voltage according to the value(s) in the table below.

Standard Voltage:

TESTER CONNECTION	SWITCH CONDITION	SPECIFIED CONDITION
EU1-1 (P+) - Body ground	Ignition switch ON	Below 1 V
EU1-2 (P-) - Body ground	Ignition switch ON	Below 1 V

(c) Check for an open in the circuit.

(1) Turn the ignition switch off.

(2) Disconnect the cable from the negative (-) battery terminal, and wait for at least 90 seconds.

(3) Measure the resistance according to the value(s) in the table below.

Standard Resistance:

TESTER CONNECTION	CONDITION	SPECIFIED CONDITION
EU1-1 (P+) - EU1-2 (P-)	Always	Below 1 Ω

(d) Check for a short to ground in the circuit.

(1) Measure the resistance according to the value(s) in the table below.

Standard Resistance:

TESTER CONNECTION	CONDITION	SPECIFIED CONDITION
EU1-1 (P+) - Body ground	Always	1 MΩ or higher
EU1-2 (P-) - Body ground	Always	1 MΩ or higher

(e) Check for a short in the circuit.

(1) Release the activation prevention mechanism built into connector B INFO .

(2) Measure the resistance according to the value(s) in the table below.

Standard Resistance:

TESTER CONNECTION	CONDITION	SPECIFIED CONDITION
EU1-1 (P+) - EU1-2 (P-)	Always	1 MΩ or higher

NG ▶ **REPLACE INSTRUMENT PANEL WIRE**

OK ▼

6.	**CHECK INSTRUMENT PANEL WIRE ASSEMBLY**

(a) Check for a short to B+ in the circuit.

(1) Connect the cable to the negative (-) battery terminal.

(2) Turn the ignition switch to ON.

(3) Measure the voltage according to the value(s) in the table below.

Standard Voltage:

TESTER CONNECTION	SWITCH CONDITION	SPECIFIED CONDITION
U1-2 (P+) - Body ground	Ignition switch ON	Below 1 V

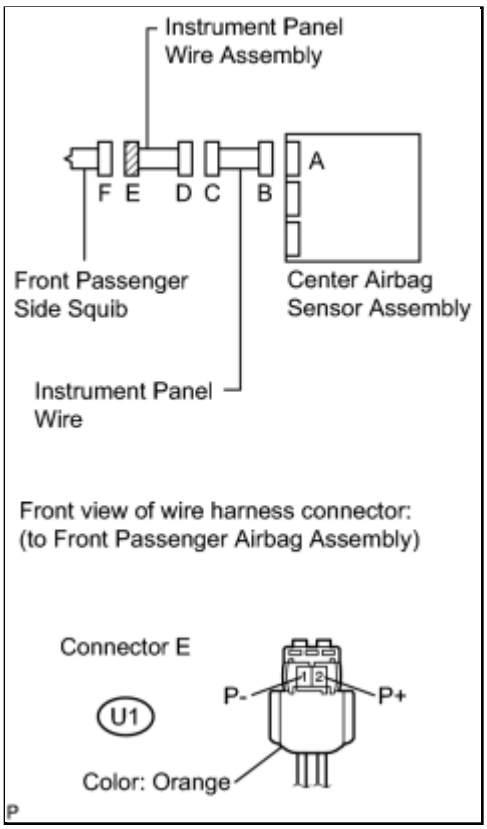

U1-1 (P-) - Body ground	Ignition switch ON	Below 1 V

(b) Check for an open in the circuit.

(1) Turn the ignition switch off.

(2) Disconnect the cable from the negative (-) battery terminal, and wait for at least 90 seconds.

(3) Measure the resistance according to the value(s) in the table below.

Standard Resistance:

TESTER CONNECTION	CONDITION	SPECIFIED CONDITION
U1-2 (P+) - U1-1 (P-)	Always	Below 1 Ω

(c) Check for a short to ground in the circuit.

(1) Measure the resistance according to the value(s) in the table below.

Standard Resistance:

TESTER CONNECTION	CONDITION	SPECIFIED CONDITION
U1-2 (P+) - Body ground	Always	1 MΩ or higher
U1-1 (P-) - Body ground	Always	1 MΩ or higher

(d) Check for a short in the circuit.

(1) Release the activation prevention mechanism built into connector D INFO .

(2) Measure the resistance according to the value(s) in the table below.

Standard Resistance:

TESTER CONNECTION	CONDITION	SPECIFIED CONDITION
U1-2 (P+) - U1-1 (P-)	Always	1 MΩ or higher

NG ▶ **REPLACE INSTRUMENT PANEL WIRE ASSEMBLY**

OK ▶ **USE SIMULATION METHOD TO CHECK**

Last Modified: 3-10-2010	6.4 C	**From:** 200901
Model Year: 2010	**Model:** Corolla	**Doc ID:** RM000000XFI06HX
Title: SUPPLEMENTAL RESTRAINT SYSTEMS: AIRBAG SYSTEM: B1810/53-B1813/53: Short in Driver Side Squib 2nd Step Circuit (2010 Corolla)		

DTC	**B1810/53**	**Short in Driver Side Squib 2nd Step Circuit**

DTC	**B1811/53**	**Open in Driver Side Squib 2nd Step Circuit**

DTC	**B1812/53**	**Short to GND in Driver Side Squib 2nd Step Circuit**

DTC	**B1813/53**	**Short to B+ in Driver Side Squib 2nd Step Circuit**

DESCRIPTION

The driver side squib 2nd step circuit consists of the center airbag sensor assembly, the spiral cable and the steering pad.
The circuit instructs the SRS to deploy when deployment conditions are met.
These DTCs are recorded when a malfunction is detected in the driver side squib 2nd step circuit.

DTC NO.	DTC DETECTION CONDITION	TROUBLE AREA
B1810/53	• The center airbag sensor assembly receives a short circuit signal 5 times in the driver side squib 2nd step circuit during primary check. • Driver side squib 2nd step malfunction • Spiral cable malfunction • Center airbag sensor assembly malfunction	• Instrument panel wire • Spiral cable • Steering pad (Driver side squib 2nd step) • Center airbag sensor assembly
B1811/53	• The center airbag sensor assembly receives an open circuit signal in the driver side squib 2nd step circuit for 2 seconds. • Driver side squib 2nd step malfunction • Spiral cable malfunction • Center airbag sensor assembly malfunction	• Instrument panel wire • Spiral cable • Steering pad (Driver side squib 2nd step) • Center airbag sensor assembly

DTC NO.	DTC DETECTION CONDITION	TROUBLE AREA
B1812/53	• The center airbag sensor assembly receives a short circuit to ground signal in the driver side squib 2nd step circuit for 0.5 seconds. • Driver side squib 2nd step malfunction • Spiral cable malfunction • Center airbag sensor assembly malfunction	• Instrument panel wire • Spiral cable • Steering pad (Driver side squib 2nd step) • Center airbag sensor assembly
B1813/53	• The center airbag sensor assembly receives a short circuit to B+ signal in the driver side squib 2nd step circuit for 0.5 seconds. • Driver side squib 2nd step malfunction • Spiral cable malfunction • Center airbag sensor assembly malfunction	• Instrument panel wire • Spiral cable • Steering pad (Driver side squib 2nd step) • Center airbag sensor assembly

WIRING DIAGRAM

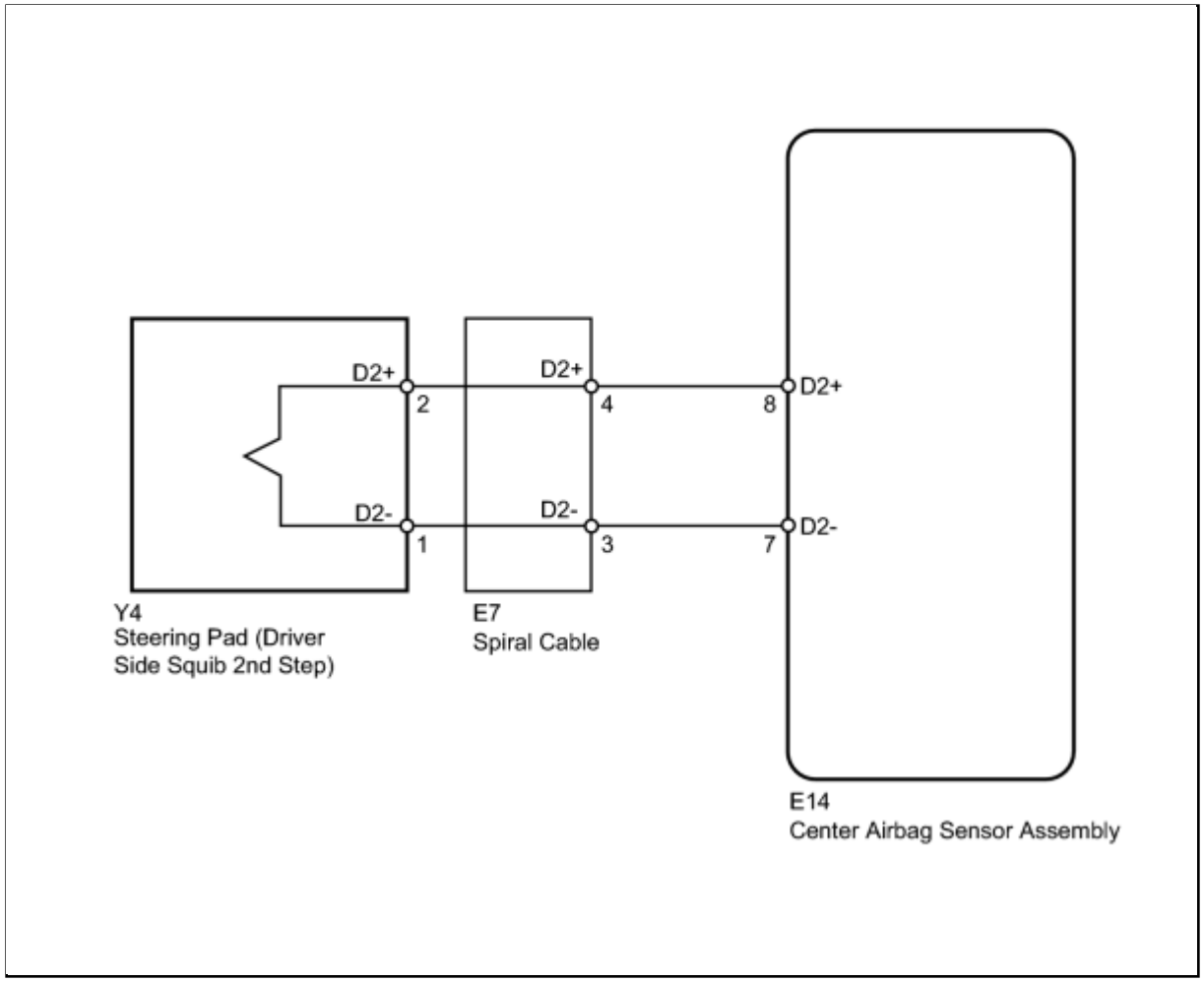

INSPECTION PROCEDURE

HINT:

- Perform the simulation method by selecting Check Mode (signal check) using the Techstream INFO .
- After selecting Check Mode (signal check), perform the simulation method by wiggling each connector of the airbag system or driving the vehicle on a city or rough road INFO .

PROCEDURE

1.	**CHECK CONNECTORS**

(a) Turn the ignition switch off.

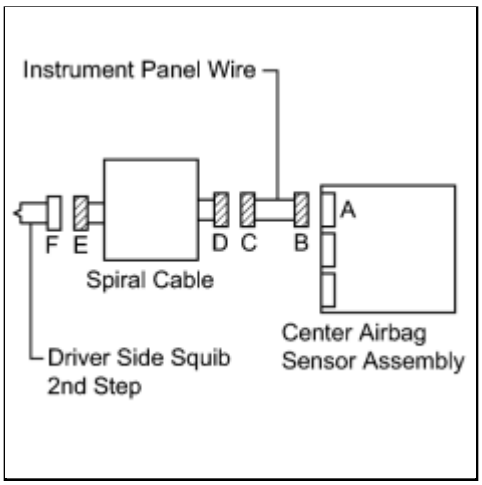

(b) Disconnect the cable from the negative (-) battery terminal, and wait for at least 90 seconds.

(c) Check that the connectors are properly connected to the steering pad, spiral cable and center airbag sensor assembly.

OK:

The connectors are properly connected.

HINT:

If the connectors are not connected securely, reconnect the connectors and proceed to the next inspection.

(d) Disconnect the connectors from the steering pad, spiral cable and center airbag sensor assembly.

(e) Check that the terminals of the connectors are not damaged.

OK:

The terminals are not deformed or damaged.

(f) Check that the spiral cable connector (on the steering pad side) is not damaged.

OK:

The lock button is not disengaged, and the claw of the lock is not deformed or damaged.

(g) Check that the short springs for the instrument panel wire and spiral cable with the activation prevention mechanism are not deformed or damaged.

OK:

The short springs are not deformed or damaged.

NG ▶ **REPLACE WIRE HARNESS**

OK ▼

2.	CHECK STEERING PAD (DRIVER SIDE SQUIB 2ND STEP)

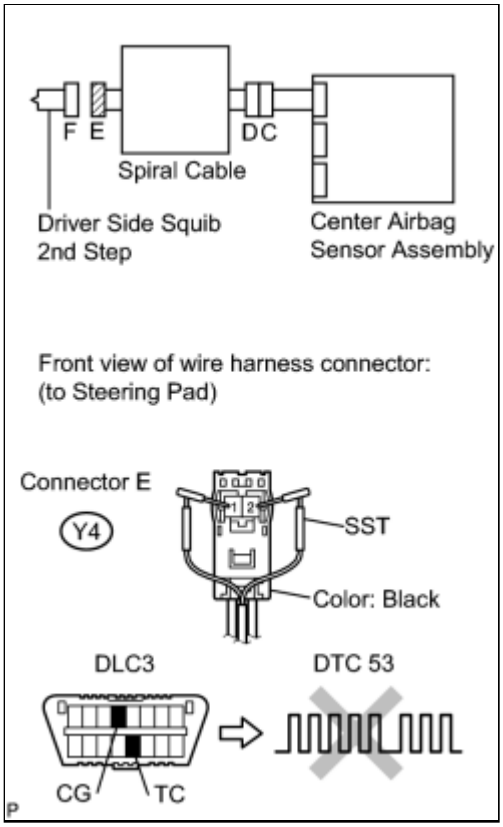

(a) Connect the instrument panel wire to the center airbag sensor assembly and spiral cable.

(b) Connect SST (resistance 2.1 Ω) to connector E (black connector).

CAUTION:

Never connect the tester to the steering pad (driver side squib 2nd step) for measurement, as this may lead to a serious injury due to airbag deployment.

NOTICE:

- Do not forcibly insert SST into the terminals of the connector when connecting.
- Insert SST straight into the terminals of the connector.

SST: 09843-18061

(c) Connect the cable to the negative (-) battery terminal.

(d) Turn the ignition switch to ON, and wait for at least 60 seconds.

(e) Clear the DTCs stored in the memory INFO .

(f) Turn the ignition switch off.

(g) Turn the ignition switch to ON, and wait for at least 60 seconds.

(h) Check for DTCs INFO .

OK:

DTC B1810, B1811, B1812, B1813, or 53 is not output.

HINT:

Codes other than DTC B1810, B1811, B1812, B1813, and 53 may be output at this time, but they are not related to this check.

NG ▶ **CHECK DRIVER SIDE SQUIB 2ND STEP CIRCUIT**

OK ▶ **REPLACE STEERING PAD**

3.	CHECK DRIVER SIDE SQUIB 2ND STEP CIRCUIT

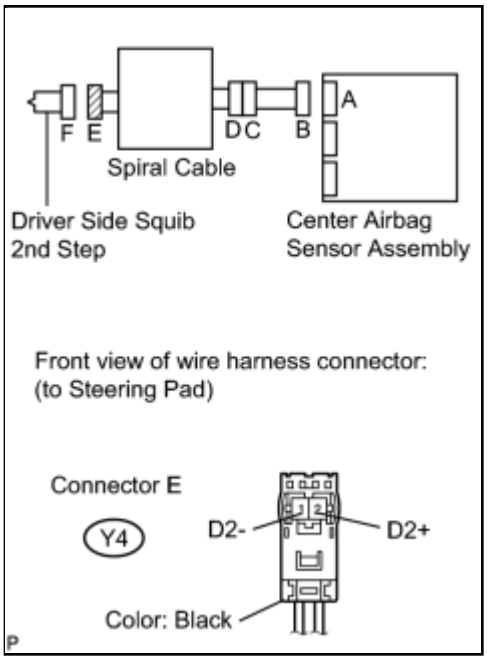

(a) Turn the ignition switch off.

(b) Disconnect the cable from the negative (-) battery terminal, and wait for at least 90 seconds.

(c) Disconnect SST from connector E.

(d) Disconnect the instrument panel wire from the center airbag sensor assembly.

(e) Check for a short to B+ in the circuit.

(1) Connect the cable to the negative (-) battery terminal.

(2) Turn the ignition switch to ON.

(3) Measure the voltage according to the value(s) in the table below.

Standard Voltage:

TESTER CONNECTION	SWITCH CONDITION	SPECIFIED CONDITION

TESTER CONNECTION	SWITCH CONDITION	SPECIFIED CONDITION
Y4-2 (D2+) - Body ground	Ignition switch ON	Below 1 V
Y4-1 (D2-) - Body ground	Ignition switch ON	Below 1 V

(f) Check for an open in the circuit.

(1) Turn the ignition switch off.

(2) Disconnect the cable from the negative (-) battery terminal, and wait for at least 90 seconds.

(3) Measure the resistance according to the value(s) in the table below.

Standard Resistance:

TESTER CONNECTION	CONDITION	SPECIFIED CONDITION
Y4-2 (D2+) - Y4-1 (D2-)	Always	Below 1 Ω

(g) Check for a short to ground in the circuit.

(1) Measure the resistance according to the value(s) in the table below.

Standard Resistance:

TESTER CONNECTION	CONDITION	SPECIFIED CONDITION
Y4-2 (D2+) - Body ground	Always	1 MΩ or higher
Y4-1 (D2-) - Body ground	Always	1 MΩ or higher

(h) Check for a short in the circuit.

(1) Release the activation prevention mechanism built into connector B INFO .

(2) Measure the resistance according to the value(s) in the table below.

Standard Resistance:

TESTER CONNECTION	CONDITION	SPECIFIED CONDITION
Y4-2 (D2+) - Y4-1 (D2-)	Always	1 MΩ or higher

NG ▶ **CHECK INSTRUMENT PANEL WIRE**

OK ▼

4.	CHECK CENTER AIRBAG SENSOR ASSEMBLY

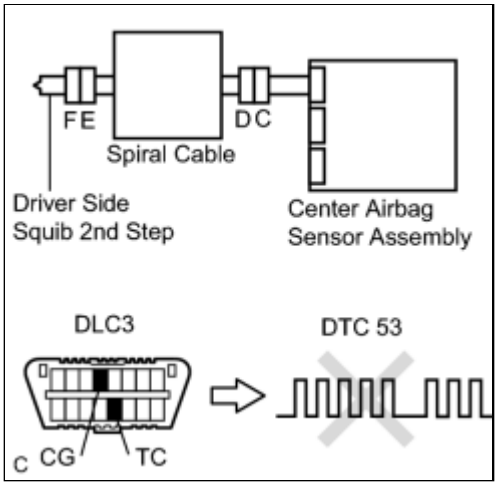

(a) Restore the released activation prevention mechanism of connector B to the original condition.

(b) Connect the connectors to the steering pad and the center airbag sensor assembly.

(c) Connect the cable to the negative (-) battery terminal.

(d) Turn the ignition switch to ON, and wait for at least 60 seconds.

(e) Clear the DTCs stored in the memory INFO .

(f) Turn the ignition switch off.

(g) Turn the ignition switch to ON, and wait for at least 60 seconds.

(h) Check for DTCs INFO .

OK:
DTC B1810, B1811, B1812, B1813, or 53 is not output.

HINT:

Codes other than DTC B1810, B1811, B1812, B1813, and 53 may be output at this time, but they are not related to this check.

NG ▶ **REPLACE CENTER AIRBAG SENSOR ASSEMBLY**

OK ▶ **USE SIMULATION METHOD TO CHECK**

5.	CHECK INSTRUMENT PANEL WIRE

(a) Restore the release activation prevention mechanism of connector B to the original condition.

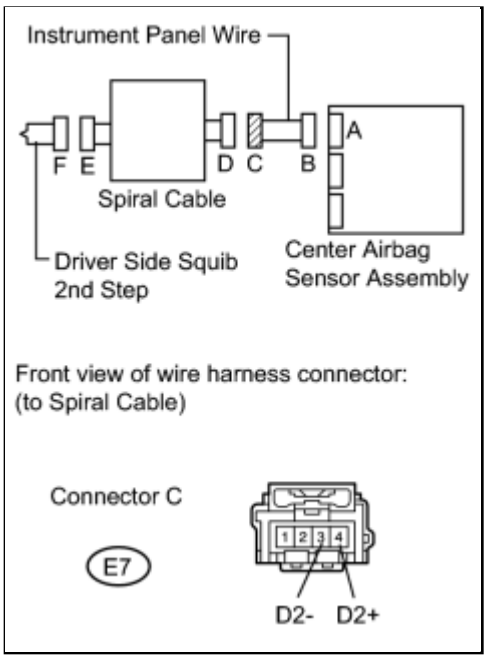

(b) Disconnect the instrument panel wire from the spiral cable.

(c) Check for a short to B+ in the circuit.

(1) Connect the cable to the negative (-) battery terminal.

(2) Turn the ignition switch to ON.

(3) Measure the voltage according to the value(s) in the table below.

Standard Voltage:

TESTER CONNECTION	SWITCH CONDITION	SPECIFIED CONDITION
E7-4 (D2+) - Body ground	Ignition switch ON	Below 1 V
E7-3 (D2-) - Body ground	Ignition switch ON	Below 1 V

(d) Check for an open in the circuit.

(1) Turn the ignition switch off.

(2) Disconnect the cable from the negative (-) battery terminal, and wait for at least 90 seconds.

(3) Measure the resistance according to the value(s) in the table below.

Standard Resistance:

TESTER CONNECTION	CONDITION	SPECIFIED CONDITION
E7-4 (D2+) - E7-3 (D2-)	Always	Below 1 Ω

(e) Check for a short to ground in the circuit.

(1) Measure the resistance according to the value(s) in the table below.

Standard Resistance:

TESTER CONNECTION	CONDITION	SPECIFIED CONDITION
E7-4 (D2+) - Body ground	Always	1 MΩ or higher
E7-3 (D2-) - Body ground	Always	1 MΩ or higher

(f) Check for a short in the circuit.

(1) Release the activation prevention mechanism built into connector B INFO .

(2) Measure the resistance according to the value(s) in the table below.

Standard Resistance:

TESTER CONNECTION	CONDITION	SPECIFIED CONDITION
E7-4 (D2+) - E7-3 (D2-)	Always	1 MΩ or higher

NG ▶ **REPLACE INSTRUMENT PANEL WIRE**

OK ▼

6.	**CHECK SPIRAL CABLE**

(a) Check for a short to B+ in the circuit.

(1) Connect the cable to the negative (-) battery terminal.

(2) Turn the ignition switch to ON.

(3) Measure the voltage according to the value(s) in the table below.

Standard Voltage:

TESTER CONNECTION	SWITCH CONDITION	SPECIFIED CONDITION
Y4-2 (D2+) - Body ground	Ignition switch ON	Below 1 V

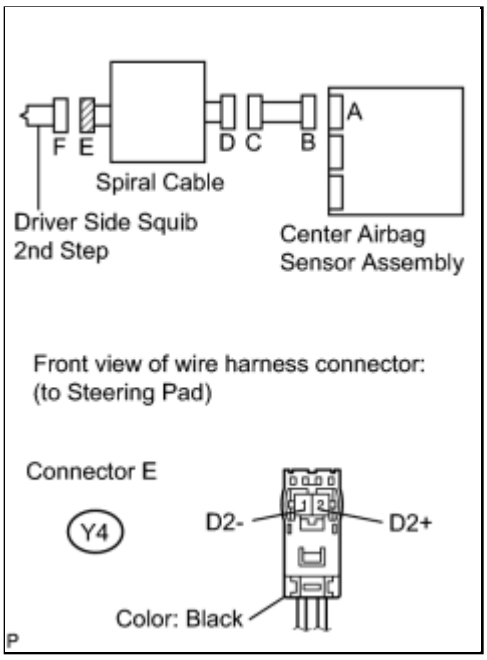

Y4-1 (D2-) - Body ground	Ignition switch ON	Below 1 V

(b) Check for an open in the circuit.

(1) Turn the ignition switch off.

(2) Disconnect the cable from the negative (-) battery terminal, and wait for at least 90 seconds.

(3) Measure the resistance according to the value(s) in the table below.

Standard Resistance:

TESTER CONNECTION	CONDITION	SPECIFIED CONDITION
Y4-2 (D2+) - Y4-1 (D2-)	Always	Below 1 Ω

(c) Check for a short to ground in the circuit.

(1) Measure the resistance according to the value(s) in the table below.

Standard Resistance:

TESTER CONNECTION	CONDITION	SPECIFIED CONDITION
Y4-2 (D2+) - Body ground	Always	1 MΩ or higher
Y4-1 (D2-) - Body ground	Always	1 MΩ or higher

(d) Check for a short in the circuit.

(1) Release the activation prevention mechanism built into connector D INFO .

(2) Measure the resistance according to the value(s) in the table below.

Standard Resistance:

TESTER CONNECTION	CONDITION	SPECIFIED CONDITION
Y4-2 (D2+) - Y4-1 (D2-)	Always	1 MΩ or higher

NG ▶ **REPLACE SPIRAL CABLE**

OK ▶ **USE SIMULATION METHOD TO CHECK**

Last Modified: 3-10-2010	6.4 C	**From:** 200901
Model Year: 2010	**Model:** Corolla	**Doc ID:** RM000000XFJ06JX
Title: SUPPLEMENTAL RESTRAINT SYSTEMS: AIRBAG SYSTEM: B1815/54-B1818/54: Short in Front Passenger Side Squib 2nd Step Circuit (2010 Corolla)		

DTC	**B1815/54**	**Short in Front Passenger Side Squib 2nd Step Circuit**

DTC	**B1816/54**	**Open in Front Passenger Side Squib 2nd Step Circuit**

DTC	**B1817/54**	**Short to GND in Front Passenger Side Squib 2nd Step Circuit**

DTC	**B1818/54**	**Short to B+ in Front Passenger Side Squib 2nd Step Circuit**

DESCRIPTION

The front passenger side squib 2nd step circuit consists of the center airbag sensor assembly and the front passenger airbag assembly.

The circuit instructs the SRS to deploy when deployment conditions are met.

These DTCs are recorded when a malfunction is detected in the front passenger side squib 2nd step circuit.

DTC NO.	DTC DETECTION CONDITION	TROUBLE AREA
B1815/54	• The center airbag sensor assembly receives a short circuit signal 5 times in the front passenger side squib 2nd step circuit during primary check. • Front passenger side squib 2nd step malfunction • Center airbag sensor assembly malfunction	• Instrument panel wire • Instrument panel wire assembly • Front passenger airbag assembly (Front passenger side squib 2nd step) • Center airbag sensor assembly
B1816/54	• The center airbag sensor assembly receives an open circuit signal in the front passenger side squib 2nd step circuit for 2 seconds.	• Instrument panel wire • Instrument panel wire assembly • Front passenger airbag

DTC NO.	DTC DETECTION CONDITION	TROUBLE AREA
	• Front passenger side squib 2nd step malfunction • Center airbag sensor assembly malfunction	assembly (Front passenger side squib 2nd step) • Center airbag sensor assembly
B1817/54	• The center airbag sensor assembly receives a short circuit to ground signal in the front passenger side squib 2nd step circuit for 0.5 seconds. • Front passenger side squib 2nd step malfunction • Center airbag sensor assembly malfunction	• Instrument panel wire • Instrument panel wire assembly • Front passenger airbag assembly (Front passenger side squib 2nd step) • Center airbag sensor assembly
B1818/54	• The center airbag sensor assembly receives a short circuit to B+ signal in the front passenger side squib 2nd step circuit for 0.5 seconds. • Front passenger side squib 2nd step malfunction • Center airbag sensor assembly malfunction	• Instrument panel wire • Instrument panel wire assembly • Front passenger airbag assembly (Front passenger side squib 2nd step) • Center airbag sensor assembly

WIRING DIAGRAM

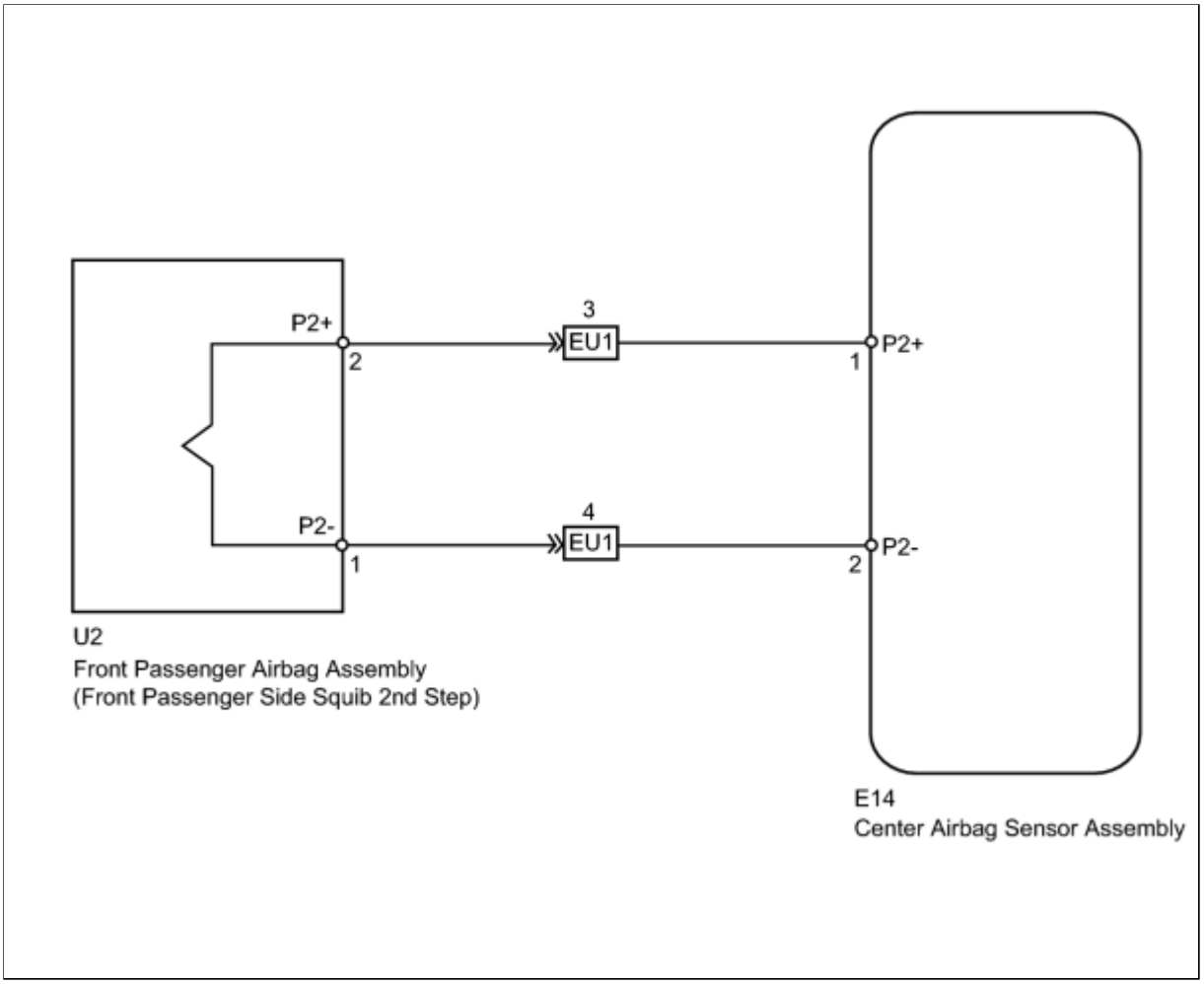

INSPECTION PROCEDURE

HINT:

- Perform the simulation method by selecting Check Mode (signal check) using the Techstream INFO .
- After selecting Check Mode (signal check), perform the simulation method by wiggling each connector of the airbag system or driving the vehicle on a city or rough road INFO .

PROCEDURE

1.	**CHECK CONNECTORS**

(a) Turn the ignition switch off.

(b) Disconnect the cable from the negative (-) battery terminal, and wait for at least 90 seconds.

(c) Check that the connectors are properly connected to

the front passenger airbag assembly and center airbag sensor assembly. Also check that the connectors that link the instrument panel wire assembly and instrument panel wire are properly connected.

OK:

The connectors are properly connected.

HINT:

If the connectors are not connected securely, reconnect the connectors and proceed to the next inspection.

(d) Disconnect the connectors from the front passenger airbag assembly and center airbag sensor assembly. Also disconnect the instrument panel wire from the instrument panel wire assembly.

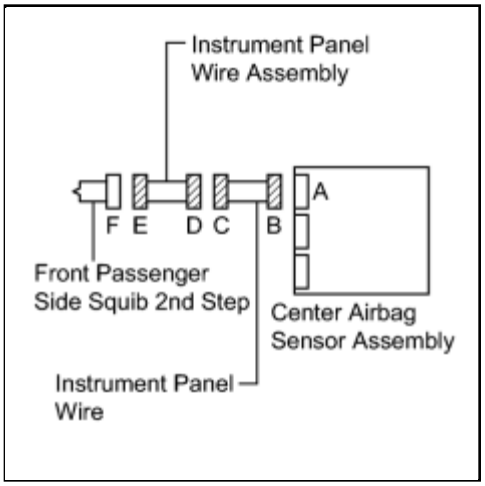

(e) Check that the terminals of the connectors are not damaged.

OK:

The terminals are not deformed or damaged.

(f) Check that the instrument panel wire assembly connector (on the front passenger airbag assembly side) is not damaged.

OK:

The lock button is not disengaged, and the claw of the lock is not deformed or damaged.

(g) Check that the short springs for the instrument panel wire and instrument panel wire assembly with the activation prevention mechanism are not deformed or damaged.

OK:

The short springs are not deformed or damaged.

NG ▶ **REPLACE WIRE HARNESS**

OK ▼

2.	**CHECK FRONT PASSENGER AIRBAG ASSEMBLY (FRONT PASSENGER SIDE SQUIB 2ND STEP)**

(a) Connect the instrument panel wire to the instrument

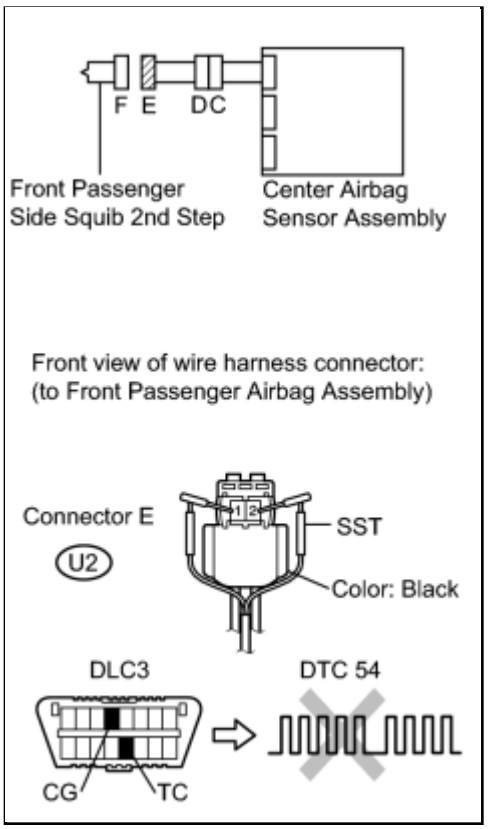

panel wire assembly and center airbag sensor assembly.

(b) Connect SST (resistance 2.1 Ω) to connector E (black connector).

CAUTION:

Never connect the tester to the front passenger airbag assembly (front passenger side squib) for measurement, as this may lead to a serious injury due to airbag deployment.

NOTICE:

- Do not forcibly insert SST into the terminals of the connector when connecting.
- Insert SST straight into the terminals of the connector.

SST: 09843-18061

(c) Connect the cable to the negative (-) battery terminal.

(d) Turn the ignition switch to ON, and wait for at least 60 seconds.

(e) Clear the DTCs stored in the memory INFO .

(f) Turn the ignition switch off.

(g) Turn the ignition switch to ON, and wait for at least 60 seconds.

(h) Check for DTCs INFO .

OK:

DTC B1815, B1816, B1817, B1818, or 54 is not output.

HINT:

Codes other than DTC B1815, B1816, B1817, B1818, and 54 may be output at this time, but they are not related to this check.

NG ▶ CHECK FRONT PASSENGER SIDE SQUIB 2ND STEP CIRCUIT

OK ▶ REPLACE FRONT PASSENGER AIRBAG ASSEMBLY

3.	CHECK FRONT PASSENGER SIDE SQUIB 2ND STEP CIRCUIT

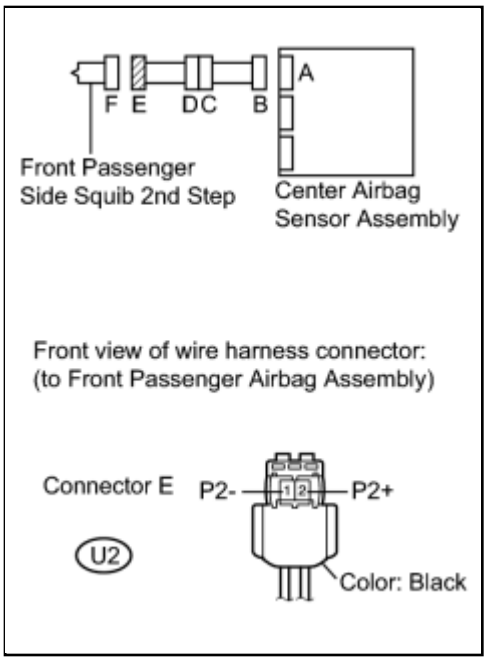

(a) Turn the ignition switch off.

(b) Disconnect the cable from the negative (-) battery terminal, and wait for at least 90 seconds.

(c) Disconnect SST from connector E.

(d) Disconnect the instrument panel wire from the center airbag sensor assembly.

(e) Check for a short to B+ in the circuit.

(1) Connect the cable to the negative (-) battery terminal.

(2) Turn the ignition switch to ON.

(3) Measure the voltage according to the value(s) in the table below.

Standard Voltage:

TESTER CONNECTION	SWITCH CONDITION	SPECIFIED CONDITION
U2-2 (P2+) - Body ground	Ignition switch ON	Below 1 V
U2-1 (P2-) - Body ground	Ignition switch ON	Below 1 V

(f) Check for an open in the circuit.

(1) Turn the ignition switch off.

(2) Disconnect the cable from the negative (-) battery terminal, and wait for at least 90 seconds.

(3) Measure the resistance according to the value(s) in the table below.

Standard Resistance:

TESTER CONNECTION	CONDITION	SPECIFIED CONDITION
U2-2 (P2+) - U2-1 (P2-)	Always	Below 1 Ω

(g) Check for a short to ground in the circuit.

(1) Measure the resistance according to the value(s) in the table below.

Standard Resistance:

TESTER CONNECTION	CONDITION	SPECIFIED CONDITION
U2-2 (P2+) - Body ground	Always	1 MΩ or higher
U2-1 (P2-) - Body ground	Always	1 MΩ or higher

(h) Check for a short in the circuit.

(1) Release the activation prevention mechanism built into connector B INFO .

(2) Measure the resistance according to the value(s) in the table below.

Standard Resistance:

TESTER CONNECTION	CONDITION	SPECIFIED CONDITION
U2-2 (P2+) - U2-1 (P2-)	Always	1 MΩ or higher

NG ▶ **CHECK INSTRUMENT PANEL WIRE**

OK ▼

4.	**CHECK CENTER AIRBAG SENSOR ASSEMBLY**

(a) Restore the released activation prevention mechanism of connector B to the original condition.

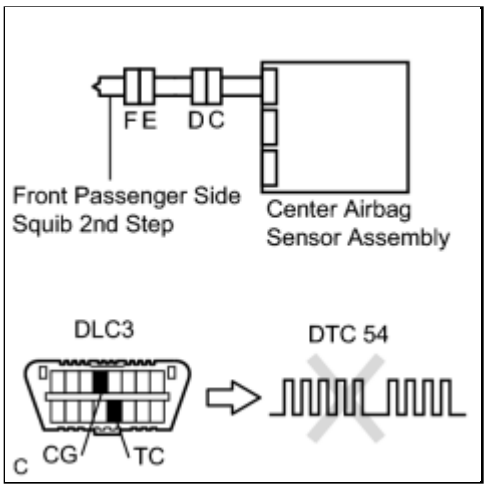

(b) Connect the connectors to the front passenger airbag assembly and the center airbag sensor assembly.

(c) Connect the cable to the negative (-) battery terminal.

(d) Turn the ignition switch to ON, and wait for at least 60 seconds.

(e) Clear the DTCs stored in the memory INFO .

(f) Turn the ignition switch off.

(g) Turn the ignition switch to ON, and wait for at least 60 seconds.

(h) Check for DTCs INFO .

OK:

DTC B1815, B1816, B1817, B1818, or 54 is not output.

HINT:

Codes other than DTC B1815, B1816, B1817, B1818, and 54 may be output at this time, but they are not related to this check.

NG ▶ **REPLACE CENTER AIRBAG SENSOR ASSEMBLY**

OK ▶ **USE SIMULATION METHOD TO CHECK**

5.	**CHECK INSTRUMENT PANEL WIRE**

(a) Restore the release activation prevention mechanism of connector B to the original condition.

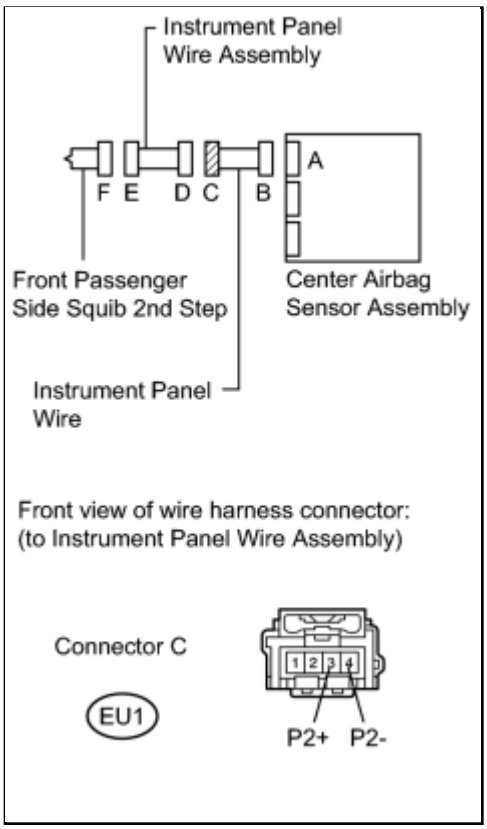

(b) Disconnect the instrument panel wire assembly from the instrument panel wire.

(c) Check for a short to B+ in the circuit.

(1) Connect the cable to the negative (-) battery terminal.

(2) Turn the ignition switch to ON.

(3) Measure the voltage according to the value(s) in the table below.

Standard Voltage:

TESTER CONNECTION	SWITCH CONDITION	SPECIFIED CONDITION
EU1-3 (P2+) - Body ground	Ignition switch ON	Below 1 V
EU1-4 (P2-) - Body ground	Ignition switch ON	Below 1 V

(d) Check for an open in the circuit.

(1) Turn the ignition switch off.

(2) Disconnect the cable from the negative (-) battery terminal, and wait for at least 90 seconds.

(3) Measure the resistance according to the value(s) in the table below.

Standard Resistance:

TESTER CONNECTION	CONDITION	SPECIFIED CONDITION

TESTER CONNECTION	CONDITION	SPECIFIED CONDITION
EU1-3 (P2+) - EU1-4 (P2-)	Always	Below 1 Ω

(e) Check for a short to ground in the circuit.

(1) Measure the resistance according to the value(s) in the table below.

Standard Resistance:

TESTER CONNECTION	CONDITION	SPECIFIED CONDITION
EU1-3 (P2+) - Body ground	Always	1 MΩ or higher
EU1-4 (P2-) - Body ground	Always	1 MΩ or higher

(f) Check for a short in the circuit.

(1) Release the activation prevention mechanism built into connector B INFO .

(2) Measure the resistance according to the value(s) in the table below.

Standard Resistance:

TESTER CONNECTION	CONDITION	SPECIFIED CONDITION
EU1-3 (P2+) - EU1-4 (P2-)	Always	1 MΩ or higher

NG ▶ **REPLACE INSTRUMENT PANEL WIRE**

OK ▼

6.	**CHECK INSTRUMENT PANEL WIRE ASSEMBLY**

(a) Check for a short to B+ in the circuit.

(1) Connect the cable to the negative (-) battery terminal.

(2) Turn the ignition switch to ON.

(3) Measure the voltage according to the value(s) in the table below.

Standard Voltage:

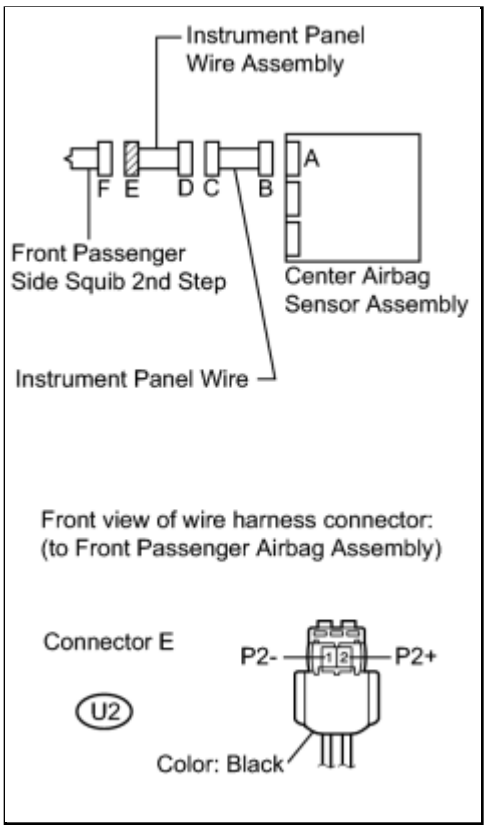

TESTER CONNECTION	SWITCH CONDITION	SPECIFIED CONDITION
U2-2 (P2+) - Body ground	Ignition switch ON	Below 1 V
U2-1 (P2-) - Body ground	Ignition switch ON	Below 1 V

(b) Check for an open in the circuit.

(1) Turn the ignition switch off.

(2) Disconnect the cable from the negative (-) battery terminal, and wait for at least 90 seconds.

(3) Measure the resistance according to the value(s) in the table below.

Standard Resistance:

TESTER CONNECTION	CONDITION	SPECIFIED CONDITION
U2-2 (P2+) - U2-1 (P2-)	Always	Below 1 Ω

(c) Check for a short to ground in the circuit.

(1) Measure the resistance according to the value(s) in the table below.

Standard Resistance:

TESTER CONNECTION	CONDITION	SPECIFIED CONDITION
U2-2 (P2+) - Body ground	Always	1 MΩ or higher
U2-1 (P2-) - Body ground	Always	1 MΩ or higher

(d) Check for a short in the circuit.

(1) Release the activation prevention mechanism built into connector D INFO .

(2) Measure the resistance according to the value(s) in the table below.

Standard Resistance:

TESTER CONNECTION	CONDITION	SPECIFIED CONDITION
U2-2 (P2+) - U2-1 (P2-)	Always	1 MΩ or higher

NG ▶ **REPLACE INSTRUMENT PANEL WIRE ASSEMBLY**

OK ▶ **USE SIMULATION METHOD TO CHECK**

Last Modified: 3-10-2010	6.4 C	**From:** 200901
Model Year: 2010	**Model:** Corolla	**Doc ID:** RM000001NZQ038X
Title: SUPPLEMENTAL RESTRAINT SYSTEMS: AIRBAG SYSTEM: B1820/55-B1823/55: Short in Side Squib RH Circuit (2010 Corolla)		

DTC	**B1820/55**	**Short in Side Squib RH Circuit**

DTC	**B1821/55**	**Open in Side Squib RH Circuit**

DTC	**B1822/55**	**Short to GND in Side Squib RH Circuit**

DTC	**B1823/55**	**Short to B+ in Side Squib RH Circuit**

DESCRIPTION

The side squib RH circuit consists of the center airbag sensor assembly and the front seat side airbag assembly RH.

This circuit instructs the SRS to deploy when deployment conditions are met.

These DTCs are recorded when a malfunction is detected in the side squib RH circuit.

DTC NO.	DTC DETECTION CONDITION	TROUBLE AREA
B1820/55	• The center airbag sensor assembly receives a short circuit signal 5 times in the side squib RH circuit during primary check. • Side squib RH malfunction • Center airbag sensor assembly malfunction	• No. 2 floor wire • Front seat side airbag assembly RH (Side squib RH) • Center airbag sensor assembly
B1821/55	• The center airbag sensor assembly receives an open circuit signal in the side squib RH circuit for 2 seconds. • Side squib RH malfunction • Center airbag sensor assembly malfunction	• No. 2 floor wire • Front seat side airbag assembly RH (Side squib RH) • Center airbag sensor assembly

DTC NO.	DTC DETECTION CONDITION	TROUBLE AREA
B1822/55	• The center airbag sensor assembly receives a short circuit to ground signal in the side squib RH circuit for 0.5 seconds. • Side squib RH malfunction • Center airbag sensor assembly malfunction	• No. 2 floor wire • Front seat side airbag assembly RH (Side squib RH) • Center airbag sensor assembly
B1823/55	• The center airbag sensor assembly receives a short circuit to B+ signal in the side squib RH circuit for 0.5 seconds. • Side squib RH malfunction • Center airbag sensor assembly malfunction	• No. 2 floor wire • Front seat side airbag assembly RH (Side squib RH) • Center airbag sensor assembly

WIRING DIAGRAM

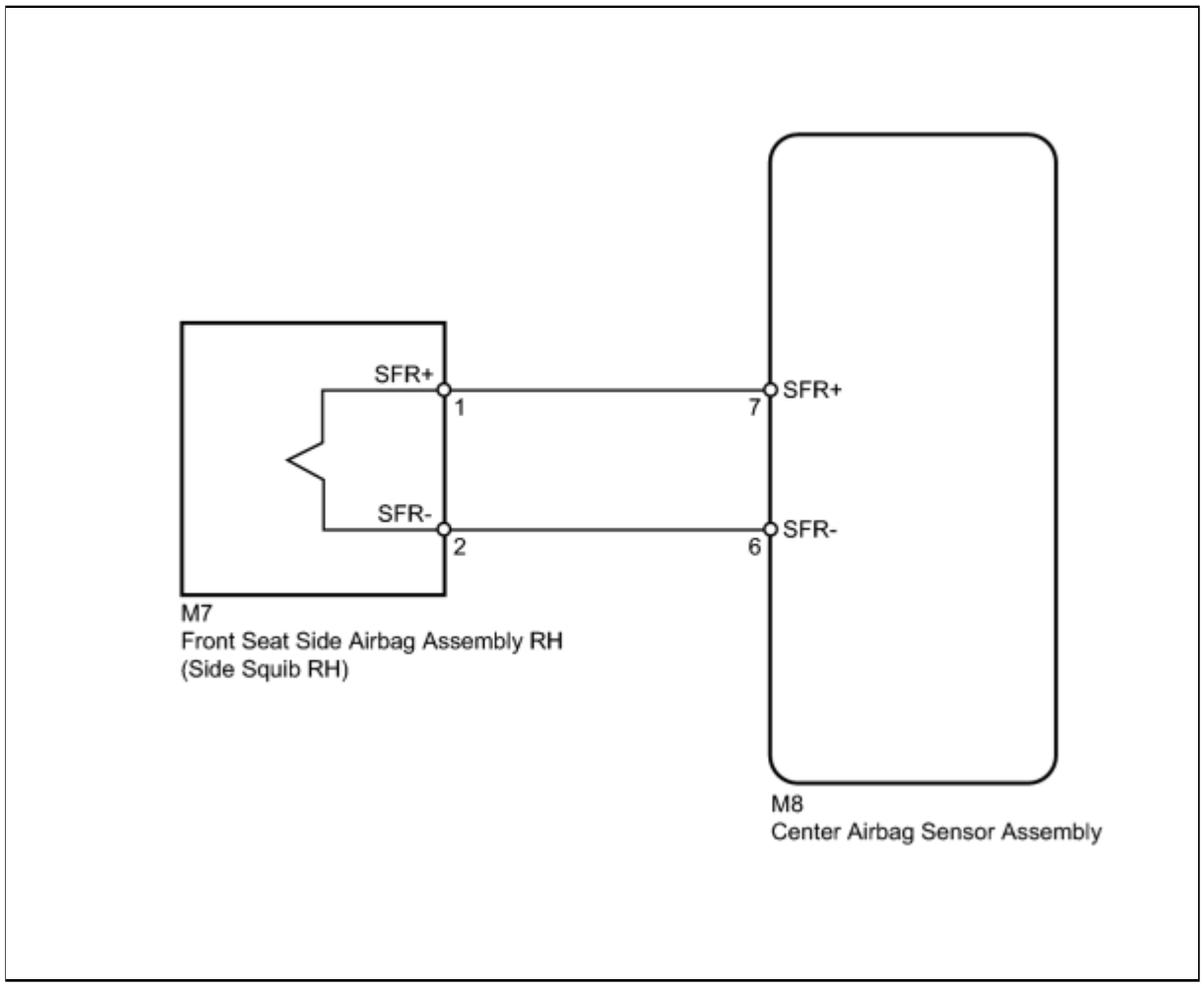

INSPECTION PROCEDURE

HINT:

- Perform the simulation method by selecting Check Mode (signal check) using the Techstream INFO .
- After selecting Check Mode (signal check), perform the simulation method by wiggling each connector of the airbag system or driving the vehicle on a city or rough road INFO .

PROCEDURE

1.	**CHECK CONNECTORS**

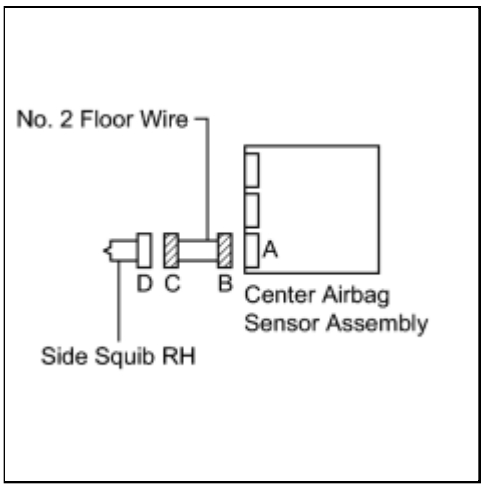

(a) Turn the ignition switch off.

(b) Disconnect the cable from the negative (-) battery terminal, and wait for at least 90 seconds.

(c) Check that the connectors are properly connected to the front seat side airbag assembly RH and center airbag sensor assembly.

OK:

The connectors are properly connected.

HINT:

If the connectors are not connected securely, reconnect the connectors and proceed to the next inspection.

(d) Disconnect the connectors from the front seat side airbag assembly RH and center airbag sensor assembly.

(e) Check that the terminals of the connectors are not damaged.

OK:

The terminals are not deformed or damaged.

(f) Check that the short spring for the No. 2 floor wire with the activation prevention mechanism is not deformed or damaged.

OK:

The short spring is not deformed or damaged.

NG ▶ REPLACE NO. 2 FLOOR WIRE

OK ▼

2.	CHECK FRONT SEAT SIDE AIRBAG ASSEMBLY RH (SIDE SQUIB RH)

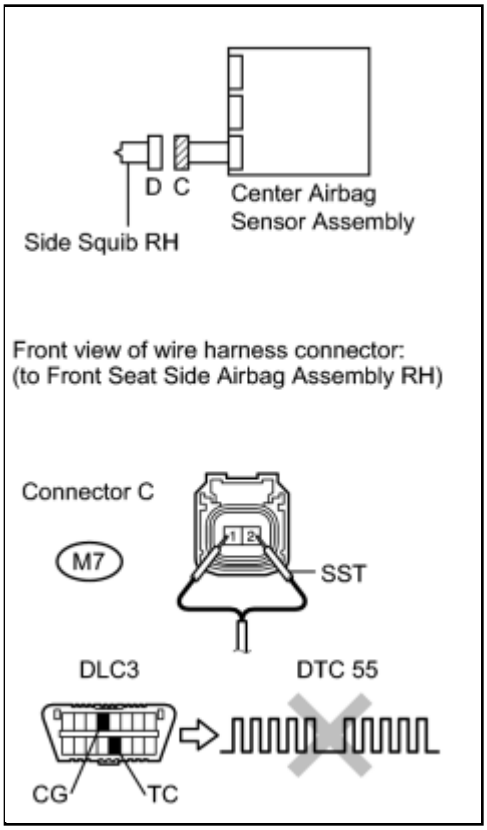

(a) Connect the connector to the center airbag sensor assembly.

(b) Connect SST (resistance 2.1 Ω) to connector C.

CAUTION:

Never connect the tester to the front seat side airbag assembly RH (side squib RH) for measurement, as this may lead to a serious injury due to airbag deployment.

NOTICE:

- Do not forcibly insert SST into the terminals of the connector when connecting.
- Insert SST straight into the terminals of the connector.

SST: 09843-18061

(c) Connect the cable to the negative (-) battery terminal.

(d) Turn the ignition switch to ON, and wait for at least 60 seconds.

(e) Clear the DTCs stored in the memory INFO .

(f) Turn the ignition switch off.

(g) Turn the ignition switch to ON, and wait for at least 60 seconds.

(h) Check for DTCs INFO .

OK:

DTC B1820, B1821, B1822, B1823, or 55 is not output.

Result

RESULT	PROCEED TO
NG	A
OK (for Power Seat)	B
OK (for Manual Seat)	C

HINT:

Codes other than DTC B1820, B1821, B1822, B1823, and 55 may be output at this time, but they are not related to this check.

C ▶ **REPLACE FRONT SEAT ASSEMBLY RH**

B ▶ **REPLACE FRONT SEAT ASSEMBLY RH**

A ▼

3.	**CHECK NO. 2 FLOOR WIRE (SIDE SQUIB RH CIRCUIT)**

(a) Turn the ignition switch off.

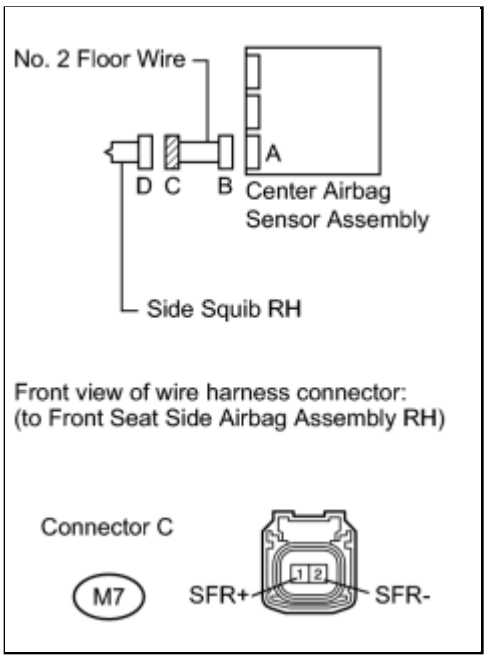

(b) Disconnect the cable from the negative (-) battery terminal, and wait for at least 90 seconds.

(c) Disconnect SST from connector C.

(d) Disconnect the connector from the center airbag sensor assembly.

(e) Check for a short to B+ in the circuit.

(1) Connect the cable to the negative (-) battery terminal.

(2) Turn the ignition switch to ON.

(3) Measure the voltage according to the value(s) in the table below.

Standard Voltage:

TESTER CONNECTION	SWITCH CONDITION	SPECIFIED CONDITION
M7-1 (SFR+) - Body ground	Ignition switch ON	Below 1 V
M7-2 (SFR-) - Body ground	Ignition switch ON	Below 1 V

(f) Check for an open in the circuit.

(1) Turn the ignition switch off.

(2) Disconnect the cable from the negative (-) battery terminal, and wait for at least 90 seconds.

(3) Measure the resistance according to the value(s) in the table below.

Standard Resistance:

TESTER CONNECTION	CONDITION	SPECIFIED CONDITION

TESTER CONNECTION	CONDITION	SPECIFIED CONDITION
M7-1 (SFR+) - M7-2 (SFR-)	Always	Below 1 Ω

(g) Check for a short to ground in the circuit.

(1) Measure the resistance according to the value(s) in the table below.

Standard Resistance:

TESTER CONNECTION	CONDITION	SPECIFIED CONDITION
M7-1 (SFR+) - Body ground	Always	1 MΩ or higher
M7-2 (SFR-) - Body ground	Always	1 MΩ or higher

(h) Check for a short in the circuit.

(1) Release the activation prevention mechanism built into connector B INFO.

(2) Measure the resistance according to the value(s) in the table below.

Standard Resistance:

TESTER CONNECTION	CONDITION	SPECIFIED CONDITION
M7-1 (SFR+) - M7-2 (SFR-)	Always	1 MΩ or higher

NG ▶ **REPLACE NO. 2 FLOOR WIRE**

OK ▼

4.	**CHECK CENTER AIRBAG SENSOR ASSEMBLY**

(a) Restore the released activation prevention mechanism of connector B to the original condition.

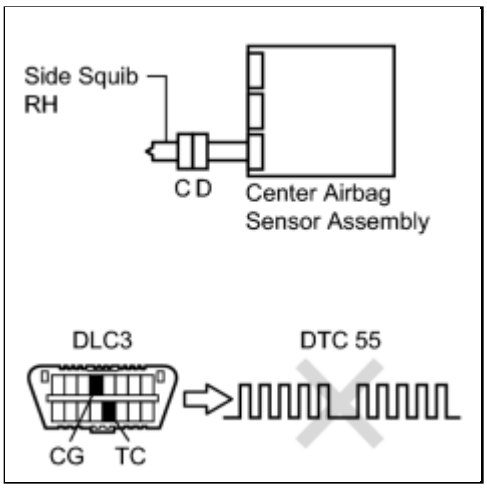

(b) Connect the connectors to the front seat side airbag assembly RH and the center airbag sensor assembly.

(c) Connect the cable to the negative (-) battery terminal.

(d) Turn the ignition switch to ON, and wait for at least 60 seconds.

(e) Clear the DTCs stored in the memory INFO .

(f) Turn the ignition switch off.

(g) Turn the ignition switch to ON, and wait for at least 60 seconds.

(h) Check for DTCs INFO .

OK:

DTC B1820, B1821, B1822, B1823, or 55 is not output.

HINT:

Codes other than DTC B1820, B1821, B1822, B1823, and 55 may be output at this time, but they are not related to this check.

NG ▶ **REPLACE CENTER AIRBAG SENSOR ASSEMBLY**

OK ▶ **USE SIMULATION METHOD TO CHECK**

Last Modified: 3-10-2010	6.4 C	**From:** 200901
Model Year: 2010	**Model:** Corolla	**Doc ID:** RM000001O02038X
Title: SUPPLEMENTAL RESTRAINT SYSTEMS: AIRBAG SYSTEM: B1825/56-B1828/56: Short in Side Squib LH Circuit (2010 Corolla)		

DTC	**B1825/56**	**Short in Side Squib LH Circuit**

DTC	**B1826/56**	**Open in Side Squib LH Circuit**

DTC	**B1827/56**	**Short to GND in Side Squib LH Circuit**

DTC	**B1828/56**	**Short to B+ in Side Squib LH Circuit**

DESCRIPTION

The side squib LH circuit consists of the center airbag sensor assembly and the front seat side airbag assembly LH.

The circuit instructs the SRS to deploy when deployment conditions are met.

These DTCs are recorded when a malfunction is detected in the side squib LH circuit.

DTC NO.	DTC DETECTION CONDITION	TROUBLE AREA
B1825/56	• The center airbag sensor assembly receives a short circuit signal 5 times in the side squib LH circuit during primary check. • Side squib LH malfunction • Center airbag sensor assembly malfunction	• Floor wire • Front seat side airbag assembly LH (Side squib LH) • Center airbag sensor assembly
B1826/56	• The center airbag sensor assembly receives an open circuit signal in the side squib LH circuit for 2 seconds. • Side squib LH malfunction • Center airbag sensor assembly malfunction	• Floor wire • Front seat side airbag assembly LH (Side squib LH) • Center airbag sensor assembly

DTC NO.	DTC DETECTION CONDITION	TROUBLE AREA
B1827/56	• The center airbag sensor assembly receives a short circuit to ground signal in the side squib LH circuit for 0.5 seconds. • Side squib LH malfunction • Center airbag sensor assembly malfunction	• Floor wire • Front seat side airbag assembly LH (Side squib LH) • Center airbag sensor assembly
B1828/56	• The center airbag sensor assembly receives a short circuit to B+ signal in the side squib LH circuit for 0.5 seconds. • Side squib LH malfunction • Center airbag sensor assembly malfunction	• Floor wire • Front seat side airbag assembly LH (Side squib LH) • Center airbag sensor assembly

WIRING DIAGRAM

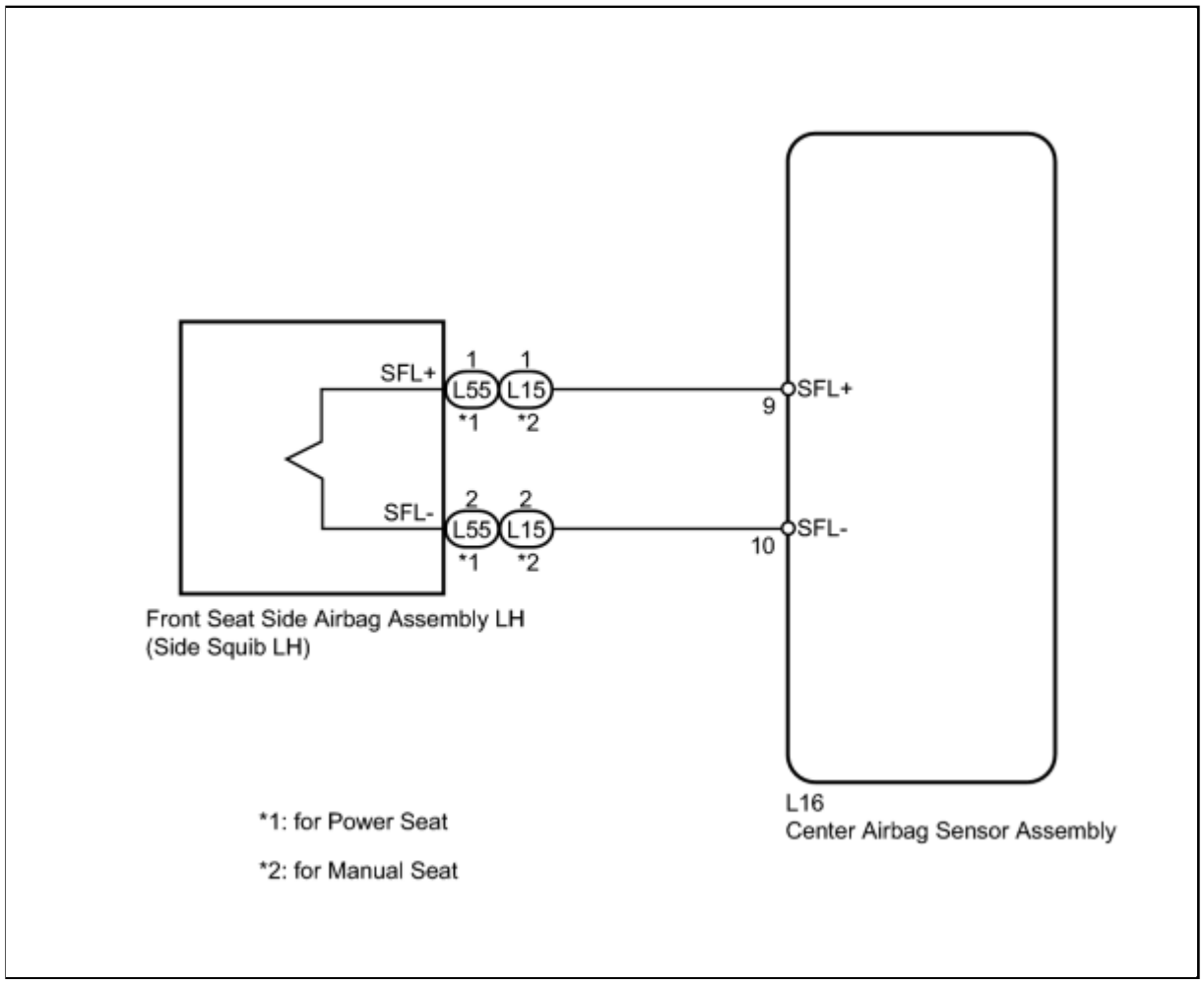

INSPECTION PROCEDURE

HINT:

- Perform the simulation method by selecting Check Mode (signal check) using the Techstream INFO .
- After selecting Check Mode (signal check), perform the simulation method by wiggling each connector of the airbag system or driving the vehicle on a city or rough road INFO .

PROCEDURE

1.	**CHECK CONNECTORS**

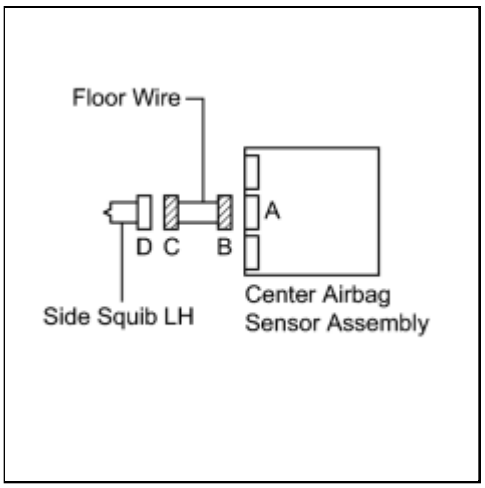

(a) Turn the ignition switch off.

(b) Disconnect the cable from the negative (-) battery terminal, and wait for at least 90 seconds.

(c) Check that the connectors are properly connected to the front seat side airbag assembly LH and center airbag sensor assembly.

OK:

The connectors are properly connected.

HINT:

If the connectors are not connected securely, reconnect the connectors and proceed to the next inspection.

(d) Disconnect the connectors from the front seat side airbag assembly LH and center airbag sensor assembly.

(e) Check that the terminals of the connectors are not damaged.

OK:

The terminals are not deformed or damaged.

(f) Check that the short spring for the floor wire with the activation prevention mechanism is not deformed or damaged.

OK:

The short spring is not deformed or damaged.

NG ▶ REPLACE FLOOR WIRE

OK ▼

2.	CHECK FRONT SEAT SIDE AIRBAG ASSEMBLY LH (SIDE SQUIB LH)

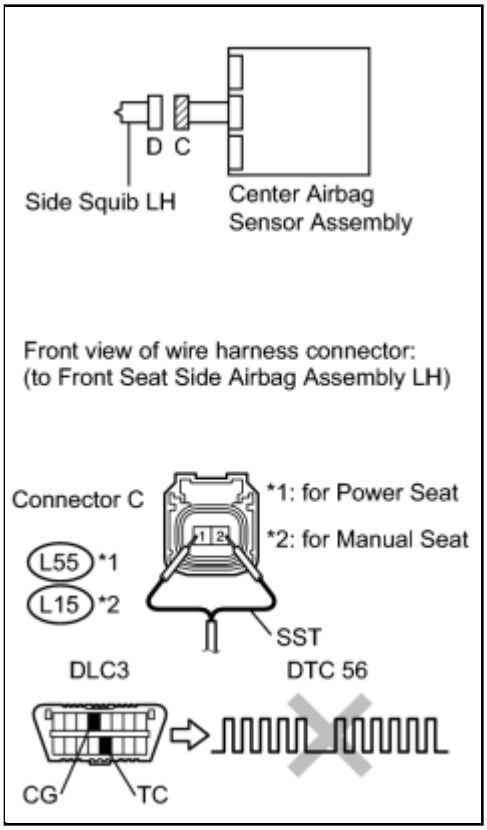

(a) Connect the connector to the center airbag sensor assembly.

(b) Connect SST (resistance 2.1 Ω) to connector C.

CAUTION:

Never connect the tester to the front seat side airbag assembly LH (side squib LH) for measurement, as this may lead to a serious injury due to airbag deployment.

NOTICE:

- Do not forcibly insert SST into the terminals of the connector when connecting.
- Insert SST straight into the terminals of the connector.

SST: 09843-18061

(c) Connect the cable to the negative (-) battery terminal.

(d) Turn the ignition switch to ON, and wait for at least 60 seconds.

(e) Clear the DTCs stored in the memory INFO .

(f) Turn the ignition switch off.

(g) Turn the ignition switch to ON, and wait for at least 60 seconds.

(h) Check for DTCs INFO .

OK:

DTC B1825, B1826, B1827, B1828, or 56 is not output.

Result

RESULT	PROCEED TO
NG	A
OK (for Power Seat)	B
OK (for Manual Seat)	C

HINT:

Codes other than DTC B1825, B1826, B1827, B1828, and 56 may be output at this time, but they are not related to this check.

C ▶ **REPLACE FRONT SEAT ASSEMBLY LH**

B ▶ **REPLACE FRONT SEAT ASSEMBLY LH**

A ▼

3.	**CHECK FLOOR WIRE (SIDE SQUIB LH CIRCUIT)**

(a) Turn the ignition switch off.

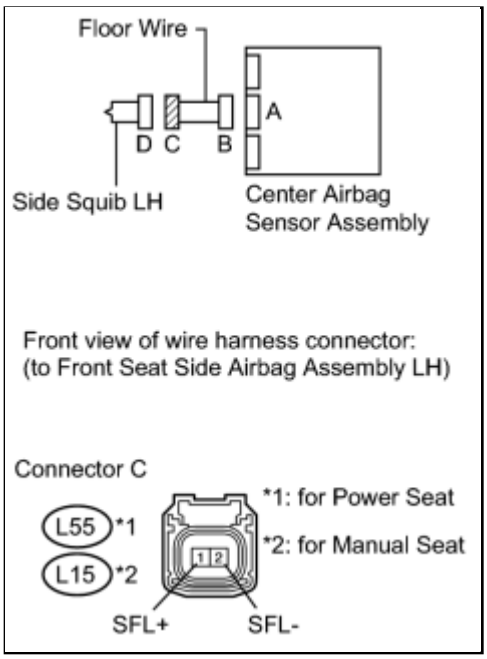

(b) Disconnect the cable from the negative (-) battery terminal, and wait for at least 90 seconds.

(c) Disconnect SST from connector C.

(d) Disconnect the floor wire from the center airbag sensor assembly.

(e) Check for a short to B+ in the circuit.

(1) Connect the cable to the negative (-) battery terminal.

(2) Turn the ignition switch to ON.

(3) Measure the voltage according to the value(s) in the table below.

Standard Voltage:

for Power Seat

for Manual Seat

TESTER CONNECTION	SWITCH CONDITION	SPECIFIED CONDITION
L55-1 (SFL+) - Body ground	Ignition switch ON	Below 1 V
L55-2 (SFL-) - Body ground	Ignition switch ON	Below 1 V

TESTER CONNECTION	SWITCH CONDITION	SPECIFIED CONDITION
L15-1 (SFL+) - Body ground	Ignition switch ON	Below 1 V
L15-2 (SFL-) - Body ground	Ignition switch ON	Below 1 V

(f) Check for an open in the circuit.

(1) Turn the ignition switch off.

(2) Disconnect the cable from the negative (-) battery terminal, and wait for at least 90 seconds.

(3) Measure the resistance according to the value(s) in the table below.

Standard Resistance:

for Power Seat

for Manual Seat

TESTER CONNECTION	CONDITION	SPECIFIED CONDITION
L55-1 (SFL+) - L55-2 (SFL-)	Always	Below 1 Ω

TESTER CONNECTION	CONDITION	SPECIFIED CONDITION
L15-1 (SFL+) - L15-2 (SFL-)	Always	Below 1 Ω

(g) Check for a short to ground in the circuit.

(1) Measure the resistance according to the value(s) in the table below.

Standard Resistance:

for Power Seat

for Manual Seat

TESTER CONNECTION	CONDITION	SPECIFIED CONDITION
L55-1 (SFL+) - Body ground	Always	1 MΩ or higher
L55-2 (SFL-) - Body ground	Always	1 MΩ or higher

TESTER CONNECTION	CONDITION	SPECIFIED CONDITION
L15-1 (SFL+) - Body ground	Always	1 MΩ or higher
L15-2 (SFL-) - Body ground	Always	1 MΩ or higher

(h) Check for a short in the circuit.

(1) Release the activation prevention mechanism built into connector B 

.

(2) Measure the resistance according to the value(s) in the table below.

Standard Resistance:

for Power Seat

for Manual Seat

TESTER CONNECTION	CONDITION	SPECIFIED CONDITION
L55-1 (SFL+) - L55-2 (SFL-)	Always	1 MΩ or higher

TESTER CONNECTION	CONDITION	SPECIFIED CONDITION
L15-1 (SFL+) - L15-2 (SFL-)	Always	1 MΩ or higher

NG ▶ **REPLACE FLOOR WIRE**

OK ▼

4.	CHECK CENTER AIRBAG SENSOR ASSEMBLY

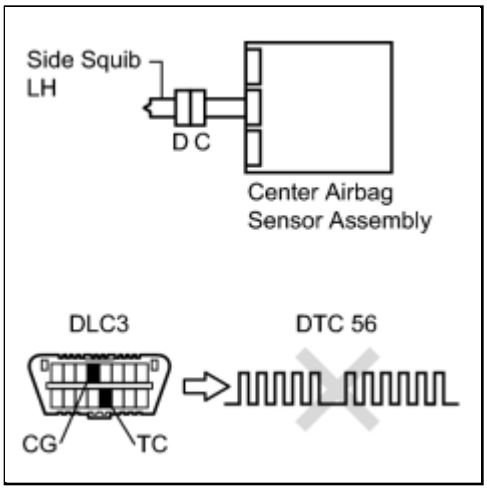

(a) Restore the released activation prevention mechanism of connector B to the original condition.

(b) Connect the connectors to the front seat side airbag assembly LH and the center airbag sensor assembly.

(c) Connect the cable to the negative (-) battery terminal.

(d) Turn the ignition switch to ON, and wait for at least 60 seconds.

(e) Clear the DTCs stored in the memory INFO .

(f) Turn the ignition switch off.

(g) Turn the ignition switch to ON, and wait for at least 60 seconds.

(h) Check for DTCs INFO .

OK:

DTC B1825, B1826, B1827, B1828, or 56 is not output.

HINT:

Codes other than DTC B1825, B1826, B1827, B1828, and 56 may be output at this time, but they are not related to this check.

NG ▶ REPLACE CENTER AIRBAG SENSOR ASSEMBLY

OK ▶ USE SIMULATION METHOD TO CHECK

Last Modified: 3-10-2010	6.4 C	**From:** 200901
Model Year: 2010	**Model:** Corolla	**Doc ID:** RM000001O03031X
Title: SUPPLEMENTAL RESTRAINT SYSTEMS: AIRBAG SYSTEM: B1830/57-B1833/57: Short in Curtain Shield Squib RH Circuit (2010 Corolla)		

DTC	**B1830/57**	**Short in Curtain Shield Squib RH Circuit**

DTC	**B1831/57**	**Open in Curtain Shield Squib RH Circuit**

DTC	**B1832/57**	**Short to GND in Curtain Shield Squib RH Circuit**

DTC	**B1833/57**	**Short to B+ in Curtain Shield Squib RH Circuit**

DESCRIPTION

The curtain shield squib RH circuit consists of the center airbag sensor assembly and the curtain shield airbag assembly RH.

The circuit instructs the SRS to deploy when deployment conditions are met.

These DTCs are recorded when a malfunction is detected in the curtain shield squib RH circuit.

DTC NO.	DTC DETECTION CONDITION	TROUBLE AREA
B1830/57	• The center airbag sensor assembly receives a short circuit signal 5 times in the curtain shield squib RH circuit during primary check. • Curtain shield squib RH malfunction • Center airbag sensor assembly malfunction	• No. 2 floor wire • Curtain shield airbag assembly RH (Curtain shield squib RH) • Center airbag sensor assembly
B1831/57	• The center airbag sensor assembly receives an open circuit signal in the curtain shield squib RH circuit for 2 seconds. • Curtain shield squib RH malfunction • Center airbag sensor assembly malfunction	• No. 2 floor wire • Curtain shield airbag assembly RH (Curtain shield squib RH) • Center airbag sensor assembly

DTC NO.	DTC DETECTION CONDITION	TROUBLE AREA
B1832/57	• The center airbag sensor assembly receives a short circuit to ground signal in the curtain shield squib RH circuit for 0.5 seconds. • Curtain shield squib RH malfunction • Center airbag sensor assembly malfunction	• No. 2 floor wire • Curtain shield airbag assembly RH (Curtain shield squib RH) • Center airbag sensor assembly
B1833/57	• The center airbag sensor assembly receives a short circuit to B+ signal in the curtain shield squib RH circuit for 0.5 seconds. • Curtain shield squib RH malfunction • Center airbag sensor assembly malfunction	• No. 2 floor wire • Curtain shield airbag assembly RH (Curtain shield squib RH) • Center airbag sensor assembly

WIRING DIAGRAM

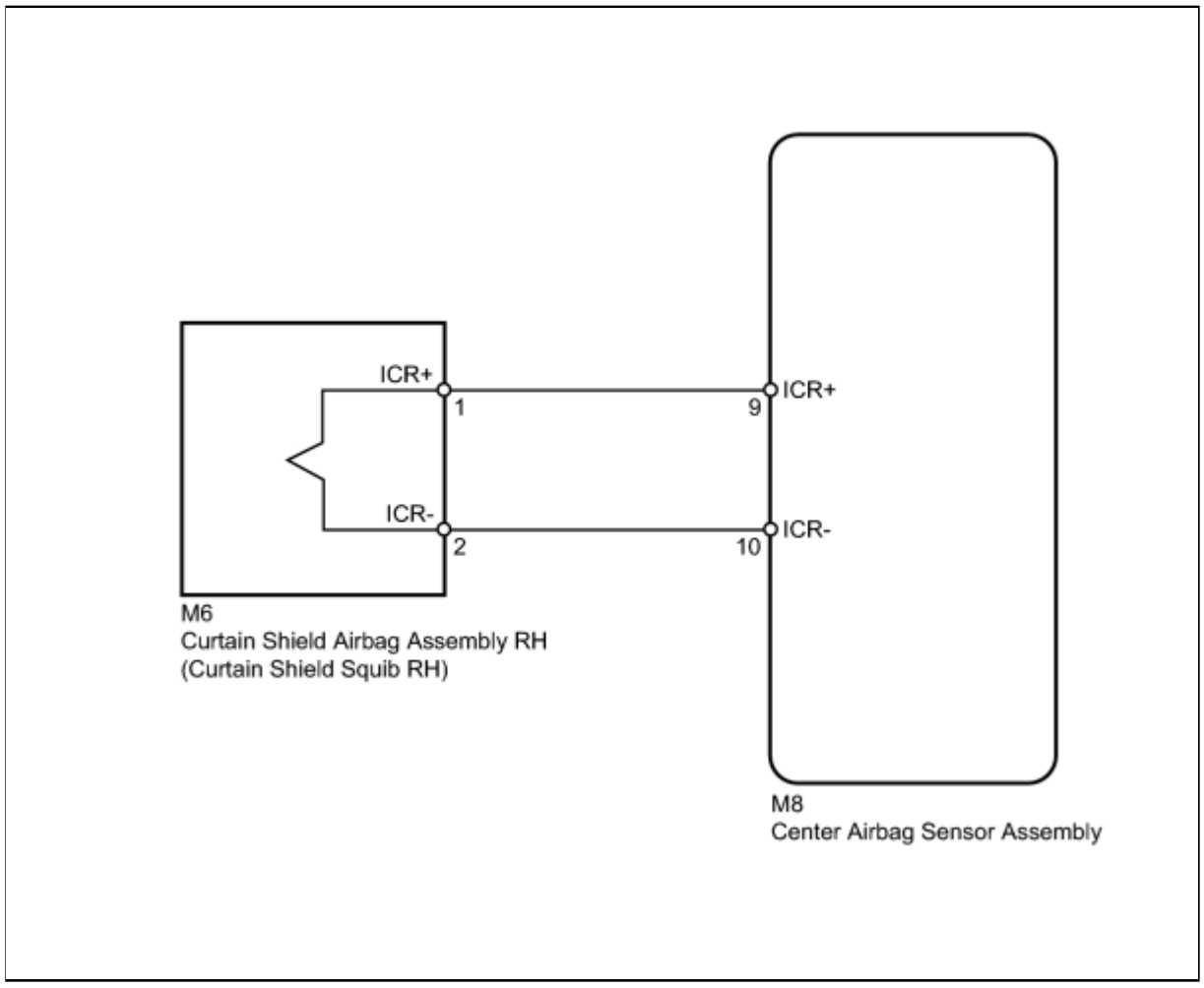

INSPECTION PROCEDURE

HINT:

- Perform the simulation method by selecting Check Mode (signal check) using the Techstream INFO .
- After selecting Check Mode (signal check), perform the simulation method by wiggling each connector of the airbag system or driving the vehicle on a city or rough road INFO .

PROCEDURE

1.	**CHECK CONNECTORS**

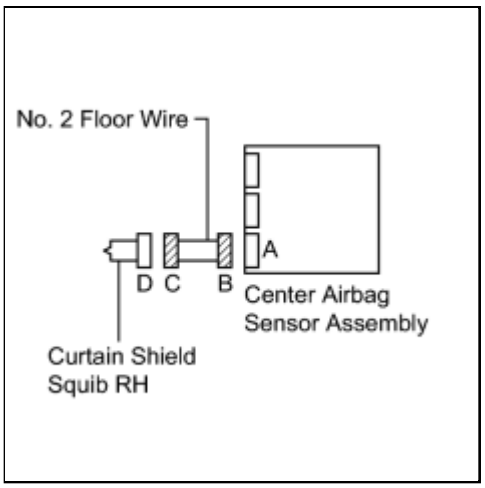

(a) Turn the ignition switch off.

(b) Disconnect the cable from the negative (-) battery terminal, and wait for at least 90 seconds.

(c) Check that the connectors are properly connected to the curtain shield airbag assembly RH and center airbag sensor assembly.

OK:

The connectors are properly connected.

HINT:

If the connectors are not connected securely, reconnect the connectors and proceed to the next inspection.

(d) Disconnect the connectors from the curtain shield airbag assembly RH and center airbag sensor assembly.

(e) Check that the terminals of the connectors are not damaged.

OK:

The terminals are not deformed or damaged.

(f) Check that the No. 2 floor wire connector (on the curtain shield airbag assembly RH side) is not damaged.

OK:

The lock button is not disengaged, or the claw of the lock is not deformed or damaged.

(g) Check that the short spring for the No. 2 floor wire with the activation prevention mechanism is not deformed or damaged.

OK:

The short spring is not deformed or damaged.

NG ▶ **REPLACE NO. 2 FLOOR WIRE**

OK ▼

2.	**CHECK CURTAIN SHIELD AIRBAG ASSEMBLY RH (CURTAIN SHIELD SQUIB RH)**

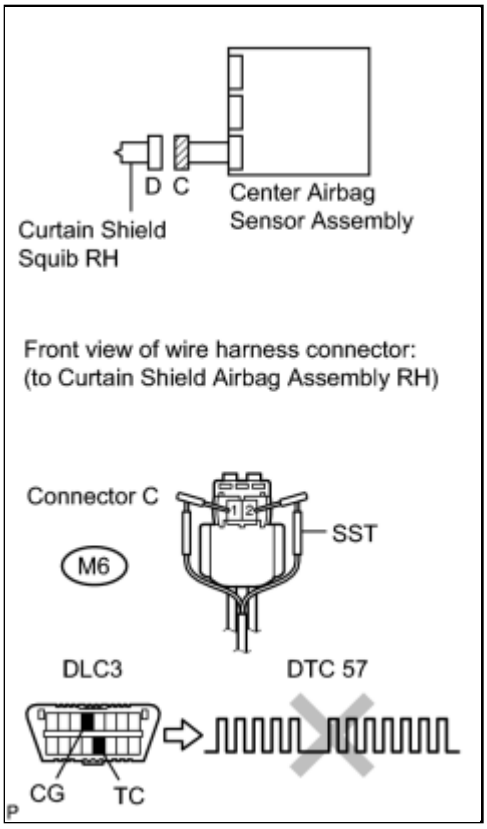

(a) Connect the connector to the center airbag sensor assembly.

(b) Connect SST (resistance 2.1 Ω) to connector C.

CAUTION:

Never connect the tester to the curtain shield airbag assembly RH (curtain shield squib RH) for measurement, as this may lead to a serious injury due to airbag deployment.

NOTICE:

- Do not forcibly insert SST into the terminals of the connector when connecting.
- Insert SST straight into the terminals of the connector.

SST: 09843-18061

(c) Connect the cable to the negative (-) battery terminal.

(d) Turn the ignition switch to ON, and wait for at least 60 seconds.

(e) Clear the DTCs stored in the memory INFO .

(f) Turn the ignition switch off.

(g) Turn the ignition switch to ON, and wait for at least 60 seconds.

(h) Check for DTCs INFO .

OK:

DTC B1830, B1831, B1832, B1833, or 57 is not output.

HINT:

Codes other than DTC B1830, B1831, B1832, B1833, and 57 may be output at this time, but they are not related to this check.

NG ▶ **CHECK NO. 2 FLOOR WIRE (CURTAIN SHIELD SQUIB RH CIRCUIT)**

OK ▶ **REPLACE CURTAIN SHIELD AIRBAG ASSEMBLY RH**

3.	**CHECK NO. 2 FLOOR WIRE (CURTAIN SHIELD SQUIB RH CIRCUIT)**

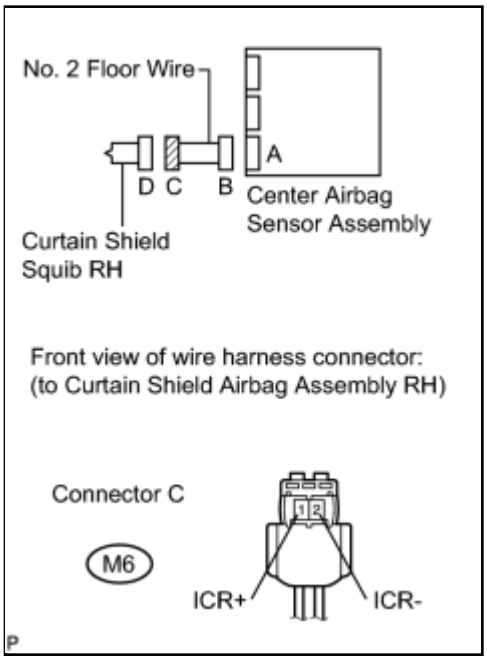

(a) Turn the ignition switch off.

(b) Disconnect the cable from the negative (-) battery terminal, and wait for at least 90 seconds.

(c) Disconnect SST from connector C.

(d) Disconnect the connector from the center airbag sensor assembly.

(e) Check for a short to B+ in the circuit.

(1) Connect the cable to the negative (-) battery terminal.

(2) Turn the ignition switch to ON.

(3) Measure the voltage according to the value(s) in the table below.

Standard Voltage:

TESTER CONNECTION	SWITCH CONDITION	SPECIFIED CONDITION
M6-1 (ICR+) - Body ground	Ignition switch ON	Below 1 V
M6-2 (ICR-) - Body ground	Ignition switch ON	Below 1 V

(f) Check for an open in the circuit.

(1) Turn the ignition switch off.

(2) Disconnect the cable from the negative (-) battery terminal, and wait for at least 90 seconds.

(3) Measure the resistance according to the value(s) in the table below.

Standard Resistance:

TESTER CONNECTION	CONDITION	SPECIFIED CONDITION
M6-1 (ICR+) - M6-2 (ICR-)	Always	Below 1 Ω

(g) Check for a short to ground in the circuit.

(1) Measure the resistance according to the value(s) in the table below.

Standard Resistance:

TESTER CONNECTION	CONDITION	SPECIFIED CONDITION
M6-1 (ICR+) - Body ground	Always	1 MΩ or higher
M6-2 (ICR-) - Body ground	Always	1 MΩ or higher

(h) Check for a short in the circuit.

(1) Release the activation prevention mechanism built into connector B INFO .

(2) Measure the resistance according to the value(s) in the table below.

Standard Resistance:

TESTER CONNECTION	CONDITION	SPECIFIED CONDITION
M6-1 (ICR+) - M6-2 (ICR-)	Always	1 MΩ or higher

NG ▶ **REPLACE NO. 2 FLOOR WIRE**

OK ▼

4.	CHECK CENTER AIRBAG SENSOR ASSEMBLY

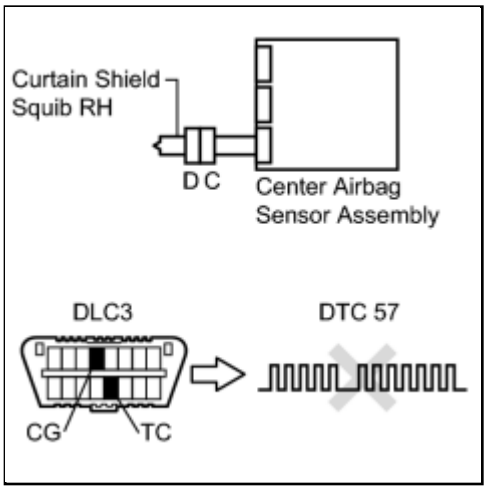

(a) Restore the released activation prevention mechanism of connector B to the original condition.

(b) Connect the connectors to the curtain shield airbag assembly RH and the center airbag sensor assembly.

(c) Connect the cable to the negative (-) battery terminal.

(d) Turn the ignition switch to ON, and wait for at least 60 seconds.

(e) Clear the DTCs stored in the memory INFO .

(f) Turn the ignition switch off.

(g) Turn the ignition switch to ON, and wait for at least 60 seconds.

(h) Check for DTCs INFO .

OK:

DTC B1830, B1831, B1832, B1833, or 57 is not output.

HINT:

Codes other than DTC B1830, B1831, B1832, B1833, and 57 may be output at this time, but they are not related to this check.

NG ▶ REPLACE CENTER AIRBAG SENSOR ASSEMBLY

OK ▶ USE SIMULATION METHOD TO CHECK

Last Modified: 3-10-2010	6.4 C	**From:** 200901
Model Year: 2010	**Model:** Corolla	**Doc ID:** RM000001O04031X
Title: SUPPLEMENTAL RESTRAINT SYSTEMS: AIRBAG SYSTEM: B1835/58-B1838/58: Short in Curtain Shield Squib LH Circuit (2010 Corolla)		

DTC	**B1835/58**	**Short in Curtain Shield Squib LH Circuit**

DTC	**B1836/58**	**Open in Curtain Shield Squib LH Circuit**

DTC	**B1837/58**	**Short to GND in Curtain Shield Squib LH Circuit**

DTC	**B1838/58**	**Short to B+ in Curtain Shield Squib LH Circuit**

DESCRIPTION

The curtain shield squib LH circuit consists of the center airbag sensor assembly and the curtain shield airbag assembly LH.

The circuit instructs the SRS to deploy when deployment conditions are met.

These DTCs are recorded when a malfunction is detected in the curtain shield squib LH circuit.

DTC NO.	DTC DETECTION CONDITION	TROUBLE AREA
B1835/58	• The center airbag sensor assembly receives a short circuit signal 5 times in the curtain shield squib LH circuit during primary check. • Curtain shield squib LH malfunction • Center airbag sensor assembly malfunction	• Floor wire • Curtain shield airbag assembly LH (Curtain shield squib LH) • Center airbag sensor assembly
B1836/58	• The center airbag sensor assembly receives an open circuit signal in the curtain shield squib LH circuit for 2 seconds. • Curtain shield squib LH malfunction • Center airbag sensor assembly malfunction	• Floor wire • Curtain shield airbag assembly LH (Curtain shield squib LH) • Center airbag sensor assembly

DTC NO.	DTC DETECTION CONDITION	TROUBLE AREA
B1837/58	• The center airbag sensor assembly receives a short circuit to ground signal in the curtain shield squib LH circuit for 0.5 seconds. • Curtain shield squib LH malfunction • Center airbag sensor assembly malfunction	• Floor wire • Curtain shield airbag assembly LH (Curtain shield squib LH) • Center airbag sensor assembly
B1838/58	• The center airbag sensor assembly receives a short circuit to B+ signal in the curtain shield squib LH circuit for 0.5 seconds. • Curtain shield squib LH malfunction • Center airbag sensor assembly malfunction	• Floor wire • Curtain shield airbag assembly LH (Curtain shield squib LH) • Center airbag sensor assembly

WIRING DIAGRAM

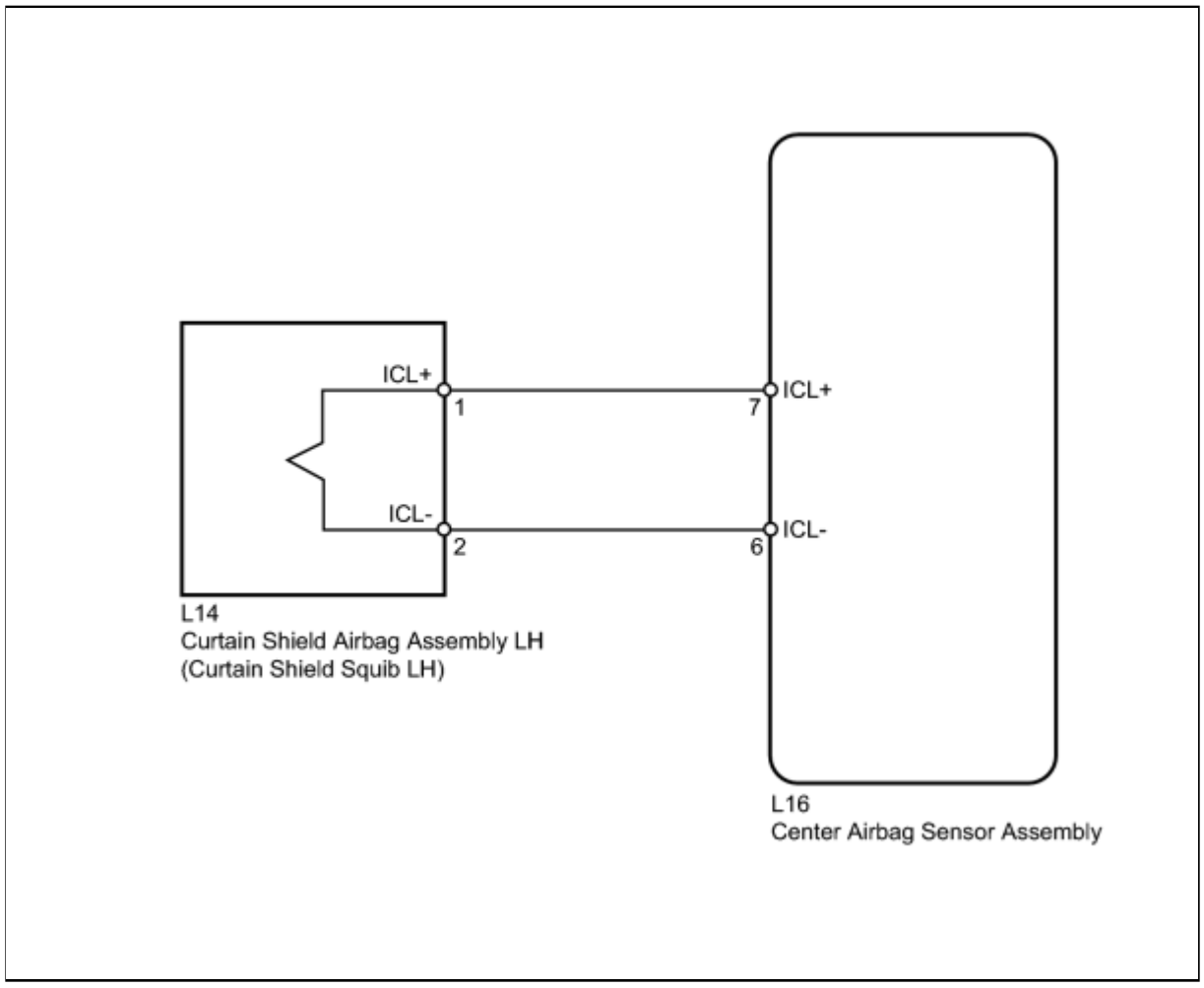

INSPECTION PROCEDURE

HINT:

- Perform the simulation method by selecting Check Mode (signal check) using the Techstream INFO .
- After selecting Check Mode (signal check), perform the simulation method by wiggling each connector of the airbag system or driving the vehicle on a city or rough road INFO .

PROCEDURE

1.	**CHECK CONNECTORS**

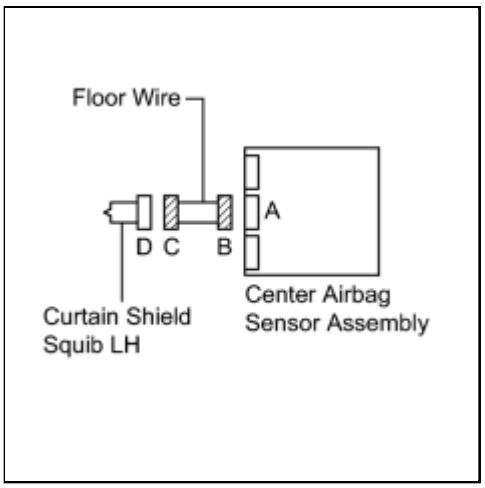

(a) Turn the ignition switch off.

(b) Disconnect the cable from the negative (-) battery terminal, and wait for at least 90 seconds.

(c) Check that the connectors are properly connected to the curtain shield airbag assembly LH and center airbag sensor assembly.

OK:

The connectors are properly connected.

HINT:

If the connectors are not connected securely, reconnect the connectors and proceed to the next inspection.

(d) Disconnect the connectors from the curtain shield airbag assembly LH and center airbag sensor assembly.

(e) Check that the terminals of the connectors are not damaged.

OK:

The terminals are not deformed or damaged.

(f) Check that the floor wire connector (on the curtain shield airbag assembly LH side) is not damaged.

OK:

The lock button is not disengaged, or the claw of the lock is not deformed or damaged.

(g) Check that the short spring for the floor wire with the activation prevention mechanism is not deformed or damaged.

OK:

The short spring is not deformed or damaged.

NG ▶ **REPLACE FLOOR WIRE**

OK ▼

2.	**CHECK CURTAIN SHIELD AIRBAG ASSEMBLY LH (CURTAIN SHIELD SQUIB LH)**

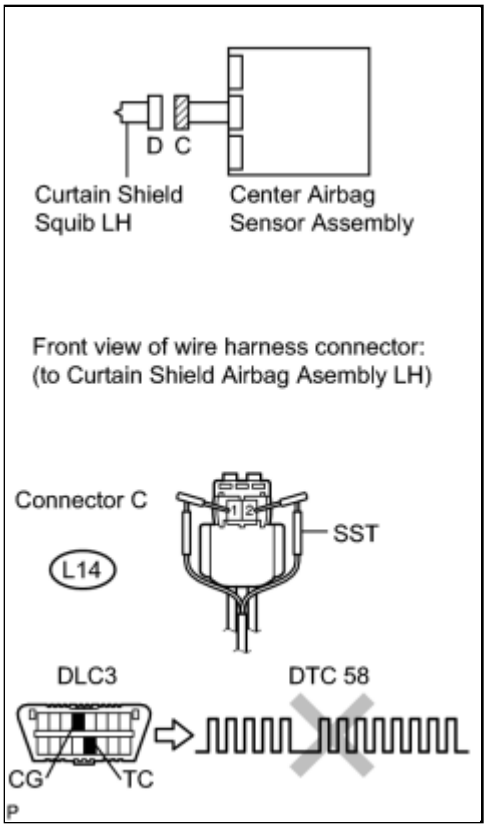

(a) Connect the connector to the center airbag sensor assembly.

(b) Connect SST (resistance 2.1 Ω) to connector C.

CAUTION:

Never connect the tester to the curtain shield airbag assembly LH (curtain shield squib LH) for measurement, as this may lead to a serious injury due to airbag deployment.

NOTICE:

- Do not forcibly insert SST into the terminals of the connector when connecting.
- Insert SST straight into the terminals of the connector.

SST: 09843-18061

(c) Connect the cable to the negative (-) battery terminal.

(d) Turn the ignition switch to ON, and wait for at least 60 seconds.

(e) Clear the DTCs stored in the memory INFO .

(f) Turn the ignition switch off.

(g) Turn the ignition switch to ON, and wait for at least 60 seconds.

(h) Check for DTCs INFO .

OK:

DTC B1835, B1836, B1837, B1838, or 58 is not output.

HINT:

Codes other than DTC B1835, B1836, B1837, B1838, and 58 may be output at this time, but they are not related to this check.

NG ▶ **CHECK FLOOR WIRE (CURTAIN SHIELD SQUIB LH CIRCUIT)**

OK ▶ **REPLACE CURTAIN SHIELD AIRBAG ASSEMBLY LH**

3.	**CHECK FLOOR WIRE (CURTAIN SHIELD SQUIB LH CIRCUIT)**

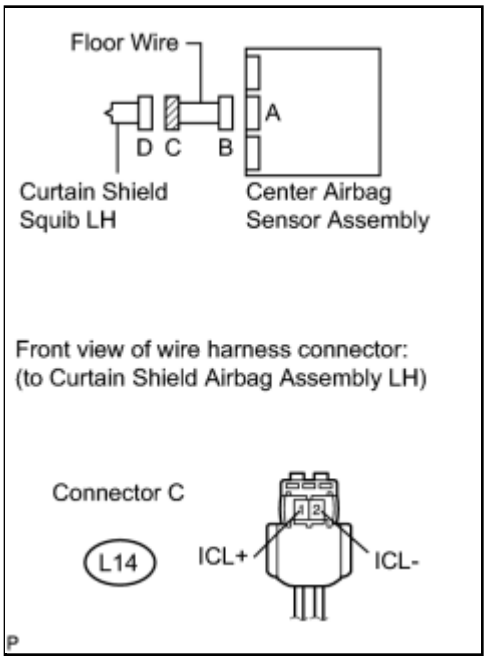

(a) Turn the ignition switch off.

(b) Disconnect the cable from the negative (-) battery terminal, and wait for at least 90 seconds.

(c) Disconnect SST from connector C.

(d) Disconnect the connector from the center airbag sensor assembly.

(e) Check for a short to B+ in the circuit.

(1) Connect the cable to the negative (-) battery terminal.

(2) Turn the ignition switch to ON.

(3) Measure the voltage according to the value(s) in the table below.

Standard Voltage:

TESTER CONNECTION	SWITCH CONDITION	SPECIFIED CONDITION
L14-1 (ICL+) - Body ground	Ignition switch ON	Below 1 V
L14-2 (ICL-) - Body ground	Ignition switch ON	Below 1 V

(f) Check for an open in the circuit.

(1) Turn the ignition switch off.

(2) Disconnect the cable from the negative (-) battery terminal, and wait for at least 90 seconds.

(3) Measure the resistance according to the value(s) in the table below.

Standard Resistance:

TESTER CONNECTION	CONDITION	SPECIFIED CONDITION
L14-1 (ICL+) - L14-2 (ICL-)	Always	Below 1 Ω

(g) Check for a short to ground in the circuit.

(1) Measure the resistance according to the value(s) in the table below.

Standard Resistance:

TESTER CONNECTION	CONDITION	SPECIFIED CONDITION
L14-1 (ICL+) - Body ground	Always	1 MΩ or higher
L14-2 (ICL-) - Body ground	Always	1 MΩ or higher

(h) Check for a short in the circuit.

(1) Release the activation prevention mechanism built into connector B INFO .

(2) Measure the resistance according to the value(s) in the table below.

Standard Resistance:

TESTER CONNECTION	CONDITION	SPECIFIED CONDITION
L14-1 (ICL+) - L14-2 (ICL-)	Always	1 MΩ or higher

NG ▶ **REPLACE FLOOR WIRE**

OK ▼

4.	CHECK CENTER AIRBAG SENSOR ASSEMBLY

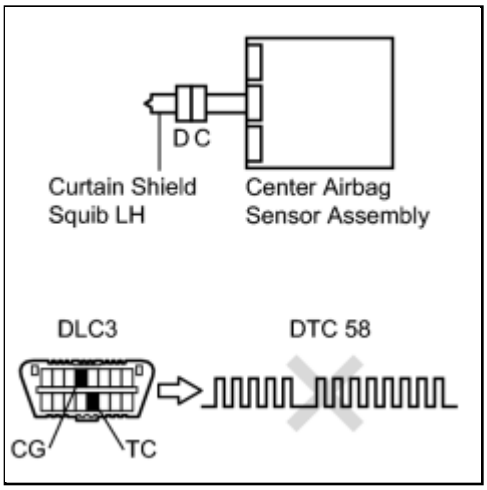

(a) Restore the released activation prevention mechanism of connector B to the original condition.

(b) Connect the connectors to the curtain shield airbag assembly LH and the center airbag sensor assembly.

(c) Connect the cable to the negative (-) battery terminal.

(d) Turn the ignition switch to ON, and wait for at least 60 seconds.

(e) Clear the DTCs stored in the memory INFO .

(f) Turn the ignition switch off.

(g) Turn the ignition switch to ON, and wait for at least 60 seconds.

(h) Check for DTCs INFO .

OK:
DTC B1835, B1836, B1837, B1838, or 58 is not output.

HINT:

Codes other than DTC B1835, B1836, B1837, B1838, and 58 may be output at this time, but they are not related to this check.

NG ▶ REPLACE CENTER AIRBAG SENSOR ASSEMBLY

OK ▶ USE SIMULATION METHOD TO CHECK

Last Modified: 3-10-2010	6.4 C	**From:** 200901
Model Year: 2010	**Model:** Corolla	**Doc ID:** RM000001O0503IX
Title: SUPPLEMENTAL RESTRAINT SYSTEMS: AIRBAG SYSTEM: B1900/73-B1903/73: Short in Front Pretensioner Squib RH Circuit (2010 Corolla)		

DTC	**B1900/73**	**Short in Front Pretensioner Squib RH Circuit**

DTC	**B1901/73**	**Open in Front Pretensioner Squib RH Circuit**

DTC	**B1902/73**	**Short to GND in Front Pretensioner Squib RH Circuit**

DTC	**B1903/73**	**Short to B+ in Front Pretensioner Squib RH Circuit**

DESCRIPTION

The front pretensioner squib RH circuit consists of the center airbag sensor assembly and the front seat outer belt assembly RH.

This circuit instructs the SRS to deploy when deployment conditions are met.

These DTCs are recorded when a malfunction is detected in the front pretensioner squib RH circuit.

DTC NO.	DTC DETECTION CONDITION	TROUBLE AREA
B1900/73	• The center airbag sensor assembly receives a short circuit signal 5 times in the front pretensioner squib RH circuit during primary check. • Front pretensioner squib RH malfunction • Center airbag sensor assembly malfunction	• No. 2 Floor wire • Front seat outer belt assembly RH (Front pretensioner squib RH) • Center airbag sensor assembly
B1901/73	• The center airbag sensor assembly receives an open circuit signal in the front pretensioner squib RH circuit for 2 seconds. • Front pretensioner squib RH malfunction • Center airbag sensor assembly malfunction	• No. 2 Floor wire • Front seat outer belt assembly RH (Front pretensioner squib RH) • Center airbag sensor assembly

DTC NO.	DTC DETECTION CONDITION	TROUBLE AREA
B1902/73	• The center airbag sensor assembly receives a short circuit to ground signal in the front pretensioner squib RH circuit for 0.5 seconds. • Front pretensioner squib RH malfunction • Center airbag sensor assembly malfunction	• No. 2 Floor wire • Front seat outer belt assembly RH (Front pretensioner squib RH) • Center airbag sensor assembly
B1903/73	• The center airbag sensor assembly receives a short circuit to B+ signal in the front pretensioner squib RH circuit for 0.5 seconds. • Front pretensioner squib RH malfunction • Center airbag sensor assembly malfunction	• No. 2 Floor wire • Front seat outer belt assembly RH (Front pretensioner squib RH) • Center airbag sensor assembly

WIRING DIAGRAM

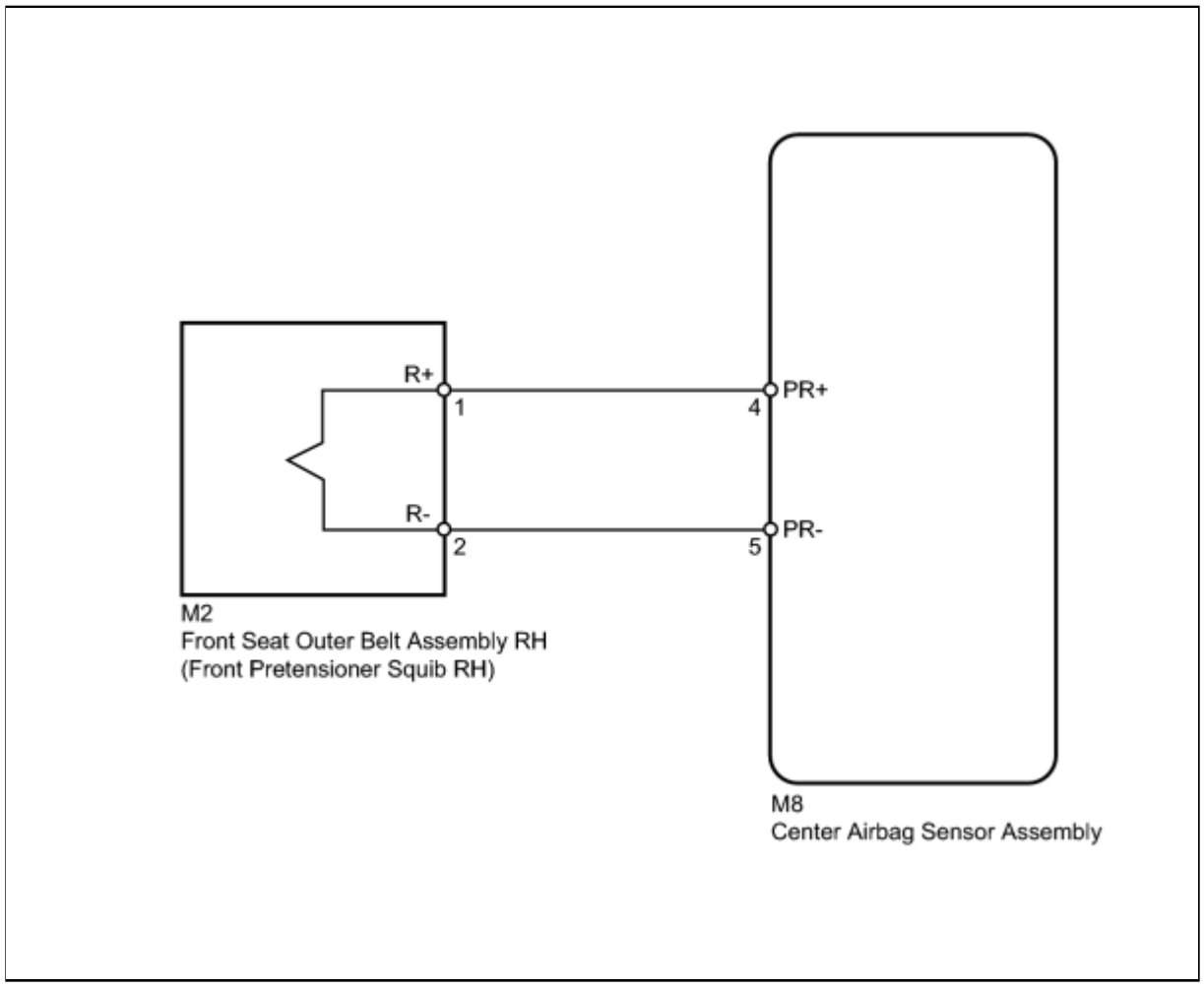

INSPECTION PROCEDURE

HINT:

- Perform the simulation method by selecting Check Mode (signal check) using the Techstream INFO .
- After selecting Check Mode (signal check), perform the simulation method by wiggling each connector of the airbag system or driving the vehicle on a city or rough road INFO .

PROCEDURE

1.	**CHECK CONNECTORS**

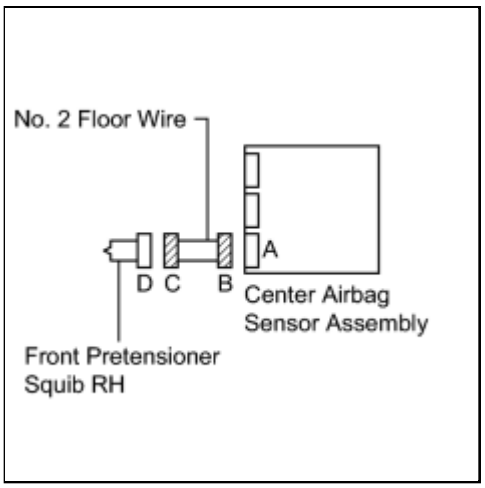

(a) Turn the ignition switch off.

(b) Disconnect the cable from the negative (-) battery terminal, and wait for at least 90 seconds.

(c) Check that the connectors are properly connected to the front seat outer belt assembly RH and center airbag sensor assembly.

OK:

The connectors are properly connected.

HINT:

If the connectors are not connected securely, reconnect the connectors and proceed to the next inspection.

(d) Disconnect the connectors from the front seat outer belt assembly RH and center airbag sensor assembly.

(e) Check that the terminals of the connectors are not damaged.

OK:

The terminals are not deformed or damaged.

(f) Check that the No. 2 floor wire connector (on the front seat outer belt assembly RH side) is not damaged.

OK:

The lock button is not disengaged, or the claw of the lock is not deformed or damaged.

(g) Check that the short spring for the No. 2 floor wire with the activation prevention mechanism is not deformed or damaged.

OK:

The short spring is not deformed or damaged.

NG ▶ **REPLACE NO. 2 FLOOR WIRE**

OK ▼

2.	**CHECK FRONT SEAT OUTER BELT ASSEMBLY RH (FRONT PRETENSIONER SQUIB RH)**

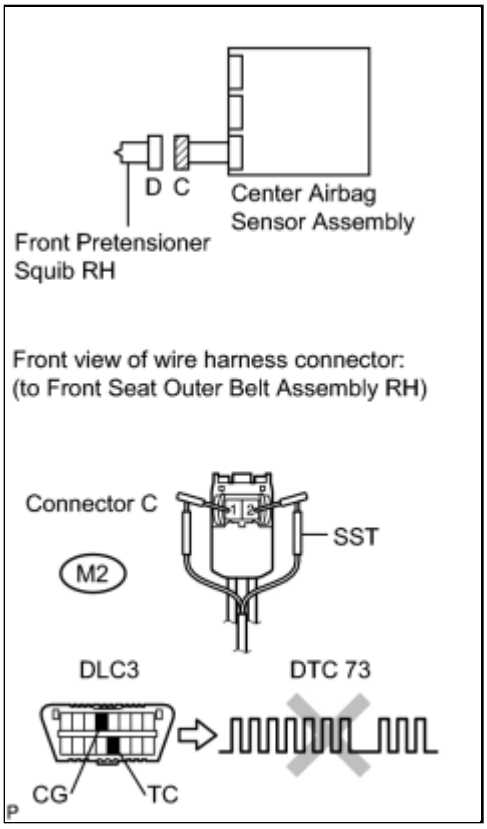

(a) Connect the connector to the center airbag sensor assembly.

(b) Connect SST (resistance 2.1 Ω) to connector C.

CAUTION:

Never connect the tester to the front seat outer belt assembly RH (front pretensioner squib RH) for measurement, as this may lead to a serious injury due to airbag deployment.

NOTICE:

- Do not forcibly insert SST into the terminals of the connector when connecting.
- Insert SST straight into the terminals of the connector.

SST: 09843-18061

(c) Connect the cable to the negative (-) battery terminal.

(d) Turn the ignition switch to ON, and wait for at least 60 seconds.

(e) Clear the DTCs stored in the memory INFO .

(f) Turn the ignition switch off.

(g) Turn the ignition switch to ON, and wait for at least 60 seconds.

(h) Check for DTCs INFO .

OK:
DTC B1900, B1901, B1902, B1903, or 73 is not output.

HINT:

Codes other than DTC B1900, B1901, B1902, B1903, and 73 may be output at this time, but they are not related to this check.

NG ▶ **CHECK NO. 2 FLOOR WIRE (FRONT PRETENSIONER SQUIB RH CIRCUIT)**

OK ▶ **REPLACE FRONT SEAT OUTER BELT ASSEMBLY RH**

3.	CHECK NO. 2 FLOOR WIRE (FRONT PRETENSIONER SQUIB RH CIRCUIT)

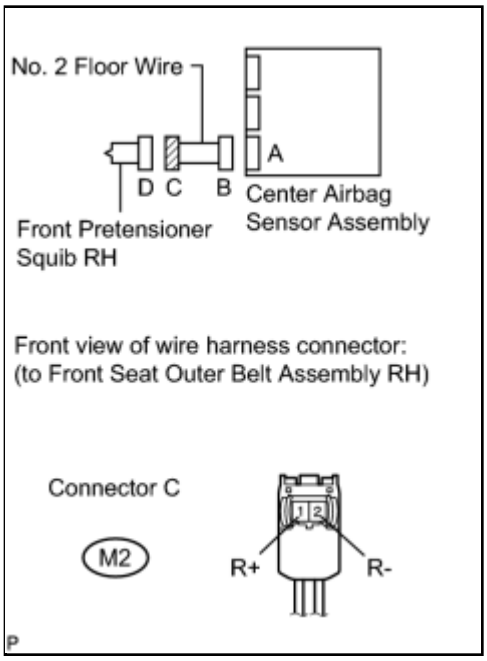

(a) Turn the ignition switch off.

(b) Disconnect the cable from the negative (-) battery terminal, and wait for at least 90 seconds.

(c) Disconnect SST from connector C.

(d) Disconnect the connector from the center airbag sensor assembly.

(e) Check for a short to B+ in the circuit.

(1) Connect the cable to the negative (-) battery terminal.

(2) Turn the ignition switch to ON.

(3) Measure the voltage according to the value(s) in the table below.

Standard Voltage:

TESTER CONNECTION	SWITCH CONDITION	SPECIFIED CONDITION
M2-1 (R+) - Body ground	Ignition switch ON	Below 1 V
M2-2 (R-) - Body ground	Ignition switch ON	Below 1 V

(f) Check for an open in the circuit.

(1) Turn the ignition switch off.

(2) Disconnect the cable from the negative (-) battery terminal, and wait for at least 90 seconds.

(3) Measure the resistance according to the value(s) in the table below.

Standard Resistance:

TESTER CONNECTION	CONDITION	SPECIFIED CONDITION
M2-1 (R+) - M2-2 (R-)	Always	Below 1 Ω

(g) Check for a short to ground in the circuit.

(1) Measure the resistance according to the value(s) in the table below.

Standard Resistance:

TESTER CONNECTION	CONDITION	SPECIFIED CONDITION
M2-1 (R+) - Body ground	Always	1 MΩ or higher
M2-2 (R-) - Body ground	Always	1 MΩ or higher

(h) Check for a short in the circuit.

(1) Release the activation prevention mechanism built into connector B INFO .

(2) Measure the resistance according to the value(s) in the table below.

Standard Resistance:

TESTER CONNECTION	CONDITION	SPECIFIED CONDITION
M2-1 (R+) - M2-2 (R-)	Always	1 MΩ or higher

NG ▶ **REPLACE NO. 2 FLOOR WIRE**

OK ▼

4.	CHECK CENTER AIRBAG SENSOR ASSEMBLY

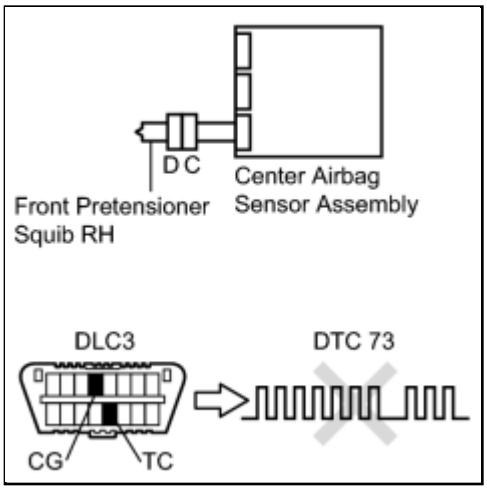

(a) Restore the released activation prevention mechanism of connector B to the original condition.

(b) Connect the connectors to the front seat outer belt assembly RH and the center airbag sensor assembly.

(c) Connect the cable to the negative (-) battery terminal.

(d) Turn the ignition switch to ON, and wait for at least 60 seconds.

(e) Clear the DTCs stored in the memory INFO .

(f) Turn the ignition switch off.

(g) Turn the ignition switch to ON, and wait for at least 60 seconds.

(h) Check for DTCs INFO .

OK:

DTC B1900, B1901, B1902, B1903, or 73 is not output.

HINT:

Codes other than DTC B1900, B1901, B1902, B1903, and 73 may be output at this time, but they are not related to this check.

NG ▶ REPLACE CENTER AIRBAG SENSOR ASSEMBLY

OK ▶ USE SIMULATION METHOD TO CHECK

Last Modified: 3-10-2010	6.4 C	**From:** 200901
Model Year: 2010	**Model:** Corolla	**Doc ID:** RM000001O0603HX
Title: SUPPLEMENTAL RESTRAINT SYSTEMS: AIRBAG SYSTEM: B1905/74-B1908/74: Short in Front Pretensioner Squib LH Circuit (2010 Corolla)		

DTC	**B1905/74**	**Short in Front Pretensioner Squib LH Circuit**

DTC	**B1906/74**	**Open in Front Pretensioner Squib LH Circuit**

DTC	**B1907/74**	**Short to GND in Front Pretensioner Squib LH Circuit**

DTC	**B1908/74**	**Short to B+ in Front Pretensioner Squib LH Circuit**

DESCRIPTION

The front pretensioner squib LH circuit consists of the center airbag sensor assembly and the front seat outer belt assembly LH.

This circuit instructs the SRS to deploy when deployment conditions are met.

These DTCs are recorded when a malfunction is detected in the front pretensioner squib LH circuit.

DTC NO.	DTC DETECTION CONDITION	TROUBLE AREA
B1905/74	• The center airbag sensor assembly receives a short circuit signal 5 times in the front pretensioner squib LH circuit during primary check. • Front pretensioner squib LH malfunction • Center airbag sensor assembly malfunction	• Floor wire • Front seat outer belt assembly LH (Front pretensioner squib LH) • Center airbag sensor assembly
B1906/74	• The center airbag sensor assembly receives an open circuit signal in the front pretensioner squib LH circuit for 2 seconds. • Front pretensioner squib LH malfunction • Center airbag sensor assembly malfunction	• Floor wire • Front seat outer belt assembly LH (Front pretensioner squib LH) • Center airbag sensor assembly

DTC NO.	DTC DETECTION CONDITION	TROUBLE AREA
B1907/74	• The center airbag sensor assembly receives a short circuit to ground signal in the front pretensioner squib LH circuit for 0.5 seconds. • Front pretensioner squib LH malfunction • Center airbag sensor assembly malfunction	• Floor wire • Front seat outer belt assembly LH (Front pretensioner squib LH) • Center airbag sensor assembly
B1908/74	• The center airbag sensor assembly receives a short circuit to B+ signal in the front pretensioner squib LH circuit for 0.5 seconds. • Front pretensioner squib LH malfunction • Center airbag sensor assembly malfunction	• Floor wire • Front seat outer belt assembly LH (Front pretensioner squib LH) • Center airbag sensor assembly

WIRING DIAGRAM

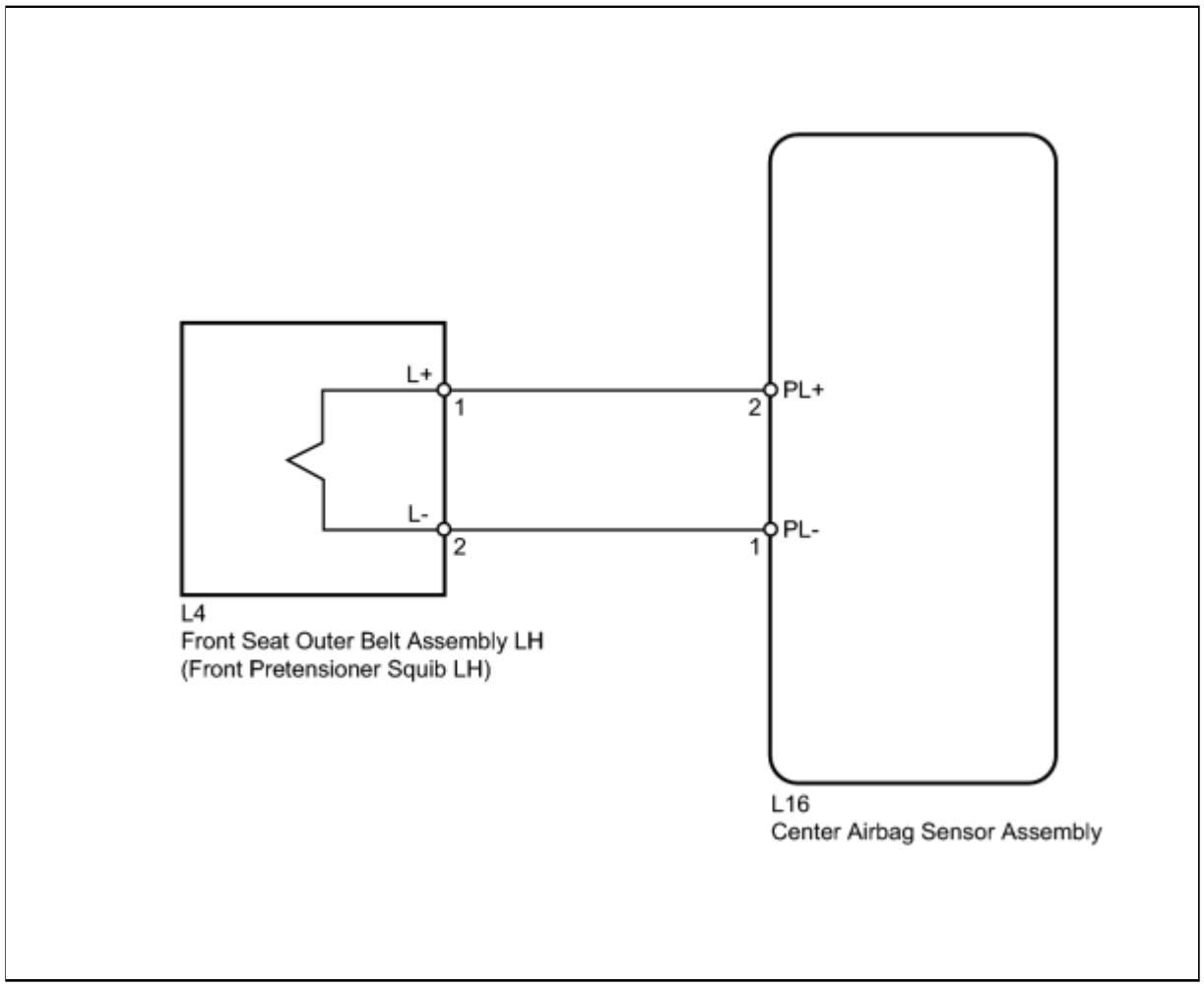

INSPECTION PROCEDURE

HINT:

- Perform the simulation method by selecting Check Mode (signal check) using the Techstream INFO .
- After selecting Check Mode (signal check), perform the simulation method by wiggling each connector of the airbag system or driving the vehicle on a city or rough road INFO .

PROCEDURE

1.	**CHECK CONNECTORS**

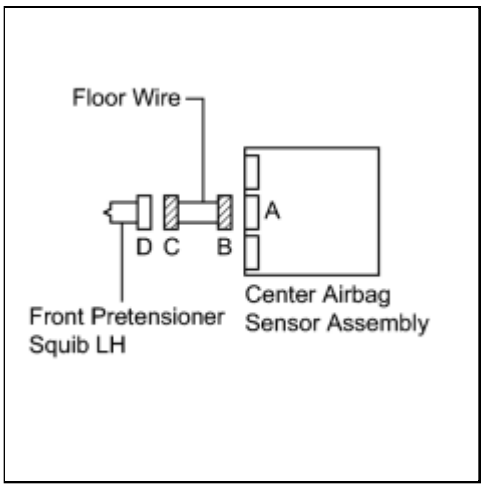

(a) Turn the ignition switch off.

(b) Disconnect the cable from the negative (-) battery terminal, and wait for at least 90 seconds.

(c) Check that the connectors are properly connected to the front seat outer belt assembly LH and center airbag sensor assembly.

OK:

The connectors are properly connected.

HINT:

If the connectors are not connected securely, reconnect the connectors and proceed to the next inspection.

(d) Disconnect the connectors from the front seat outer belt assembly LH and center airbag sensor assembly.

(e) Check that the terminals of the connectors are not damaged.

OK:

The terminals are not deformed or damaged.

(f) Check that the floor wire connector (on the front seat outer belt assembly LH side) is not damaged.

OK:

The lock button is not disengaged, or the claw of the lock is not deformed or damaged.

(g) Check that the short spring for the floor wire with the activation prevention mechanism is not deformed or damaged.

OK:

The short spring is not deformed or damaged.

NG ▶ **REPLACE FLOOR WIRE**

OK ▼

2.	**CHECK FRONT SEAT OUTER BELT ASSEMBLY LH (FRONT PRETENSIONER SQUIB LH)**

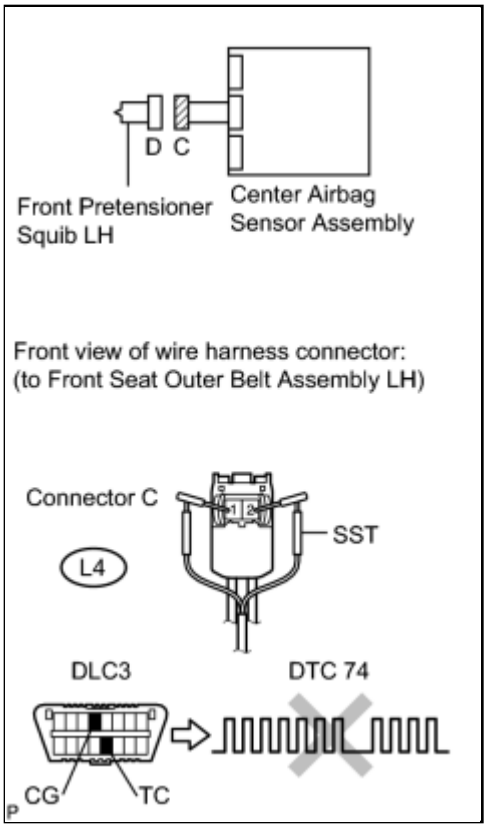

(a) Connect the connector to the center airbag sensor assembly.

(b) Connect SST (resistance 2.1 Ω) to connector C.

CAUTION:

Never connect the tester to the front seat outer belt assembly LH (front pretensioner squib LH) for measurement, as this may lead to a serious injury due to airbag deployment.

NOTICE:

- Do not forcibly insert SST into the terminals of the connector when connecting.
- Insert SST straight into the terminals of the connector.

SST: 09843-18061

(c) Connect the cable to the negative (-) battery terminal.

(d) Turn the ignition switch to ON, and wait for at least 60 seconds.

(e) Clear the DTCs stored in the memory INFO .

(f) Turn the ignition switch off.

(g) Turn the ignition switch to ON, and wait for at least 60 seconds.

(h) Check for DTCs INFO .

OK:
DTC B1905, B1906, B1907, B1908, or 74 is not output.

HINT:

Codes other than DTC B1905, B1906, B1907, B1908, and 74 may be output at this time, but they are not related to this check.

NG ▶ **CHECK FLOOR WIRE (FRONT PRETENSIONER SQUIB LH CIRCUIT)**

OK ▶ **REPLACE FRONT SEAT OUTER BELT ASSEMBLY LH**

3.	CHECK FLOOR WIRE (FRONT PRETENSIONER SQUIB LH CIRCUIT)

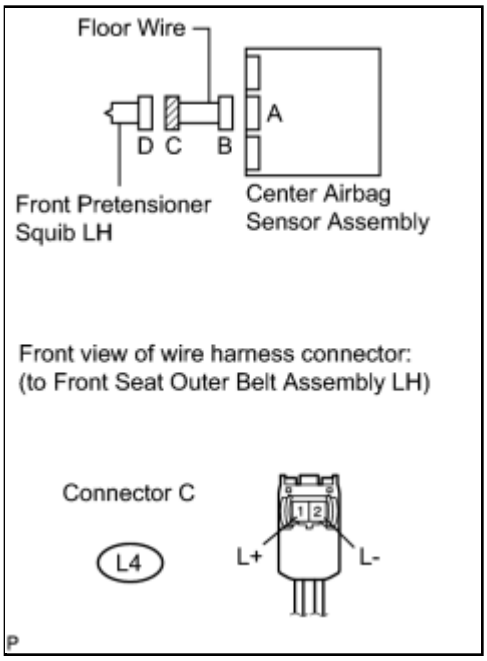

(a) Turn the ignition switch off.

(b) Disconnect the cable from the negative (-) battery terminal, and wait for at least 90 seconds.

(c) Disconnect SST from connector C.

(d) Disconnect the connector from the center airbag sensor assembly.

(e) Check for a short to B+ in the circuit.

(1) Connect the cable to the negative (-) battery terminal.

(2) Turn the ignition switch to ON.

(3) Measure the voltage according to the value(s) in the table below.

Standard Voltage:

TESTER CONNECTION	SWITCH CONDITION	SPECIFIED CONDITION
L4-1 (L+) - Body ground	Ignition switch ON	Below 1 V
L4-2 (L-) - Body ground	Ignition switch ON	Below 1 V

(f) Check for an open in the circuit.

(1) Turn the ignition switch off.

(2) Disconnect the cable from the negative (-) battery terminal, and wait for at least 90 seconds.

(3) Measure the resistance according to the value(s) in the table below.

Standard Resistance:

TESTER CONNECTION	CONDITION	SPECIFIED CONDITION
L4-1 (L+) - L4-2 (L-)	Always	Below 1 Ω

(g) Check for a short to ground in the circuit.

(1) Measure the resistance according to the value(s) in the table below.

Standard Resistance:

TESTER CONNECTION	CONDITION	SPECIFIED CONDITION
L4-1 (L+) - Body ground	Always	1 MΩ or higher
L4-2 (L-) - Body ground	Always	1 MΩ or higher

(h) Check for a short in the circuit.

(1) Release the activation prevention mechanism built into connector B INFO .

(2) Measure the resistance according to the value(s) in the table below.

Standard Resistance:

TESTER CONNECTION	CONDITION	SPECIFIED CONDITION
L4-1 (L+) - L4-2 (L-)	Always	1 MΩ or higher

NG ▶ **REPLACE FLOOR WIRE**

OK ▼

4.	CHECK CENTER AIRBAG SENSOR ASSEMBLY

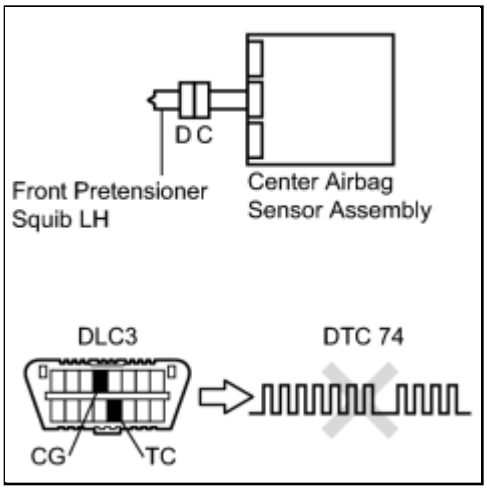

(a) Restore the released activation prevention mechanism of connector B to the original condition.

(b) Connect the connectors to the front seat outer belt assembly LH and the center airbag sensor assembly.

(c) Connect the cable to the negative (-) battery terminal.

(d) Turn the ignition switch to ON, and wait for at least 60 seconds.

(e) Clear the DTCs stored in the memory INFO .

(f) Turn the ignition switch off.

(g) Turn the ignition switch to ON, and wait for at least 60 seconds.

(h) Check for DTCs INFO .

OK:
DTC B1905, B1906, B1907, B1908, or 74 is not output.

HINT:

Codes other than DTC B1905, B1906, B1907, B1908, and 74 may be output at this time, but they are not related to this check.

NG ▶ REPLACE CENTER AIRBAG SENSOR ASSEMBLY

OK ▶ USE SIMULATION METHOD TO CHECK

Last Modified: 3-10-2010	6.4 J	**From:** 200901
Model Year: 2010	**Model:** Corolla	**Doc ID:** RM000000YE206HX
Title: SUPPLEMENTAL RESTRAINT SYSTEMS: AIRBAG SYSTEM: SRS Warning Light Remains ON (2010 Corolla)		

SRS Warning Light Remains ON

DESCRIPTION

The SRS warning light is located on the combination meter assembly.

When the SRS is normal, the SRS warning light comes on for approximately 6 seconds after the ignition switch is turned from off to ON, and then goes off automatically.

If there is a malfunction in the SRS, the SRS warning light comes on to inform the driver of a problem.

When terminals TC and CG of the DLC3 are connected, the DTC is indicated by blinking pattern of the SRS warning light.

The SRS is equipped with a voltage-increase circuit (DC-DC converter) in the center airbag sensor assembly in case the source voltage drops.

When the battery voltage drops, the voltage-increase circuit (DC-DC converter) functions to increase the voltage of the SRS to normal voltage.

A malfunction in this circuit is not recorded in the center airbag sensor assembly. The SRS warning light automatically goes off when the source voltage returns to normal.

The signal to illuminate the SRS warning light is transmitted from the center airbag sensor assembly to the combination meter assembly through the CAN communication system.

WIRING DIAGRAM

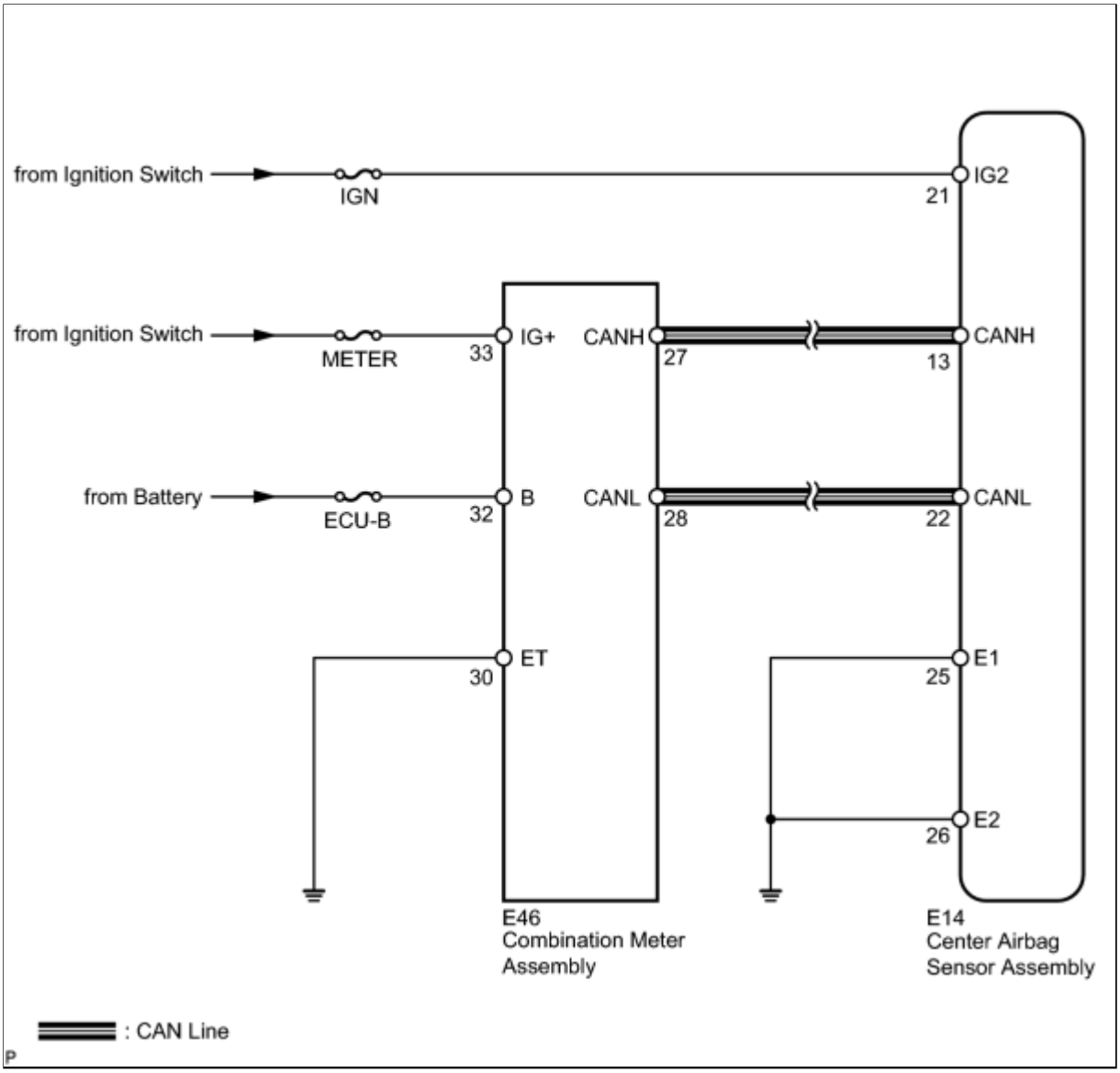

INSPECTION PROCEDURE

PROCEDURE

1.	**CHECK SRS WARNING LIGHT OPERATION**

(a) Check the SRS warning light operation approximately 6 seconds after the ignition switch is turned to ON.

Result:

SRS WARNING LIGHT ILLUMINATION	PROCEED TO
Remains on	A
Remains on after it goes off	B

B ▶ CHECK CAN COMMUNICATION SYSTEM

A ▼

2.	**CHECK BATTERY VOLTAGE**

(a) Measure the voltage of the battery.

Standard Voltage:

11 to 14 V

Result

RESULT	PROCEED TO
OK	A
NG (for 2AZ-FE)	B
NG (for 2ZR-FE)	C

C ▶ INSPECT CHARGING SYSTEM AND BATTERY

B ▶ INSPECT CHARGING SYSTEM AND BATTERY

A ▼

3.	**CHECK CONNECTOR**

(a) Turn the ignition switch off.

(b) Disconnect the cable from the negative (-) battery terminal, and wait for at least 90 seconds.

(c) Check that the connector is properly connected to the center airbag sensor assembly.

OK:

The connector is properly connected.

HINT:

If the connector is not connected securely, reconnect the connector and proceed to the next inspection.

(d) Disconnect the connector from the center airbag sensor assembly.

(e) Check that the terminal of the connector is not damaged.

OK:

The terminal is not deformed or damaged.

NG ▶ **REPLACE WIRE HARNESS**

OK ▼

4.	CHECK WIRE HARNESS (CENTER AIRBAG SENSOR ASSEMBLY - BODY GROUND)

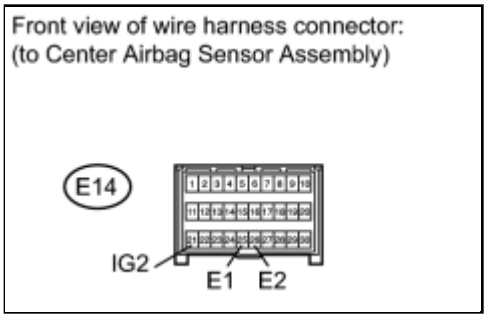

(a) Connect the cable to the negative (-) battery terminal.

(b) Turn the ignition switch to ON.

(c) Operate all components of the electrical system (defogger, wipers, headlights, heater blower, etc.).

(d) Measure the voltage according to the value(s) in the table below.

Standard Voltage:

TESTER CONNECTION	SWITCH CONDITION	SPECIFIED CONDITION
E14-21 (IG2) - Body ground	Ignition switch ON	8 to 16 V

(e) Turn the ignition switch off.

(f) Measure the resistance according to the value(s) in the table below.

Standard Resistance:

TESTER CONNECTION	CONDITION	SPECIFIED CONDITION
E14-25 (E1) - Body ground	Always	Below 1 Ω

TESTER CONNECTION	CONDITION	SPECIFIED CONDITION
E14-26 (E2) - Body ground	Always	Below 1 Ω

NG ▶ **REPLACE WIRE HARNESS**

OK ▼

5.	CHECK SRS WARNING LIGHT

(a) Turn the ignition switch to ON.

(b) Check the SRS warning light condition.

OK:

After the primary check period, the SRS warning light goes off for approximately 10 seconds and remains on.

HINT:

The primary check period is approximately 6 seconds after the ignition switch is turned to ON.

NG ▶ **REPLACE COMBINATION METER ASSEMBLY**

OK ▶ **REPLACE CENTER AIRBAG SENSOR ASSEMBLY**

6.	CHECK CAN COMMUNICATION SYSTEM

(a) Use the Techstream to check if the CAN communication system is functioning normally.

HINT:

- Refer to Bus Check for the CAN communication system INFO .
- The center airbag sensor assembly is connected to the CAN communication system. Therefore, before starting troubleshooting, make sure to check that there is no trouble in the CAN communication system.

Result:

RESULT	PROCEED TO
DTC is not output	A

RESULT	PROCEED TO
DTC is output	B

B ▶ GO TO CAN COMMUNICATION SYSTEM

A ▼

7.	CHECK BATTERY VOLTAGE

(a) Measure the voltage of the battery.

Standard Voltage:

11 to 14 V

Result

RESULT	PROCEED TO
OK	A
NG (for 2AZ-FE)	B
NG (for 2ZR-FE)	C

C ▶ INSPECT CHARGING SYSTEM AND BATTERY

B ▶ INSPECT CHARGING SYSTEM AND BATTERY

A ▼

8.	CHECK CONNECTOR

(a) Turn the ignition switch off.

(b) Disconnect the cable from the negative (-) battery terminal, and wait for at least 90 seconds.

(c) Check that the connector is properly connected to the center airbag sensor assembly.

OK:

The connector is properly connected.

HINT:

If the connector is not connected securely, reconnect the connector and proceed to the next inspection.

(d) Disconnect the connector from the center airbag sensor assembly.

(e) Check that the terminal of the connector is not damaged.

OK:

The terminal is not deformed or damaged.

NG ▶ **REPLACE WIRE HARNESS**

OK ▼

9.	**CHECK WIRE HARNESS (CENTER AIRBAG SENSOR ASSEMBLY - BODY GROUND)**

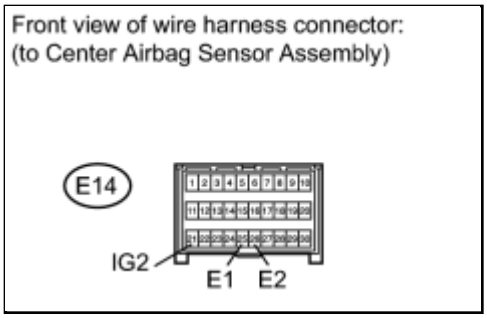

(a) Connect the cable to the negative (-) battery terminal.

(b) Turn the ignition switch to ON.

(c) Operate all components of the electrical system (defogger, wipers, headlights, heater blower, etc.).

(d) Measure the voltage according to the value(s) in the table below.

Standard Voltage:

TESTER CONNECTION	SWITCH CONDITION	SPECIFIED CONDITION
E14-21 (IG2) - Body ground	Ignition switch ON	8 to 16 V

(e) Turn the ignition switch off.

(f) Measure the resistance according to the value(s) in the table below.

Standard Resistance:

TESTER CONNECTION	CONDITION	SPECIFIED CONDITION
E14-25 (E1) - Body ground	Always	Below 1 Ω
E14-26 (E2) - Body ground	Always	Below 1 Ω

NG ▶ **REPLACE WIRE HARNESS**

OK ▼

10.	CHECK CONNECTOR

(a) Disconnect the cable from the negative (-) battery terminal, and wait for at least 90 seconds.

(b) Check that the connector is properly connected to the combination meter assembly.

OK:

The connector is properly connected.

HINT:

If the connector is not connected securely, reconnect the connector and proceed to the next inspection.

(c) Disconnect the connector from the combination meter assembly.

(d) Check that the terminal of the connector is not damaged.

OK:

The terminal is not deformed or damaged.

NG ▶ **REPLACE WIRE HARNESS**

OK ▼

11.	CHECK WIRE HARNESS (COMBINATION METER ASSEMBLY - BODY GROUND)

(a) Connect the cable to the negative (-) battery terminal.

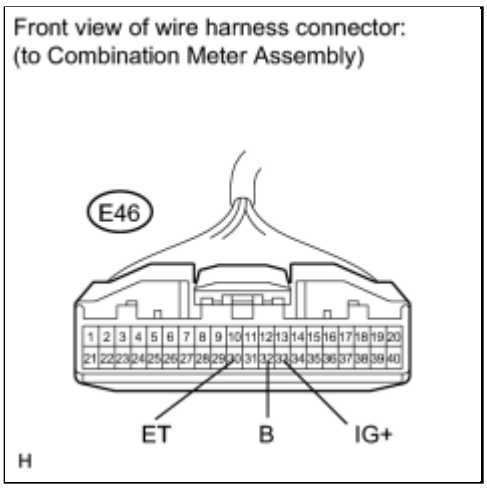

(b) Turn the ignition switch to ON.

(c) Measure the voltage according to the value(s) in the table below.

Standard Voltage:

TESTER CONNECTION	CONDITION	SPECIFIED CONDITION
E46-32 (B) - Body ground	Always	11 to 14 V
E46-33 (IG+) - Body ground	Ignition switch ON	11 to 14 V

(d) Turn the ignition switch off.

(e) Measure the resistance according to the value(s) in the table below.

Standard Resistance:

TESTER CONNECTION	CONDITION	SPECIFIED CONDITION
E46-30 (ET) - Body ground	Always	Below 1 Ω

NG ▶ **REPLACE WIRE HARNESS**

OK ▼

12.	**CHECK SRS WARNING LIGHT**

(a) Connect the connector to the combination meter assembly.

(b) Connect the cable to the negative (-) battery terminal.

(c) Turn the ignition switch to ON.

(d) Check the SRS warning light condition.

OK:

After the primary check period, the SRS warning light goes off for approximately 10 seconds and remains on.

HINT:

The primary check period is approximately 6 seconds after the ignition switch is turned to ON.

NG ▶ **REPLACE COMBINATION METER ASSEMBLY**

OK ▶ **REPLACE CENTER AIRBAG SENSOR ASSEMBLY**

Last Modified: 3-10-2010	6.4 J	**From:** 200901
Model Year: 2010	**Model:** Corolla	**Doc ID:** RM000000YE306HX
Title: SUPPLEMENTAL RESTRAINT SYSTEMS: AIRBAG SYSTEM: SRS Warning Light does not Come ON (2010 Corolla)		

SRS Warning Light does not Come ON

DESCRIPTION

The SRS warning light is located on the combination meter assembly.

When the SRS is normal, the SRS warning light comes on for approximately 6 seconds after the ignition switch is turned from off to ON, and then goes off automatically.

If there is a malfunction in the SRS, the SRS warning light comes on to inform the driver of a problem.

When terminals TC and CG of the DLC3 are connected, the DTC is indicated by blinking pattern of the SRS warning light.

The SRS is equipped with a voltage-increase circuit (DC-DC converter) in the center airbag sensor assembly in case the source voltage drops.

When the battery voltage drops, the voltage-increase circuit (DC-DC converter) functions to increase the voltage of the SRS to normal voltage.

A malfunction in this circuit is not recorded in the center airbag sensor assembly. The SRS warning light automatically goes off when the source voltage returns to normal.

The signal to illuminate the SRS warning light is transmitted from the center airbag sensor assembly to the combination meter assembly through the CAN communication system.

WIRING DIAGRAM

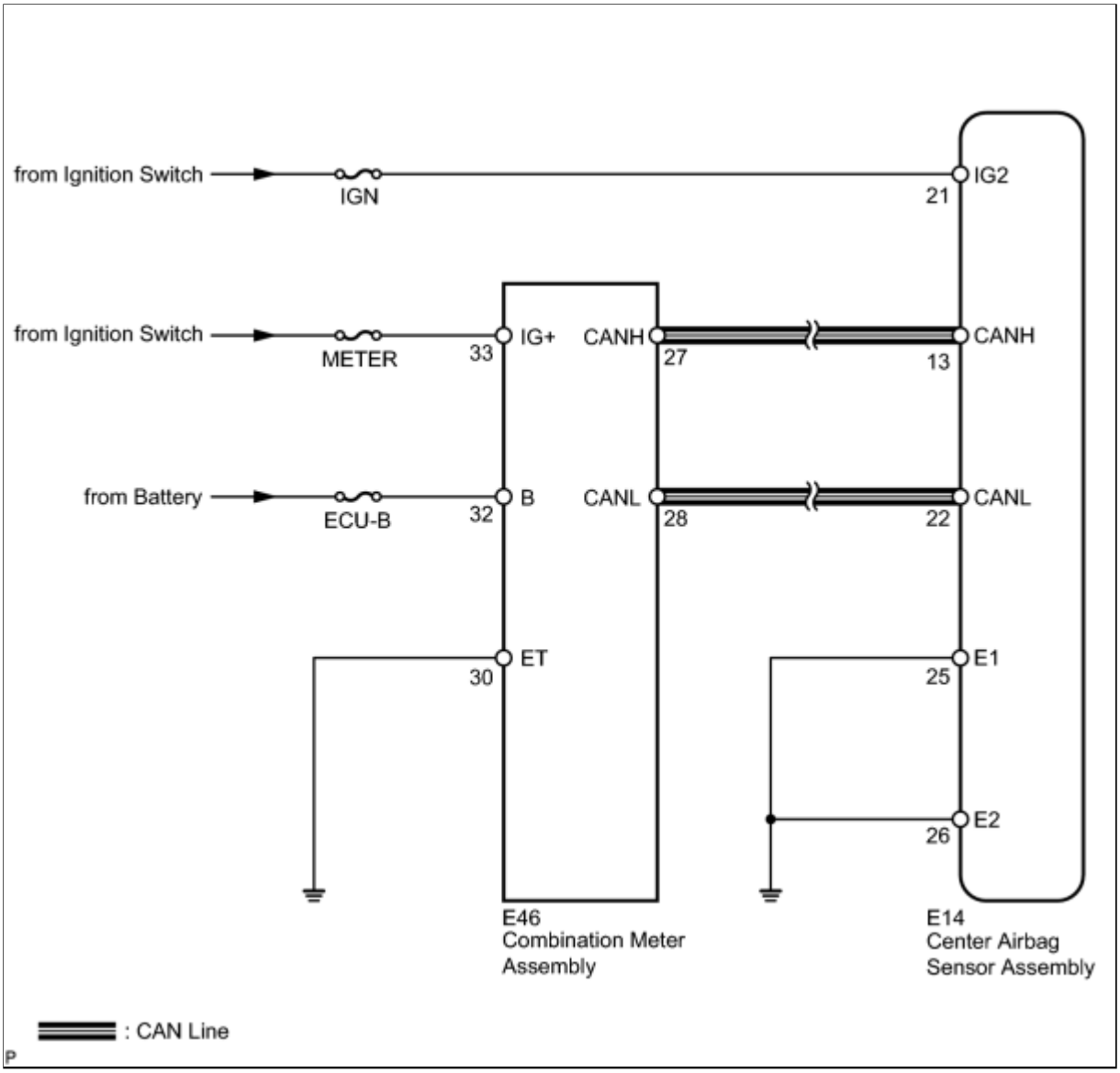

INSPECTION PROCEDURE

PROCEDURE

1.	**CHECK BATTERY VOLTAGE**

(a) Measure the voltage of the battery.

Standard Voltage:

11 to 14 V

Result

RESULT	PROCEED TO
OK	A

RESULT	PROCEED TO
NG (for 2AZ-FE)	B
NG (for 2ZR-FE)	C

C ▶ **INSPECT CHARGING SYSTEM AND BATTERY**

B ▶ **INSPECT CHARGING SYSTEM AND BATTERY**

A
▼

2.	**CHECK CONNECTOR**

(a) Turn the ignition switch off.

(b) Disconnect the cable from the negative (-) battery terminal, and wait for at least 90 seconds.

(c) Check that the connector is properly connected to the combination meter assembly.

OK:
The connector is properly connected.

HINT:

If the connector is not connected securely, reconnect the connector and proceed to the next inspection.

(d) Disconnect the connector from the combination meter assembly.

(e) Check that the terminal of the connector is not damaged.

OK:
The terminal is not deformed or damaged.

NG ▶ **REPLACE WIRE HARNESS**

OK
▼

3.	**CHECK WIRE HARNESS (COMBINATION METER ASSEMBLY - BODY GROUND)**

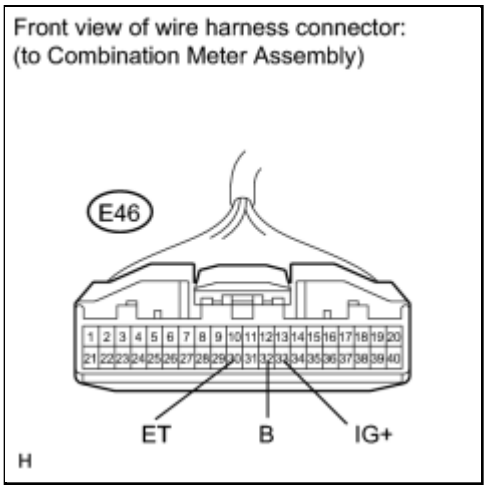

(a) Connect the cable to the negative (-) battery terminal.

(b) Turn the ignition switch to ON.

(c) Measure the voltage according to the value(s) in the table below.

Standard Voltage:

TESTER CONNECTION	CONDITION	SPECIFIED CONDITION
E46-32 (B) - Body ground	Always	11 to 14 V
E46-33 (IG+) - Body ground	Ignition switch ON	11 to 14 V

(d) Turn the ignition switch off.

(e) Measure the resistance according to the value(s) in the table below.

Standard Resistance:

TESTER CONNECTION	CONDITION	SPECIFIED CONDITION
E46-30 (ET) - Body ground	Always	Below 1 Ω

NG ▶ **REPLACE WIRE HARNESS**

OK ▼

4.	**CHECK SRS WARNING LIGHT**

(a) Disconnect the cable from the negative (-) battery terminal, and wait for at least 90 seconds.

(b) Connect the connector to the combination meter assembly.

(c) Disconnect the connector from the center airbag sensor assembly.

(d) Connect the cable to the negative (-) battery terminal.

(e) Turn the ignition switch to ON.

(f) Check the SRS warning light condition.

OK:

After the primary check period, the SRS warning light goes off for approximately 10 seconds and remains on.

HINT:

The primary check period is approximately 6 seconds after the ignition switch is turned to ON.

NG ▶ **REPLACE COMBINATION METER ASSEMBLY**

OK ▶ **REPLACE CENTER AIRBAG SENSOR ASSEMBLY**

Last Modified: 3-10-2010	6.4 J	**From:** 200901
Model Year: 2010	**Model:** Corolla	**Doc ID:** RM0000014JK035X
Title: SUPPLEMENTAL RESTRAINT SYSTEMS: AIRBAG SYSTEM: TC and CG Terminal Circuit (2010 Corolla)		

TC and CG Terminal Circuit

DESCRIPTION

DTC output mode is set by connecting terminals TC and CG of the DLC3.

DTCs are indicated by blinking pattern of the SRS warning light.

HINT:

- When the SRS warning light remains blinking, a ground short in the wiring of terminal TC of the DLC3 or an internal ground short in the center airbag sensor assembly is suspected.
- A DTC output mode signal is transmitted through the CAN communication system to each ECU including the center airbag sensor assembly. Thus when all systems do not enter DTC output mode, there may be an ECM malfunction.

WIRING DIAGRAM

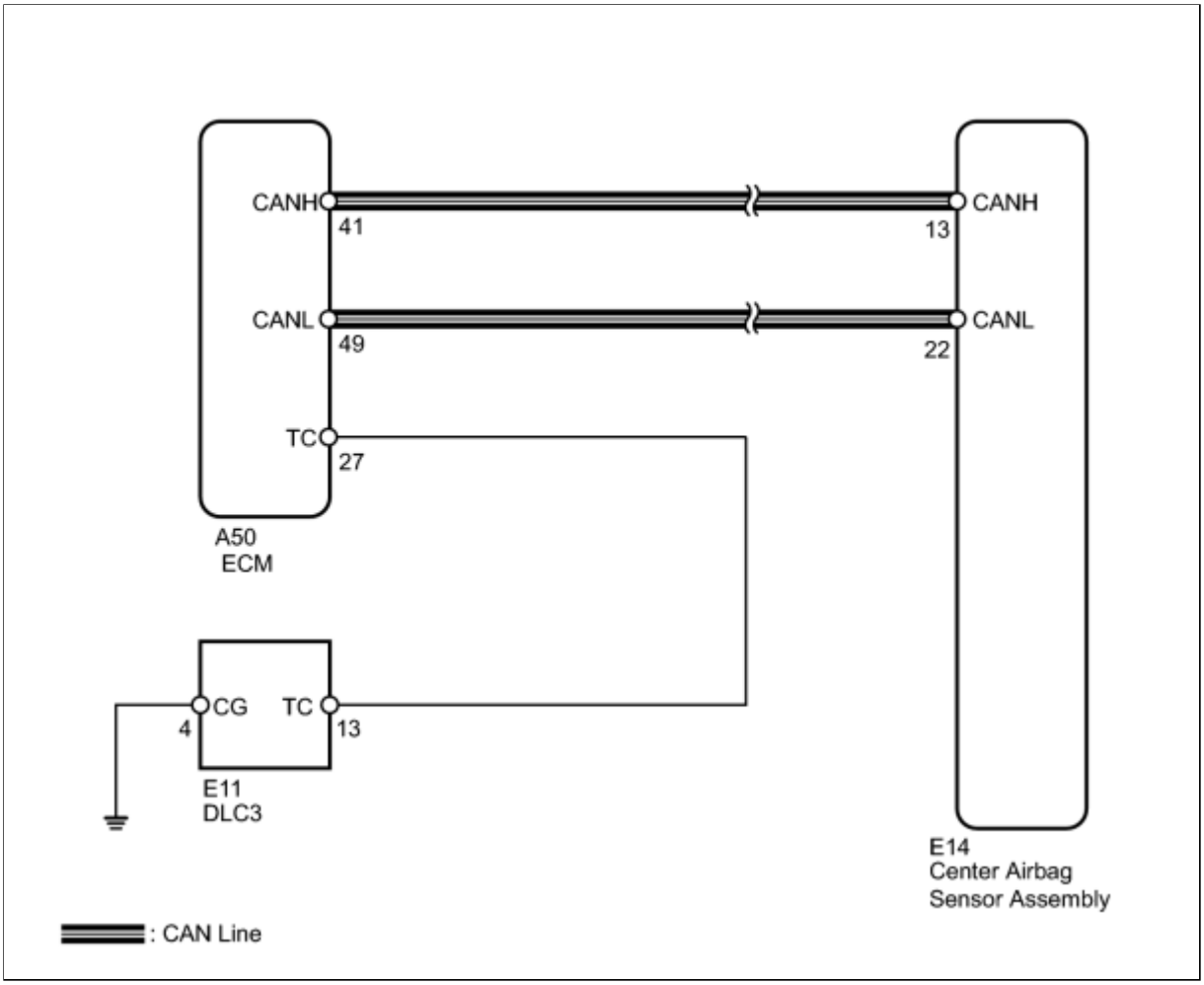

INSPECTION PROCEDURE

PROCEDURE

1.	**CHECK WIRE HARNESS (TC OF DLC3 - TC OF ECM)**

(a) Turn the ignition switch off.

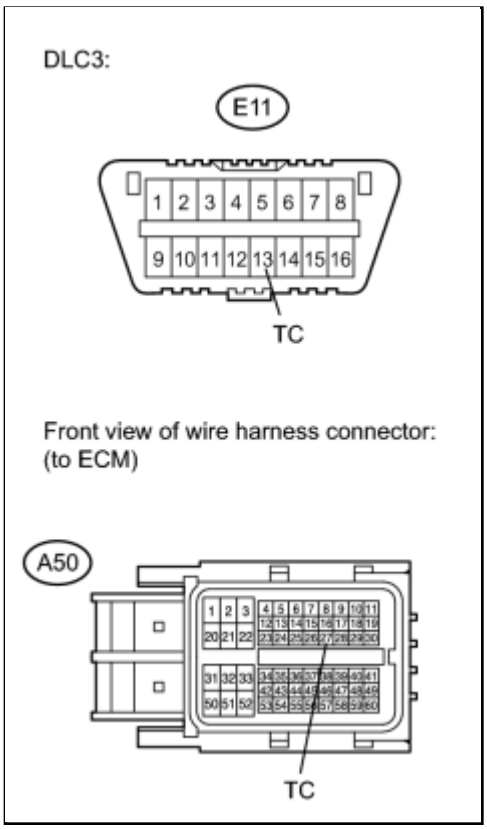

(b) Disconnect the connector from the ECM.

(c) Measure the resistance according to the value(s) in the table below.

Standard Resistance:

TESTER CONNECTION	CONDITION	SPECIFIED CONDITION
E11-13 (TC) - A50-27 (TC)	Always	Below 1 Ω

NG ▶ **REPLACE WIRE HARNESS**

OK ▼

2.	**CHECK WIRE HARNESS (CG OF DLC3 - BODY GROUND)**

(a) Measure the resistance according to the value(s) in the table below.

Standard Resistance:

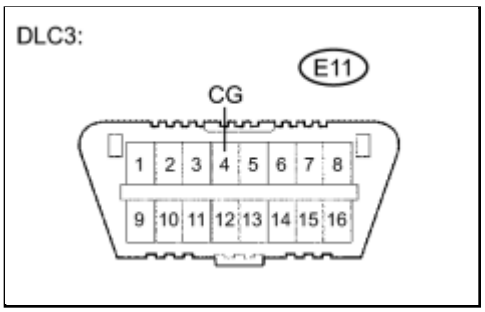

TESTER CONNECTION	CONDITION	SPECIFIED CONDITION
E11-4 (CG) - Body ground	Always	Below 1 Ω

NG ▶ **REPLACE WIRE HARNESS**

OK ▼

3.	CHECK WIRE HARNESS (TC OF DCL3 - BODY GROUND)

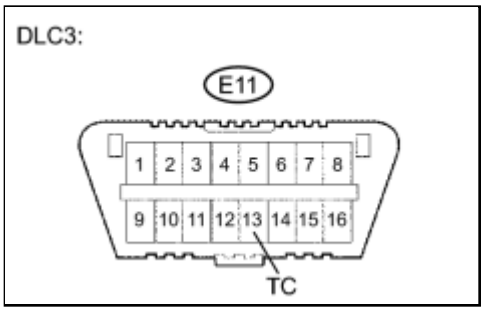

(a) Measure the resistance according to the value(s) in the table below.

Standard Resistance:

TESTER CONNECTION	CONDITION	SPECIFIED CONDITION
E11-13 (TC) - Body ground	Always	1 MΩ or higher

NG ▶ **REPLACE WIRE HARNESS OR EACH ECU**

OK ▶ **REPLACE CENTER AIRBAG SENSOR ASSEMBLY**

Last Modified: 3-10-2010	6.4 K	**From:** 200901
Model Year: 2010	**Model:** Corolla	**Doc ID:** RM000000UWU037X
Title: SUPPLEMENTAL RESTRAINT SYSTEMS: CENTER AIRBAG SENSOR ASSEMBLY: COMPONENTS (2010 Corolla)		

COMPONENTS

ILLUSTRATION

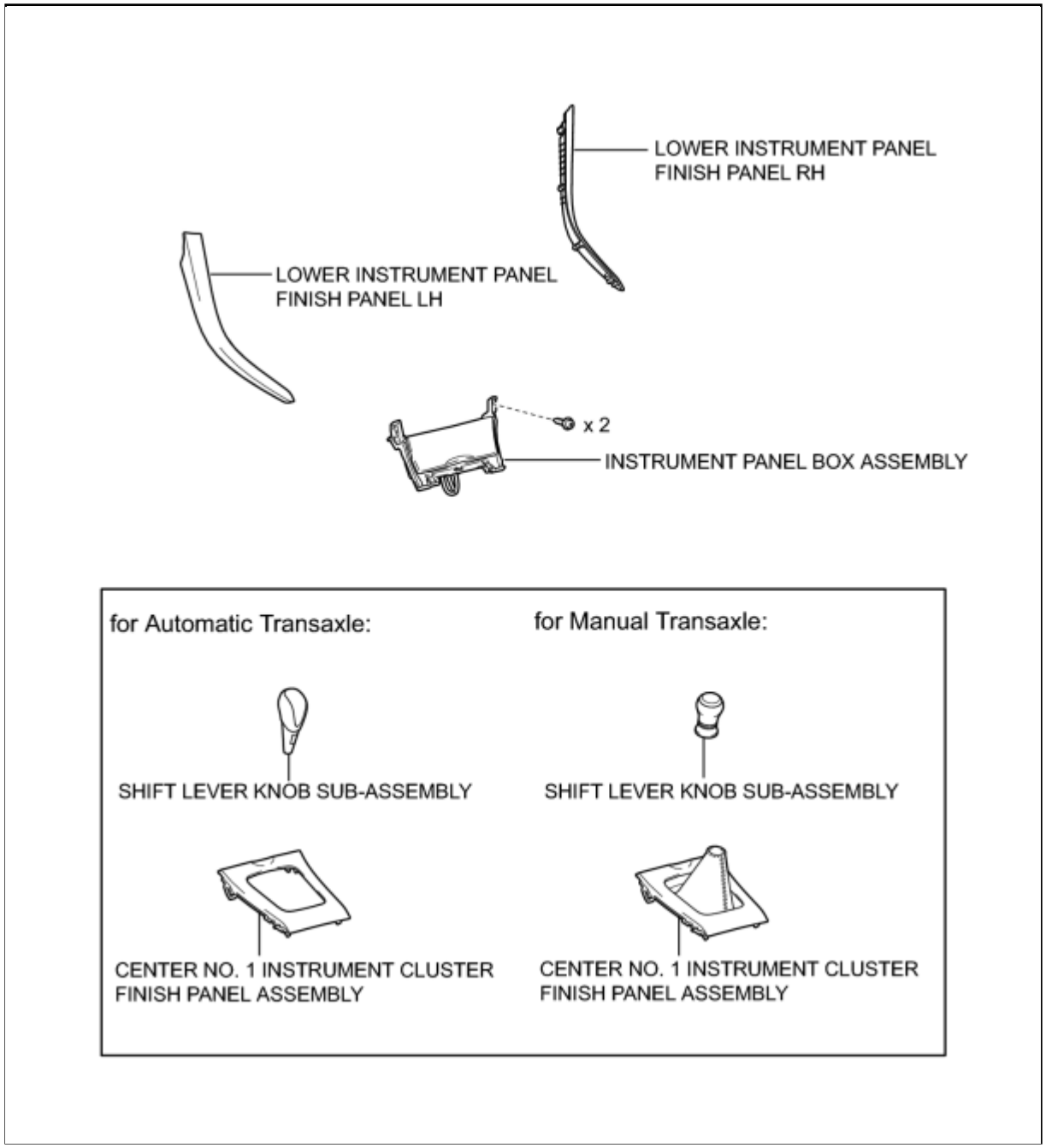

ILLUSTRATION

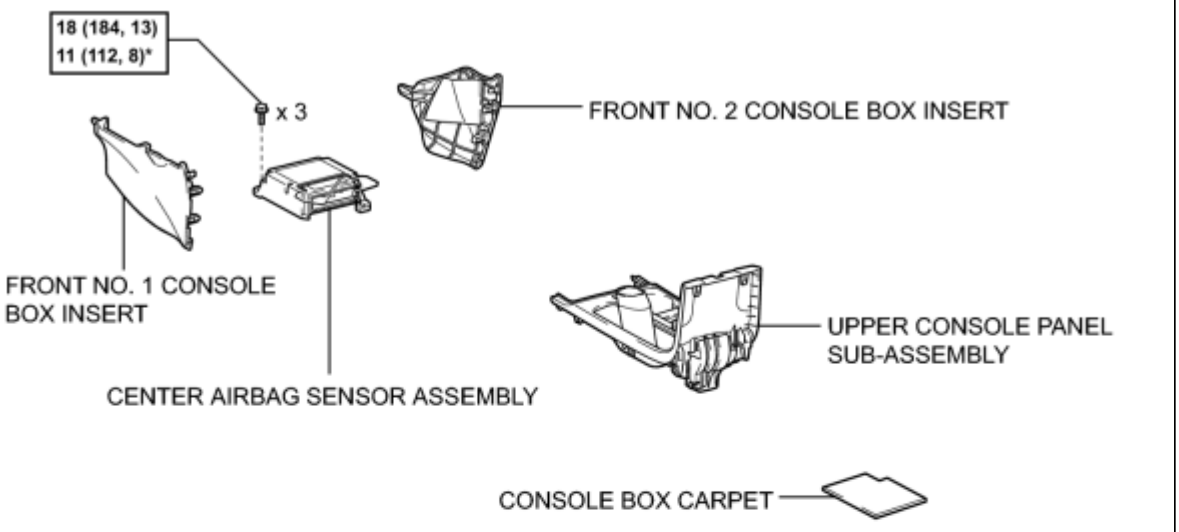

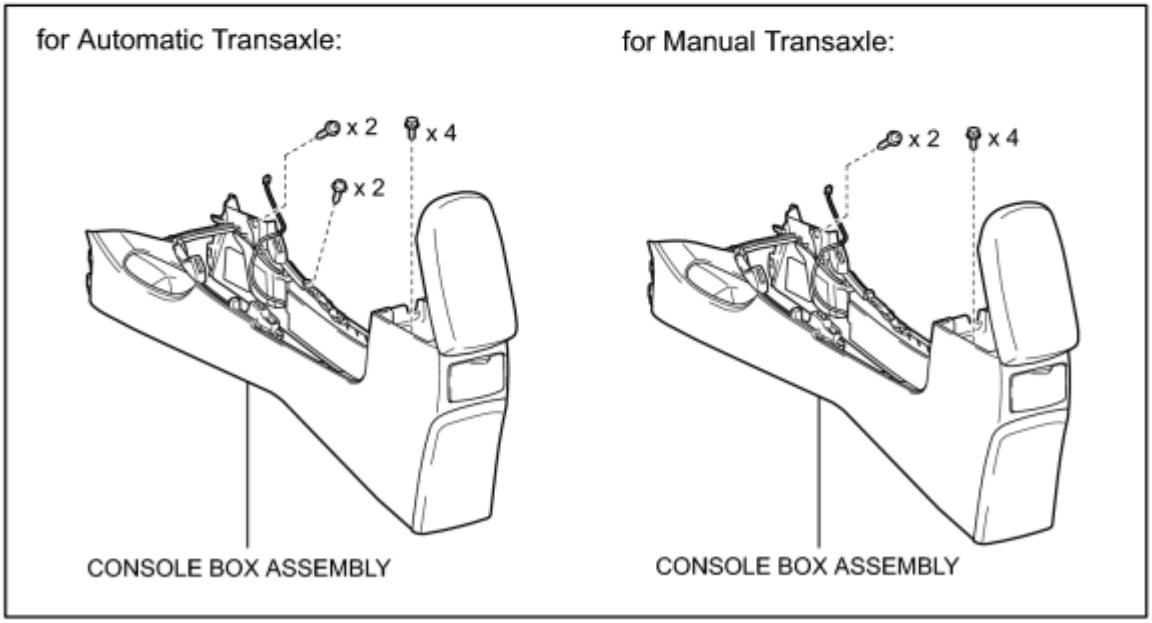

N*m (kgf*cm, ft.*lbf) : Specified torque

* For use with SST

Last Modified: 3-10-2010	6.4 G	**From:** 200901
Model Year: 2010	**Model:** Corolla	**Doc ID:** RM000000VPT043X
Title: SUPPLEMENTAL RESTRAINT SYSTEMS: CENTER AIRBAG SENSOR ASSEMBLY: ON-VEHICLE INSPECTION (2010 Corolla)		

ON-VEHICLE INSPECTION

1. INSPECT CENTER AIRBAG SENSOR ASSEMBLY (VEHICLE NOT INVOLVED IN COLLISION)

(a) Perform a diagnostic system check INFO .

2. INSPECT CENTER AIRBAG SENSOR ASSEMBLY (VEHICLE INVOLVED IN COLLISION AND AIRBAG HAS NOT DEPLOYED)

(a) Perform a diagnostic system check INFO .

3. INSPECT CENTER AIRBAG SENSOR ASSEMBLY (VEHICLE INVOLVED IN COLLISION AND AIRBAG IS DEPLOYED)

(a) Replace the center airbag sensor assembly.

CAUTION:

Be sure to follow the correct removal and installation procedures of the center airbag sensor assembly.

HINT:

The center airbag sensor assembly should be replaced after any of the airbags has deployed, as it has been subjected to the impact.

Last Modified: 3-10-2010	6.4 A	**From:** 200901
Model Year: 2010	**Model:** Corolla	**Doc ID:** RM000000UWV042X
Title: SUPPLEMENTAL RESTRAINT SYSTEMS: CENTER AIRBAG SENSOR ASSEMBLY: REMOVAL (2010 Corolla)		

REMOVAL

1. PRECAUTION

CAUTION:

Be sure to read Precaution thoroughly before servicing INFO .

2. DISCONNECT CABLE FROM NEGATIVE BATTERY TERMINAL

CAUTION:

Wait at least 90 seconds after disconnecting the cable from the negative (-) battery terminal to disable the SRS system.

3. REMOVE LOWER INSTRUMENT PANEL FINISH PANEL LH INFO

4. REMOVE LOWER INSTRUMENT PANEL FINISH PANEL RH INFO

5. REMOVE SHIFT LEVER KNOB SUB-ASSEMBLY (for Manual Transaxle) INFO

6. REMOVE SHIFT LEVER KNOB SUB-ASSEMBLY (for Automatic Transaxle) INFO

7. REMOVE CENTER NO. 1 INSTRUMENT CLUSTER FINISH PANEL ASSEMBLY (for Manual Transaxle) INFO

8. REMOVE CENTER NO. 1 INSTRUMENT CLUSTER FINISH PANEL ASSEMBLY (for Automatic Transaxle) INFO

9. REMOVE INSTRUMENT PANEL BOX ASSEMBLY INFO

10. REMOVE FRONT NO. 1 CONSOLE BOX INSERT INFO

11. REMOVE FRONT NO. 2 CONSOLE BOX INSERT INFO

12. REMOVE UPPER CONSOLE PANEL SUB-ASSEMBLY INFO

13. REMOVE CONSOLE BOX CARPET INFO

14. REMOVE CONSOLE BOX ASSEMBLY (for Manual Transaxle) INFO

15. REMOVE CONSOLE BOX ASSEMBLY (for Automatic Transaxle) INFO

16. REMOVE CENTER AIRBAG SENSOR ASSEMBLY

(a) Check that the ignition switch is off.

(b) Check that the cable is disconnected from the negative (-) battery terminal.

CAUTION:

Wait at least 90 seconds after disconnecting the cable from the negative (-) battery terminal to disable the SRS system.

(c) Turn back the carpet.

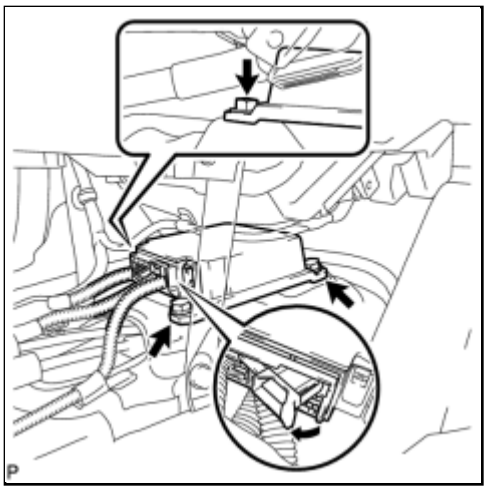

(d) Disconnect the holder (with connectors).

NOTICE:

When connecting the airbag connector, take care not to damage the airbag wire harness.

(e) Remove the 3 bolts and center airbag sensor assembly.

Last Modified: 3-10-2010	6.4 A	**From:** 200901
Model Year: 2010	**Model:** Corolla	**Doc ID:** RM000000UWS042X
Title: SUPPLEMENTAL RESTRAINT SYSTEMS: CENTER AIRBAG SENSOR ASSEMBLY: INSTALLATION (2010 Corolla)		

INSTALLATION

1. INSTALL CENTER AIRBAG SENSOR ASSEMBLY

(a) Check that the ignition switch is off.

(b) Check that the cable is disconnected from the negative (-) battery terminal.

CAUTION:

Wait at least 90 seconds after disconnecting the cable from the negative (-) battery terminal to disable the SRS system.

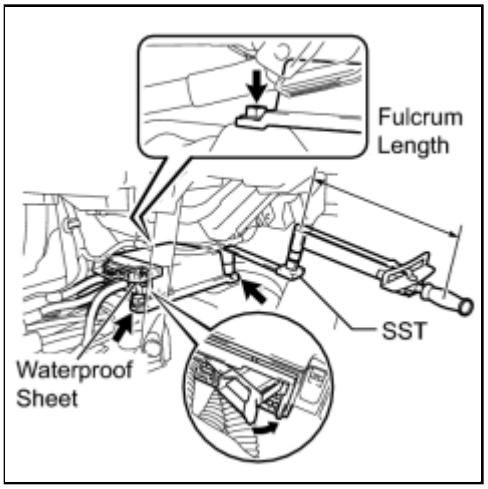

(c) Using SST, install the center airbag sensor assembly with the 3 bolts.

SST: 09961-01270

without SST - Torque: 18 N·m (184 kgf·cm, 13ft·lbf)

with SST - Torque: 11 N·m (112 kgf·cm, 8ft·lbf)

NOTICE:

- Use a torque wrench with a fulcrum length of 250 mm (9.84 in.).
- This torque value is effective when SST is parallel to a torque wrench.
- If the center airbag sensor assembly has been dropped, or there are any cracks, dents or other defects in the case or connector, replace it with a new one.
- When installing the center airbag sensor assembly, be careful that the SRS wiring does not interfere with other parts and that it is not pinched between other parts.
- When the ignition switch is first turned to ON after the center airbag sensor assembly has been replaced, make sure that no one is in the vehicle.

(d) Connect the holder (with connectors).

NOTICE:

When connecting the airbag connector, take care not to damage the airbag wire harness.

(e) Check that there is no looseness in the installation parts of the center airbag sensor assembly.

(f) Check that the waterproof sheet is properly set.

2. INSTALL CONSOLE BOX ASSEMBLY (for Manual Transaxle) INFO

3. INSTALL CONSOLE BOX ASSEMBLY (for Automatic Transaxle) INFO

4. INSTALL CONSOLE BOX CARPET INFO

5. INSTALL UPPER CONSOLE PANEL SUB-ASSEMBLY INFO

6. INSTALL FRONT NO. 1 CONSOLE BOX INSERT INFO

7. INSTALL FRONT NO. 2 CONSOLE BOX INSERT INFO

8. INSTALL INSTRUMENT PANEL BOX ASSEMBLY INFO

9. INSTALL CENTER NO. 1 INSTRUMENT CLUSTER FINISH PANEL ASSEMBLY (for Manual Transaxle) INFO

10. INSTALL CENTER NO. 1 INSTRUMENT CLUSTER FINISH PANEL ASSEMBLY (for Automatic Transaxle) INFO

11. INSTALL SHIFT LEVER KNOB SUB-ASSEMBLY (for Manual Transaxle) INFO

12. INSTALL SHIFT LEVER KNOB SUB-ASSEMBLY (for Automatic Transaxle) INFO

13. INSTALL LOWER INSTRUMENT PANEL FINISH PANEL LH INFO

14. INSTALL LOWER INSTRUMENT PANEL FINISH PANEL RH INFO

15. CONNECT CABLE TO NEGATIVE BATTERY TERMINAL

16. INSPECT SRS WARNING LIGHT

(a) Inspect the SRS warning light INFO .

Last Modified: 3-10-2010	6.4 K	**From:** 200901
Model Year: 2010	**Model:** Corolla	**Doc ID:** RM000000UXF038X
Title: SUPPLEMENTAL RESTRAINT SYSTEMS: CURTAIN SHIELD AIRBAG ASSEMBLY: COMPONENTS (2010 Corolla)		

COMPONENTS

ILLUSTRATION

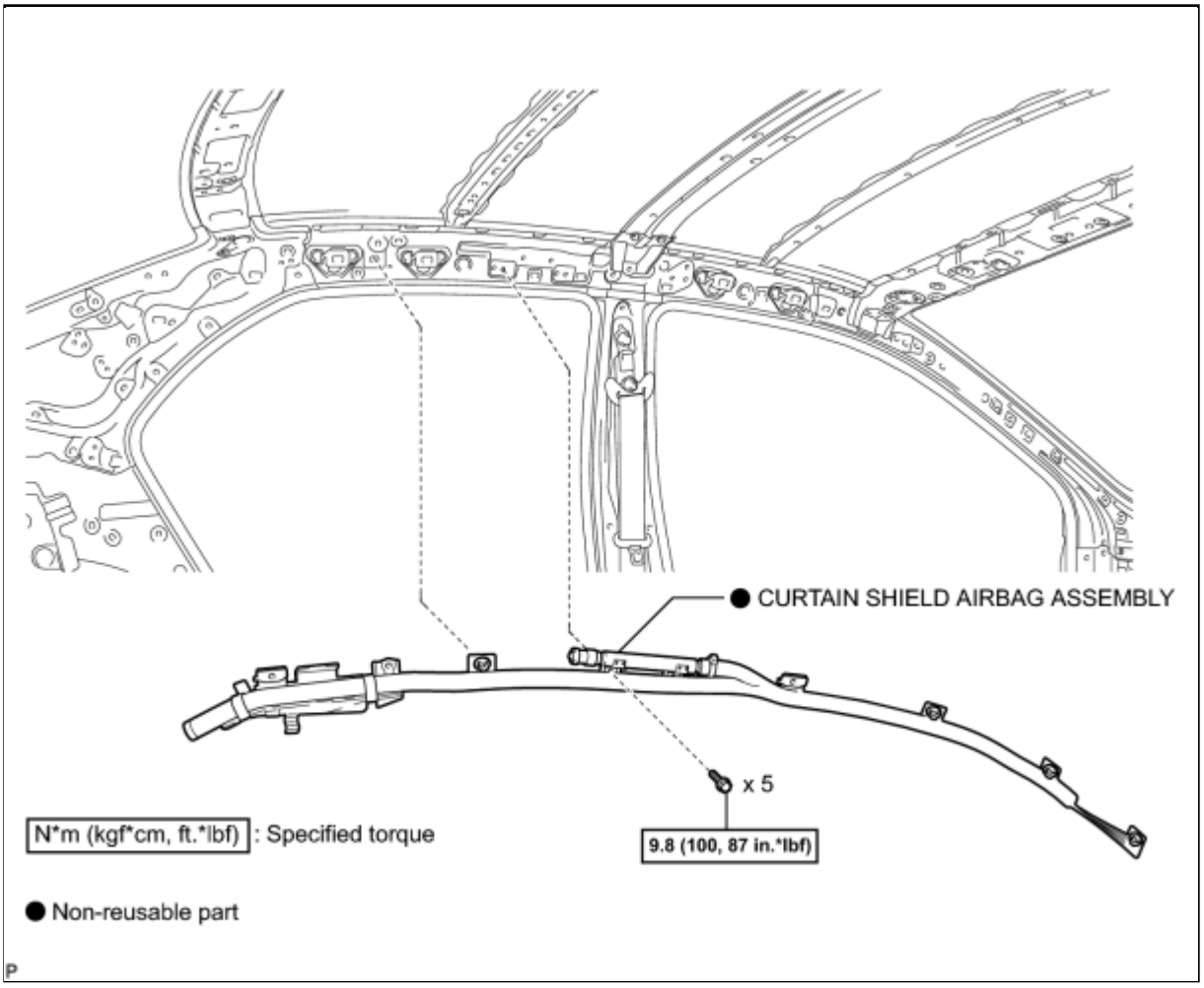

Last Modified: 3-10-2010	6.4 G	**From:** 200901
Model Year: 2010	**Model:** Corolla	**Doc ID:** RM000000UXH04FX
Title: SUPPLEMENTAL RESTRAINT SYSTEMS: CURTAIN SHIELD AIRBAG ASSEMBLY: ON-VEHICLE INSPECTION (2010 Corolla)		

ON-VEHICLE INSPECTION

1. INSPECT CURTAIN SHIELD AIRBAG ASSEMBLY (VEHICLE NOT INVOLVED IN COLLISION)

(a) Perform a diagnostic system check INFO .

(b) With the curtain shield airbag assembly installed on the vehicle, perform a visual check. If there are any following defects, replace the front pillar garnish or roof headlining assembly with a new one:

- Cuts, minute cracks or marked discoloration on the front pillar garnish or roof headlining assembly around the curtain shield airbag assembly.

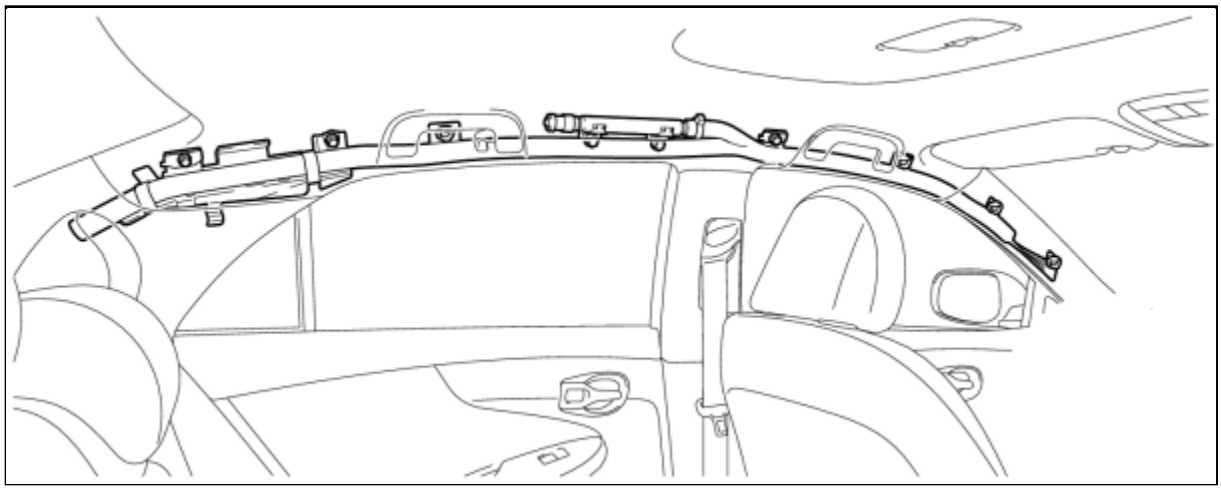

2. INSPECT CURTAIN SHIELD AIRBAG ASSEMBLY (VEHICLE INVOLVED IN COLLISION AND AIRBAG HAS NOT DEPLOYED)

(a) Perform a diagnostic system check INFO .

(b) With the roof headlining assembly removed from the vehicle, perform a visual check. If there are any following defects, replace the curtain shield airbag assembly with a new one:

- Cuts, minute cracks or marked discoloration on the curtain shield airbag assembly.
- Cracks or other damage to the connectors.

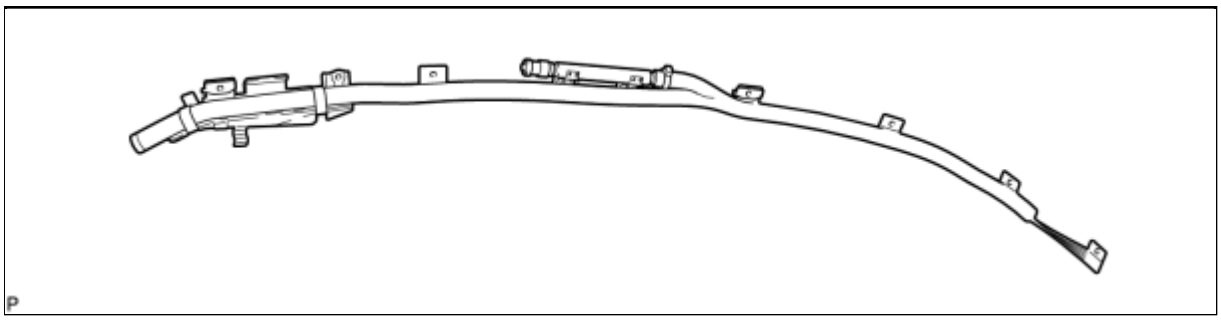

CAUTION:

Be sure to follow the correct removal and installation procedures of the curtain shield airbag assembly.

Last Modified: 3-10-2010	6.4 A	**From:** 200901
Model Year: 2010	**Model:** Corolla	**Doc ID:** RM000000UXG03PX
Title: SUPPLEMENTAL RESTRAINT SYSTEMS: CURTAIN SHIELD AIRBAG ASSEMBLY: REMOVAL (2010 Corolla)		

REMOVAL

NOTICE:

If the curtain shield airbag assembly is removed, replace it with a new one.

HINT:

- Use the same procedure for the RH side and LH side.
- The following procedure is for the LH side.

1. PRECAUTION

CAUTION:

Be sure to read Precaution thoroughly before servicing INFO **.**

2. DISCONNECT CABLE FROM NEGATIVE BATTERY TERMINAL

CAUTION:

Wait at least 90 seconds after disconnecting the cable from the negative (-) battery terminal to disable the SRS system.

3. REMOVE ROOF HEADLINING ASSEMBLY

HINT:

Refer to the procedure up to Remove Roof Headlining Assembly INFO **.**

4. REMOVE CURTAIN SHIELD AIRBAG ASSEMBLY

(a) Disconnect the curtain shield airbag connector.

NOTICE:

When disconnecting the airbag connector, take care not to damage the airbag wire harness.

(b) Separate the 4 clips from the body panel.

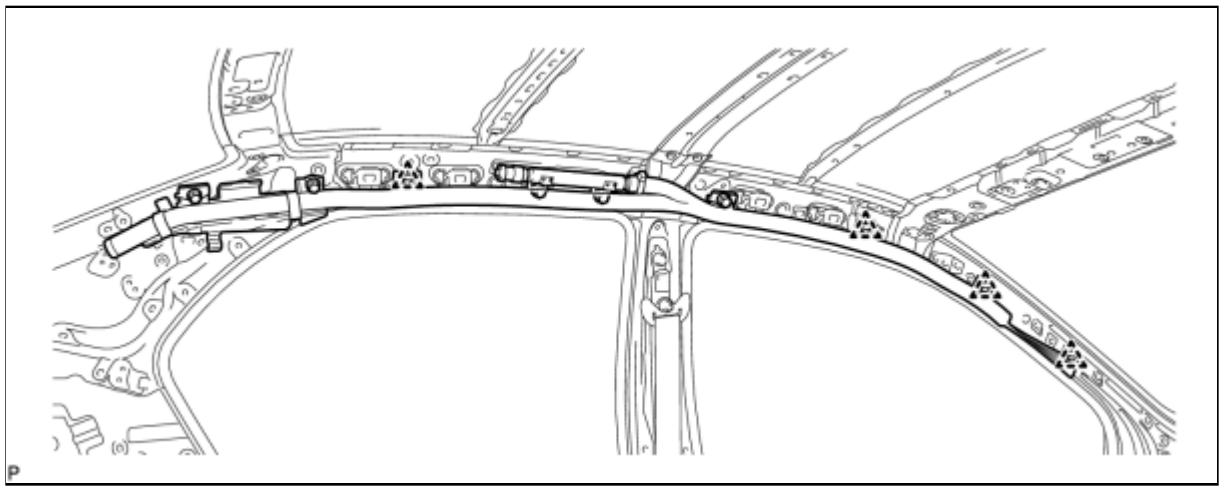

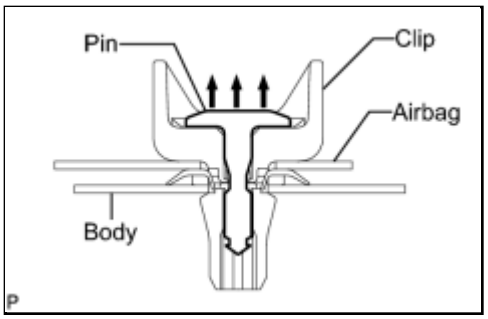

(1) Using a clip remover, remove the 4 pins.

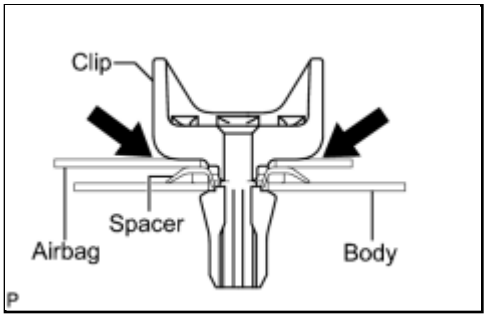

(2) Using needle-nose pliers, separate the 4 clips and curtain shield airbag assembly from the body as shown in the illustration.

(c) Remove the 5 bolts and curtain shield airbag assembly with the 4 spacers and 4 clips.

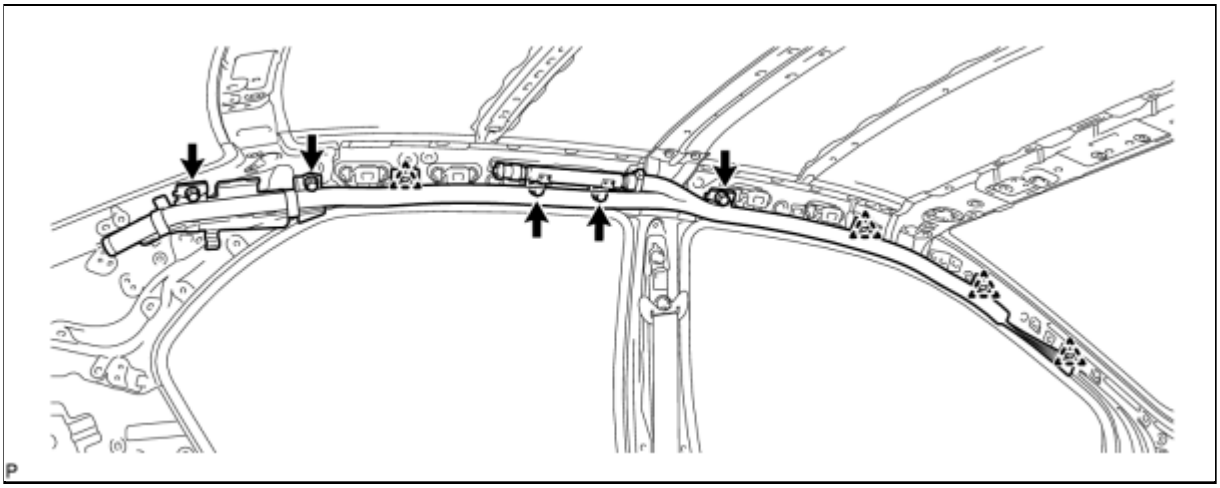

NOTICE:

If the curtain shield airbag assembly is removed, replace it with a new one.

Last Modified: 3-10-2010	6.4 N	**From:** 200901
Model Year: 2010	**Model:** Corolla	**Doc ID:** RM000000UXC04OX
Title: SUPPLEMENTAL RESTRAINT SYSTEMS: CURTAIN SHIELD AIRBAG ASSEMBLY: DISPOSAL (2010 Corolla)		

DISPOSAL

CAUTION:

Before performing pre-disposal deployment of any SRS component, review and closely follow all applicable environmental and hazardous material regulations. Pre-disposal deployment may be considered hazardous material treatment.

1. PRECAUTION

HINT:

When scrapping a vehicle equipped with an SRS or disposing of the curtain shield airbag assembly, be sure to deploy the airbag first in accordance with the procedure described below. If any abnormality occurs with the airbag deployment, contact the Service Dept. of TOYOTA MOTOR SALES, U.S.A., INC.

CAUTION:

- An airbag or pretensioner may be activated by static electricity. To prevent this, be sure to touch a metal surface with bare hands to discharge static electricity before performing this procedure.
- Never dispose of a curtain shield airbag assembly with an undeployed airbag.
- The airbag produces an exploding sound when it is deployed, so perform the operation outdoors and where it will not create a nuisance to nearby residents.
- When deploying the airbag, always use the specified SST (SRS Airbag Deployment Tool). Perform the operation in a place away from electrical noise.
- When deploying the airbag, perform the operation at least 10 m (33 ft.) away from the curtain shield airbag assembly.
- The curtain shield airbag assembly becomes extremely hot when the airbag is deployed, so do not touch it for at least 30 minutes after deployment.
- Use gloves and safety glasses when handling a curtain shield airbag assembly with a deployed airbag.
- Do not apply water, etc. to a curtain shield airbag assembly with a deployed airbag.
- Always wash your hands with water after completing the operation.

2. DISPOSE OF CURTAIN SHIELD AIRBAG ASSEMBLY (WHEN INSTALLED IN VEHICLE)

HINT:

Prepare a battery as the power source to deploy the airbag.

(a) Check the function of SST INFO .

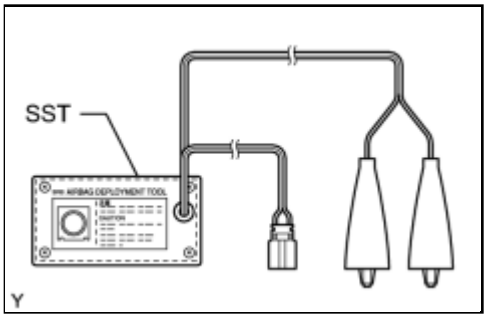

(b) Refer to Precaution INFO .

(c) Disconnect the cable from the negative (-) battery terminal.

CAUTION:

Wait at least 90 seconds after disconnecting the cable from the negative (-) battery terminal to disable the SRS system.

(d) Remove the roof headlining assembly INFO .

(e) Install SST.

(1) Disconnect the connector from the curtain shield airbag assembly.

NOTICE:

When disconnecting the airbag connector, take care not to damage the airbag wire harness.

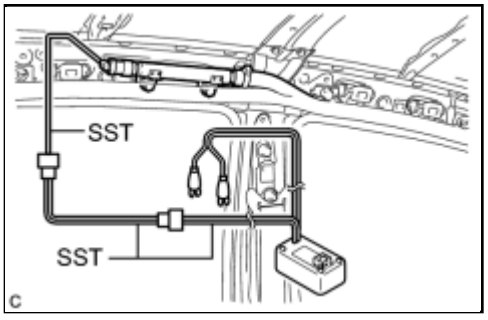

(2) After connecting SST below to each other, connect them to the curtain shield airbag assembly.

SST: 09082-00700

SST: 09082-00802

09082-10801

09082-20801

NOTICE:

To avoid damaging the SST connector and wire harness, do not lock the secondary lock of the twin lock.

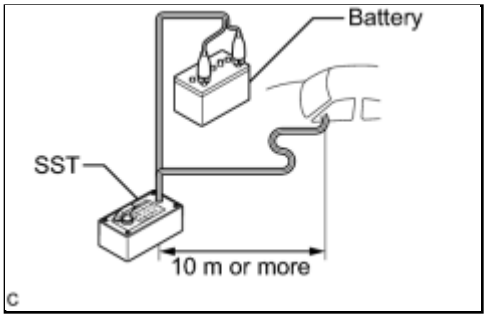

(3) Move SST at least 10 m (33 ft.) away from the vehicle rear side window.

(4) Maintaining enough clearance for the SST wire harness in the rear side window, close all doors and windows of the vehicle.

NOTICE:

Take care not to damage the SST wire harness.

(5) Connect the red clip of SST to the positive (+) battery terminal and the black clip of SST to the negative (-) battery terminal.

(f) Deploy the airbag.

(1) Check that no one is inside the vehicle or within a 10 m (33 ft.) radius of the vehicle.

(2) Press the SST activation switch and deploy the airbag.

CAUTION:

- When deploying the airbag, make sure that no one is near the vehicle.
- The curtain shield airbag assembly becomes extremely hot when the airbag is deployed, so do not touch it for at least 30 minutes after deployment.
- Use gloves and safety glasses when handling a curtain shield airbag assembly with a deployed airbag.
- Do not apply water, etc. to a curtain shield airbag assembly with a deployed airbag.
- Always wash your hands with water after completing the operation.

HINT:

The airbag is deployed as the LED of the SST activation switch comes on.

3. DISPOSE OF CURTAIN SHIELD AIRBAG ASSEMBLY (WHEN NOT INSTALLED IN VEHICLE)

NOTICE:

- When disposing of the curtain shield airbag assembly, never use the customer's vehicle to deploy the airbag.
- Be sure to follow the following procedure when deploying the airbag.

HINT:

Prepare a battery as the power source to deploy the airbag.

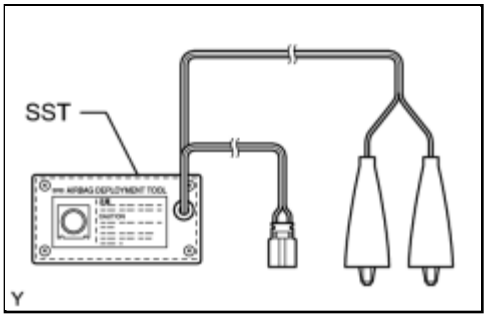

(a) Check the function of SST INFO .

(b) Remove the curtain shield airbag assembly INFO .

CAUTION:

When removing the curtain shield airbag assembly, before the work is started, leave the vehicle at least 90 seconds after turning the ignition switch off and disconnecting the cable from the negative (-) battery terminal.

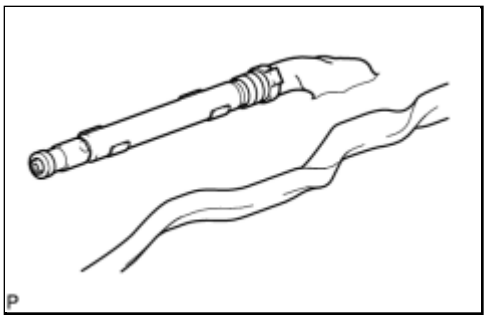

(c) Cut off the deployment section of the curtain shield airbag assembly.

(d) Using a service-purpose wire harness for the vehicle, tie down the curtain shield airbag assembly to the tire.

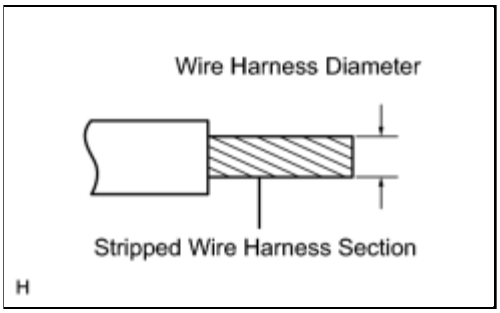

Wire harness:

Stripped wire harness section

1.25 mm^2 (0.0019 $in.^2$) or more

CAUTION:

If the wire harness is too thin or an alternative object is used to tie down the curtain shield airbag assembly, it may be snapped by the shock when the airbag is deployed. Always use a wire harness for vehicle use with an area of at least 1.25 mm^2 (0.0019 $in.^2$).

HINT:

To calculate the area of the stripped wire harness section:

Area = 3.14 x (Diameter)^2 divided by 4

(1) Position the curtain shield airbag assembly inside the tire as shown in the illustration.

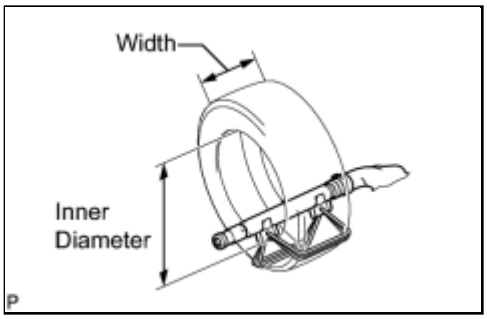

Tire size:

Must exceed the following dimensions

Width:

185 mm (7.28 in.)

Inner diameter:

360 mm (14.2 in.)

CAUTION:

Make sure that the wire harness is tight. If there is slack in the wire harness, the curtain shield airbag assembly may become loose due to the shock when the airbag is deployed.

NOTICE:

The tire may be damaged by the airbag deployment, so use an extra tire.

(e) Install SST.

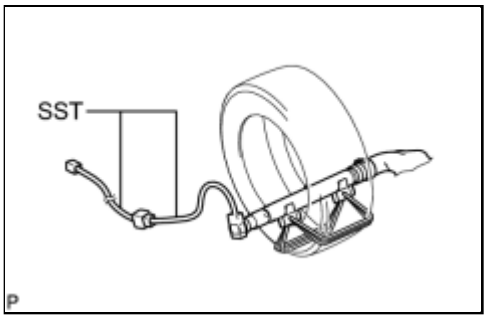

(1) After connecting SST below to each other, connect them to the curtain shield airbag assembly.

SST: 09082-00802

09082-10801

09082-20801

(f) Place the tires.

CAUTION:

Do not place the deployment direction of the curtain shield airbag assembly facing toward the ground.

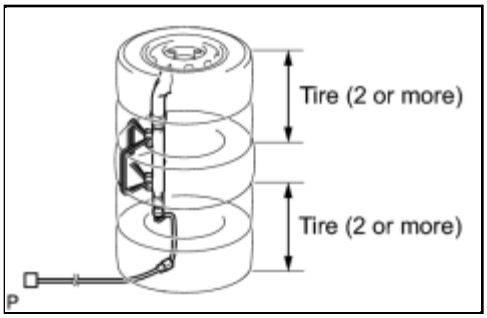

(1) Place at least 2 tires under the tire tied to the curtain shield airbag assembly.

(2) Place at least 2 tires onto the tire tied to the curtain shield airbag assembly. The top tire should have the disc wheel installed.

NOTICE:

Do not place the SST connector under the tire because it could be damaged.

(3) Tie the tires together with the 2 wire harnesses.

CAUTION:

Make sure that the wire harnesses are tight. Looseness in the wire harness results in the tires coming free due to the shock when the airbag is deployed.

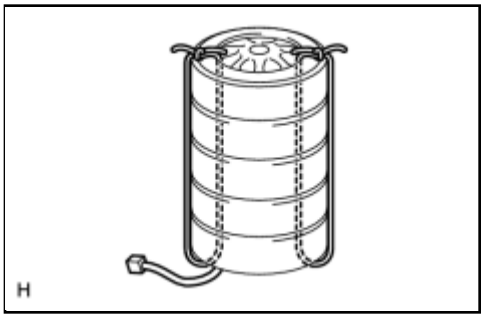

(g) Install SST.

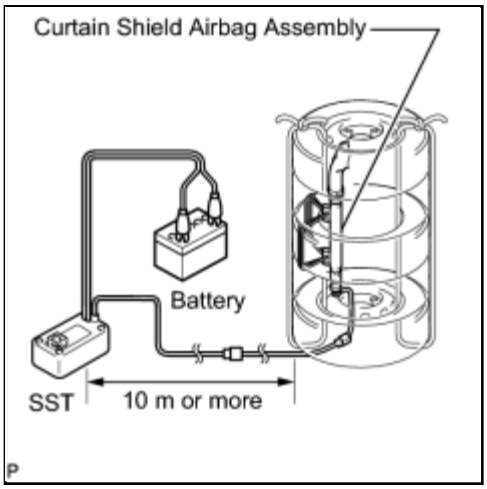

(1) Connect the SST connector.

SST: 09082-00700

NOTICE:

To avoid damaging the SST connector and wire harness, do not lock the secondary lock of the twin lock. Also, secure some slack for the SST wire harness inside the tire.

(2) Move SST at least 10 m (33 ft.) away from the airbag tied down to the tire.

(h) Deploy the airbag.

(1) Connect the red clip of SST to the positive (+) battery terminal and the black clip of SST to the negative (-) battery terminal.

(2) Check that no one is within a 10 m (33 ft.) radius of the tire which the curtain shield airbag assembly is tied to.

(3) Press the SST activation switch and deploy the airbag.

CAUTION:

When deploying the airbag, make sure that no one is near the tire.

HINT:

The airbag is deployed as the LED of the SST activation switch comes on.

(i) Dispose of the curtain shield airbag assembly.

CAUTION:

- The curtain shield airbag assembly becomes extremely hot when the airbag is deployed, so do not touch it for at least 30 minutes after deployment.

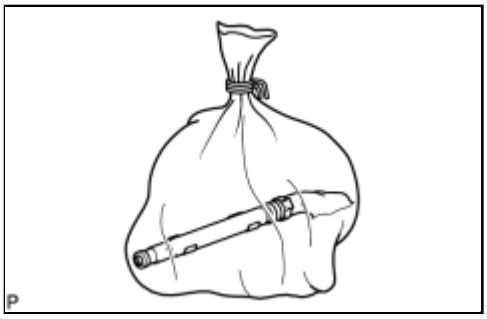

- Use gloves and safety glasses when handling a curtain shield airbag assembly with a deployed airbag.
- Do not apply water, etc. to a curtain shield airbag assembly with a deployed airbag.
- Always wash your hands with water after completing the operation.

(1) Remove the curtain shield airbag assembly from the tire.

(2) Place the curtain shield airbag assembly in a plastic bag, tie it tightly, and dispose of it as other general part disposal.

Last Modified: 3-10-2010	6.4 A	**From:** 200901
Model Year: 2010	**Model:** Corolla	**Doc ID:** RM000000UXD03SX
Title: SUPPLEMENTAL RESTRAINT SYSTEMS: CURTAIN SHIELD AIRBAG ASSEMBLY: INSTALLATION (2010 Corolla)		

INSTALLATION

1. INSTALL CURTAIN SHIELD AIRBAG ASSEMBLY

(a) Check that the ignition switch is off.

(b) Check that the cable is disconnected from the negative (-) battery terminal.

CAUTION:

Wait at least 90 seconds after disconnecting the cable from the negative (-) battery terminal to disable the SRS system.

(c) Install a new curtain shield airbag assembly with the 5 bolts.

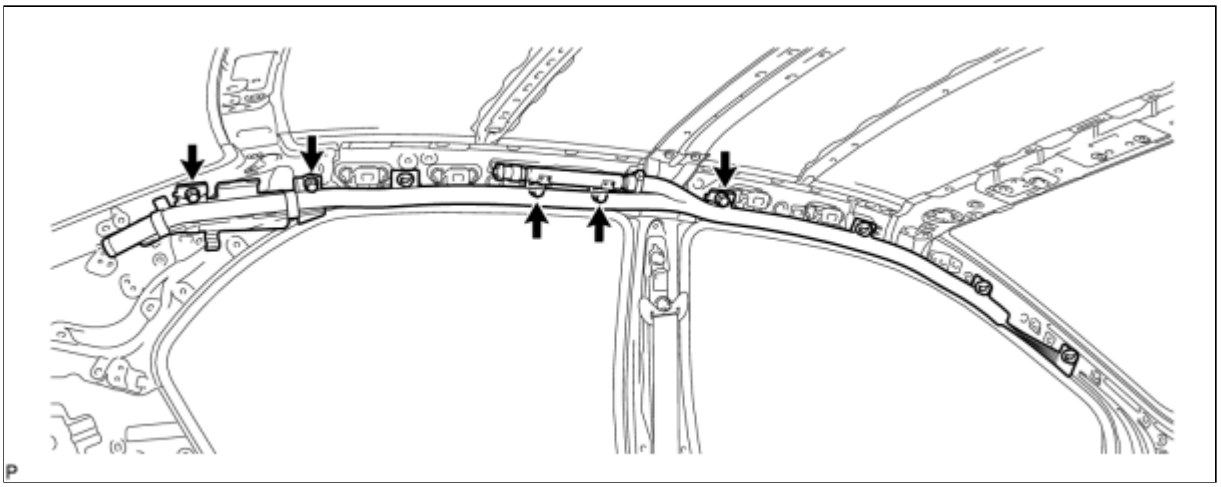

Torque: 9.8 N·m (100 kgf·cm, 87in·lbf)

NOTICE:

- If the curtain shield airbag assembly is removed, replace it with a new one.
- Do not twist the curtain shield airbag assembly when installing it.

(d) Install the 4 clips with the curtain shield airbag assembly to the body panel.

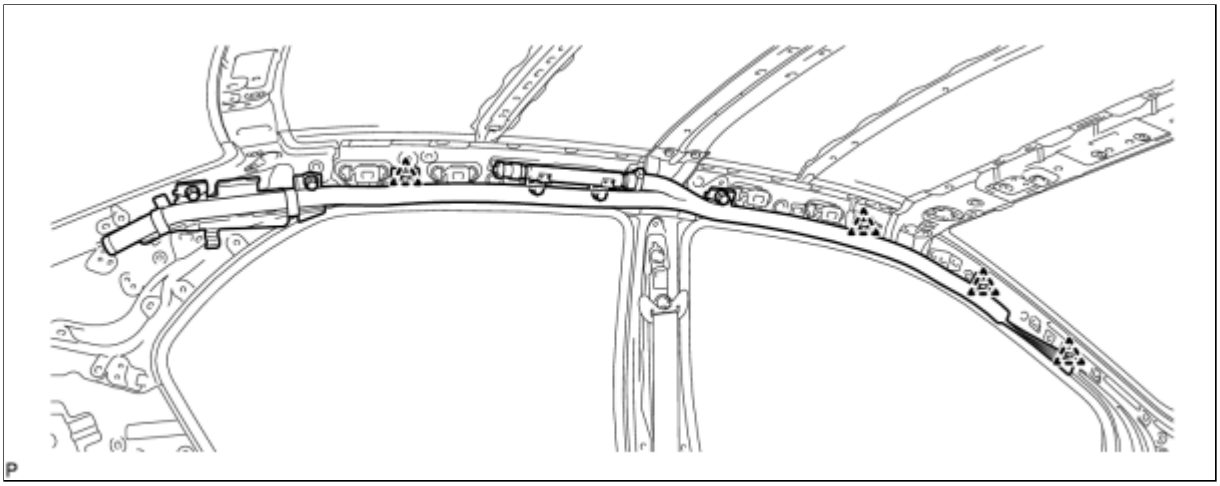

NOTICE:

Do not twist the curtain shield airbag assembly when installing it.

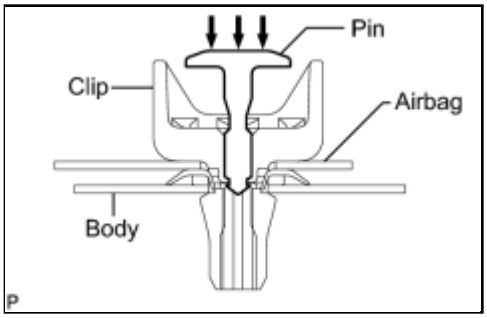

(e) Install the 4 pins as shown in the illustration.

NOTICE:

Make sure that the pins of the clips are pushed in firmly.

(f) Connect the curtain shield airbag connector.

NOTICE:

When connecting the airbag connector, take care not to damage the airbag wire harness.

2. INSTALL ROOF HEADLINING ASSEMBLY

HINT:

Refer to the procedure from Install Roof Headlining Assembly INFO .

3. CONNECT CABLE TO NEGATIVE BATTERY TERMINAL

4. INSPECT SRS WARNING LIGHT

(a) Inspect the SRS warning light INFO .

Last Modified: 3-10-2010	6.4 K	**From:** 200901
Model Year: 2010	**Model:** Corolla	**Doc ID:** RM000000UWY035X
Title: SUPPLEMENTAL RESTRAINT SYSTEMS: FRONT AIRBAG SENSOR: COMPONENTS (2010 Corolla)		

COMPONENTS

ILLUSTRATION

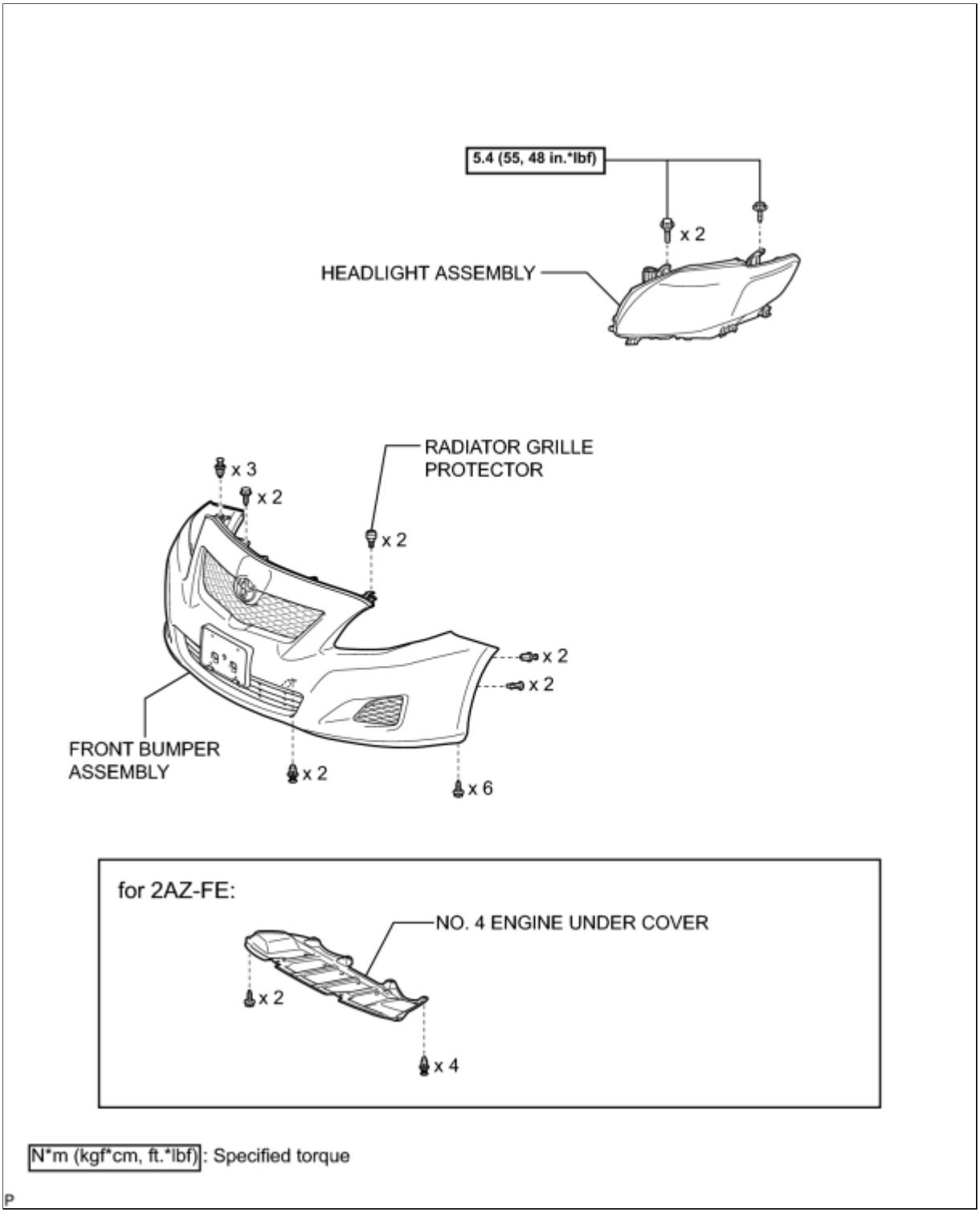

P

ILLUSTRATION

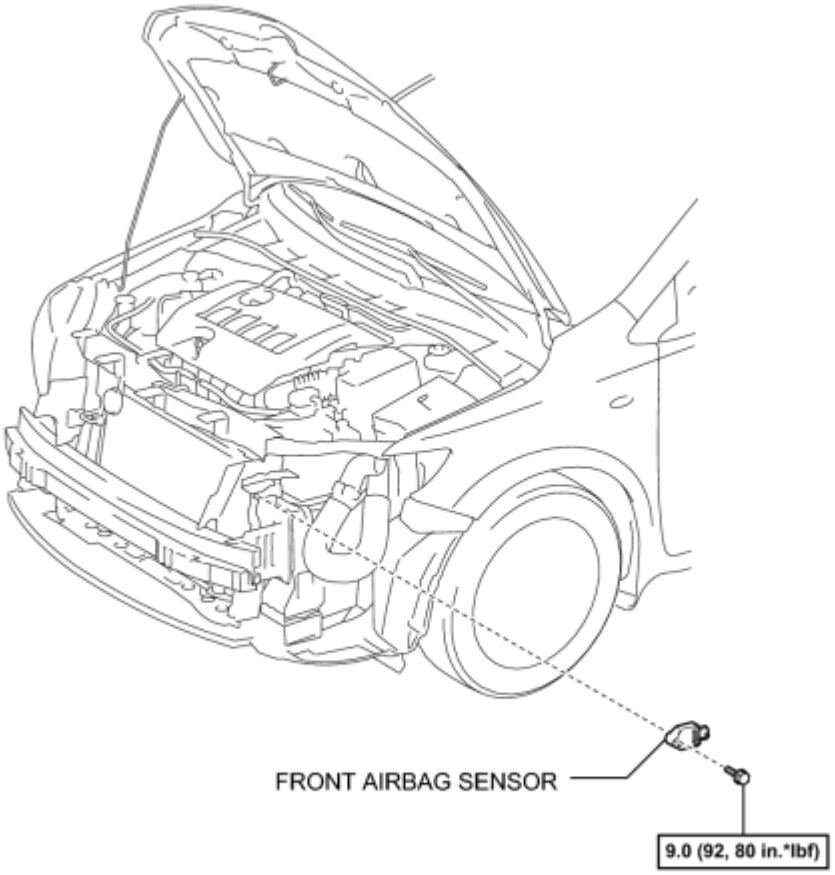

N*m (kgf*cm, ft.*lbf) : Specified torque

P

Last Modified: 3-10-2010	6.4 G	**From:** 200901
Model Year: 2010	**Model:** Corolla	**Doc ID:** RM000000VPU03VX
Title: SUPPLEMENTAL RESTRAINT SYSTEMS: FRONT AIRBAG SENSOR: ON-VEHICLE INSPECTION (2010 Corolla)		

ON-VEHICLE INSPECTION

1. INSPECT FRONT AIRBAG SENSOR (VEHICLE NOT INVOLVED IN COLLISION)

(a) Perform a diagnostic system check INFO .

2. INSPECT FRONT AIRBAG SENSOR (VEHICLE INVOLVED IN COLLISION AND AIRBAG HAS NOT DEPLOYED)

(a) Perform a diagnostic system check INFO .

(b) When the front bumper of the vehicle or the surrounding area is damaged, check if there is any damage to the front airbag sensor. If there are any following defects, replace the front airbag sensor with a new one:

- Cracks, dents or chips on the sensor housing.
- Cracks or other damage to the connector.
- Peeling off of the label or damage to the serial number.

CAUTION:

Be sure to follow the correct removal and installation procedures of the front airbag sensor.

3. INSPECT FRONT AIRBAG SENSOR (VEHICLE INVOLVED IN COLLISION AND AIRBAG IS DEPLOYED)

(a) When airbags have deployed as the result of a collision, be certain to replace all front airbag sensors in the damaged area (anywhere in need of repair). Furthermore, it is also necessary to replace any front airbag sensors in undamaged areas that have registered a major collision, or which exhibit any of the following abnormalities:

- Cracks, dents or chips on the sensor housing.
- Cracks or other damage to the connector.
- Peeling off of the label or damage to the serial number.

CAUTION:

Be sure to follow the correct removal and installation procedures of the front airbag sensor.

Last Modified: 3-10-2010	6.4 A	**From:** 200901
Model Year: 2010	**Model:** Corolla	**Doc ID:** RM000000UWZ040X
Title: SUPPLEMENTAL RESTRAINT SYSTEMS: FRONT AIRBAG SENSOR: REMOVAL (2010 Corolla)		

REMOVAL

HINT:

- Use the same procedure for the RH side and LH side.
- The following procedure is for the LH side.

1. PRECAUTION

CAUTION:

Be sure to read Precaution thoroughly before servicing INFO **.**

2. DISCONNECT CABLE FROM NEGATIVE BATTERY TERMINAL

CAUTION:

Wait at least 90 seconds after disconnecting the cable from the negative (-) battery terminal to disable the SRS system.

3. REMOVE RADIATOR GRILLE PROTECTOR INFO

4. REMOVE NO. 4 ENGINE UNDER COVER (for 2AZ-FE) INFO

5. REMOVE FRONT BUMPER ASSEMBLY INFO

6. REMOVE HEADLIGHT ASSEMBLY INFO

7. REMOVE FRONT AIRBAG SENSOR

(a) Check that the ignition switch is off.

(b) Check that the cable is disconnected from the negative (-) battery terminal.

CAUTION:

Wait at least 90 seconds after disconnecting the cable from the negative (-) battery terminal to disable the SRS system.

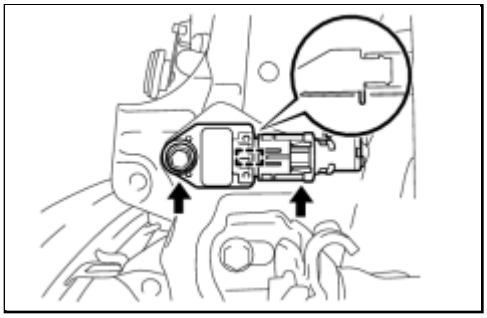

(c) Disconnect the connector from the front airbag sensor.

NOTICE:

When disconnecting the airbag connector, take care not to damage the airbag wire harness.

(d) Remove the bolt and front airbag sensor from the body.

NOTICE:

Loosen the bolt while holding the front airbag sensor because the front airbag sensor pin (stopper) is easily damaged.

Last Modified: 3-10-2010	6.4 A	**From:** 200901
Model Year: 2010	**Model:** Corolla	**Doc ID:** RM000000UWW040X
Title: SUPPLEMENTAL RESTRAINT SYSTEMS: FRONT AIRBAG SENSOR: INSTALLATION (2010 Corolla)		

INSTALLATION

1. INSTALL FRONT AIRBAG SENSOR

(a) Check that the ignition switch is off.

(b) Check that the cable is disconnected from the negative (-) battery terminal.

CAUTION:

Wait at least 90 seconds after disconnecting the cable from the negative (-) battery terminal to disable the SRS system.

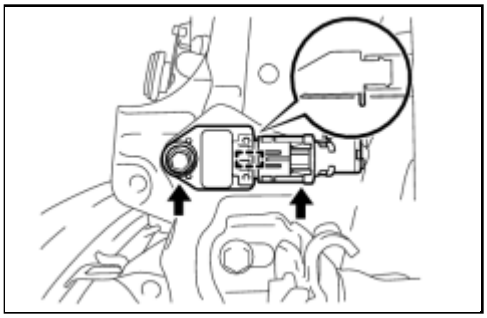

(c) Install the front airbag sensor with the bolt and pin.

Torque: 9.0 N·m (92 kgf·cm, 80in·lbf)

NOTICE:

- If the front airbag sensor has been dropped, or there are any cracks, dents or other defects in the case or connector, replace it with a new one.
- When installing the front airbag sensor, be careful that the SRS wiring does not interfere with other parts and that it is not pinched between other parts.
- Make sure that the pin is securely inserted into the body hole.
- Tighten the bolt while holding the front airbag sensor because the front airbag sensor pin (stopper) is easily damaged.

(d) Connect the connector.

NOTICE:

When connecting the airbag connector, take care not to damage the airbag wire harness.

(e) Check that there is no looseness in the installation parts of the front airbag sensor.

2. INSTALL HEADLIGHT ASSEMBLY INFO

3. INSTALL FRONT BUMPER ASSEMBLY INFO

4. INSTALL NO. 4 ENGINE UNDER COVER INFO

5. INSTALL RADIATOR GRILLE PROTECTOR INFO

6. CONNECT CABLE TO NEGATIVE BATTERY TERMINAL

7. INSPECT AND ADJUST HEADLIGHT AIMING

(a) Inspect and adjust headlight aiming INFO .

8. INSPECT AND ADJUST FOG LIGHT AIMING (w/ Fog Light)

(a) Inspect and adjust fog light aiming INFO .

9. INSPECT SRS WARNING LIGHT

(a) Inspect the SRS warning light INFO .

Last Modified: 3-10-2010	6.4 K	**From:** 200901
Model Year: 2010	**Model:** Corolla	**Doc ID:** RM000000UX903BX
Title: SUPPLEMENTAL RESTRAINT SYSTEMS: FRONT PASSENGER AIRBAG ASSEMBLY: COMPONENTS (2010 Corolla)		

COMPONENTS

ILLUSTRATION

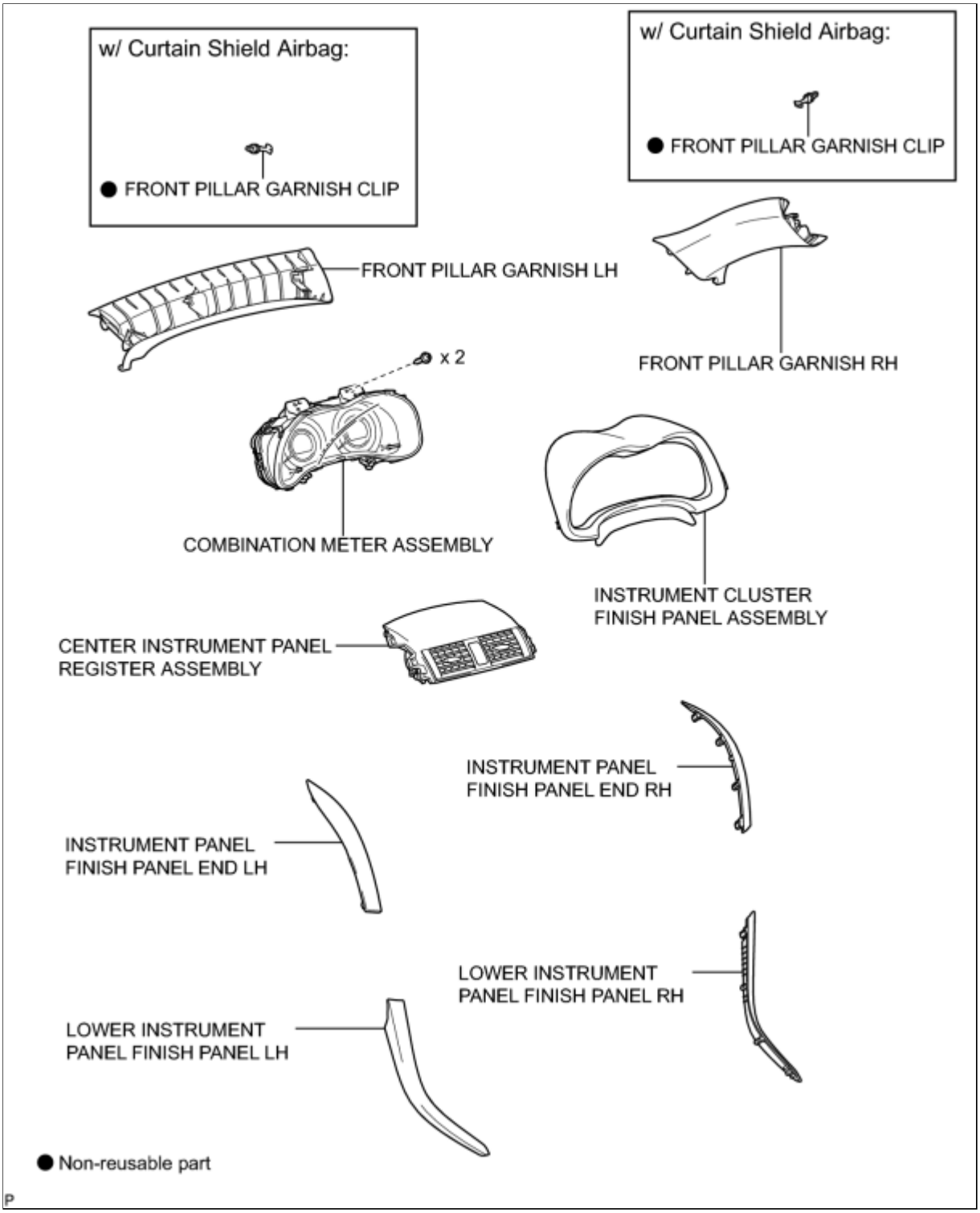

ILLUSTRATION

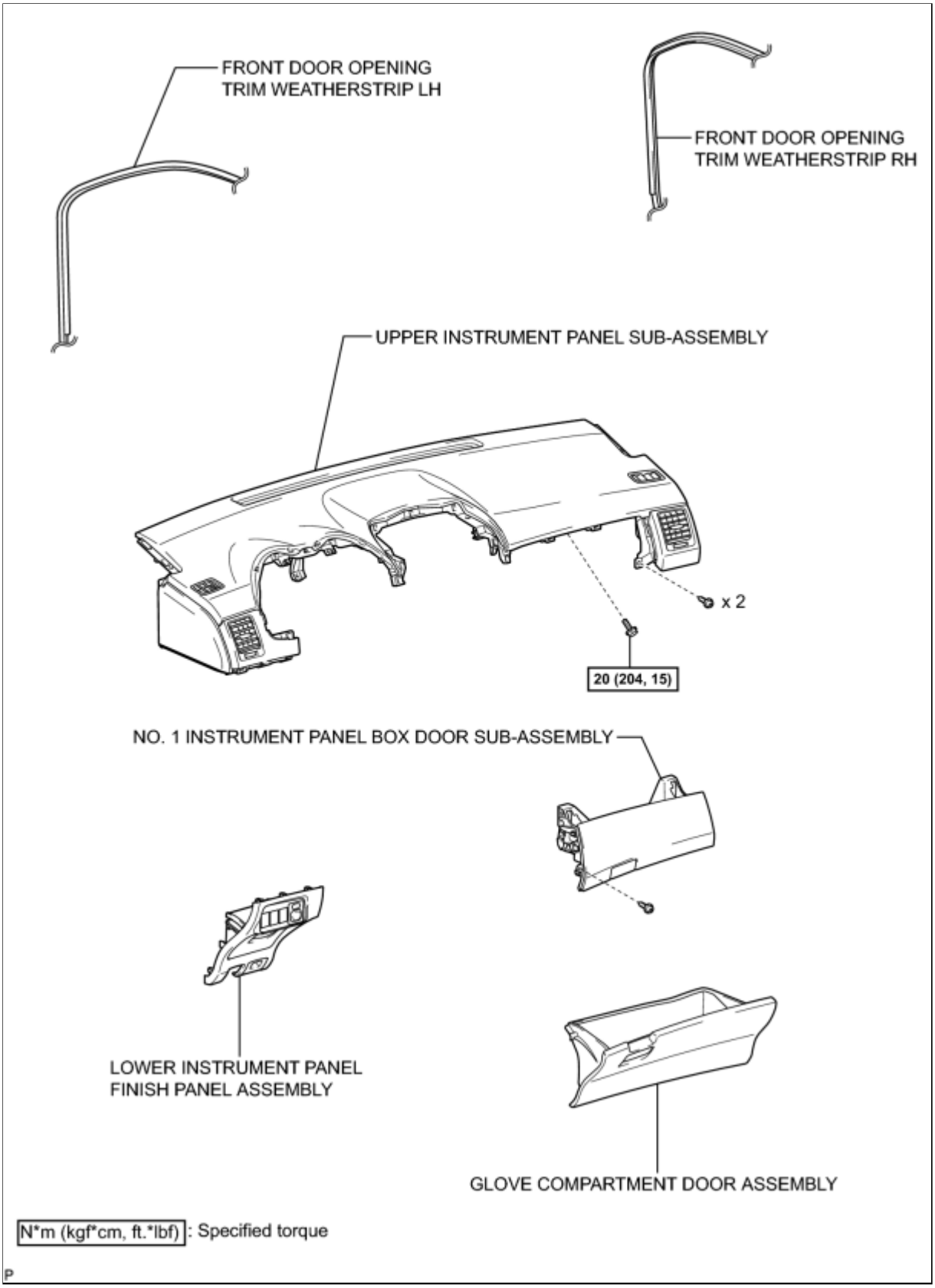

ILLUSTRATION

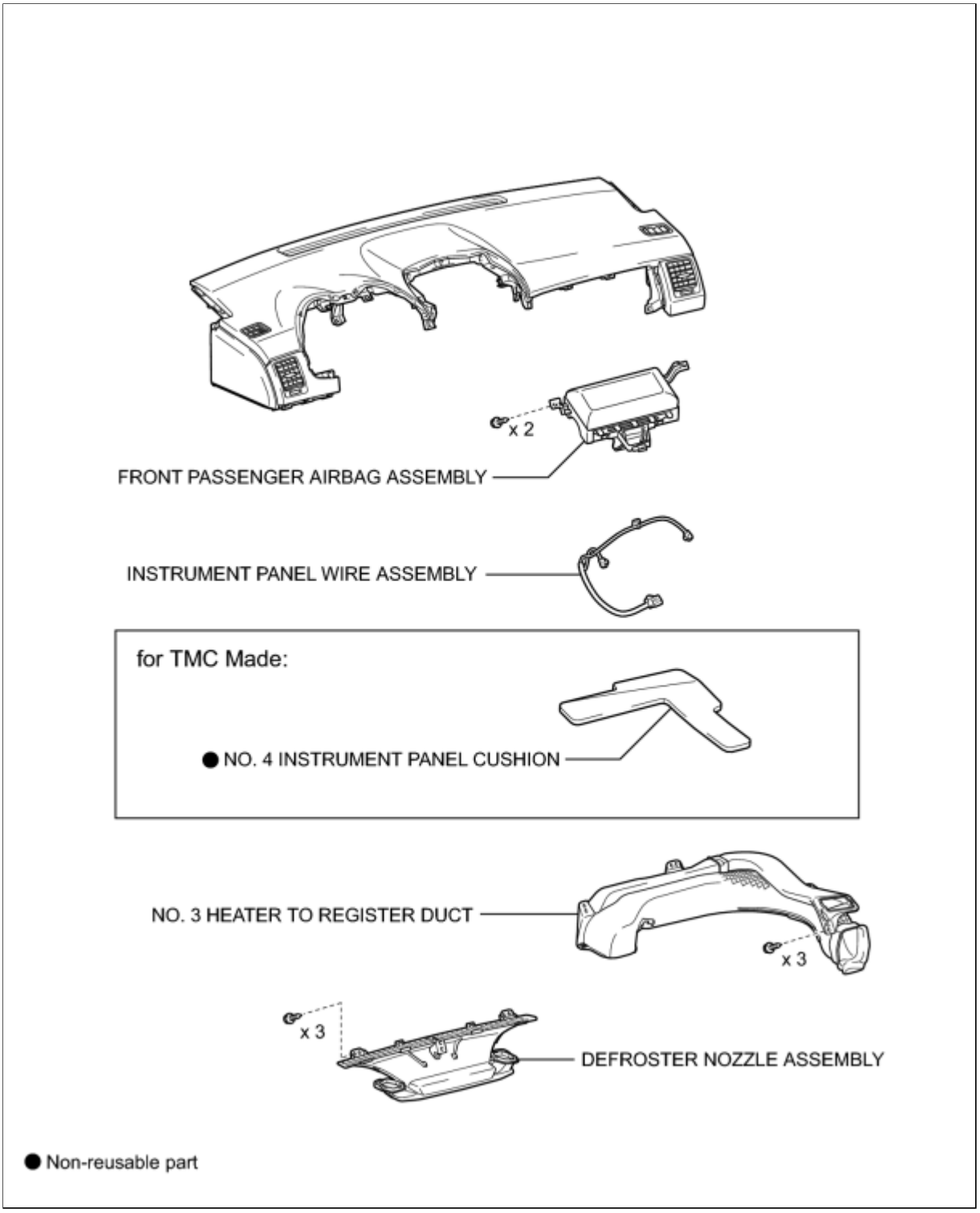
x 2
FRONT PASSENGER AIRBAG ASSEMBLY
INSTRUMENT PANEL WIRE ASSEMBLY
for TMC Made:
● NO. 4 INSTRUMENT PANEL CUSHION
NO. 3 HEATER TO REGISTER DUCT
x 3
x 3
DEFROSTER NOZZLE ASSEMBLY
● Non-reusable part

Last Modified: 3-10-2010	6.4 G	**From:** 200901
Model Year: 2010	**Model:** Corolla	**Doc ID:** RM000000UXB045X
Title: SUPPLEMENTAL RESTRAINT SYSTEMS: FRONT PASSENGER AIRBAG ASSEMBLY: ON-VEHICLE INSPECTION (2010 Corolla)		

ON-VEHICLE INSPECTION

1. INSPECT FRONT PASSENGER AIRBAG ASSEMBLY (VEHICLE NOT INVOLVED IN COLLISION)

(a) Perform a diagnostic system check INFO .

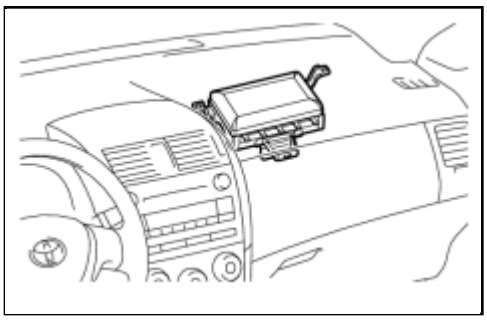

(b) With the front passenger airbag assembly installed on the vehicle, perform a visual check. If there are any following defects, replace the instrument panel with a new one:

Cuts, minute cracks or marked discoloration on the instrument panel around the front passenger airbag assembly.

2. INSPECT FRONT PASSENGER AIRBAG ASSEMBLY (VEHICLE INVOLVED IN COLLISION AND AIRBAG HAS NOT DEPLOYED)

(a) Perform a diagnostic system check INFO .

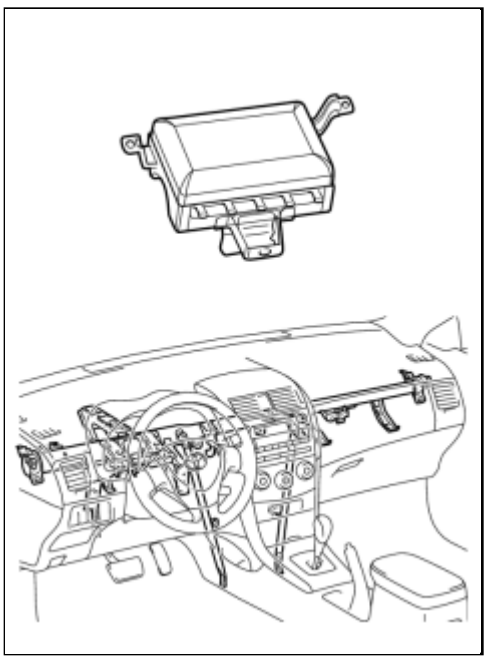

(b) With the front passenger airbag assembly removed from the vehicle, perform a visual check. If there are any following defects, replace the front passenger airbag assembly, instrument panel or instrument panel reinforcement with a new one:

- Cuts, minute cracks or marked discoloration on the front passenger airbag assembly.
- Cracks or other damage to the connectors.
- Deformation or cracks on the instrument panel or instrument panel reinforcement.

CAUTION:

Be sure to follow the correct removal and installation procedures of the front passenger airbag assembly.

Last Modified: 3-10-2010	6.4 A	**From:** 200901
Model Year: 2010	**Model:** Corolla	**Doc ID:** RM000000UXA04AX
Title: SUPPLEMENTAL RESTRAINT SYSTEMS: FRONT PASSENGER AIRBAG ASSEMBLY: REMOVAL (2010 Corolla)		

REMOVAL

1. PRECAUTION

CAUTION:

Be sure to read Precaution thoroughly before servicing INFO .

2. DISCONNECT CABLE FROM NEGATIVE BATTERY TERMINAL

CAUTION:

Wait at least 90 seconds after disconnecting the cable from the negative (-) battery terminal to disable the SRS system.

3. REMOVE LOWER INSTRUMENT PANEL FINISH PANEL LH INFO

4. REMOVE LOWER INSTRUMENT PANEL FINISH PANEL RH INFO

5. REMOVE INSTRUMENT PANEL FINISH PANEL END LH INFO

6. REMOVE INSTRUMENT PANEL FINISH PANEL END RH INFO

7. REMOVE CENTER INSTRUMENT PANEL REGISTER ASSEMBLY INFO

8. REMOVE INSTRUMENT CLUSTER FINISH PANEL ASSEMBLY INFO

9. REMOVE COMBINATION METER ASSEMBLY INFO

10. REMOVE FRONT PILLAR GARNISH LH (w/o Curtain Shield Airbag) INFO

11. REMOVE FRONT PILLAR GARNISH LH (w/ Curtain Shield Airbag) INFO

12. REMOVE FRONT PILLAR GARNISH RH (w/o Curtain Shield Airbag)

HINT:

Use the same procedure for the RH side and LH side INFO .

13. REMOVE FRONT PILLAR GARNISH RH (w/ Curtain Shield Airbag) INFO

14. REMOVE LOWER INSTRUMENT PANEL FINISH PANEL ASSEMBLY INFO

15. DISCONNECT FRONT DOOR OPENING TRIM WEATHERSTRIP LH INFO

16. REMOVE GLOVE COMPARTMENT DOOR ASSEMBLY INFO

17. REMOVE NO. 1 INSTRUMENT PANEL BOX DOOR SUB-ASSEMBLY INFO

18. DISCONNECT FRONT DOOR OPENING TRIM WEATHERSTRIP RH

HINT:

Use the same procedure for the RH side and LH side INFO .

19. DISCONNECT INSTRUMENT PANEL WIRE ASSEMBLY

(a) Check that the ignition switch is off.

(b) Check that the cable is disconnected from the negative (-) battery terminal.

CAUTION:

Wait at least 90 seconds after disconnecting the cable from the negative (-) battery terminal to disable the SRS system.

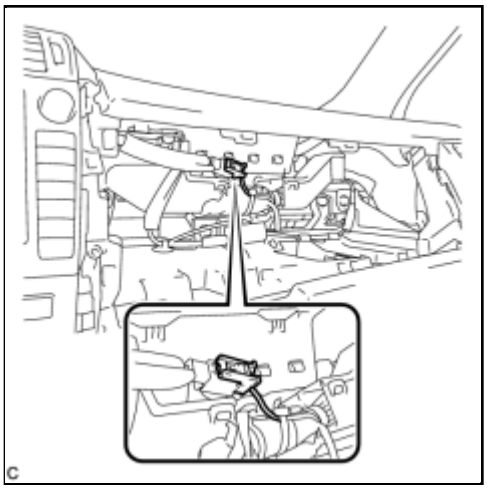

(c) Disconnect the connector.

NOTICE:

When disconnecting the airbag connector, take care not to damage the airbag wire harness.

20. REMOVE UPPER INSTRUMENT PANEL SUB-ASSEMBLY INFO

21. REMOVE DEFROSTER NOZZLE ASSEMBLY INFO

22. REMOVE NO. 3 HEATER TO REGISTER DUCT INFO

23. REMOVE NO. 4 INSTRUMENT PANEL CUSHION (for TMC Made) INFO

24. REMOVE FRONT PASSENGER AIRBAG ASSEMBLY

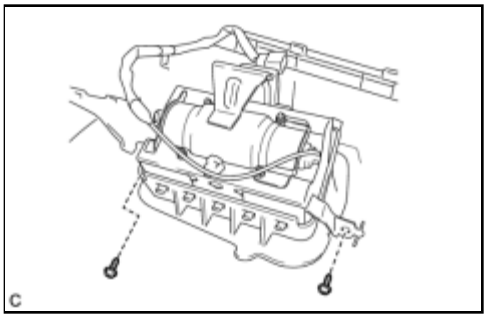

(a) Remove the 2 screws.

(b) Lean the instrument panel as shown the illustration and disengage the 5 hooks.

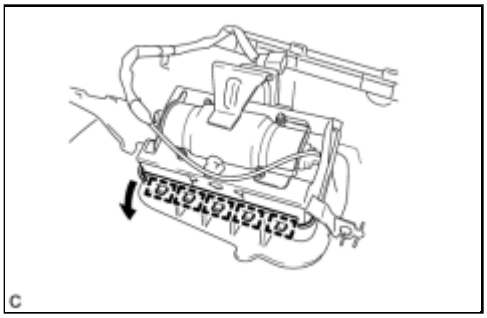

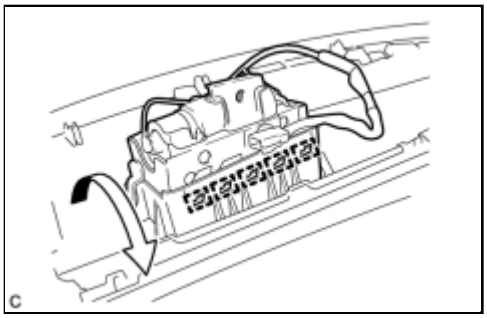

(c) Disengage the 5 hooks and remove the front passenger airbag assembly from the instrument panel as shown in the illustration.

25. REMOVE INSTRUMENT PANEL WIRE ASSEMBLY

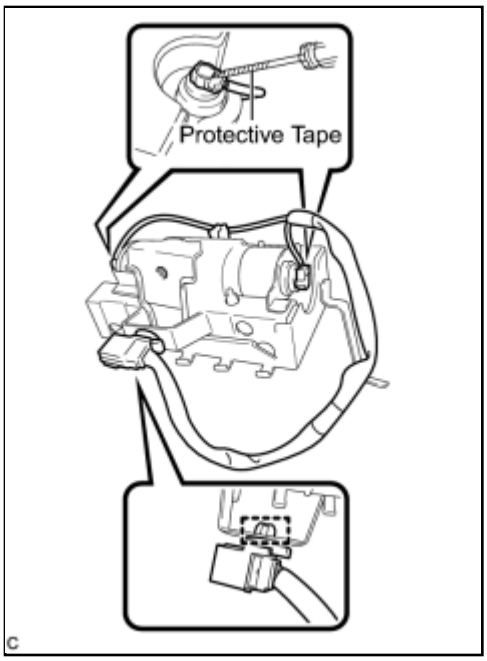

(a) Using a screwdriver with the tip wrapped with protective tape, disconnect the 2 airbag connectors and remove the clamp.

NOTICE:

When disconnecting the airbag connector, take care not to damage the airbag wire harness.

(b) Remove the clamp and instrument panel wire assembly from the front passenger airbag assembly.

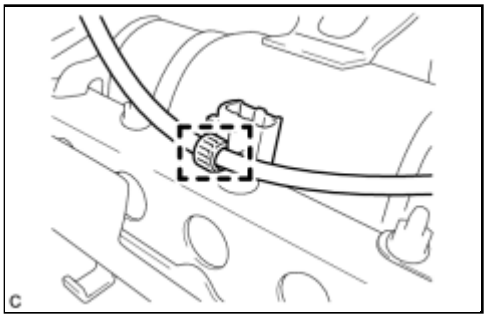
C

Last Modified: 3-10-2010	6.4 N	**From:** 200901
Model Year: 2010	**Model:** Corolla	**Doc ID:** RM000000UX604DX
Title: SUPPLEMENTAL RESTRAINT SYSTEMS: FRONT PASSENGER AIRBAG ASSEMBLY: DISPOSAL (2010 Corolla)		

DISPOSAL

CAUTION:

Before performing pre-disposal deployment of any SRS component, review and closely follow all applicable environmental and hazardous material regulations. Pre-disposal deployment may be considered hazardous material treatment.

1. PRECAUTION

HINT:

When scrapping a vehicle equipped with an SRS or disposing of the front passenger airbag assembly, be sure to deploy the airbag first in accordance with the procedure described below. If any abnormality occurs with the airbag deployment, contact the Service Dept. of TOYOTA MOTOR SALES, U.S.A., INC.

CAUTION:

- An airbag or pretensioner may be activated by static electricity. To prevent this, be sure to touch a metal surface with bare hands to discharge static electricity before performing this procedure.
- Never dispose of a front passenger airbag assembly with an undeployed airbag.
- The airbag produces an exploding sound when it is deployed, so perform the operation outdoors and where it will not create a nuisance to nearby residents.
- When deploying the airbag, always use the specified SST (SRS Airbag Deployment Tool). Perform the operation in a place away from electrical noise.
- When deploying the airbag, perform the operation at least 10 m (33 ft.) away from the front passenger airbag assembly.
- The front passenger airbag assembly becomes extremely hot when the airbag is deployed, so do not touch it for at least 30 minutes after deployment.
- Use gloves and safety glasses when handling a front passenger airbag assembly with a deployed airbag.
- Do not apply water, etc. to a front passenger airbag assembly with a deployed airbag.
- Always wash your hands with water after completing the operation.

2. DISPOSE OF FRONT PASSENGER AIRBAG ASSEMBLY (WHEN INSTALLED IN VEHICLE)

HINT:

Prepare a battery as the power source to deploy the airbag.

(a) Check the function of SST INFO .

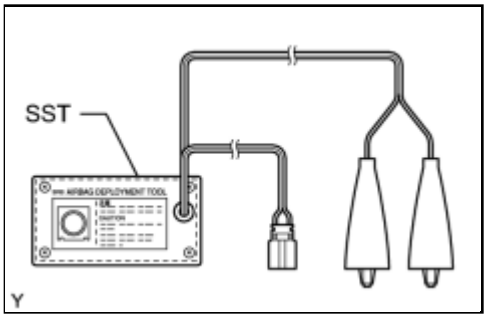

(b) Refer to Precaution INFO .

(c) Disconnect the cable from the negative (-) battery terminal.

CAUTION:

Wait at least 90 seconds after disconnecting the cable from the negative (-) battery terminal to disable the SRS system.

(d) Remove the lower instrument panel finish panel RH INFO .

(e) Remove the instrument panel finish panel end RH INFO .

(f) Remove the No. 1 instrument panel box door sub-assembly INFO .

(g) Install SST.

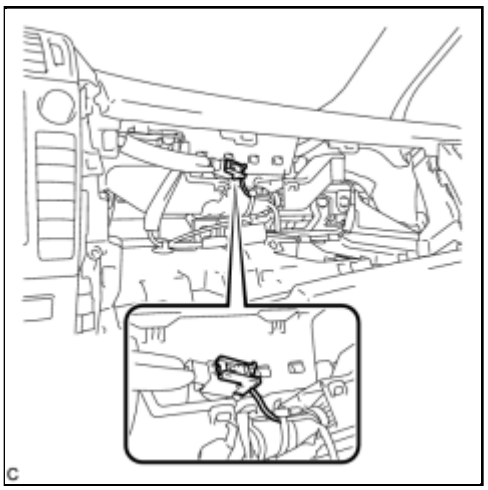

(1) Disconnect the connector.

NOTICE:

When disconnecting the airbag connector, take care not to damage the airbag wire harness.

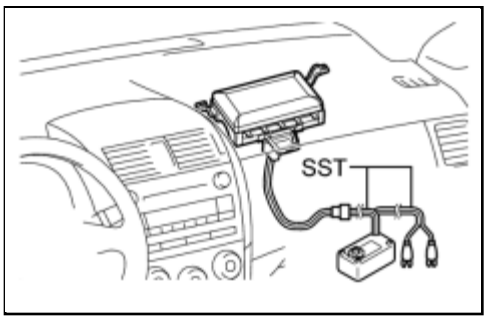

(2) Connect the SST connector to the instrument panel wire assembly.

SST: 09082-00700

SST: 09082-00760

NOTICE:

To avoid damaging the SST connector and wire harness, do not lock the secondary lock of the twin lock.

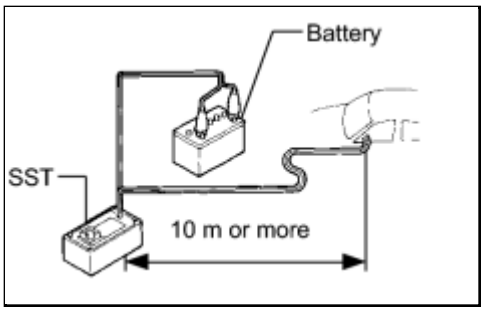

(3) Move SST at least 10 m (33 ft.) away from the vehicle front side window.

(4) Maintaining sufficient clearance for the SST wire harness in the front side window, close all doors and windows of the vehicle.

NOTICE:

Take care not to damage the SST wire harness.

(5) Connect the red clip of SST to the positive (+) battery terminal and the black clip of SST to the negative (-) battery terminal.

(h) Deploy the airbag.

(1) Check that no one is inside the vehicle or within a 10 m (33 ft.) radius of the vehicle.

(2) Press the SST activation switch and deploy the airbag.

CAUTION:

- When deploying the airbag, make sure that no one is near the vehicle.
- The front passenger airbag assembly becomes extremely hot when the airbag is deployed, so do not touch it for at least 30 minutes after deployment.
- Use gloves and safety glasses when handling a front passenger airbag assembly with a deployed airbag.
- Do not apply water, etc. to a front passenger airbag assembly with a deployed airbag.
- Always wash your hands with water after completing the operation.

HINT:

The airbag is deployed as the LED of the SST activation switch comes on.

3. DISPOSE OF FRONT PASSENGER AIRBAG ASSEMBLY (WHEN NOT INSTALLED IN VEHICLE)

NOTICE:

- When disposing of the front passenger airbag assembly, never use the customer's vehicle to deploy the airbag.
- Be sure to follow the following procedure when deploying the airbag.

HINT:

Prepare a battery as the power source to deploy the airbag.

(a) Check the function of SST INFO .

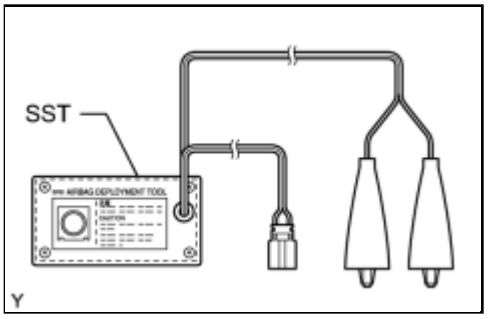

(b) Remove the front passenger airbag assembly INFO .

CAUTION:

- When removing the front passenger airbag assembly, before the work is started, leave the vehicle at least 90 seconds after turning the ignition switch off and disconnecting the cable from the negative (-) battery terminal.
- When storing the front passenger airbag assembly, keep the airbag deployment side facing upward.

(c) Install SST.

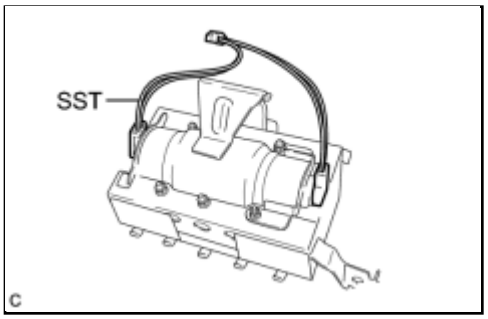

(1) After connecting SST below to each other, connect them to the front passenger airbag assembly.

SST: 09082-00802

09082-10801

09082-40800

(d) Using a service-purpose wire harness for the vehicle, tie down the front passenger airbag assembly to the tire.

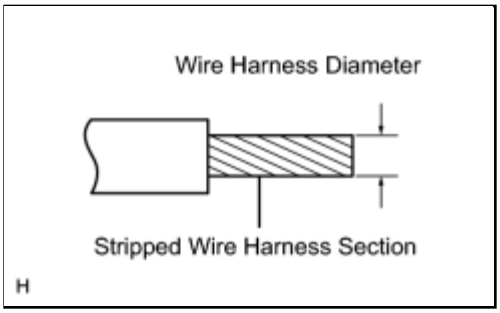

Wire harness:

Stripped wire harness section

1.25 mm^2 (0.0019 $in.^2$) or more

CAUTION:

If the wire harness is too thin or an alternative object is used to tie down the front passenger airbag assembly, it may be snapped by the shock when the airbag is deployed. Always use a wire harness for

vehicle use with an area of at least 1.25 mm^2 (0.0019 $in.^2$).

HINT:

To calculate the area of the stripped wire harness section:

Area = 3.14 x $(Diameter)^2$ divided by 4

(1) Position the front passenger airbag assembly inside the tire with the airbag deployment side facing inside.

Tire size:
Must exceed the following dimensions
Width:
185 mm (7.28 in.)
Inner diameter:
360 mm (14.2 in.)

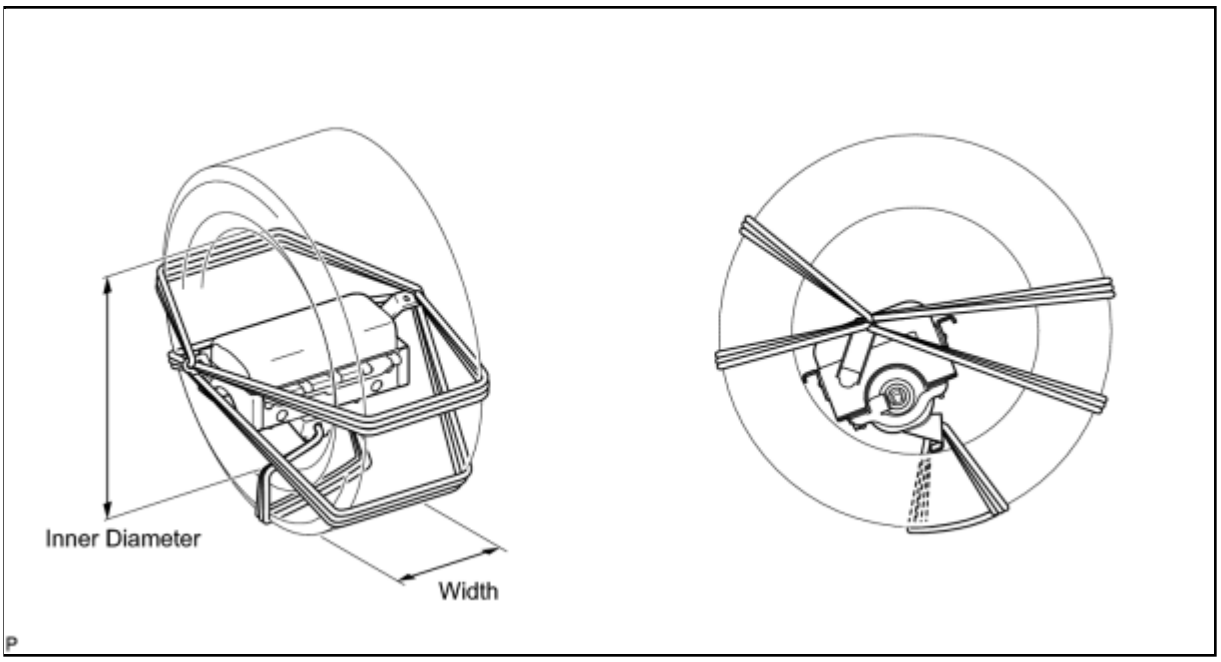

CAUTION:

- Make sure that the wire harness is tight. If there is slack in the wire harness, the front passenger airbag assembly may become loose due to the shock when the airbag is deployed.
- Always tie down the front passenger airbag assembly with the airbag deployment side facing inside the tire.

NOTICE:

The tire will be marked by the airbag deployment, so use an extra tire.

(e) Place the tires.

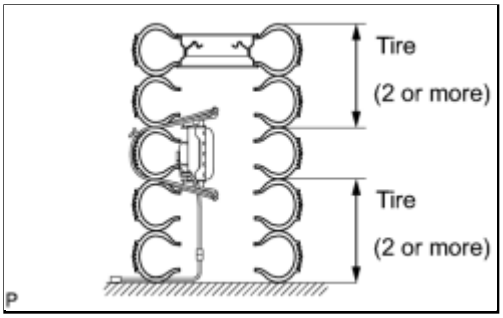

(1) Place at least 2 tires under the tire tied to the front passenger airbag assembly.

(2) Place at least 2 tires onto the tire tied to the front passenger airbag assembly. The top tire should have a disc wheel installed.

NOTICE:

Do not place the SST connector under the tire because it could be damaged.

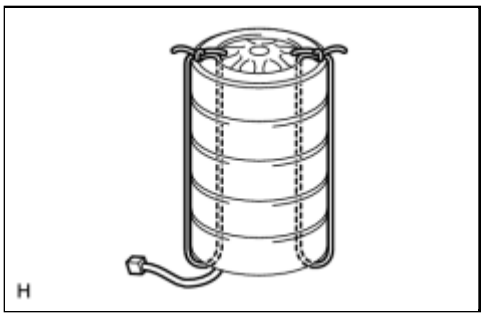

(3) Tie the tires together with the 2 wire harnesses.

CAUTION:

Make sure that the wire harnesses are tight. Looseness in the wire harnesses results in the tires coming free due to the shock when the airbag is deployed.

(f) Install SST.

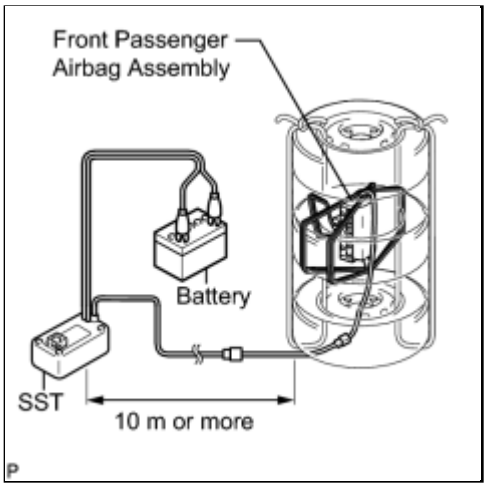

(1) Connect the SST connector.

SST: 09082-00700

NOTICE:

To avoid damaging the SST connector and wire harness, do not lock the secondary lock of the twin lock. Also, secure some slack for the SST wire harness inside the tire.

(2) Move SST at least 10 m (33 ft.) away from the airbag tied down to the tire.

(g) Deploy the airbag.

(1) Connect the red clip of SST to the positive (+) battery terminal and the black clip of SST to the negative (-) battery terminal.

(2) Check that no one is within a 10 m (33 ft.) radius of the tire which the front passenger airbag assembly is tied to.

(3) Press the SST activation switch and deploy the airbag.

CAUTION:

When deploying the airbag, make sure that no one is near the tire.

HINT:

The airbag is deployed as the LED of the SST activation switch comes on.

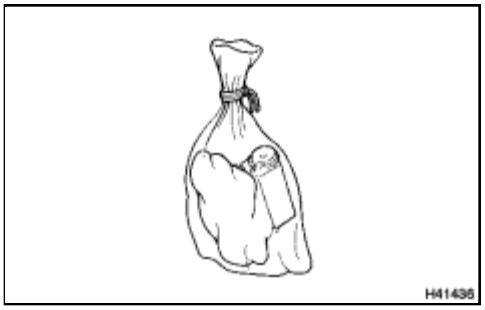

(h) Dispose of the front passenger airbag assembly.

CAUTION:

- The front passenger airbag assembly becomes extremely hot when the airbag is deployed, so do not touch it for at least 30 minutes after deployment.
- Use gloves and safety glasses when handling a front passenger airbag assembly with a deployed airbag.
- Do not apply water, etc. to a front passenger airbag assembly with a deployed airbag.
- Always wash your hands with water after completing the operation.

(1) Remove the front passenger airbag assembly from the tire.

(2) Place the front passenger airbag assembly in a plastic bag, tie it tightly, and dispose of it as other general part disposal.

Last Modified: 3-10-2010	6.4 A	**From:** 200901
Model Year: 2010	**Model:** Corolla	**Doc ID:** RM000000UX704CX
Title: SUPPLEMENTAL RESTRAINT SYSTEMS: FRONT PASSENGER AIRBAG ASSEMBLY: INSTALLATION (2010 Corolla)		

INSTALLATION

1. INSTALL INSTRUMENT PANEL WIRE ASSEMBLY

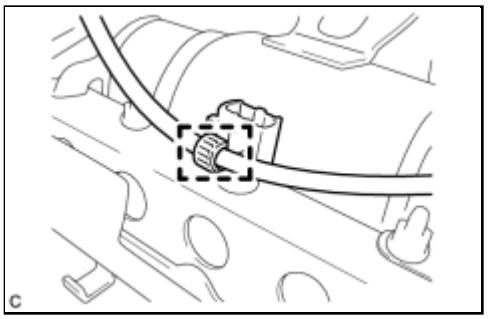

(a) Install the clamp.

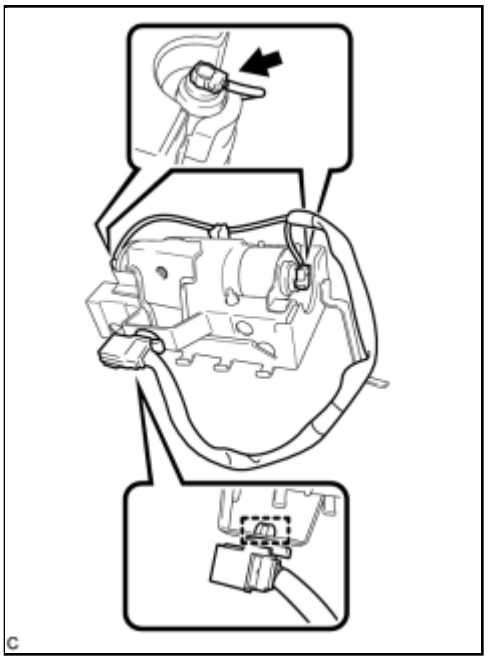

(b) Connect the 2 airbag connectors.

(c) Install the clamp and instrument panel wire assembly on the front passenger airbag assembly.

NOTICE:

When connecting the airbag connector, take care not to damage the airbag wire harness.

2. INSTALL FRONT PASSENGER AIRBAG ASSEMBLY

(a) Engage the 5 hooks.

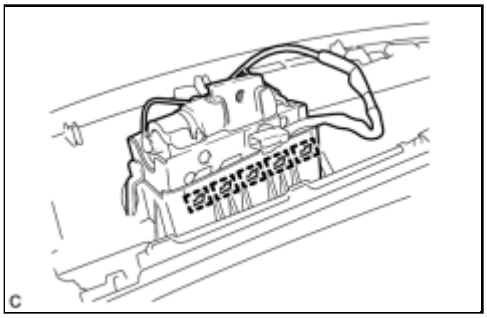

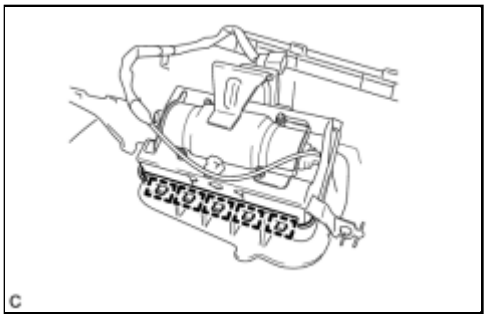

(b) Install the front passenger airbag assembly with the 5 hooks on the instrument panel.

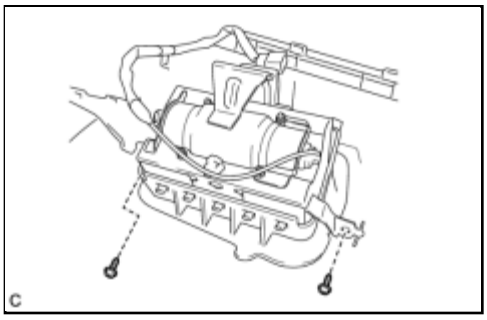

(c) Install the 2 screws.

3. INSTALL NO. 4 INSTRUMENT PANEL CUSHION (for TMC Made) INFO

4. INSTALL NO. 3 HEATER TO REGISTER DUCT INFO

5. INSTALL DEFROSTER NOZZLE ASSEMBLY INFO

6. INSTALL UPPER INSTRUMENT PANEL SUB-ASSEMBLY INFO

7. CONNECT INSTRUMENT PANEL WIRE ASSEMBLY

(a) Check that the ignition switch is off.

(b) Check that the cable is disconnected from the negative (-) battery terminal.

CAUTION:

Wait at least 90 seconds after disconnecting the cable from the negative (-) battery terminal to disable the SRS system.

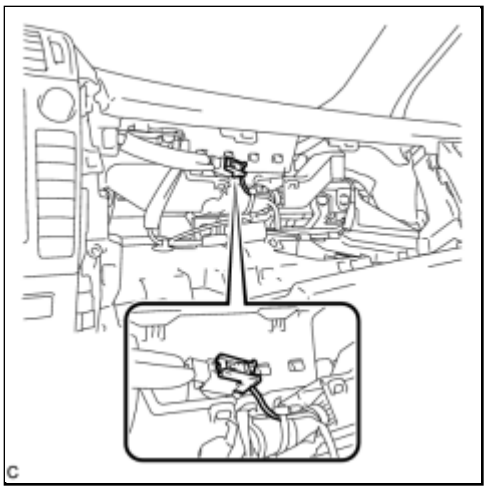

(c) Connect the connector.

NOTICE:

When connecting the airbag connector, take care not to damage the airbag wire harness.

8. CONNECT FRONT DOOR OPENING TRIM WEATHERSTRIP LH INFO

9. INSTALL LOWER INSTRUMENT PANEL FINISH PANEL ASSEMBLY INFO

10. CONNECT FRONT DOOR OPENING TRIM WEATHERSTRIP RH

HINT:

Use the same procedure for the RH side and LH side INFO .

11. INSTALL NO. 1 INSTRUMENT PANEL BOX DOOR SUB-ASSEMBLY INFO

12. INSTALL GLOVE COMPARTMENT DOOR ASSEMBLY INFO

13. INSTALL FRONT PILLAR GARNISH LH (w/ Curtain Shield Airbag) INFO

14. INSTALL FRONT PILLAR GARNISH LH (w/o Curtain Shield Airbag) INFO

15. INSTALL FRONT PILLAR GARNISH RH (w/ Curtain Shield Airbag) INFO

16. INSTALL FRONT PILLAR GARNISH RH (w/o Curtain Shield Airbag)

HINT:

Use the same procedure for the RH side and LH side INFO .

17. INSTALL COMBINATION METER ASSEMBLY INFO

18. INSTALL INSTRUMENT CLUSTER FINISH PANEL ASSEMBLY INFO

19. INSTALL CENTER INSTRUMENT PANEL REGISTER ASSEMBLY INFO

20. INSTALL INSTRUMENT PANEL FINISH PANEL END LH INFO

21. INSTALL INSTRUMENT PANEL FINISH PANEL END RH INFO

22. INSTALL LOWER INSTRUMENT PANEL FINISH PANEL LH INFO

23. INSTALL LOWER INSTRUMENT PANEL FINISH PANEL RH INFO

24. CONNECT CABLE TO NEGATIVE BATTERY TERMINAL

25. INSPECT SRS WARNING LIGHT

(a) Inspect the SRS warning light INFO .

Last Modified: 3-10-2010	6.4 K	**From:** 200901
Model Year: 2010	**Model:** Corolla	**Doc ID:** RM000001Q5H00JX
Title: SUPPLEMENTAL RESTRAINT SYSTEMS: FRONT SEAT CUSHION ASSEMBLY (w/ Occupant Classification ECU, Occupant Classification Sensor): COMPONENTS (2010 Corolla)		

COMPONENTS

ILLUSTRATION

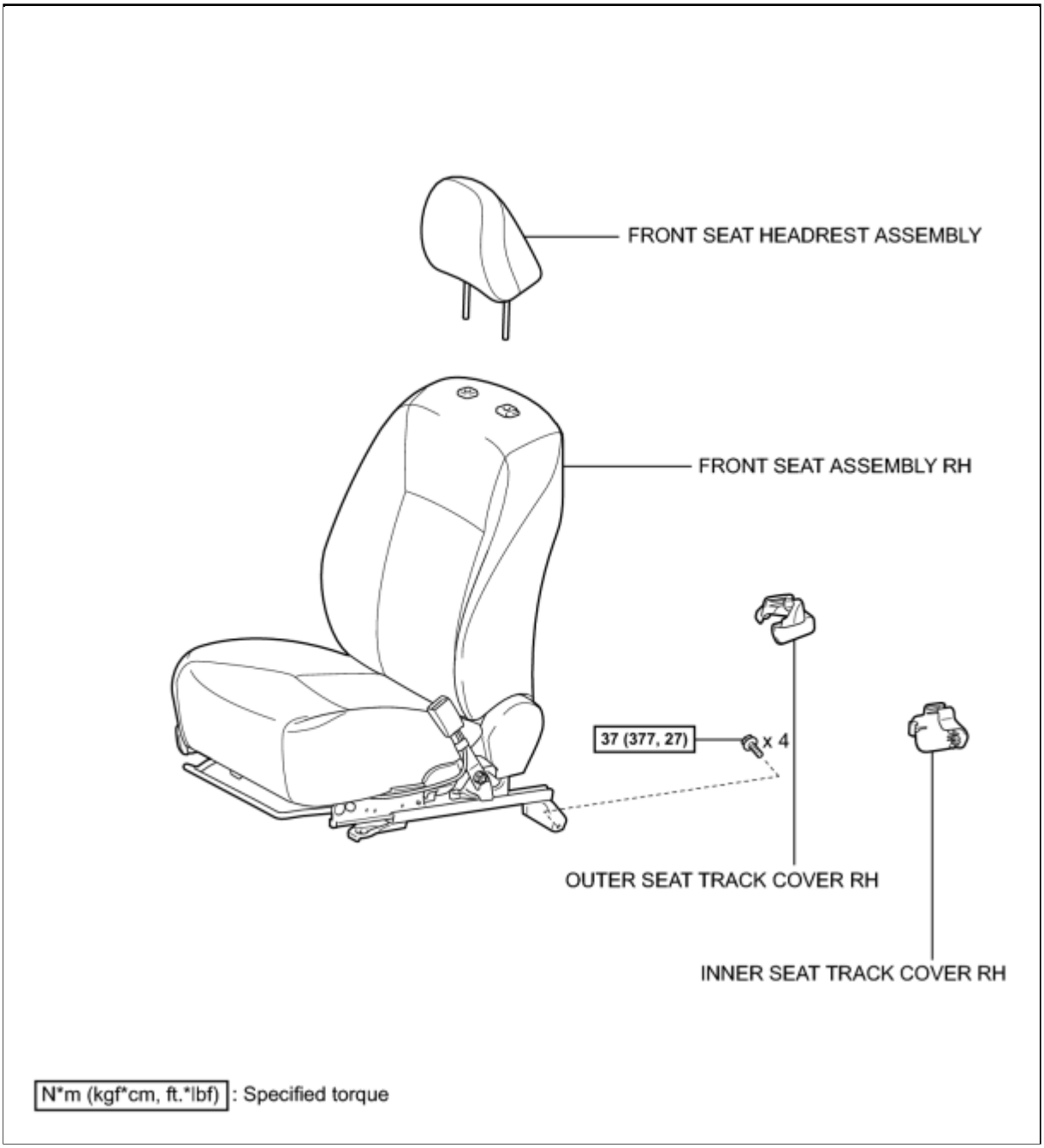

ILLUSTRATION

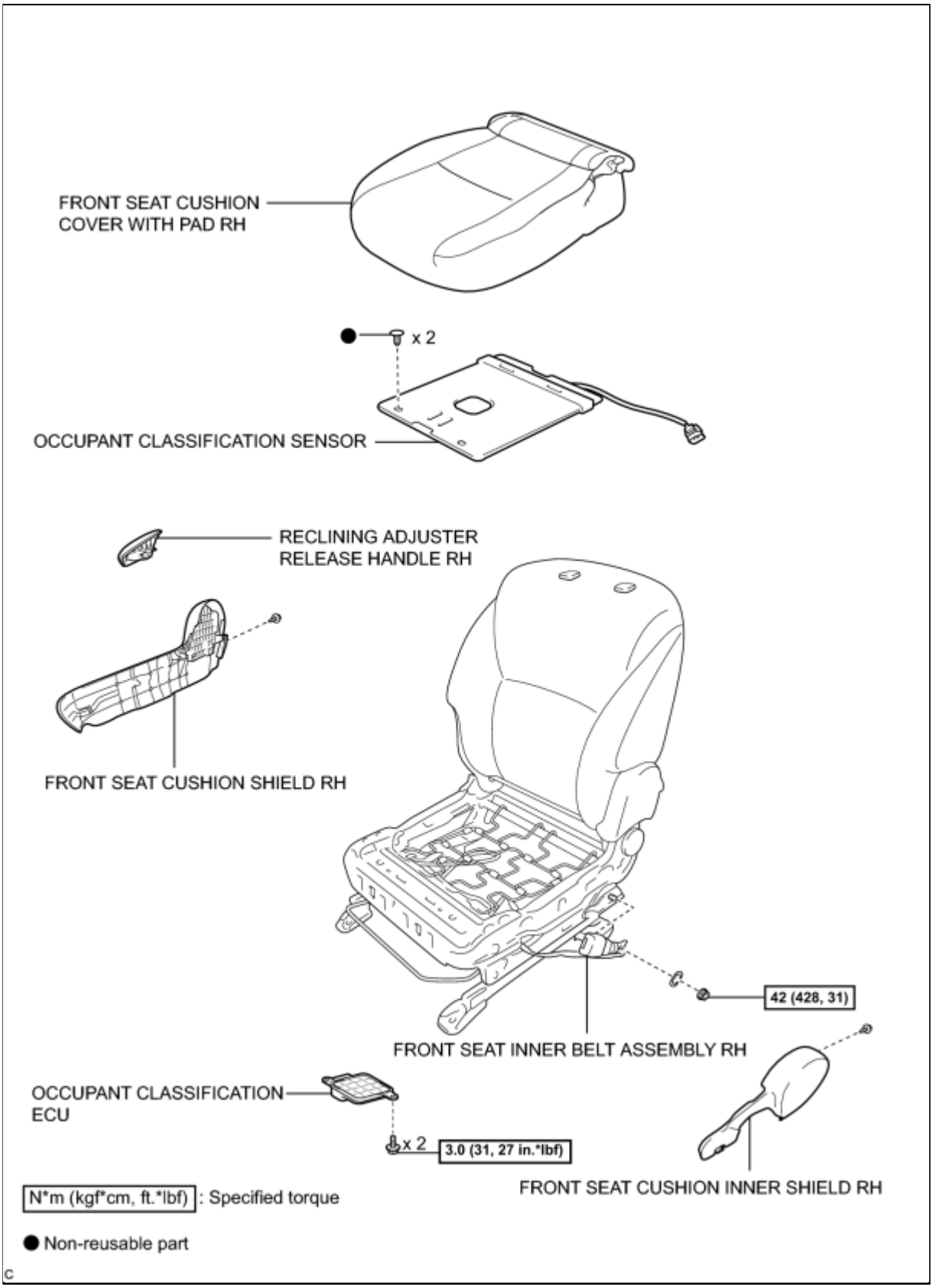
FRONT SEAT CUSHION COVER WITH PAD RH
x 2
OCCUPANT CLASSIFICATION SENSOR
RECLINING ADJUSTER RELEASE HANDLE RH
FRONT SEAT CUSHION SHIELD RH
42 (428, 31)
FRONT SEAT INNER BELT ASSEMBLY RH
OCCUPANT CLASSIFICATION ECU
x 2
3.0 (31, 27 in.*lbf)
FRONT SEAT CUSHION INNER SHIELD RH
N*m (kgf*cm, ft.*lbf) : Specified torque
● Non-reusable part

C

Last Modified: 3-10-2010	6.4 G	**From:** 200901
Model Year: 2010	**Model:** Corolla	**Doc ID:** RM0000013LT01AX
Title: SUPPLEMENTAL RESTRAINT SYSTEMS: FRONT SEAT CUSHION ASSEMBLY (w/ Occupant Classification ECU, Occupant Classification Sensor): ON-VEHICLE INSPECTION (2010 Corolla)		

ON-VEHICLE INSPECTION

1. INSPECT OCCUPANT CLASSIFICATION SENSOR (VEHICLE NOT INVOLVED IN COLLISION)

(a) Perform a diagnostic system check INFO .

2. INSPECT OCCUPANT CLASSIFICATION SENSOR (VEHICLE INVOLVED IN COLLISION AND AIRBAG HAS NOT DEPLOYED)

(a) Perform a diagnostic system check INFO .

(b) When an airbag has deployed as the result of a collision, be certain to replace the occupant classification sensor when it is in the damaged area (anywhere in need of repair). Furthermore, it is also necessary to replace the occupant classification sensor in an undamaged area that has registered a major collision, or which exhibits any of the following abnormalities:

- Cracks, dents or chips on the sensor housing.
- Cracks or other damage to the connector.
- Peeling off of the label or damage to the serial number.

CAUTION:

Be sure to follow the correct removal and installation of the occupant classification sensor.

3. INSPECT OCCUPANT CLASSIFICATION SENSOR (VEHICLE INVOLVED IN COLLISION AND AIRBAG HAS DEPLOYED)

(a) When an airbag has deployed as the result of a collision, be certain to replace the occupant classification sensor in the damaged area (anywhere in need of repair). Furthermore, it is also necessary to replace the occupant classification sensor in an undamaged area that have registered a major collision, or which exhibits any of the following abnormalities:

- Cracks, dents or chips on the sensor housing.
- Cracks or other damage to the connector.
- Peeling off of the label or damage to the serial number.

CAUTION:

Be sure to follow the correct removal and installation of the occupant classification sensor.

Last Modified: 3-10-2010	6.4 A	**From:** 200901
Model Year: 2010	**Model:** Corolla	**Doc ID:** RM000001Q5I00PX
Title: SUPPLEMENTAL RESTRAINT SYSTEMS: FRONT SEAT CUSHION ASSEMBLY (w/ Occupant Classification ECU, Occupant Classification Sensor): REMOVAL (2010 Corolla)		

REMOVAL

1. PRECAUTION

CAUTION:

Be sure to read Precaution thoroughly before servicing INFO **.**

NOTICE:

When replacing the occupant classification ECU, perform registration INFO **.**

2. DISCONNECT CABLE FROM NEGATIVE BATTERY TERMINAL

CAUTION:

Wait at least 90 seconds after disconnecting the cable from the negative (-) battery terminal to disable the SRS system.

3. REMOVE FRONT SEAT HEADREST ASSEMBLY

4. REMOVE OUTER SEAT TRACK COVER RH INFO

5. REMOVE INNER SEAT TRACK COVER RH INFO

6. REMOVE FRONT SEAT ASSEMBLY RH INFO

7. REMOVE RECLINING ADJUSTER RELEASE HANDLE RH INFO

8. REMOVE FRONT SEAT CUSHION SHIELD RH INFO

9. SEPARATE FRONT SEAT INNER BELT ASSEMBLY RH INFO

10. REMOVE FRONT SEAT CUSHION INNER SHIELD RH INFO

11. REMOVE FRONT SEAT CUSHION COVER WITH PAD RH INFO

12. REMOVE OCCUPANT CLASSIFICATION SENSOR

(a) Disconnect the connector.

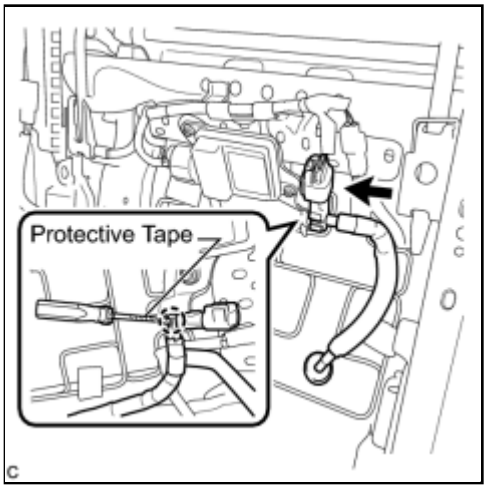

(b) Using a screwdriver with the tip wrapped with protective tape, disengage the claw and remove the connector and clamp as shown in the illustration.

NOTICE:

Do not kink the pressure hose.

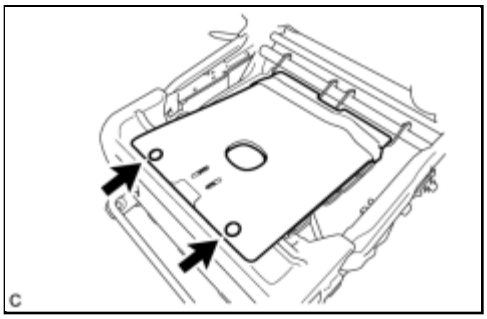

(c) Using a clip remover, disengage the 2 clips and remove the occupant classification sensor.

NOTICE:

When the occupant classification sensor is replaced, be sure to replace the occupant classification ECU as a set.

13. REMOVE OCCUPANT CLASSIFICATION ECU INFO

Last Modified: 3-10-2010	6.4 G	**From:** 200901
Model Year: 2010	**Model:** Corolla	**Doc ID:** RM000003HL7001X
Title: SUPPLEMENTAL RESTRAINT SYSTEMS: FRONT SEAT CUSHION ASSEMBLY (w/ Occupant Classification ECU, Occupant Classification Sensor): INSPECTION (2010 Corolla)		

INSPECTION

1. INSPECT OCCUPANT DETECTION SENSOR (SEPARATE TYPE FRONT SEAT CUSHION PAD)

Component without harness connected:
(Occupant Classification Sensor)



(a) Measure the resistance according to the value(s) in the table below.

Standard Resistance:

TESTER CONNECTION	CONDITION	SPECIFIED CONDITION
1 - 3	The passenger seat is occupied	Below 100 Ω
1 - 3	The passenger seat is not occupied	Below 1 MΩ

Last Modified: 3-10-2010	6.4 A	**From:** 200901
Model Year: 2010	**Model:** Corolla	**Doc ID:** RM000001Q5G00PX
Title: SUPPLEMENTAL RESTRAINT SYSTEMS: FRONT SEAT CUSHION ASSEMBLY (w/ Occupant Classification ECU, Occupant Classification Sensor): INSTALLATION (2010 Corolla)		

INSTALLATION

1. INSTALL OCCUPANT CLASSIFICATION ECU INFO

2. INSTALL OCCUPANT CLASSIFICATION SENSOR

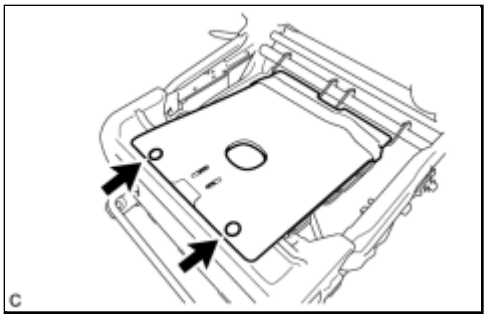

(a) Install the occupant classification sensor with the 2 new clips.

NOTICE:

- Do not reuse the clip.
- Securely install the clip.
- Do not reuse an occupant classification sensor which has been dropped.
- Make sure that there is no foreign matter between the occupant classification sensor and seat assembly.

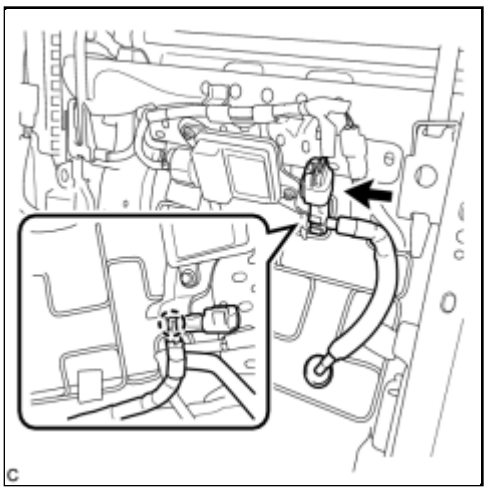

(b) Install the connector with the claw.

(c) Install the clamp and connect the connector.

CAUTION:

- Make sure the gel mat pressure hose is closer to the floor than the main harness.
- When setting the pressure hose, make sure the hose is not twisted. 1 full twist or more will damage the pressure hose.
- Make sure the radius of the circular path of the pressure hose is 20 mm (0.787 in.) or more.
- After connecting the connectors, make sure that the connectors are not strained or pulled apart.
- Make sure that the pressure hose is not pinched between other components.
- Do not kink the pressure hose.

3. INSTALL FRONT SEAT CUSHION COVER WITH PAD RH INFO

4. INSTALL FRONT SEAT CUSHION INNER SHIELD RH INFO

5. INSTALL FRONT SEAT INNER BELT ASSEMBLY RH INFO

6. INSTALL FRONT SEAT CUSHION SHIELD RH INFO

7. INSTALL RECLINING ADJUSTER RELEASE HANDLE RH INFO

8. INSTALL FRONT SEAT ASSEMBLY RH INFO

9. INSPECT FRONT SEAT SLIDE ADJUSTER LOCK INFO

10. INSTALL INNER SEAT TRACK COVER RH INFO

11. INSTALL OUTER SEAT TRACK COVER RH INFO

12. INSTALL FRONT SEAT HEADREST ASSEMBLY

13. CONNECT CABLE TO NEGATIVE BATTERY TERMINAL

14. PERFORM REGISTRATION

(a) If the occupant classification ECU has been replaced, perform registration INFO .

15. PERFORM ZERO POINT CALIBRATION AND SENSITIVITY CHECK

(a) If the occupant classification ECU has been replaced, perform zero point calibration and sensitivity check INFO .

16. INSPECT SRS WARNING LIGHT

(a) Inspect SRS warning light INFO .

Last Modified: 3-10-2010	6.4 N	**From:** 200901
Model Year: 2010	**Model:** Corolla	**Doc ID:** RM000000UX004UX
Title: SUPPLEMENTAL RESTRAINT SYSTEMS: FRONT SEAT SIDE AIRBAG ASSEMBLY: DISPOSAL (2010 Corolla)		

DISPOSAL

CAUTION:

Before performing pre-disposal deployment of any SRS component, review and closely follow all applicable environmental and hazardous material regulations. Pre-disposal deployment may be considered hazardous material treatment.

1. PRECAUTION

HINT:

When scrapping a vehicle equipped with an SRS or disposing of the front seat side airbag assembly, be sure to deploy the airbag first in accordance with the procedure described below. If any abnormality occurs with the airbag deployment, contact the Service Dept. of TOYOTA MOTOR SALES, U.S.A., INC.

CAUTION:

- An airbag or pretensioner may be activated by static electricity. To prevent this, be sure to touch a metal surface with bare hands to discharge static electricity before performing this procedure.
- Never dispose of a front seat side airbag assembly with an undeployed airbag.
- The airbag produces an exploding sound when it is deployed, so perform the operation outdoors and where it will not create a nuisance to nearby residents.
- When deploying the airbag, always use the specified SST (SRS Airbag Deployment Tool). Perform the operation in a place away from electrical noise.
- When deploying the airbag, perform the operation at least 10 m (33 ft.) away from the front seat side airbag assembly.
- The front seat side airbag assembly becomes extremely hot when the airbag is deployed, so do not touch it for at least 30 minutes after deployment.
- Use gloves and safety glasses when handling a front seat side airbag assembly with a deployed airbag.
- Do not apply water, etc. to a front seat side airbag assembly with a deployed airbag.
- Always wash your hands with water after completing the operation.

2. DISPOSE OF FRONT SEAT SIDE AIRBAG ASSEMBLY (WHEN INSTALLED IN VEHICLE)

HINT:

Prepare a battery as the power source to deploy the airbag.

(a) Check the function of SST INFO .

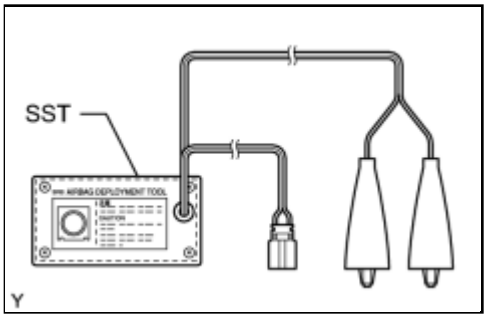

(b) Refer to Precaution INFO .

(c) Disconnect the cable from the negative (-) battery terminal.

CAUTION:

Wait at least 90 seconds after disconnecting the cable from the negative (-) battery terminal to disable the SRS system.

(d) Install SST.

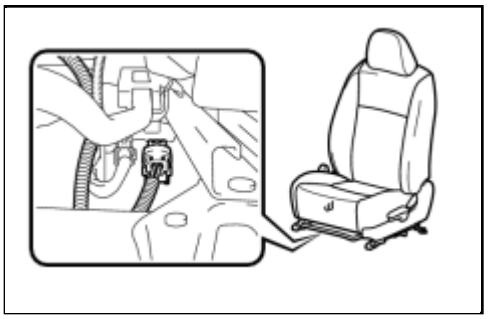

(1) Slide the front seat to the back of the vehicle.

(2) Disconnect the connector (yellow colored one) from the front seat side airbag assembly.

NOTICE:

When disconnecting the airbag connector, take care not to damage the airbag wire harness.

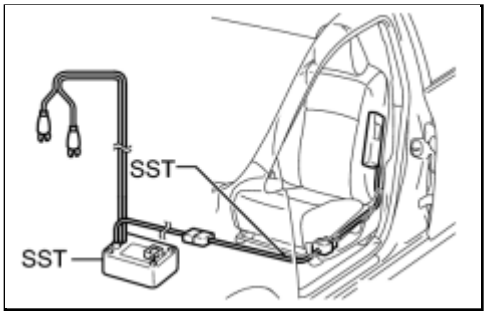

(3) Connect the SST connector to the front seat side airbag assembly connector.

SST: 09082-00700

SST: 09082-00820

NOTICE:

To avoid damaging the SST connector and wire harness, do not lock the secondary lock of the twin lock.

(4) Move SST at least 10 m (33 ft.) away from the vehicle front side window.

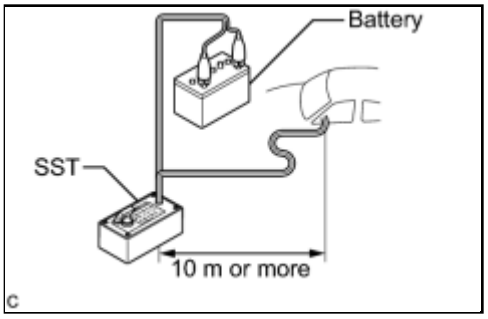

(5) Maintaining sufficient clearance for the SST wire harness in the front side window, close all doors and windows of the vehicle.

NOTICE:

Take care not to damage the SST wire harness.

(6) Connect the red clip of SST to the positive (+) battery terminal and the black clip of SST to the negative (-) battery terminal.

(e) Deploy the airbag.

(1) Check that no one is inside the vehicle or within a 10 m (33 ft.) radius of the vehicle.

(2) Press the SST activation switch and deploy the airbag.

CAUTION:

- When deploying the airbag, make sure that no one is near the vehicle.
- The front seat side airbag assembly becomes extremely hot when the airbag is deployed, so do not touch it for at least 30 minutes after deployment.
- Use gloves and safety glasses when handling a front seat side airbag assembly with a deployed airbag.
- Do not apply water, etc. to a front seat side airbag assembly with a deployed airbag.
- Always wash your hands with water after completing the operation.

HINT:

The airbag is deployed as the LED of the SST activation switch comes on.

3. DISPOSE OF FRONT SEAT SIDE AIRBAG ASSEMBLY (WHEN NOT INSTALLED IN VEHICLE)

NOTICE:

- When disposing of the front seat side airbag assembly, never use the customer's vehicle to deploy the airbag.
- Be sure to follow the following procedure when deploying the airbag.

HINT:

Prepare a battery as the power source to deploy the airbag.

(a) Check the function of SST INFO .

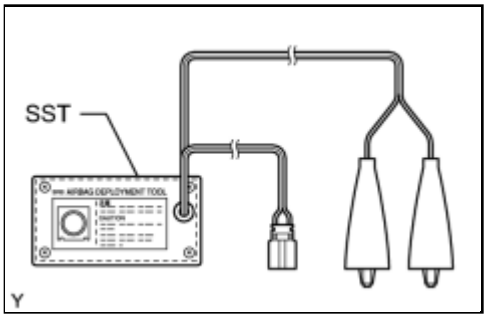

(b) Remove the front seat side airbag assembly.

(1) Remove the front seat assembly INFO for manual seat, INFO for power seat).

(2) Remove the 2 nuts and the front seat side airbag assembly from the seatback assembly INFO for manual seat, INFO for power seat).

CAUTION:

- When removing the front seat side airbag assembly, before the work is started, leave the vehicle at least 90 seconds after turning the ignition switch off and disconnecting the cable from the negative (-) battery terminal.
- When storing the front seat side airbag assembly, keep the airbag deployment side facing upward.

(c) Using a service-purpose wire harness for the vehicle, tie down the front seat side airbag assembly to the tire.

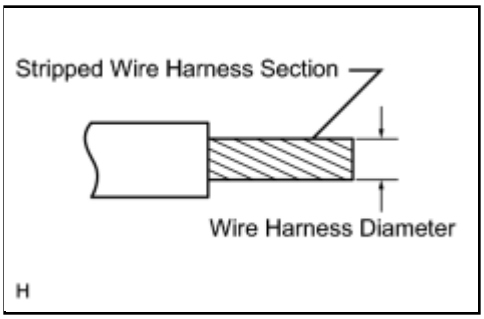

Wire harness:
Stripped wire harness section
1.25 mm^2 (0.0019 $in.^2$) or more

CAUTION:

If the wire harness is too thin or an alternative object is used to tie down the front seat side airbag assembly, it may be snapped by the shock when the airbag is deployed. Always use a wire harness for vehicle use with an area of at least 1.25 mm^2 (0.0019 $in.^2$).

HINT:

To calculate the area of the stripped wire harness section:

Area = 3.14 x (Diameter)^2 divided by 4

(1) Install the 2 nuts to the front seat side airbag assembly.

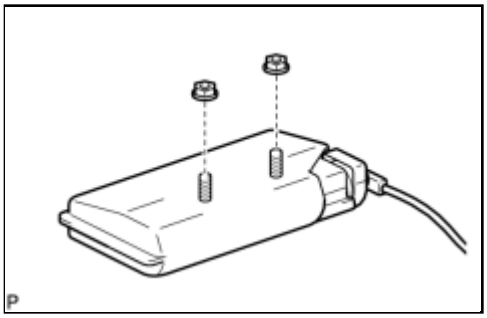

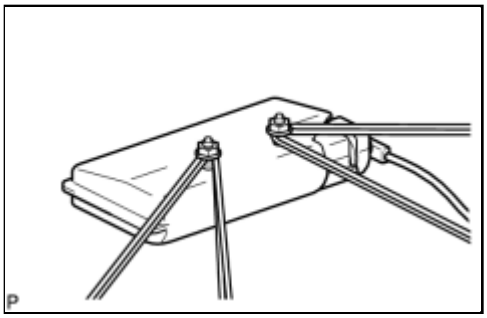

(2) Wind the wire harness around the stud bolts of the front seat side airbag assembly as shown in the illustration.

(3) Position the front seat side airbag assembly inside the tire.

Tire size:
Must exceed the following dimensions
Width:
185 mm (7.28 in.)
Inner diameter:
360 mm (14.2 in.)

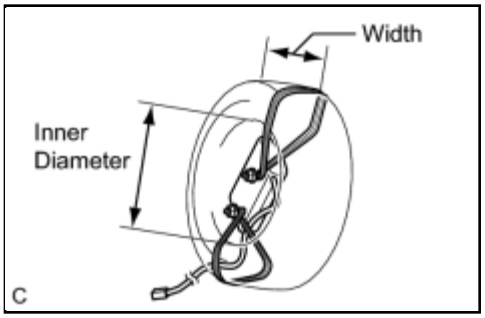

CAUTION:

- Make sure that the wire harness is tight. If there is slack in the wire harness, the front seat side airbag assembly may become loose due to the shock when the airbag is deployed.
- Always tie down the front seat side airbag assembly with the airbag deployment direction facing inside the tire.

NOTICE:

The tire will be marked by the airbag deployment, so use an extra tire.

(d) Install SST.

(1) Connect the SST connector to the front seat side airbag assembly connector.

SST: 09082-00820

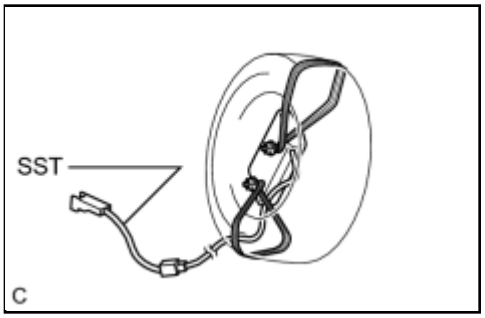

(e) Place the tires.

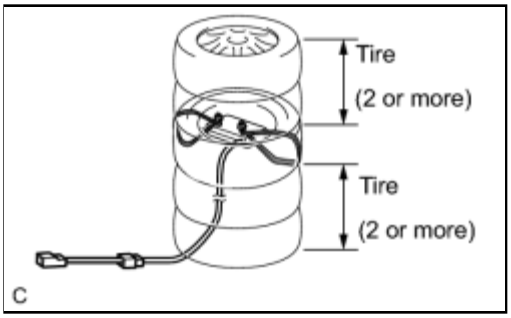

(1) Place at least 2 tires under the tire tied to the front seat side airbag assembly.

(2) Place at least 2 tires onto the tire tied to the front seat side airbag assembly. The top tire should have the disc wheel installed.

NOTICE:

Do not place the SST connector under the tire because it could be damaged.

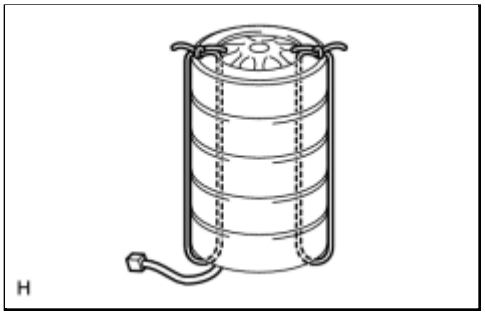

(3) Tie the tires together with the 2 wire harnesses.

CAUTION:

Make sure that the wire harnesses are tight. Looseness in the wire harnesses results in the tires coming free due to the shock when the airbag is deployed.

(f) Install SST.

(1) Connect the SST connector.

SST: 09082-00700

NOTICE:

To avoid damaging the SST connector and wire harness, do not lock the secondary lock of the twin lock. Also, secure some slack for the SST wire harness inside the tire.

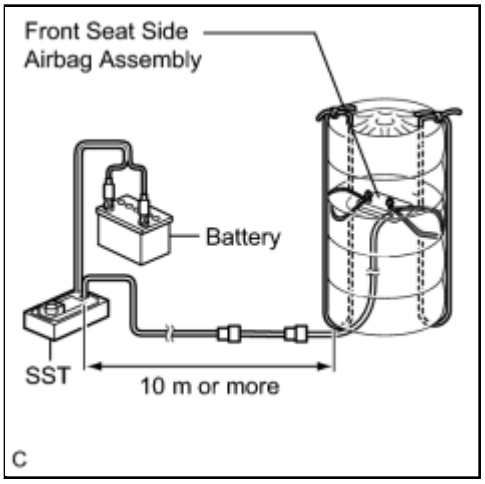

(2) Move SST at least 10 m (33 ft.) away from the airbag tied down to the tire.

(g) Deploy the airbag.

(1) Connect the red clip of SST to the positive (+) battery terminal and the black clip of SST to the negative (-) battery terminal.

(2) Check that no one is within a 10 m (33 ft.) radius of the tire which the front seat side airbag assembly is tied to.

(3) Press the SST activation switch and deploy the airbag.

CAUTION:

When deploying the airbag, make sure that no one is near the tire.

HINT:

The airbag is deployed as the LED of the SST activation switch comes on.

(h) Dispose of the front seat side airbag assembly.

CAUTION:

- The front seat side airbag assembly becomes extremely hot when the airbag is deployed, so do not touch it for at least 30 minutes after deployment.
- Use gloves and safety glasses when handling a front seat side airbag assembly with a deployed airbag.
- Do not apply water, etc. to a front seat side airbag assembly with a deployed airbag.
- Always wash your hands with water after completing the operation.

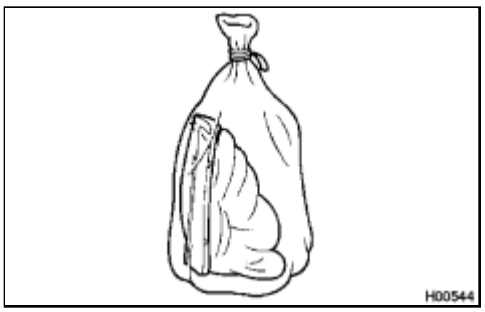

(1) Remove the front seat side airbag assembly from the tire.

(2) Place the front seat side airbag assembly in a plastic bag, tie it tightly, and dispose of it as other general part disposal.

Last Modified: 3-10-2010	6.4 G	**From:** 200901
Model Year: 2010	**Model:** Corolla	**Doc ID:** RM000000VPS04KX
Title: SUPPLEMENTAL RESTRAINT SYSTEMS: FRONT SEAT SIDE AIRBAG ASSEMBLY: ON-VEHICLE INSPECTION (2010 Corolla)		

ON-VEHICLE INSPECTION

1. INSPECT FRONT SEAT SIDE AIRBAG ASSEMBLY (VEHICLE NOT INVOLVED IN COLLISION)

(a) Perform a diagnostic system check INFO .

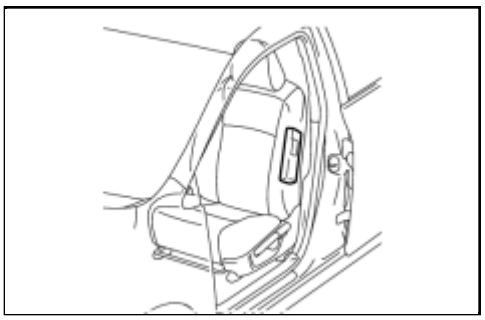

(b) With the front seat side airbag assembly installed on the vehicle, perform a visual check. If there are any following defects, replace the front seat assembly with a new one:

Cuts, minute cracks or marked discoloration on the front seatback assembly around the front seat side airbag assembly.

2. INSPECT FRONT SEAT SIDE AIRBAG ASSEMBLY (VEHICLE INVOLVED IN COLLISION AND AIRBAG HAS NOT DEPLOYED)

(a) Perform a diagnostic system check INFO .

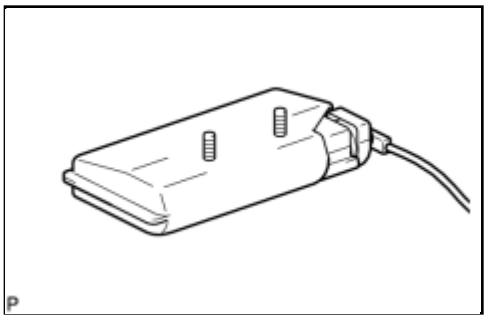

(b) With the front seat side airbag assembly removed from the vehicle, perform a visual check. If there are any following defects, replace the front seat assembly with a new one:

- There are scratches, broken or frayed threads on the surface of the front seat side airbag assembly base fabric.
- A front seat side airbag assembly that has been dropped.
- A front seat side airbag assembly with a deformed installation part.
- Cracks or other damage to the wire harness or connector.

CAUTION:

Be sure to follow the correct removal and installation procedures of the front seat assembly.

Last Modified: 3-10-2010	6.4 K	**From:** 200901
Model Year: 2010	**Model:** Corolla	**Doc ID:** RM0000011JF00ZX
Title: SUPPLEMENTAL RESTRAINT SYSTEMS: OCCUPANT CLASSIFICATION ECU: COMPONENTS (2010 Corolla)		

COMPONENTS

ILLUSTRATION

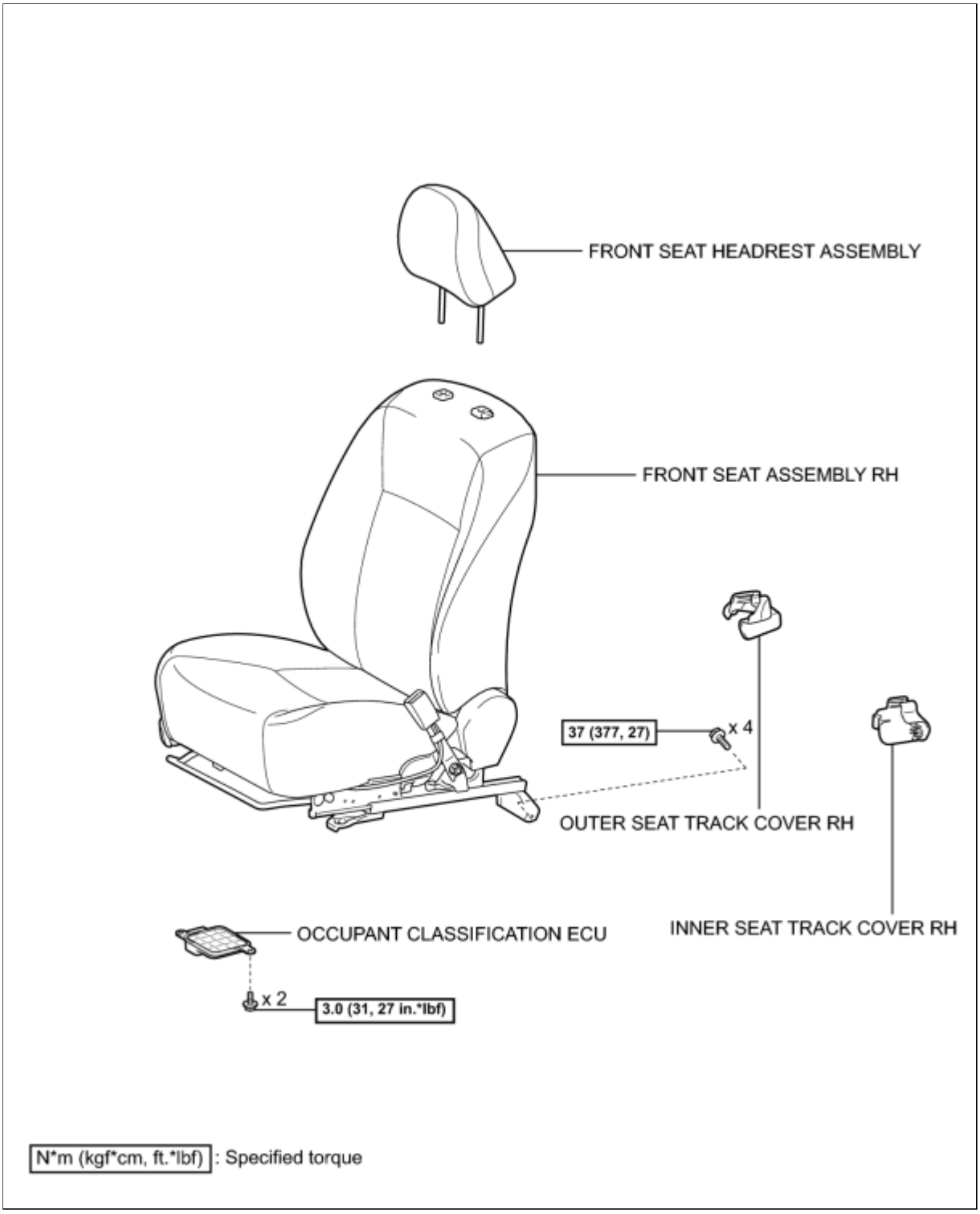

N*m (kgf*cm, ft.*lbf) : Specified torque

Last Modified: 3-10-2010	6.4 G	**From:** 200901
Model Year: 2010	**Model:** Corolla	**Doc ID:** RM0000011JH014X
Title: SUPPLEMENTAL RESTRAINT SYSTEMS: OCCUPANT CLASSIFICATION ECU: ON-VEHICLE INSPECTION (2010 Corolla)		

ON-VEHICLE INSPECTION

1. INSPECT OCCUPANT CLASSIFICATION ECU (VEHICLE NOT INVOLVED IN COLLISION)

(a) Perform a diagnostic system check INFO .

2. INSPECT OCCUPANT CLASSIFICATION ECU (VEHICLE INVOLVED IN COLLISION)

(a) Perform a diagnostic system check INFO .

(b) Even if an airbag was not deployed, check if there is any damage to the occupant classification ECU. If there are any following defects, replace the occupant classification ECU with a new one:

- Cracks, dents or chips on the case.
- Cracks or other damage to the connector.

CAUTION:

Be sure to follow the correct removal and installation procedures of the occupant classification ECU.

Last Modified: 3-10-2010	6.4 A	**From:** 200901
Model Year: 2010	**Model:** Corolla	**Doc ID:** RM0000011JG016X
Title: SUPPLEMENTAL RESTRAINT SYSTEMS: OCCUPANT CLASSIFICATION ECU: REMOVAL (2010 Corolla)		

REMOVAL

1. PRECAUTION

CAUTION:

Be sure to read Precaution thoroughly before servicing INFO .

NOTICE:

When replacing the occupant classification ECU, perform registration INFO .

2. REMOVE FRONT SEAT ASSEMBLY RH

(a) Remove the front seat assembly RH.

HINT:

Use the same procedure for the RH side and the LH side INFO .

3. REMOVE OCCUPANT CLASSIFICATION ECU

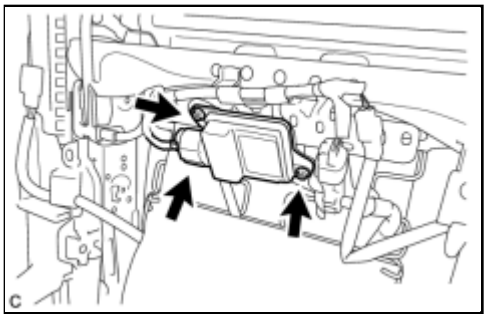

(a) Disconnect the connector from the occupant classification ECU.

(b) Remove the 2 screws and occupant classification ECU.

Last Modified: 3-10-2010	6.4 A	**From:** 200901
Model Year: 2010	**Model:** Corolla	**Doc ID:** RM0000011JE016X
Title: SUPPLEMENTAL RESTRAINT SYSTEMS: OCCUPANT CLASSIFICATION ECU: INSTALLATION (2010 Corolla)		

INSTALLATION

1. INSTALL OCCUPANT CLASSIFICATION ECU

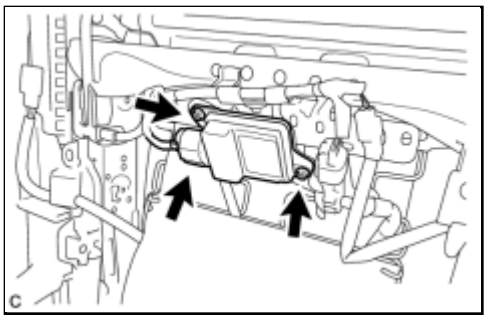

(a) Install the occupant classification ECU with the 2 claws.

Torque: 3.0 N·m (31 kgf·cm, 27in·lbf)

NOTICE:

- If the occupant classification ECU has been dropped, or there are any cracks, dents or other defects in the case or connector, replace the occupant classification ECU with a new one.
- When installing the occupant classification ECU, be careful that the SRS wiring does not interfere with other parts and that it is not pinched between other parts.
- Do not allow oil or grease to adhere to the occupant classification ECU during installation.

(b) Connect the connector.

2. INSTALL FRONT SEAT ASSEMBLY RH

(a) Install the front seat assembly RH.

HINT:

Use the same procedure for the RH side and LH side INFO .

3. PERFORM REGISTRATION

(a) If the occupant classification ECU has been replaced, perform registration INFO .

4. ZERO POINT CALIBRATION AND SENSITIVITY CHECK

(a) If the occupant classification ECU has been replaced, perform zero point calibration and sensitivity check INFO .

Last Modified: 3-10-2010	6.4 L	**From:** 200901
Model Year: 2010	**Model:** Corolla	**Doc ID:** RM0000010V0041X
Title: SUPPLEMENTAL RESTRAINT SYSTEMS: OCCUPANT CLASSIFICATION SYSTEM: PRECAUTION (2010 Corolla)		

PRECAUTION

NOTICE:

Do not use seat accessories (such as cushions or covers) that cover the front seats. Also, do not modify or replace the upholstery of the front seat. Doing so may prevent the front passenger airbag system from activating correctly, disable the system or cause the front passenger airbag to inflate accidentally, and result in death or serious injury.

1. INSPECTION PROCEDURE FOR VEHICLE INVOLVED IN ACCIDENT

(a) Perform the zero point calibration and sensitivity check if any of the following conditions are met:

- The occupant classification ECU is replaced.
- The passenger airbag ON/OFF indicator indicates OFF when the front passenger seat is not occupied.
- The vehicle is brought to the workshop for repair after an accident or a collision.

2. EXPRESSIONS OF IGNITION SWITCH

(a) The type of ignition switch used on this model differs according to the specifications of the vehicle. The expressions listed in the table below are used in this section.

EXPRESSION	SWITCH TYPE	
	IGNITION SWITCH (POSITION)	ENGINE SWITCH (CONDITION)
Ignition Switch off	LOCK	Off
Ignition Switch ON	ON	On (IG)
Ignition Switch ACC	ACC	On (ACC)
Engine Start	START	Start

Last Modified: 3-10-2010	6.4 R	**From:** 200901
Model Year: 2010	**Model:** Corolla	**Doc ID:** RM000001OQK00MX
Title: SUPPLEMENTAL RESTRAINT SYSTEMS: OCCUPANT CLASSIFICATION SYSTEM: PARTS LOCATION (2010 Corolla)		

PARTS LOCATION

ILLUSTRATION

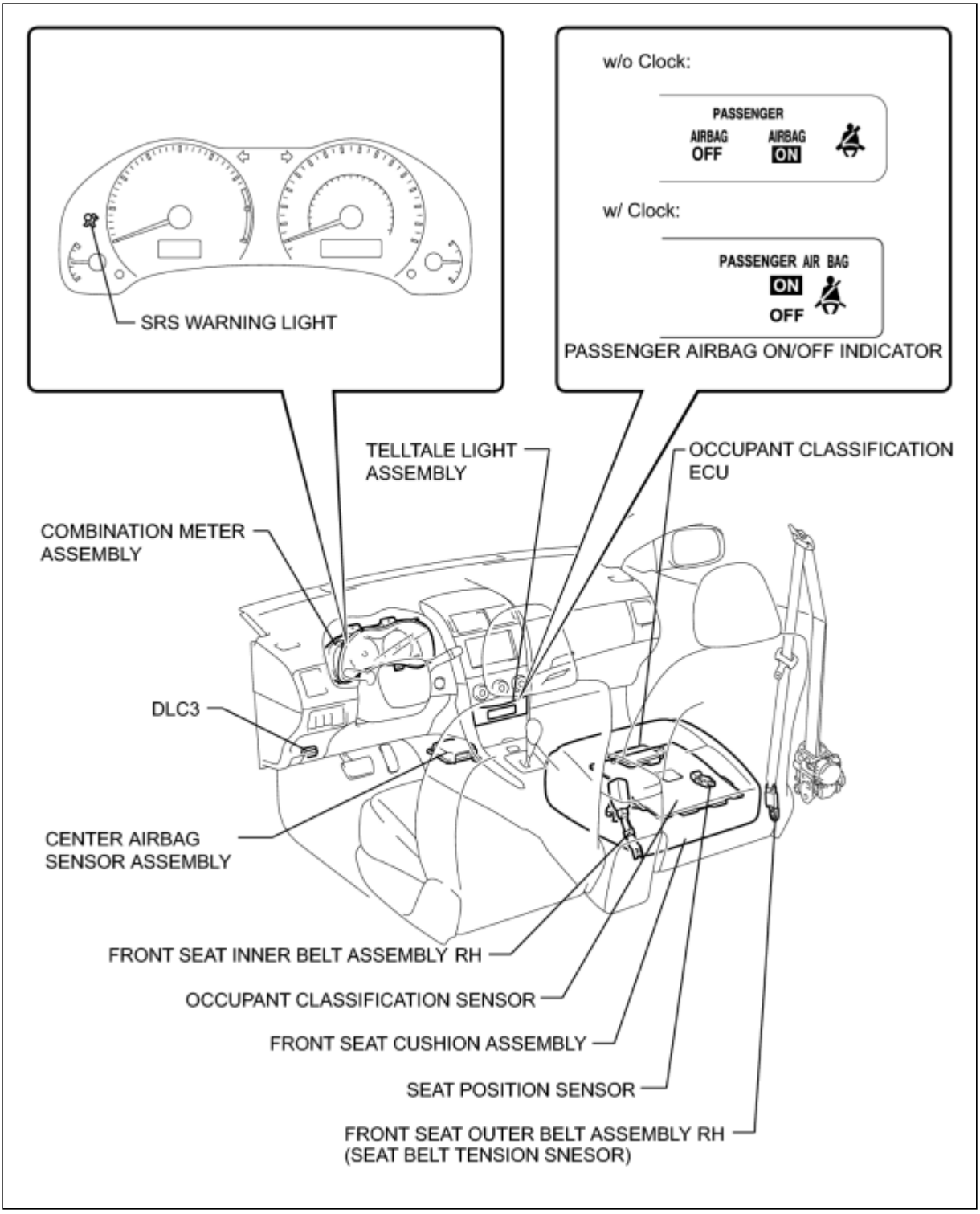
SRS WARNING LIGHT
w/o Clock:
PASSENGER
AIRBAG OFF
AIRBAG ON
w/ Clock:
PASSENGER AIR BAG
ON
OFF
PASSENGER AIRBAG ON/OFF INDICATOR
TELLTALE LIGHT ASSEMBLY
OCCUPANT CLASSIFICATION ECU
COMBINATION METER ASSEMBLY
DLC3
CENTER AIRBAG SENSOR ASSEMBLY
FRONT SEAT INNER BELT ASSEMBLY RH
OCCUPANT CLASSIFICATION SENSOR
FRONT SEAT CUSHION ASSEMBLY
SEAT POSITION SENSOR
FRONT SEAT OUTER BELT ASSEMBLY RH
(SEAT BELT TENSION SNESOR)

Last Modified: 3-10-2010	6.4 U	**From:** 200901
Model Year: 2010	**Model:** Corolla	**Doc ID:** RM000001OQP01DX
Title: SUPPLEMENTAL RESTRAINT SYSTEMS: OCCUPANT CLASSIFICATION SYSTEM: SYSTEM DIAGRAM (2010 Corolla)		

SYSTEM DIAGRAM

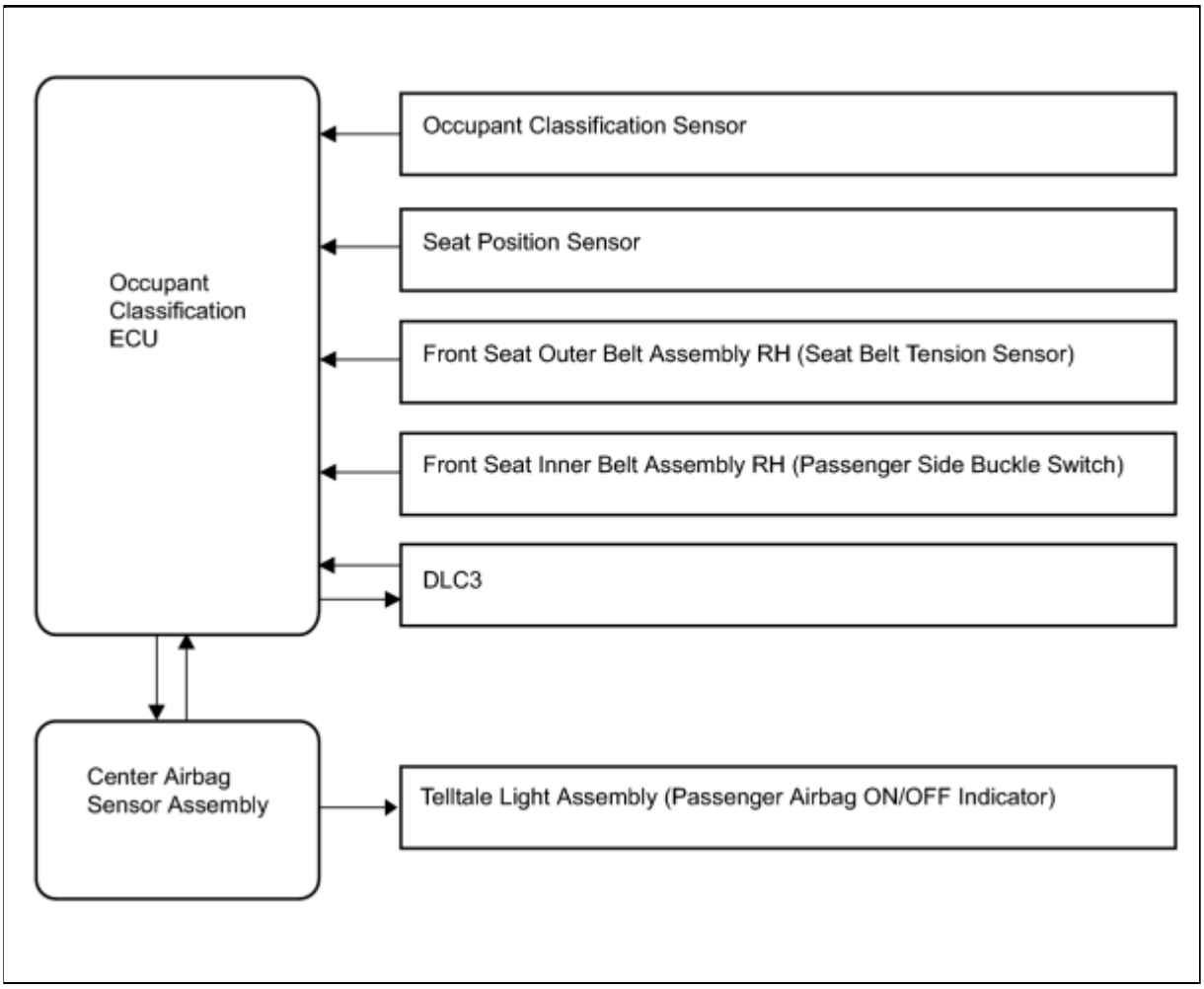

Last Modified: 3-10-2010	6.4 D	**From:** 200901
Model Year: 2010	**Model:** Corolla	**Doc ID:** RM0000010V1042X
Title: SUPPLEMENTAL RESTRAINT SYSTEMS: OCCUPANT CLASSIFICATION SYSTEM: HOW TO PROCEED WITH TROUBLESHOOTING (2010 Corolla)		

HOW TO PROCEED WITH TROUBLESHOOTING

HINT:

***: Use the Techstream.**

1.	**VEHICLE BROUGHT TO WORKSHOP**

NEXT

2.	**CUSTOMER PROBLEM ANALYSIS**

(a) Confirm problem symptoms INFO .

NEXT

3.	**PASSENGER AIRBAG ON/OFF INDICATOR CHECK**

(a) Proceed to Diagnosis System INFO .

NEXT

4.	**DTC CHECK (Present and Past DTCs)***

(a) Proceed to DTC Check / Clear INFO .

Result:

RESULT	PROCEED TO
DTC is output.	A
DTC is not output.	B

B ▶ INFO **GO TO PROBLEM SYMPTOMS TABLE**

A ▼

5.	**DIAGNOSTIC TROUBLE CODE CHART**

(a) Proceed to Diagnostic Trouble Code Chart INFO .

NEXT ▼

6.	**CIRCUIT INSPECTION***

NEXT ▼

7.	**REPAIR**

NEXT ▼

8.	CLEAR DTC (Present and Past DTCs)*

(a) Proceed to DTC Check / Clear INFO .

NEXT

9.	DTC CHECK (Present and Past DTCs)*

(a) Proceed to DTC Check / Clear INFO .

Result:

RESULT	PROCEED TO
DTC is not output.	A
DTC is output.	B

B **INFO** **GO TO DIAGNOSTIC TROUBLE CODE CHART**

A

10.	SYMPTOM SIMULATION

(a) Check the passenger airbag ON/OFF indicator condition.

Result:

RESULT	PROCEED TO
Passenger airbag ON/OFF indicator operates normally.	A
Passenger airbag ON/OFF indicator ("OFF") and SRS warning light come on.	B

B **INFO** **GO TO DIAGNOSTIC TROUBLE CODE CHART**

A

11.	CONFIRMATION TEST

NEXT END

Last Modified: 3-10-2010	6.4 D	**From:** 200901
Model Year: 2010	**Model:** Corolla	**Doc ID:** RM000001OQO01CX
Title: SUPPLEMENTAL RESTRAINT SYSTEMS: OCCUPANT CLASSIFICATION SYSTEM: SYSTEM DESCRIPTION (2010 Corolla)		

SYSTEM DESCRIPTION

1. GENERAL DESCRIPTION

(a) In the occupant classification system, the occupant classification ECU calculates the weight of the front passenger based on a signal from the occupant classification sensor. This system judges the occupant to be a child, and disables the front passenger airbag and front seat side airbag RH.

(b) This system is mainly composed of the occupant classification sensor that detects the load on the front passenger seat. The occupant classification ECU controls the system, and the passenger airbag ON/OFF indicator indicates the ON/OFF condition of the front passenger airbag and front seat side airbag RH.

2. OCCUPANT CLASSIFICATION SENSOR

(a) The occupant classification sensor consists of the gel mat and the pressure sensor.

When weight is applied to the gel mat, the pressure applied through the silicone to the pressure sensor changes. The pressure sensor converts these changes into voltages and transmits them to the occupant classification ECU.

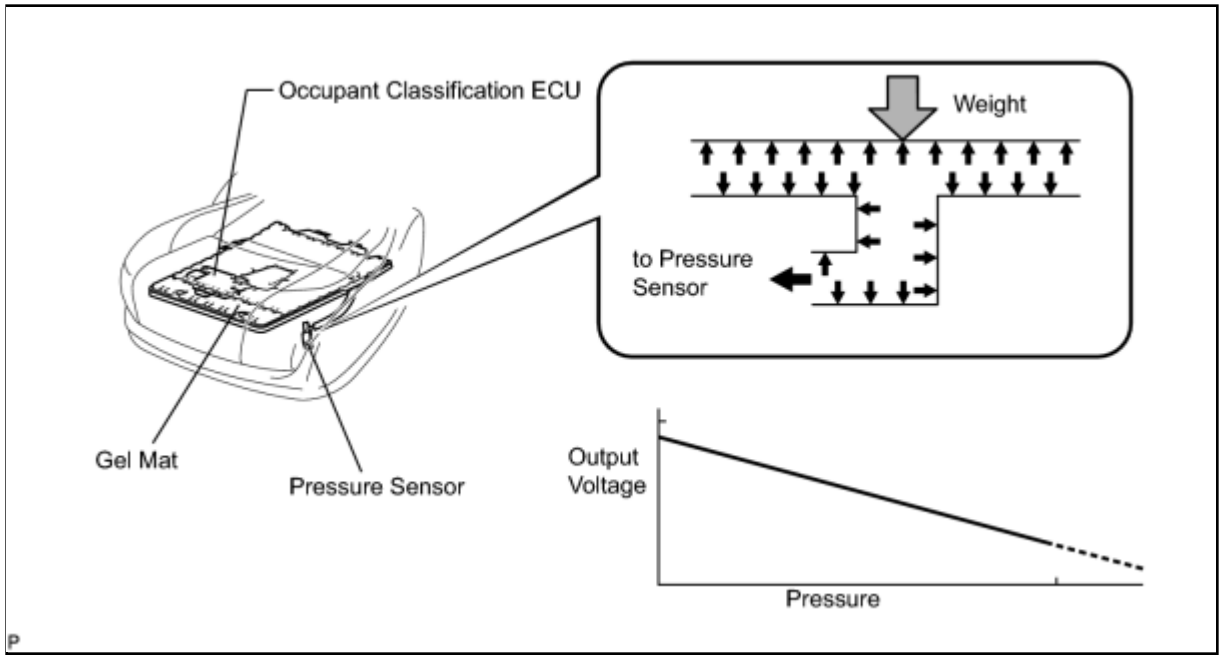

(b) The occupant classification sensor is installed between the seat cushion frame and seat cushion pad. The pressure sensor is installed on the seat frame.

(c) The pressure sensor detects the pressure applied to the front passenger seat as a seated passenger. The occupant classification ECU determines whether the front passenger airbag and front seat side airbag RH are deployed based on signals from the pressure sensor.

3. SEAT BELT TENSION SENSOR

(a) The seat belt tension sensor is installed on the front seat outer belt to detect a CRS (Child Restraint System).

Last Modified: 3-10-2010	6.4 M	**From:** 200901
Model Year: 2010	**Model:** Corolla	**Doc ID:** RM000001QX401DX
Title: SUPPLEMENTAL RESTRAINT SYSTEMS: OCCUPANT CLASSIFICATION SYSTEM: REGISTRATION (2010 Corolla)		

REGISTRATION

1. REGISTRATION

NOTICE:

- If any DTCs related to the occupant classification ECU are output, troubleshoot those DTCs by referring to Diagnostic Trouble Code Chart.
- When ECU data saving or loading operations cannot be performed, replace the front seat cushion assembly (with occupant classification ECU and occupant classification sensor).

HINT:

- When the occupant classification ECU is replaced, the previous ECU data must be saved in the Techstream and loaded into the new ECU by following the procedure below.
- Until the data from the previous ECU are loaded into the new occupant classification ECU, these data are not cleared even when the Techstream is turned off.
- ECU EXCHANGE PROCEDURE (Before Exchange) describes the procedure to save the data in the Techstream from the occupant classification ECU installed on the vehicle. ECU EXCHANGE PROCEDURE (After Exchange) describes the procedure to load the data from the previous ECU, stored in the Techstream, into the new ECU.

(a) Connect the Techstream to the DLC3.

(b) Turn the ignition switch to ON.

(c) Store the occupant classification ECU data in the Techstream by following the prompts on the Techstream screen.

HINT:

If the ECU data cannot be stored in the Techstream, replace the front seat cushion assembly (with occupant classification ECU and occupant classification sensor).

(d) Turn the ignition switch to ON.

(e) Disconnect the cable from the negative (-) battery terminal, and wait for at least 90 seconds.

(f) Replace the occupant classification ECU INFO .

(g) Connect the cable to the negative (-) battery terminal.

(h) Turn the ignition switch to ON.

(i) Load the data from the previous ECU stored in the Techstream into the newly installed ECU by following the prompts on the Techstream screen.

(j) Turn the ignition switch off.

(k) Turn the ignition switch to ON.

(l) Clear the DTCs stored in the memory INFO .

HINT:

If the DTCs are not cleared at this time, past DTCs will remain.

Last Modified: 3-10-2010	6.4 D	**From:** 200901
Model Year: 2010	**Model:** Corolla	**Doc ID:** RM0000010VN041X
Title: SUPPLEMENTAL RESTRAINT SYSTEMS: OCCUPANT CLASSIFICATION SYSTEM: INITIALIZATION (2010 Corolla)		

INITIALIZATION

NOTICE:

Make sure that the front passenger seat is not occupied before performing the operation.

HINT:

Perform the zero point calibration if any of the following conditions is met:

- The occupant classification ECU is replaced.
- The passenger airbag ON/OFF indicator indicates OFF when the front passenger seat is not occupied.
- The vehicle is brought to the workshop for repair after an accident or a collision.

1. ZERO POINT CALIBRATION

(a) Zero point calibration procedures

(1) Check that all of the following conditions are met:

- The vehicle is parked on a flat surface.
- No objects are placed on the front passenger seat.
- The front passenger seat belt buckle switch is OFF.

(2) Adjust the seat position according to the table below.

ADJUSTMENT ITEM	POSITION
Slide Direction	Rearmost position
Reclining Angle	Upright position
Headrest Height	Lowest position
Lifter Height	Lowest position

(3) Connect the Techstream to the DLC3.

(4) Turn the ignition switch to ON.

(5) Enter the following menus: Body Electrical / Occupant Detection / Utility / Zero Point Calibration.

(6) Perform the zero point calibration by following the prompts on the Techstream screen.

HINT:

- Refer to the Techstream operator's manual for further details.
- If the zero point calibration is performed when the calibration conditions are not satisfied, DTC B1797 is output.
- If the zero point calibration has failed, DTC B1797 is output.
- If After Exchange is selected before the previous ECU data are stored in the Techstream, the display screen returns to CONDITION SELECT ECU: Occupant Detect.

ITEM	PROCEDURE
DTC	Perform DTC check and repair
Write error	Replace front seat cushion assembly (with occupant classification ECU and occupant classification sensor)
Temperature	Check value of THERMISTOR TEMP in ECU DATA LIST
Pressure	Check value of FILTERED PRESS in ECU DATA LIST
Crash counter	-

2. SENSITIVITY CHECK

(a) Sensitivity check procedures

(1) Turn the ignition switch off.

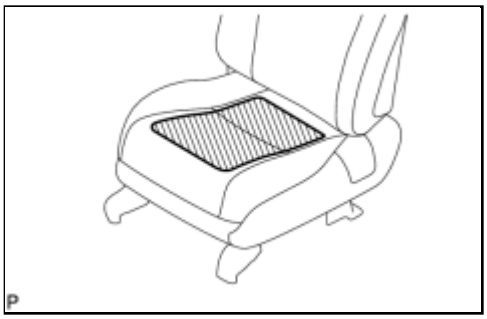

(2) Place a 20 kg (44.0 lb) weight on the front passenger seat.

NOTICE:

- Do not allow the weight to come into contact with the seatback when placing it on the seat cushion.
- Place the weight in the area shown in the illustration.

(3) Turn the ignition switch to ON, and wait for at least 6 seconds.

(4) Check that the passenger airbag ON/OFF indicator indicates OFF.

OK:

The passenger airbag ON/OFF indicator indicates OFF.

(5) Add a 30 kg (66.1 lb) weight to the front passenger seat (total 50 kg (110.2 lb)).

NOTICE:

- Do not allow the weight to come into contact with the seatback when placing it on the seat cushion.
- Place the weight in the area shown in the illustration.

(6) Check that the passenger airbag ON/OFF indicator indicates ON.

OK:

The passenger airbag ON/OFF indicator indicates ON.

Last Modified: 3-10-2010	6.4 T	**From:** 200901
Model Year: 2010	**Model:** Corolla	**Doc ID:** RM0000010V502VX
Title: SUPPLEMENTAL RESTRAINT SYSTEMS: OCCUPANT CLASSIFICATION SYSTEM: PROBLEM SYMPTOMS TABLE (2010 Corolla)		

PROBLEM SYMPTOMS TABLE

HINT:

- Use the table below to help determine the cause of problem symptoms. If multiple suspected areas are listed, the potential causes of the symptoms are listed in order of probability in the "Suspected Area" column of the table. Check each symptom by checking the suspected areas in the order they are listed. Replace parts as necessary.
- Inspect the fuses and relays related to this system before inspecting the suspected areas below.

Occupant Classification System

SYMPTOM	SUSPECTED AREA	SEE PAGE
The front passenger seat condition differs from the indication by the passenger airbag ON/OFF indicator (DTC is not output).	Passenger Airbag ON/OFF Indicator	INFO

Last Modified: 3-10-2010	6.4 D	**From:** 200901
Model Year: 2010	**Model:** Corolla	**Doc ID:** RM0000010VJ044X
Title: SUPPLEMENTAL RESTRAINT SYSTEMS: OCCUPANT CLASSIFICATION SYSTEM: DIAGNOSIS SYSTEM (2010 Corolla)		

DIAGNOSIS SYSTEM

1. CHECK DLC3

(a) Check the DLC3 INFO .

2. SYMPTOM SIMULATION

HINT:

The most difficult case in troubleshooting is when no symptoms occur. In such cases, a thorough customer problem analysis must be carried out. Then the same or similar conditions and the environment in which the problem occurred in the customer's vehicle should be simulated. No matter how experienced or skilled a technician may be, if he/she proceeds to troubleshooting without confirming the problem symptoms, he/she will likely overlook something important and make a wrong guess at some points in the repair operation.

This leads to a standstill in troubleshooting.

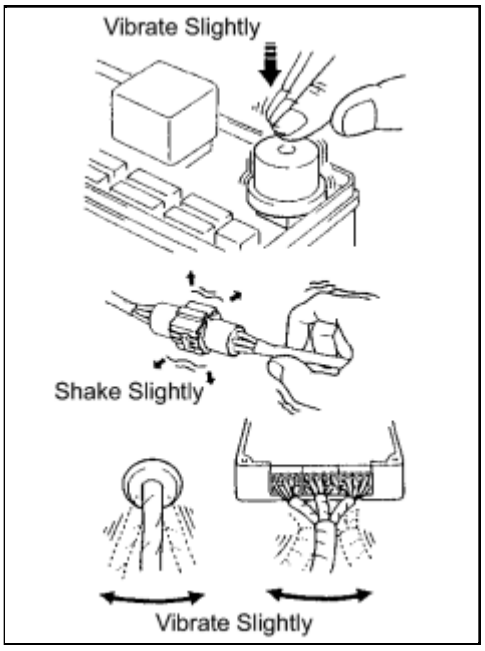

(a) Vibration method: When vibration seems to be the major cause.

HINT:

Perform the simulation method only during the primary check period of approximately 6 seconds after the ignition switch is turned to ON.

(1) Slightly vibrate the part of the sensor considered to be the problem cause with your fingers and check whether the malfunction occurs.

HINT:

Shaking the relays too strongly may result in open relays.

(2) Slightly shake the connector vertically and horizontally.

(3) Slightly shake the wire harness vertically and horizontally.

The connector joint and fulcrum of the vibration are the major areas to be checked thoroughly.

3. FUNCTION OF PASSENGER AIRBAG ON/OFF INDICATOR

(a) Initial check

(1) Turn the ignition switch to ON.

(2) The passenger airbag ON/OFF indicator ("ON" and "OFF") comes on for approximately 4 seconds, then goes off for approximately 2 seconds.

(3) Approximately 6 seconds after the ignition switch is turned to ON, the passenger airbag ON/OFF indicator will indicate ON or OFF depending on the conditions listed below.

FRONT PASSENGER SEAT CONDITION	PASSENGER AIRBAG ON/OFF INDICATOR		SRS WARNING LIGHT
	ON INDICATOR	OFF INDICATOR	
Vacant	OFF	OFF	OFF
Adult is seated.	ON	OFF	OFF
Child is seated.	OFF	ON	OFF
Child restraint system is set.	OFF	ON	OFF
Front passenger occupant classification failure	OFF	ON	ON

HINT:

- The passenger airbag ON/OFF indicator is based on the timing chart below in order to check the indicator light circuit.
- When the occupant classification system has trouble, both the SRS warning light and the passenger airbag ON/OFF indicator ("OFF") come on. In this case, check the DTCs in the airbag system first.

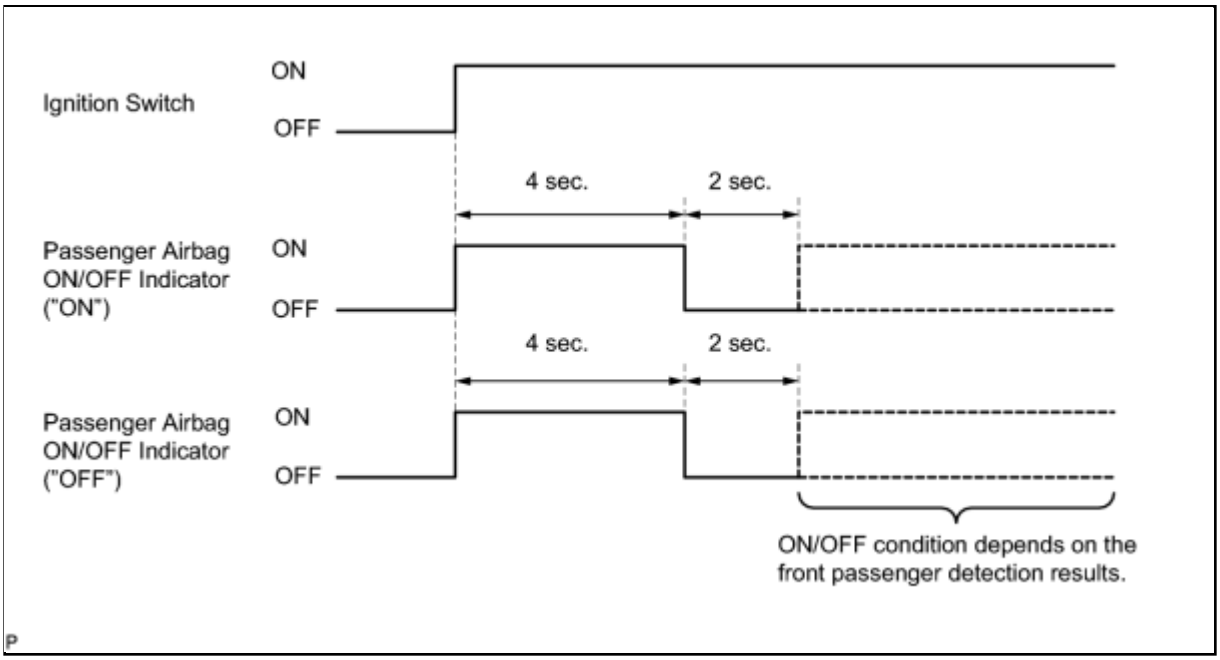

4. CHECK PASSENGER AIRBAG ON/OFF INDICATOR

(a) Turn the ignition switch to ON.

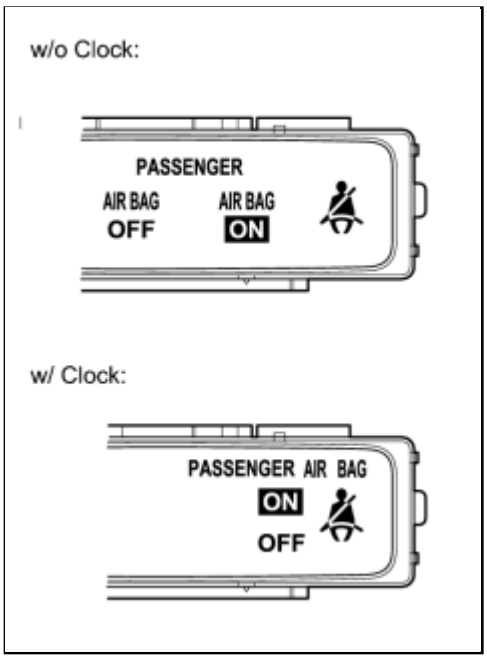

(b) Check that the passenger airbag ON/OFF indicator ("ON" and "OFF") comes on for approximately 4 seconds, then goes off for approximately 2 seconds.

HINT:

Refer to the table in the previous step regarding the passenger airbag ON/OFF indicator when the ignition switch is turned to ON and approximately 6 seconds pass.

Last Modified: 3-10-2010	6.4 U	**From:** 200901
Model Year: 2010	**Model:** Corolla	**Doc ID:** RM000001OQM01CX
Title: SUPPLEMENTAL RESTRAINT SYSTEMS: OCCUPANT CLASSIFICATION SYSTEM: TERMINALS OF ECU (2010 Corolla)		

TERMINALS OF ECU

1. OCCUPANT CLASSIFICATION ECU

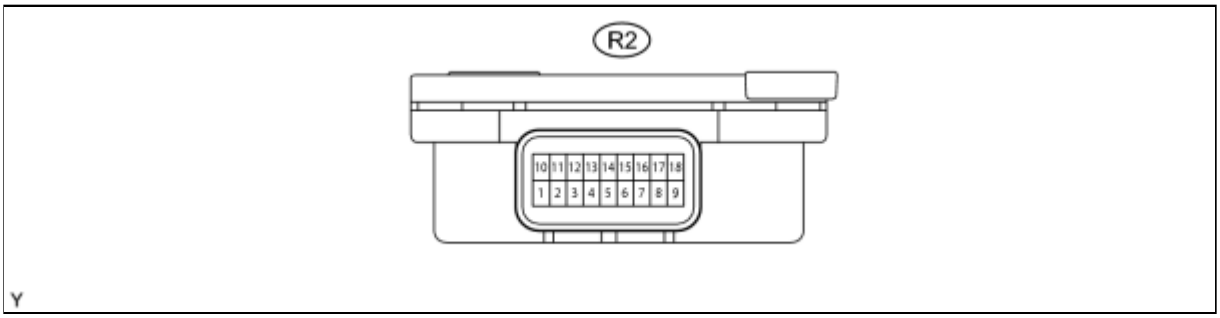

TERMINAL NO. (SYMBOL)	WIRING COLOR	TERMINAL DESCRIPTION	CONDITION	SPECIFIED CONDITION
R2-3 (GSP) - R2-5 (GND)	Y - W-B *1	Seat position sensor (for front passenger side) ground line	Always	Below 1 Ω
	BE - W-B *2			
R2-4 (SP) - R2-5 (GND)	B - W-B *1	Seat position sensor (for front passenger side) ground line	Always	Low: 5.0 to 6.9 mA Hi: 12 to 17 mA
	V - W-B *2			
R2-5 (GND) - Body ground	W-B - Body ground	Occupant classification ECU ground line	Always	Below 1 V
R2-6 (PS) - R2-15 (GPS)	R - Y *1	Pressure sensor signal line	Ignition switch ON	Below 1 V
	W - GR *2			
R2-7 (VPS) - R2-5 (GND)	W - W-B *1	Pressure sensor +B line	Ignition switch ON	4.75 to 5.25 V
	LG - W-B *2			
R2-8 (GBT) - R2-5 (GND)	Y - W-B	Belt tension sensor ground line	Always	Below 1 V
R2-9 (IG) - R2-5 (GND)	B - W-B	Occupant classification ECU +B line	Ignition switch ON	10 to 14 V

TERMINAL NO. (SYMBOL)	WIRING COLOR	TERMINAL DESCRIPTION	CONDITION	SPECIFIED CONDITION
R2-10 (DIA) - R2-5 (GND)	W - W-B	Diagnosis (DLC3)	Ignition switch ON	Pulse generation
R2-11 (FSR+) - R2-12 (FSR-)	W - B	Center airbag sensor assembly communication line	Ignition switch ON	Pulse generation
R2-12 (FSR-) - R2-5 (GND)	B - W-B	Center airbag sensor assembly communication line (-)	Always	Below 1 V
R2-13 (BSW) - R2-14 (BGND)	G - W-B *1 G - P *2	Passenger side buckle switch line	Ignition switch ON	Low: 4 to 7 mA Hi: 12 to 18 mA
R2-14 (BGND) - R2-5 (GND)	W-B - W-B *1 P - W-B *2	Passenger side buckle switch ground line	Always	Below 1 V
R2-15 (GPS) - R2-5 (GND)	Y - W-B *1 GR - W-B *2	Pressure sensor ground line	Always	Below 1 V
R2-16 (BT) - R2-5 (GND)	R - W-B	Belt tension sensor signal line	Ignition switch ON	0 to 5 V
R2-17 (VBT) - R2-5 (GND)	G - W-B	Belt tension sensor +B line	Ignition switch ON	4.75 to 5.25 V

HINT:

***1: TMC Made**

***2: NUMMI, TMMC Made**

Last Modified: 3-10-2010	6.4 D	**From:** 200901
Model Year: 2010	**Model:** Corolla	**Doc ID:** RM0000010VK041X
Title: SUPPLEMENTAL RESTRAINT SYSTEMS: OCCUPANT CLASSIFICATION SYSTEM: DTC CHECK / CLEAR (2010 Corolla)		

DTC CHECK / CLEAR

HINT:

Use the Techstream to read and clear the DTC of the occupant classification ECU, otherwise the DTCs cannot be read or cleared.

1. DTC CHECK

(a) Turn the ignition switch off.

(b) Connect the Techstream to the DLC3.

(c) Turn the ignition switch to ON and turn the Techstream on.

(d) Enter the following menus: Body Electrical / Occupant Detection / Trouble Code.

(e) Check the DTCs by following the prompts on the Techstream screen.

HINT:

Refer to the Techstream operator's manual for further details.

2. DTC CLEAR

(a) Turn the ignition switch off.

(b) Connect the Techstream to the DLC3.

(c) Turn the ignition switch to ON and turn the Techstream on.

(d) Enter the following menus: Body Electrical / Occupant Detection / Trouble Code.

(e) Clear the DTCs by following the prompts on the Techstream screen.

HINT:

Refer to the Techstream operator's manual for further details.

Last Modified: 3-10-2010	6.4 U	**From:** 200901
Model Year: 2010	**Model:** Corolla	**Doc ID:** RM0000010VM040X
Title: SUPPLEMENTAL RESTRAINT SYSTEMS: OCCUPANT CLASSIFICATION SYSTEM: DATA LIST / ACTIVE TEST (2010 Corolla)		

DATA LIST / ACTIVE TEST

HINT:

Using the Techstream to read the Data List allows the values or states of switches, sensors, actuators and other items to be read without removing any parts. This non-intrusive inspection can be very useful because intermittent conditions or signals may be discovered before parts or wiring is disturbed. Reading the Data List information early in troubleshooting is one way to save diagnostic time.

NOTICE:

In the table below, the values listed under "Normal Condition" are reference values. Do not depend solely on these reference values when deciding whether a part is faulty or not.

1. DATA LIST FOR OCCUPANT CLASSIFICATION ECU

(a) Turn the ignition switch off.

(b) Connect the Techstream to the DLC3.

(c) Turn the ignition switch to ON and turn the Techstream on.

(d) Enter the following menus: Body Electrical / Occupant Detection / Data List.

(e) Check the values by referring to the table below.

HINT:

The Specified Condition for Zero Point Calibration in the table below must be satisfied when the zero point calibration is performed.

Data List

TESTER DISPLAY	MEASUREMENT ITEM/RANGE	NORMAL CONDITION	SPECIFIED CONDITION FOR ZERO POINT CALIBRATION	DIAGNOSTIC NOTE
Passenger Classification	Passenger classification/ NG: Data is not determined AM50: Adult is seated and seat is in rear position AF05: Adult is seated and seat is in front position CHILD: Child is seated OFF: Vacant	AM50/AF05/CHILD/OFF	OFF	-

TESTER DISPLAY	MEASUREMENT ITEM/RANGE	NORMAL CONDITION	SPECIFIED CONDITION FOR ZERO POINT CALIBRATION	DIAGNOSTIC NOTE
Passenger Buckle SW	Buckle switch (Passenger side)/ Set: Passenger side seat belt is fastened Unset: Passenger side seat belt is unfastened NG: Data is not determined	Unset/Set	Unset	-
Pressure Sensor Output	Pressure sensor output/ Min.: 0 Max.: 255	0 to 210	0 to 2	-
Filtered Pressure Sensor Output	Filtered pressure sensor output/ Min.: 0 Max.: 255	38 to 240	38 to 75	If value is outside range of Specified Condition for Zero Point Calibration, check whether any objects placed on seat cushion and that seat cushion fitted correctly.
Thermistor Temperature Output	Thermistor temperature output/ Min.: -40°C (-40°F) Max.: 90°C (194°F)	-40 to 85°C (-40 to 185°F)	3 to 40°C (37 to 104°F)	If value is outside range of Specified Condition for Zero Point Calibration, adjust temperature to proper range by using air conditioner, etc.
Weight Threshold	Weight threshold/ Min.: 0 Max.: 255	36 to 67 (reference value)	36 to 67 (reference value)	-
Filtered Belt Tension Output	Filtered belt tension output/ Min.: 0 Max.: 255	39 to 229	39 to 64 (no load)	-
Empty Threshold Value from the Seat Factory	Empty threshold value from seat factory/ Min.: 0 Max.: 255	38 to 75	38 to 75	-
Allow Threshold	Threshold value for adult passenger or	43 to 64 (reference	43 to 64 (reference value)	-

TESTER DISPLAY	MEASUREMENT ITEM/RANGE	NORMAL CONDITION	SPECIFIED CONDITION FOR ZERO POINT CALIBRATION	DIAGNOSTIC NOTE
	not from seat factory/ Min.: 0 Max.: 255	value)		
Number of Present DTC	Number of present trouble codes/ Min.: 0 Max.: 255	0	0	-
Number of Past DTC	Number of past trouble codes/ Min.: 0 Max.: 255	0	0	-

Last Modified: 3-10-2010	6.4 C	**From:** 200901
Model Year: 2010	**Model:** Corolla	**Doc ID:** RM0000010V6049X
Title: SUPPLEMENTAL RESTRAINT SYSTEMS: OCCUPANT CLASSIFICATION SYSTEM: B1771: Passenger Side Buckle Switch Circuit Malfunction (2010 Corolla)		

DTC	**B1771**	**Passenger Side Buckle Switch Circuit Malfunction**

DESCRIPTION

The passenger side buckle switch circuit consists of the occupant classification ECU and the front seat inner belt assembly RH.

DTC B1771 is recorded when a malfunction is detected in the passenger side buckle switch circuit.

DTC NO.	DTC DETECTING CONDITION	TROUBLE AREA
B1771	• The occupant classification ECU receives a short circuit signal, open circuit signal and short circuit to ground signal or a short circuit to B+ signal in passenger side buckle switch circuit for 2 seconds • Passenger side buckle switch malfunction • Occupant classification ECU malfunction	• Front seat wire RH • Front seat inner belt assembly RH (Passenger side buckle switch) • Occupant classification ECU

HINT:

When DTC B1650/32 is detected as a result of troubleshooting for the airbag system, check the DTCs stored in the occupant classification ECU. When DTC B1771 is output, perform troubleshooting for the DTC.

WIRING DIAGRAM

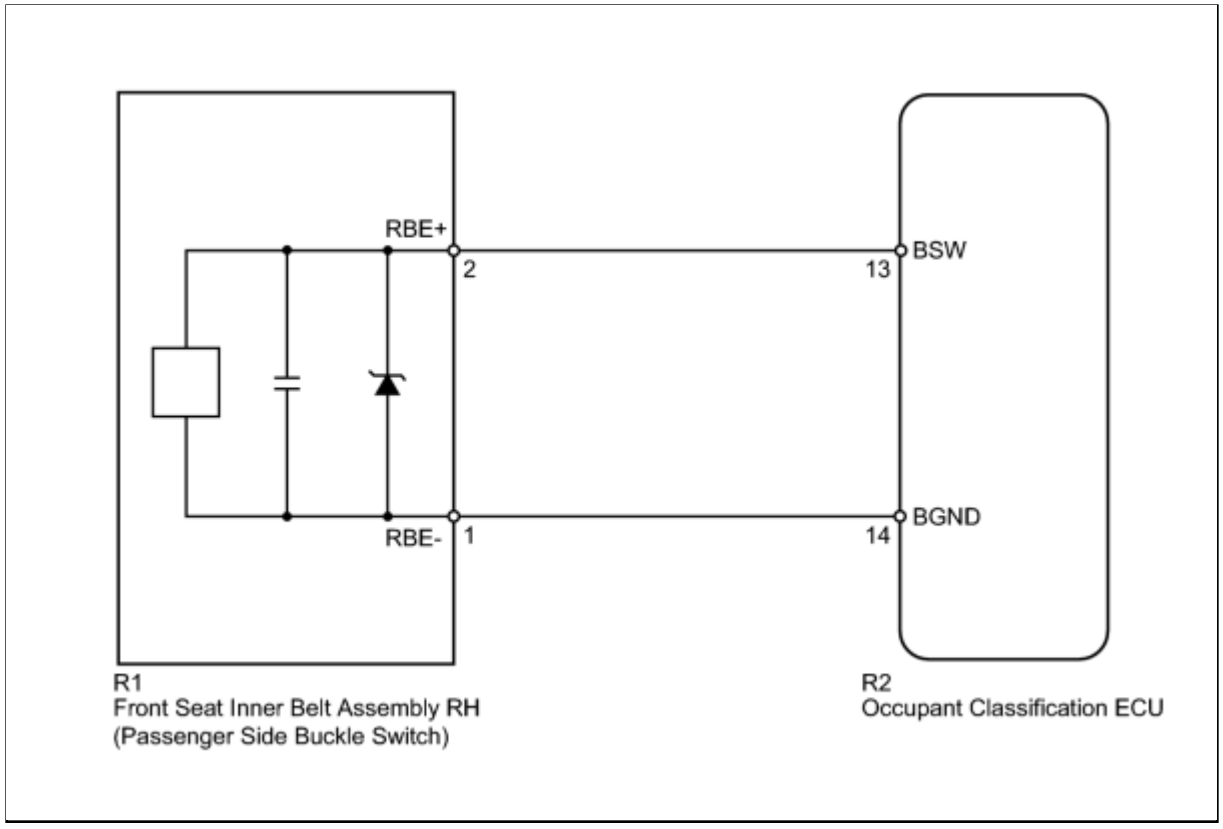

INSPECTION PROCEDURE

HINT:

- If troubleshooting (wire harness inspection) is difficult to perform, remove the front passenger seat installation bolts to access the underside of the seat cushion.
- In the above case, hold the seat so that it does not fall down. Holding the seat for a long period of time may damage the seat or deform the seat rails. Hold the seat only as necessary.

PROCEDURE

1.	**CHECK CONNECTORS**

(a) Turn the ignition switch off.

(b) Disconnect the cable from the negative (-) battery terminal.

(c) Check that the connectors are properly connected to the occupant classification ECU and the front seat inner belt assembly RH.

OK:

The connectors are properly connected.

HINT:

If the connectors are not connected securely, reconnect the connectors and proceed to the next inspection.

(d) Disconnect the connectors from the occupant classification ECU and the front seat inner belt assembly RH.

(e) Check that the terminals of the connectors are not damaged.

OK:

The terminals are not deformed or damaged.

NG ▶ **REPLACE FRONT SEAT WIRE RH**

OK ▼

2.	CHECK FRONT SEAT WIRE RH (SHORT TO B+)

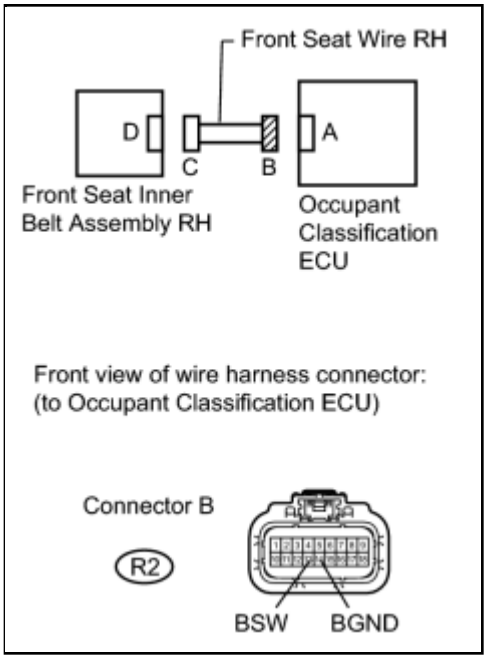

(a) Connect the cable to the negative (-) battery terminal.

(b) Turn the ignition switch to ON.

(c) Measure the voltage according to the value(s) in the table below.

Standard Voltage:

TESTER CONNECTION	SWITCH CONDITION	SPECIFIED CONDITION
R2-13 (BSW) - Body ground	Ignition switch ON	Below 1 V
R2-14 (BGND) - Body ground	Ignition switch ON	Below 1 V

NG ▶ **REPLACE FRONT SEAT WIRE RH**

OK

3.	CHECK FRONT SEAT WIRE RH (OPEN)

(a) Turn the ignition switch off.

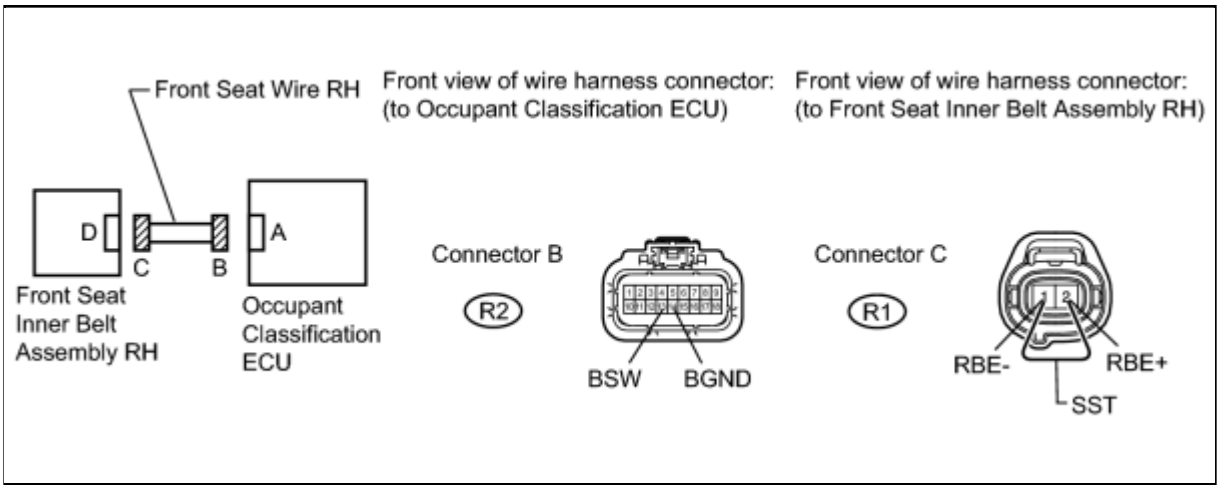

(b) Disconnect the cable from the negative (-) battery terminal.

(c) Using SST, connect terminals 2 (RBE+) and 1 (RBE-) of connector C.

NOTICE:

Do not forcibly insert SST into the terminals of the connector when connecting the wire.

SST: 09843-18040

(d) Measure the resistance according to the value(s) in the table below.

Standard Resistance:

TESTER CONNECTION	CONDITION	SPECIFIED CONDITION
R2-13 (BSW) - R2-14 (BGND)	Always	Below 1 Ω

NG **REPLACE FRONT SEAT WIRE RH**

OK

4.	CHECK FRONT SEAT WIRE RH (SHORT TO GROUND)

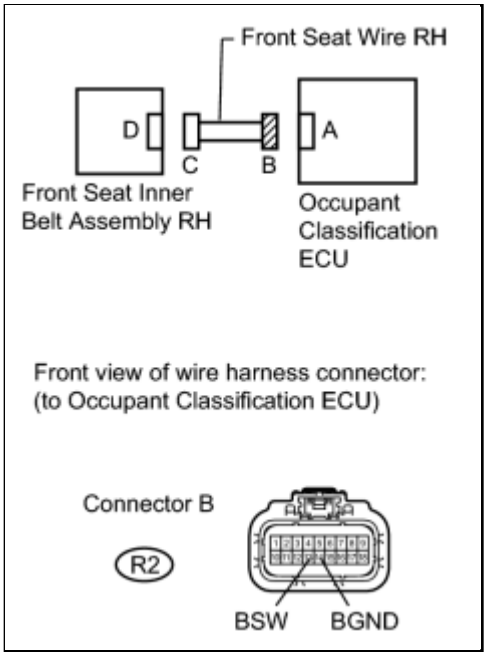

(a) Disconnect SST wire from connector C.

(b) Measure the resistance according to the value(s) in the table below.

Standard Resistance:

TESTER CONNECTION	CONDITION	SPECIFIED CONDITION
R2-13 (BSW) - Body ground	Always	1 MΩ or higher
R2-14 (BGND) - Body ground	Always	1 MΩ or higher

NG ▶ **REPLACE FRONT SEAT WIRE RH**

OK ▼

5.	CHECK FRONT SEAT WIRE RH (SHORT)

(a) Measure the resistance according to the value(s) in the table below.

Standard Resistance:

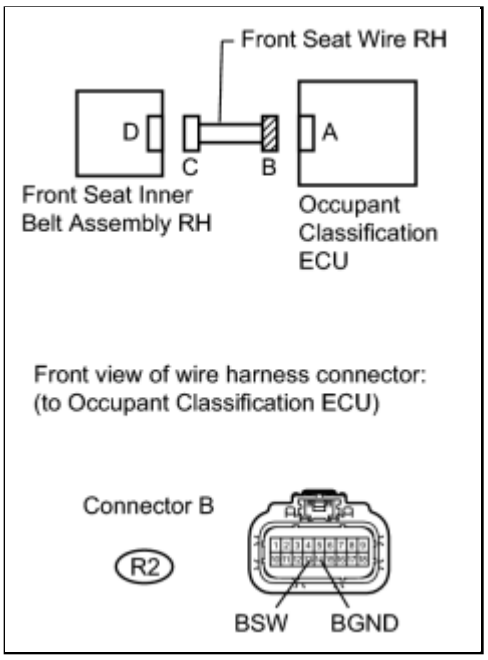

TESTER CONNECTION	CONDITION	SPECIFIED CONDITION
R2-13 (BSW) - R2-14 (BGND)	Always	1 MΩ or higher

NG ▶ **REPLACE FRONT SEAT WIRE RH**

OK ▼

6.	CHECK FOR DTC

(a) Connect the connectors to the occupant classification ECU and the front seat inner belt assembly RH.

(b) Connect the cable to the negative (-) battery terminal.

(c) Turn the ignition switch to ON.

(d) Clear the DTCs stored in the occupant classification ECU INFO .

(e) Clear the DTCs stored in the center airbag sensor assembly INFO .

(f) Turn the ignition switch off.

(g) Turn the ignition switch to ON.

(h) Check for DTCs INFO .

OK:

DTC B1771 is not output.

HINT:

Codes other than B1771 may be output at this time, but they are not related to this check.

NG ▶ INSPECT FRONT SEAT INNER BELT ASSEMBLY RH

OK ▶ USE SIMULATION METHOD TO CHECK

7.	INSPECT FRONT SEAT INNER BELT ASSEMBLY RH

(a) Turn the ignition switch off.

(b) Disconnect the cable from the negative (-) battery terminal.

(c) Replace the front seat inner belt assembly RH with a known good part INFO .

HINT:

Perform an inspection using known good parts from another vehicle if possible.

(d) Connect the cable to the negative (-) battery terminal.

(e) Turn the ignition switch to ON.

(f) Clear the DTCs stored in the occupant classification ECU INFO .

(g) Clear the DTCs stored in the center airbag sensor assembly INFO .

(h) Turn the ignition switch off.

(i) Turn the ignition switch to ON.

(j) Check for DTCs INFO .

OK:

DTC B1771 is not output.

HINT:

Codes other than B1771 may be output at this time, but they are not related to this check.

NG ▶ REPLACE OCCUPANT CLASSIFICATION ECU

OK ▶ END

8.	REPLACE OCCUPANT CLASSIFICATION ECU

(a) Connect the Techstream to the DLC3.

(b) Turn the ignition switch to ON.

(c) Using the Techstream, save the ECU data from the ECU currently installed on the vehicle INFO .

(d) Turn the ignition switch off.

(e) Disconnect the cable from the negative (-) battery terminal.

(f) Replace the occupant classification ECU INFO .

(g) Connect the cable to the negative (-) battery terminal.

(h) Turn the ignition switch to ON.

(i) Using the Techstream, load the previous ECU data stored into the new ECU INFO .

(j) Turn the ignition switch off.

(k) Turn the ignition switch to ON.

(l) Clear the DTCs stored in the memory INFO .

HINT:

If the DTCs are not cleared at this time, past DTCs will remain.

NEXT

9.	**PERFORM SENSITIVITY CHECK**

(a) Perform the sensitivity check INFO .

NEXT **END**

Last Modified: 3-10-2010	6.4 C	**From:** 200901
Model Year: 2010	**Model:** Corolla	**Doc ID:** RM000001PK501DX
Title: SUPPLEMENTAL RESTRAINT SYSTEMS: OCCUPANT CLASSIFICATION SYSTEM: B1773,B1776: Belt Tension Sensor Circuit Malfunction (2010 Corolla)		

DTC	**B1773**	**Belt Tension Sensor Circuit Malfunction**

DTC	**B1776**	**Seat Belt Tension Sensor Power Source Circuit Malfunction**

DESCRIPTION

The seat belt tension sensor circuit consists of the occupant classification ECU and the seat belt tension sensor.

The seat belt tension sensor sends the seat belt tension signal to the occupant classification ECU.

DTC B1773 and B1776 are recorded when a malfunction is detected in the seat belt tension sensor circuit.

DTC NO.	DTC DETECTING CONDITION	TROUBLE AREA
B1773 B1776	• The occupant classification ECU receives a short circuit signal, open circuit signal and short circuit to ground signal or a short circuit to B+ signal in the seat belt tension sensor circuit for 2 seconds. • Seat belt tension sensor malfunction • Occupant classification ECU malfunction	• No. 2 floor wire • Front seat wire RH • Front seat outer belt assembly RH (Seat belt tension sensor) • Occupant classification ECU

HINT:

When DTC B1650/32 is detected as a result of troubleshooting for the airbag system, check the DTCs stored in the occupant classification ECU. When DTC B1773 and B1776 are output, perform troubleshooting for those DTCs.

WIRING DIAGRAM

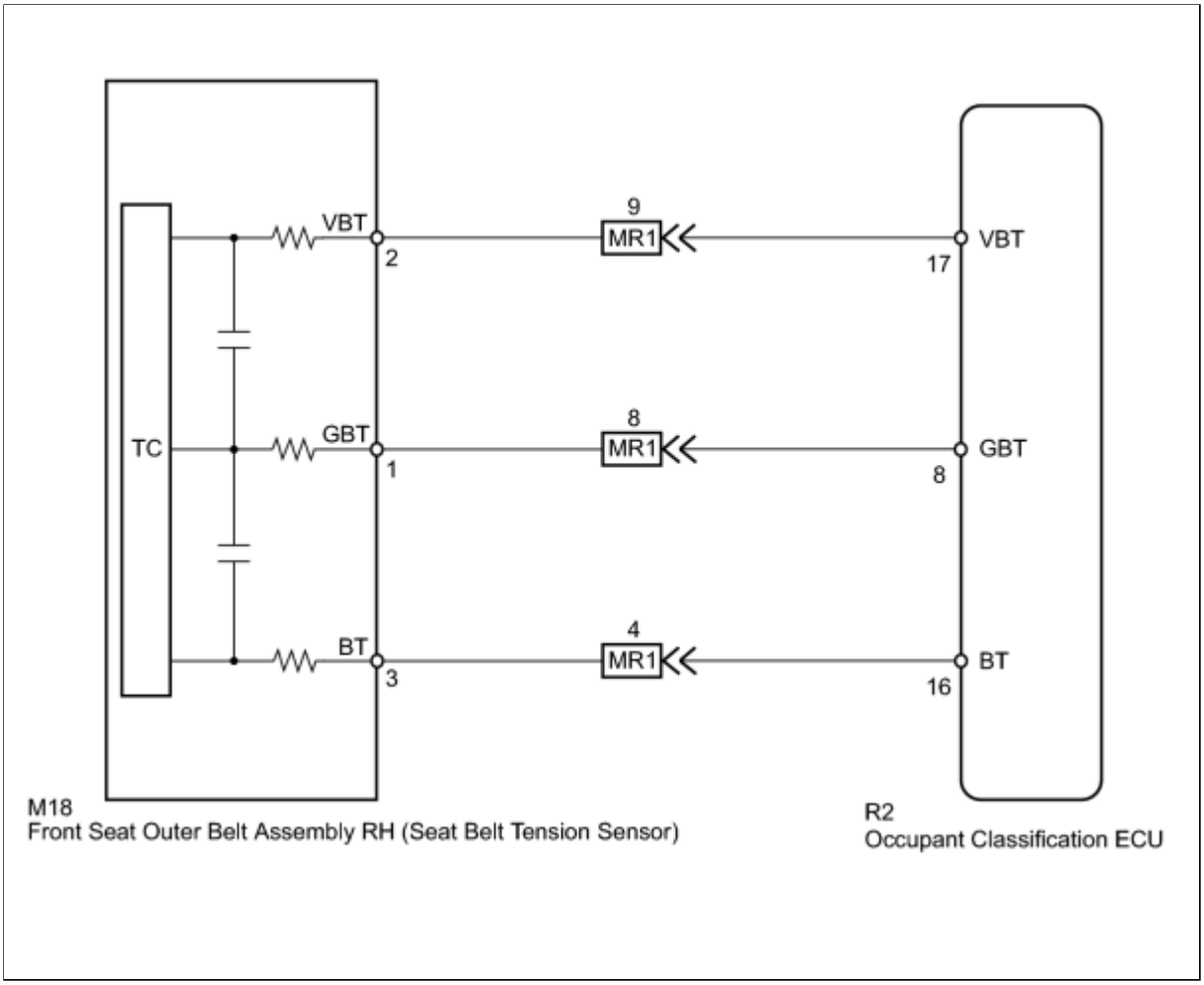

INSPECTION PROCEDURE

HINT:

- If troubleshooting (wire harness inspection) is difficult to perform, remove the passenger seat installation bolts to access the underside of the seat cushion.
- In the above case, hold the seat so that it does not fall down. Holding the seat for a long period of time may damage the seat or deform the seat rails. Hold the seat only as necessary.

PROCEDURE

1.	**CHECK CONNECTORS**

(a) Turn the ignition switch off.

(b) Disconnect the cable from the negative (-) battery terminal.

(c) Check that the connectors are properly connected to the occupant classification ECU and the seat belt tension sensor.

OK:

The connectors are properly connected.

HINT:

If the connectors are not connected securely, reconnect the connectors and proceed to the next inspection.

(d) Disconnect the connectors from the occupant classification ECU and the seat belt tension sensor.

(e) Check that the terminals of the connectors are not damaged.

OK:

The terminals are not deformed or damaged.

NG ▶ **REPLACE WIRE HARNESS**

OK ▼

2.	CHECK SEAT BELT TENSION SENSOR CIRCUIT (SHORT TO B+)

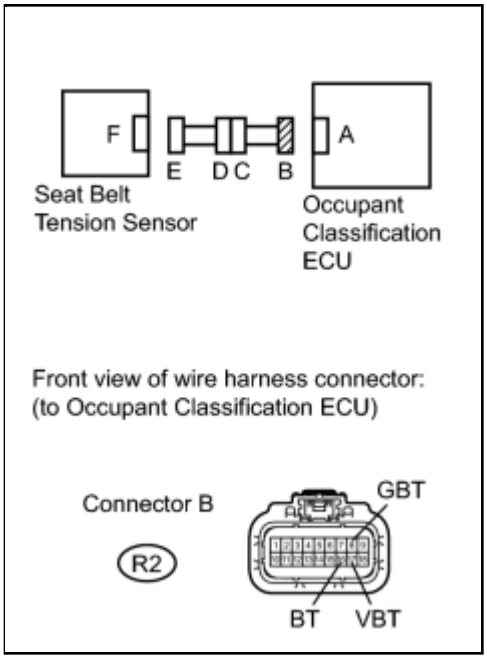

(a) Connect the cable to the negative (-) battery terminal.

(b) Turn the ignition switch to ON.

(c) Measure the voltage according to the value(s) in the table below.

Standard Voltage:

TESTER CONNECTION	SWITCH CONDITION	SPECIFIED CONDITION
R2-8 (GBT) - Body ground	Ignition switch ON	Below 1 V

TESTER CONNECTION	SWITCH CONDITION	SPECIFIED CONDITION
R2-16 (BT) - Body ground	Ignition switch ON	Below 1 V
R2-17 (VBT) - Body ground	Ignition switch ON	Below 1 V

NG ▶ **CHECK FRONT SEAT WIRE RH (SHORT TO B+)**

OK ▼

3.	CHECK SEAT BELT TENSION SENSOR CIRCUIT (OPEN)

(a) Turn the ignition switch off.

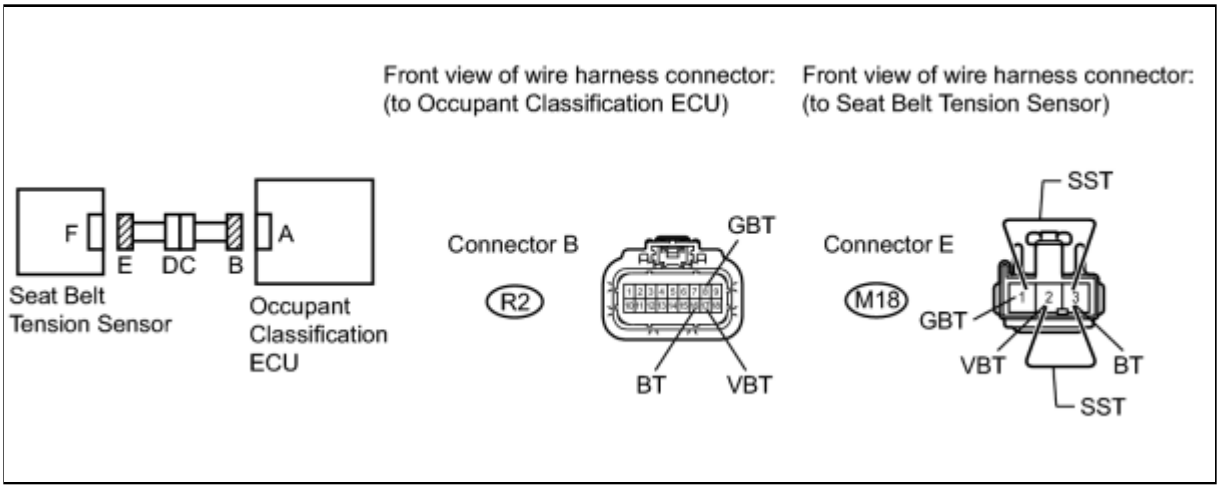

(b) Disconnect the cable from the negative (-) battery terminal.

(c) Using SST, connect terminals 1 (GBT) and 3 (BT), and connect terminals 2 (VBT) and 3 (BT) of connector E.

NOTICE:

Do not forcibly insert SST into the terminals of the connector when connecting the wire.

SST: 09843-18040

(d) Measure the resistance according to the value(s) in the table below.

Standard Resistance:

TESTER CONNECTION	CONDITION	SPECIFIED CONDITION
R2-16 (BT) - R2-8 (GBT)	Always	Below 1 Ω

TESTER CONNECTION	CONDITION	SPECIFIED CONDITION
R2-17 (VBT) - R2-16 (BT)	Always	Below 1 Ω

NG ▶ CHECK FRONT SEAT WIRE RH (OPEN)

OK ▼

4.	CHECK SEAT BELT TENSION SENSOR CIRCUIT (SHORT TO GROUND)

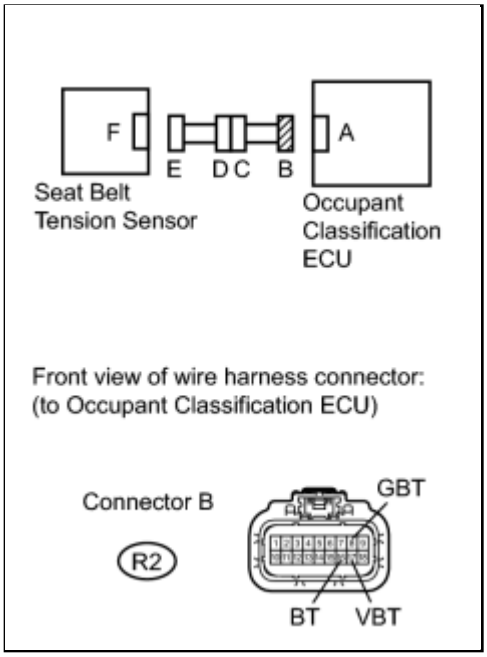

(a) Disconnect SST from connector E.

(b) Measure the resistance according to the value(s) in the table below.

Standard Resistance:

TESTER CONNECTION	CONDITION	SPECIFIED CONDITION
R2-8 (GBT) - Body ground	Always	1 MΩ or higher
R2-16 (BT) - Body ground	Always	1 MΩ or higher
R2-17 (VBT) - Body ground	Always	1 MΩ or higher

NG ▶ CHECK FRONT SEAT WIRE RH (SHORT TO GROUND)

OK

5.	CHECK SEAT BELT TENSION SENSOR CIRCUIT (SHORT)

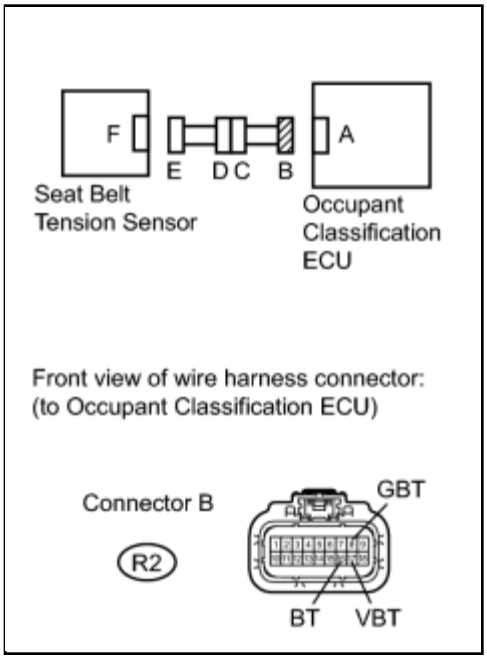

(a) Measure the resistance according to the value(s) in the table below.

Standard Resistance:

TESTER CONNECTION	CONDITION	SPECIFIED CONDITION
R2-16 (BT) - R2-8 (GBT)	Always	1 MΩ or higher
R2-17 (VBT) - R2-16 (BT)	Always	1 MΩ or higher

NG ▶ **CHECK FRONT SEAT WIRE RH (SHORT)**

OK

6.	CHECK FOR DTC

(a) Connect the connectors to the occupant classification ECU and the seat belt tension sensor.

(b) Connect the cable to the negative (-) battery terminal.

(c) Turn the ignition switch to ON.

(d) Clear the DTCs stored in the occupant classification ECU INFO .

(e) Clear the DTCs stored in the center airbag sensor assembly INFO .

(f) Turn the ignition switch off.

(g) Turn the ignition switch to ON.

(h) Check for DTCs INFO .

OK:
DTC B1773 and B1776 are not output.

HINT:

Codes other than B1773 and B1776 may be output at this time, but they are not related to this check.

NG ▶ **INSPECT FRONT SEAT OUTER BELT ASSEMBLY RH**

OK ▶ **USE SIMULATION METHOD TO CHECK**

7.	INSPECT FRONT SEAT OUTER BELT ASSEMBLY RH

(a) Turn the ignition switch off.

(b) Disconnect the cable from the negative (-) battery terminal.

(c) Replace the front seat outer belt assembly RH with a known good part INFO .

HINT:

Perform an inspection using known good parts from another vehicle if possible.

(d) Connect the cable to the negative (-) battery terminal.

(e) Turn the ignition switch to ON.

(f) Clear the DTCs stored in the occupant classification ECU INFO .

(g) Clear the DTCs stored in the center airbag sensor assembly INFO .

(h) Turn the ignition switch off.

(i) Turn the ignition switch to ON.

(j) Check the DTCs INFO .

OK:
DTC B1773 and B1776 are not output.

HINT:

Codes other than B1773 and B1776 may be output at this time, but they are not related to this check.

OK ▶ **REPLACE OCCUPANT CLASSIFICATION ECU**

NG ▶ **END**

8.	REPLACE OCCUPANT CLASSIFICATION ECU

(a) Connect the Techstream to the DLC3.

(b) Turn the ignition switch to ON.

(c) Using the Techstream, save the ECU data from the ECU currently installed on the vehicle INFO .

(d) Turn the ignition switch off.

(e) Disconnect the cable from the negative (-) battery terminal.

(f) Replace the occupant classification ECU INFO .

(g) Connect the cable to the negative (-) battery terminal.

(h) Turn the ignition switch to ON.

(i) Using the Techstream, load the previous ECU data stored into the new ECU INFO .

(j) Turn the ignition switch off.

(k) Turn the ignition switch to ON.

(l) Clear the DTCs stored in the memory INFO .

HINT:

If the DTCs are not cleared at this time, past DTCs will remain.

NEXT

9.	PERFORM SENSITIVITY CHECK

(a) Perform the sensitivity check INFO .

NEXT **END**

10.	CHECK FRONT SEAT WIRE RH (SHORT TO B+)

(a) Turn the ignition switch off.

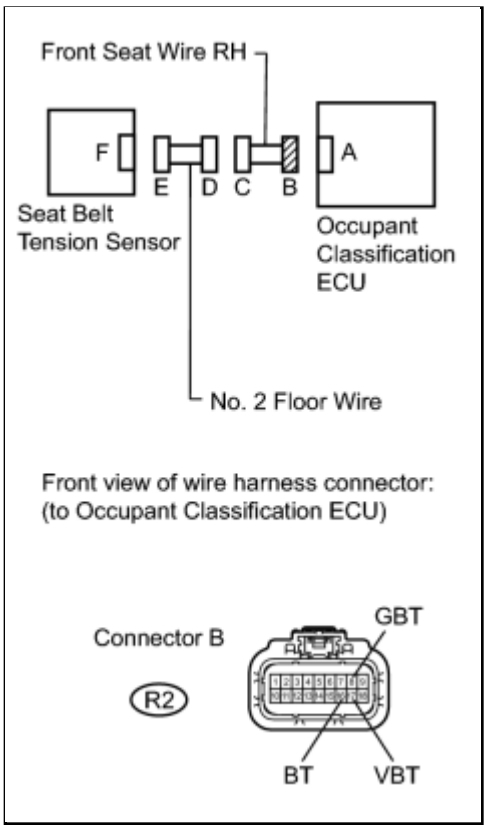

(b) Disconnect the cable from the negative (-) battery terminal.

(c) Disconnect the No. 2 floor wire connector from the front seat wire RH.

(d) Connect the cable to the negative (-) battery terminal.

(e) Turn the ignition switch to ON.

(f) Measure the voltage according to the value(s) in the table below.

Standard Voltage:

TESTER CONNECTION	SWITCH CONDITION	SPECIFIED CONDITION
R2-8 (GBT) - Body ground	Ignition switch ON	Below 1 V
R2-16 (BT) - Body ground	Ignition switch ON	Below 1 V
R2-17 (VBT) - Body ground	Ignition switch ON	Below 1 V

NG ▶ **REPLACE FRONT SEAT WIRE RH**

OK ▶ **REPLACE NO. 2 FLOOR WIRE**

11.	**CHECK FRONT SEAT WIRE RH (OPEN)**

(a) Disconnect the No. 2 floor wire connector from the front seat wire RH.

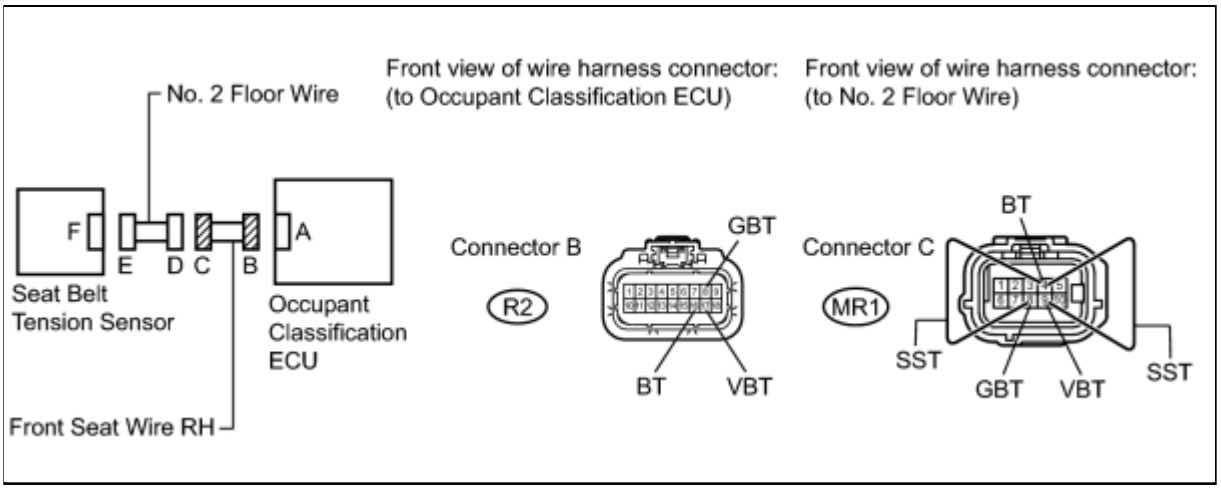

(b) Using SST, connect terminals 4 (BT) and 8 (GBT), and connect terminals 4 (BT) and 9 (VBT) of connector C.

NOTICE:

Do not forcibly insert SST into the terminals of the connector when connecting the wire.

SST: 09843-18040

(c) Measure the resistance according to the value(s) in the table below.

Standard Resistance:

TESTER CONNECTION	CONDITION	SPECIFIED CONDITION
R2-16 (BT) - R2-8 (GBT)	Always	Below 1 Ω
R2-16 (BT) - R2-17 (VBT)	Always	Below 1 Ω

NG ▶ **REPLACE FRONT SEAT WIRE RH**

OK ▶ **REPLACE NO. 2 FLOOR WIRE**

12.	**CHECK FRONT SEAT WIRE RH (SHORT TO GROUND)**

(a) Disconnect the No. 2 floor wire connector from the front seat wire RH.

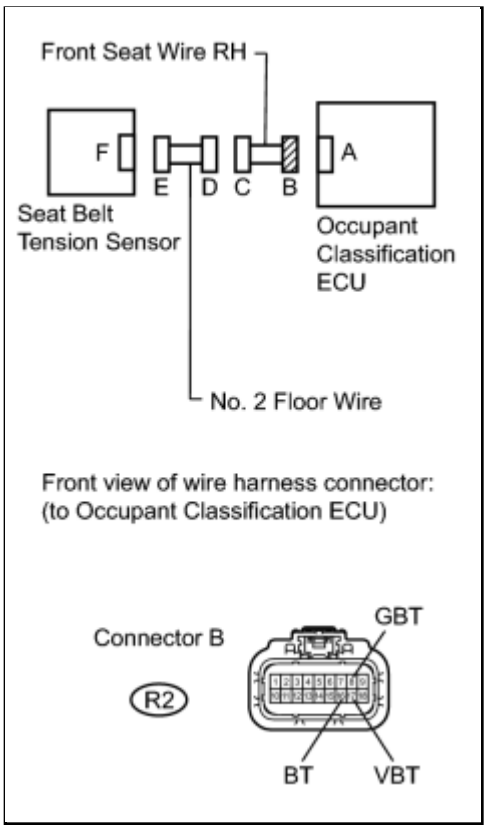

(b) Measure the resistance according to the value(s) in the table below.

Standard Resistance:

TESTER CONNECTION	CONDITION	SPECIFIED CONDITION
R2-8 (GBT) - Body ground	Always	1 MΩ or higher
R2-16 (BT) - Body ground	Always	1 MΩ or higher
R2-17 (VBT) - Body ground	Always	1 MΩ or higher

NG ▶ **REPLACE FRONT SEAT WIRE RH**

OK ▶ **REPLACE NO. 2 FLOOR WIRE**

13.	**CHECK FRONT SEAT WIRE RH (SHORT)**

(a) Disconnect the No. 2 floor wire connector from the front seat wire RH.

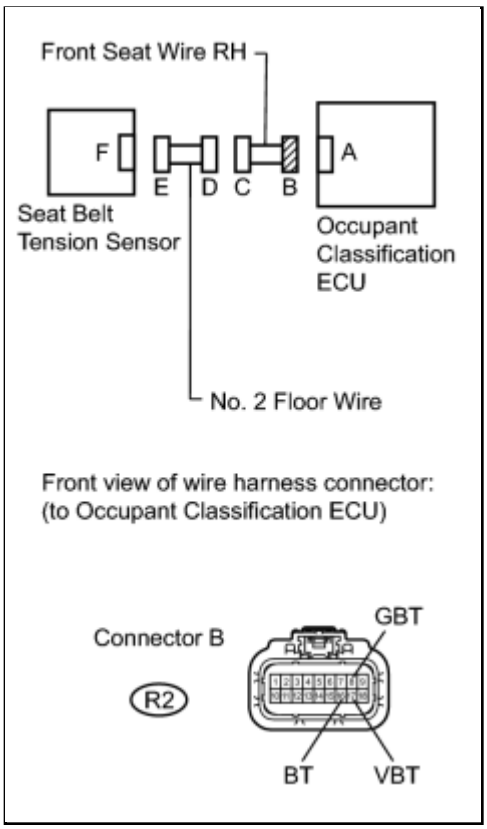

(b) Measure the resistance according to the value(s) in the table below.

Standard Resistance:

TESTER CONNECTION	CONDITION	SPECIFIED CONDITION
R2-16 (BT) - R2-8 (GBT)	Always	1 MΩ or higher
R2-17 (VBT) - R2-16 (BT)	Always	1 MΩ or higher

NG ▶ **REPLACE FRONT SEAT WIRE RH**

OK ▶ **REPLACE NO. 2 FLOOR WIRE**

Last Modified: 3-10-2010	6.4 U	**From:** 200901
Model Year: 2010	**Model:** Corolla	**Doc ID:** RM0000039SE00CX
Title: SUPPLEMENTAL RESTRAINT SYSTEMS: OCCUPANT CLASSIFICATION SYSTEM: FAIL-SAFE CHART (2010 Corolla)		

FAIL-SAFE CHART

1. FAIL SAFE FUNCTION

(a) The following chart shows the status of the controls when the system is normal and malfunctioning.

- The passenger airbag ON/OFF indicator ("ON" and "OFF") comes on for approximately 4 seconds, then goes off for approximately 2 seconds.
- Approximately 6 seconds after the ignition switch is turned to ON, the passenger airbag ON/OFF indicator will indicate ON or OFF depending on the conditions listed below.

CONDITION	ON INDICATOR	OFF INDICATOR	FRONT PASSENGER AIRBAG	FRONT SEAT SIDE AIRBAG RH	FRONT SEAT BELT PRETENSIONER RH	CURTAIN SHIELD AIRBAG RH
Adult is seated	ON	OFF	○	○	○	○
Child is seated	OFF	ON	-	-	○	○
Vacant	OFF	OFF	-	-	-	○
Failure	OFF	ON	-	-	○	○

HINT:

○: Deployable

-: Not deployable

Last Modified: 3-10-2010	6.4 C	**From:** 200901
Model Year: 2010	**Model:** Corolla	**Doc ID:** RM000001PK400IX
Title: SUPPLEMENTAL RESTRAINT SYSTEMS: OCCUPANT CLASSIFICATION SYSTEM: B1772: Seat Position Sensor Circuit Malfunction (2010 Corolla)		

DTC	**B1772**	**Seat Position Sensor Circuit Malfunction**

DESCRIPTION

The seat position sensor circuit consists of the occupant classification ECU and the seat position airbag sensor (passenger side).

The seat position airbag sensor sends the seat position signal to the occupant classification ECU to control the dual stage deployment of the front passenger airbag.

DTC B1772 is recorded when a malfunction is detected in the seat position sensor circuit.

DTC NO.	DTC DETECTION CONDITION	TROUBLE AREA
B1772	• Occupant classification ECU receives a short circuit signal, open circuit signal and short circuit to ground signal or short circuit to B+ signal in seat position sensor circuit for 2 seconds. • Seat position airbag sensor (Passenger side) malfunction • Occupant classification ECU malfunction	• Front seat wire RH • Seat position airbag sensor (Passenger side) • Occupant classification ECU

HINT:

When DTC B1650/32 is detected as a result of troubleshooting for the airbag system, check the DTCs stored in the occupant classification ECU, and perform troubleshooting for those DTCs first.

WIRING DIAGRAM

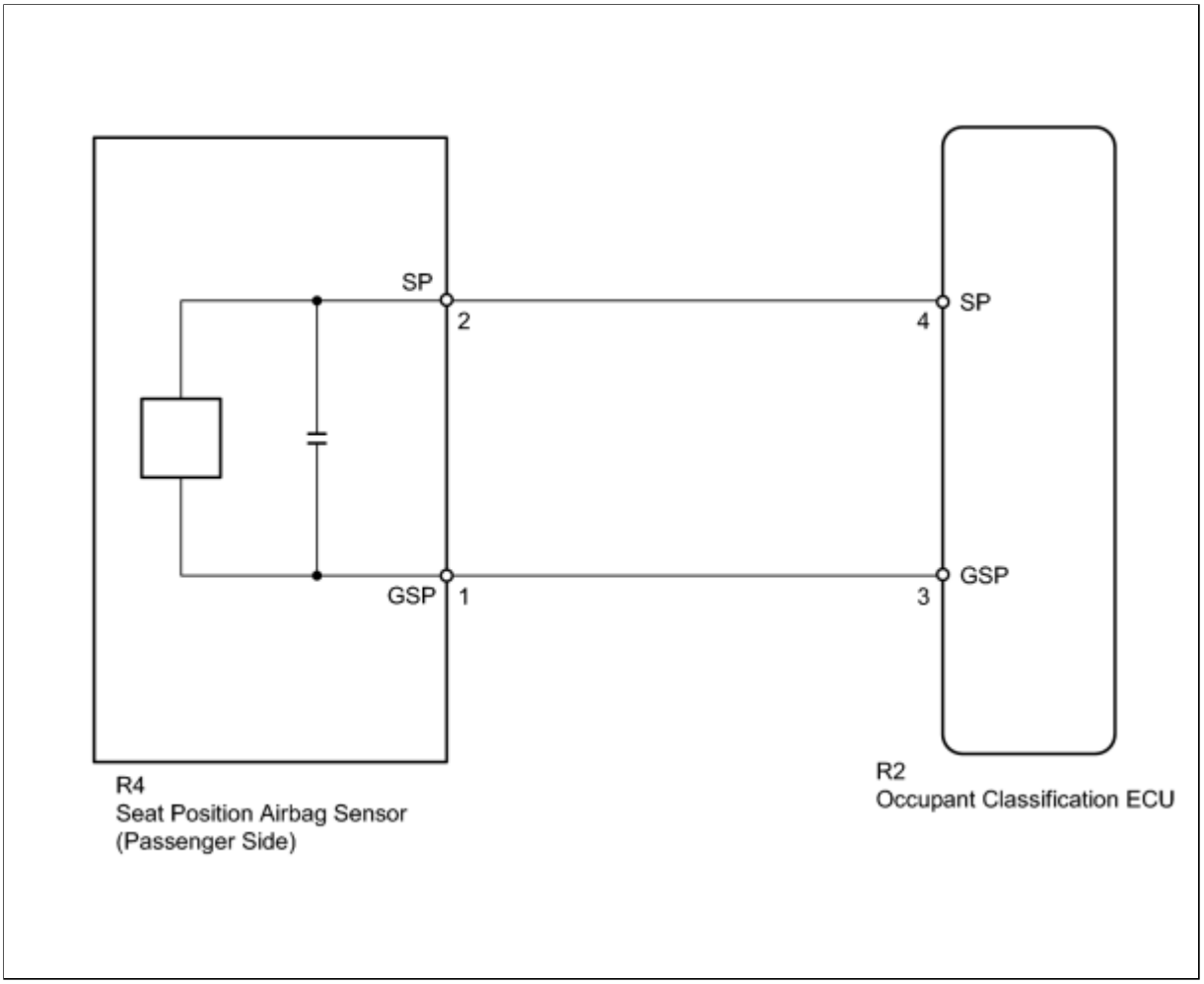

INSPECTION PROCEDURE

HINT:

- If troubleshooting (wire harness inspection) is difficult to perform, remove the passenger seat installation bolts to access the underside of the seat cushion.
- In the above case, hold the seat so that it does not tip over. Holding the seat up for a long period of time may damage the seat or deform the seat rails. Hold the seat up only for as long as necessary.

PROCEDURE

1.	**CHECK CONNECTORS**

(a) Turn the ignition switch off.

(b) Disconnect the cable from the negative (-) battery terminal.

(c) Check that the connectors are properly connected to the occupant classification ECU and the seat position airbag sensor (passenger side).

OK:

The connectors are properly connected.

HINT:

If the connectors are not connected securely, reconnect the connectors and proceed to the next inspection.

(d) Disconnect the connectors from the occupant classification ECU and the seat position airbag sensor (passenger side).

(e) Check that the terminals of the connectors are not damaged.

OK:

The terminals are not deformed or damaged.

NG ▶ **REPLACE FRONT SEAT WIRE RH**

OK ▼

2.	**CHECK FRONT SEAT WIRE RH (SHORT TO B+)**

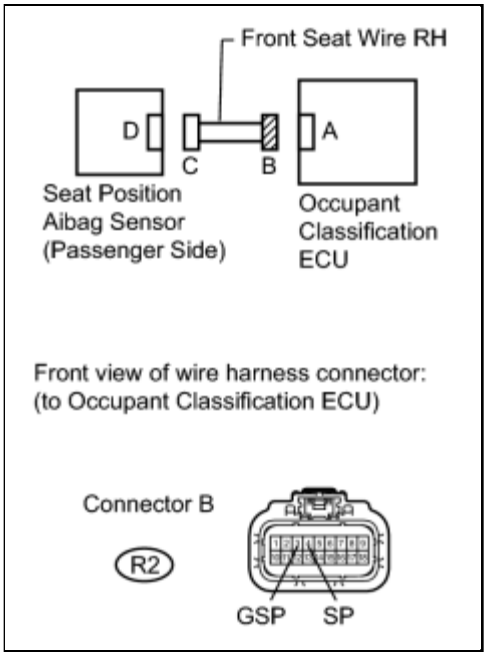

(a) Connect the cable to the negative (-) battery terminal.

(b) Turn the ignition switch to ON.

(c) Measure the voltage according to the value(s) in the table below.

Standard Voltage:

TESTER CONNECTION	SWITCH CONDITION	SPECIFIED CONDITION

TESTER CONNECTION	SWITCH CONDITION	SPECIFIED CONDITION
R2-4 (SP) - Body ground	Ignition switch ON	Below 1 V
R2-3 (GSP) - Body ground	Ignition switch ON	Below 1 V

NG ▶ **REPLACE FRONT SEAT WIRE RH**

OK ▼

3.	CHECK FRONT SEAT WIRE RH (OPEN)

(a) Turn the ignition switch off.

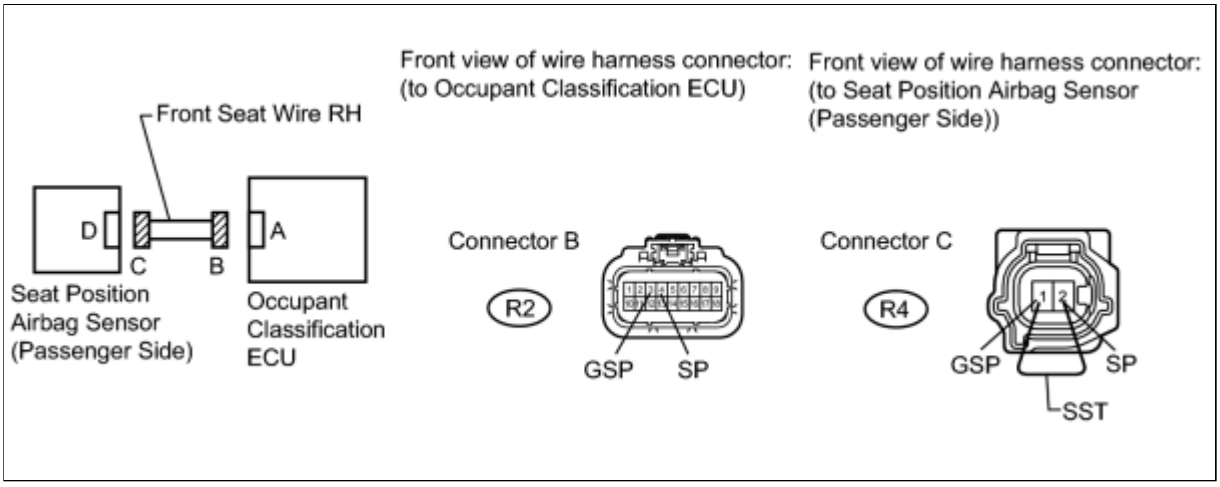

(b) Disconnect the cable from the negative (-) battery terminal.

(c) Using SST, connect terminals 2 (SP) and 1 (GSP) of connector C.

NOTICE:

Do not forcibly insert SST into the terminals of the connector when connecting.

SST: 09843-18040

(d) Measure the resistance according to the value(s) in the table below.

Standard Resistance:

TESTER CONNECTION	CONDITION	SPECIFIED CONDITION
R2-4 (SP) - R2-3 (GSP)	Always	Below 1 Ω

NG ▶ **REPLACE FRONT SEAT WIRE RH**

OK

4.	**CHECK FRONT SEAT WIRE RH (SHORT TO GROUND)**

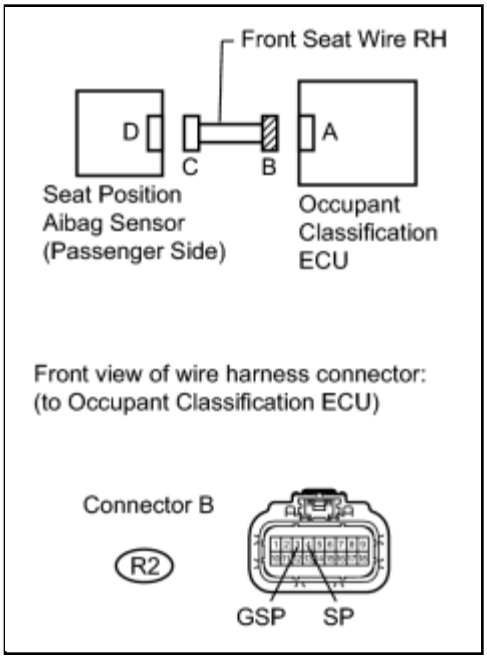

(a) Disconnect SST from connector C.

(b) Measure the resistance according to the value(s) in the table below.

Standard Resistance:

TESTER CONNECTION	CONDITION	SPECIFIED CONDITION
R2-4 (SP) - Body ground	Always	1 MΩ or higher
R2-3 (GSP) - Body ground	Always	1 MΩ or higher

NG ▶ **REPLACE FRONT SEAT WIRE RH**

OK

5.	**CHECK FRONT SEAT WIRE RH (SHORT)**

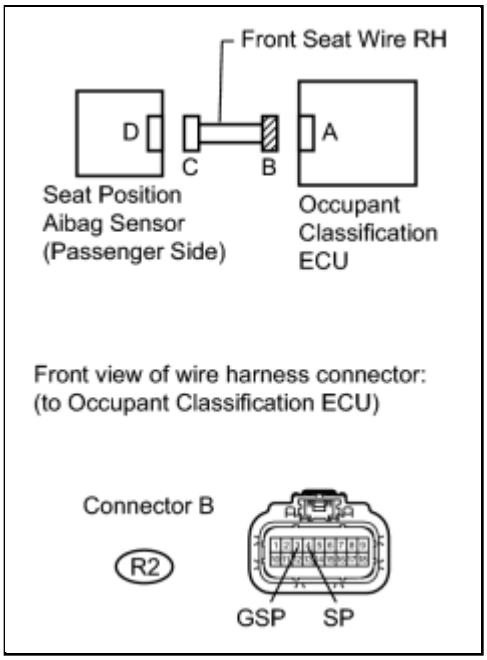

(a) Measure the resistance according to the value(s) in the table below.

Standard Resistance:

TESTER CONNECTION	CONDITION	SPECIFIED CONDITION
R2-4 (SP) - R2-3 (GSP)	Always	1 MΩ or higher

NG ▶ **REPLACE FRONT SEAT WIRE RH**

OK ▼

6.	**CHECK FOR DTC**

(a) Connect the connectors to the occupant classification ECU and the seat position airbag sensor (passenger side).

(b) Connect the cable to the negative (-) battery terminal.

(c) Turn the ignition switch to ON.

(d) Clear the DTCs stored in the occupant classification ECU INFO .

(e) Clear the DTCs stored in the center airbag sensor assembly INFO .

(f) Turn the ignition switch off.

(g) Turn the ignition switch to ON.

(h) Check for DTCs INFO .

OK:

DTC B1772 is not output.

HINT:

DTCs other than B1772 may be output at this time, but they are not related to this check.

NG ▶ **INSPECT SEAT POSITION AIRBAG SENSOR (PASSENGER SIDE)**

OK ▶ **USE SIMULATION METHOD TO CHECK**

7.	INSPECT SEAT POSITION AIRBAG SENSOR (PASSENGER SIDE)

(a) Turn the ignition switch off.

(b) Disconnect the cable from the negative (-) battery terminal.

(c) Replace the seat position airbag sensor with a known good part (passenger side) INFO .

HINT:

- Perform an inspection using known good parts from another vehicle if possible.
- The seat position airbag sensor is installed on the driver side.

(d) Connect the cable to the negative (-) battery terminal.

(e) Turn the ignition switch to ON.

(f) Clear the DTCs stored in the occupant classification ECU INFO .

(g) Clear the DTCs stored in the center airbag sensor assembly INFO .

(h) Turn the ignition switch off.

(i) Turn the ignition switch to ON.

(j) Check for DTCs INFO .

OK:
DTC B1772 is not output.

HINT:

DTCs other than B1772 may be output at this time, but they are not related to this check.

NG ▶ **REPLACE OCCUPANT CLASSIFICATION ECU**

OK ▶ **END**

8.	REPLACE OCCUPANT CLASSIFICATION ECU

(a) Connect the Techstream to the DLC3.

(b) Turn the ignition switch to ON.

(c) Using the Techstream, save the ECU data from the ECU currently installed on the vehicle INFO .

(d) Turn the ignition switch off.

(e) Disconnect the cable from the negative (-) battery terminal.

(f) Replace the occupant classification ECU INFO .

(g) Connect the cable to the negative (-) battery terminal.

(h) Turn the ignition switch to ON.

(i) Using the Techstream, load the previous ECU data stored into the new ECU INFO .

(j) Turn the ignition switch off.

(k) Turn the ignition switch to ON.

(l) Clear the DTCs stored in the memory INFO .

HINT:

If the DTCs are not cleared at this time, past DTCs will remain.

NEXT

9.	**PERFORM SENSITIVITY CHECK**

(a) Perform the sensitivity check INFO .

NEXT **END**

Last Modified: 3-10-2010	6.4 S	**From:** 200901
Model Year: 2010	**Model:** Corolla	**Doc ID:** RM000001OQL01EX
Title: SUPPLEMENTAL RESTRAINT SYSTEMS: OCCUPANT CLASSIFICATION SYSTEM: DIAGNOSTIC TROUBLE CODE CHART (2010 Corolla)		

DIAGNOSTIC TROUBLE CODE CHART

HINT:

When DTC B1650/32 is detected as a result of troubleshooting for the airbag system, perform troubleshooting for the occupant classification system as shown in the chart below.

Occupant Classification System

DTC CODE	DETECTION ITEM	TROUBLE AREA	PASSENGER AIRBAG ON/OFF INDICATOR (OFF INDICATOR)	SEE PAGE
B1771	Passenger Side Buckle Switch Circuit Malfunction	1. Front seat wire RH 2. Front seat inner belt assembly RH (Passenger side buckle switch) 3. Occupant classification ECU	ON	INFO
B1772	Seat Position Sensor Circuit Malfunction	1. Front seat wire RH 2. Seat position airbag sensor (Passenger side) 3. Occupant classification ECU	ON	INFO
B1773	Belt Tension Sensor Circuit Malfunction	1. No. 2 floor wire 2. Front seat wire RH 3. Front seat outer belt assembly RH (Seat belt tension sensor) 4. Occupant classification ECU	ON	INFO
B1774	Pressure Sensor Circuit Malfunction	1. Front seat wire RH 2. Occupant classification sensor 3. Occupant classification ECU	ON	INFO
B1775	Pressure Sensor Power Source Circuit Malfunction	1. Front seat wire RH 2. Occupant classification sensor 3. Occupant classification ECU	ON	INFO
B1776	Seat Belt Tension Sensor Power Source Circuit Malfunction	1. No. 2 floor wire 2. Front seat wire RH 3. Front seat outer belt assembly RH (Seat belt tension sensor) 4. Occupant classification ECU	ON	INFO

DTC CODE	DETECTION ITEM	TROUBLE AREA	PASSENGER AIRBAG ON/OFF INDICATOR (OFF INDICATOR)	SEE PAGE
B1790	Center Airbag Sensor Assembly Communication Circuit Malfunction	1. No. 2 floor wire 2. Front seat wire RH 3. Occupant classification ECU 4. Center airbag sensor assembly	ON	INFO
B1795	Occupant Classification ECU Malfunction	Occupant classification ECU	ON	INFO
B1797	Calibration Malfunction	1. There is no malfunction if this DTC is not output again after performing occupant classification system zero point calibration. 2. Occupant classification sensor 3. Occupant classification ECU	ON	INFO

Last Modified: 3-10-2010	6.4 C	**From:** 200901
Model Year: 2010	**Model:** Corolla	**Doc ID:** RM000001PK601DX
Title: SUPPLEMENTAL RESTRAINT SYSTEMS: OCCUPANT CLASSIFICATION SYSTEM: B1774,B1775: Pressure Sensor Circuit Malfunction (2010 Corolla)		

DTC	**B1774**	**Pressure Sensor Circuit Malfunction**

DTC	**B1775**	**Pressure Sensor Power Source Circuit Malfunction**

DESCRIPTION

The pressure sensor circuit consists of the occupant classification ECU and the occupant classification sensor.

The occupant classification sensor sends the pressure signal to the occupant classification ECU.

DTC B1774 and B1775 are recorded when a malfunction is detected in the pressure sensor circuit.

DTC NO.	DTC DETECTING CONDITION	TROUBLE AREA
B1774 B1775	• The occupant classification ECU receives a short circuit signal, open circuit signal and short circuit to ground signal or a short circuit to B+ signal in the pressure sensor circuit for 2 seconds. • Occupant classification sensor malfunction • Occupant classification ECU malfunction	• Front seat wire RH • Occupant classification sensor • Occupant classification ECU

HINT:

When DTC B1650/32 is detected as a result of troubleshooting for the airbag system, check the DTCs stored in the occupant classification ECU. When DTC B1774 and B1775 are output, perform troubleshooting for those DTCs.

WIRING DIAGRAM

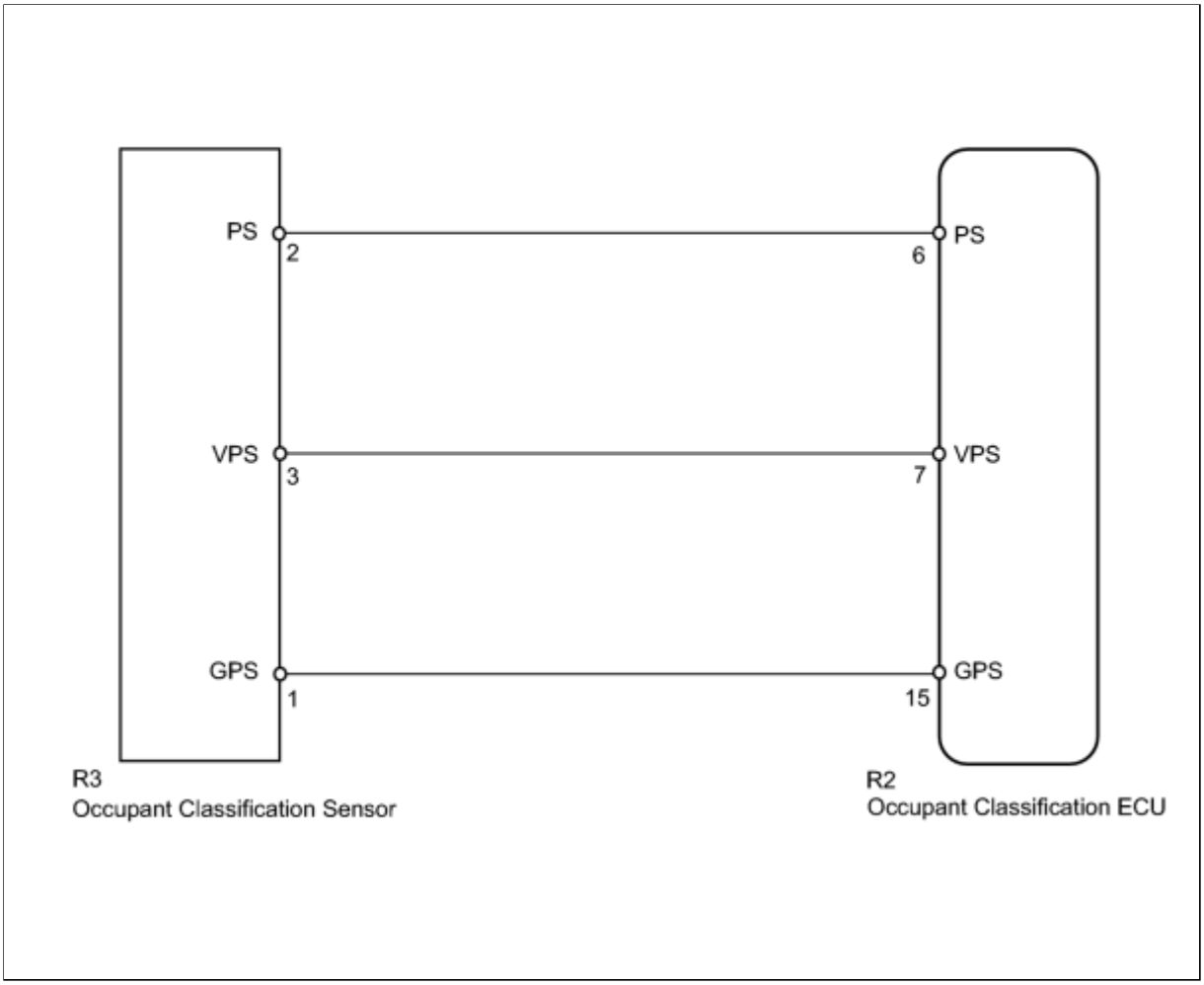

INSPECTION PROCEDURE

HINT:

- If troubleshooting (wire harness inspection) is difficult to perform, remove the passenger seat installation bolts to access the underside of the seat cushion.
- In the above case, hold the seat so that it does not fall down. Holding the seat for a long period of time may damage the seat and deform the seat rails. Hold the seat only as necessary.
- After performing the zero point calibration, check for DTCs to confirm that the calibration is completed normally. (If it fails, DTC B1797 will be output.)

PROCEDURE

1.	**CHECK CONNECTORS**

(a) Turn the ignition switch off.

(b) Disconnect the cable from the negative (-) battery terminal.

(c) Check that the connectors are properly connected to the occupant classification ECU and the occupant classification sensor.

OK:

The connectors are properly connected.

HINT:

If the connectors are not connected securely, reconnect the connectors and proceed to the next inspection.

(d) Disconnect the connectors from the occupant classification ECU and the occupant classification sensor.

(e) Check that the terminals of the connectors are not damaged.

OK:

The terminals are not deformed or damaged.

NG ▶ **REPLACE FRONT SEAT WIRE RH**

OK ▼

2.	**CHECK FRONT SEAT WIRE RH (SHORT TO B+)**

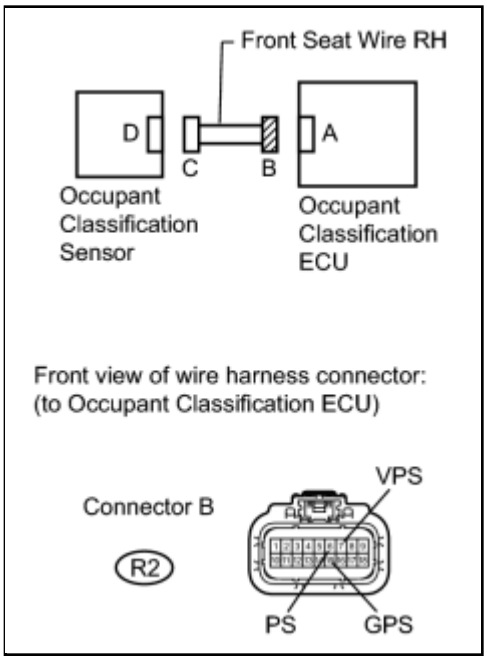

(a) Connect the cable to the negative (-) battery terminal.

(b) Turn the ignition switch to ON.

(c) Measure the voltage according to the value(s) in the table below.

Standard Voltage:

TESTER CONNECTION	SWITCH CONDITION	SPECIFIED CONDITION

TESTER CONNECTION	SWITCH CONDITION	SPECIFIED CONDITION
R2-6 (PS) - Body ground	Ignition switch ON	Below 1 V
R2-7 (VPS) - Body ground	Ignition switch ON	Below 1 V
R2-15 (GPS) - Body ground	Ignition switch ON	Below 1 V

NG ▶ **REPLACE FRONT SEAT WIRE RH**

OK ▼

3.	CHECK FRONT SEAT WIRE RH (OPEN)

(a) Turn the ignition switch off.

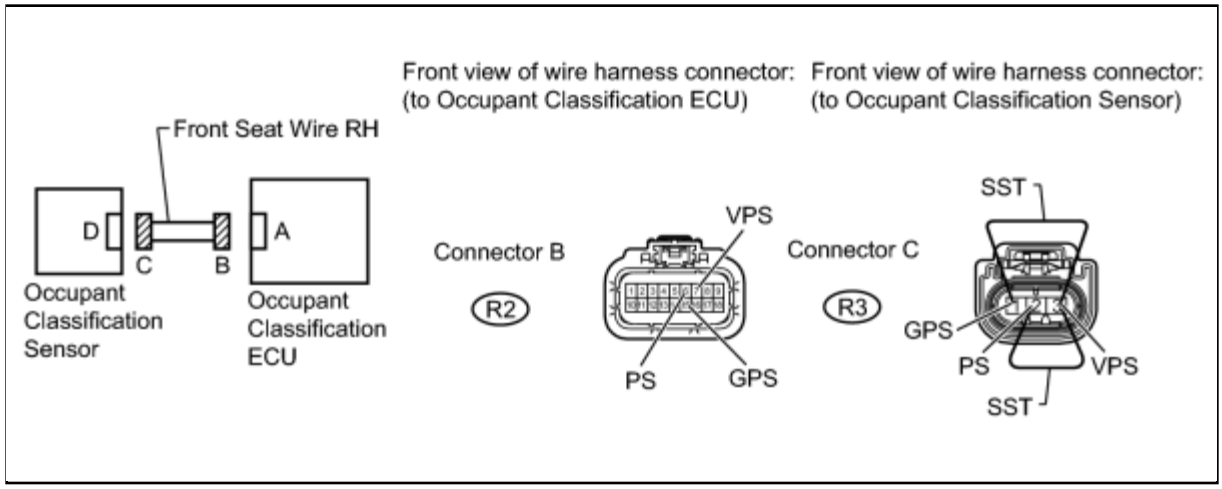

(b) Disconnect the cable from the negative (-) battery terminal.

(c) Using SST, connect terminals 1 (GPS) and 3 (VPS), and connect terminals 2 (PS) and 3 (VPS) of connector C.

NOTICE:

Do not forcibly insert SST into the terminals of the connector when connecting the wire.

SST: 09843-18040

(d) Measure the resistance according to the value(s) in the table below.

Standard Resistance:

TESTER CONNECTION	CONDITION	SPECIFIED CONDITION

TESTER CONNECTION	CONDITION	SPECIFIED CONDITION
R2-6 (PS) - R2-7 (VPS)	Always	Below 1 Ω
R2-7 (VPS) - R2-15 (GPS)	Always	Below 1 Ω

NG ▶ **REPLACE FRONT SEAT WIRE RH**

OK ▼

4.	**CHECK FRONT SEAT WIRE RH (SHORT TO GROUND)**

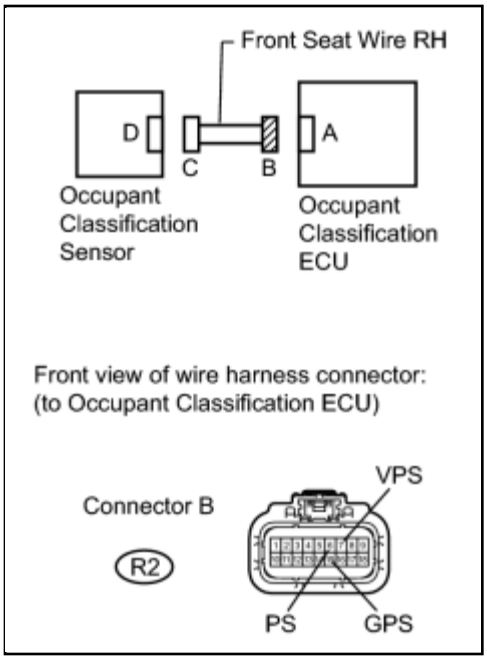

(a) Disconnect SST from connector C.

(b) Measure the resistance according to the value(s) in the table below.

Standard Resistance:

TESTER CONNECTION	CONDITION	SPECIFIED CONDITION
R2-6 (PS) - Body ground	Always	1 MΩ or higher
R2-7 (VPS) - Body ground	Always	1 MΩ or higher
R2-15 (GPS) - Body ground	Always	1 MΩ or higher

NG ▶ **REPLACE FRONT SEAT WIRE RH**

OK

5.	CHECK FRONT SEAT WIRE RH (SHORT)

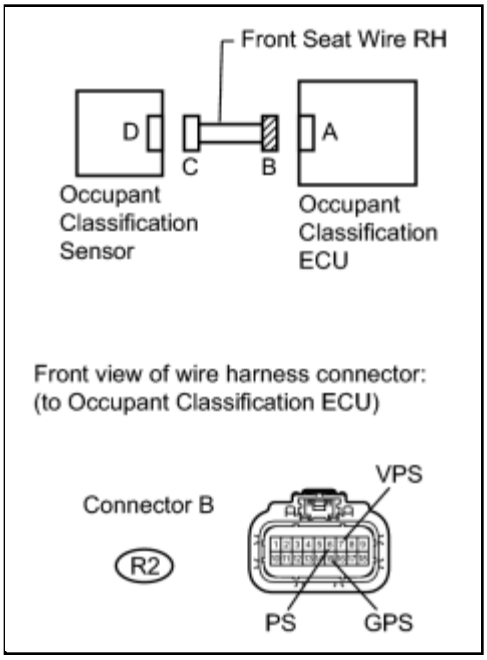

(a) Measure the resistance according to the value(s) in the table below.

Standard Resistance:

TESTER CONNECTION	CONDITION	SPECIFIED CONDITION
R2-6 (PS) - R2-15 (GPS)	Always	1 MΩ or higher
R2-7 (VPS) - R2-15 (GPS)	Always	1 MΩ or higher

NG **REPLACE FRONT SEAT WIRE RH**

OK

6.	CHECK FOR DTC

(a) Connect the connectors to the occupant classification ECU and the occupant classification sensor.

(b) Connect the cable to the negative (-) battery terminal.

(c) Turn the ignition switch to ON.

(d) Clear the DTCs stored in the occupant classification ECU INFO .

(e) Clear the DTCs stored in the center airbag sensor assembly INFO .

(f) Turn the ignition switch off.

(g) Turn the ignition switch to ON.

(h) Check for DTCs INFO .

OK:
DTCs B1774 and B1775 are not output.

HINT:

Codes other than B1774 and B1775 may be output at this time, but they are not related to this check.

NG ▶ **REPLACE OCCUPANT CLASSIFICATION SENSOR (FRONT SEAT CUSHION ASSEMBLY)**

OK ▶ **USE SIMULATION METHOD TO CHECK**

7.	REPLACE OCCUPANT CLASSIFICATION SENSOR (FRONT SEAT CUSHION ASSEMBLY)

(a) Turn the ignition switch off.

(b) Disconnect the cable from the negative (-) battery terminal.

(c) Replace the front seat cushion assembly (with occupant classification ECU and occupant classification sensor) with a known good part INFO .

HINT:

Perform an inspection using known good parts from another vehicle if possible.

(d) Connect the cable to the negative (-) battery terminal.

(e) Turn the ignition switch to ON.

(f) Clear the DTCs stored in the occupant classification ECU INFO .

(g) Clear the DTCs stored in the center airbag sensor assembly INFO .

(h) Turn the ignition switch off.

(i) Turn the ignition switch to ON.

(j) Check for DTCs INFO .

OK:
DTC B1774 and B1775 are not output.

HINT:

Codes other than B1774 and B1775 may be output at this time, but they are not related to this check.

NEXT

8.	PERFORM ZERO POINT CALIBRATION

(a) Connect the Techstream to the DLC3.

(b) Turn the ignition switch to ON.

(c) Using the Techstream, perform the zero point calibration INFO .

(d) Turn the ignition switch off.

(e) Turn the ignition switch to ON.

(f) Clear the DTCs stored in the memory INFO .

HINT:

If the DTCs are not cleared at this time, past DTCs will remain.

NEXT

9.	CHECK FOR DTC

HINT:

Check that the zero point calibration is completed normally. If either of the following conditions is met, DTC B1797 will be output (Refer to Initialization: INFO):

- Zero point calibration is performed when the conditions for the calibration are not satisfied.
- Zero point calibration has failed.

(a) Turn the ignition switch to ON.

(b) Clear the DTCs stored in the occupant classification ECU INFO .

(c) Clear the DTCs stored in the center airbag sensor assembly INFO .

(d) Turn the ignition switch off.

(e) Turn the ignition switch to ON.

(f) Check for DTCs INFO .

OK:

DTC B1797 is not output.

NG ▶ **GO TO DTC B1797**

OK ▼

10.	**PERFORM SENSITIVITY CHECK**

(a) Perform the sensitivity check INFO .

NEXT ▶ **END**

Last Modified: 3-10-2010	6.4 C	**From:** 200901
Model Year: 2010	**Model:** Corolla	**Doc ID:** RM0000010VF03NX
Title: SUPPLEMENTAL RESTRAINT SYSTEMS: OCCUPANT CLASSIFICATION SYSTEM: B1790: Center Airbag Sensor Assembly Communication Circuit Malfunction (2010 Corolla)		

DTC	**B1790**	**Center Airbag Sensor Assembly Communication Circuit Malfunction**

DESCRIPTION

The center airbag sensor assembly communication circuit consists of the occupant classification ECU and the center airbag sensor assembly.

DTC B1790 is recorded when a malfunction is detected in the center airbag sensor assembly communication circuit.

DTC NO.	DTC DETECTING CONDITION	TROUBLE AREA
B1790	• The occupant classification ECU receives a short circuit signal, an open circuit signal and short circuit to ground signal or a short circuit to B+ signal in the center airbag sensor assembly communication circuit for 2 seconds. • Center airbag sensor assembly malfunction • Occupant classification ECU malfunction	• No. 2 floor wire • Front seat wire RH • Occupant classification ECU • Center airbag sensor assembly

HINT:

When DTC B1650/32 is detected as a result of troubleshooting for the airbag system, check the DTCs stored in the occupant classification ECU. When DTC B1790 is output, perform troubleshooting for the DTC.

WIRING DIAGRAM

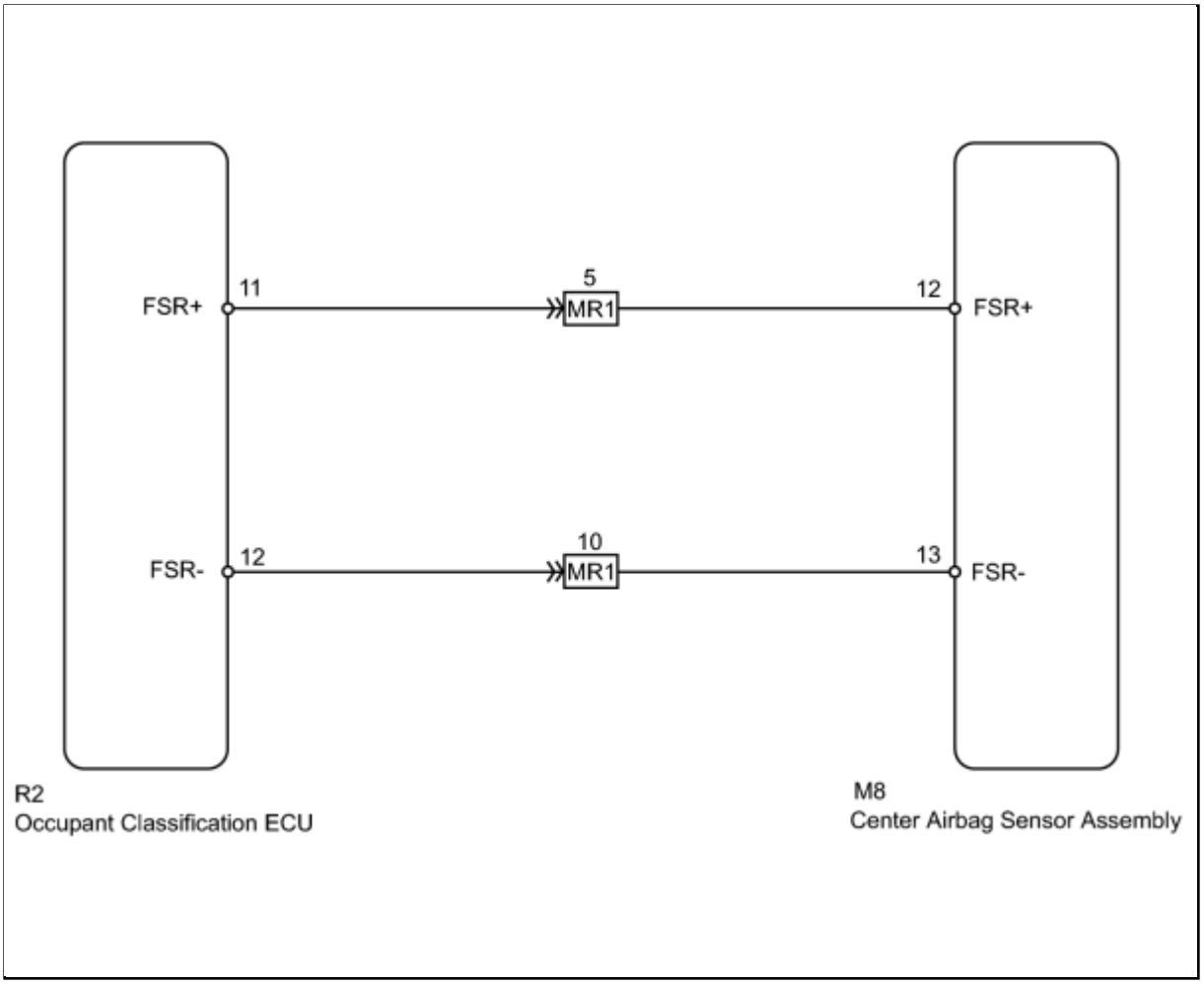

INSPECTION PROCEDURE

HINT:

- If troubleshooting (wire harness inspection) is difficult to perform, remove the front passenger seat installation bolts to access the underside of the seat cushion.
- In the above case, hold the seat so that it does not fall down. Holding the seat for a long period of time may damage the seat or deform the seat rails. Hold the seat only as necessary.

PROCEDURE

1.	**CHECK CONNECTORS**

(a) Turn the ignition switch off.

(b) Disconnect the cable from the negative (-) battery terminal, and wait for at least 90 seconds.

(c) Check that the connectors are properly connected to the occupant classification ECU and the center airbag sensor assembly.

OK:

The connectors are properly connected.

HINT:

If the connectors are not connected securely, reconnect the connectors and proceed to the next inspection.

(d) Disconnect the connectors from the center airbag sensor assembly and the occupant classification ECU.

(e) Check that the terminals of the connectors are not damaged.

OK:

The terminals are not deformed or damaged.

NG ▶ **REPLACE WIRE HARNESS**

OK ▼

2.	**CHECK OCCUPANT CLASSIFICATION SYSTEM CIRCUIT (SHORT TO B+)**

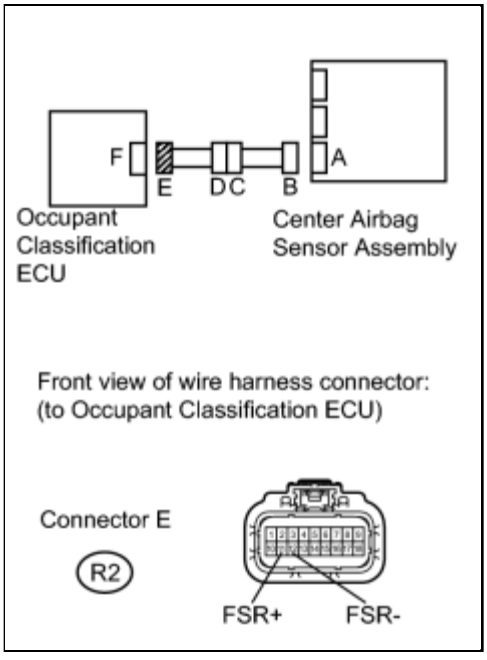

(a) Connect the cable to the negative (-) battery terminal.

(b) Turn the ignition switch to ON.

(c) Measure the voltage according to the value(s) in the table below.

Standard Voltage:

TESTER CONNECTION	SWITCH CONDITION	SPECIFIED CONDITION

TESTER CONNECTION	SWITCH CONDITION	SPECIFIED CONDITION
R2-11 (FSR+) - Body ground	Ignition switch ON	Below 1 V
R2-12 (FSR-) - Body ground	Ignition switch ON	Below 1 V

NG ▶ **CHECK NO. 2 FLOOR WIRE (SHORT TO B+)**

OK ▼

3.	CHECK OCCUPANT CLASSIFICATION SYSTEM CIRCUIT (OPEN)

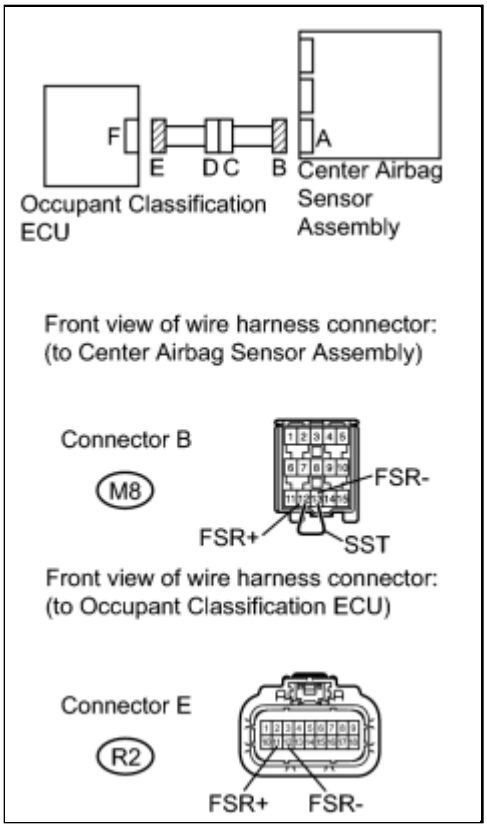

(a) Turn the ignition switch off.

(b) Disconnect the cable from the negative (-) battery terminal, and wait for at least 90 seconds.

(c) Using SST, connect terminals 12 (FSR+) and 13 (FSR-) of connector B.

NOTICE:

Do not forcibly insert SST into the terminals of the connector when connecting the wire.

SST: 09843-18040

(d) Measure the resistance according to the value(s) in the table below.

Standard Resistance:

TESTER CONNECTION	CONDITION	SPECIFIED CONDITION
R2-11 (FSR+) - R2-12 (FSR-)	Always	Below 1 Ω

NG ▶ **CHECK NO. 2 FLOOR WIRE (OPEN)**

OK ▼

4.	CHECK OCCUPANT CLASSIFICATION SYSTEM CIRCUIT (SHORT)

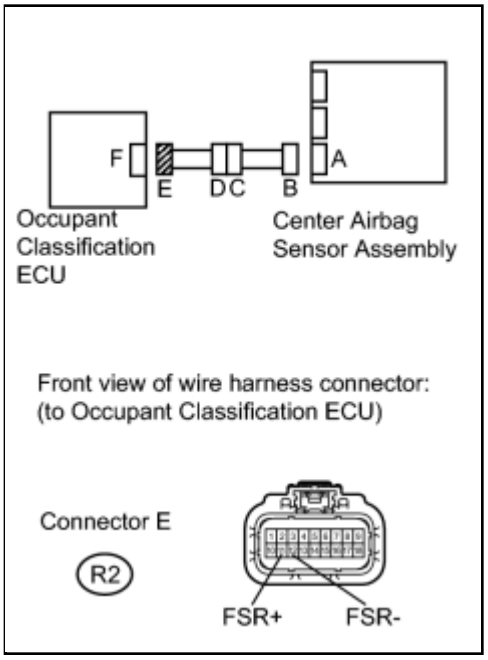

(a) Disconnect SST from connector B.

(b) Measure the resistance according to the value(s) in the table below.

Standard Resistance:

TESTER CONNECTION	CONDITION	SPECIFIED CONDITION
R2-11 (FSR+) - R2-12 (FSR-)	Always	1 MΩ or higher

NG ▶ **CHECK NO. 2 FLOOR WIRE (SHORT)**

OK

5.	CHECK OCCUPANT CLASSIFICATION SYSTEM CIRCUIT (SHORT TO GROUND)

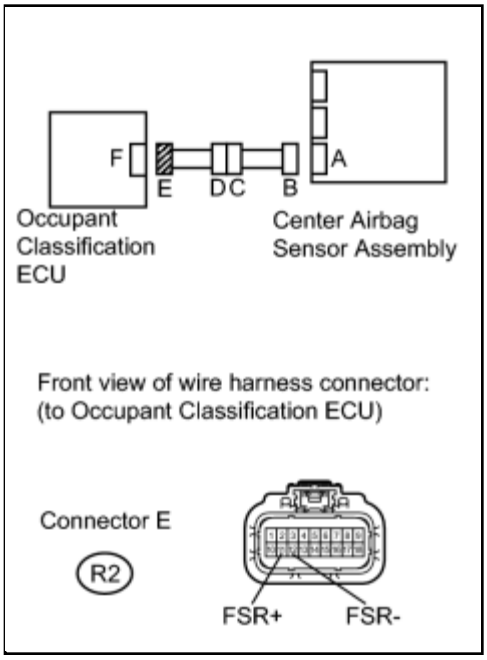

(a) Measure the resistance according to the value(s) in the table below.

Standard Resistance:

TESTER CONNECTION	CONDITION	SPECIFIED CONDITION
R2-11 (FSR+) - Body ground	Always	1 MΩ or higher
R2-12 (FSR-) - Body ground	Always	1 MΩ or higher

NG ▶ **CHECK NO. 2 FLOOR WIRE (SHORT TO GROUND)**

OK

6.	RECHECK FOR DTC

(a) Connect the connectors to the occupant classification ECU and the center airbag sensor assembly.

(b) Connect the Techstream to the DLC3.

(c) Connect the cable to the negative (-) battery terminal.

(d) Turn the ignition switch to ON.

(e) Clear the DTCs stored in the occupant classification ECU INFO .

(f) Clear the DTCs stored in the center airbag sensor assembly INFO .

(g) Turn the ignition switch off.

(h) Turn the ignition switch to ON.

(i) Using the Techstream, check for occupant classification ECU DTCs INFO .

OK:
DTC B1790 is not output.

HINT:

Codes other than DTC B1790 may be output at this time, but they are not related to this check.

NG ▶ **REPLACE OCCUPANT CLASSIFICATION ECU**

OK ▶ **USE SIMULATION METHOD TO CHECK**

7.	REPLACE OCCUPANT CLASSIFICATION ECU

(a) Connect the Techstream to the DLC3.

(b) Turn the ignition switch to ON.

(c) Using the Techstream, save the ECU data from the ECU currently installed on the vehicle INFO .

(d) Turn the ignition switch off.

(e) Disconnect the cable from the negative (-) battery terminal.

(f) Replace the occupant classification ECU INFO .

(g) Connect the cable to the negative (-) battery terminal.

(h) Turn the ignition switch to ON.

(i) Using the Techstream, load the previous ECU data stored into the new ECU INFO .

(j) Turn the ignition switch off.

(k) Turn the ignition switch to ON.

(l) Clear the DTCs stored in the memory INFO .

HINT:

If the DTCs are not cleared at this time, past DTCs will remain.

NEXT

8.	**RECHECK FOR DTC**

(a) Turn the ignition switch to ON.

(b) Clear the DTCs stored in the occupant classification ECU INFO .

(c) Clear the DTCs stored in the center airbag sensor assembly INFO .

(d) Turn the ignition switch off.

(e) Turn the ignition switch to ON.

(f) Using the Techstream, check for occupant classification ECU DTCs INFO .

OK:
DTC B1790 is not output.

HINT:

Codes other than DTC B1790 may be output at this time, but they are not related to this check.

NG ▶ **REPLACE CENTER AIRBAG SENSOR ASSEMBLY**

OK

9.	**PERFORM SENSITIVITY CHECK**

(a) Perform the sensitivity check INFO .

NEXT ▶ **END**

10.	**REPLACE CENTER AIRBAG SENSOR ASSEMBLY**

(a) Turn the ignition switch off.

(b) Disconnect the cable from the negative (-) battery terminal, and wait for at least 90 seconds.

(c) Replace the center airbag sensor assembly INFO .

NEXT

11.	**PERFORM SENSITIVITY CHECK**

(a) Perform the sensitivity check INFO .

NEXT **END**

12.	**CHECK NO. 2 FLOOR WIRE (SHORT TO B+)**

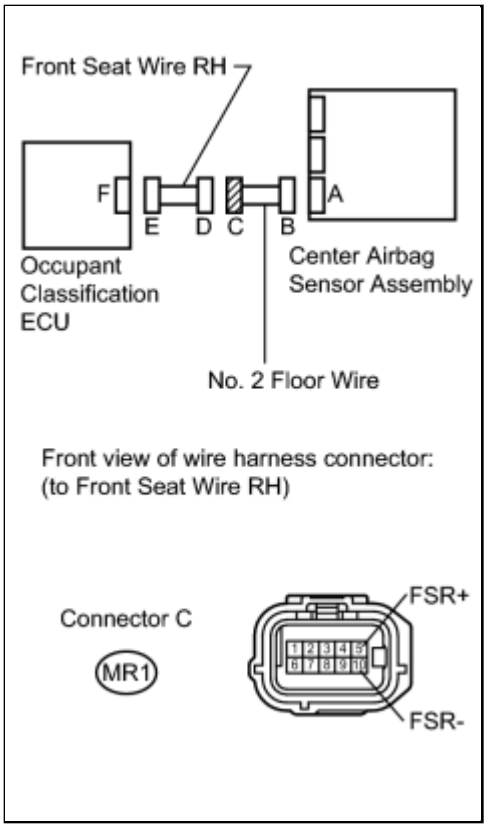

(a) Turn the ignition switch off.

(b) Disconnect the cable from the negative (-) battery terminal, and wait for at least 90 seconds.

(c) Disconnect the front seat wire RH connector from the No. 2 floor wire.

(d) Connect the cable to the negative (-) battery terminal.

(e) Turn the ignition switch to ON.

(f) Measure the voltage according to the value(s) in the table below.

Standard Voltage:

TESTER CONNECTION	SWITCH CONDITION	SPECIFIED CONDITION
MR1-5 (FSR+) - Body ground	Ignition switch ON	Below 1 V
MR1-10 (FSR-) - Body ground	Ignition switch ON	Below 1 V

NG ▶ **REPLACE NO. 2 FLOOR WIRE**

OK ▶ **REPLACE FRONT SEAT WIRE RH**

13.	CHECK NO. 2 FLOOR WIRE (OPEN)

(a) Disconnect the front seat wire RH connector from the No. 2 floor wire.

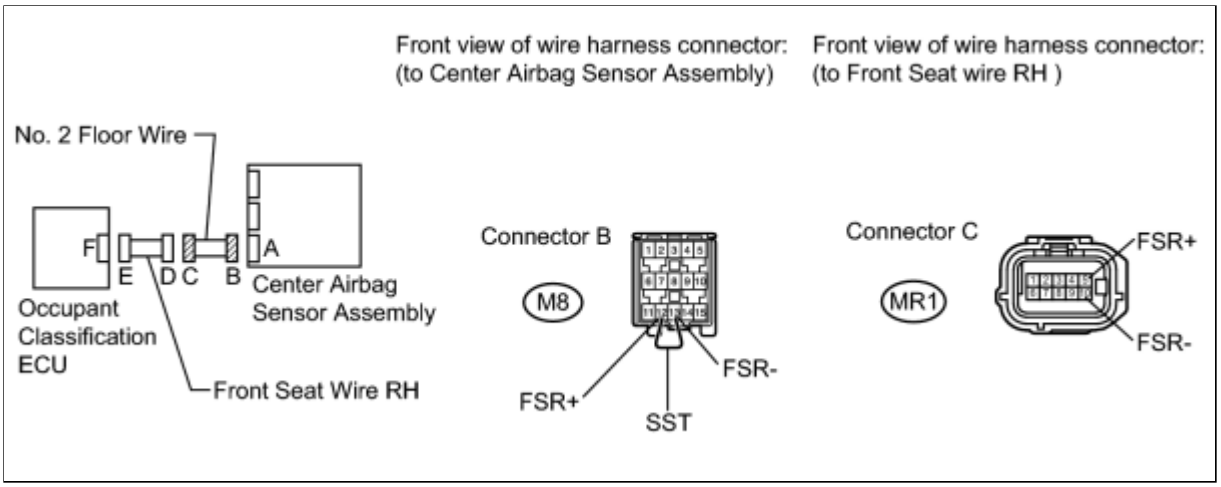

HINT:

SST has already been inserted into connector B.

(b) Measure the resistance according to the value(s) in the table below.

Standard Resistance:

TESTER CONNECTION	CONDITION	SPECIFIED CONDITION
MR1-5 (FSR+) - MR1-10 (FSR-)	Always	Below 1 Ω

NG ▶ **REPLACE NO. 2 FLOOR WIRE**

OK ▶ **REPLACE FRONT SEAT WIRE RH**

14.	**CHECK NO. 2 FLOOR WIRE (SHORT)**

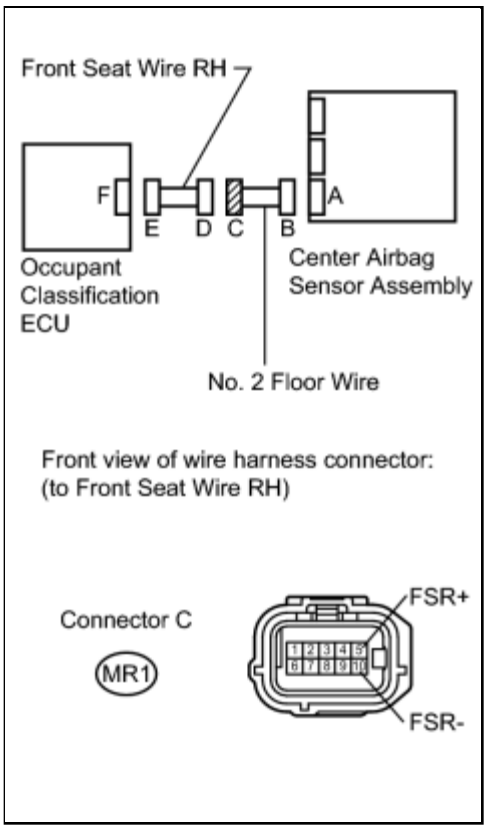

(a) Disconnect the front seat wire RH connector from the No. 2 floor wire.

(b) Measure the resistance according to the value(s) in the table below.

Standard Resistance:

TESTER CONNECTION	CONDITION	SPECIFIED CONDITION
MR1-5 (FSR+) - MR1-10 (FSR-)	Always	1 MΩ or higher

NG ▶ **REPLACE NO. 2 FLOOR WIRE**

OK ▶ **REPLACE FRONT SEAT WIRE RH**

15.	**CHECK NO. 2 FLOOR WIRE (SHORT TO GROUND)**

(a) Disconnect the front seat wire RH connector from the

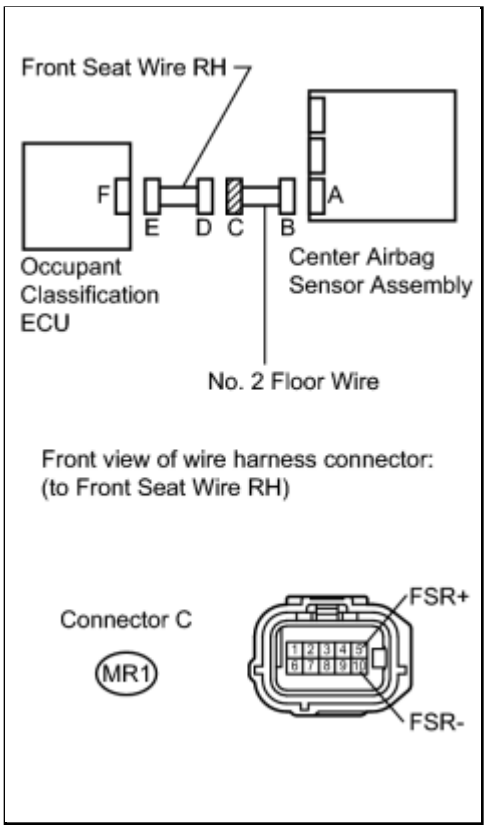

No. 2 floor wire.

(b) Measure the resistance according to the value(s) in the table below.

Standard Resistance:

TESTER CONNECTION	CONDITION	SPECIFIED CONDITION
MR1-5 (FSR+) - Body ground	Always	1 MΩ or higher
MR1-10 (FSR-) - Body ground	Always	1 MΩ or higher

NG ▶ **REPLACE NO. 2 FLOOR WIRE**

OK ▶ **REPLACE FRONT SEAT WIRE RH**

Last Modified: 3-10-2010	6.4 C	**From:** 200901
Model Year: 2010	**Model:** Corolla	**Doc ID:** RM000001PK801DX
Title: SUPPLEMENTAL RESTRAINT SYSTEMS: OCCUPANT CLASSIFICATION SYSTEM: B1797: Calibration Malfunction (2010 Corolla)		

DTC	**B1797**	**Calibration Malfunction**

DESCRIPTION

DTC B1797 is output when the following conditions are met:

- Zero point calibration is performed when the conditions for the calibration are not satisfied.
- Zero point calibration has failed.

Condition for the Zero Point Calibration

ITEM	CONDITION
DTC	Not recorded
Front passenger seat occupant	Vacant
Front passenger side buckle switch	OFF (The seat belt is not fastened)
ECU temperature	0 to 46°C (32 to 114.8°F)
Filtered pressure	38 to 75 count

DTC NO.	DTC DETECTING CONDITION	TROUBLE AREA
B1797	• Zero point calibration is performed when the conditions for the calibration are not satisfied. • Zero point calibration has failed.	• There is no malfunction if this DTC is not output again after performing occupant classification system zero point calibration. • Occupant classification sensor • Occupant classification ECU

HINT:

When DTC B1650/32 is detected as a result of troubleshooting for the airbag system, check the DTCs stored in the occupant classification ECU. When DTC B1797 is output, perform troubleshooting for the DTC.

INSPECTION PROCEDURE

PROCEDURE

1.	CHECK FOR DTC

(a) Turn the ignition switch to ON.

(b) Clear the DTCs stored in the occupant classification ECU INFO .

(c) Clear the DTCs stored in the center airbag sensor assembly INFO .

(d) Turn the ignition switch off.

(e) Turn the ignition switch to ON, and wait for at least 10 seconds.

(f) Check for DTCs INFO .

OK:
DTC B1797 is not output.

HINT:

Codes other than B1797 may be output at this time, but they are not related to this check.

NG ▶ **READ VALUE USING DATA LIST (SPECIFIED CONDITION FOR ZERO POINT CALIBRATION)**

OK ▶ **PERFORM ZERO POINT CALIBRATION**

2.	READ VALUE USING DATA LIST (SPECIFIED CONDITION FOR ZERO POINT CALIBRATION)

(a) Connect the Techstream to the DLC3.

(b) Turn the ignition switch to ON.

(c) Using the Techstream, read the Data List INFO .

TESTER DISPLAY	MEASUREMENT ITEM/RANGE	NORMAL CONDITION	SPECIFIED CONDITION FOR ZERO POINT CALIBRATION
Pressure Sensor Output	Pressure sensor output/ Min.: 0 Max.: 255	0 to 210 (reference value)	0 to 2
Thermistor Temperature Output	Thermistor temperature output/ Min.: -40°C (-40°F) Max.: 90°C (194°F)	-40 to 85°C (-40 to 185°F)	3 to 40°C (37 to 104°F)

TESTER DISPLAY	MEASUREMENT ITEM/RANGE	NORMAL CONDITION	SPECIFIED CONDITION FOR ZERO POINT CALIBRATION
Number of Present DTC	Number of present trouble codes/ Min.: 0 Max.: 255	0	0
Number of Past DTC	Number of past trouble codes/ Min.: 0 Max.: 255	0	0

Result:

RESULT	PROCEED TO
All items correspond to the range of specified condition for zero point calibration.	A
THERMISTOR TEMP does not correspond to the range of specified condition for zero point calibration.	B

B ▶ **REPLACE OCCUPANT CLASSIFICATION SENSOR (FRONT SEAT CUSHION ASSEMBLY)**

A ▼

3.	**CHECK FOR DTC**

HINT:

Check that the zero point calibration is completed normally. If any of the following conditions is met, DTC B1797 will be output (Refer to Initialization: INFO).

- Zero point calibration is performed when the calibration conditions are not satisfied.
- Zero point calibration has failed.

(a) Turn the ignition switch to ON.

(b) Clear the DTCs stored in the occupant classification ECU INFO .

(c) Clear the DTCs stored in the center airbag sensor assembly INFO .

(d) Turn the ignition switch off.

(e) Turn the ignition switch to ON.

(f) Check for DTCs INFO .

OK:
DTC B1797 is not output.

NEXT

4.	PERFORM ZERO POINT CALIBRATION

(a) Connect the Techstream to the DLC3.

(b) Turn the ignition switch to ON.

(c) Using the Techstream, perform the zero point calibration INFO .

(d) Turn the ignition switch off.

(e) Turn the ignition switch to ON.

(f) Clear the DTCs stored in the memory INFO .

HINT:

If the DTCs are not cleared at this time, past DTCs will remain.

NEXT

5.	CHECK FOR DTC

(a) Turn the ignition switch to ON.

(b) Clear the DTCs stored in the occupant classification ECU INFO .

(c) Clear the DTCs stored in the center airbag sensor assembly INFO .

(d) Turn the ignition switch off.

(e) Turn the ignition switch to ON.

(f) Check for DTCs INFO .

OK:

DTC B1797 is not output.

HINT:

Codes other than B1797 may be output at this time, but they are not related to this check.

NEXT ▶ **END**

6.	REPLACE OCCUPANT CLASSIFICATION SENSOR (FRONT SEAT CUSHION ASSEMBLY)

(a) Turn the ignition switch off.

(b) Disconnect the cable from the negative (-) battery terminal.

(c) Replace the front seat cushion assembly (with occupant classification ECU and occupant classification sensor) INFO .

(d) Connect the cable to the negative (-) battery terminal.

(e) Turn the ignition switch to ON.

(f) Clear the DTCs stored in the occupant classification ECU INFO .

(g) Clear the DTCs stored in the center airbag sensor assembly INFO .

(h) Turn the ignition switch off.

(i) Turn the ignition switch to ON.

(j) Using the Techstream, check for occupant classification ECU DTCs INFO .

OK:

DTC is not output.

NEXT ▼

7.	PERFORM ZERO POINT CALIBRATION

(a) Connect the Techstream to the DLC3.

(b) Turn the ignition switch to ON.

(c) Using the Techstream, perform the zero point calibration INFO .

(d) Turn the ignition switch off.

(e) Turn the ignition switch to ON.

(f) Clear the DTCs stored in the occupant classification ECU INFO .

HINT:

If the DTCs are not cleared at this time, past DTCs will remain.

NEXT

8.	CHECK FOR DTC

(a) Turn the ignition switch to ON.

(b) Clear the DTCs stored in the occupant classification ECU INFO .

(c) Clear the DTCs stored in the center airbag sensor assembly INFO .

(d) Turn the ignition switch off.

(e) Turn the ignition switch to ON.

(f) Check for DTCs INFO .

OK:

DTC B1797 is not output.

NEXT

9.	PERFORM SENSITIVITY CHECK

(a) Perform the sensitivity check INFO .

NEXT **END**

Last Modified: 3-10-2010	6.4 C	**From:** 200901
Model Year: 2010	**Model:** Corolla	**Doc ID:** RM000000158201TX
Title: SUPPLEMENTAL RESTRAINT SYSTEMS: OCCUPANT CLASSIFICATION SYSTEM: B1795: Occupant Classification ECU Malfunction (2010 Corolla)		

DTC	**B1795**	**Occupant Classification ECU Malfunction**

DESCRIPTION

DTC B1795 is recorded when a malfunction is detected in the occupant classification ECU.

DTC NO.	DTC DETECTING CONDITION	TROUBLE AREA
B1795	Occupant classification ECU malfunction	Occupant classification ECU

HINT:

When DTC B1650/32 is detected as a result of troubleshooting for the airbag system, check the DTCs stored in the occupant classification ECU. When DTC B1795 is output, perform troubleshooting for the DTC.

INSPECTION PROCEDURE

HINT:

- If troubleshooting (wire harness inspection) is difficult to perform, remove the front passenger seat installation bolts to access the underside of the seat cushion.
- In the above case, hold the seat so that it does not fall down. Holding the seat for a long period of time may damage the seat or deform the seat rails. Hold the seat only as necessary.

PROCEDURE

1.	**CHECK FOR DTC**

(a) Turn the ignition switch to ON.

(b) Clear the DTCs stored in the occupant classification ECU INFO .

(c) Clear the DTCs stored in the center airbag sensor assembly INFO .

(d) Turn the ignition switch off.

(e) Turn the ignition switch to ON, and wait for at least 10 seconds.

(f) Check for DTCs INFO .

OK:

DTC B1795 is not output.

HINT:

Codes other than B1795 may be output at this time, but they are not related to this check.

NG ▶ **REPLACE OCCUPANT CLASSIFICATION ECU**

OK ▶ **USE SIMULATION METHOD TO CHECK**

2.	REPLACE OCCUPANT CLASSIFICATION ECU

(a) Connect the Techstream to the DLC3.

(b) Turn the ignition switch to ON.

(c) Using the Techstream, save the ECU data from the ECU currently installed on the vehicle INFO .

(d) Turn the ignition switch off.

(e) Disconnect the cable from the negative (-) battery terminal.

(f) Replace the occupant classification ECU INFO .

(g) Connect the cable to the negative (-) battery terminal.

(h) Turn the ignition switch to ON.

(i) Using the Techstream, load the previous ECU data stored into the new ECU INFO .

(j) Turn the ignition switch off.

(k) Turn the ignition switch to ON.

(l) Clear the DTCs stored in the memory INFO .

HINT:

If the DTCs are not cleared at this time, past DTCs will remain.

NEXT

3.	PERFORM SENSITIVITY CHECK

(a) Perform the sensitivity check INFO .

NEXT END

Last Modified: 3-10-2010	6.4 J	**From:** 200901
Model Year: 2010	**Model:** Corolla	**Doc ID:** RM000001P3801DX
Title: SUPPLEMENTAL RESTRAINT SYSTEMS: OCCUPANT CLASSIFICATION SYSTEM: Trouble in Passenger Airbag ON/OFF Indicator (2010 Corolla)		

Trouble in Passenger Airbag ON/OFF Indicator

DESCRIPTION

The occupant classification system detects the front passenger seat condition. It then informs a passenger of the front passenger airbag assembly and front seat side airbag assembly condition (activated/not activated) by the passenger airbag ON/OFF indicator.

HINT:

Approximately 6 seconds after the ignition switch is turned to ON, the passenger airbag ON/OFF indicator will be ON/OFF depending on the conditions listed below.

FRONT PASSENGER SEAT CONDITION	PASSENGER AIRBAG ON/OFF INDICATOR		SRS WARNING LIGHT
	ON INDICATOR	OFF INDICATOR	
Adult is seated	ON	OFF	OFF
Child is seated	OFF	ON	OFF
Vacant	OFF	OFF	OFF
Occupant classification system failure	OFF	ON	ON

INSPECTION PROCEDURE

HINT:

When the indicator is malfunctioning, if the SRS warning light is off, follow the procedures below as a DTC is not output. If the SRS warning light is on, a DTC is output. Troubleshoot the output DTC.

PROCEDURE

1.	**PERFORM ZERO POINT CALIBRATION**

(a) Connect the Techstream to the DLC3.

(b) Turn the ignition switch to ON.

(c) Using the Techstream, perform the zero point calibration INFO .

(d) Turn the ignition switch off.

(e) Turn the ignition switch to ON.

(f) Clear the DTCs stored in the occupant classification ECU INFO .

HINT:

If the DTCs are not cleared at this time, past DTCs will remain.

NEXT

2.	**CHECK FOR DTC**

(a) Turn the ignition switch to ON.

(b) Clear the DTCs stored in the occupant classification ECU INFO .

(c) Clear the DTCs stored in the center airbag sensor assembly INFO .

(d) Turn the ignition switch off.

(e) Turn the ignition switch to ON.

(f) Check the DTCs of the occupant classification ECU INFO .

OK:
DTC B1797 is not output.

HINT:

Codes other than DTC B1797 may be output at this time, but they are not related to this check.

NG ▶ **GO TO DTC B1797**

OK

3.	**CHECK PASSENGER AIRBAG ON/OFF INDICATOR (PERFORM SENSITIVITY CHECK)**

(a) Perform the sensitivity check INFO .

NG ▶ READ VALUE USING DATA LIST (PASSENGER SIDE BUCKLE SWITCH)

OK ▶ END

4.	READ VALUE USING DATA LIST (PASSENGER SIDE BUCKLE SWITCH)

(a) Turn the ignition switch to ON.

(b) Using the Techstream, read the Data List INFO .

(1) Read the display when the passenger side buckle switch is operated.

TESTER DISPLAY	MEASUREMENT ITEM/RANGE	NORMAL CONDITION	DIAGNOSTIC NOTE
Passenger Buckle SW	Buckle switch (Passenger side)/ Unset: The seat belt is not fastened Set: The seat belt is fastened NG: Data is not determined	Unset/Set	-

OK:
The Techstream display changes correctly in accordance with the operation of the buckle switch.

NG ▶ REPLACE FRONT SEAT INNER BELT ASSEMBLY RH

OK ▼

5.	READ VALUE USING DATA LIST (SEAT BELT TENSION SENSOR)

(a) Fasten the passenger side seat belt.

(b) Turn the ignition switch to ON.

(c) Using the Techstream, read the value of the Data List INFO .

TESTER DISPLAY	MEASUREMENT	NORMAL	DIAGNOSTIC

	ITEM/RANGE	CONDITION	NOTE
Filtered Pressure Sensor Output	Filtered belt tension output/ Min.: 0 Max.: 255	39 to 64 (no load)	-

OK:

When there is no tension on the belt, 39 to 64 is displayed on the Techstream.

NG ▶ **REPLACE FRONT SEAT OUTER BELT ASSEMBLY RH**

OK ▼

6.	CHECK CONNECTORS

(a) Disconnect the connectors from the occupant classification ECU and the occupant classification sensor.

(b) Check that the terminals of the connectors are not damaged.

OK:

The terminals are not deformed or damaged.

NG ▶ **REPLACE FRONT SEAT WIRE RH**

OK ▼

7.	REPLACE FRONT SEAT CUSHION ASSEMBLY

(a) Turn the ignition switch off.

(b) Disconnect the cable from the negative (-) battery terminal.

(c) Replace the front seat cushion assembly (with occupant classification ECU and occupant classification sensor) INFO .

(d) Connect the cable to the negative (-) battery terminal.

(e) Turn the ignition switch to ON.

(f) Clear the DTCs stored in the occupant classification ECU INFO .

(g) Clear the DTCs stored in the center airbag sensor assembly INFO .

(h) Turn the ignition switch off.

(i) Turn the ignition switch to ON.

(j) Check for DTCs INFO .

OK:

DTC is not output.

NEXT

8.	PERFORM ZERO POINT CALIBRATION

(a) Connect the Techstream to the DLC3.

(b) Turn the ignition switch to ON.

(c) Using the Techstream, perform the zero point calibration INFO .

(d) Turn the ignition switch off.

(e) Turn the ignition switch to ON.

(f) Clear the DTCs stored in the occupant classification ECU INFO .

HINT:

If the DTCs are not cleared at this time, past DTCs will remain.

NEXT

9.	PERFORM SENSITIVITY CHECK

(a) Perform the sensitivity check INFO .

NEXT **END**

Last Modified: 3-10-2010	6.4 K	**From:** 200901
Model Year: 2010	**Model:** Corolla	**Doc ID:** RM000000UWQ02XX
Title: SUPPLEMENTAL RESTRAINT SYSTEMS: REAR AIRBAG SENSOR: COMPONENTS (2010 Corolla)		

COMPONENTS

ILLUSTRATION

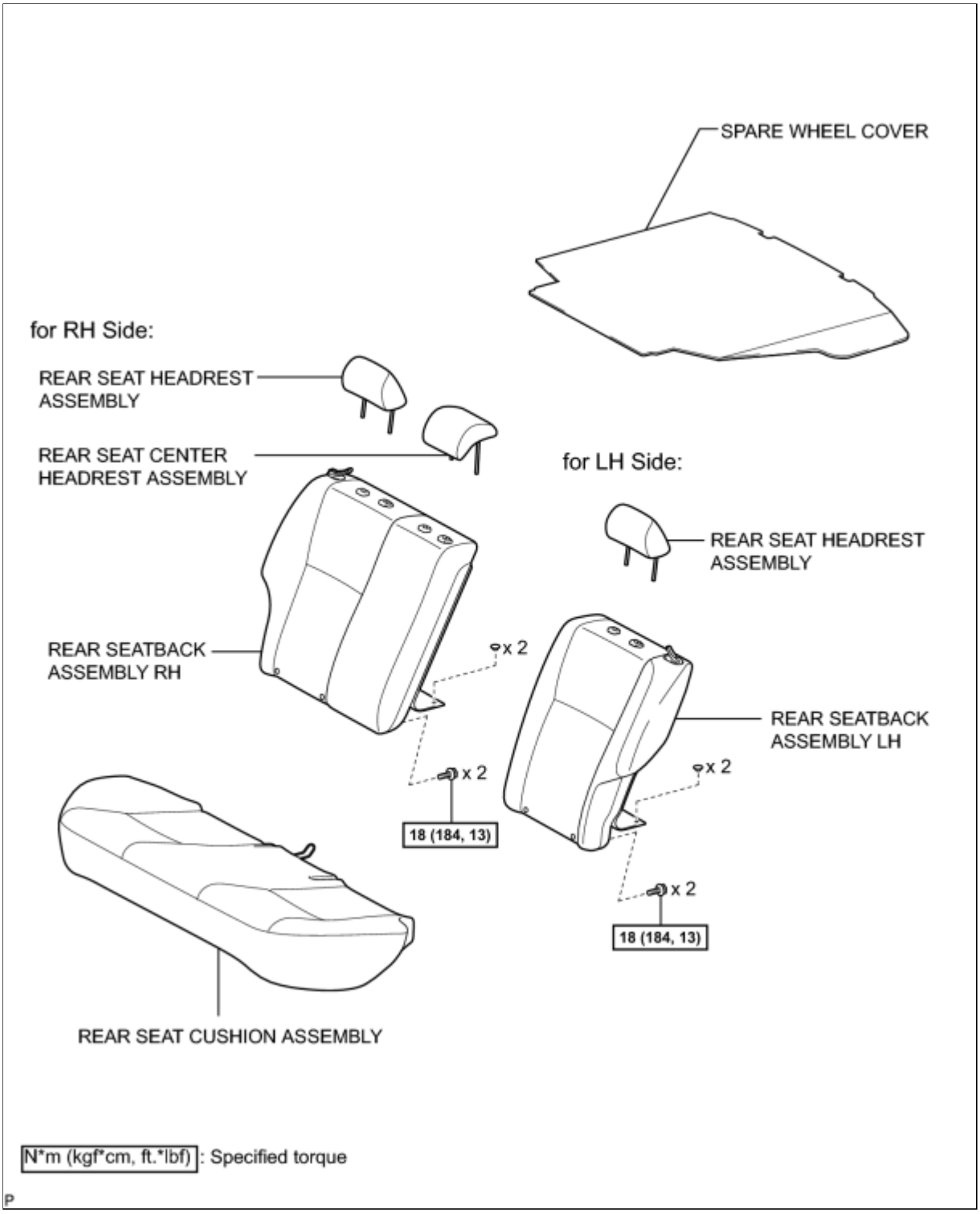

ILLUSTRATION

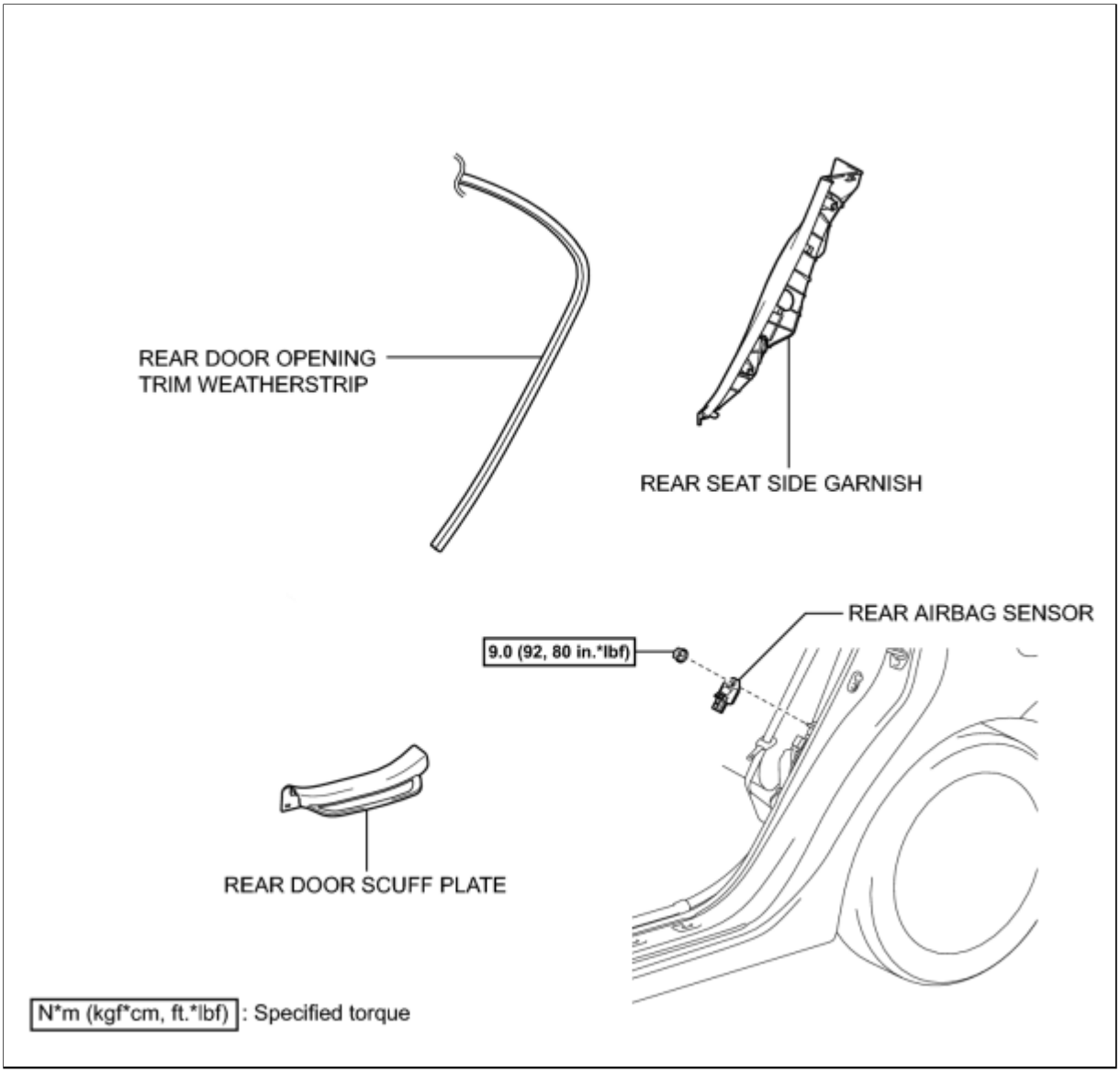
REAR DOOR OPENING
TRIM WEATHERSTRIP
REAR SEAT SIDE GARNISH
REAR AIRBAG SENSOR
9.0 (92, 80 in.*lbf)
REAR DOOR SCUFF PLATE
N*m (kgf*cm, ft.*lbf) : Specified torque

Last Modified: 3-10-2010	6.4 G	**From:** 200901
Model Year: 2010	**Model:** Corolla	**Doc ID:** RM000000VPW04EX
Title: SUPPLEMENTAL RESTRAINT SYSTEMS: REAR AIRBAG SENSOR: ON-VEHICLE INSPECTION (2010 Corolla)		

ON-VEHICLE INSPECTION

1. INSPECT REAR AIRBAG SENSOR (VEHICLE NOT INVOLVED IN COLLISION)

(a) Perform a diagnostic system check INFO .

2. INSPECT REAR AIRBAG SENSOR (VEHICLE INVOLVED IN COLLISION AND AIRBAG HAS NOT DEPLOYED)

(a) Perform a diagnostic system check INFO .

(b) When the quarter panel of the vehicle or the surrounding area is damaged, check if there is any damage to the rear airbag sensor. If there are any following defects, replace the rear airbag sensor with a new one:

- Cracks, dents or chips on the sensor housing.
- Cracks or other damage to the connector.
- Peeling off of the label or damage to the serial number.

CAUTION:

Be sure to follow the correct removal and installation procedures of the rear airbag sensor.

3. INSPECT REAR AIRBAG SENSOR (VEHICLE INVOLVED IN COLLISION AND AIRBAG IS DEPLOYED)

(a) When airbags have deployed as the result of a collision, be certain to replace all rear airbag sensors in the damaged area (anywhere in need of repair). Furthermore, it is also necessary to replace any rear airbag sensors in undamaged areas that have registered a major collision, or which exhibit any of the following abnormalities:

- Cracks, dents or chips on the sensor housing.
- Cracks or other damage to the connector.
- Peeling off of the label or damage to the serial number.

CAUTION:

Be sure to follow the correct removal and installation procedures of the rear airbag sensor.

Last Modified: 3-10-2010	6.4 A	**From:** 200901
Model Year: 2010	**Model:** Corolla	**Doc ID:** RM000000UWR03OX
Title: SUPPLEMENTAL RESTRAINT SYSTEMS: REAR AIRBAG SENSOR: REMOVAL (2010 Corolla)		

REMOVAL

HINT:

- Use the same procedure for the RH side and LH side.
- The following procedure is for the LH side.

1. PRECAUTION

CAUTION:

Be sure to read Precaution thoroughly before servicing INFO **.**

2. DISCONNECT CABLE FROM NEGATIVE BATTERY TERMINAL

CAUTION:

Wait at least 90 seconds after disconnecting the cable from the negative (-) battery terminal to disable the SRS system.

3. REMOVE REAR DOOR SCUFF PLATE INFO

4. DISCONNECT REAR DOOR OPENING TRIM WEATHERSTRIP INFO

5. REMOVE SPARE WHEEL COVER INFO

6. REMOVE REAR SEAT CUSHION ASSEMBLY INFO

7. REMOVE REAR SEAT HEADREST ASSEMBLY (for LH Side)

8. REMOVE REAR SEATBACK ASSEMBLY LH (for LH Side) INFO

9. REMOVE REAR SEAT HEADREST ASSEMBLY (for RH Side)

10. REMOVE REAR SEAT CENTER HEADREST ASSEMBLY (for RH Side)

11. REMOVE REAR SEATBACK ASSEMBLY RH (for RH Side) INFO

12. REMOVE REAR SEAT SIDE GARNISH INFO

13. REMOVE REAR AIRBAG SENSOR

(a) Check that the ignition switch is off.

(b) Check that the cable is disconnected from the negative (-) battery terminal.

CAUTION:

Wait at least 90 seconds after disconnecting the cable from the negative (-) battery terminal to disable the SRS system.

(c) Disconnect the connector.

NOTICE:

When disconnecting the airbag connector, take care not to

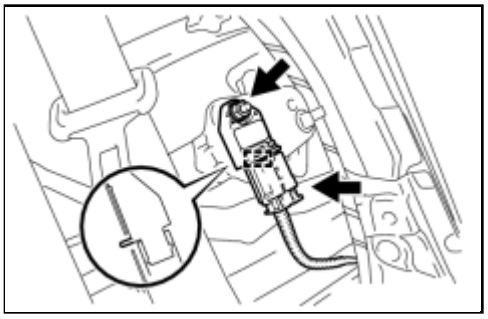

damage the airbag wire harness.

(d) Remove the nut and rear airbag sensor.

NOTICE:

Loosen the nut while holding the rear airbag sensor because the rear airbag sensor pin (stopper) is easily damaged.

Last Modified: 3-10-2010	6.4 A	**From:** 200901
Model Year: 2010	**Model:** Corolla	**Doc ID:** RM000000UWO03QX
Title: SUPPLEMENTAL RESTRAINT SYSTEMS: REAR AIRBAG SENSOR: INSTALLATION (2010 Corolla)		

INSTALLATION

1. INSTALL REAR AIRBAG SENSOR

(a) Check that the ignition switch is off.

(b) Check that the cable is disconnected from the negative (-) battery terminal.

CAUTION:

Wait at least 90 seconds after disconnecting the cable from the negative (-) battery terminal to disable the SRS system.

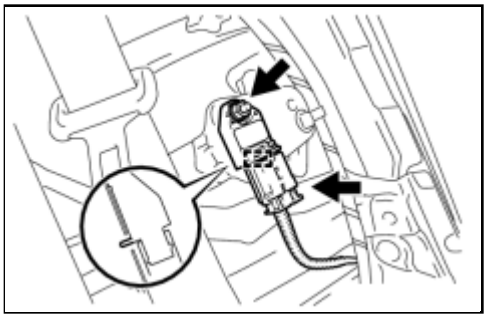

(c) Install the rear airbag sensor with the nut and pin.

Torque: 9.0 N·m (92 kgf·cm, 80in·lbf)

NOTICE:

- If the rear airbag sensor has been dropped, or there are any cracks, dents or other defects in the case or connector, replace it with a new one.
- When installing the rear airbag sensor, be careful that the SRS wiring does not interfere with other parts and that it is not pinched between other parts.
- Make sure that the pin is securely inserted into the body hole.
- Tighten the nut while holding the rear airbag sensor because the rear airbag sensor pin (stopper) is easily damaged.

(d) Connect the connector.

NOTICE:

When connecting the airbag connector, take care not to damage the airbag wire harness.

(e) Check that there is no looseness in the installation parts of the rear airbag sensor.

2. INSTALL REAR SEAT SIDE GARNISH INFO

3. INSTALL REAR SEATBACK ASSEMBLY LH (for LH Side) INFO

4. INSTALL REAR SEAT HEADREST ASSEMBLY (for LH Side)

5. INSTALL REAR SEATBACK ASSEMBLY RH (for RH Side) INFO

6. INSTALL REAR SEAT CENTER HEADREST ASSEMBLY (for RH Side)

7. INSTALL REAR SEAT HEADREST ASSEMBLY (for RH Side)

8. INSTALL REAR SEAT CUSHION ASSEMBLY INFO

9. INSTALL SPARE WHEEL COVER INFO

10. INSTALL REAR DOOR OPENING TRIM WEATHERSTRIP INFO

11. INSTALL REAR DOOR SCUFF PLATE INFO

12. CONNECT CABLE TO NEGATIVE BATTERY TERMINAL

13. INSPECT SRS WARNING LIGHT

(a) Inspect the SRS warning light INFO .

Last Modified: 3-10-2010	6.4 K	**From:** 200901
Model Year: 2010	**Model:** Corolla	**Doc ID:** RM000000UWI02FX
Title: SUPPLEMENTAL RESTRAINT SYSTEMS: SEAT POSITION SENSOR: COMPONENTS (2010 Corolla)		

COMPONENTS

ILLUSTRATION

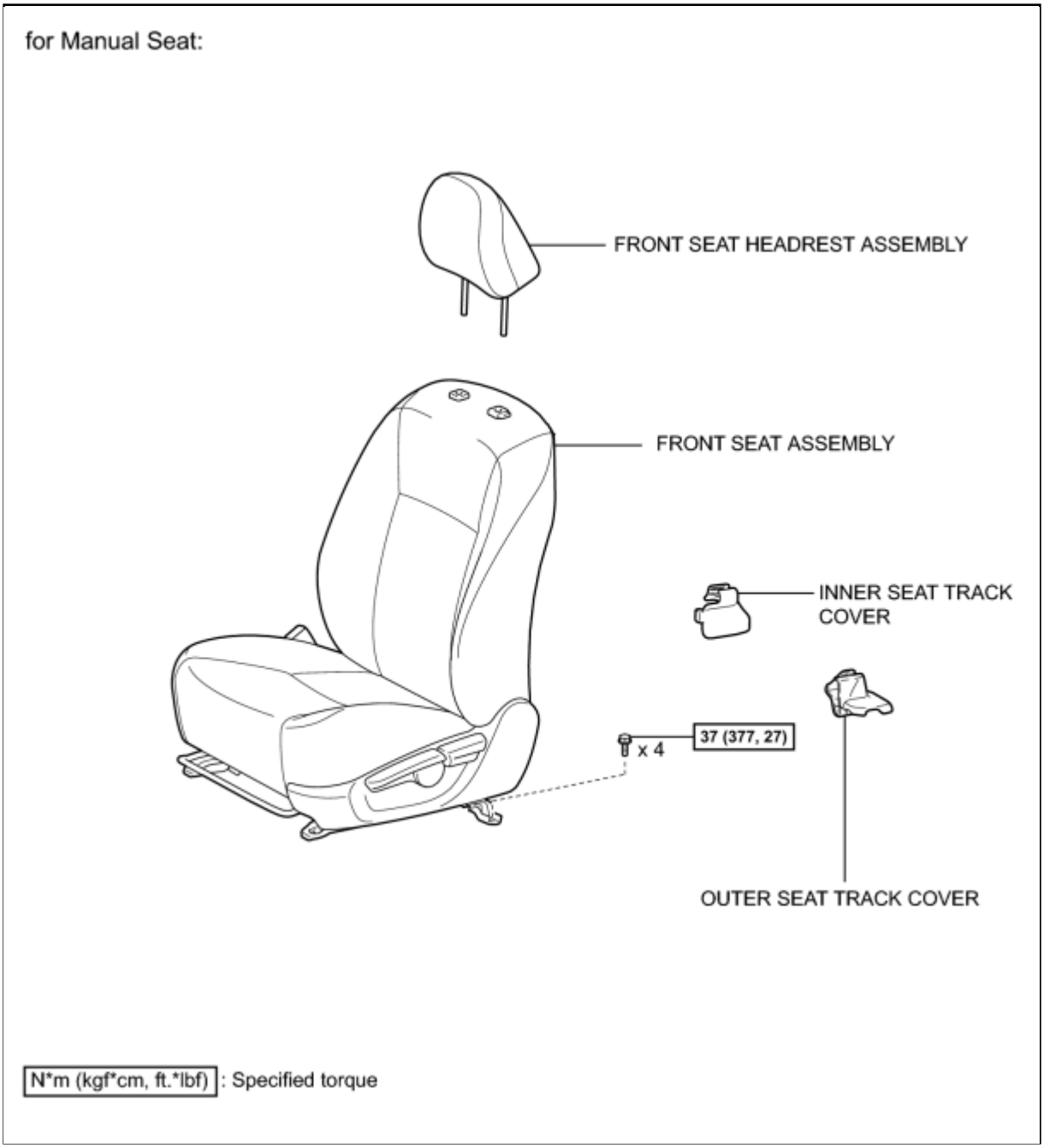

ILLUSTRATION

for Manual Seat:

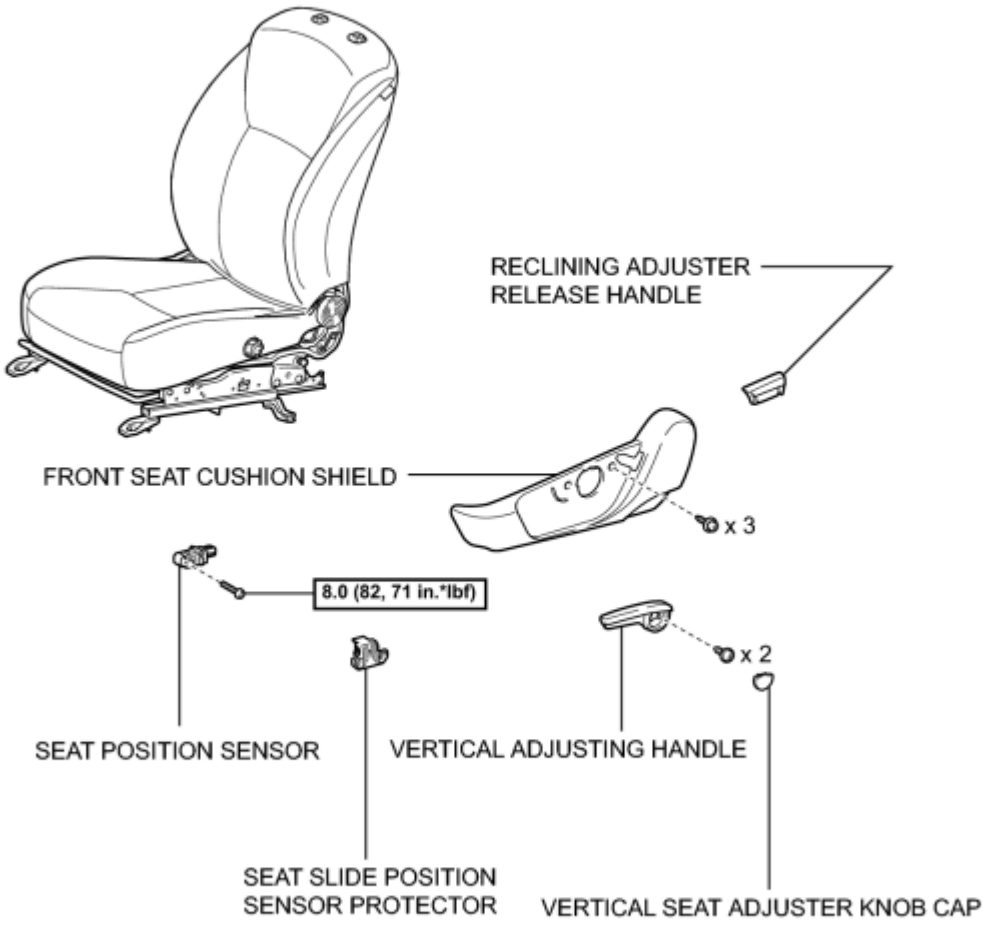

N*m (kgf*cm, ft.*lbf) : Specified torque

ILLUSTRATION

for Power Seat:

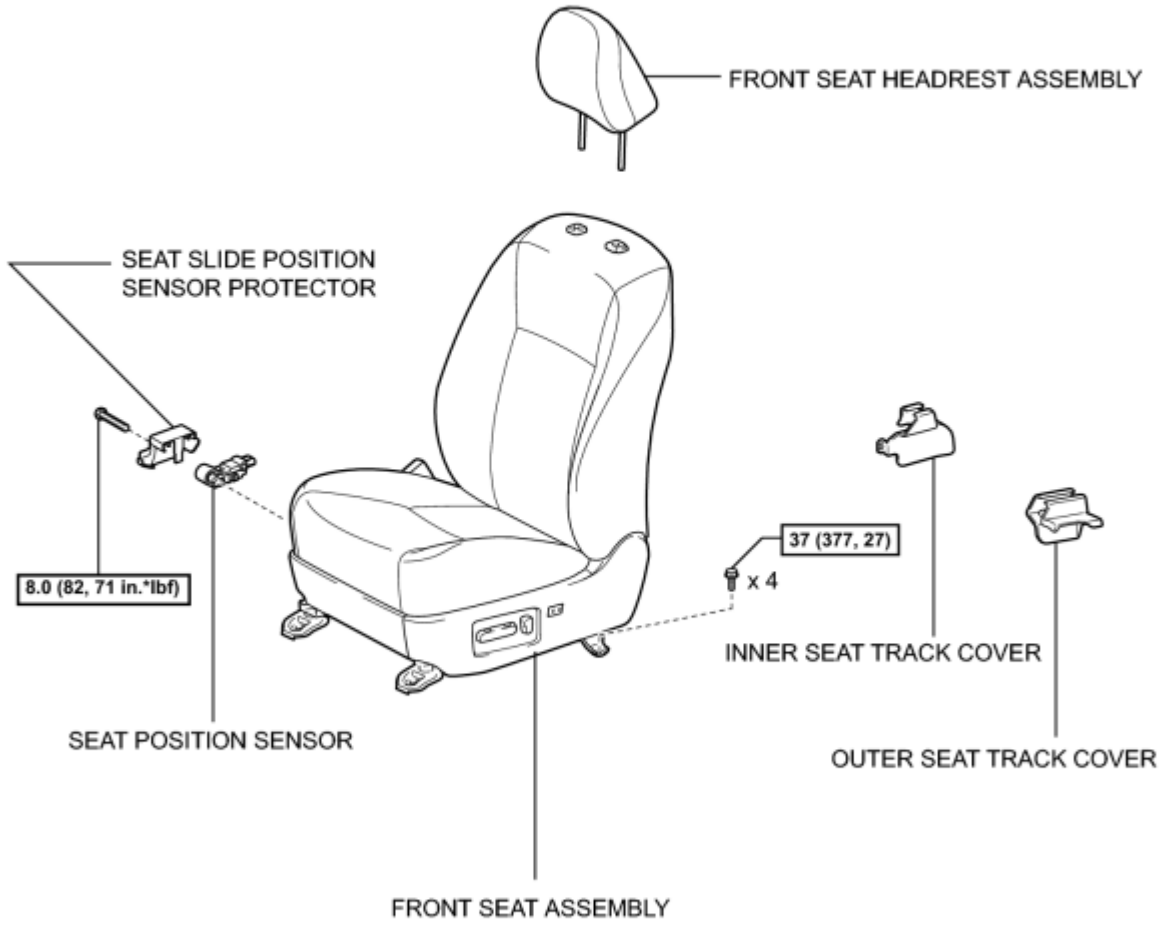

N*m (kgf*cm, ft.*lbf) : Specified torque

Last Modified: 3-10-2010	6.4 G	**From:** 200901
Model Year: 2010	**Model:** Corolla	**Doc ID:** RM000000VPX03PX
Title: SUPPLEMENTAL RESTRAINT SYSTEMS: SEAT POSITION SENSOR: ON-VEHICLE INSPECTION (2010 Corolla)		

ON-VEHICLE INSPECTION

1. INSPECT SEAT POSITION SENSOR (VEHICLE NOT INVOLVED IN COLLISION)

(a) Perform a diagnostic system check INFO .

2. INSPECT SEAT POSITION SENSOR (VEHICLE INVOLVED IN COLLISION)

(a) Perform a diagnostic system check INFO .

(b) Even if an airbag was not deployed, check if there is any damage to the seat position sensor.

If there are any following defects, replace the seat position sensor with a new one:

- Cracks, dents or chips on the sensor housing.
- Cracks or other damage to the connector.

CAUTION:

Be sure to follow the correct removal and installation procedures of the seat position sensor.

Last Modified: 3-10-2010	6.4 A	**From:** 200901
Model Year: 2010	**Model:** Corolla	**Doc ID:** RM000000UWG033X
Title: SUPPLEMENTAL RESTRAINT SYSTEMS: SEAT POSITION SENSOR: INSTALLATION (2010 Corolla)		

INSTALLATION

1. INSTALL SEAT POSITION SENSOR (for Manual Seat)

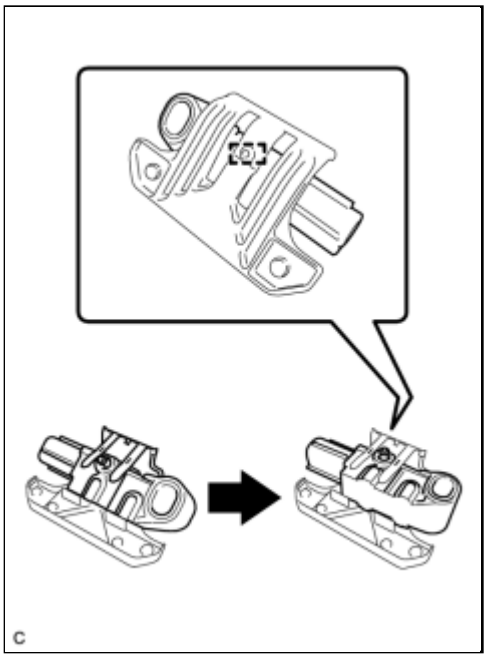

(a) Install the seat position sensor to the seat slide position sensor protector with the pin as shown in the illustration.

(b) Using a 1.3 mm (0.0512 in.) feeler gauge, temporarily install the seat position sensor with seat slide position sensor protector.

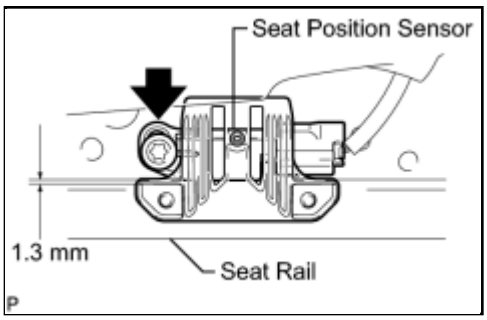

NOTICE:

- If the seat position sensor has been dropped, or there are any cracks, dents or other defects in the case or connector, replace the seat position sensor with a new one.
- When installing the seat position sensor, be careful that the SRS wiring does not interfere with other parts and that it is not pinched between other parts.

HINT:

Be sure that the clearance between the seat position sensor and the seat rail is within 0.6 mm (0.0236 in.) to 2.0 mm (0.0787 in.).

(c) Using a "TORX" socket wrench (T30), tighten the "TORX"

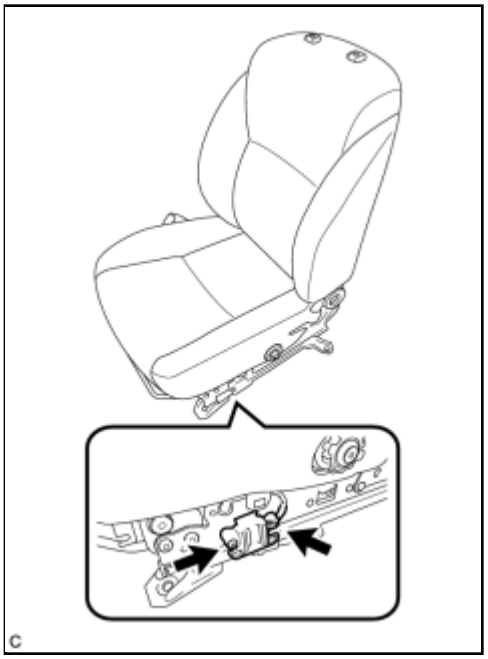

screw to install the seat position sensor with seat slide position sensor protector.

Torque: 8.0 N·m (82 kgf·cm, 71in·lbf)

(d) Make sure that the clearance between the seat position sensor and the seat rail is within 0.6 mm (0.0236 in.) to 2.0 mm (0.0787 in.).

(e) Connect the connector.

(f) Check that there are no loose parts after installing the seat position sensor.

2. INSTALL SEAT POSITION SENSOR (for Power Seat)

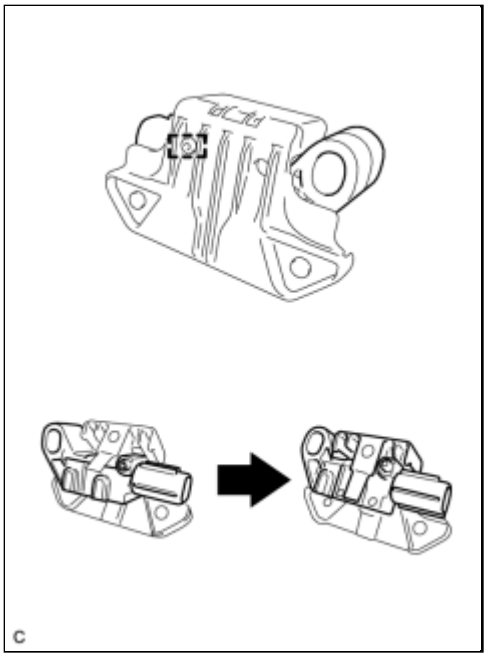

(a) Install the seat position sensor to the seat slide position sensor protector with the pin as shown in the illustration.

(b) Using a 1.3 mm (0.0512 in.) feeler gauge, temporarily

install the seat position sensor with seat slide position sensor protector.

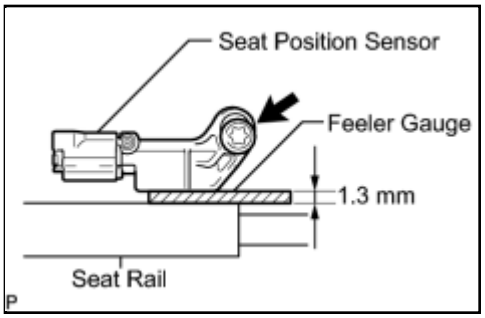

NOTICE:

- If the seat position sensor has been dropped, or there are any cracks, dents or other defects in the case or connector, replace the seat position sensor with a new one.
- When installing the seat position sensor, be careful that the SRS wiring does not interfere with other parts and that it is not pinched between other parts.

HINT:

Be sure that the clearance between the seat position sensor and the seat rail is within 0.6 mm (0.0236 in.) to 2.0 mm (0.0787 in.).

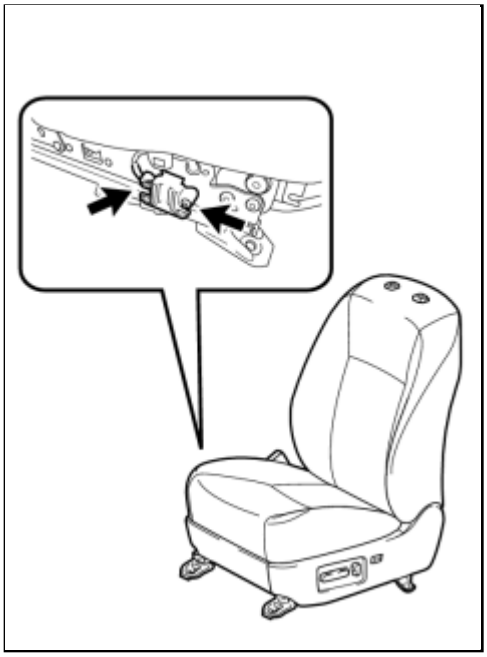

(c) Using a "TORX" socket wrench (T30), tighten the "TORX" screw to install the seat position sensor with seat slide position sensor protector.

Torque: 8.0 N·m (82 kgf·cm, 71in·lbf)

(d) Make sure that the clearance between the seat position sensor and the seat rail is within 0.6 mm (0.0236 in.) to 2.0 mm (0.0787 in.).

(e) Connect the connector.

(f) Check that there are no loose parts after installing the seat position sensor.

3. INSTALL FRONT SEAT CUSHION SHIELD (for Manual Seat) INFO

4. INSTALL VERTICAL ADJUSTING HANDLE (for Manual Seat) INFO

5. INSTALL VERTICAL SEAT ADJUSTER KNOB CAP (for Manual Seat) INFO

6. INSTALL RECLINING ADJUSTER RELEASE HANDLE (for Manual Seat) INFO

7. INSTALL FRONT SEAT ASSEMBLY (for Manual Seat)

(a) Install the front seat assembly INFO .

8. INSTALL FRONT SEAT ASSEMBLY (for Power Seat)

(a) Install the front seat assembly INFO .



Last Modified: 3-10-2010	6.4 A	**From:** 200901
Model Year: 2010	**Model:** Corolla	**Doc ID:** RM000000UWJ02ZX
Title: SUPPLEMENTAL RESTRAINT SYSTEMS: SEAT POSITION SENSOR: REMOVAL (2010 Corolla)		

REMOVAL

1. PRECAUTION

CAUTION:

Be sure to read Precaution thoroughly before servicing INFO .

2. REMOVE FRONT SEAT ASSEMBLY (for Manual Seat)

(a) Remove the front seat assembly INFO .

3. REMOVE FRONT SEAT ASSEMBLY (for Power Seat)

(a) Remove the front seat assembly INFO .

4. REMOVE RECLINING ADJUSTER RELEASE HANDLE (for Manual Seat) INFO

5. REMOVE VERTICAL SEAT ADJUSTER KNOB CAP (for Manual Seat) INFO

6. REMOVE VERTICAL ADJUSTING HANDLE (for Manual Seat) INFO

7. REMOVE FRONT SEAT CUSHION SHIELD (for Manual Seat) INFO

8. REMOVE SEAT POSITION SENSOR (for Manual Seat)

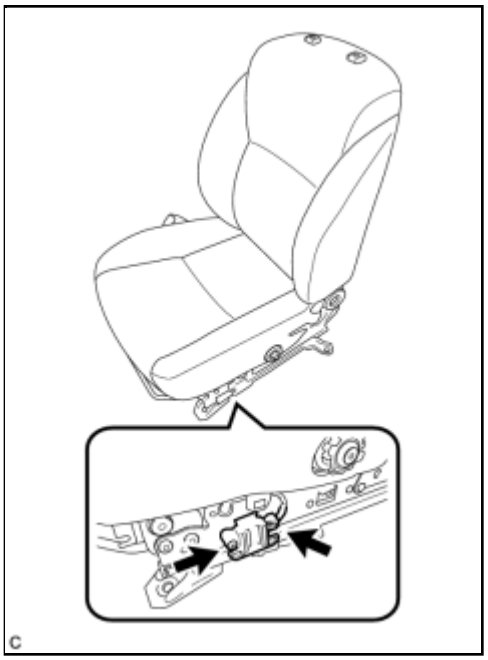

(a) Disconnect the connector.

(b) Using a "TORX" socket wrench (T30), remove the "TORX" screw and seat position sensor with the seat slide position sensor protector.

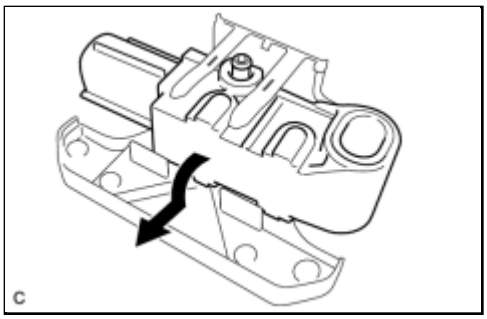

(c) Remove the seat position sensor from the seat slide position sensor protector as shown in the illustration.

9. REMOVE SEAT POSITION SENSOR (for Power Seat)

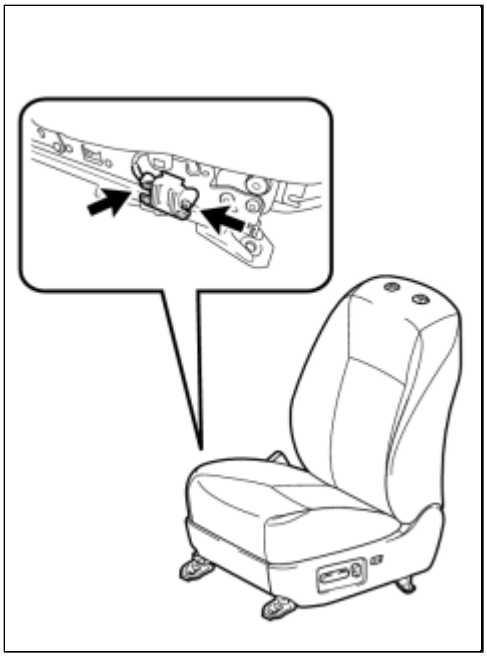

(a) Disconnect the connector.

(b) Using a "TORX" socket wrench (T30), remove the "TORX" screw and seat position sensor with the seat slide position sensor protector.

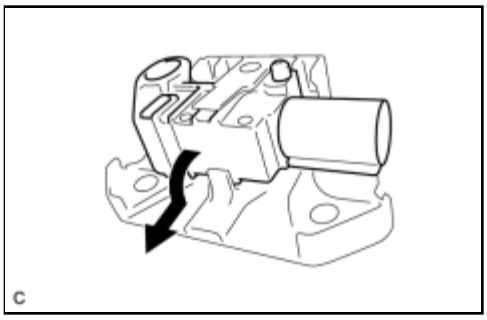

(c) Remove the seat position sensor from the seat slide position sensor protector as shown in the illustration.

Last Modified: 3-10-2010	6.4 K	**From:** 200901
Model Year: 2010	**Model:** Corolla	**Doc ID:** RM000000UWM032X
Title: SUPPLEMENTAL RESTRAINT SYSTEMS: SIDE AIRBAG SENSOR: COMPONENTS (2010 Corolla)		

COMPONENTS

ILLUSTRATION

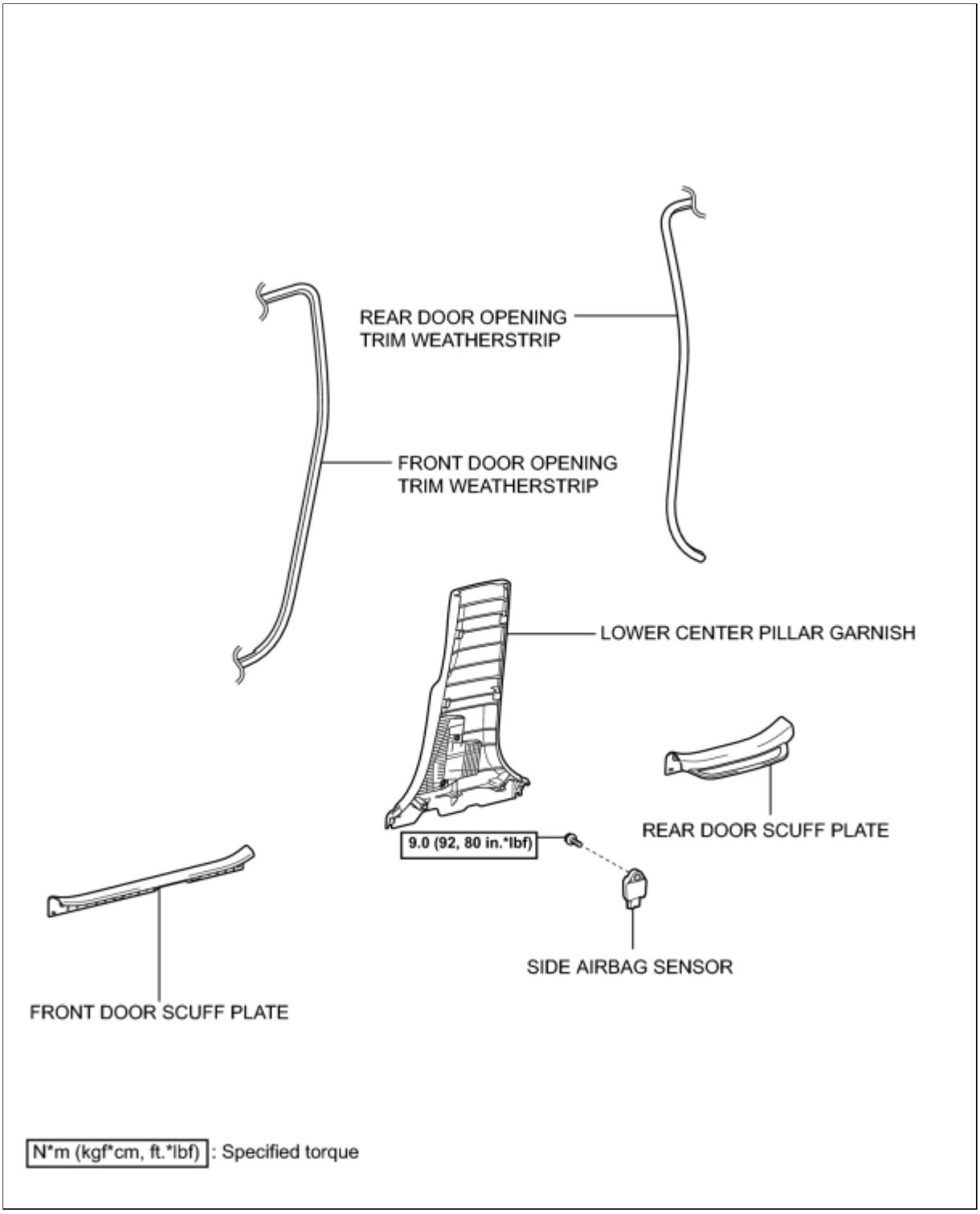

N*m (kgf*cm, ft.*lbf) : Specified torque

Last Modified: 3-10-2010	6.4 G	**From:** 200901
Model Year: 2010	**Model:** Corolla	**Doc ID:** RM000000VPV04OX
Title: SUPPLEMENTAL RESTRAINT SYSTEMS: SIDE AIRBAG SENSOR: ON-VEHICLE INSPECTION (2010 Corolla)		

ON-VEHICLE INSPECTION

1. INSPECT SIDE AIRBAG SENSOR (VEHICLE NOT INVOLVED IN COLLISION)

(a) Perform a diagnostic system check INFO .

2. INSPECT SIDE AIRBAG SENSOR (VEHICLE INVOLVED IN COLLISION AND AIRBAG HAS NOT DEPLOYED)

(a) Perform a diagnostic system check INFO .

(b) When the center pillar of the vehicle or the surrounding area is damaged, check if there is any damage to the side airbag sensor. If there are any following defects, replace the side airbag sensor with a new one:

- Cracks, dents or chips on the sensor housing.
- Cracks or other damage to the connector.
- Peeling off of the label or damage to the serial number.

CAUTION:

Be sure to follow the correct removal and installation procedures of the side airbag sensor.

3. INSPECT SIDE AIRBAG SENSOR (VEHICLE INVOLVED IN COLLISION AND AIRBAG IS DEPLOYED)

(a) When airbags have deployed as the result of a collision, be certain to replace all side airbag sensors in the damaged area (anywhere in need of repair). Furthermore, it is also necessary to replace any side airbag sensors in undamaged areas that have registered a major collision, or which exhibit any of the following abnormalities:

- Cracks, dents or chips on the sensor housing.
- Cracks or other damage to the connector.
- Peeling off of the label or damage to the serial number.

CAUTION:

Be sure to follow the correct removal and installation procedures of the side airbag sensor.

Last Modified: 3-10-2010	6.4 A	**From:** 200901
Model Year: 2010	**Model:** Corolla	**Doc ID:** RM000000UWN03RX
Title: SUPPLEMENTAL RESTRAINT SYSTEMS: SIDE AIRBAG SENSOR: REMOVAL (2010 Corolla)		

REMOVAL

HINT:

- Use the same procedure for the RH side and LH side.
- The following procedure is for the LH side.

1. PRECAUTION

CAUTION:

Be sure to read Precaution thoroughly before servicing INFO **.**

2. DISCONNECT CABLE FROM NEGATIVE BATTERY TERMINAL

CAUTION:

Wait at least 90 seconds after disconnecting the cable from the negative (-) battery terminal to disable the SRS system.

3. REMOVE FRONT DOOR SCUFF PLATE INFO

4. DISCONNECT FRONT DOOR OPENING TRIM WEATHERSTRIP INFO

5. REMOVE REAR DOOR SCUFF PLATE INFO

6. DISCONNECT REAR DOOR OPENING TRIM WEATHERSTRIP INFO

7. REMOVE LOWER CENTER PILLAR GARNISH INFO

8. REMOVE SIDE AIRBAG SENSOR

(a) Check that the ignition switch is off.

(b) Check that the cable is disconnected from the negative (-) battery terminal.

CAUTION:

Wait at least 90 seconds after disconnecting the cable from the negative (-) battery terminal to disable the SRS system.

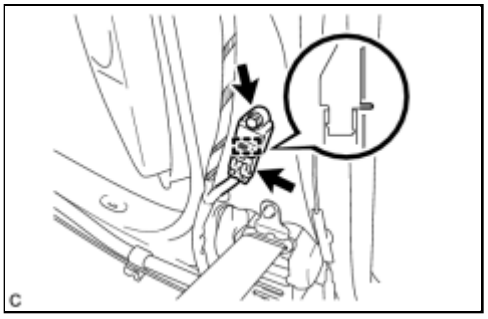

(c) Disconnect the connector.

NOTICE:

When disconnecting the airbag connector, take care not to damage the airbag wire harness.

(d) Remove the bolt, disengage the pin and remove the side airbag sensor.

NOTICE:

Loosen the bolt while holding the side airbag sensor because the side airbag sensor pin (stopper) is easily damaged.

Last Modified: 3-10-2010	6.4 A	**From:** 200901
Model Year: 2010	**Model:** Corolla	**Doc ID:** RM000000UWK03TX
Title: SUPPLEMENTAL RESTRAINT SYSTEMS: SIDE AIRBAG SENSOR: INSTALLATION (2010 Corolla)		

INSTALLATION

1. INSTALL SIDE AIRBAG SENSOR

(a) Check that the ignition switch is off.

(b) Check that the cable is disconnected from the negative (-) battery terminal.

CAUTION:

Wait at least 90 seconds after disconnecting the cable from the negative (-) battery terminal to disable the SRS system.

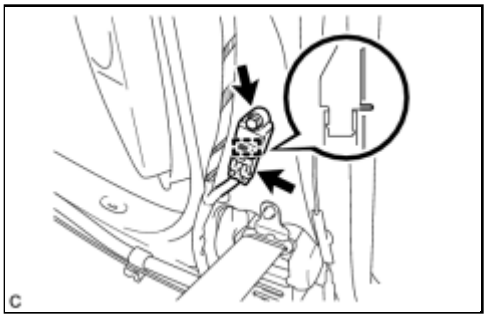

(c) Install the side airbag sensor with the bolt and pin.

Torque: 9.0 N·m (92 kgf·cm, 80in·lbf)

NOTICE:

- If the side airbag sensor has been dropped, or there are any cracks, dents or other defects in the case or connector, replace it with a new one.
- When installing the side airbag sensor, be careful that the SRS wiring does not interfere with other parts and that it is not pinched between other parts.
- Make sure that the pin is securely inserted into the body hole.
- Tighten the bolt while holding the side airbag sensor because the side airbag sensor pin (stopper) is easily damaged.

(d) Connect the connector.

NOTICE:

When connecting the airbag connector, take care not to damage the airbag wire harness.

(e) Check that there is no looseness in the installation parts of the side airbag sensor.

2. INSTALL LOWER CENTER PILLAR GARNISH INFO

3. CONNECT REAR DOOR OPENING TRIM WEATHERSTRIP INFO

4. INSTALL REAR DOOR SCUFF PLATE INFO

5. CONNECT FRONT DOOR OPENING TRIM WEATHERSTRIP INFO

6. INSTALL FRONT DOOR SCUFF PLATE INFO

7. CONNECT CABLE TO NEGATIVE BATTERY TERMINAL

8. INSPECT SRS WARNING LIGHT

(a) Inspect the SRS warning light INFO .

Last Modified: 3-10-2010	6.4 K	**From:** 200901
Model Year: 2010	**Model:** Corolla	**Doc ID:** RM000000UWC030X
Title: SUPPLEMENTAL RESTRAINT SYSTEMS: SPIRAL CABLE: COMPONENTS (2010 Corolla)		

COMPONENTS

ILLUSTRATION

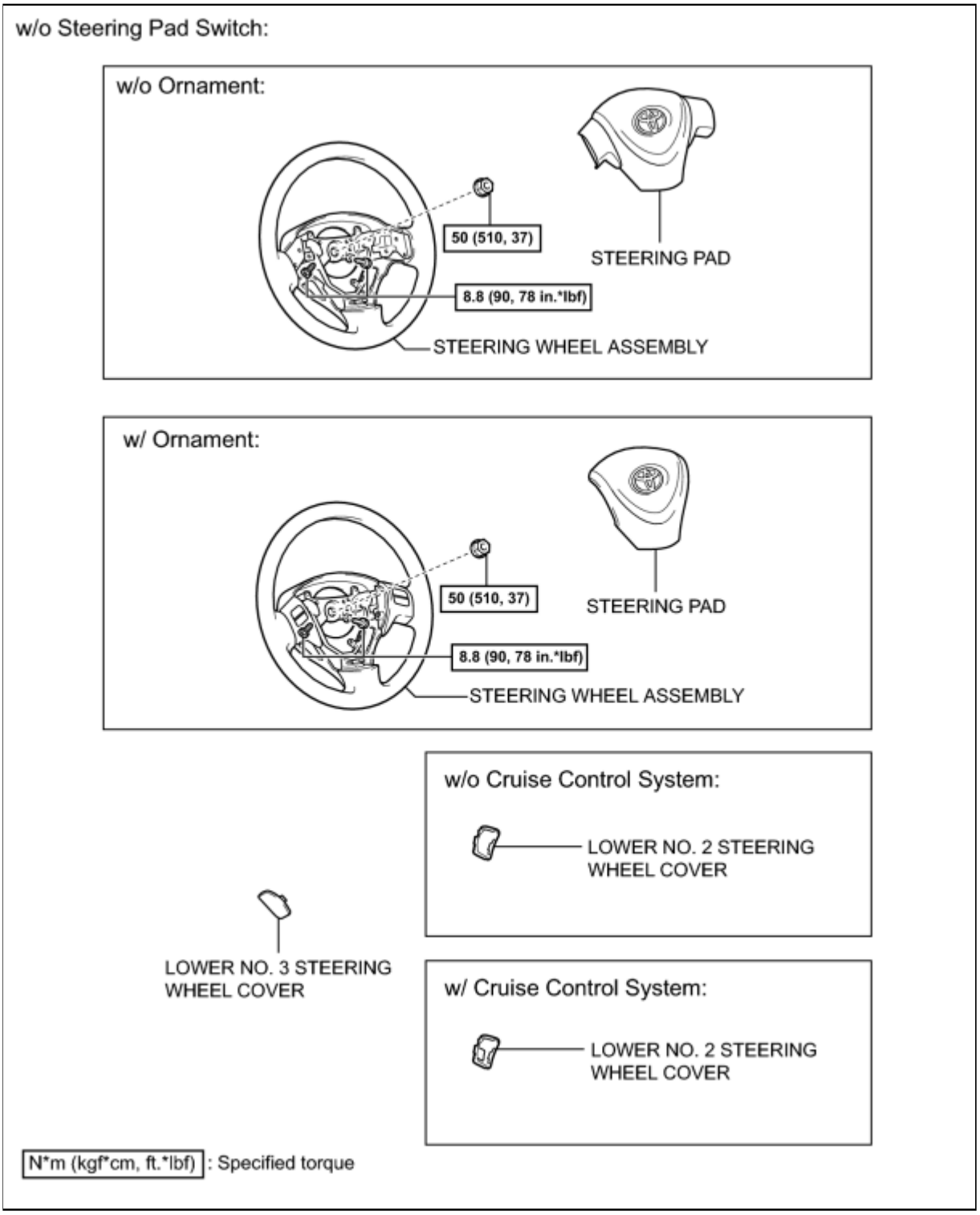

ILLUSTRATION

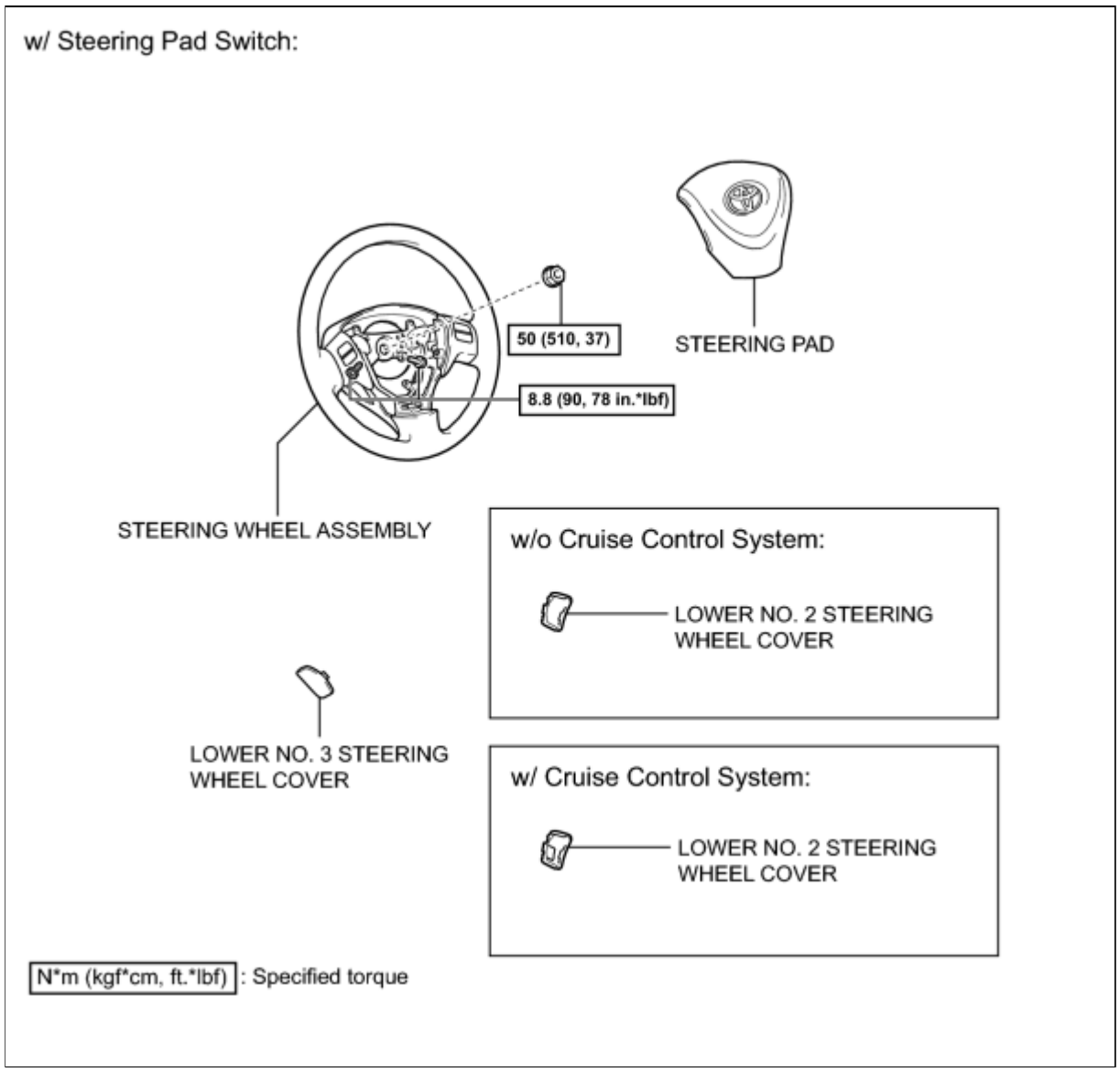

ILLUSTRATION

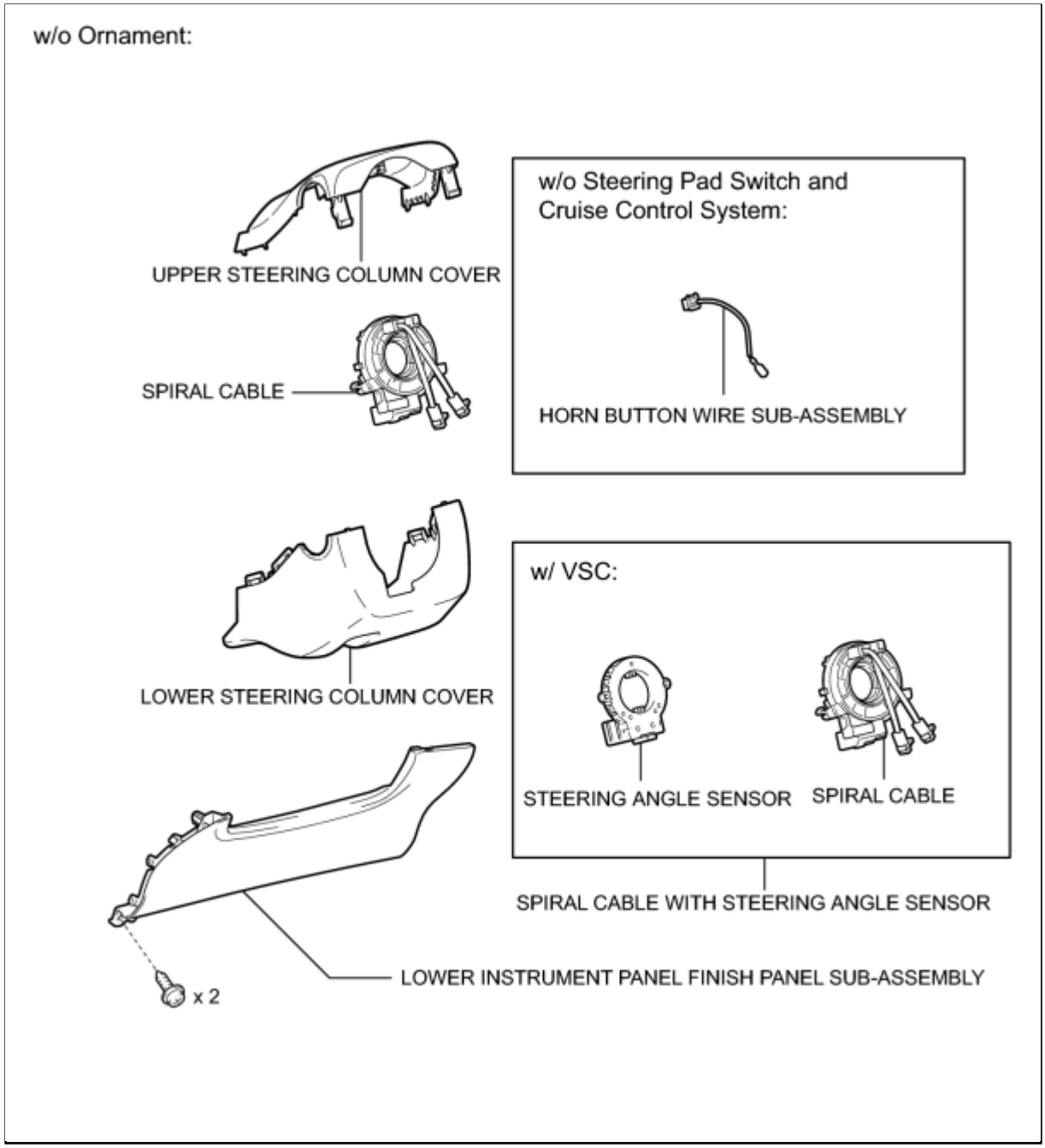

ILLUSTRATION

w/ Ornament:

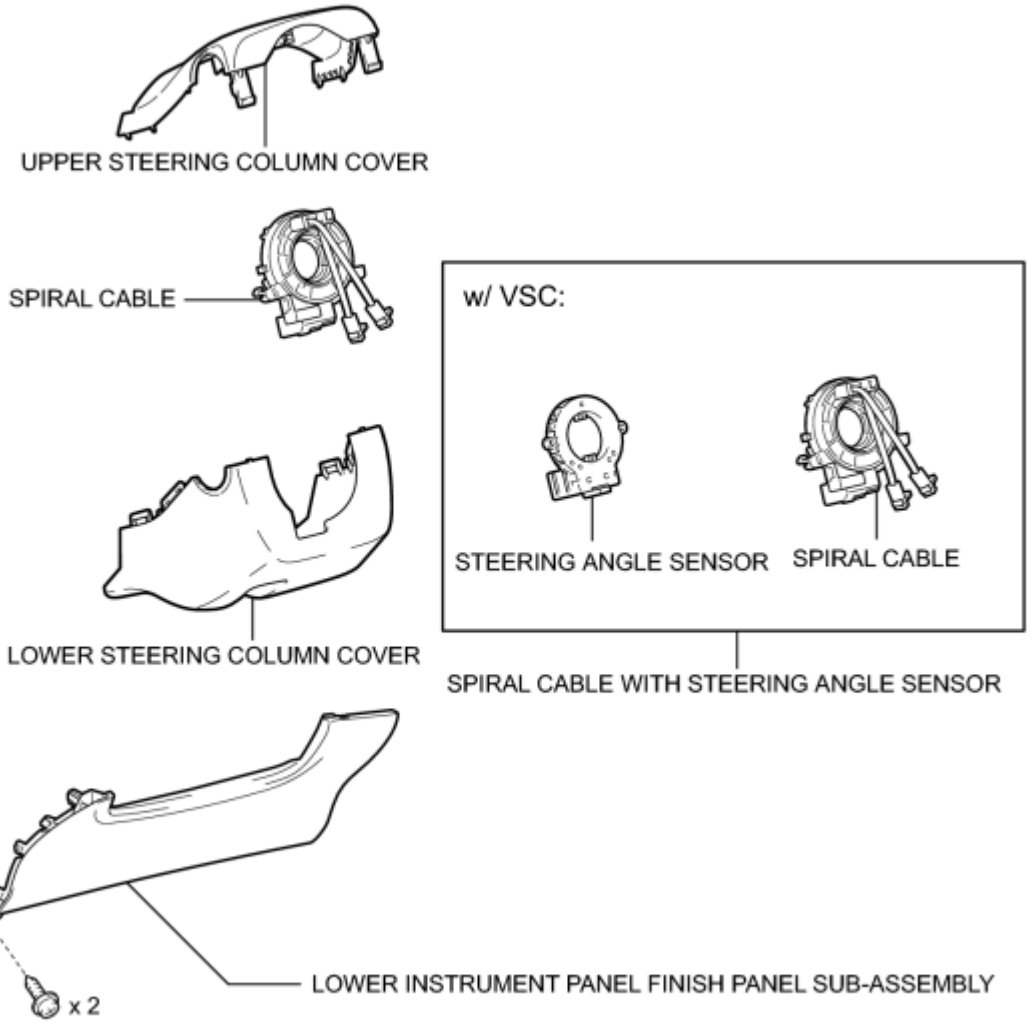
UPPER STEERING COLUMN COVER
SPIRAL CABLE
LOWER STEERING COLUMN COVER
w/ VSC:
STEERING ANGLE SENSOR
SPIRAL CABLE
SPIRAL CABLE WITH STEERING ANGLE SENSOR
x 2
LOWER INSTRUMENT PANEL FINISH PANEL SUB-ASSEMBLY

Last Modified: 3-10-2010	6.4 A	**From:** 200901
Model Year: 2010	**Model:** Corolla	**Doc ID:** RM000000UWD042X
Title: SUPPLEMENTAL RESTRAINT SYSTEMS: SPIRAL CABLE: REMOVAL (2010 Corolla)		

REMOVAL

1. PRECAUTION

CAUTION:

Be sure to read Precaution thoroughly before servicing INFO **.**

2. TURN FRONT WHEELS TO FACE STRAIGHT AHEAD

3. DISCONNECT CABLE FROM NEGATIVE BATTERY TERMINAL

CAUTION:

Wait at least 90 seconds after disconnecting the cable from the negative (-) battery terminal to disable the SRS system.

4. REMOVE LOWER NO. 3 STEERING WHEEL COVER INFO

5. REMOVE LOWER NO. 2 STEERING WHEEL COVER INFO

6. REMOVE STEERING PAD INFO

7. REMOVE STEERING WHEEL ASSEMBLY INFO

8. REMOVE LOWER INSTRUMENT PANEL FINISH PANEL SUB-ASSEMBLY INFO

9. REMOVE HORN BUTTON WIRE SUB-ASSEMBLY (w/o Steering Pad Switch and Cruise Control System)

(a) w/o Ornament:

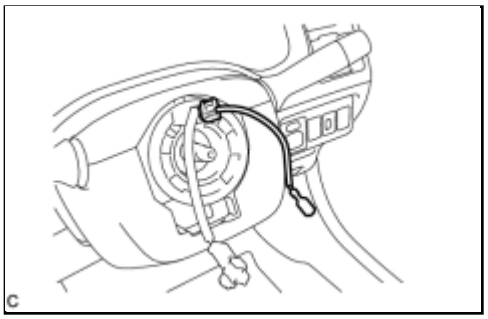

(1) Disconnect the connector and remove the horn button wire sub-assembly.

10. REMOVE LOWER STEERING COLUMN COVER INFO

11. REMOVE UPPER STEERING COLUMN COVER INFO

12. REMOVE SPIRAL CABLE (w/o VSC)

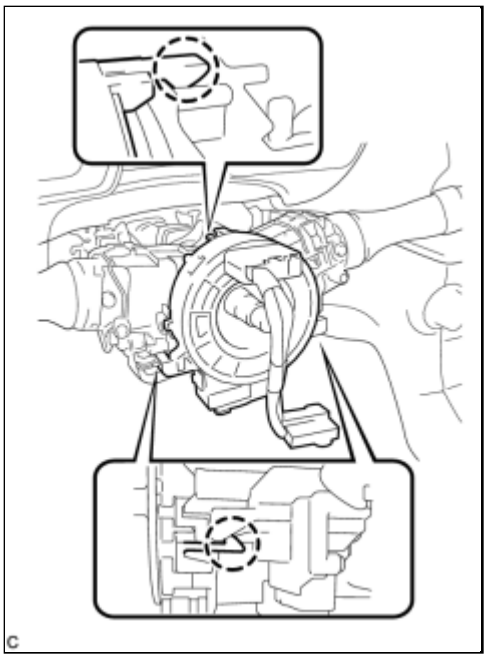

(a) Disconnect the connectors from the spiral cable.

NOTICE:

When disconnecting the airbag connector, take care not to damage the airbag wire harness.

(b) Disengage the 3 claws and remove the spiral cable.

13. REMOVE SPIRAL CABLE WITH STEERING ANGLE SENSOR (w/ VSC)

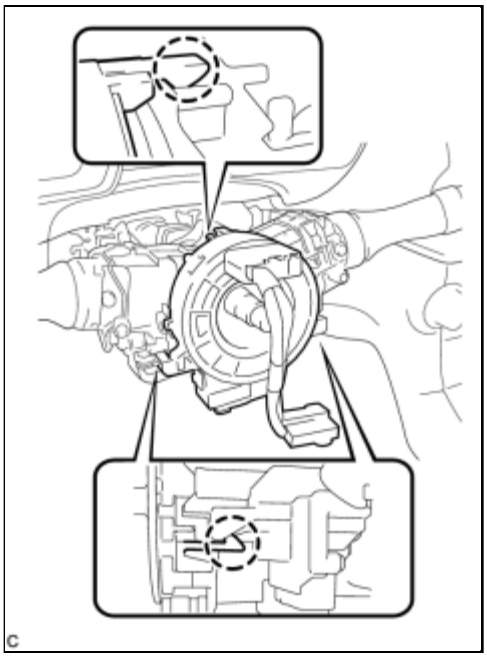

(a) Disconnect the connectors from the spiral cable with steering angle sensor.

NOTICE:

When disconnecting the airbag connector, take care not to damage the airbag wire harness.

(b) Disengage the 3 claws and remove the spiral cable with steering angle sensor.

14. REMOVE SPIRAL CABLE (w/ VSC)

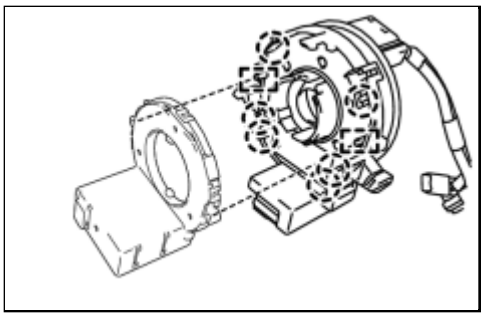

(a) Disengage the 6 claws and 2 pins, and remove the spiral cable from the steering angle sensor.

Last Modified: 3-10-2010	6.4 G	**From:** 200901
Model Year: 2010	**Model:** Corolla	**Doc ID:** RM000000UWB042X
Title: SUPPLEMENTAL RESTRAINT SYSTEMS: SPIRAL CABLE: INSPECTION (2010 Corolla)		

INSPECTION

1. INSPECT SPIRAL CABLE

(a) If there are any defects as mentioned below, replace the spiral cable with a new one:

- Scratches, cracks, dents or chips on the connector or the spiral cable.

(b) Inspect the spiral cable.

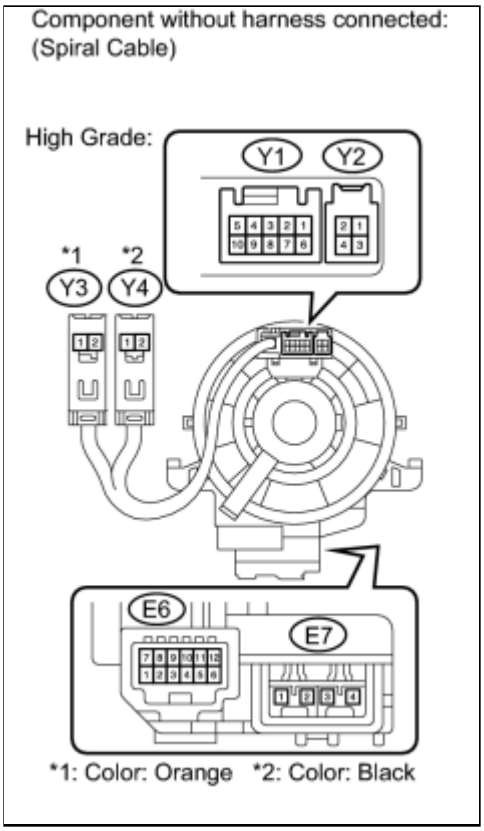

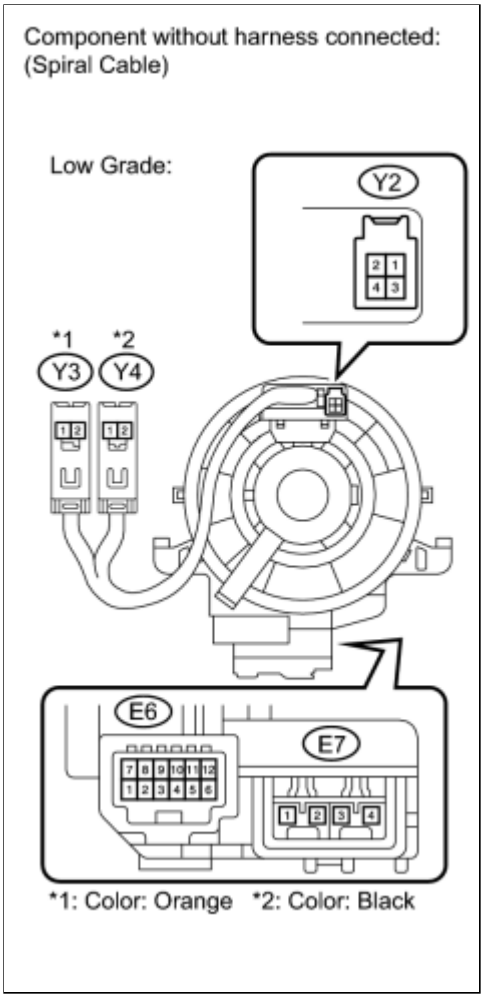

(1) Measure the resistance according to the value(s) in the table below.

NOTICE:

To avoid breakage of the spiral cable, do not turn the spiral cable more than necessary.

If the value is not within the specified range, replace the spiral cable.

Standard Resistance

TESTER CONNECTION	CONDITION	SPECIFIED CONDITION
Y1-1 - E6-8 (HO)	Center	Below 1 Ω
	2.5 rotations to the left	
	2.5 rotations to the right	
Y1-5 - E6-12 (IL+2)	Center	Below 1 Ω
	2.5 rotations to the left	
	2.5 rotations to the right	
Y1-6 - E6-2 (ECC)	Center	Below 1 Ω
	2.5 rotations to the left	
	2.5 rotations to the right	

TESTER CONNECTION	CONDITION	SPECIFIED CONDITION
Y1-8 - E6-4 (EAU)	Center	Below 1 Ω
	2.5 rotations to the left	
	2.5 rotations to the right	
Y1-9 - E6-5 (AU2)	Center	Below 1 Ω
	2.5 rotations to the left	
	2.5 rotations to the right	
Y1-10 - E6-6 (AU1)	Center	Below 1 Ω
	2.5 rotations to the left	
	2.5 rotations to the right	
Y2-2 - E6-8 (HO)	Center	Below 1 Ω
	2.5 rotations to the left	
	2.5 rotations to the right	
Y2-3 - E6-1 (CCS)	Center	Below 1 Ω
	2.5 rotations to the left	
	2.5 rotations to the right	
Y2-4 - E6-2 (ECC)	Center	Below 1 Ω
	2.5 rotations to the left	
	2.5 rotations to the right	
Y3-1 (D-) - E7-2 (D-)	Center	Below 1 Ω
	2.5 rotations to the left	
	2.5 rotations to the right	
Y3-2 (D+) - E7-1 (D+)	Center	Below 1 Ω
	2.5 rotations to the left	
	2.5 rotations to the right	
Y4-1 (D2-) - E7-3 (D2-)	Center	Below 1 Ω
	2.5 rotations to the left	
	2.5 rotations to the right	
Y4-2 (D2+) - E7-4 (D2+)	Center	Below 1 Ω
	2.5 rotations to the left	
	2.5 rotations to the right	

Last Modified: 3-10-2010	6.4 A	**From:** 200901
Model Year: 2010	**Model:** Corolla	**Doc ID:** RM000000UWA042X
Title: SUPPLEMENTAL RESTRAINT SYSTEMS: SPIRAL CABLE: INSTALLATION (2010 Corolla)		

INSTALLATION

1. INSTALL SPIRAL CABLE (w/o VSC)

(a) Check that the front wheels are facing straight ahead.

(b) Set the turn signal switch to the neutral position.

NOTICE:

If it is not in the neutral position, the turn signal switch pin may be snapped.

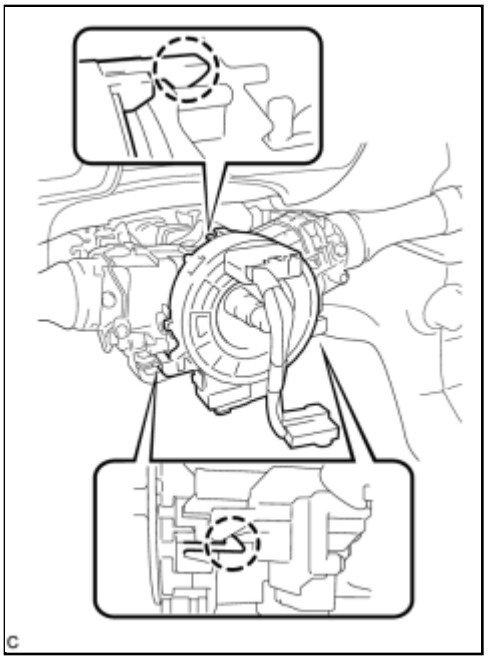

(c) Install the spiral cable with the 3 claws.

NOTICE:

When replacing the spiral cable with a new one, remove the lock pin before installing the steering wheel assembly.

(d) Connect the connectors to the spiral cable.

NOTICE:

When connecting the airbag connector, take care not to damage the airbag wire harness.

2. INSTALL SPIRAL CABLE (w/ VSC)

(a) Install the spiral cable to the steering angle sensor with the 6 claws and 2 pins.

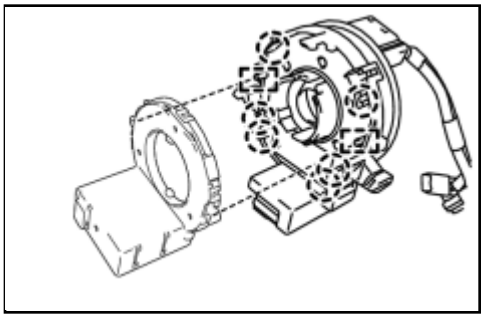

3. INSTALL SPIRAL CABLE WITH STEERING ANGLE SENSOR (w/ VSC)

(a) Check that the front wheels are facing straight ahead.

(b) Set the turn signal switch to the neutral position.

NOTICE:

If it is not in the neutral position, the turn signal switch pin may be snapped..

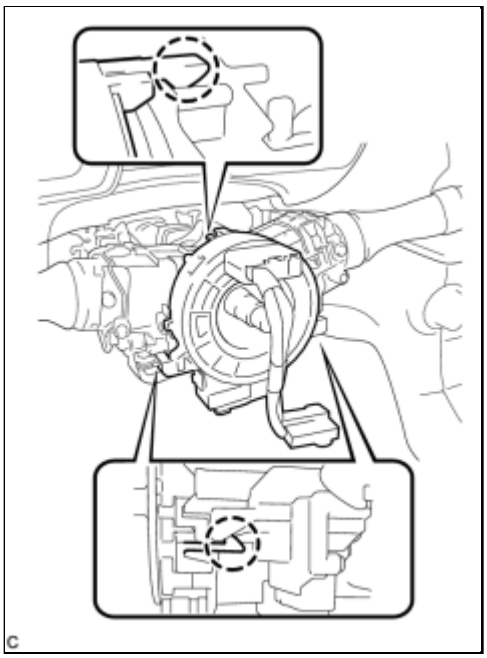

(c) Install the spiral cable with steering angle sensor with the 3 claws.

NOTICE:

When replacing the spiral cable with a new one, remove the lock pin before installing the steering wheel assembly.

(d) Connect the connectors to the spiral cable with steering angle sensor.

NOTICE:

When connecting the airbag connector, take care not to damage the airbag wire harness.

4. INSTALL UPPER STEERING COLUMN COVER INFO

5. INSTALL LOWER STEERING COLUMN COVER INFO

6. INSTALL LOWER INSTRUMENT PANEL FINISH PANEL SUB-ASSEMBLY INFO

7. INSTALL HORN BUTTON WIRE SUB-ASSEMBLY (w/o Steering Pad Switch and Cruise Control System)

(a) w/o Ornament:

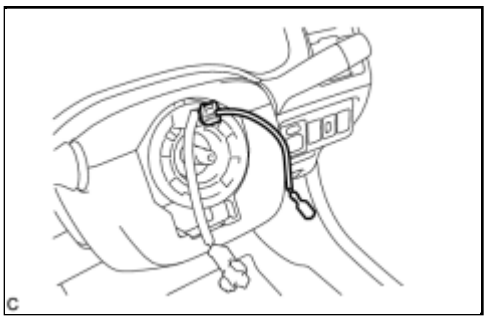

(1) Connect the connector and install the horn button wire sub-assembly.

8. ADJUST SPIRAL CABLE

(a) Check that the ignition switch is off.

(b) Check that the cable is disconnected from the negative (-) battery terminal.

CAUTION:

Wait at least 90 seconds after disconnecting the cable from the negative (-) battery terminal to disable the SRS system.

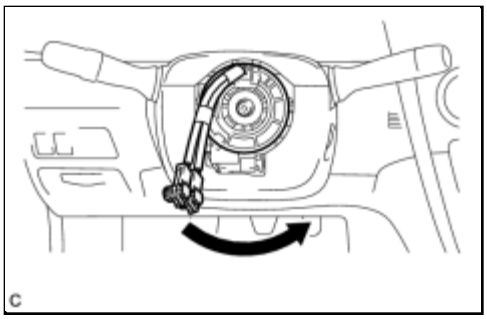

(c) Rotate the spiral cable counterclockwise slowly by hand until it stops.

NOTICE:

Do not turn the spiral cable using the airbag wire harness.

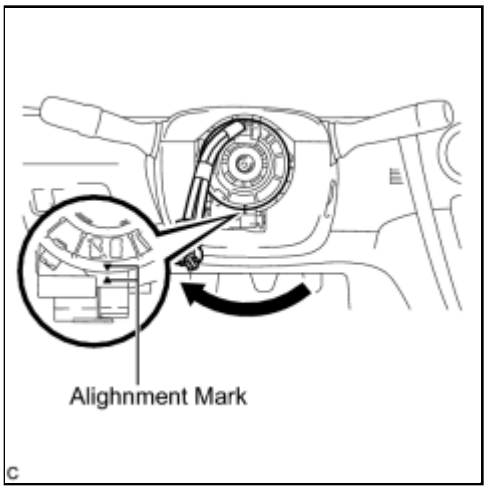

(d) Rotate the spiral cable clockwise approximately 2.5 turns to align the marks.

NOTICE:

Do not turn the spiral cable using the airbag wire harness.

HINT:

The spiral cable will rotate approximately 2.5 turns to both the left and right from the center.

9. INSTALL STEERING WHEEL ASSEMBLY INFO

10. INSTALL STEERING PAD INFO

11. INSTALL LOWER NO. 3 STEERING WHEEL COVER INFO

12. INSTALL LOWER NO. 2 STEERING WHEEL COVER INFO

13. INSPECT STEERING WHEEL CENTER POINT

14. CONNECT CABLE TO NEGATIVE BATTERY TERMINAL

15. INSPECT STEERING PAD INFO

16. INSPECT SRS WARNING LIGHT

(a) Inspect the SRS warning light INFO .

Last Modified: 3-10-2010	6.4 K	**From:** 200901
Model Year: 2010	**Model:** Corolla	**Doc ID:** RM000000UW403HX
Title: SUPPLEMENTAL RESTRAINT SYSTEMS: STEERING PAD: COMPONENTS (2010 Corolla)		

COMPONENTS

ILLUSTRATION

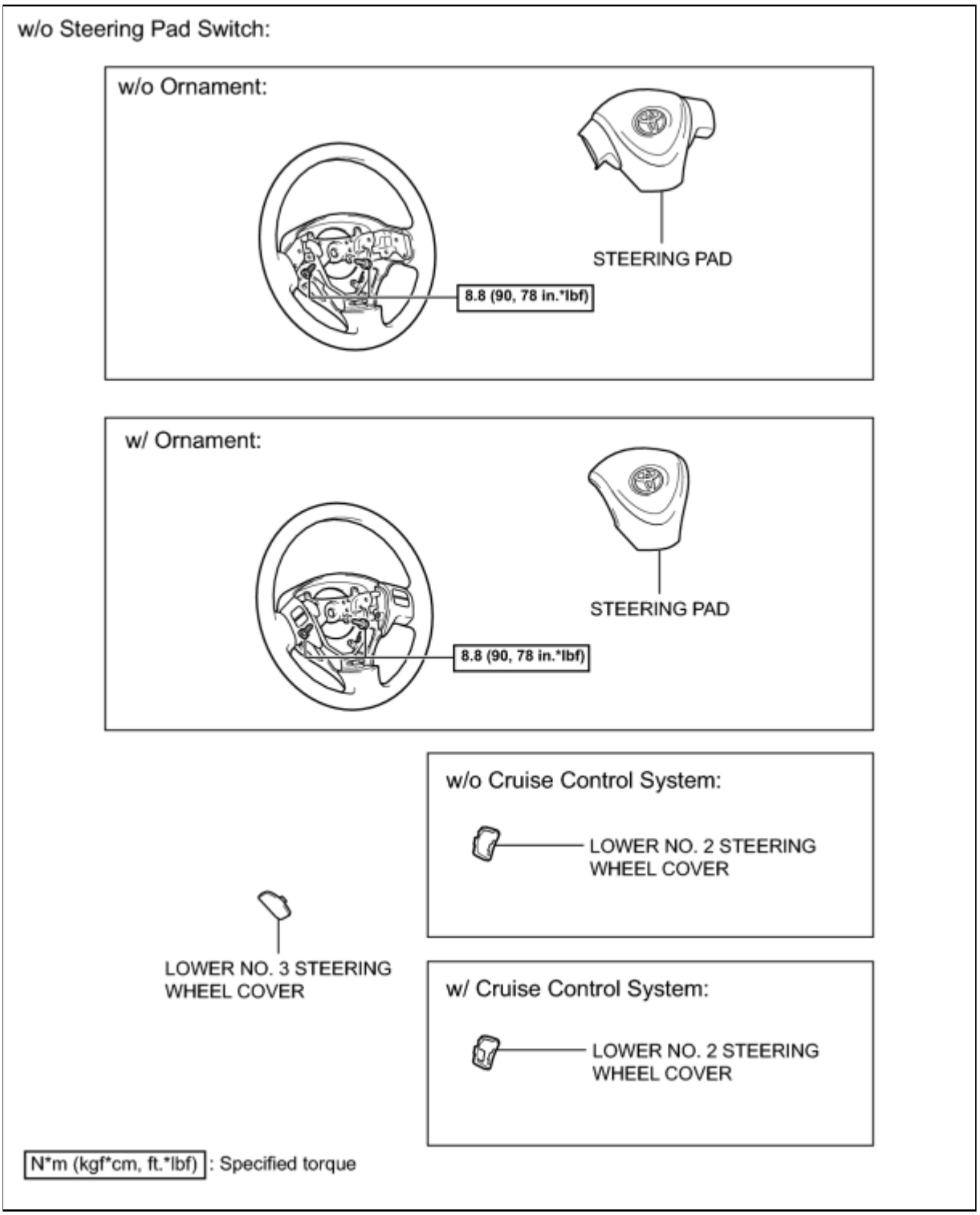

ILLUSTRATION

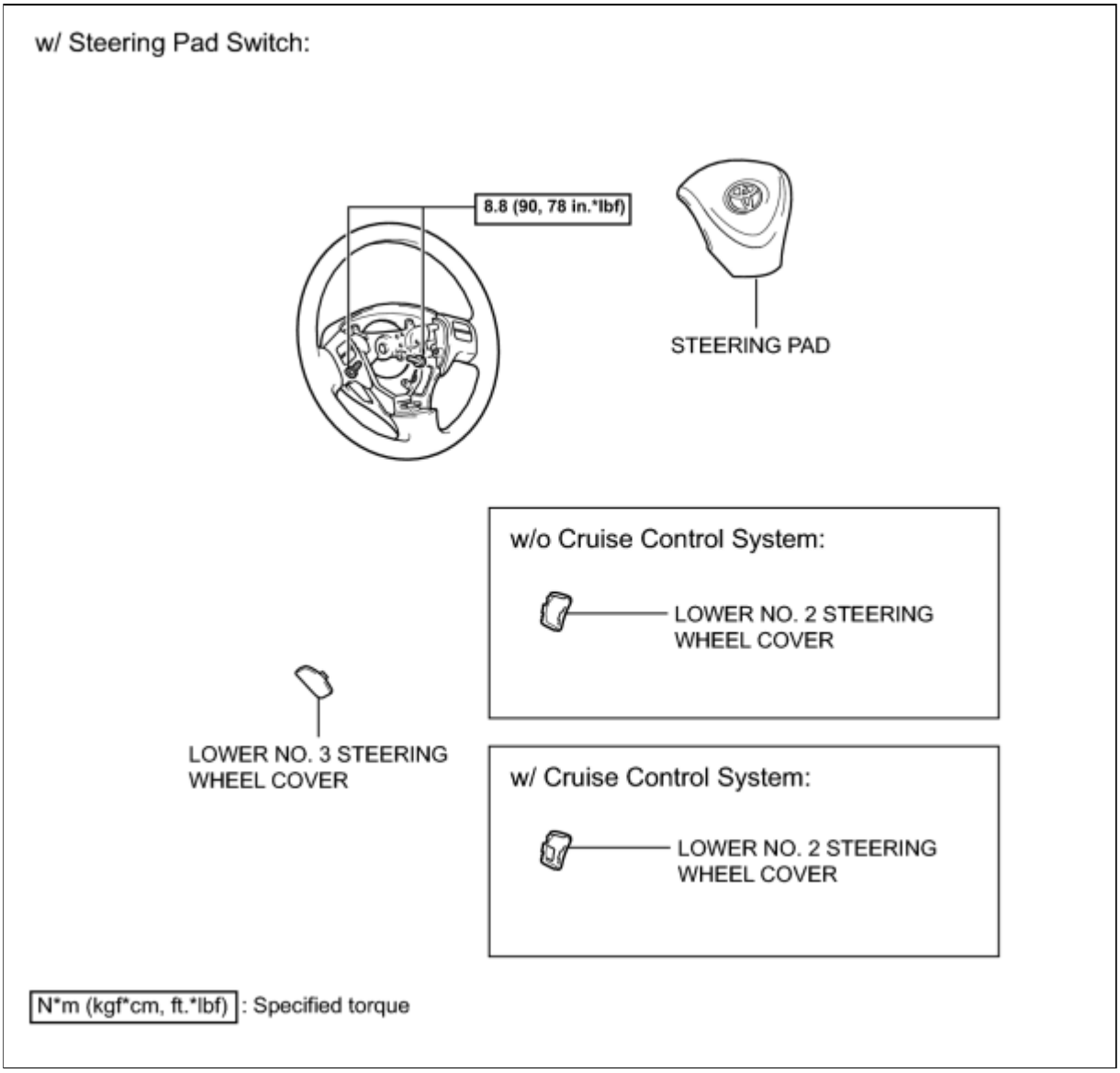

Last Modified: 3-10-2010	6.4 N	**From:** 200901
Model Year: 2010	**Model:** Corolla	**Doc ID:** RM000000UW504FX
Title: SUPPLEMENTAL RESTRAINT SYSTEMS: STEERING PAD: DISPOSAL (2010 Corolla)		

DISPOSAL

CAUTION:

Before performing pre-disposal deployment of any SRS component, review and closely follow all applicable environmental and hazardous material regulations. Pre-disposal deployment may be considered hazardous material treatment.

1. PRECAUTION

HINT:

When scrapping a vehicle equipped with an SRS or disposing of the steering pad, be sure to deploy the airbag first in accordance with the procedure described below. If any abnormality occurs with the airbag deployment, contact the Service Dept. of TOYOTA MOTOR SALES, U.S.A., INC.

CAUTION:

- An airbag or pretensioner may be activated by static electricity. To prevent this, be sure to touch a metal surface with bare hands to discharge static electricity before performing this procedure.
- Never dispose of a steering pad with an undeployed airbag.
- The airbag produces an exploding sound when it is deployed, so perform the operation outdoors and where it will not create a nuisance to nearby residents.
- When deploying the airbag, always use the specified SST (SRS Airbag Deployment Tool). Perform the operation in a place away from electrical noise.
- When deploying the airbag, perform the operation at least 10 m (33 ft.) away from the steering pad.
- The steering pad becomes extremely hot when the airbag is deployed, so do not touch it for at least 30 minutes after deployment.
- Use gloves and safety glasses when handling a steering pad with a deployed airbag.
- Do not apply water, etc. to a steering pad with a deployed airbag.
- Always wash your hands with water after completing the operation.

2. DISPOSE OF STEERING PAD (WHEN INSTALLED IN VEHICLE)

HINT:

Prepare a battery as the power source to deploy the airbag.

(a) Check the function of SST.

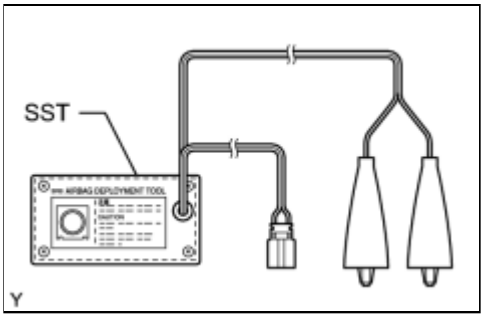

SST: 09082-00700

CAUTION:

When deploying the airbag, always use the specified SST:

SRS Airbag Deployment Tool

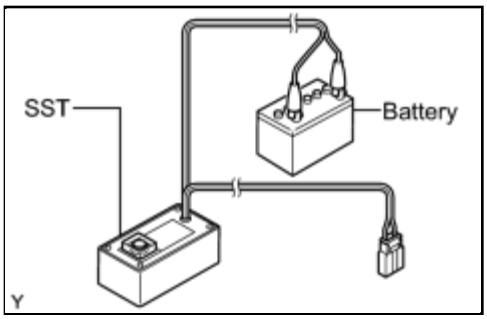

(1) Connect SST to the battery.

Connect the red clip of SST to the positive (+) battery terminal and the black clip of SST to the negative (-) battery terminal.

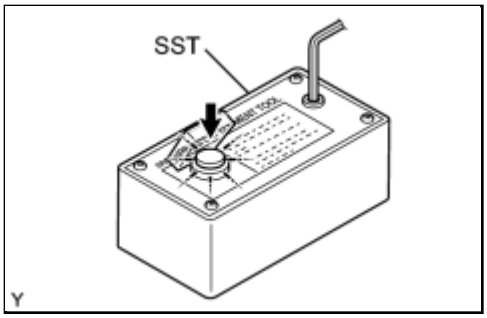

(2) Check the function of SST.

Press the SST activation switch and check that the LED of the SST activation switch comes on.

CAUTION:

- Do not connect the SST connector (yellow colored one) to the airbag.
- If the LED comes on when the activation switch is not being pressed, an SST malfunction is possible, so replace SST with a new one.

(3) Disconnect SST from the battery.

(b) Refer to Precaution INFO .

(c) Disconnect the cable from the negative (-) battery terminal.

CAUTION:

Wait at least 90 seconds after disconnecting the cable from the negative (-) battery terminal to disable the SRS system.

(d) Remove the steering column cover (lower) INFO .

(e) Install the steering wheel assembly INFO .

(f) Install the steering pad INFO .

(g) Install SST.

CAUTION:

Check that there is no looseness in the steering wheel assembly and steering pad.

(1) Disconnect the airbag connector (yellow colored one) from the spiral cable.

NOTICE:

When disconnecting the airbag connector, take care not to damage the airbag wire harness.

(2) Connect the SST connector to the airbag connector of

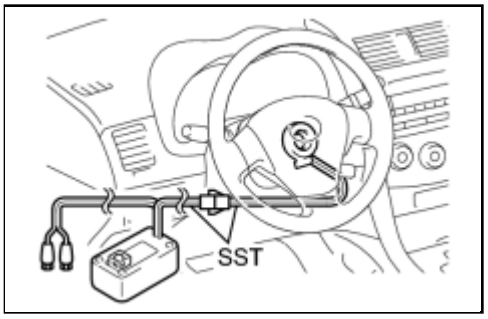

the spiral cable.

SST: 09082-00700

SST: 09082-00780

NOTICE:

To avoid damaging the SST connector and wire harness, do not lock the secondary lock of the twin lock.

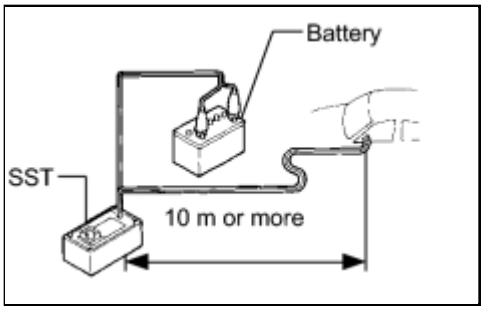

(3) Move SST at least 10 m (33 ft.) away from the vehicle front side window.

(4) Maintaining sufficient clearance for the SST wire harness in the front side window, close all doors and windows of the vehicle.

NOTICE:

Take care not to damage the SST wire harness.

(5) Connect the red clip of SST to the positive (+) battery terminal and the black clip of SST to the negative (-) battery terminal.

(h) Deploy the airbag.

(1) Check that no one is inside the vehicle or within a 10 m (33 ft.) radius of the vehicle.

(2) Press the SST activation switch and deploy the airbag.

CAUTION:

- When deploying the airbag, make sure that no one is near the vehicle.
- The steering pad becomes extremely hot when the airbag is deployed, so do not touch it for at least 30 minutes after deployment.
- Use gloves and safety glasses when handling a steering pad with a deployed airbag.
- Do not apply water, etc. to a steering pad with a deployed airbag.
- Always wash your hands with water after completing the operation.

HINT:

The airbag is deployed as the LED of the SST activation switch comes on.

3. DISPOSE OF STEERING PAD (WHEN NOT INSTALLED IN VEHICLE)

NOTICE:

- When disposing of the steering pad, never use the customer's vehicle to deploy the airbag.
- Be sure to follow the following procedure when deploying the airbag.

HINT:

Prepare a battery as the power source to deploy the airbag.

(a) Check the function of SST.

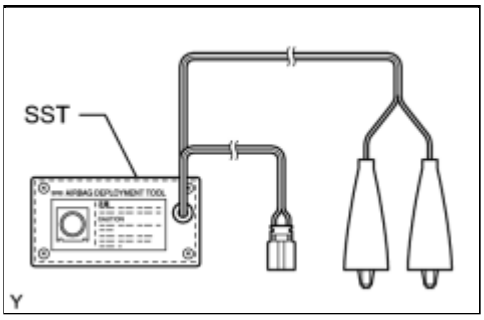

SST: 09082-00700

CAUTION:

When deploying the airbag, always use the specified SST:

SRS Airbag Deployment Tool

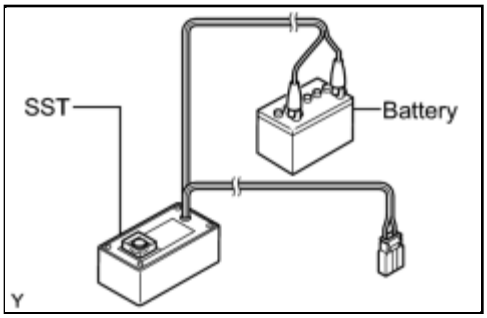

(1) Connect SST to the battery.

Connect the red clip of SST to the positive (+) battery terminal and the black clip of SST to the negative (-) battery terminal.

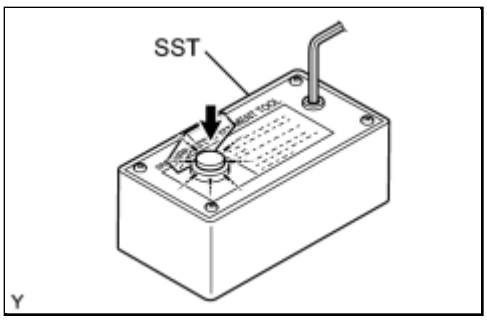

(2) Check the function of SST.

Press the SST activation switch and check that the LED of the SST activation switch comes on.

CAUTION:

- Do not connect the SST connector (yellow colored one) to the airbag.
- If the LED comes on when the activation switch is not being pressed, an SST malfunction is possible, so replace SST with a new one.

(3) Disconnect SST from the battery.

(b) Remove the steering pad INFO .

CAUTION:

- When removing the steering pad, before the work is started, leave the vehicle at least 90 seconds after turning the ignition switch off and disconnecting the cable from the negative (-) battery terminal.
- When storing the steering pad, keep the airbag deployment side facing upward.

(c) Using braided wire, tie down the steering pad to an unneeded wheel.

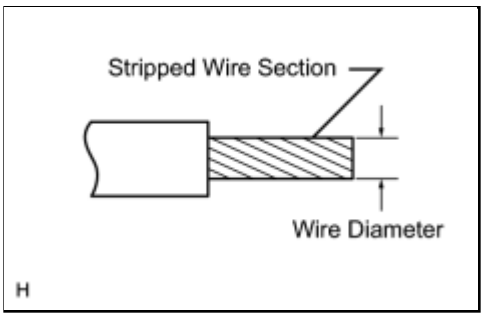

Wire:
Stripped wire section
1.25 mm^2 (0.0019 $in.^2$) or more

CAUTION:

If the wire is too thin or an alternative object is used to tie down the steering pad, it may be snapped by the shock when the airbag is deployed. Always use a wire for vehicle use with an area of at least 1.25 mm^2 (0.0019 $in.^2$).

HINT:

To calculate the area of the stripped wire section:

Area = 3.14 x (Diameter)^2 divided by 4

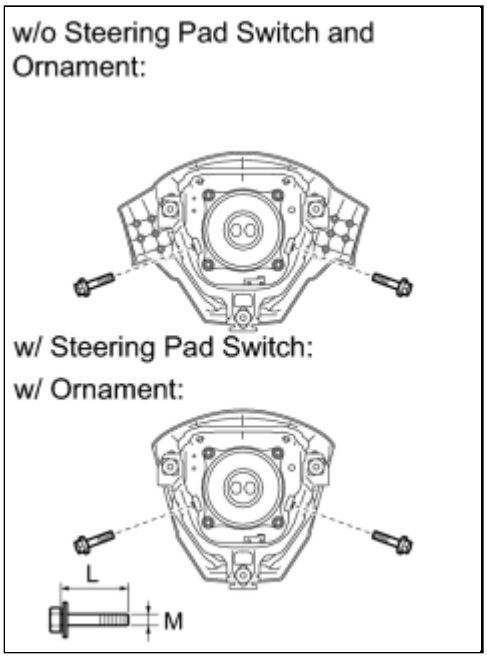

(1) Install the 2 bolts with washers into the 2 bolt holes on the steering pad.

Bolt:

L

35.0 mm (1.38 in.)

M

6.0 mm (0.236 in.)

Pitch

1.0 mm (0.0394 in.)

NOTICE:

- Tighten the bolts by hand until they become difficult to turn.
- Do not tighten the bolts excessively.

(2) After connecting the following SST to each other, connect them to the steering pad.

SST: 09082-00802

09082-10801

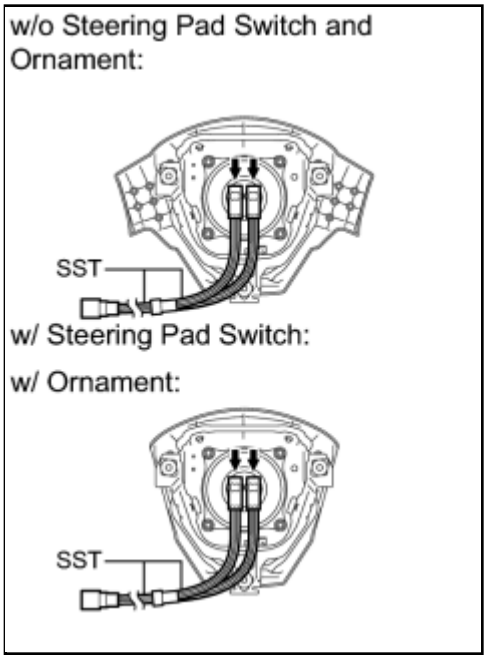

09082-30801

(3) Wind 3 wires at least twice each around each of the bolts installed on the left and right sides of the steering pad.

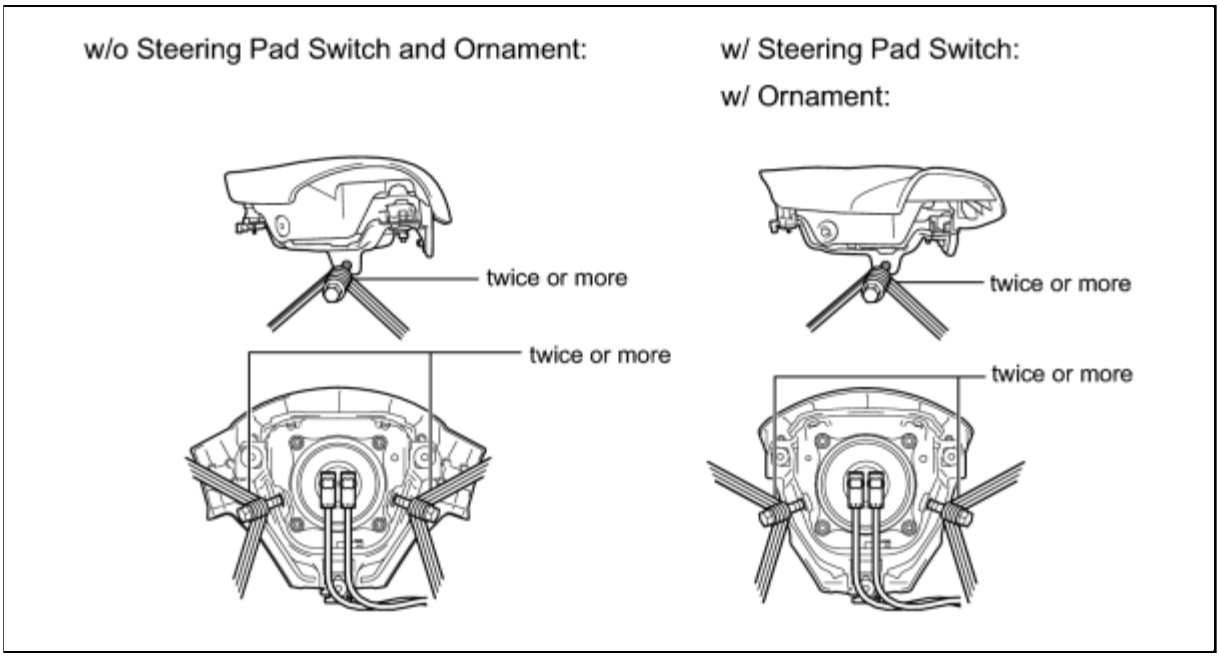

CAUTION:

- Tightly wind the wires around the bolts so that there is no slack.
- Make sure that the wires are tight. If there is slack in the wires, the steering pad may break loose due to the shock when the airbag is deployed.

(4) Face the airbag deployment side of the steering pad upward on top of an unneeded tire and wheel set.

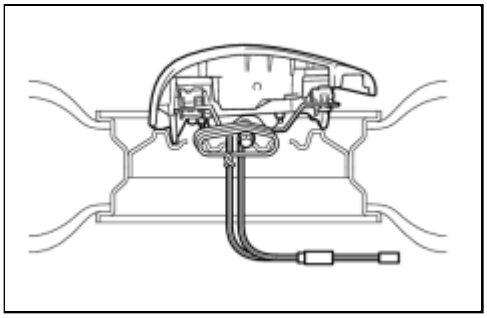

Separately tie the left and right sides of the steering pad to the wheel through the hub nut holes. Position the SST connector so that it hangs downward through the hub hole of the wheel.

CAUTION:

- Make sure that the wires are tight. If there is slack in the wires, the steering pad may break loose due to the shock when the airbag is deployed.
- Always tie down the steering pad with the airbag deployment side facing upward.

NOTICE:

The wheel will be damaged by the airbag deployment, so use an unneeded wheel.

(d) Install SST.

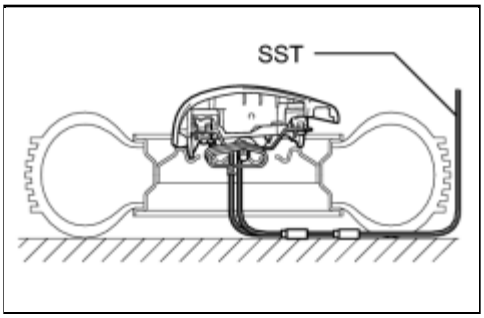

CAUTION:

Place the wheel on level ground.

(1) Connect the SST connector.

SST: 09082-00700

NOTICE:

To avoid damaging the SST connector and wire harness, do not lock the secondary lock of the twin lock. Also, secure some slack for the SST wire harness inside the disc wheel.

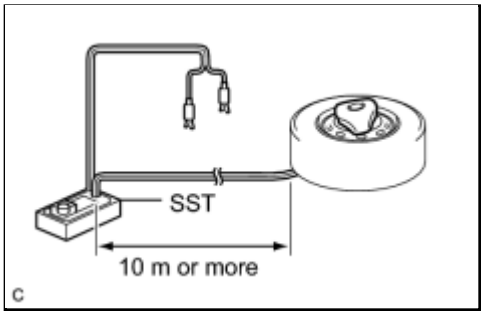

(2) Move SST at least 10 m (33 ft.) away from the airbag tied down to the wheel.

(e) Cover the steering pad (using a cardboard box).

(1) Cover the steering pad with the cardboard box.

(2) Place weights on the cardboard box in 4 places totalling at least 190 N (19 kg, 42.7 lb).

Minimum cardboard box size:
Must exceed the following dimensions
X
460 mm (18.1 in.)
Y
650 mm (25.6 in.)

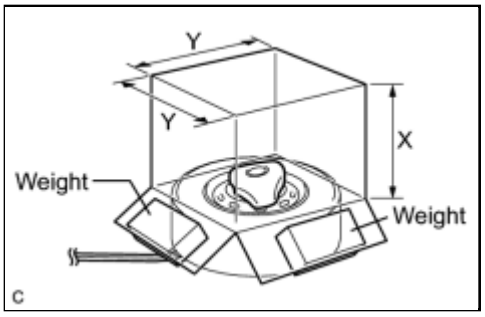

NOTICE:

- When dimension Y of the cardboard box exceeds the diameter of the wheel and tire which the steering pad is tied to, X should be the following size.

  X = 460 mm (18.1 in.) + width of tire
- If a cardboard box which is smaller than the specified size is used, the cardboard box may be broken by the shock from the airbag deployment.

(f) Cover the steering pad (using tires).

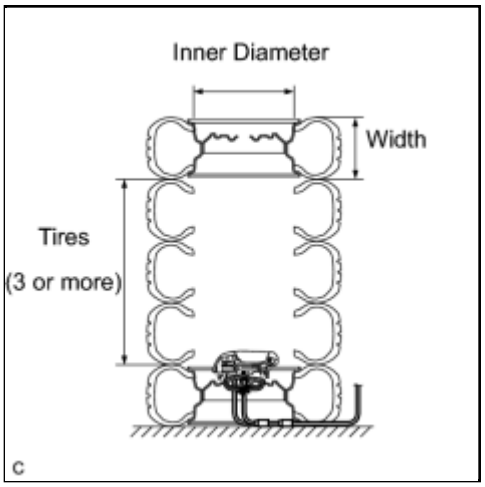

(1) Place at least 3 tires without wheels onto the wheel and tire which the steering pad is tied to.

(2) Place the wheel and tire on top of them.

Minimum tire size:
Must exceed the following dimensions
Width:
185 mm (7.28 in.)
Inner diameter:
360 mm (14.2 in.)

CAUTION:

Do not use tires with wheels except for on the top and bottom.

NOTICE:

- The tires may be damaged by the airbag deployment, so use an extra tires.
- Do not place the SST connector under the tire because it could be damaged.

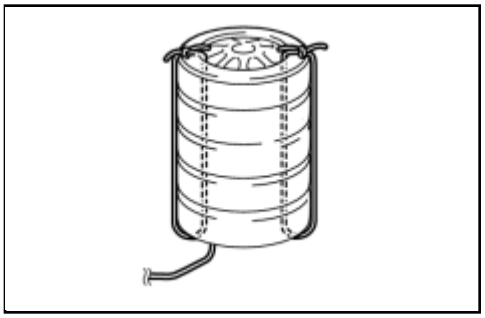

(3) Tie the tires together with the 2 wires.

CAUTION:

Make sure that the wires are tight. Looseness in the wires results in the tires breaking loose due to the shock when the airbag is deployed.

(g) Deploy the airbag.

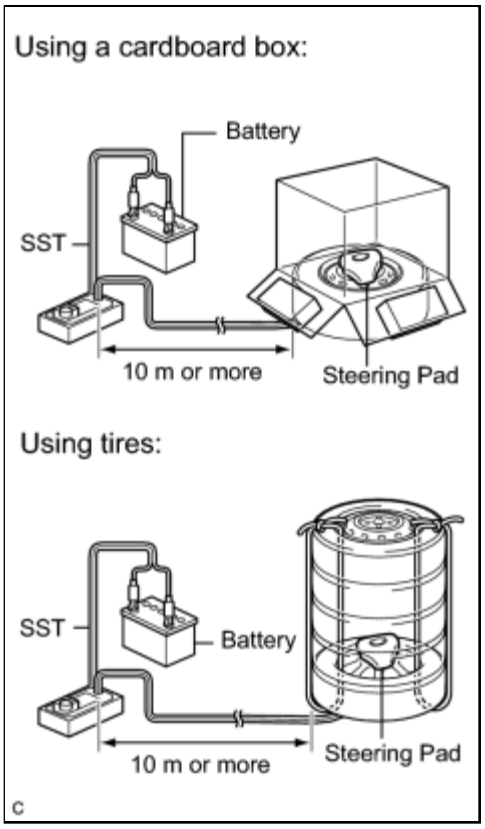

(1) Connect the red clip of SST to the positive (+) battery terminal and the black clip of SST to the negative (-) battery terminal.

(2) Check that no one is within a 10 m (33 ft.) radius of the wheel which the steering pad is tied to.

(3) Press the SST activation switch and deploy the airbag.

CAUTION:

When deploying the airbag, make sure that no one is near the tire.

HINT:

The airbag is deployed as the LED of the SST activation switch comes on.



(h) Dispose of the steering pad.

CAUTION:

- The steering pad becomes extremely hot when the airbag is deployed, so do not touch it for at least 30 minutes after deployment.
- Use gloves and safety glasses when handling a steering pad with a deployed airbag.
- Do not apply water, etc. to a steering pad with a deployed airbag.
- Always wash your hands with water after completing the operation.

(1) Remove the steering pad from the wheel.

(2) Place the steering pad in a plastic bag, tie it tightly and dispose of it according to local regulations.

Last Modified: 3-10-2010	6.4 G	**From:** 200901
Model Year: 2010	**Model:** Corolla	**Doc ID:** RM000000UW904CX
Title: SUPPLEMENTAL RESTRAINT SYSTEMS: STEERING PAD: ON-VEHICLE INSPECTION (2010 Corolla)		

ON-VEHICLE INSPECTION

1. INSPECT STEERING PAD (VEHICLE NOT INVOLVED IN COLLISION) (w/o Steering Pad Switch)

(a) Perform a diagnostic system check INFO .

(b) With the steering pad installed on the vehicle, perform a visual check. If there are any following defects, replace the steering pad with a new one:

- Cuts, minute cracks or marked discoloration on the steering pad top surface or grooves.

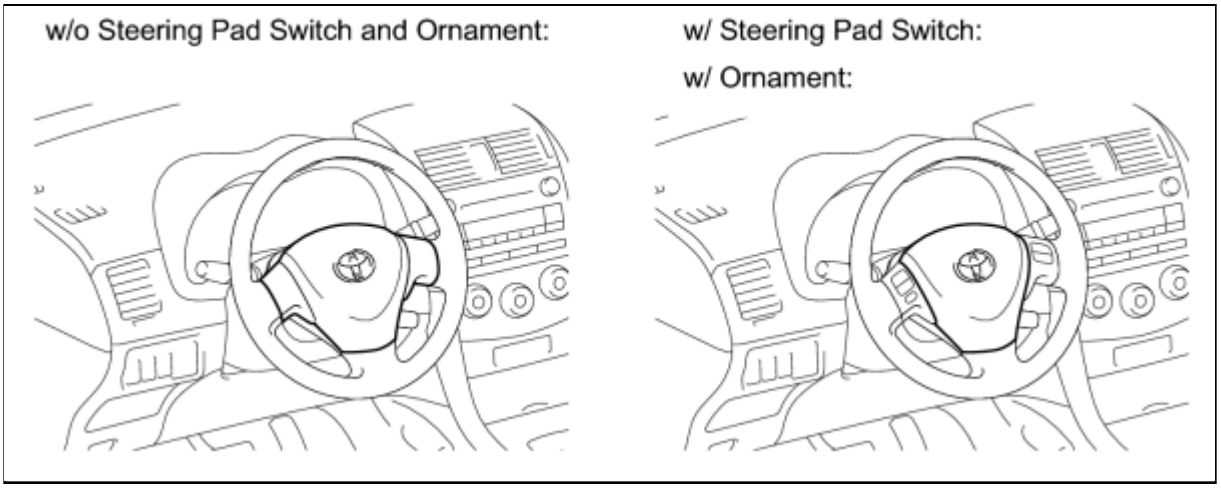

2. INSPECT STEERING PAD (VEHICLE INVOLVED IN COLLISION AND AIRBAG HAS NOT DEPLOYED)

(a) Perform a diagnostic system check INFO .

(b) With the steering pad removed from the vehicle, perform a visual check. If there are any following defects, replace the steering pad or steering wheel assembly with a new one:

- Cuts, minute cracks or marked discoloration on the steering pad top surface or grooves.
- Cracks or other damage to the connectors.
- Deformation of the steering wheel assembly.
- Deformation of the horn button contact plate of the steering pad.
- There should be no interference between the steering pad and steering wheel assembly, and the clearance should be uniform all the way around when a new steering pad is installed on the steering wheel assembly.

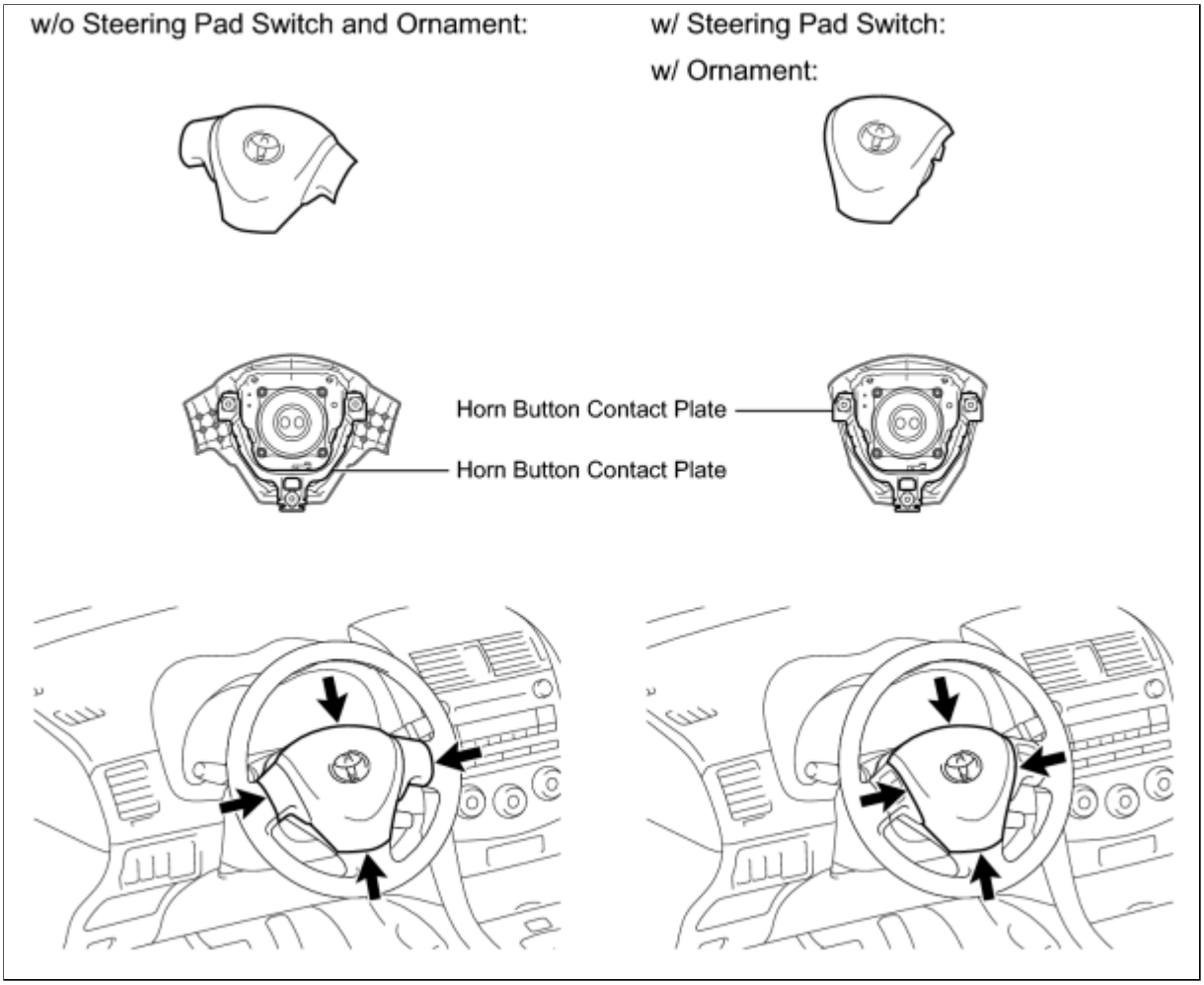

CAUTION:

Be sure to follow the correct removal and installation procedures of the steering pad.

Last Modified: 3-10-2010	6.4 A	**From:** 200901
Model Year: 2010	**Model:** Corolla	**Doc ID:** RM000000UW804AX
Title: SUPPLEMENTAL RESTRAINT SYSTEMS: STEERING PAD: REMOVAL (2010 Corolla)		

REMOVAL

1. PRECAUTION

CAUTION:

Be sure to read Precaution thoroughly before servicing INFO **.**

2. DISCONNECT CABLE FROM NEGATIVE BATTERY TERMINAL

CAUTION:

Wait at least 90 seconds after disconnecting the cable from the negative (-) battery terminal to disable the SRS system.

3. REMOVE LOWER NO. 3 STEERING WHEEL COVER

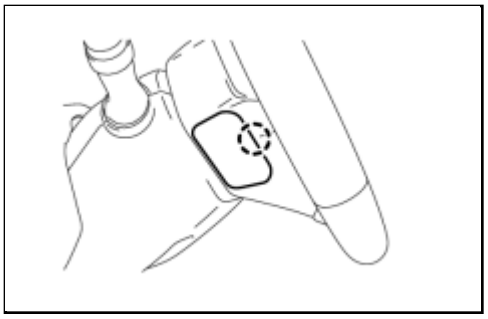

(a) Disengage the claw and remove the lower No. 3 steering wheel cover.

4. REMOVE LOWER NO. 2 STEERING WHEEL COVER

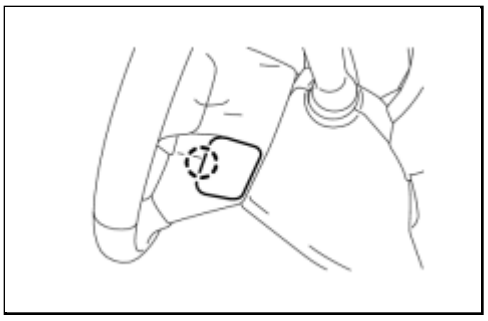

(a) Disengage the claw and remove the lower No. 2 steering wheel cover.

5. REMOVE STEERING PAD

(a) Using a "TORX" socket wrench (T30), loosen the 2 "TORX" screws until the groove along the screw circumference catches on the screw case.

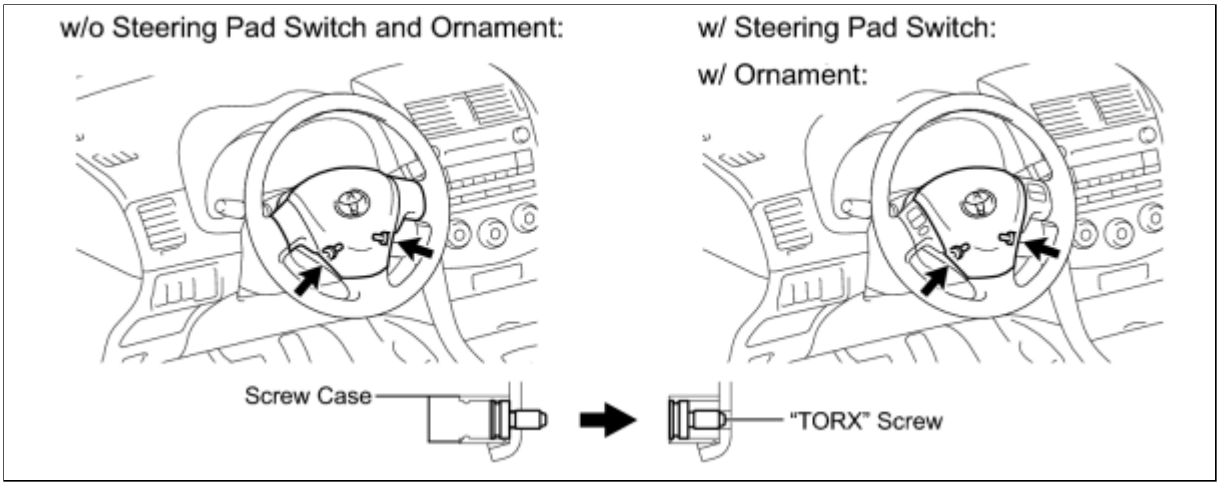

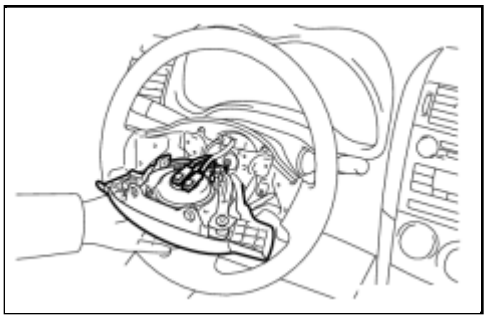

(b) Pull out the steering pad from the steering wheel assembly and support the steering pad with one hand as shown in the illustration.

NOTICE:

When removing the steering pad, do not pull the airbag wire harness.

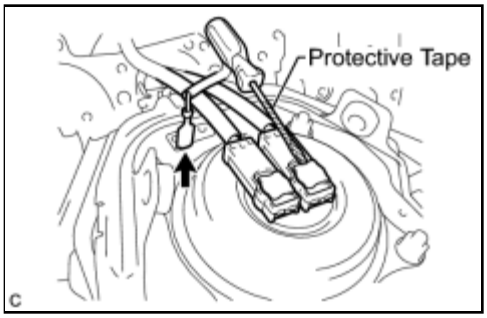

(c) Disconnect the horn connector from the steering pad.

(d) Using a screwdriver with the tip wrapped with protective tape, disconnect the 2 airbag connectors and remove the steering pad.

NOTICE:

When disconnecting the airbag connector, take care not to damage the airbag wire harness.

Last Modified: 3-10-2010	6.4 A	**From:** 200901
Model Year: 2010	**Model:** Corolla	**Doc ID:** RM000000UW604CX
Title: SUPPLEMENTAL RESTRAINT SYSTEMS: STEERING PAD: INSTALLATION (2010 Corolla)		

INSTALLATION

1. INSTALL STEERING PAD

(a) Check that the ignition switch is off.

(b) Check that the cable is disconnected from the negative (-) battery terminal.

CAUTION:

Wait at least 90 seconds after disconnecting the cable from the negative (-) battery terminal to disable the SRS system.

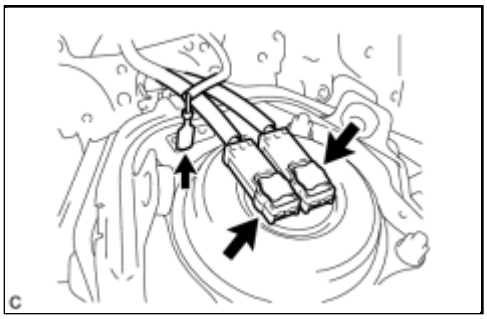

(c) Connect the 2 airbag connectors to the steering pad.

NOTICE:

When connecting the airbag connector, take care not to damage the airbag wire harness.

(d) Connect the horn connector to the steering pad.

(e) Confirm that the circumference groove of the "TORX" screw fits in the screw case, and place the steering pad onto the steering wheel assembly.

(f) Using a "TORX" socket wrench (T30), tighten the 2 "TORX" screws.

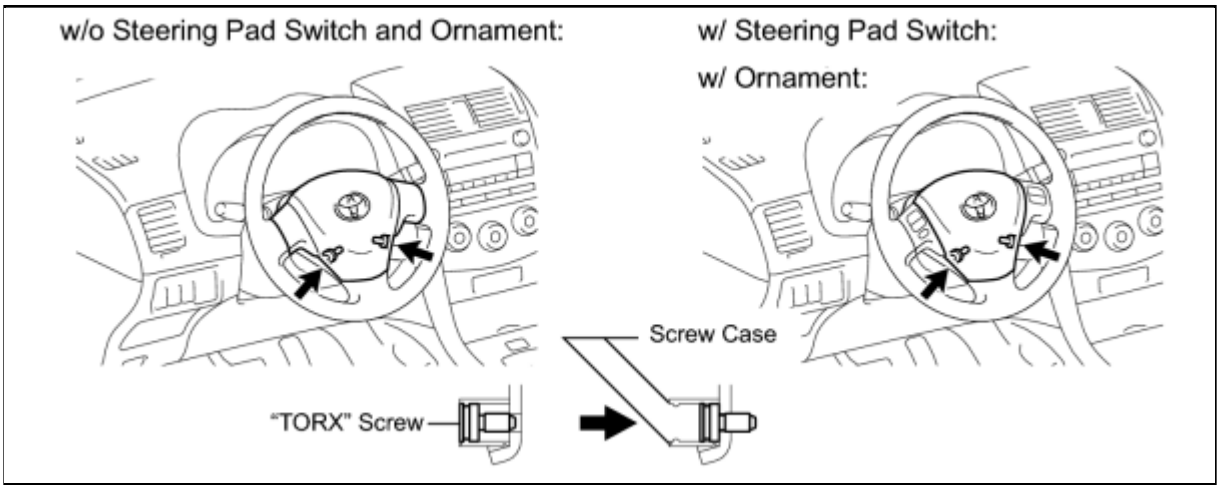

Torque: 8.8 N·m (90 kgf·cm, 78in·lbf)

2. INSTALL LOWER NO. 3 STEERING WHEEL COVER

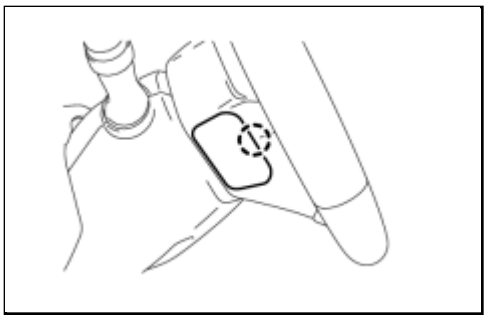

(a) Install the lower No. 3 steering wheel cover with the claw.

3. INSTALL LOWER NO. 2 STEERING WHEEL COVER

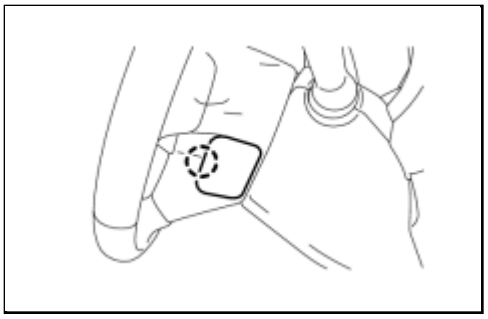

(a) Install the lower No. 2 steering wheel cover with the claw.

4. CONNECT CABLE TO NEGATIVE BATTERY TERMINAL

5. INSPECT STEERING PAD

(a) With the steering pad installed on the vehicle, perform a visual check. If there are any following defects, replace the steering pad with a new one:

- Cuts, minute cracks or marked discoloration on the steering pad top surface or grooves.

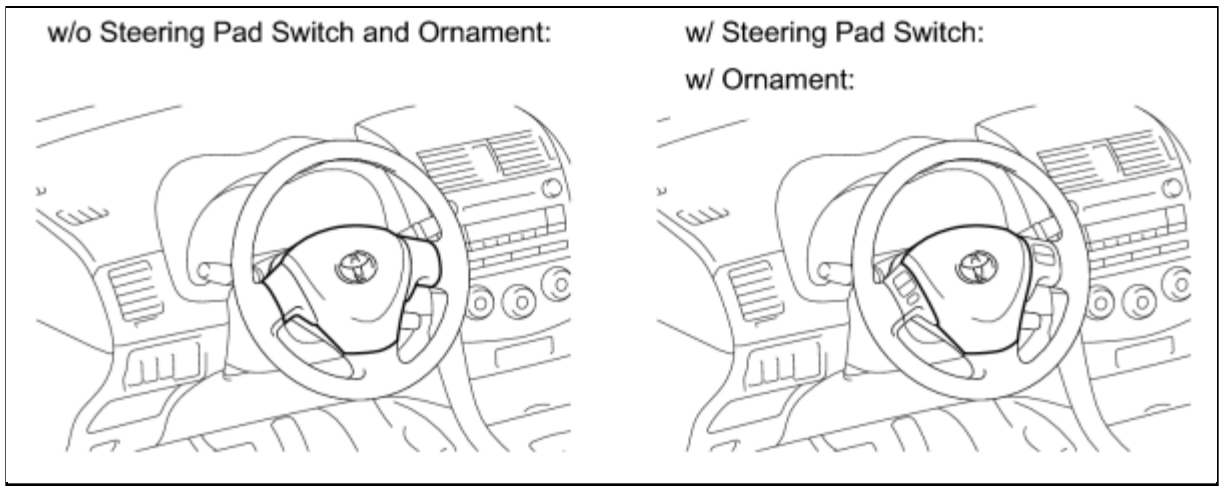

(b) Make sure that the horn sounds.

HINT:

If the horn does not sound, inspect the horn system INFO .

6. INSPECT SRS WARNING LIGHT

(a) Inspect the SRS warning light INFO .

Last Modified: 3-10-2010	6.4 K	**From:** 200901
Model Year: 2010	**Model:** Corolla	**Doc ID:** RM000003CO7002X
Title: THEFT DETERRENT / KEYLESS ENTRY: GLASS BREAKAGE SENSOR: COMPONENTS (2010 Corolla)		

COMPONENTS

ILLUSTRATION

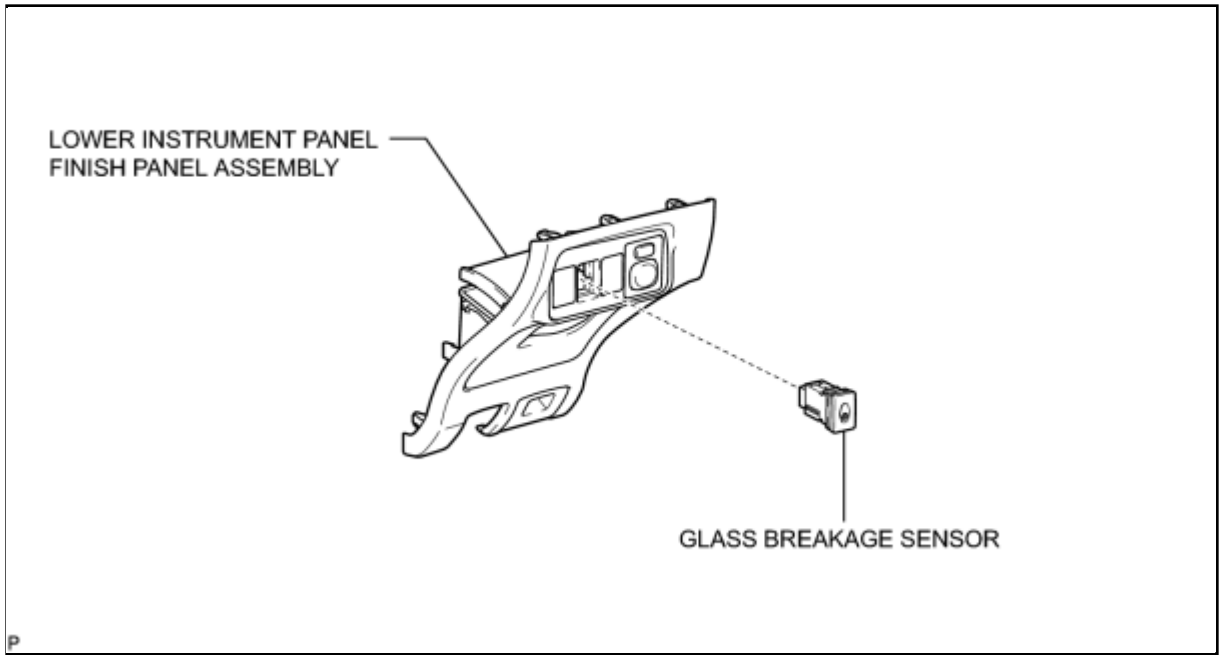

Last Modified: 3-10-2010	6.4 A	**From:** 200901
Model Year: 2010	**Model:** Corolla	**Doc ID:** RM000003CO8002X
Title: THEFT DETERRENT / KEYLESS ENTRY: GLASS BREAKAGE SENSOR: REMOVAL (2010 Corolla)		

REMOVAL

1. REMOVE LOWER INSTRUMENT PANEL FINISH PANEL ASSEMBLY INFO

2. REMOVE GLASS BREAKAGE SENSOR

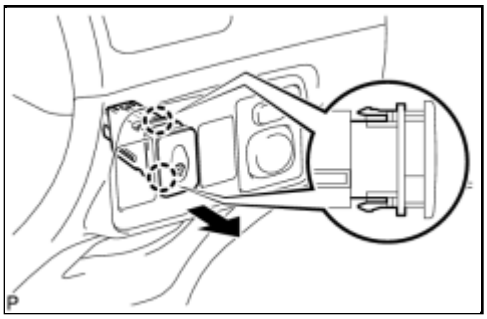

(a) Disengage the 2 claws and remove the glass breakage sensor.

Last Modified: 3-10-2010	6.4 A	**From:** 200901
Model Year: 2010	**Model:** Corolla	**Doc ID:** RM000003CO5002X
Title: THEFT DETERRENT / KEYLESS ENTRY: GLASS BREAKAGE SENSOR: INSTALLATION (2010 Corolla)		

INSTALLATION

1. INSTALL GLASS BREAKAGE SENSOR

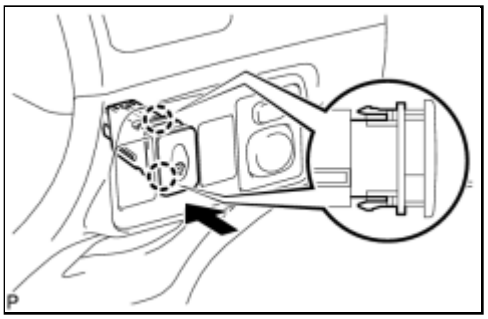

(a) Engage the 2 claws and install the glass breakage sensor.

2. INSTALL LOWER INSTRUMENT PANEL FINISH PANEL ASSEMBLY INFO

Last Modified: 3-10-2010	6.4 K	**From:** 200901
Model Year: 2010	**Model:** Corolla	**Doc ID:** RM000003CO7003X
Title: THEFT DETERRENT / KEYLESS ENTRY: GLASS BREAKAGE SENSOR ECU: COMPONENTS (2010 Corolla)		

COMPONENTS

ILLUSTRATION

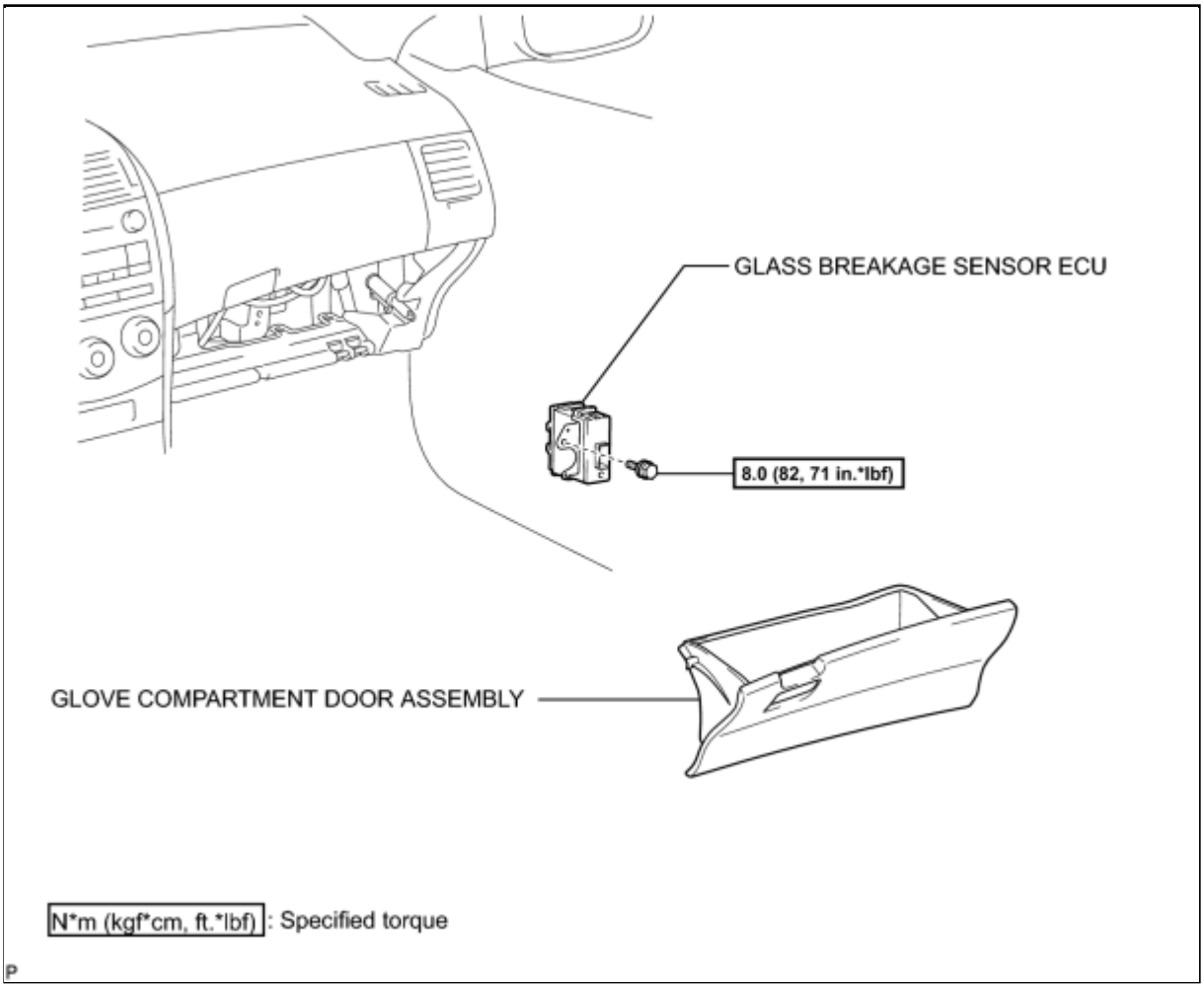

Last Modified: 3-10-2010	6.4 A	**From:** 200901
Model Year: 2010	**Model:** Corolla	**Doc ID:** RM000003CO8003X
Title: THEFT DETERRENT / KEYLESS ENTRY: GLASS BREAKAGE SENSOR ECU: REMOVAL (2010 Corolla)		

REMOVAL

1. REMOVE GLOVE COMPARTMENT DOOR ASSEMBLY INFO

2. REMOVE GLASS BREAKAGE SENSOR ECU

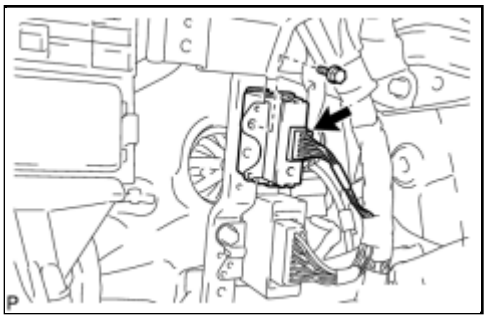

(a) Disconnect the connector.

(b) Remove the bolt and glass breakage sensor ECU.

Last Modified: 3-10-2010	6.4 A	**From:** 200901
Model Year: 2010	**Model:** Corolla	**Doc ID:** RM000003CO5003X
Title: THEFT DETERRENT / KEYLESS ENTRY: GLASS BREAKAGE SENSOR ECU: INSTALLATION (2010 Corolla)		

INSTALLATION

1. INSTALL GLASS BREAKAGE SENSOR ECU

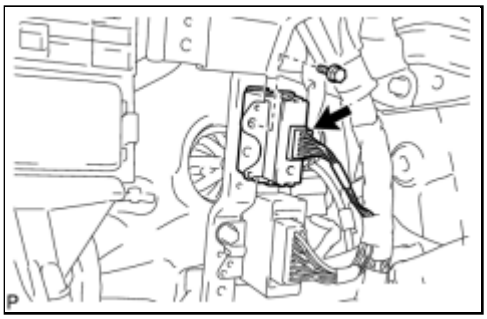

(a) Install the glass breakage sensor ECU with the bolt.

Torque: 8.0 N·m (82 kgf·cm, 71in·lbf)

(b) Connect the connector.

2. INSTALL GLOVE COMPARTMENT DOOR ASSEMBLY INFO

Last Modified: 3-10-2010	6.4 K	**From:** 200901
Model Year: 2010	**Model:** Corolla	**Doc ID:** RM000003G04001X
Title: THEFT DETERRENT / KEYLESS ENTRY: ID CODE BOX: COMPONENTS (2010 Corolla)		

COMPONENTS

ILLUSTRATION

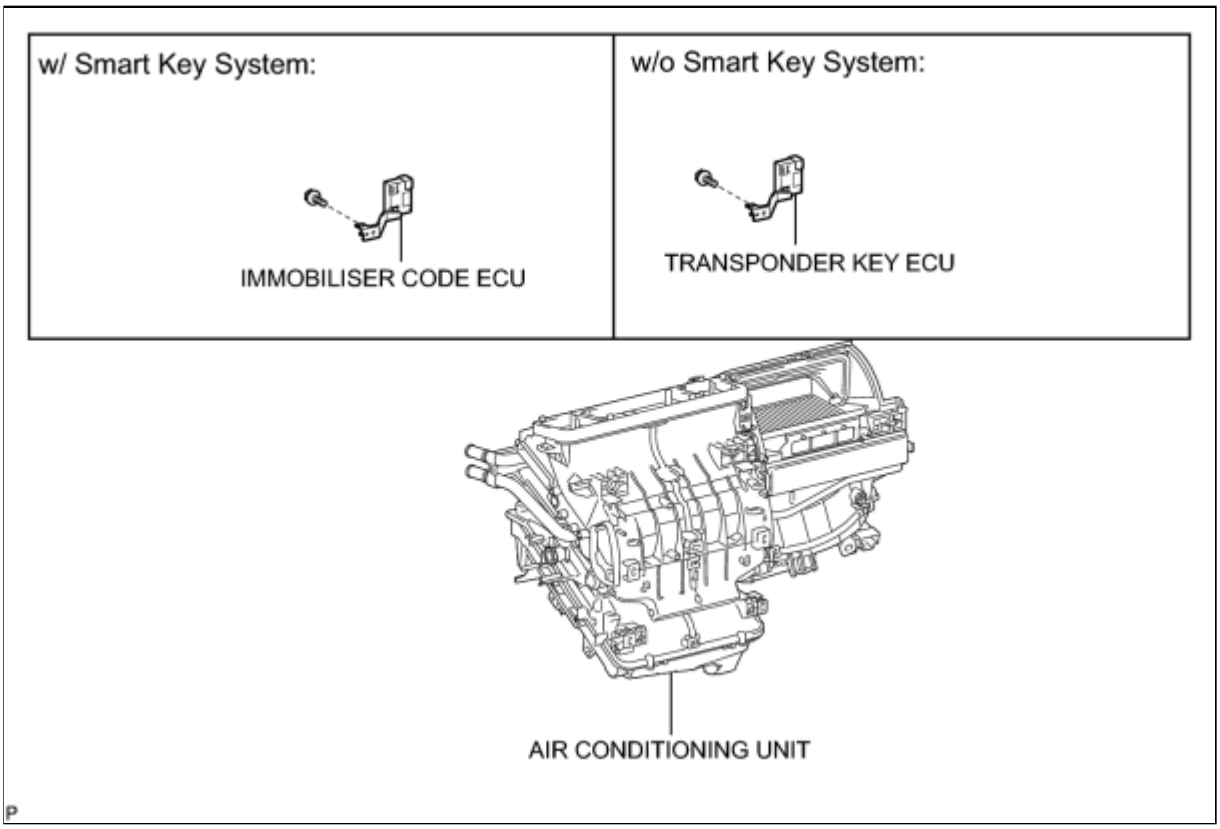

Last Modified: 3-10-2010	6.4 A	**From:** 200901
Model Year: 2010	**Model:** Corolla	**Doc ID:** RM000003G05001X
Title: THEFT DETERRENT / KEYLESS ENTRY: ID CODE BOX: REMOVAL (2010 Corolla)		

REMOVAL

1. REMOVE AIR CONDITIONING UNIT

HINT:

Refer to the removal procedure for the air conditioning unit INFO **.**

2. REMOVE IMMOBILISER CODE ECU (w/ Smart Key System)

(a) Disconnect the connector.

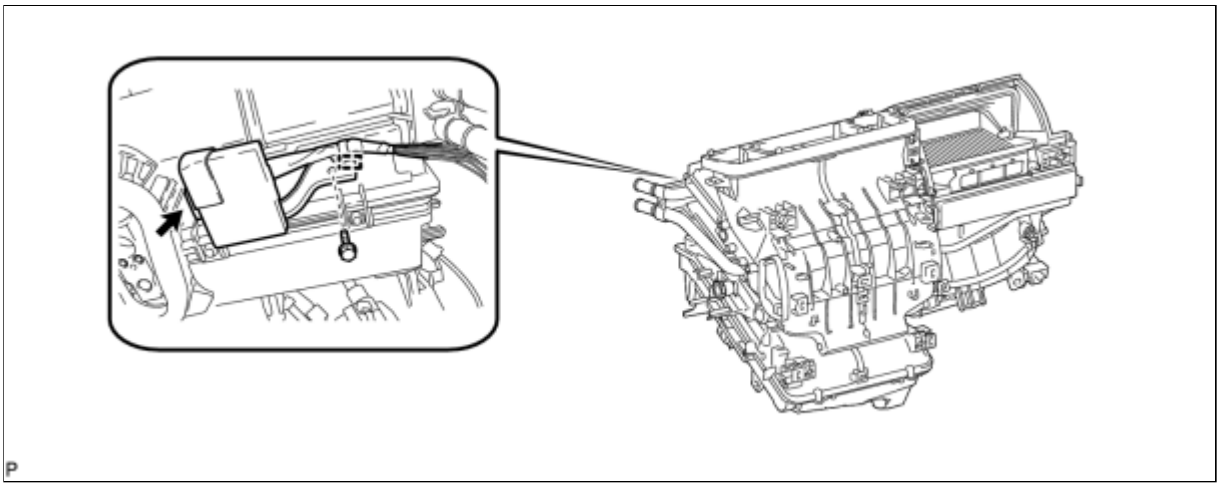

(b) Disengage the clamp.

(c) Remove the bolt and the immobiliser code ECU.

3. REMOVE TRANSPONDER KEY ECU (w/o Smart Key System)

(a) Disconnect the connector.

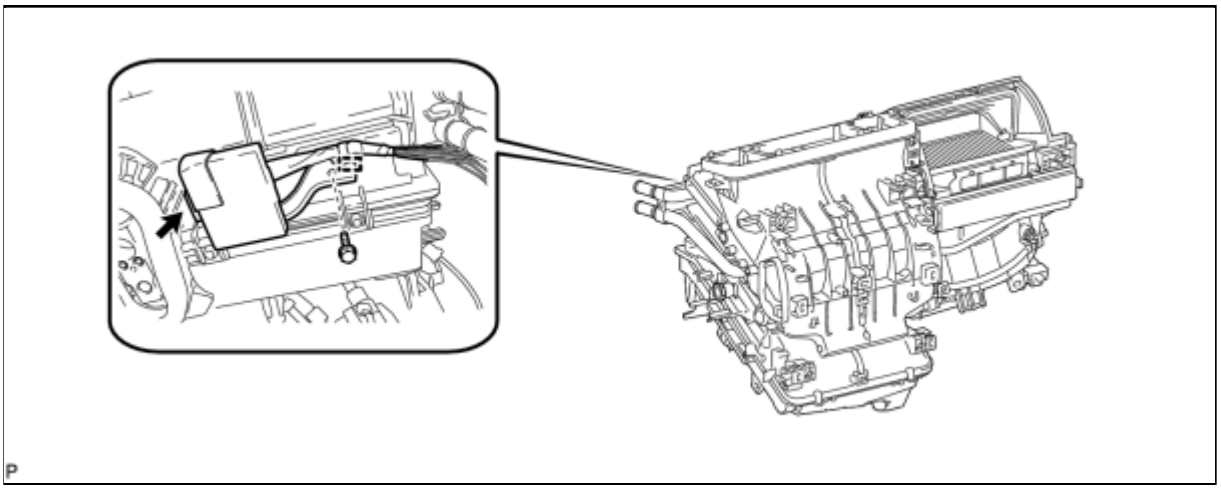

(b) Disengage the clamp.

(c) Remove the bolt and the transponder key ECU.

Last Modified: 3-10-2010	6.4 A	**From:** 200901
Model Year: 2010	**Model:** Corolla	**Doc ID:** RM000003G03001X
Title: THEFT DETERRENT / KEYLESS ENTRY: ID CODE BOX: INSTALLATION (2010 Corolla)		

INSTALLATION

1. INSTALL IMMOBILISER CODE ECU (w/ Smart Key System)

(a) Install the immobiliser code ECU with the bolt.

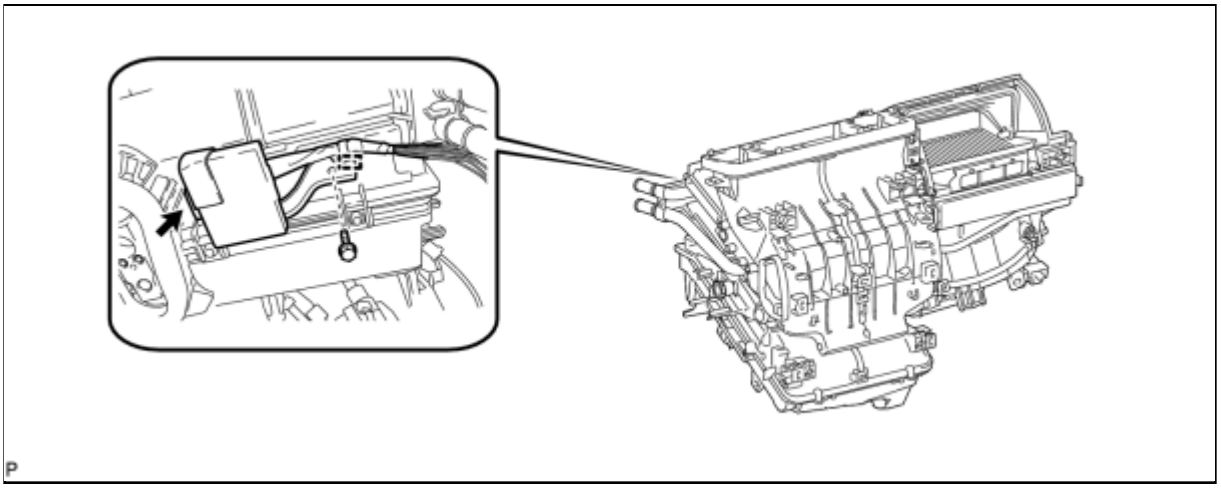

(b) Engage the clamp.

(c) Connect the connector.

2. INSTALL TRANSPONDER KEY ECU (w/o Smart Key System)

(a) Install the transponder key ECU with the bolt.

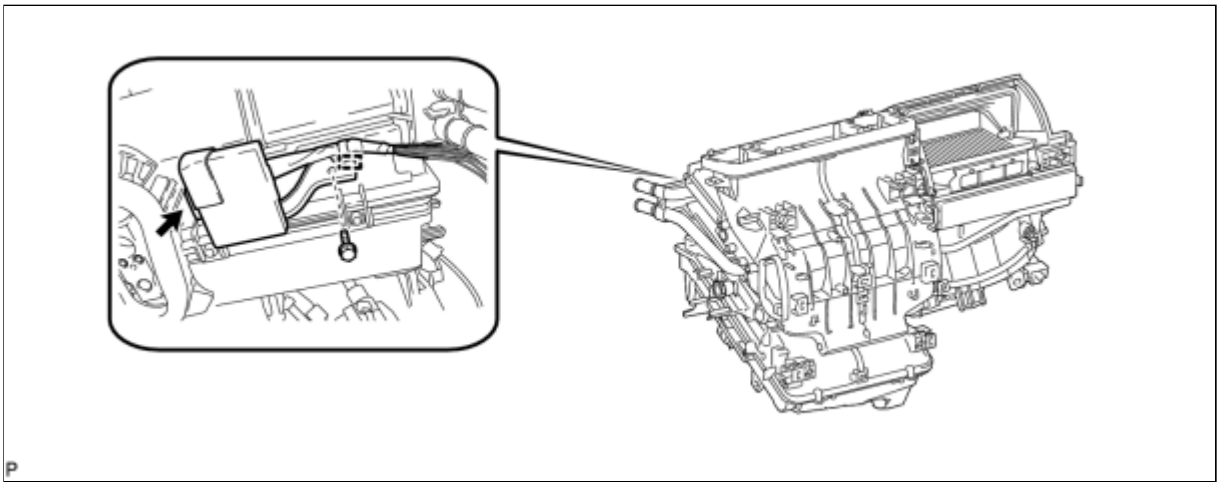

(b) Engage the clamp.

(c) Connect the connector.

3. INSTALL AIR CONDITIONING UNIT

HINT:

Refer to the installation procedure for the air conditioning unit INFO .



Last Modified: 3-10-2010	6.4 K	**From:** 200901
Model Year: 2010	**Model:** Corolla	**Doc ID:** RM000003FX6001X
Title: THEFT DETERRENT / KEYLESS ENTRY: SECURITY INDICATOR LIGHT ASSEMBLY: COMPONENTS (2010 Corolla)		

COMPONENTS

ILLUSTRATION

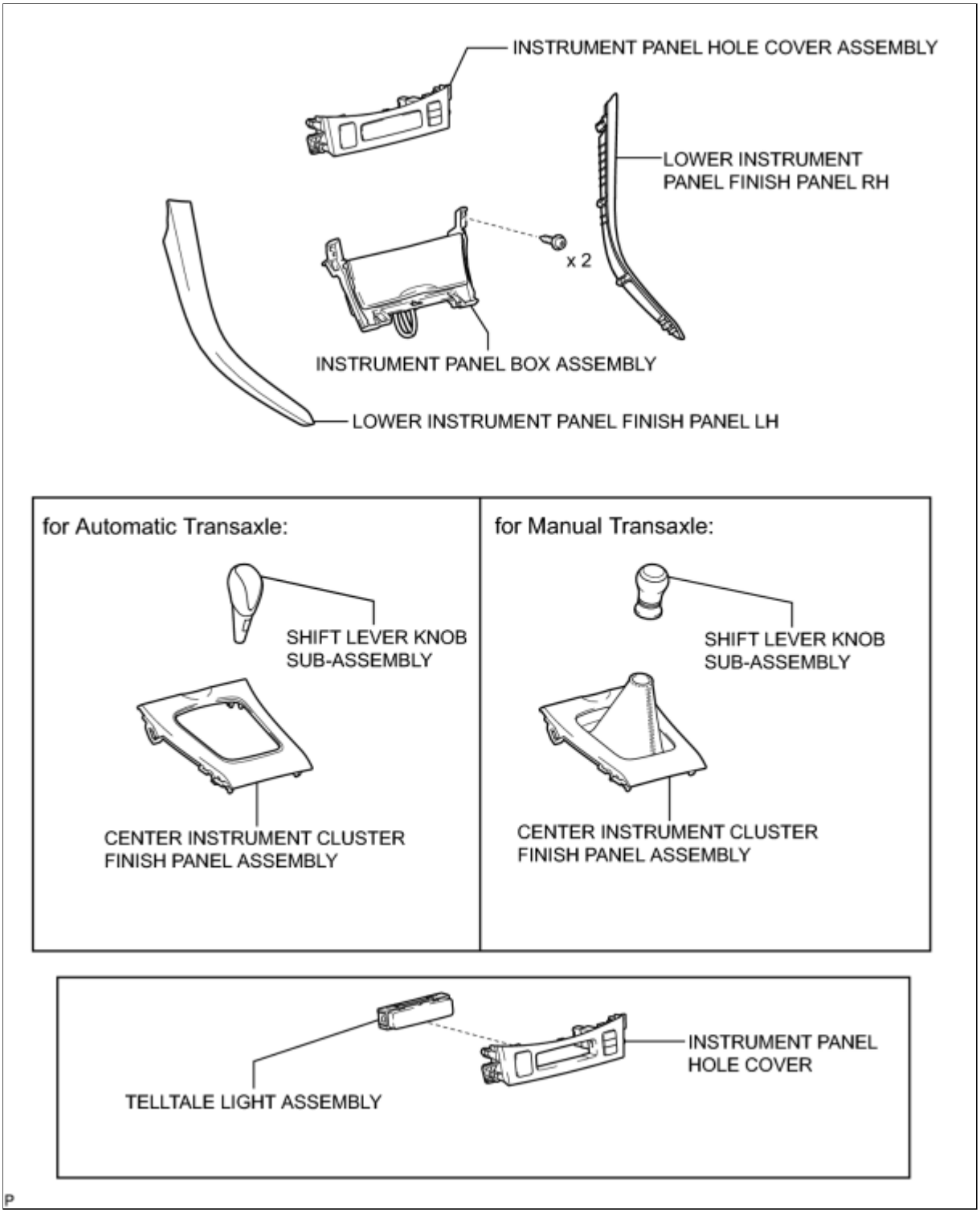
INSTRUMENT PANEL HOLE COVER ASSEMBLY
LOWER INSTRUMENT PANEL FINISH PANEL RH
x 2
INSTRUMENT PANEL BOX ASSEMBLY
LOWER INSTRUMENT PANEL FINISH PANEL LH
for Automatic Transaxle:
SHIFT LEVER KNOB SUB-ASSEMBLY
CENTER INSTRUMENT CLUSTER FINISH PANEL ASSEMBLY
for Manual Transaxle:
SHIFT LEVER KNOB SUB-ASSEMBLY
CENTER INSTRUMENT CLUSTER FINISH PANEL ASSEMBLY
INSTRUMENT PANEL HOLE COVER
TELLTALE LIGHT ASSEMBLY

P

Last Modified: 3-10-2010	6.4 A	**From:** 200901
Model Year: 2010	**Model:** Corolla	**Doc ID:** RM000003FX7001X
Title: THEFT DETERRENT / KEYLESS ENTRY: SECURITY INDICATOR LIGHT ASSEMBLY: REMOVAL (2010 Corolla)		

REMOVAL

1. **REMOVE LOWER INSTRUMENT PANEL FINISH PANEL LH** INFO
2. **REMOVE LOWER INSTRUMENT PANEL FINISH PANEL RH** INFO
3. **REMOVE SHIFT LEVER KNOB SUB-ASSEMBLY (for Manual Transaxle)** INFO
4. **REMOVE SHIFT LEVER KNOB SUB-ASSEMBLY (for Automatic Transaxle)** INFO
5. **REMOVE CENTER INSTRUMENT CLUSTER FINISH PANEL ASSEMBLY (for Manual Transaxle)** INFO
6. **REMOVE CENTER INSTRUMENT CLUSTER FINISH PANEL ASSEMBLY (for Automatic Transaxle)** INFO
7. **REMOVE INSTRUMENT PANEL BOX ASSEMBLY** INFO
8. **REMOVE INSTRUMENT PANEL HOLE COVER ASSEMBLY** INFO
9. **REMOVE TELLTALE LIGHT ASSEMBLY**

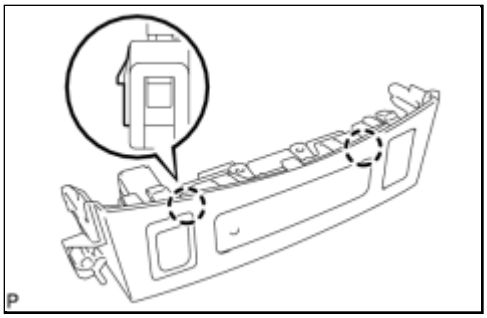

(a) Disengage the 2 claws and remove the telltale light assembly.

Last Modified: 3-10-2010	6.4 D	**From:** 200901
Model Year: 2010	**Model:** Corolla	**Doc ID:** RM000000XUC03BX
Title: THEFT DETERRENT / KEYLESS ENTRY: SMART KEY SYSTEM (for Entry Function): SYSTEM DESCRIPTION (2010 Corolla)		

SYSTEM DESCRIPTION

CAUTION:

If using a pacemaker, be sure to read the manual of the pacemaker before using the key because the radio waves of the key may affect the pacemaker.

1. SMART KEY SYSTEM DESCRIPTION

(a) In addition to conventional mechanical key and wireless door lock control functions, the smart key system enables door locking/unlocking, steering lock releasing, engine starting, and luggage compartment door opening without operating the key. The only requirement is that the key is in the user's possession.

- This system is controlled by the certification ECU (smart key ECU assembly). When the certification ECU (smart key ECU assembly) detects the presence of a key in one of the detection areas, it identifies and checks the ID code, and outputs operation signals to the related ECU in accordance with their functions.
- The detection areas are formed by 6 electrical key oscillators (2 door electrical key oscillators, 3 indoor electrical key oscillators, and 1 outside electrical key oscillator).

2. DETECTION AREA

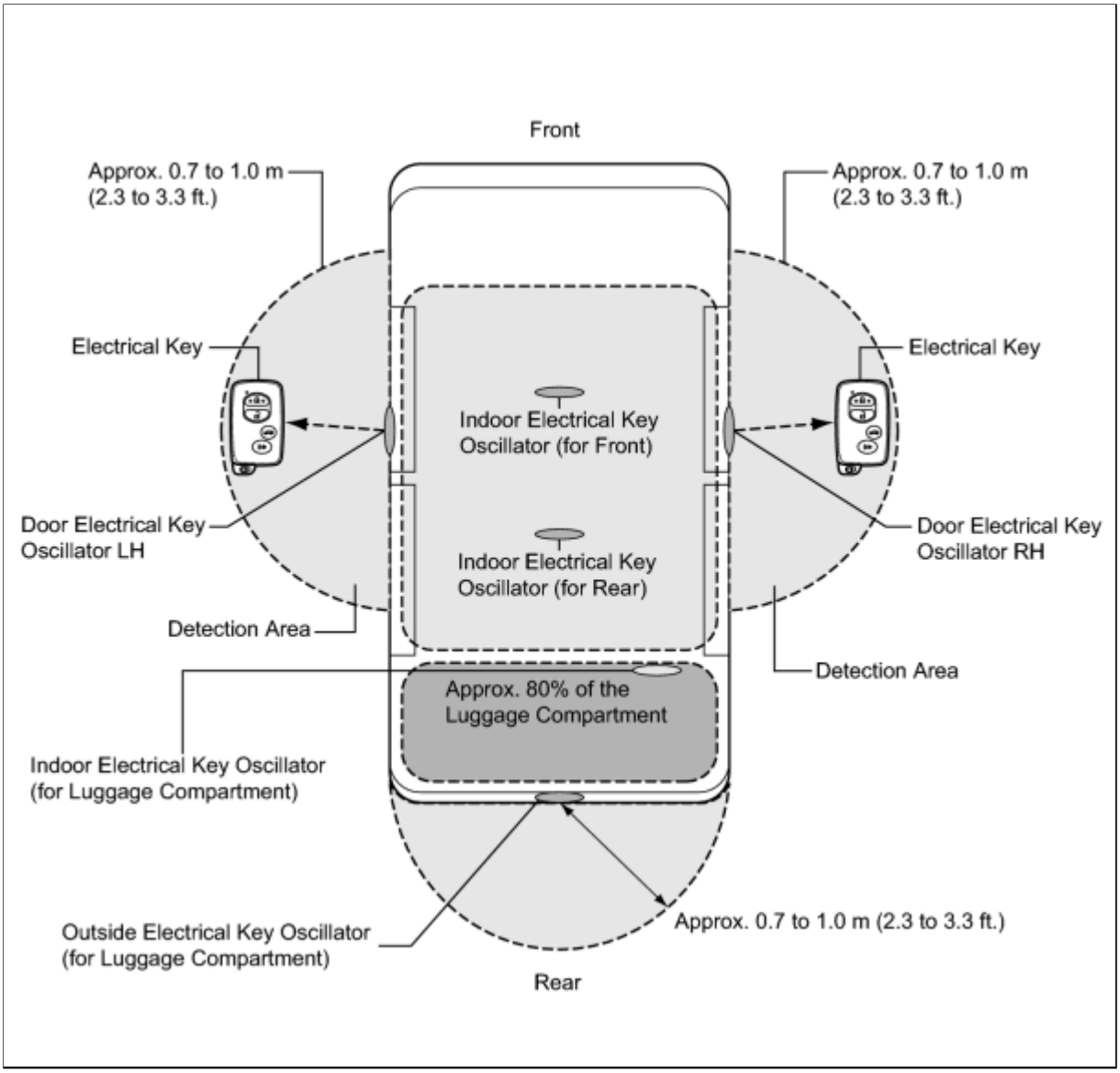

(a) Precautions for the entire system:

- Be sure to carry the key during inspection of the smart key system.
- As weak radio waves are used to detect the key, the key detection area may decrease, or the key may not be detected correctly in the following situations:
    a. The key battery is depleted.
    b. Any facilities that generate strong radio waves, such as a TV tower, power plant, broadcast station, or gas station, are located near the inspection site.
    c. A wireless device, such as a cellular phone, is carried with the key.
    d. The key is in contact with or covered with metal.
    e. Another wireless door lock control function is operated near the vehicle.
    f. The key is located near a device that generates high voltage or noise.
- The key may be difficult to operate for a reason relating to the vehicle body shape.
- The key may not be detected correctly if it is around the vehicle's windows, the door handle, or the center of the bumper even when it is in the detection area outside the vehicle.
- The key may not be detected correctly if it is on the instrument panel, rear package tray, floor, or in the glove box even when it is in the detection area inside the vehicle.
- The engine cannot be started even when the key is in the detection area inside the

luggage compartment.

- The key may not operate if the key is not held properly.
- The smart key system does not operate in the following conditions:

    a. The smart key system is canceled.
    b. The key battery is completely depleted (the indicator does not blink when pushing any of the buttons on the key).

3. FUNCTION OF MAIN COMPONENTS

COMPONENT	FUNCTION
Key	Consists of mechanical key, transmitter for wireless door lock control, and transceiver for smart key system
Certification ECU (smart key ECU assembly)	Controls smart key system in accordance with signals from each electrical key oscillator, various switches, ECUs, and key • Judges and certifies ID code from door control receiver • Transmits engine immobiliser unset signal to ID code box (immobiliser code ECU) • Transmits steering unlock signals to steering lock ECU
Main Body ECU (instrument panel junction block)	Controls push button start function in accordance with signals from various switches, ECUs, and combination meter • Transmits key verification request signal to certification ECU (smart key ECU assembly) in accordance with engine switch signal, and turns relays ON and OFF • Receives request signal from certification ECU (smart key ECU assembly) and actuates door lock motor to unlock or lock door • Transmits each door condition signal to certification ECU (smart key ECU assembly)
ID Code Box (immobiliser code ECU)	Receives steering unlock or engine immobiliser unset signals from certification ECU (smart key ECU assembly), certifies them, and transmits unset signals to steering lock ECU or ECM
Outside Door Handle (driver door and passenger door) (antenna)	Transmits request signals
Outside Door Handle (driver door and passenger door) (touch sensor)	Detects that person touches inside of outside handle
Outside Door Handle (driver door and passenger door) (lock switch)	Transmits door lock request signals to certification ECU (smart key ECU assembly)
Door Electrical Key Oscillator (driver door and passenger door)	Receives request signal from certification ECU (smart key ECU assembly), and forms detection area around front door

COMPONENT	FUNCTION
Indoor Electrical Key Oscillator (front and rear)	Receives request signal from certification ECU (smart key ECU assembly), and forms detection area in vehicle interior
Indoor Electrical Key Oscillator (luggage compartment)	Receives request signal from certification ECU (smart key ECU assembly), and forms detection area in luggage compartment
Outside Electrical Key Oscillator (luggage compartment)	Receives request signal from certification ECU (smart key ECU assembly), and forms detection area around luggage compartment door
Door Control Receiver	• Receives ID code from key in detection area and transmits it to certification ECU (smart key ECU assembly) • Receives ID code from key in luggage compartment and transmits it to certification ECU (smart key ECU assembly)
Electrical Key Antenna	Receives ID code from key and transmits it to door control receiver
Luggage Compartment Door Opener Outer Switch	Transmits luggage compartment door open request signal to certification ECU (smart key ECU assembly)
Stop Light Switch	Outputs state of brake pedal to main body ECU (instrument panel junction block)

• Wireless Door Lock Buzzer
• Combination Meter
  ○ Multi-information Display
  ○ Buzzer
	When certification ECU (smart key ECU assembly) detects human errors such as those below, it warns driver by sounding wireless door lock buzzer, displaying information and sounding a buzzer in combination meter in accordance with request signal from ECU
	Example:
	• Key is taken out of vehicle
	• Driver leaves vehicle while engine is still running

4. CONSTRUCTION AND OPERATION

(a) Key

The key consists of a mechanical key, a transmitter for the wireless door lock control, and a transceiver for the smart key system.

- The transceiver for the smart key system receives signals from the oscillators and sends the ID code to the tuner.
- The transmitter for the wireless door lock control has a LOCK switch, UNLOCK switch, LUGGAGE COMPARTMENT switch.
- This mechanical key works for the driver door, luggage compartment door, and glove box, but cannot start the engine.

A total of 4 keys can be registered.

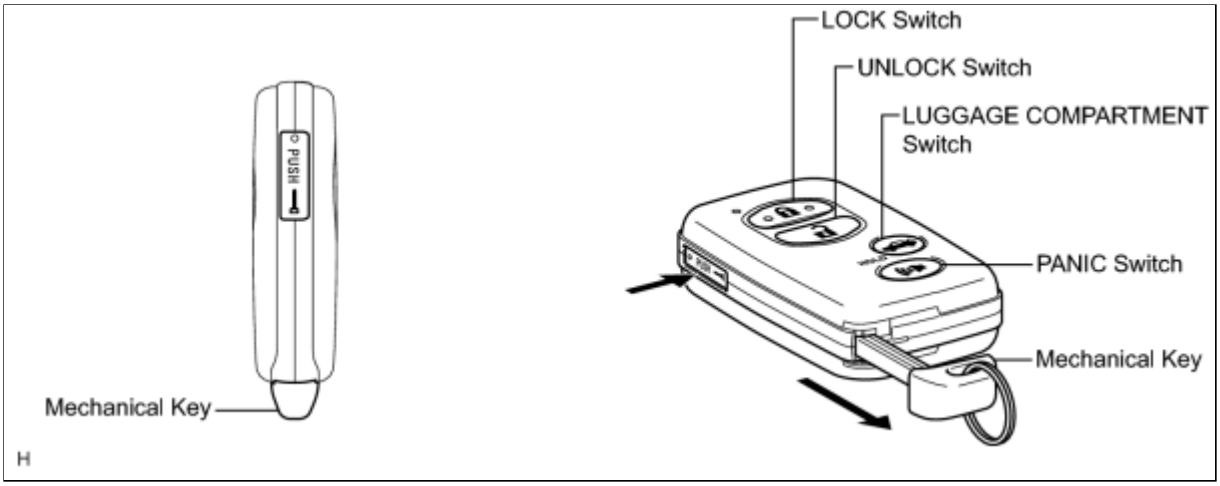

(b) Electrical key oscillator (door electrical key oscillators, indoor electrical key oscillators (front, rear and luggage compartment) and outside electrical key oscillator (luggage compartment))

Each electrical key oscillator transmits the request signal received from the certification ECU (smart key ECU assembly), and forms a key detection area to detect the presence of a key. The detection area formed by the door electrical key oscillator and outside electrical key oscillator (luggage compartment) is approximately 0.7 to 1.0 m (2.3 to 3.3 ft.) from the outside handle of the door or the center of the rear bumper.

- The detection area of the door electrical key oscillator is formed by transmitting a request signal every 0.25 seconds while the engine switch is off and each door is locked. In this way, the oscillator detects the proximity of a key. During entry lock, the detection area is formed with the lock switch on.
- The detection area of the outside electrical key oscillator (luggage compartment) is formed when the power luggage door open switch is on.
- The detection area of the indoor electrical key oscillator (front and rear) is formed when the driver door is opened or closed, during start ignition, when a warning is activated, or the lock switch is on.
- The detection area of the indoor electrical key oscillator (luggage compartment) is formed when the luggage compartment door is closed, or the luggage compartment opener outer switch is pressed.

5. ENTRY FUNCTION OPERATION

(a) The smart key system has the following functions:

FUNCTION	OUTLINE
Mechanical Key	Operation is same as conventional mechanical key.
Wireless Door Lock Control	This function remotely locks and unlocks all doors or luggage compartment. Operation is same as wireless door lock control system. However, receiver in certification ECU (smart key ECU assembly) uses entry door control receiver to control locking and unlocking.
Entry Illumination	When person carrying key enters detection area, door will enter unlock standby mode and front map light will illuminate.
Entry Unlock	When key is located in detection area of door electrical key oscillator, door will unlock by touching inside of outside door handle.

FUNCTION	OUTLINE
Entry Unlock Mode Switching INFO	Changes doors that can be unlocked with entry unlock function between 2 modes. • Driver door mode • All door mode
Entry Lock	When key is located in detection area of door electrical key oscillator and engine switch is off, door can be locked by pressing lock switch on outside door handle.
Entry Luggage Compartment Open	When key is in detection area of outside electrical key oscillator (luggage compartment), luggage compartment door opens by pressing luggage compartment opener outer switch.
Key Lock-in Prevention	• Prevents confinement of key if door is locked using outside door handle while key is still inside vehicle. • If all doors are locked and luggage compartment door is closed while key is still in luggage compartment, warning buzzer sounds. If luggage compartment open switch is operated, luggage compartment door can be opened.
Warning	When any of situations below occur, smart key system causes certification ECU (smart key ECU assembly) to sound buzzer in combination meter and wireless door lock buzzer in order to alert driver. • Occupant leaves with key. • Engine switch is operated while key is outside actuation area. • Entry lock is operated while key is inside vehicle. • Key battery is weak. • The key is left in the vehicle. • A door is ajar. • The key is left in the luggage compartment. • Steering lock does not release. • The steering lock mechanism is malfunctioning. • The main body ECU (instrument panel junction block) is malfunctioning.
Battery Saving	If key is constantly located within actuation area of door electrical key oscillator, system maintains periodic communication with key. Therefore, if vehicle remains parked in that state for a long time, key battery and vehicle battery could be drained.
Key Cancel INFO	Following key functions can be cancelled by performing certain operations: • Entry Unlock/Lock • Entry Luggage Compartment Open • Key Lock-in Prevention • Warning
Key Code Registration	The total number of keys that can be registered is four. Enables the registration (writing and storing) of transmitter recognition codes in the EEPROM that is contained in the certification ECU (smart key ECU assembly).

6. WIRELESS DOOR LOCK AND UNLOCK AND LUGGAGE COMPARTMENT OPEN FUNCTION

Push the LOCK/UNLOCK/LUGGAGE COMPARTMENT switch on the key to operate each function. For details, INFO .

7. ENTRY UNLOCK FUNCTION

(a) The detection area is formed by communication between a door electrical key oscillator and door control receiver when the door is locked in order to detect access of the person carrying the key.

(b) When the person carrying the key enters the detection area around the vehicle, the matching of the ID codes for a door electrical key oscillator and key will automatically be performed. After the matching is completed, the door will enter unlock standby mode.

(c) In unlock standby mode, the antenna built into the outside handle starts sensing. If the outside handle is held (the back side of the handle is touched), the door unlock operation will be performed. At this time, the hazard warning light blinks twice and the wireless door lock buzzer sounds twice.

(d) If any of the doors are not opened after a door unlock operation, all doors will automatically lock after 60 seconds.

8. ENTRY LOCK FUNCTION

(a) After leaving the vehicle carrying the key, push the lock switch on the outside handle when all the doors are closed.

(b) The certification ECU (smart key ECU assembly) determines whether the key is located inside or outside the cabin based on the information from a door electrical key oscillator and indoor electrical key oscillator. Then matching of the ID codes is performed.

(c) When the matching result shows that the ID codes of the key and indoor antenna do not match and the ID codes of the key and door electrical key oscillator match, the door lock function will operate. At this time, the hazard warning lights blink once and the wireless door lock buzzer sounds once.

(d) If the key is located inside the cabin, the door lock function will not operate and the alarm buzzer (beep sound) will sound for 2 seconds.

9. ENTRY LUGGAGE COMPARTMENT OPEN FUNCTION

Stand in front of the luggage compartment with the key and push the power luggage compartment opener switch to start the matching of the ID codes for the outside electrical key oscillator (luggage compartment). If the ID codes match, luggage compartment door open operation will be performed.

10. KEY LOCK-IN PREVENTION FUNCTION

(a) If you attempt to lock the door through keyless operation (move the lock knob to the lock position and then close the door) with the key in the cabin, the system determines that the key is located in the cabin and unlocks the door.

(b) If the luggage compartment is closed with the key in it, the alarm will sound and the luggage compartment can be opened only when all the doors are locked in order to prevent key confinement in the vehicle.

11. WARNING FUNCTION

(a) General

When any of the situations below occur, the smart key system causes the certification ECU (smart key ECU assembly) to sound the buzzer in the combination meter and the wireless door

lock buzzer in order to alert the driver.

WARNING FUNCTION OPERATION CONDITION	SITUATION
Exit warning if shift lever position is not P and power source mode is not off.	A
Exit warning if shift lever position is P and power source mode is not off.	B
An occupant leaves with the key.	C
The engine switch is operated while the key is outside the detection area.	D
Entry lock is operated while the key is inside the cabin or luggage compartment.	E
The key battery is weak.	F
The key reminder warning sounds.	G
A door is ajar.	H
The key is left in the luggage compartment.	I
Steering lock does not release.	J
The steering lock mechanism is malfunctioning.	K
The main body ECU (instrument panel junction block) is malfunctioning.	L

(b) Situation A

There are 2 patterns for situation A.

Pattern 1: In situation A, the door is opened and the user tries to leave the vehicle.

Pattern 2: Then the user holds the key and tries to move away from the vehicle.

In these situations, the following control is performed:

- Pattern 1

Possible Effects without Warning	Sudden vehicle start, vehicle theft, vehicle roll-away
Warning Condition	The certification ECU (smart key ECU assembly) gives warning when all following conditions are satisfied: ○ The shift lever position is not P. ○ The engine switch is not off. ○ The driver side door is opened. ○ Vehicle speed is less than 5 km/h (3.1 mph).
Combination Meter ○ Buzzer	Warning: Continuous sound
Combination Meter ○ Smart Key Indicator Light	-

Wireless Door Lock Buzzer	-
Warning Stop Condition	The warning is stopped when one of the following conditions is met: ○ The engine switch is off. ○ The shift lever position is P. ○ The driver side door is closed. ○ Vehicle speed is above 5 km/h (3.1 mph).

- Pattern 2

Possible Effects without Warning	Sudden vehicle start, vehicle theft, vehicle roll-away
Warning Condition	The certification ECU (smart key ECU assembly) gives warning when all following conditions are satisfied: ○ The shift lever position is not P. ○ The engine switch is not off. ○ The driver side door is opened and closed. ○ Vehicle speed is 0 km/h (0 mph). ○ The key is not in the cabin or luggage compartment.
Combination Meter ○ Buzzer	Warning: Continuous sound The warning is stopped when one of the following conditions is met: ○ The engine switch is off. ○ The shift lever position is P. ○ The key is in the cabin or luggage compartment. ○ Vehicle speed is above 0 km/h (0 mph).
Combination Meter ○ Smart Key Indicator Light	Flashes
Wireless Door Lock Buzzer	Warning: Continuous sound The warning is stopped when one of the following conditions is met: ○ The engine switch is off. ○ The shift lever position is P. ○ The key is in the cabin or luggage compartment. ○ Vehicle speed is above 0 km/h (0 mph).

(c) Situation B

There are 2 patterns for situation B.

Pattern 1: In situation B, the door is opened and the user tries to leave the vehicle.

Then the user holds the key and tries to move away from the vehicle.

Pattern 2: Then the user tries to use the entry lock and presses the lock switch.

In these situations, the following control is performed:

- Pattern 1

Possible Effects without Warning	Vehicle theft, engine cannot be restarted
Warning Condition	The certification ECU (smart key ECU assembly) gives warning when all following conditions are satisfied: ○ The shift lever position is P. ○ The engine switch is not off. ○ The driver side door is opened and closed. ○ The key is not in the cabin or luggage compartment.
Combination Meter ○ Buzzer	Warning: Sounds once
Combination Meter ○ Smart Key Indicator Light	Flashes
Wireless Door Lock Buzzer	Warning: Sounds 3 times The warning is stopped when either of the following conditions is met: ○ The engine switch is off. ○ The key is in the cabin or luggage compartment.

- Pattern 2

Possible Effects without Warning	Vehicle theft
Warning Condition	The certification ECU (smart key ECU assembly) gives warning when all following conditions are satisfied: ○ The shift lever position is P. ○ The engine switch is not off. ○ All doors are closed. ○ The lock switch is "ON". ○ The key is not in the cabin or luggage compartment. ○ The key is outside vehicle (within one of the

	actuation areas).
Combination Meter ○ Buzzer	-
Combination Meter ○ Smart Key Indicator Light	-
Wireless Door Lock Buzzer	Warning: Sounds for 2 seconds

(d) Situation C

In this situation, the following control is performed:

Possible Effects without Warning	Engine cannot be restarted
Warning Condition	The certification ECU (smart key ECU assembly) gives warning when all following conditions are satisfied: • The engine switch is not off. • Any door other than driver side door is opened and closed. • The key is not in the cabin or luggage compartment.
Combination Meter • Buzzer	Warning: Sounds once
Combination Meter • Smart Key Indicator Light	Flashes
Wireless Door Lock Buzzer	Warning: Sounds 3 times The warning is stopped when one of the following conditions is met: • The engine switch is off. • Vehicle speed is above 0 km/h (0 mph). • The key is in the cabin or luggage compartment.

(e) Situation D

In this situation, the following control is performed:

Possible Effects without Warning	Confuses the user

Warning Condition	The certification ECU (smart key ECU assembly) gives warning when both of the following conditions are satisfied: • The engine switch is off → on (IG). • The key is not in the cabin.
Combination Meter • Buzzer	Warning: Sounds once
Combination Meter • Smart Key Indicator Light	Flashes Information is displayed on the combination meter for 8seconds (disappears after 8 seconds).
Wireless Door Lock Buzzer	-

(f) Situation E

In this situation, the following control is performed:

Possible Effects without Warning	Vehicle theft
Warning Condition	The certification ECU (smart key ECU assembly) gives warning when all following conditions are satisfied: • The engine switch is off. • All doors are closed. • The lock switch is "ON". • The key is in the cabin or luggage compartment.
Combination Meter • Buzzer	-
Combination Meter • Smart Key Indicator Light	-
Wireless Door Lock Buzzer	Warning: Sounds for 2 seconds

(g) Situation F

In this situation, the following control is performed:

Possible Effects without Warning	Smart key system does not function
Warning Condition	The certification ECU (smart key ECU assembly) gives warning when all following conditions are satisfied:

	• The engine switch is turned off after being left on (IG) for over 20 minutes. • The key battery voltage is low. • The key is in the cabin.
Combination Meter • Buzzer	Warning: Sounds once
Combination Meter • Smart Key Indicator Light	-
Wireless Door Lock Buzzer	-

(h) Situation G

There are 2 patterns for situation G.

- Pattern 1: When the driver's door is open, the driver turns the engine switch on (ACC) and attempts to leave the vehicle.
- Pattern 2: When the driver's door is open, the driver turns the engine switch from on (IG) to off and attempts to leave the vehicle.

In these situations, the following control is performed:

Pattern 1 and Pattern 2

Possible Effects without Warning	Vehicle theft
Warning Condition	The warning is activated when either of the following conditions is met: • The engine switch is on (ACC) and the driver door is opened. • The engine switch is off, the steering is unlocked, and the driver door is opened.
Combination Meter • Buzzer	Continues to sound at short and even intervals
Combination Meter • Smart Key Indicator Light	-
Wireless Door Lock Buzzer	-
Engine Switch Indicator Light	-

Warning Stop Condition	The warning is stopped when one of the following conditions is met: • The engine switch is on (IG). • The driver side door is closed. • The engine switch is off and the steering is locked.

(i) Situation H

The lock switch on the door outside handle is pressed to perform entry lock with a door open. In this situation, the following control is performed:

Possible Effects without Warning	Vehicle theft
Warning Condition	The warning is activated when all of the following conditions are met: • The engine switch is off. • Any doors are opened. • The entry lock button on the outer door handle is operated.
Combination Meter • Buzzer	-
Combination Meter • Smart Key Indicator Light	-
Wireless Door Lock Buzzer	Warning: Continuous sound
Engine Switch Indicator Light	-
Warning Stop Condition	The warning is stopped when one of the following conditions is met: • The engine switch is off. • All doors are closed. • Wireless door lock remote function is unlocked. • Entry unlock is operated. • 10 seconds have elapsed since the wireless door lock buzzer was activated.

(j) Situation I

The luggage compartment door is closed with the key left in the luggage compartment. In this situation, the following control is performed:

Possible Effects without Warning	Vehicle theft

Warning Condition	The warning is activated when all of the following conditions are met: • Vehicle speed is 0 km/h (0 mph). • All doors are closed and all doors are locked or the state where the door after unlock operation is waiting to open. • Entry luggage compartment open function is available.
Combination Meter • Buzzer	-
Combination Meter • Smart Key Indicator Light	-
Wireless Door Lock Buzzer	Sounds for 2 seconds
Warning Stop Condition	-

(k) Situation J

The steering lock cannot be released. In this situation, the following control is performed:

Possible Effects without Warning	Vehicle theft
Warning Condition	The steering lock cannot be released, thus the engine is prevented from starting.
Combination Meter • Buzzer	-
Combination Meter • Smart Key Indicator Light	Flashes
Wireless Door Lock Buzzer	-
Engine Switch Indicator Light	The green indicator blinks at 1-second intervals (goes off automatically in 30 seconds).
Warning Stop Condition	The engine switch is pressed while the steering wheel is turned left and right, and the steering lock is successfully released.

(l) Situation K

A malfunction of the steering lock ECU is detected. In this situation, the following control is performed:

Possible Effects without Warning	Vehicle theft

Warning Condition	A malfunction of the steering lock ECU is detected.
Combination Meter • Buzzer	-
Combination Meter • Smart Key Indicator Light	Flashes
Wireless Door Lock Buzzer	-
Engine Switch Indicator Light	The amber indicator blinks at 2-second intervals (goes off automatically in 15 seconds).
Warning Stop Condition	The steering lock ECU returns to normal.

(m) Situation L

A malfunction of the main body ECU (instrument panel junction block) is detected. In this situation, the following control is performed:

Possible Effects without Warning	Vehicle theft
Warning Condition	A malfunction in the main body ECU (instrument panel junction block) is detected.
Combination Meter • Buzzer	-
Combination Meter • Smart Key Indicator Light	-
Wireless Door Lock Buzzer	-
Engine Switch Indicator Light	The amber indicator blinks at 2-second intervals (goes off automatically in 15 seconds).
Warning Stop Condition	The main body ECU (instrument panel junction block) returns to normal.

12. BATTERY SAVING

(a) Vehicle Battery Saving Function

In the smart key system, signals are emitted outside the vehicle at a prescribed interval (0.25 seconds) when the doors are locked. Therefore, the vehicle battery could be drained if the vehicle remains parked for a long time. For this reason, the controls listed below are carried out:

CONDITION	CONTROL

CONDITION	CONTROL
Both conditions below are met for 5 days: • Key is not in detection area. • Touch sensor or lock switch operation is not performed.	Signal transmission interval is extended from 0.25 to 0.75 seconds.
Both conditions below are met for 14 days: • Key is not in detection area. • Touch sensor or lock switch operation is not performed.	The smart key system is automatically deactivated.

Reinstatement Conditions

- A wireless door lock control signal (lock, unlock) is input and the ID code matches.
- A user carries the key and pushes a lock switch on an outside door handle.
- A door is locked or unlocked by the mechanical key.

(b) Key Battery and Vehicle Battery Saving Function

In the smart key system, if the key is constantly located within the vehicle exterior detection area of the doors, the system maintains periodic communication with the key. Therefore, if the vehicle remains parked in that state for a long time, the key battery and the vehicle battery could be drained. For this reason, if this state continues longer than 10 minutes, the smart key system automatically becomes deactivated.

Reinstatement Conditions

- A wireless door lock control signal (lock, unlock) is input and the ID code matches.
- A user carries the key and pushes a lock switch on an outside door handle.
- A door is locked or unlocked by the mechanical key.

Last Modified: 3-10-2010	6.4 A	**From:** 200901
Model Year: 2010	**Model:** Corolla	**Doc ID:** RM000003FX5001X
Title: THEFT DETERRENT / KEYLESS ENTRY: SECURITY INDICATOR LIGHT ASSEMBLY: INSTALLATION (2010 Corolla)		

INSTALLATION

1. INSTALL TELLTALE LIGHT ASSEMBLY

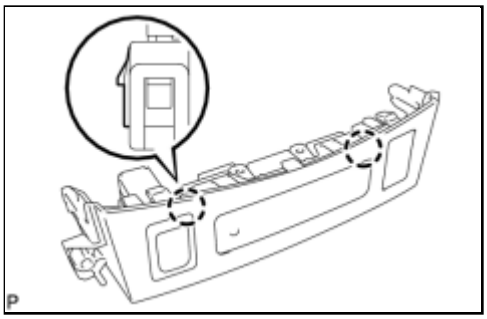

(a) Engage the 2 claws and install the telltale light assembly.

2. INSTALL INSTRUMENT PANEL HOLE COVER ASSEMBLY INFO

3. INSTALL INSTRUMENT PANEL BOX ASSEMBLY INFO

4. INSTALL CENTER INSTRUMENT CLUSTER FINISH PANEL ASSEMBLY (for Manual Transaxle) INFO

5. INSTALL CENTER INSTRUMENT CLUSTER FINISH PANEL ASSEMBLY (for Automatic Transaxle) INFO

6. INSTALL SHIFT LEVER KNOB SUB-ASSEMBLY (for Manual Transaxle) INFO

7. INSTALL SHIFT LEVER KNOB SUB-ASSEMBLY (for Automatic Transaxle) INFO

8. INSTALL LOWER INSTRUMENT PANEL FINISH PANEL LH INFO

9. INSTALL LOWER INSTRUMENT PANEL FINISH PANEL RH INFO

Last Modified: 3-10-2010	6.4 L	**From:** 200901
Model Year: 2010	**Model:** Corolla	**Doc ID:** RM000000XU6036X
Title: THEFT DETERRENT / KEYLESS ENTRY: SMART KEY SYSTEM (for Entry Function): PRECAUTION (2010 Corolla)		

PRECAUTION

1. PRECAUTIONS WHEN USING TECHSTREAM

(a) When troubleshooting the smart key system using the Techstream with the engine switch off, connect the Techstream to the vehicle and repeat turning any of the courtesy light switches on and off until communication between the Techstream and the vehicle begins (the interval between ON and OFF should be less than 1.5 seconds).

(b) After DTCs are all cleared, check if the trouble occurs again 6 seconds after the engine switch is turned on (IG).

2. PRECAUTIONS FOR EACH FUNCTION

(a) Precautions for the key:

The key is a precision instrument. Be sure to observe the following:

(1) Do not drop or strike the key.

(2) Do not keep the key in a high temperature area for a long time.

(3) Do not use an ultrasonic washing machine to clean the key.

(4) Keep the key away from magnets or magnetized items during use.

(5) Do not attach any stickers to the key.

(6) If a key is lost, delete all registered key ID codes and then reregister the remaining keys.

(b) Precautions for the entry unlock function:

(1) As the sensor is built into the backside of the outside door handle, the user must touch the backside of the handle when performing the unlock function.

(2) If the backside of the handle is touched with gloved hands, the response of the door may be delayed.

(3) During the entry unlock operation, if the door handle is pulled before the door unlocks, the unlock function cannot be completed. Confirm that the door has been unlocked before pulling the door handle to open the door.

(4) Make sure that the doors are unlocked when touching the touch sensor on the outside door handle while the key is being carried.

If the doors cannot be unlocked, the certification ECU (smart key ECU assembly) orders the main body ECU (instrument panel junction block) to perform the door unlock operation 4 times at intervals of 0.75 seconds.

At this time, the door may not be unlocked because the handle is being pulled due to some mechanical reasons.

Be sure to return the door handle to its original position.

If the door cannot be opened by pulling the handle, perform the entry unlock operation again.

(5) If the key is too close to the electrical key oscillator on the outside of the vehicle, the door may not be unlocked because the key cannot react to the strong wave output from the transmitter.

(6) If the key is within the vehicle exterior detection area, the door can be unlocked even when a person other than the person carrying the key holds the door handle.

However, the doors other than the door that the codes match will not be unlocked.

(If the key is within the driver side door's detection area outside the vehicle, the doors will be unlocked when the person carrying the key holds the driver side door handle. However, if any door handle other than that of the driver side door is held, the doors will not be unlocked).

(7) If a door is not opened after the door unlock operation, the doors automatically lock after approximately 60 seconds.

(8) If a large amount of water is applied to the door handle due to a car wash or heavy rain, the key being within the vehicle exterior detection area may cause the doors to be unlocked.

However, the doors will be locked again after approximately 60 seconds if a door is not opened.

(9) If the key of the smart key system is used while it is being carried with the key of another smart key system, the time before the entry unlock operation will become longer than usual. This is not a malfunction.

(c) Precautions for the entry lock function:

(1) When performing the entry lock operation, firmly press the lock switch on the outside door handle.

If the lock switch is pressed too quickly or lightly, the entry lock may not operate.

(2) Signals output from the indoor electrical key antenna may leak through the window. Also, if the key is too close to a door electrical key oscillator, the electrical key oscillator output signals are too strong and the key cannot respond. As a result, when the key is near the vehicle (window, door handle), the entry lock function may not operate. Also, the key reminder warning buzzer may sound and the entry unlock operation may stop functioning. In this situation, move the key away from the vehicle (window, door handle), perform the entry lock operation and perform the entry unlock operation.

(3) Do not touch the lock switch while opening or closing a door.

If the lock switch is pressed when opening or closing a door while the key is being carried, the door ajar warning buzzer sounds (beeps outside the vehicle for 10 seconds).

(4) If the key is on the instrument panel, rear package tray, floor, or in the glove box, the key reminder function may not operate and the key may be locked in the vehicle. Always carry the key.

(5) If the key is outside the vehicle but is very close to a window or door handle (the ECU determines that the key is inside the vehicle) and the transmitter or mechanical key is used to lock the doors (entry lock is not used), entry unlock will not operate. To unlock the doors, perform a wireless door unlock operation. The entry lock function operates in this way to prevent the user from unintentionally unlocking the doors from outside the vehicle. For example, when a user operates the wireless door lock operation from inside the vehicle, radio waves from a door electrical key oscillator may leak into the vehicle interior and the doors may unlock.

(6) To allow the user enough time to check if the doors are locked after performing a door lock operation (entry lock function or wireless door lock operation), the entry unlock function will not be permitted for 3 seconds after the door lock operation.

(d) Precautions for luggage compartment door entry function:

Even if the key is within the outside electrical key oscillator (luggage compartment) detection area, the luggage compartment door cannot be opened if the key is in the following areas:

- Near the center of the bumper
- Too close to the ground or in a high place

(e) Precautions for the function to prevent key confinement in the luggage compartment:

(1) Do not place the key in the luggage compartment.

If the luggage compartment door is closed with the key in it when all the doors are locked, the alarm to indicate key confinement will operate (beeping sound for 2 seconds outside of the vehicle). However, the alarm may not operate for some reason relating to the key location (near the spare tire or the side of the luggage compartment), the key condition (covered with metal or near metal), or ambient radio waves.

(2) If the luggage compartment door is closed with the key in it when any of the doors is unlocked or open, the key confinement prevention function will not operate. In this case, use the luggage compartment opener in the cabin to open the luggage compartment door and take out the key.

(3) The alarm may erroneously operate in the following conditions. If you can confirm that you are carrying the key or that the key is in the cabin, there is no problem. The entry luggage compartment open function may not operate if the alarm erroneously operates. In this case, use the luggage compartment opener in the cabin or perform a wireless operation to open the luggage compartment door.

- The key is brought into the cabin after the luggage compartment door is opened, and then the luggage compartment door is closed.

- The luggage compartment door is closed by the person who is carrying the key.

(4) If the alarm operates when the luggage compartment door is closed with all the doors locked, the key is in the cabin or luggage compartment. Check the cabin and luggage compartment to find the key.

(5) If the luggage compartment door is closed with the key in it when all the doors are locked, the alarm will sound and the luggage compartment door can be opened. This may increase the risk of the vehicle being stolen.

(6) Do not open or close the luggage compartment door after all the doors are locked if you want to keep the spare keys in the cabin. As a result, the alarm may sound and the luggage compartment door can be opened. This may increase the risk of the vehicle being stolen.

(f) Precautions for the battery built into the key and the vehicle battery:

(1) The key is constantly checking for signals from the vehicle, which requires power from the key's built-in battery. The life of the battery is approximately 1 to 2 years depending on the usage conditions. Be sure to replace the battery when its power is low. When replacing the battery, do not touch the inner circuit board or other inner parts.

(2) The key is constantly checking for signals from the vehicle using battery power to determine whether the key is being used or not. Even if the user is carrying 2 keys and only 1 key is used, both keys will consume battery power.

(3) The key receives radio waves at approximately 314 MHz. If the key continuously receives strong, identical frequency waves, the key's battery may be drained. Store the key at least 1 m (3.3 ft.) away from TVs, personal computers, or other electrical products.

(4) When a door is being locked, the vehicle battery is used to transmit radio waves. The battery may be dead if the vehicle remains stopped for a long time. If the vehicle is not used for a long time, remove the battery from the vehicle or cancel the smart key system.

(5) When a door is being locked with the key in the detection area of a door electrical key oscillator, the battery is used for regular communication between the key and vehicle. If the

vehicle is not used, keep the key away from the vehicle (more than 2 m (6.6 ft.)).

(6) After disconnecting and reconnecting the battery cable, the entry unlock function may not operate. If this occurs, perform a wireless door unlock and lock operation.

(g) Precautions for the entry unlock mode switching function:

(1) Use the entry unlock mode switching function within a 1 m (3.3 ft.) area around the vehicle.

(2) The entry unlock mode switching function cannot be used within 5 seconds of the previous mode change. Wait 5 seconds or more before performing a mode change.



Last Modified: 3-10-2010	6.4 R	**From:** 200901
Model Year: 2010	**Model:** Corolla	**Doc ID:** RM000000XU902QX
Title: THEFT DETERRENT / KEYLESS ENTRY: SMART KEY SYSTEM (for Entry Function): PARTS LOCATION (2010 Corolla)		

PARTS LOCATION

ILLUSTRATION

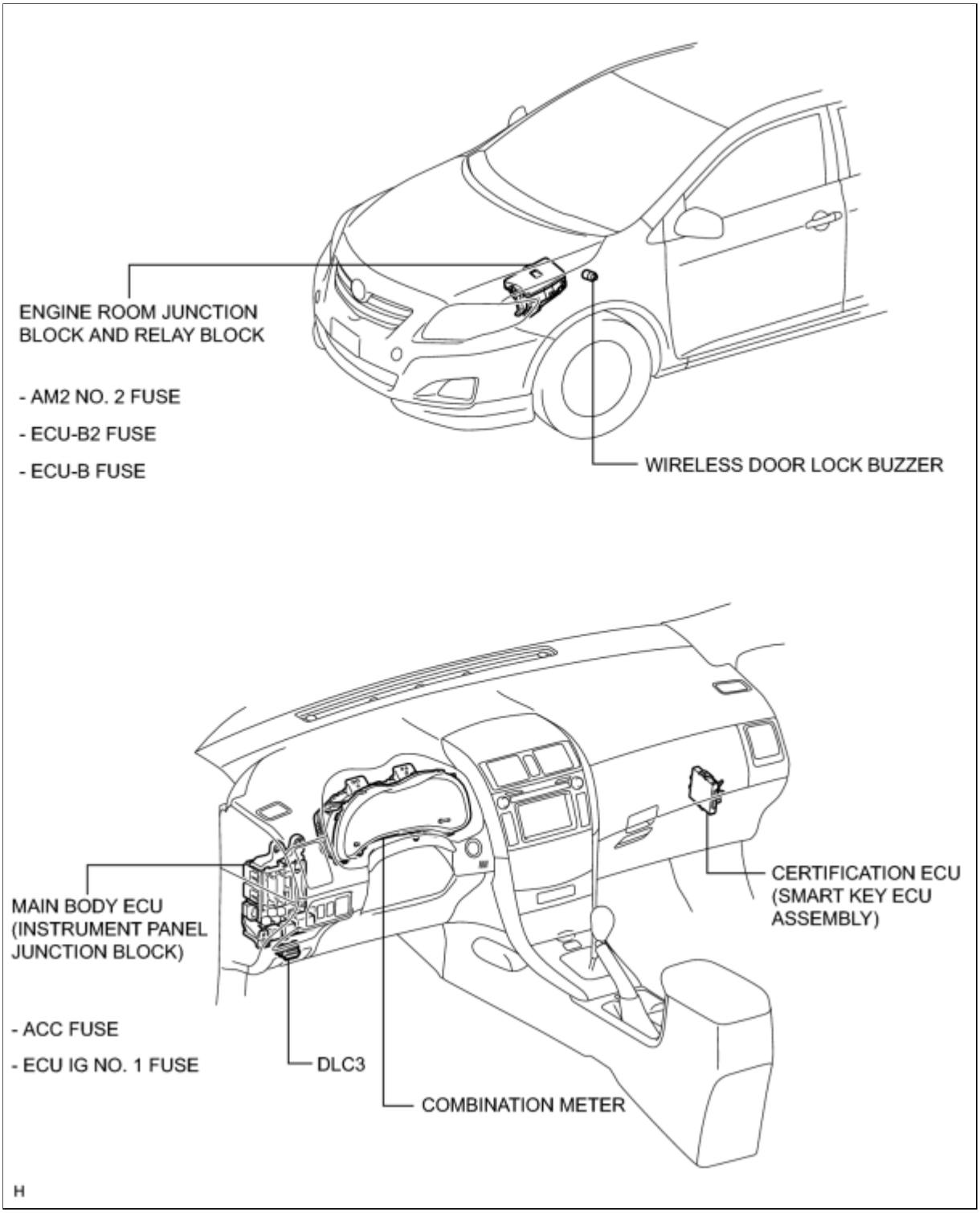

ILLUSTRATION

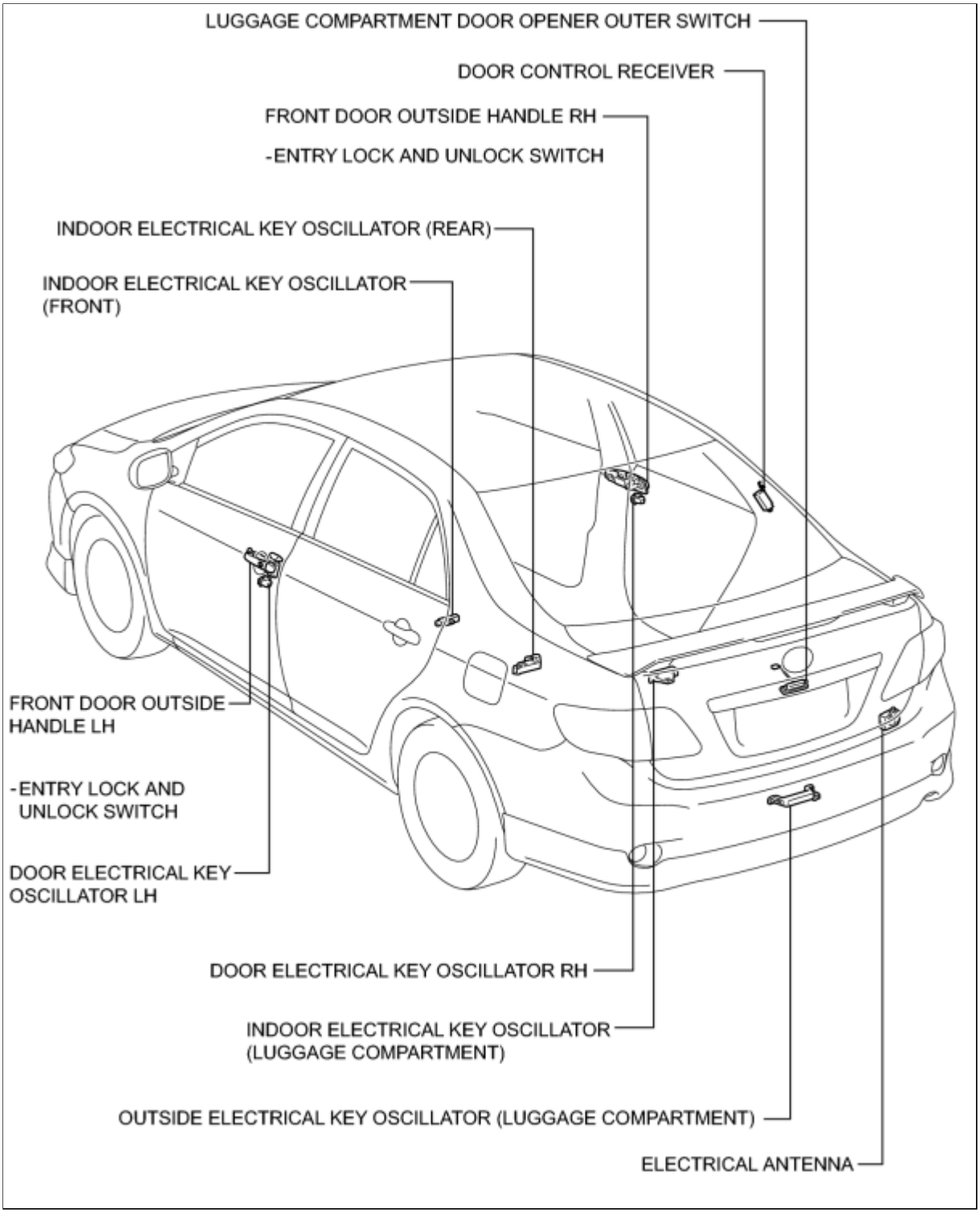

ILLUSTRATION

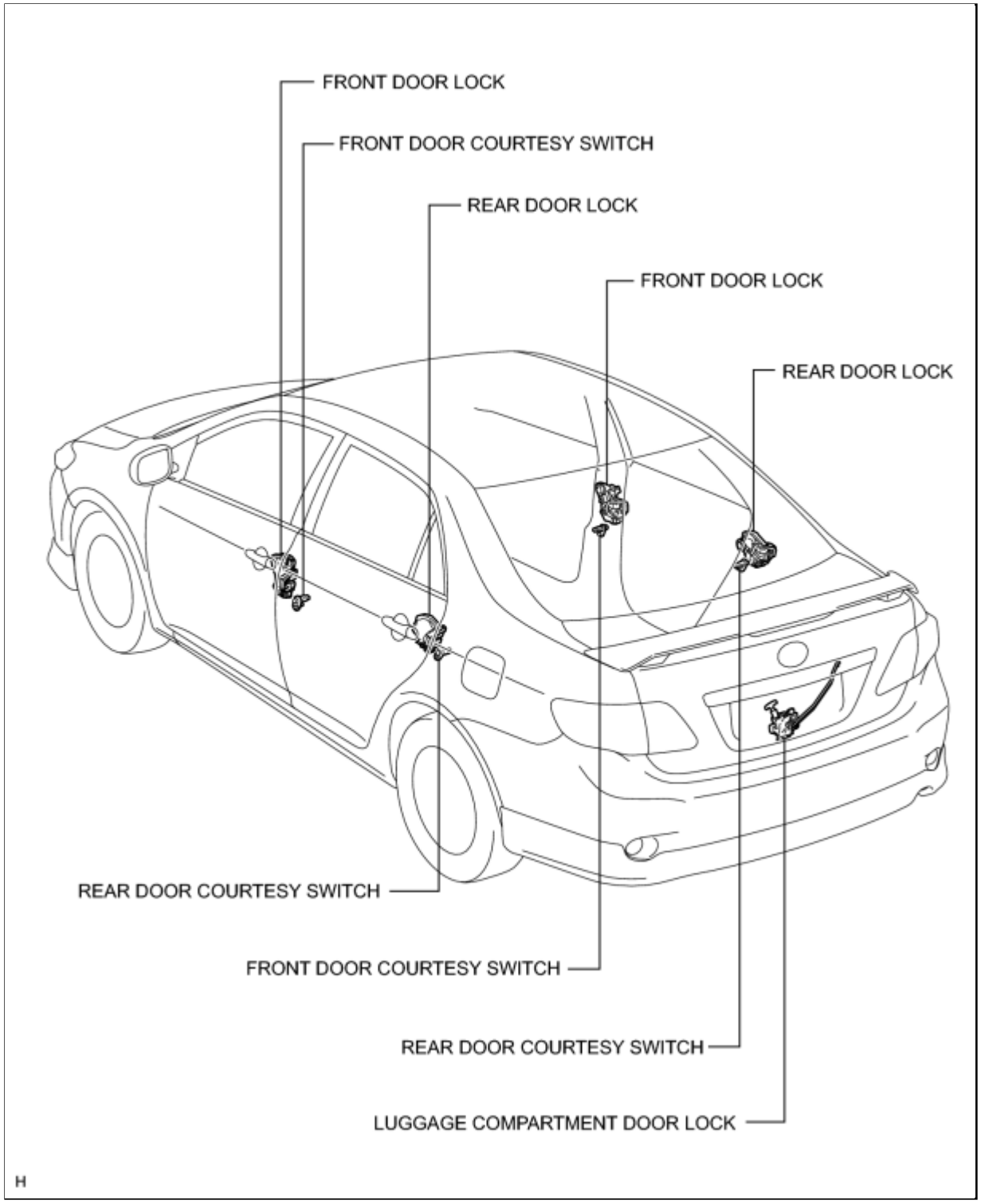
FRONT DOOR LOCK
FRONT DOOR COURTESY SWITCH
REAR DOOR LOCK
FRONT DOOR LOCK
REAR DOOR LOCK
REAR DOOR COURTESY SWITCH
FRONT DOOR COURTESY SWITCH
REAR DOOR COURTESY SWITCH
LUGGAGE COMPARTMENT DOOR LOCK
H

Last Modified: 3-10-2010	6.4 U	**From:** 200901
Model Year: 2010	**Model:** Corolla	**Doc ID:** RM000000XUE02YX
Title: THEFT DETERRENT / KEYLESS ENTRY: SMART KEY SYSTEM (for Entry Function): SYSTEM DIAGRAM (2010 Corolla)		

SYSTEM DIAGRAM

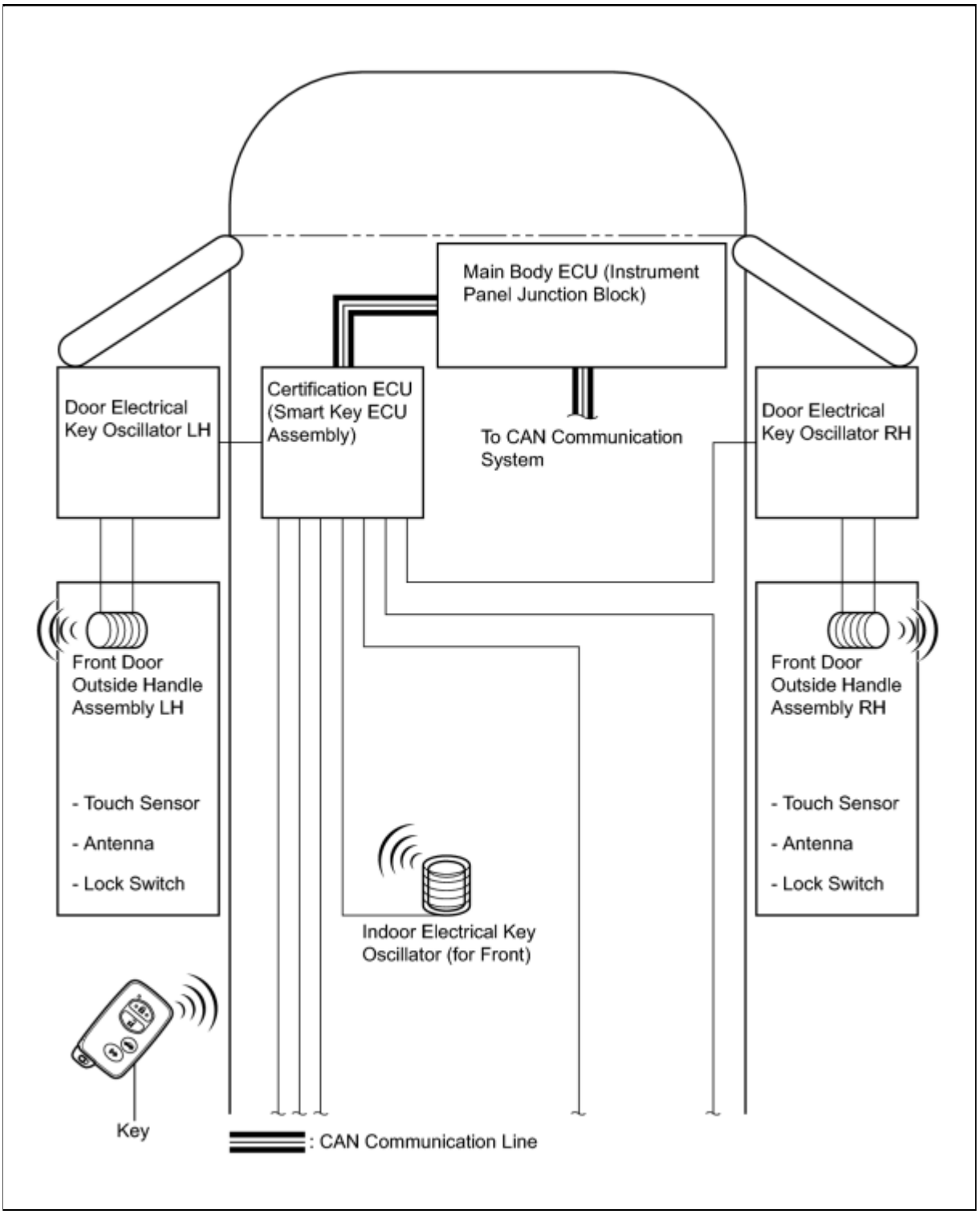

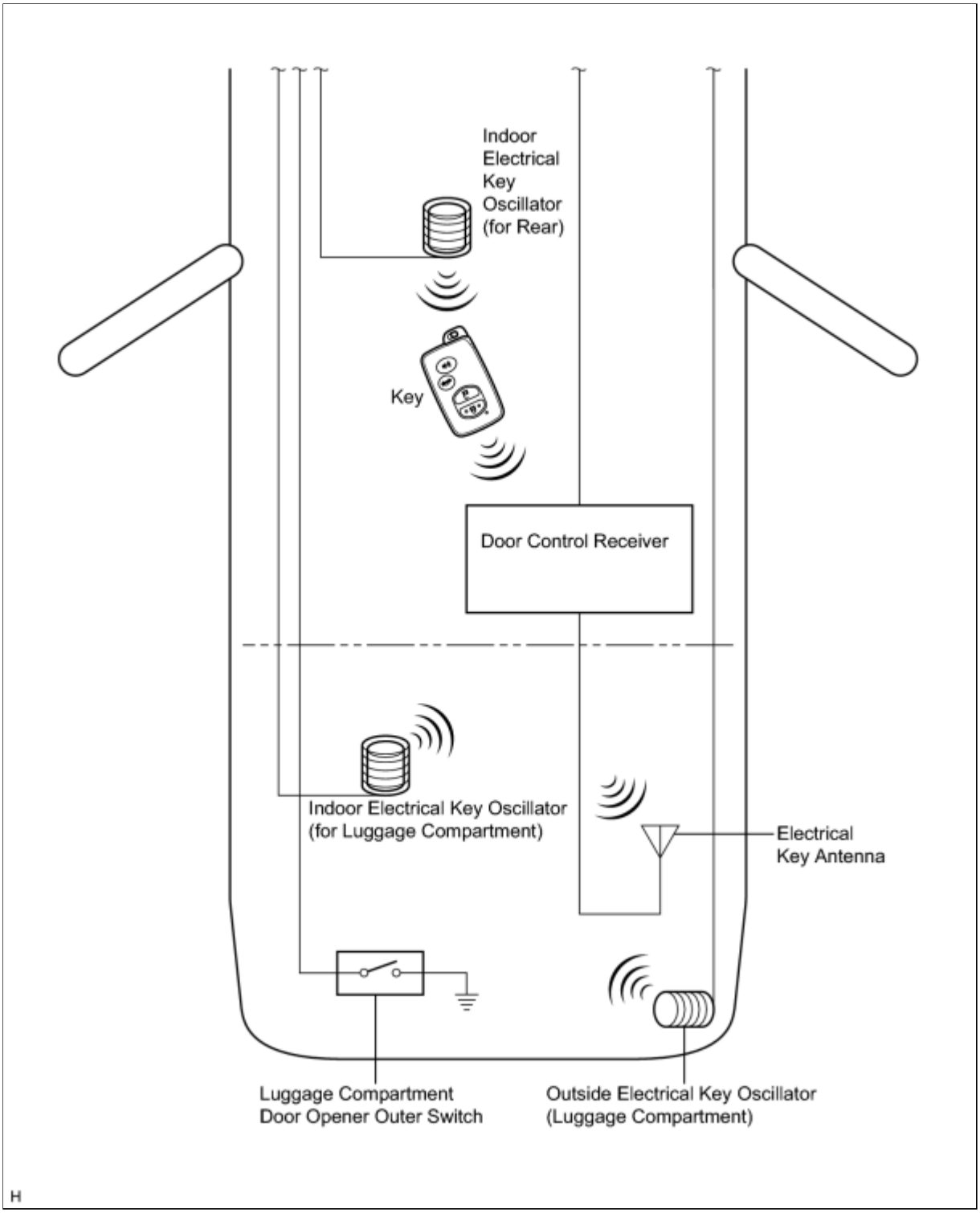

TRANSMITTING ECU (TRANSMITTER)	RECEIVING ECU	SIGNAL	COMMUNICATION METHOD
Main body ECU (Instrument panel junction block)	Certification ECU (smart key ECU assembly)	Door lock output signal	CAN
		Luggage compartment door output request signal	

TRANSMITTING ECU (TRANSMITTER)	RECEIVING ECU	SIGNAL	COMMUNICATION METHOD
		Wireless door lock buzzer request signal	
		Door lock position switch signal	
		Driver door key operated switch signal	
		Luggage compartment door key operated switch signal	
Certification ECU (smart key ECU assembly)	Main body ECU (Instrument panel junction block)	Illumination light request signal	CAN
		Light answer back signal	
		Door lock/unlock request signal	
Certification ECU (smart key ECU assembly)	Combination meter	Meter buzzer single-tone request signal	CAN
		Meter buzzer intermittence request signal	
		Meter buzzer continuation request signal	
Combination meter	• Certification ECU (smart key ECU assembly) • Main body ECU (Instrument panel junction block)	Vehicle speed signal	CAN

Last Modified: 3-10-2010	6.4 D	**From:** 200901
Model Year: 2010	**Model:** Corolla	**Doc ID:** RM000000XU703QX
Title: THEFT DETERRENT / KEYLESS ENTRY: SMART KEY SYSTEM (for Entry Function): HOW TO PROCEED WITH TROUBLESHOOTING (2010 Corolla)		

HOW TO PROCEED WITH TROUBLESHOOTING

HINT:

- Use the following procedures to troubleshoot the smart key system.
- *: Use the Techstream.
- When troubleshooting the smart key system using the Techstream with the engine switch off, connect the Techstream to the vehicle and repeat turning any of the courtesy light switches on and off until communication between the Techstream and the vehicle begins (the interval between ON and OFF should be less than 1.5 seconds).

1.	**VEHICLE BROUGHT TO WORKSHOP**

NEXT

2.	**CUSTOMER PROBLEM ANALYSIS CHECK**

HINT:

- In troubleshooting, confirm that the problem symptoms have been accurately identified. Preconceptions should be discarded in order to make an accurate judgment. To clearly understand what the problem symptoms are, it is extremely important to ask the customer about the problem and the conditions at the time the malfunction occurred.
- Gather as much information as possible for reference. Past problems that seem unrelated may also help in some cases.
- The following 5 items are important points in the problem analysis:

What	Vehicle model, system name
When	Date, time, occurrence frequency
Where	Road conditions
Under what conditions?	Driving conditions, weather conditions
How did it happen?	Problem symptoms

NEXT

3.	INSPECT BATTERY VOLTAGE

(a) Measure the battery voltage.

Standard Voltage:
11 to 14 V

If the voltage is below 11 V, recharge or replace the battery before proceeding to the next step.

NEXT

4.	INSPECT COMMUNICATION FUNCTION OF CAN COMMUNICATION SYSTEM (CAN)*

(a) Use the Techstream to check if the CAN communication system is functioning normally.

Result:

RESULT	PROCEED TO
CAN DTC is output.	A
CAN DTC is not output.	B

A INFO **Go to DIAGNOSTIC TROUBLE CODE CHART**

B

5.	INSPECT COMMUNICATION FUNCTION OF LIN COMMUNICATION SYSTEM (LIN)*

(a) Use the Techstream to check if the Multiplex Communication System (MPX) is functioning normally.

Result:

RESULT	PROCEED TO
LIN DTC is output.	A
LIN DTC is not output.	B

A ▶ INFO **Go to DIAGNOSTIC TROUBLE CODE CHART**

B
▼

6.	**CHECK DTC OUTPUT***

(a) Check for DTCs. Based on the DTCs output, try to cause the same steering lock system DTC, engine immobiliser system DTC, wireless door lock control system DTC or smart key system (for start function) DTC to be output by simulating the symptoms indicated by the DTCs.

Result:

RESULT	PROCEED TO
Steering lock system DTC is not output.	A
Engine immobiliser system DTC is output.	B
Wireless door lock control system DTC is output.	C
Smart key system (for start function) DTC is output.	D
DTC is not output.	E

A ▶ INFO **Go to DIAGNOSTIC TROUBLE CODE CHART**

B ▶ INFO **Go to DIAGNOSTIC TROUBLE CODE CHART**

C ▶ INFO **Go to DIAGNOSTIC TROUBLE CODE CHART**

D ▶ INFO **Go to DIAGNOSTIC TROUBLE CODE CHART**

E

7.	PROBLEM SYMPTOMS TABLE

(a) Refer to Problem Symptoms Table INFO .

Result:

RESULT	PROCEED TO
Fault is listed in problem symptoms table.	A
Fault is not listed in problem symptoms table.	B

A **Go to step 9**

B

8.	OVERALL ANALYSIS AND TROUBLESHOOTING*

(a) Operation Check INFO

(b) Data List / Active Teat INFO

(c) Terminals of ECU INFO

NEXT

9.	REPAIR OR REPLACE

NEXT

10.	**CONFIRMATION TEST**

NEXT **END**

Last Modified: 3-10-2010	6.4 D	**From:** 200901
Model Year: 2010	**Model:** Corolla	**Doc ID:** RM000002U9W00XX
Title: THEFT DETERRENT / KEYLESS ENTRY: SMART KEY SYSTEM (for Entry Function): OPERATION CHECK (2010 Corolla)		

OPERATION CHECK

1. SMART KEY SYSTEM OPERATION INSPECTION

(a) Check the entry unlock function.

(1) Use the wireless lock operation to lock the doors. With the key in your possession, touch a door's outside handle (touch sensor) and check that the door unlocks.

(b) Check the entry unlock operation's detection area.

(1) Step 1: Hold the key at the same height as the door's outside handle (approximately 0.8 m (2.62 ft.)). Pay attention to the direction of the key shown in the illustration.

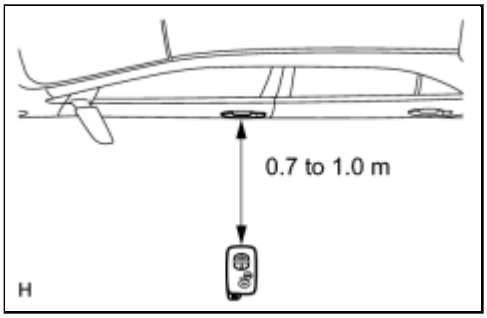

(2) Step 2: Check that when the key is brought within 0.7 to 1.0 m (2.30 to 3.28 ft.) of the vehicle, the system enters unlock standby mode.

HINT:

Unlock standby mode is signified by the key's red LED illuminating.

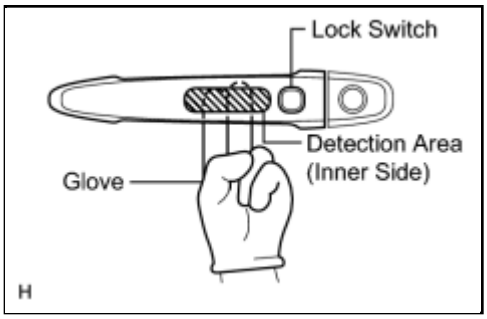

(3) Step 3: After the system enters unlock standby mode, touch the outside handle's sensor within 3 seconds. Check that the door unlocks.

NOTICE:

The key may not be able to communicate with the system within a 0.2 m (0.656 ft.) radius of each outside handle.

(4) Step 4: Repeat step 2 and step 3 for the remaining doors.

(5) Step 5: Inspect the door electrical key oscillator's response sensitivity. Wear protective gloves, set the system to unlock standby mode, and check that touching the inner side of the outside handle (the highlighted area in the illustration) with your finger causes the door to unlock.

NOTICE:

When touching the highlighted area, tapping too quickly or having extended contact may not trigger the sensor. In such a case, the door will not unlock.

(6) Step 6: Repeat step 5 for the remaining doors.

(c) Check the entry lock function.

(1) Step 1: Close all of the vehicle's doors. With the key in your possession outside of the vehicle, check that pressing the lock switch locks the doors.

HINT:

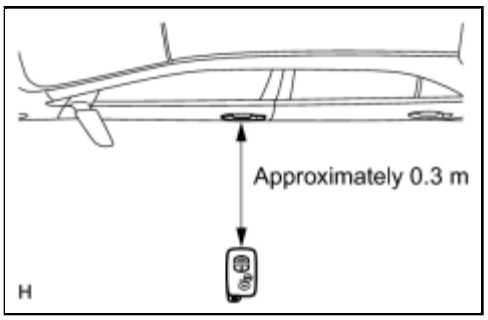

- When pressing the lock switch, hold the electrical key transmitter about 1 m (3.28 ft.) above the ground and about 0.3 m (0.984 ft.) away from the vehicle as shown in the illustration.
- Due to the key being unable to communicate with the system within a 0.2 m (0.656 ft.) distance from the outside handle, do not press the lock switch with the same hand that is holding the key. The doors may not lock.
- If the key lock-in prevention function buzzer sounds*, radio waves from the indoor electrical key oscillator may be leaking from the vehicle. Perform this same check for the front passenger side and rear doors.

*: Except Europe and China

(2) Step 2: Repeat step 1 for the remaining doors.

(d) Check the entry luggage compartment door open function.

(1) Close the luggage compartment door. With the key in your possession, check that pressing the luggage door opener switch opens the luggage compartment door.

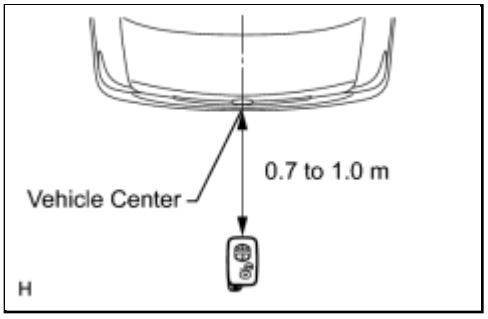

(2) Inspect the entry luggage compartment door open operation's detection area. Hold the key at the same height as the luggage door opener switch (approximately 0.8 m (2.62 ft.)) aligning it with the center of the rear of the vehicle. Pay attention to the direction of the key shown in the illustration. Check that when the key is brought within 0.7 to 1.0 m (2.30 to 3.28 ft.) of the vehicle, pressing the luggage door opener switch opens the luggage compartment door.

(e) Check the entry ignition function.

(1) When the engine is stopped:

With the key in your possession and the brake pedal depressed, check that pressing the engine switch releases the steering wheel lock and starts the engine.

HINT:

The engine can be started only when the engine switch indicator illuminates in green.

(2) When the engine is running:

With the key in your possession, check that pressing the engine switch stops the engine and activates the steering wheel lock.

HINT:

The shift position must be P to stop the engine.

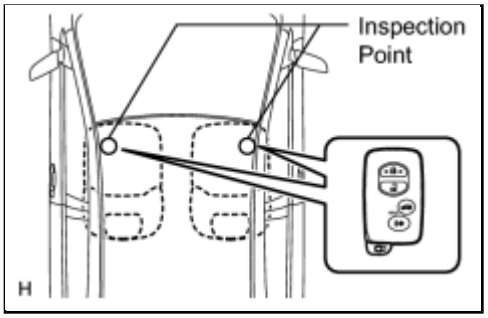

(3) Inspect the entry ignition operation's detection area (front seat). Pay attention to the direction of the key in the illustration. When the key is in either of the 2 locations in the illustration, check that the engine can start.

NOTICE:

The engine cannot be started when the key is on the instrument panel or rear package tray, or in the glove box.

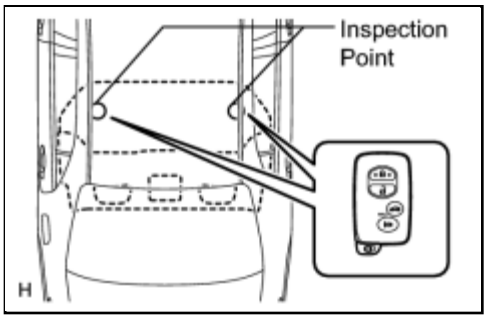

(4) Inspect the entry ignition operation's detection area (rear seat). Pay attention to the direction of the key shown in the illustration. When the key is in either of the 2 locations in the illustration, check that the engine can start.

NOTICE:

The engine cannot be started when the key is on the instrument panel or rear package tray, or in the glove box.

(f) Check the key lock-in prevention function (for luggage compartment).

(1) Place the key in the luggage compartment with all doors locked. Check that: 1) closing the luggage compartment door triggers the key's wireless buzzer (which lasts approximately 2 seconds), and 2) pressing the luggage door opener switch opens the luggage compartment door.

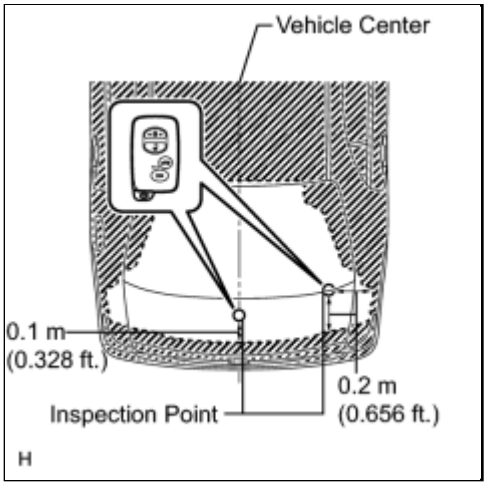

(2) Inspect the key lock-in prevention's detection area. Pay attention to the direction of the key shown in the illustration. When the key is in either of the 2 locations in the illustration, check that: 1) closing the luggage compartment door sounds the wireless buzzer, and 2) pressing the luggage door opener switch opens the luggage compartment door.

NOTICE:

If the key is inside a metal storage item, such as a metal briefcase or metal box, the key will not be able to be detected by the system.

(3) Inspect the key lock-in prevention's detection area and the entry door control receiver for wave leaks. Hold the key at the same height as the lower edge of the luggage compartment door aligning it with the center of the rear of the vehicle. Pay attention to the direction

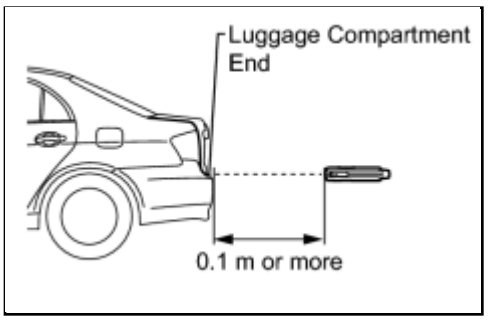

and position of the key shown in the illustration. Check that when the key is more than 0.1 m (0.328 ft.) away from the vehicle's rear bumper, the wireless buzzer does not sound. If the warning buzzer sounds, the entry door control receiver may have a wave leak.

(g) Check the key cancel function.

(1) While the engine switch is on (IG), check that the luggage door opener switch is the only switch that can be operated in the smart key system.

(2) While the key cancel function (smart key system cancel function) is ON, check that all functions of the smart key system cannot be operated.

(h) Check the answer-back function (hazard warning light flashing and buzzer sounding).

ENTRY OPERATION	HAZARD WARNING LIGHT	BUZZER
Entry Door Lock	Flashes once	Sounds once
Entry Door Unlock	Flashes twice	Sounds twice
Entry Luggage Compartment Door Open	Flashes once	Sounds once

(i) Check that the key reminder warning buzzer sounds.

(1) Carry the key in the vehicle and close the driver side door. Then turn the engine switch off or on (ACC).

(2) Open the driver side door and check that the buzzer sounds intermittently.

(j) Check that the key reminder warning buzzer stops.

(1) When the buzzer is sounding, check that the buzzer stops sounding if either of the following is performed:

- Close the driver side door (front door courtesy light switch is off).
- Turn the engine switch on (IG).

2. KEY DIAGNOSTIC MODE

HINT:

Key diagnostic mode checks if the electrical key transmitter within a selected oscillator/amplifier detection area is operating normally. The results are output through the wireless door lock buzzer.

(a) Connect the Techstream to the DLC3.

(b) Turn the engine switch on (IG).

(c) Turn the Techstream on.

(d) Enter the following menus: Body Electrical / Smart Key / Utility / Communication Check (Key Diag Mode).

(e) Check the values by referring to the table below.

Smart Key

TESTER DISPLAY	INSPECTION RANGE
Overhead + Driver Side	Door electrical key oscillator (driver side)
Overhead + Passenger Side	Door electrical key oscillator (front passenger side)
Overhead + Front Room	Indoor electrical key oscillator (front floor)
Overhead + Rear Room	Indoor electrical key oscillator (rear floor)
Overhead + Luggage (outside)	Outside electrical key oscillator (luggage compartment)
Overhead + Luggage (inside)	Indoor electrical key oscillator (luggage compartment)
Immobiliser Amp	Amplifier (engine switch)

(f) When the electrical key transmitter is brought near the selected oscillator/amplifier, check that the wireless door lock buzzer sounds.

Last Modified: 3-10-2010	6.4 D	**From:** 200901
Model Year: 2010	**Model:** Corolla	**Doc ID:** RM000000XUG035X
Title: THEFT DETERRENT / KEYLESS ENTRY: SMART KEY SYSTEM (for Entry Function): CUSTOMIZE PARAMETERS (2010 Corolla)		

CUSTOMIZE PARAMETERS

1. CUSTOMIZING FUNCTION WITH TECHSTREAM

HINT:

The items in the table below can be customized.

NOTICE:

- When the customer requests a change in a function, first make sure that the function can be customized.
- Be sure to make a note of the current setting before customizing.
- When troubleshooting a function, first make sure that the function is set to the default setting.

HINT:

The following functions' default settings are ON. Part of these functions can be customized.

(a) Connect the Techstream to the DLC3.

(b) Turn the engine switch on (IG).

(c) Turn the Techstream on.

(d) Enter the following menu: Customize Setting / Smart Key/Access.

(e) Select the setting by referring to the table.

Smart Key/Access (Certification ECU (Smart Key ECU assembly))

DISPLAY (ITEM)	DEFAULT	CONTENT	SETTING
Park Wait Time	2.5s	Function to set waiting time to permit opening door after door is locked with entry lock function.	0.5s / 1.5s / 2.5s / 5.0s
Ignition Available Area	ALL	Function to choose the available area for key to start the engine and cancel the steering lock.	FRONT / ALL
Trunk Open Mode	ON	Function to open the luggage compartment door when the driver has the key and presses the luggage open button.	ON / OFF
Key Low Battery Warning	ON	Function to set a warning function for a low battery.	ON / OFF

2. ENTRY UNLOCK MODE SWITCHING FUNCTION

(a) To change the vehicle to entry unlock mode switching function, make sure that the engine switch is off and simultaneously press and hold the electrical key's LOCK switch and another electrical key switch for 5 seconds.

- Driver door unlock default setting:

When the switches are pressed and held for 5 seconds, the entry door unlock mode changes in the following order: driver door mode, all door mode.

NOTICE:

After pressing and holding the switches for 5 seconds, wait 5 seconds before performing the same procedure again.

- Driver door unlock mode:

  When the driver door's touch sensor is touched, only the driver door unlocks. When another touch sensor is touched, all doors unlock.

- All door unlock mode:

  When the touch sensor is touched, all doors unlock.

(b) The certification ECU (smart key ECU assembly) receives this signal from the entry door control receiver and changes the smart key system to the entry unlock mode.

(c) The certification ECU (smart key ECU assembly) sounds the wireless door lock buzzer and combination meter buzzer to inform the user that the mode has been switched.

MODE	WIRELESS DOOR LOCK BUZZER	COMBINATION METER BUZZER
Driver Door (Default)	Sounds 3 times	Sounds once
All Doors (Customized)	Sounds 2 times	Sounds once

HINT:

The function only changes the entry unlock mode of the smart key system. It does not switch the unlocking of the wireless door lock control.

3. ELECTRICAL KEY CANCEL

The electrical key cancel operation disables the following functions:

- Entry Unlock / Lock
- Entry Luggage Compartment Open
- Key Lock-in Prevention
- Warning

(a) The operation procedures are as follows:

Precondition:

Engine switch off, driver side door closed and unlocked.

(1) Unlock the driver side door once with the UNLOCK switch of the key.

(2) Open the driver door within 5 seconds.

(3) Unlock the driver side door twice with the UNLOCK switch of the key within 5 seconds.

(4) Close and open the driver door twice within 30 seconds.

(Driver door: Close → Open → Close → Open)

(5) Unlock the driver side door twice with the UNLOCK switch of the key within 5 seconds.

(6) Close and open the driver door within 30 seconds.

(Driver door: Close → Open)

(7) Close the driver door within 5 seconds.

When electrical key cancel is activated, the wireless door lock buzzer sounds twice.

To return to the original condition, perform the procedures again. When the original condition is returned, the wireless door lock buzzer sounds once.



Last Modified: 3-10-2010	6.4 U	**From:** 200901
Model Year: 2010	**Model:** Corolla	**Doc ID:** RM000000XUA034X
Title: THEFT DETERRENT / KEYLESS ENTRY: SMART KEY SYSTEM (for Entry Function): TERMINALS OF ECU (2010 Corolla)		

TERMINALS OF ECU

1. CHECK CERTIFICATION ECU (SMART KEY ECU ASSEMBLY)

(a) Disconnect the E36 certification ECU (smart key ECU assembly) connector.

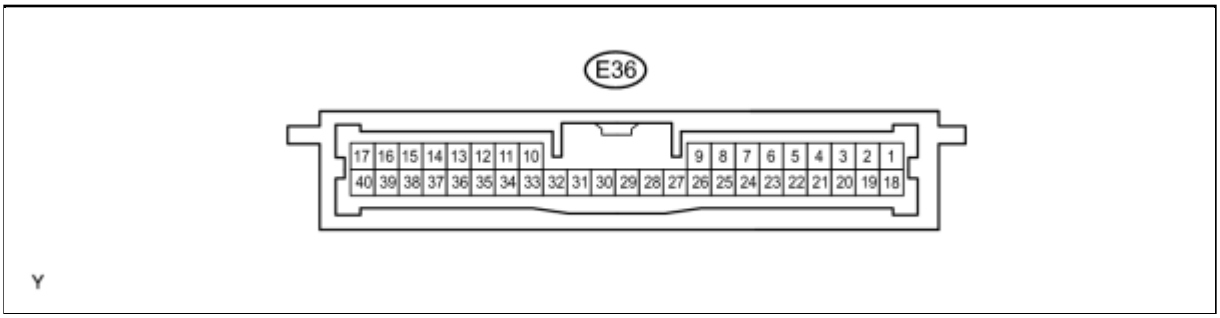

(b) Measure the voltage and resistance according to the value(s) in the table below.

TESTER CONNECTION	WIRING COLOR	TERMINAL DESCRIPTION	CONDITION	SPECIFIED CONDITION
E36-1 (+B) - Body ground	W - Body ground*1 BR - Body ground*2	+B power supply	Always	11 to 14 V
E36-18 (IG) - Body ground	L - Body ground*1 B - Body ground*2	Ignition power supply	Engine switch off	Below 1 V
E36-18 (IG) - Body ground	L - Body ground*1 B - Body ground*2	Ignition power supply	Engine switch on (IG)	11 to 14 V
E36-17 (E) - Body ground	W-B - Body ground	Ground	Always	Below 1 Ω
E36-19 (ACC) - Body ground	GR - Body ground	ACC power supply	Engine switch off	Below 1 V
E36-19 (ACC) - Body ground	GR - Body ground	ACC power supply	Engine switch on (ACC)	11 to 14 V
E36-3 (TSW1) - Body ground	V - Body ground	Entry lock switch (driver side) signal	Front lock switch not pushed	10 kΩ or higher

TESTER CONNECTION	WIRING COLOR	TERMINAL DESCRIPTION	CONDITION	SPECIFIED CONDITION
E36-3 (TSW1) - Body ground	V - Body ground	Entry lock switch (driver side) signal	Front lock switch pushed	Below 1 Ω
E36-4 (TSW2) - Body ground	R - Body ground*1 W - Body ground*2	Entry lock switch (passenger side) signal	Front lock switch not pushed	10 kΩ or higher
E36-4 (TSW2) - Body ground	R - Body ground*1 W - Body ground*2	Entry lock switch (passenger side) signal	Front lock switch pushed	Below 1 Ω
E36-10 (LIN) - Body ground	V - Body ground	LIN line	Always	10 kΩ or higher
E36-27 (CANH) - Body ground	SB - Body ground	CAN line	Always	10 kΩ or higher
E36-28 (CANL) - Body ground	W - Body ground	CAN line	Always	10 kΩ or higher
E36-40 (AGND) - Body ground	BR - Body ground*1 GR - Body ground*2	Ground	Always	Below 1 Ω
E36-7 (TSW5) - Body ground	V - Body ground*1 GR - Body ground*2	Luggage compartment door opener outer switch signal	Opener switch OFF	10 kΩ or higher
E36-7 (TSW5) - Body ground	V - Body ground*1 GR - Body ground*2	Luggage compartment door opener outer switch signal	Opener switch ON	Below 1 Ω

- *1: for TMC Made
- *2: Except for TMC Made

If the result is not as specified, the wire harness side may have a malfunction.

(c) Reconnect the E36 certification ECU (smart key ECU assembly) connector.

(d) Measure the voltage according to the value(s) in the table below.

TESTER CONNECTION	WIRING COLOR	TERMINAL DESCRIPTION	CONDITION	SPECIFIED CONDITION
E36-33 (CLG1) - E36-17 (E)	R - W-B*1 BR - W-B*2	Door electrical key oscillator (driver side) sensor signal	All doors closed, all doors locked and engine switch off	Alternating between 5 V and below 1 V

TESTER CONNECTION	WIRING COLOR	TERMINAL DESCRIPTION	CONDITION	SPECIFIED CONDITION
E36-33 (CLG1) - E36-17 (E)	R - W-B*1 BR - W-B*2	Door electrical key oscillator (driver side) sensor signal	Door unlocked or door open	Below 1 V
E36-22 (SEN1) - E36-17 (E)	R - W-B*1 LG - W-B*2	Touch sensor (driver side) detection signal	Outside door handle touched	Below 1 V
E36-22 (SEN1) - E36-17 (E)	R - W-B*1 LG - W-B*2	Touch sensor (driver side) detection signal	Outside door handle not touched (Have the key outside the cabin)	11 to 14 V
E36-5 (SEL1) - E36-17 (E)	Y - W-B	Touch sensor (driver side) activation control signal	The key is more than 5 m (16.4 ft.) away from the driver door.	11 to 14 V
E36-5 (SEL1) - E36-17 (E)	Y - W-B	Touch sensor (driver side) activation control signal	The key brought to the outside handle	Below 1 V
E36-35 (CLG2) - E36-17 (E)	B - W-B*1 R - W-B*2	Door electrical key oscillator (passenger side) sensor signal	All doors closed, all doors locked and engine switch off	Alternating between 5 V and below 1 V
E36-35 (CLG2) - E36-17 (E)	B - W-B*1 R - W-B*2	Door electrical key oscillator (passenger side) sensor signal	Door unlocked or door open	Below 1 V
E36-23 (SEN2) - E36-17 (E)	W - W-B*1 BR - W-B*2	Touch sensor (passenger side) detection signal	Outside door handle touched	Below 1 V
E36-23 (SEN2) - E36-17 (E)	W - W-B*1 BR - W-B*2	Touch sensor (passenger side) detection signal	Outside door handle not touched (Have the key outside the cabin)	11 to 14 V
E36-6 (SEL2) - E36-17 (E)	LG - W-B*1 B - W-B*2	Touch sensor (passenger side) activation control signal	The key is more than 5 m (16.4 ft.) away from the passenger door.	11 to 14 V
E36-6 (SEL2) - E36-17 (E)	LG - W-B*1 B - W-B*2	Touch sensor (passenger side) activation control signal	The key brought to the outside handle	Below 1 V
E36-11 (CLG5) - E36-12 (CG5B)	R - G*1 L - LG*2	Indoor electrical key oscillator (front) sensor signal	Within 30 seconds after driver side door opened and closed, engine switch off	Alternating between 5 V and below -5 V

TESTER CONNECTION	WIRING COLOR	TERMINAL DESCRIPTION	CONDITION	SPECIFIED CONDITION
E36-11 (CLG5) - E36-12 (CG5B)	R - G*1 L - LG*2	Indoor electrical key oscillator (front) sensor signal	Engine switch on (IG)	Below 1 V
E36-13 (CLG6) - E36-14 (CG6B)	W - B*1 W - BR*2	Indoor electrical key oscillator (rear) sensor signal	Within 30 seconds after driver side door opened and closed, engine switch off	Alternating between 5 V and below -5 V
E36-13 (CLG6) - E36-14 (CG6B)	W - B*1 W - BR*2	Indoor electrical key oscillator (rear) sensor signal	Engine switch on (IG)	Below 1 V
E36-15 (CLG7) - E36-16 (CG7B)	R - G*1 GR - W*2	Indoor electrical key oscillator (luggage compartment) sensor signal	Luggage compartment door opener switch ON	Alternating between 5 V and below -5 V
E36-15 (CLG7) - E36-16 (CG7B)	R - G*1 GR - W*2	Indoor electrical key oscillator (luggage compartment) sensor signal	Luggage compartment door opener switch OFF	Below 1 V
E36-31 (CLG8) - E36-32 (CG8B)	LG - P*1 SB- Y*2	Outside electrical key oscillator (luggage compartment) sensor signal	Luggage compartment door opener switch ON	Alternating between 5 V and below -5 V
E36-31 (CLG8) - E36-32 (CG8B)	LG - P*1 SB- Y*2	Outside electrical key oscillator (luggage compartment) sensor signal	Luggage compartment door opener switch OFF	Below 1 V
E36-29 (RC0) - E36-17 (E)	V - W-B*1 LG - W-B*2	Entry door control receiver power source	Engine switch off, all doors closed and key switch on	4.5 to 5.5 V
E36-29 (RC0) - E36-17 (E)	V - W-B*1 LG - W-B*2	Entry door control receiver power source	Engine switch off, all doors closed and key switch off	Below 1 V
E36-39 (RSSI) - E36-17 (E)	R - W-B*1 L - W-B*2	Entry door control receiver electric wave existence signal	Engine switch off, all doors closed, and the key is not in the detection area.	11 to 14 V
E36-39 (RSSI) - E36-17 (E)	R - W-B*1 L - W-B*2	Entry door control receiver electric wave existence signal	Engine switch off, all doors closed, and the key is in the detection area.	Below 1 V
E36-38 (RDA) - E36-17 (E)	Y - W-B*1 P - W-B*2	Entry door control receiver data input signal	Engine switch off, all doors closed and key switch off	11 to 14 V (Pulse generation)

TESTER CONNECTION	WIRING COLOR	TERMINAL DESCRIPTION	CONDITION	SPECIFIED CONDITION
E36-38 (RDA) - E36-17 (E)	Y - W-B*1 P - W-B*2	Entry door control receiver data input signal	Engine switch off, all doors closed and key switch on	Pulse generation
E36-38 (RDA) - Body ground	Y - Body ground*1 P - Body ground*2	Tuner input signal	Engine switch off, all doors closed, and the key is not in the detection area.	11 to 14 V (Pulse generation)
E36-38 (RDA) - Body ground	Y - Body ground*1 P - Body ground*2	Tuner input signal	The key is in the detection area.	Pulse generation
E36-37 (ASEL) - Body ground	L - Body ground*1 B - Body ground*2	Cabin / luggage receiver select signal	Engine switch off, luggage compartment door closed and the key is in the luggage detection area.	4.6 to 6.0 V
E36-37 (ASEL) - Body ground	L - Body ground*1 B - Body ground*2	Cabin / luggage receiver select signal	Engine switch off, luggage compartment door open	Below 1 V
E36-30 (VC5) - Body ground	SB - Body ground*1 BE - Body ground*2	Transponder key amplifier power supply	Key is not in the cabin.	Below 1 V
E36-30 (VC5) - Body ground	SB - Body ground*1 BE - Body ground*2	Transponder key amplifier power supply	The key is outside the cabin and the driver's door is open.	4.5 to 5.5 V
E36-8 (TXCT) - Body ground	L - Body ground*1 SB - Body ground*2	Transponder key amplifier output signal	Key is not in the cabin.	Below 1 V
E36-8 (TXCT) - Body ground	L - Body ground*1 SB - Body ground*2	Transponder key amplifier output signal	The key is outside the cabin and the driver's door is open.	Pulse generation (see waveform 1)
E36-9 (CODE) - Body ground	P - Body ground*1 G - Body ground*2	Transponder key amplifier communication signal	Key is not in the cabin.	Below 1 V
E36-9 (CODE) - Body ground	P - Body ground*1 G - Body	Transponder key amplifier communication signal	The key is outside the cabin and the driver's door is open. The key is close to	Pulse generation (see waveform 2)

TESTER CONNECTION	WIRING COLOR	TERMINAL DESCRIPTION	CONDITION	SPECIFIED CONDITION
	ground*2		the engine switch with the brake pedal depressed.	
E36-21 (BZR) - Body ground	L - Body ground*1 R - Body ground*2	Wireless door lock buzzer signal	Wireless door lock buzzer OFF	Below 1 V
E36-21 (BZR) - Body ground	L - Body ground*1 R - Body ground*2	Wireless door lock buzzer signal	Wireless door lock buzzer ON	Pulse generation

- *1: for TMC Made
- *2: Except for TMC Made

If the result is not as specified, the certification ECU (smart key ECU assembly) may have a malfunction.

(e) Inspect using an oscilloscope.

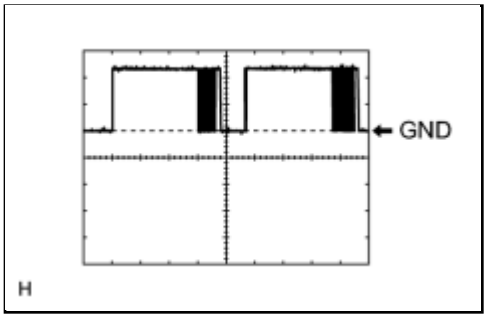

Waveform 1 (Reference)

Tester Connection	E36-8 (TXCT) - Body ground
Tool Setting	2 V/DIV., 50 ms./DIV.
Condition	The key is outside the cabin and the driver's door is open.

(f) Inspect using an oscilloscope.

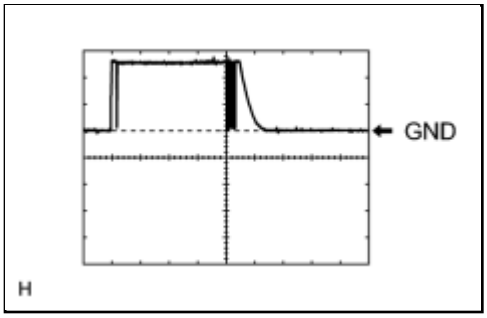

Waveform 2 (Reference)

Tester Connection	E36-9 (CODE) - Body ground
Tool Setting	2 V/DIV., 50 ms./DIV.
Condition	The key is outside the cabin and the driver's door is open. The key is close to the engine switch with the brake pedal depressed.

2. MAIN BODY ECU (INSTRUMENT PANEL JUNCTION BLOCK)

(a) Measure the voltage and resistance according to the value(s) in the table below.

Main Body ECU (Instrument Panel Junction Block):

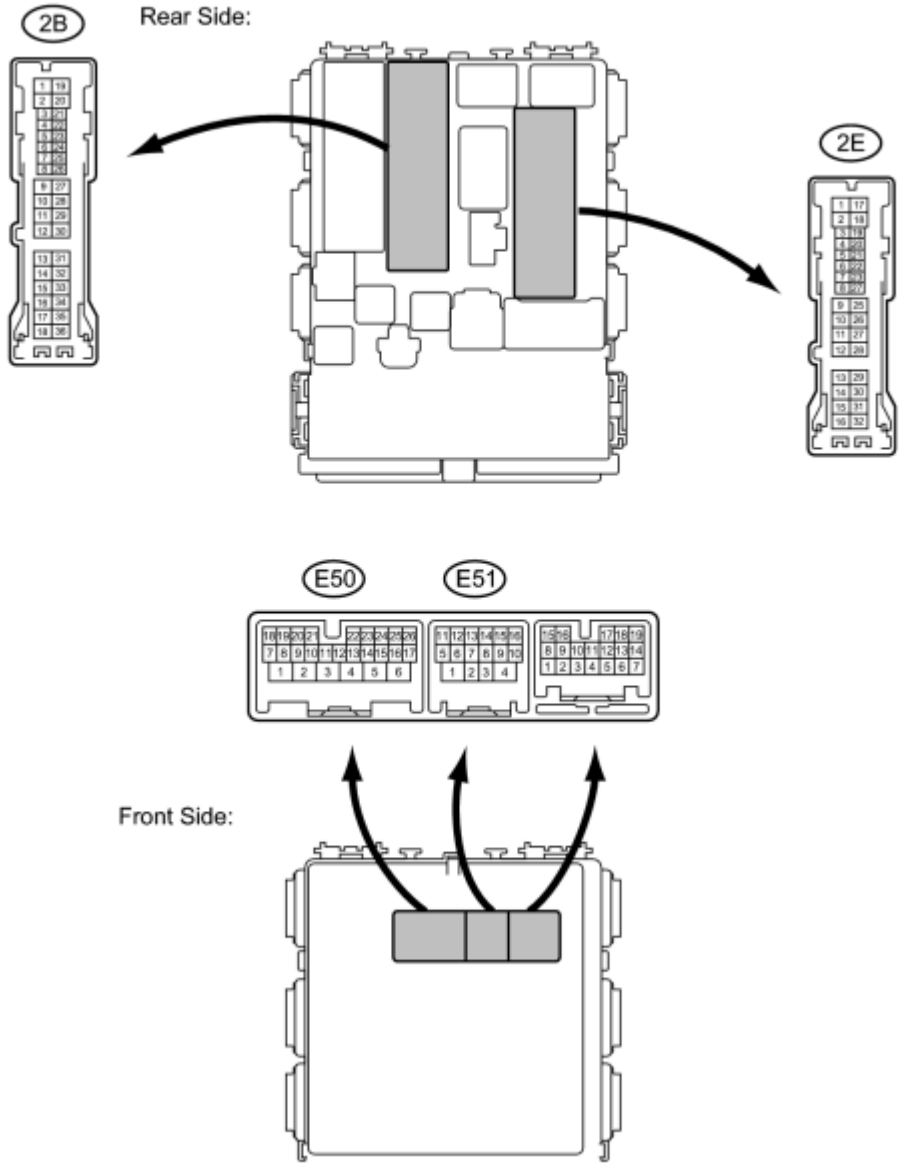

TESTER CONNECTION	WIRING COLOR	TERMINAL DESCRIPTION	CONDITION	SPECIFIED CONDITION
2B-30 (BECU) - Body ground	W - Body ground	Battery power supply	Always	11 to 14 V
2E-17 (GND1) - Body ground	W-B - Body ground	Ground	Always	Below 1 Ω
E51-4 (GND2) - Body ground	W-B - Body ground	Ground	Always	Below 1 Ω
E51-12 (CANN) - Body ground	W - Body ground	CAN Line	Always	10 kΩ or higher

TESTER CONNECTION	WIRING COLOR	TERMINAL DESCRIPTION	CONDITION	SPECIFIED CONDITION
E51-11 (CANP) - Body ground	R - Body ground	CAN Line	Always	10 kΩ or higher
E50-14 (STP) - Body ground	L - Body ground	Stop light switch signal	Brake pedal depressed	11 to 14 V
E50-14 (STP) - Body ground	L - Body ground	Stop light switch signal	Brake pedal released	Below 1 V

If the result is not as specified, the junction block may have a malfunction.

Last Modified: 3-10-2010	6.4 T	**From:** 200901
Model Year: 2010	**Model:** Corolla	**Doc ID:** RM000000XUB03FX
Title: THEFT DETERRENT / KEYLESS ENTRY: SMART KEY SYSTEM (for Entry Function): PROBLEM SYMPTOMS TABLE (2010 Corolla)		

PROBLEM SYMPTOMS TABLE

HINT:

Use the table below to help determine the cause of problem symptoms. If multiple suspected areas are listed, the potential causes of the symptoms are listed in order of probability in the "Suspected Area" column of the table. Check each symptom by checking the suspected areas in the order they are listed. Replace parts as necessary.

Smart Key System

SYMPTOM	SUSPECTED AREA	SEE PAGE
All door entry lock / unlock functions and wireless functions do not operate	Power door lock control system	INFO
	Electrical key transmitter	-
	Transmitter battery	-
	Fuse (ECU-B2)	-
	Wire harness or connector	-
	Door control receiver	-
	Certification ECU (smart key ECU assembly)	-
All door entry lock / unlock functions do not operate, but wireless functions operate	Power door lock control system	INFO
	Electrical key transmitter	-
	Certification ECU (smart key ECU assembly)	-
Driver side door entry unlock function does not operate	Power door lock control system	INFO
	Door electrical key oscillator (for driver side)	-
	Front door outside handle (for driver side)	-
	Certification ECU (smart key ECU assembly)	-
	Wire harness or connector	-
Front passenger side door entry unlock function does not operate	Power door lock control system	INFO
	Door electrical key oscillator (for front passenger side)	-

SYMPTOM	SUSPECTED AREA	SEE PAGE
	Front door outside handle (for front passenger side)	-
	Certification ECU (smart key ECU assembly)	-
	Wire harness or connector	-
Driver side door entry lock and unlock function does not operate	Power door lock control system	INFO
	Door electrical key oscillator (for driver side)	-
	Front door outside handle (for driver side)	-
	Certification ECU (smart key ECU assembly)	-
	Wire harness or connector	-
Front passenger side door entry lock and unlock function does not operate	Power door lock control system	INFO
	Door electrical key oscillator (for front passenger side)	-
	Front door outside handle (for front passenger side)	-
	Certification ECU (smart key ECU assembly)	-
	Wire harness or connector	-
Driver side door entry lock function does not operate	Power door lock control system	INFO
	Door electrical key oscillator (for driver side)	-
	Front door outside handle (for driver side)	-
	Certification ECU (smart key ECU assembly)	-
	Wire harness or connector	-
Front passenger side door entry lock function does not operate	Power door lock control system	INFO
	Door electrical key oscillator (for front passenger side)	-
	Front door outside handle (for front passenger side)	-
	Certification ECU (smart key ECU assembly)	-

SYMPTOM	SUSPECTED AREA	SEE PAGE
	Wire harness or connector	-
Room oscillator does not recognize key	Indoor electrical key oscillator (for front)	INFO
	Indoor electrical key oscillator (for rear)	-
	Certification ECU (smart key ECU assembly)	-
	Wire harness or connector	-
	Electrical key transmitter	-
Luggage compartment door entry unlock function does not operate when key is outside luggage compartment	Outside electrical key oscillator (for luggage compartment)	INFO
	Luggage compartment door opener outer switch	-
	Luggage compartment door lock assembly	-
	Wire harness or connector	-
	Certification ECU (smart key ECU assembly)	-
Key luggage compartment lock-in prevention function does not operate	Indoor electrical key oscillator (for luggage compartment)	INFO
	Electrical key antenna (for luggage compartment)	-
	Certification ECU (smart key ECU assembly)	-
	Wire harness or connector	-
Entry interior alarm does not sound	Meter / Gauge system	INFO
	Certification ECU (smart key ECU assembly)	-
Entry answer-back does not occur	Wireless door lock control system	INFO
	Certification ECU (smart key ECU assembly)	-

Last Modified: 3-10-2010	6.4 U	**From:** 200901
Model Year: 2010	**Model:** Corolla	**Doc ID:** RM000000XUF033X
Title: THEFT DETERRENT / KEYLESS ENTRY: SMART KEY SYSTEM (for Entry Function): DATA LIST / ACTIVE TEST (2010 Corolla)		

DATA LIST / ACTIVE TEST

1. DATA LIST

HINT:

Using the Techstream to read the Data List allows the values or states of switches, sensors, actuators and other items to be read without removing any parts. This non-intrusive inspection can be very useful because intermittent conditions or signals may be discovered before parts or wiring is disturbed. Reading the Data List information early in troubleshooting is one way to save diagnostic time.

NOTICE:

In the table below, the values listed under "Normal Condition" are reference values. Do not depend solely on these reference values when deciding whether a part is faulty or not.

(a) Connect the Techstream to the DLC3.

(b) Turn the engine switch on (IG).

(c) Turn the Techstream on.

(d) Enter the following menus: Body Electrical / Smart Key or Main Body / Data List.

(e) Read the Data List according to the display on the Techstream.

Smart Key (Certification ECU (Smart Key ECU Assembly))

TESTER DISPLAY	MEASUREMENT ITEM/RANGE	NORMAL CONDITION	DIAGNOSTIC NOTE
D-Door Touch Sensor	Driver side door touch sensor/ON or OFF	ON: Sensor is touched OFF: Sensor is not touched	-
P-Door Touch Sensor	Front passenger side door touch sensor/ON or OFF	ON: Sensor is touched OFF: Sensor is not touched	-
D-Door Trigger SW	Driver side door lock switch/ON or OFF	ON: Switch is touched OFF: Switch is not touched	-
P-Door Trigger SW	Front passenger side door lock switch/ON or OFF	ON: Switch is touched OFF: Switch is not touched	-
Tr/B-Door Unlock SW	Luggage compartment door opener outer switch/ON or OFF	ON: Switch is pushed OFF: Switch is not pushed	-
Ignition Switch	Engine switch/ON or OFF	ON: Engine switch is on (IG) OFF: Engine switch is off	-
Unmatch V-ID	Unmatched vehicle-ID/YES or NO	YES: Key ID matches vehicle NO: Key ID does not match vehicle	-

TESTER DISPLAY	MEASUREMENT ITEM/RANGE	NORMAL CONDITION	DIAGNOSTIC NOTE
No Response	No communication condition between vehicle and electrical key transmitter (response) / Yes or No	Yes: Key ID code not matched to vehicle, No: Key ID code matched to vehicle.	-
Unmatch Format	Unmatched response code and format/YES or NO	YES: Key ID code matches NO: Key ID code does not match	-
Low Battery	Low key battery/YES or NO	YES: Key battery voltage drops NO: Key battery voltage is normal	-
Power Save Cnt 10 Min	Power save counter - 10 minutes/Min.: 0; Max.: 255	Power save counter after door LOCK/UNLOCK-10 minutes	-
Power Save Cnt 5 Day	Power save counter - 5 days/Min.: 0; Max.: 255	Power save counter after door LOCK/UNLOCK-5 days	-
Power Save Cnt 14 Day	Power save counter - 14 days/Min.: 0; Max.: 255	Power save counter after door LOCK/UNLOCK-14 days	-
ACC Switch	Engine switch/ON or OFF	ON: Engine switch is on (ACC) OFF: Engine switch is off	-
Wrong Code	ID code difference/YES or NO	YES: Key ID code matches NO: Key ID code does not match	-
Wrong C Code	Challenge code difference (Response)/YES or NO	YES: Key ID code matches NO: Key ID code does not match	-
Wrong ID Code	ID code difference/YES or NO	YES: Key ID code matches NO: Key ID code does not match	-
Wrong Rol Code	Rolling code difference/YES or NO	YES: Key rolling code matches NO: Key rolling code does not match	-
Auto Entry Cancel Switch	Entry door lock function cancel/ON or OFF	Mode status is displayed	-
Trunk Open Mode	Luggage compartment door open mode with vehicle locked/ON or OFF	Customization status is displayed	-
Key Low Battery Warning	Low key battery warning/ON or OFF	Customization status is displayed	-

Main Body (Main Body ECU (Instrument Panel Junction Block))

TESTER DISPLAY	MEASUREMENT ITEM/RANGE	NORMAL CONDITION	DIAGNOSTIC NOTE
IG SW	Engine switch/ON or OFF	ON: Engine switch is on (IG) OFF: Engine switch is off	-
D Door Courtesy SW	Driver side door courtesy light switch signal/ON or OFF	ON: Driver side door open OFF: Driver side door closed	-
P Door Courtesy SW	Front passenger side door courtesy light switch signal/ON or OFF	ON: Front passenger side door open OFF: Front passenger side door closed	-
RR Door Courtesy SW	Rear door courtesy light switch RH signal/ON or OFF	ON: Rear door open OFF: Rear door closed	-
RL Door Courtesy SW	Rear door courtesy light switch LH signal/ON or OFF	ON: Rear door open OFF: Rear door closed	-
Luggage Courtesy SW	Luggage compartment door courtesy light switch signal/ON or OFF	ON: Luggage compartment door open OFF: Luggage compartment door closed	-

2. ACTIVE TEST

HINT:

Using the Techstream to perform Active Tests allows relays, VSVs, actuators and other items to be operated without removing any parts. This non-intrusive functional inspection can be very useful because intermittent operation may be discovered before parts or wiring is disturbed. Performing Active Tests early in troubleshooting is one way to save diagnostic time. Data List information can be displayed while performing Active Tests.

(a) Connect the Techstream to the DLC3.

(b) Turn the engine switch on (IG).

(c) Turn the Techstream on.

(d) Enter the following menus: Body Electrical / Smart Key or Main Body / Active Test.

(e) Perform the Active Test according to the display on the Techstream.

Smart Key (Certification ECU (Smart Key ECU Assembly))

TESTER DISPLAY	TEST PART	CONTROL RANGE	DIAGNOSTIC NOTE
Overhead Tuner Power Supply ON	Entry door control receiver	ON/OFF	-

TESTER DISPLAY	TEST PART	CONTROL RANGE	DIAGNOSTIC NOTE
Inside Luggage Tuner Power Supply ON	Luggage receiver	ON/OFF	-
Fr-Seat Inside Transmitter	Indoor electrical key oscillator (console)	ON/OFF	-
Rr-Seat Inside Transmitter	Indoor electrical key oscillator (rear seat)	ON/OFF	-
Inside Trunk/Backdoor Transmitter	Luggage compartment door inner oscillator	ON/OFF	-
Outside Trunk/Backdoor Transmitter	Luggage compartment door outer oscillator	ON/OFF	-
P-Seat Select	Front passenger side selection	ON/OFF	-
Wireless Buzzer	Wireless buzzer	ON/OFF	-
Security Indicator	Security indicator	ON/OFF	-

Main Body (Main Body ECU (Instrument Panel Junction Block))

TESTER DISPLAY	TEST PART	CONTROL RANGE	DIAGNOSTIC NOTE
Trunk and Back-door Open	Luggage compartment door opener outer switch	ON/OFF	-

Last Modified: 3-10-2010	6.4 D	**From:** 200901
Model Year: 2010	**Model:** Corolla	**Doc ID:** RM000000XUD02UX
Title: THEFT DETERRENT / KEYLESS ENTRY: SMART KEY SYSTEM (for Entry Function): DIAGNOSIS SYSTEM (2010 Corolla)		

DIAGNOSIS SYSTEM

1. CHECK DLC3

(a) Check the DLC3 INFO .

2. INSPECT BATTERY VOLTAGE

(a) Measure the battery voltage.

Standard Voltage:
11 to 14 V

If the voltage is below 11 V, recharge or replace the battery before proceeding to the next step.

Last Modified: 3-10-2010	6.4 J	**From:** 200901
Model Year: 2010	**Model:** Corolla	**Doc ID:** RM000002VHD01QX
Title: THEFT DETERRENT / KEYLESS ENTRY: SMART KEY SYSTEM (for Entry Function): All Door Entry Lock/Unlock Functions and Wireless Functions do not Operate (2010 Corolla)		

All Door Entry Lock/Unlock Functions and Wireless Functions do not Operate

DESCRIPTION

When the entry functions and wireless door lock functions do not operate, a malfunction or wave interference may be occurring in either of the following: 1) signal communication between the door control receiver and certification ECU (smart key ECU assembly) (communication shared by entry and wireless functions); or 2) electrical key transmitter.

WIRING DIAGRAM

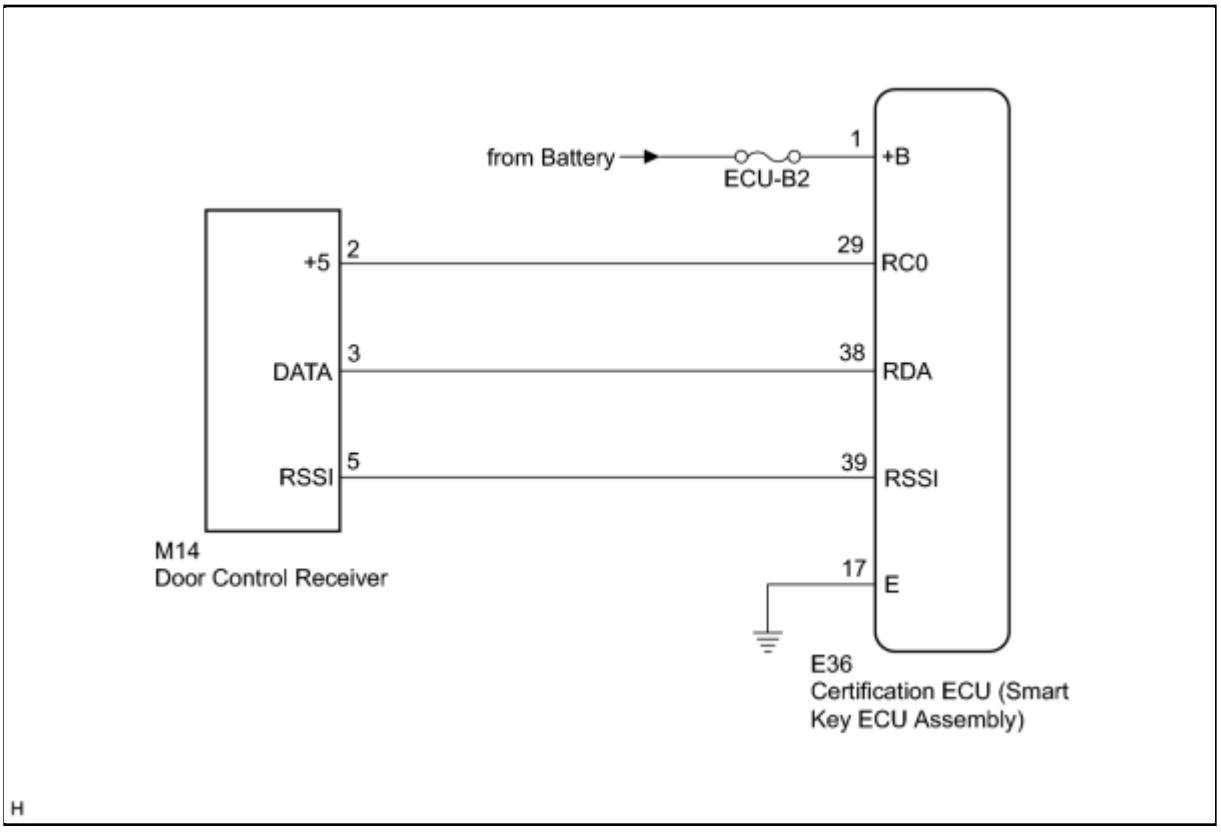

INSPECTION PROCEDURE

NOTICE:

- Check that there are not electrical key transmitters in the vehicle.
- Before performing the inspection, check that DTC B1242 (wireless door lock control) is not output INFO .

PROCEDURE

1.	CHECK POWER DOOR LOCK OPERATION

(a) When the master switch assembly's door control switch is operated, check that the doors unlock and lock according to switch operation INFO.

OK:

Door locks operate normally.

NG ▶ GO TO POWER DOOR LOCK CONTROL SYSTEM

OK ▼

2.	CHECK ELECTRICAL KEY TRANSMITTER

(a) When another registered electrical key transmitter is used, check that the entry functions operate normally.

Result:

RESULT	PROCEED TO
Entry functions do not operate normally	A
Entry functions operate normally	B

A ▶ CHECK WAVE ENVIRONMENT

B ▼

3.	CHECK ELECTRICAL KEY TRANSMITTER (LED)

(a) Check that the transmitter's LED illuminates 3 times when the switch is pressed 3 times.

Result:

RESULT	PROCEED TO
Transmitter's LED illuminates 3 times when switch is pressed 3 times	A
Transmitter's LED does not illuminate the second or third time	B
Transmitter's LED does not illuminate when switch is pressed 3 times	C

HINT:

If the transmitter's LED does not illuminate the second or third time, replace the transmitter battery as it is depleted.

B ▶ **REPLACE ELECTRICAL TRANSMITTER BATTERY**

A ▶ **REPLACE ELECTRICAL KEY TRANSMITTER**

C ▼

4.	INSPECT ELECTRICAL TRANSMITTER BATTERY (VOLTAGE)

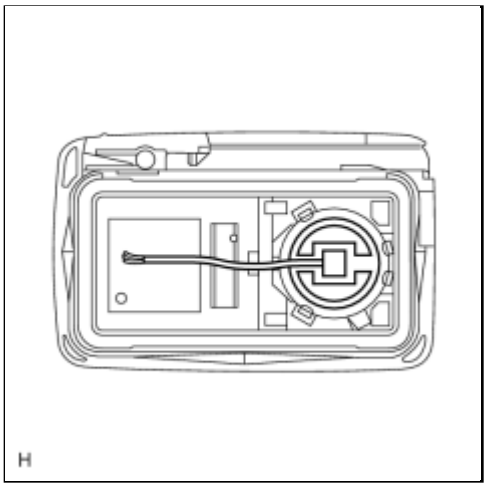

(a) Remove the battery from the electrical key transmitter that does not operate. Attach a lead wire (0.6 mm (0.0236 in.) or less in diameter including wire sheath) with tape or equivalent to the negative terminal.

NOTICE:

Do not wrap the lead wire around a terminal, wedge it between the terminals, or solder it. A terminal may be deformed or damaged, and the battery will not be able to be installed correctly.

(b) Carefully pull the lead wire out from the position shown in the illustration and install the previously removed transmitter battery.

(c) Using an oscilloscope, check the transmitter battery voltage waveform.

HINT:

When measuring the battery voltage, while operating the lock switch

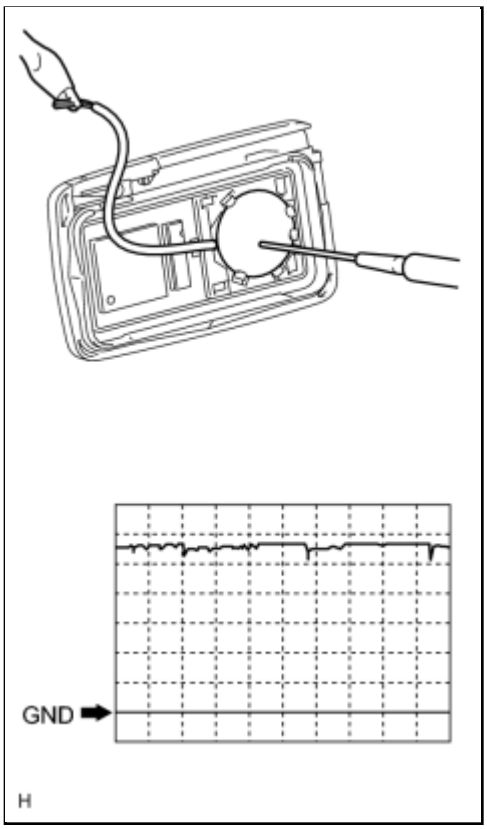

of a door outside handle, bring the electrical key transmitter within the entry operating range to perform the measurement. For the entry operating range, refer to System Description INFO .

Standard Voltage:

ITEM	CONTENT
Tester Connection	Battery positive (+) - Battery negative (-)
Tool Setting	0.5 V/DIV., 100 ms/DIV.
Condition	Engine switch off, all doors closed and lock switch pushed
Specified Condition	2.2 to 3.2 V (Refer to the waveform)

NG ▶ **REPLACE ELECTRICAL TRANSMITTER BATTERY**

OK ▶ **REPLACE ELECTRICAL KEY TRANSMITTER**

5.	**CHECK WAVE ENVIRONMENT**

(a) Bring the electrical key transmitter near the door control receiver, and perform a wireless operation check.

HINT:

When the electrical key transmitter is brought near the door control receiver, the possibility of wave interference decreases, and it can be determined if wave interference is causing the problem symptom.

Result:

RESULT	PROCEED TO
Operation check is normal	A
Operation check fails	B

HINT:

If the inspection result indicates that the problem only occurs in certain locations or times of day, the possibility of wave interference is high. Also, added vehicle components may cause wave interference. If

installed, remove them and perform the operation check.

A ▶ **AFFECTED BY WAVE INTERFERENCE**

B ▼

6.	**INSPECT FUSE (ECU-B2)**

(a) Remove the ECU-B2 fuse from the main body ECU (instrument panel junction block).

(b) Measure the resistance according to the value(s) in the table below.

Standard Resistance:

TESTER CONNECTION	CONDITION	SPECIFIED CONDITION
ECU-B2 fuse	Always	Below 1 Ω

NG ▶ **REPLACE FUSE**

OK ▼

7.	**CHECK HARNESS AND CONNECTOR (CERTIFICATION ECU - BATTERY AND GROUND)**

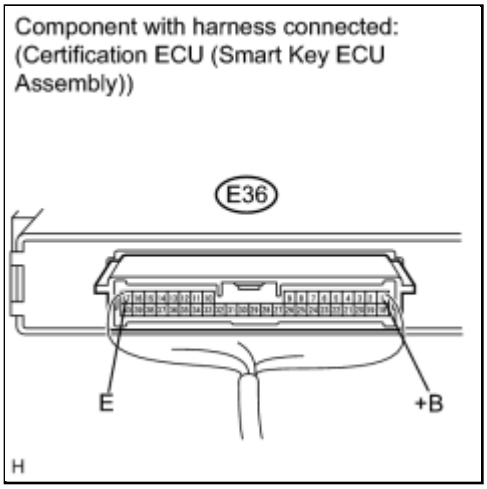

(a) Disconnect the certification ECU (smart key ECU assembly) connector.

(b) Measure the voltage and resistance according to the value(s) in the table below.

Standard Voltage:

TESTER CONNECTION	CONDITION	SPECIFIED CONDITION
E36-1 (+B) - Body ground	Always	11 to 14 V

Standard Resistance:

TESTER CONNECTION	CONDITION	SPECIFIED CONDITION
E36-17 (E) - Body ground	Always	Below 1 Ω

NG ▶ **REPAIR OR REPLACE HARNESS OR CONNECTOR**

OK ▼

8.	**CHECK HARNESS AND CONNECTOR (DOOR CONTROL RECEIVER - CERTIFICATION ECU)**

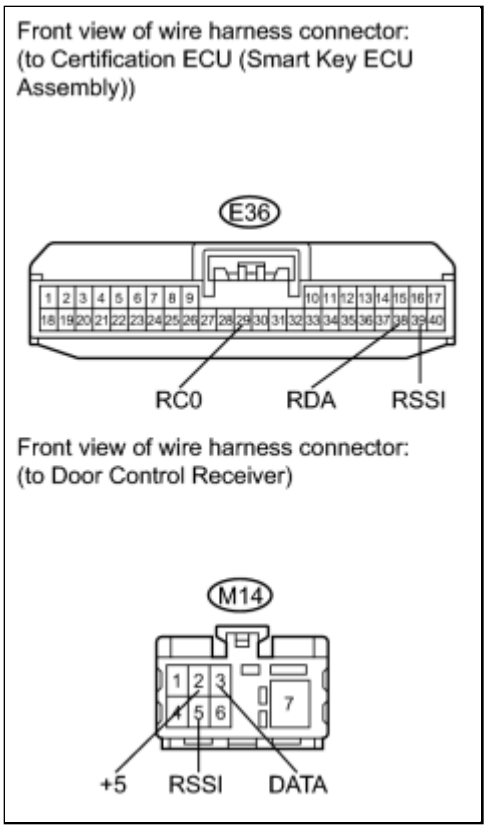

(a) Disconnect the door control receiver connector.

(b) Measure the resistance according to the value(s) in the table below.

Standard Resistance:

TESTER CONNECTION	CONDITION	SPECIFIED CONDITION
E36-39 (RSSI) - M14-5 (RSSI)	Always	Below 1 Ω
E36-38 (RDA) - M14-3 (DATA)	Always	Below 1 Ω
E36-29 (RC0) - M14-2 (+5)	Always	Below 1 Ω
E36-39 (RSSI) - Body ground	Always	10 kΩ or higher
E36-38 (RDA) - Body ground	Always	10 kΩ or higher
E36-29 (RC0) - Body ground	Always	10 kΩ or higher

NG ▶ **REPAIR OR REPLACE HARNESS OR CONNECTOR**

OK ▼

9.	REPLACE DOOR CONTROL RECEIVER

(a) Replace the door control receiver INFO .

NEXT ▼

10.	CHECK DOOR CONTROL RECEIVER (OPERATION)

(a) Check that the entry functions operate normally.

OK:

Entry functions operate normally.

NG ▶ **REPLACE CERTIFICATION ECU (SMART KEY ECU ASSEMBLY)**

OK ▶ **END (DOOR CONTROL RECEIVER IS DEFECTIVE)**

Last Modified: 3-10-2010	6.4 J	**From:** 200901
Model Year: 2010	**Model:** Corolla	**Doc ID:** RM000002WEG01GX
Title: THEFT DETERRENT / KEYLESS ENTRY: SMART KEY SYSTEM (for Entry Function): Entry Answer-back Buzzer does not Sound (2010 Corolla)		

Entry Answer-back Buzzer does not Sound

DESCRIPTION

The smart key system uses the wireless door lock buzzer to perform various vehicle exterior warnings. When each warning's conditions are met, the certification ECU (smart key ECU assembly) sends a buzzer signal to the wireless door lock buzzer, and the wireless door lock buzzer sounds.

INSPECTION PROCEDURE

PROCEDURE

1.	**CHECK WIRELESS DOOR LOCK BUZZER OPERATION**

(a) When the wireless operation is used to lock and unlock the doors, check that the wireless door lock buzzer sounds normally.

HINT:

Turn the wireless door lock buzzer controller ON.

Result:

RESULT	PROCEED TO
Buzzer does not sound	A
Buzzer sounds	B

A ▶ **GO TO WIRELESS DOOR LOCK CONTROL SYSTEM**

B ▶ **REPLACE CERTIFICATION ECU (SMART KEY ECU ASSEMBLY)**

Last Modified: 3-10-2010	6.4 J	**From:** 200901
Model Year: 2010	**Model:** Corolla	**Doc ID:** RM000000XUH02BX
Title: THEFT DETERRENT / KEYLESS ENTRY: SMART KEY SYSTEM (for Entry Function): All Door Entry Lock/Unlock Functions do not Operate, but Wireless Functions Operate (2010 Corolla)		

All Door Entry Lock/Unlock Functions do not Operate, but Wireless Functions Operate

DESCRIPTION

When the wireless functions can be used to lock and unlock the doors, communication between the door control receiver and certification ECU (smart key ECU assembly) is normal. When the entry functions do not operate, one of the following may be the cause: 1) entry cancel function is set through customization; 2) malfunction in smart key system communication (electrical key transmitter and vehicle); or 3) wave interference.

INSPECTION PROCEDURE

PROCEDURE

1.	**READ VALUE USING TECHSTREAM**

(a) Connect the Techstream to the DLC3.

(b) Turn the engine switch on (IG).

(c) Turn the Techstream on.

(d) Enter the following menus: Body Electrical / Smart Key / Data List.

(e) Read the Data List according to the display on the Techstream.

Smart Key (Certification ECU (Smart Key ECU Assembly))

TESTER DISPLAY	MEASUREMENT ITEM/RANGE	NORMAL CONDITION	DIAGNOSTIC NOTE
Auto Entry Cancel SW	Entry function cancel / ON or OFF	Mode status is displayed	-

Result:

RESULT	PROCEED TO
Entry function is ON	A
Entry function is OFF	B

A ▶ PERFORM CANCELLATION OF ENTRY KEY CANCEL FUNCTION

B ▼

2.	CHECK WAVE ENVIRONMENT

(a) Move the electrical key transmitter as described below and perform the operation inspection.

HINT:

- When the electrical key transmitter is brought near the door outside handle or electrical key antenna, the possibility of wave interference decreases, and it can be determined if wave interference is causing the problem symptom.
- The transmitting waves of the wireless functions and entry functions are the same, but the wave logic is different. As a result, it is possible that only the wireless functions or only the entry functions are affected by wave interference.

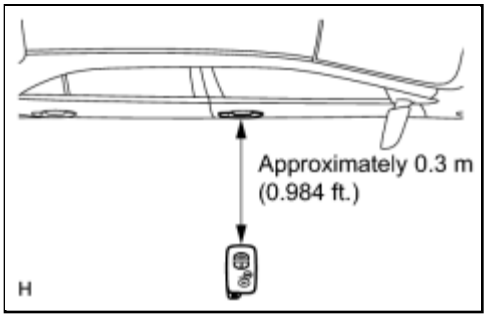

(b) Bring the electrical key transmitter near the front RH door outside handle, and perform a front RH door entry lock and unlock operation check.

NOTICE:

If the key is brought within 0.2 m (0.656 ft.) of the door handle, communication is not possible.

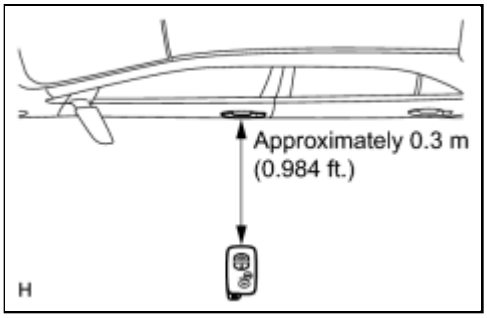

(c) Bring the electrical key transmitter near the front LH door outside handle, and perform a front LH door entry lock and unlock operation check.

NOTICE:

If the key is brought within 0.2 m (0.656 ft.) of the door handle, communication is not possible.

(d) Bring the electrical key transmitter near the electrical key antenna (in rear bumper), and perform an entry luggage compartment open function check.

NOTICE:

If the key is brought within 0.2 m (0.656 ft.) of the rear bumper, communication is not possible.

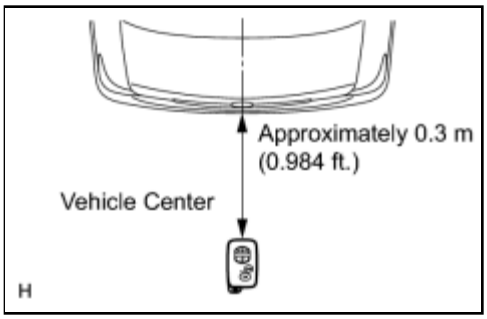

HINT:

If the inspection result indicates that the problem only occurs in certain locations or times of day, the possibility of wave interference is high. Also, added vehicle components may cause wave interference. If installed, remove them and perform the operation check.

Result:

RESULT	PROCEED TO
Some operation checks are normal	A
All operation checks fail	B

A **AFFECTED BY WAVE INTERFERENCE**

B

3.	PERFORM KEY DIAGNOSTIC MODE INSPECTION

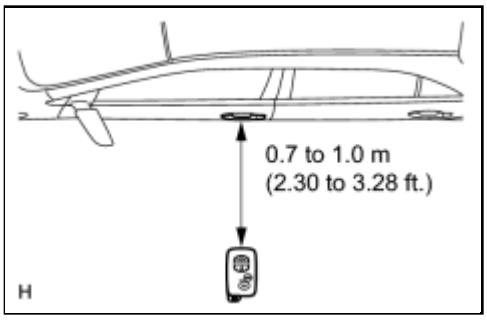

(a) Diagnostic mode inspection

(1) Connect the Techstream to the DLC3.

(2) Turn the engine switch on (IG).

(3) Turn the Techstream on.

(4) Enter the following menus: Body Electrical / Smart Key / Utility / Communication Check (Key Diag Mode) / Overhead + Driver Side.

(5) When the electrical key transmitter is in the position shown in the illustration, check that the wireless door lock buzzer sounds.

(b) Diagnostic mode inspection

(1) Connect the Techstream to the DLC3.

(2) Turn the engine switch on (IG).

(3) Turn the Techstream on.

(4) Enter the following menus: Body Electrical / Smart

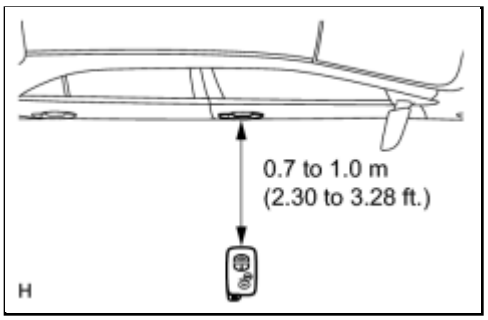

Key / Utility / Communication Check (Key Diag Mode) / Overhead + Passenger Side.

(5) When the electrical key transmitter is in the position shown in the illustration, check that the wireless door lock buzzer sounds.

(c) Diagnostic mode inspection

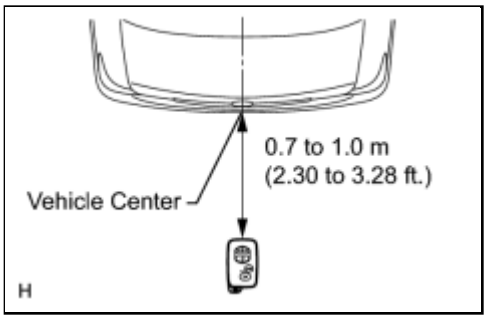

(1) Connect the Techstream to the DLC3.

(2) Turn the engine switch on (IG).

(3) Turn the Techstream on.

(4) Enter the following menus: Body Electrical / Smart Key / Utility / Communication Check (Key Diag Mode) / Overhead + Luggage (outside).

(5) When the electrical key transmitter is in the position shown in the illustration, check that the wireless door lock buzzer sounds.

(d) Diagnostic mode inspection

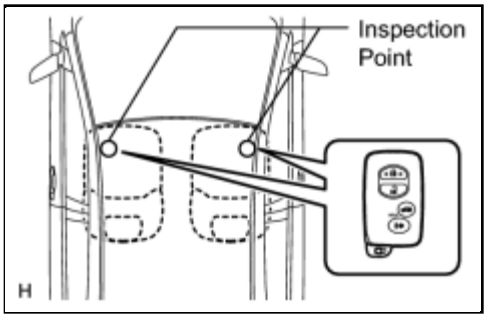

(1) Connect the Techstream to the DLC3.

(2) Turn the engine switch on (IG).

(3) Turn the Techstream on.

(4) Enter the following menus: Body Electrical / Smart Access / Utility / Communication Check (Key Diag Mode) / Overhead + Front Room.

(5) When the electrical key transmitter is placed on the driver seat or front passenger seat cushion, check that the wireless door lock buzzer sounds.

(e) Diagnostic mode inspection

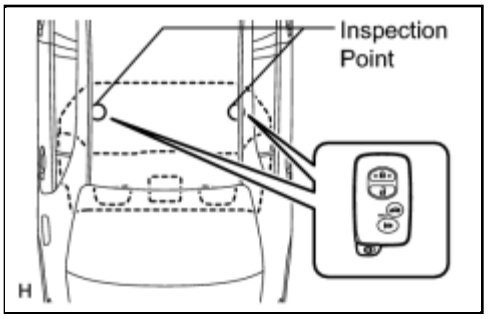

(1) Connect the Techstream to the DLC3.

(2) Turn the engine switch on (IG).

(3) Turn the Techstream on.

(4) Enter the following menus: Body Electrical / Smart Key / Utility / Communication Check (Key Diag Mode) / Overhead + Rear Room.

(5) When the electrical key transmitter is in the position

shown in the illustration, check that the wireless door lock buzzer sounds.

(f) Diagnostic mode inspection

(1) Connect the Techstream to the DLC3.

(2) Turn the engine switch on (IG).

(3) Turn the Techstream on.

(4) Enter the following menus: Body Electrical / Smart Key / Utility / Communication Check (Key Diag Mode) / Overhead + Luggage (inside).

(5) When the electrical key transmitter is in the position shown in the illustration, check that the wireless door lock buzzer sounds.

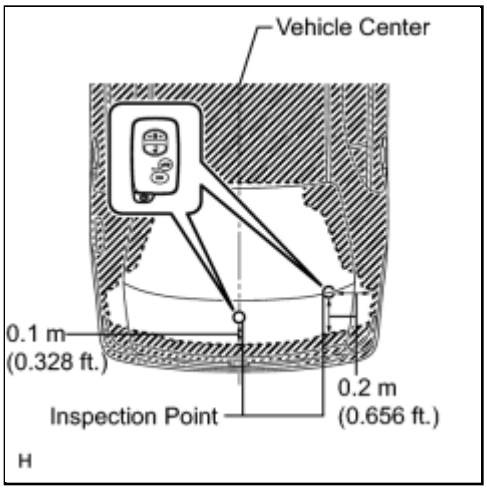

Result:

RESULT	PROCEED TO
Some diagnostic mode inspections fail (door)	A
Some diagnostic mode inspections fail (indoor)	B
Some diagnostic mode inspections fail (luggage compartment)	C
All diagnostic mode inspections are normal	D
All diagnostic mode inspections fail	E

D ▶ **REPLACE CERTIFICATION ECU (SMART KEY ECU ASSEMBLY)**

C ▶ **GO TO OTHER PROBLEM**

B ▶ **GO TO OTHER PROBLEM**

A ▶ **GO TO OTHER PROBLEM (PROCEED TO PROBLEM SYMPTOM TABLE FOR EACH DOOR)**

E ▼

4.	**REPLACE ELECTRICAL KEY TRANSMITTER**

(a) Replace the electrical key transmitter.

NEXT

5.	REGISTER ELECTRICAL KEY TRANSMITTER

(a) Register the electrical key transmitter INFO .

NEXT

6.	CHECK OPERATION

(a) Check that the entry functions operate normally.

OK:
Entry functions operate normally.

NG ▶ REPLACE CERTIFICATION ECU (SMART KEY ECU ASSEMBLY)

OK ▶ END (ELECTRICAL KEY TRANSMITTER IS DEFECTIVE)

Last Modified: 3-10-2010	6.4 J	**From:** 200901
Model Year: 2010	**Model:** Corolla	**Doc ID:** RM000002WBW02CX
Title: THEFT DETERRENT / KEYLESS ENTRY: SMART KEY SYSTEM (for Entry Function): Driver Side Door Entry Unlock Function does not Operate (2010 Corolla)		

Driver Side Door Entry Unlock Function does not Operate

DESCRIPTION

If the driver door entry unlock function does not operate but the entry lock function operates, communication between the vehicle and electrical key transmitter is normal. As a result, the touch sensor circuit can be considered to be faulty (certification ECU (smart key ECU assembly) → driver side door outside handle → driver side door electrical key oscillator).

WIRING DIAGRAM

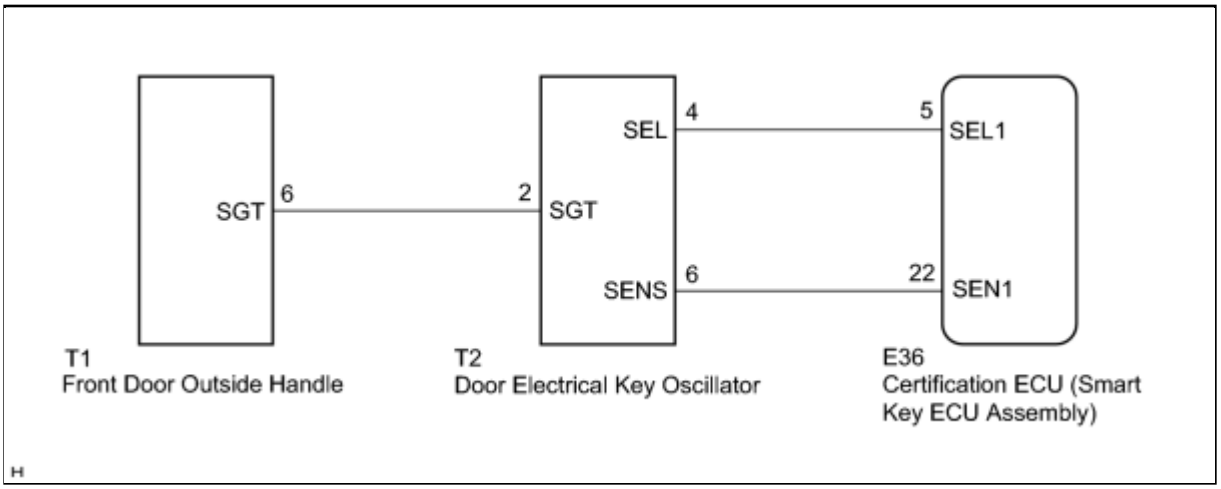

INSPECTION PROCEDURE

PROCEDURE

1.	**CHECK POWER DOOR LOCK OPERATION**

(a) When the master switch assembly's door control switch is operated, check that the locked doors unlock INFO .

OK:

Door locks operate normally.

NG ▶ **GO TO POWER DOOR LOCK CONTROL SYSTEM**

OK

2.	READ VALUE USING TECHSTREAM

(a) Connect the Techstream to the DLC3.

(b) Turn the engine switch on (IG).

(c) Turn the Techstream on.

(d) Enter the following menus: Body Electrical / Smart Key / Data List.

(e) Read the Data List according to the display on the Techstream.

Smart Key (Certification ECU (Smart Key ECU Assembly))

TESTER DISPLAY	MEASUREMENT ITEM/RANGE	NORMAL CONDITION	DIAGNOSTIC NOTE
D-Door Touch Sensor	Driver side door touch sensor/ON or OFF	ON: Sensor is touched OFF: Sensor is not touched	-

OK:
On the Techstream screen, the item changes between ON and OFF according to the chart above.

NG ▶ **CHECK HARNESS AND CONNECTOR (CERTIFICATION ECU - DOOR ELECTRICAL KEY OSCILLATOR)**

OK ▶ **REPLACE CERTIFICATION ECU (SMART KEY ECU ASSEMBLY)**

3.	CHECK HARNESS AND CONNECTOR (CERTIFICATION ECU - DOOR ELECTRICAL KEY OSCILLATOR)

(a) Disconnect the certification ECU (smart key ECU assembly) connector.

(b) Disconnect the door electrical key oscillator connector.

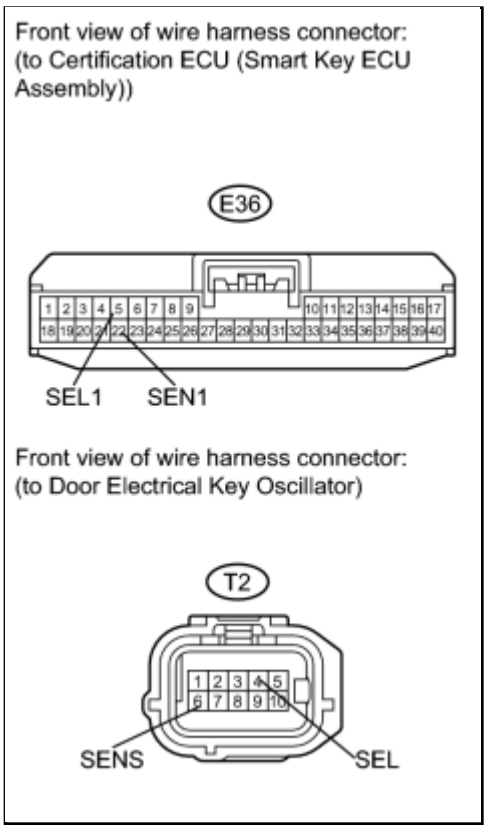

(c) Measure the resistance according to the value(s) in the table below.

Standard Resistance:

TESTER CONNECTION	CONDITION	SPECIFIED CONDITION
E36-5 (SEL1) - T2-4 (SEL)	Always	Below 1 Ω
E36-22 (SEN1) - T2-6 (SENS)	Always	Below 1 Ω
E36-5 (SEL1) - Body ground	Always	10 kΩ or higher
E36-22 (SEN1) - Body ground	Always	10 kΩ or higher

NG ▶ **REPAIR OR REPLACE HARNESS OR CONNECTOR**

OK ▼

4.	**CHECK HARNESS AND CONNECTOR (DOOR ELECTRICAL KEY OSCILLATOR - FRONT DOOR OUTSIDE HANDLE)**

(a) Disconnect the front door outside handle connector.

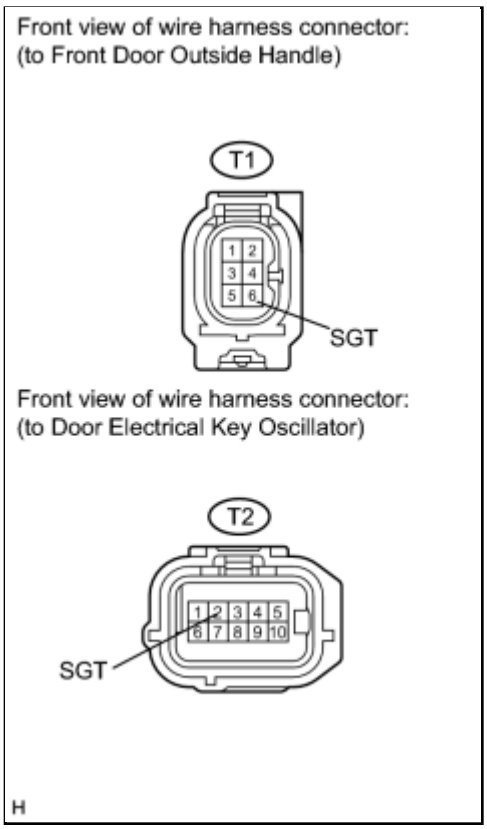

(b) Measure the resistance according to the value(s) in the table below.

Standard Resistance:

TESTER CONNECTION	CONDITION	SPECIFIED CONDITION
T1-6 (SGT) - T2-2 (SGT)	Always	Below 1 Ω
T1-6 (SGT) - Body ground	Always	10 kΩ or higher

NG ▶ **REPAIR OR REPLACE HARNESS OR CONNECTOR**

OK ▼

5.	**REPLACE DOOR ELECTRICAL KEY OSCILLATOR**

(a) Replace the electrical key oscillator INFO .

NEXT

6.	CHECK DOOR ELECTRICAL KEY OSCILLATOR (OPERATION)

(a) Check that the entry functions operate normally.

OK:

Entry functions operate normally.

NG ▶ REPLACE FRONT DOOR OUTSIDE HANDLE

OK ▶ END (DOOR ELECTRICAL KEY OSCILLATOR IS DEFECTIVE)

7.	REPLACE FRONT DOOR OUTSIDE HANDLE

(a) Replace the front door outside handle (driver side) INFO .

NEXT

8.	CHECK FRONT DOOR OUTSIDE HANDLE (OPERATION)

(a) Check that the entry functions operate normally.

OK:

Entry functions operate normally.

NG ▶ REPLACE CERTIFICATION ECU (SMART KEY ECU ASSEMBLY)

OK ▶ END (FRONT DOOR OUTSIDE HANDLE IS DEFECTIVE)

Last Modified: 3-10-2010	6.4 J	**From:** 200901
Model Year: 2010	**Model:** Corolla	**Doc ID:** RM000000XUI02YX
Title: THEFT DETERRENT / KEYLESS ENTRY: SMART KEY SYSTEM (for Entry Function): Driver Side Door Entry Lock and Unlock Functions do not Operate (2010 Corolla)		

Driver Side Door Entry Lock and Unlock Functions do not Operate

DESCRIPTION

When the driver door entry lock and unlock functions do not operate, one of the following may be malfunctioning: 1) power door lock control system, 2) driver side door electrical key oscillator, or 3) certification ECU (smart key ECU assembly).

WIRING DIAGRAM

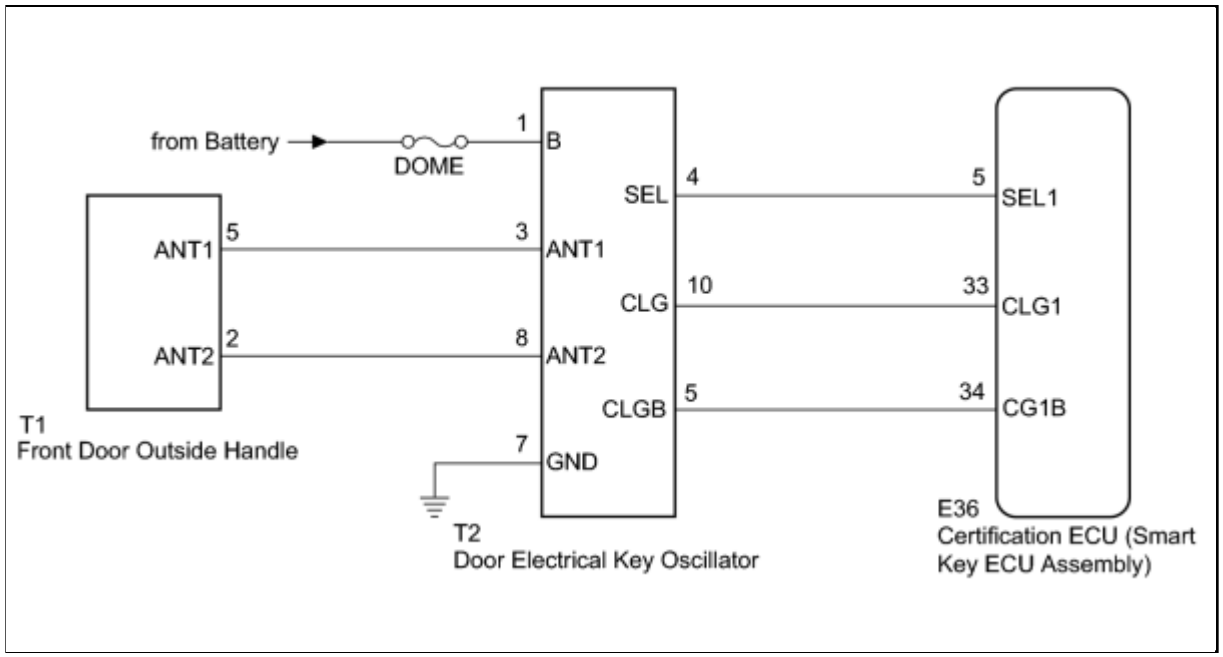

INSPECTION PROCEDURE

PROCEDURE

1.	**CHECK POWER DOOR LOCK OPERATION**

(a) When the master switch assembly's door control switch is operated, check that the doors unlock and lock according to switch operation INFO.

OK:

Door locks operate normally.

NG ▶ GO TO POWER DOOR LOCK CONTROL SYSTEM

OK ▼

2.	READ VALUE USING TECHSTREAM

(a) Connect the Techstream to the DLC3

(b) Turn the engine switch on (IG).

(c) Turn the Techstream on.

(d) Enter the following menus: Body Electrical / Smart Key / Data List.

(e) Read the Data List according to the display on the Techstream.

Smart Key (Certification ECU (Smart Key ECU Assembly))

TESTER DISPLAY	MEASUREMENT ITEM/RANGE	NORMAL CONDITION	DIAGNOSTIC NOTE
D-Door Touch Sensor	Driver side door touch sensor/ON or OFF	ON: Sensor is touched OFF: Sensor is not touched	-
D-Door Trigger SW	Driver side door lock switch/ON or OFF	ON: Switch is touched OFF: Switch is not touched	-

OK:

On the Techstream screen, each item changes between ON and OFF according to the chart above.

NG ▶ REPLACE FRONT DOOR OUTSIDE HANDLE

OK ▼

3.	CHECK WAVE ENVIRONMENT

(a) Bring the electrical key transmitter near the driver door outside handle, and perform a driver door entry lock and unlock operation check.

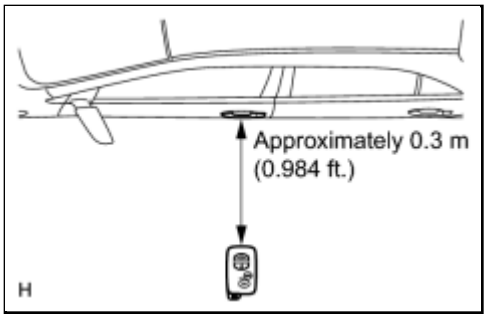

NOTICE:

If the key is brought within 0.2 m (0.656 ft.) of the door handle, communication is not possible.

HINT:

- When the electrical key transmitter is brought near the driver door outside handle, the possibility of wave interference decreases, and it can be determined if wave interference is causing the problem symptom.
- If the operation is normal, the possibility of wave interference is high. Also, added vehicle components may cause wave interference. If installed, remove them and perform the operation check.

OK:

Entry functions operate normally.

NG ▶ **PERFORM KEY DIAGNOSTIC MODE INSPECTION**

OK ▶ **AFFECTED BY WAVE INTERFERENCE**

4.	PERFORM KEY DIAGNOSTIC MODE INSPECTION

(a) Diagnostic mode inspection

(1) Connect the Techstream to the DLC3.

(2) Turn the engine switch on (IG).

(3) Turn the Techstream on.

(4) Enter the following menus: Body Electrical / Smart Key / Utility / Communication Check (Key Diag Mode) / Overhead + Driver Side.

(5) When the electrical key transmitter is in the position shown in the illustration, check that the wireless door lock buzzer sounds.

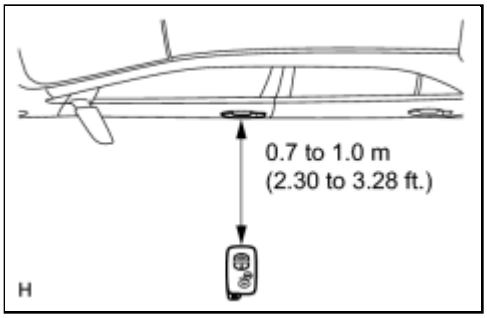

HINT:

If the buzzer sounds, it can be determined that the driver seat outside transmitter is operating normally.

OK:

Wireless door lock buzzer sounds.

NG ▶ CHECK HARNESS AND CONNECTOR (CERTIFICATION ECU - DOOR ELECTRICAL KEY OSCILLATOR)

OK ▶ REPLACE CERTIFICATION ECU (SMART KEY ECU ASSEMBLY)

5.	CHECK HARNESS AND CONNECTOR (CERTIFICATION ECU - DOOR ELECTRICAL KEY OSCILLATOR)

(a) Disconnect the certification ECU (smart key ECU assembly) connector.

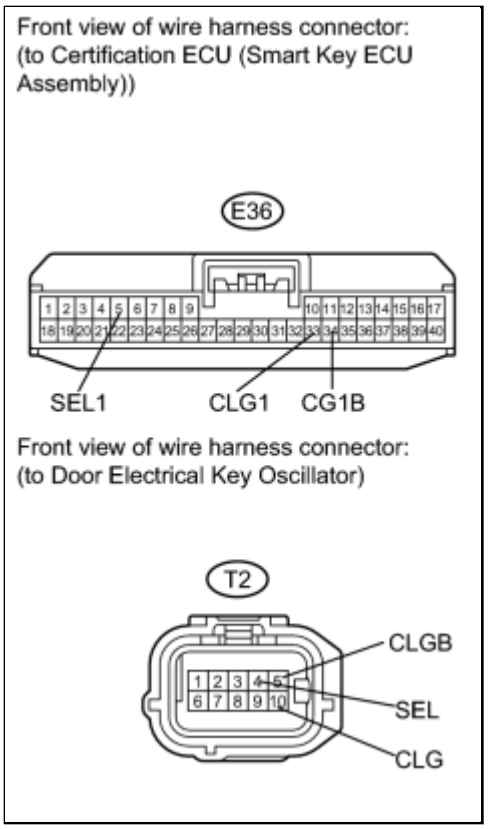

(b) Disconnect the door electrical key oscillator connector.

(c) Measure the resistance according to the value(s) in the table below.

Standard Resistance:

TESTER CONNECTION	CONDITION	SPECIFIED CONDITION
E36-5 (SEL1) - T2-4 (SEL)	Always	Below 1 Ω
E36-33 (CLG1) - T2-10 (CLG)	Always	Below 1 Ω
E36-34 (CG1B) - T2-5 (CLGB)	Always	Below 1 Ω
E36-5 (SEL1) - Body ground	Always	10 kΩ or higher

TESTER CONNECTION	CONDITION	SPECIFIED CONDITION
E36-33 (CLG1) - Body ground	Always	10 kΩ or higher
E36-34 (CG1B) - Body ground	Always	10 kΩ or higher

NG ▶ **REPAIR OR REPLACE HARNESS OR CONNECTOR**

OK ▼

6.	**CHECK HARNESS AND CONNECTOR (DOOR ELECTRICAL KEY OSCILLATOR - FRONT DOOR OUTSIDE HANDLE)**

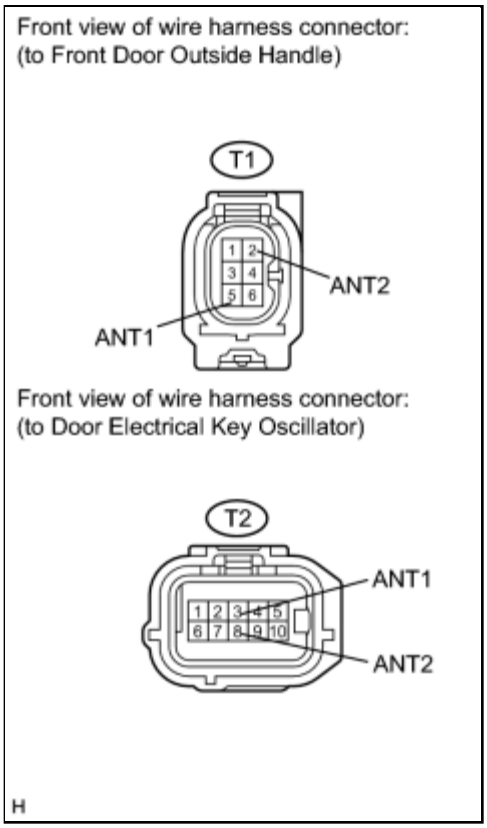

(a) Disconnect the front door outside handle connector.

(b) Measure the resistance according to the value(s) in the table below.

Standard Resistance:

TESTER CONNECTION	CONDITION	SPECIFIED CONDITION
T1-2 (ANT2) - T2-8 (ANT2)	Always	Below 1 Ω

TESTER CONNECTION	CONDITION	SPECIFIED CONDITION
T1-5 (ANT1) - T2-3 (ANT1)	Always	Below 1 Ω
T1-2 (ANT2) - Body ground	Always	10 kΩ or higher
T1-5 (ANT1) - Body ground	Always	10 kΩ or higher

NG ▶ **REPAIR OR REPLACE HARNESS OR CONNECTOR**

OK ▼

7.	**CHECK HARNESS AND CONNECTOR (DOOR ELECTRICAL KEY OSCILLATOR - BATTERY AND BODY GROUND)**

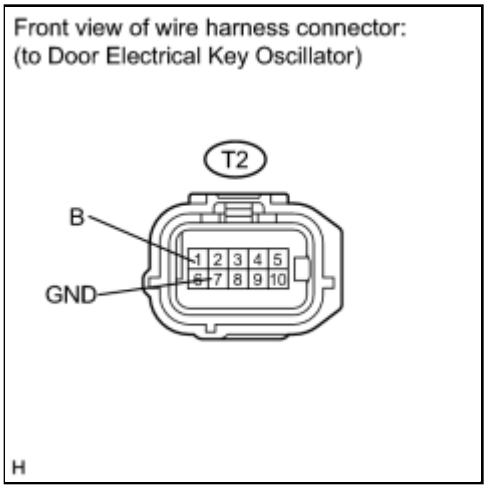

(a) Measure the voltage according to the value(s) in the table below.

Standard Voltage:

TESTER CONNECTION	CONDITION	SPECIFIED CONDITION
T2-1 (B) - T2-7 (GND)	Always	11 to 14 V

NG ▶ **REPAIR OR REPLACE HARNESS OR CONNECTOR**

OK ▼

8.	**REPLACE DOOR ELECTRICAL KEY OSCILLATOR**

(a) Replace the door electrical key oscillator INFO .

NEXT

9.	**CHECK DOOR ELECTRICAL KEY OSCILLATOR (OPERATION)**

(a) Check that the entry functions operate normally.

OK:

Entry functions operate normally.

NG → **REPLACE CERTIFICATION ECU (SMART KEY ECU ASSEMBLY)**

OK → **END (DOOR ELECTRICAL KEY OSCILLATOR IS DEFECTIVE)**

Last Modified: 3-10-2010	6.4 J	**From:** 200901
Model Year: 2010	**Model:** Corolla	**Doc ID:** RM000002WBX013X
Title: THEFT DETERRENT / KEYLESS ENTRY: SMART KEY SYSTEM (for Entry Function): Front Passenger Side Door Entry Unlock Function does not Operate (2010 Corolla)		

Front Passenger Side Door Entry Unlock Function does not Operate

DESCRIPTION

If the front passenger door entry unlock function does not operate but the entry lock function operates, communication between the vehicle and electrical key transmitter is normal. As a result, the touch sensor circuit can be considered to be faulty (certification ECU (smart key ECU assembly) → front passenger side outside handle → front passenger side door electrical key oscillator).

WIRING DIAGRAM

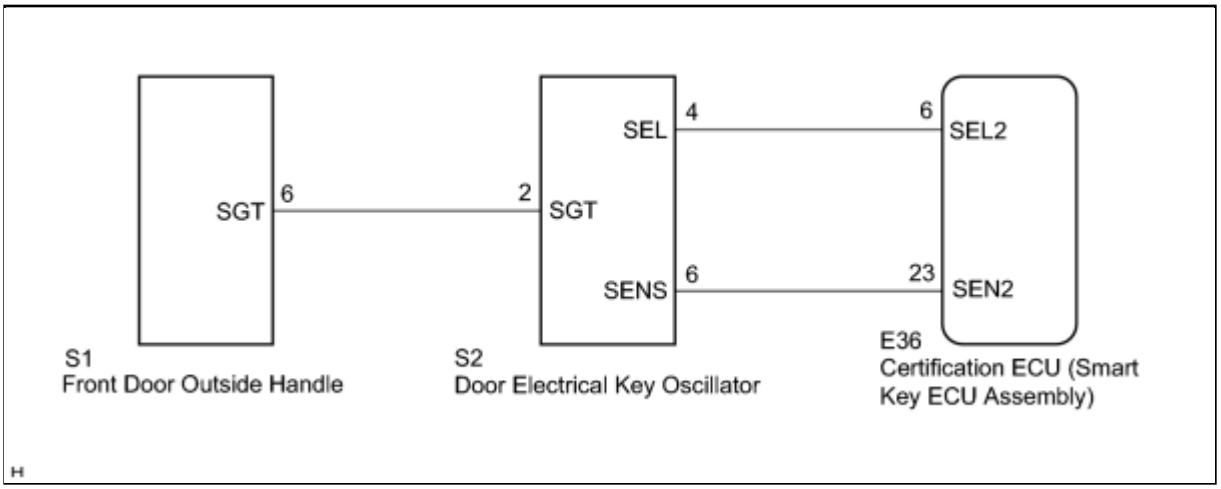

INSPECTION PROCEDURE

PROCEDURE

1.	**CHECK POWER DOOR LOCK OPERATION**

(a) When the master switch assembly's door control switch is operated, check that the locked doors unlock INFO .

OK:

Door locks operate normally.

NG ▶ **GO TO POWER DOOR LOCK CONTROL SYSTEM**

OK

2.	**READ VALUE USING TECHSTREAM**

(a) Connect the Techstream to the DLC3.

(b) Turn the engine switch on (IG).

(c) Turn the Techstream on.

(d) Enter the following menus: Body Electrical / Smart Key / Data List.

(e) Read the Data List according to the display on the Techstream.

Smart Key (Certification ECU (Smart Key ECU Assembly))

TESTER DISPLAY	MEASUREMENT ITEM/RANGE	NORMAL CONDITION	DIAGNOSTIC NOTE
P-Door Touch Sensor	Front passenger side door touch sensor/ON or OFF	ON: Sensor is touched OFF: Sensor is not touched	-

OK:

On the Techstream screen, the item changes between ON and OFF according to the chart above.

NG ▶ **CHECK HARNESS AND CONNECTOR (CERTIFICATION ECU - DOOR ELECTRICAL KEY OSCILLATOR)**

OK ▶ **REPLACE CERTIFICATION ECU (SMART KEY ECU ASSEMBLY)**

3.	**CHECK HARNESS AND CONNECTOR (CERTIFICATION ECU - DOOR ELECTRICAL KEY OSCILLATOR)**

(a) Disconnect the certification ECU (smart key ECU assembly) connector.

(b) Disconnect the door electrical key oscillator connector.

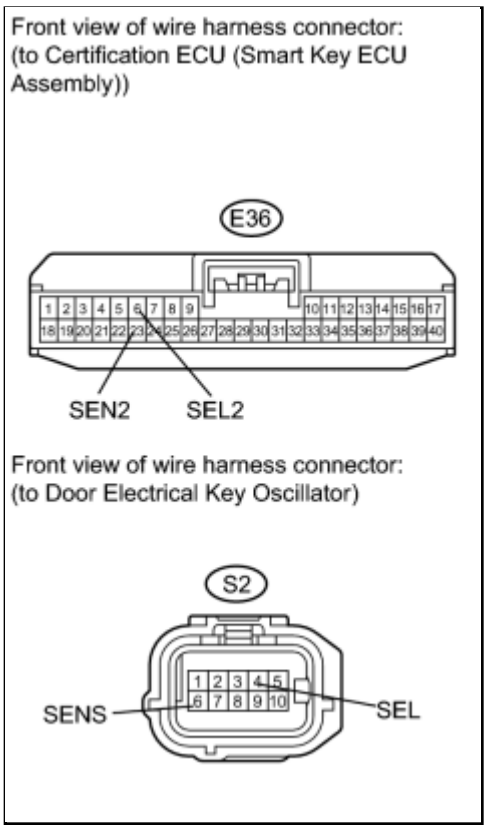

(c) Measure the resistance according to the value(s) in the table below.

Standard Resistance:

TESTER CONNECTION	CONDITION	SPECIFIED CONDITION
E36-6 (SEL2) - S2-4 (SEL)	Always	Below 1 Ω
E36-23 (SEN2) - S2-6 (SENS)	Always	Below 1 Ω
E36-6 (SEL2) - Body ground	Always	10 kΩ or higher
E36-23 (SEN2) - Body ground	Always	10 kΩ or higher

NG ▶ **REPAIR OR REPLACE HARNESS OR CONNECTOR**

OK ▼

4.	**CHECK HARNESS AND CONNECTOR (DOOR ELECTRICAL KEY OSCILLATOR - FRONT DOOR OUTSIDE HANDLE)**

(a) Disconnect the front door outside handle connector.

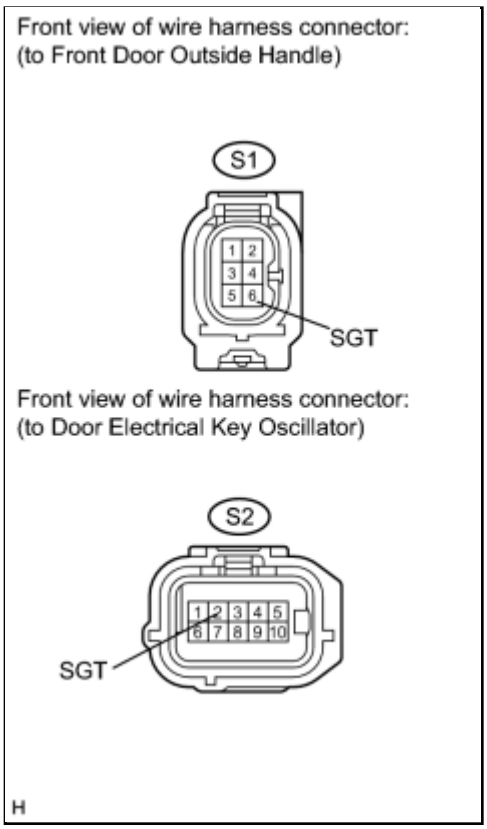

(b) Measure the resistance according to the value(s) in the table below.

Standard Resistance:

TESTER CONNECTION	CONDITION	SPECIFIED CONDITION
S1-6 (SGT) - S2-2 (SGT)	Always	Below 1 Ω
S1-6 (SGT) - Body ground	Always	10 kΩ or higher

NG ▶ **REPAIR OR REPLACE HARNESS OR CONNECTOR**

OK ▼

5.	**REPLACE DOOR ELECTRICAL KEY OSCILLATOR**

(a) Replace the door electrical key oscillator INFO .

NEXT

6.	CHECK DOOR ELECTRICAL KEY OSCILLATOR (OPERATION)

(a) Check that the entry functions operate normally.

OK:

Entry functions operate normally.

NG ▶ REPLACE FRONT DOOR OUTSIDE HANDLE

OK ▶ END (DOOR ELECTRICAL KEY OSCILLATOR IS DEFECTIVE)

7.	REPLACE FRONT DOOR OUTSIDE HANDLE

(a) Replace the front door outside handle (front passenger side) INFO .

NEXT

8.	CHECK FRONT DOOR OUTSIDE HANDLE (OPERATION)

(a) Check that the entry functions operate normally.

OK:

Entry functions operate normally.

NG ▶ REPLACE CERTIFICATION ECU (SMART KEY ECU ASSEMBLY)

OK ▶ END (FRONT DOOR OUTSIDE HANDLE IS DEFECTIVE)

Last Modified: 3-10-2010	6.4 J	**From:** 200901
Model Year: 2010	**Model:** Corolla	**Doc ID:** RM000000XUJ01OX
Title: THEFT DETERRENT / KEYLESS ENTRY: SMART KEY SYSTEM (for Entry Function): Front Passenger Side Door Entry Lock and Unlock Functions do not Operate (2010 Corolla)		

Front Passenger Side Door Entry Lock and Unlock Functions do not Operate

DESCRIPTION

When the front passenger door entry lock and unlock functions do not operate, one of the following may be malfunctioning: 1) power door lock control system, 2) door electrical key oscillator front passenger side, or 3) certification ECU (smart key ECU assembly).

WIRING DIAGRAM

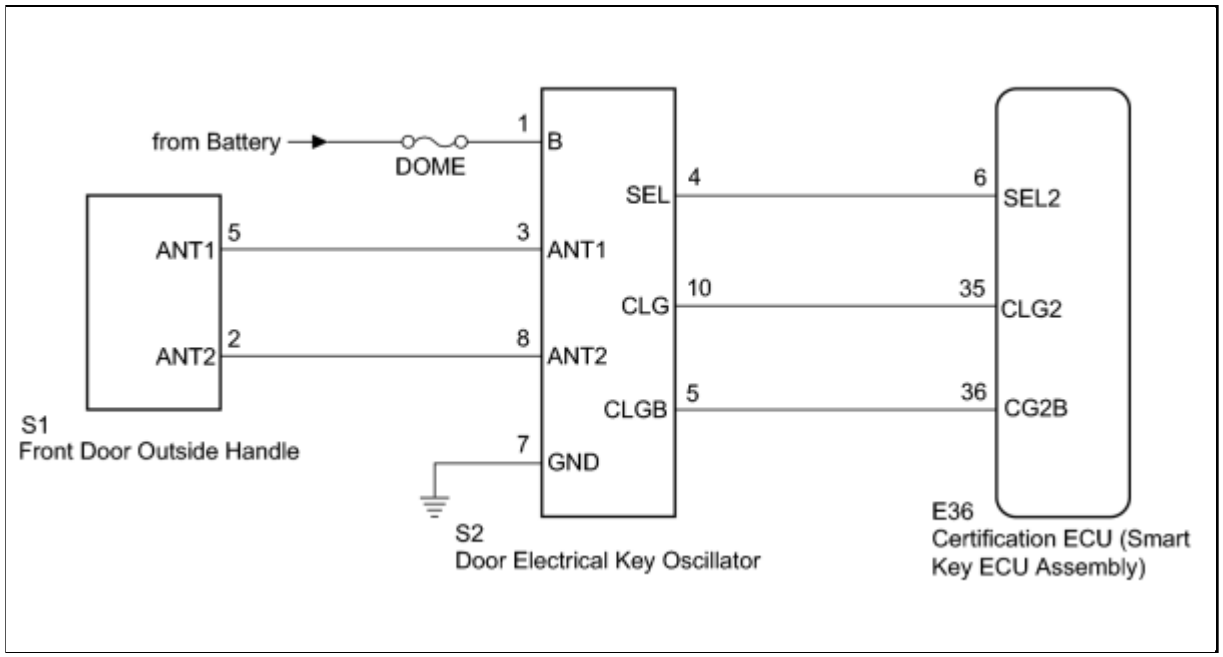

INSPECTION PROCEDURE

PROCEDURE

1.	**CHECK POWER DOOR LOCK OPERATION**

(a) When the master switch assembly's door control switch is operated, check that the doors unlock and lock according to switch operation.

OK:

Door locks operate normally.

NG ▶ GO TO POWER DOOR LOCK CONTROL SYSTEM

OK ▼

2.	READ VALUE USING TECHSTREAM

(a) Connect the Techstream to the DLC3.

(b) Turn the engine switch on (IG).

(c) Turn the Techstream on.

(d) Enter the following menus: Body Electrical / Smart Key / Data List.

(e) Read the Data List according to the display on the Techstream.

Smart Key (Certification ECU (Smart Key ECU Assembly))

TESTER DISPLAY	MEASUREMENT ITEM/RANGE	NORMAL CONDITION	DIAGNOSTIC NOTE
P-Door Touch Sensor	Front passenger side door touch sensor/ON or OFF	ON: Sensor is touched OFF: Sensor is not touched	-
P-Door Trigger SW	Front passenger side door lock switch/ON or OFF	ON: Switch is touched OFF: Switch is not touched	-

OK:
On the Techstream screen, each item changes between ON and OFF according to the chart above.

NG ▶ REPLACE FRONT DOOR OUTSIDE HANDLE

OK ▼

3.	CHECK WAVE ENVIRONMENT

(a) Bring the electrical key transmitter near the front

passenger door outside handle, and perform a front passenger door entry lock and unlock operation check.

NOTICE:

If the key is brought within 0.2 m (0.656 ft.) of the door handle, communication is not possible.

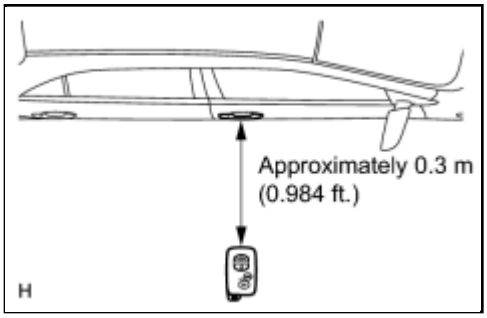

HINT:

- When the electrical key transmitter is brought near the front passenger door outside handle, the possibility of wave interference decreases, and it can be determined if wave interference is causing the problem symptom.
- If the operation is normal, the possibility of wave interference is high. Also, added vehicle components may cause wave interference. If installed, remove them and perform the operation check.

OK:

Entry functions operate normally.

NG ▶ **PERFORM KEY DIAGNOSTIC MODE INSPECTION**

OK ▶ **AFFECTED BY WAVE INTERFERENCE**

4.	PERFORM KEY DIAGNOSTIC MODE INSPECTION

(a) Diagnostic mode inspection

(1) Connect the Techstream to the DLC3.

(2) Turn the engine switch on (IG).

(3) Turn the Techstream on.

(4) Enter the following menus: Body Electrical / Smart Key / Utility / Communication Check (Key Diag Mode) / Overhead + Passenger Side.

(5) When the electrical key transmitter is in the position shown in the illustration, check that the wireless door lock buzzer sounds.

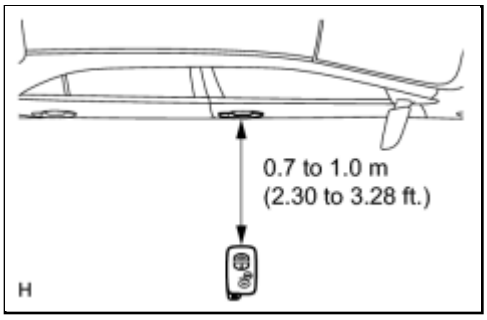

HINT:

If the buzzer sounds, it can be determined that the front passenger seat outside transmitter is operating normally.

OK:

Wireless door lock buzzer sounds.

NG ▶ **CHECK HARNESS AND CONNECTOR (CERTIFICATION ECU - DOOR ELECTRICAL KEY**

OSCILLATOR)

OK ▶ REPLACE CERTIFICATION ECU (SMART KEY ECU ASSEMBLY)

5.	CHECK HARNESS AND CONNECTOR (CERTIFICATION ECU - DOOR ELECTRICAL KEY OSCILLATOR)

(a) Disconnect the certification ECU (smart key ECU assembly) connector.

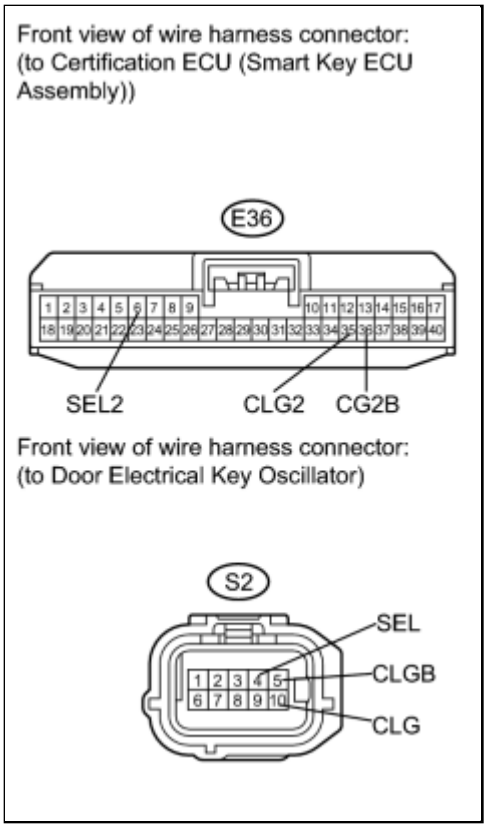

(b) Disconnect the door electrical key oscillator connector.

(c) Measure the resistance according to the value(s) in the table below.

Standard Resistance:

TESTER CONNECTION	CONDITION	SPECIFIED CONDITION
E36-6 (SEL2) - S2-4 (SEL)	Always	Below 1 Ω
E36-35 (CLG2) - S2-10 (CLG)	Always	Below 1 Ω
E36-36 (CG2B) - S2-5 (CLGB)	Always	Below 1 Ω
E36-6 (SEL2) - Body ground	Always	10 kΩ or higher
E36-35 (CLG2) - Body ground	Always	10 kΩ or higher

TESTER CONNECTION	CONDITION	SPECIFIED CONDITION
E36-36 (CG2B) - Body ground	Always	10 kΩ or higher

NG ▶ **REPAIR OR REPLACE HARNESS OR CONNECTOR**

OK ▼

6.	**CHECK HARNESS AND CONNECTOR (DOOR ELECTRICAL KEY OSCILLATOR - FRONT DOOR OUTSIDE HANDLE)**

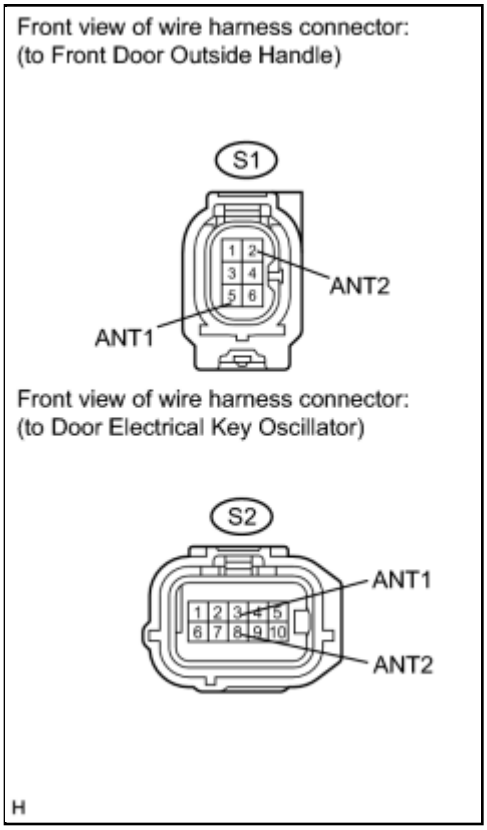

(a) Disconnect the front door outside handle connector.

(b) Measure the resistance according to the value(s) in the table below.

Standard Resistance:

TESTER CONNECTION	CONDITION	SPECIFIED CONDITION
S1-2 (ANT2) - S2-8 (ANT2)	Always	Below 1 Ω
S1-5 (ANT1) - S2-3 (ANT1)	Always	Below 1 Ω

TESTER CONNECTION	CONDITION	SPECIFIED CONDITION
S1-2 (ANT2) - Body ground	Always	10 kΩ or higher
S1-5 (ANT1) - Body ground	Always	10 kΩ or higher

NG ▶ **REPAIR OR REPLACE HARNESS OR CONNECTOR**

OK ▼

7.	**CHECK HARNESS AND CONNECTOR (DOOR ELECTRICAL KEY OSCILLATOR - BATTERY AND BODY GROUND)**

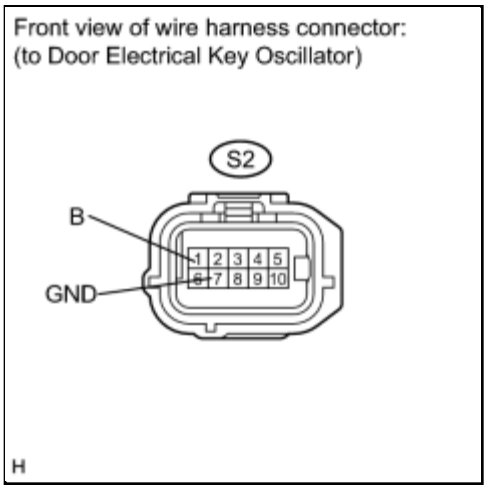

(a) Measure the voltage according to the value(s) in the table below.

Standard Voltage:

TESTER CONNECTION	CONDITION	SPECIFIED CONDITION
S2-1 (B) - S2-7 (GND)	Always	11 to 14 V

NG ▶ **REPAIR OR REPLACE HARNESS OR CONNECTOR**

OK ▼

8.	**REPLACE DOOR ELECTRICAL KEY OSCILLATOR**

(a) Replace the door electrical key oscillator INFO .

NEXT

9.	**CHECK DOOR ELECTRICAL KEY OSCILLATOR (OPERATION)**

(a) Check that the entry functions operate normally.

OK:

Entry functions operate normally.

NG → **REPLACE CERTIFICATION ECU (SMART KEY ECU ASSEMBLY)**

OK → **END (DOOR ELECTRICAL KEY OSCILLATOR IS DEFECTIVE)**

Last Modified: 3-10-2010	6.4 J	**From:** 200901
Model Year: 2010	**Model:** Corolla	**Doc ID:** RM000000XUQ02XX
Title: THEFT DETERRENT / KEYLESS ENTRY: SMART KEY SYSTEM (for Entry Function): Driver Side Door Entry Lock Function does not Operate (2010 Corolla)		

Driver Side Door Entry Lock Function does not Operate

DESCRIPTION

If the driver door entry lock function does not operate but the entry unlock function operates, communication between the vehicle and electrical key transmitter is normal. As a result, the entry lock switch circuit can be considered to be faulty (certification ECU (smart key ECU assembly) → driver side outside handle (entry lock switch) → driver side door electrical key oscillator).

WIRING DIAGRAM

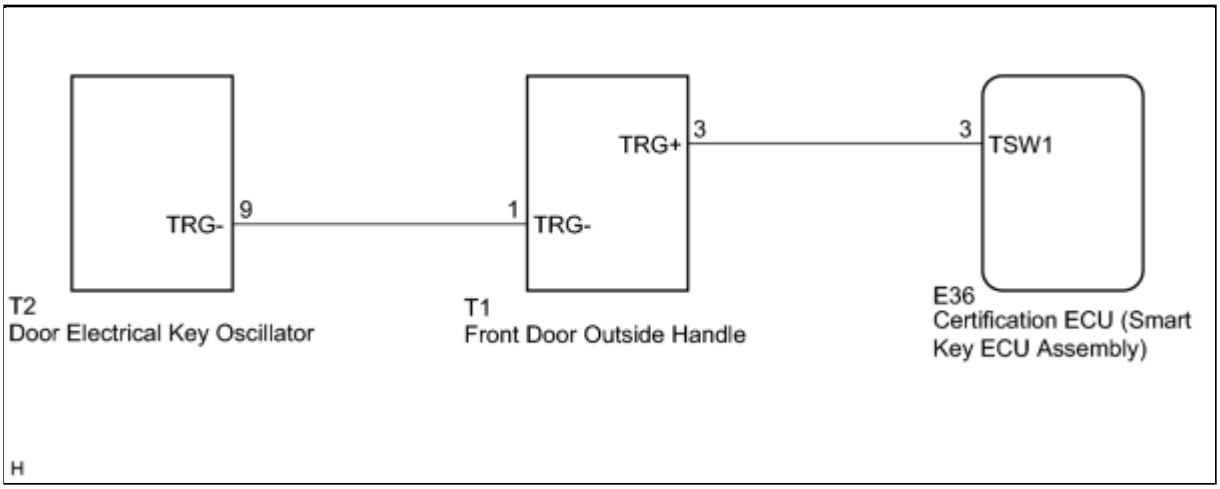

INSPECTION PROCEDURE

PROCEDURE

1.	**CHECK POWER DOOR LOCK OPERATION**

(a) When the master switch assembly's door control switch is operated, check that the doors lock INFO .

OK:

Door locks operate normally.

NG ▶ **GO TO POWER DOOR LOCK CONTROL SYSTEM**

OK

2.	READ VALUE USING TECHSTREAM (OUTSIDE HANDLE)

(a) Connect the Techstream to the DLC3.

(b) Turn the engine switch on (IG).

(c) Turn the Techstream on.

(d) Enter the following menus: Body Electrical / Smart Key / Data List.

(e) Read the Data List according to the display on the Techstream.

Smart Key (Certification ECU (Smart Key ECU Assembly))

TESTER DISPLAY	MEASUREMENT ITEM/RANGE	NORMAL CONDITION	DIAGNOSTIC NOTE
D-Door Trigger SW	Driver side door lock switch/ON or OFF	ON: Switch is touched OFF: Switch is not touched	-

OK:
On the Techstream screen, the item changes between ON and OFF according to the chart above.

NG ▶ **CHECK HARNESS AND CONNECTOR (FRONT DOOR OUTSIDE HANDLE - DOOR ELECTRICAL KEY OSCILLATOR)**

OK ▶ **REPLACE CERTIFICATION ECU (SMART KEY ECU ASSEMBLY)**

3.	CHECK HARNESS AND CONNECTOR (FRONT DOOR OUTSIDE HANDLE - DOOR ELECTRICAL KEY OSCILLATOR)

(a) Disconnect the front door outside handle.

(b) Disconnect the door electrical key oscillator connector.

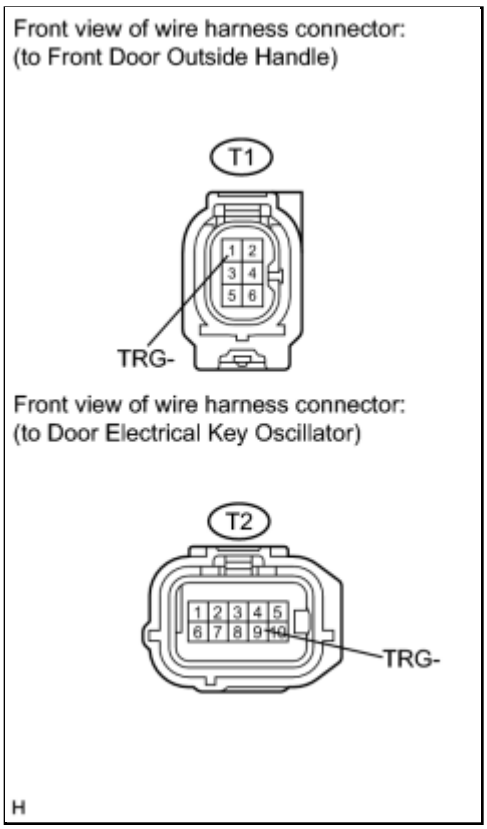

(c) Measure the resistance according to the value(s) in the table below.

Standard Resistance:

TESTER CONNECTION	CONDITION	SPECIFIED CONDITION
T2-9 (TRG-) - T1-1 (TRG-)	Always	Below 1 Ω
T2-9 (TRG-) - Body ground	Always	10 kΩ or higher

NG ▶ **REPAIR OR REPLACE HARNESS OR CONNECTOR**

OK ▼

4.	**CHECK HARNESS AND CONNECTOR (CERTIFICATION ECU - FRONT DOOR OUTSIDE HANDLE)**

(a) Disconnect the certification ECU (smart key ECU assembly) connector.

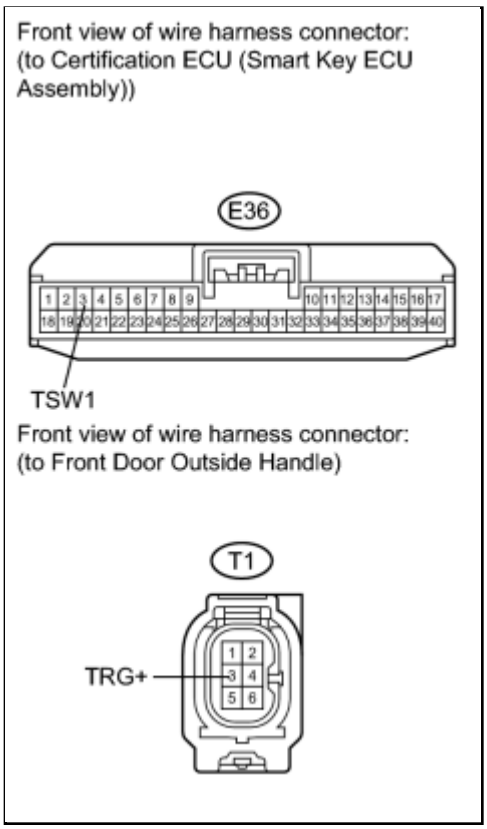

(b) Measure the resistance according to the value(s) in the table below.

Standard Resistance:

TESTER CONNECTION	CONDITION	SPECIFIED CONDITION
E36-3 (TSW1) - T1-3 (TRG+)	Always	Below 1 Ω
E36-3 (TSW1) - Body ground	Always	10 kΩ or higher

NG ▶ **REPAIR OR REPLACE HARNESS OR CONNECTOR**

OK ▼

5.	**INSPECT FRONT DOOR OUTSIDE HANDLE (for Driver Side)**

(a) Measure the resistance according to the value(s) in the table below.

Standard Resistance:

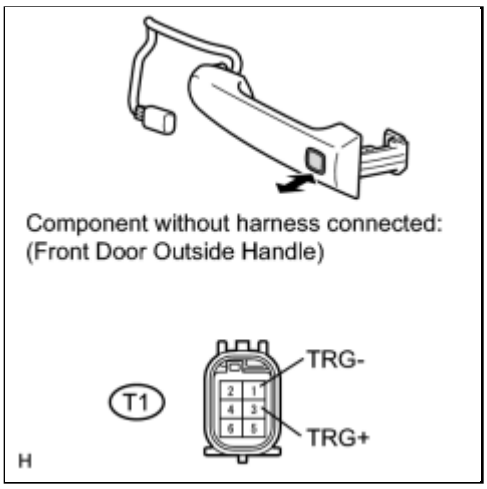

TESTER CONNECTION	CONDITION	SPECIFIED CONDITION
T1-1 (TRG-) - T1-3 (TRG+)	Lock switch not pushed	10 kΩ or higher
T1-1 (TRG-) - T1-3 (TRG+)	Lock switch pushed	Below 1 Ω

NG ▶ **REPLACE FRONT DOOR OUTSIDE HANDLE**

OK
▼

6.	REPLACE DOOR ELECTRICAL KEY OSCILLATOR

(a) Replace the door electrical key oscillator INFO .

NEXT
▼

7.	CHECK DOOR ELECTRICAL KEY OSCILLATOR (OPERATION)

(a) Check that the entry functions operate normally.

OK:

Entry functions operate normally.

NG ▶ **REPLACE CERTIFICATION ECU (SMART KEY ECU ASSEMBLY)**

OK ▶ **END (DOOR ELECTRICAL OSCILLATOR IS DEFECTIVE)**

Last Modified: 3-10-2010	6.4 J	**From:** 200901
Model Year: 2010	**Model:** Corolla	**Doc ID:** RM000000XUR01NX
Title: THEFT DETERRENT / KEYLESS ENTRY: SMART KEY SYSTEM (for Entry Function): Front Passenger Side Door Entry Lock Function does not Operate (2010 Corolla)		

Front Passenger Side Door Entry Lock Function does not Operate

DESCRIPTION

If the front passenger door entry lock function does not operate but the entry unlock function operates, communication between the vehicle and electrical key transmitter is normal. As a result, the entry lock switch circuit can be considered to be faulty (certification ECU (smart key ECU assembly) → passenger side outside handle (entry lock switch) → front passenger side door electrical key oscillator).

WIRING DIAGRAM

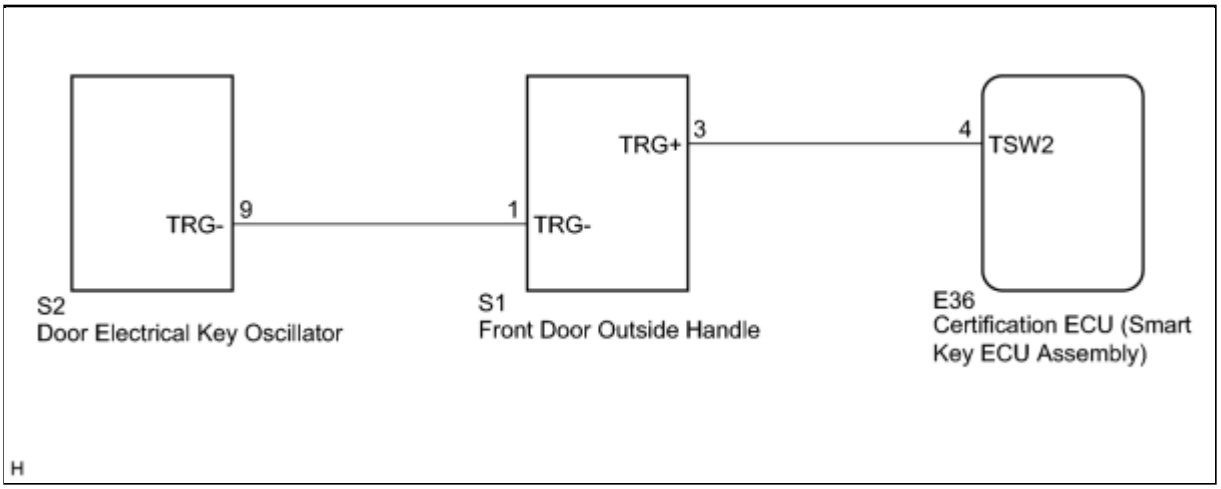

INSPECTION PROCEDURE

PROCEDURE

1.	**CHECK POWER DOOR LOCK OPERATION**

(a) When the master switch assembly's door control switch is operated, check that the doors lock INFO .

OK:

Door locks operate normally.

NG ▶ **GO TO POWER DOOR LOCK CONTROL SYSTEM**

OK

2.	READ VALUE USING TECHSTREAM (OUTSIDE HANDLE)

(a) Connect the Techstream to the DLC3.

(b) Turn the engine switch on (IG).

(c) Turn the Techstream on.

(d) Enter the following menus: Body Electrical / Smart Key / Data List.

(e) Read the Data List according to the display on the Techstream.

Smart Key (Certification ECU (Smart Key ECU Assembly))

TESTER DISPLAY	MEASUREMENT ITEM/RANGE	NORMAL CONDITION	DIAGNOSTIC NOTE
P-Door Trigger SW	Front passenger side door lock switch/ON or OFF	ON: Switch is touched OFF: Switch is not touched	-

OK:
On the Techstream screen, the item changes between ON and OFF according to the chart above.

NG → **CHECK HARNESS AND CONNECTOR (FRONT DOOR OUTSIDE HANDLE - DOOR ELECTRICAL KEY OSCILLATOR)**

OK → **REPLACE CERTIFICATION ECU (SMART KEY ECU ASSEMBLY)**

3.	CHECK HARNESS AND CONNECTOR (FRONT DOOR OUTSIDE HANDLE - DOOR ELECTRICAL KEY OSCILLATOR)

(a) Disconnect the front door outside handle connector.

(b) Disconnect the door electrical key oscillator connector.

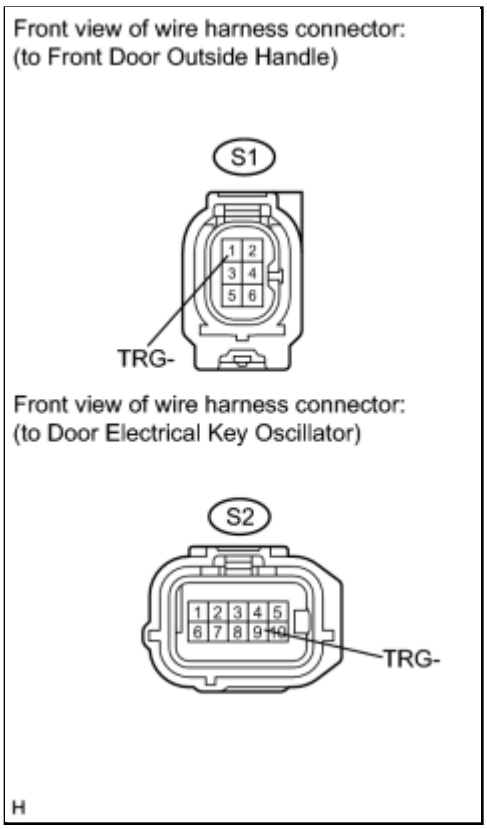

(c) Measure the resistance according to the value(s) in the table below.

Standard Resistance:

TESTER CONNECTION	CONDITION	SPECIFIED CONDITION
S2-9 (TRG-) - S1-1 (TRG-)	Always	Below 1 Ω
S2-9 (TRG-) - Body ground	Always	10 kΩ or higher

NG ▶ **REPAIR OR REPLACE HARNESS OR CONNECTOR**

OK ▼

4.	**CHECK HARNESS AND CONNECTOR (CERTIFICATION ECU - FRONT DOOR OUTSIDE HANDLE)**

(a) Disconnect the certification ECU (smart key ECU assembly) connector.

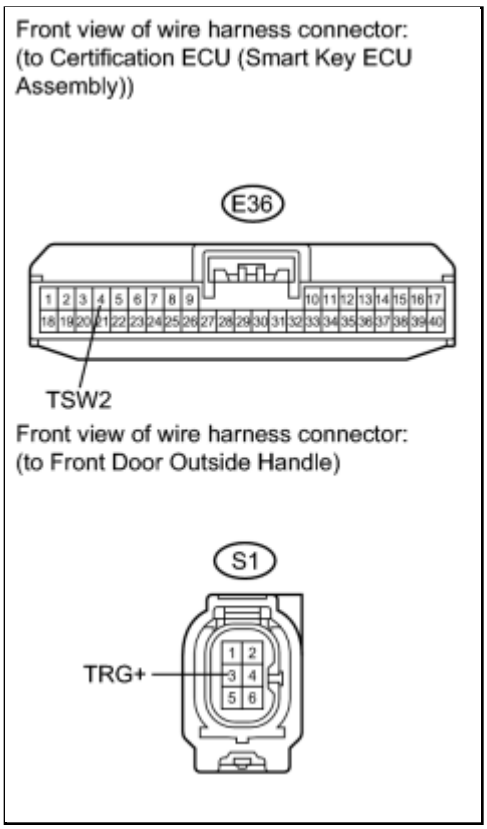

(b) Measure the resistance according to the value(s) in the table below.

Standard Resistance:

TESTER CONNECTION	CONDITION	SPECIFIED CONDITION
E36-4 (TSW2) - S1-3 (TRG+)	Always	Below 1 Ω
E36-4 (TSW2) - Body ground	Always	10 kΩ or higher

NG ▶ **REPAIR OR REPLACE HARNESS OR CONNECTOR**

OK ▼

5.	**INSPECT FRONT DOOR OUTSIDE HANDLE (for Front Passenger Side)**

(a) Measure the resistance according to the value(s) in the table below.

Standard Resistance:

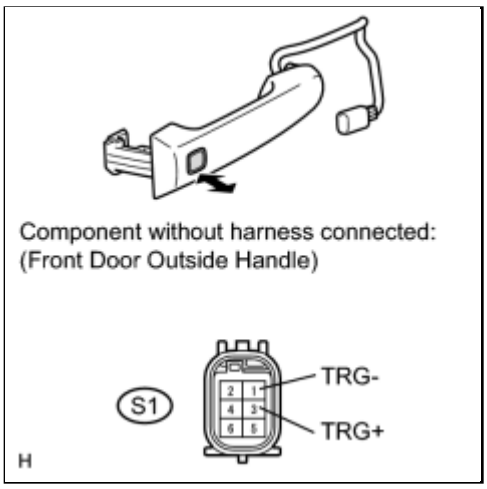

TESTER CONNECTION	CONDITION	SPECIFIED CONDITION
S1-1 (TRG-) - S1-3 (TRG+)	Lock switch not pushed	10 kΩ or higher
S1-1 (TRG-) - S1-3 (TRG+)	Lock switch pushed	Below 1 Ω

NG ▶ **REPLACE FRONT DOOR OUTSIDE HANDLE**

OK ▼

6.	REPLACE DOOR ELECTRICAL KEY OSCILLATOR

(a) Replace the door electrical key oscillator INFO .

NEXT ▼

7.	CHECK DOOR ELECTRICAL KEY OSCILLATOR (OPERATION)

(a) Check that the entry functions operate normally.

OK:

Entry functions operate normally.

NG ▶ **REPLACE CERTIFICATION ECU (SMART KEY ECU ASSEMBLY)**

OK ▶ **END (DOOR ELECTRICAL KEY OSCILLATOR IS DEFECTIVE)**

Last Modified: 3-10-2010	6.4 J	**From:** 200901
Model Year: 2010	**Model:** Corolla	**Doc ID:** RM000000XUV01JX
Title: THEFT DETERRENT / KEYLESS ENTRY: SMART KEY SYSTEM (for Entry Function): Luggage Compartment Door Entry Unlock Function does not Operate when Key is Outside Luggage Compartment (2010 Corolla)		

Luggage Compartment Door Entry Unlock Function does not Operate when Key is Outside Luggage Compartment

DESCRIPTION

When the luggage compartment door entry unlock function does not operate, one of the following may be the cause: 1) luggage compartment door opener outer switch malfunction; 2) communication malfunction between the electrical key antenna and electrical key transmitter; 3) the main body ECU (instrument panel junction block) receives the luggage compartment door opener outer switch ON signal, but is unable to send the signal to the certification ECU (smart key ECU assembly) through CAN communication; or 4) certification ECU (smart key ECU assembly) malfunction.

WIRING DIAGRAM

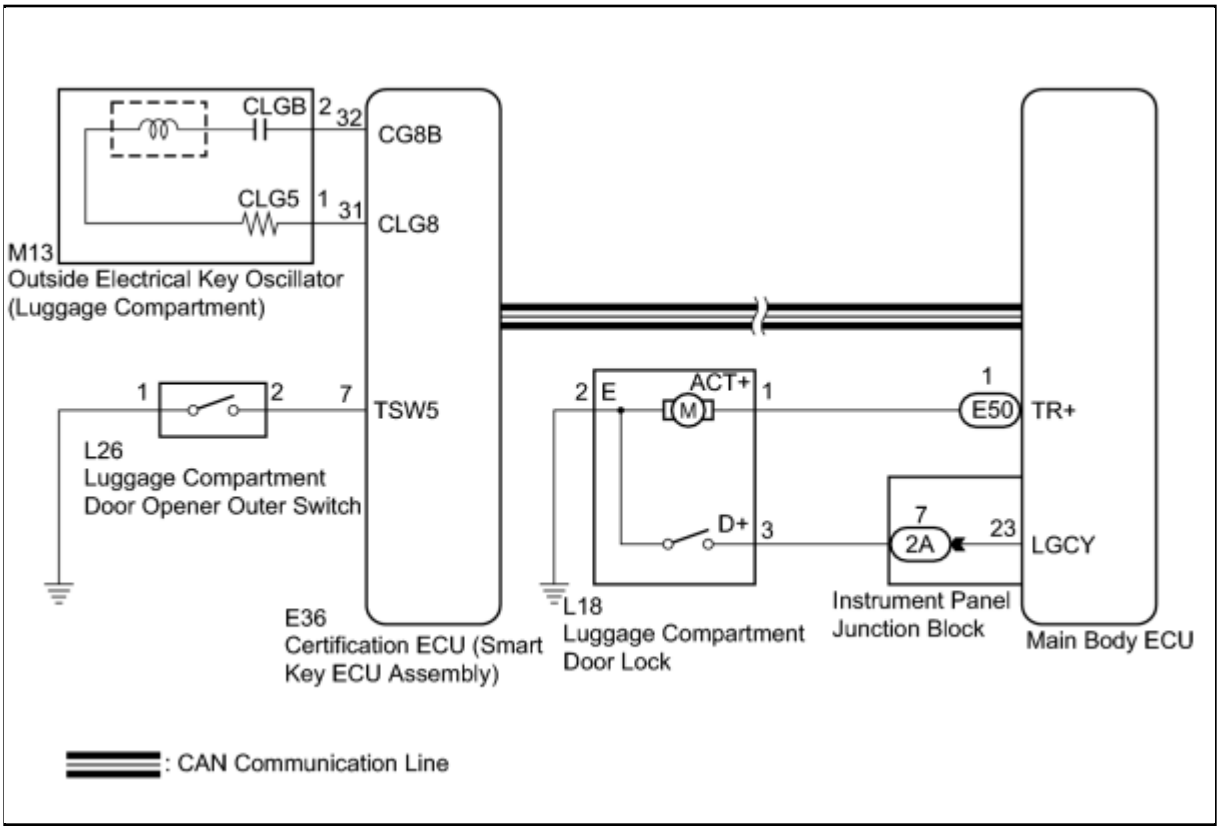

INSPECTION PROCEDURE

PROCEDURE

1.	**CHECK SMART KEY SYSTEM (Entry Function)**

(a) Check that entry lock and unlock functions can be operated at each door.

OK:

Entry lock and unlock functions operate normally.

NG ▶ **GO TO OTHER PROBLEM (PROBLEM SYMPTOMS TABLE)**

OK ▼

2.	**READ VALUE USING TECHSTREAM (LUGGAGE COMPARTMENT DOOR OPENER SWITCH)**

(a) Connect the Techstream to the DLC3.

(b) Turn the engine switch on (IG).

(c) Turn the Techstream on.

(d) Enter the following menus: Body Electrical / Smart Key / Data List.

(e) Read the Data List according to the display on the Techstream.

Smart Key (Certification ECU (Smart Key ECU Assembly))

TESTER DISPLAY	MEASUREMENT ITEM/RANGE	NORMAL CONDITION	DIAGNOSTIC NOTE
Tr/B-Door Unlock SW	Luggage compartment door opener switch / ON or OFF	ON: Luggage compartment door opener outer switch is pushed OFF: Luggage compartment door opener outer switch is not pushed	-

OK:

On the Techstream screen, the item changes between ON and OFF according to above chart.

NG ▶ **INSPECT LUGGAGE COMPARTMENT DOOR OPENER OUTER SWITCH**

OK

3.	PERFORM ACTIVE TEST USING TECHSTREAM

(a) Connect the Techstream to the DLC3.

(b) Turn the engine switch on (IG).

(c) Turn the Techstream on.

(d) Enter the following menus: Body Electrical / Main Body / Active Test.

(e) Perform the Active Test according to the display on the Techstream.

Main Body (Main Body ECU (Instrument Panel Junction Block))

TESTER DISPLAY	TEST PART	CONTROL RANGE	DIAGNOSTIC NOTE
Trunk and Back-door Open	Luggage compartment open switch	ON/OFF	-

OK:

Luggage compartment door lock motor operates according to the Techstream operation.

NG ▶ **INSPECT LUGGAGE COMPARTMENT DOOR LOCK ASSEMBLY**

OK

4.	CHECK WAVE ENVIRONMENT

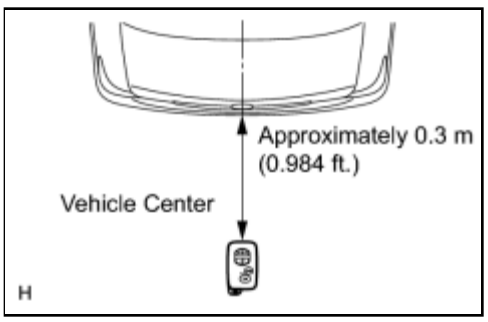

(a) Bring the electrical key transmitter near the outside electrical key oscillator (luggage compartment), and perform an entry luggage compartment open function check.

NOTICE:

If the key is brought within 0.2 m (0.656 ft) of the rear bumper, communication is not possible.

HINT:

- When the electrical key transmitter is brought near the electrical key antenna, the possibility of wave interference decreases, and it can be determined if wave interference is causing the problem symptom.
- If the operation is normal, the possibility of wave interference is high. Also, added vehicle components may cause wave interference. If installed, remove them and perform the operation check.

OK:
Entry functions operate normally.

NG ▶ **PERFORM KEY DIAGNOSTIC MODE INSPECTION**

OK ▶ **AFFECTED BY WAVE INTERFERENCE**

5.	PERFORM KEY DIAGNOSTIC MODE INSPECTION

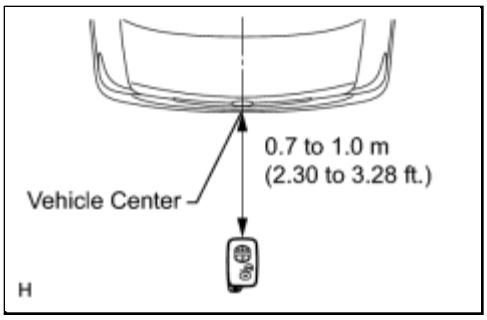

(a) Diagnostic mode inspection (outside electrical key oscillator (luggage compartment))

(1) Connect the Techstream to the DLC3.

(2) Turn the engine switch on (IG).

(3) Turn the Techstream on.

(4) Enter the following menus: Body Electrical / Smart Key / Utility / Communication Check (Key Diag Mode) / Overhead + Luggage (outside).

(5) When the electrical key transmitter is held at the same height as the rear bumper upper surface aligning it with the center of the rear of the vehicle, check that the wireless door lock buzzer sounds.

HINT:

If the buzzer sounds, it can be determined that the luggage compartment exterior transmitter is operating normally.

OK:
Wireless door lock buzzer sounds.

NG ▶ **CHECK HARNESS AND CONNECTOR (CERTIFICATION ECU - OUTSIDE ELECTRICAL KEY OSCILLATOR)**

OK ▶ **REPLACE CERTIFICATION ECU (SMART KEY ECU ASSEMBLY)**

6.	**CHECK HARNESS AND CONNECTOR (CERTIFICATION ECU - OUTSIDE ELECTRICAL KEY OSCILLATOR)**

(a) Disconnect the certification ECU (smart key ECU assembly) connector.

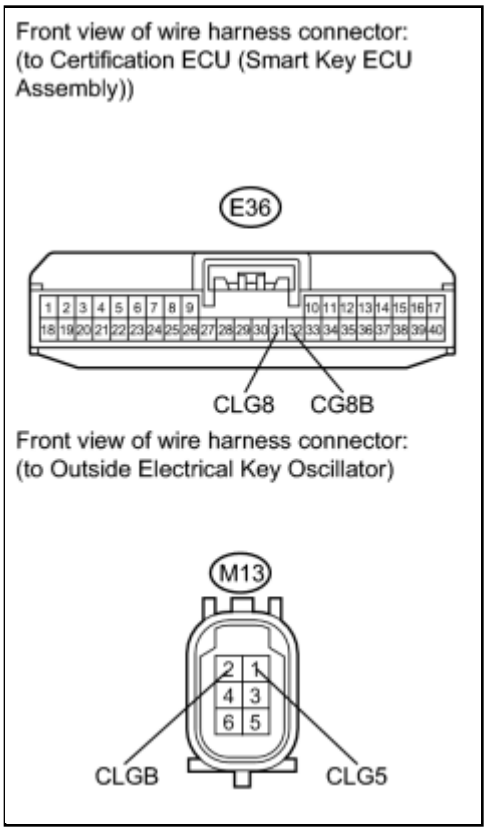

(b) Disconnect the outside electrical key oscillator connector.

(c) Measure the resistance according to the value(s) in the table below.

Standard Resistance:

TESTER CONNECTION	CONDITION	SPECIFIED CONDITION
E36-32 (CG8B) - M13-2 (CLGB)	Always	Below 1 Ω
E36-31 (CLG8) - M13-1 (CLG5)	Always	Below 1 Ω
E36-32 (CG8B) - Body ground	Always	10 kΩ or higher
E36-31 (CLG8) - Body ground	Always	10 kΩ or higher

NG ▶ **REPAIR OR REPLACE HARNESS OR CONNECTOR**

OK ▼

7.	REPLACE OUTSIDE ELECTRICAL KEY OSCILLATOR (Luggage Compartment)

(a) Replace the outside electrical key oscillator (luggage compartment) INFO .

NEXT

8.	CHECK OUTSIDE ELECTRICAL KEY OSCILLATOR (OPERATION)

(a) Check that the entry functions operate normally.

OK:

Entry functions operate normally.

NG ▶ **REPLACE CERTIFICATION ECU (SMART KEY ECU ASSEMBLY)**

OK ▶ **END (OUTSIDE ELECTRICAL KEY OSCILLATOR IS DEFECTIVE)**

9.	INSPECT LUGGAGE COMPARTMENT DOOR LOCK ASSEMBLY

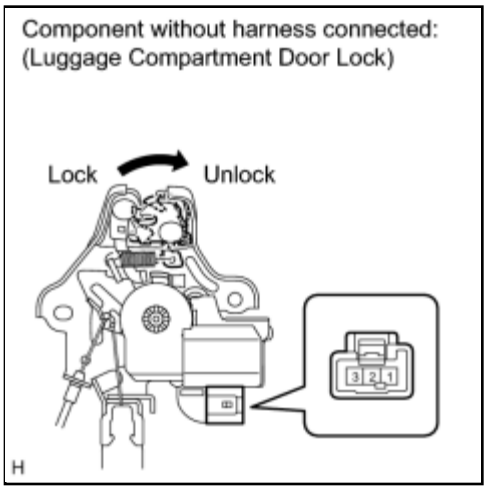

(a) Remove the luggage compartment door lock assembly INFO .

(b) Check the operation of the door lock motor.

(1) Move the door lock to the lock position.

(2) Apply battery voltage to the door lock motor and check the operation of the door lock motor.

OK:

MEASUREMENT CONDITION	SPECIFIED CONDITION
Battery positive (+) → Terminal 1 Battery negative (-) → Terminal 2	Unlock

(c) Check the operation of the door courtesy switch.

(1) Measure the resistance according to the value(s) in the table below.

Standard Resistance:

TESTER CONNECTION	CONDITION	SPECIFIED CONDITION
2 - 3	Unlock	Below 1 Ω
2 - 3	Lock	10 kΩ or higher

NG ▶ **REPLACE LUGGAGE COMPARTMENT DOOR LOCK ASSEMBLY**

OK ▼

10.	**CHECK HARNESS AND CONNECTOR (MAIN BODY ECU - LUGGAGE COMPARTMENT DOOR LOCK)**

(a) Luggage compartment door lock motor:

(1) Disconnect the main body ECU (instrument panel junction block) connector.

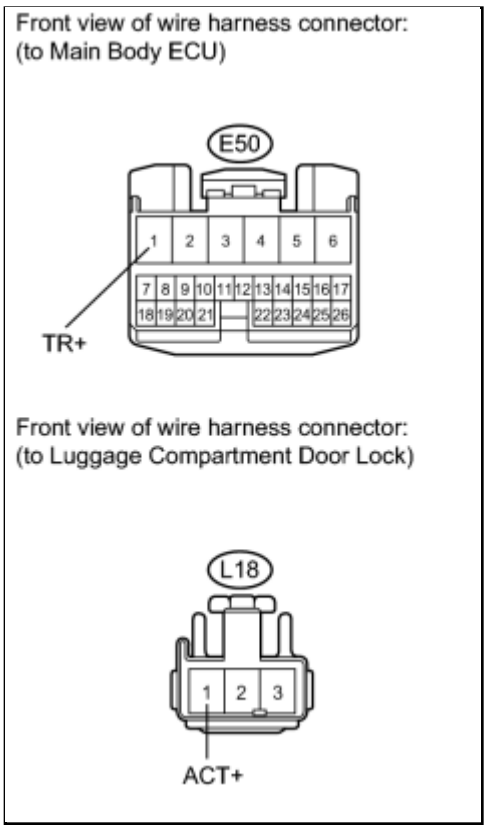

(2) Measure the resistance according to the value(s) in the table below.

Standard Resistance:

TESTER CONNECTION	CONDITION	SPECIFIED CONDITION
E50-1 (TR+) - L18-1 (ACT+)	Always	Below 1 Ω
E50-1 (TR+) - Body ground	Always	10 kΩ or higher

(b) Luggage compartment door courtesy switch:

(1) Disconnect the instrument panel junction block connector.

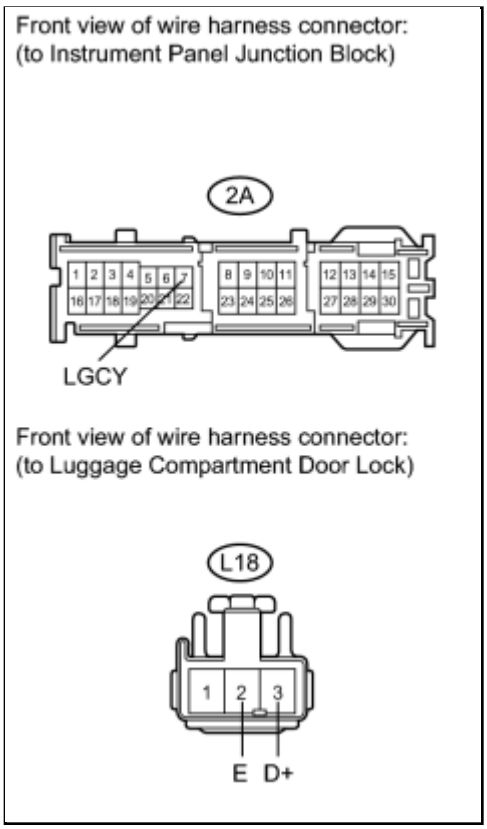

(2) Measure the resistance according to the value(s) in the table below.

Standard Resistance:

TESTER CONNECTION	CONDITION	SPECIFIED CONDITION
L18-2 (E) - Body ground	Always	Below 1 Ω
2A-7 (LGCY) - L18-3 (D+)	Always	Below 1 Ω
2A-7 (LGCY) - Body ground	Always	10 kΩ or higher

NG ▶ **REPAIR OR REPLACE HARNESS OR CONNECTOR**

OK ▶ **REPLACE MAIN BODY ECU (INSTRUMENT PANEL JUNCTION BLOCK)**

11.	**INSPECT LUGGAGE COMPARTMENT DOOR OPENER OUTER SWITCH**

(a) Disconnect the luggage compartment door opener outer switch connector.

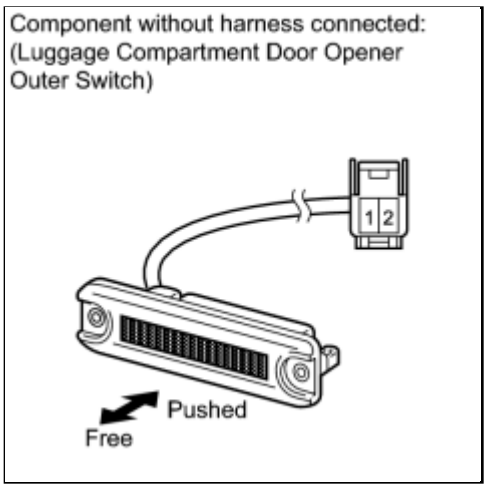

(b) Measure the resistance according to the value(s) in the table below.

Standard Resistance:

TESTER CONNECTION	SWITCH CONDITION	SPECIFIED CONDITION
1 - 2	Luggage compartment door opener outer switch not pushed (OFF)	10 kΩ or higher
1 - 2	Luggage compartment door opener outer switch pushed (ON)	Below 1 Ω

NG ▶ **REPLACE LUGGAGE COMPARTMENT DOOR OPENER OUTER SWITCH**

OK ▼

12.	**CHECK HARNESS AND CONNECTOR (CERTIFICATION ECU - LUGGAGE COMPARTMENT DOOR OPENER SWITCH)**

(a) Disconnect the certification ECU (smart key ECU assembly) connector.

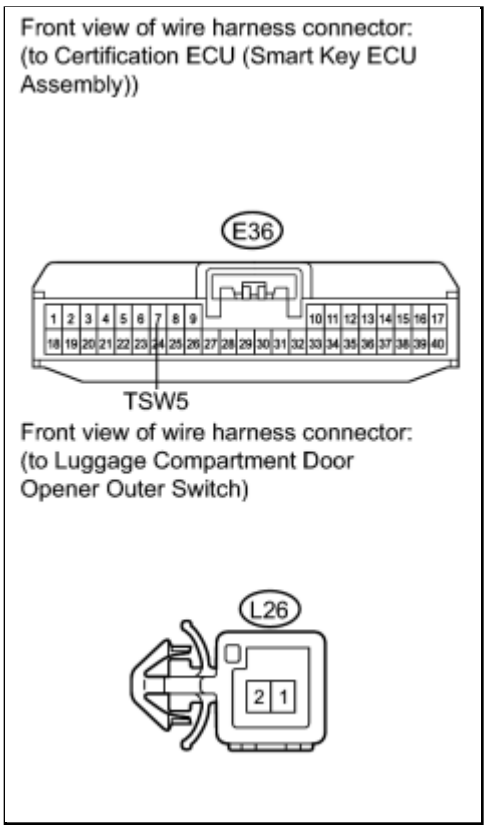

(b) Measure the resistance according to the value(s) in the table below.

Standard Resistance:

TESTER CONNECTION	CONDITION	SPECIFIED CONDITION
L26-1 - Body ground	Always	Below 1 Ω
L26-2 - E36-7 (TSW5)	Always	Below 1 Ω
L26-2 - Body ground	Always	10 kΩ or higher

NG ▶ **REPAIR OR REPLACE HARNESS OR CONNECTOR**

OK ▶ **REPLACE CERTIFICATION ECU (SMART KEY ECU ASSEMBLY)**

Last Modified: 3-10-2010	6.4 J	**From:** 200901
Model Year: 2010	**Model:** Corolla	**Doc ID:** RM000000XUU02KX
Title: THEFT DETERRENT / KEYLESS ENTRY: SMART KEY SYSTEM (for Entry Function): Room Oscillator does not Recognize Key (2010 Corolla)		

Room Oscillator does not Recognize Key

DESCRIPTION

If the indoor electrical key oscillator does not recognize a key, either of the following may be the cause: 1) communication between the indoor electrical key oscillator (front floor) and electrical key transmitter cannot be performed; or 2) communication between the indoor electrical key oscillator (rear floor) and electrical key transmitter cannot be performed.

WIRING DIAGRAM

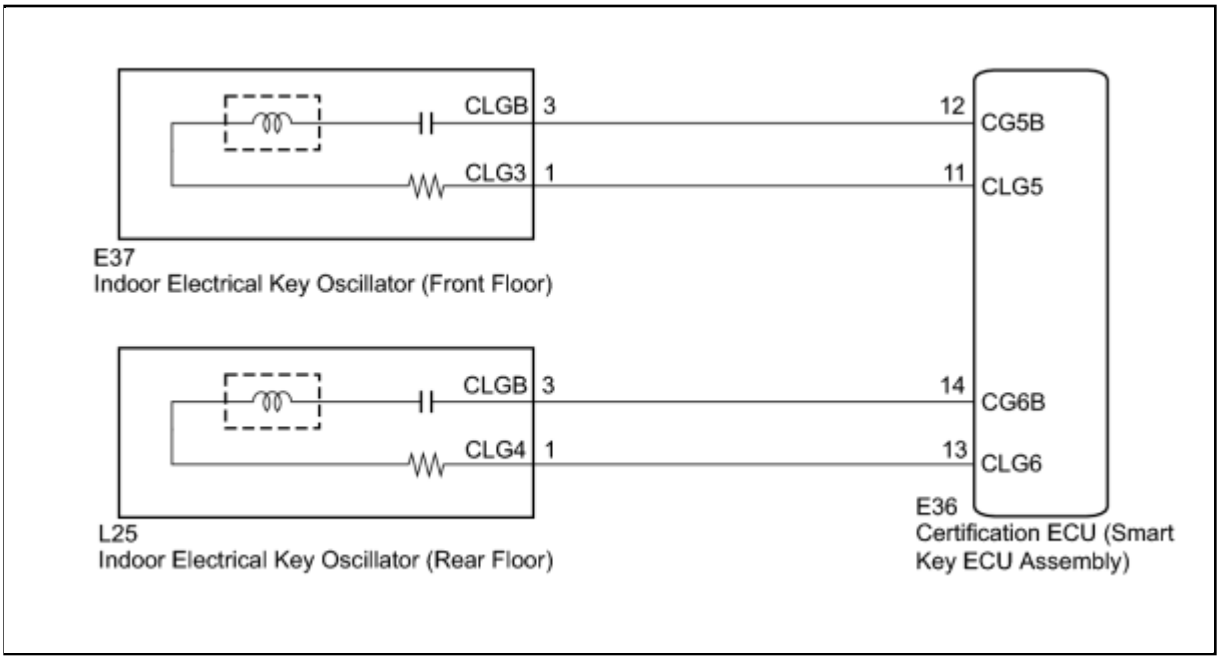

INSPECTION PROCEDURE

NOTICE:

When using the Techstream to troubleshoot with the engine switch off: Connect the Techstream to the vehicle, and turn a courtesy light switch on and off at 1.5-second intervals until communication between the Techstream and vehicle begins.

PROCEDURE

1.	**CHECK SMART KEY SYSTEM (Entry Function)**

(a) Check that entry lock and unlock functions can be operated at each door.

OK:

Entry lock and unlock functions operate normally.

NG ▶ **GO TO OTHER PROBLEM (PROCEED TO PROBLEM SYMPTOMS TABLE FOR EACH DOOR)**

OK ▼

2.	**CHECK SMART KEY SYSTEM (Start Function)**

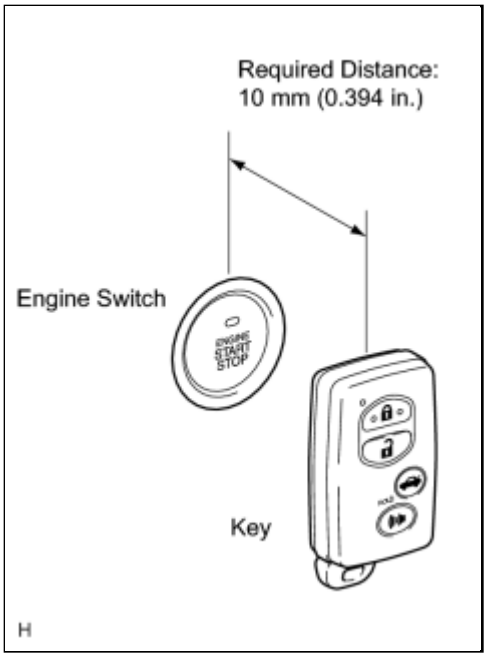

(a) Remove the battery of the electrical key transmitter INFO .

(b) With the brake pedal depressed, face the logo side of the key to the engine switch.

(c) When operating the engine switch, check whether the power source mode changes.

OK:

Power source mode changes.

HINT:

- When the electrical key transmitter cannot be verified even though it is within the specified range, the engine start check can be performed by removing the transmitter battery from the electrical key transmitter and holding the transmitter against the engine switch.
- When performing the check, if the power source mode changes, there is a problem with key certification inside the cabin.

NG ▶ **GO TO SMART KEY SYSTEM (Power Source Mode**

does not Change)

OK

3.	CHECK WAVE ENVIRONMENT

(a) Install the battery to the electrical key transmitter.

(b) Bring the electrical key transmitter near the indoor electrical key oscillator (front floor), and check that the engine can be started.

NOTICE:

If the key is brought within 0.2 m (0.656 ft.) of the indoor electrical key oscillator (front floor), communication is not possible.

(c) Bring the electrical key transmitter near the indoor electrical key oscillator (rear floor), and check that the engine can be started.

NOTICE:

If the key is brought within 0.2 m (0.656 ft.) of the indoor electrical key oscillator (rear floor), communication is not possible.

HINT:

- When the electrical key transmitter is brought near the indoor electrical key oscillator, the possibility of wave interference decreases, and it can be determined if wave interference is causing the problem symptom.
- If the operation is normal, the possibility of wave interference is high. Also, added vehicle components may cause wave interference. If installed, remove them and perform the operation check.

OK:

The engine starts.

NG ▶ **PERFORM KEY DIAGNOSTIC MODE INSPECTION**

OK ▶ **AFFECTED BY WAVE INTERFERENCE**

4.	PERFORM KEY DIAGNOSTIC MODE INSPECTION

(a) Diagnostic mode inspection (indoor electrical key oscillator (front floor))

(1) Connect the Techstream to the DLC3.

(2) Turn the engine switch on (IG).

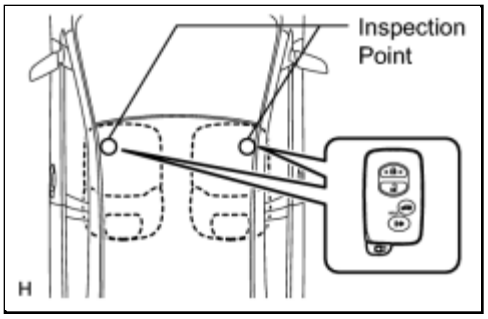

(3) Turn the Techstream on.

(4) Enter the following menus: Body Electrical / Smart Access / Utility / Communication Check (Key Diag Mode) / Overhead + Front Room.

(5) When the electrical key transmitter is placed on the driver seat or front passenger seat cushion, check that the wireless door lock buzzer sounds.

(b) Diagnostic mode inspection (indoor electrical key oscillator (rear floor))

(1) Connect the Techstream to the DLC3.

(2) Turn the engine switch on (IG).

(3) Turn the Techstream on.

(4) Enter the following menus: Body Electrical / Smart Access / Utility / Communication Check (Key Diag Mode) / Overhead + Rear Room.

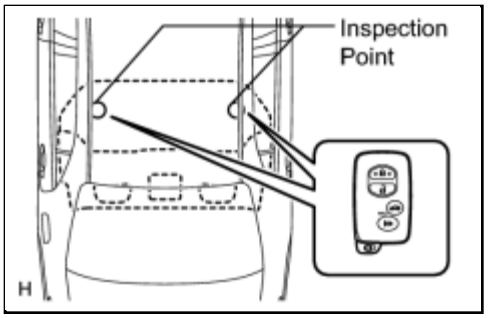

(5) When the electrical key transmitter is placed on the rear seat cushion, check that the wireless door lock buzzer sounds.

HINT:

If the buzzer sounds, it can be determined that the indoor electrical key oscillators are operating normally.

Result:

RESULT	PROCEED TO
Front and rear operation checks are normal or fail	A
Rear operation check is normal	B
Front operation check is normal	C

B ▶ **CHECK HARNESS AND CONNECTOR (CERTIFICATION ECU - INDOOR ELECTRICAL KEY OSCILLATOR)**

A ▶ **REPLACE CERTIFICATION ECU (SMART KEY ECU ASSEMBLY)**

C

5.	**CHECK HARNESS AND CONNECTOR (CERTIFICATION ECU - INDOOR ELECTRICAL KEY OSCILLATOR)**

(a) Disconnect the certification ECU (smart key ECU assembly) connector.

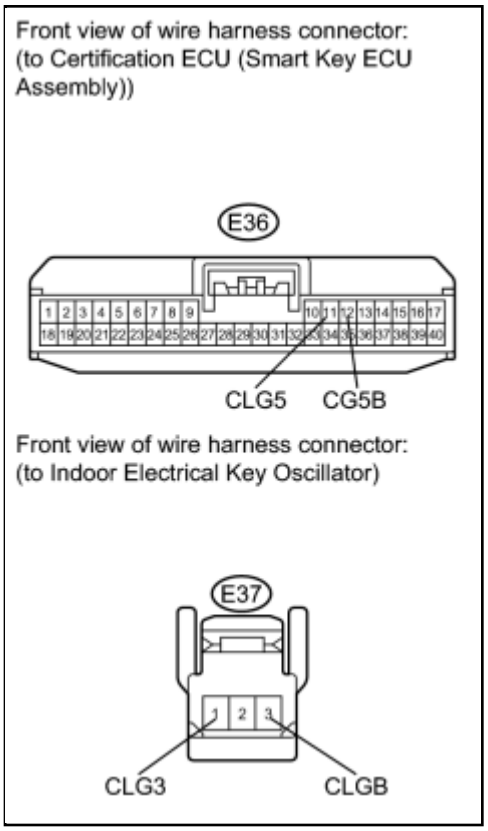

(b) Disconnect the indoor electrical key oscillator (front floor) connector.

(c) Measure the resistance according to the value(s) in the table below.

Standard Resistance:

TESTER CONNECTION	CONDITION	SPECIFIED CONDITION
E36-11 (CLG5) - E37-1 (CLG3)	Always	Below 1 Ω
E36-12 (CG5B) - E37-3 (CLGB)	Always	Below 1 Ω
E36-11 (CLG5) - Body ground	Always	10 kΩ or higher
E36-12 (CG5B) - Body ground	Always	10 kΩ or higher

NG ▶ **REPAIR OR REPLACE HARNESS OR CONNECTOR**

OK

6.	INSPECT INDOOR ELECTRICAL KEY OSCILLATOR (FRONT FLOOR)

(a) Measure the voltage according to the value(s) in the table below.

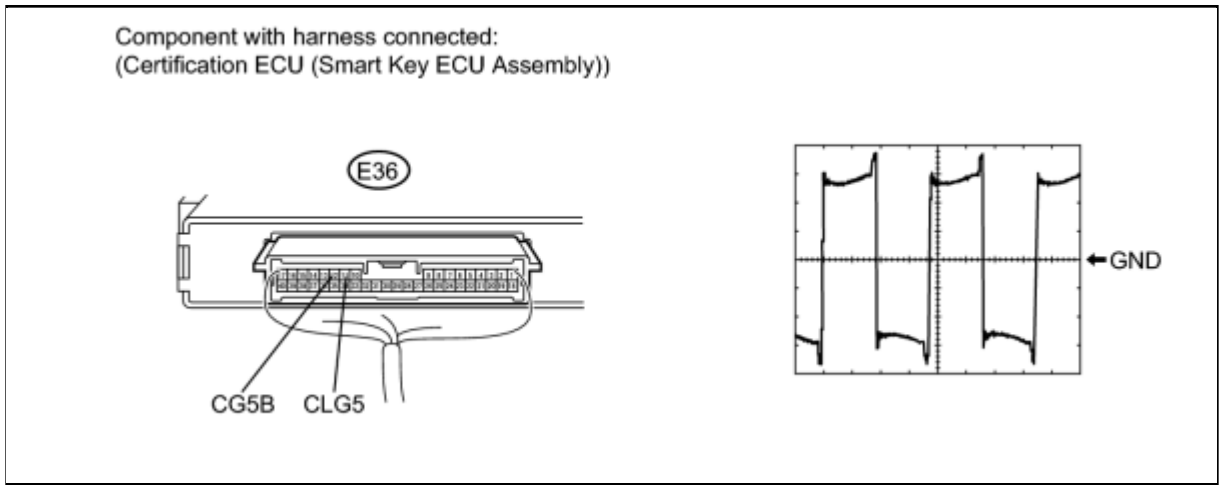

Standard:

TESTER CONNECTION	TOOL SETTING	SWITCH CONDITION	SPECIFIED CONDITION
E36-11 (CLG5) - E36-12 (CG5B)	2 V/DIV, 2 µs/DIV. (Reference)	Engine switch on (IG)	Pulse generation

NG ▶ **REPLACE CERTIFICATION ECU (SMART KEY ECU ASSEMBLY)**

OK ▶ **REPLACE INDOOR ELECTRICAL KEY OSCILLATOR (Front Side)**

7.	CHECK HARNESS AND CONNECTOR (CERTIFICATION ECU - INDOOR ELECTRICAL KEY OSCILLATOR)

(a) Disconnect the certification ECU (smart key ECU assembly) connector.

(b) Disconnect the indoor electrical key oscillator (rear

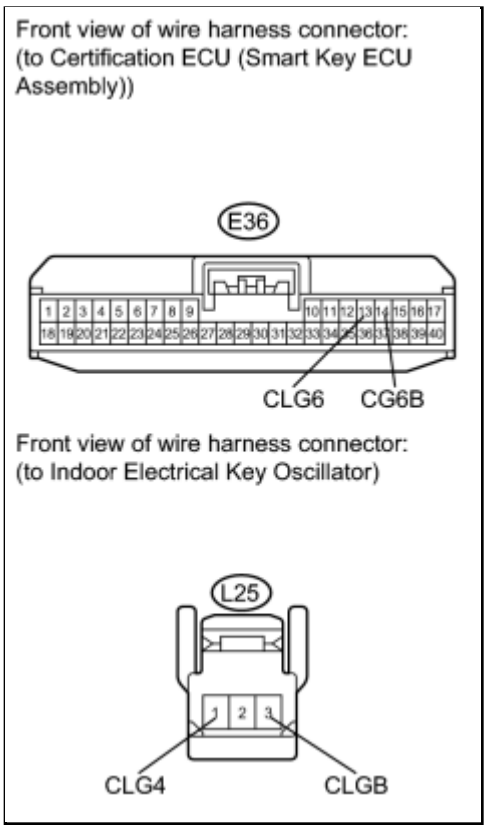

floor) connector.

(c) Measure the resistance according to the value(s) in the table below.

Standard Resistance:

TESTER CONNECTION	CONDITION	SPECIFIED CONDITION
E36-13 (CLG6) - L25-1 (CLG4)	Always	Below 1 Ω
E36-14 (CG6B) - L25-3 (CLGB)	Always	Below 1 Ω
E36-13 (CLG6) - Body ground	Always	10 kΩ or higher
E36-14 (CG6B) - Body ground	Always	10 kΩ or higher

NG ▶ **REPAIR OR REPLACE HARNESS OR CONNECTOR**

OK ▼

8.	**INSPECT INDOOR ELECTRICAL KEY OSCILLATOR (REAR FLOOR)**

(a) Measure the voltage according to the value(s) in the table below.

Component with harness connected:
(Certification ECU (Smart Key ECU Assembly))

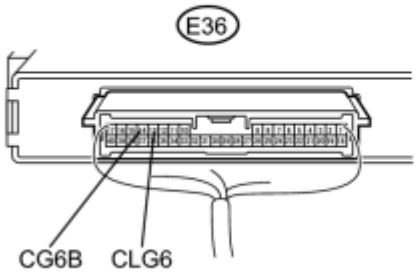

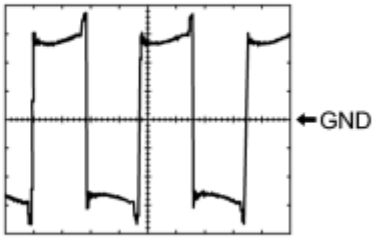

Standard:

TESTER CONNECTION	TOOL SETTING	SWITCH CONDITION	SPECIFIED CONDITION
E36-13 (CLG6) - E36-14 (CG6B)	2 V/DIV, 2 µs/DIV. (Reference)	Engine switch on (IG)	Pulse generation

NG ▶ **REPLACE CERTIFICATION ECU (SMART KEY ECU ASSEMBLY)**

OK ▶ **REPLACE INDOOR ELECTRICAL KEY OSCILLATOR (Rear Side)**

Last Modified: 3-10-2010	6.4 J	**From:** 200901
Model Year: 2010	**Model:** Corolla	**Doc ID:** RM000000XUW01OX
Title: THEFT DETERRENT / KEYLESS ENTRY: SMART KEY SYSTEM (for Entry Function): Key Luggage Compartment Lock-in Prevention Function does not Operate (2010 Corolla)		

Key Luggage Compartment Lock-in Prevention Function does not Operate

DESCRIPTION

If the key luggage compartment lock-in prevention function does not operate, either of the following may be the cause: 1) communication between the indoor electrical key oscillator (luggage compartment) and electrical key transmitter cannot be performed; or 2) a malfunction in the certification ECU (smart key ECU assembly).

WIRING DIAGRAM

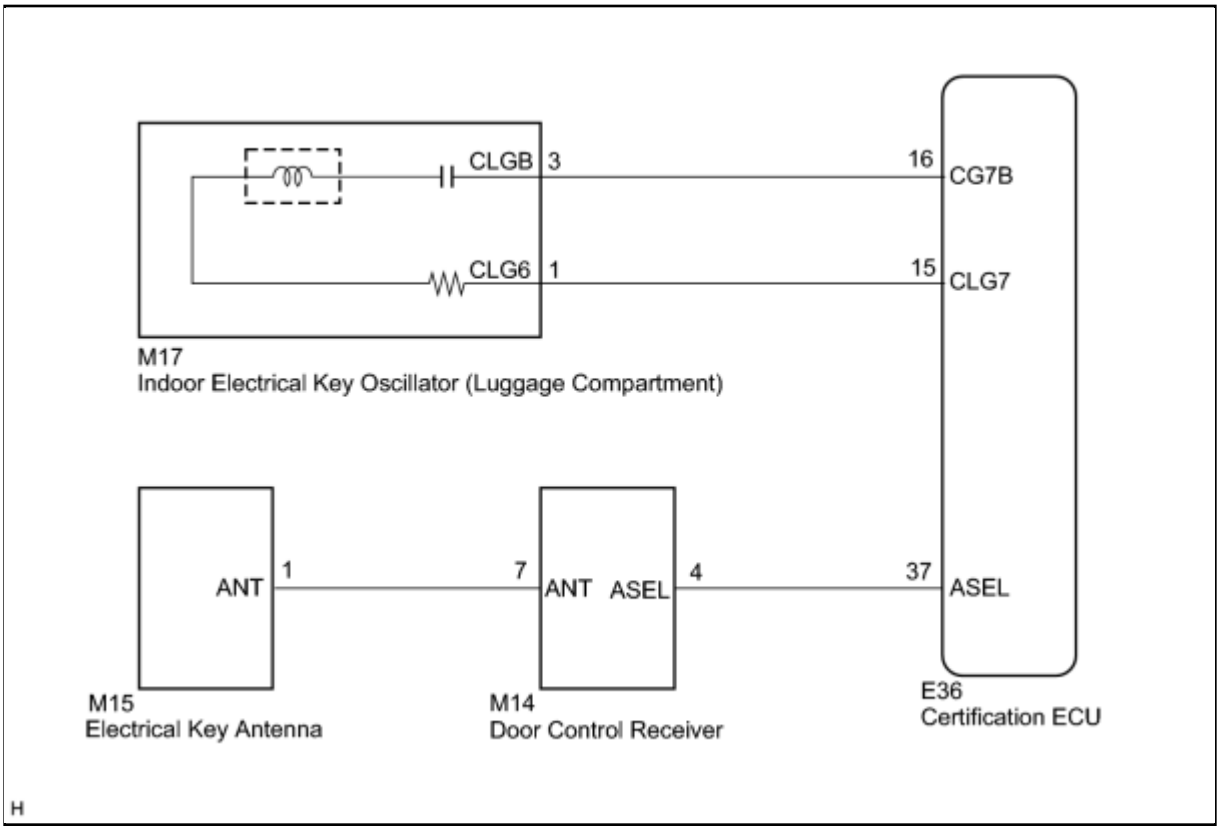

INSPECTION PROCEDURE

PROCEDURE

1.	**CHECK SMART KEY SYSTEM (Entry Function)**

(a) Check that the luggage compartment door entry unlock function operates.

Result:

RESULT	PROCEED TO
Luggage compartment door entry unlock function does not operate	A
Luggage compartment door entry unlock function operates	B

A ▶ **GO TO OTHER PROBLEM**

B ▼

2.	**CHECK WAVE ENVIRONMENT**

(a) Bring the electrical key transmitter near the indoor electrical key oscillator (luggage compartment), and check that the key luggage compartment lock-in prevention function operates.

NOTICE:

If the key is brought within 0.2 m (0.656 ft.) of the indoor electrical key oscillator, communication is not possible.

HINT:

- When the electrical key transmitter is brought near the indoor electrical key oscillator (luggage compartment), the possibility of wave interference decreases, and it can be determined if wave interference is causing the problem symptom.
- If the operation is normal, the possibility of wave interference is high. Also, added vehicle components may cause wave interference. If installed, remove them and perform the operation check.

OK:

Key lock-in prevention function operates normally.

NG ▶ **PERFORM KEY DIAGNOSTIC MODE INSPECTION**

OK ▶ **AFFECTED BY WAVE INTERFERENCE**

3.	PERFORM KEY DIAGNOSTIC MODE INSPECTION

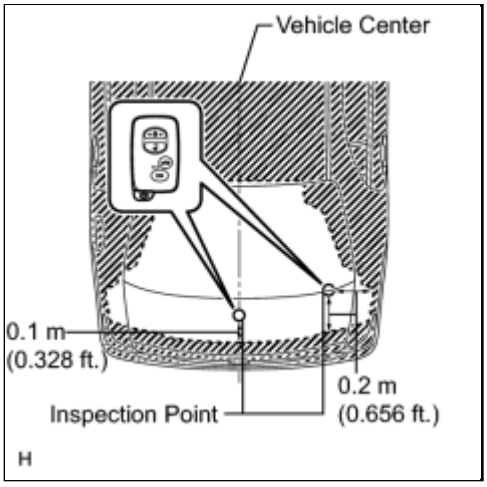

(a) Diagnostic mode inspection (indoor electrical key oscillator)

(1) Connect the Techstream to the DLC3.

(2) Turn the engine switch on (IG).

(3) Turn the Techstream on.

(4) Enter the following menus: Body Electrical / Smart Key / Utility / Communication Check (Key Diag Mode) / Overhead + Luggage (inside).

(5) When the electrical key transmitter is held at the same height as the rear bumper upper surface aligning it with the center of the rear of the vehicle, check that the wireless door lock buzzer sounds.

HINT:

If the buzzer sounds, it can be determined that the luggage compartment interior transmitter is operating normally.

OK:
Wireless door lock buzzer sounds.

NG ▶ **CHECK HARNESS AND CONNECTOR (CERTIFICATION ECU - INDOOR ELECTRICAL KEY OSCILLATOR)**

OK ▶ **REPLACE CERTIFICATION ECU (SMART KEY ECU ASSEMBLY)**

4.	CHECK HARNESS AND CONNECTOR (CERTIFICATION ECU - INDOOR ELECTRICAL KEY OSCILLATOR)

(a) Disconnect the certification ECU (smart key ECU assembly) connector.

(b) Disconnect the indoor electrical key oscillator connector.

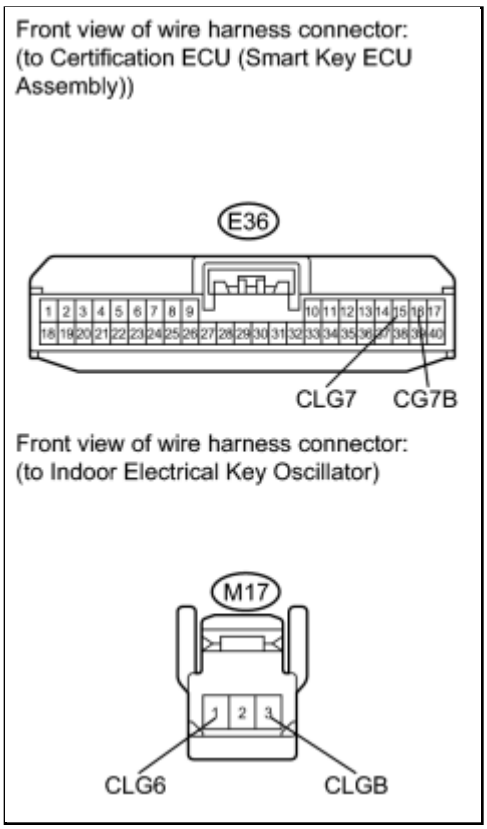

(c) Measure the resistance according to the value(s) in the table below.

Standard Resistance:

TESTER CONNECTION	CONDITION	SPECIFIED CONDITION
E36-16 (CG7B) - M17-3 (CLGB)	Always	Below 1 Ω
E36-15 (CLG7) - M17-1 (CLG6)	Always	Below 1 Ω
E36-16 (CG7B) - Body ground	Always	10 kΩ or higher
E36-15 (CLG7) - Body ground	Always	10 kΩ or higher

NG ▶ **REPAIR OR REPLACE HARNESS OR CONNECTOR**

OK ▼

5.	**CHECK HARNESS AND CONNECTOR (CERTIFICATION ECU - DOOR CONTROL RECEIVER)**

(a) Disconnect the door control receiver connector.

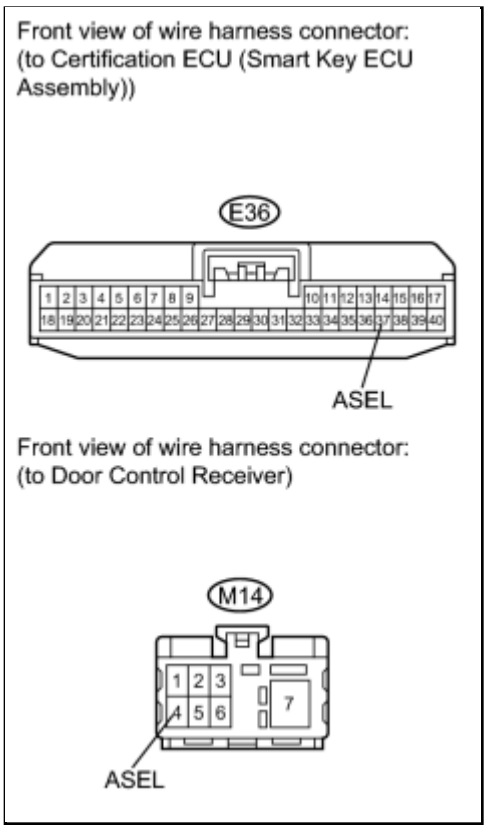

(b) Measure the resistance according to the value(s) in the table below.

Standard Resistance:

TESTER CONNECTION	CONDITION	SPECIFIED CONDITION
E36-37 (ASEL) - M14-4 (ASEL)	Always	Below 1 Ω
E36-37 (ASEL) - Body ground	Always	10 kΩ or higher

NG ▶ **REPAIR OR REPLACE HARNESS OR CONNECTOR**

OK ▼

6.	**CHECK HARNESS AND CONNECTOR (DOOR CONTROL RECEIVER - ELECTRICAL KEY ANTENNA)**

(a) Disconnect the electrical key antenna connector.

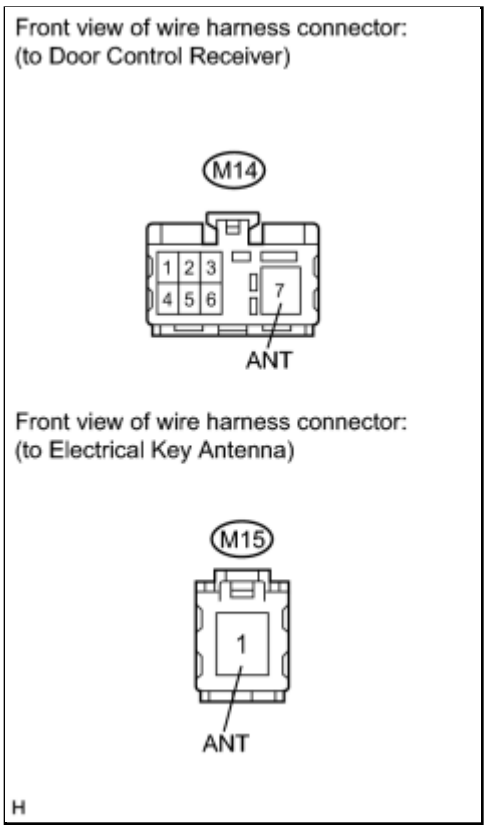

(b) Measure the resistance according to the value(s) in the table below.

Standard Resistance:

TESTER CONNECTION	CONDITION	SPECIFIED CONDITION
M14-7 (ANT) - M15-1 (ANT)	Always	Below 1 Ω
M14-7 (ANT) - Body ground	Always	10 kΩ or higher

NG ▶ **REPAIR OR REPLACE HARNESS OR CONNECTOR**

OK ▼

7.	**REPLACE INDOOR ELECTRICAL KEY OSCILLATOR (Luggage Compartment)**

(a) Replace the indoor electrical key oscillator (luggage compartment) INFO .

NEXT

8.	CHECK INDOOR ELECTRICAL KEY OSCILLATOR (OPERATION)

(a) Check that the entry functions operate normally.

OK:

Entry functions operate normally.

NG ▶ REPLACE ELECTRICAL KEY ANTENNA

OK ▶ END (INDOOR ELECTRICAL KEY OSCILLATOR IS DEFECTIVE)

9.	REPLACE ELECTRICAL KEY ANTENNA

(a) Replace the indoor electrical key antenna.

NEXT

10.	CHECK ELECTRICAL KEY ANTENNA (OPERATION)

(a) Check that the entry functions operate normally.

OK:

Entry functions operate normally.

NG ▶ REPLACE CERTIFICATION ECU (SMART KEY ECU ASSEMBLY)

OK ▶ END (ELECTRICAL KEY ANTENNA IS DEFECTIVE)

Last Modified: 3-10-2010	6.4 J	**From:** 200901
Model Year: 2010	**Model:** Corolla	**Doc ID:** RM000000XUX02CX
Title: THEFT DETERRENT / KEYLESS ENTRY: SMART KEY SYSTEM (for Entry Function): Entry Interior Alarm does not Sound (2010 Corolla)		

Entry Interior Alarm does not Sound

DESCRIPTION

The smart key system uses the combination meter buzzer to perform various vehicle interior warnings. When each warning's conditions are met, the certification ECU (smart key ECU assembly) sends a buzzer signal to the meter ECU, and the combination meter buzzer sounds.

INSPECTION PROCEDURE

PROCEDURE

1.	**CHECK COMBINATION METER ASSEMBLY (OPERATION)**

(a) Turn the engine switch on (IG). Place luggage on the front passenger seat to cause the front passenger seat belt warning light to blink.

(b) When driving the vehicle at 15 km/h (9 mph) or higher, check that the seat belt warning buzzer sounds to inform that the passenger seat belt is not fastened.

HINT:

The smart key system sounds the buzzer built into the combination meter for indoor warnings. This buzzer is also used for the seat belt warning system. Therefore, check the operation of the combination meter buzzer by checking if the buzzer sounds to inform that the seat belt is not fastened.

OK:
Combination meter buzzer sounds.

NG ▶ **GO TO METER / GAUGE SYSTEM**

OK ▶ **REPLACE CERTIFICATION ECU (SMART KEY ECU ASSEMBLY)**

Last Modified: 3-10-2010	6.4 R	**From:** 200901
Model Year: 2010	**Model:** Corolla	**Doc ID:** RM000000YEE041X
Title: THEFT DETERRENT / KEYLESS ENTRY: SMART KEY SYSTEM (for Start Function): PARTS LOCATION (2010 Corolla)		

PARTS LOCATION

ILLUSTRATION

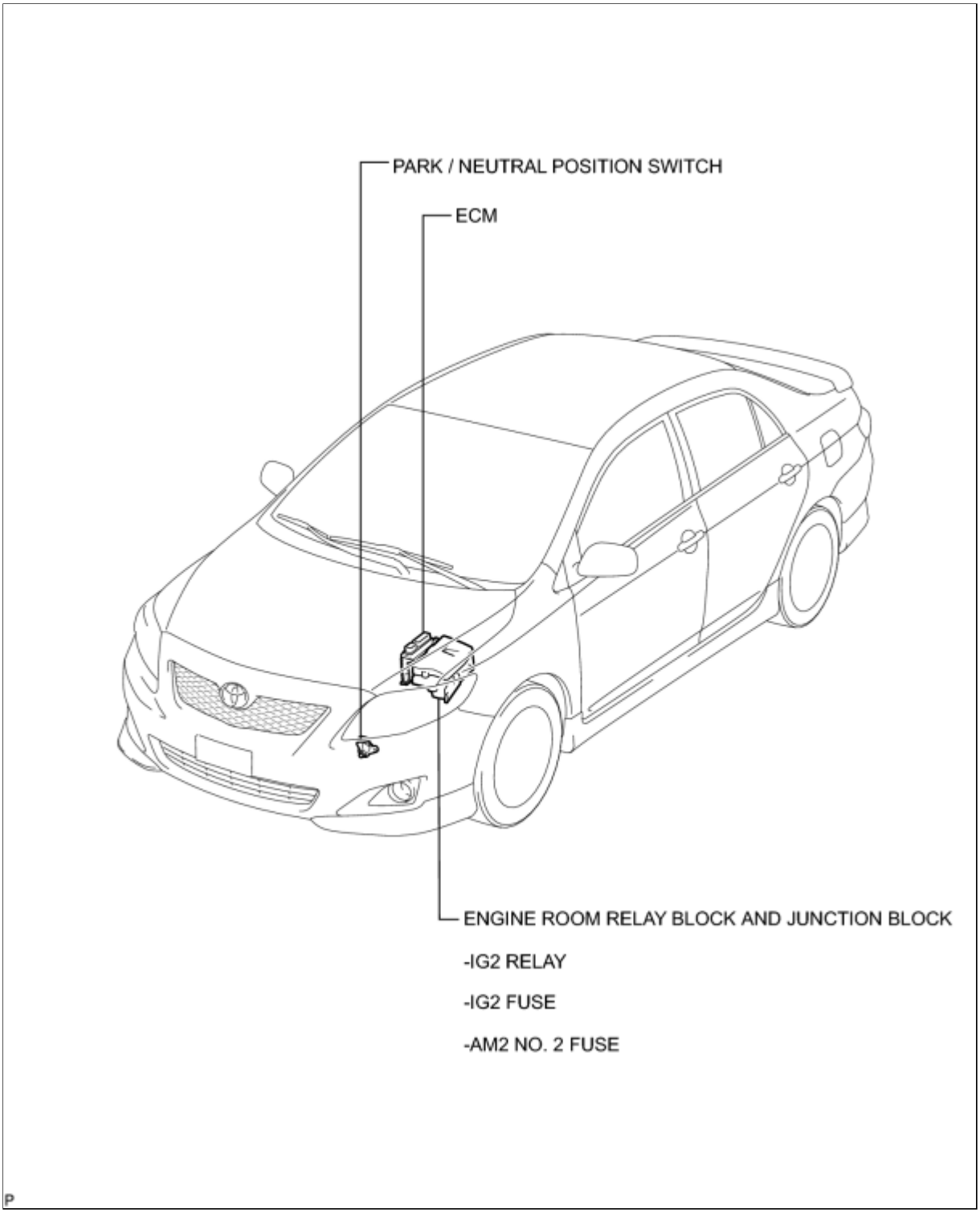

ILLUSTRATION

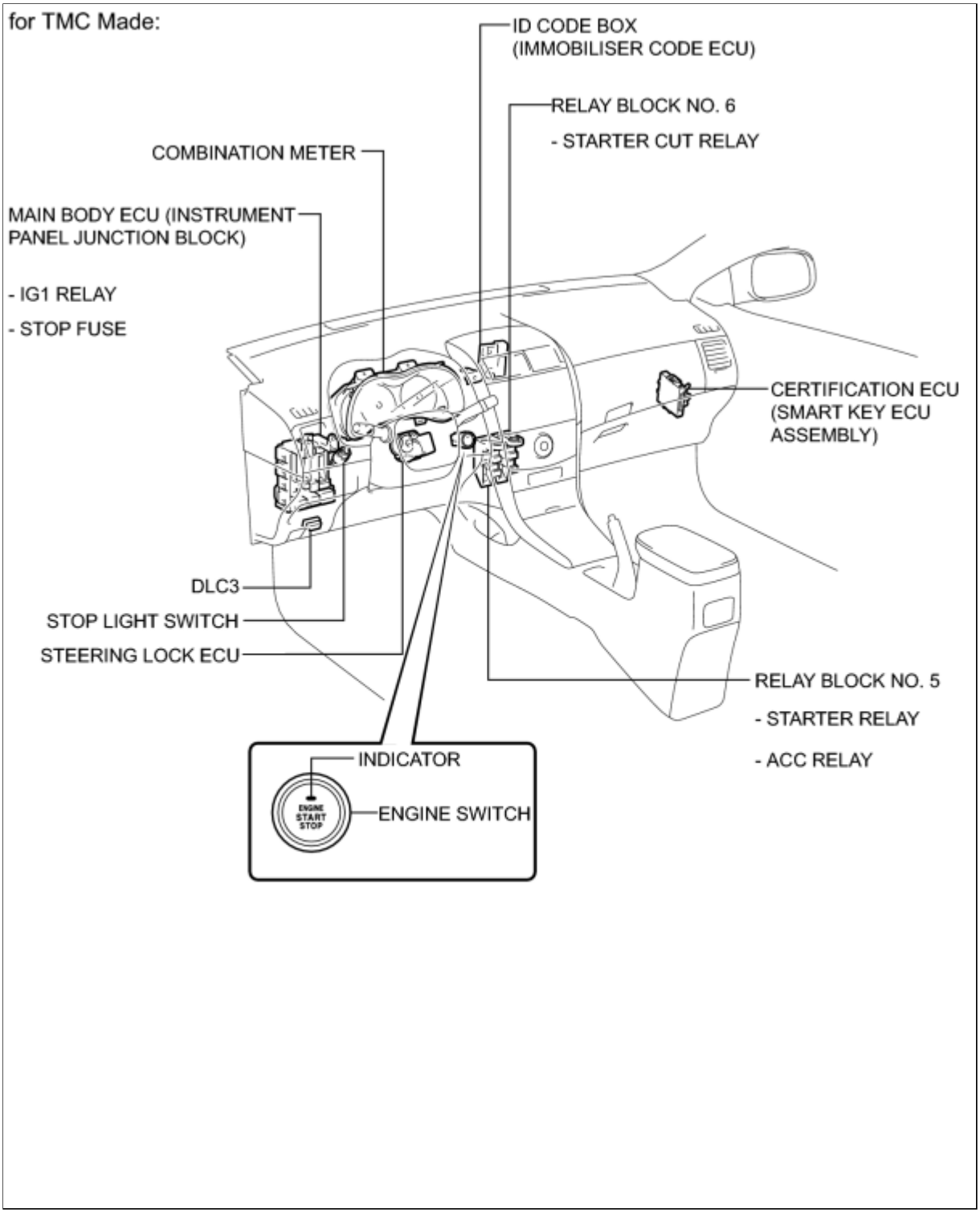

ILLUSTRATION

for except TMC Made:

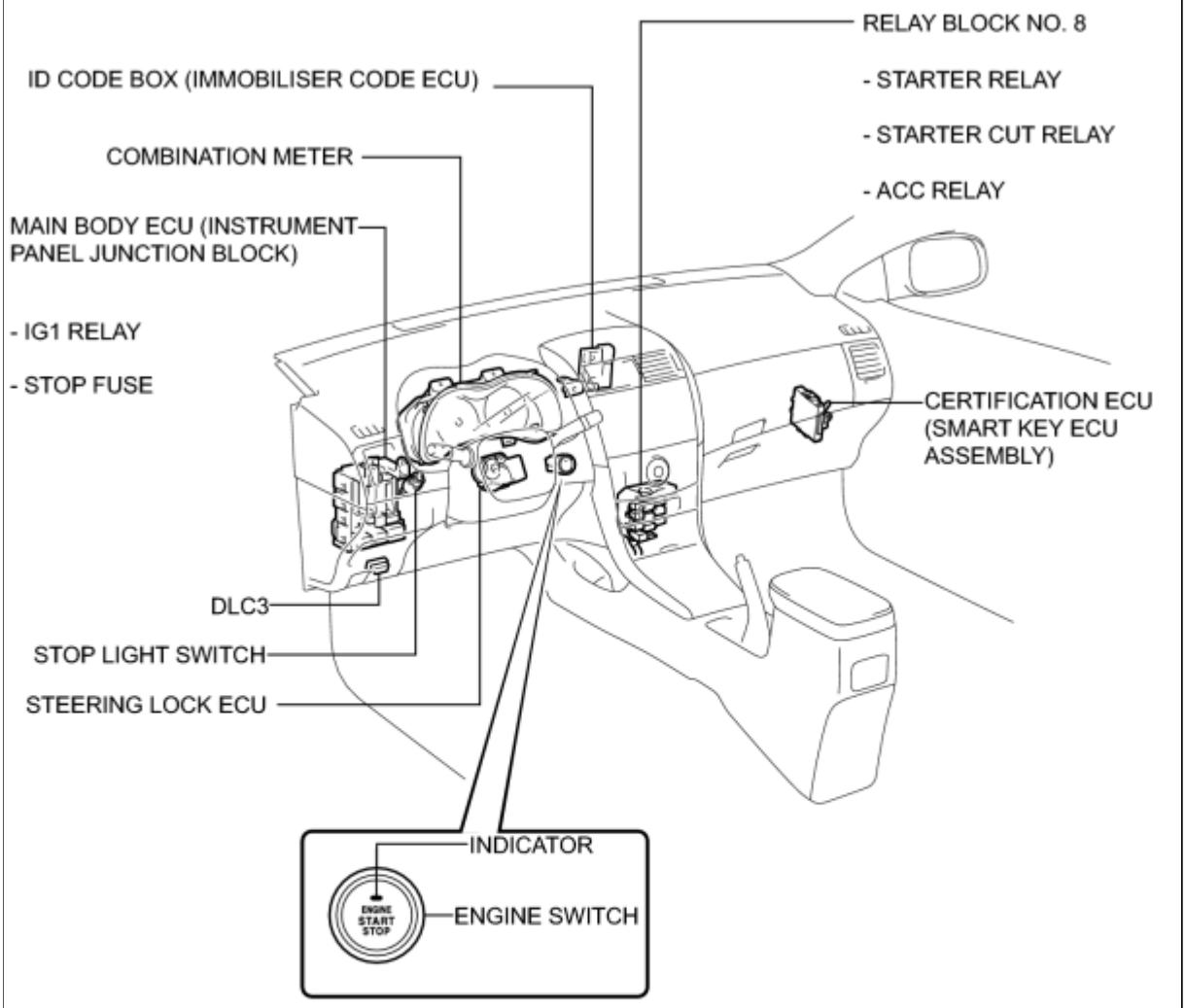

Last Modified: 3-10-2010	6.4 L	**From:** 200901
Model Year: 2010	**Model:** Corolla	**Doc ID:** RM000000YED053X
Title: THEFT DETERRENT / KEYLESS ENTRY: SMART KEY SYSTEM (for Start Function): PRECAUTION (2010 Corolla)		

PRECAUTION

1. EMERGENCY ENGINE START CONTROL

(a) If there is a malfunction in the stop light switch or STOP fuse, their signals may not be correctly transmitted to the main body ECU (instrument panel junction block). This may result in the engine not starting even if the engine switch is pressed while the brake pedal is depressed and the shift lever is in the P or N.

To activate the starter:

(1) Turn the engine switch from off to on (ACC).

(2) Press and hold the engine switch for 15 seconds.

2. PRECAUTIONS FOR PUSH-BUTTON START FUNCTION:

(a) Before starting the engine, firmly depress the brake pedal until the indicator in the engine switch turns green.

(b) The power source mode (off, on (ACC), on (IG)) is always retained in memory by the vehicle. If the battery is disconnected, the power source mode that was present before disconnection will be restored after the battery is reconnected. Be sure to turn the engine switch off before disconnecting the cable from the negative battery terminal. Be careful if the power source mode of a vehicle with a discharged battery is not known.

(c) After the battery is reconnected, be sure to wait 10 seconds or more before attempting to start the engine. The engine may not start immediately after the battery is reconnected.

(d) If the electrical key is held near the engine switch to start the engine when the electrical key battery is depleted, the following warnings will sound:

(1) Driver's door open → closed

- An exit warning will sound if the power source is in a mode other than off.

(2) Doors other than the driver door open → closed

- A warning will sound to indicate that the electrical key has been taken out of the vehicle.

These warnings will sound because it is not possible for the vehicle to determine if the key is present in the vehicle (due to the depleted key battery). These warnings do not indicate system malfunctions.

Last Modified: 3-10-2010	6.4 D	**From:** 200901
Model Year: 2010	**Model:** Corolla	**Doc ID:** RM000000XI304RX
Title: THEFT DETERRENT / KEYLESS ENTRY: SMART KEY SYSTEM (for Start Function): SYSTEM DESCRIPTION (2010 Corolla)		

SYSTEM DESCRIPTION

1. PUSH-BUTTON START FUNCTION DESCRIPTION

(a) The push-button start function uses a push-type engine switch, which the driver can operate by merely carrying the electrical key. This system consists primarily of the main body ECU (instrument panel junction block), engine switch, ID code box (immobiliser code ECU), steering lock ECU, electrical key, ACC relay, IG1 relay, IG2 relay and certification ECU (smart key ECU assembly). The main body ECU (instrument panel junction block) controls the function. This function operates in cooperation with the smart key system.

2. FUNCTION OF COMPONENT

COMPONENT	FUNCTION
Engine switch • Transponder key amplifier	• Transmits engine switch signal to main body ECU (instrument panel junction block). • Informs driver of power source mode or system abnormality with illumination of indicator light. • Receives ID code and transmits it to certification ECU (smart key ECU assembly) when key battery is low.
Electrical key	Receives signals from oscillators and returns ID code to door control receiver.
Indoor oscillator • Front and rear	Receives request signals from certification ECU (smart key ECU assembly) and forms detection area in vehicle interior.
Steering lock ECU	Receives lock/unlock request signals from certification ECU (smart key ECU assembly) and main body ECU (instrument panel junction block).
Stop light switch	Outputs state of brake pedal to main body ECU (instrument panel junction block).
Door control receiver	Receives ID code from electrical key and transmits it to certification ECU (smart key ECU assembly).
Main body ECU (instrument panel junction block)	• Changes power source mode in 4 stages (off, on (ACC), on (IG), start) in accordance with shift position and state of stop light switch. • Controls push-button start function in accordance with signals received from switches and each ECU.
Certification ECU (smart key ECU assembly)	Certifies ID code received from door control receiver and transmits certification results to ID code box (immobiliser code ECU) and steering lock ECU.

COMPONENT	FUNCTION
ID code box (immobiliser code ECU)	Receives steering unlock or engine immobiliser unset signals from certification ECU (smart key ECU assembly), certifies them, and transmits each unset signal to steering lock ECU or ECM.
ECM	• Receives engine start request signal from main body ECU (instrument panel junction block), turns ON starter relay, and starts engine. • Receives signal from ID code box (immobiliser code ECU) and performs engine ignition and injection.

3. SYSTEM FUNCTION

The electric controls of the push-button start function are described below:

CONTROL	OUTLINE
Engine switch control	When driver operates engine switch with electrical key in driver's possession, certification ECU (smart key ECU assembly) starts indoor oscillator, which transmits request signal to electrical key. Upon receiving this signal, the electrical key transmits ID code matching result signal to main body ECU (instrument panel junction block).
Diagnosis	When main body ECU (instrument panel junction block) detects malfunction, main body ECU (instrument panel junction block) diagnoses and memorizes failed section.

4. CONSTRUCTION AND OPERATION

(a) Engine Switch

The engine switch consists of a momentary type switch, 2 color (amber, green) LEDs, and a transponder key amplifier.

- The amber and green LEDs are for the indicator lights. The driver can check the present power source mode and whether the engine can start in accordance with the illumination state of the indicator light.
- When the main body ECU (instrument panel junction block) detects an abnormality in the push-button start function, it makes the amber indicator light flash. If the engine is stopped in this state, it may not be possible to restart it.

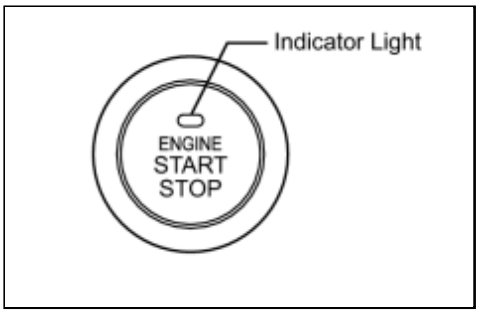

(b) Indicator Light Condition

Engine Switch Indicator Light Condition

POWER SOURCE	INDICATOR LIGHT CONDITION

MODE/CONDITION		
	BRAKE PEDAL RELEASED	BRAKE PEDAL DEPRESSED, SHIFT LEVER IN P OR N
off	OFF	ON (Green) (When key and vehicle IDs match)
on (ACC, IG)	ON (Amber)	ON (Green)
Engine running	OFF	OFF
Steering lock not unlocked	Flashes (Green) for 15 sec.	Flashes (Green) for 15 sec.
System malfunction	Flashes (Amber) for 15 sec.	Flashes (Amber) for 15 sec.

(c) Main body ECU (instrument panel junction block)

The main body ECU (instrument panel junction block) consists of the IG1 and IG2 relay actuation circuits and CPU.

HINT:

Before removing the battery, make sure to turn the engine switch off. The main body ECU (instrument panel junction block) constantly stores the present power source mode in its memory. Therefore, if the main body ECU (instrument panel junction block) is interrupted by disconnecting the battery, the main body ECU (instrument panel junction block) restores the power source mode after the battery is reconnected. For this reason, if the battery is disconnected when the engine switch is not off, the power will be restored to the vehicle at the same time the power is restored to the main body ECU (instrument panel junction block) (by reconnecting the battery).

5. PUSH-BUTTON START FUNCTION OPERATION

(a) This system has different power source mode patterns depending on the brake pedal condition and shift lever position.

BRAKE PEDAL	SHIFT LEVER	POWER SOURCE MODE PATTERN
Depressed	P or N	When the engine switch is pushed once. • off → engine start • on (ACC) → engine start • on (IG) → engine start

BRAKE PEDAL	SHIFT LEVER	POWER SOURCE MODE PATTERN
Not depressed	P	Each time the engine switch is pushed. • off → on (ACC) → on (IG) → off
	Except P	Each time the engine switch is pushed. • off → on (ACC) → on (IG) → on (ACC)
-	P	When the engine switch is pushed with power source mode on (IG) (engine running). • on (IG) → off
-	Except P	When the engine switch is pushed with power source mode on (IG) (engine running). • on (IG) → on (ACC)

When the battery of the key is low, the push-button start function can be operated by holding the key against the engine switch.

- After approximately 1 hour has passed with the engine switch on (ACC) and the shift position in P, the main body ECU (instrument panel junction block) will automatically cut the power supply (the power source mode changes to off).
- The illustration below shows the transition of power source modes.

Transition of power source mode:

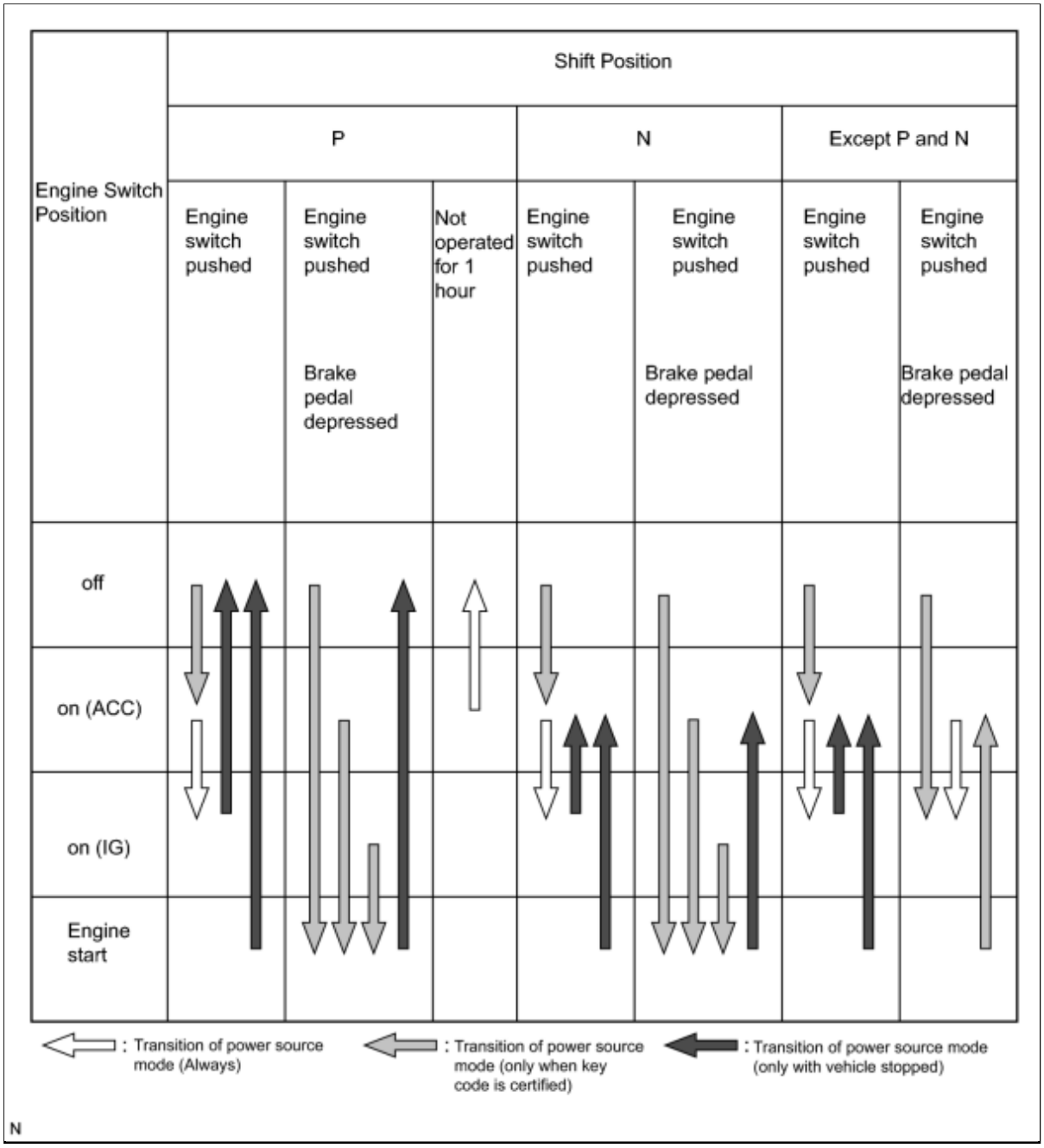

HINT:

While the vehicle is being driven normally, operation of the engine switch is disabled. However, if the engine must be stopped in an emergency while the vehicle is being driven, pressing the engine switch for 3 seconds or more stops the engine. Power source mode changes from start to on (ACC).

6. WHEN KEY BATTERY IS LOW

(a) To operate the push-button start function when the key battery is low, hold the key close to the engine switch with the brake pedal depressed.

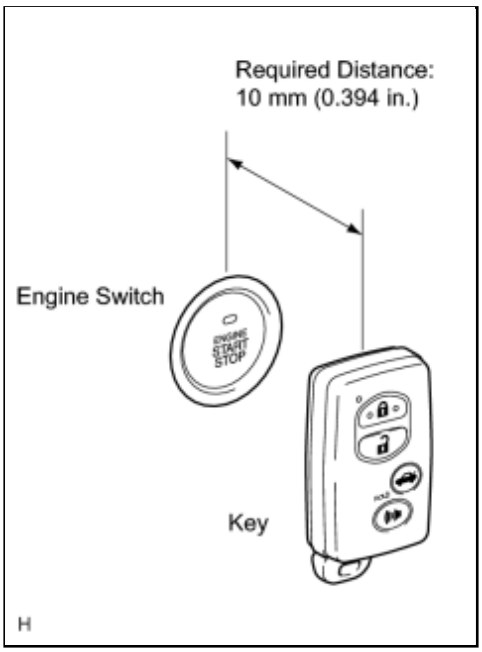

(b) The main body ECU (instrument panel junction block) transmits a key verification request signal to the certification ECU (smart key ECU assembly).

(c) The certification ECU (smart key ECU assembly) does not receive an ID code response from the door control receiver, so it actuates the transponder key amplifier built into the engine switch.

(d) The transponder key amplifier outputs an engine immobiliser radio wave to the key.

(e) The key receives the radio wave, and returns a radio wave response to the transponder key amplifier.

(f) The transponder key amplifier combines the key ID codes with the radio wave response, and transmits it to the certification ECU (smart key ECU assembly).

(g) The certification ECU (smart key ECU assembly) judges and verifies the ID code, and transmits a key verification OK signal to the main body ECU (instrument panel junction block). The buzzer in the combination meter sounds at the same time.

(h) After the buzzer sounds, if the engine switch is pressed within 5 seconds with the brake pedal not depressed, the power source mode changes to on (ACC) or on (IG), the same as in the normal condition.

7. DIAGNOSIS

The main body ECU (instrument panel junction block) can detect malfunctions in the push-button start function when the power source mode is on (IG).

When the ECU detects a malfunction, the amber or green indicator light of the engine switch flashes to warn the driver. At the same time, the ECU stores a 5-digit DTC (Diagnostic Trouble Code) in the memory.

- The indicator light warning continues for 15 seconds even after the power source mode is changed to off.
- The DTC can be read by connecting the Techstream to the DLC3.
- The push-button start function cannot be operated if a malfunction occurs.

Last Modified: 3-10-2010	6.4 U	**From:** 200901
Model Year: 2010	**Model:** Corolla	**Doc ID:** RM000000XI4045X
Title: THEFT DETERRENT / KEYLESS ENTRY: SMART KEY SYSTEM (for Start Function): SYSTEM DIAGRAM (2010 Corolla)		

SYSTEM DIAGRAM

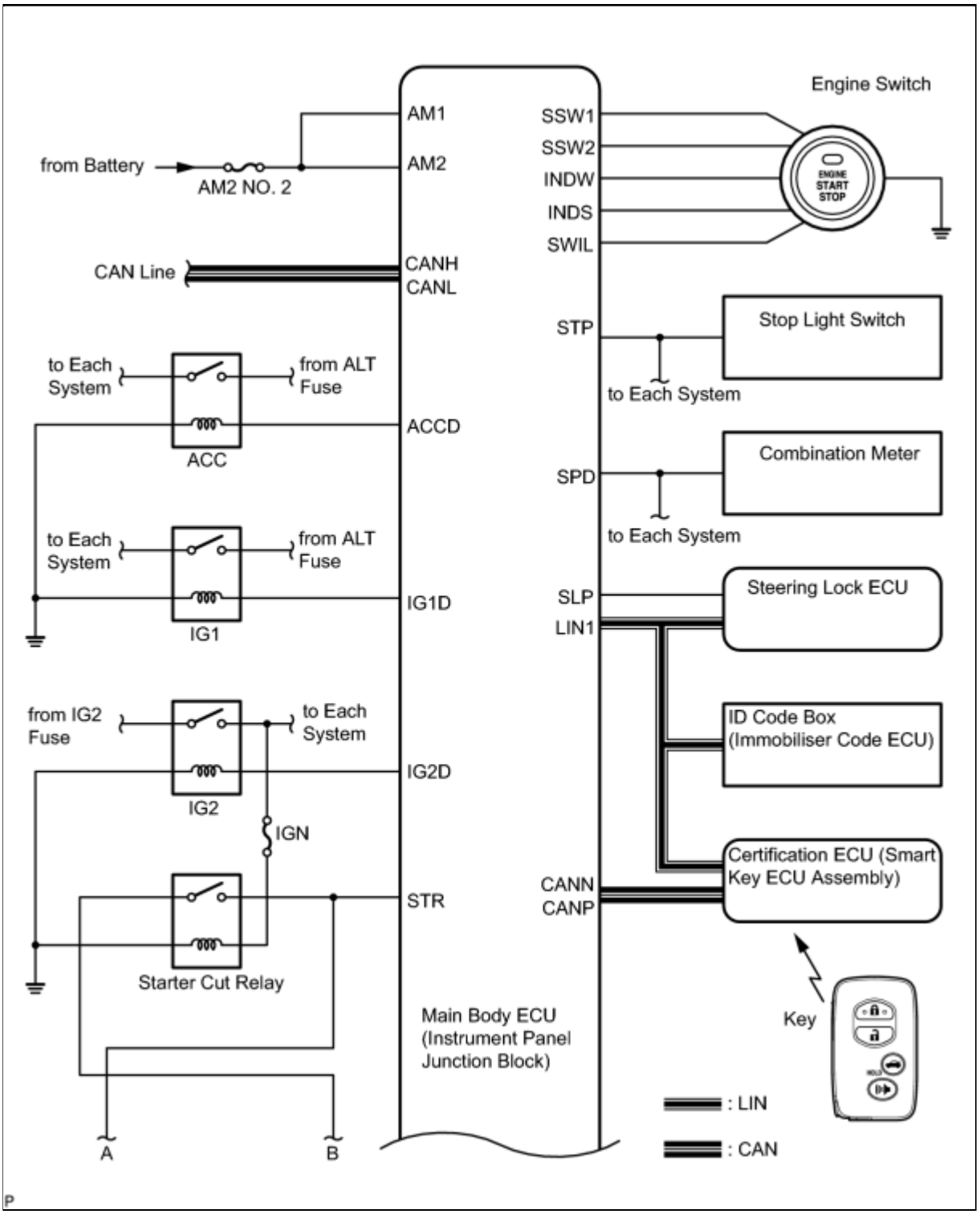

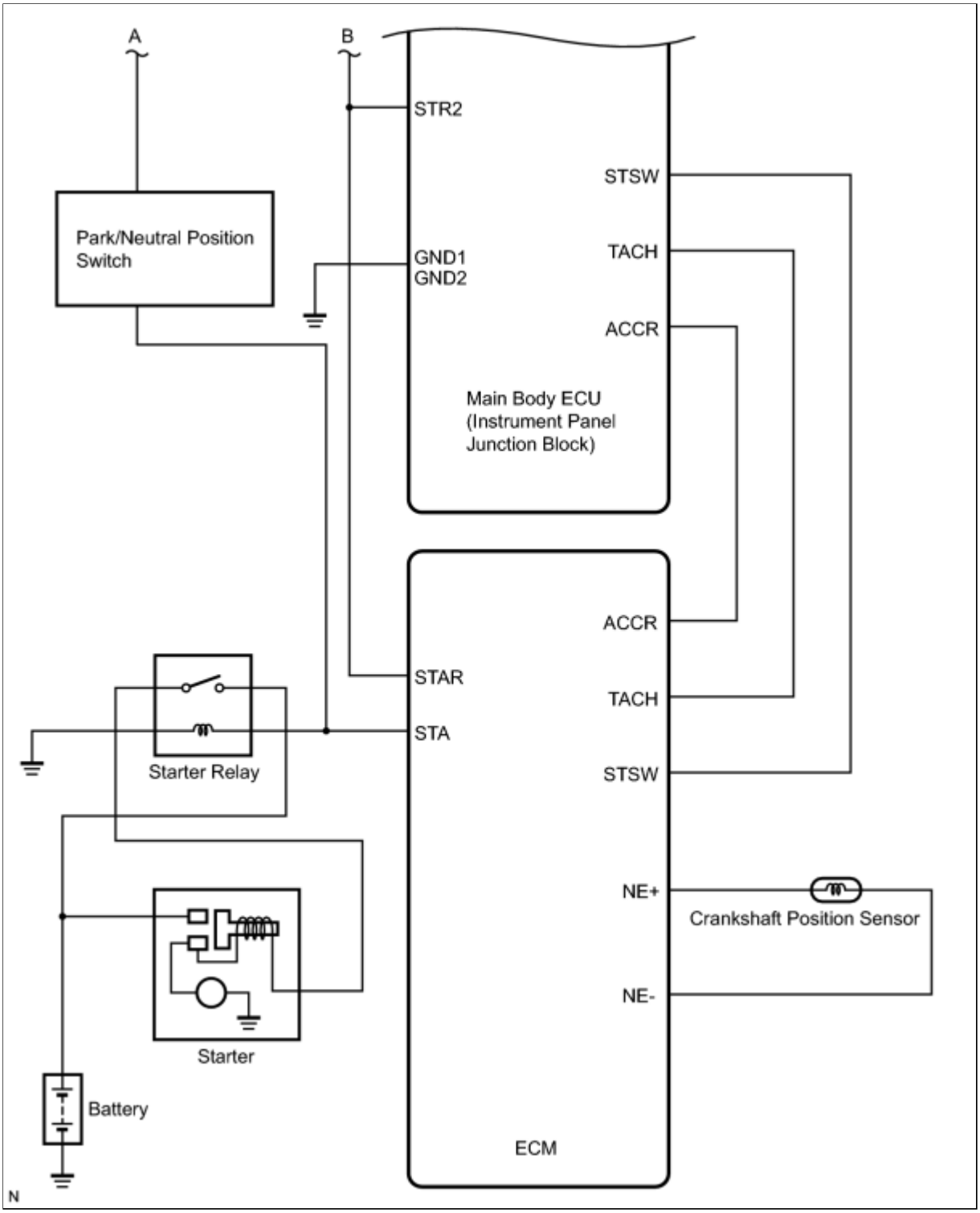

Communication Table

TRANSMITTING ECU (TRANSMITTER)	RECEIVING ECU (RECEIVER)	SIGNAL	COMMUNICATION METHOD
Combination meter	Main body ECU (instrument panel junction block)	Vehicle speed signal	CAN/Local communication
Steering lock ECU	Main body ECU (instrument panel junction block)	Steering lock/unlock signal	LIN/Local communication

TRANSMITTING ECU (TRANSMITTER)	RECEIVING ECU (RECEIVER)	SIGNAL	COMMUNICATION METHOD
ECM	Main body ECU (instrument panel junction block)	Starter signal	CAN
		Shift position signal	
		Engine revolution speed signal	CAN/Local communication
Main body ECU (instrument panel junction block)	Certification ECU (smart key ECU assembly)	Engine switch position signal	CAN
		Courtesy light switch signal	
		Wireless door lock buzzer request signal	
Certification ECU (smart key ECU assembly)	Main body ECU (instrument panel junction block)	Illumination light request signal	CAN
Certification ECU (smart key ECU assembly)	Main body ECU (instrument panel junction block)	Light answer back signal	CAN
Certification ECU (smart key ECU assembly)	Combination meter	Meter buzzer single-shot request signal	CAN
		Meter buzzer intermittence request signal	
		Meter buzzer continuation request signal	
		Door open display signal	
		Key loss warning signal	
		Low key battery warning signal	
		Shift position warning signal	
		Steering lock abnormal warning	
		Steering lock unlock warning	

TRANSMITTING ECU (TRANSMITTER)	RECEIVING ECU (RECEIVER)	SIGNAL	COMMUNICATION METHOD
Combination meter	Certification ECU (smart key ECU assembly) / Main body ECU (instrument panel junction block)	Vehicle speed signal	CAN
Certification ECU (smart key ECU assembly)	Main body ECU (instrument panel junction block)	Key ID matching request signal	LIN
Main body ECU (instrument panel junction block)	Certification ECU (smart key ECU assembly)	ID required signal	LIN



Last Modified: 3-10-2010	6.4 D	**From:** 200901
Model Year: 2010	**Model:** Corolla	**Doc ID:** RM000000YEF057X
Title: THEFT DETERRENT / KEYLESS ENTRY: SMART KEY SYSTEM (for Start Function): HOW TO PROCEED WITH TROUBLESHOOTING (2010 Corolla)		

HOW TO PROCEED WITH TROUBLESHOOTING

HINT:

- Use the following procedures to troubleshoot the push-button start function.
- *: Use the Techstream.

1.	**VEHICLE BROUGHT TO WORKSHOP**

NEXT

2.	**CUSTOMER PROBLEM ANALYSIS CHECK**

HINT:

- In troubleshooting, confirm that the problem symptoms have been accurately identified. Preconceptions should be discarded in order to make an accurate judgment. To clearly understand what the problem symptoms are, it is extremely important to ask the customer about the problem and the conditions at the time the malfunction occurred.
- Gather as much information as possible for reference. Past problems that seem unrelated may also help in some cases.
  - The following 5 items are important points in the problem analysis:

What	Vehicle model, system name
When	Date, time, occurrence frequency
Where	Road conditions
Under what conditions?	Running conditions, driving conditions, weather conditions
How did it happen?	Problem symptoms

NEXT

3.	**INSPECT BATTERY VOLTAGE**

Standard voltage:
11 to 14 V

If the voltage is below 11 V, recharge or replace the battery before proceeding.

NEXT

4.	**INSPECT COMMUNICATION FUNCTION OF CAN COMMUNICATION SYSTEM***

(a) Use the Techstream to check if the CAN Communication System is functioning normally INFO .

Result:

RESULT	PROCEED TO
CAN DTC is not output	A
CAN DTC is output	B

B INFO **GO TO CAN COMMUNICATION SYSTEM**

A

5.	**CHECK FOR DTC***

(a) Check for DTCs and note any codes that are output INFO .

(b) Clear the DTCs.

(c) Recheck for DTCs.

Result:

RESULT	PROCEED TO
DTC does not reoccur	A
DTC reoccurs	B

B **INFO** **GO TO DIAGNOSTIC TROUBLE CODE CHART**

A

6.	INSPECT BASIC OPERATION

(a) Turn the engine switch on (START) and check that the engine starts normally. Make sure that the brake pedal is depressed and the shift position is P at this time.

(b) Check that the engine switch mode can be changed by pushing the engine switch.

HINT:

Without depressing the brake pedal, push the engine switch repeatedly. Engine switch mode should turn from off to on (ACC) to on (IG) and back to off.

With the brake pedal depressed, push the engine switch repeatedly. Engine switch mode should turn to ENGINE START from any status.

OK:

Engine can start normally.

NEXT

7.	PROBLEM SYMPTOMS TABLE

Result:

RESULT	PROCEED TO
Fault is not listed in the problem symptoms table	A

RESULT	PROCEED TO
Fault is listed in the problem symptoms table	B

B ▶ **Go to step 9**

A

▼

8.	OVERALL ANALYSIS AND TROUBLESHOOTING*

(a) Terminal of ECU INFO .

(b) Data List/Active Test INFO .

NEXT

▼

9.	REPAIR OR REPLACE

NEXT

▼

10.	CONFIRMATION TEST

NEXT ▶ **END**

Last Modified: 3-10-2010	6.4 U	**From:** 200901
Model Year: 2010	**Model:** Corolla	**Doc ID:** RM000000XI204FX
Title: THEFT DETERRENT / KEYLESS ENTRY: SMART KEY SYSTEM (for Start Function): TERMINALS OF ECU (2010 Corolla)		

TERMINALS OF ECU

1. CHECK MAIN BODY ECU (INSTRUMENT PANEL JUNCTION BLOCK)

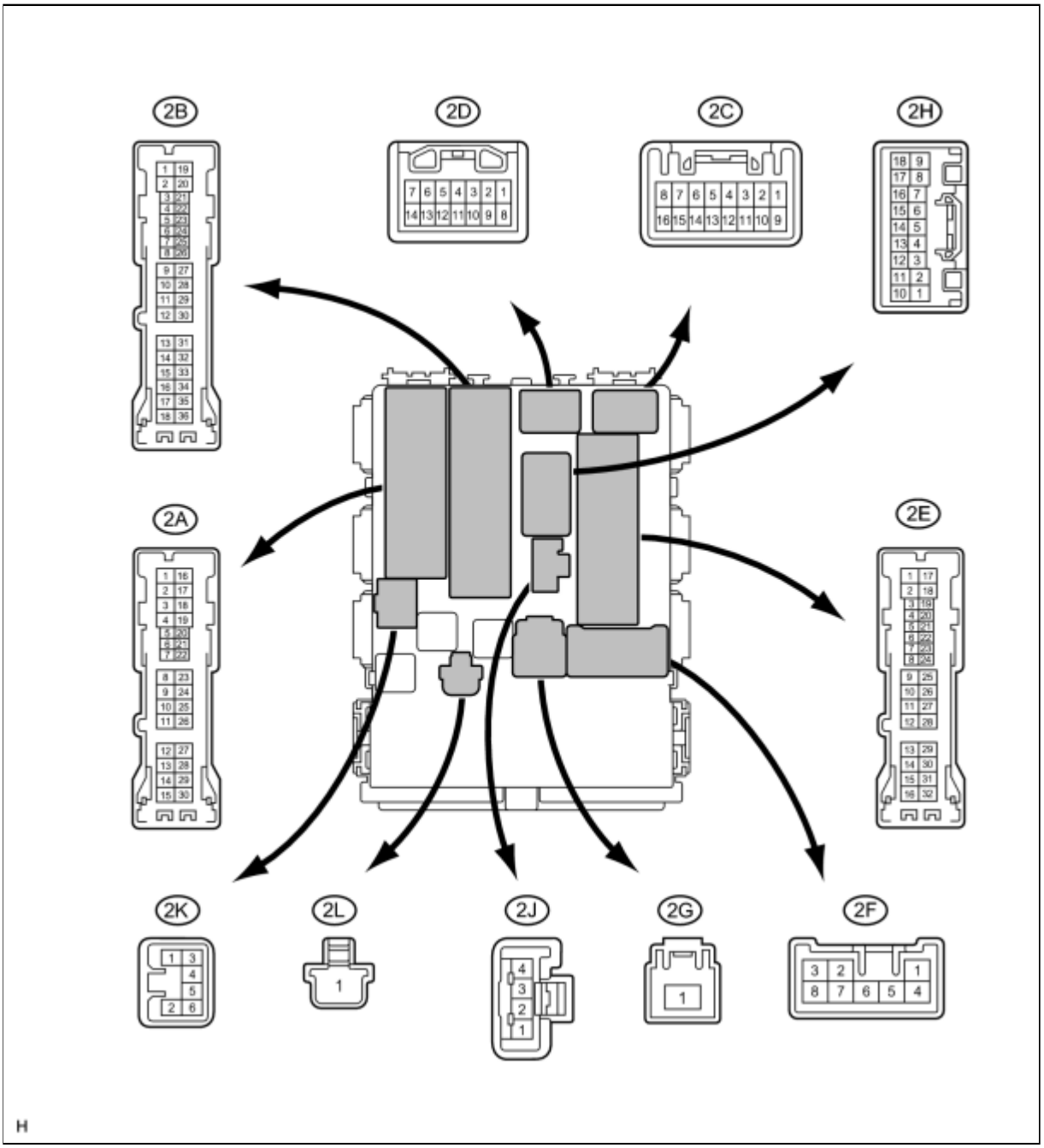

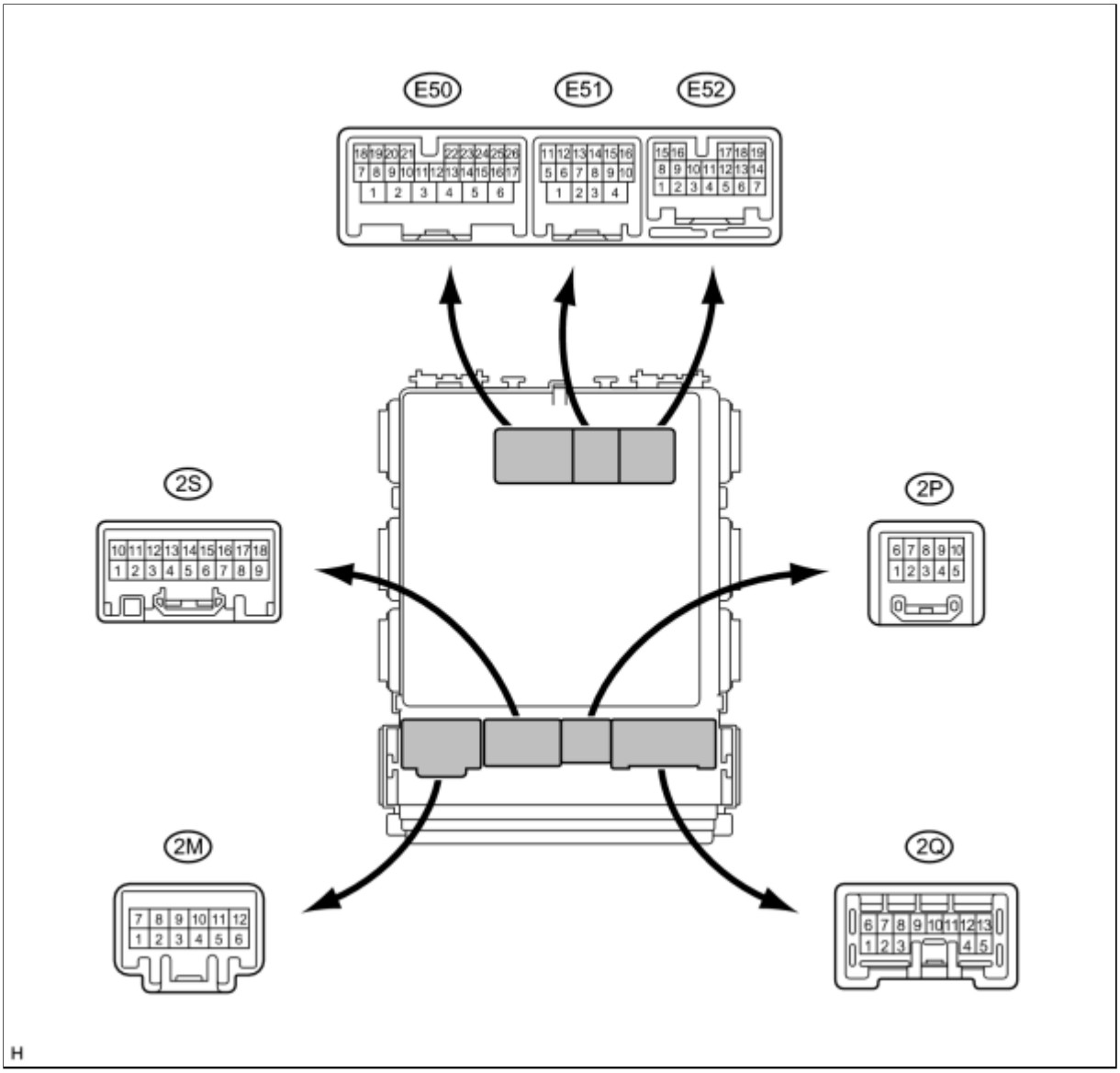

(a) Disconnect the E50, E51, E52, 2E and 2C ECU connectors.

(b) Measure the voltage and resistance of the wire harness side connector.

TESTER CONNECTION	WIRING COLOR	TERMINAL DESCRIPTION	CONDITION	SPECIFIED CONDITION
E51-1 (AM1) - Body ground	Y - Body ground*4 L - Body ground*5	+B power supply	Always	11 to 14 V
E50-6 (AM2) - Body ground	W - Body ground*4 L - Body ground*5	+B power supply	Always	11 to 14 V
E51-9 (SSW2) - Body ground	B - Body ground*4 R - Body	Engine switch signal	Engine switch pushed	Below 1 Ω

TESTER CONNECTION	WIRING COLOR	TERMINAL DESCRIPTION	CONDITION	SPECIFIED CONDITION
	ground*5			
E51-9 (SSW2) - Body ground	B - Body ground*4 R - Body ground*5	Engine switch signal	Engine switch not pushed	10 kΩ or higher
E51-10 (SSW1) - Body ground	W - Body ground	Engine switch signal	Engine switch pushed	Below 1 Ω
E51-10 (SSW1) - Body ground	W - Body ground	Engine switch signal	Engine switch not pushed	10 kΩ or higher
E51-4 (GND2) - Body ground	W-B - Body ground	Ground	Always	Below 1 Ω
E52-15 (CANH) - Body ground	R - Body ground	CAN Line	Always	10 kΩ or higher
E52-16 (CANL) - Body ground	W - Body ground	CAN Line	Always	10 kΩ or higher
E51-12 (CANN) - Body ground	W - Body ground	CAN Line	Always	10 kΩ or higher
E51-11 (CANP) - Body ground	R - Body ground	CAN Line	Always	10 kΩ or higher
2E-17 (GND1) - Body ground	W-B - Body ground	Ground	Always	Below 1 Ω
2C-12 (LIN1) - Body ground	V - Body ground	LIN line	Always	10 kΩ or higher

If the result is not as specified, there may be a malfunction on the wire harness side.

(c) Reconnect the ECU connectors.

(d) Measure the voltage of the connector.

TESTER CONNECTION	WIRING COLOR	TERMINAL DESCRIPTION	CONDITION	SPECIFIED CONDITION
E52-11 (ACCR) - E51-4 (GND2)	P - W-B	Starter assist signal (ACC cut signal)	Brake pedal depressed, shift lever P, engine switch is pushed once → on (IG)	0.1 to 0.8 V*1 → Output voltage at terminal AM1 or AM2 is -2 V or more.
E51-5 (IG2D) - E51-4 (GND2)	GR - W-B*4 BR - W-B*5	IG2 signal	Engine switch on (IG)	Output voltage at terminal AM1 or AM2 is -2 V or more.

TESTER CONNECTION	WIRING COLOR	TERMINAL DESCRIPTION	CONDITION	SPECIFIED CONDITION
E51-5 (IG2D) - E51-4 (GND2)	GR - W-B*4 BR - W-B*5	IG2 signal	Engine switch on (ACC)	Below 1 V
E51-6 (IG1D) - E51-4 (GND2)	W - W-B*4 G - W-B*5	IG1 signal	Engine switch on (IG)	Output voltage at terminal AM1 or AM2 is -2 V or more.
E51-6 (IG1D) - E51-4 (GND2)	W - W-B*4 G - W-B*5	IG1 signal	Engine switch on (ACC)	Below 1 V
E52-3 (STR) - E51-4 (GND2)	BR - W-B*4 W - W-B*5	Park/Neutral position switch signal	Engine switch on (IG), shift lever except P or N → P or N	Below 2 V → Pulse generation*3
E50-18 (SLP) - E51-4 (GND2)	G - W-B*4 BR - W-B*5	Steering lock actuator position signal	Steering lock is locked	Pulse generation (See waveform 3)
E50-18 (SLP) - E51-4 (GND2)	G - W-B*4 BR - W-B*5	Steering lock actuator position signal	Steering lock is released	Pulse generation (See waveform 3)
E50-7 (SLR+) - E51-4 (GND2)	P - W-B*4 LG - W-B*5	Steering lock motor signal	Steering lock motor operating	Below 1 V
E50-7 (SLR+) - E51-4 (GND2)	P - W-B*4 LG - W-B*5	Steering lock motor signal	Steering lock motor does not operate	Output voltage at terminal AM1 or AM2 is -2 V or more.
E50-4 (ACCD) - E51-4 (GND2)	GR - W-B	ACC signal	Engine switch on (ACC)	Output voltage at terminal AM1 or AM2 is -2 V or more.
E50-4 (ACCD) - E51-4 (GND2)	GR - W-B	ACC signal	Engine switch off	Below 1 V
E51-8 (SWIL) - E51-4 (GND2)	G - W-B*4 L - W-B*5	Illumination signal	Light control switch TAIL or HEAD	Output voltage at terminal AM1 or AM2 is -2 V or more.
E52-2 (TACH) - E51-4 (GND2)	GR - W-B	Tachometer signal	Engine running	Pulse generation (See waveform 2)
2C-8 (SPD) - E51-4 (GND2)	V - W-B	Vehicle speed signal	Engine switch on (IG), rotate rear wheel slowly	Pulse generation (See waveform 1)
E52-4 (STSW) - E51-4 (GND2)	W - W-B*4 B - W-B*5	Starter activation request signal	Brake pedal depressed, engine switch held on (ST)	Output voltage at terminal AM1 or AM2 is -2 V or more.

TESTER CONNECTION	WIRING COLOR	TERMINAL DESCRIPTION	CONDITION	SPECIFIED CONDITION
E52-14 (STR2) - E51-4 (GND2)	W - W-B*4 Y - W-B*5	Starter signal (Sub)	Brake pedal depressed, shift lever P or N, engine switch on (ST)	Output voltage at terminal AM1 or AM2 is -3.5 V or more.*2
2F-5 (ACC) - Body ground	W - Body ground*4 L - Body ground*5	ACC power supply	Always	11 to 14 V
2G-1 (IG) - Body ground	W - Body ground	IG power supply	Always	11 to 14 V
E50-14 (STP) - E51-4 (GND2)	L - W-B	Stop light signal	Brake pedal depressed	Output voltage at terminal AM1 or AM2 is -2 V or more.
E50-14 (STP) - E51-4 (GND2)	L - W-B	Stop light signal	Brake pedal released	Below 1 V

HINT:

***1: Voltage is output only when the engine is cranking.**

***2: Voltage is output for 0.3 seconds when the engine is cranking to start. Disconnect the B31 connector from the ECM and starter cut relay before measuring the voltage.**

***3: Remove the starter cut relay before measuring the voltage.**

***4: for TMC Made**

***5: for except TMC Made**

If the result is not as specified, the ECU may have a malfunction.

(e) Using an oscilloscope, check the signal waveform of the ECU.

(1) Waveform 1

Waveform 1 (Reference)

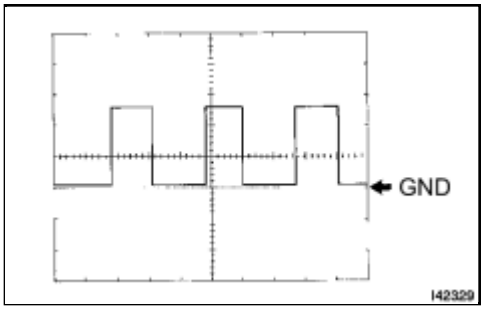

Terminal No.	2C-8 (SPD) - E51-4 (GND2)
Tool Setting	5 V/DIV., 10 ms./DIV.
Vehicle Condition	Driving at approx. 20 km/h (12 mph)

HINT:

As the vehicle speed increases, the wavelength shortens.

(2) Waveform 2

Waveform 2 (Reference)

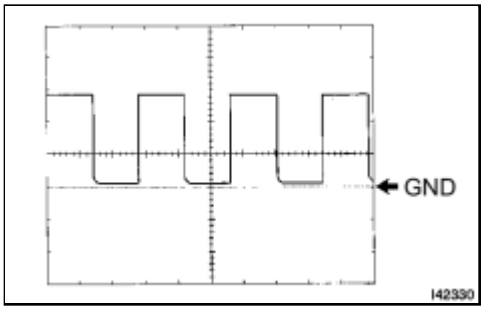

Terminal No.	E52-2 (TACH) - E51-4 (GND2)
Tool Setting	5 V/DIV., 10 ms./DIV.
Vehicle Condition	Engine idling

HINT:

As the engine revolution speed increases, the wavelength shortens.

(3) Waveform 3

Waveform 3 (Reference)

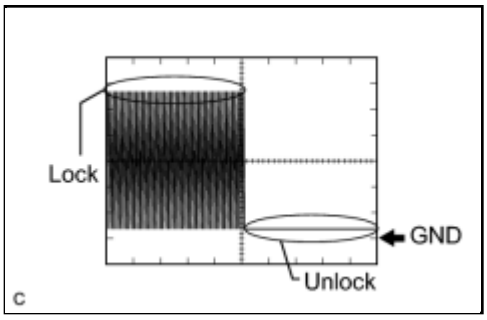

Terminal No.	E50-18 (SLP) - E51-4 (GND2)
Tool Setting	2 V/DIV., 100 ms./DIV.
Vehicle Condition	Steering lock/unlock

2. CHECK CERTIFICATION ECU (SMART KEY ECU ASSEMBLY)

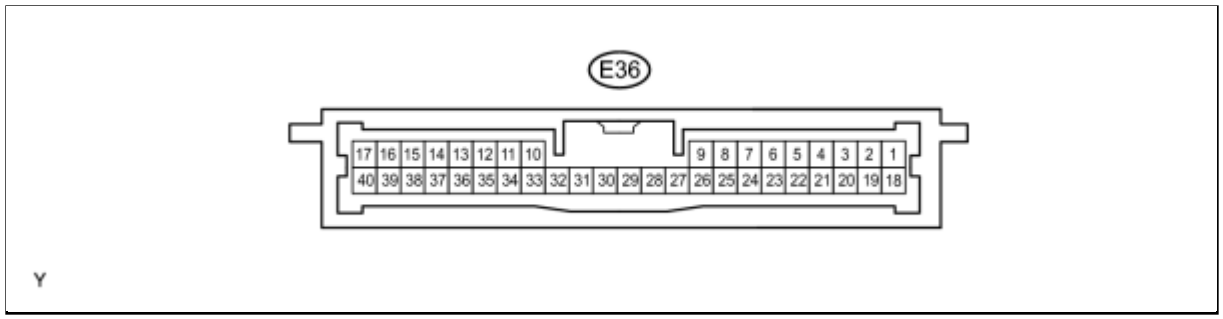

(a) Disconnect the E36 ECU connector.

(b) Measure the voltage and resistance of the wire harness side connector.

TESTER CONNECTION	WIRING COLOR	TERMINAL DESCRIPTION	CONDITION	SPECIFIED CONDITION
E36-1 (+B) - Body ground	W - Body ground*1 BR - Body ground*2	+B power supply	Always	11 to 14 V

TESTER CONNECTION	WIRING COLOR	TERMINAL DESCRIPTION	CONDITION	SPECIFIED CONDITION
E36-10 (LIN) - Body ground	V - Body ground	LIN line	Always	10 kΩ or higher
E36-17 (E) - Body ground	W-B - Body ground	Ground	Always	Below 1 Ω

If the result is not as specified, there may be a malfunction on the wire harness side.

(c) Reconnect the ECU connector.

(d) Measure the voltage of the connector.

TESTER CONNECTION	WIRING COLOR	TERMINAL DESCRIPTION	CONDITION	SPECIFIED CONDITION
E36-18 (IG) - Body ground	L - Body ground*1 B - Body ground*2	Ignition power supply	Engine switch on (IG)	11 to 14 V
E36-18 (IG) - Body ground	L - Body ground*1 B - Body ground*2	Ignition power supply	Engine switch off	Below 1 V

HINT:

***1: for TMC Made**

***2: for except TMC Made**

If the result is not as specified, the ECU may have a malfunction.

3. CHECK ECM

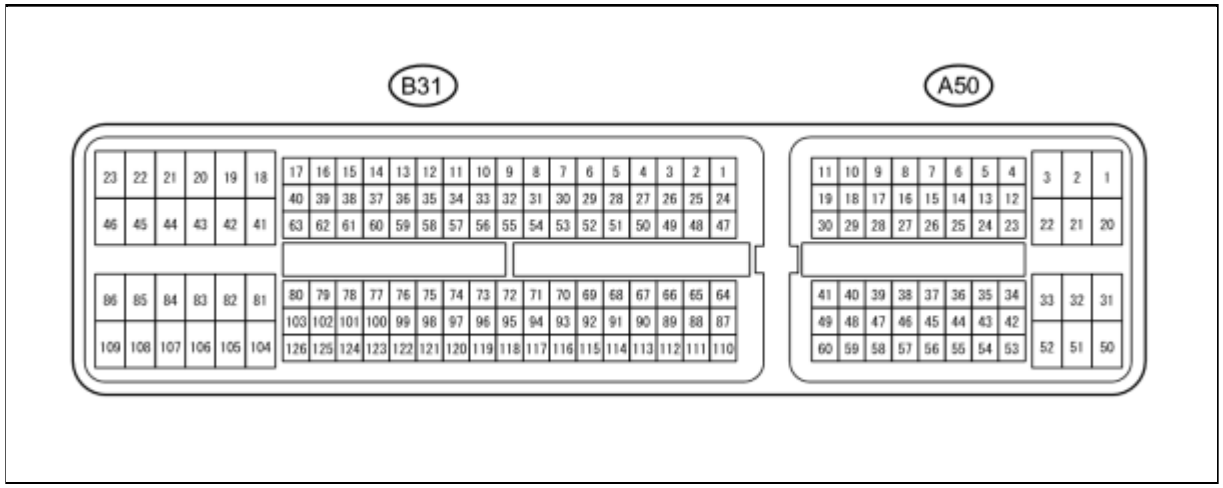

(a) Disconnect the B31 and A50 ECM connectors.

(b) Measure the voltage and resistance of the wire harness side connectors.

TESTER CONNECTION	WIRING COLOR	TERMINAL DESCRIPTION	CONDITION	SPECIFIED CONDITION
A50-1 (+B2) - Body ground	B - Body ground	Power source of ECM	Engine switch on (IG)	11 to 14 V
A50-2 (+B) - Body ground	B - Body ground	Power source of ECM	Engine switch on (IG)	11 to 14 V
A50-28 (IGSW) - Body ground	B - Body ground	Engine switch signal	Engine switch on (IG)	11 to 14 V
B31-43 (ME01) - Body ground	W-B - Body ground	Ground	Always	Below 1 Ω
B31-44 (E02) - Body ground	W-B - Body ground	Ground	Always	Below 1 Ω
B31-45 (E01) - Body ground	W-B - Body ground	Ground	Always	Below 1 Ω
B31-46 (E04) - Body ground	W-B - Body ground	Ground	Always	Below 1 Ω
A50-32 (EC) - Body ground	W-B - Body ground	Ground	Always	Below 1 Ω
B31-104 (E1) - Body ground	BR - Body ground	Ground	Always	Below 1 Ω
B31-86 (E03) - Body ground	W-B - Body ground	Ground	Always	Below 1 Ω

(c) Reconnect the ECM connectors.

(d) Measure the voltage of the connectors.

TESTER CONNECTION	WIRING COLOR	TERMINAL DESCRIPTION	CONDITION	SPECIFIED CONDITION
A50-13 (ACCR) - B31-104 (E1)	L-Y - BR	ACC relay cut signal (output)	Brake pedal depressed, shift lever P or N, engine switch is pushed once → on (IG)	0.1 to 0.8 V* → Output voltage at terminal AM1 or AM2 is -2 V or more.
A50-14 (STSW) - B31-104 (E1)	W-G - BR	Starter activation request signal	Brake pedal depressed, engine switch held (IG)	Output voltage at terminal AM1 or AM2 is -2 V or more.
A50-15 (TACH) - B31-104 (E1)	GR - BR	Engine revolution signal (output)	Idling	Pulse generation (see waveform 1)
A50-36 (STP) - B31-104 (E1)	L - BR	Stop light switch signal (input)	Brake pedal depressed	7.5 to 14 V

TESTER CONNECTION	WIRING COLOR	TERMINAL DESCRIPTION	CONDITION	SPECIFIED CONDITION
A50-36 (STP) - B31-104 (E1)	L - BR	Stop light switch signal (input)	Brake pedal released	Below 1.5 V
A50-48 (STA) - B31-104 (E1)	LG - BR	Starter relay operation signal	Cranking	11 to 14 V
B31-52 (STAR) - B31-104 (E1)	W - BR	Starter signal (Main)	Brake pedal depressed, shift lever P or N, engine switch on (ST)	11 to 14 V

HINT:

***: Voltage is output only when the engine is cranking.**

If the result is not as specified, the ECM may have a malfunction.

(e) Using an oscilloscope, check the signal waveform of the ECM.

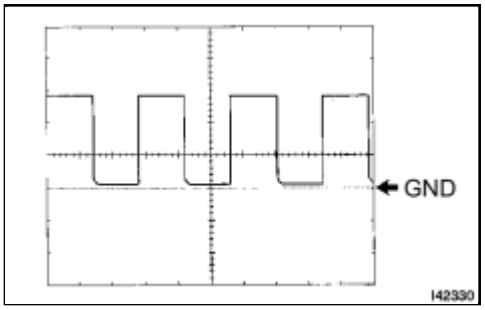

Waveform 1 (Reference)

Terminal No.	A50-15 (TACH) - B31-104 (E1)
Tool Setting	5 V/DIV., 10 ms./DIV.
Vehicle Condition	Engine idling

HINT:

As the vehicle speed increases, the wavelength shortens.

4. CHECK STEERING LOCK ECU

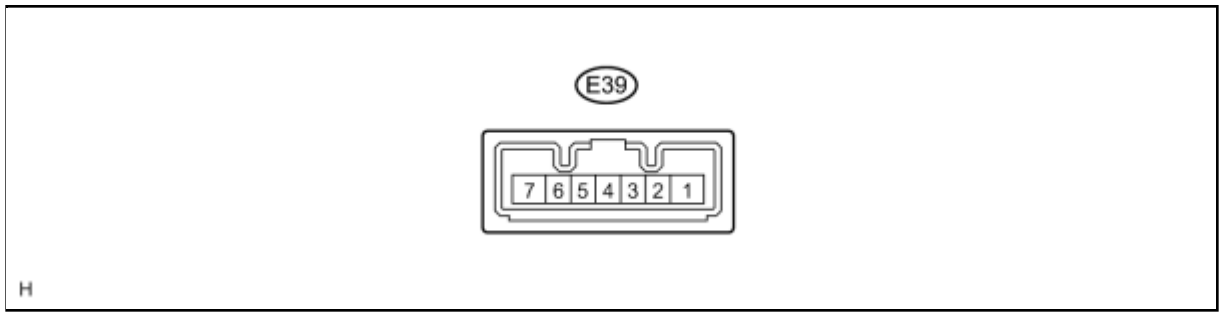

(a) Disconnect the E39 ECU connector.

(b) Measure the voltage and resistance of the wire harness side connector.

TESTER CONNECTION	WIRING COLOR	TERMINAL DESCRIPTION	CONDITION	SPECIFIED CONDITION
E39-1 (GND) - Body ground	W-B - Body ground	Ground	Always	Below 1 Ω
E39-2 (SGND) - Body ground	BR - Body ground*1 W-B - Body ground*2	Ground	Always	Below 1 Ω
E39-6 (IG2) - Body ground	B - Body ground	Ignition power supply	Engine switch on (IG)	11 to 14 V
E39-6 (IG2) - Body ground	B - Body ground	Ignition power supply	Engine switch off	Below 1 V
E39-7 (B) - Body ground	L - Body ground	+B power supply	Always	11 to 14 V

If the result is not as specified, there may be a malfunction on the wire harness side.

(c) Reconnect the E39 ECU connector.

(d) Measure the voltage of the connector.

TESTER CONNECTION	WIRING COLOR	TERMINAL DESCRIPTION	CONDITION	SPECIFIED CONDITION
E39-4 (SLP1) - E39-1 (GND)	G - W-B*1 BR - W-B*2	Steering lock actuator position signal	Steering is locked	11 to 14 V
E39-4 (SLP1) - E39-1 (GND)	G - W-B*1 BR - W-B*2	Steering lock actuator position signal	Steering is released	Below 1 V

- If the result is not as specified, the ECU may have a malfunction.

HINT:

***1: for TMC Made**

***2: for except TMC Made**

Last Modified: 3-10-2010	6.4 D	**From:** 200901
Model Year: 2010	**Model:** Corolla	**Doc ID:** RM00000367300QX
Title: THEFT DETERRENT / KEYLESS ENTRY: SMART KEY SYSTEM (for Start Function): CUSTOMIZE PARAMETERS (2010 Corolla)		

CUSTOMIZE PARAMETERS

1. CUSTOMIZING FUNCTION WITH TECHSTREAM

HINT:

The items in the table below can be customized.

NOTICE:

- When the customer requests a change in a function, first make sure that the function can be customized.
- Be sure to make a note of the current setting before customizing.
- When troubleshooting a function, first make sure that the function is set to the default setting.

HINT:

The following functions' default settings are ON. Part of these functions can be customized.

Smart Key / Access

DISPLAY (ITEM)	DEFAULT	CONTENT	SETTING
Ignition Available Area (Entry ignition available area)	All	Function to choose the available area for electrical key to start E/G and cancel the steering lock.	Front / All

Last Modified: 3-10-2010	6.4 T	**From:** 200901
Model Year: 2010	**Model:** Corolla	**Doc ID:** RM000000XI605ZX
Title: THEFT DETERRENT / KEYLESS ENTRY: SMART KEY SYSTEM (for Start Function): PROBLEM SYMPTOMS TABLE (2010 Corolla)		

PROBLEM SYMPTOMS TABLE

HINT:

- Use the table below to help determine the cause of problem symptom. If multiple suspected areas are listed, the potential causes of the symptoms are listed in order of probability in the "Suspected Area" column of the table. Check each symptom by checking the suspected areas in the order they are listed. Replace parts as necessary.
- Inspect the fuses and relays related to the system before inspecting the suspected areas below.

Smart Key System

SYMPTOM	SUSPECTED AREA	SEE PAGE
Power source mode does not change.	AM2 NO. 2 fuse	INFO
	IG1 relay	-
	IG2 relay	-
	Engine switch	-
	Wire harness or connector	-
	Smart key system (entry function)	-
	Main body ECU (instrument panel junction block)	-
	Certification ECU (smart key ECU assembly)	-
	ID code box (immobiliser code ECU)	-
	Steering lock ECU	-
Engine does not start.	Smart key system (entry function)	INFO
	Engine switch	-
	Park/Neutral position switch	-
	STOP fuse	-
	Stop light switch	-
	Electrical steering lock function	-
	Starter cut relay	-
	Starter relay	-
	ECM	-
	Engine immobiliser system	-

SYMPTOM	SUSPECTED AREA	SEE PAGE
	Main body ECU (instrument panel junction block)	-
	Wire harness or connector	-
Engine switch indicator light does not come on.	Engine switch indicator light circuit	INFO

Last Modified: 3-10-2010	6.4 D	**From:** 200901
Model Year: 2010	**Model:** Corolla	**Doc ID:** RM000000YEG04QX
Title: THEFT DETERRENT / KEYLESS ENTRY: SMART KEY SYSTEM (for Start Function): DIAGNOSIS SYSTEM (2010 Corolla)		

DIAGNOSIS SYSTEM

1. DESCRIPTION

(a) Push-button start function data and the Diagnostic Trouble Codes (DTCs) can be read through the Data Link Connector 3 (DLC3) of the vehicle. When the function seems to be malfunctioning, use the Techstream to check for malfunctions and perform repairs.

2. CHECK DLC3

(a) Check the DLC3 INFO .

3. INSPECT BATTERY VOLTAGE

Standard voltage:

11 to 14 V

If the voltage is below 11 V, recharge or replace the battery before proceeding.

Last Modified: 3-10-2010	6.4 U	**From:** 200901
Model Year: 2010	**Model:** Corolla	**Doc ID:** RM000000XI504UX
Title: THEFT DETERRENT / KEYLESS ENTRY: SMART KEY SYSTEM (for Start Function): DATA LIST / ACTIVE TEST (2010 Corolla)		

DATA LIST / ACTIVE TEST

1. READ DATA LIST

HINT:

Using the Techstream to read the Data List allows the values or states of switches, sensors, actuators and other items to be read without removing any parts. This non-intrusive inspection can be very useful because intermittent conditions or signals may be discovered before parts or wiring is disturbed. Reading the Data List information early in troubleshooting is one way to save diagnostic time.

(a) Connect the Techstream to the DLC3.

When using the Techstream with the engine switch off, turn on and off any of the door courtesy light switches repeatedly at 1.5 or less second intervals until communication between the tester and vehicle starts.

(b) Turn the engine switch on (IG).

(c) Read the Data List according to the displays on the Techstream.

Main Body

TESTER DISPLAY	MEASUREMENT ITEM/RANGE	NORMAL CONDITION	DIAGNOSTIC NOTE
ACC SW	Engine switch on (ACC) / ON or OFF	ON: Engine switch on (ACC) OFF: Engine switch off	-
IG SW	Engine switch on (IG) / ON or OFF	ON: Engine switch on (IG) OFF: Engine switch off	-
Stop Light SW	Stop light switch / ON or OFF	ON: Brake pedal depressed OFF: Brake pedal released	-
Start Switch 1	Start switch 1 / ON or OFF	ON: Engine switch is pushed OFF: Engine switch is not pushed	-
Start Switch 2	Start switch 2 / ON or OFF	ON: Engine switch is pushed OFF: Engine switch is not pushed	-

TESTER DISPLAY	MEASUREMENT ITEM/RANGE	NORMAL CONDITION	DIAGNOSTIC NOTE
Steering Unlock Switch	Steering lock condition / ON or OFF	ON: Steering is unlocked (Engine switch on (ACC)) OFF: Steering is locked (Engine switch off)	-
Neutral SW / Clutch SW	Park/Neutral position switch / ON or OFF	ON: Shift position is N OFF: Shift position is except N	-
Shift P Signal	Shift P position signal / ON or OFF	ON: Shift position is P OFF: Shift position is not P	-
Vehicle Speed Signal	Vehicle speed signal / Stop or Run	Stop: Vehicle is stopped Run: Vehicle is running	-
Engine Condition	Engine condition / Stop or Run	Stop: Engine is stopped Run: Engine is running	-
IG1 Relay Monitor (Outside)	IG1 relay monitor (outer) / ON or OFF	ON: Engine switch on (IG) OFF: Engine switch off	-
IG2 Relay Monitor (Outside)	IG2 relay monitor (outer) / ON or OFF	ON: Engine switch on (IG) OFF: Engine switch off	-
IG1 Relay Monitor (Inside)	IG1 relay monitor (inner) / ON or OFF	ON: Engine switch on (IG) OFF: Engine switch off	-
IG2 Relay Monitor (Inside)	IG2 relay monitor (inner) / ON or OFF	ON: Engine switch on (IG) OFF: Engine switch off	-
ACC Relay Monitor	ACC relay monitor / ON or OFF	ON: Engine switch on (ACC) OFF: Engine switch off	-
Latch Circuit	Ratch circuit / ON or OFF	ON: Engine switch on (IG) or engine running OFF: Engine switch off or on (ACC)	-
Starter Request Signal	Starter request signal monitor / ON or OFF	ON: Starter relay is ON OFF: Starter relay is OFF	Engine switch pressed and held with shift lever in P or N

TESTER DISPLAY	MEASUREMENT ITEM/RANGE	NORMAL CONDITION	DIAGNOSTIC NOTE
Power Supply Condition	Power supply condition / All, ACC ON, IG1 IG2, ST ON	All: All relays are OFF ACC ON: ACC relay is ON IG1: IG1 relay is ON IG2: IG2 relay is ON ST ON: ST request signal is ON	-
ACC Relay Cut Signal	ACC relay cut signal / ON or OFF	ON: Engine is cranking OFF: Engine is not cranking	-
Starter Relay Monitor	STARTER relay monitor / ON or OFF	ON: Engine is cranking OFF: Engine is not cranking	Engine is cranking with engine switch on (IG) and shift lever in P or N
Communication Entry&Start	Communication for certification ECU (smart key ECU assembly) / OK or Stop	OK: Communication Stop: No communication	-

2. PERFORM ACTIVE TEST

HINT:

Using the Techstream to perform Active Test allows the relays, VSVs, actuators and other items to be operated without removing any parts. This non-intrusive functional inspection can be very useful because intermittent operation may be discovered before parts or wiring is disturbed. Performing the Active Test early in troubleshooting is one way to save diagnostic time. The Data List can be displayed while performing Active Tests.

(a) Connect the Techstream to the DLC3.

(b) Turn the engine switch on (IG).

(c) Perform the Active Test according to the display on the Techstream.

Main Body

TESTER DISPLAY	TEST PART	CONTROL RANGE	DIAGNOSTIC NOTE
Indicator for Lighting	Indicator for lighting	ON / OFF	-
Indicator Condition	Engine switch indicator	Green / Amber / No Sig	-
P Supply for Steering lock	Power supply for steering lock ECU	ON / OFF	-

Last Modified: 3-10-2010	6.4 D	**From:** 200901
Model Year: 2010	**Model:** Corolla	**Doc ID:** RM000000YEH04XX
Title: THEFT DETERRENT / KEYLESS ENTRY: SMART KEY SYSTEM (for Start Function): DTC CHECK / CLEAR (2010 Corolla)		

DTC CHECK / CLEAR

1. CHECK DTC

(a) Connect the Techstream to the DLC3.

(b) Turn the engine switch on (IG).

(c) Read the DTC by following the prompts on the Techstream screen.

HINT:

Refer to the Techstream operator's manual for further details.

2. CLEAR DTC

(a) Connect the Techstream to the DLC3.

(b) Turn the engine switch on (IG).

(c) Clear the DTC by following the directions on the Techstream screen.

HINT:

Refer to the Techstream operator's manual for further details.

Last Modified: 3-10-2010	6.4 S	**From:** 200901
Model Year: 2010	**Model:** Corolla	**Doc ID:** RM000000XIZ051X
Title: THEFT DETERRENT / KEYLESS ENTRY: SMART KEY SYSTEM (for Start Function): DIAGNOSTIC TROUBLE CODE CHART (2010 Corolla)		

DIAGNOSTIC TROUBLE CODE CHART

Smart Key System

DTC CODE	DETECTION ITEM	TROUBLE AREA	SEE PAGE
B2271	Ignition Hold Monitor Malfunction	1. AM2 NO. 2 fuse 2. Main body ECU (instrument panel junction block) 3. Wire harness or connector	INFO
B2272	Ignition 1 Monitor Malfunction	1. IG1 relay 2. Main body ECU (instrument panel junction block) 3. Wire harness or connector	INFO
B2273	Ignition 2 Monitor Malfunction	1. IG2 relay 2. Main body ECU (instrument panel junction block) 3. Wire harness or connector	INFO
B2274	ACC Monitor Malfunction	1. ACC relay 2. Main body ECU (instrument panel junction block) 3. Wire harness or connector	INFO
B2275	STSW Monitor Malfunction	1. ECM 2. Main body ECU (instrument panel junction block) 3. Wire harness or connector	INFO
B2276	ACCR Signal Circuit Malfunction	1. Main body ECU (instrument panel junction block) 2. ECM 3. Wire harness or connector	INFO
B2277	Detecting Vehicle Submersion	Main body ECU (instrument panel junction block)	INFO
B2278	Engine Switch Circuit Malfunction	1. Engine switch 2. Main body ECU (instrument panel junction block) 3. Wire harness or connector	INFO
B2281	"P" Signal Malfunction	1. Main body ECU (instrument panel junction block) 2. Shift lock control ECU	INFO

DTC CODE	DETECTION ITEM	TROUBLE AREA	SEE PAGE
		3. Wire harness connector	
B2282	Vehicle Speed Signal Malfunction	1. CAN communication system 2. Combination meter system 3. Main body ECU (instrument panel junction block) 4. Wire harness or connector	INFO
B2283	Vehicle Speed Sensor Malfunction	1. DTC B2282 detection area 2. Combination meter 3. Speed sensor 4. Skid control ECU 5. Main body ECU (instrument panel junction block) 6. Wire harness or connector	INFO
B2284	Brake Signal Malfunction	1. Stop light switch 2. CAN communication system 3. ECM 4. Main body ECU (instrument panel junction block) 5. Wire harness or connector	INFO
B2285	Steering Lock Position Signal Circuit Malfunction	1. Main body ECU (instrument panel junction block) 2. Steering lock ECU 3. Wire harness or connector	INFO
B2286	Runnable Signal Malfunction	1. CAN communication system 2. ECM 3. Main body ECU (instrument panel junction block) 4. Wire harness or connector	INFO
B2287	LIN Communication Master Malfunction	1. Main body ECU (instrument panel junction block) 2. Certification ECU (smart key ECU assembly) 3. Wire harness or connector	INFO
B2288	Steering Lock Signal Circuit Malfunction	1. Main body ECU (instrument panel junction block) 2. Steering lock ECU 3. Wire harness or connector	INFO
B2289	Key Collation Waiting Time Over	1. Main body ECU (instrument panel junction block) 2. Smart key system (entry function) 3. Wire harness or connector 4. Certification ECU (smart key ECU	INFO

DTC CODE	DETECTION ITEM	TROUBLE AREA	SEE PAGE
		assembly)	

Last Modified: 3-10-2010	6.4 G	**From:** 200901
Model Year: 2010	**Model:** Corolla	**Doc ID:** RM000000YL1038X
Title: THEFT DETERRENT / KEYLESS ENTRY: SMART KEY SYSTEM (for Start Function): ON-VEHICLE INSPECTION (2010 Corolla)		

ON-VEHICLE INSPECTION

1. CHECK POWER SOURCE MODE CHANGE FUNCTION

(a) Check the function of the engine switch.

(1) Check that power source mode changes in accordance with the conditions of the shift position and brake pedal.

BRAKE PEDAL	SHIFT LEVER	POWER SOURCE MODE PATTERN
Depressed	P or N	When the engine switch is pushed once. • off → engine start • on (ACC) → engine start • on (IG) → engine start
Not depressed	P	Each time the engine switch is pushed. • off → on (ACC) → on (IG) → off
	Except P	Each time the engine switch is pushed. • off → on (ACC) → on (IG) → on (ACC)
-	P	When the engine switch is pushed with power source mode on (IG) (engine running). • on (IG) → off
-	Except P	When the engine switch is pushed with power source mode on (IG) (engine running). • on (IG) → on (ACC)

(b) Check if power source mode changes without pressing the engine switch.

(1) With power source mode on (ACC) and the shift position in P, wait for at least 1 hour. Check that power source mode changes from on (ACC) to off automatically.

2. CHECK INDICATOR CONDITION

(a) Check the indicator on the engine switch.

(1) Check that the engine switch indicator turns on and changes color according to the table below.

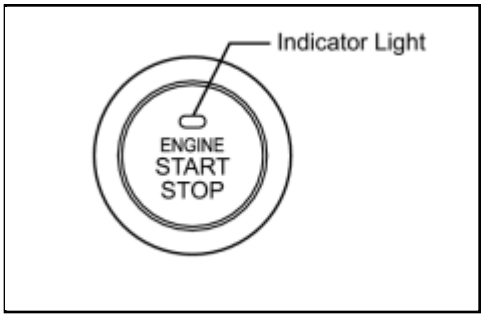

POWER SOURCE MODE/CONDITION	INDICATOR LIGHT CONDITION	
	BRAKE PEDAL RELEASED	BRAKE PEDAL DEPRESSED, SHIFT LEVER IN P OR N
off	OFF	ON (Green) (When key and vehicle IDs match)
on (ACC, IG)	ON (Amber)	ON (Green)
Engine running	OFF	OFF
Steering lock not unlocked	Flashes (Green) for 15 sec.	Flashes (Green) for 15 sec.
System malfunction	Flashes (Amber) for 15 sec.	Flashes (Amber) for 15 sec.

Last Modified: 3-10-2010	6.4 C	**From:** 200901
Model Year: 2010	**Model:** Corolla	**Doc ID:** RM000001LUV01UX
Title: THEFT DETERRENT / KEYLESS ENTRY: SMART KEY SYSTEM (for Start Function): B2271: Ignition Hold Monitor Malfunction (2010 Corolla)		

DTC	**B2271**	**Ignition Hold Monitor Malfunction**

DESCRIPTION

This DTC is output when a problem such as an open in the AM2 NO. 2 fuse, an open or short in the wire harness between the fuse and main body ECU (instrument panel junction block), a short in the IG output circuit inside the main body ECU (instrument panel junction block), a short between the main body ECU (instrument panel junction block) and relay, and a short in the relay is detected.

HINT:

When the main body ECU (instrument panel junction block) is replaced with a new one and the cable from the negative (-) battery terminal is connected, the power source mode becomes the IG-ON mode. When the battery is removed and reinstalled, the power source mode that was selected when the battery was removed is restored.

After the main body ECU (instrument panel junction block) is replaced, perform the registration procedures for the engine immobiliser system INFO **.**

DTC NO.	DTC DETECTION CONDITION	TROUBLE AREA
B2271	Hold circuit, IG1 relay actuation circuit or IG2 relay actuation circuit inside main body ECU (instrument panel junction block) is open or shorted	• AM2 NO. 2 fuse • Main body ECU (instrument panel junction block) • Wire harness or connector

WIRING DIAGRAM

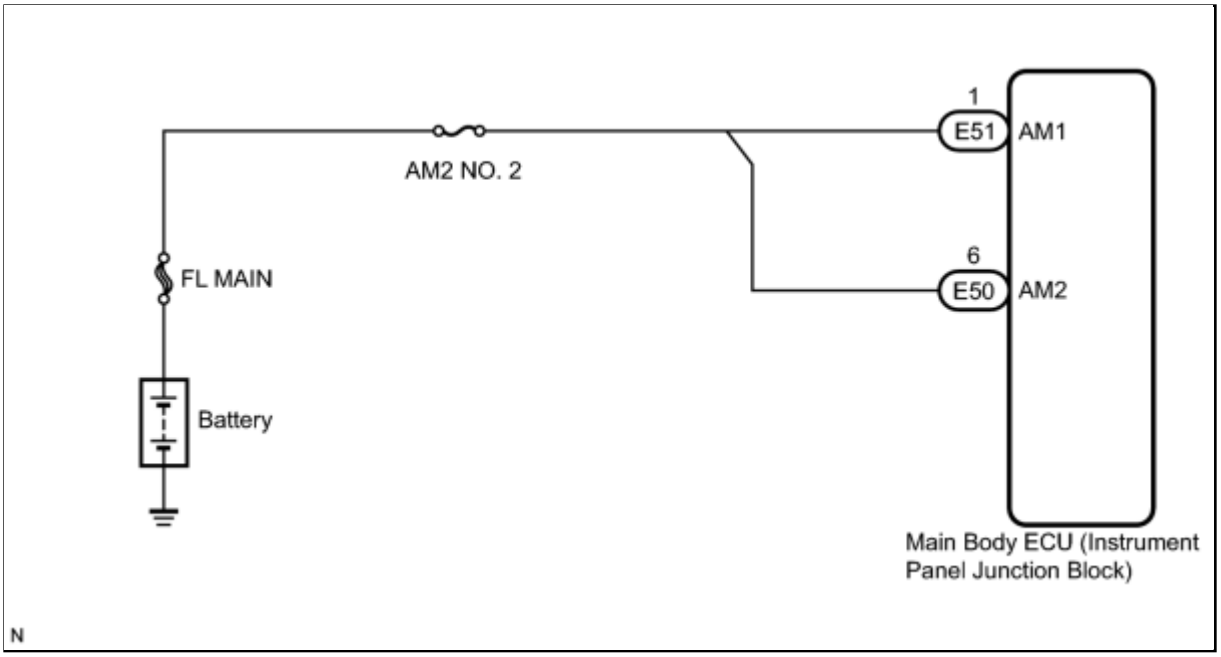

INSPECTION PROCEDURE

PROCEDURE

1.	**CHECK FOR DTC**

(a) Clear the DTCs INFO.

(b) After all DTCs are cleared, check if the trouble occurs again 6 seconds after the engine switch is turned on (IG).

(c) Check for DTCs again.

OK:

DTC is not output.

NG ▶ **CHECK HARNESS AND CONNECTOR (MAIN BODY ECU (INSTRUMENT PANEL JUNCTION BLOCK) - BATTERY)**

OK ▶ **USE SYMPTOM METHOD TO CHECK**

2.	**CHECK HARNESS AND CONNECTOR (MAIN BODY ECU (INSTRUMENT PANEL JUNCTION BLOCK) - BATTERY)**

(a) Disconnect the E50 and E51 ECU connectors.

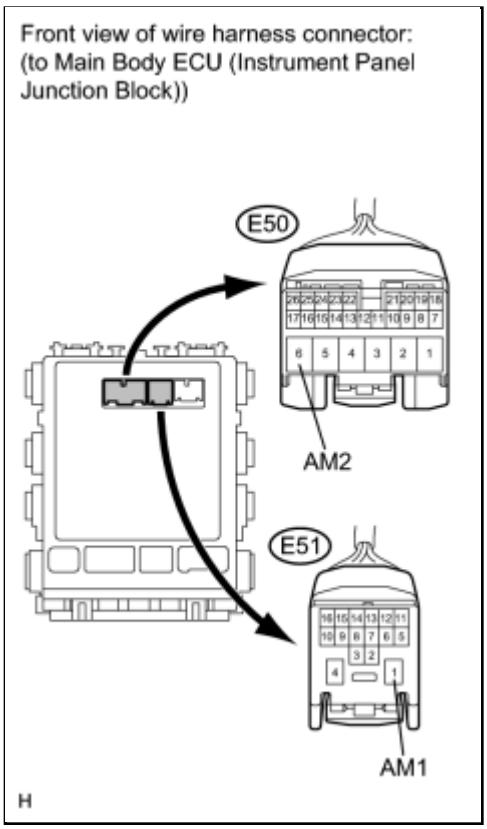

(b) Measure the voltage according to the value(s) in the table below.

Standard Voltage:

TESTER CONNECTION	CONDITION	SPECIFIED CONDITION
E51-1 (AM1) - Body ground	Always	11 to 14 V
E50-6 (AM2) - Body ground	Always	11 to 14 V

NG ▶ **REPAIR OR REPLACE HARNESS OR CONNECTOR, OR FUSE**

OK ▶ **REPLACE MAIN BODY ECU (INSTRUMENT PANEL JUNCTION BLOCK)**

Last Modified: 3-10-2010	6.4 C	**From:** 200901
Model Year: 2010	**Model:** Corolla	**Doc ID:** RM000001LUW024X
Title: THEFT DETERRENT / KEYLESS ENTRY: SMART KEY SYSTEM (for Start Function): B2272: Ignition 1 Monitor Malfunction (2010 Corolla)		

DTC	**B2272**	**Ignition 1 Monitor Malfunction**

DESCRIPTION

This DTC is output when there is a problem in the IG1D output circuit, which is from the inside of the main body ECU (instrument panel junction block) to the IG1 relay.

HINT:

When the main body ECU (instrument panel junction block) is replaced with a new one and the cable from the negative (-) battery terminal is connected, the power source mode becomes the IG-ON mode. When the battery is removed and reinstalled, the power source mode that was selected when the battery was removed is restored.

After the main body ECU (instrument panel junction block) is replaced, perform the registration procedures for the engine immobiliser system INFO **.**

DTC NO.	DTC DETECTION CONDITION	TROUBLE AREA
B2272	IG1 relay actuation circuit inside main body ECU (instrument panel junction block) or other related circuit is malfunctioning	• Main body ECU (instrument panel junction block) • IG1 relay • Wire harness or connector

WIRING DIAGRAM

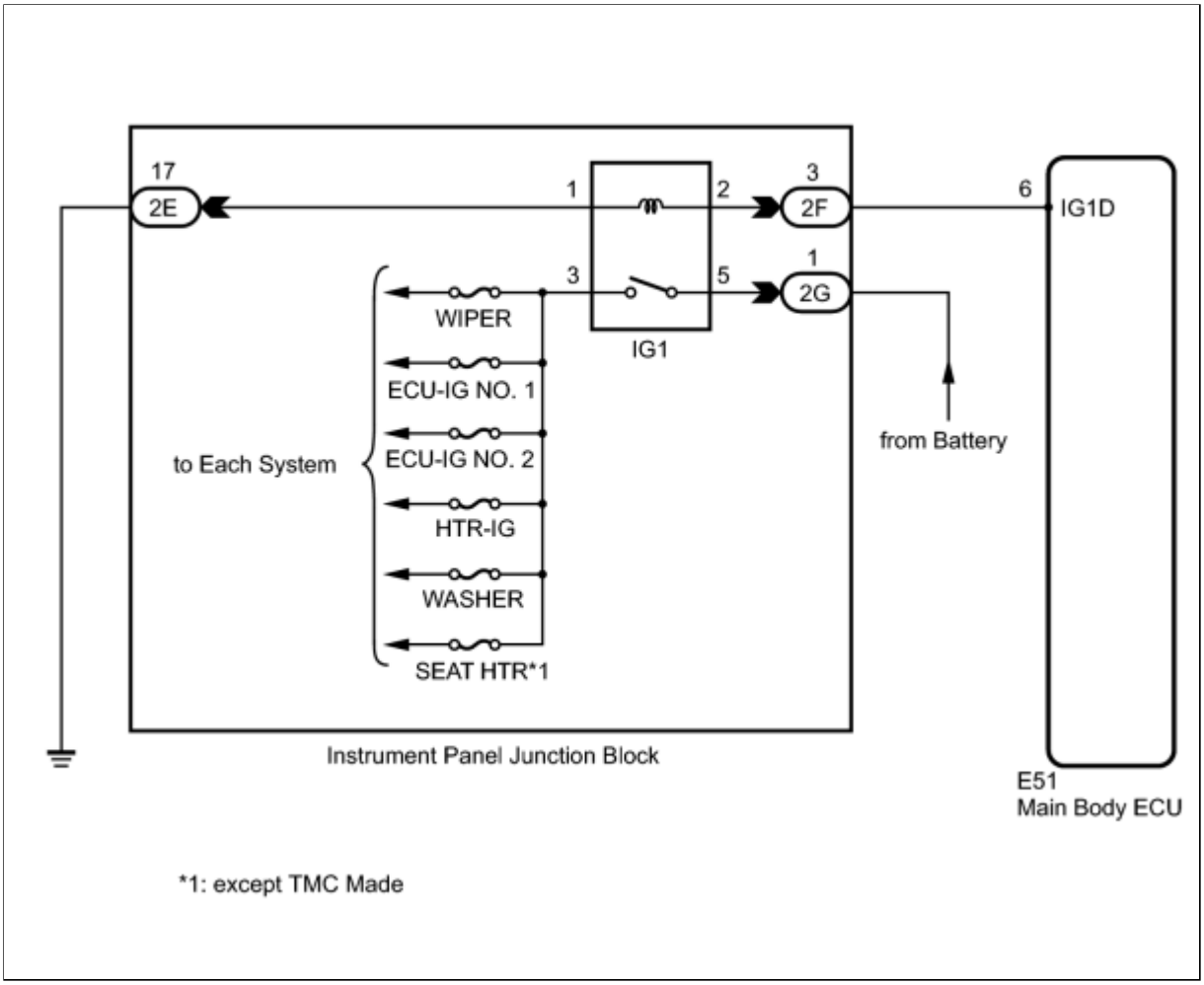

INSPECTION PROCEDURE

PROCEDURE

1.	**READ VALUE USING TECHSTREAM**

(a) Connect the Techstream to the DLC3.

(b) Turn the engine switch on (IG) and turn the Techstream on.

(c) Select the item below in the Data List, and read the display on the Techstream.

HINT:

When using the Techstream with the engine switch off, turn on and off any of the door courtesy light switches repeatedly at 1.5 second intervals or less until communication between the Techstream and vehicle starts.

Main Body

TESTER DISPLAY	MEASUREMENT ITEM/RANGE	NORMAL CONDITION	DIAGNOSTIC

			NOTE
IG1 Relay Monitor (Outside)	Status of IG1 relay monitor (outer) / ON or OFF	ON: Engine switch on (IG) (IG1 relay is ON) OFF: Engine switch off (IG1 relay is OFF)	-

OK:
"ON" (engine switch on (IG)) appears on the screen.

NG ▶ **INSPECT RELAY (IG1 RELAY)**

OK ▼

2.	CHECK FOR DTC

(a) Clear the DTC INFO.

(b) Turn the engine switch on (IG).

(c) After 10 seconds have elapsed, check if the trouble occurs again.

OK:
DTC B2272 is not output.

NG ▶ **REPLACE MAIN BODY ECU (INSTRUMENT PANEL JUNCTION BLOCK)**

OK ▶ **USE SIMULATION METHOD TO CHECK**

3.	INSPECT RELAY (IG1 RELAY)

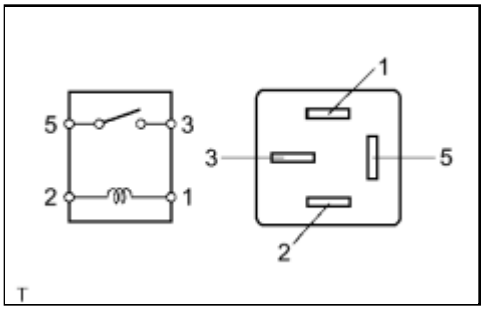

(a) Remove the IG1 relay from the instrument panel junction block.

(b) Measure the resistance according to the value(s) in the table below.

Standard Resistance:

TESTER CONNECTION	CONDITION	SPECIFIED CONDITION
3 - 5	When battery voltage is not applied to terminals 1 and 2	10 kΩ or higher
3 - 5	When battery voltage is applied to terminals 1 and 2	Below 1 Ω

NG ▶ **REPLACE IG1 RELAY**

OK ▼

4.	**CHECK HARNESS AND CONNECTOR (INSTRUMENT PANEL JUNCTION BLOCK - MAIN BODY ECU)**

(a) Disconnect the 2F junction block connector.

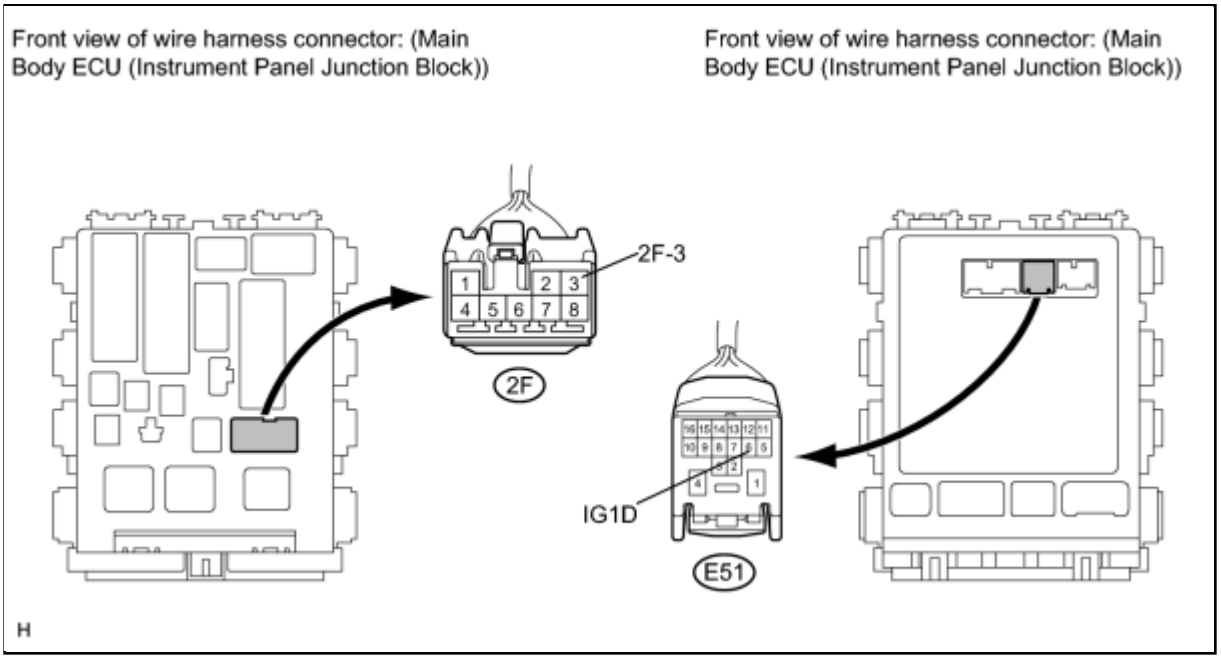

(b) Disconnect the E51 ECU connector.

(c) Measure the resistance according to the value(s) in the table below.

Standard Resistance:

TESTER CONNECTION	CONDITION	SPECIFIED CONDITION
2F-3 - E51-6 (IG1D)	Always	Below 1 Ω
E51-6 (IG1D) - Body ground	Always	10 kΩ or higher

NG ▶ **REPAIR OR REPLACE HARNESS OR CONNECTOR (INSTRUMENT PANEL JUNCTION BLOCK - MAIN BODY ECU)**

OK ▼

5.	**CHECK HARNESS AND CONNECTOR (INSTRUMENT PANEL JUNCTION BLOCK - BATTERY AND BODY GROUND)**

(a) Disconnect the 2E and 2G junction block connectors.

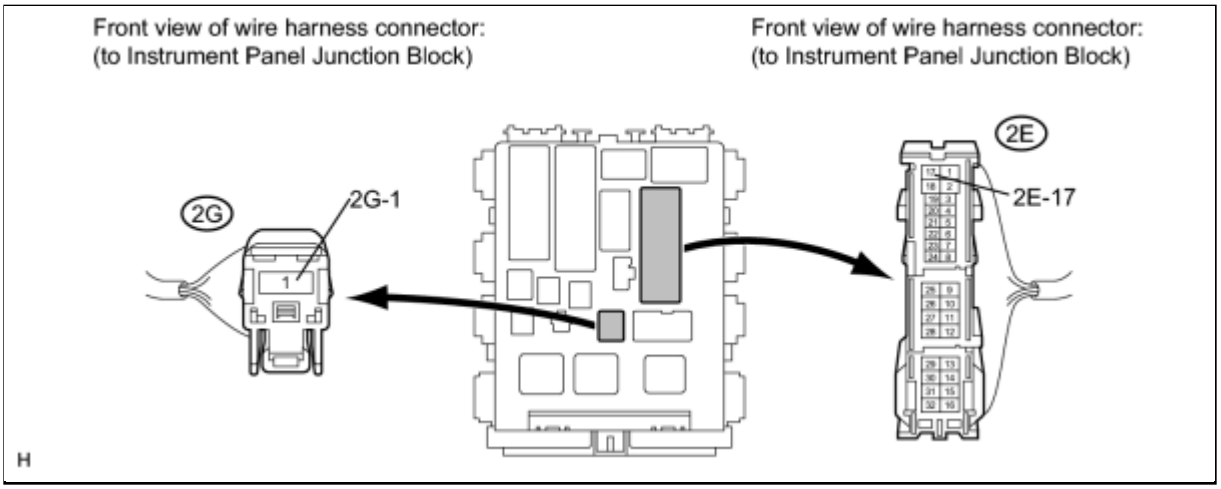

(b) Measure the resistance according to the value(s) in the table below.

Standard Resistance:

TESTER CONNECTION	CONDITION	SPECIFIED CONDITION
2E-17 - Body ground	Always	Below 1 Ω

(c) Measure the voltage according to the value(s) in the table below.

Standard Voltage:

TESTER CONNECTION	CONDITION	SPECIFIED CONDITION

TESTER CONNECTION	CONDITION	SPECIFIED CONDITION
2G-1 - Body ground	Always	11 to 14 V

NG ▶ **REPAIR OR REPLACE HARNESS OR CONNECTOR (INSTRUMENT PANEL JUNCTION BLOCK - BATTERY AND BODY GROUND)**

OK ▶ **REPLACE MAIN BODY ECU (INSTRUMENT PANEL JUNCTION BLOCK)**

Last Modified: 3-10-2010	6.4 C	**From:** 200901
Model Year: 2010	**Model:** Corolla	**Doc ID:** RM000001LUX024X
Title: THEFT DETERRENT / KEYLESS ENTRY: SMART KEY SYSTEM (for Start Function): B2273: Ignition 2 Monitor Malfunction (2010 Corolla)		

DTC	**B2273**	**Ignition 2 Monitor Malfunction**

DESCRIPTION

This DTC is output when there is a problem in the IG2D output circuit, which is from the inside of the main body ECU (instrument panel junction block) to the IG2 relay.

HINT:

When the main body ECU (instrument panel junction block) is replaced with a new one and the cable from the negative (-) battery terminal is connected, the power source mode becomes the IG-ON mode. When the battery is removed and reinstalled, the power source mode that was selected when the battery was removed is restored.

After the main body ECU (instrument panel junction block) is replaced, perform the registration procedures for the engine immobiliser system INFO **.**

DTC NO.	DTC DETECTION CONDITION	TROUBLE AREA
B2273	IG2 relay actuation circuit inside main body ECU (instrument panel junction block) or other related circuit is malfunctioning	• Main body ECU (instrument panel junction block) • IG2 relay • Wire harness or connector

WIRING DIAGRAM

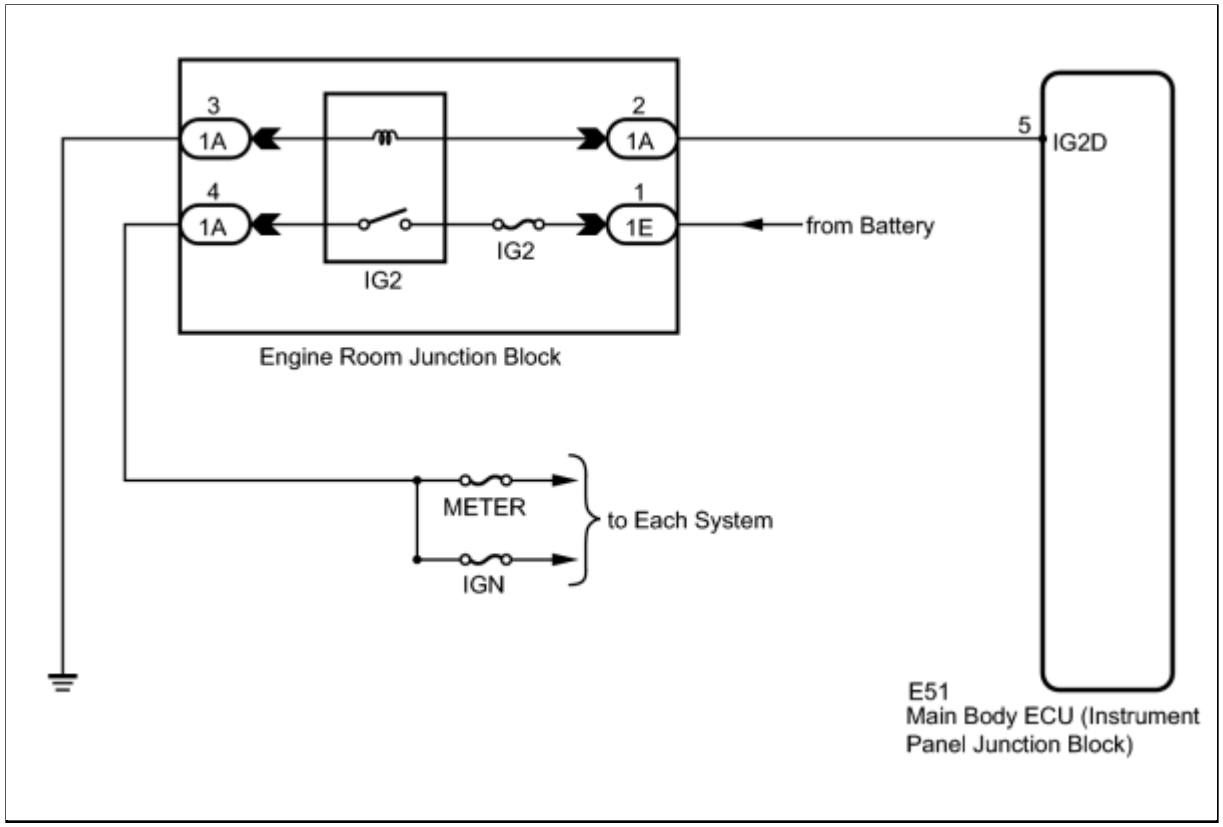

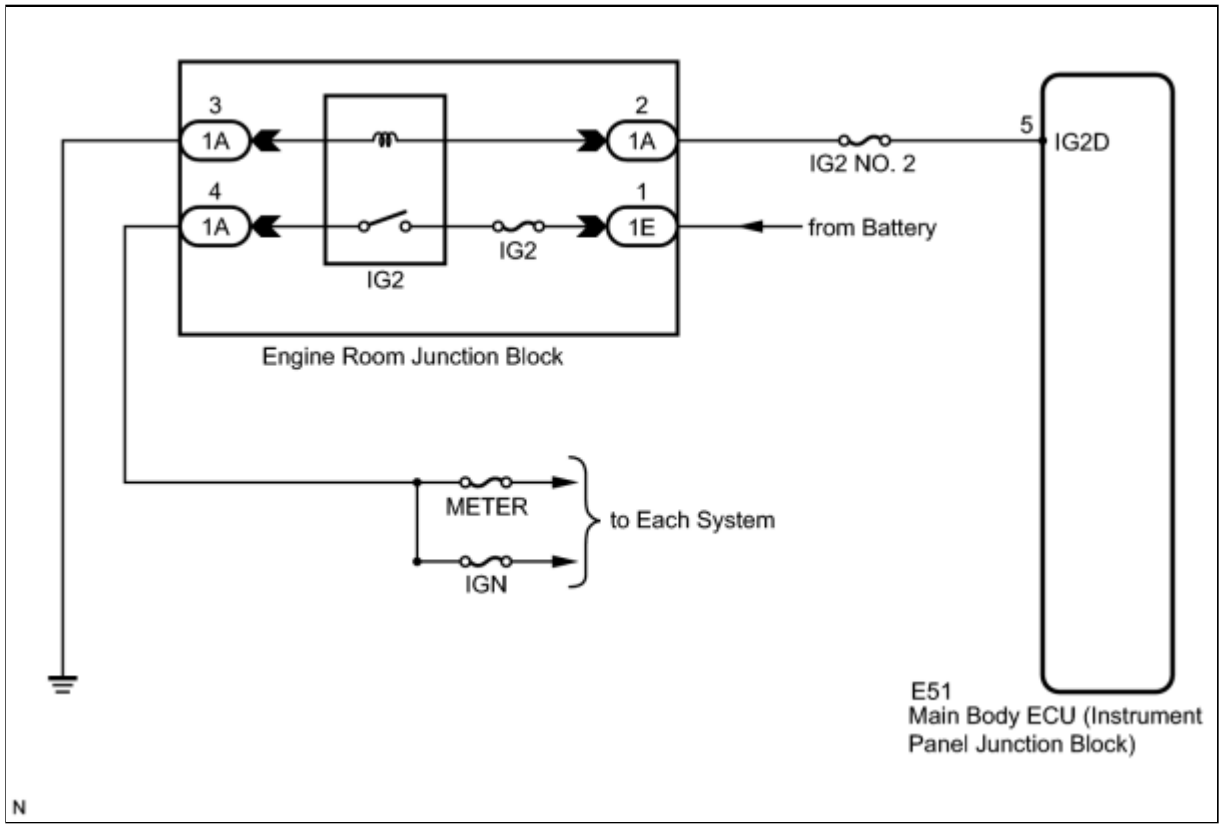

INSPECTION PROCEDURE

PROCEDURE

1.	READ VALUE USING TECHSTREAM

(a) Connect the Techstream to the DLC3.

(b) Turn the engine switch on (IG) and turn the Techstream on.

(c) Read the Data List according to the displays on the Techstream.

HINT:

When using the Techstream with the engine switch off, turn on and off any of the door courtesy light switches repeatedly at 1.5 second intervals or less until communication between the Techstream and vehicle starts.

Main Body

TESTER DISPLAY	MEASUREMENT ITEM/RANGE	NORMAL CONDITION	DIAGNOSTIC NOTE
IG2 Relay Monitor (Outside)	Status of IG2 relay monitor (outer) / ON or OFF	ON: Engine switch on (IG) (IG2 relay is ON) OFF: Engine switch off (IG2 relay is OFF)	-

OK:
"ON" (Engine switch on (IG)) appears on the screen.

NG ▶ **CHECK HARNESS AND CONNECTOR (ENGINE ROOM JUNCTION BLOCK - MAIN BODY ECU AND BODY GROUND)**

OK ▼

2.	CHECK FRO DTC

(a) Clear the DTC INFO .

(b) Turn the engine switch on (IG).

(c) After 10 seconds have elapsed, check if the trouble occurs again.

OK:
DTC B2273 is not output.

NG ▶ **REPLACE MAIN BODY ECU (INSTRUMENT PANEL JUNCTION BLOCK)**

OK ▶ USE SIMULATION METHOD TO CHECK

3.	**CHECK HARNESS AND CONNECTOR (ENGINE ROOM JUNCTION BLOCK - MAIN BODY ECU AND BODY GROUND)**

(a) Disconnect the 1A connector from the engine room junction block.

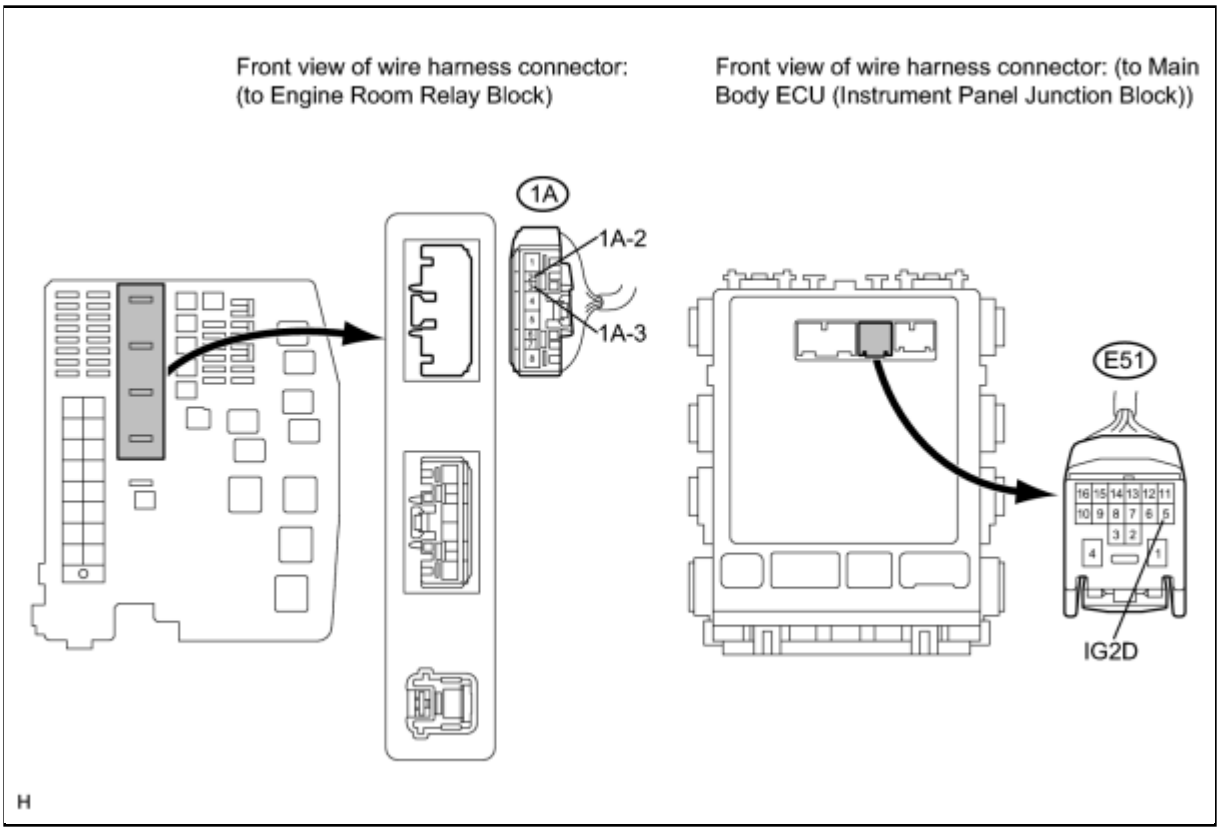

(b) Disconnect the E51 ECU connector.

(c) Measure the resistance according to the value(s) in the table below.

Standard Resistance:

TESTER CONNECTION	CONDITION	SPECIFIED CONDITION
1A-2 - E51-5 (IG2D)	Always	Below 1 Ω
1A-2 - Body ground	Always	10 kΩ or higher
1A-3 - Body ground	Always	Below 1 Ω

NG ▶ **REPAIR OR REPLACE HARNESS OR CONNECTOR (ENGINE ROOM JUNCTION BLOCK - MAIN BODY ECU AND BODY GROUND)**

OK

4.	INSPECT ENGINE ROOM JUNCTION BLOCK (IG2 RELAY)

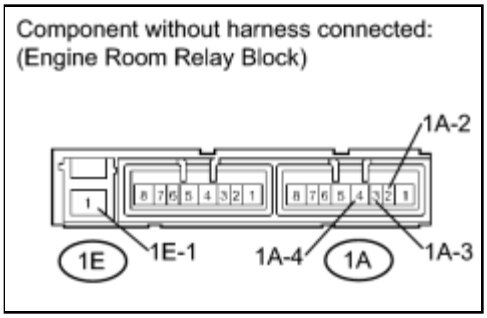

(a) Disconnect the 1E connector from the engine room relay block.

(b) Measure the resistance according to the value(s) in the table below.

Standard Resistance:

TESTER CONNECTION	CONDITION	SPECIFIED CONDITION
1A-4 - 1E-1	When battery voltage is not applied to terminals 1A-3 and 1A-2	10 kΩ or higher
1A-4 - 1E-1	When battery voltage is applied to terminals 1A-3 and 1A-2	Below 1 Ω

NG → **REPLACE ENGINE ROOM JUNCTION BLOCK**

OK → **REPLACE MAIN BODY ECU (INSTRUMENT PANEL JUNCTION BLOCK)**

Last Modified: 3-10-2010	6.4 C	**From:** 200901
Model Year: 2010	**Model:** Corolla	**Doc ID:** RM000001LUY024X
Title: THEFT DETERRENT / KEYLESS ENTRY: SMART KEY SYSTEM (for Start Function): B2274: ACC Monitor Malfunction (2010 Corolla)		

DTC	**B2274**	**ACC Monitor Malfunction**

DESCRIPTION

This DTC is output when there is a problem in the ACCD output circuit, which is from the inside of the main body ECU (instrument panel junction block) to the ACC relay.

HINT:

When the main body ECU (instrument panel junction block) is replaced with a new one and the cable from the negative (-) battery terminal is connected, the power source mode becomes the IG-ON mode. When the battery is removed and reinstalled, the power source mode that was selected when the battery was removed is restored.

After the main body ECU (instrument panel junction block) is replaced, perform the registration procedures for the engine immobiliser system INFO **.**

DTC NO.	DTC DETECTION CONDITION	TROUBLE AREA
B2274	ACC relay actuation circuit inside main body ECU (instrument panel junction block) or other related circuit is malfunctioning	• Main body ECU (instrument panel junction block) • ACC relay • Wire harness or connector

WIRING DIAGRAM

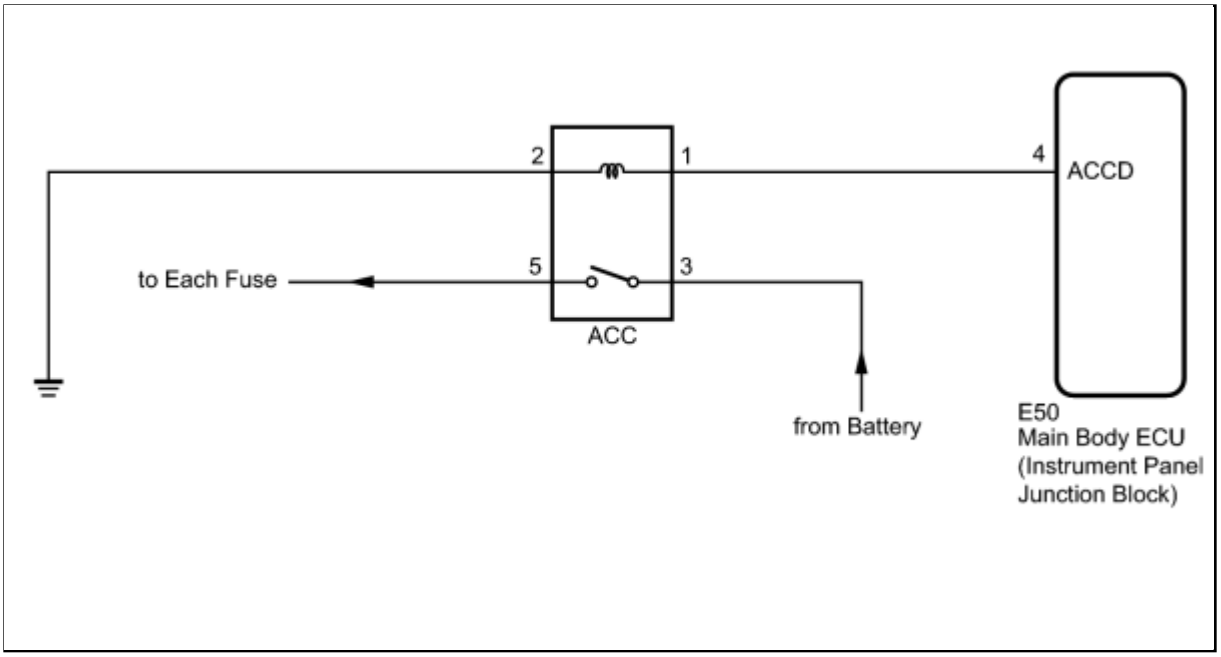

INSPECTION PROCEDURE

PROCEDURE

1.	**READ VALUE USING TECHSTREAM**

(a) Connect the Techstream to the DLC3.

(b) Turn the engine switch on (IG) and turn the Techstream on.

(c) Read the Data List according to the displays on the Techstream.

HINT:

When using the Techstream with the engine switch off, turn on and off any of the door courtesy light switches repeatedly at 1.5 second intervals or less until communication between the Techstream and vehicle starts.

Main Body

TESTER DISPLAY	MEASUREMENT ITEM/RANGE	NORMAL CONDITION	DIAGNOSTIC NOTE
ACC Relay Monitor	Status of ACC Relay Monitor / ON or OFF	ON: Engine switch on (ACC) OFF: Engine switch off	-

OK:
"ON" (engine switch on (ACC)) appears on the screen.

NG ▶ **INSPECT RELAY (ACC RELAY)**

OK

2.	CHECK FOR DTC

(a) Clear the DTC INFO .

(b) Turn the engine switch on (IG).

(c) After 10 seconds have elapsed, check if the trouble occurs again.

OK:
DTC B2273 is not output.

NG ▶ **REPLACE MAIN BODY ECU (INSTRUMENT PANEL JUNCTION BLOCK)**

OK ▶ **USE SIMULATION METHOD TO CHECK**

3.	INSPECT RELAY (ACC RELAY)

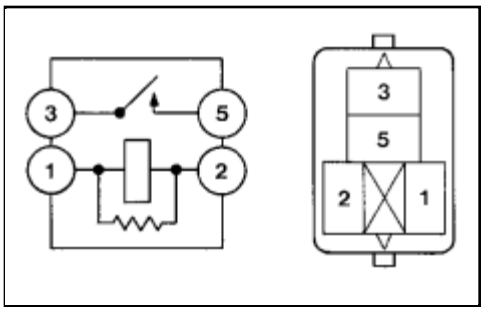

(a) Remove the ACC relay from the relay block No. 5*1.

(b) Remove the ACC relay from the relay block No. 8*2.

(c) Measure the resistance according to the value(s) in the table below.

Standard Resistance:

TESTER CONNECTION	CONDITION	SPECIFIED CONDITION
3 - 5	When battery voltage is not applied to terminals 1 and 2	10 kΩ or higher
3 - 5	When battery voltage is applied to terminals 1 and 2	Below 1 Ω

HINT:

- *1: for TMC Made
- *2: for except TMC Made

NG ▶ **REPLACE ACC RELAY**

OK ▼

4.	**CHECK HARNESS AND CONNECTOR (ACC RELAY - MAIN BODY ECU (INSTRUMENT PANEL JUNCTION BLOCK)**

(a) for TMC Made:

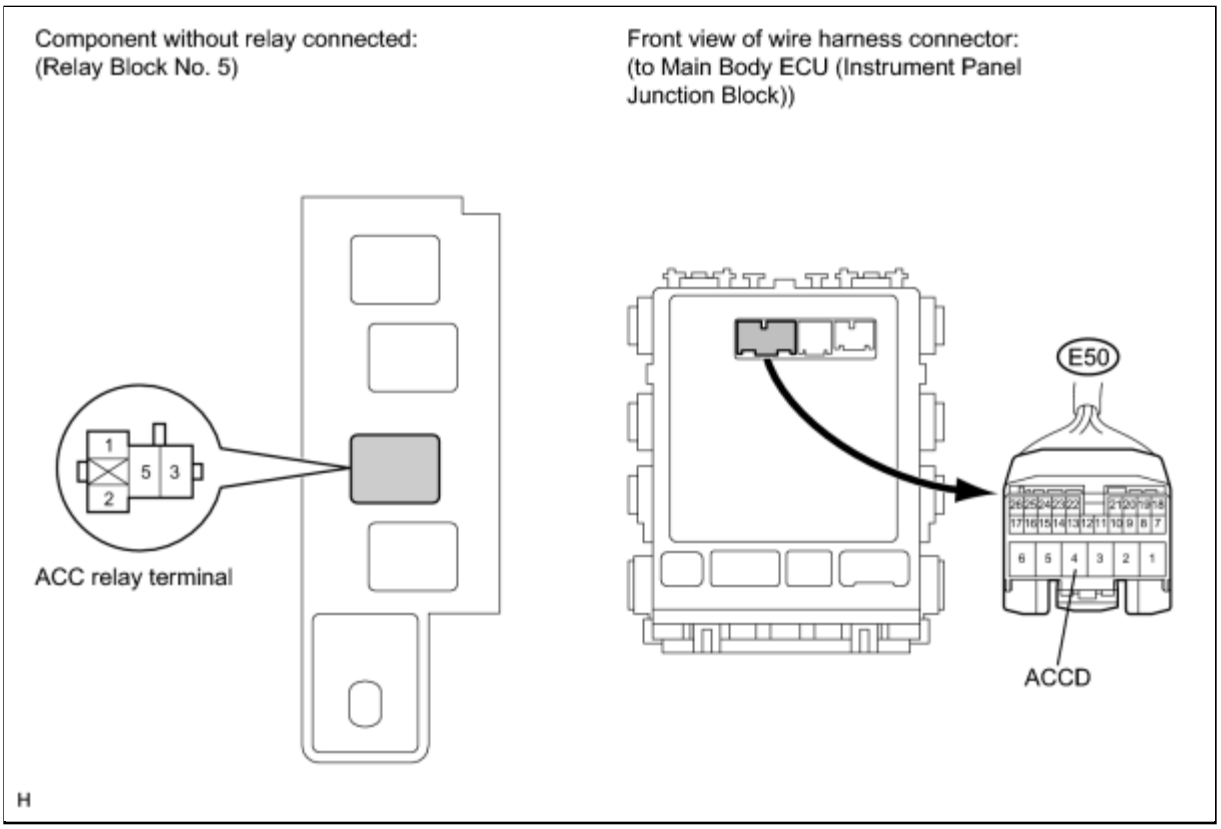

(1) Disconnect the E50 ECU connector.

(2) Measure the resistance according to the value(s) in the table below.

Standard Resistance:

TESTER CONNECTION	CONDITION	SPECIFIED

		CONDITION
Relay block No. 5 ACC relay terminal 1 - E50-4 (ACCD)	Always	Below 1 Ω
E50-4 (ACCD) or Relay block No. 5 ACC relay terminal 1 - Body ground	Always	10 kΩ or higher

(b) for except TMC Made:

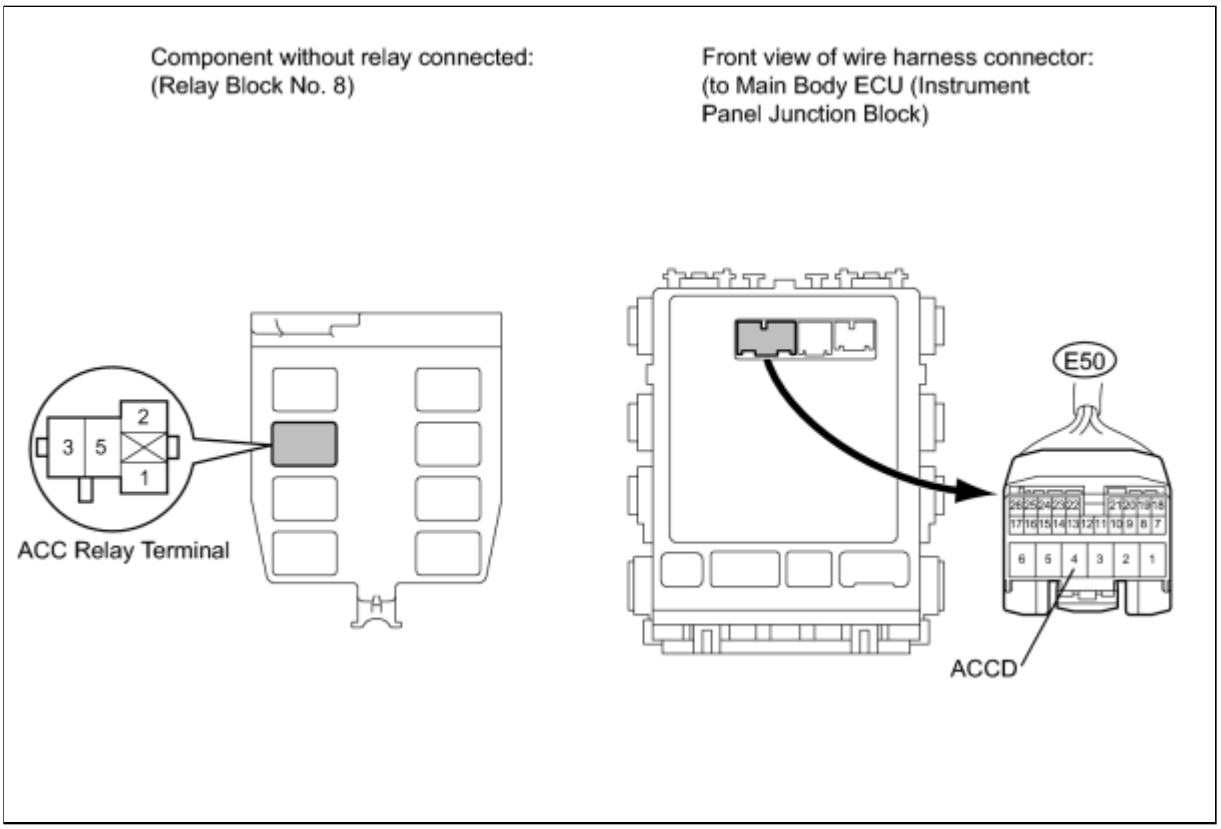

(1) Disconnect the E50 connector.

(2) Measure the resistance according to the value(s) in the table below.

Standard Resistance:

TESTER CONNECTION	CONDITION	SPECIFIED CONDITION
Relay block No. 8 ACC relay terminal 1 - E50-4 (ACCD)	Always	Below 1 Ω
Relay block No. 8 ACC relay terminal 1 or E50-4 (ACCD) - Body ground	Always	10 kΩ or higher

NG ▶ **REPAIR OR REPLACE HARNESS OR CONNECTOR (ACC RELAY - MAIN BODY ECU (INSTRUMENT PANEL JUNCTION BLOCK)**

OK

5.	CHECK HARNESS AND CONNECTOR (ACC RELAY - BATTERY AND BODY GROUND)

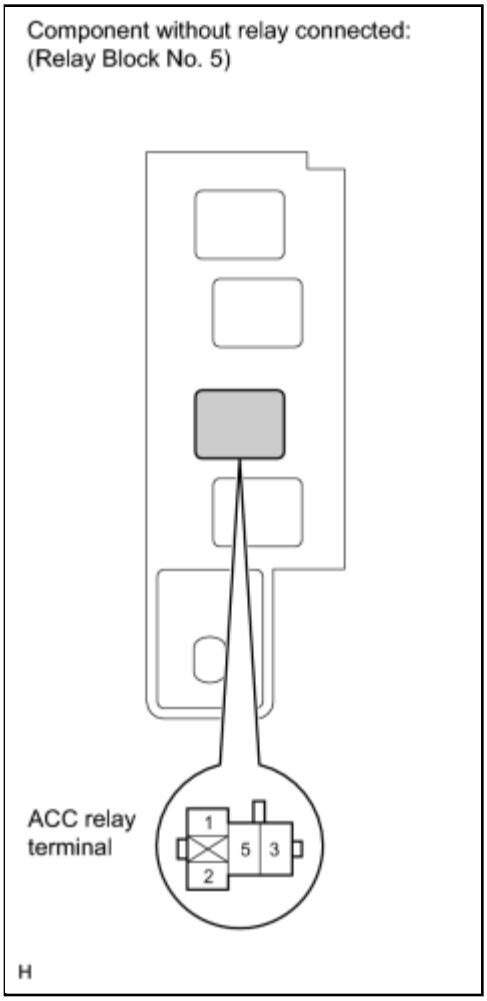

(a) for TMC Made:

(1) Measure the resistance according to the value(s) in the table below.

Standard Resistance:

TESTER CONNECTION	CONDITION	SPECIFIED CONDITION
Relay block No. 5 ACC relay terminal 2 - Body ground	Always	Below 1 Ω

(2) Measure the voltage according to the value(s) in the table below.

Standard Voltage:

TESTER CONNECTION	CONDITION	SPECIFIED CONDITION
Relay block No. 5 ACC relay terminal 3 - Body ground	Always	11 to 14 V

(b) for except TMC Made:

(1) Measure the resistance according to the value(s) in the table below.

Standard Resistance:

TESTER CONNECTION	CONDITION	SPECIFIED CONDITION
Relay block No. 8 ACC relay terminal 2 - Body ground	Always	Below 1 Ω

(2) Measure the voltage according to the value(s) in

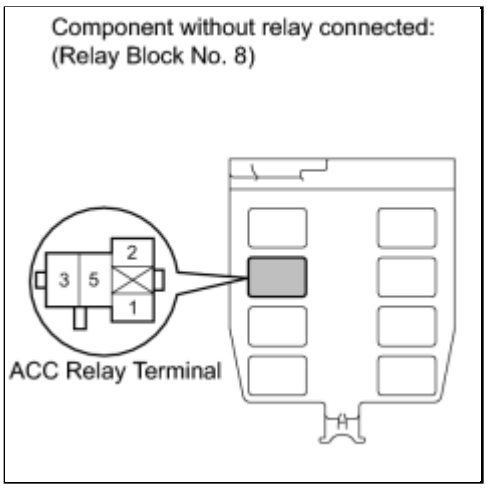

the table below.

Standard Voltage:

TESTER CONNECTION	CONDITION	SPECIFIED CONDITION
Relay block No. 8 ACC relay terminal 3 - Body ground	Always	11 to 14 V

NG ▶ **REPAIR OR REPLACE HARNESS OR CONNECTOR (ACC RELAY - BATTERY AND BODY GROUND)**

OK ▶ **REPLACE MAIN BODY ECU (INSTRUMENT PANEL JUNCTION BLOCK)**

Last Modified: 3-10-2010	6.4 C	**From:** 200901
Model Year: 2010	**Model:** Corolla	**Doc ID:** RM000001LUZ024X
Title: THEFT DETERRENT / KEYLESS ENTRY: SMART KEY SYSTEM (for Start Function): B2275: STSW Monitor Malfunction (2010 Corolla)		

DTC	**B2275**	**STSW Monitor Malfunction**

DESCRIPTION

This DTC is output when there is an open, short, or any other problem in the engine start request output circuit inside the main body ECU (instrument panel junction block) or in the external circuit.

HINT:

When the main body ECU (instrument panel junction block) is replaced with a new one and the cable from the negative (-) battery terminal is connected, the power source mode becomes the IG-ON mode. When the battery is removed and reinstalled, the power source mode that was selected when the battery was removed is restored.

After the main body ECU (instrument panel junction block) is replaced, perform the registration procedures for the engine immobiliser system INFO **.**

DTC NO.	DTC DETECTION CONDITION	TROUBLE AREA
B2275	STSW output circuit (engine starting request signal circuit) inside main body ECU (instrument panel junction block) or other related circuit is malfunctioning	• Main body ECU (instrument panel junction block) • ECM • Wire harness or connector

WIRING DIAGRAM

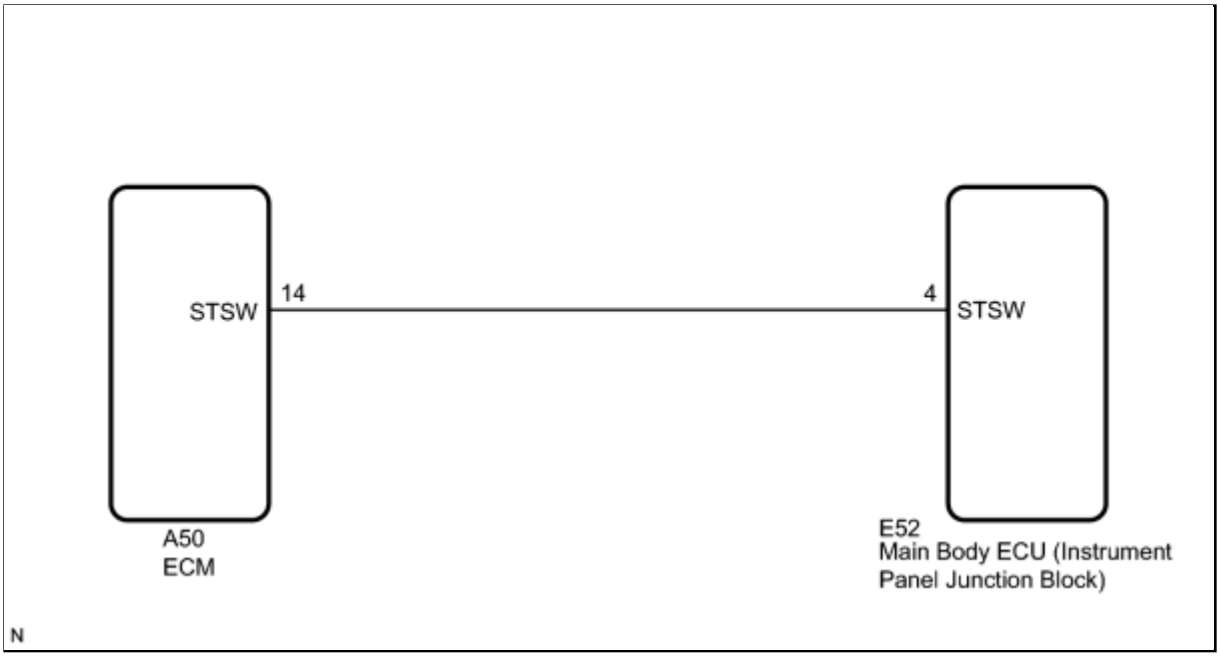

INSPECTION PROCEDURE

PROCEDURE

1.	**CHECK FOR DTC**

(a) Clear the DTC INFO .

(b) Turn the engine switch on (IG).

(c) After 15 seconds have elapsed, check if the trouble occurs again.

OK:

DTC B2273 is not output.

NG ▶ **CHECK HARNESS AND CONNECTOR (MAIN BODY ECU (INSTRUMENT PANEL JUNCTION BLOCK) - ECM)**

OK ▶ **USE SIMULATION METHOD TO CHECK**

2.	**CHECK HARNESS AND CONNECTOR (MAIN BODY ECU (INSTRUMENT PANEL JUNCTION BLOCK) - ECM)**

(a) Disconnect the E52 ECU connector.

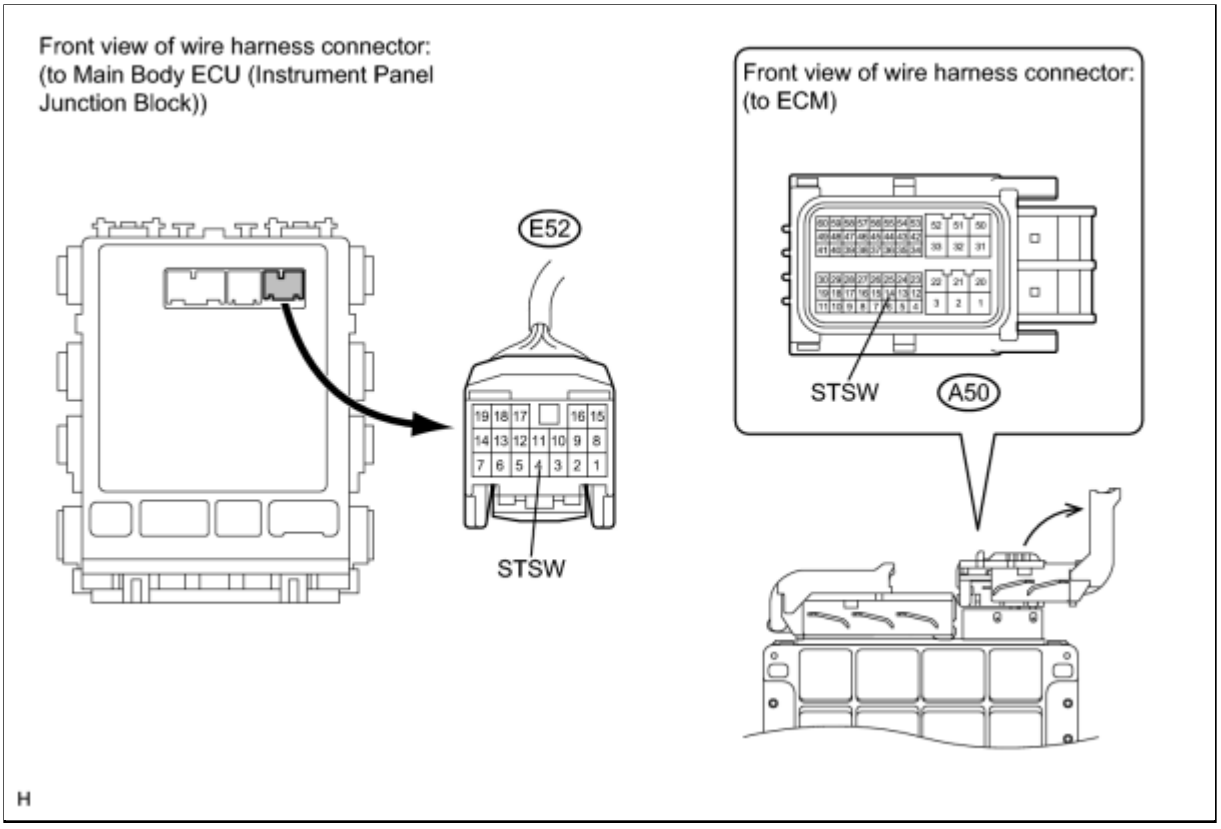

(b) Disconnect the A50 ECM connector.

(c) Measure the resistance according to the value(s) in the table below.

Standard Resistance:

TESTER CONNECTION	CONDITION	SPECIFIED CONDITION
E52-4 (STSW) - A50-14 (STSW)	Always	Below 1 Ω
E52-4 (STSW) - Body ground	Always	10 kΩ or higher

NG ▶ **REPAIR OR REPLACE HARNESS OR CONNECTOR (MAIN BODY ECU (INSTRUMENT PANEL JUNCTION BLOCK) - ECM)**

OK ▼

3.	**INSPECT MAIN BODY ECU (INSTRUMENT PANEL JUNCTION BLOCK)**

(a) Reconnect the E52 connector.

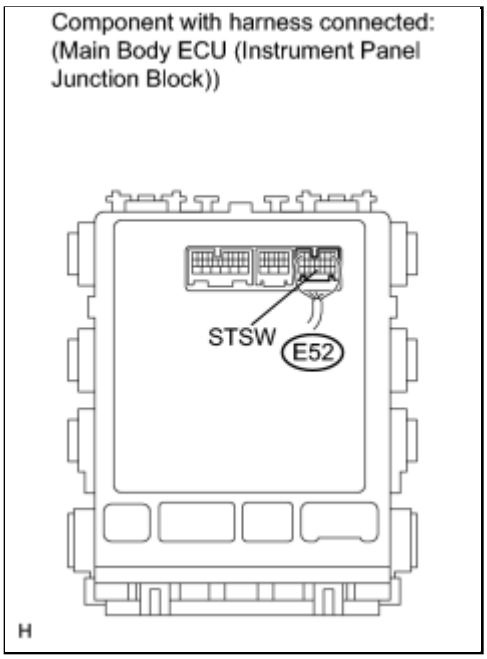

(b) Measure the voltage according to the value(s) in the table below.

Standard Voltage:

TESTER CONNECTION	CONDITION	SPECIFIED CONDITION
E52-4 (STSW) - Body ground	Brake pedal depressed, Engine switch hold on (ST)	Output voltage at terminal AM1 or AM2 is -2 V or more.

NG ▶ **REPLACE MAIN BODY ECU (INSTRUMENT PANEL JUNCTION BLOCK)**

OK ▶ **REPLACE ECM**

Last Modified: 3-10-2010	6.4 C	**From:** 200901
Model Year: 2010	**Model:** Corolla	**Doc ID:** RM000001LV8020X
Title: THEFT DETERRENT / KEYLESS ENTRY: SMART KEY SYSTEM (for Start Function): B2276: ACCR Signal Circuit Malfunction (2010 Corolla)		

DTC	**B2276**	**ACCR Signal Circuit Malfunction**

DESCRIPTION

The main body ECU (instrument panel junction block) will set this DTC if the ACCR signal sent from the ECM is ON for 40 seconds or more.

HINT:

When the main body ECU (instrument panel junction block) is replaced with a new one and the cable from the negative (-) battery terminal is connected, the power source mode becomes the IG-ON mode. When the battery is removed and reinstalled, the power source mode that was selected when the battery was removed is restored.

After the main body ECU (instrument panel junction block) is replaced, perform the registration procedures for the engine immobiliser system INFO **.**

DTC NO.	DTC DETECTION CONDITION	TROUBLE AREA
B2276	ACCR output circuit inside main body ECU (instrument panel junction block) or other related circuit is malfunctioning	• Main body ECU (instrument panel junction block) • ECM • Wire harness or connector

WIRING DIAGRAM

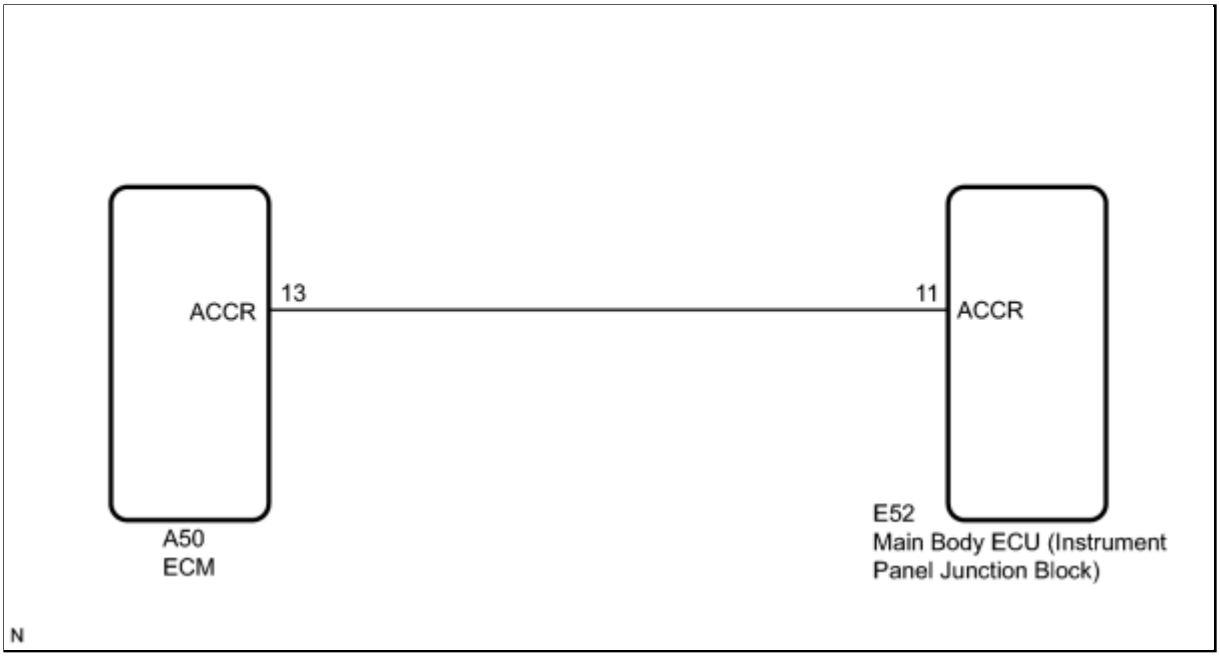

INSPECTION PROCEDURE

PROCEDURE

1.	**CHECK DTC OUTPUT**

(a) Clear the DTCs INFO.

(b) After all DTCs are cleared, check if the trouble occurs again 50 seconds after the engine switch is turned on (IG).

(c) Check for DTCs again.

OK:

No DTC B2276 is output.

NG ▶ **CHECK HARNESS AND CONNECTOR (MAIN BODY ECU (INSTRUMENT PANEL JUNCTION BLOCK) - ECM)**

OK ▶ **USE SIMULATION METHOD TO CHECK**

2.	**CHECK HARNESS AND CONNECTOR (MAIN BODY ECU (INSTRUMENT PANEL JUNCTION BLOCK) - ECM)**

(a) Disconnect the E52 ECU connector.

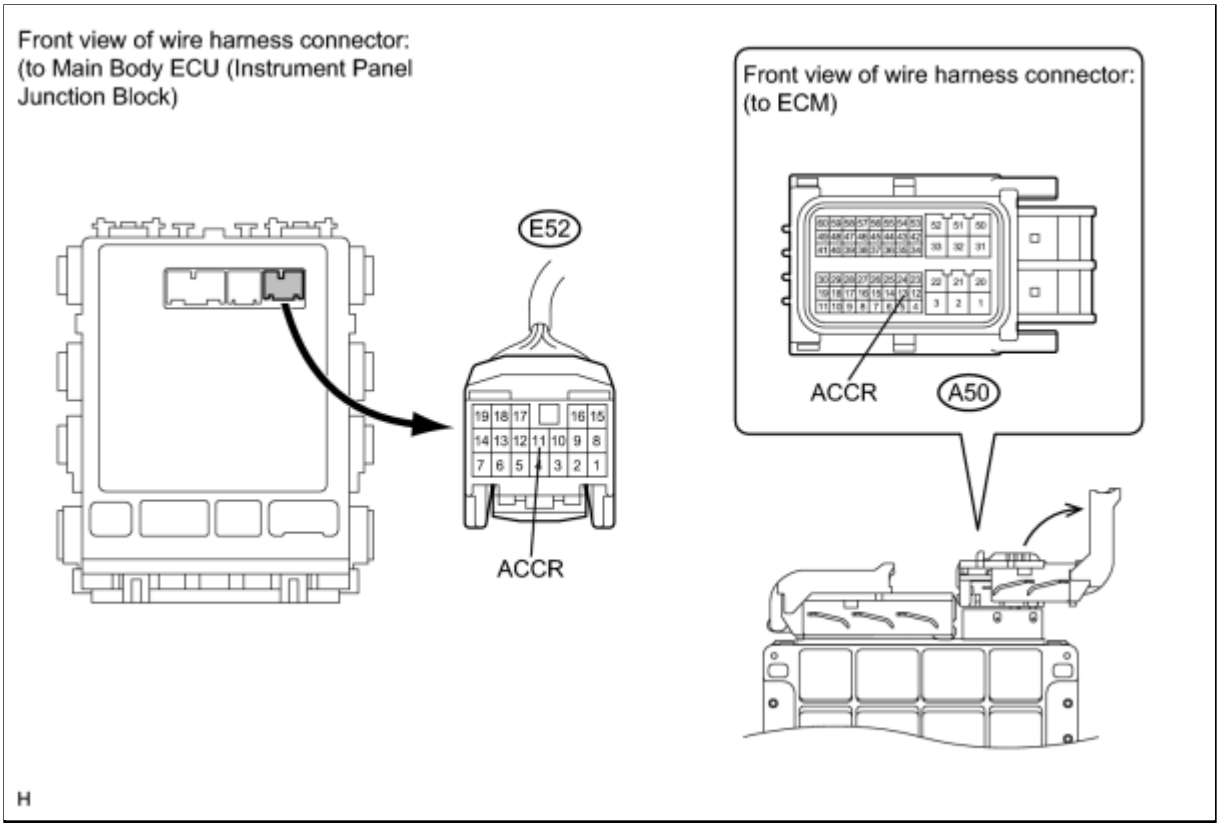

(b) Disconnect the A50 ECM connector.

(c) Measure the resistance according to the value(s) in the table below.

Standard Resistance:

TESTER CONNECTION	CONDITION	SPECIFIED CONDITION
E52-11 (ACCR) - A50-13 (ACCR)	Always	Below 1 Ω
E52-11 (ACCR) - Body ground	Always	10 kΩ or higher

NG ▶ **REPAIR OR REPLACE HARNESS OR CONNECTOR (MAIN BODY ECU (INSTRUMENT PANEL JUNCTION BLOCK) - ECM)**

OK ▼

3.	**INSPECT MAIN BODY ECU (INSTRUMENT PANEL JUNCTION BLOCK)**

(a) Reconnect the E52 connector.

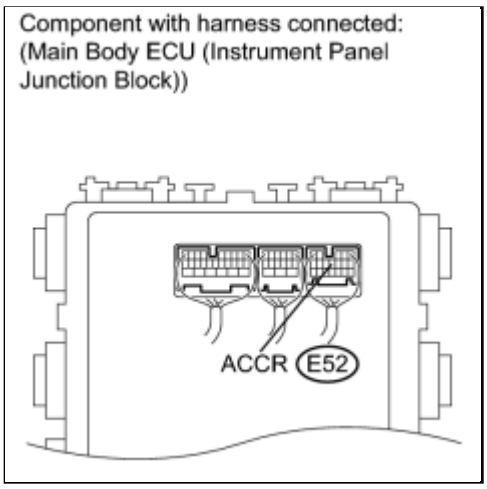

(b) Measure the voltage according to the value(s) in the table below.

Standard Voltage:

TESTER CONNECTION	CONDITION	SPECIFIED CONDITION
E52-11 (ACCR) - Body ground	Brake pedal depressed, shift P, engine switch is pushed once → on (IG)	0.1 to 0.8 V*1 → output voltage at terminal AM1 or AM2 is -2 V or more.

HINT:

***1: Voltage is output only when the engine is cranking.**

NG ▶ **REPLACE ECM**

OK ▶ **REPLACE MAIN BODY ECU (INSTRUMENT PANEL JUNCTION BLOCK)**

Last Modified: 3-10-2010	6.4 C	**From:** 200901
Model Year: 2010	**Model:** Corolla	**Doc ID:** RM000000Y7Z04VX
Title: THEFT DETERRENT / KEYLESS ENTRY: SMART KEY SYSTEM (for Start Function): B2278: Engine Switch Circuit Malfunction (2010 Corolla)		

DTC	**B2278**	**Engine Switch Circuit Malfunction**

DESCRIPTION

This DTC is output when 1) a malfunction is detected between the main body ECU (instrument panel junction block) and the engine switch; or 2) either of the switches inside the engine switch is malfunctioning.

HINT:

When the main body ECU (instrument panel junction block) is replaced with a new one and the cable from the negative (-) battery terminal is connected, the power source mode becomes the IG-ON mode. When the battery is removed and reinstalled, the power source mode that was selected when the battery was removed is restored.

After the main body ECU (instrument panel junction block) is replaced, perform the registration procedures for the engine immobiliser system INFO .

DTC NO.	DTC DETECTION CONDITION	TROUBLE AREA
B2278	Communication is abnormal between the main body ECU (instrument panel junction block) and engine switch or the engine switch is defective	• Engine switch • Main body ECU (instrument panel junction block) • Wire harness or connector

WIRING DIAGRAM

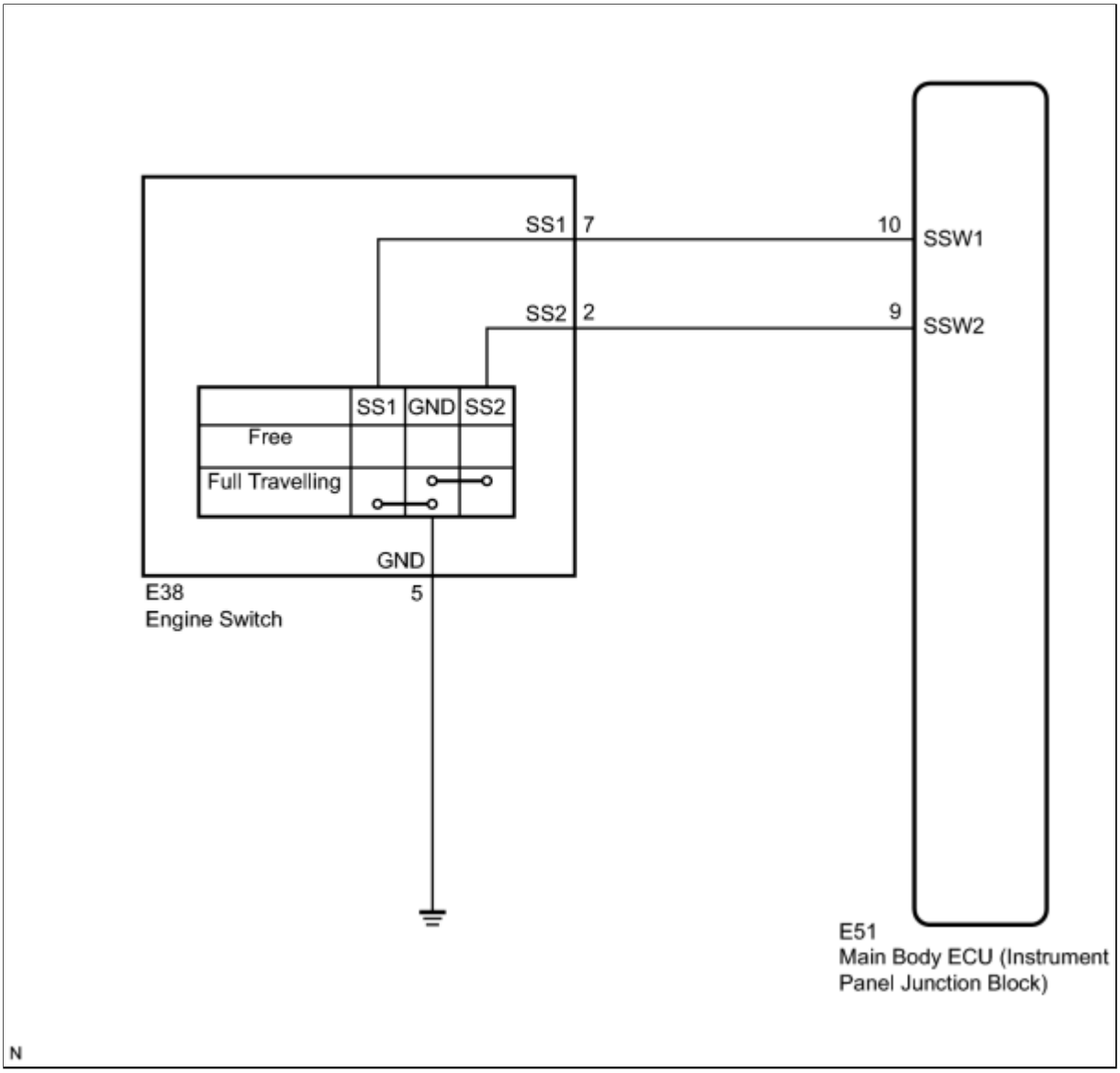

INSPECTION PROCEDURE

PROCEDURE

1.	**READ VALUE USING TECHSTREAM (START SWITCH)**

(a) Connect the Techstream to the DLC3.

(b) Check the Data List for proper functioning of the start switch.

HINT:

When using the Techstream with the engine switch off, turn on and off any of the door courtesy light switches repeatedly at 1.5 second intervals or less until communication between the Techstream and vehicle starts.

Main Body

TESTER DISPLAY	MEASUREMENT ITEM/RANGE	NORMAL CONDITION	DIAGNOSTIC NOTE
Start Switch 1	Start Switch 1 / ON or OFF	ON: Engine switch is pushed OFF: Engine switch is not pushed	-
Start Switch 22	Start Switch 2 / ON or OFF	ON: Engine switch is pushed OFF: Engine switch is not pushed	-

OK:

ON (engine switch is pushed) and OFF (engine switch is not pushed) appear on the screen.

NG ▶ **INSPECT ENGINE SWITCH**

OK ▶ **REPLACE MAIN BODY ECU (INSTRUMENT PANEL JUNCTION BLOCK)**

2.	**INSPECT ENGINE SWITCH**

(a) Remove the engine switch INFO .

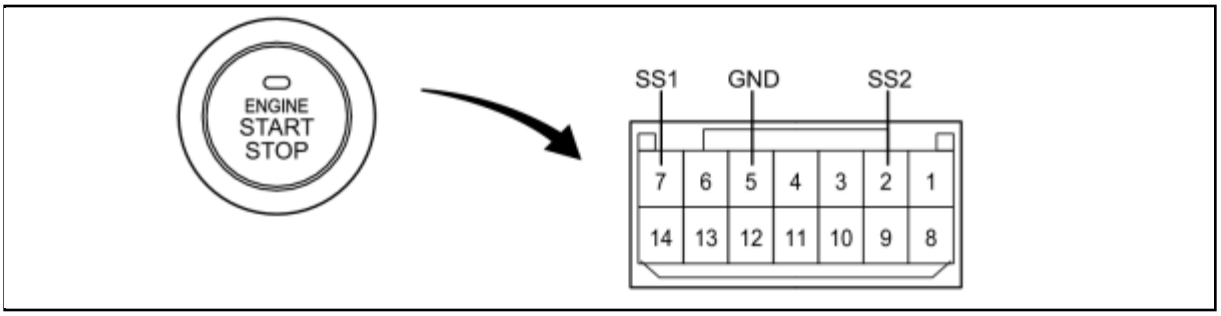

(b) Disconnect the switch connector.

(c) Measure the resistance according to the value(s) in the table below.

Standard Resistance:

TESTER CONNECTION	SWITCH CONDITION	SPECIFIED CONDITION
7 (SS1) - 5 (GND)	Pushed	Below 1 Ω
2 (SS2) - 5 (GND)	Pushed	Below 1 Ω
7 (SS1) - 5 (GND)	Not pushed	10 kΩ or higher
2 (SS2) - 5 (GND)	Not pushed	10 kΩ or higher

HINT:

This switch is a momentary type switch.

NG ▶ **REPLACE ENGINE SWITCH**

OK ▼

3.	**CHECK HARNESS AND CONNECTOR (ENGINE SWITCH - MAIN BODY ECU AND BODY GROUND)**

(a) Disconnect the E51 ECU connector.

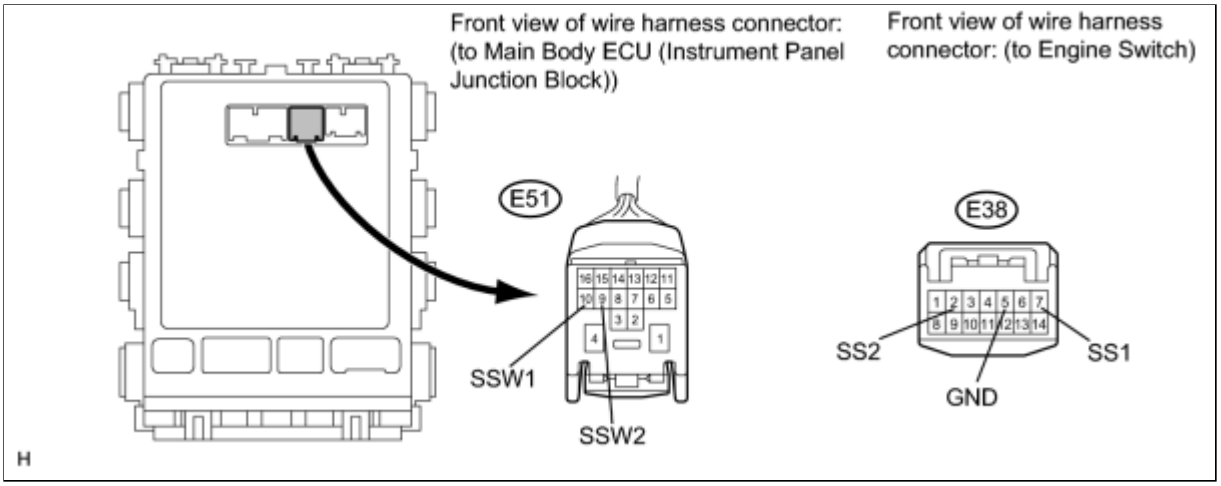

(b) Disconnect the E38 switch connector.

(c) Measure the resistance according to the value(s) in the table below.

Standard Resistance:

TESTER CONNECTION	CONDITION	SPECIFIED CONDITION
E38-7 (SS1) - E51-10 (SSW1)	Always	Below 1 Ω
E38-2 (SS2) - E51-9 (SSW2)	Always	Below 1 Ω
E38-5 (GND) - Body ground	Always	Below 1 Ω
E38-7 (SS1) or E51-10 (SSW1) - Body ground	Always	10 kΩ or higher
E38-2 (SS2) or E51-9 (SSW2) - Body ground	Always	10 kΩ or higher

NG ▶ **REPAIR OR REPLACE HARNESS OR CONNECTOR (ENGINE SWITCH - MAIN BODY ECU AND BODY GROUND)**

OK ▶ REPLACE MAIN BODY ECU (INSTRUMENT PANEL JUNCTION BLOCK)

Last Modified: 3-10-2010	6.4 C	**From:** 200901
Model Year: 2010	**Model:** Corolla	**Doc ID:** RM000001LV001UX
Title: THEFT DETERRENT / KEYLESS ENTRY: SMART KEY SYSTEM (for Start Function): B2277: Detecting Vehicle Submersion (2010 Corolla)		

DTC	**B2277**	**Detecting Vehicle Submersion**

DESCRIPTION

This DTC is output when the submersion circuit monitor inside the main body ECU (instrument panel junction block) detects that the vehicle is submerged in water.

HINT:

When the main body ECU (instrument panel junction block) is replaced with a new one and the cable from the negative (-) battery terminal is connected, the power source mode becomes the IG-ON mode. When the battery is removed and reinstalled, the power source mode that was selected when the battery was removed is restored.

After the main body ECU (instrument panel junction block) is replaced, perform the registration procedures for the engine immobiliser system INFO **.**

DTC NO.	DTC DETECTION CONDITION	TROUBLE AREA
B2277	Submersion circuit monitor inside main body ECU (instrument panel junction block) detects that vehicle is submerged in water	Main body ECU (instrument panel junction block)

INSPECTION PROCEDURE

PROCEDURE

1.	**CHECK FOR WATER DAMAGE**

(a) Check the main body ECU (instrument panel junction block), peripheral components, and wire harnesses for traces of water.

OK:

There are no traces of water.

NG ▶ **TAKE APPROPRIATE MEASURES AGAINST CAUSE OF WATER DAMAGE AND REPLACE MAIN BODY ECU (INSTRUMENT PANEL JUNCTION BLOCK)**

OK

2.	**CHECK FOR DTC**

(a) Clear the DTC INFO .

(b) Turn the engine switch on (IG).

(c) After 330 seconds have elapsed, check if the trouble occurs again.

OK:
DTC B2277 is not output.

NG ▶ **REPLACE MAIN BODY ECU (INSTRUMENT PANEL JUNCTION BLOCK)**

OK ▶ **USE SIMULATION METHOD TO CHECK**

Last Modified: 3-10-2010	6.4 C	**From:** 200901
Model Year: 2010	**Model:** Corolla	**Doc ID:** RM000000XEV055X
Title: THEFT DETERRENT / KEYLESS ENTRY: SMART KEY SYSTEM (for Start Function): B2282,B2283: Vehicle Speed Signal Malfunction (2010 Corolla)		

DTC	**B2282**	**Vehicle Speed Signal Malfunction**

DTC	**B2283**	**Vehicle Speed Sensor Malfunction**

DESCRIPTION

The skid control ECU converts these signals into 4-pulse signals and sends them to the combination meter. After this signal is converted into a more precise rectangular waveform by the waveform shaping circuit inside the combination meter, it is then transmitted to the main body ECU (instrument panel junction block). The main body ECU (instrument panel junction block) determines the vehicle speed based on the frequency of these pulse signals.

The main body ECU (instrument panel junction block) and the combination meter are connected by a cable and the CAN. DTC B2282 is output when the cable information and CAN information are inconsistent.

HINT:

When the main body ECU (instrument panel junction block) is replaced with a new one and the cable from the negative (-) battery terminal is connected, the power source mode becomes the IG-ON mode. When the battery is removed and reinstalled, the power source mode that was selected when the battery was removed is restored.

After the main body ECU (instrument panel junction block) is replaced, perform the registration procedures for the engine immobiliser system INFO **.**

DTC NO.	DTC DETECTION CONDITION	TROUBLE AREA
B2282	Cable information and CAN information between the main body ECU (instrument panel junction block) and the combination meter are inconsistent	• CAN communication system • Combination meter system • Main body ECU (instrument panel junction block) • Wire harness or connector

DTC NO.	DTC DETECTION CONDITION	TROUBLE AREA
B2283	When either of conditions below is met: • Over-deceleration in vehicle speed • Vehicle speed and engine speed do not match	• DTC B2282 detection area • Combination meter • Speed sensor • Skid control ECU • Main body ECU (instrument panel junction block) • Wire harness or connector

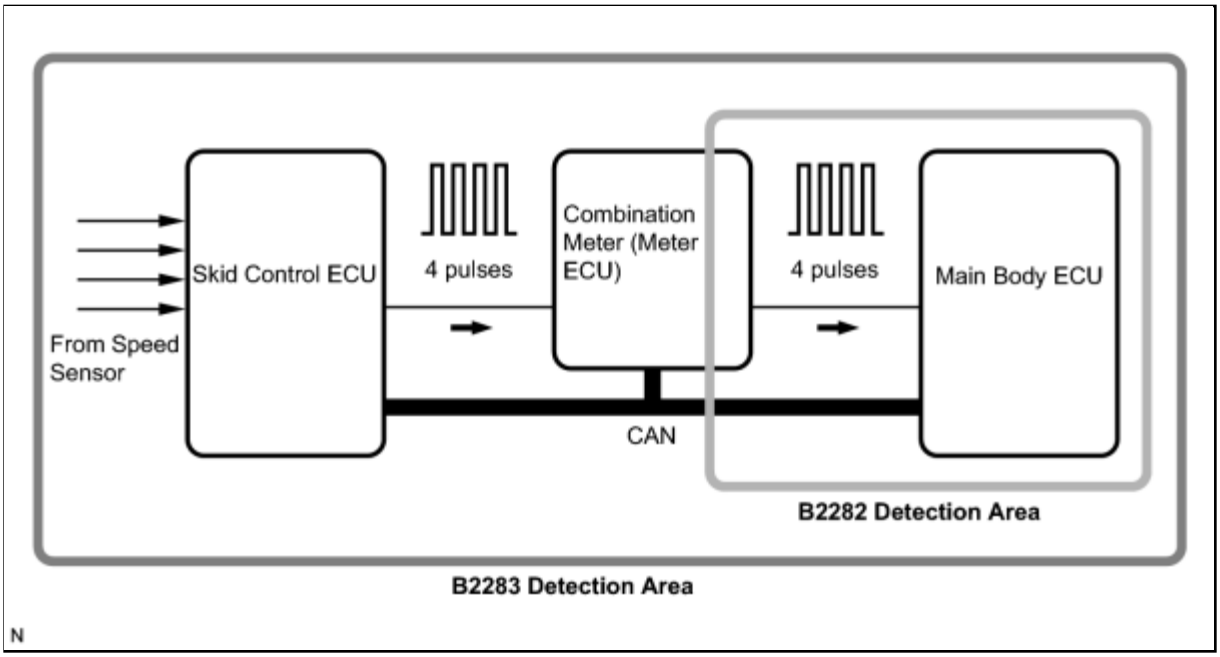

WIRING DIAGRAM

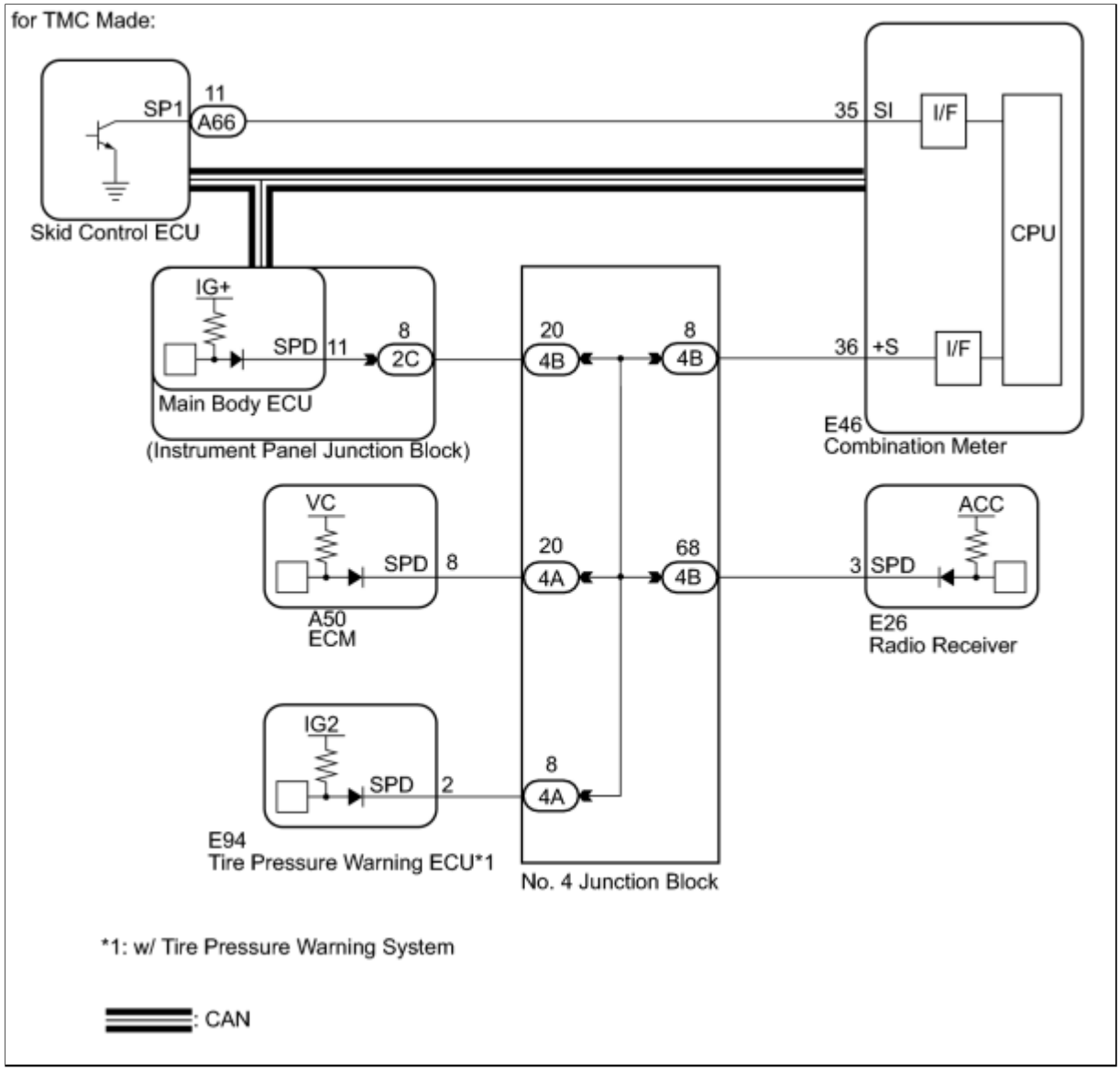
for TMC Made:
SP1
11
A66
Skid Control ECU
35
SI
I/F
CPU
IG+
SPD
11
8
2C
Main Body ECU
(Instrument Panel Junction Block)
20
4B
8
4B
36
+S
I/F
E46
Combination Meter
VC
SPD
8
A50
ECM
20
4A
68
4B
3
SPD
ACC
E26
Radio Receiver
IG2
SPD
2
8
4A
E94
Tire Pressure Warning ECU*1
No. 4 Junction Block
*1: w/ Tire Pressure Warning System
: CAN

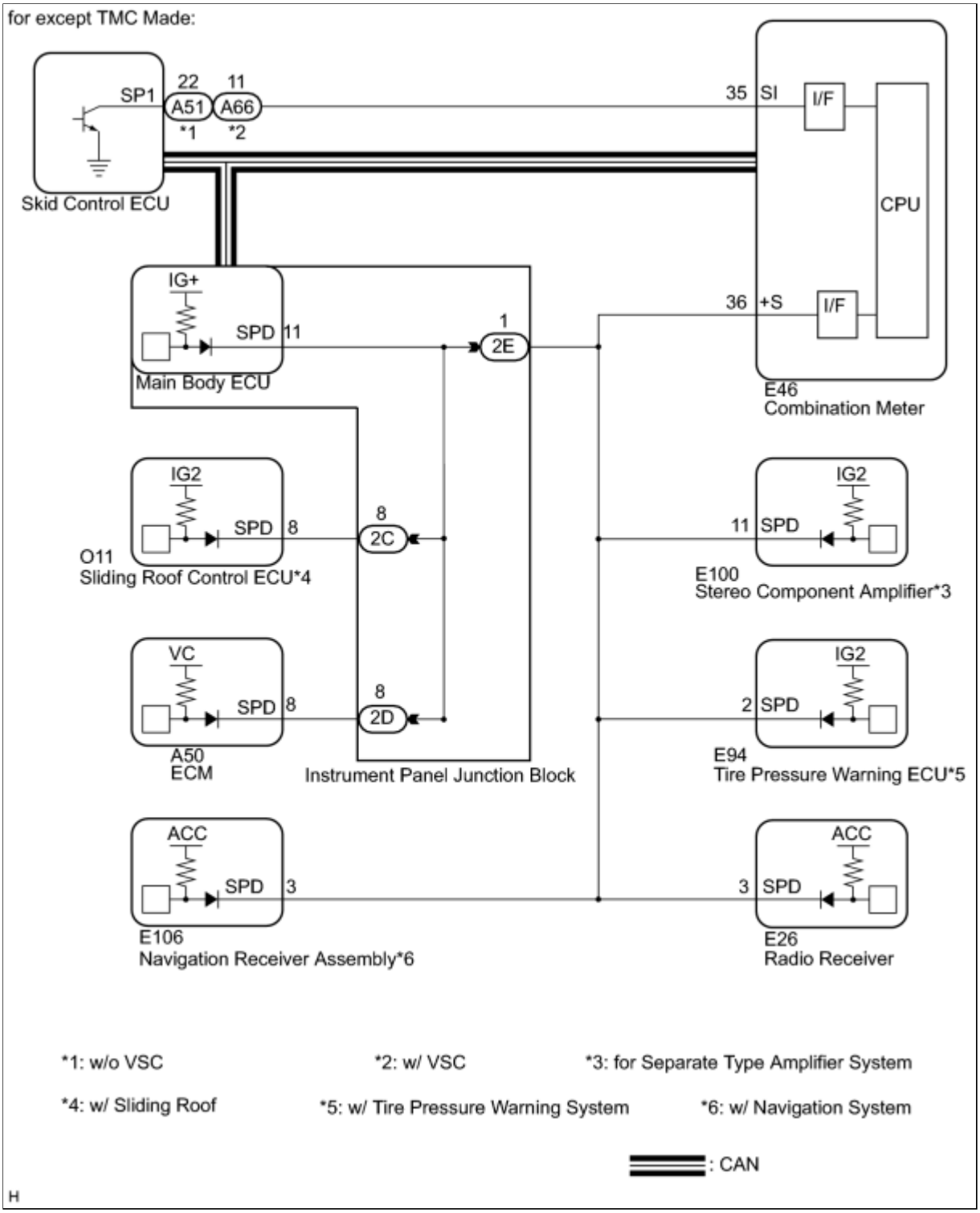

HINT:

- A voltage of 12 V or 5 V is output from each ECU and then input to the combination meter. The signal is changed to a pulse signal at the transistor in the combination meter. Each ECU controls the respective system based on the pulse signal.
- If a short occurs in an ECU, all systems in the diagram above will not operate normally.

INSPECTION PROCEDURE

PROCEDURE

1.	CHECK CAN COMMUNICATION SYSTEM

(a) Check for CAN communication system DTCs INFO .

HINT:

If the DTCs for the CAN communication system malfunction are output, inspect those DTCs first.

Result:

RESULT	PROCEED TO
CAN communication DTC is not output	A
CAN communication DTC is output	B

B ▶ **GO TO CAN COMMUNICATION SYSTEM**

A ▼

2.	CHECK SPEEDOMETER OPERATION

(a) Connect the Techstream to the DLC3.

(b) Turn the engine switch on (IG).

(c) Enter the following menus: Body Electrical / Combination Meter / Data List.

(d) Check the values by referring to the values in the table below.

Combination Meter

TESTER DISPLAY	MEASUREMENT ITEM/RANGE	NORMAL CONDITION	DIAGNOSTIC NOTE
Vehicle Speed Meter	Vehicle speed/Min.: 0 km/h (0mph), Max.: 255 km/h (158 mph)	Almost same as actual speed (When driving)	-

OK:

Vehicle speed displayed on the Techstream is almost the same as the actual vehicle speed measured using a speedometer tester (calibrated chassis dynamometer).

NG ▶ **GO TO METER / GAUGE SYSTEM (SPEEDOMETER MALFUNCTION)**

OK

3.	**READ VALUE USING TECHSTREAM (VEHICLE SPEED SIGNAL)**

(a) Connect the Techstream to the DLC3.

(b) Turn the engine switch on (IG).

(c) Read the Data List according to the displays on the Techstream.

Main Body

TESTER DISPLAY	MEASUREMENT ITEM/RANGE	NORMAL CONDITION	DIAGNOSTIC NOTE
Vehicle Speed Signal	Vehicle speed signal / STOP or RUN	STOP: Vehicle is stopped Run: Vehicle is running	-

OK:

"STOP" (Vehicle is stopped) and "OFF" (Vehicle is running) appear on the screen.

(d) Proceed to the next step based on the inspection result.

Result:

RESULT	PROCEED TO
OK	A
NG (TMC made)	B
NG (except TMC Made)	C

C **CHECK HARNESS AND CONNECTOR (COMBINATION METER - INSTRUMENT PANEL JUNCTION BLOCK)**

B **CHECK HARNESS AND CONNECTOR (COMBINATION METER - MAIN BODY ECU)**

A **REPLACE MAIN BODY ECU (INSTRUMENT PANEL JUNCTION BLOCK)**

4.	**CHECK HARNESS AND CONNECTOR (COMBINATION METER - MAIN BODY ECU)**

(a) Disconnect the E46 meter connector.

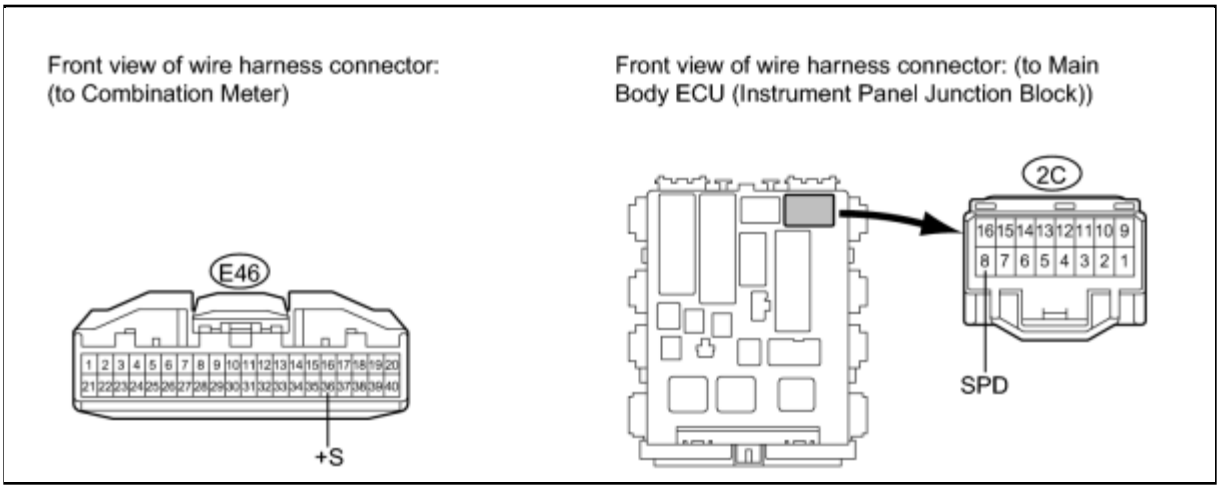

(b) Disconnect the 2C connector.

(c) Measure the resistance according to the value(s) in the table below.

Standard Resistance:

TESTER CONNECTION	CONDITION	SPECIFIED CONDITION
2C-8 (SPD) - E46-36 (+S)	Always	Below 1 Ω
2C-8 (SPD) or E46-36 (+S) - Body ground	Always	10 kΩ or higher

NG ▶ **CHECK HARNESS AND CONNECTOR (COMBINATION METER - NO. 4 JUNCTION BLOCK)**

OK ▼

5.	**INSPECT COMBINATION METER ASSEMBLY**

(a) Check the output waveform.

(1) Remove the combination meter with the connector(s) still connected INFO .

(2) Connect the oscilloscope to terminals E46-36 (+S) and body ground.

(3) Turn the engine switch on (IG).

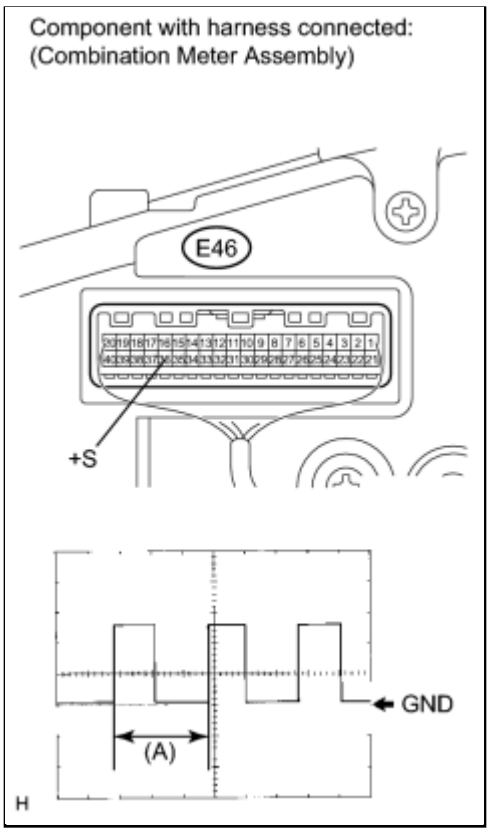

(4) Turn the wheel slowly.

(5) Check the signal waveform according to the condition(s) in the table below.

ITEM	CONDITION
Tool setting	5 V/DIV., 20 ms./DIV
Vehicle condition	Driving at approx. 20 km/h

OK:

The waveform is displayed as shown in the illustration.

HINT:

When the system is functioning normally, one wheel revolution generates 4 pulses. As the vehicle speed increases, the width indicated by (A) in the illustration narrows.

NG ▶ **GO TO METER / GAUGE SYSTEM**

OK ▶ **REPLACE MAIN BODY ECU (INSTRUMENT PANEL JUNCTION BLOCK)**

6.	**CHECK HARNESS AND CONNECTOR (COMBINATION METER - NO. 4 JUNCTION BLOCK)**

(a) Disconnect the 4B connector.

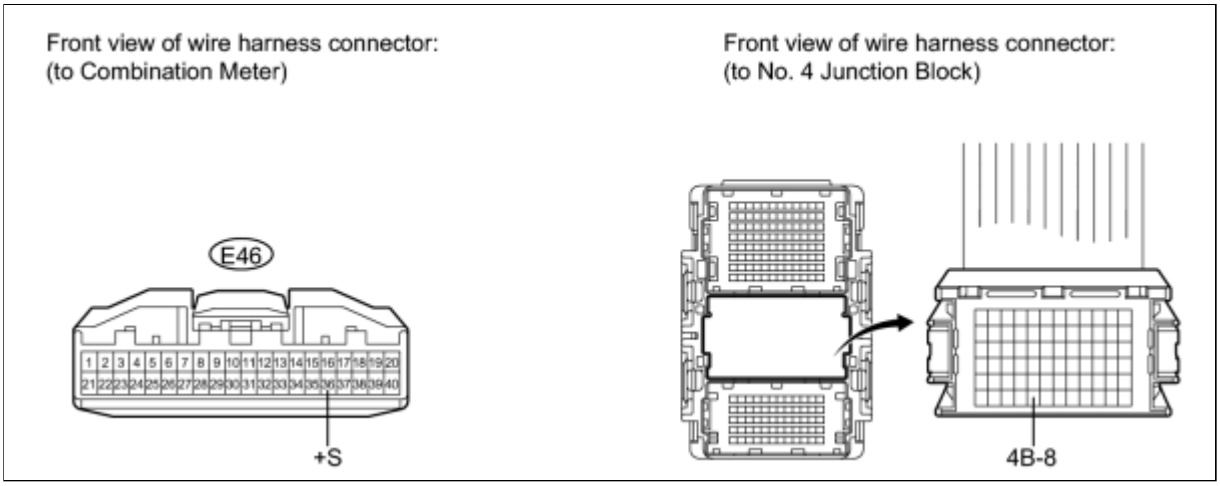

(b) Measure the resistance according to the value(s) in the table below.

Standard Resistance:

TESTER CONNECTION	CONDITION	SPECIFIED CONDITION
E46-36 (+S) - 4B-8	Always	Below 1 Ω
E46-36 (+S) or 4B-8 - Body ground	Always	Below 1 Ω

NG ▶ **REPAIR OR REPLACE HARNESS OR CONNECTOR (COMBINATION METER - NO. 4 JUNCTION BLOCK)**

OK ▼

7.	**CHECK HARNESS AND CONNECTOR (INSTRUMENT PANEL JUNCTION BLOCK - NO. 4 JUNCTION BLOCK)**

(a) Measure the resistance according to the value(s) in the table below.

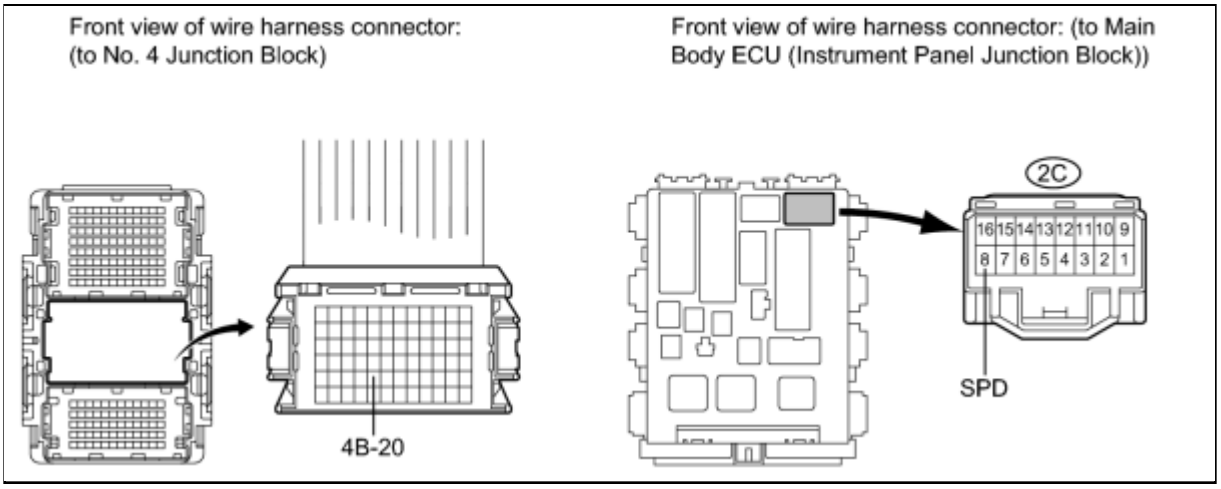

Standard Resistance:

TESTER CONNECTION	CONDITION	SPECIFIED CONDITION
2C-8 (SPD) - 4B-20	Always	Below 1 Ω
2C-8 (SPD) or 4B-20 - Body ground	Always	10 kΩ or higher

NG ▶ **REPAIR OR REPLACE HARNESS OR CONNECTOR (INSTRUMENT PANEL JUNCTION BLOCK - NO. 4 JUNCTION BLOCK)**

OK ▶ **REPLACE JUNCTION CONNECTOR**

8.	**CHECK HARNESS AND CONNECTOR (COMBINATION METER - INSTRUMENT PANEL JUNCTION BLOCK)**

(a) Disconnect the E46 meter connector.

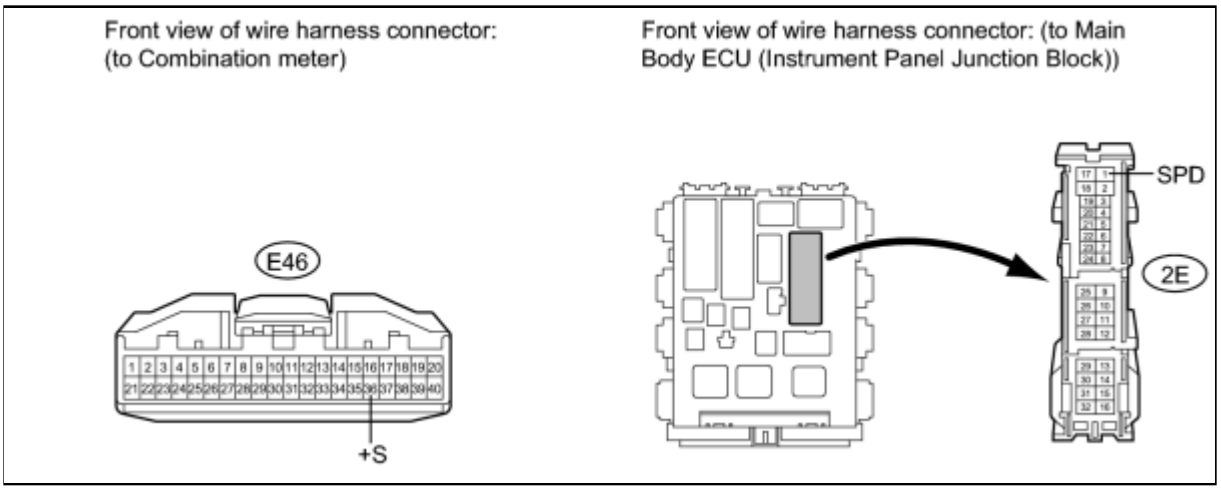

(b) Disconnect the 2E connector.

(c) Measure the resistance according to the value(s) in the table below.

Standard Resistance:

TESTER CONNECTION	CONDITION	SPECIFIED CONDITION
2E-1 (SPD) - E46-36 (+S)	Always	Below 1 Ω
2E-1 (SPD) or E46-36 (+S) - Body ground	Always	10 kΩ or higher

NG ▶ **REPAIR OR REPLACE HARNESS OR CONNECTOR (COMBINATION METER - INSTRUMENT PANEL JUNCTION BLOCK))**

OK ▼

9.	**INSPECT COMBINATION METER**

(a) Check the output waveform.

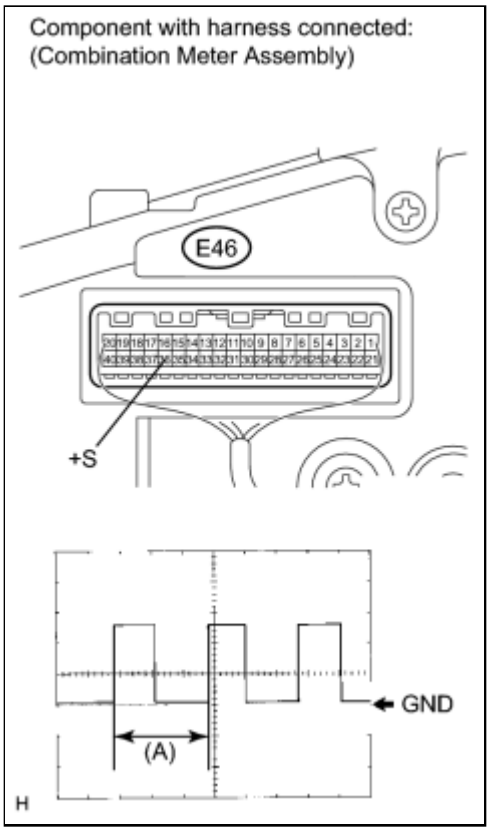

(1) Remove the combination meter with the connector(s) still connected INFO .

(2) Connect the oscilloscope to terminals E46-36 (+S) and body ground.

(3) Turn the engine switch on (IG).

(4) Turn the wheel slowly.

(5) Check the signal waveform according to the condition(s) in the table below.

ITEM	CONDITION
Tool setting	5 V/DIV., 20 ms./DIV
Vehicle condition	Driving at approx. 20 km/h

OK:

The waveform is displayed as shown in the illustration.

HINT:

When the system is functioning normally, one wheel revolution generates 4 pulses. As the vehicle speed increases, the width indicated by (A) in the illustration narrows.

NG ▶ **GO TO METER / GAUGE SYSTEM**

OK ▶ **REPLACE MAIN BODY ECU (INSTRUMENT PANEL JUNCTION BLOCK)**

Last Modified: 3-10-2010	6.4 C	**From:** 200901
Model Year: 2010	**Model:** Corolla	**Doc ID:** RM000001LV201TX
Title: THEFT DETERRENT / KEYLESS ENTRY: SMART KEY SYSTEM (for Start Function): B2281: "P" Signal Malfunction (2010 Corolla)		

DTC	**B2281**	**"P" Signal Malfunction**

DESCRIPTION

The ECM and the shift lock control ECU are connected by a cable and the CAN. If the cable information and CAN information are inconsistent, this DTC will be output.

HINT:

If the main body ECU (instrument panel junction block) is replaced with a new one while the cable from the negative (-) battery terminal is connected, the power source mode will be in IG-ON mode. When the battery is removed and reinstalled, the power source mode that was selected when the battery was removed is restored. After the main body ECU (instrument panel junction block) is replaced, perform the registration procedure for the engine immobiliser system INFO **.**

DTC NO.	DTC DETECTION CONDITION	TROUBLE AREA
B2281	Cable information and CAN information between main body ECU (instrument panel junction block) and shift lock control ECU are inconsistent	• Main body ECU (instrument panel junction block) • Shift lock control ECU • Wire harness or connector

WIRING DIAGRAM

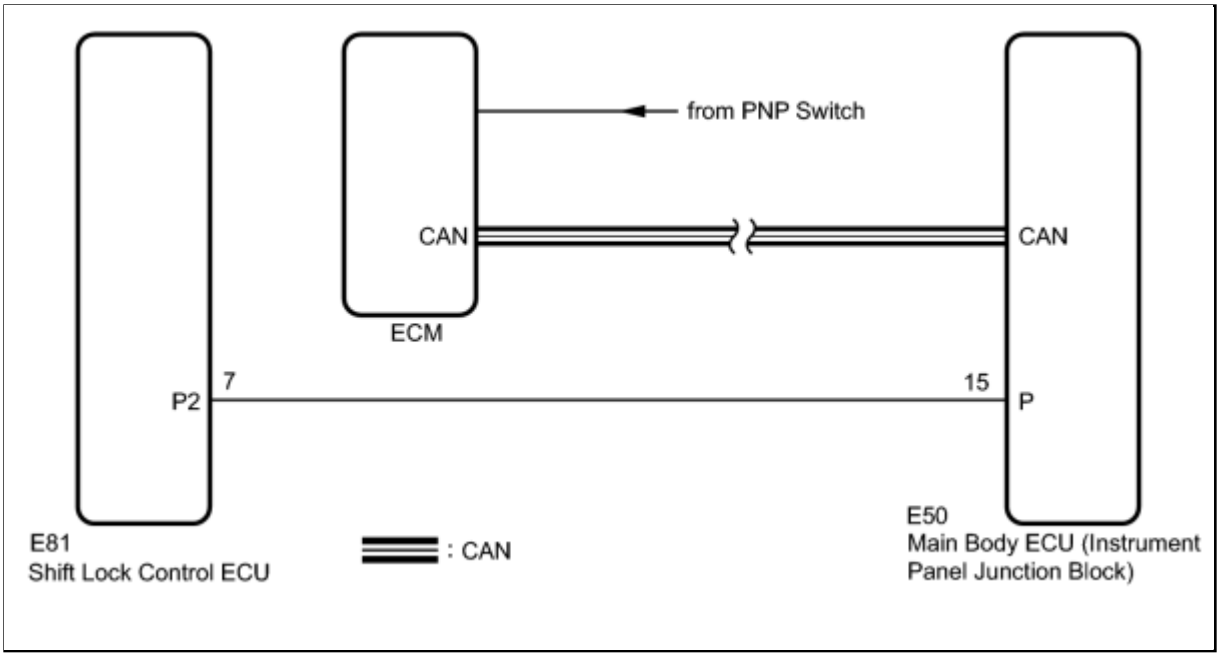

INSPECTION PROCEDURE

PROCEDURE

1.	**CHECK CAN COMMUNICATION SYSTEM**

(a) Check for CAN communication system DTCs INFO .

HINT:

If the DTCs for the CAN communication system malfunction are output, inspect those DTCs first.

Result:

RESULT	PROCEED TO
CAN communication DTC is not output	A
CAN communication DTC is output	B

B **GO TO CAN COMMUNICATION SYSTEM**

A

2.	READ VALUE USING TECHSTREAM

(a) Connect the Techstream to the DLC3.

(b) Turn the engine switch on (IG) and turn the Techstream main switch on.

(c) Read the Data List according to the displays on the Techstream.

Main Body

TESTER DISPLAY	MEASUREMENT ITEM/RANGE	NORMAL CONDITION	DIAGNOSTIC NOTE
Shift P Signal	Shift P Signal / ON or OFF	ON: Shift P signal ON (Shift position is P) OFF: Shift P signal OFF (Shift position is not P)	-

OK:

"ON" (P signal is ON) and "OFF" (P signal is OFF) appear on the screen.

NG ▶ **GO TO SHIFT CONTROL SYSTEM**

OK ▼

3.	CHECK HARNESS AND CONNECTOR (MAIN BODY ECU - SHIFT LOCK CONTROL ECU)

(a) Disconnect the E50 and E81 ECU connectors.

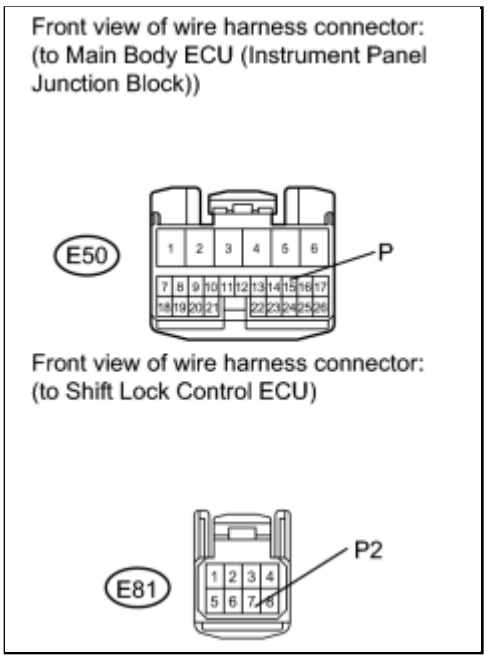

(b) Measure the resistance according to the value(s) in the table below.

Standard Resistance:

TERMINAL NO. (SYMBOL)	CONDITION	SPECIFIED CONDITION
E50-15 (P) - E81-7 (P2)	Always	Below 1 Ω
E50-15 (P) - Body ground	Always	10 kΩ or higher

NG ▶ **REPAIR OR REPLACE HARNESS OR CONNECTOR (MAIN BODY ECU - SHIFT LOCK CONTROL ECU)**

OK ▼

4.	CHECK MAIN BODY ECU (INSTRUMENT PANEL JUNCTION BLOCK) OPERATION

(a) After replacing the main body ECU (instrument panel junction block) with a normally functioning ECU, check that the engine can start normally.

OK:

Engine can start normally.

NG ▶ **REPLACE SHIFT LOCK CONTROL ECU**

OK ▶ **END (MAIN BODY ECU (INSTRUMENT PANEL JUNCTION BLOCK) DEFECTIVE)**

Last Modified: 3-10-2010	6.4 J	**From:** 200901
Model Year: 2010	**Model:** Corolla	**Doc ID:** RM000000YA105EX
Title: THEFT DETERRENT / KEYLESS ENTRY: SMART KEY SYSTEM (for Start Function): Engine does not Start (2010 Corolla)		

Engine does not Start

DESCRIPTION

1. ENGINE START SYSTEM FUNCTION

(a) If the engine switch is pressed with the shift lever is in P or N and the brake pedal depressed, the main body ECU (instrument panel junction block) determines that it is an engine start request.

(b) The certification ECU (smart key ECU assembly) and other ECUs perform key verification via the LIN communication line.

(c) The main body ECU (instrument panel junction block) activates the ACC relay.

(d) The main body ECU (instrument panel junction block) activates the IG1 and IG2 relays.

(e) The certification ECU (smart key ECU assembly) outputs a steering UNLOCK signal. The signal is sent to the main body ECU (instrument panel junction block) via the steering lock ECU.

(f) The main body ECU (instrument panel junction block) sends an engine start request signal to the ECM.

(g) The ECM sends an ACC cut request signal to the main body ECU (instrument panel junction block).

(h) The ECM and main body ECU (instrument panel junction block) activate the starter relay.

(i) The main body ECU (instrument panel junction block) deactivates the ACC relay until the main body ECU (instrument panel junction block) detects an engine start.

(j) When engine revolution speed reaches 1200 rpm, the ECM determines that the engine has been started.

The ECM stops sending an ACC cut request signal to the main body ECU.

The main body ECU (instrument panel junction block) reactivates the ACC relay and turns off the engine switch indicator light, when engine revolution speed reaches 800 rpm.

SYMBOL OF MAIN BODY ECU	SIGNAL	
STP	Stop light switch ON signal	Input
SSW1/SSW2	Engine switch ON signal	Input
ACCD	ACC relay operation signal	Output
SLP	Steering lock actuator position signal	Input
IG1D	IG1 relay operation signal	Output
IG2D	IG2 relay operation signal	Output
STR2	Starter relay operation signal (Sub)	Output

SYMBOL OF MAIN BODY ECU	SIGNAL	
STR	Park/Neutral position switch signal	Input
TACH	Engine start detection signal	Input
STSW	Starter activation request signal	Output
ACCR	ACC cut request signal	Input

SYMBOL OF ECM	SIGNAL	
ACCR	ACC cut request signal	Output
TACH	Engine revolution speed signal	Output
STSW	Starter activation request signal	Input
STAR	Starter relay operation signal (Main)	Output
STA	Starter activation signal	Input

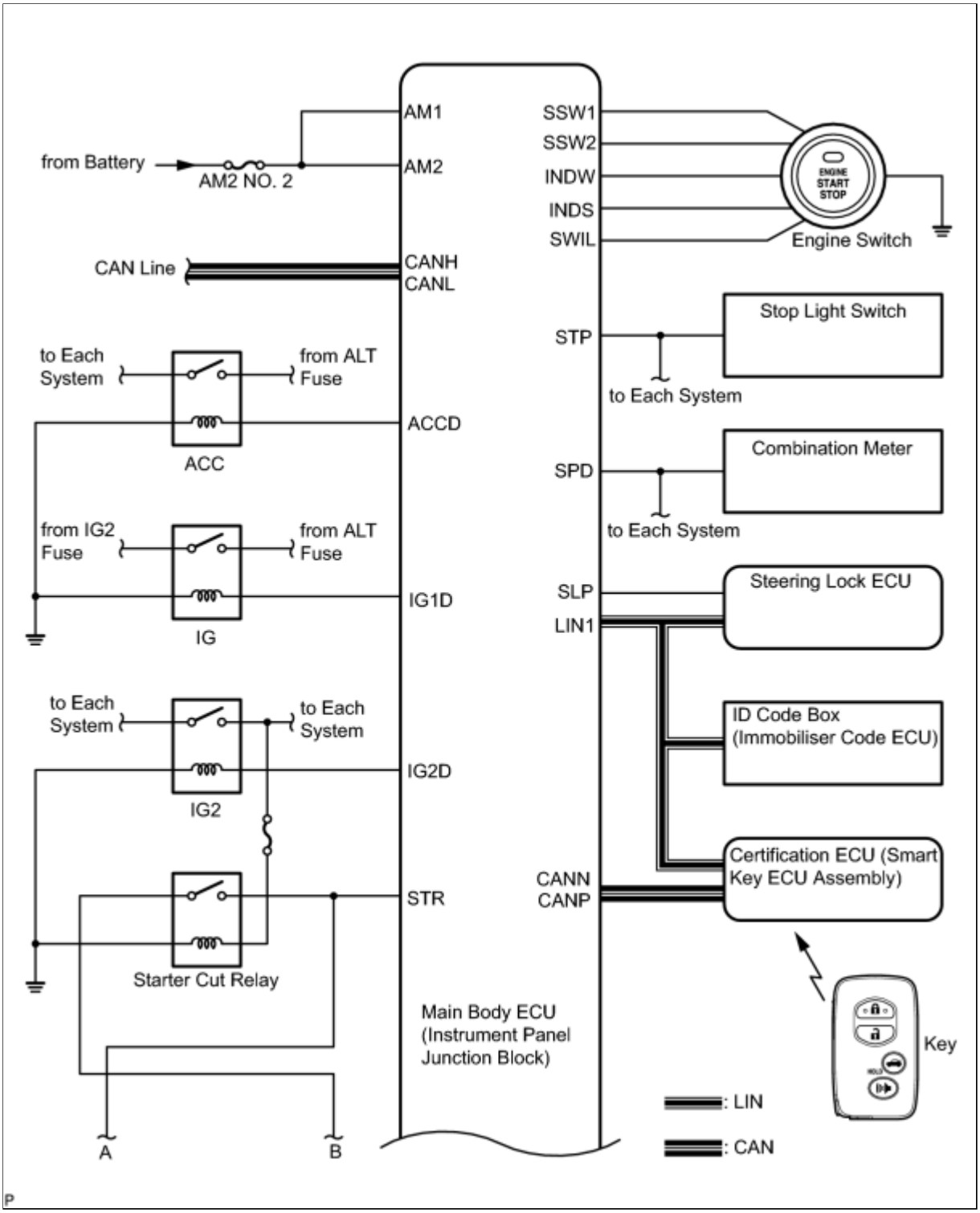
AM1
AM2
from Battery
AM2 NO. 2
CAN Line
CANH
CANL
to Each System
from ALT Fuse
ACCD
ACC
from IG2 Fuse
from ALT Fuse
IG1D
IG
to Each System
to Each System
IG2D
IG2
STR
Starter Cut Relay
A
B
Main Body ECU (Instrument Panel Junction Block)
SSW1
SSW2
INDW
INDS
SWIL
ENGINE START STOP
Engine Switch
STP
Stop Light Switch
to Each System
SPD
Combination Meter
to Each System
SLP
LIN1
Steering Lock ECU
ID Code Box (Immobiliser Code ECU)
CANN
CANP
Certification ECU (Smart Key ECU Assembly)
Key
: LIN
: CAN

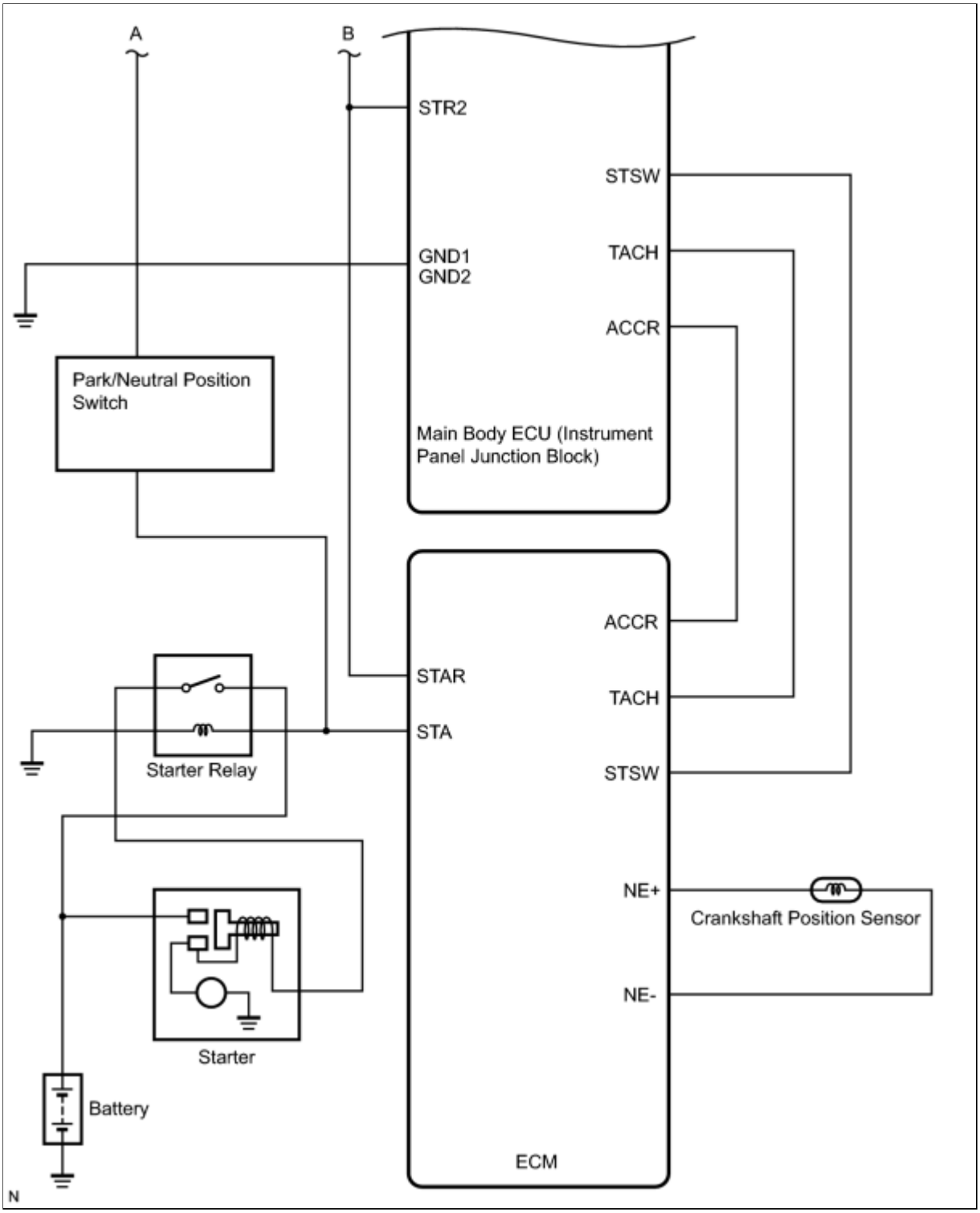

WIRING DIAGRAM

See CRANKING HOLDING FUNCTION CIRCUIT INFO .

INSPECTION PROCEDURE

1. EMERGENCY ENGINE START CONTROL

(a) If there is a malfunction in the stop light switch or STOP fuse, their signals may not be correctly transmitted to the main body ECU (instrument panel junction block). This may result in the engine

not starting even if the engine switch is pressed while the brake pedal is depressed and the shift lever is in P.

To activate the starter:

(1) Turn the engine switch from off to on (ACC).

(2) Hold pressing and hold the engine switch for 15 seconds.

HINT:

After the main body ECU (instrument panel junction block), certification ECU (smart key ECU assembly), steering lock ECU, ID code box (immobiliser code ECU) and/or ECM are/is replaced, perform the registration procedures for the engine immobiliser system INFO **.**

PROCEDURE

1.	**CHECK THE ENGINE SWITCH CONDITION**

(a) Check the power source mode changes.

(1) When the key is inside the vehicle and the shift lever is in P, check that the power source mode changes.

OK:

off → on (ACC) → on (IG) → off

NG ▶ **GO TO OTHER FLOW CHART**

OK ▼

2.	**CHECK FOR DTC**

(a) Clear the DTCs INFO .

(b) Check for DTCs again.

(c) Proceed to the next step based on the inspection result.

Result:

RESULT	PROCEED TO
No DTC is output	A
Smart key system (for start function) DTCs are output	B

RESULT	PROCEED TO
Steering lock DTCs are output	C
Engine immobiliser system DTCs are output	D
Vehicle stability control system DTCs are output	E

E ▶ **GO TO DIAGNOSTIC TROUBLE CODE CHART (VEHICLE STABILITY CONTROL SYSTEM)**

D ▶ **GO TO DIAGNOSTIC TROUBLE CODE CHART (ENGINE IMMOBILISER SYSTEM)**

C ▶ **GO TO DIAGNOSTIC TROUBLE CODE CHART (STEERING LOCK SYSTEM)**

B ▶ **GO TO DIAGNOSTIC TROUBLE CODE CHART (SMART KEY SYSTEM (STARTING))**

A ▼

3.	CHECK CRANKING FUNCTION

(a) Check the engine cranking function.

(1) When there is fuel in the fuel tank, the key is inside the vehicle, and the shift lever is in P, check that depressing the brake pedal and pressing the engine switch crank the engine.

Result:

RESULT	PROCEED TO
Engine cranks	A
Engine does not crank	B

A ▶ **GO TO SFI SYSTEM**

B

4.	READ VALUE USING TECHSTREAM (STARTER CONTROL)

(a) Connect the Techstream to the DLC3.

(b) Turn the engine switch on (IG).

(c) Read the Data List according to the displays on the Techstream screen.

Engine and ECT

TESTER DISPLAY	MEASUREMENT ITEM/RANGE	NORMAL CONDITION	DIAGNOSTIC NOTE
Starter Control	Starter switch signal / ON or OFF	ON: Engine switch on (ST) OFF: Engine switch except on (ST)	-

Standard:

ENGINE SWITCH CONDITION	TESTER DISPLAY
When engine switch is on (ST)	ON
When engine switch is except on (ST)	OFF

NG READ VALUE USING TECHSTREAM (PARK/NEUTRAL POSITION SWITCH)

OK

5.	PERFORM ACTIVE TEST USING TECHSTREAM (STARTER RELAY)

(a) Connect the Techstream to the DLC3.

(b) Turn the engine switch on (IG).

(c) Perform Active Test according to the prompts displayed on the Techstream.

Engine and ECT

TESTER DISPLAY	TEST PART	CONTROL RANGE	DIAGNOSTIC NOTE
Activate the Starter Relay	Starter	ON or OFF	-

(d) for TMC Made:

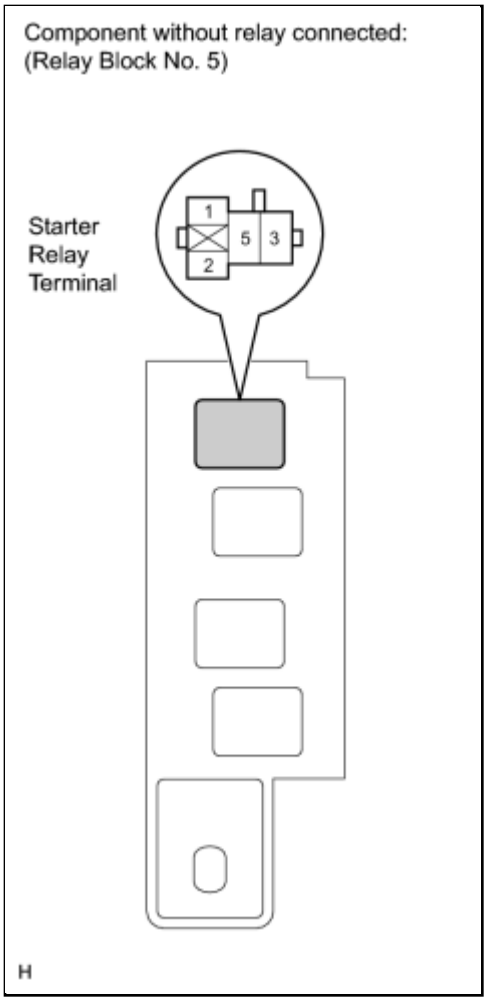

(1) Measure the voltage according to the value(s) in the table below.

Standard Voltage:

TESTER CONNECTION	CONDITION	SPECIFIED CONDITION
Relay block No. 5 starter relay terminal 2 - Relay block No. 5 starter relay terminal 1	When starter relay is ON by Active test using Techstream	8 to 14 V
Relay block No. 5 starter relay terminal 2 - Relay block No. 5 starter relay terminal 1	When starter relay is OFF by Active test using Techstream	Below 1 V

(e) for except TMC Made:

(1) Measure the voltage according to the value(s) in the table below.

Standard Voltage:

TESTER CONNECTION	CONDITION	SPECIFIED CONDITION
Relay block No. 8 starter relay terminal 2 - Relay block No. 8 starter relay terminal 1	When starter relay is ON by Active test using Techstream	8 to 14 V

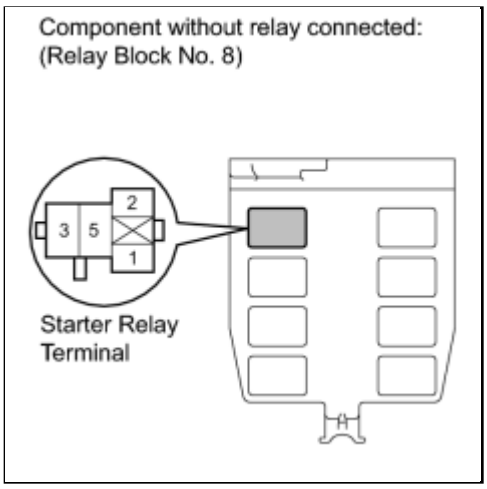

Relay block No. 8 starter relay terminal 2 - Relay block No. 8 starter relay terminal 1	When starter relay is OFF by Active test using Techstream	Below 1 V

NG ▶ **INSPECT STARTER CUT RELAY**

OK ▼

6.	**INSPECT STARTER RELAY**

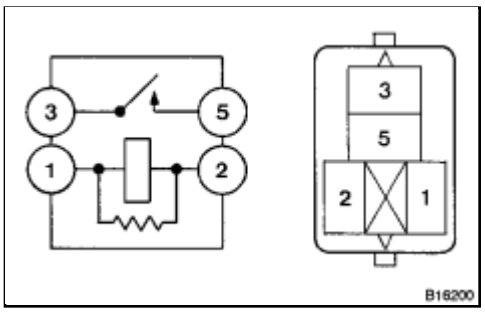

(a) Remove the starter relay from the relay block No. 5*1.

(b) Remove the starter relay from the relay block No. 8*2.

(c) Measure the resistance according to the value(s) in the table below.

Standard Resistance:

TESTER CONNECTION	CONDITION	SPECIFIED CONDITION
3 - 5	When battery voltage is not applied to terminals 1 and 2	10 kΩ or higher
3 - 5	When battery voltage is applied to terminals 1 and 2	Below 1 Ω

HINT:

- *1: for TMC Made
- *2: for except TMC Made

NG ▶ **REPLACE STARTER RELAY**

OK ▼

7.	**CHECK HARNESS AND CONNECTOR (STARTER RELAY TERMINAL VOLTAGE AND RESISTANCE)**

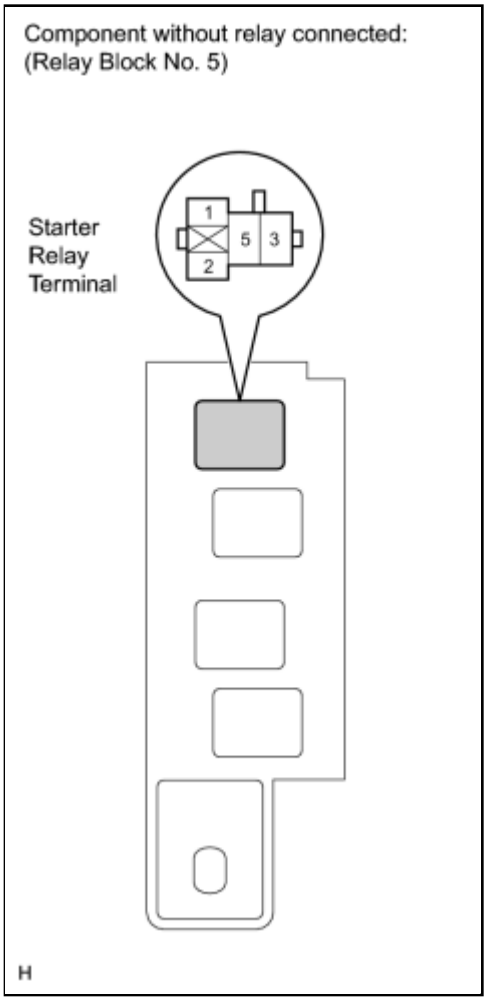

(a) for TMC Made:

(1) Measure the voltage according to the value(s) in the table below.

Standard Voltage:

TESTER CONNECTION	CONDITION	SPECIFIED CONDITION
Relay block No. 5 starter relay terminal 5 - Body ground	Always	11 to 14 V

(2) Measure the resistance according to the value(s) in the table below.

Standard Resistance:

TESTER CONNECTION	CONDITION	SPECIFIED CONDITION
Relay Block No. 5 starter relay terminal 1 - Body ground	Always	Below 1 Ω

(b) for except TMC Made:

(1) Measure the voltage according to the value(s) in the table below.

Standard Voltage:

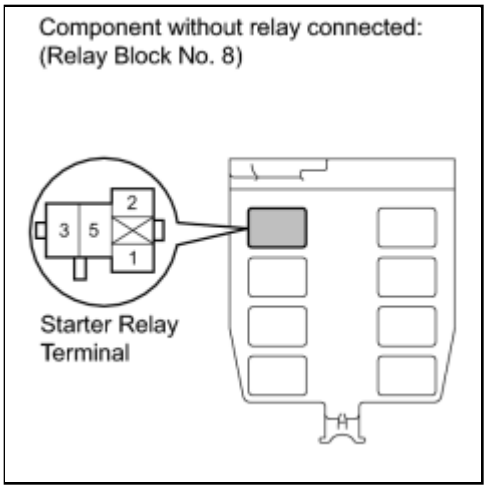

TESTER CONNECTION	CONDITION	SPECIFIED CONDITION
Relay block No. 8 starter relay terminal 5 - Body ground	Always	11 to 14 V

(2) Measure the resistance according to the value(s) in the table below.

Standard Voltage:

TESTER CONNECTION	CONDITION	SPECIFIED CONDITION
Relay block No. 8 starter relay terminals 1 - Body ground	Always	Below 1 Ω

NG ▶ **REPAIR OR REPLACE HARNESS OR CONNECTOR, OR REPLACE FUSE**

OK ▼

8.	**CHECK HARNESS AND CONNECTOR (STARTER RELAY - STARTER)**

(a) for TMC Made:

(1) Disconnect the B8 connector.

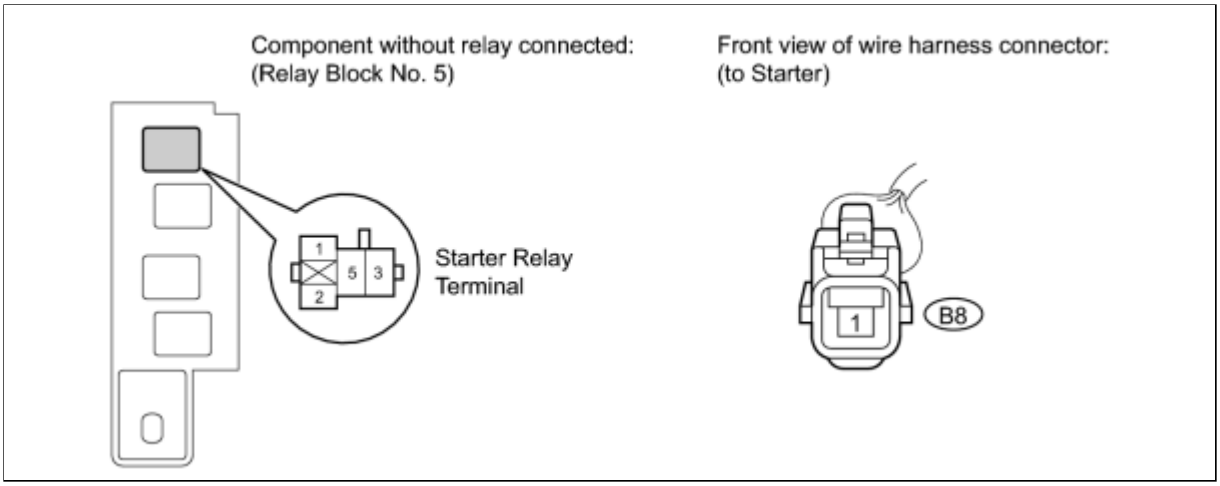

(2) Measure the resistance according to the value(s) in the table below.

Standard Resistance:

TESTER CONNECTION	CONDITION	SPECIFIED CONDITION
Relay block No. 5 starter relay terminal 3 - B8-1	Always	Below 1 Ω
Relay block No. 5 starter relay terminal 3 or B8-1 - Body ground	Always	10 kΩ or higher

(b) for except TMC Made:

(1) Disconnect the B8 connector.

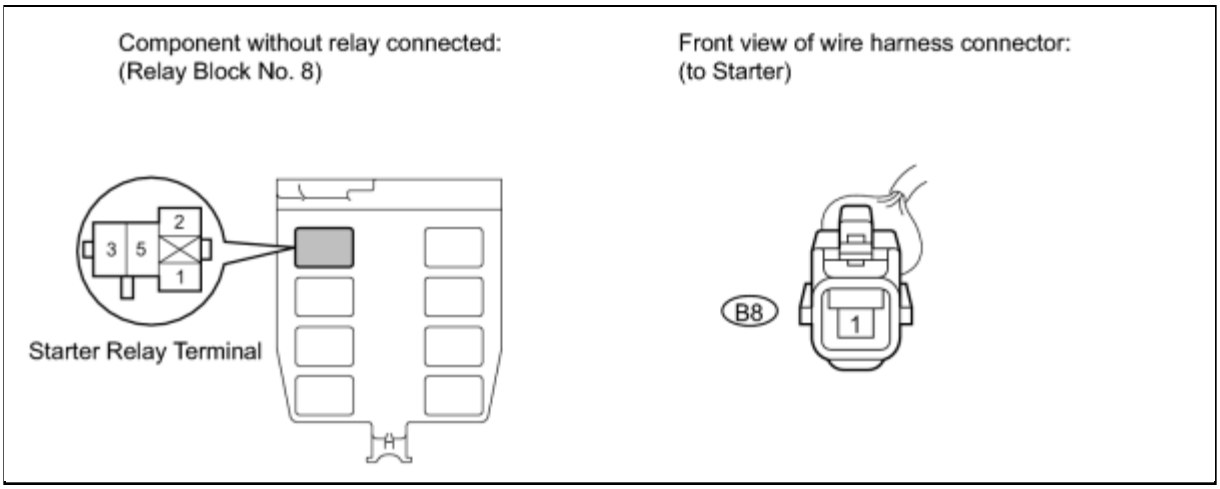

(2) Measure the resistance according to the value(s) in the table below.

Standard Resistance:

TESTER CONNECTION	CONDITION	SPECIFIED CONDITION

TESTER CONNECTION	CONDITION	SPECIFIED CONDITION
Relay block No. 8 starter relay terminal 3 - B8-1	Always	Below 1 Ω
Relay block No. 8 starter relay terminal 3 or B8-1 - Body ground	Always	10 kΩ or higher

NG ▶ **REPAIR OR REPLACE HARNESS OR CONNECTOR (STARTER RELAY - STARTER)**

OK ▼

9.	CHECK HARNESS AND CONNECTOR (BATTERY - STARTER)

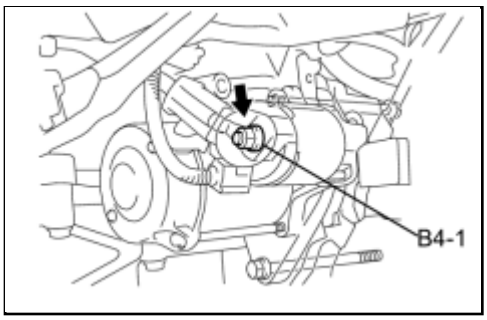

(a) Disconnect the B4 connector.

(b) Measure the voltage according to the value(s) in the table below.

Standard Voltage:

TESTER CONNECTION	CONDITION	SPECIFIED CONDITION
B4-1 - Body ground	Always	11 to 14 V

NG ▶ **REPAIR OR REPLACE HARNESS OR CONNECTOR (BATTERY - STARTER)**

OK ▶ **REPLACE STARTER ASSEMBLY**

10.	READ VALUE USING TECHSTREAM (PARK/NEUTRAL POSITION SWITCH)

(a) Connect the Techstream to the DLC3.

(b) Turn the engine switch on (IG).

(c) Read the Data List according to the displays on the Techstream screen.

Main Body

TESTER DISPLAY	MEASUREMENT ITEM/RANGE	NORMAL CONDITION	DIAGNOSTIC NOTE
N SW / C SW	Park/Neutral position switch / ON or OFF	ON: Shift position is P or N OFF: Shift position is not P nor N	-

OK:
"ON" (Shift position is P or N) and "OFF" (Shift position is not P nor N) appear on the screen.

NG ▶ **CHECK HARNESS AND CONNECTOR (MAIN BODY ECU - BODY GROUND)**

OK ▼

11.	READ VALUE USING TECHSTREAM (S CODE)

(a) Connect the Techstream to the DLC3.

HINT:

When using the Techstream with the engine switch off, turn on and off any of the door courtesy light switches repeatedly at 1.5 second intervals or less until communication between the Techstream and vehicle starts.

(b) Turn the engine switch on (IG).

(c) Read the Data List according to the displays on the Techstream.

Smart Key

TESTER DISPLAY	MEASUREMENT ITEM/RANGE	NORMAL CONDITION	DIAGNOSTIC NOTE
S Code Chk	S code check / OK or NG	OK: Normal NG: Malfunction	-

OK:
"OK" is displayed on the screen.

NG ▶ **REGISTER RECOGNITION CODE (ECU CODE)**

OK

12.	READ VALUE USING TECHSTREAM (L CODE)

(a) Connect the Techstream to the DLC3.

HINT:

When using the Techstream with the engine switch off, turn on and off any of the door courtesy light switches repeatedly at 1.5 second intervals or less until communication between the Techstream and vehicle starts.

(b) Turn the engine switch on (IG).

(c) Read the Data List according to the displays on the Techstream.

Smart Key

TESTER DISPLAY	MEASUREMENT ITEM/RANGE	NORMAL CONDITION	DIAGNOSTIC NOTE
L Code Chk	L code check / OK or NG	OK: Normal NG: Malfunction	-

OK:
"OK" is displayed on the screen.

NG ▶ **REGISTER RECOGNITION CODE (ECU CODE)**

OK

13.	READ VALUE USING TECHSTREAM (IMMOBILISER SYSTEM STATUS)

(a) Connect the Techstream to the DLC3.

HINT:

When using the Techstream with the engine switch off, turn on and off any of the door courtesy light switches repeatedly at 1.5 second intervals or less until communication between the Techstream and vehicle starts.

(b) Turn the engine switch on (IG).

(c) Read the Data List according to the displays on the Techstream.

Immobiliser

TESTER DISPLAY	MEASUREMENT ITEM/RANGE	NORMAL CONDITION	DIAGNOSTIC NOTE
Immobiliser	Immobiliser system status / SET or UNSET	UNSET: Engine switch ON SET: Without key	-

OK:
UNSET (Engine switch ON) appears on the screen.

NG ▶ **READ VALUE USING TECHSTREAM (ENGINE START REQUEST)**

OK ▶ **REPLACE MAIN BODY ECU (INSTRUMENT PANEL JUNCTION BLOCK)**

14.	CHECK HARNESS AND CONNECTOR (MAIN BODY ECU - BODY GROUND)

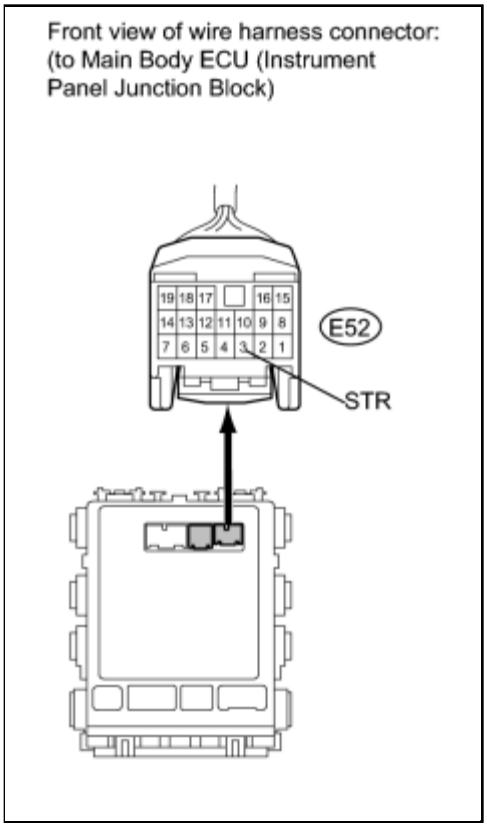

(a) Disconnect the E52 connector from the main body ECU (instrument panel junction block).

(b) Measure the resistance according to the value(s) in the table below.

Standard Resistance:

TESTER CONNECTION	CONDITION	SPECIFIED CONDITION
E52-3 (STR) - Body ground	Shift position is P or N	105 to 115 Ω
E52-3 (STR) - Body ground	Shift position is not P nor N	10 kΩ or higher

NG ▶ **INSPECT PARK/NEUTRAL POSITION SWITCH**

OK ▶ **REPLACE MAIN BODY ECU (INSTRUMENT PANEL JUNCTION BLOCK)**

15.	**INSPECT PARK/NEUTRAL POSITION SWITCH**

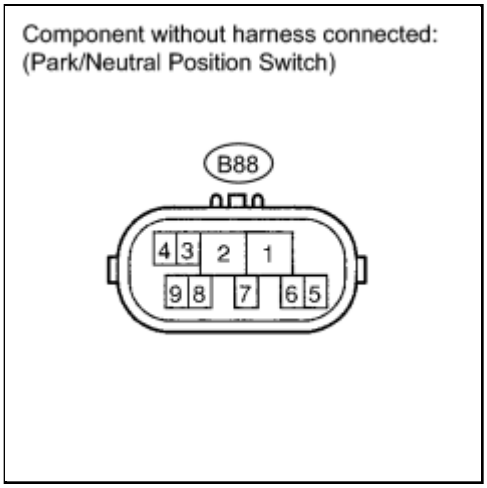

(a) Disconnect the B88 connector.

(b) Measure the resistance according to the value(s) in the table below.

Standard Resistance:

TESTER CONNECTION	CONDITION	SPECIFIED CONDITION
4 - 5	P	Below 1 Ω
4 - 5	N	Below 1 Ω
4 - 5	Except P and N	10 kΩ or higher

NG ▶ **REPLACE PARK/NEUTRAL POSITION SWITCH**

OK ▼

16.	**CHECK HARNESS AND CONNECTOR (MAIN BODY ECU - PARK/NEUTRAL POSITION SWITCH)**

(a) Measure the resistance according to the value(s) in the table below.

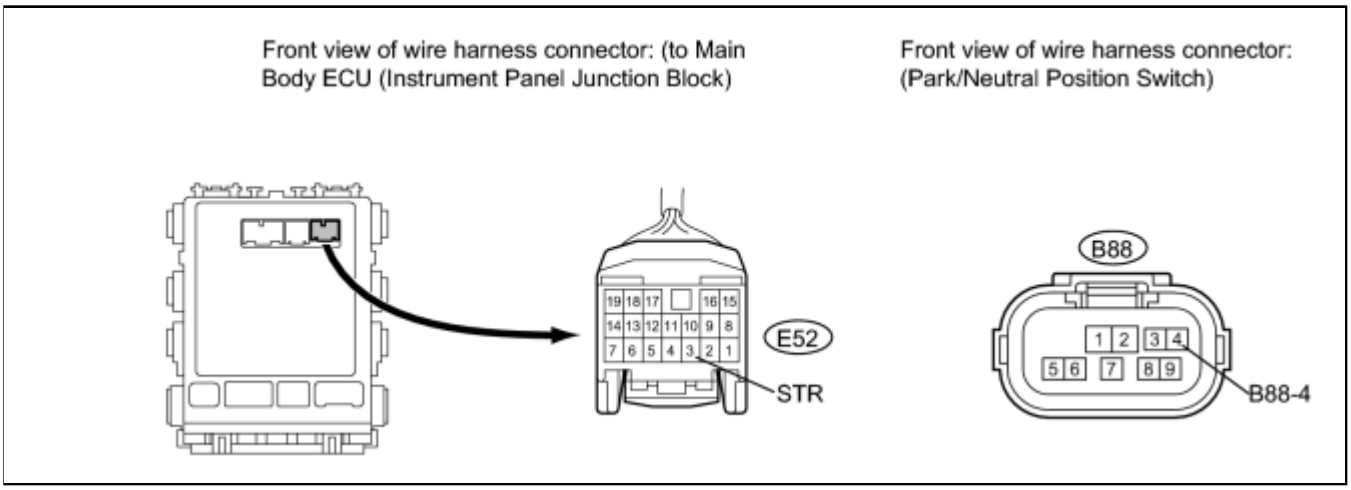

Standard Resistance:

TESTER CONNECTION	CONDITION	SPECIFIED CONDITION
E52-3 (STR) - B88-4	Always	Below 1 Ω
E52-3 (STR) or B88-4 - Body ground	Always	10 kΩ or higher

NG ▶ **REPAIR OR REPLACE HARNESS OR CONNECTOR (MAIN BODY ECU - PARK/NEUTRAL POSITION SWITCH)**

OK ▼

17.	**CHECK HARNESS AND CONNECTOR (PARK/NEUTRAL POSITION SWITCH - ECM)**

(a) Disconnect the E50 connector from the ECM.

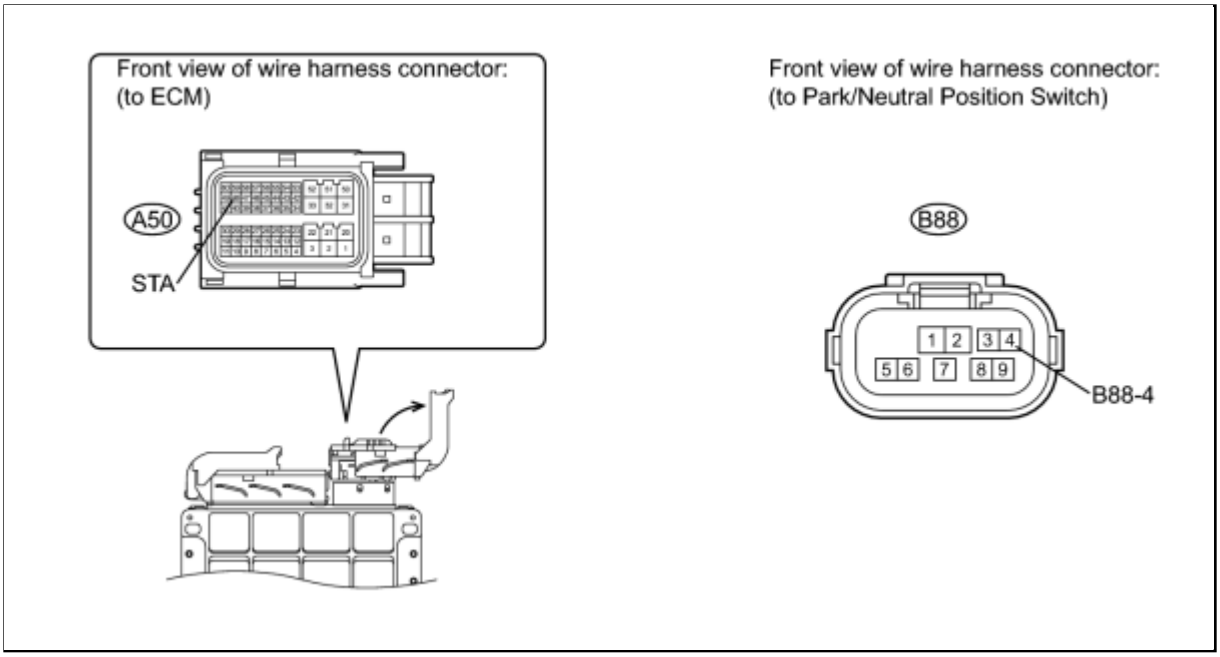

(b) Measure the resistance according to the value(s) in the table below.

Standard Resistance:

TESTER CONNECTION	CONDITION	SPECIFIED CONDITION
B88-4 - A50-48 (STA)	Always	Below 1 Ω
B88-4 or A50-48 (STA) - Body ground	Always	10 kΩ or higher

NG ▶ **REPAIR OR REPLACE HARNESS OR CONNECTOR (PARK/NEUTRAL POSITION SWITCH - ECM)**

OK ▼

18.	**INSPECT STARTER RELAY**

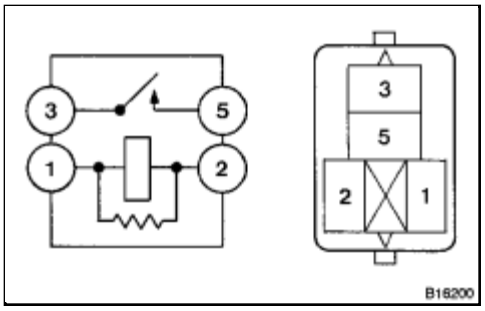

(a) Remove the starter relay from engine room relay block.

(b) Measure the resistance according to the value(s) in the table below.

Standard Resistance:

TESTER CONNECTION	CONDITION	SPECIFIED CONDITION
3 - 5	When battery voltage is not applied to terminals 1 and 2	10 kΩ or higher
3 - 5	When battery voltage is applied to terminals 1 and 2	Below 1 Ω

NG ▶ **REPLACE STARTER RELAY**

OK ▼

19.	CHECK HARNESS AND CONNECTOR (ECM - STARTER RELAY)

(a) Measure the resistance according to the value(s) in the table below.

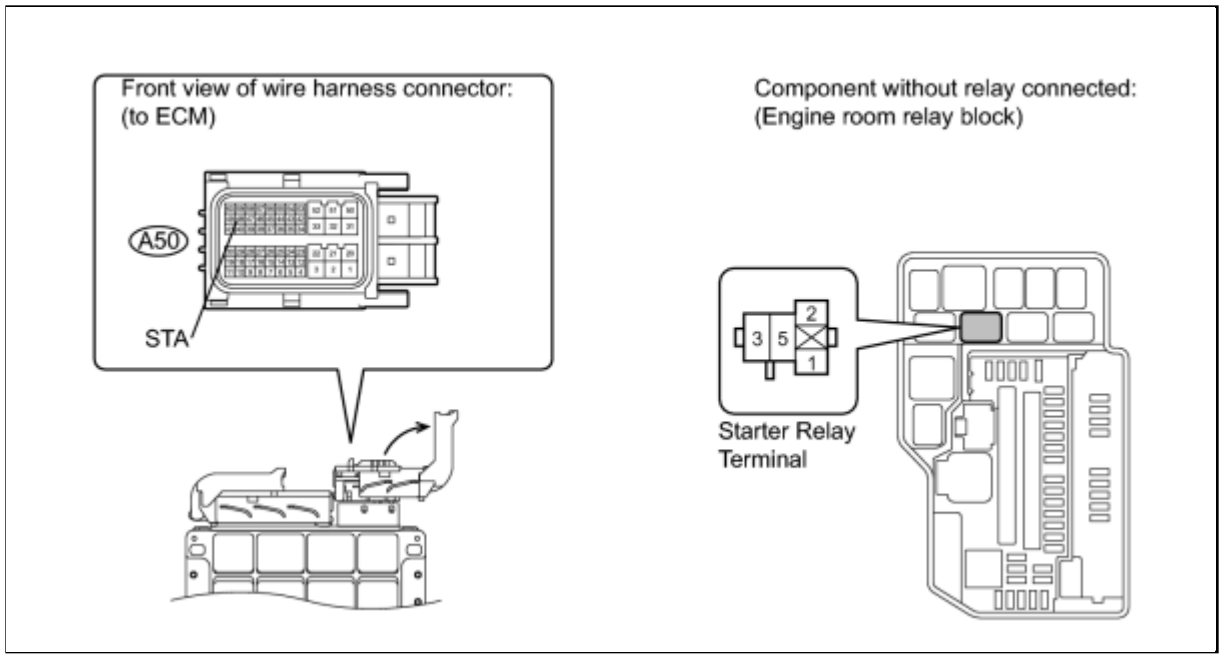

Standard Resistance:

TESTER CONNECTION	CONDITION	SPECIFIED CONDITION

TESTER CONNECTION	CONDITION	SPECIFIED CONDITION
Engine room relay block starter relay terminal 2 - A50-48 (STA)	Always	Below 1 Ω
Engine room relay block starter relay terminal 2 or A50-48 (STA) - Body ground	Always	10 kΩ or higher

NG ▶ **REPAIR OR REPLACE HARNESS OR CONNECTOR (ECM - STARTER RELAY)**

OK ▶ **REPAIR OR REPLACE HARNESS OR CONNECTOR (STARTER RELAY - BODY GROUND)**

20.	**INSPECT STARTER CUT RELAY**

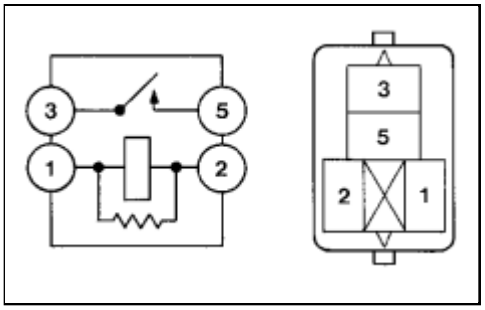

(a) Remove the starter cut relay from the engine room relay block.

(b) Measure the resistance according to the value(s) in the table below.

Standard Resistance:

TESTER CONNECTION	CONDITION	SPECIFIED CONDITION
3 - 5	When battery voltage is applied to terminals 1 and 2	Below 1 Ω
3 - 5	When battery voltage is not applied to terminals 1 and 2	10 kΩ or higher

NG ▶ **REPLACE STARTER CUT RELAY**

OK ▼

21.	CHECK HARNESS AND CONNECTOR (STARTER CUT RELAY - ECM)

(a) Disconnect the B31 connector from the ECM.

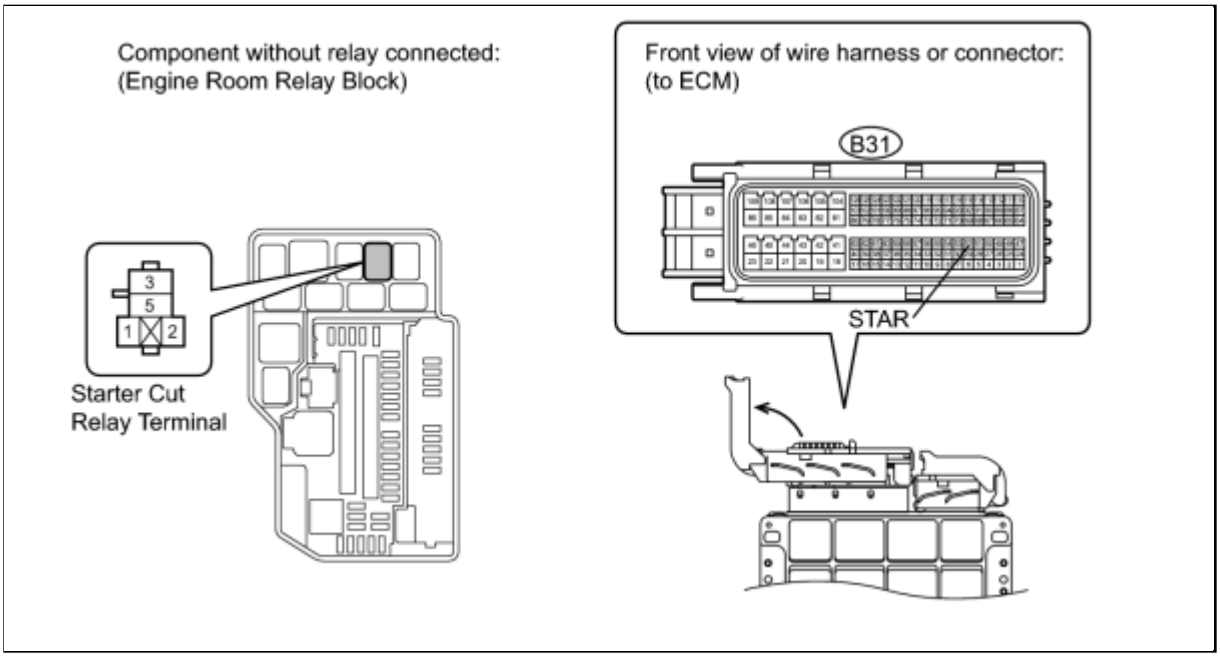

(b) Measure the resistance according to the value(s) in the table below.

Standard Resistance:

TESTER CONNECTION	CONDITION	SPECIFIED CONDITION
Engine room relay block starter cut relay terminal 5 - B31-52 (STAR)	Always	Below 1 Ω
Engine room relay block starter cut relay terminal 5 or B31-52 (STAR) - Body ground	Always	10 kΩ or higher

NG ▶ **REPAIR OR REPLACE HARNESS OR CONNECTOR (STARTER CUT RELAY - ECM)**

OK ▼

22.	CHECK HARNESS AND CONNECTOR (STARTER CUT RELAY - MAIN BODY ECU)

(a) Disconnect the E52 connector from the main body ECU (instrument panel junction block).

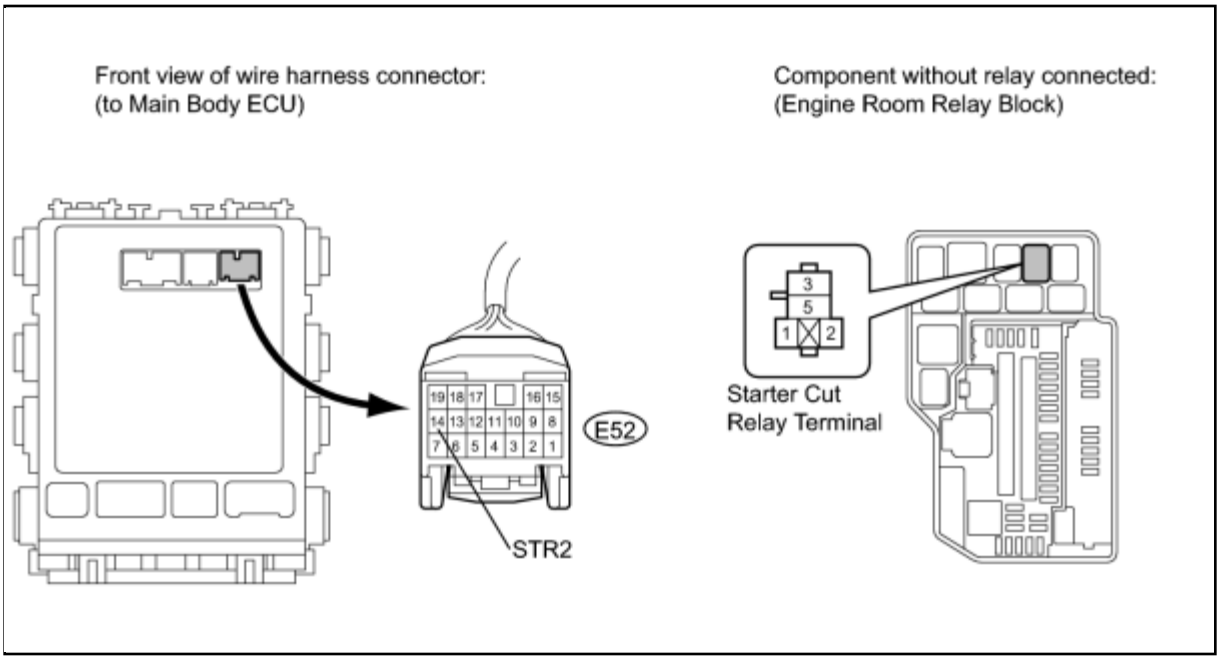

(b) Measure the resistance according to the value(s) in the table below.

Standard Resistance:

TESTER CONNECTION	CONDITION	SPECIFIED CONDITION
Engine room relay block starter cut relay terminal 5 - E52-14 (STR2)	Always	Below 1 Ω
Engine room relay block starter cut relay terminal 5 or E52-14 (STR2) - Body ground	Always	10 kΩ or higher

NG ▶ **REPAIR OR REPLACE HARNESS OR CONNECTOR (STARTER CUT RELAY - MAIN BODY ECU)**

OK ▼

23.	**CHECK HARNESS AND CONNECTOR (ECM - STARTER RELAY)**

(a) Measure the resistance according to the value(s) in the table below.

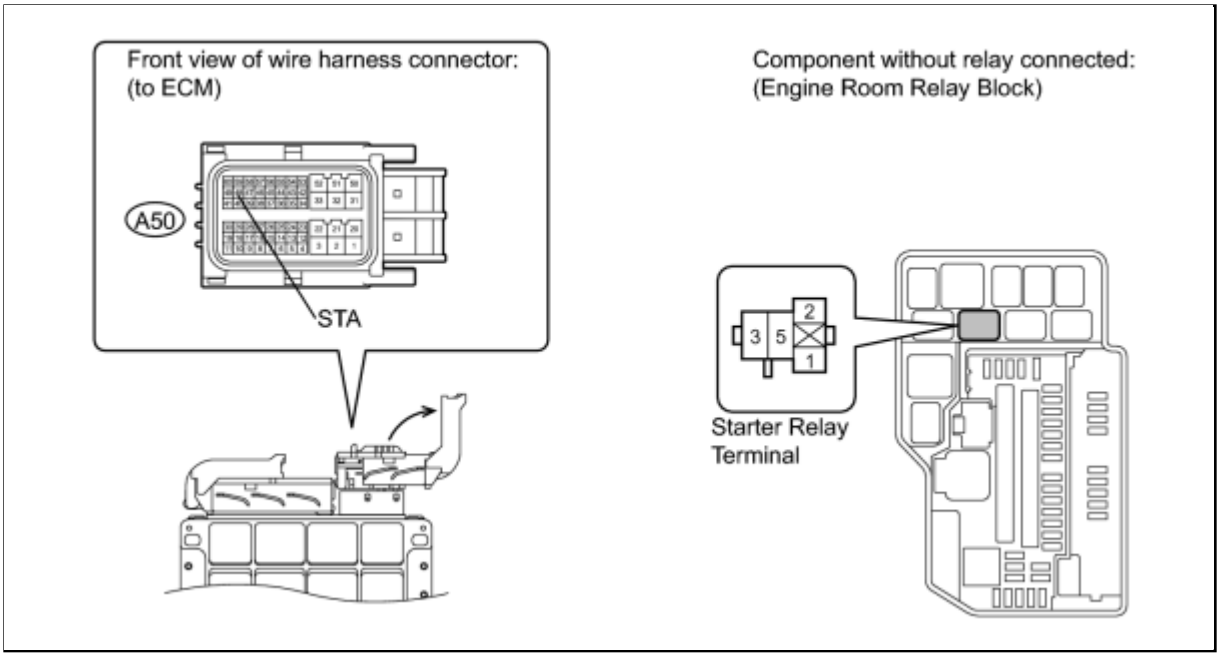

Standard Resistance:

TESTER CONNECTION	CONDITION	SPECIFIED CONDITION
Engine room relay block starter relay terminal 2 - A50-48 (STA)	Always	Below 1 Ω
Engine room relay block starter relay terminal 2 or A50-48 (STA) - Body ground	Always	10 kΩ or higher

NG ▶ **REPAIR OR REPLACE HARNESS OR CONNECTOR (ECM - STARTER RELAY)**

OK ▶ **REPLACE ECM**

24.	**REGISTER RECOGNITION CODE (ECU CODE)**

(a) Register the recognition code (ECU code) INFO .

NEXT

25.	**CHECK CRANKING FUNCTION**

(a) Check the engine cranking function.

(1) When there is fuel in the fuel tank, the key is inside the vehicle, and the shift lever is in P, check that depressing the brake pedal and pressing the engine switch crank the engine.

Result:

RESULT	PROCEED TO
Engine does not crank	A
Engine cranks	B

B ▶ END

A ▼

26.	**REPLACE CERTIFICATION ECU (SMART KEY ECU ASSEMBLY)**

(a) Replace the certification ECU (smart key ECU assembly) INFO .

NEXT ▼

27.	**KEY REGISTRATION**

(a) Register the key INFO .

NEXT ▼

28.	**CHECK CRANKING FUNCTION**

(a) Check the engine cranking function.

(1) When there is fuel in the fuel tank, the key is inside the vehicle, and the shift lever is in P, check that depressing the brake pedal and pressing the engine switch crank the engine.

Result:

RESULT	PROCEED TO
Engine does not crank	A
Engine cranks	B

B ▶ END

A ▶ REPLACE ID CODE BOX (IMMOBILISER CODE ECU)

29.	REGISTER RECOGNITION CODE (ECU CODE)

(a) Register the recognition code (ECU code) INFO .

NEXT ▼

30.	CHECK CRANKING FUNCTION

(a) Check the engine cranking function.

(1) When there is fuel in the fuel tank, the key is inside the vehicle, and the shift lever is in P, check that depressing the brake pedal and pressing the engine switch crank the engine.

Result:

RESULT	PROCEED TO
Engine does not crank	A
Engine cranks	B

B ▶ END

A

31.	REPLACE STEERING LOCK ECU

(a) Replace the steering lock ECU INFO .

NEXT

32.	REGISTER RECOGNITION CODE (ECU CODE)

(a) Register the recognition code (ECU code) INFO .

NEXT

33.	CHECK CRANKING FUNCTION

(a) Check the engine cranking function.

(1) When there is fuel in the fuel tank, the key is inside the vehicle, and the shift lever is in P, check that depressing the brake pedal and pressing the engine switch crank the engine.

Result:

RESULT	PROCEED TO
Engine does not crank	A
Engine cranks	B

B ▶ **END**

A ▶ **REPLACE ID CODE BOX (IMMOBILISER CODE ECU)**

34.	READ VALUE USING TECHSTREAM (ENGINE START REQUEST)

(a) Connect Techstream to the DLC3.

HINT:

When using Techstream with the engine switch off, turn on and off any of the door courtesy light switches repeatedly at 1.5 second intervals or less until communication between the Techstream and vehicle starts.

(b) Turn the engine switch on (IG).

(c) Read the Data List according to the displays on the Techstream.

Smart Key

TESTER DISPLAY	MEASUREMENT ITEM/RANGE	NORMAL CONDITION	DIAGNOSTIC NOTE
Start Rqst	Start request signal response / OK or NG	OK: Received NG: Not received	-

OK:
"OK" (received) and "NG" (not received) appear on the screen.

NG ▶ **REPLACE CERTIFICATION ECU (SMART KEY ECU ASSEMBLY)**

OK ▶ **REPLACE ID CODE BOX (IMMOBILISER CODE ECU)**

Last Modified: 3-10-2010	6.4 C	**From:** 200901
Model Year: 2010	**Model:** Corolla	**Doc ID:** RM000000XEW044X
Title: THEFT DETERRENT / KEYLESS ENTRY: SMART KEY SYSTEM (for Start Function): B2284: Brake Signal Malfunction (2010 Corolla)		

DTC	**B2284**	**Brake Signal Malfunction**

DESCRIPTION

HINT:

When the main body ECU is replaced with a new one and the cable from the negative (-) battery terminal is connected, the power source mode becomes the IG-ON mode. When the battery is removed and reinstalled, the power source mode that was selected when the battery was removed is restored.

After the main body ECU is replaced, perform the registration procedures for the engine immobiliser system INFO **.**

DTC NO.	DTC DETECTION CONDITION	TROUBLE AREA
B2284	The brake signal circuit between the main body ECU and the stop light switch is malfunctioning and the CAN information is inconsistent	• Stop light switch • CAN communication system • ECM • Main body ECU (instrument panel junction block) • Wire harness or connector

WIRING DIAGRAM

for TMC Made:

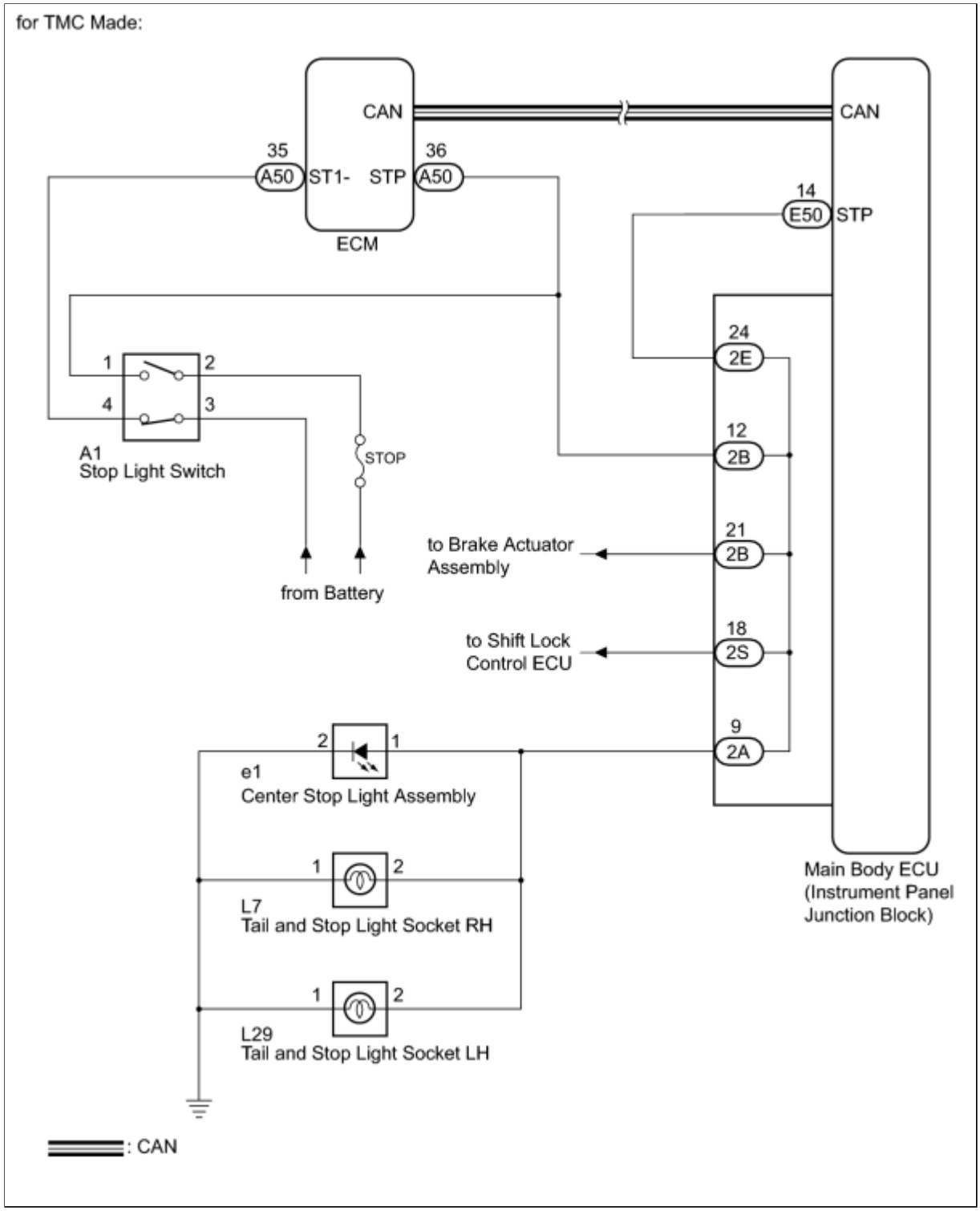
CAN
CAN
35
A50
ST1-
STP
36
A50
ECM
14
E50
STP
24
2E
12
2B
21
2B
18
2S
9
2A
1
2
4
3
A1
Stop Light Switch
STOP
from Battery
to Brake Actuator
Assembly
to Shift Lock
Control ECU
2
1
e1
Center Stop Light Assembly
1
2
L7
Tail and Stop Light Socket RH
1
2
L29
Tail and Stop Light Socket LH
Main Body ECU
(Instrument Panel
Junction Block)
: CAN

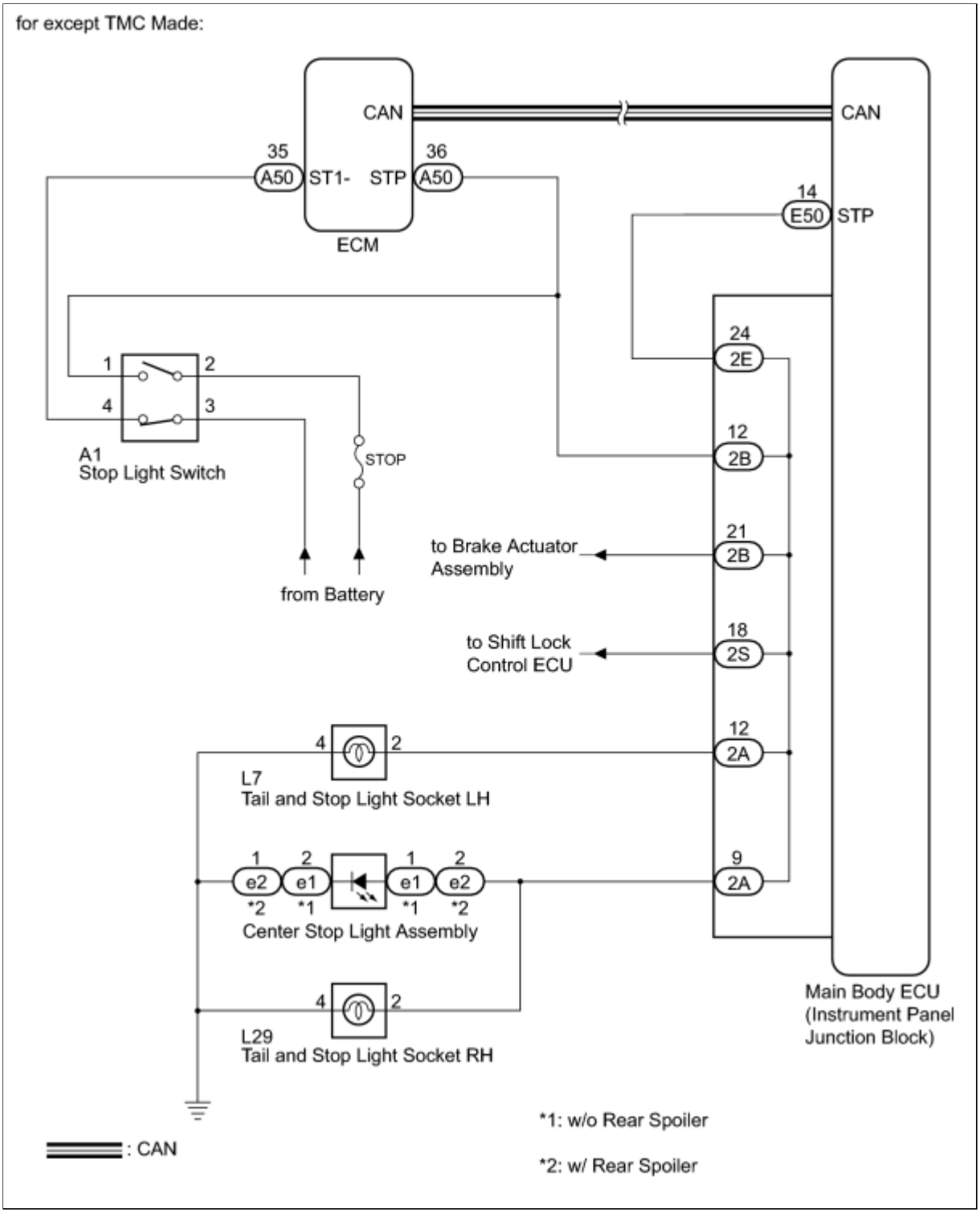

INSPECTION PROCEDURE

1. EMERGENCY ENGINE START CONTROL

(a) If there is a malfunction in the stop light switch or STOP fuse, their signals may not be correctly transmitted to the main body ECU. This may result in the engine not starting even if the engine switch is pressed while the brake pedal is depressed and the shift lever is in P.

To activate the starter:

(1) Turn the engine switch from off to on (ACC).

(2) Press and hold the engine switch for 15 seconds.

PROCEDURE

1.	CHECK FOR DTC (CAN COMMUNICATION SYSTEM)

(a) Clear the DTCs INFO.

(b) Check for CAN communication system DTCs INFO.

HINT:

If the DTCs for the CAN communication system malfunction are output, inspect those DTCs first.

OK:
No DTC is output.

NG ▶ **GO TO CAN COMMUNICATION SYSTEM**

OK ▼

2.	CHECK FOR DTC (ENGINE CONTROL SYSTEM)

(a) Clear the DTCs INFO.

(b) Check for DTC P0500 (Vehicle speed sensor A).

OK:
No DTC is output.

NG ▶ **GO TO ENGINE CONTROL SYSTEM**

OK ▼

3.	READ VALUE USING TECHSTREAM (STOP LIGHT SWITCH)

(a) Connect the Techstream to the DLC3.

(b) Turn the engine switch on (IG).

(c) Check the Data List for proper functioning of the stop light switch.

Main Body

TESTER DISPLAY	MEASUREMENT ITEM/RANGE	NORMAL CONDITION	DIAGNOSTIC NOTE
Stop Light SW	Stop light switch/ON or OFF	ON: Brake pedal depressed OFF: Brake pedal released	-

OK:
ON (brake pedal depressed) and OFF (brake pedal released) appear on the screen.

NG ▶ **CHECK HARNESS AND CONNECTOR (STOP LIGHT SWITCH - INSTRUMENT PANEL JUNCTION BLOCK)**

OK ▶ **REPLACE MAIN BODY ECU (INSTRUMENT PANEL JUNCTION BLOCK)**

4.	**CHECK HARNESS AND CONNECTOR (STOP LIGHT SWITCH - INSTRUMENT PANEL JUNCTION BLOCK)**

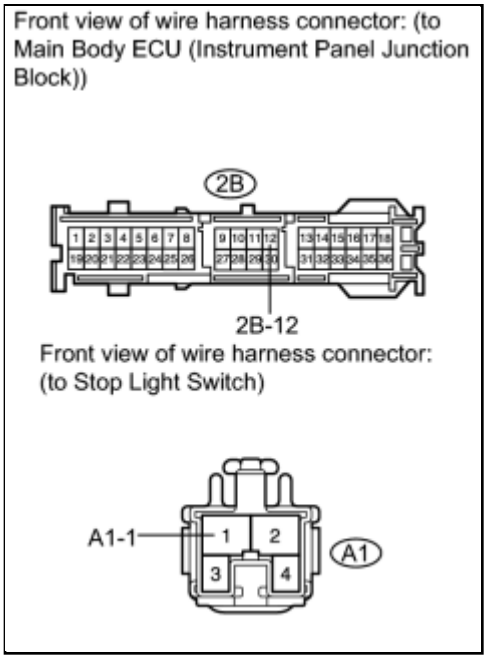

(a) Disconnect the A1 switch connector.

(b) Disconnect the 2B junction block connector.

(c) Measure the resistance according to the value(s) in the table below.

Standard Resistance:

TESTER CONNECTION	CONDITION	SPECIFIED CONDITION
A1-1 - 2B-12	Always	Below 1 Ω
A1-1 or 2B-12 - Body ground	Always	10 kΩ or higher

NG ▶ **REPAIR OR REPLACE HARNESS OR CONNECTOR (STOP LIGHT SWITCH - INSTRUMENT PANEL JUNCTION BLOCK)**

OK ▼

5.	**CHECK HARNESS AND CONNECTOR (INSTRUMENT PANEL JUNCTION BLOCK - MAIN BODY ECU)**

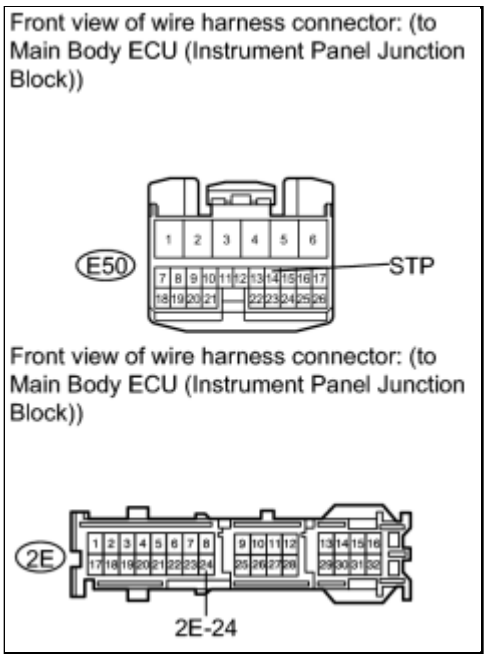

(a) Disconnect the 2E junction block connector.

(b) Disconnect the E50 ECU connector.

(c) Measure the resistance according to the value(s) in the table below.

Standard Resistance:

TESTER CONNECTION	CONDITION	SPECIFIED CONDITION
2E-24 - E50-14 (STP)	Always	Below 1 Ω
2E-24 or E50-14 (STP) - Body ground	Always	10 kΩ or higher

NG ▶ REPAIR OR REPLACE HARNESS OR CONNECTOR (INSTRUMENT PANEL JUNCTION BLOCK - MAIN BODY ECU)

OK ▶ REPLACE INSTRUMENT PANEL JUNCTION BLOCK

Last Modified: 3-10-2010	6.4 C	**From:** 200901
Model Year: 2010	**Model:** Corolla	**Doc ID:** RM000000YD304TX
Title: THEFT DETERRENT / KEYLESS ENTRY: SMART KEY SYSTEM (for Start Function): B2285: Steering Lock Position Signal Circuit Malfunction (2010 Corolla)		

DTC	**B2285**	**Steering Lock Position Signal Circuit Malfunction**

DESCRIPTION

This DTC is output when serial communication signals and LIN communication signals in the circuit between the main body ECU (instrument panel junction block) and steering lock actuator (steering lock ECU) are inconsistent.

HINT:

When the main body ECU (instrument panel junction block) is replaced with a new one and the cable from the negative (-) battery terminal is connected, the power source mode becomes the IG-ON mode. When the battery is removed and reinstalled, the power source mode that was selected when the battery was removed is restored.

After the main body ECU (instrument panel junction block) or steering lock ECU is replaced, perform the registration procedures for the engine immobiliser system INFO **.**

DTC NO.	DTC DETECTION CONDITION	TROUBLE AREA
B2285	Cable and LIN information between the main body ECU (instrument panel junction block) and the steering lock ECU are inconsistent	• Main body ECU (instrument panel junction block) • Steering lock ECU • Wire harness or connector

WIRING DIAGRAM

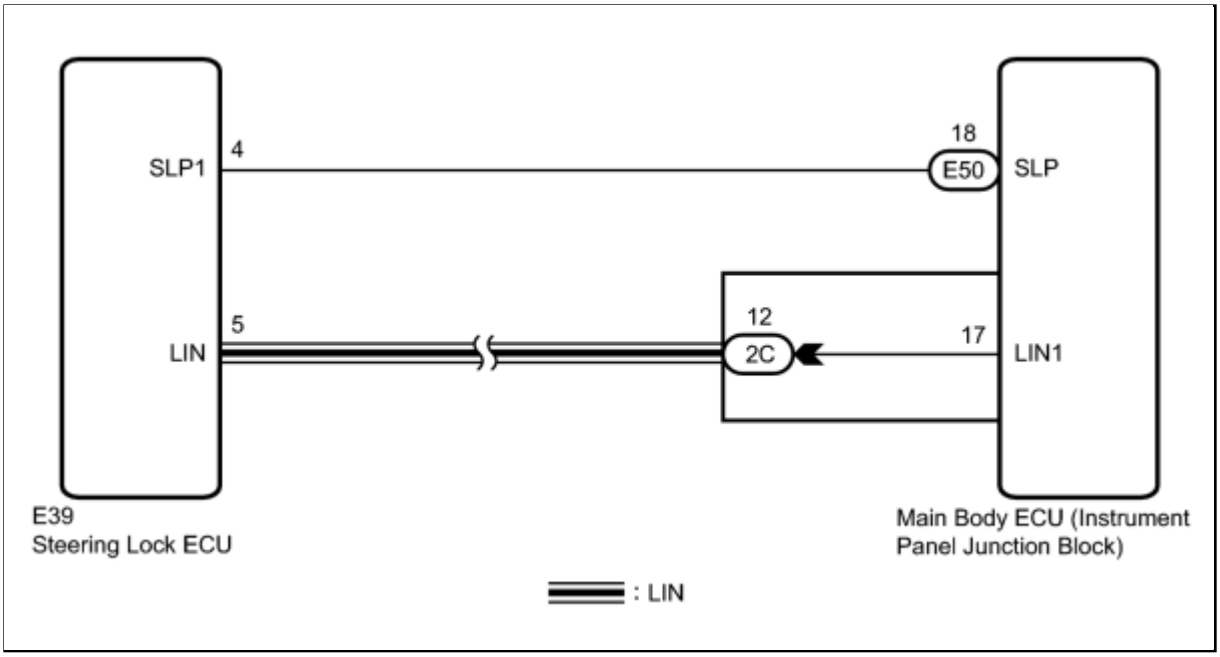

INSPECTION PROCEDURE

PROCEDURE

1.	**READ VALUE USING TECHSTREAM**

(a) Connect the Techstream to the DLC3.

(b) Check the Data List for proper functioning of the steering lock function.

HINT:

When using the Techstream with the engine switch off, turn on and off any of the door courtesy light switches repeatedly at 1.5 second intervals or less until communication between the Techstream and vehicle starts.

Main Body

TESTER DISPLAY	MEASUREMENT ITEM/RANGE	NORMAL CONDITION	DIAGNOSTIC NOTE
Steering Unlock Switch	Steering lock condition / ON or OFF	ON: Steering is unlocked (Engine switch on (ACC)) OFF: Steering is locked (Engine switch off)	-

OK:
ON (steering is unlocked) and OFF (steering is locked) appear on the screen.

NG ▶ **CHECK HARNESS AND CONNECTOR (MAIN BODY ECU - STEERING LOCK ECU)**

OK

2.	CHECK FOR DTC

(a) Clear the DTCs INFO .

(b) Check for DTC B2285 (Steering lock position signal circuit malfunction), DTC B2287 (LIN communication master malfunction) and DTC B2785 (Communication malfunction between ECUs connected by LIN).

Result:

DISPLAY (DTC OUTPUT)	PROCEED TO
"DTC B2285" only	A
"DTC B2287" and/or "DTC B2785"	B
No DTC	C

HINT:

- If DTC B2287 is output INFO .
- If DTC B2785 is output INFO .

C **CHECK INTERMITTENT PROBLEMS**

B **GO TO DTC CHART**

A **REPLACE MAIN BODY ECU (INSTRUMENT PANEL JUNCTION BLOCK)**

3.	CHECK HARNESS AND CONNECTOR (MAIN BODY ECU - STEERING LOCK ECU)

(a) Disconnect the E50, 2C and E39 ECU connectors.

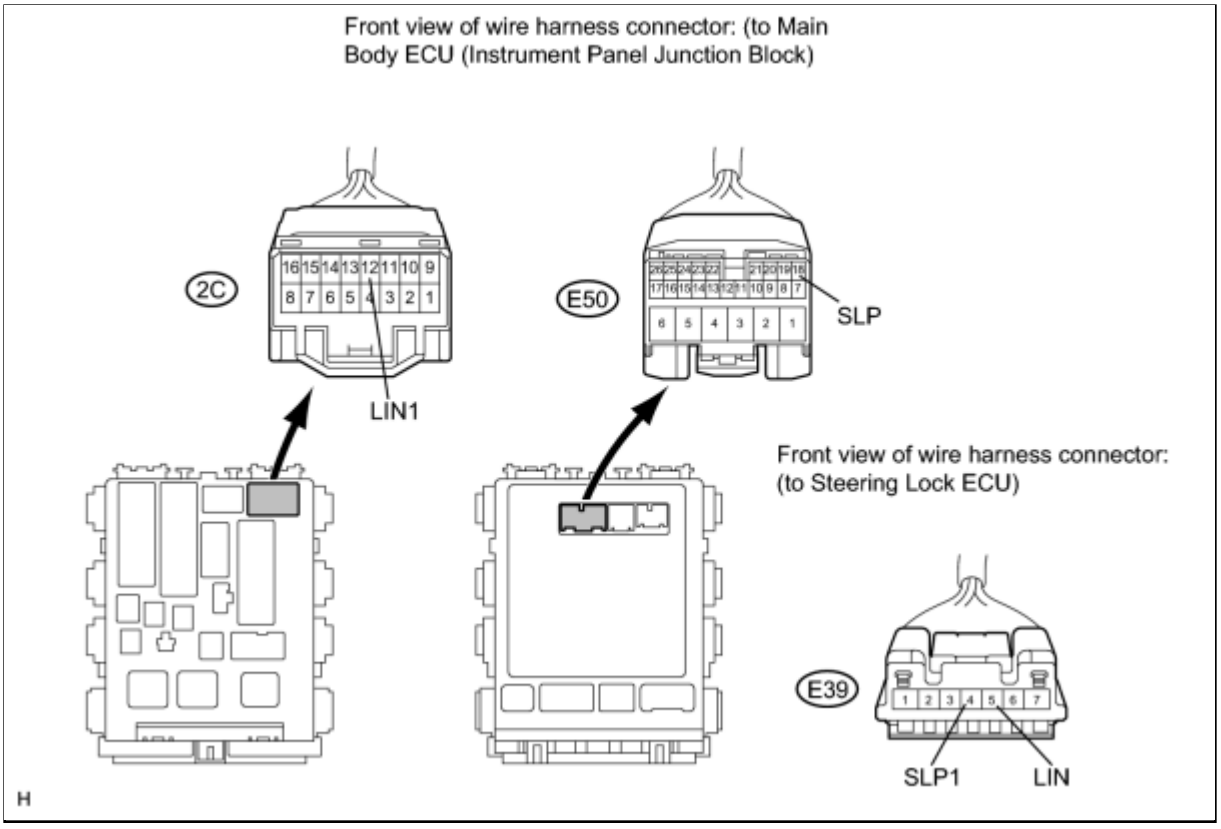

(b) Measure the resistance according to the value(s) in the table below.

Standard Resistance:

TESTER CONNECTION	CONDITION	SPECIFIED CONDITION
E50-18 (SLP) - E39-4 (SLP1)	Always	Below 1 Ω
2C-12 (LIN1) - E39-5 (LIN)	Always	Below 1 Ω
E50-18 (SLP) or E39-4 (SLP1) - Body ground	Always	10 kΩ or higher
2C-12 (LIN1) or E39-5 (LIN) - Body ground	Always	10 kΩ or higher

NG ▶ **REPAIR OR REPLACE HARNESS OR CONNECTOR**

OK ▼

4.	**CHECK MAIN BODY ECU OPERATION**

(a) After replacing the main body ECU with a normally functioning ECU, check that the engine starts. Make sure the brake pedal is depressed and the shift position is P at this time.

(b) Check that the engine switch mode can be changed by pushing the engine switch.

HINT:

Without depressing the brake pedal, push the engine switch repeatedly. Engine switch mode should turn from off to on (ACC) to on (IG) and back to off. With the brake pedal depressed, push the engine switch repeatedly. Engine switch mode should turn to ENGINE START from any status.

OK:
Engine starts normally.

NG ▶ **REPLACE STEERING LOCK ECU**

OK ▶ **END (MAIN BODY ECU DEFECTIVE)**

Last Modified: 3-10-2010	6.4 J	**From:** 200901
Model Year: 2010	**Model:** Corolla	**Doc ID:** RM0000020S9034X
Title: THEFT DETERRENT / KEYLESS ENTRY: SMART KEY SYSTEM (for Start Function): Power Source Mode does not Change (2010 Corolla)		

Power Source Mode does not Change

DESCRIPTION

When the engine switch is pushed with the electrical key in the cabin, the main body ECU (instrument panel junction block) receives signals to switch the power source mode.

HINT:

To allow use of the Techstream to inspect the push-button start function when the engine switch is off, repeat opening and closing any of the doors. Opening and closing a door establishes communication between the Techstream and the main body ECU (instrument panel junction block). (Opening and closing a door can also be simulated by operating a door courtesy light switch.)

WIRING DIAGRAM

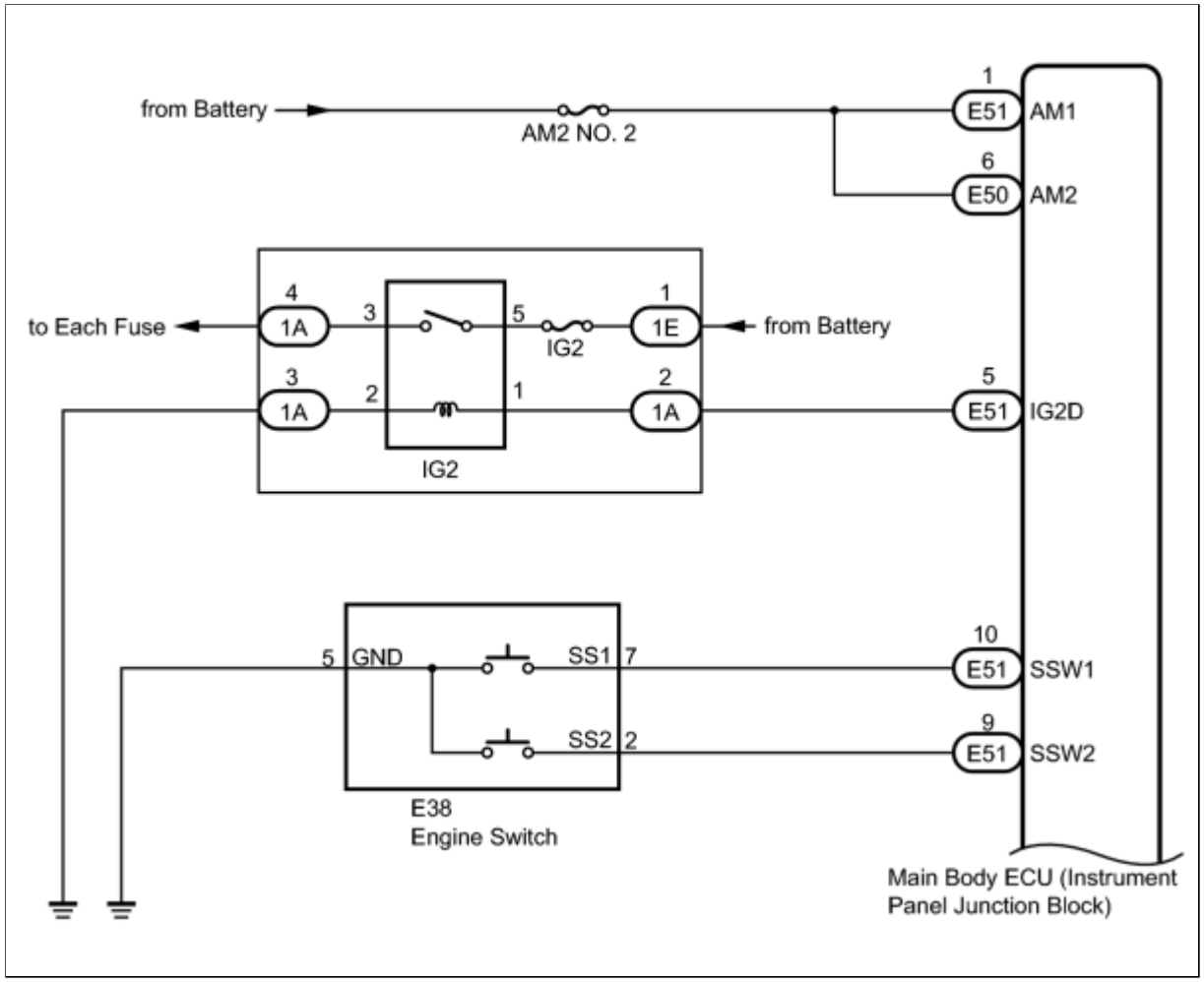
from Battery
AM2 NO. 2
1
E51
AM1
6
E50
AM2
to Each Fuse
4
1A
3
5
IG2
1
1E
from Battery
3
1A
2
1
2
1A
5
E51
IG2D
IG2
5
GND
SS1
7
10
E51
SSW1
SS2
2
9
E51
SSW2
E38
Engine Switch
Main Body ECU (Instrument
Panel Junction Block)

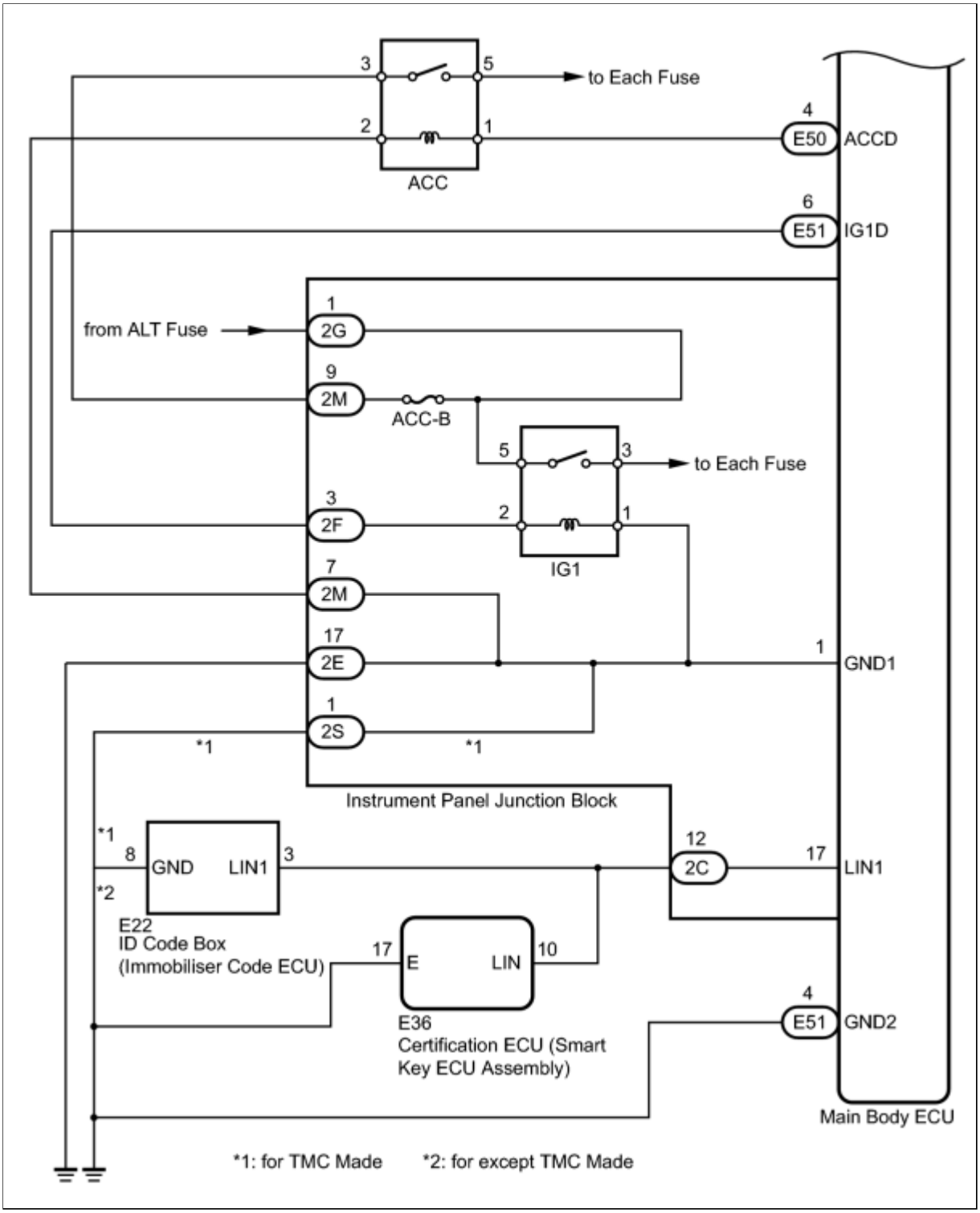

INSPECTION PROCEDURE

PROCEDURE

1.	**CHECK SMART KEY SYSTEM**

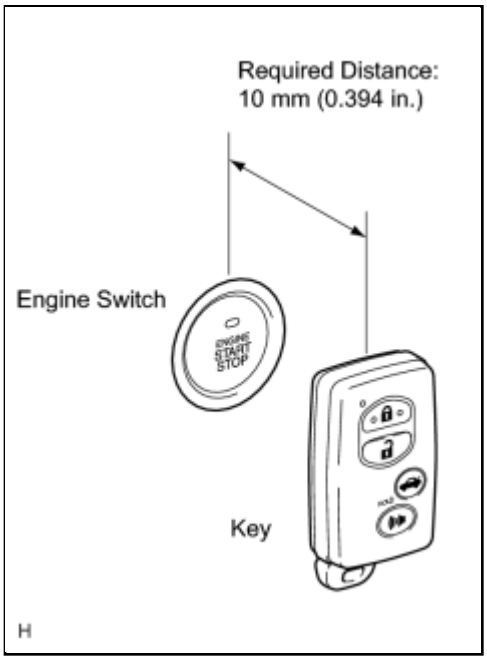

(a) Remove the battery of the electrical key transmitter INFO .

(b) Touch the logo side mark of the key or card key to the engine witch.

(c) Check that the engine switch can be turned on (IG).

Result:

RESULT	PROCEED TO
Power source mode does not change to on (ACC)	A
Power source mode does not change to on (IG)	B
Power source mode does not change to on (IG and ACC)	C
Power source mode is turned on	D

D ▶ **GO TO SMART KEY SYSTEM (ENTRY FUNCTION)**

C ▶ **CHECK HARNESS AND CONNECTOR (BATTERY - INSTRUMENT PANEL JUNCTION BLOCK)**

B ▶ **INSPECT IG1 RELAY**

A ▼

2. INSPECT ACC RELAY

(a) Remove the ACC relay from the relay block No. 5*1.

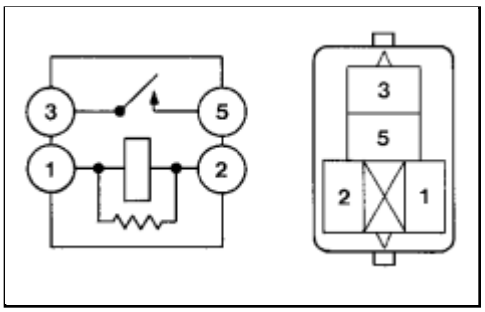

(b) Remove the ACC relay from the relay block No. 8*2.

(c) Measure the resistance according to the value(s) in the table below.

Standard Resistance:

TESTER CONNECTION	CONDITION	SPECIFIED CONDITION
3 - 5	When battery voltage is not applied to terminals 1 and 2	10 kΩ or higher
3 - 5	When battery voltage is applied to terminals 1 and 2	Below 1 Ω

HINT:

- *1: for TMC Made
- *2: for except TMC Made

NG ▶ **REPLACE ACC RELAY**

OK ▼

3.	**CHECK HARNESS AND CONNECTOR (MAIN BODY ECU - ACC RELAY)**

(a) for TMC Made:

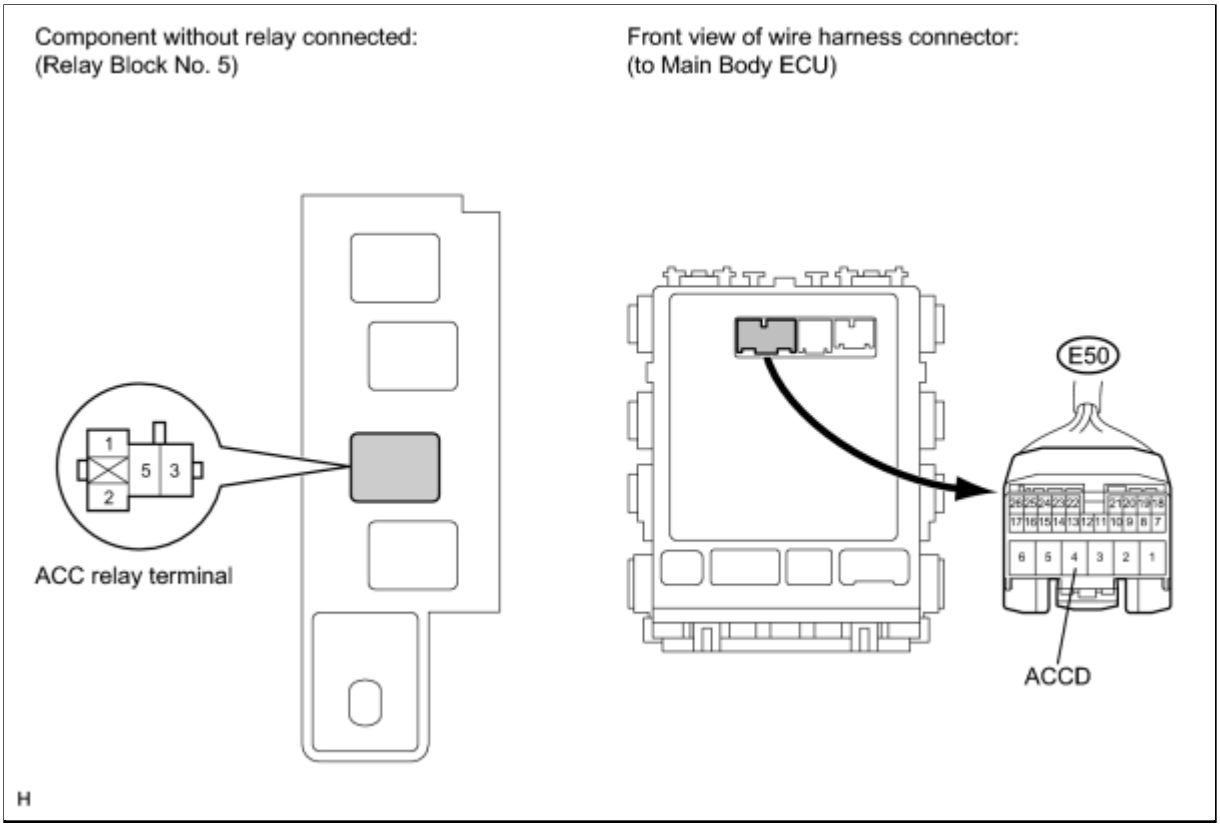

(1) Disconnect the E50 connector from the main body ECU (instrument panel junction block).

(2) Measure the resistance according to the value(s) in the table below.

Standard Resistance:

TESTER CONNECTION	CONDITION	SPECIFIED CONDITION
E50-4 (ACCD) - Relay block No. 5 ACC relay terminal 1	Always	Below 1 Ω
E50-4 (ACCD) or Relay block No. 5 ACC relay terminal 1 - Body ground	Always	10 kΩ or higher

(b) for except TMC Made:

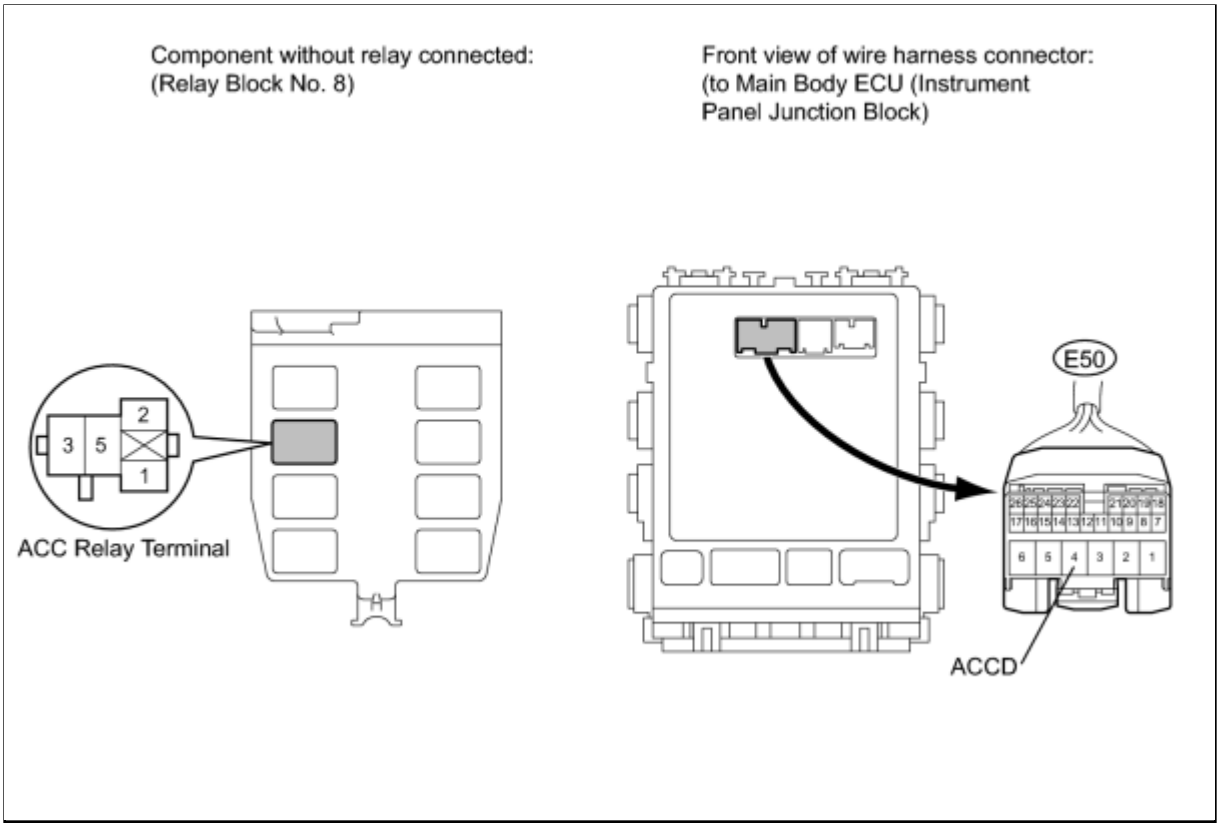

(1) Disconnect the E50 connector from the main body ECU (instrument panel junction block).

(2) Measure the resistance according to the value(s) in the table below.

Standard Resistance:

TESTER CONNECTION	CONDITION	SPECIFIED CONDITION
E50-4 (ACCD) - Relay block No. 8 ACC relay terminal 1	Always	Below 1 Ω
E50-4 (ACCD) or Relay block No. 8 ACC relay terminal 1 - Body ground	Always	10 kΩ or higher

NG ▶ **REPAIR OR REPLACE HARNESS OR CONNECTOR (MAIN BODY ECU - ACC RELAY)**

OK ▼

4.	**INSPECT FUSE (ACC-B FUSE)**

(a) Remove the ACC-B fuse from the main body ECU (instrument panel junction block).

(b) Measure the resistance according to the value(s) in the table below.

Standard Resistance:

TESTER CONNECTION	CONDITION	SPECIFIED CONDITION
ACC-B fuse	Always	Below 1 Ω

NG ▶ **REPLACE FUSE (ACC-B FUSE)**

OK ▼

5.	**CHECK HARNESS AND CONNECTOR (INSTRUMENT PANEL JUNCTION BLOCK - ACC RELAY)**

(a) for TMC Made:

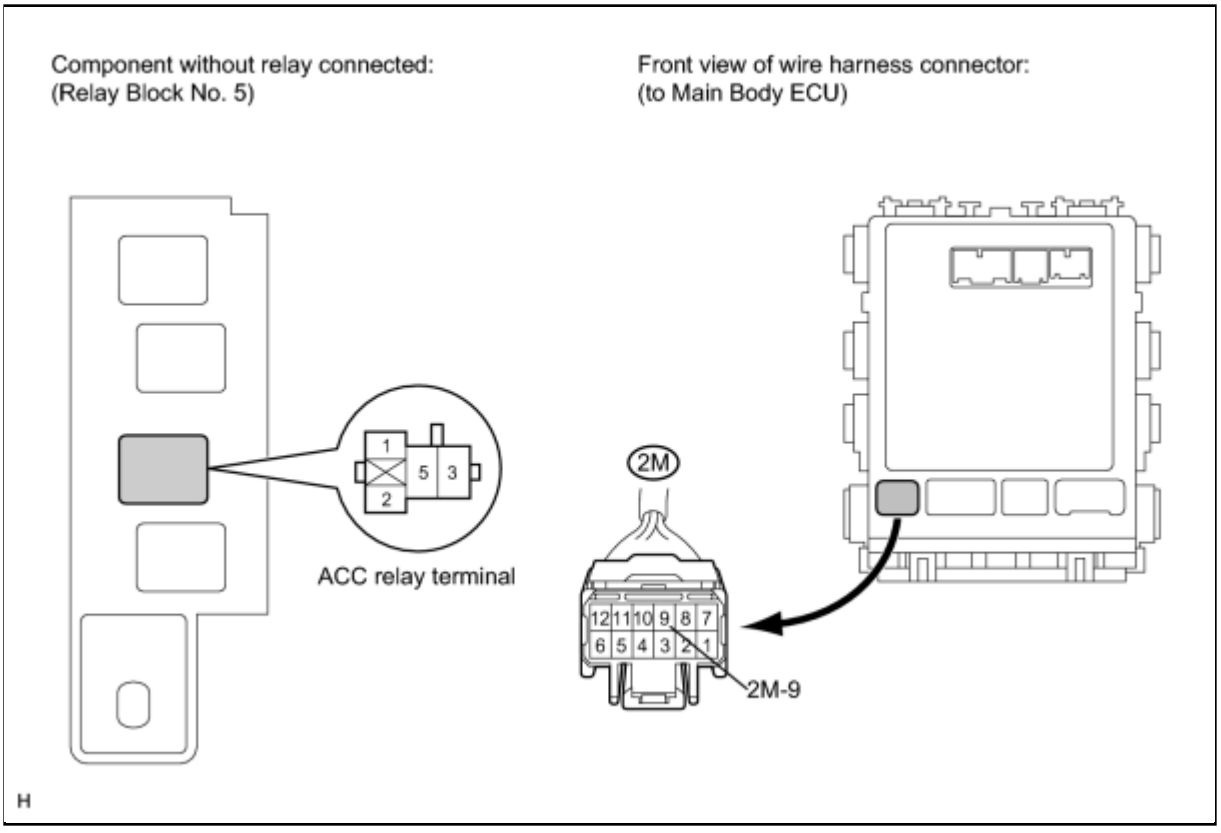

(1) Disconnect the 2M connector from the main body ECU (Instrument panel junction block).

(2) Measure the resistance according to the value(s) in the table below.

Standard Resistance:

TESTER CONNECTION	CONDITION	SPECIFIED CONDITION
2M-9 - Relay block No. 5 ACC relay terminal 3	Always	Below 1 Ω
2M-9 or Relay block No. 5 ACC relay terminal 3 - Body ground	Always	10 kΩ or higher

(b) for except TMC Made:

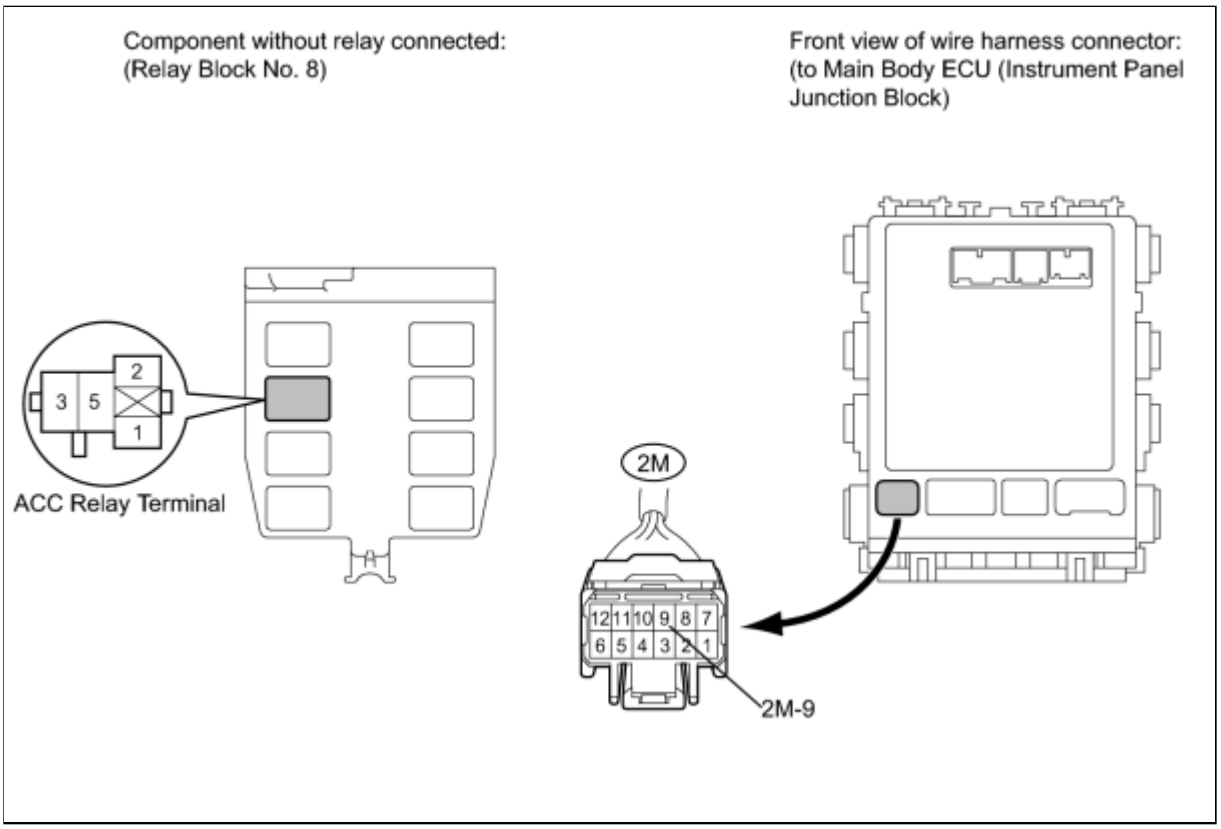

(1) Disconnect the 2M connector from the main body ECU (instrument panel junction block)

(2) Measure the resistance according to the value(s) in the table below.

Standard Resistance:

TESTER CONNECTION	CONDITION	SPECIFIED CONDITION
2M-9 - Relay block No. 8 ACC relay terminal 3	Always	Below 1 Ω
2M-9 or Relay block No. 8 ACC relay terminal 3 - Body ground	Always	10 k Ω or higher

NG ▶ **REPAIR OR REPLACE HARNESS OR CONNECTOR (INSTRUMENT PANEL JUNCTION BLOCK - ACC**

RELAY)

OK ▶ REPLACE MAIN BODY ECU (INSTRUMENT PANEL JUNCTION BLOCK

6.	INSPECT IG1 RELAY

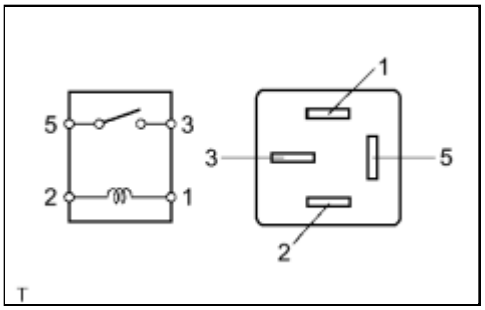

(a) Remove the IG1 relay from the main body ECU (instrument panel junction block).

(b) Measure the resistance according to the value(s) in the table below.

Standard Resistance:

TESTER CONNECTION	CONDITION	SPECIFIED CONDITION
3 - 5	When battery voltage is not applied to terminals 1 and 2	10 kΩ or higher
3 - 5	When battery voltage is applied to terminals 1 and 2	Below 1 Ω

NG ▶ REPLACE IG1 RELAY

OK ▼

7.	CHECK HARNESS AND CONNECTOR (MAIN BODY ECU - INSTRUMENT PANEL JUNCTION BLOCK)

(a) Disconnect the E51 and 2F connectors from the main body ECU (Instrument panel junction block).

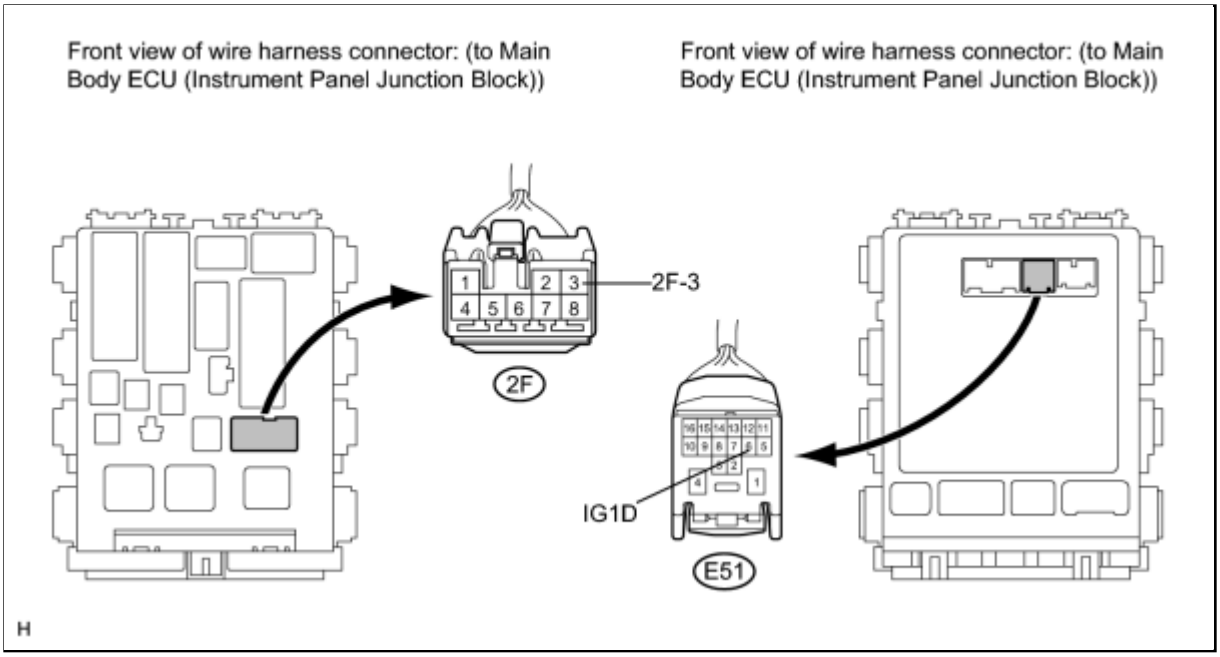

(b) Measure the resistance according to the value(s) in the table below.

Standard Resistance:

TESTER CONNECTION	CONDITION	SPECIFIED CONDITION
E51-6 (IG1D) - 2F-3	Always	Below 1 Ω
E51-6 (IG1D) or 2F-3 - Body ground	Always	10 kΩ or higher

NG ▶ **REPAIR OR REPLACE HARNESS OR CONNECTOR (MAIN BODY ECU - INSTRUMENT PANEL JUNCTION BLOCK)**

OK ▼

8.	**CHECK HARNESS OR CONNECTOR (INSTRUMENT PANEL JUNCTION BLOCK - BODY GROUND)**

(a) Disconnect the 2E connector from main body ECU (Instrument panel junction block).

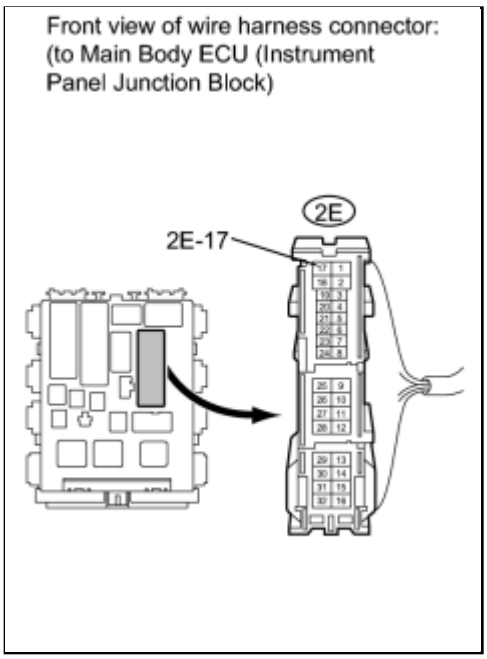

(b) Measure the voltage according to the value(s) in the table below.

Standard Voltage:

TESTER CONNECTION	CONDITION	SPECIFIED CONDITION
2E-17 - Body ground	Always	Below 1 Ω

NG ▶ **REPAIR OR REPLACE HARNESS OR CONNECTOR (INSTRUMENT PANEL JUNCTION BLOCK - BODY GROUND)**

OK ▼

9.	**INSPECT FUSE (IG2 FUSE)**

(a) Remove the IG2 fuse from engine room relay block.

(b) Measure the resistance according to the value(s) in the table below.

Standard Resistance:

TESTER CONNECTION	CONDITION	SPECIFIED CONDITION
IG2 fuse	Always	Below 1 Ω

NG ▶ **REPLACE FUSE (IG2 FUSE)**

OK

10.	**CHECK HARNESS AND CONNECTOR (BATTERY - ENGINE ROOM RELAY BLOCK)**

(a) Disconnect the 1E connector from engine room relay block.

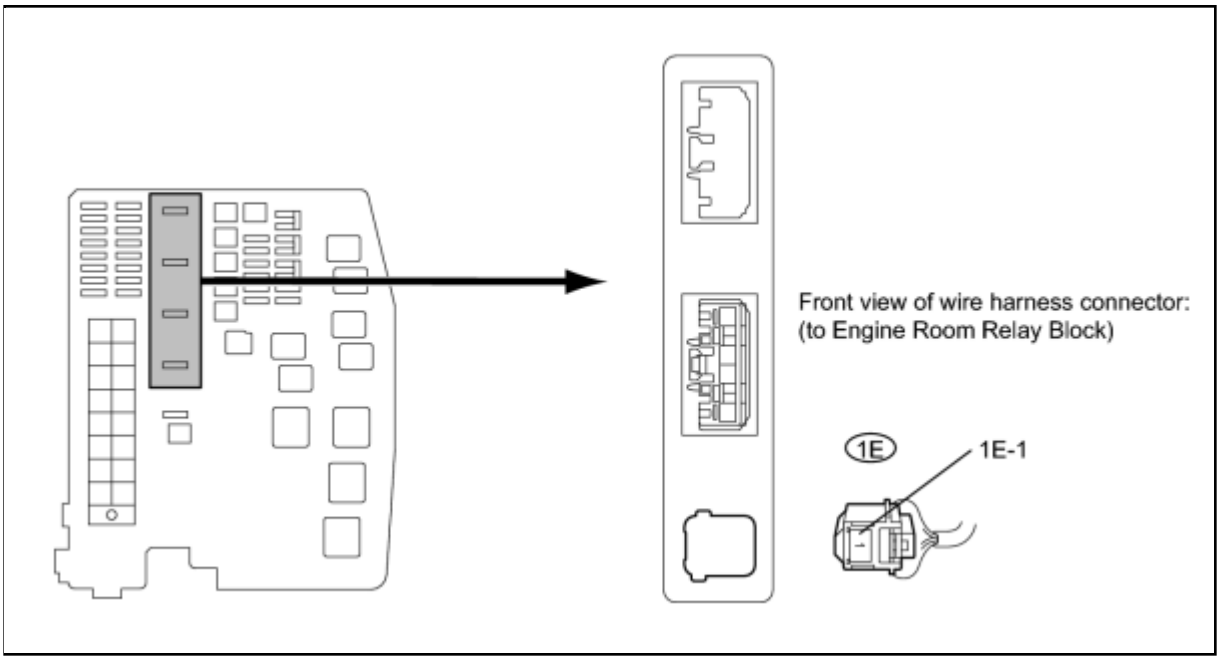

(b) Measure the voltage according to the value(s) in the table below.

Standard Voltage:

TESTER CONNECTION	CONDITION	SPECIFIED CONDITION
1E-1 - Body ground	Always	11 to 14 V

NG ▶ **REPAIR OR REPLACE HARNESS OR CONNECTOR (BATTERY - ENGINE ROOM RELAY BLOCK)**

OK

11.	**CHECK HARNESS AND CONNECTOR (MAIN BODY ECU - ENGINE ROOM RELAY**

	BLOCK)

(a) Disconnect the E51 connector from the main body ECU (instrument panel junction block).

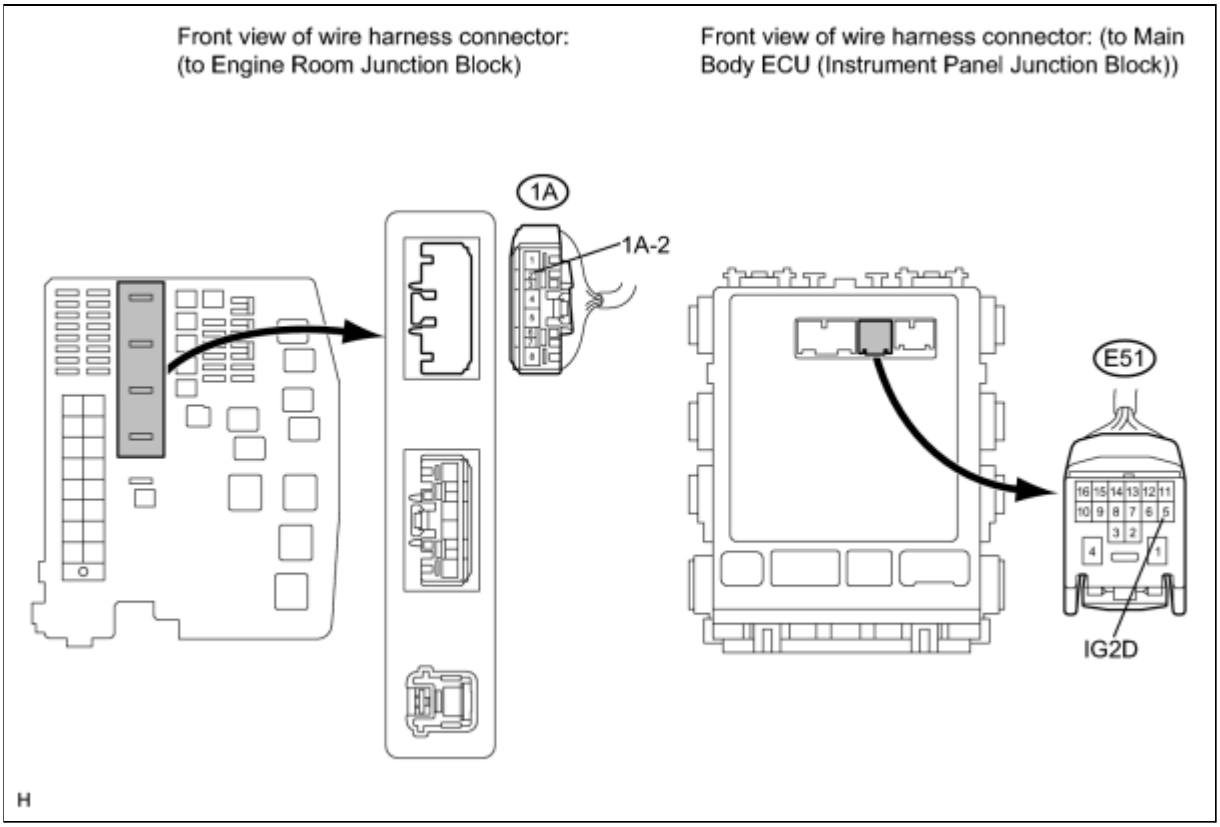

(b) Disconnect the 1A connector from engine room relay block.

(c) Measure the resistance according to the value(s) in the table below.

Standard Resistance:

TESTER CONNECTION	CONDITION	SPECIFIED CONDITION
E51-5 (IG2D) - 1A-2	Always	Below 1 Ω
E51-5 (IG2D) or 1A-2 - Body ground	Always	10 kΩ or higher

NG ▶ **REPAIR OR REPLACE HARNESS OR CONNECTOR (MAIN BODY ECU - ENGINE ROOM RELAY BLOCK)**

OK ▼

12.	CHECK HARNESS AND CONNECTOR (ENGINE ROOM RELAY BLOCK - BODY GROUND)

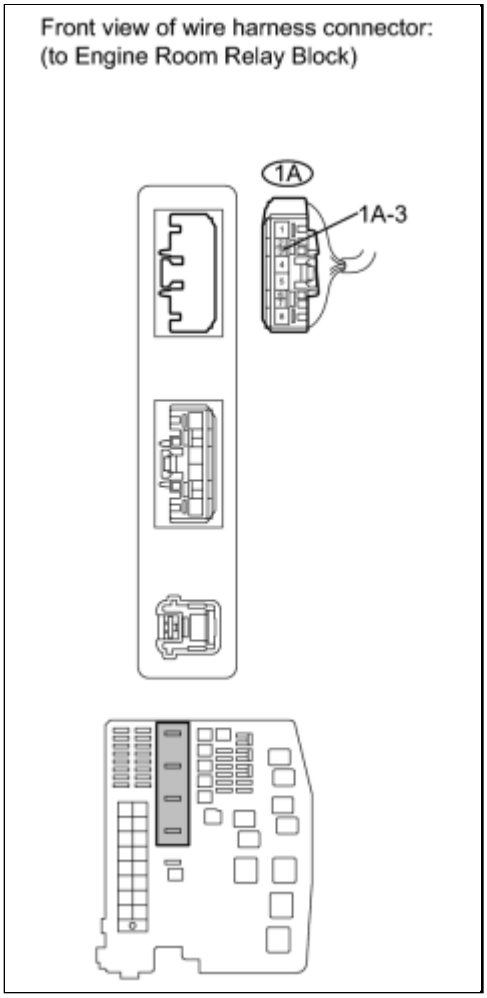

(a) Measure the resistance according to the value(s) in the table below.

Standard Resistance:

TESTER CONNECTION	CONDITION	SPECIFIED CONDITION
1A-3 - Body ground	Always	Below 1 Ω

NG ▶ **REPAIR OR REPLACE HARNESS OR CONNECTOR (ENGINE ROOM RELAY BLOCK - BODY GROUND)**

OK ▼

13.	INSPECT ENGINE ROOM RELAY BLOCK (IG2 RELAY)

(a) Remove the engine room relay block.

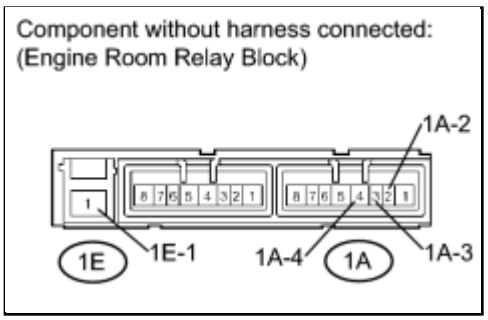

(b) Measure the resistance according to the value(s) in the table below.

Standard Resistance:

TESTER CONNECTION	CONDITION	SPECIFIED CONDITION
1E-1 - 1A-4	When battery voltage is not applied to terminals 1A-2 and 1A-3	10 kΩ or higher
1E-1 - 1A-4	When battery voltage is applied to terminals 1A-2 and 1A-3	Below 1 Ω

NG ▶ **REPLACE ENGINE ROOM RELAY BLOCK**

OK ▶ **REPLACE MAIN BODY ECU (INSTRUMENT PANEL JUNCTION BLOCK)**

14.	**CHECK HARNESS AND CONNECTOR (BATTERY - INSTRUMENT PANEL JUNCTION BLOCK)**

(a) Disconnect the 2G connector from main body ECU (Instrument panel junction block).

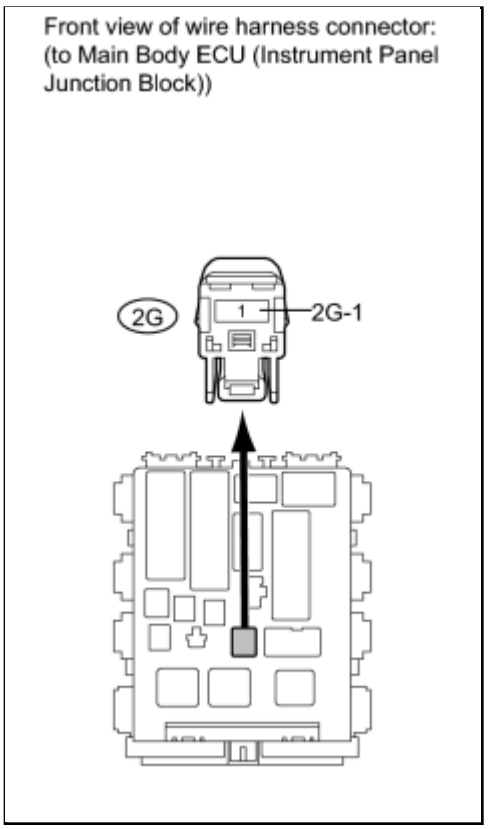

(b) Measure the voltage according to the value(s) in the table below.

Standard Voltage:

TESTER CONNECTION	CONDITION	SPECIFIED CONDITION
2G-1 - Body ground	Always	11 to 14 V

NG ▶ **REPAIR OR REPLACE HARNESS OR CONNECTOR (BATTERY - INSTRUMENT PANEL JUNCTION BLOCK)**

OK ▼

15.	**CHECK HARNESS OR CONNECTOR (INSTRUMENT PANEL JUNCTION BLOCK - BODY GROUND)**

(a) Disconnect the 2E connector from main body ECU (instrument panel junction block).

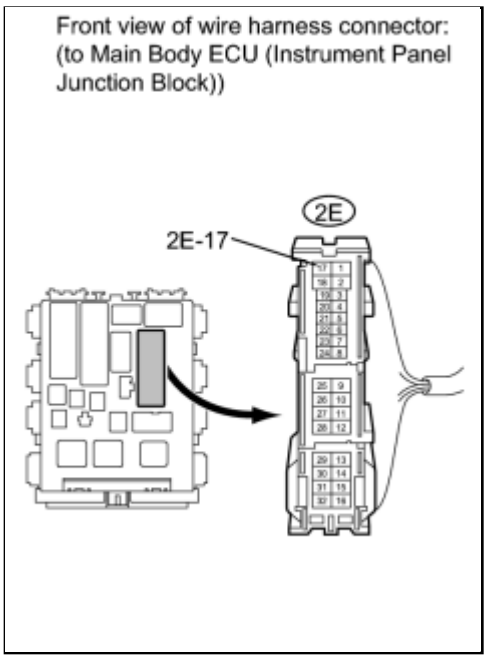

(b) Measure the resistance according to the value(s) in the table below.

Standard Resistance:

TESTER CONNECTION	CONDITION	SPECIFIED CONDITION
2E-17 - Body ground	Always	Below 1 Ω

NG ▶ **REPAIR OR REPLACE HARNESS OR CONNECTOR (INSTRUMENT PANEL JUNCTION BLOCK - BODY GROUND)**

OK ▼

16.	**CHECK HARNESS AND CONNECTOR (BATTERY - MAIN BODY ECU)**

(a) Disconnect the E50 and E51 connectors from the main body ECU (Instrument panel junction block).

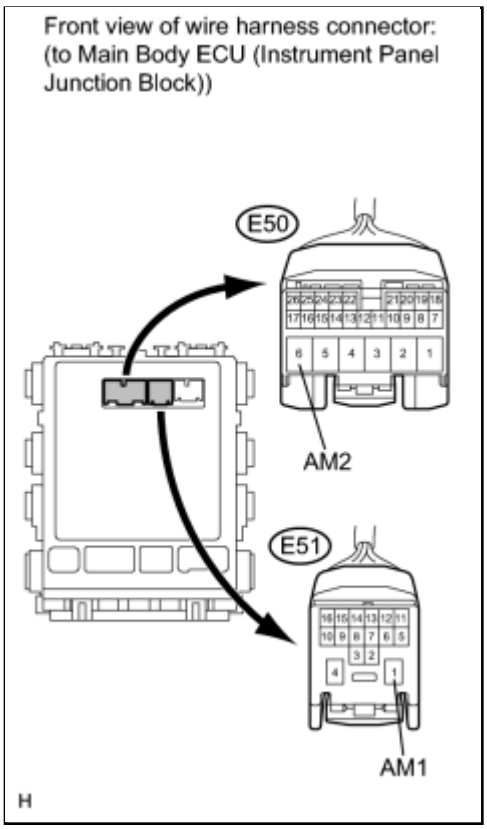

(b) Measure the voltage according to the value(s) in the table below.

Standard Voltage:

TESTER CONNECTION	CONDITION	SPECIFIED CONDITION
E50-6 (AM2) - Body ground	Always	11 to 14 V
E51-1 (AM1) - Body ground	Always	11 to 14 V

NG ▶ **REPAIR OR REPLACE HARNESS OR CONNECTOR (BATTERY - MAIN BODY ECU)**

OK ▼

17.	**CHECK HARNESS AND CONNECTOR (MAIN BODY ECU - BODY GROUND)**

(a) Disconnect the E51 connector from main body ECU (Instrument panel junction block).

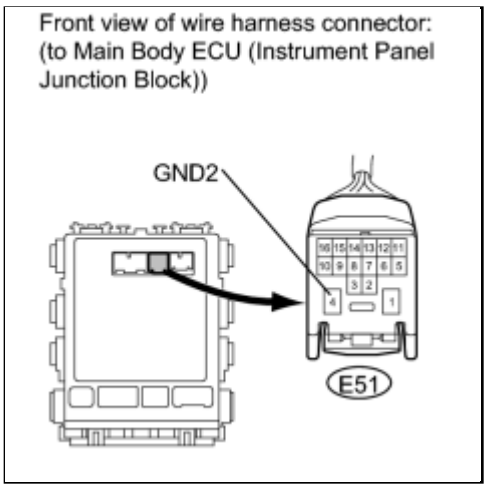

(b) Measure the resistance according to the value(s) in the table below.

Standard Resistance:

TESTER CONNECTION	CONDITION	SPECIFIED CONDITION
E51-4 (GND2) - Body ground	Always	Below 1 Ω

NG ▶ **REPAIR OR REPLACE HARNESS OR CONNECTOR (MAIN BODY ECU - BODY GROUND)**

OK ▶ **REPLACE MAIN BODY ECU (INSTRUMENT PANEL JUNCTION BLOCK)**

Last Modified: 3-10-2010	6.4 C	**From:** 200901
Model Year: 2010	**Model:** Corolla	**Doc ID:** RM000000YD4058X
Title: THEFT DETERRENT / KEYLESS ENTRY: SMART KEY SYSTEM (for Start Function): B2286: Runnable Signal Malfunction (2010 Corolla)		

DTC	**B2286**	**Runnable Signal Malfunction**

DESCRIPTION

This DTC is output when serial communication signals and CAN communication signals in the circuit between the main body ECU (instrument panel junction block) and ECM are inconsistent.

HINT:

When the main body ECU (instrument panel junction block) is replaced with a new one and the cable from the negative (-) battery terminal is connected, the power source mode becomes the IG-ON mode. When the battery is removed and reinstalled, the power source mode that was selected when the battery was removed is restored.

After the main body ECU (instrument panel junction block) is replaced, perform the registration procedures for the engine immobiliser system INFO **.**

DTC NO.	DTC DETECTION CONDITION	TROUBLE AREA
B2286	Serial communication signals and CAN communication signals in the circuit between the main body ECU (instrument panel junction block) and ECM are inconsistent.	• CAN communication system • ECM • Main body ECU (instrument panel junction block) • Wire harness or connector

WIRING DIAGRAM

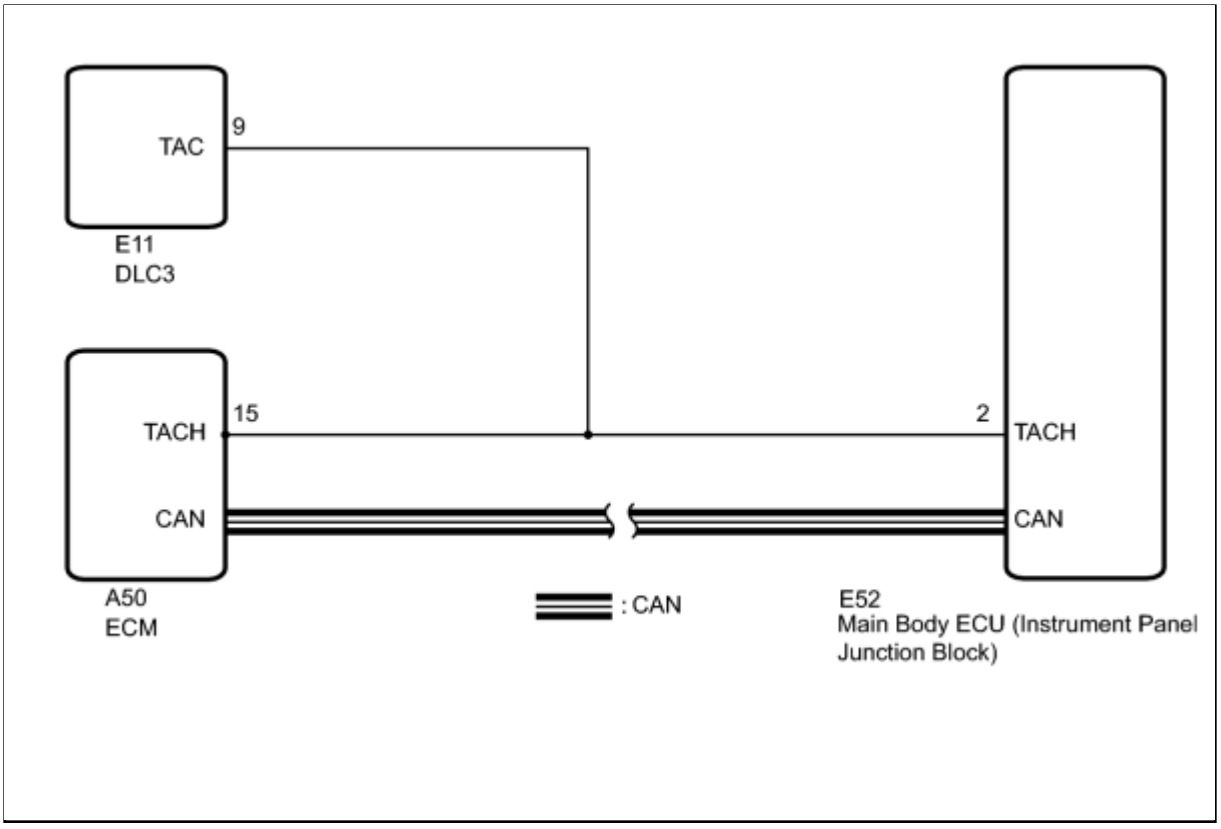

INSPECTION PROCEDURE

PROCEDURE

1.	**CHECK FOR DTC (CAN COMMUNICATION SYSTEM)**

(a) Clear the DTCs INFO .

(b) Check for CAN communication system INFO .

HINT:

If the DTCs for the CAN communication system malfunction are output, inspect those DTCs first.

OK:
DTC is not output.

NG ▶ **GO TO CAN COMMUNICATION SYSTEM**

OK
▼

2.	**READ VALUE USING TECHSTREAM**

(a) Connect the Techstream to the DLC3.

(b) Check the Data List for proper functioning of the engine.

HINT:

When using the Techstream with the engine switch off, turn on and off any of the door courtesy light switches repeatedly at 1.5 second intervals or less until communication between the Techstream and vehicle starts.

Main Body

TESTER DISPLAY	MEASUREMENT ITEM/RANGE	NORMAL CONDITION	DIAGNOSTIC NOTE
Engine Condition	Engine condition/STOP or RUN	Stop: Engine is stopped RUN: Engine is running	-

NG ▶ **CHECK HARNESS AND CONNECTOR (MAIN BODY ECU (INSTRUMENT PANEL JUNCTION BLOCK) - ECM)**

OK ▶ **REPLACE MAIN BODY ECU (INSTRUMENT PANEL JUNCTION BLOCK)**

3.	**CHECK HARNESS AND CONNECTOR (MAIN BODY ECU (INSTRUMENT PANEL JUNCTION BLOCK) - ECM)**

(a) Disconnect the A50 ECM connector.

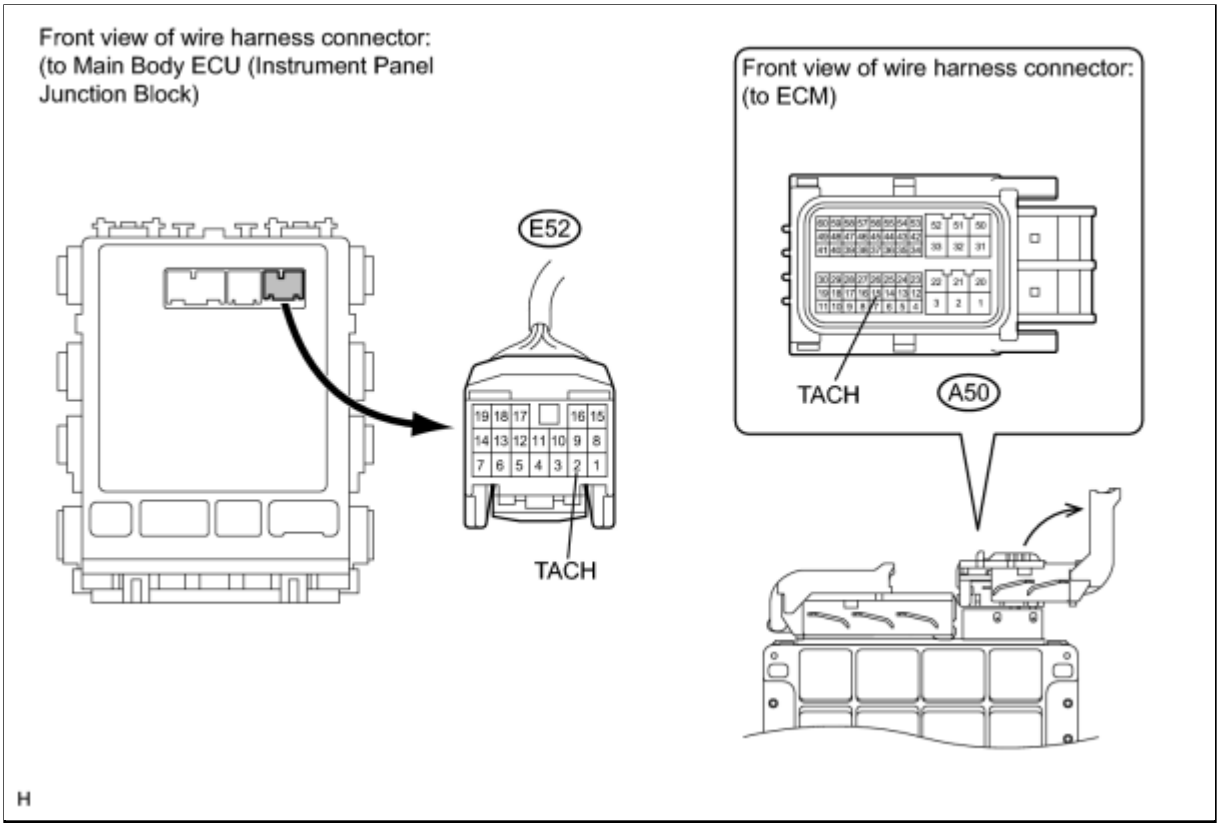

(b) Disconnect the E52 ECU connector.

(c) Measure the resistance according to the value(s) in the table below.

Standard Resistance:

TESTER CONNECTION	CONDITION	SPECIFIED CONDITION
E52-2 (TACH) - A50-15 (TACH)	Always	Below 1 Ω
E52-2 (TACH) or A50-15 (TACH) - Body ground	Always	10 kΩ or higher

NG ▶ **REPAIR OR REPLACE HARNESS OR CONNECTOR (MAIN BODY ECU (INSTRUMENT PANEL JUNCTION BLOCK) - ECM)**

OK ▶ **REPLACE MAIN BODY ECU (INSTRUMENT PANEL JUNCTION BLOCK)**

Last Modified: 3-10-2010	6.4 C	**From:** 200901
Model Year: 2010	**Model:** Corolla	**Doc ID:** RM000000XEY04AX
Title: THEFT DETERRENT / KEYLESS ENTRY: SMART KEY SYSTEM (for Start Function): B2287: LIN Communication Master Malfunction (2010 Corolla)		

DTC	**B2287**	**LIN Communication Master Malfunction**

DESCRIPTION

Refer to DTC B2287 INFO .

DTC NO.	DTC DETECTION CONDITION	TROUBLE AREA
B2287	Communication or communication line is abnormal between the main body ECU (instrument panel junction block) and the certification ECU (smart key ECU assembly)	• Main body ECU (instrument panel junction block) • Certification ECU (smart key ECU assembly) • Wire harness or connector

WIRING DIAGRAM

Refer to DTC B2287 INFO .

INSPECTION PROCEDURE

Refer to DTC B2287 INFO .

Last Modified: 3-10-2010	6.4 C	**From:** 200901
Model Year: 2010	**Model:** Corolla	**Doc ID:** RM0000020S7037X
Title: THEFT DETERRENT / KEYLESS ENTRY: SMART KEY SYSTEM (for Start Function): B2288: Steering Lock Signal Circuit Malfunction (2010 Corolla)		

DTC	**B2288**	**Steering Lock Signal Circuit Malfunction**

DESCRIPTION

This DTC is output when the main body ECU (instrument panel junction block) cannot detect the unlock condition of the steering lock within a specified time.

HINT:

When the main body ECU (instrument panel junction block) is replaced with a new one and the cable from the negative (-) battery terminal is connected, the power source mode becomes the IG-ON mode. When the battery is removed and reinstalled, the power source mode that was selected when the battery was removed is restored.

After the main body ECU (instrument panel junction block) is replaced, perform the registration procedures for the engine immobiliser system INFO **.**

DTC NO.	DTC DETECTION CONDITION	TROUBLE AREA
B2288	After turning engine switch from off to on (IG), the steering wheel does not unlock for a certain period of time (ECU unlocks steering wheel only when it receives an unlock signal from LIN communication and cable)	• Main body ECU (instrument panel junction block) • Steering lock ECU • Wire harness or connector

WIRING DIAGRAM

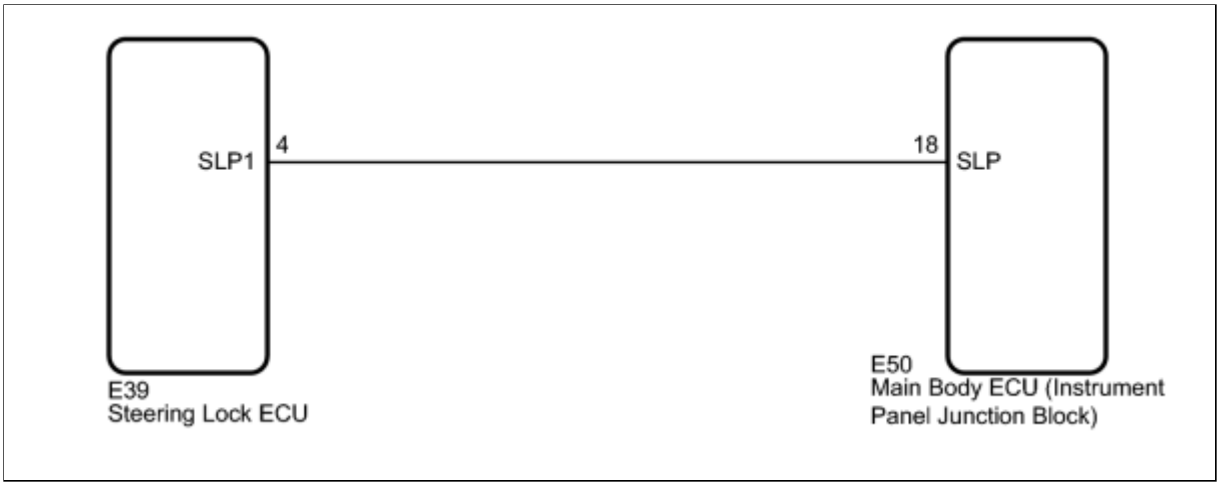

INSPECTION PROCEDURE

PROCEDURE

1.	**CHECK FOR DTC**

(a) Clear the DTCs INFO.

(b) After all DTCs are cleared, check if the trouble occurs again 18 to 22 seconds after the engine switch is turned on (IG).

(c) Check for DTCs again.

Result:

RESULT	PROCEED TO
DTC B2285 (Steering lock Position Signal Circuit Malfunction) is output	A
Steering lock DTCs B2781, B2782 and / or B2788 are output	B
DTC is not output	C

B ▶ **GO TO DIAGNOSTIC TROUBLE CODE CHART (DTC B2781, B2782, B2788)**

A ▶ **GO TO OTHER FLOW CHART (DTC B2285)**

C ▼

2.	CHECK STEERING LOCK

(a) Check if the steering lock is released when turning the engine switch on (ACC).

OK:
The steering lock is released.

NG ▶ **GO TO STEERING LOCK SYSTEM**

OK ▼

3.	READ VALUE USING TECHSTREAM

(a) Connect the Techstream to the DLC3.

(b) Check the Data List for proper functioning of the steering lock function.

HINT:

When using the Techstream with the engine switch off, turn on and off any of the door courtesy light switches repeatedly at 1.5 second intervals or less until communication between the Techstream and vehicle starts.

Main Body

TESTER DISPLAY	MEASUREMENT ITEM/RANGE	NORMAL CONDITION	DIAGNOSTIC NOTE
Steering Unlock Switch	Steering lock condition / ON or OFF	ON: Steering is unlocked (Engine switch on (ACC)) OFF: Steering is locked (Engine switch off)	-

NG ▶ **REPLACE STEERING LOCK ECU**

OK ▶ **REPLACE MAIN BODY ECU (INSTRUMENT PANEL JUNCTION BLOCK)**

Last Modified: 3-10-2010	6.4 C	**From:** 200901
Model Year: 2010	**Model:** Corolla	**Doc ID:** RM0000020S8037X
Title: THEFT DETERRENT / KEYLESS ENTRY: SMART KEY SYSTEM (for Start Function): B2289: Key Collation Waiting Time Over (2010 Corolla)		

DTC	**B2289**	**Key Collation Waiting Time Over**

DESCRIPTION

This DTC is output when there is a LIN communication problem between the main body ECU (instrument panel junction block) and certification ECU (smart key ECU assembly) or when there is a problem in the entry function.

HINT:

After the main body ECU (instrument panel junction block) is replaced, perform the registration procedures for the engine immobiliser system INFO **.**

DTC NO.	DTC DETECTION CONDITION	TROUBLE AREA
B2289	Either condition below is met: • LIN communication is abnormal between the main body ECU (instrument panel junction block) and the certification ECU (smart key ECU assembly) • The engine immobiliser system is malfunctioning	• Main body ECU (instrument panel junction block) • Smart key system (entry function) • Wire harness or connector • Certification ECU (smart key ECU assembly)

WIRING DIAGRAM

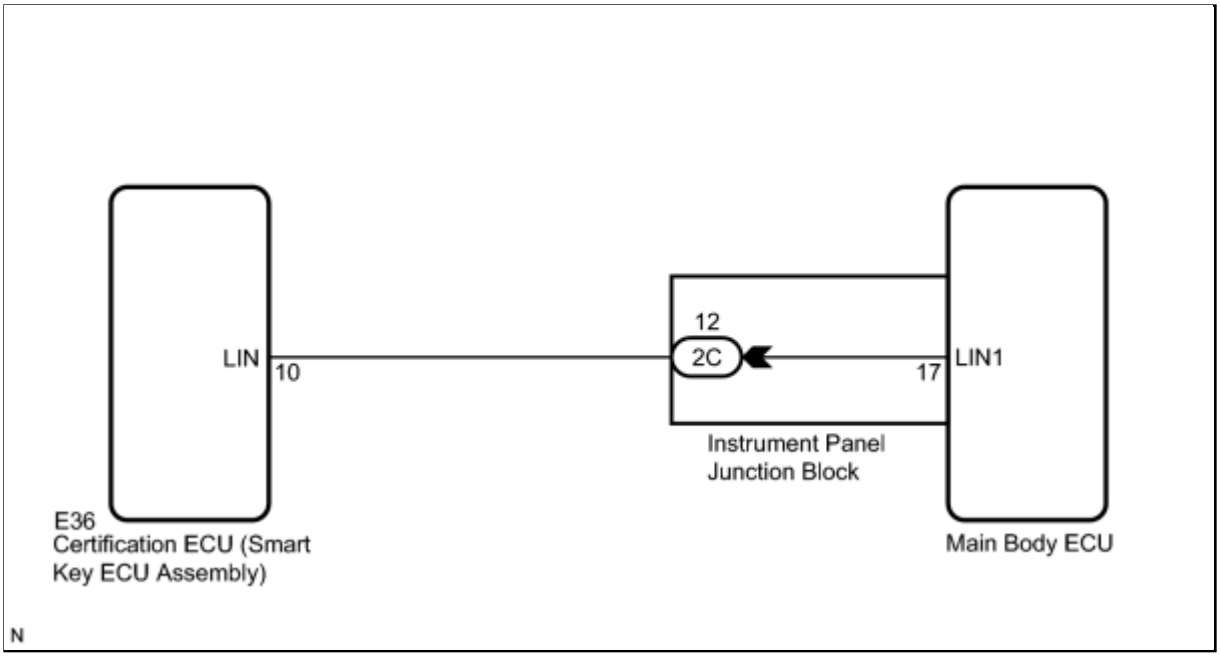

INSPECTION PROCEDURE

PROCEDURE

1.	**CHECK FOR DTC**

(a) Clear the DTCs INFO.

(b) Check for DTC B2289 (Key collection waiting time over) and B2785 (Communication malfunction between ECUs connected by LIN).

Result:

DISPLAY (DTC OUTPUT)	PROCEED TO
"DTC B2289" only	A
"DTC B2785" only	B
No DTC	C

HINT:

- If DTC B2785 is output, perform troubleshooting for DTC B2785 first.

C ▶ **USE SIMULATION METHOD TO CHECK**

B ▶ **GO TO DTC B2785**

A

2.	CHECK HARNESS AND CONNECTOR (MAIN BODY ECU - CERTIFICATION ECU)

(a) Disconnect the E36 ECU and 2C junction block connectors.

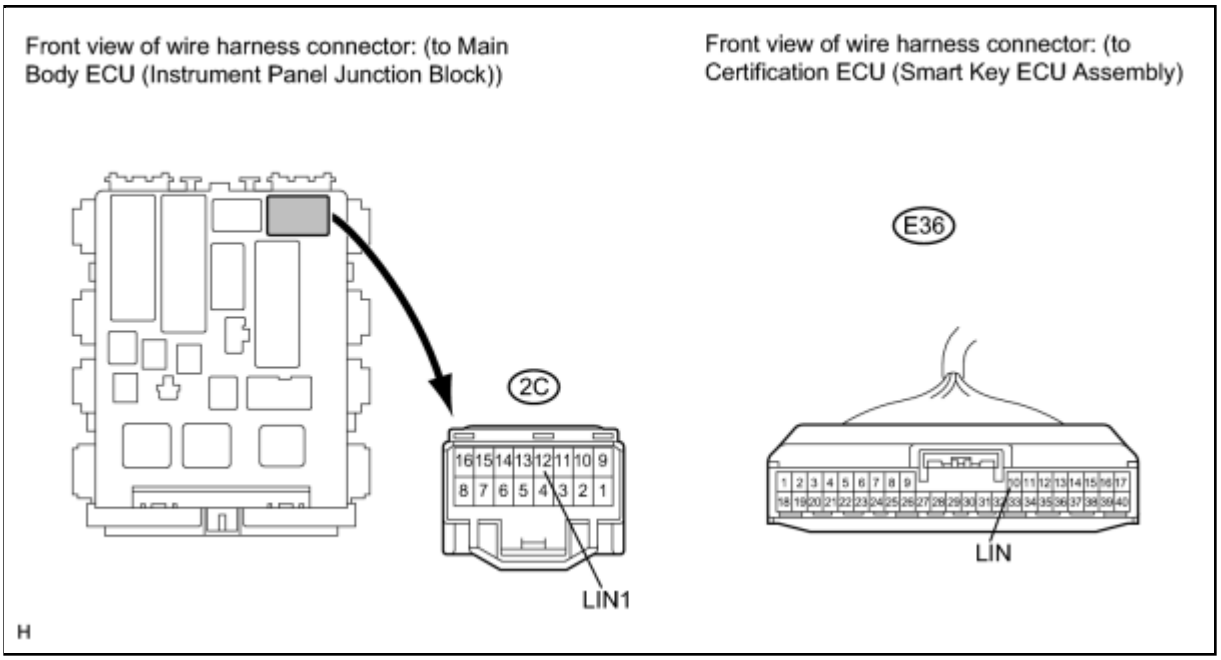

(b) Measure the resistance according to the value(s) in the table below.

Standard Resistance:

TESTER CONNECTION	CONDITION	SPECIFIED CONDITION
2C-12 (LIN1) - E36-10 (LIN)	Always	Below 1 Ω
2C-12 (LIN1) or E36-10 (LIN) - Body ground	Always	10 kΩ or higher

NG ▶ **REPAIR OR REPLACE HARNESS OR CONNECTOR (MAIN BODY ECU - CERTIFICATION ECU)**

OK

3.	**CHECK MAIN BODY ECU (INSTRUMENT PANEL JUNCTION BLOCK) OPERATION**

(a) After replacing the main body ECU (instrument panel junction block) with a normally functioning ECU, check that the engine starts.

OK:

Engine starts normally.

HINT:

If the engine does not start, refer to Problem Symptoms Table of the smart key system (entry function) (Room Oscillator does not Recognized Key).

NG ▶ **GO TO SMART KEY SYSTEM (ENTRY FUNCTION)**

OK ▶ **END (MAIN BODY ECU DEFECTIVE)**

Last Modified: 3-10-2010	6.4 J	**From:** 200901
Model Year: 2010	**Model:** Corolla	**Doc ID:** RM000000YA204NX
Title: THEFT DETERRENT / KEYLESS ENTRY: SMART KEY SYSTEM (for Start Function): Engine Switch Indicator Circuit (2010 Corolla)		

Engine Switch Indicator Circuit

DESCRIPTION

Engine start conditions or system malfunctions can be checked by the status of the engine switch indicator light.

Engine Switch Indicator Light Condition

POWER SOURCE MODE/CONDITION	INDICATOR LIGHT CONDITION	
	BRAKE PEDAL RELEASED	BRAKE PEDAL DEPRESSED, SHIFT LEVER IN P
off	OFF	ON (Green) (When key and vehicle IDs match)
on (ACC, IG)	ON (Amber)	ON (Green)
Engine running	OFF	OFF
Steering lock not unlocked	Flashes (Green) for 15 sec.	Flashes (Green) for 15 sec.
System malfunction	Flashes (Amber) for 15 sec.	Flashes (Amber) for 15 sec.

WIRING DIAGRAM

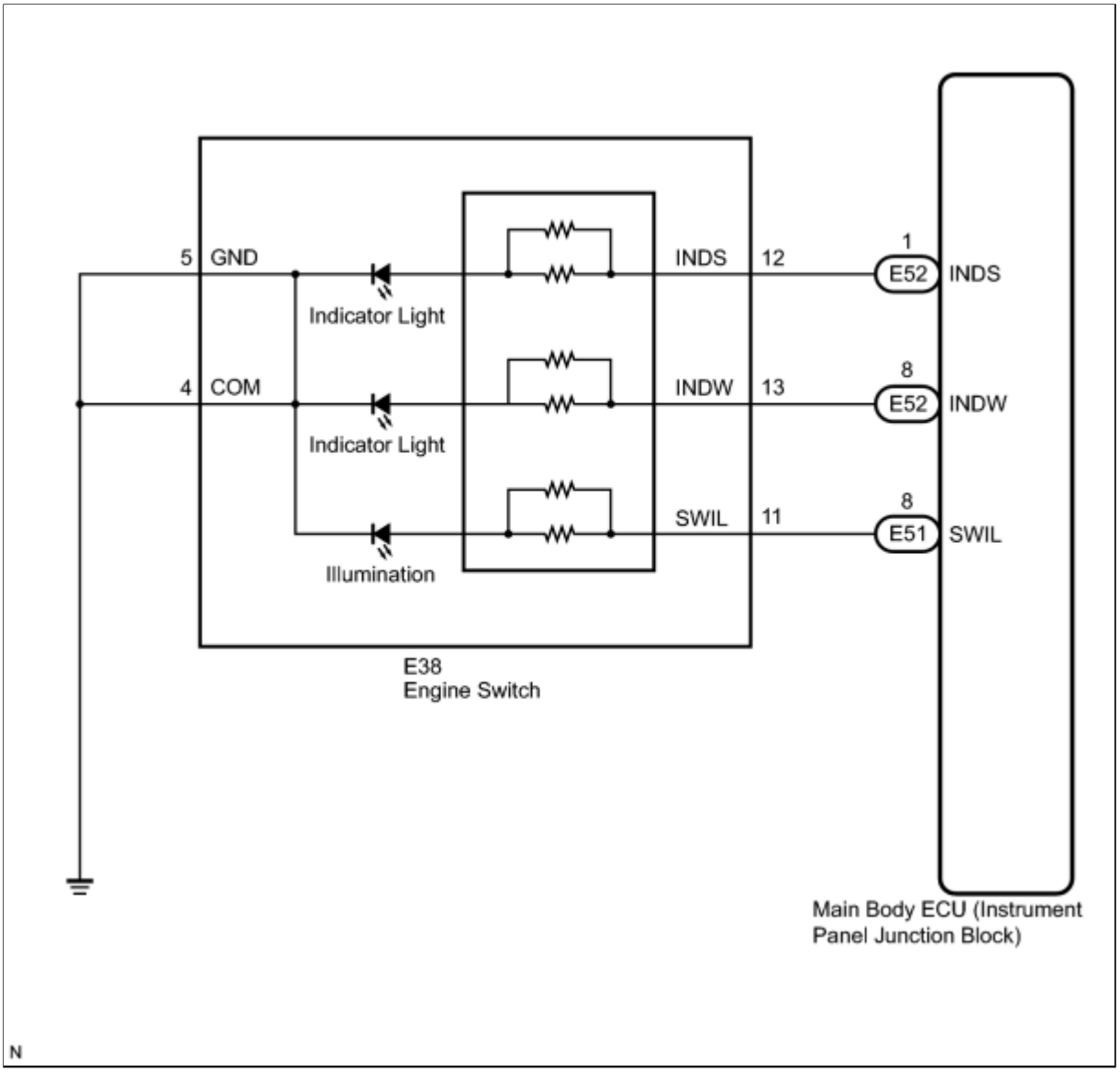

INSPECTION PROCEDURE

PROCEDURE

1.	**INSPECT ENGINE SWITCH**

(a) Remove the engine switch INFO .

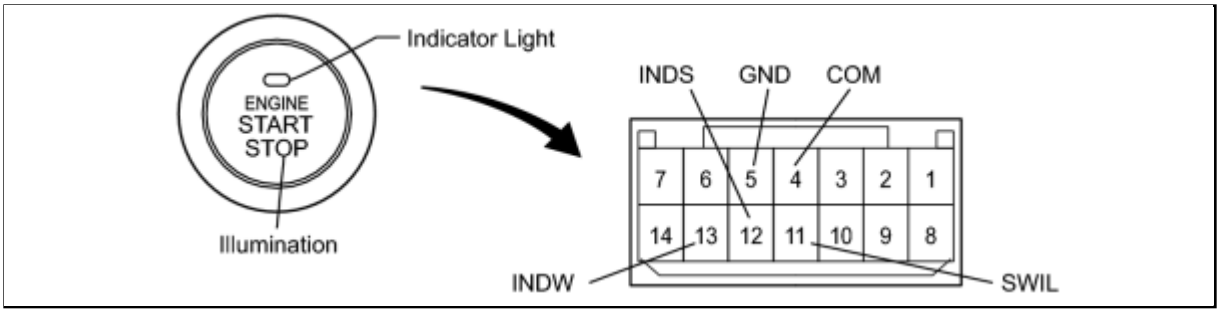

(b) Apply battery voltage between the terminals of the switch, and check the illumination condition of the switch.

NOTICE:

- If the positive (+) lead and the negative (-) lead are incorrectly connected, the engine switch indicator will not illuminate.
- If the voltage is too low, the indicator will not illuminate.

OK:

MEASUREMENT CONDITION	SPECIFIED CONDITION
Battery positive (+) → Terminal 11 (SWIL) Battery negative (-) → Terminal 4 (COM) or 5 (GND)	Illuminates
Battery positive (+) → Terminal 12 (INDS) Battery negative (-) → Terminal 4 (COM) or 5 (GND)	Illuminates
Battery positive (+) → Terminal 13 (INDW) Battery negative (-) → Terminal 4 (COM) or 5 (GND)	Illuminates

NG ▶ **REPLACE ENGINE SWITCH**

OK ▼

2.	**CHECK HARNESS AND CONNECTOR (ENGINE SWITCH - MAIN BODY ECU AND BODY GROUND)**

(a) Disconnect the E38 switch connector.

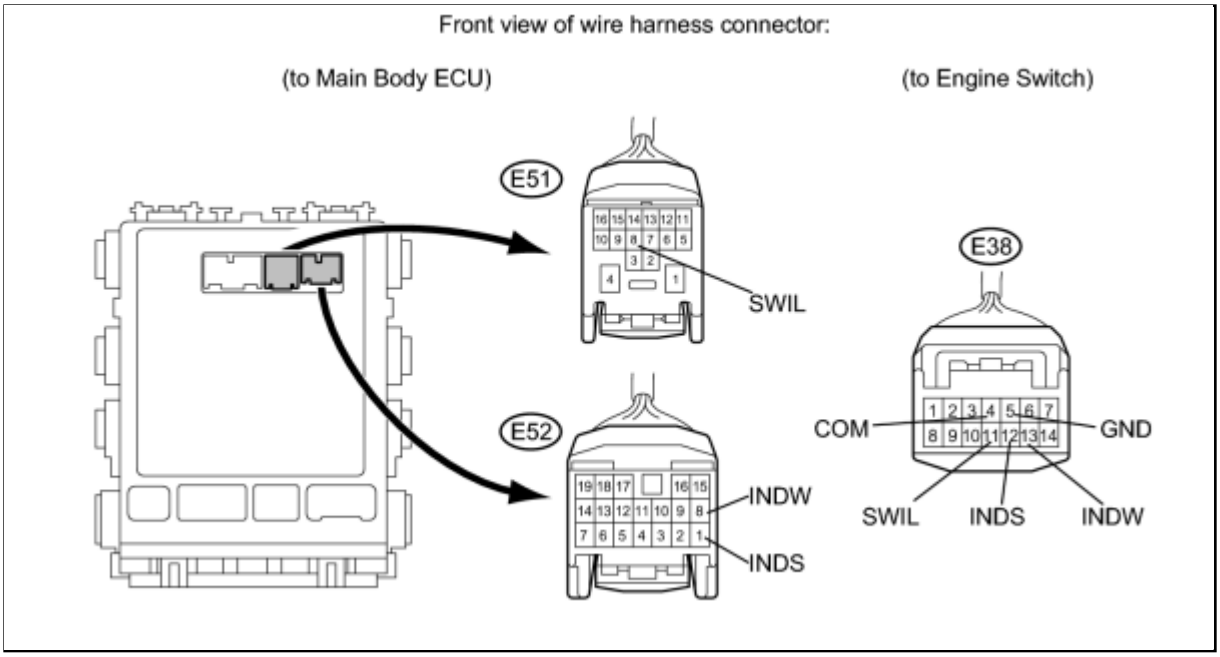

(b) Disconnect the E51 and E52 ECU connectors.

(c) Measure the resistance according to the value(s) in the table below.

Standard Resistance:

TESTER CONNECTION	CONDITION	SPECIFIED CONDITION
E38-11 (SWIL) - E51-8 (SWIL)	Always	Below 1 Ω
E38-12 (INDS) - E52-1 (INDS)		
E38-13 (INDW) - E52-8 (INDW)		
E38-5 (GND) - Body ground		
E38-4 (COM) - Body ground		
E38-11 (SWIL) or E51-8 (SWIL) - Body ground		10 kΩ or higher
E38-12 (INDS) or E52-1 (INDS) - Body ground		
E38-13 (INDW) or E52-8 (INDW) - Body ground		

NG ▶ **REPAIR OR REPLACE HARNESS OR CONNECTOR**

OK ▶ **REPLACE MAIN BODY ECU (INSTRUMENT PANEL JUNCTION BLOCK)**

Last Modified: 3-10-2010	6.4 R	**From:** 200901
Model Year: 2010	**Model:** Corolla	**Doc ID:** RM0000035 7I00AX
Title: THEFT DETERRENT / KEYLESS ENTRY: THEFT DETERRENT SYSTEM: PARTS LOCATION (2010 Corolla)		

PARTS LOCATION

ILLUSTRATION

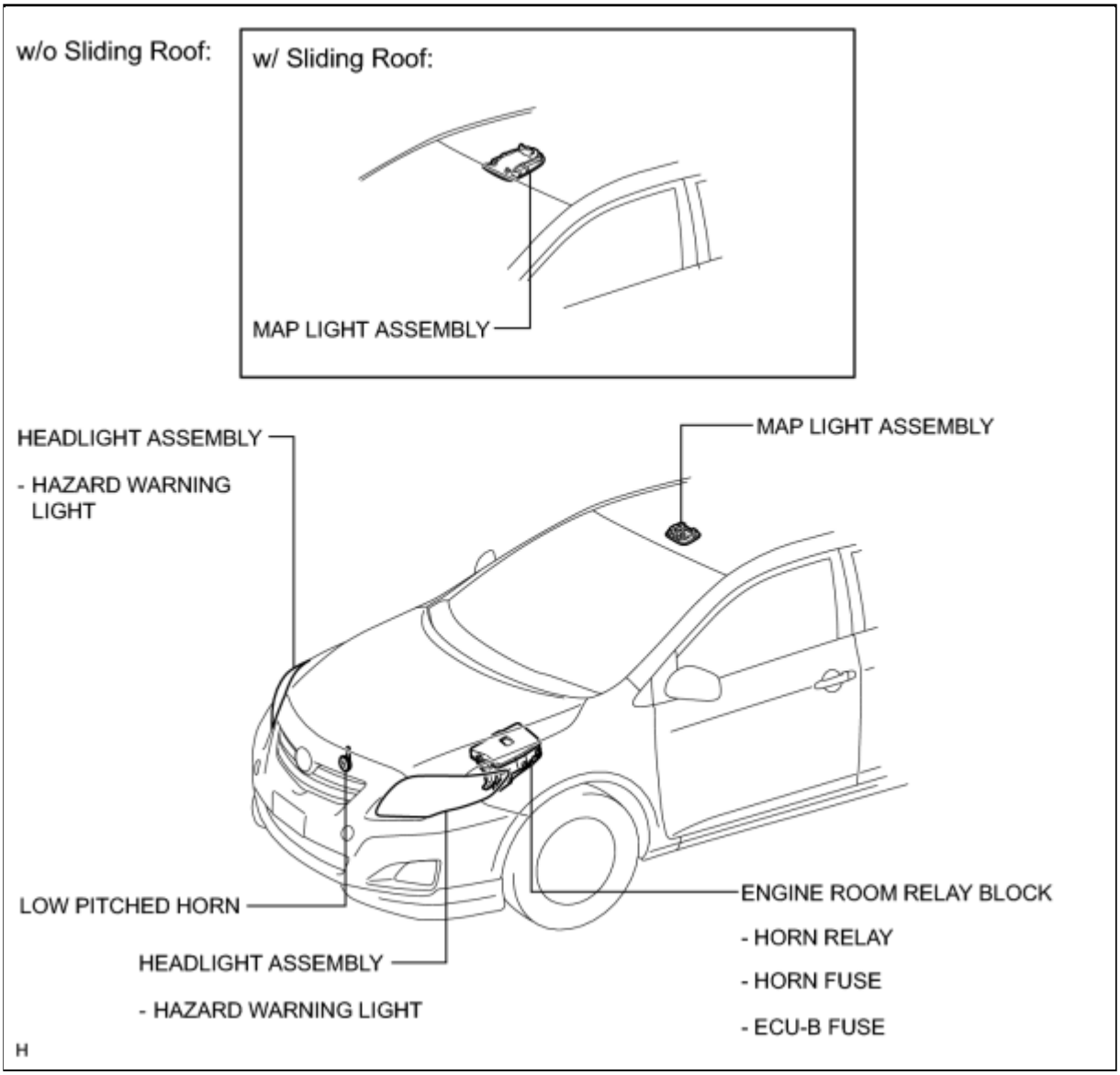

ILLUSTRATION

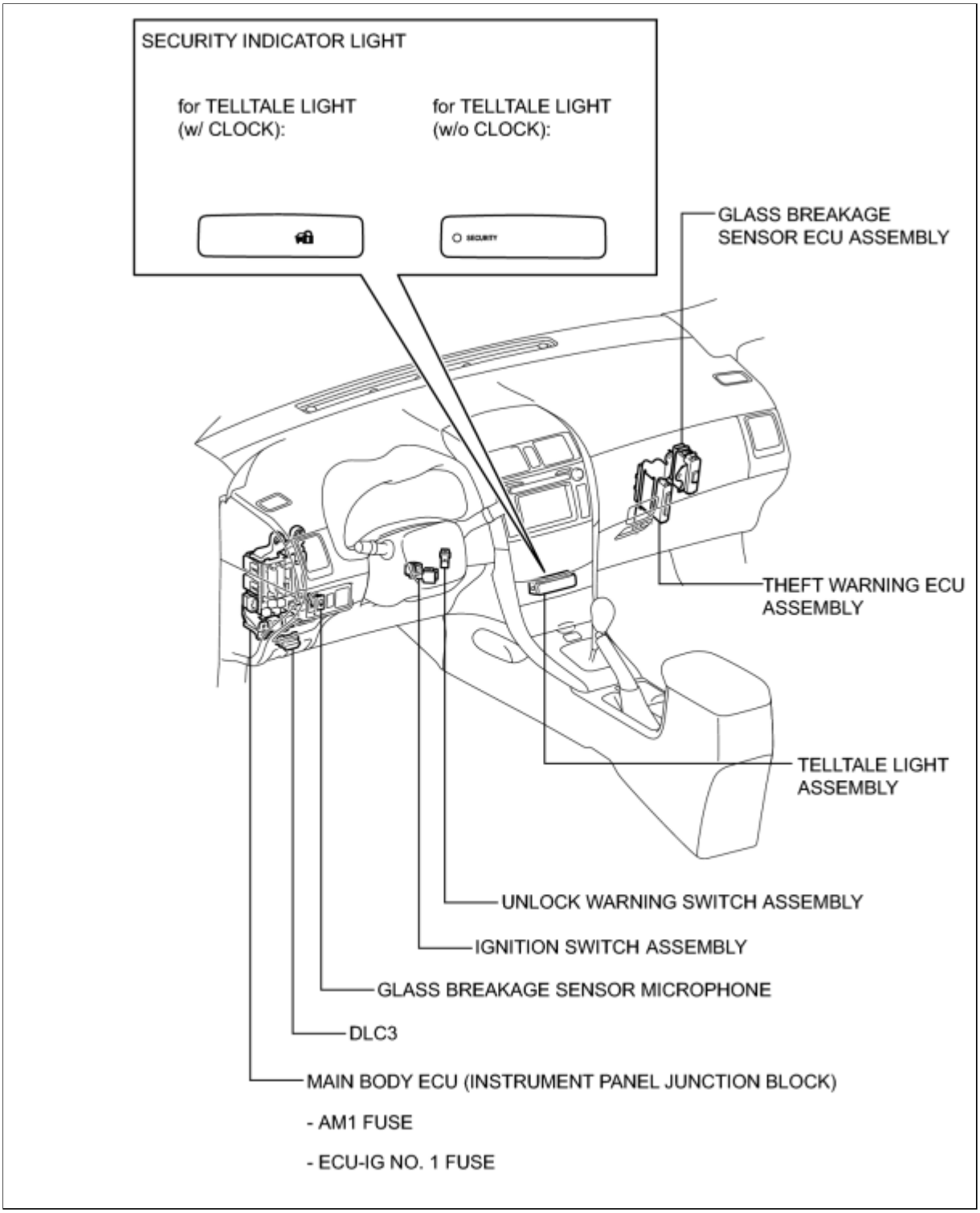

ILLUSTRATION

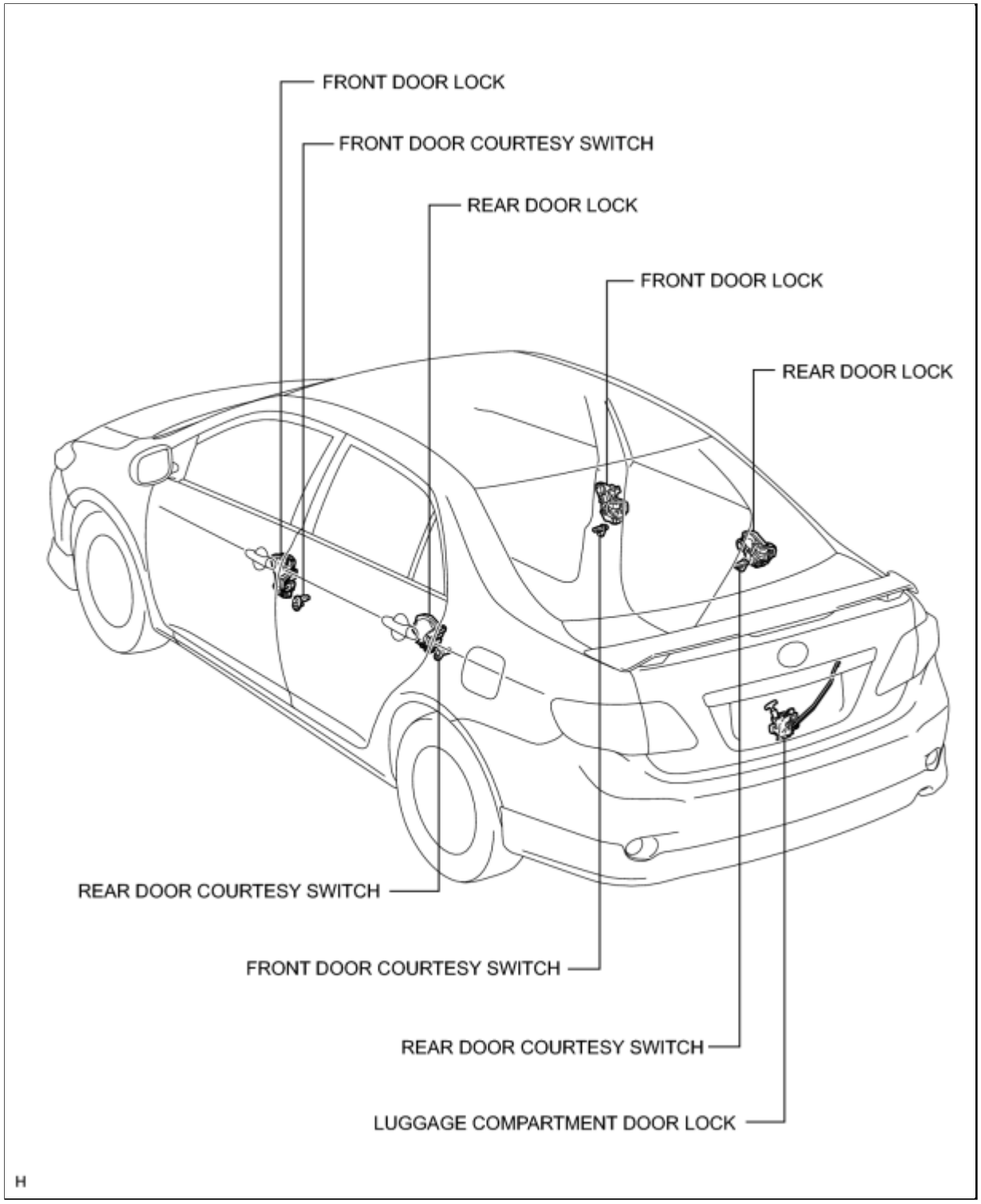
FRONT DOOR LOCK
FRONT DOOR COURTESY SWITCH
REAR DOOR LOCK
FRONT DOOR LOCK
REAR DOOR LOCK
REAR DOOR COURTESY SWITCH
FRONT DOOR COURTESY SWITCH
REAR DOOR COURTESY SWITCH
LUGGAGE COMPARTMENT DOOR LOCK
H

Last Modified: 3-10-2010	6.4 D	**From:** 200901
Model Year: 2010	**Model:** Corolla	**Doc ID:** RM0000026P0021X
Title: THEFT DETERRENT / KEYLESS ENTRY: THEFT DETERRENT SYSTEM: SYSTEM DESCRIPTION (2010 Corolla)		

SYSTEM DESCRIPTION

1. OUTLINE OF THEFT DETERRENT SYSTEM

- The theft deterrent system can be set by locking the doors using the transmitter or key, or by opening and closing the doors (see Active Arming Mode or Passive Arming Mode for details).
- The alarm function will be activated when someone attempts to forcibly unlock the any of the doors, open any of the doors or the luggage compartment door while the system is in the armed state.
- In the alarm sounding state, the system illuminates the interior light and blinks the hazard warning lights, the headlights and taillights. At the same time, the system sounds the vehicle horn to deter break-in and theft as well as to warn people around the vehicle.
- The alarm can be cancelled by unlocking the doors using the transmitter or key.
- There are two arming modes for this system: active arming mode and passive arming mode. When the active arming mode has been set, the theft deterrent system will be set after the user locks the doors via the transmitter or key. When the passive arming mode has been set, the theft deterrent system will be set after the key is removed and the driver door is closed.

(a) Disarmed state:

- The alarm function is not operating.
- The theft deterrent system is not operating.

(b) Arming preparation state:

- The time until the system goes into the armed state.
- The theft deterrent system is not operating.

(c) Armed state:

- The theft deterrent system is operating.

(d) Alarm sounding state:

- The alarm function is operating.

Alarm time:
Approx. 57 sec.

Refer to the table below for alarm methods and time

Alarm Method	Headlights	Blinking
	Taillights	Blinking
	Hazard Warning Lights	Blinking
	Interior Light	Illuminating
	Vehicle Horn	Sounding (approx. 0.4-second cycles)

Alarm Time	Approx. 57 sec.

HINT:

If any of the doors are unlocked when the key is not in the key cylinder during the armed state, a forced door lock signal will be output (see Forced Door Lock Control).

2. FUNCTION OF MAIN COMPONENTS

COMPONENT	FUNCTION
Security indicator light	Informs driver of theft deterrent system status.
Headlights	Blink when attempted break-in or theft is detected.
Taillights	• Blink when attempted break-in or theft is detected. • Come on when theft deterrent system has entered into alarm sounding state.
Hazard warning lights	Blink when attempted break-in or theft is detected.
Interior light	Comes on when attempted break-in or theft is detected.
Vehicle horn	Sounds when attempted break-in or theft is detected.
Door courtesy light switch	Detects door status (open or closed).
Door unlock detection switch	Detects door status (locked or unlocked).
Luggage courtesy switch	Detects luggage compartment door status (open or closed).
Glass breakage sensor	When detecting that any door glass is tapped or broken, the glass breakage sensor microphone sends an analog signal to the glass breakage sensor ECU assembly. After receiving the analog signal, the glass breakage sensor ECU assembly sends a signal to the theft warning ECU assembly to sound the alarm.

3. ACTIVE ARMING MODE

HINT:

Active arming mode starts the alarm control immediately after the doors are locked.

(a) Active arming mode:

This system operates as described in the diagram below when one of the items for each condition is met.

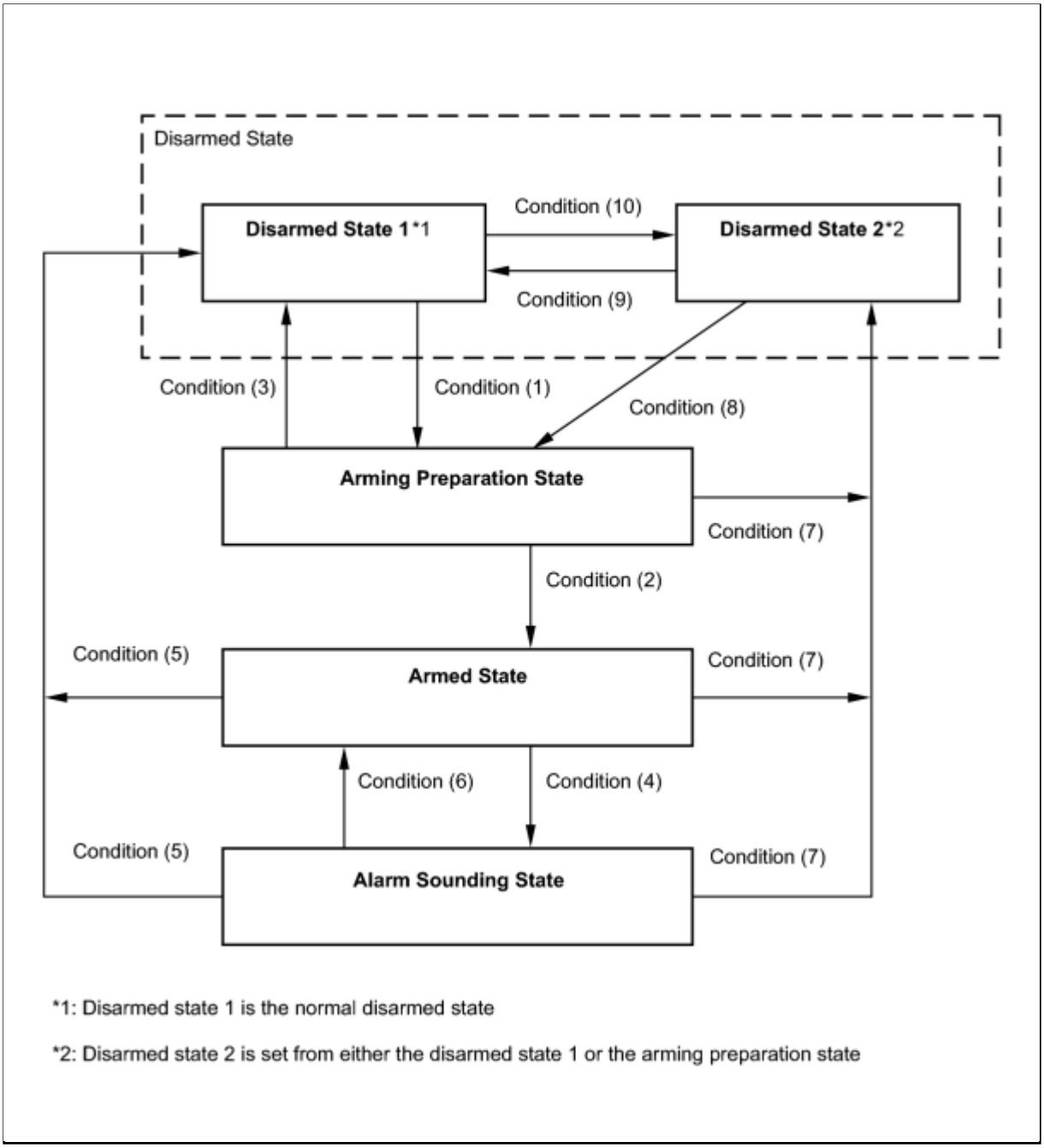

CONDITION	ITEM
Condition (1)	In the disarmed state, the system state is switched if one of the following conditions is met when the key is not in the ignition key cylinder: • With all doors and luggage compartment door closed, all doors are locked by key operation. • With all doors and luggage compartment door closed, all doors are locked by wireless operation. • With all door lock position switches locked and luggage compartment door closed, all doors are closed.
Condition (2)	Approx. 30 seconds elapse after condition (1) is met.

CONDITION	ITEM
Condition (3)	• A wireless unlock signal is received. • All doors are unlocked by key operation. • Any door is unlocked. • Any door is opened. • The luggage compartment is opened. • The key is inserted into the ignition key cylinder. • The ignition switch is turned to ON or ACC. • The battery is reconnected.
Condition (4)	• The battery is reconnected. • The luggage compartment is opened. • Any door is opened. • Any door is unlocked when all doors are locked without using the key. • Any door is unlocked when all doors are locked without using the wireless operation. • Glass breakage sensor impacts to or breakage of the glass.
Condition (5)	• A wireless unlock signal is received. • All door are unlocked by key operation. • The ignition switch is turned to ON and the engine is run for more than 2 seconds.
Condition (6)	Approx. 57 seconds elapse. (The alarm stops and the system returns to the armed state.)
Condition (7)	• Luggage compartment door is opened by wireless trunk opener operation. • Luggage compartment door is opened by key operation.
Condition (8)	• Luggage compartment door is closed.
Condition (9)	• Any door is unlocked when all doors are locked. • Any door is opened. • The key is inserted into the ignition key cylinder. • The ignition switch is turned to ON or ACC. • The battery is reconnected. • All doors are unlocked by wireless operation. • All doors are unlocked by key operation.
Condition (10)	In the disarmed state, the system state is switched if one of the following conditions is met when the key is not in the ignition key cylinder: • With all doors closed and luggage compartment door opened, all doors are locked by key operation. • With all doors closed and luggage compartment door opened, all doors are locked by wireless operation. • With all doors lock position locked and luggage compartment door opened, all doors are closed.

4. PASSIVE ARMING MODE

HINT:

- Passive arming mode starts the alarm control after the key is removed from the key cylinder and the doors are closed.
- Passive arming mode can be switched ON/OFF using the Techstream.
- The alarm is initially set (when shipped from the factory) to active arming mode (not passive arming mode).

- During passive arming mode, the theft deterrent system goes into the armed state even if the doors are not locked.
- Detecting that the doors are unlocked does not set off the alarm during passive arming mode.
- A forced door lock signal is not output during passive arming mode (see Forced Door Lock Control).
- Although the theft deterrent system detects that the doors are opened during passive arming mode, the alarm will not go off immediately because an entry delay time is set.
- If condition (1) of active arming mode is met during passive arming mode, the theft deterrent system will switch to active arming mode.

(a) Passive arming mode:

This system operates as described in the diagram below when one of the items for each condition is met.

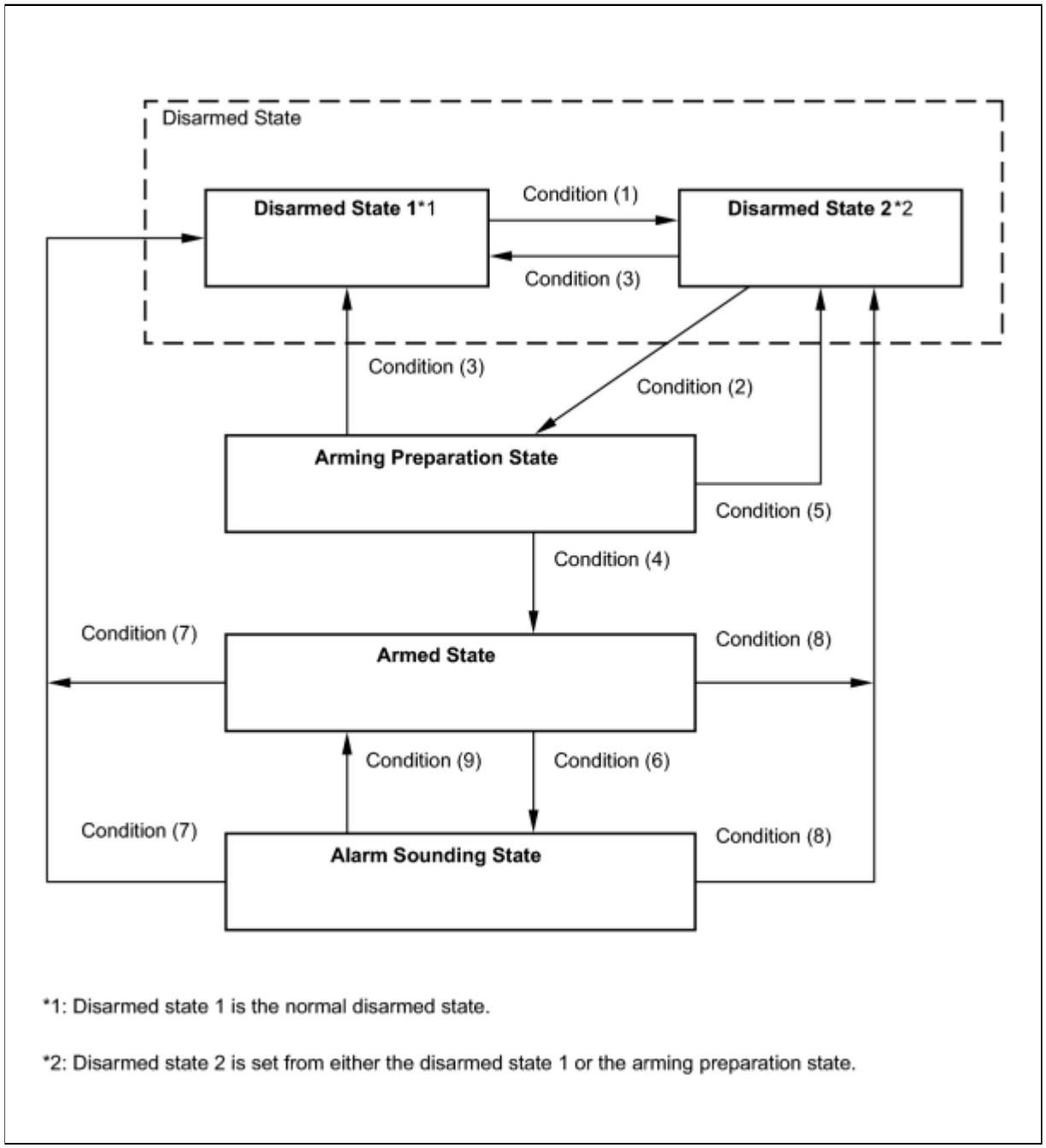

CONDITION	ITEM
Condition (1)	• With the ignition switch off, any door is opened and then the key is removed from the ignition key cylinder. • With the ignition switch off, the key is removed from the ignition key cylinder and then any door is opened.
Condition (2)	• With luggage compartment door closed, all doors are closed. • With all doors closed, luggage compartment door is closed.
Condition (3)	• A wireless unlock signal is received. • All doors are unlocked by key operation. • The battery is reconnected. • The key is inserted into the ignition key cylinder. • The ignition switch is turned to ON or ACC.
Condition (4)	Approx. 30 seconds elapse after condition (1) is met.
Condition (5)	• Any door is opened. • Luggage compartment door is opened by key operation. • Luggage compartment door is opened by wireless trunk opener operation.
Condition (6)	• Any door is opened and the entry delay time* elapse. • Luggage compartment door is opened. • The battery is reconnected. • The ignition switch is turned to ON without using the key. • The ignition switch is turned to ON within 5 seconds after it is turned off.
Condition (7)	• A wireless unlock signal is received. • All doors are unlocked by key operation. • The ignition switch is turned to ON and the engine is run for more than 2 seconds. • Insert the key into the ignition key cylinder and turn the ignition switch to ON.
Condition (8)	• Luggage compartment door is opened by key operation. • Luggage compartment door is opened by wireless trunk opener operation.
Condition (9)	Approx. 57 seconds elapse. (The alarm stops and the system returns to the armed state.)

- *: When any door is opened while all the doors are closed during passive arming mode, the entry delay time starts. If the switch condition (armed state → disarmed state (1) or (2)) is met during the entry delay time, the theft deterrent system will return to disarmed state (1) or (2). However, if the switch condition for disarmed state (1) or (2) is not met, the theft deterrent system will recognize it as a theft and set off the alarm. Entry delay time of 0, 14 or 30 sec. can be selected by the customizing function.

5. FORCED DOOR LOCK CONTROL

(a) The forced door lock control prevents the vehicle from being tampered with. Immediately after a door is unlocked (alarm starts), all doors are forced to lock by a forced door lock signal.

(1) Conditions that force the doors to lock:

The key is not in the key cylinder and both of the following conditions are met:

- The theft deterrent system is in the alarm sounding state of active arming mode.
- Any door is unlocked.

6. ALARM MEMORY FUNCTION

(a) If the alarm is set off (tampering is detected) while the theft deterrent system is armed, it will be recorded by the alarm memory function. Whenever the theft deterrent system is cancelled, the alarm memory function causes the taillights to light up for 2 seconds in order to inform you that the alarm has been set off.

(1) Conditions of the alarm memory function that cause the taillights to light up for 2 seconds:

- When the theft deterrent system has entered into the alarm sounding state (tempering has been detected) even once.
- When switched to disarmed state 1 from the armed state during passive arming mode.

HINT:

Active arming mode: See Active Arming Mode.

Passive arming mode: See Passive Arming Mode.

7. PANIC ALARM CONTROL

(a) The panic alarm control makes it possible to voluntarily set off the panic alarm by pressing the panic switch on the wireless transmitter.

(1) When the PANIC switch on the wireless transmitter is pressed, the panic alarm control sets off the panic alarm if any of the following conditions is met:

- The ignition switch is off.
- The theft deterrent system is not in the alarm sounding state. (This condition is common both to active arming mode and to passive arming mode.)

(2) Conditions that cause the panic alarm control to shut off the alarm:

The panic alarm control shuts off the panic alarm when any of the following conditions is met during panic alarm operation:

- The ignition switch is turned to ON.
- The panic alarm switch is turned on again.
- Either of the switches on the wireless transmitter (LOCK/UNLOCK/TRUNK OPENER) is pressed.
- The panic alarm ends (approx. 57 sec. have elapsed).
- The theft deterrent system switches to the alarm sounding state. Under this condition, the theft deterrent system is controlling the alarm rather than the panic alarm control. In order to cancel this alarm, refer to the theft deterrent system alarm sounding state cancellation procedure. (This condition is common both to active arming mode and to passive arming mode.)

HINT:

- Active arming mode: See Active Arming Mode.
- Passive arming mode: See Passive Arming Mode.

8. SECURITY INDICATOR OUTPUT

(a) The main body ECU outputs a signal to come on the security indicator light assembly, according to the state of the theft deterrent system. However, some of the actual lighting conditions of the security indicator light assembly are different from the output signals of the main body ECU.

Output

STATE OF THEFT DETERRENT SYSTEM	SECURITY INDICATOR	
	OUTPUT SIGNAL FROM MAIN BODY ECU	ACTUAL LIGHTING CONDITION
Disarmed state (1), (2)	OFF	OFF (Immobiliser system unset) BLINKING (Immobiliser system set)
Arming preparation state	ON	ON
Armed state	OFF	BLINKING
Alarm sounding state	ON	ON

Blinking Cycle

TIME	SECURITY INDICATOR
0.25 sec.	ON
1.8 sec.	OFF

HINT:

When the immobiliser system is set, the security indicator light assembly blinks during both the disarmed state and the armed state, due to output signals from the immobiliser system.

9. GLASS BREAKAGE SENSOR

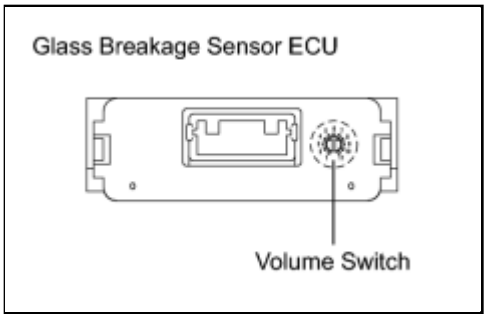

(a) The glass breakage sensor detects impacts or breakage of the glass. If the sensor detects any impacts or breakage while the theft deterrent system is functioning, it will sound an alarm for 57 seconds.

(b) The sensitivity of the glass breakage sensor can be adjusted by the volume switch in the glass breakage sensor ECU.

HINT:

The glass breakage sensor may issue a false alarm if the sensor sensitivity is set too high.



Last Modified: 3-10-2010	6.4 U	**From:** 200901
Model Year: 2010	**Model:** Corolla	**Doc ID:** RM000002Y8H00JX
Title: THEFT DETERRENT / KEYLESS ENTRY: THEFT DETERRENT SYSTEM: SYSTEM DIAGRAM (2010 Corolla)		

SYSTEM DIAGRAM

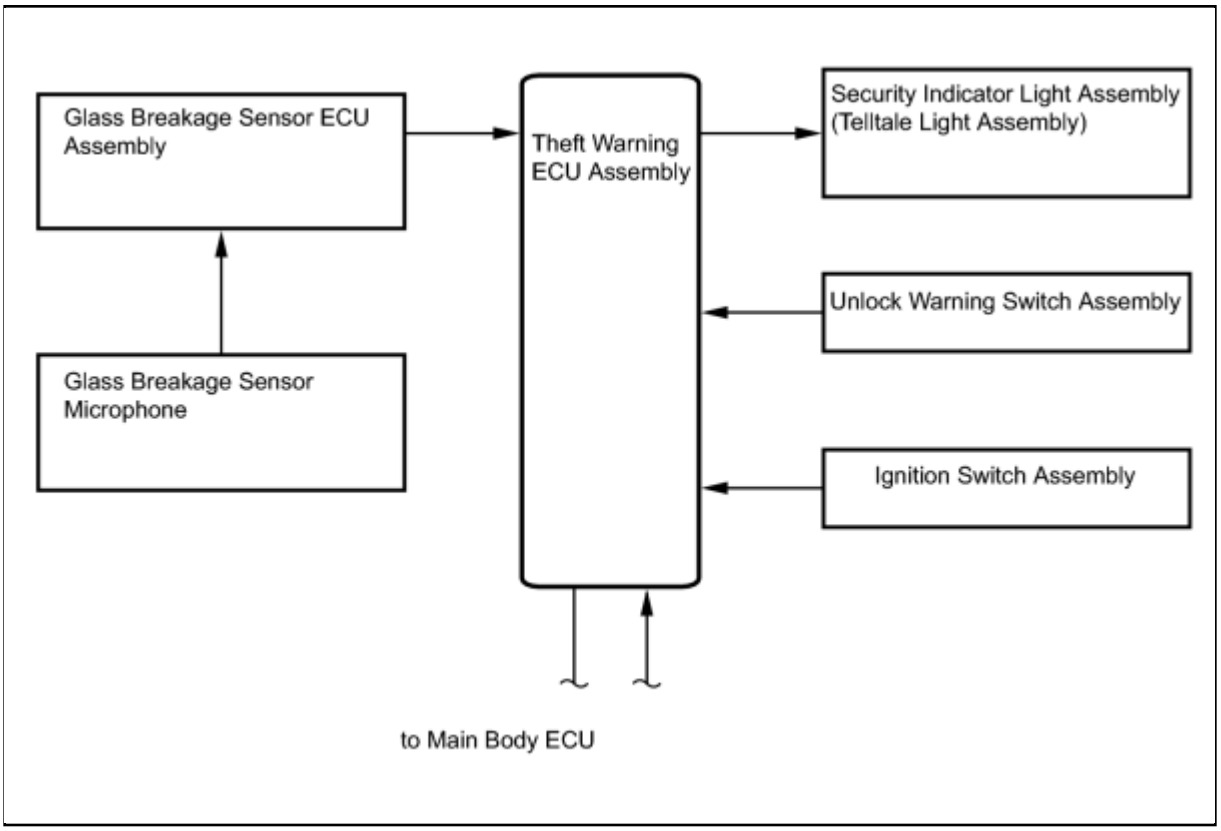

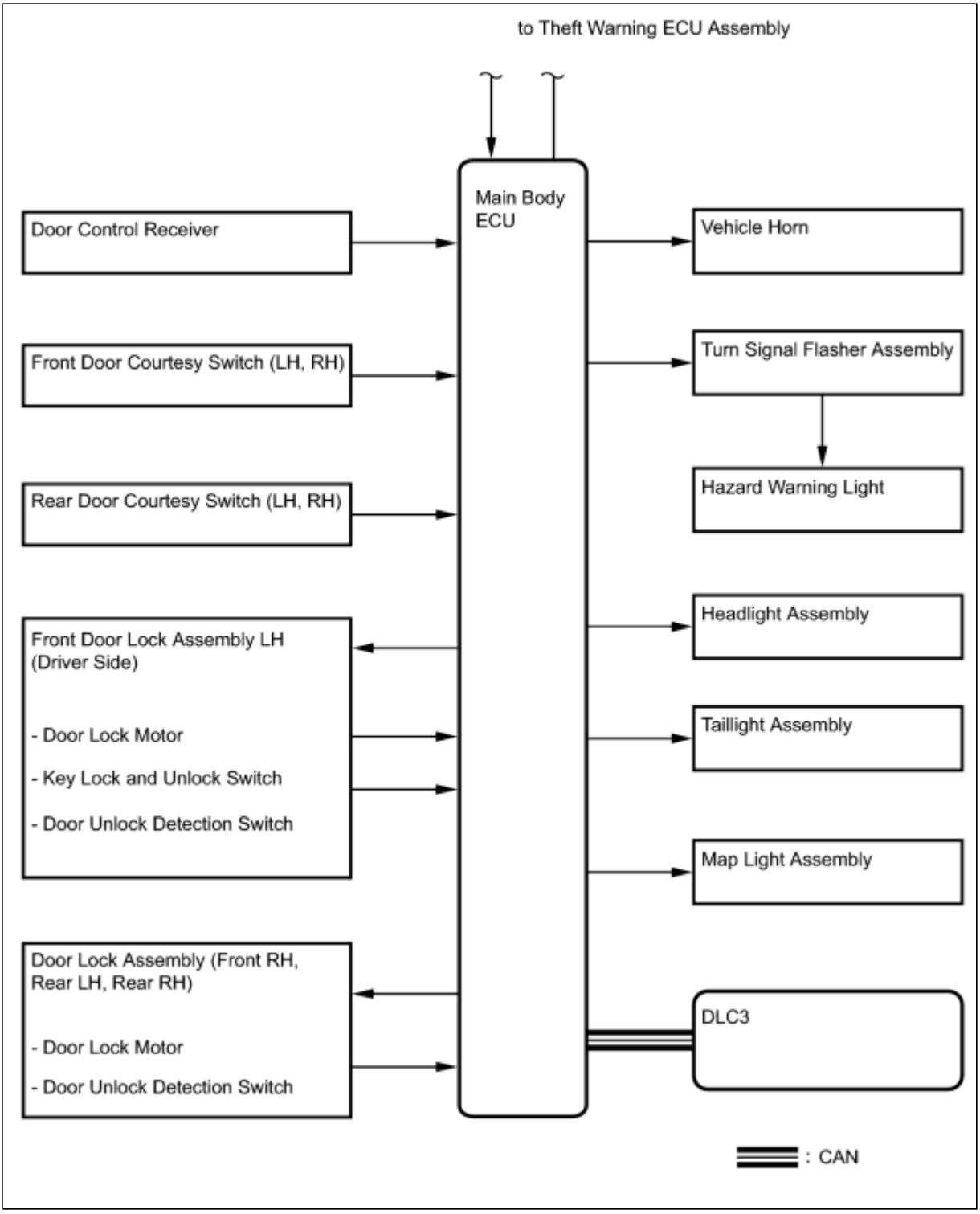
to Theft Warning ECU Assembly
Main Body ECU
Door Control Receiver
Front Door Courtesy Switch (LH, RH)
Rear Door Courtesy Switch (LH, RH)
Front Door Lock Assembly LH (Driver Side)
- Door Lock Motor
- Key Lock and Unlock Switch
- Door Unlock Detection Switch
Door Lock Assembly (Front RH, Rear LH, Rear RH)
- Door Lock Motor
- Door Unlock Detection Switch
Vehicle Horn
Turn Signal Flasher Assembly
Hazard Warning Light
Headlight Assembly
Taillight Assembly
Map Light Assembly
DLC3
: CAN

Last Modified: 3-10-2010	6.4 D	**From:** 200901
Model Year: 2010	**Model:** Corolla	**Doc ID:** RM0000010J306NX
Title: THEFT DETERRENT / KEYLESS ENTRY: THEFT DETERRENT SYSTEM: HOW TO PROCEED WITH TROUBLESHOOTING (2010 Corolla)		

HOW TO PROCEED WITH TROUBLESHOOTING

HINT:

- Use this procedure to troubleshoot the theft deterrent system.
- *: Using the Techstream.

1.	**VEHICLE BROUGHT TO WORKSHOP**

NEXT

2.	**CUSTOMER PROBLEM ANALYSIS**

(a) Interview the customer to confirm the trouble INFO.

NEXT

3.	**INSPECT FOR DTC***

(a) Use the Techstream to check for DTC B1269 INFO.

Result:

RESULT	PROCEED TO
DTC is not output	A
DTC is output	B

B INFO **GO TO DIAGNOSTIC TROUBLE CODE CHART**

A

4.	**INSPECT COMMUNICATION FUNCTION OF CAN COMMUNICATION SYSTEM***

(a) Use the Techstream to check if the CAN communication system is functioning normally INFO .

Result:

RESULT	PROCEED TO
CAN DTC is not output	A
CAN DTC is output	B

B INFO **GO TO CAN COMMUNICATION SYSTEM**

A

5.	**SYMPTOM SIMULATION**

NEXT

6.	**PROBLEM SYMPTOMS TABLE**

Result:

RESULT	PROCEED TO
Fault is not listed in Problem Symptoms Table	A
Fault is listed in Problem Symptoms Table	B

B ▶ Go to step 8

A

▼

7.	PERFORM TROUBLESHOOTING ACCORDING TO MALFUNCTION SYMPTOM*

(a) System description INFO

(b) Terminals of ECU INFO

(c) Data List/Active Test INFO

8.	ADJUST, REPAIR OR REPLACE

NEXT

▼

9.	CONFIRMATION TEST

NEXT ▶ END

Last Modified: 3-10-2010	6.4 D	**From:** 200901
Model Year: 2010	**Model:** Corolla	**Doc ID:** RM0000010JG02AX
Title: THEFT DETERRENT / KEYLESS ENTRY: THEFT DETERRENT SYSTEM: CUSTOMIZE PARAMETERS (2010 Corolla)		

CUSTOMIZE PARAMETERS

HINT:

The following items can be customized.

NOTICE:

- After confirming whether the items requested by the customer are applicable or not for customization, perform customizing operations.
- Be sure to record the current settings before customization.
- When troubleshooting, make sure that the item in question is not set to "OFF" as a result of customization (Example: For the system, "the wireless function does not operate", first check that the wireless function is not set to "OFF", then perform troubleshooting).

1. CUSTOMIZE

(a) Connect the Techstream to the DLC3.

(b) Turn the ignition switch to ON.

(c) Turn the Techstream on.

(d) Enter the following menus: Customize Setting.

(e) Select the setting by referring to the table below.

Security

DISPLAY (ITEM)	DEFAULT	CONTENTS	SETTING
Passive Mode	OFF	• Passive Mode is a function that switches the theft deterrent system from the arming preparation state to the armed state 30 seconds after the key is removed from the key cylinder and all doors and luggage compartment door are closed, even if the doors are not locked by wireless or door key lock operation. • In Passive Mode, if the following operations are not performed within 14 seconds after a door is opened during the armed state, the theft deterrent system will judge that condition as a theft and switch to the alarm sounding state. • Unlock any door by key or wireless operation • Turn the ignition switch to ON • Open the luggage compartment door by key or wireless operation	ON/OFF
Warning by Glass Sen	ON	Function that turns the glass breakage sensor on/off this function is only effective for vehicles with glass breakage sensor.	ON/OFF

DISPLAY (ITEM)	DEFAULT	CONTENTS	SETTING
Entry Delay Time	14 s	Function that changes entry delay time (time before warning starts) for Passive Mode	0 s/14 s/30 s

Last Modified: 3-10-2010	6.4 T	**From:** 200901
Model Year: 2010	**Model:** Corolla	**Doc ID:** RM0000026P1011X
Title: THEFT DETERRENT / KEYLESS ENTRY: THEFT DETERRENT SYSTEM: PROBLEM SYMPTOMS TABLE (2010 Corolla)		

PROBLEM SYMPTOMS TABLE

- Use the table below to help determine the cause of problem symptoms. If multiple suspected areas are listed, the potential causes of the symptoms are listed in order of probability in the "Suspected Area" column of the table. Check each symptom by checking the suspected areas in the order they are listed. Replace parts as necessary.
- Inspect the fuses and relays related to this system before inspecting the suspected areas below.

Theft Deterrent System

SYMPTOM	SUSPECTED AREA	SEE PAGE
Theft deterrent system cannot be set	Security indicator light circuit	INFO
	Theft Warning ECU power source circuit	INFO
	Unlock warning switch circuit	INFO
	Door courtesy switch circuit	INFO
	Front door lock assembly	INFO
	Rear door lock assembly	INFO
	Luggage compartment door lock assembly	INFO
	Theft warning ECU assembly	INFO
	If the symptom(s) still occur after the above areas are inspected and proved to be normal, replace the main body ECU (instrument panel junction block)	-
Security indicator does not blink when theft deterrent system is set	Security indicator light circuit	INFO
	Theft warning ECU assembly	INFO
	If the symptom(s) still occur after the above areas are inspected and proved to be normal, replace the main body ECU (instrument panel junction block)	-
Alarm sounding state to cannot be canceled when ignition switch is turned to ON	Ignition switch circuit	INFO
	Unlock warning switch circuit	INFO
	Theft warning ECU assembly	INFO
	If the symptom(s) still occur after the above areas are inspected and proved to be normal, replace the main body ECU (instrument panel junction block)	-
	Door courtesy switch circuit	INFO

Last Modified: 3-10-2010	6.4 U	**From:** 200901
Model Year: 2010	**Model:** Corolla	**Doc ID:** RM000001PQV01RX
Title: THEFT DETERRENT / KEYLESS ENTRY: THEFT DETERRENT SYSTEM: TERMINALS OF ECU (2010 Corolla)		

TERMINALS OF ECU

1. CHECK MAIN BODY ECU (INSTRUMENT PANEL JUNCTION BLOCK)

(a) Disconnect the 2A, 2B, 2E, 2F, 2G and E61 junction block connectors and main body ECU connector.

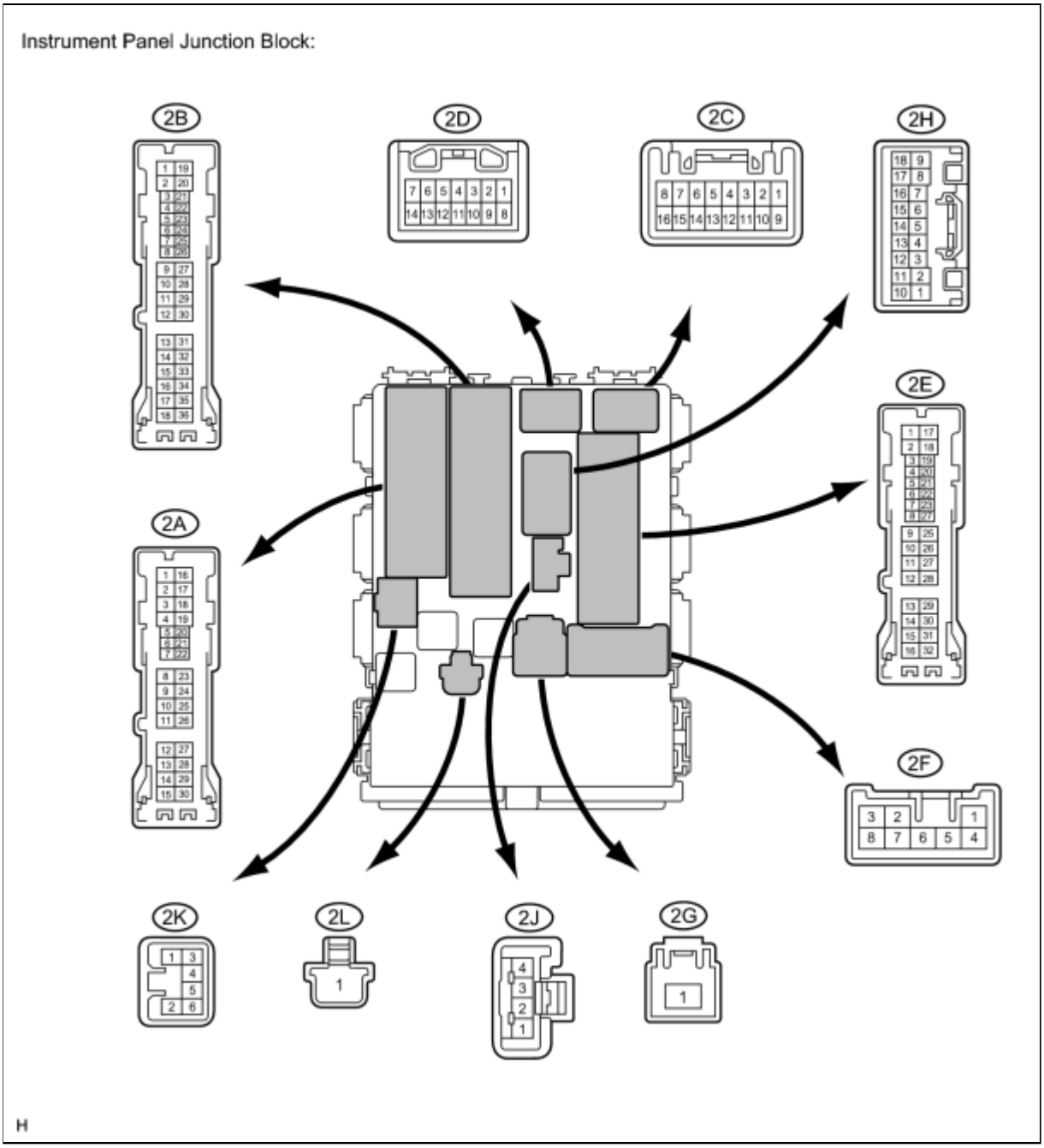

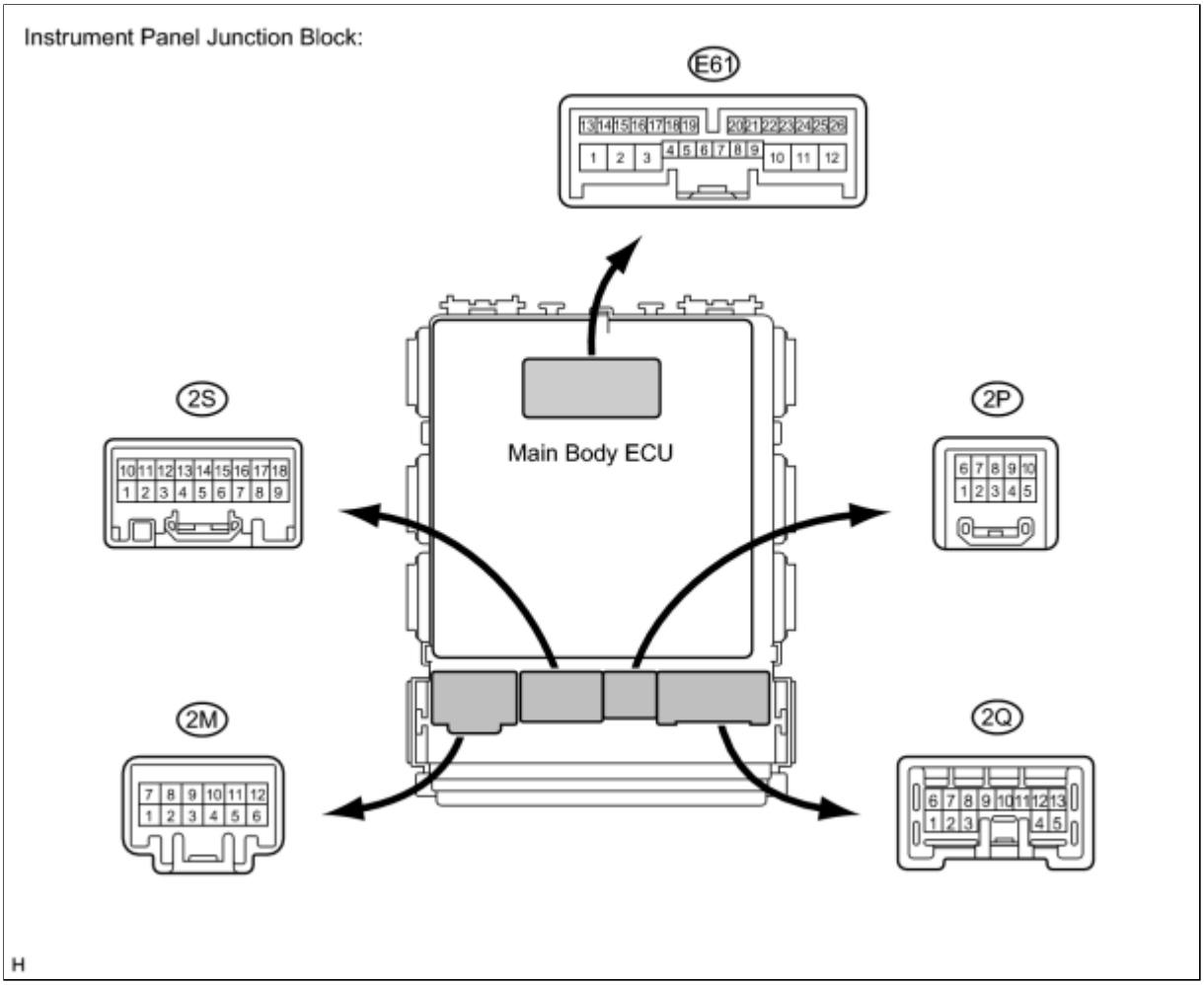

(b) Measure the resistance and voltage between each terminal of the wire harness side connectors and body ground.

TESTER CONNECTION	WIRING COLOR	TERMINAL DESCRIPTION	CONDITION	SPECIFIED CONDITION
2H-7 (LGCY) - Body ground	LG - Body ground	Luggage compartment door courtesy light switch input	Luggage compartment door CLOSED (OFF) → OPEN (ON)	10 kΩ or higher → Below 1 Ω
2A-21 (DCTY) - Body ground	V - Body ground	Driver side door courtesy light switch input	Driver side door CLOSED (OFF) → OPEN (ON)	10 kΩ or higher → Below 1 Ω
2B-30 (BECU) - Body ground	W - Body ground	+B power supply	Always	11 to 14 V
2E-19 (RCTY) - Body ground	Y - Body ground	Rear courtesy light switch RH input	Rear door RH CLOSED (OFF) → OPEN (ON)	10 kΩ or higher → Below 1 Ω
2E-20 (PCTY) - Body ground	BR - Body ground	Passenger side courtesy light switch input	Passenger side door CLOSED (OFF) → OPEN (ON)	10 kΩ or higher → Below 1 Ω

TESTER CONNECTION	WIRING COLOR	TERMINAL DESCRIPTION	CONDITION	SPECIFIED CONDITION
2F-5 (ACC) - Body ground	L - Body ground	Ignition power supply (ACC signal)	Ignition switch ACC → off	11 to 14 V → Below 1 V
2G-1 (IG) - Body ground	W - Body ground	Ignition power supply (IG signal)	Ignition switch ON → off	11 to 14 V → Below 1 V
2E-17 (GND1) - Body ground	W-B - Body ground	Ground	Always	Below 1 Ω
E61-13 (LCTY) -Body ground	B - Body ground	Rear courtesy light switch LH input	Rear door LH CLOSED (OFF) → OPEN (ON)	10 kΩ or higher → Below 1 Ω

HINT:

If the result is not as specified, there may be a malfunction on the wire harness side.

2. CHECK THEFT WARNING ECU ASSEMBLY

(a) Disconnect the E110 theft warning ECU assembly connector.

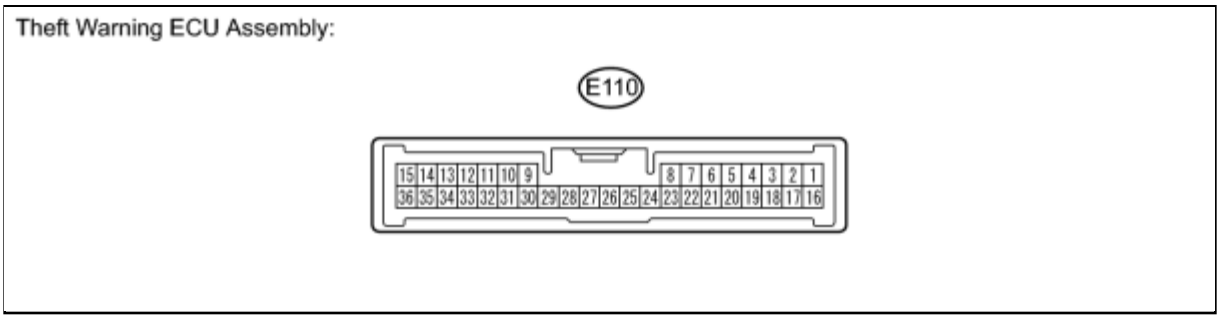

(b) Measure the voltage and resistance between each terminal of the wire harness side connectors and body ground.

TESTER CONNECTION	WIRING COLOR	TERMINAL DESCRIPTION	CONDITION	SPECIFIED CONDITION
E110-7 (KSW) - E110-16 (E)	L - W-B	Unlock warning switch input	No key in ignition key cylinder (OFF) → Key inserted (ON)	10 kΩ or higher → Below 1 Ω
E110-9 (IG) - E110-16 (E)	L -W-B	Ignition power supply (IG signal)	Ignition switch ON → off	11 to 14 V → Below 1 V
E110-11 (+B1) - E110-16 (E)	R - W-B	+B power supply	Always	11 to 14 V
E110-16 (E) - Body ground	W-B - Body ground	Ground	Always	Below 1 Ω

If the result is not as specified, there may be a malfunction on the wire harness side.

(c) Reconnect the E110 theft warning ECU assembly connector.

(d) Measure the voltage between each terminal of the connector.

TESTER CONNECTION	WIRING COLOR	TERMINAL DESCRIPTION	CONDITION	SPECIFIED CONDITION
E110-24 (BRK+) - E110-16 (E)	LG - W-B	Alarm BERKES communication	Theft deterrent system is in alarm sounding state	Pulse generation (1.5 V ← → Below 1.2 V)
E110-25 (BRK-) - E110-16 (E)	W - W-B	Alarm BERKES communication	All doors are locked using key (Theft deterrent system is in arming preparation state.)	Pulse generation (1.5 V ← → Below 1.2 V)
E110-29 (IND) - E110-16 (E)	Y - W-B	Security indicator output	Security indicator light assembly in on (It comes on only in arming preparation state or alarm sounding state. It flashes when immobiliser is operating.)	3 to 6 V
E110-3 (GBS) - E110-16 (E)	BE - W-B	Glass breakage sensor ECU communication	Armed state → Alarm sounds (on glass breakage detection)	Below 1 V → Pulse generation

Last Modified: 3-10-2010	6.4 D	**From:** 200901
Model Year: 2010	**Model:** Corolla	**Doc ID:** RM000001PQX05CX
Title: THEFT DETERRENT / KEYLESS ENTRY: THEFT DETERRENT SYSTEM: DIAGNOSIS SYSTEM (2010 Corolla)		

DIAGNOSIS SYSTEM

1. DESCRIPTION

The ECU stores trouble codes when trouble occurs on the vehicle.

The diagnostic system allows for reading of the trouble codes from the DLC3.

Use the Techstream to check and solve the problem.

2. CHECK DLC3

(a) Check the DLC3 INFO .

Last Modified: 3-10-2010	6.4 D	**From:** 200901
Model Year: 2010	**Model:** Corolla	**Doc ID:** RM000001NN601NX
Title: THEFT DETERRENT / KEYLESS ENTRY: THEFT DETERRENT SYSTEM: DTC CHECK / CLEAR (2010 Corolla)		

DTC CHECK / CLEAR

1. DTC CHECK/CLEAR (USING TECHSTREAM)

(a) DTC check

(1) Connect the Techstream to the DLC3.

(2) Turn the ignition switch to ON .

(3) Read DTCs on the Techstream screen.

(b) DTC clear

(1) Connect the Techstream to the DLC3.

(2) Turn the ignition switch to ON.

(3) Clear the DTCs following the prompts on the Techstream screen.

Last Modified: 3-10-2010	6.4 U	**From:** 200901
Model Year: 2010	**Model:** Corolla	**Doc ID:** RM000001PQY01OX
Title: THEFT DETERRENT / KEYLESS ENTRY: THEFT DETERRENT SYSTEM: DATA LIST / ACTIVE TEST (2010 Corolla)		

DATA LIST / ACTIVE TEST

1. DATA LIST

HINT:

Using the Techstream to read the Data List allows the values or states of switches, sensors, actuators and other items to be read without removing any parts. This non-intrusive inspection can be very useful because intermittent conditions or signals may be discovered before parts or wiring is disturbed. Reading the Data List information early in troubleshooting is one way to save diagnostic time.

(a) Connect the Techstream to the DLC3.

(b) Turn the ignition switch to ON.

(c) Turn the Techstream on.

(d) Enter the following menus: Body Electrical / Main Body or Security / Data List.

(e) According to the display on the Techstream, read the Data List.

Main Body

TESTER DISPLAY	MEASUREMENT ITEM/RANGE	NORMAL CONDITION	DIAGNOSTIC NOTE
D Door Courtesy SW	D door courtesy switch / ON or OFF	ON: Driver door is OPEN OFF: Driver door is CLOSED	-
P Door Courtesy SW	P door courtesy switch / ON or OFF	ON: Front passenger side door is OPEN OFF: Front passenger side door is CLOSED	-
RR Door Courtesy SW	Rear right door courtesy switch / ON or OFF	ON: Rear right door is OPEN OFF: Rear right door is CLOSED	-
RL Door Courtesy SW	Rear left door courtesy switch / ON or OFF	ON: Rear left door is OPEN OFF: Rear left door is CLOSED	-
D-Door Lock Pos SW	Driver's door lock position switch / ON or OFF	ON: Driver door is UNLOCKED OFF: Driver door is LOCKED	-
P-Door Lock Pos SW	Passenger door lock position switch / ON or OFF	ON: Front passenger door is UNLOCKED OFF: Front passenger door is LOCKED	-

Security

TESTER DISPLAY	MEASUREMENT ITEM/RANGE	NORMAL CONDITION	DIAGNOSTIC NOTE
Glass Sensor Detection	Glass breakage sensor detection / ON or OFF	ON: Glass breakage sensor operates OFF: Glass breakage sensor does not operate	-
Key Unlock Warning SW	Unlock warning switch signal / ON or OFF	ON: Key is inserted in the ignition key cylinder OFF: Key is removed from the ignition key cylinder	-
IG SW	Ignition switch signal / ON or OFF	ON: Ignition switch is ON OFF: Ignition switch is off	-
Alarm Trigger	Alarm trigger	GLS BRK: Alarms are caused by glass breakage sensor D CRTSY: Alarms are caused by door courtesy switch IG SW: Alarms are caused by ignition switch OPEN: Alarms are caused by open circuit KEY UNLK: Alarms are caused by unlock warning switch	-
Passive Mode	Passive mode/ON or OFF	ON: Passive mode ON OFF: Passive mode OFF	-
Warning by Glass Sensor	Warning by glass breakage sensor / ON or OFF	ON: Warns when glass breakage is detected OFF: Does not warn when glass breakage is detected	-
Entry Delay Time	Entry delay time during passive mode	0s: Entry delay time is 0 sec. 14s: Entry delay time is 14 sec. 30s: Entry delay time is 30 sec.	-

2. ACTIVE TEST

HINT:

Using the Techstream to perform Active Tests allows relays, VSVs, actuators and other items to be operated without removing any parts. This non-intrusive functional inspection can be very useful because intermittent operation may be discovered before parts or wiring is disturbed. Performing Active Tests early in trouble shooting is one way to save diagnostic time. Data List information can be displayed while performing Active Tests.

(a) Connect the Techstream to the DLC3.

(b) Turn the ignition switch to ON.

(c) Turn the Techstream on.

(d) Enter the following menus: Body Electrical / Main Body or Security / Active Test.

(e) According to the display on the Techstream, perform the Active Test.

Main Body

TESTER DISPLAY	TEST PART	CONTROL RANGE	DIAGNOSTIC NOTE
Hazard	Hazard warning lights	ON / OFF	-
Vehicle Horn	Vehicle horn	ON / OFF	-

Security

TESTER DISPLAY	TEST PART	CONTROL RANGE	DIAGNOSTIC NOTE
Security Indicator	Security indicator	ON / OFF	-

Last Modified: 3-10-2010	6.4 S	**From:** 200901
Model Year: 2010	**Model:** Corolla	**Doc ID:** RM000002Y8R00DX
Title: THEFT DETERRENT / KEYLESS ENTRY: THEFT DETERRENT SYSTEM: DIAGNOSTIC TROUBLE CODE CHART (2010 Corolla)		

DIAGNOSTIC TROUBLE CODE CHART

Theft Deterrent System

DTC CODE	DETECTION ITEM	TROUBLE AREA	SEE PAGE
B1269	Theft Deterrent ECU Communication Stop	1. Wire harness and connector 2. Theft warning ECU assembly 3. Main body ECU (instrument panel junction block)	INFO

Last Modified: 3-10-2010	6.4 N	**From:** 200901
Model Year: 2010	**Model:** Corolla	**Doc ID:** RM000002JWF006X
Title: THEFT DETERRENT / KEYLESS ENTRY: THEFT DETERRENT SYSTEM: ADJUSTMENT (2010 Corolla)		

ADJUSTMENT

1. ADJUST SENSITIVITY

(a) Adjust the sensitivity volume.

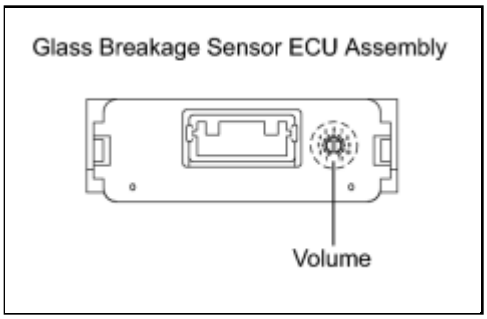

(1) Turn the knob on the glass breakage sensor ECU assembly to adjust the volume.

Last Modified: 3-10-2010	6.4 C	**From:** 200901
Model Year: 2010	**Model:** Corolla	**Doc ID:** RM000001K7I011X
Title: THEFT DETERRENT / KEYLESS ENTRY: THEFT DETERRENT SYSTEM: B1269: Theft Deterrent ECU Communication Stop (2010 Corolla)		

DTC	**B1269**	**Theft Deterrent ECU Communication Stop**

DESCRIPTION

DTC B1269 is stored when the communication between the theft warning ECU assembly and the main body ECU stops for more than 10 seconds.

DTC NO.	DTC DETECTION CONDITION	TROUBLE AREA
B1269	No communication from theft warning ECU assembly for more than 10 seconds.	• Wire harness and connector • Theft warning ECU assembly • Main body ECU (instrument panel junction block)

WIRING DIAGRAM

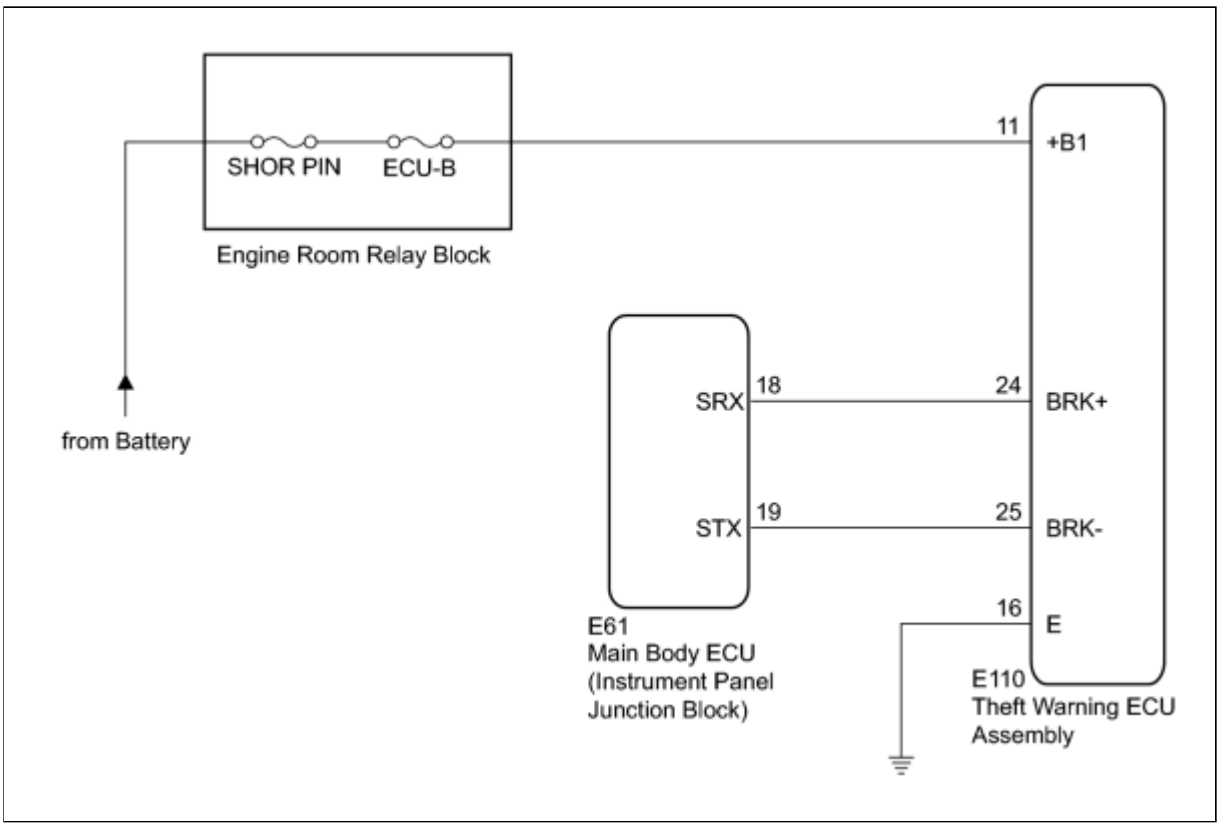

INSPECTION PROCEDURE

NOTICE:

Inspect the fuses for circuits related to this system before performing the following inspection procedure.

PROCEDURE

1.	**CHECK HARNESS AND CONNECTOR (BATTERY VOLTAGE)**

(a) Disconnect the E110 theft warning ECU assembly connector.

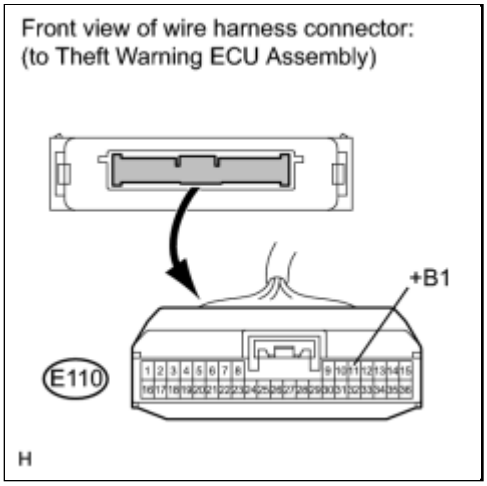

(b) Measure the voltage according to the value(s) in the table below.

Standard Voltage:

TESTER CONNECTION	CONDITION	SPECIFIED CONDITION
E110-11 (+B1) - Body ground	Always	11 to 14 V

NG ▶ **REPAIR OR REPLACE HARNESS OR CONNECTOR**

OK ▼

2.	**CHECK HARNESS AND CONNECTOR (THEFT WARNING ECU ASSEMBLY - MAIN BODY ECU)**

(a) Disconnect the E61 main body ECU connector.

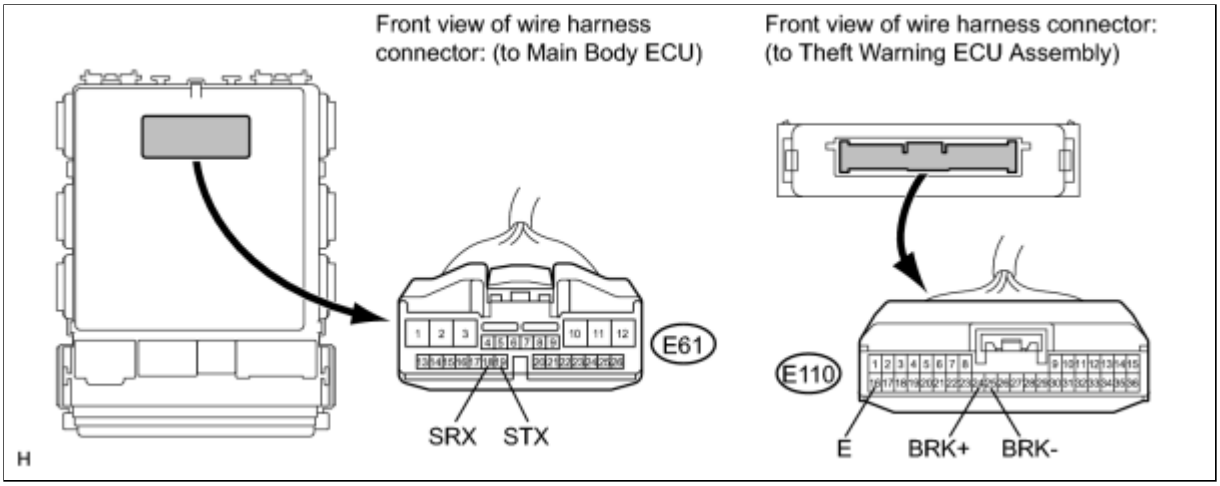

(b) Measure the resistance according to the value(s) in the table below.

Standard Resistance:

TESTER CONNECTION	CONDITION	SPECIFIED CONDITION
E110-24 (BRK+) - E61-18 (SRX)	Always	Below 1 Ω
E110-25 (BRK-) - E61-19 (STX)	Always	Below 1 Ω
E110-24 (BRK+) - Body ground	Always	10 kΩ or higher
E110-25 (BRK-) - Body ground	Always	10 kΩ or higher
E110-16 (E) - Body ground	Always	Below 1 Ω

NG ▶ **REPAIR OR REPLACE HARNESS OR CONNECTOR**

OK ▼

3.	**CONFIRM DTC**

(a) Clear the DTC INFO .

(b) Check if the same DTC is detected.

HINT:

Reinstall the sensors, connectors, etc. and restore the previous vehicle conditions before rechecking for DTCs.

Result:

RESULT	PROCEED TO

RESULT	PROCEED TO
DTC is output	A
DTC is not output	B

B ▶ **USE SIMULATION METHOD TO CHECK**

A

4.	**REPLACE THEFT WARNING ECU ASSEMBLY**

(a) Replace the theft warning ECU assembly INFO

NEXT

5.	**CONFIRM DTC**

(a) Clear the DTC INFO .

(b) Check if the same DTC is detected.

HINT:

Reinstall the sensors, connectors, etc. and restore the previous vehicle conditions before rechecking for DTCs.

Result:

RESULT	PROCEED TO
DTC is not output	A
DTC is output	B

B ▶ **REPLACE MAIN BODY ECU (INSTRUMENT PANEL JUNCTION BLOCK ASSEMBLY)**

A ▶ **END**

Last Modified: 3-10-2010	6.4 J	**From:** 200901
Model Year: 2010	**Model:** Corolla	**Doc ID:** RM0000028IX00XX
Title: THEFT DETERRENT / KEYLESS ENTRY: THEFT DETERRENT SYSTEM: Ignition Switch Circuit (2010 Corolla)		

Ignition Switch Circuit

DESCRIPTION

The theft warning ECU assembly determines the ignition switch assembly (off, ON) based on signals from the IG circuit.

WIRING DIAGRAM

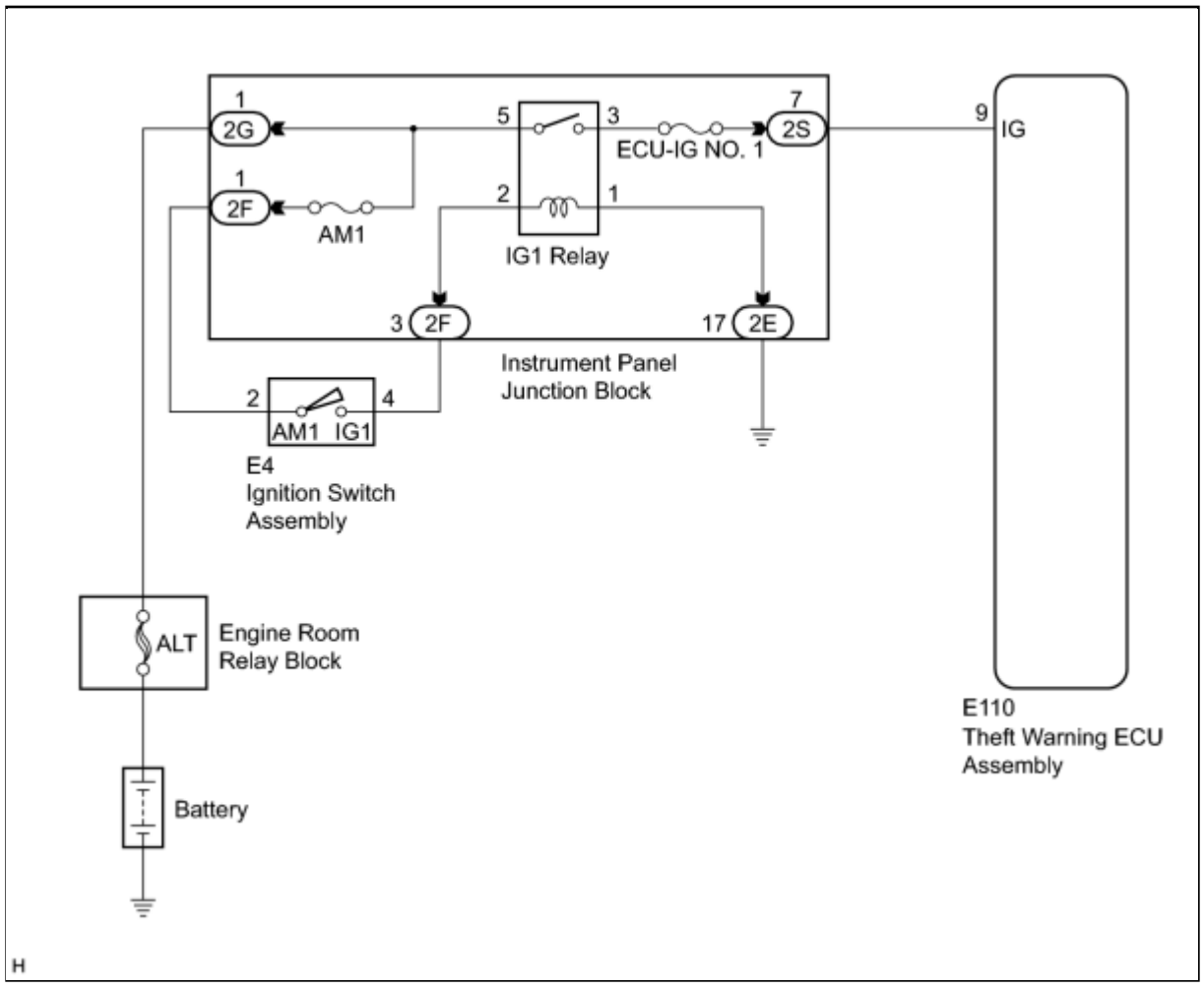

INSPECTION PROCEDURE

NOTICE:

Inspect the fuses for circuits related to this system before performing the following inspection procedure.

PROCEDURE

1.	**READ VALUE USING TECHSTREAM**

(a) Connect the Techstream to the DLC3.

(b) Turn the ignition switch to ON.

(c) Turn the Techstream on.

(d) Select the items below in the Data List and read the display on the Techstream.

Security

ITEM	MEASUREMENT ITEM/RANGE	NORMAL CONDITION	DIAGNOSTIC NOTE
IG SW	Ignition switch ON signal ON/OFF	ON: Ignition switch is ON OFF: Ignition switch is off	-

OK:

When the ignition switch assembly is operated, the display changes as shown in the table.

NG ▶ **CHECK HARNESS AND CONNECTOR (BATTERY - INSTRUMENT PANEL JUNCTION BLOCK)**

OK ▶ **PROCEED TO NEXT SUSPECTED AREA SHOWN IN PROBLEM SYMPTOMS TABLE**

2.	**CHECK HARNESS AND CONNECTOR (BATTERY - INSTRUMENT PANEL JUNCTION BLOCK)**

(a) Disconnect the 2G instrument panel junction block connector.

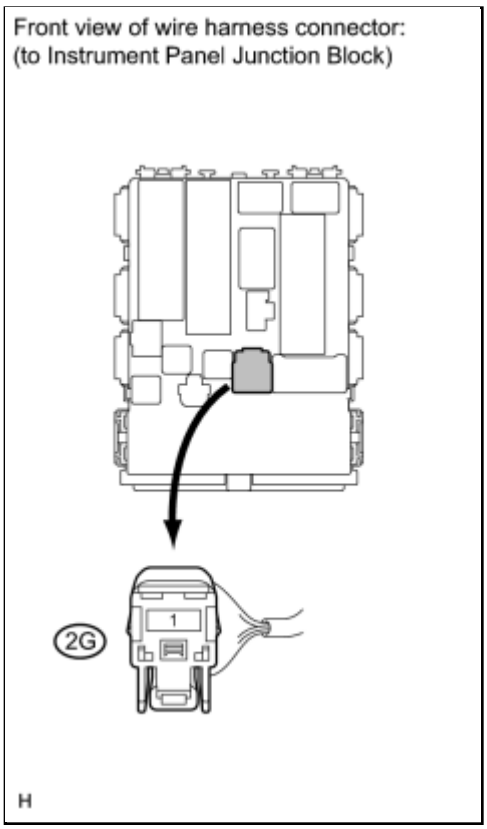

(b) Measure the voltage according to the value(s) in the table below.

Standard Voltage:

TESTER CONNECTION	CONDITION	SPECIFIED CONDITION
2G-1 - Body ground	Always	11 to 14 V

NG ▶ **REPAIR OR REPLACE HARNESS OR CONNECTOR OR ALT FUSE**

OK ▼

3.	**INSPECT IGNITION SWITCH ASSEMBLY**

(a) Disconnect the E4 ignition switch assembly connector.

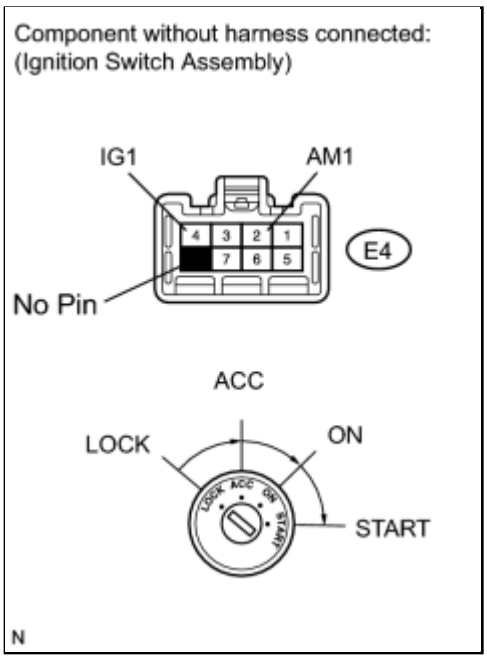

(b) Measure the resistance according to the value(s) in the table below.

Standard Resistance:

TESTER CONNECTION	CONDITION	SPECIFIED CONDITION
E4-2 (AM1) - E4-4 (IG1)	Ignition switch ON	Below 1 Ω
E4-2 (AM1) - E4-4 (IG1)	Ignition switch off	10 kΩ or higher

Result:

RESULT	PROCEED TO
OK	A
NG (2AZ-FE)	B
NG (2ZR-FE)	C

C ▶ **REPLACE IGNITION SWITCH ASSEMBLY (2ZR-FE)**

B ▶ **REPLACE IGNITION SWITCH ASSEMBLY (2AZ-FE)**

A ▼

4.	**CHECK HARNESS AND CONNECTOR (INSTRUMENT PANEL J/B - INSTRUMENT PANEL**

	J/B)

(a) Reconnect the E4 ignition switch assembly connector.

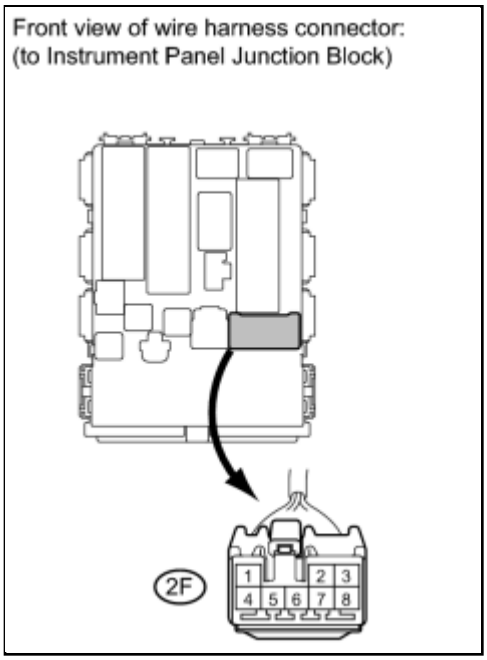

(b) Disconnect the 2F instrument panel junction block connector.

(c) Measure the resistance according to the value(s) in the table below.

Standard Resistance:

TESTER CONNECTION	CONDITION	SPECIFIED CONDITION
2F-1 - 2F-3	Ignition switch ON	Below 1 Ω
2F-1 - 2F-3	Ignition switch off	10 kΩ or higher

NG ▶ **REPAIR OR REPLACE HARNESS OR CONNECTOR**

OK ▼

5.	**CHECK HARNESS AND CONNECTOR (INSTRUMENT PANEL JUNCTION BLOCK - BODY GROUND)**

(a) Disconnect the 2E instrument panel junction block connector.

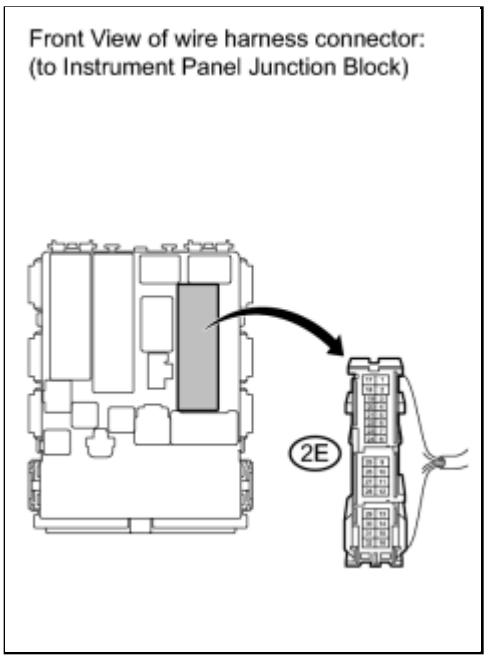

(b) Measure the resistance according to the value(s) in the table below.

Standard Resistance:

TESTER CONNECTION	CONDITION	SPECIFIED CONDITION
2E-17 - Body ground	Always	Below 1 Ω

NG ▶ **REPAIR OR REPLACE HARNESS OR CONNECTOR**

OK ▼

6.	**INSPECT MAIN BODY ECU (INSTRUMENT PANEL JUNCTION BLOCK (IG SIGNAL))**

(a) Reconnect the 2G, 2F and 2E instrument panel junction block connectors.

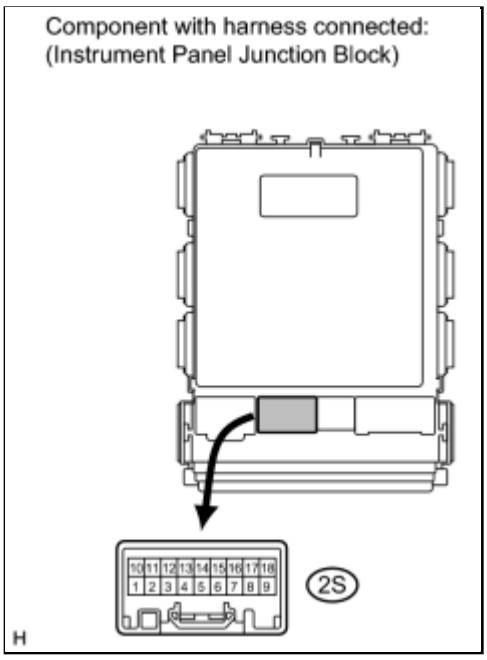

(b) Measure the voltage according to the value(s) in the table below.

Standard Voltage:

TESTER CONNECTION	SWITCH CONDITION	SPECIFIED CONDITION
2S-7 - Body ground	Ignition switch ON	11 to 14 V

NG ▶ **REPLACE MAIN BODY ECU (INSTRUMENT PANEL JUNCTION BLOCK)**

OK ▼

7.	**CHECK HARNESS AND CONNECTOR (THEFT WARNING ECU ASSEMBLY - INSTRUMENT PANEL JUNCTION BLOCK)**

(a) Disconnect the E110 theft warning ECU assembly and 2S instrument panel junction block connectors.

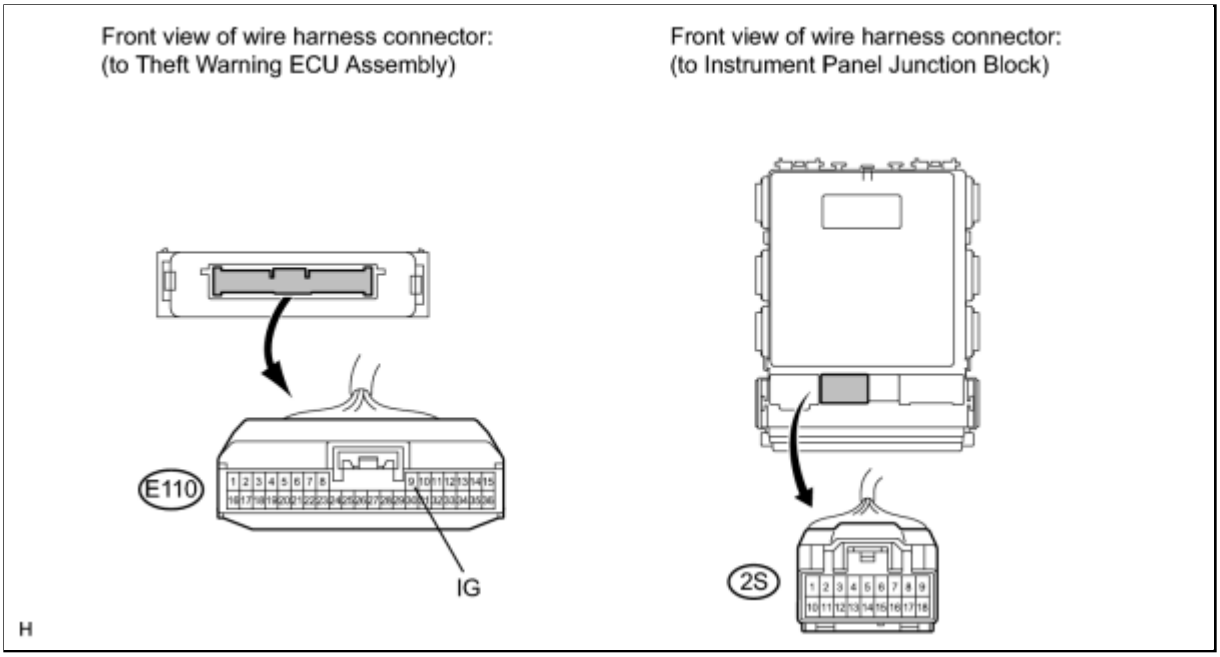

(b) Measure the resistance according to the value(s) in the table below.

Standard Resistance:

TESTER CONNECTION	CONDITION	SPECIFIED CONDITION
E110-9 (IG) - 2S-7	Always	Below 1 Ω
E110-9 (IG) - Body ground	Always	10 kΩ or higher

NG ▶ **REPAIR OR REPLACE HARNESS OR CONNECTOR**

OK ▶ **REPLACE THEFT WARNING ECU ASSEMBLY**

Last Modified: 3-10-2010	6.4 J	**From:** 200901
Model Year: 2010	**Model:** Corolla	**Doc ID:** RM000001PR402HX
Title: THEFT DETERRENT / KEYLESS ENTRY: THEFT DETERRENT SYSTEM: Horn Circuit (2010 Corolla)		

Horn Circuit

DESCRIPTION

When the theft deterrent system is switched from the armed state to the alarm sounding state, the main body ECU transmits a signal to cause the horn to sound at intervals of 0.4 seconds.

WIRING DIAGRAM

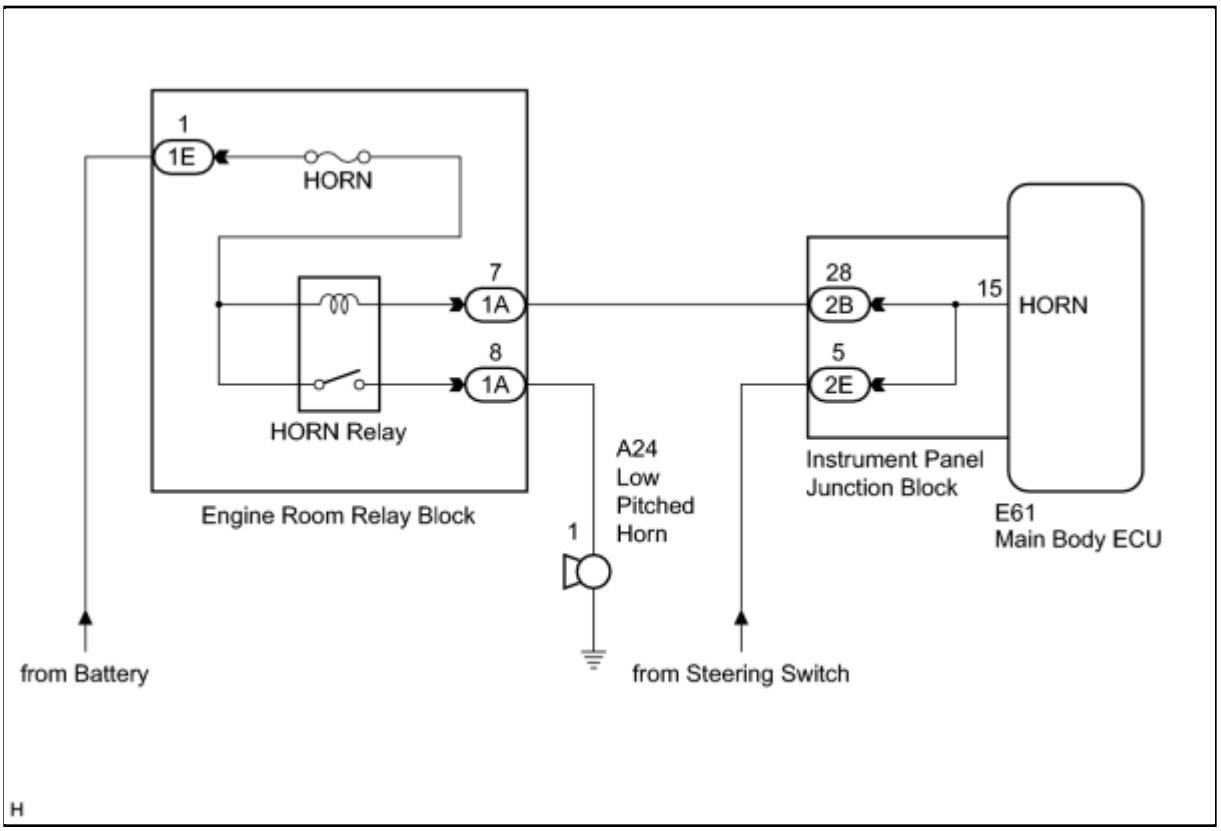

INSPECTION PROCEDURE

NOTICE:

Inspect the fuses for circuits related to this system before performing the following inspection procedure.

PROCEDURE

1.	**INSPECT HORN**

(a) Press the horn switch and check if the horn sound.

Result:

RESULT	PROCEED TO
Horn sounds	A
Horn does not sound	B

B ▶ **GO TO HORN SYSTEM**

A ▼

2.	**PERFORM ACTIVE TEST USING TECHSTREAM**

(a) Connect the Techstream to the DLC3.

(b) Turn the ignition switch to ON.

(c) Turn the Techstream on.

(d) Select the item below in the Active Test and then check that the horn operate.

Main Body

TESTER DISPLAY	TEST PART	CONTROL RANGE	DIAGNOSTIC NOTE
Vehicle Horn	Vehicle horn	ON / OFF	-

OK:

The vehicle horn sounds or stops correctly when operating them through the Techstream.

NG ▶ **CHECK HARNESS AND CONNECTOR (INSTRUMENT PANEL JUNCTION BLOCK - ENGINE ROOM RELAY BLOCK)**

OK ▶ **REPLACE MAIN BODY ECU (INSTRUMENT PANEL JUNCTION BLOCK)**

3.	**CHECK HARNESS AND CONNECTOR (INSTRUMENT PANEL JUNCTION BLOCK - ENGINE ROOM RELAY BLOCK)**

(a) Disconnect the 2B instrument panel junction block and 1A engine room relay block connectors.

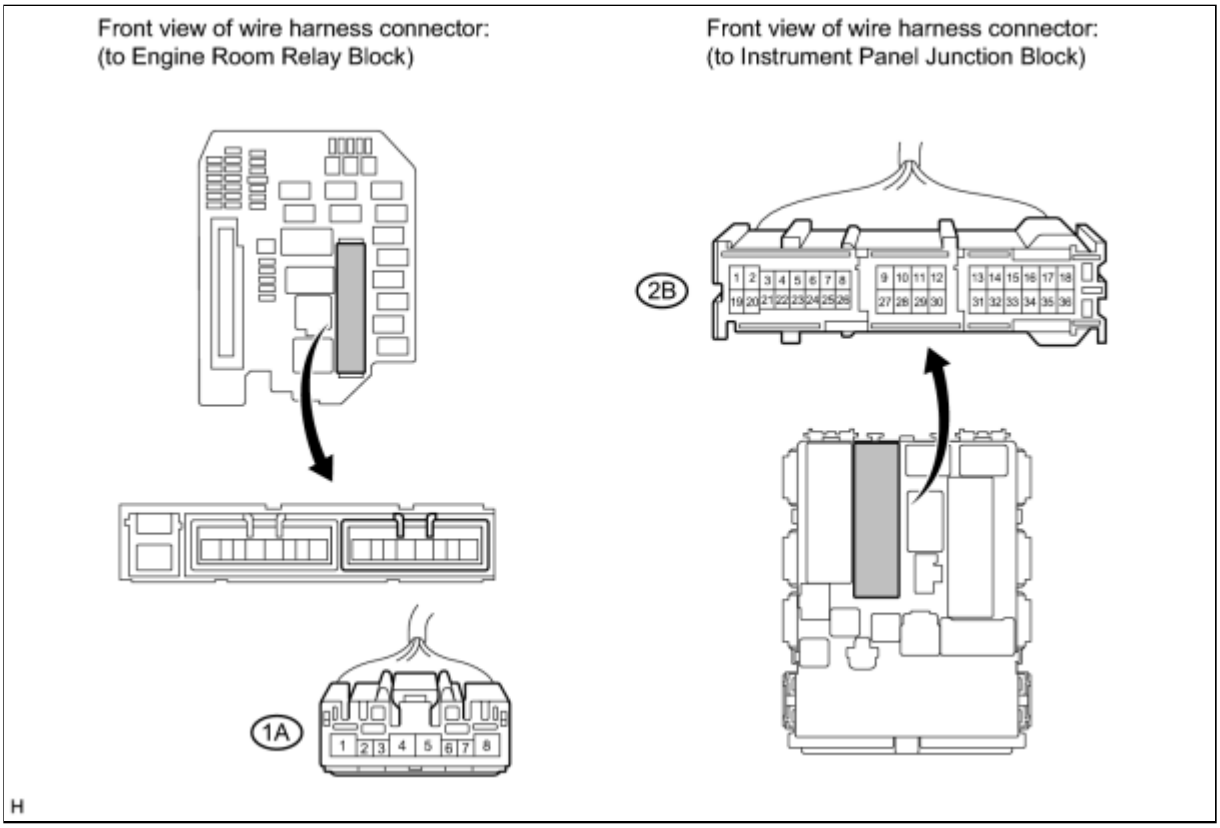

(b) Measure the resistance according to the value(s) in the table below.

Standard Resistance:

TESTER CONNECTION	CONDITION	SPECIFIED CONDITION
2B-28 - 1A-7	Always	Below 1 Ω
2B-28 - Body ground	Always	10 kΩ or higher

NG ▶ **REPAIR OR REPLACE HARNESS OR CONNECTOR**

OK ▶ **REPLACE MAIN BODY ECU (INSTRUMENT PANEL JUNCTION BLOCK)**

Last Modified: 3-10-2010	6.4 J	**From:** 200901
Model Year: 2010	**Model:** Corolla	**Doc ID:** RM0000010J6023X
Title: THEFT DETERRENT / KEYLESS ENTRY: THEFT DETERRENT SYSTEM: Theft Warning ECU Power Source Circuit (2010 Corolla)		

Theft Warning ECU Power Source Circuit

DESCRIPTION

This circuit provides power for theft warning ECU assembly operation.

WIRING DIAGRAM

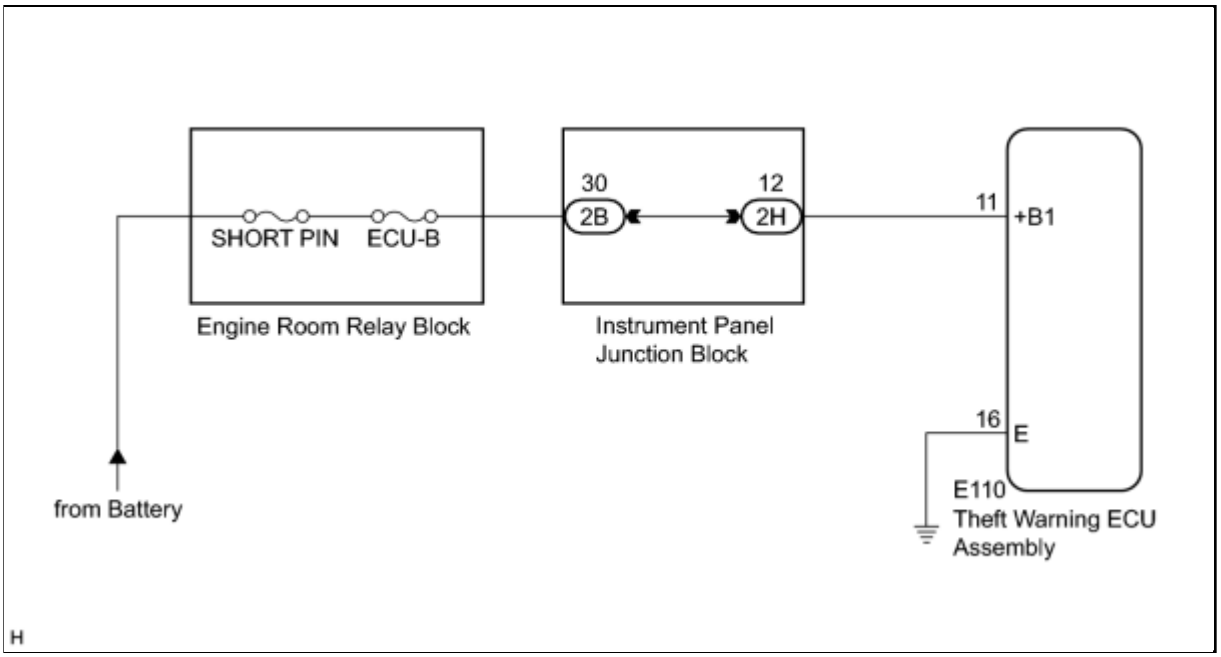

INSPECTION PROCEDURE

PROCEDURE

1.	**CHECK THEFT WARNING ECU ASSEMBLY**

(a) Measure the voltage according to the value(s) in the table below.

Standard Voltage:

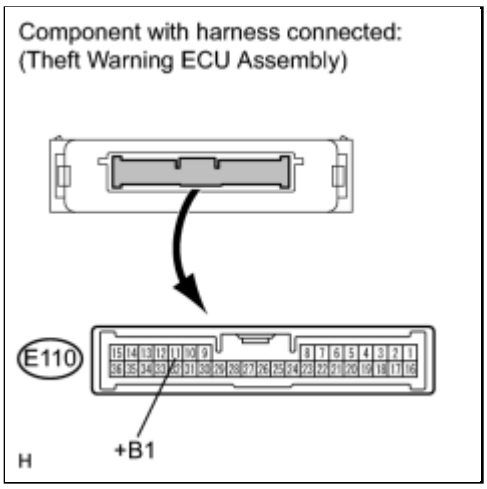

TESTER CONNECTION	CONDITION	SPECIFIED CONDITION
E110-11 (+B1) - Body ground	Always	11 to 14 V

NG ▶ **CHECK HARNESS AND CONNECTOR (THEFT WARNING ECU ASSEMBLY - BODY GROUND)**

OK ▶ **PROCEED TO NEXT SUSPECTED AREA SHOWN IN PROBLEM SYMPTOMS TABLE**

2.	**CHECK HARNESS AND CONNECTOR (THEFT WARNING ECU ASSEMBLY - BODY GROUND)**

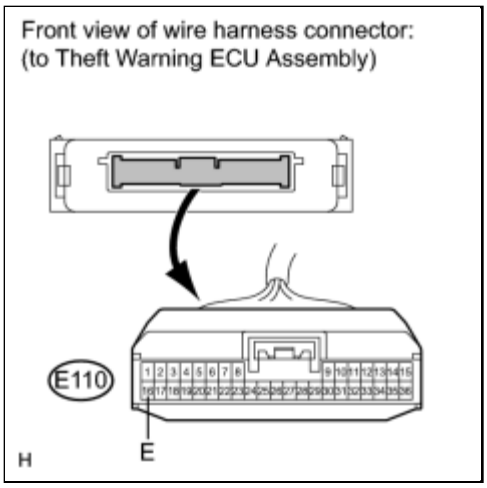

(a) Disconnect the E110 theft warning ECU assembly connector.

(b) Measure the resistance according to the value(s) in the table below.

Standard Resistance:

TESTER CONNECTION	CONDITION	SPECIFIED CONDITION
E110-16 (E) - Body ground	Always	Below 1 Ω

NG ▶ **REPAIR OR REPLACE HARNESS OR CONNECTOR**

OK

3.	**CHECK HARNESS AND CONNECTOR (BATTERY - INSTRUMENT PANEL JUNCTION BLOCK)**

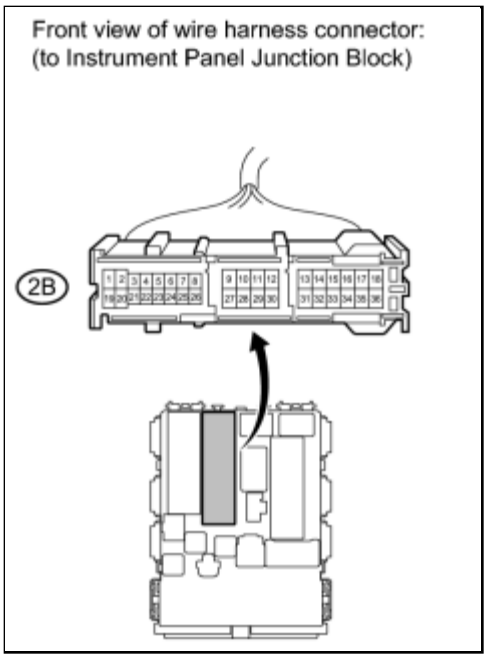

(a) Disconnect the 2B instrument panel junction block connector.

(b) Measure the voltage according to the value(s) in the table below.

Standard Voltage:

TESTER CONNECTION	CONDITION	SPECIFIED CONDITION
2B-30 - Body ground	Always	11 to 14 V

NG ▶ **REPAIR OR REPLACE HARNESS OR CONNECTOR OR SHORT PIN OR ECU-B**

OK

4.	**CHECK INSTRUMENT PANEL JUNCTION BLOCK (POWER SOURCE)**

(a) Reconnect the 2B instrument panel junction block connector.

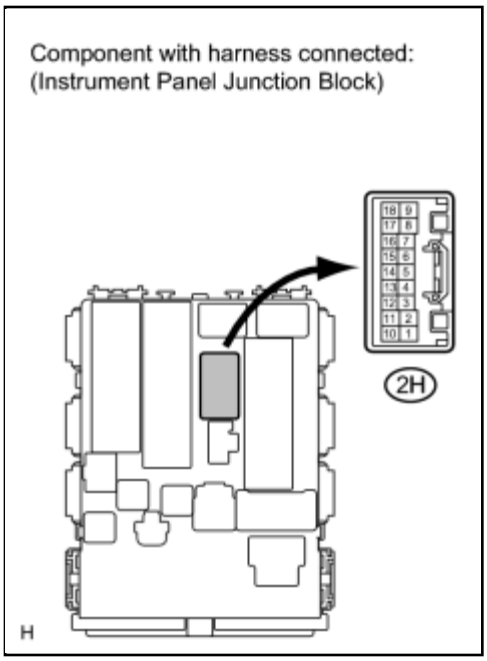

(b) Measure the voltage according to the value(s) in the table below.

Standard Voltage:

TESTER CONNECTION	CONDITION	SPECIFIED CONDITION
2H-12 - Body ground	Always	11 to 14 V

NG ▶ **REPLACE MAIN BODY ECU (INSTRUMENT PANEL JUNCTION BLOCK)**

OK ▼

5.	**CHECK HARNESS AND CONNECTOR (INSTRUMENT PANEL JUNCTION BLOCK - THEFT WARNING ECU ASSEMBLY)**

(a) Disconnect the 2H instrument panel junction block and E110 theft warning ECU assembly connectors.

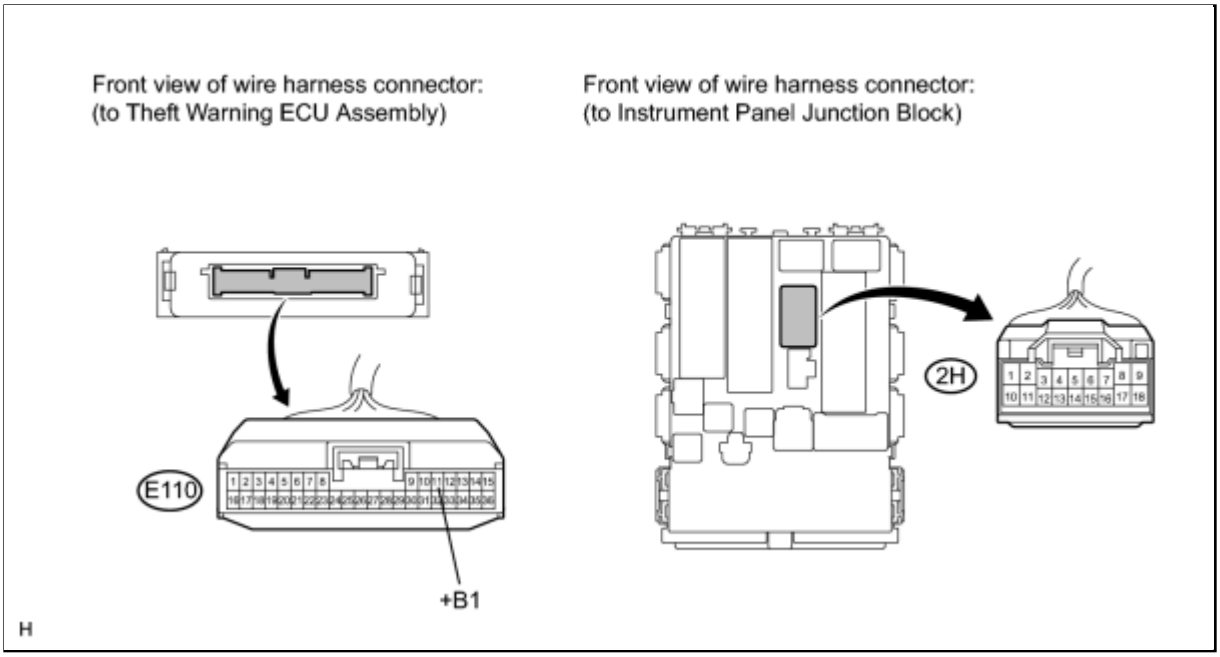

(b) Measure the resistance according to the value(s) in the table below.

Standard Resistance:

TESTER CONNECTION	CONDITION	SPECIFIED CONDITION
2H-12 - E110-11 (+B1)	Always	Below 1 Ω
2H-12 - Body ground	Always	10 kΩ or higher

NG ▶ **REPAIR OR REPLACE HARNESS OR CONNECTOR**

OK ▶ **REPLACE THEFT WARNING ECU ASSEMBLY**

Last Modified: 3-10-2010	6.4 J	**From:** 200901
Model Year: 2010	**Model:** Corolla	**Doc ID:** RM00000215L00DX
Title: THEFT DETERRENT / KEYLESS ENTRY: THEFT DETERRENT SYSTEM: Glass Breakage Sensor Circuit (2010 Corolla)		

Glass Breakage Sensor Circuit

DESCRIPTION

When the glass breakage sensor detects that any door glass is tapped or broken, the sensor will set off an alarm for 57 seconds.

WIRING DIAGRAM

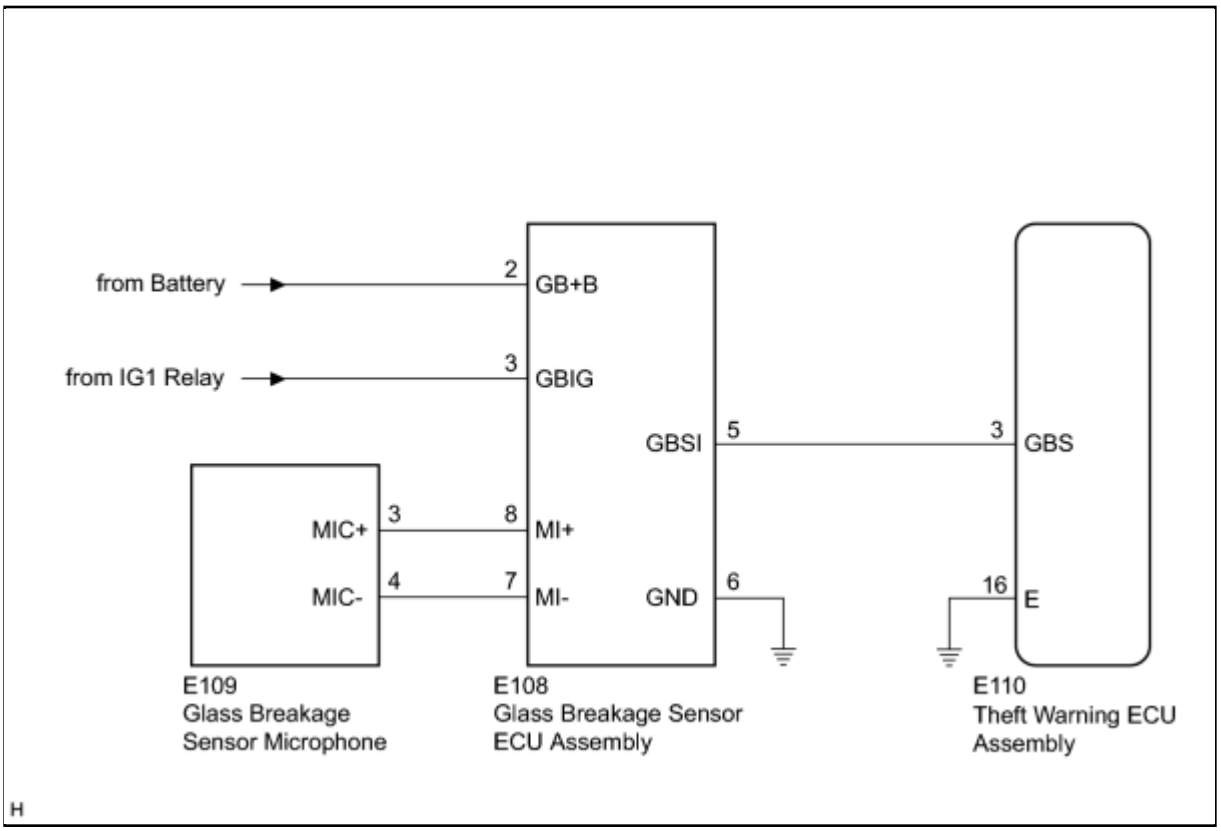

INSPECTION PROCEDURE

PROCEDURE

1.	**READ VALUE USING TECHSTREAM**

(a) Connect the Techstream to the DLC3.

(b) Turn the ignition switch to ON.

(c) Turn the Techstream on.

(d) Select the item below in the Data List and then check that the indicator operates.

Security

TESTER DISPLAY	MEASUREMENT ITEM/RANGE	NORMAL CONDITION	DIAGNOSTIC NOTE
Glass break sensor detection	Glass breakage sensor detection / ON or OFF	ON: Glass breakage sensor operates OFF: Glass breakage sensor does not operate	-

OK:

When tapping on the glass breakage sensor microphone with your finger, "ON" is displayed on the Techstream screen.

NG ▶ **CHECK HARNESS AND CONNECTOR (GLASS BREAKAGE SENSOR ECU ASSEMBLY - POWER SOURCE)**

OK ▶ **PROCEED TO NEXT SUSPECTED AREA SHOWN IN PROBLEM SYMPTOMS TABLE**

2.	**CHECK HARNESS AND CONNECTOR (GLASS BREAKAGE SENSOR ECU ASSEMBLY - POWER SOURCE)**

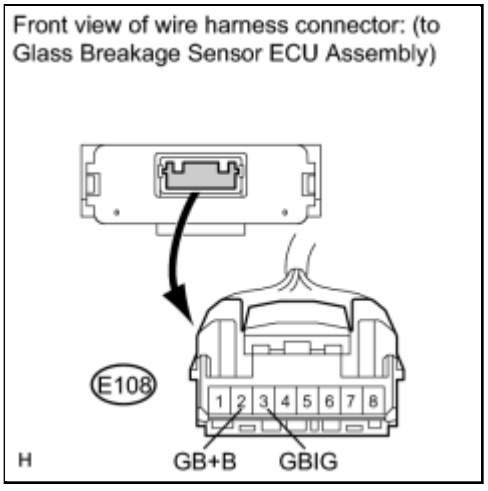

(a) Disconnect the E108 glass breakage sensor ECU assembly connector.

(b) Measure the voltage according to the value(s) in the table below.

Standard Voltage:

TESTER CONNECTION	CONDITION	SPECIFIED CONDITION
E108-2 (GB+B) - Body ground	Always	11 to 14 V
E108-3 (GBIG) - Body ground	Ignition switch ON	11 to 14 V
E108-3 (GBIG) - Body ground	Ignition switch off	Below 1 V

NG ▶ **REPAIR OR REPLACE HARNESS OR CONNECTOR**

OK ▼

3.	**CHECK HARNESS AND CONNECTOR (GLASS BREAKAGE SENSOR ECU ASSEMBLY - BODY GROUND)**

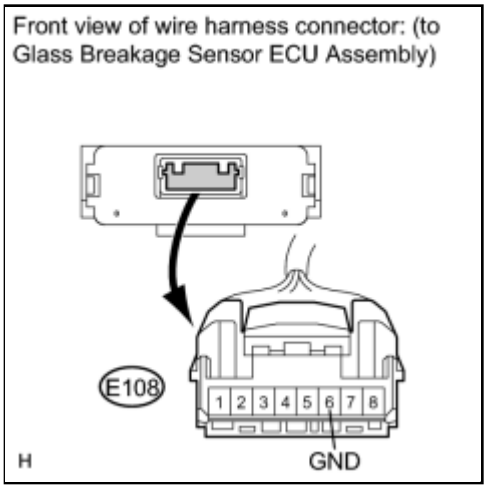

(a) Measure the resistance according to the value(s) in the table below.

Standard Resistance:

TESTER CONNECTION	CONDITION	SPECIFIED CONDITION
E108-6 (GND) - Body ground	Always	Below 1 Ω

NG ▶ **REPAIR OR REPLACE HARNESS OR CONNECTOR**

OK ▼

4.	**CHECK HARNESS AND CONNECTOR (THEFT WARNING ECU ASSEMBLY - GLASS BREAKAGE SENSOR ECU)**

(a) Disconnect the E110 theft warning ECU assembly connector.

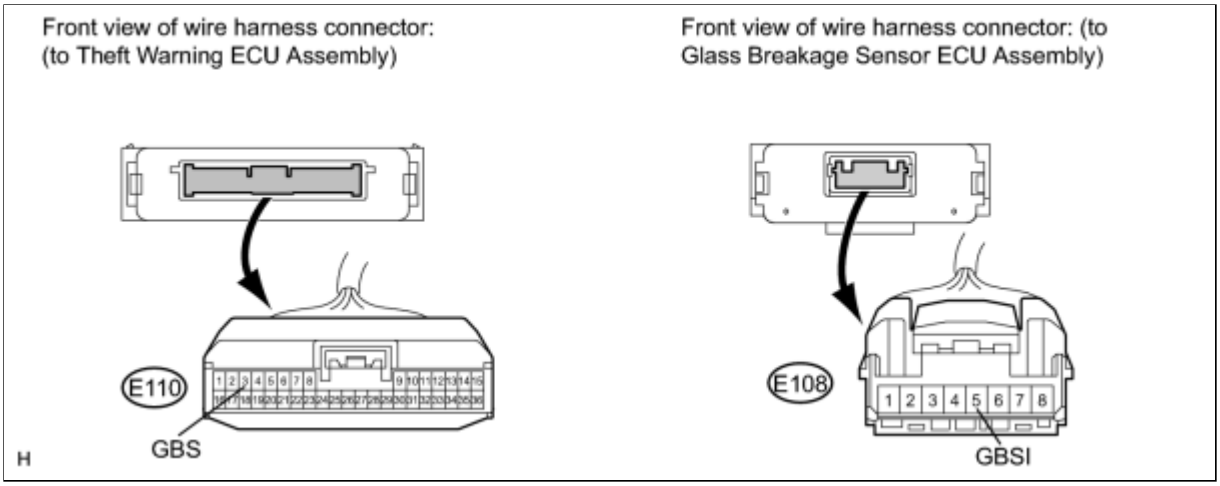

(b) Measure the resistance according to the value(s) in the table below.

Standard Resistance:

TESTER CONNECTION	CONDITION	SPECIFIED CONDITION
E110-3 (GBS) - E108-5 (GBSI)	Always	Below 1 Ω
E110-3 (GBS) - Body ground	Always	10 kΩ or higher

NG ▶ **REPAIR OR REPLACE HARNESS OR CONNECTOR**

OK
▼

5.	**CHECK HARNESS AND CONNECTOR (GLASS BREAKAGE SENSOR ECU - GLASS BREAKAGE SENSOR MICROPHONE)**

(a) Disconnect the E109 glass breakage sensor microphone connector.

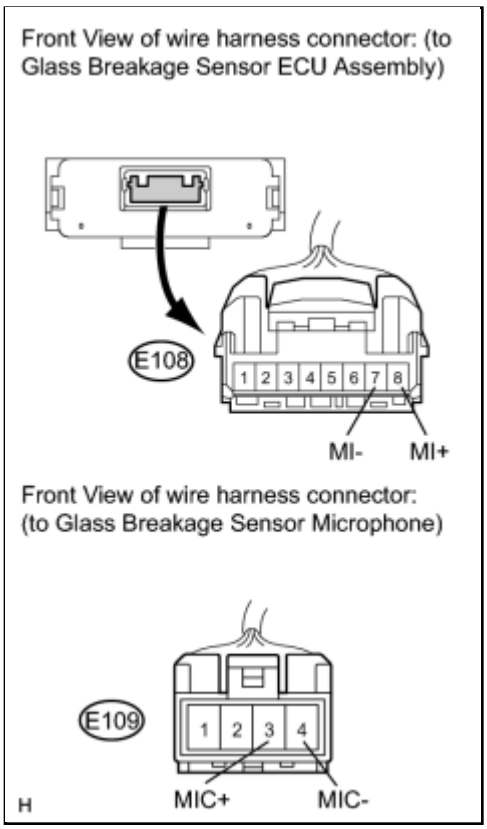

(b) Measure the resistance according to the value(s) in the table below.

Standard Resistance:

TESTER CONNECTION	CONDITION	SPECIFIED CONDITION
E108-7 (MI-) - E109-4 (MIC-)	Always	Below 1 Ω
E108-8 (MI+) - E109-3 (MIC+)	Always	Below 1 Ω
E108-7 (MI+) - Body ground	Always	10 kΩ or higher
E108-8 (MI-) - Body ground	Always	10 kΩ or higher

NG ▶ **REPAIR OR REPLACE HARNESS OR CONNECTOR**

OK ▼

6.	**INSPECT GLASS BREAKAGE SENSOR ECU ASSEMBLY (MICROPHONE OUTPUT)**

(a) Reconnect the E108 glass breakage sensor ECU assembly, E109 glass breakage sensor microphone and E110 theft warning ECU assembly connectors.

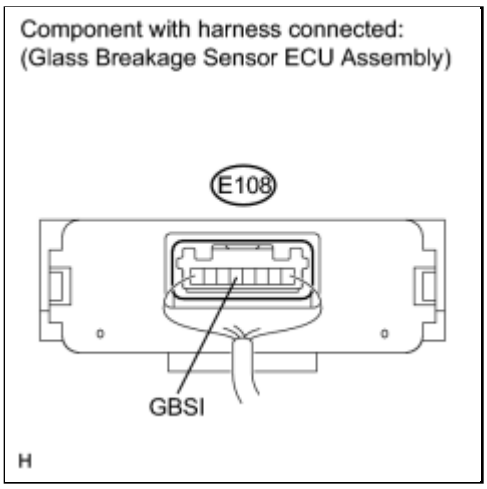

(b) Connect an oscilloscope to terminal 5 (GBSI) of the glass breakage sensor ECU assembly and body ground.

(c) Turn the ignition switch to ON.

(d) Check the signal waveform according to the condition(s) in the table below.

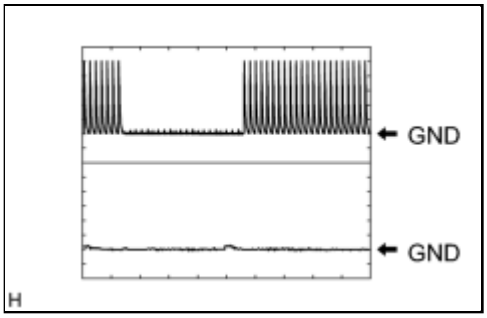

ITEM	CONDITION
Tool setting	1 V/DIV, 50 ms/DIV
Vehicle condition	Tap the glass breakage sensor microphone with a hard object such as your fingernail.

OK:

Waveform is as shown in the illustration.

NG ▶ **REPLACE GLASS BREAKAGE SENSOR MICROPHONE**

OK ▶ **REPLACE GLASS BREAKAGE SENSOR ECU ASSEMBLY**

7.	REPLACE GLASS BREAKAGE SENSOR MICROPHONE

(a) Replace glass breakage sensor microphone INFO.

NEXT

8.	CHECK GLASS BREAKAGE SENSOR

(a) Check the glass breakage sensor operation INFO .

(b) Connect the Techstream to the DLC3.

(c) Turn the ignition switch to ON.

(d) Turn the Techstream on.

(e) Select the item below in the Data List and then check that the indicator operates.

Security

TESTER DISPLAY	MEASUREMENT ITEM/RANGE	NORMAL CONDITION	DIAGNOSTIC NOTE
Glass break sensor detection	Glass breakage sensor detection / ON or OFF	ON: Glass breakage sensor operates OFF: Glass breakage sensor does not operates	-

OK:

When tapping on the glass breakage sensor microphone with your finger, "ON" is displayed on the Techstream screen.

Result:

RESULT	PROCEED TO
Glass breakage sensor operates	OK
Glass breakage sensor does not operate	NG

NG ▶ **REPLACE GLASS BREAKAGE SENSOR ECU ASSEMBLY**

OK ▶ **END**

9.	REPLACE GLASS BREAKAGE SENSOR ECU ASSEMBLY

(a) Replace glass breakage sensor ECU assembly INFO .

NEXT

10.	CHECK GLASS BREAKAGE SENSOR

(a) Check the glass breakage sensor operation INFO .

(b) Connect the Techstream to the DLC3.

(c) Turn the ignition switch to ON.

(d) Turn the Techstream on.

(e) Select the item below in the Data List and then check that the indicator operates.

Security

TESTER DISPLAY	MEASUREMENT ITEM/RANGE	NORMAL CONDITION	DIAGNOSTIC NOTE
Glass break sensor detection	Glass breakage sensor detection / ON or OFF	ON: Glass breakage sensor operates OFF: Glass breakage sensor does not operates	-

OK:

When tapping on the glass breakage sensor microphone with your finger, "ON" is displayed on the Techstream screen.

Result:

RESULT	PROCEED TO
Glass breakage sensor operates	OK
Glass breakage sensor does not operate	NG

NG ▶ **REPLACE THEFT WARNING ECU ASSEMBLY**

OK ▶ **END**

Last Modified: 3-10-2010	6.4 J	**From:** 200901
Model Year: 2010	**Model:** Corolla	**Doc ID:** RM000001PR501XX
Title: THEFT DETERRENT / KEYLESS ENTRY: THEFT DETERRENT SYSTEM: Security Indicator Light Circuit (2010 Corolla)		

Security Indicator Light Circuit

DESCRIPTION

Even when the theft deterrent system is in the disarmed state, the telltale light assembly (security indicator light) blinks due to a signal output from the immobiliser system. The telltale light assembly (security indicator light) blinks continuously due to a continuous signal received from the immobiliser system while in the armed state.

The theft warning ECU assembly causes the telltale light assembly (security indicator light) to come on only during the arming preparation and alarm sounding states.

WIRING DIAGRAM

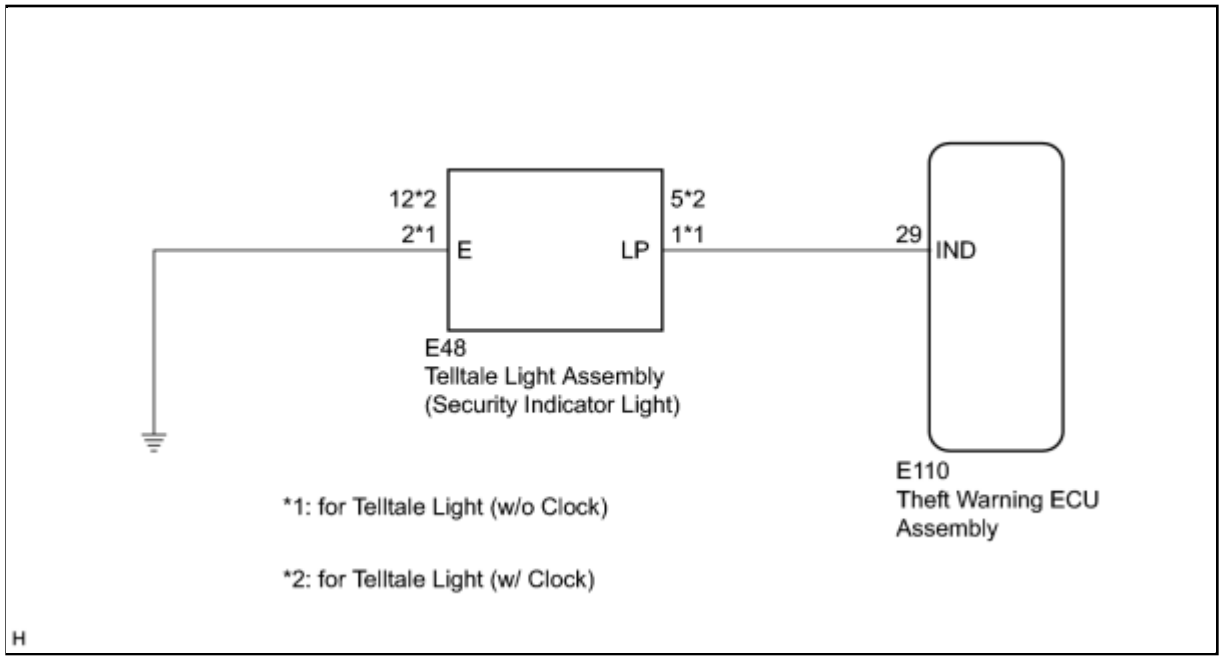

INSPECTION PROCEDURE

PROCEDURE

1.	**PERFORM ACTIVE TEST USING TECHSTREAM**

(a) Connect the Techstream to the DLC3.

(b) Turn the ignition switch to ON.

(c) Turn the Techstream on.

(d) Select the item below in the Active Test and then check that the indicator operates.

Security

TESTER DISPLAY	TEST PART	CONTROL RANGE	DIAGNOSTIC NOTE
Security Indicator	Security indicator	ON / OFF	-

OK:

The security indicator light flashes or goes off correctly when operating it through the Techstream.

NG ▶ **CHECK HARNESS AND CONNECTOR (THEFT DETERRENT ECU ASSEMBLY - TELLTALE LIGHT ASSEMBLY)**

OK ▶ **PROCEED TO NEXT SUSPECTED AREA SHOWN IN PROBLEM SYMPTOMS TABLE**

2.	**CHECK HARNESS AND CONNECTOR (THEFT DETERRENT ECU ASSEMBLY - TELLTALE LIGHT ASSEMBLY)**

(a) Disconnect the E110 theft warning ECU assembly and E48 telltale light assembly (security indicator light) connectors.

(b) for Telltale Light (w/o Clock):

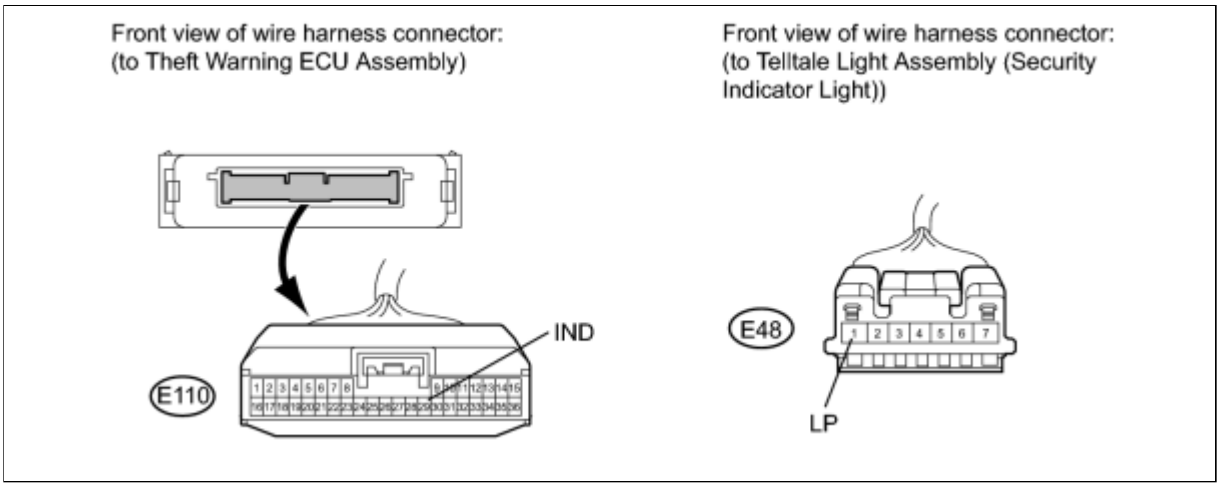

(1) Measure the resistance according to the value(s) in the table below.

Standard Resistance:

TESTER CONNECTION	CONDITION	SPECIFIED CONDITION
E110-29 (IND) - E48-1 (LP)	Always	Below 1 Ω
E110-29 (IND) - Body ground	Always	10 kΩ or higher

(c) for Telltale Light (w/ Clock):

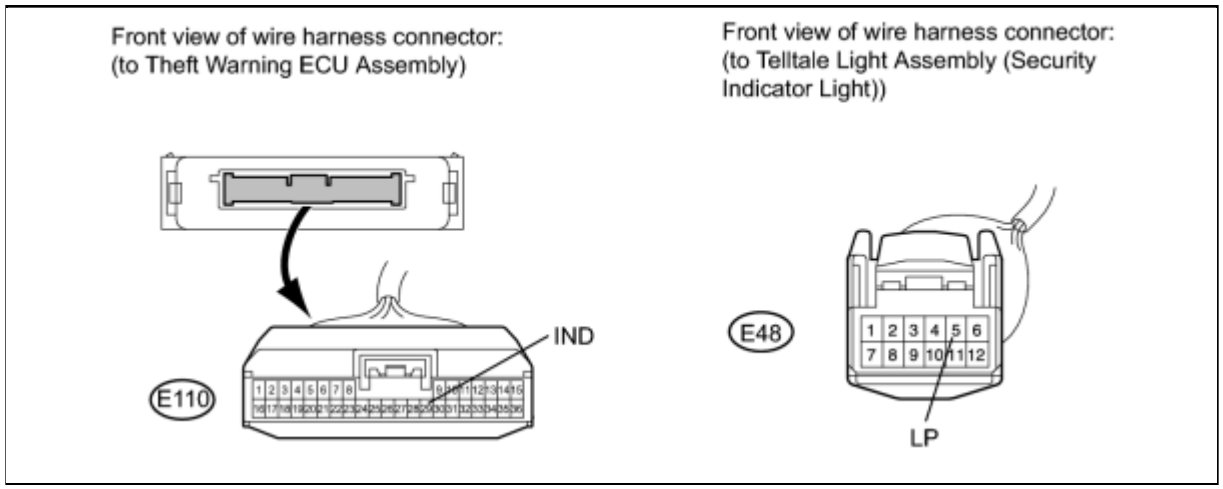

(1) Measure the resistance according to the value(s) in the table below.

Standard Resistance:

TESTER CONNECTION	CONDITION	SPECIFIED CONDITION
E110-29 (IND) - E48-5 (LP)	Always	Below 1 Ω
E110-29 (IND) - Body ground	Always	10 kΩ or higher

NG ▶ **REPAIR OR REPLACE HARNESS OR CONNECTOR**

OK ▼

3.	**CHECK HARNESS AND CONNECTOR (TELLTALE LIGHT ASSEMBLY - BODY GROUND)**

(a) for Telltale Light (w/o Clock):

(1) Measure the resistance according to the value(s) in the table below.

Standard Resistance:

Front view of wire harness connector:
(to Telltale Light Assembly (Security Indicator Light))

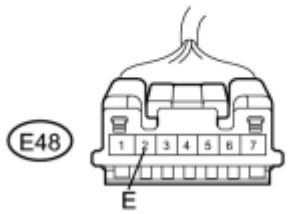

TESTER CONNECTION	CONDITION	SPECIFIED CONDITION
E48-2 (E) - Body ground	Always	Below 1 Ω

(b) for Telltale Light (w/ Clock):

Front view of wire harness connector:
(to Telltale Light Assembly (Security Indicator Light))

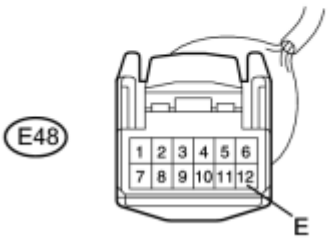

(1) Measure the resistance according to the value(s) in the table below.

Standard Resistance:

TESTER CONNECTION	CONDITION	SPECIFIED CONDITION
E48-12 (E) - Body ground	Always	Below 1 Ω

NG ▶ **REPAIR OR REPLACE HARNESS OR CONNECTOR**

OK ▶ **REPLACE TELLTALE LIGHT ASSEMBLY (SECURITY INDICATOR LIGHT)**

Last Modified: 3-10-2010	6.4 J	**From:** 200901
Model Year: 2010	**Model:** Corolla	**Doc ID:** RM000001575016X
Title: THEFT DETERRENT / KEYLESS ENTRY: THEFT DETERRENT SYSTEM: Unlock Warning Switch Circuit (2010 Corolla)		

Unlock Warning Switch Circuit

DESCRIPTION

The key unlock warning switch assembly turns on when the ignition key is inserted into the ignition key cylinder and turns off when the ignition key is removed.

The theft warning ECU assembly operates the key confinement prevention function while the key unlock warning switch assembly is on.

WIRING DIAGRAM

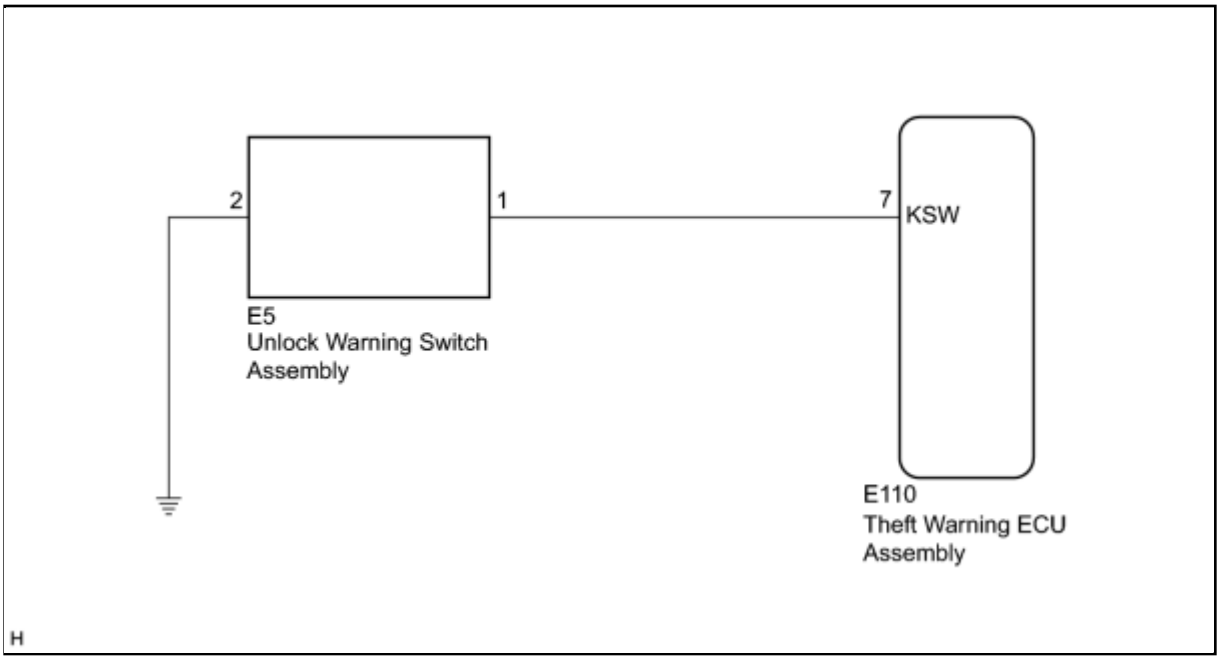

INSPECTION PROCEDURE

PROCEDURE

1.	**READ VALUE USING TECHSTREAM (UNLOCK WARNING SWITCH ASSEMBLY)**

(a) Connect the Techstream to the DLC3.

(b) Turn the ignition switch to ON.

(c) Turn the Techstream on.

(d) Select the item below in the Data List and then read the display on the Techstream.

Security

TESTER DISPLAY	MEASUREMENT ITEM/RANGE	NORMAL CONDITION	DIAGNOSTIC NOTE
Key unlock warning switch	Unlock warning switch signal / ON or OFF	ON: Key is inserted into ignition key cylinder OFF: Key is removed from ignition key cylinder	-

OK:

When the key is in the ignition key cylinder, "ON" appears on the screen.

NG ▶ **INSPECT UNLOCK WARNING SWITCH ASSEMBLY**

OK ▶ **PROCEED TO NEXT SUSPECTED AREA SHOWN IN PROBLEM SYMPTOMS TABLE**

2.	**INSPECT UNLOCK WARNING SWITCH ASSEMBLY**

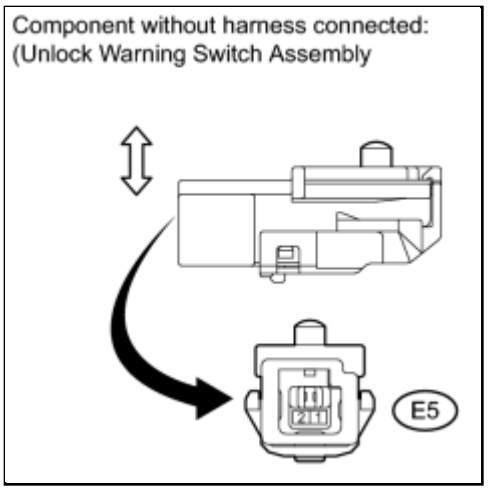

(a) Remove the unlock warning switch assembly INFO .

(b) Measure the resistance according to the value(s) in the table below.

Standard Resistance:

TESTER CONNECTION	CONDITION	SPECIFIED CONDITION
E5-1 - E5-2	Free (Key removed)	10 kΩ or higher

TESTER CONNECTION	CONDITION	SPECIFIED CONDITION
E5-1 - E5-2	Pushed (Key set)	Below 1 Ω

NG ▶ **REPLACE UNLOCK WARNING SWITCH ASSEMBLY**

OK ▼

3.	**CHECK HARNESS AND CONNECTOR (UNLOCK WARNING SWITCH ASSEMBLY - BODY GROUND)**

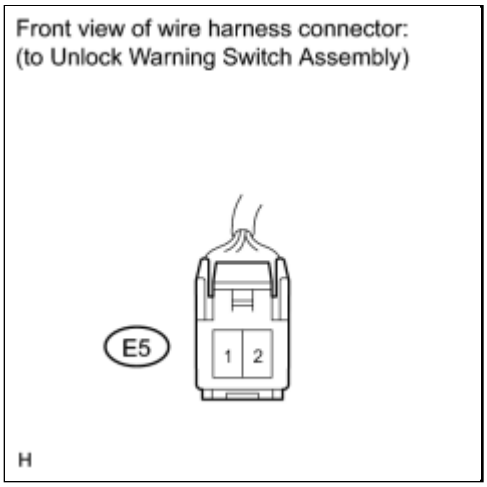

(a) Disconnect the E5 unlock warning switch assembly connector.

(b) Measure the resistance according to the value(s) in the table below.

Standard Resistance:

TESTER CONNECTION	CONDITION	SPECIFIED CONDITION
E5-2 - Body ground	Always	Below 1 Ω

NG ▶ **REPAIR OR REPLACE HARNESS OR CONNECTOR**

OK ▼

4.	**CHECK HARNESS AND CONNECTOR (UNLOCK WARNING SWITCH ASSEMBLY - THEFT WARNING ECU ASSEMBLY)**

(a) Disconnect the E110 theft warning ECU assembly connector.

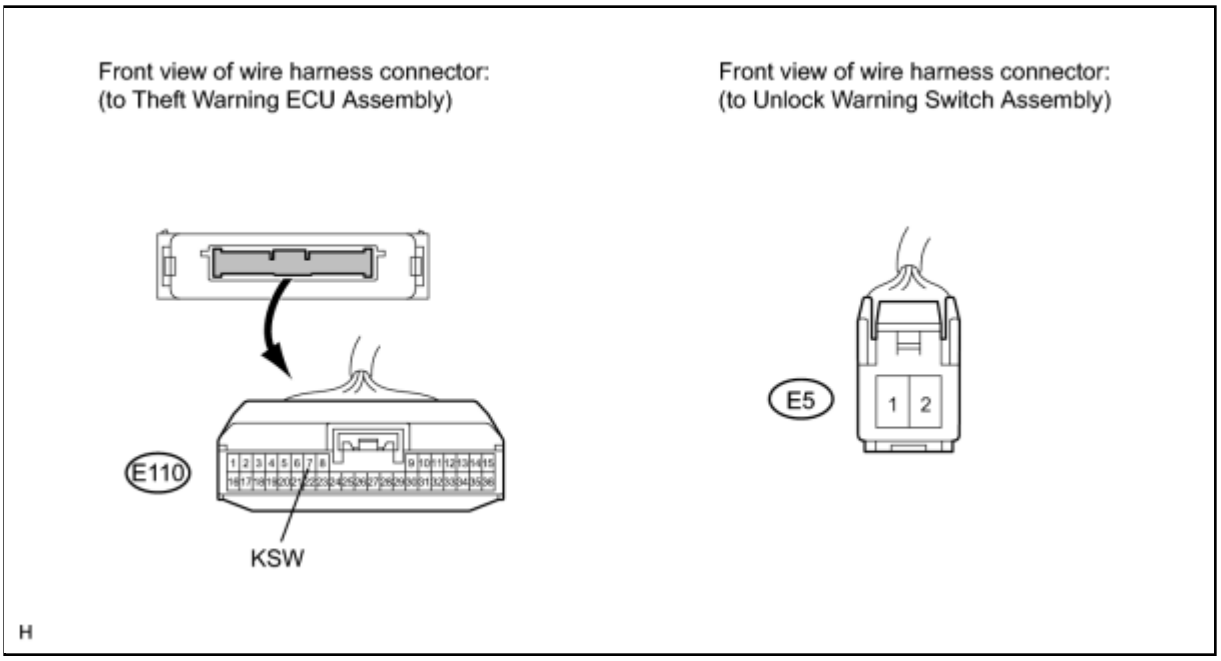

(b) Measure the resistance according to the value(s) in the table below.

Standard Resistance:

TESTER CONNECTION	CONDITION	SPECIFIED CONDITION
E5-1 - E110-7 (KSW)	Always	Below 1 Ω

NG ▶ **REPAIR OR REPLACE HARNESS OR CONNECTOR**

OK ▶ **REPLACE THEFT WARNING ECU ASSEMBLY**

Last Modified: 3-10-2010	6.4 K	**From:** 200901
Model Year: 2010	**Model:** Corolla	**Doc ID:** RM00000342J005X
Title: THEFT DETERRENT / KEYLESS ENTRY: THEFT WARNING ECU: COMPONENTS (2010 Corolla)		

COMPONENTS

ILLUSTRATION

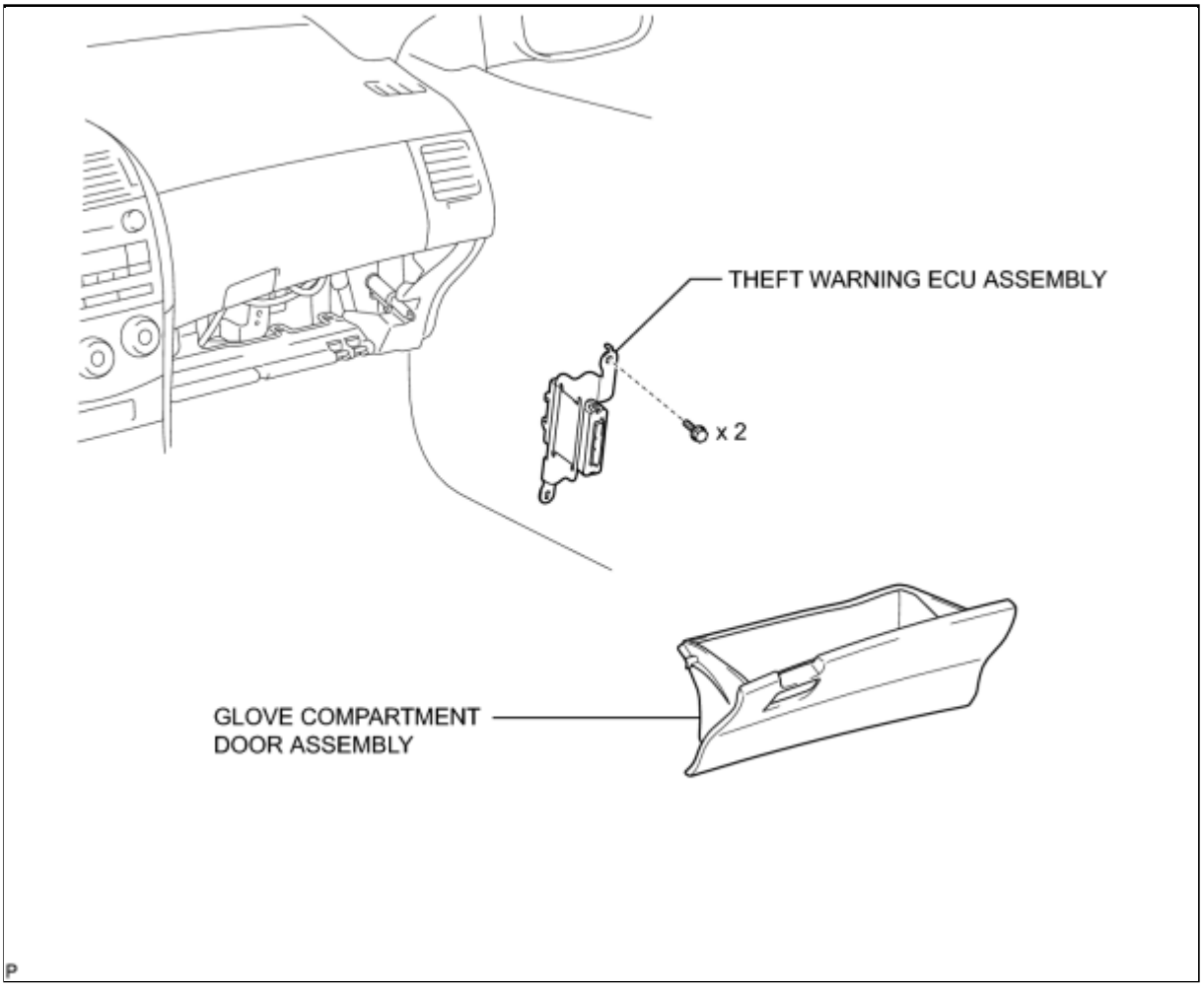

Last Modified: 3-10-2010	6.4 A	**From:** 200901
Model Year: 2010	**Model:** Corolla	**Doc ID:** RM00000342K007X
Title: THEFT DETERRENT / KEYLESS ENTRY: THEFT WARNING ECU: REMOVAL (2010 Corolla)		

REMOVAL

1. REMOVE GLOVE COMPARTMENT DOOR ASSEMBLY INFO

2. REMOVE THEFT WARNING ECU ASSEMBLY

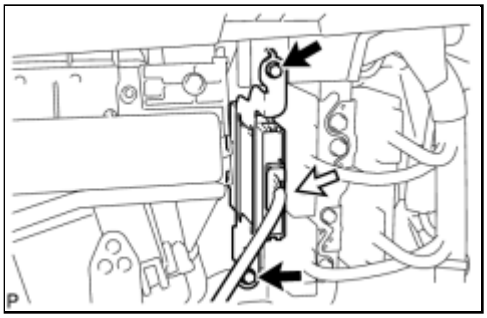

(a) Disconnect the connector.

(b) Remove the 2 bolts and theft warning ECU assembly.

Last Modified: 3-10-2010	6.4 A	**From:** 200901
Model Year: 2010	**Model:** Corolla	**Doc ID:** RM000000342I007X
Title: THEFT DETERRENT / KEYLESS ENTRY: THEFT WARNING ECU: INSTALLATION (2010 Corolla)		

INSTALLATION

1. INSTALL THEFT WARNING ECU ASSEMBLY

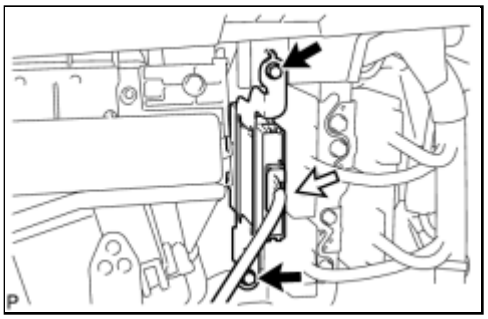

(a) Install the theft warning ECU assembly with the 2 bolts.

(b) Connect the connector.

2. INSTALL GLOVE COMPARTMENT DOOR ASSEMBLY INFO

Last Modified: 3-10-2010	6.4 K	**From:** 200901
Model Year: 2010	**Model:** Corolla	**Doc ID:** RM000003G0K001X
Title: THEFT DETERRENT / KEYLESS ENTRY: TRANSPONDER KEY AMPLIFIER: COMPONENTS (2010 Corolla)		

COMPONENTS

ILLUSTRATION

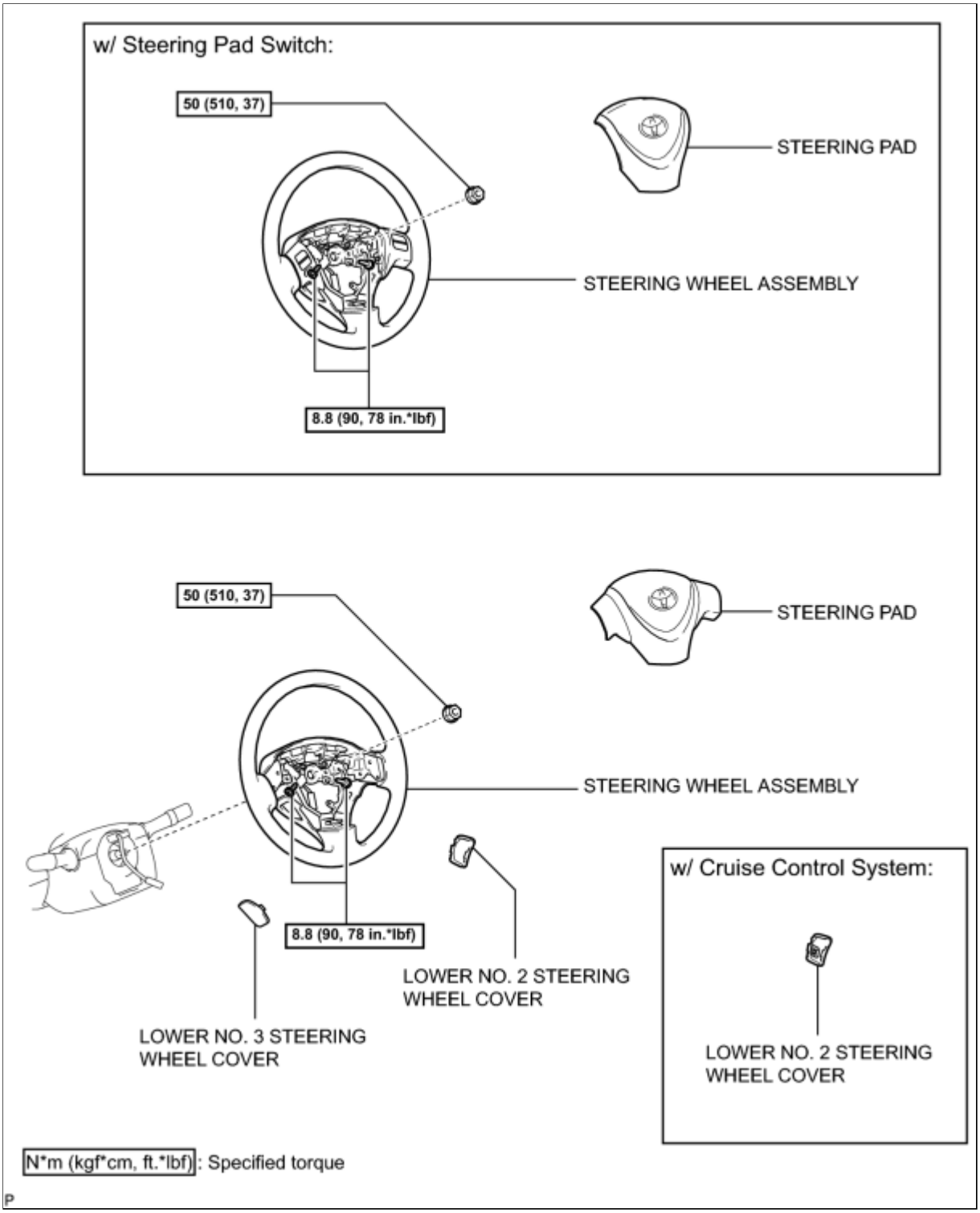

ILLUSTRATION

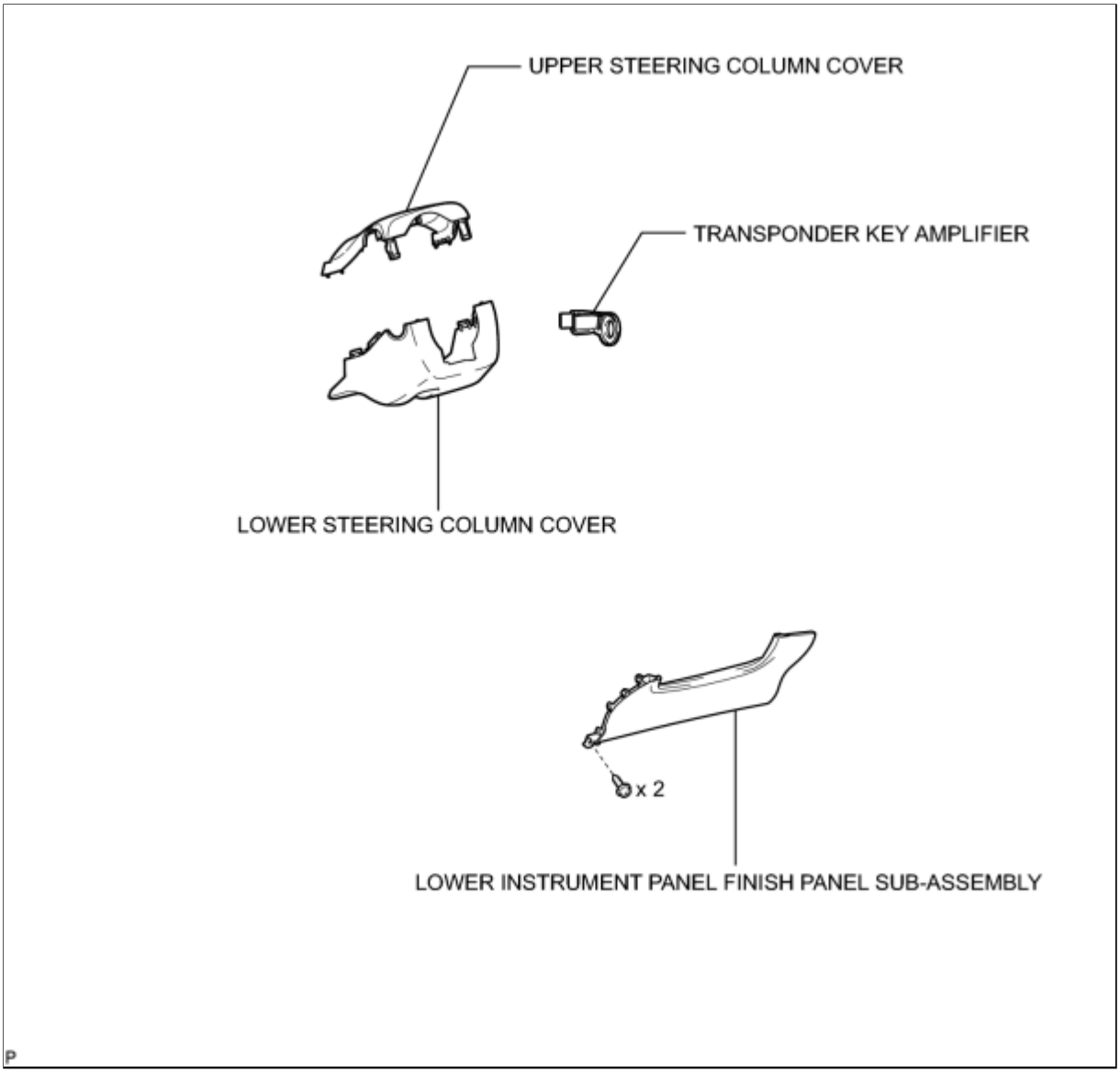
UPPER STEERING COLUMN COVER
TRANSPONDER KEY AMPLIFIER
LOWER STEERING COLUMN COVER
x 2
LOWER INSTRUMENT PANEL FINISH PANEL SUB-ASSEMBLY

P

Last Modified: 3-10-2010	6.4 A	**From:** 200901
Model Year: 2010	**Model:** Corolla	**Doc ID:** RM000003G0L001X
Title: THEFT DETERRENT / KEYLESS ENTRY: TRANSPONDER KEY AMPLIFIER: REMOVAL (2010 Corolla)		

REMOVAL

1. DISCONNECT CABLE FROM NEGATIVE BATTERY TERMINAL

CAUTION:

Wait at least 90 seconds after disconnecting the cable from the negative (-) battery terminal to disable the SRS system.

2. REMOVE LOWER NO. 2 STEERING WHEEL COVER INFO

3. REMOVE LOWER NO. 3 STEERING WHEEL COVER INFO

4. REMOVE STEERING PAD INFO

5. REMOVE STEERING WHEEL ASSEMBLY INFO

6. REMOVE LOWER INSTRUMENT PANEL FINISH PANEL SUB-ASSEMBLY INFO

7. REMOVE LOWER STEERING COLUMN COVER INFO

8. REMOVE UPPER STEERING COLUMN COVER INFO

9. REMOVE TRANSPONDER KEY AMPLIFIER

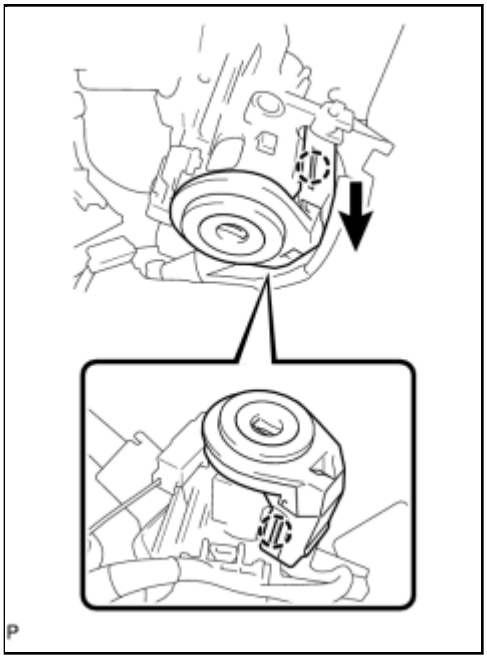

(a) Disengage the 2 claws as shown in the illustration.

(b) Disconnect the connector and remove the transponder key

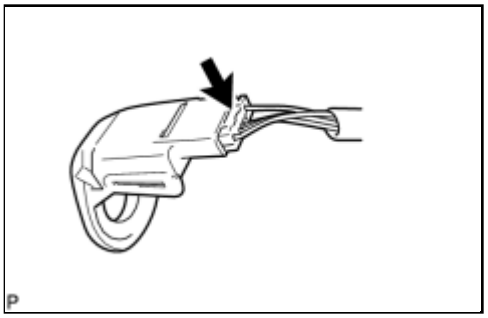

amplifier.

Last Modified: 3-10-2010	6.4 A	**From:** 200901
Model Year: 2010	**Model:** Corolla	**Doc ID:** RM000003G0J001X
Title: THEFT DETERRENT / KEYLESS ENTRY: TRANSPONDER KEY AMPLIFIER: INSTALLATION (2010 Corolla)		

INSTALLATION

1. INSTALL TRANSPONDER KEY AMPLIFIER

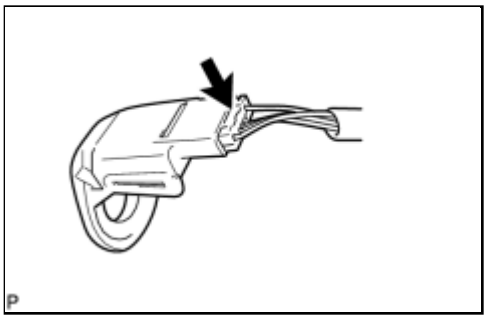

(a) Connect the connector to the transponder key amplifier.

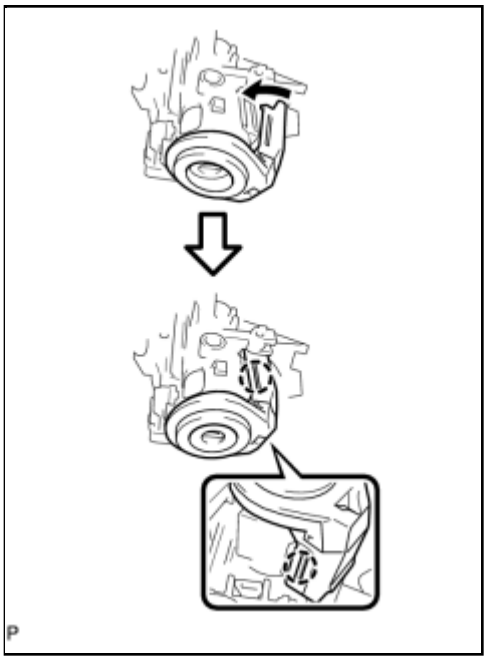

(b) Align the transponder key amplifier with the steering column upper bracket. Tilt the amplifier slightly and slide it into position.

(c) Push the transponder key amplifier, and engage the 2 claws to install the transponder key amplifier to the steering column upper bracket.

2. INSTALL UPPER STEERING COLUMN COVER INFO

3. INSTALL LOWER STEERING COLUMN COVER INFO

4. ADJUST SPIRAL CABLE INFO

5. INSTALL STEERING WHEEL ASSEMBLY INFO

6. INSTALL STEERING PAD INFO

7. INSTALL LOWER NO. 3 STEERING WHEEL COVER INFO

8. INSTALL LOWER NO. 2 STEERING WHEEL COVER INFO

9. INSPECT STEERING WHEEL CENTER POINT

10. CONNECT CABLE TO NEGATIVE BATTERY TERMINAL

11. INSPECT STEERING PAD INFO

12. INSPECT SRS WARNING LIGHT

INFO

Last Modified: 3-10-2010	6.4 K	**From:** 200901
Model Year: 2010	**Model:** Corolla	**Doc ID:** RM000003G0N001X
Title: THEFT DETERRENT / KEYLESS ENTRY: CERTIFICATION ECU: COMPONENTS (2010 Corolla)		

COMPONENTS

ILLUSTRATION

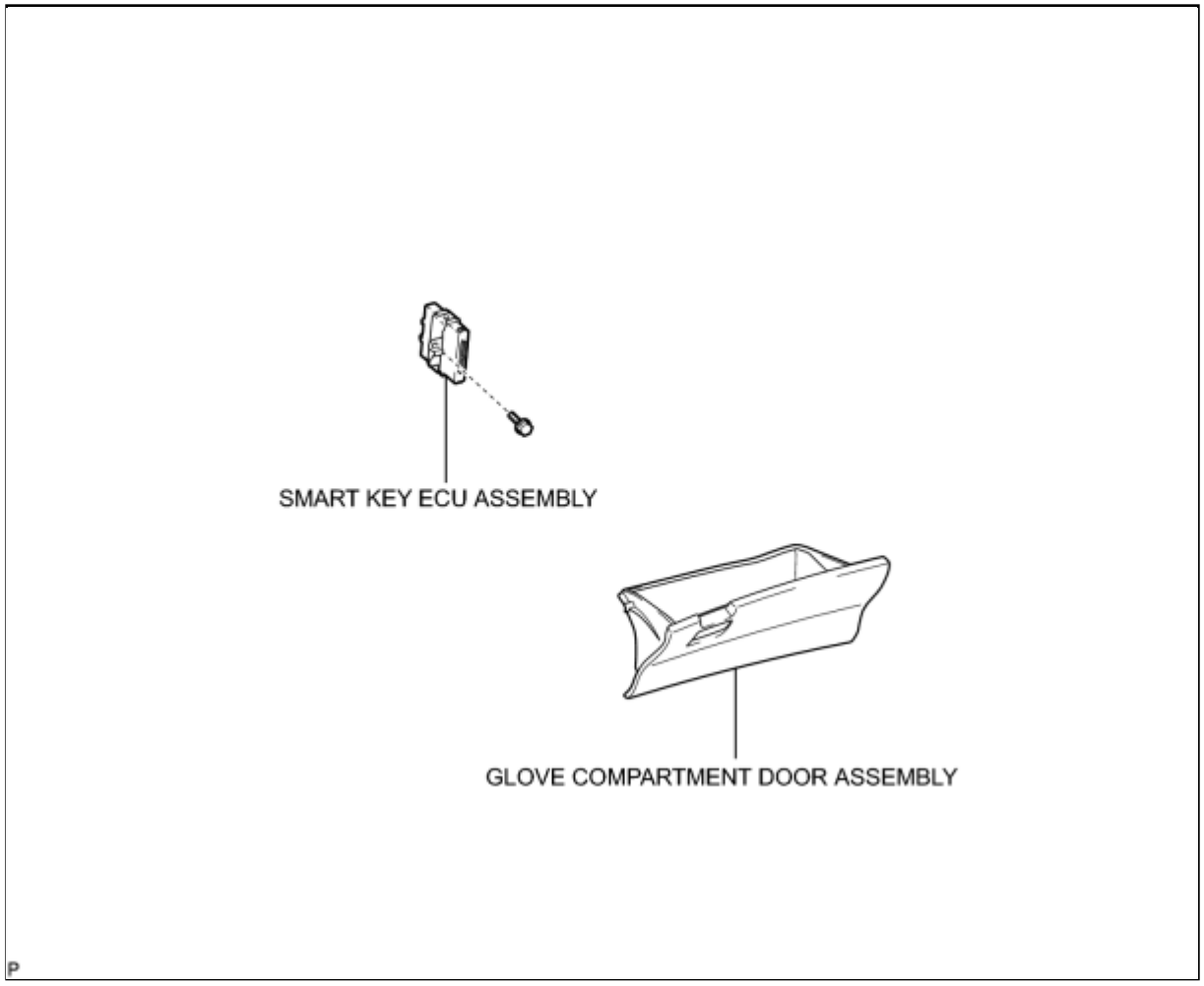

Last Modified: 3-10-2010	6.4 A	**From:** 200901
Model Year: 2010	**Model:** Corolla	**Doc ID:** RM000003G0O001X
Title: THEFT DETERRENT / KEYLESS ENTRY: CERTIFICATION ECU: REMOVAL (2010 Corolla)		

REMOVAL

1. REMOVE GLOVE COMPARTMENT DOOR ASSEMBLY INFO

2. REMOVE SMART KEY ECU ASSEMBLY

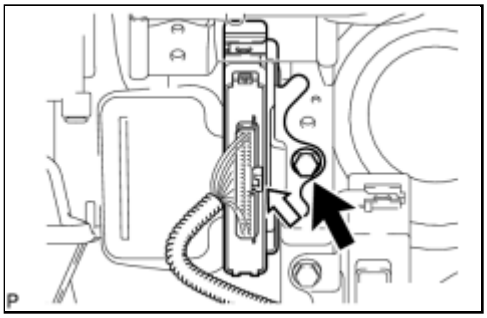

(a) Disconnect the connector.

(b) Remove the bolt and smart key ECU assembly.

Last Modified: 3-10-2010	6.4 A	**From:** 200901
Model Year: 2010	**Model:** Corolla	**Doc ID:** RM000003G0M001X
Title: THEFT DETERRENT / KEYLESS ENTRY: CERTIFICATION ECU: INSTALLATION (2010 Corolla)		

INSTALLATION

1. INSTALL SMART KEY ECU ASSEMBLY

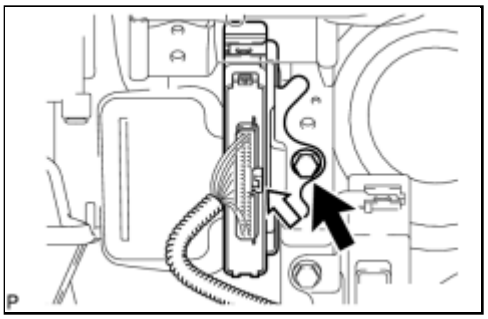

(a) Install the smart key ECU assembly with the bolt.

(b) Connect the connector.

2. INSTALL GLOVE COMPARTMENT DOOR ASSEMBLY INFO

Last Modified: 3-10-2010	6.4 K	**From:** 200901
Model Year: 2010	**Model:** Corolla	**Doc ID:** RM000002Y4I00GX
Title: THEFT DETERRENT / KEYLESS ENTRY: ELECTRICAL KEY OSCILLATOR (for Front Door): COMPONENTS (2010 Corolla)		

COMPONENTS

ILLUSTRATION

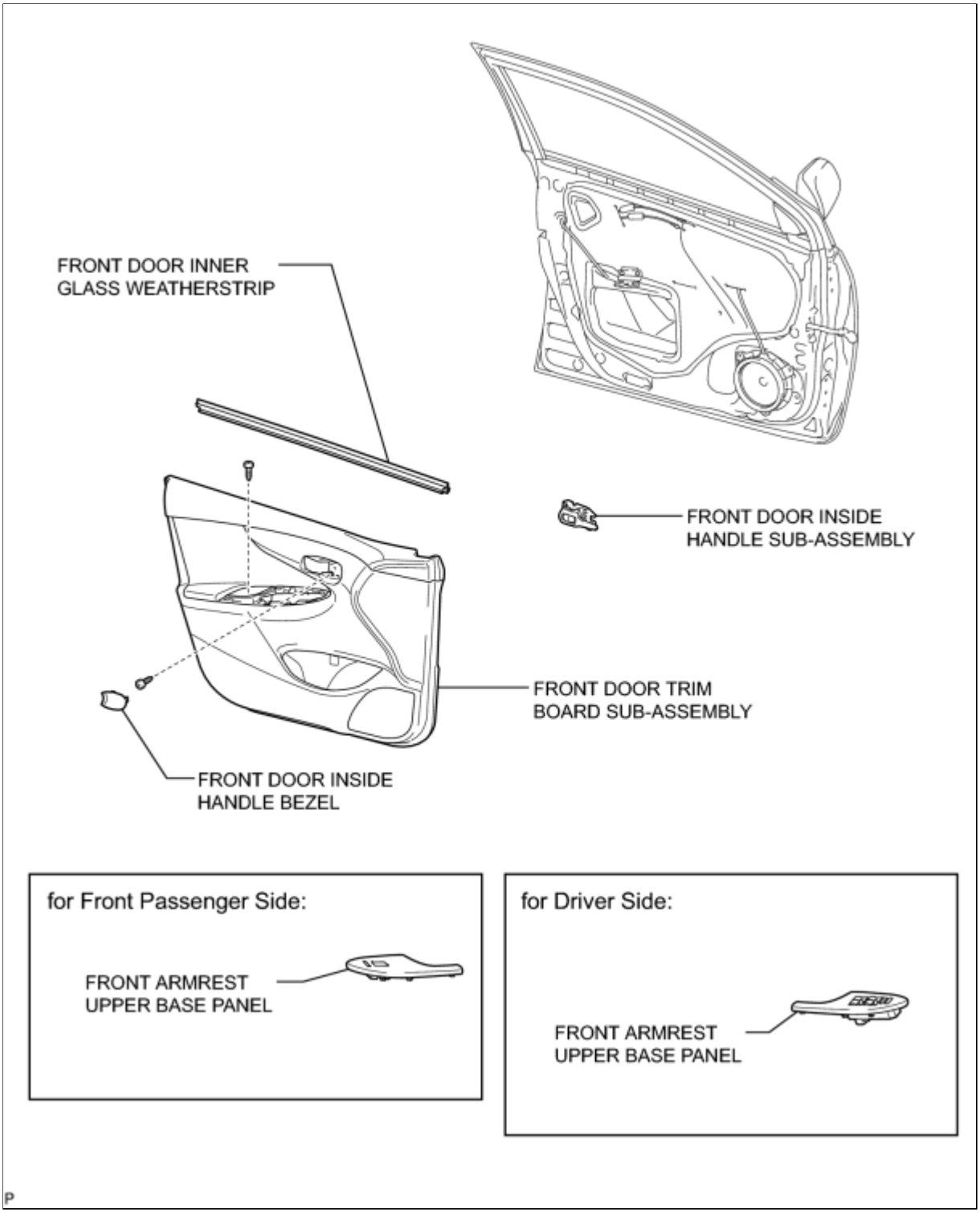

ILLUSTRATION

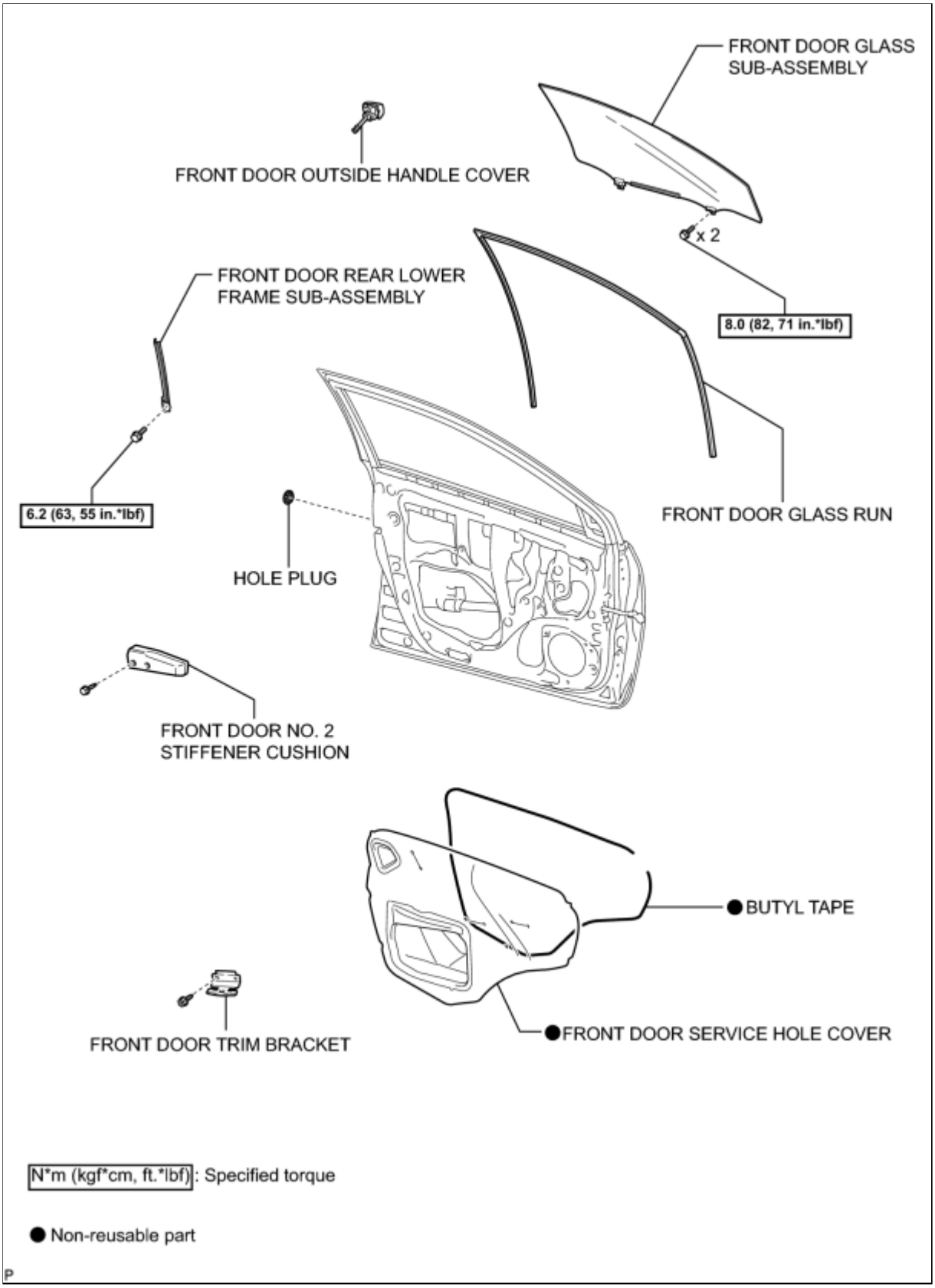

ILLUSTRATION

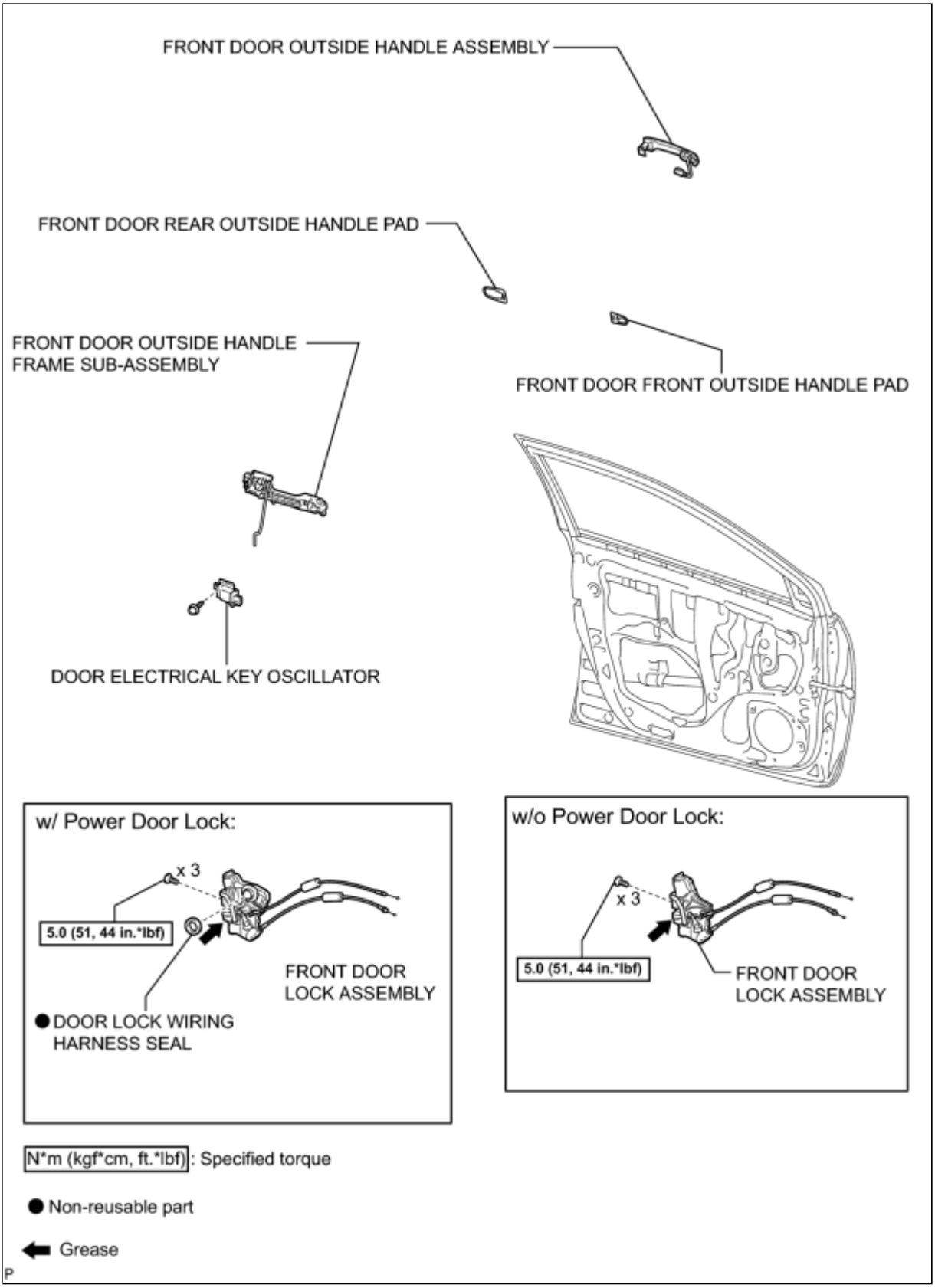
FRONT DOOR OUTSIDE HANDLE ASSEMBLY
FRONT DOOR REAR OUTSIDE HANDLE PAD
FRONT DOOR OUTSIDE HANDLE FRAME SUB-ASSEMBLY
FRONT DOOR FRONT OUTSIDE HANDLE PAD
DOOR ELECTRICAL KEY OSCILLATOR
w/ Power Door Lock:
x 3
5.0 (51, 44 in.*lbf)
FRONT DOOR LOCK ASSEMBLY
● DOOR LOCK WIRING HARNESS SEAL
w/o Power Door Lock:
x 3
5.0 (51, 44 in.*lbf)
FRONT DOOR LOCK ASSEMBLY
N*m (kgf*cm, ft.*lbf): Specified torque
● Non-reusable part
Grease

Last Modified: 3-10-2010	6.4 A	**From:** 200901
Model Year: 2010	**Model:** Corolla	**Doc ID:** RM0000011QF02VX
Title: THEFT DETERRENT / KEYLESS ENTRY: ELECTRICAL KEY OSCILLATOR (for Front Door): REMOVAL (2010 Corolla)		

REMOVAL

1. REMOVE FRONT DOOR INSIDE HANDLE BEZEL INFO

2. REMOVE FRONT ARMREST UPPER BASE PANEL INFO

3. REMOVE FRONT DOOR TRIM BOARD SUB-ASSEMBLY INFO

4. REMOVE FRONT DOOR INSIDE HANDLE SUB-ASSEMBLY INFO

5. REMOVE FRONT DOOR INNER GLASS WEATHERSTRIP INFO

6. REMOVE FRONT DOOR TRIM BRACKET INFO

7. REMOVE FRONT DOOR SERVICE HOLE COVER INFO

8. REMOVE FRONT DOOR GLASS SUB-ASSEMBLY INFO

9. REMOVE FRONT DOOR NO. 2 STIFFENER CUSHION INFO

10. REMOVE FRONT DOOR GLASS RUN INFO

11. REMOVE FRONT DOOR REAR LOWER FRAME SUB-ASSEMBLY INFO

12. REMOVE FRONT DOOR OUTSIDE HANDLE COVER INFO

13. REMOVE FRONT DOOR OUTSIDE HANDLE ASSEMBLY INFO

14. REMOVE FRONT DOOR FRONT OUTSIDE HANDLE PAD INFO

15. REMOVE FRONT DOOR REAR OUTSIDE HANDLE PAD INFO

16. REMOVE FRONT DOOR LOCK ASSEMBLY (w/o Power Door Lock) INFO

17. REMOVE FRONT DOOR LOCK ASSEMBLY (w/ Power Door Lock) INFO

18. REMOVE FRONT DOOR OUTSIDE HANDLE FRAME SUB-ASSEMBLY INFO

19. REMOVE DOOR ELECTRICAL KEY OSCILLATOR

(a) Remove the screw and the door electrical key oscillator.

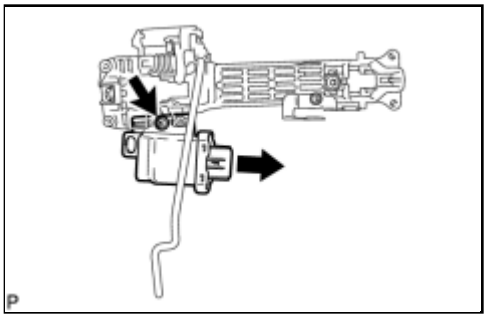
P

Last Modified: 3-10-2010	6.4 A	**From:** 200901
Model Year: 2010	**Model:** Corolla	**Doc ID:** RM0000011QG02VX
Title: THEFT DETERRENT / KEYLESS ENTRY: ELECTRICAL KEY OSCILLATOR (for Front Door): INSTALLATION (2010 Corolla)		

INSTALLATION

1. INSTALL DOOR ELECTRICAL KEY OSCILLATOR

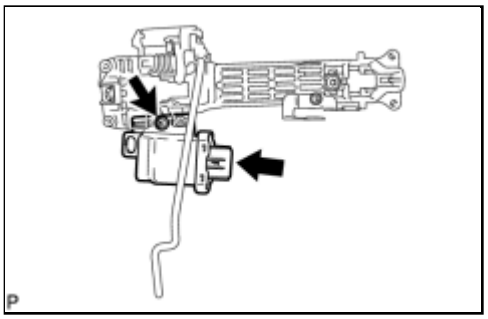

(a) Install the door electrical key oscillator with the screw.

2. INSTALL FRONT DOOR OUTSIDE HANDLE FRAME SUB-ASSEMBLY INFO

3. INSTALL FRONT DOOR LOCK ASSEMBLY (w/o Power Door Lock) INFO

4. INSTALL FRONT DOOR LOCK ASSEMBLY (w/ Power Door Lock) INFO

5. INSTALL FRONT DOOR REAR OUTSIDE HANDLE PAD INFO

6. INSTALL FRONT DOOR FRONT OUTSIDE HANDLE PAD INFO

7. INSTALL FRONT DOOR OUTSIDE HANDLE ASSEMBLY INFO

8. INSTALL FRONT DOOR OUTSIDE HANDLE COVER INFO

9. INSTALL FRONT DOOR REAR LOWER FRAME SUB-ASSEMBLY INFO

10. INSTALL FRONT DOOR GLASS RUN INFO

11. INSTALL FRONT DOOR NO. 2 STIFFENER CUSHION INFO

12. INSTALL FRONT DOOR GLASS SUB-ASSEMBLY INFO

13. INSTALL FRONT DOOR SERVICE HOLE COVER INFO

14. INSTALL FRONT DOOR TRIM BRACKET INFO

15. INSTALL FRONT DOOR INNER GLASS WEATHERSTRIP INFO

16. INSTALL FRONT DOOR INSIDE HANDLE SUB-ASSEMBLY INFO

17. INSTALL FRONT DOOR TRIM BOARD SUB-ASSEMBLY INFO

18. INSTALL FRONT ARMREST UPPER BASE PANEL INFO

19. INSTALL FRONT DOOR INSIDE HANDLE BEZEL INFO

Last Modified: 3-10-2010	6.4 K	**From:** 200901
Model Year: 2010	**Model:** Corolla	**Doc ID:** RM000002XQ600GX
Title: THEFT DETERRENT / KEYLESS ENTRY: ELECTRICAL KEY OSCILLATOR (for Front Side): COMPONENTS (2010 Corolla)		

COMPONENTS

ILLUSTRATION

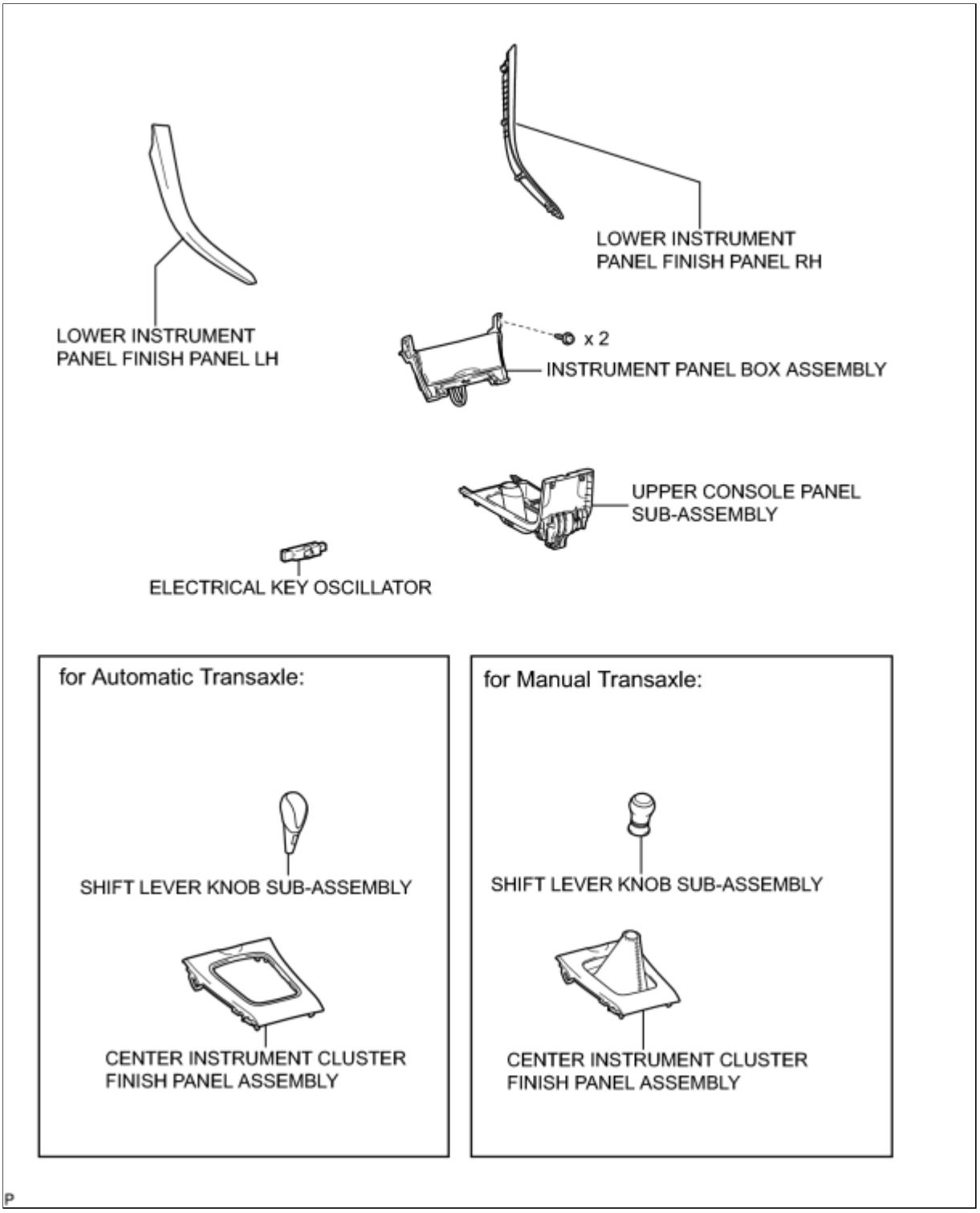
LOWER INSTRUMENT
PANEL FINISH PANEL RH
LOWER INSTRUMENT
PANEL FINISH PANEL LH
x 2
INSTRUMENT PANEL BOX ASSEMBLY
UPPER CONSOLE PANEL
SUB-ASSEMBLY
ELECTRICAL KEY OSCILLATOR
for Automatic Transaxle:
SHIFT LEVER KNOB SUB-ASSEMBLY
CENTER INSTRUMENT CLUSTER
FINISH PANEL ASSEMBLY
for Manual Transaxle:
SHIFT LEVER KNOB SUB-ASSEMBLY
CENTER INSTRUMENT CLUSTER
FINISH PANEL ASSEMBLY

P

Last Modified: 3-10-2010	6.4 A	**From:** 200901
Model Year: 2010	**Model:** Corolla	**Doc ID:** RM000002XWJ00OX
Title: THEFT DETERRENT / KEYLESS ENTRY: ELECTRICAL KEY OSCILLATOR (for Front Side): REMOVAL (2010 Corolla)		

REMOVAL

1. **REMOVE LOWER INSTRUMENT PANEL FINISH PANEL LH** INFO
2. **REMOVE LOWER INSTRUMENT PANEL FINISH PANEL RH** INFO
3. **REMOVE SHIFT LEVER KNOB SUB-ASSEMBLY (for Manual Transaxle)** INFO
4. **REMOVE SHIFT LEVER KNOB SUB-ASSEMBLY (for Automatic Transaxle)** INFO
5. **REMOVE CENTER INSTRUMENT CLUSTER FINISH PANEL ASSEMBLY (for Manual Transaxle)** INFO
6. **REMOVE CENTER INSTRUMENT CLUSTER FINISH PANEL ASSEMBLY (for Automatic Transaxle)** INFO
7. **REMOVE INSTRUMENT PANEL BOX ASSEMBLY** INFO
8. **REMOVE UPPER CONSOLE PANEL SUB-ASSEMBLY** INFO
9. **REMOVE ELECTRICAL KEY OSCILLATOR**

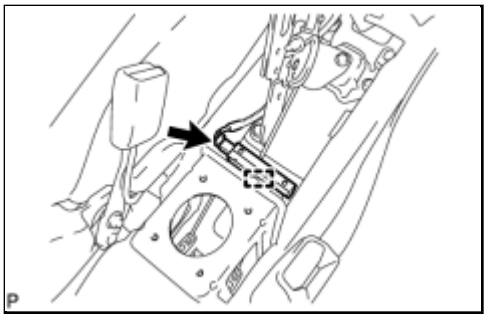

(a) Disconnect the connector.

(b) Disengage the clamp and remove the electrical key oscillator.

Last Modified: 3-10-2010	6.4 A	**From:** 200901
Model Year: 2010	**Model:** Corolla	**Doc ID:** RM0000030OB00JX
Title: THEFT DETERRENT / KEYLESS ENTRY: ELECTRICAL KEY OSCILLATOR (for Front Side): INSTALLATION (2010 Corolla)		

INSTALLATION

1. INSTALL ELECTRICAL KEY OSCILLATOR

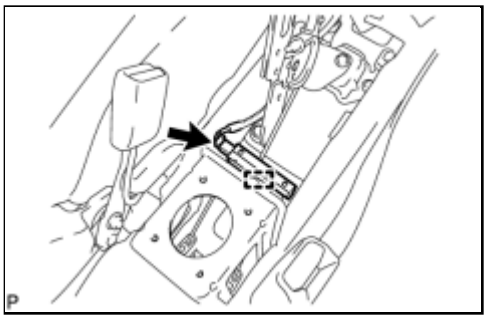

(a) Disconnect the connector.

(b) Remove the bolt and the indoor electrical key oscillator.

2. INSTALL UPPER CONSOLE PANEL SUB-ASSEMBLY INFO

3. INSTALL INSTRUMENT PANEL BOX ASSEMBLY INFO

4. INSTALL CENTER INSTRUMENT CLUSTER FINISH PANEL ASSEMBLY (for Automatic Transaxle) INFO

5. INSTALL CENTER INSTRUMENT CLUSTER FINISH PANEL ASSEMBLY (for Manual Transaxle) INFO

6. INSTALL SHIFT LEVER KNOB SUB-ASSEMBLY (for Automatic Transaxle) INFO

7. INSTALL SHIFT LEVER KNOB SUB-ASSEMBLY (for Manual Transaxle) INFO

8. INSTALL LOWER INSTRUMENT PANEL FINISH PANEL LH INFO

9. INSTALL LOWER INSTRUMENT PANEL FINISH PANEL RH INFO

Last Modified: 3-10-2010	6.4 K	**From:** 200901
Model Year: 2010	**Model:** Corolla	**Doc ID:** RM0000030OD00CX
Title: THEFT DETERRENT / KEYLESS ENTRY: ELECTRICAL KEY OSCILLATOR (for Luggage Compartment): COMPONENTS (2010 Corolla)		

COMPONENTS

ILLUSTRATION

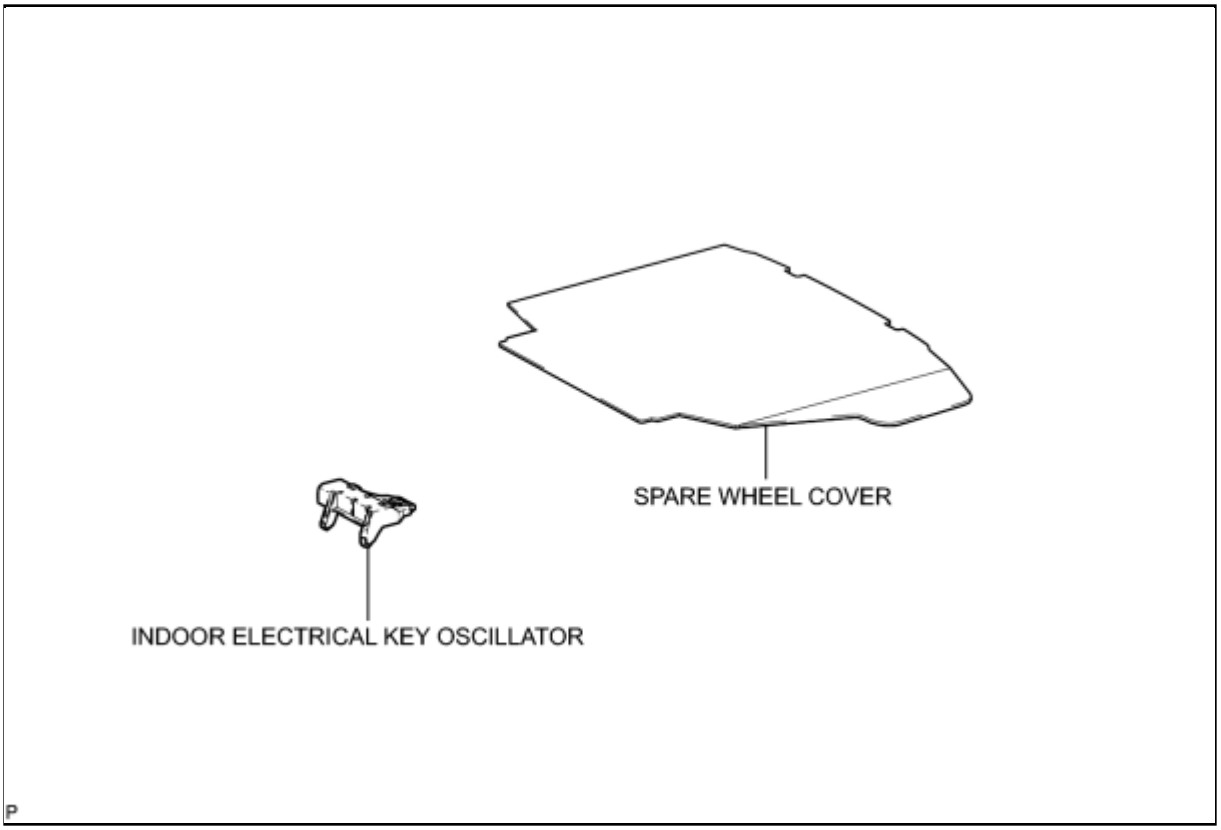

Last Modified: 3-10-2010	6.4 A	**From:** 200901
Model Year: 2010	**Model:** Corolla	**Doc ID:** RM0000030OE00CX
Title: THEFT DETERRENT / KEYLESS ENTRY: ELECTRICAL KEY OSCILLATOR (for Luggage Compartment): REMOVAL (2010 Corolla)		

REMOVAL

1. REMOVE SPARE WHEEL COVER INFO

2. REMOVE INDOOR ELECTRICAL KEY OSCILLATOR

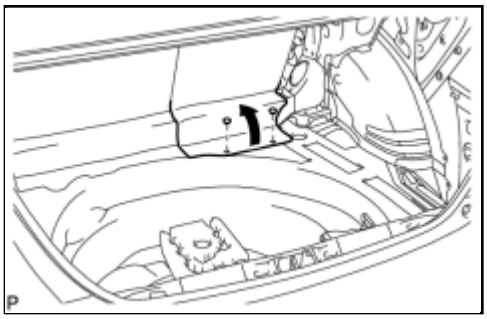

(a) Disengage the 2 clips and pull the rear seat back cover off.

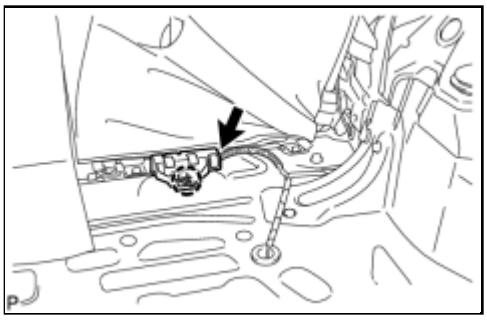

(b) Disengage the claw and remove the indoor electrical key oscillator.

(c) Disconnect the connector and remove the indoor electrical key oscillator.

Last Modified: 3-10-2010	6.4 A	**From:** 200901
Model Year: 2010	**Model:** Corolla	**Doc ID:** RM0000030OC00CX
Title: THEFT DETERRENT / KEYLESS ENTRY: ELECTRICAL KEY OSCILLATOR (for Luggage Compartment): INSTALLATION (2010 Corolla)		

INSTALLATION

1. INSTALL INDOOR ELECTRICAL KEY OSCILLATOR

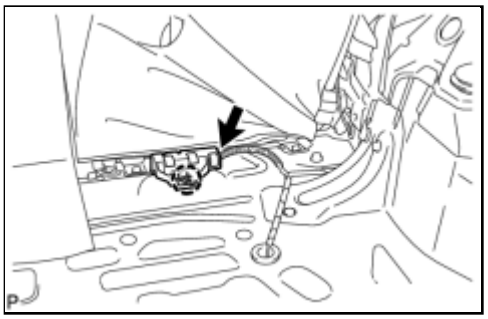

(a) Connect the connector.

(b) Engage the claw and install the indoor electrical key oscillator.

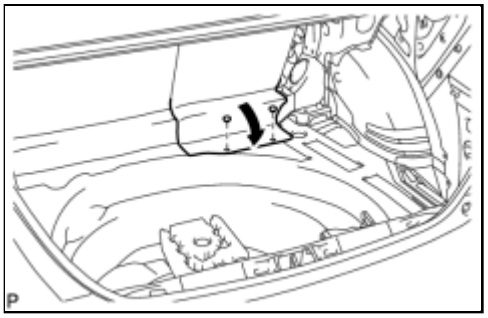

(c) Install the seat back cover with the 2 clips.

2. INSTALL SPARE WHEEL COVER INFO

Last Modified: 3-10-2010	6.4 K	**From:** 200901
Model Year: 2010	**Model:** Corolla	**Doc ID:** RM000002XQC00GX
Title: THEFT DETERRENT / KEYLESS ENTRY: ELECTRICAL KEY OSCILLATOR (for Outside Luggage Compartment): COMPONENTS (2010 Corolla)		

COMPONENTS

ILLUSTRATION

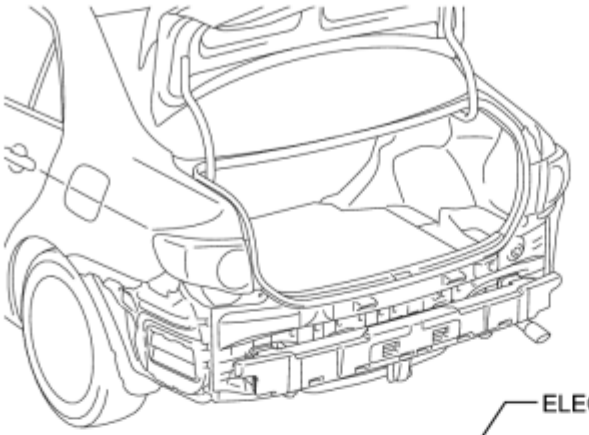

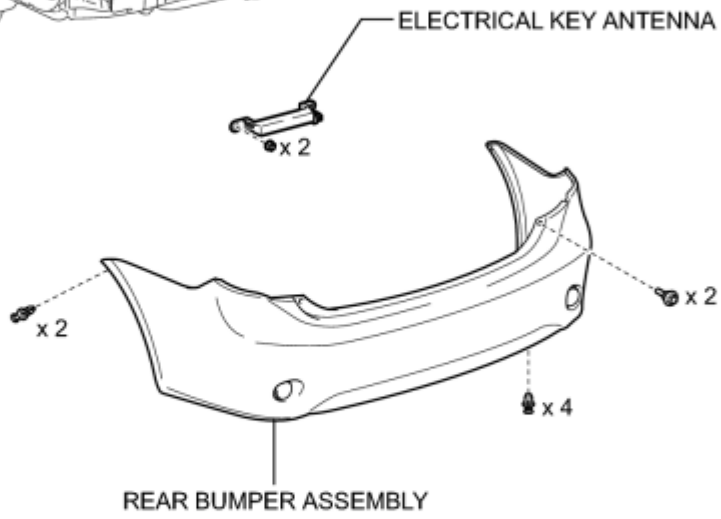

w/ Rear Fender Mudguard:



P

Last Modified: 3-10-2010	6.4 A	**From:** 200901
Model Year: 2010	**Model:** Corolla	**Doc ID:** RM000002XQD00HX
Title: THEFT DETERRENT / KEYLESS ENTRY: ELECTRICAL KEY OSCILLATOR (for Outside Luggage Compartment): REMOVAL (2010 Corolla)		

REMOVAL

1. REMOVE REAR QUARTER PANEL MUDGUARD LH (w/ Rear Fender Mudguard) INFO

2. REMOVE REAR QUARTER PANEL MUDGUARD RH (w/ Rear Fender Mudguard) INFO

3. REMOVE REAR BUMPER ASSEMBLY INFO

4. REMOVE ELECTRICAL KEY ANTENNA

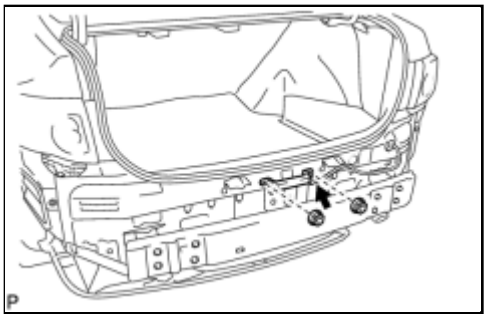

(a) Disconnect the connector.

(b) Remove the 2 nuts and the electrical key antenna.

Last Modified: 3-10-2010	6.4 A	**From:** 200901
Model Year: 2010	**Model:** Corolla	**Doc ID:** RM000002XQB00GX
Title: THEFT DETERRENT / KEYLESS ENTRY: ELECTRICAL KEY OSCILLATOR (for Outside Luggage Compartment): INSTALLATION (2010 Corolla)		

INSTALLATION

1. INSTALL ELECTRICAL KEY ANTENNA

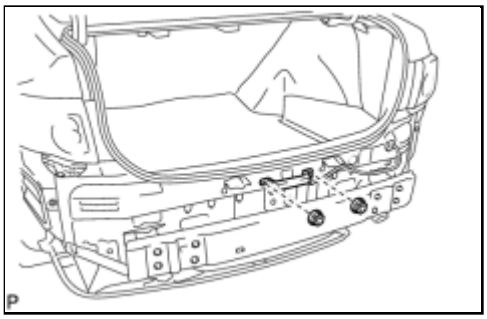

(a) Install the electrical key antenna with the 2 nuts.

(b) Connect the connector.

2. INSTALL REAR BUMPER ASSEMBLY INFO

3. INSTALL REAR QUARTER PANEL MUDGUARD LH (w/ Rear Fender Mudguard) INFO

4. INSTALL REAR QUARTER PANEL MUDGUARD RH (w/ Rear Fender Mudguard) INFO

Last Modified: 3-10-2010	6.4 K	**From:** 200901
Model Year: 2010	**Model:** Corolla	**Doc ID:** RM000002XQ900HX
Title: THEFT DETERRENT / KEYLESS ENTRY: ELECTRICAL KEY OSCILLATOR (for Rear Side): COMPONENTS (2010 Corolla)		

COMPONENTS

ILLUSTRATION

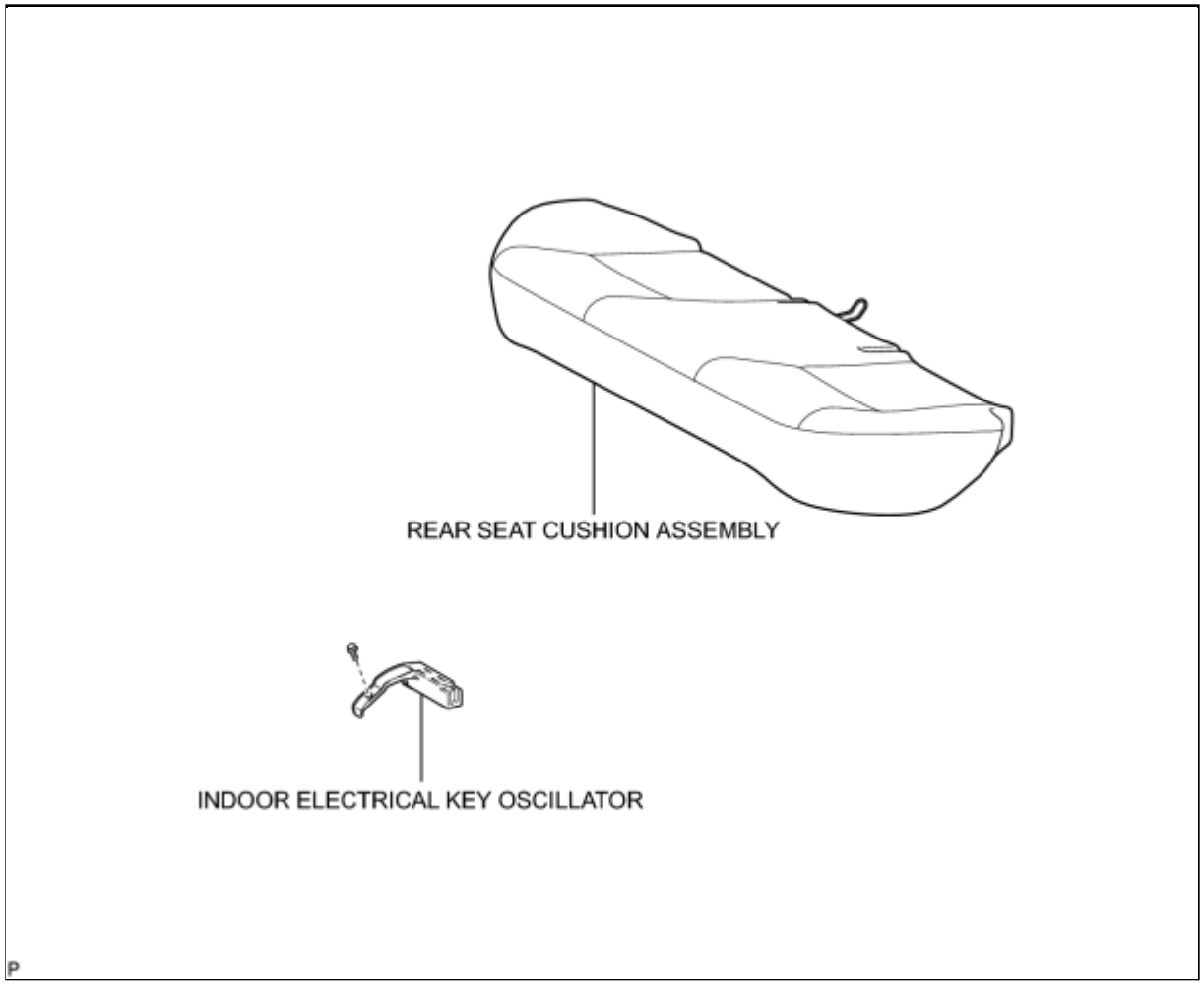

Last Modified: 3-10-2010	6.4 A	**From:** 200901
Model Year: 2010	**Model:** Corolla	**Doc ID:** RM000002XQA00HX
Title: THEFT DETERRENT / KEYLESS ENTRY: ELECTRICAL KEY OSCILLATOR (for Rear Side): REMOVAL (2010 Corolla)		

REMOVAL

1. REMOVE REAR SEAT CUSHION ASSEMBLY INFO

2. REMOVE INDOOR ELECTRICAL KEY OSCILLATOR

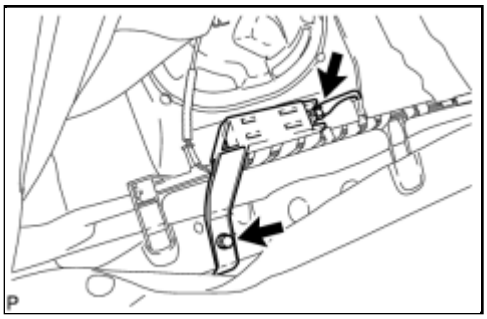

(a) Disconnect the connector.

(b) Remove the bolt and the indoor electrical key oscillator.

Last Modified: 3-10-2010	6.4 A	**From:** 200901
Model Year: 2010	**Model:** Corolla	**Doc ID:** RM000002XQ800HX
Title: THEFT DETERRENT / KEYLESS ENTRY: ELECTRICAL KEY OSCILLATOR (for Rear Side): INSTALLATION (2010 Corolla)		

INSTALLATION

1. INSTALL INDOOR ELECTRICAL KEY OSCILLATOR

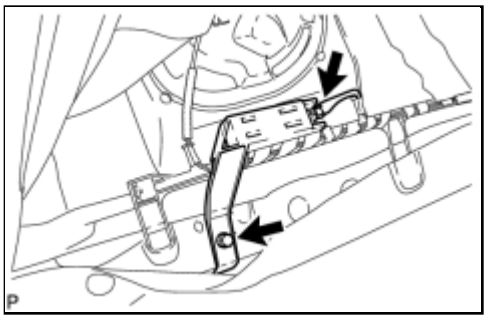

(a) Install the indoor electrical key oscillator with the bolt.

(b) Connect the connector.

2. INSTALL REAR SEAT CUSHION ASSEMBLY INFO

Last Modified: 3-10-2010	6.4 K	**From:** 200901
Model Year: 2010	**Model:** Corolla	**Doc ID:** RM000000Y5402CX
Title: THEFT DETERRENT / KEYLESS ENTRY: ENGINE HOOD COURTESY SWITCH: COMPONENTS (2010 Corolla)		

COMPONENTS

ILLUSTRATION

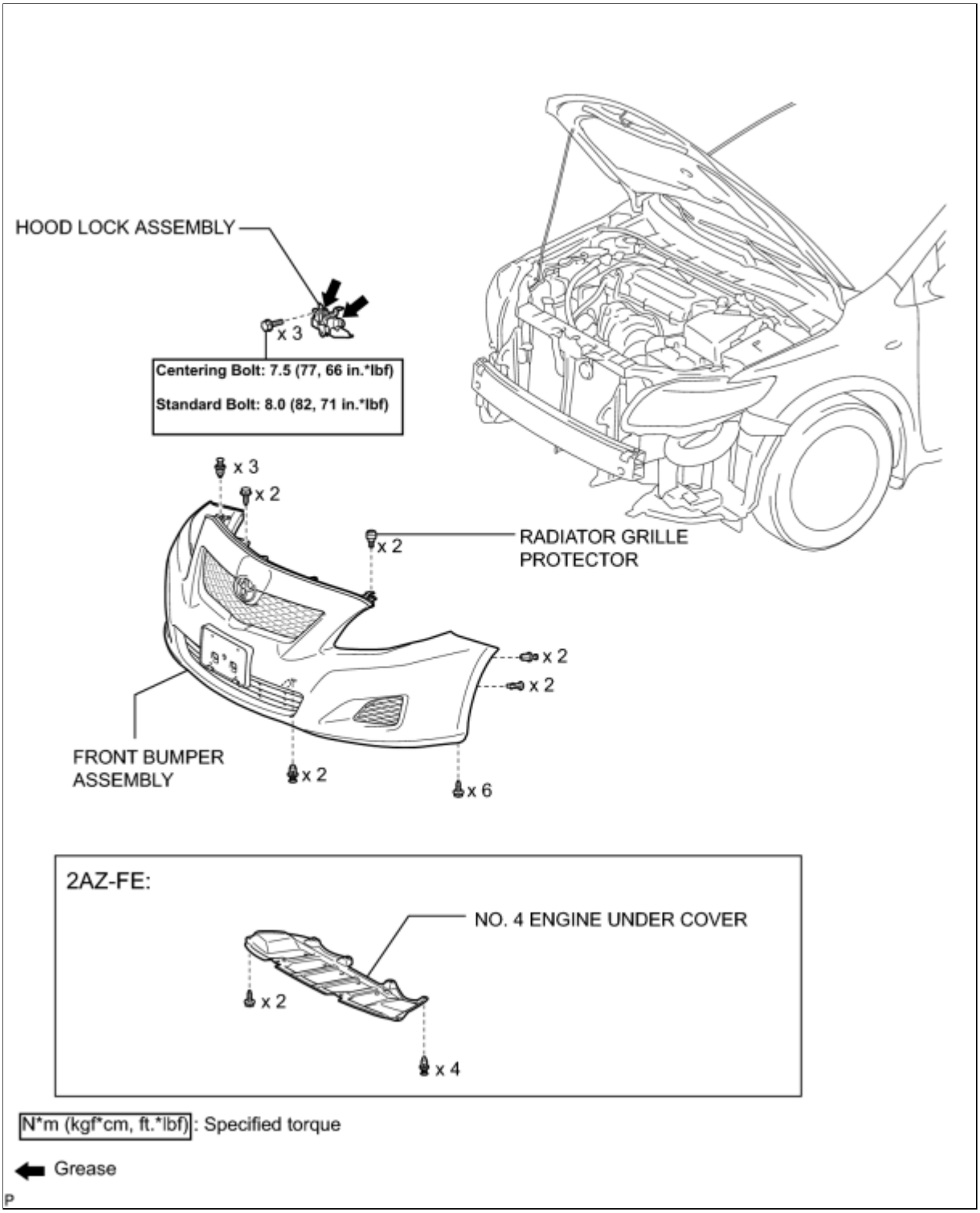
HOOD LOCK ASSEMBLY
x 3
Centering Bolt: 7.5 (77, 66 in.*lbf)
Standard Bolt: 8.0 (82, 71 in.*lbf)
x 3
x 2
x 2
RADIATOR GRILLE PROTECTOR
x 2
x 2
FRONT BUMPER ASSEMBLY
x 2
x 6
2AZ-FE:
NO. 4 ENGINE UNDER COVER
x 2
x 4
N*m (kgf*cm, ft.*lbf): Specified torque
Grease

P

Last Modified: 3-10-2010	6.4 A	**From:** 200901
Model Year: 2010	**Model:** Corolla	**Doc ID:** RM000000Y5502WX
Title: THEFT DETERRENT / KEYLESS ENTRY: ENGINE HOOD COURTESY SWITCH: REMOVAL (2010 Corolla)		

REMOVAL

1. REMOVE RADIATOR GRILLE PROTECTOR INFO

2. REMOVE NO. 4 ENGINE UNDER COVER (for 2AZ-FE) INFO

3. REMOVE FRONT BUMPER ASSEMBLY INFO

4. REMOVE HOOD LOCK ASSEMBLY

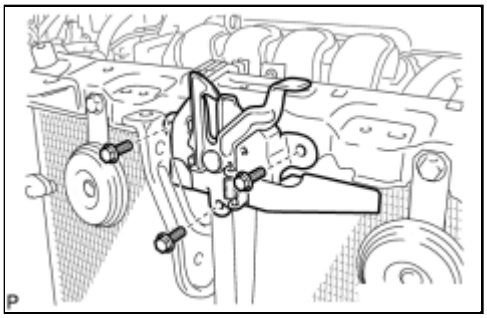

(a) Remove the 3 bolts from the hood lock assembly.

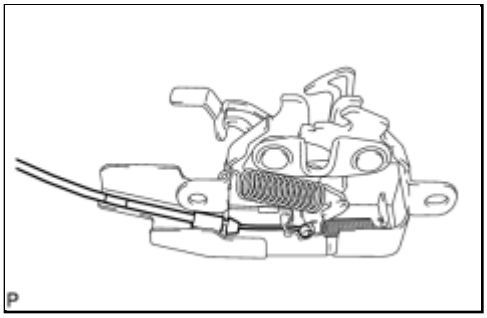

(b) Disconnect the hood lock control cable and remove the hood lock assembly.

Last Modified: 3-10-2010	6.4 A	**From:** 200901
Model Year: 2010	**Model:** Corolla	**Doc ID:** RM000000Y53031X
Title: THEFT DETERRENT / KEYLESS ENTRY: ENGINE HOOD COURTESY SWITCH: INSTALLATION (2010 Corolla)		

INSTALLATION

1. INSTALL HOOD LOCK ASSEMBLY

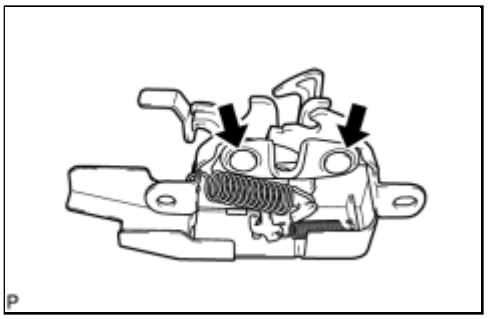

(a) Apply MP grease to the sliding areas of the lock.

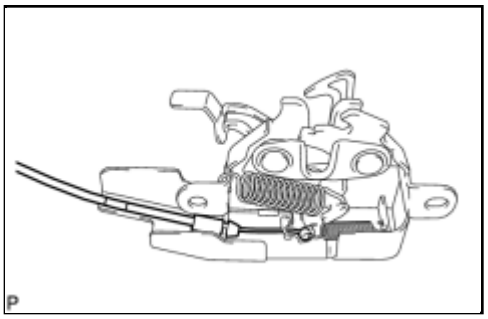

(b) Connect the hood lock control cable.

(c) Install the hood lock assembly with the 3 bolts.

Centering Bolt - Torque: 7.5 N·m (77 kgf·cm, 66in·lbf)
Standard Bolt - Torque: 8.0 N·m (82 kgf·cm, 71in·lbf)

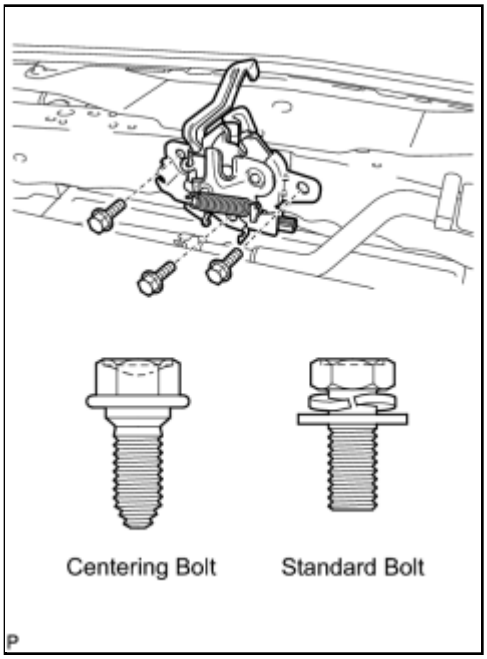

2. INSPECT HOOD SUB-ASSEMBLY INFO

3. ADJUST HOOD SUB-ASSEMBLY INFO

4. INSTALL FRONT BUMPER ASSEMBLY INFO

5. INSTALL NO. 4 ENGINE UNDER COVER (for 2AZ-FE) INFO

6. INSTALL RADIATOR GRILLE PROTECTOR INFO

7. VEHICLE PREPARATION FOR FOG LIGHT AIMING (w/ Fog Light) INFO

8. PREPARATION FOR FOG LIGHT AIMING (w/ Fog Light) INFO

9. INSPECT FOG LIGHT AIMING (w/ Fog Light) INFO

10. ADJUST FOG LIGHT AIMING (w/ Fog Light) INFO

Last Modified: 3-10-2010	6.4 L	**From:** 200901
Model Year: 2010	**Model:** Corolla	**Doc ID:** RM000000PVN02XX
Title: THEFT DETERRENT / KEYLESS ENTRY: ENGINE IMMOBILISER SYSTEM (w/ Smart Key System): PRECAUTION (2010 Corolla)		

PRECAUTION

1. PRECAUTIONS WHEN USING TECHSTREAM

(a) When using the Techstream to troubleshoot the smart key system: Connect the Techstream to the DLC3 while the engine switch is off, and turn a door courtesy light switch on and off at 1.5-second intervals until communication between the Techstream and vehicle begins.

2. PRECAUTIONS FOR EACH FUNCTION

(a) Precautions for the key:

- The key is a precision instrument. Be sure to observe the following:

  (1) Do not drop or strike the key.

  (2) Do not keep the key in a high temperature area for a long time.

  (3) Do not use an ultrasonic washing machine to clean the key.

  (4) Keep the key away from magnets or magnetized items during use.

  (5) Do not attach any stickers to the key.

(b) Precautions for the engine start function:

(1) Before starting the engine, firmly depress the brake pedal until the indicator of the engine switch illuminates in green.

(2) Be sure to turn the engine switch off before disconnecting the cable from the negative (-) battery terminal. When the battery terminal is disconnected, the power source mode (off, on (ACC), on (IG)) will remain in memory. When the vehicle battery becomes discharged, be sure to remember the power source mode.

(3) After the battery is removed and reinstalled, be sure to wait 10 seconds or more before starting the engine. The engine may not start immediately after the battery is reinstalled.

(c) Precautions for the battery built into the key and the vehicle battery:

(1) When the doors are locked (locked state), signals are emitted by the vehicle at predetermined intervals. If the vehicle remains parked for a long time, the battery may become discharged. To prevent this, periodically charge the vehicle battery, or disable the smart key system.

(2) When the doors are locked (locked state), and the key remains in the door oscillator detection area, the system will maintain periodic communication with the key. If the vehicle remains parked in this state for a long time, the vehicle and key batteries may become discharged. If the vehicle is not being used, keep the key at least 2 m (6.56 ft.) away from the vehicle.

Last Modified: 3-10-2010	6.4 R	**From:** 200901
Model Year: 2010	**Model:** Corolla	**Doc ID:** RM000001W2100XX
Title: THEFT DETERRENT / KEYLESS ENTRY: ENGINE IMMOBILISER SYSTEM (w/ Smart Key System): PARTS LOCATION (2010 Corolla)		

PARTS LOCATION

ILLUSTRATION

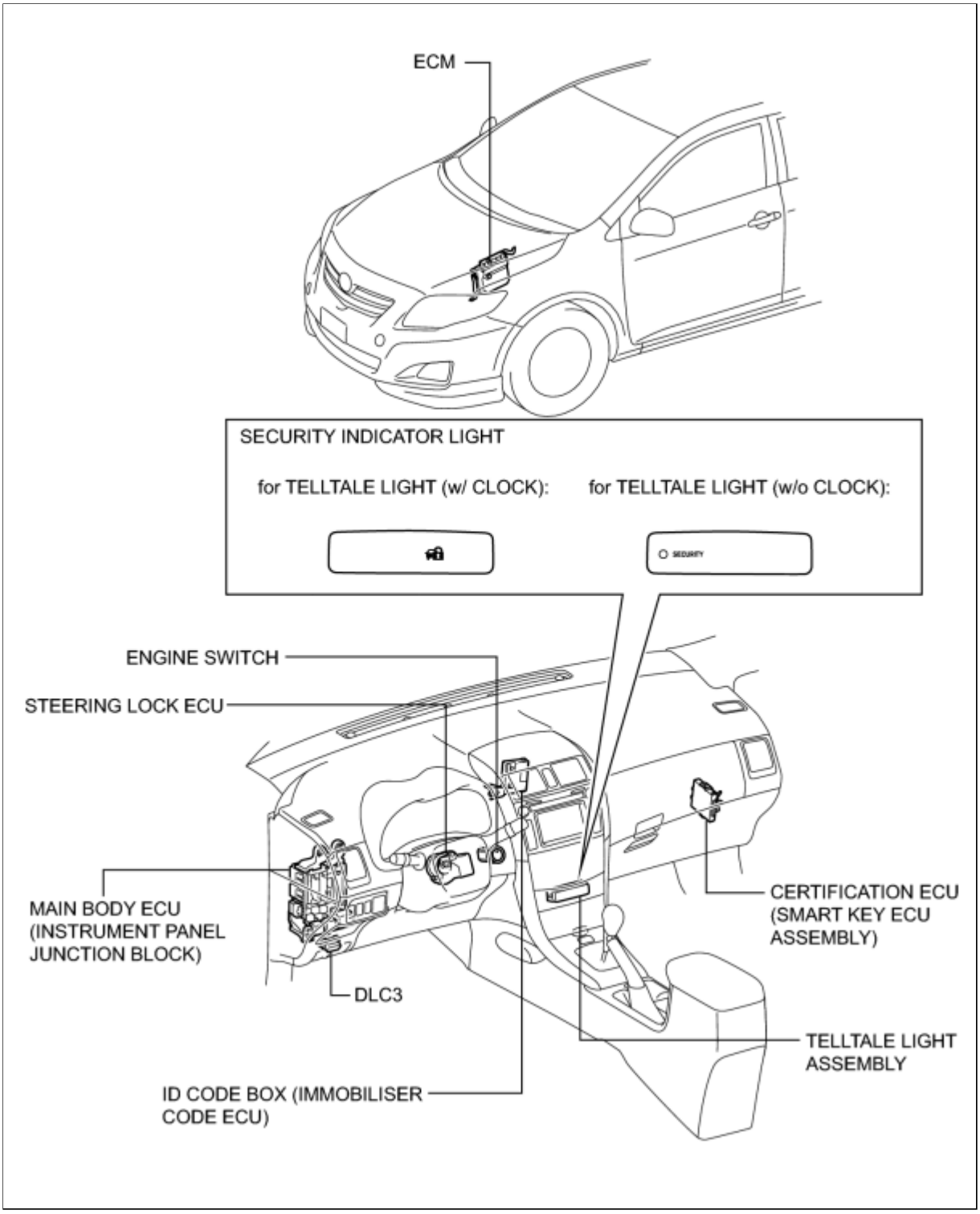
ECM
SECURITY INDICATOR LIGHT
for TELLTALE LIGHT (w/ CLOCK):
for TELLTALE LIGHT (w/o CLOCK):
SECURITY
ENGINE SWITCH
STEERING LOCK ECU
MAIN BODY ECU (INSTRUMENT PANEL JUNCTION BLOCK)
DLC3
ID CODE BOX (IMMOBILISER CODE ECU)
CERTIFICATION ECU (SMART KEY ECU ASSEMBLY)
TELLTALE LIGHT ASSEMBLY

Last Modified: 3-10-2010	6.4 U	**From:** 200901
Model Year: 2010	**Model:** Corolla	**Doc ID:** RM000000QYD02UX
Title: THEFT DETERRENT / KEYLESS ENTRY: ENGINE IMMOBILISER SYSTEM (w/ Smart Key System): SYSTEM DIAGRAM (2010 Corolla)		

SYSTEM DIAGRAM

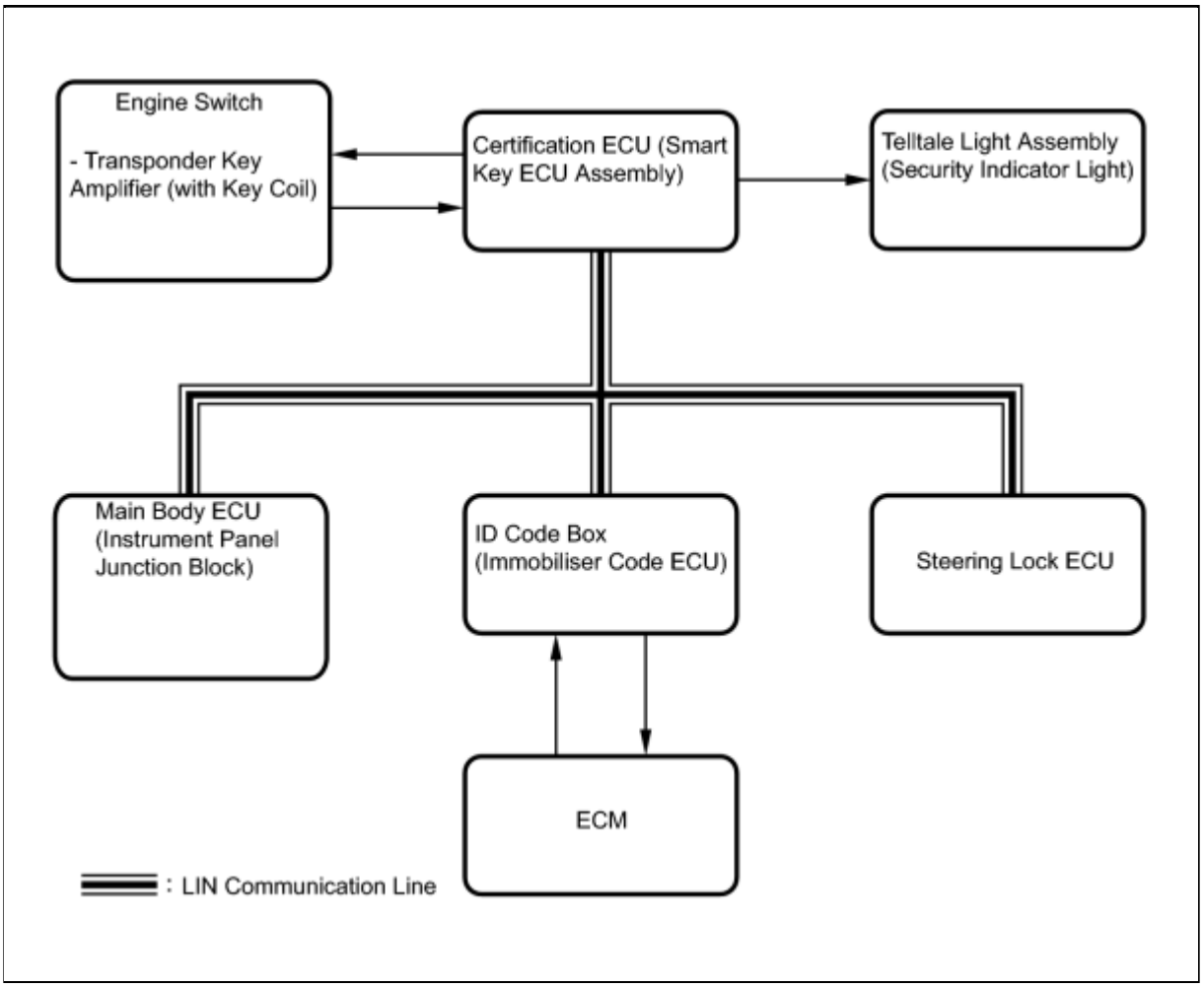

Communication Table

TRANSMITTING ECU (TRANSMITTER)	RECEIVING ECU (RECEIVER)	SIGNAL	COMMUNICATION METHOD
Steering lock ECU	• Certification ECU (Smart Key ECU Assembly) • ID code box (Immobiliser Code ECU)	Steering lock request signal	LIN
		Steering unlock signal	
		Steering lock confirmation signal	

TRANSMITTING ECU (TRANSMITTER)	RECEIVING ECU (RECEIVER)	SIGNAL	COMMUNICATION METHOD
		Steering unlock confirmation signal	
		Diagnosis response signal	
		Steering unlock drive relay signal	
		Steering lock drive relay signal	
		Steering lock motor operation signal	
ID code box (Immobiliser Code ECU)	Certification ECU (Smart Key ECU Assembly)	Matching request random number signal	LIN
		EEPROM access malfunction signal	
		Model code matching signal	
		Model code mismatching signal	
		ECM code receiving status signal	
		Engine start permission request signal	
		Engine start permission response signal	
		S code matching result signal	
		S code registration status signal	
		S code registration mode signal	
		L code matching result signal	
		ECM communication signal	
		Registered key number response	

TRANSMITTING ECU (TRANSMITTER)	RECEIVING ECU (RECEIVER)	SIGNAL	COMMUNICATION METHOD
		signal	
		Diagnosis mode switching signal	
		DTC (B2791) signal	
		Registered key number signal	
ID code box (Immobiliser Code ECU)	Steering lock ECU	Steering lock release signal	LIN
		Matching request random number signal	
Certification ECU (Smart Key ECU Assembly)	ID code box (Immobiliser Code ECU)	3 bit code request signal	LIN
		ID code matching result signal	
		Registered key number signal	
		Vehicle type handle signal	
Certification ECU (Smart Key ECU Assembly)	• ID code box (Immobiliser Code ECU) • Steering lock ECU	L code registration mode signal	LIN
		Diagnosis mode request signal	
		DTC clear request signal	
		L code registration status signal	
Main body ECU (Instrument panel junction block)	Certification ECU (Smart Key ECU Assembly)	Key code recognition signal	LIN

Last Modified: 3-10-2010	6.4 M	**From:** 200901
Model Year: 2010	**Model:** Corolla	**Doc ID:** RM000000QYF01NX
Title: THEFT DETERRENT / KEYLESS ENTRY: ENGINE IMMOBILISER SYSTEM (w/ Smart Key System): REGISTRATION (2010 Corolla)		

REGISTRATION

1. DESCRIPTION OF CODE REGISTRATION

HINT:

- The ID codes are the same as recognition codes for the wireless transmitter and the engine immobiliser function. Registering an ID code enables the smart key system, the wireless door lock control function and the engine immobiliser function to be operated.
- Code registration is necessary when the certification ECU (smart key ECU assembly), ID code box (immobiliser code ECU), steering lock ECU, or key is replaced with a new one.

(a) Vehicles with the smart key system do not have a key slot. Therefore, hold the key close to the engine switch to register the key, as shown in the illustration.

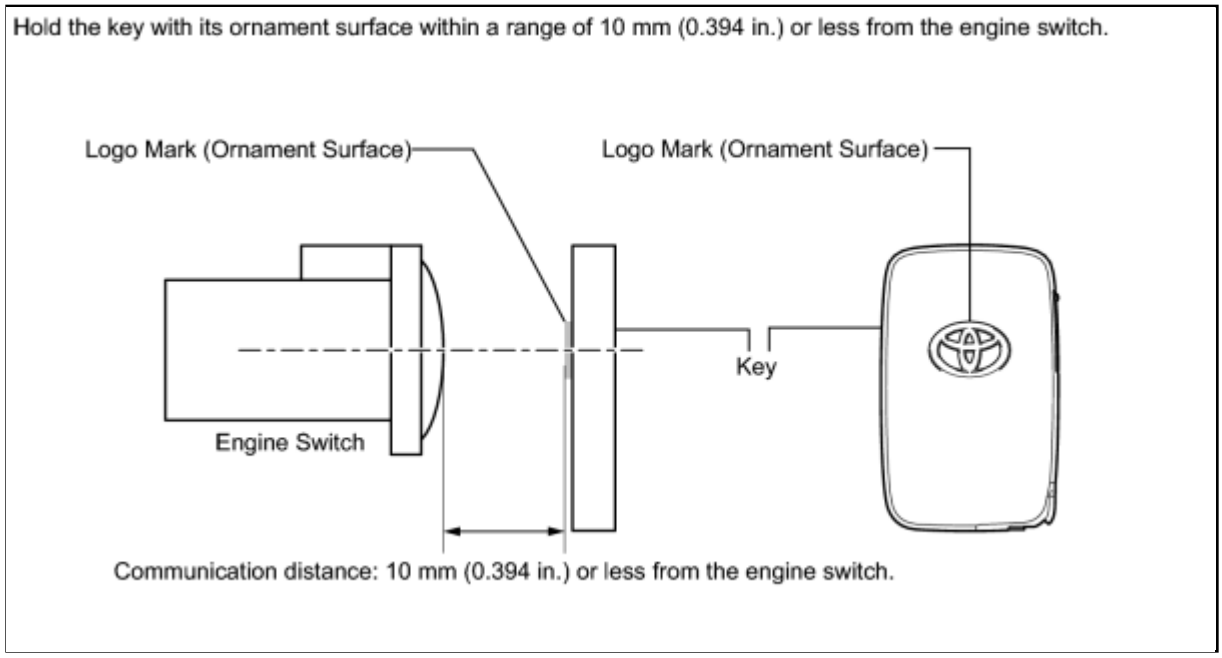

2. PART REPLACEMENT AND KEY REGISTRATION

(a) The following table shows ECU replacement and key registration procedures for cases in which a malfunctioning ECU has been identified through the troubleshooting of the smart key system.

HINT:

- The following procedures can be performed:

  New key ID registration

  Additional key ID registration

  Key ID erasure

All key ID erasure

ECU code registration

- If the customer has not brought all the registered keys, replacement of the ID code box (immobiliser code ECU) is also required.
- A maximum of 4 keys can be registered.

PART TO BE REPLACED	CONDITION		PROCEDURE	REFERENCE
Certification ECU (Smart key ECU assembly)	Customer has brought all keys		1. Replace certification ECU (smart key ECU assembly)	-
			2. Reregister all keys (New key ID registration)	PROCEDURE "B"
	Some keys are lost	Key ID codes can be registered and erased	1. Erase key codes (Key ID erasure)	PROCEDURE "D"
			2. Perform additional key registration procedure (Additional key ID registration)	PROCEDURE "C"
			3. Replace certification ECU (smart key ECU assembly)	-
			4. Reregister all keys (New key ID registration) **HINT:** **If some keys are not registered during the above steps, they will be disabled because they cannot be registered later.**	PROCEDURE "B"
		Key ID codes cannot be either registered or erased	1. Replace certification ECU (smart key ECU assembly)	-
			2. Replace ID code box (immobiliser code ECU)	-
			3. Reregister all keys (New key ID registration) **HINT:** **If key codes cannot be erased or additional keys cannot be registered due to a malfunction in the certification ECU (smart key ECU assembly), replace the ID code box (immobiliser code ECU) and certification ECU (smart key ECU assembly). If some keys are not registered during the above steps, they will be disabled because they cannot be registered later.**	PROCEDURE "A"
			4. Register ECU communication ID	PROCEDURE "G"

PART TO BE REPLACED	CONDITION	PROCEDURE	REFERENCE
Certification ECU (Smart key ECU assembly)	All keys are lost	1. Replace certification ECU (smart key ECU assembly)	-
		2. Replace ID code box (immobiliser code ECU)	-
		3. Reregister all keys (New key ID registration) **HINT:** **If key codes cannot be erased or additional keys cannot be registered due to a malfunction in the certification ECU (smart key ECU assembly), replace the ID code box (immobiliser code ECU) and certification ECU (smart key ECU assembly). If some keys are not registered during the above steps, they will be disabled because they cannot be registered later.**	PROCEDURE "A"
		4. Register ECU communication ID	PROCEDURE "G"
ID code box (Immobiliser code ECU)	Customer has brought at least 1 key	1. Replace ID code box (immobiliser code ECU)	-
		2. Register recognition codes in ECUs (ECU code registration)	PROCEDURE "F"
		3. Register ECU communication ID	PROCEDURE "G"
	All keys are lost	1. Replace ID code box (immobiliser code ECU)	-
		2. Replace certification ECU (smart key ECU assembly)	-
		3. Reregister all keys (New key ID registration) **HINT:** **If some keys are not registered during the above steps, they will be disabled because they cannot be registered later.**	PROCEDURE "A"
		4. Register ECU communication ID	PROCEDURE "G"
Steering lock ECU	Customer has brought at least 1 key	1. Replace steering lock ECU	-
		2. Register recognition codes in ECUs (ECU code registration)	PROCEDURE "F"

PART TO BE REPLACED	CONDITION	PROCEDURE	REFERENCE
	All keys are lost	1. Replace steering lock ECU	-
		2. Replace certification ECU (smart key ECU assembly)	-
		3. Replace ID code box (immobiliser code ECU)	-
		4. Reregister all keys (New key ID registration) **HINT:** **If some keys are not registered during the above steps, they will be disabled because they cannot be registered later.**	PROCEDURE "A"
		5. Register ECU communication ID	PROCEDURE "G"
Main body ECU (Instrument panel junction block)	No condition required	Replace main body ECU (instrument panel junction block)	-
ECM	No condition required	1. Replace ECM	-
		2. Register ECU communication ID	PROCEDURE "H"
Key (for replacement)	Customer has brought at least 1 key	1. Using remaining key, erase lost key code (Key ID erasure)	PROCEDURE "D"
		2. Register additional keys as necessary (Additional key ID registration)	PROCEDURE "C"
	All keys are lost	1. Erase all key codes (All key ID erasure)	PROCEDURE "E"
		2. Register all keys (New key ID registration) **HINT:** **If the customer brings lost keys at a later date, they can be registered using the additional key ID registration function.**	PROCEDURE "A"
Key (for addition)	Customer has brought at least 1 key **HINT:** **When adding keys (Additional**	1. Register additional keys as necessary (Additional key ID registration)	PROCEDURE "C"

PART TO BE REPLACED	CONDITION	PROCEDURE	REFERENCE
	registration)		

3. KEY REGISTRATION

(a) PROCEDURE "A"

New key ID registration (when replacing the certification ECU (smart key ECU assembly) and ID code box (immobiliser code ECU), or when replacing the certification ECU (smart key ECU assembly), ID code box (immobiliser code ECU) and steering lock ECU)

PROCESS	PROCEDURE
1. Start of registration	1. Connect the Techstream to DLC3 2. Turn the engine switch on (IG) 3. Enter the following menus: Body Electrical / Smart Key / Utility / Smart Code Registration **HINT:** **The engine switch cannot be turned on (IG) more than 10 times. After connecting the Techstream, turn the Techstream on while turning the driver's side door courtesy light switch on and off repeatedly at 1.5-second intervals or less to continue key registration procedure.**
2. Confirmation of ECU code	• Perform operation according to prompts on the Techstream screen **HINT:** **Mode is automatically selected by the Techstream (new registration mode or add mode).**
3. Verification of unregistered key*1	1. Hold the unregistered key close to the engine switch (For details, refer to "Description of Code Registration") 2. Confirm that the wireless door lock buzzer sounds once (short beep) 3. Place the unregistered key on the driver's seat 4. Confirm that the wireless door lock buzzer sounds once (short beep)
4. Registration of ID code	• Perform operation according to prompts on the Techstream screen
5. End of registration	• Finish new key ID code registration

- *1: Repeat this process for each key which is to be registered for the vehicle. Finish the procedure for each key within 30 seconds. If the procedure for any of the keys has not been finished within the specified time, perform the registration procedures again from process 1. Make sure that only 1 key is in the cabin during the registration procedures. If 2 or more keys are in the cabin simultaneously, electric waves will interfere with each other, preventing normal registration.

(b) PROCEDURE "B"

New key ID registration (when replacing the certification ECU (smart key ECU assembly))

PROCESS	PROCEDURE
1. Start of registration	1. Connect the Techstream to DLC3 2. Turn the engine switch on (IG) 3. Enter the following menus: Body Electrical / Smart Key / Utility / Smart Code Registration **HINT:** **The engine switch cannot be turned on (IG) more than 10 times. After connecting the Techstream, turn the Techstream on while turning the driver's side door courtesy light switch on and off repeatedly at 1.5-second intervals or less to continue key registration procedure.**
2. Confirmation of ECU code	• Perform operation according to prompts on the Techstream screen **HINT:** **Mode is automatically selected by the Techstream (new registration mode or add mode).**
3. Confirmation of all registered keys*1	1. Hold the registered key close to the engine switch (For details, refer to "Description of Code Registration") 2. Confirm that wireless door lock buzzer sounds once (short beep)
4. Confirmation of ECU code	• Perform operation according to prompts on the Techstream screen
5. Verification of unregistered key*2	1. Hold the unregistered key close to the engine switch (For details, refer to "Description of Code Registration") 2. Confirm that wireless door lock buzzer sounds once (short beep) 3. Place the unregistered key on the driver's seat 4. Confirm that the wireless door lock buzzer sounds once (short beep)
5. Registration of ID code	• Perform operation according to prompts on the Techstream screen
6. End of registration	• Finish new key ID code registration

- *1: Repeat this process for each key registered for the vehicle. Finish the procedure for each key within 30 seconds. If the procedure for any of the keys has not been finished within the specified time, perform the registration procedures again from process 1. If the key confirmation procedure for a key is performed, the security indicator light comes on and remains on until all the keys are confirmed.
- *2: Repeat this process for each key which is to be registered for the vehicle. Finish the procedure for each key within 30 seconds. If the procedure for any of the keys is not finished within the specified time, perform the registration procedures again from 1. Make sure that only 1 key is in the cabin during the registration procedures. If 2 or more keys are in the cabin simultaneously, electric waves will interfere with each other, preventing normal registration.

(c) PROCEDURE "C"

Additional key ID registration

PROCESS	PROCEDURE
1. Start of registration	1. Connect the Techstream to DLC3 2. Turn the engine switch on (IG) 3. Enter the following menus: Body Electrical / Smart Key / Utility / Smart Code Registration
2. Confirmation of registered key*1	1. Perform operation according to prompts on the Techstream screen **HINT:** **Mode is automatically selected by the Techstream (new registration mode or add mode)** 2. Hold the registered key close to the engine switch (For details, refer to "Description of Code Registration") 3. Confirm that the wireless door lock buzzer sounds once (short beep)
3. Confirmation of ECU code	• Perform operation according to prompts on the Techstream screen
4. Verification of unregistered key*2	1. Hold the unregistered key close to the engine switch (For details, refer to "Description of Code Registration") 2. Confirm that the wireless door lock buzzer sounds once (short beep) 3. Place the unregistered key on driver's seat 4. Confirm that the wireless door lock buzzer sounds once (short beep)
5. Registration of ID code	• Perform operation according to prompts on the Techstream screen
6. End of registration	• Finish additional key ID code registration

- *1: Perform this process for one of the keys registered for the vehicle. Finish the procedure within 30 seconds. If the procedure has not been finished within the specified time, perform the registration procedures again from process 1.
- *2: Repeat this process for each key which is to be registered for the vehicle. Finish the procedure for each key within 30 seconds. If the procedure for any of the keys is not finished within the specified time, perform the registration procedures again from 1. Make sure that only 1 key is in the cabin during the registration procedures. If 2 or more keys are in the cabin simultaneously, electric waves will interfere with each other, preventing normal registration.

(d) PROCEDURE "D"

Key ID erasure

HINT:

Erase all registered key codes except one.

PROCESS	PROCEDURE
1. Start of erasure	1. Connect the Techstream to DLC3 2. Turn the engine switch on (IG) 3. Enter the following menus: Body Electrical / Smart Key / Utility / Smart Code Erasure
2. Confirmation of registered key*1 **HINT:** **Select the key that will not be erased.**	1. Perform operation according to prompts on the Techstream screen 2. Hold the registered key close to engine switch (For details, refer to "Description of Code Registration") 3. Confirm that the wireless door lock buzzer sounds once (short beep)
3. Confirmation of ECU code •	Perform operation according to prompts on the Techstream screen
4. Erasure of ID code •	Perform operation according to prompts on the Techstream screen
5. End of erasure •	Finish key ID code erasure

- *1: Perform this process for one of the keys registered for the vehicle. Finish the procedure within 30 seconds. If the procedure has not been finished within the specified time, perform the erasure procedures again from process 1.

(e) PROCEDURE "E"

All key ID erasure

HINT:

All the key codes registered in the vehicle are erased.

PROCESS	PROCEDURE
1. Start of erasure	1. Connect the Techstream to DLC3 2. Turn the engine switch on (IG) 3. Turn the Techstream on while turning driver side door courtesy light switch on and off repeatedly at 1.5-second intervals or less 4. Enter the following menus: Body Electrical / Smart Key / Utility / Smart Code Erasure
2. Confirmation of ECU code •	Perform operation according to prompts on the Techstream screen
3. Erasure of ID code •	Perform operation according to prompts on the Techstream screen
4. End of erasure •	Finish key ID code erasure

(f) PROCEDURE "F"

ECU code registration

PROCESS	PROCEDURE
1. Start of registration	1. Connect the Techstream to DLC3 2. Turn the engine switch on (IG) 3. Enter the following menus: Body Electrical / Smart Key / Utility / ECU Communication ID Registration
2. Confirmation of registered key*1	1. Hold the registered key close to engine switch (For details, refer to "Description of Code Registration") 2. Confirm that the wireless door lock buzzer sounds once (short beep)
3. Registration of ECU code	• Perform operation according to prompts on the Techstream screen
4. End of registration	• Finish ECU code registration

- *1: Perform this process for one of the keys registered for the vehicle. Finish the procedure within 30 seconds. If the procedure has not been finished within the specified time, perform the erasure procedures again from process 1.

(g) PROCEDURE "G"

ECU communication ID registration

NOTICE:

- The ECU communication ID should be registered when the ID code box (immobiliser code ECU) is replaced in order to match these ECU communication IDs.
- The engine cannot be started unless the ECU communication IDs match.
- After the registration, pressing the engine switch may not start the engine on the first try. If so, press the engine switch again.
- Clear DTC B2799 (code for ECM's immobiliser communication error) by either of the following:

  - Use the Techstream.

  - Disconnect the battery for 30 seconds.

(1) Using SST, connect terminals TC and CG of the DLC3.

SST: 09843-18040

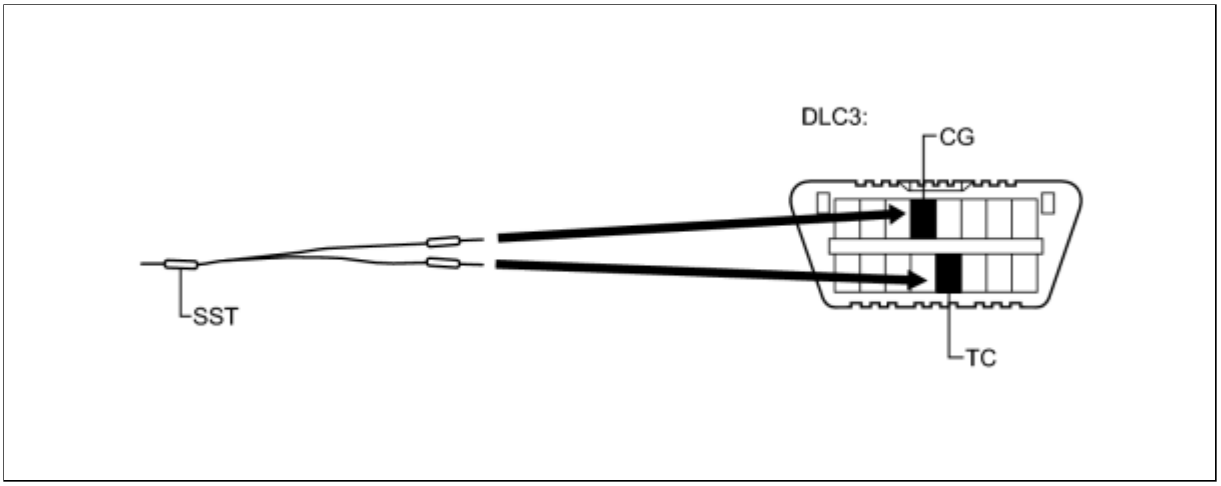

(2) Turn the engine switch on (IG) and leave it as is for 30 minutes.

HINT:

Do not start the engine.

(3) Turn the engine switch off and disconnect terminals TC and CG.

(4) Check that the engine starts and stays running for more than 3 seconds.

(h) PROCEDURE "H"

ECU communication ID registration

NOTICE:

The ECU communication ID should be registered when the ECM is replaced in order to match the ECU communication IDs.

PROCEDURE	SECURITY INDICATOR LIGHT CONDITION
1. Start	OFF
2. Hold an already registered key close to the engine switch and turn the engine switch on (IG) with the brake pedal depressed	
3. Check that the engine starts and stays running for more than 3 seconds	
4. Next	
5. End	

Last Modified: 3-10-2010	6.4 D	**From:** 200901
Model Year: 2010	**Model:** Corolla	**Doc ID:** RM000000QYA02UX
Title: THEFT DETERRENT / KEYLESS ENTRY: ENGINE IMMOBILISER SYSTEM (w/ Smart Key System): SYSTEM DESCRIPTION (2010 Corolla)		

SYSTEM DESCRIPTION

1. ENGINE IMMOBILISER SYSTEM DESCRIPTION

(a) The immobiliser system is a theft deterrent system that determines whether to disable starting of the SFI system based on a comparison of the key ID codes and the vehicle pre-registered code. The immobiliser system compares the vehicle certification ECU (smart key ECU assembly) pre-registered ID code with the ID of the key-embedded transponder chip. If the ID codes do not match, the immobiliser system is activated and the SFI system cannot be started. The certification ECU (smart key ECU assembly) manages communication with the ECM, main body ECU (instrument panel junction block), steering lock ECU and ID code box (immobiliser code ECU). When the ID codes of the transponder chip and certification ECU (smart key ECU assembly) match, the certification ECU (smart key ECU assembly) authorizes the SFI system to start.

2. FUNCTION OF MAIN COMPONENTS

COMPONENT	OUTLINE
Transponder key coil/amplifier (built into the engine switch)	Receives a key ID code, amplifies and outputs the code to the certification ECU (smart key ECU assembly).
Indoor electrical key oscillator	Transmits key detection signals within the detection area in the vehicle interior upon receiving a transmission request signal from the certification ECU (smart key ECU assembly). A certification ECU (smart key ECU assembly) request signal is activated when the key is brought into the vehicle interior and the engine switch is pushed.
Door control receiver	Receives an ID code from the key in the actuation area and transmits it to the certification ECU (smart key ECU assembly).
Security indicator	Illuminates or starts flashing. Illumination is controlled by the certification ECU (smart key ECU assembly).

3. SYSTEM FUNCTION

(a) Using the entry function

(1) When the driver (or passenger) is sitting in the vehicle while carrying the key, and the engine switch is pressed while the brake pedal is depressed, the main body ECU (instrument panel junction block) recognizes that the engine start operation has occurred and sends a certification request signal to the certification ECU (smart key ECU assembly). Upon receipt of the certification request signal, the certification ECU (smart key ECU assembly) sends a request signal to the indoor electrical key oscillator. Upon receipt of the request signal, the indoor electrical key oscillator sends a request signal to detect if the key is inside the vehicle. When the key receives this request signal, it answers by sending an ID code containing a

response code through the glass antenna to the door control receiver. Upon receipt of the ID code, the certification ECU (smart key ECU assembly) analyzes the code. If the interior certification passes, then the main body ECU (instrument panel junction block) sends a certification pass response signal. When the main body ECU (instrument panel junction block) receives this signal, the ACC relay is switched on and the IG1 and IG2 relays are switched on in sequence. At this time, the engine switch indicator illuminates in green. Then the certification ECU (smart key ECU assembly) checks that the power source mode has been changed and sends a steering lock command signal to the main body ECU (instrument panel junction block). After receiving this signal, the main body ECU (instrument panel junction block) supplies power to the steering lock actuator. Then the steering lock ECU confirms that the certification ECU (smart key ECU assembly) is certified (via the ID code box (immobiliser code ECU)) and drives the steering actuator motor until the steering is unlocked. After unlocking the steering, an unlock completed signal is sent to the certification ECU (smart key ECU assembly). Upon receipt of this signal, the certification ECU (smart key ECU assembly) sends an unset command signal to the ID code box (immobiliser code ECU). Once this signal is received, the ID code box (immobiliser code ECU) confirms that the certification ECU (smart key ECU assembly) is certified, sends an immobiliser unset command signal to the ECM, and sends a security indicator light off signal to the certification ECU (smart key ECU assembly).

(b) Not using the entry function (when the key battery is depleted)

(1) When the driver is sitting in the vehicle while carrying the key and depressing the brake pedal, the main body ECU (instrument panel junction block) recognizes that the stop light switch is on and sends a key confirmation request signal to the certification ECU (smart key ECU assembly). Upon receipt of this signal, the certification ECU (smart key ECU assembly) drives the immobiliser amplifier built in the engine switch. At this time, the engine switch sends an RF wave communication signal to the immobiliser. If the driver holds the key up to the engine switch at this time, the engine switch receives the immobiliser RF wave signal and responds by sending a radio wave signal. When the engine switch receives the radio wave signal from the key, it duplicates the signal and sends an ID code to the certification ECU (smart key ECU assembly). Upon receipt of the ID code, the code is analyzed. If the certification passes, the certification ECU sends a key certification pass response signal to the main body ECU (instrument panel junction block) and a sound buzzer request signal to the meter ECU. When the main body ECU (instrument panel junction block) receives this signal, the ACC relay is switched on and the IG1 and IG2 relays are switched on in sequence. At this time, the engine switch indicator illuminates in green. Then the certification ECU (smart key ECU assembly) checks that the power source mode has been changed and sends a steering lock command signal to the main body ECU (instrument panel junction block). After receiving this signal, the main body ECU (instrument panel junction block) supplies power to the steering lock actuator. Then the steering lock ECU confirms that the certification ECU (smart key ECU assembly) is certified (via the ID code box (immobiliser code ECU)) and drives the steering actuator motor until the steering is unlocked. After unlocking the steering, an unlock completed signal is sent to the certification ECU (smart key ECU assembly). Upon receipt of this signal, the certification ECU (smart key ECU assembly) sends an unset command signal to the ID code box (immobiliser code ECU). Once this signal is received, the ID code box (immobiliser code ECU) confirms that the certification ECU (smart key ECU assembly) is certified, sends an immobiliser unset command signal to the ECM, and sends a security indicator light off signal to the certification ECU (smart key ECU assembly).

Last Modified: 3-10-2010	6.4 D	**From:** 200901
Model Year: 2010	**Model:** Corolla	**Doc ID:** RM000000QY4038X
Title: THEFT DETERRENT / KEYLESS ENTRY: ENGINE IMMOBILISER SYSTEM (w/ Smart Key System): HOW TO PROCEED WITH TROUBLESHOOTING (2010 Corolla)		

HOW TO PROCEED WITH TROUBLESHOOTING

HINT:

- Use the following procedures to troubleshoot the engine immobiliser system.
- *: Using the Techstream.

1.	**VEHICLE BROUGHT TO WORKSHOP**

NEXT

2.	**CUSTOMER PROBLEM ANALYSIS**

HINT:

- In troubleshooting, confirm that the problem symptoms have been accurately identified. Preconceptions should be discarded in order to make an accurate judgment. To clearly understand what the problem symptoms are, it is extremely important to ask the customer about the problem and the conditions at the time the malfunction occurred.
- Gather as much information as possible for reference. Past problems that seem unrelated may also help in some cases.
  - The following 5 items are important points in the problem analysis:

What	Vehicle model, system name
When	Date, time, occurrence frequency
Where	Road conditions
Under what conditions?	Driving conditions, weather conditions
How did it happen?	Problem symptoms

NEXT

3.	**INSPECT BATTERY VOLTAGE**

(a) Measure the battery voltage.

Standard Voltage:
11 to 14 V

If the voltage is below 11 V, recharge or replace the battery before proceeding to the next step.

NEXT

4.	**CRANK ENGINE FOR MORE THAN 10 SECONDS**

NEXT

5.	**CHECK FOR DTC***

(a) Check for DTCs and note any codes that are output INFO .

(b) Clear the DTCs.

(c) Recheck for DTCs. Based on the DTCs output above, try to duplicate the SFI system DTC, engine immobiliser system DTC, steering lock system DTC or smart key system (for start function) DTC by simulating the symptoms indicated by the DTCs.

Result:

RESULT	PROCEED TO
SFI system DTC output recurs	A
Engine immobiliser system DTC output recurs	B
Steering lock system DTC output recurs	C

RESULT	PROCEED TO
Smart key system (for start function) DTC output recurs	D
DTC output does not recur	E

A ▶ INFO **Go to DIAGNOSTIC TROUBLE CODE CHART**

B ▶ INFO **Go to DIAGNOSTIC TROUBLE CODE CHART**

C ▶ INFO **Go to DIAGNOSTIC TROUBLE CODE CHART**

D ▶ INFO **Go to DIAGNOSTIC TROUBLE CODE CHART**

E ▼

6.	PROBLEM SYMPTOMS TABLE

(a) Refer to Problem Symptoms Table INFO .

Result:

RESULT	PROCEED TO
Fault is listed in problem symptoms table	A
Fault is not listed in problem symptoms table	B

A ▶ **GO TO STEP 8**

B ▼

7.	OVERALL ANALYSIS AND TROUBLESHOOTING*

(a) Data List / Active Test INFO

(b) Terminals of ECU INFO

NEXT

8.	REPAIR OR REPLACE

NEXT

9.	CONFIRMATION TEST

NEXT END

Last Modified: 3-10-2010	6.4 U	**From:** 200901
Model Year: 2010	**Model:** Corolla	**Doc ID:** RM000000QY702ZX
Title: THEFT DETERRENT / KEYLESS ENTRY: ENGINE IMMOBILISER SYSTEM (w/ Smart Key System): TERMINALS OF ECU (2010 Corolla)		

TERMINALS OF ECU

1. CHECK ENGINE SWITCH

(a) Disconnect the E38 engine switch connector.

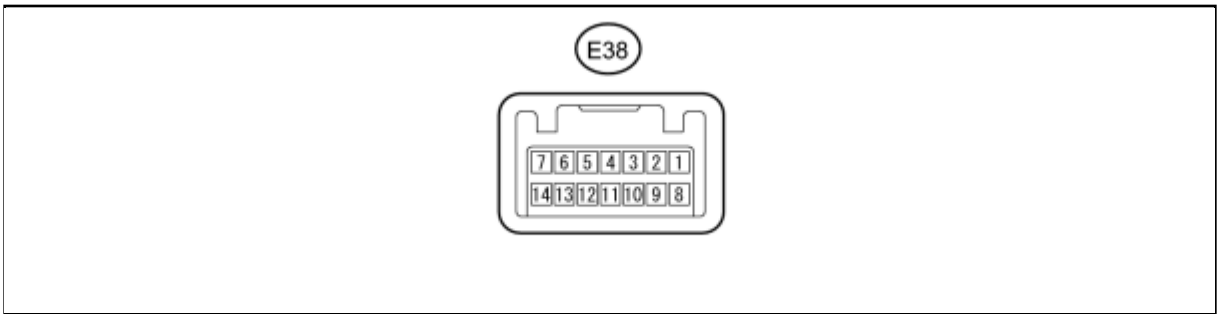

(b) Measure the resistance according to the value(s) in the table below.

TESTER CONNECTION	WIRING COLOR	TERMINAL DESCRIPTION	CONDITION	SPECIFIED CONDITION
E38-8 (AGND) - Body ground	BR - Body ground*1 GR - Body ground*2	Ground	Always	Below 1 Ω

- *1: for TMC Made
- *2: Except for TMC Made

- If the result is not as specified, there may be a malfunction on the wire harness side.

(c) Reconnect the E38 engine switch connector.

(d) Measure the resistance and voltage according to the value(s) in the table below.

TESTER CONNECTION	WIRING COLOR	TERMINAL DESCRIPTION	CONDITION	SPECIFIED CONDITION
E38-8 (AGND) - Body ground	BR - Body ground*1 GR - Body ground*2	Ground	Always	Below 1 Ω
E38-14 (VC5) - E38-8 (AGND)	SB - BR*1 BE - GR*2	Power supply	Key is not in cabin	Below 1 V

TESTER CONNECTION	WIRING COLOR	TERMINAL DESCRIPTION	CONDITION	SPECIFIED CONDITION
E38-14 (VC5) - E38-8 (AGND)	SB - BR*1 BE - GR*2	Power supply	Key is in cabin*	4.6 to 5.4 V
E38-10 (CODE) - E38-8 (AGND)	P - BR*1 G - GR*2	Demodulated signal of key code data	Key is not in cabin	Below 1 V
E38-10 (CODE) - E38-8 (AGND)	P - BR*1 G - GR*2	Demodulated signal of key code data	Press engine switch and hold key close to engine switch*	Pulse generation (See waveform 1)
E38-9 (TXCT) - E38-8 (AGND)	L - BR*1 SB - GR*2	Key code output signal	Key is not in cabin	Below 1 V
E38-9 (TXCT) - E38-8 (AGND)	L - BR*1 SB - GR*2	Key code output signal	Press engine switch and hold key close to engine switch*	Pulse generation (See waveform 2)

- *1: for TMC Made
- *2: Except for TMC Made

- If the result is not as specified, the engine switch may have a malfunction.

(e) Inspect using an oscilloscope.

(1) Waveform 1 (Reference)

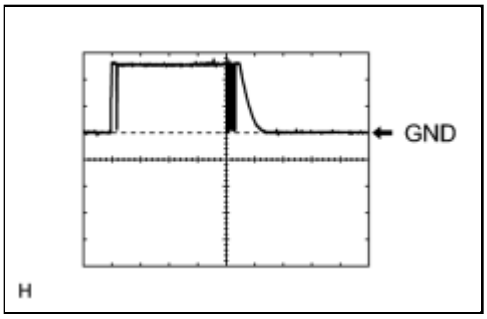

ITEM	CONTENT
Tester Connection	E38-10 (CODE) - E38-8 (AGND)
Tool Setting	2 V/DIV., 50 ms./DIV.
Condition	Press engine switch and hold key close to engine switch*

HINT:

***: Remove the key battery before performing this inspection.**

(2) Waveform 2 (Reference)

ITEM	CONTENT
Tester Connection	E38-9 (TXCT) - E38-8 (AGND)

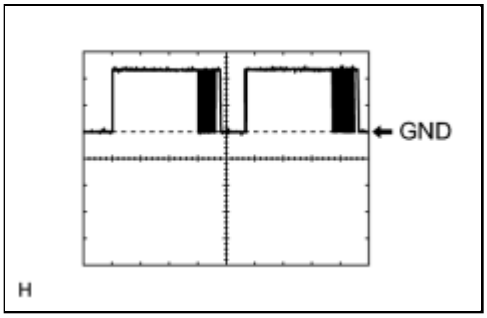

Tool Setting	2 V/DIV., 50 ms./DIV.
Condition	Press engine switch and hold key close to engine switch*

HINT:

***: Remove the key battery before performing this inspection.**

2. CHECK CERTIFICATION ECU (SMART KEY ECU ASSEMBLY)

(a) Disconnect the E36 certification ECU (smart key ECU assembly) connector.

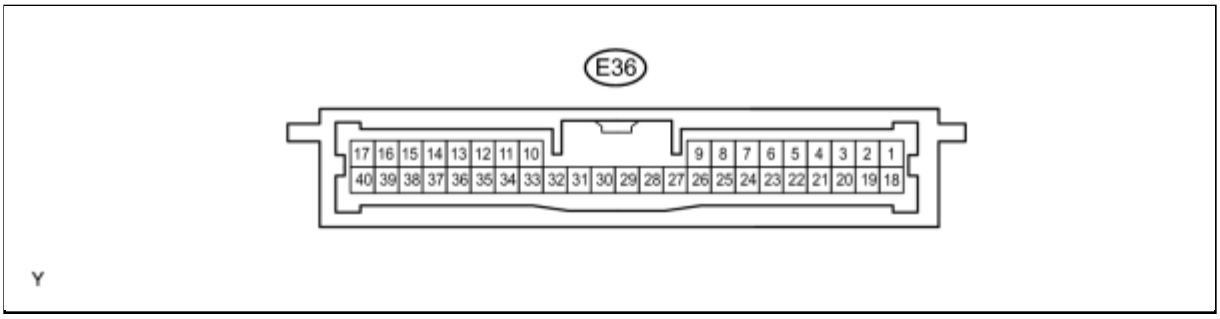

(b) Measure the resistance and voltage according to the value(s) in the table below.

TESTER CONNECTION	WIRING COLOR	TERMINAL DESCRIPTION	CONDITION	SPECIFIED CONDITION
E36-17 (E) - Body ground	W-B - Body ground	Ground	Always	Below 1 Ω
E36-1 (+B) - E36-17 (E)	W - W-B*1 BR - W-B*2	+B power supply	Always	11 to 14 V
E36-18 (IG) - E36-17 (E)	L - W-B*1 B - W-B*2	Ignition power supply	Engine switch off	Below 1 V

- *1: for TMC Made
- *2: Except for TMC Made

- If the result is not as specified, there may be a malfunction on the wire harness side.

(c) Reconnect the E36 certification ECU (smart key ECU assembly) connector.

(d) Measure the resistance and voltage according to the value(s) in the table below.

TESTER CONNECTION	WIRING COLOR	TERMINAL DESCRIPTION	CONDITION	SPECIFIED CONDITION
E36-40 (AGND) - Body ground	BR - Body ground*1 GR - Body	Engine switch ground	Always	Below 1 Ω

TESTER CONNECTION	WIRING COLOR	TERMINAL DESCRIPTION	CONDITION	SPECIFIED CONDITION
	ground*2			
E36-30 (VC5) - E36-40 (AGND)	SB - BR*1 BE - GR*2	Engine switch power supply	Key is not in cabin	Below 1 V
E36-30 (VC5) - E36-40 (AGND)	SB - BR*1 BE - GR*2	Engine switch power supply	Key is in cabin*	4.6 to 5.4 V
E36-9 (CODE) - E36-40 (AGND)	P - BR*1 G - GR*2	Engine switch CODE input	Key is not in cabin	Below 1 V
E36-9 (CODE) - E36-40 (AGND)	P - BR*1 G - GR*2	Engine switch CODE input	Press engine switch and hold key close to engine switch*	Pulse generation (See waveform 1)
E36-8 (TXCT) - E36-40 (AGND)	L - BR*1 SB - GR*2	Engine switch TXCT output	Key is not in cabin	Below 1 V
E36-8 (TXCT) - E36-40 (AGND)	L - BR*1 SB - GR*2	Engine switch TXCT output	Press engine switch and hold key close to engine switch*	Pulse generation (See waveform 2)

- *1: for TMC Made
- *2: Except for TMC Made

- If the result is not as specified, the certification ECU (smart key ECU assembly) may have a malfunction.

(e) Inspect using an oscilloscope.

(1) Waveform 1 (Reference)

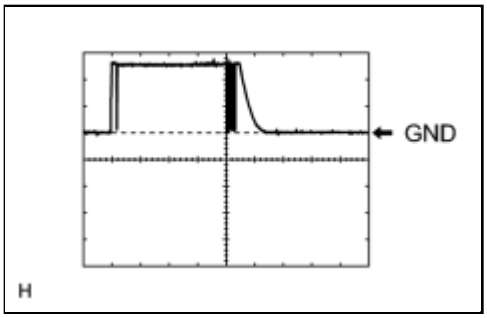

ITEM	CONTENT
Tester Connection	E36-9 (CODE) - E36-40 (AGND)
Tool Setting	2 V/DIV., 50 ms./DIV.
Condition	Press engine switch and hold key close to engine switch*

HINT:

***: Remove the key battery before performing this inspection.**

(2) Waveform 2 (Reference)

ITEM	CONTENT

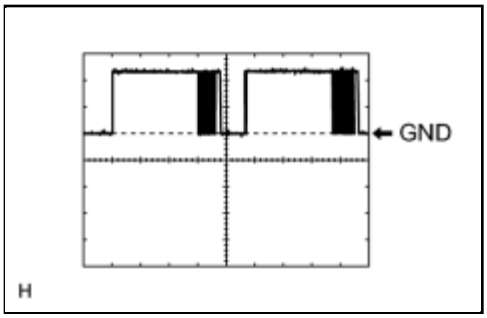

Tester Connection	E36-8 (TXCT) - E36-40 (AGND)
Tool Setting	2 V/DIV., 50 ms./DIV.
Condition	Press engine switch and hold key close to engine switch*

HINT:

***: Remove the key battery before performing this inspection.**

3. CHECK ID CODE BOX (IMMOBILISER CODE ECU)

(a) Disconnect the E22 ID code box (immobiliser code ECU) connector.

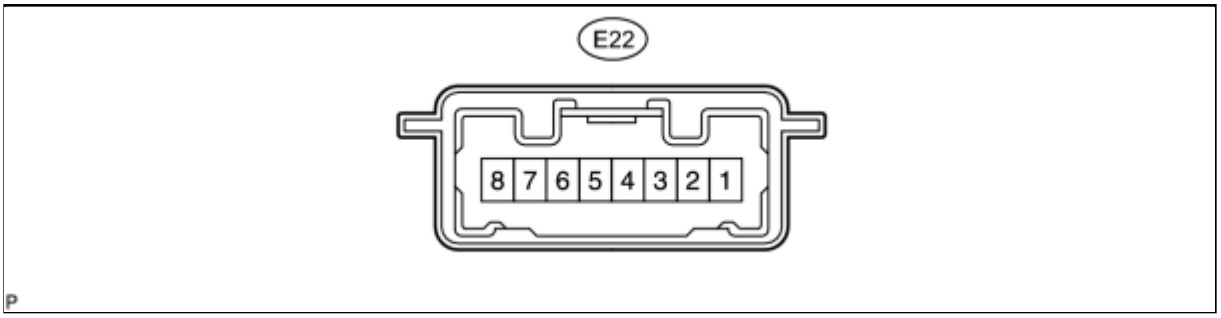

(b) Measure the resistance and voltage according to the value(s) in the table below.

TESTER CONNECTION	WIRING COLOR	TERMINAL DESCRIPTION	CONDITION	SPECIFIED CONDITION
E22-8 (GND) - Body ground	BR - Body ground	Ground	Always	Below 1 Ω
E22-1 (+B) - E22-8 (GND)	W - BR*1 BR - BR*2	+B power supply	Always	11 to 14 V

- *1: for TMC Made
- *2: Except for TMC Made

- If the result is not as specified, there may be a malfunction on the wire harness side.

(c) Reconnect the E22 ID code box (immobiliser code ECU) connector.

(d) Measure the voltage according to the value(s) in the table below.

TESTER CONNECTION	WIRING COLOR	TERMINAL DESCRIPTION	CONDITION	SPECIFIED CONDITION
E22-5 (EFII) - E22-8 (GND)	LG - BR	ECM input signal	Engine switch off	10 to 14 V

TESTER CONNECTION	WIRING COLOR	TERMINAL DESCRIPTION	CONDITION	SPECIFIED CONDITION
E22-5 (EFII) - E22-8 (GND)	LG - BR	ECM input signal	Within 3 seconds after starter operates and initial combustion occurs, or within 3seconds after engine switch first turned on (IG) after battery disconnected and connected.	Pulse generation (see waveform 1)
E22-6 (EFIO) - E22-8 (GND)	P - BR	ECM output signal	Engine switch off	Below 1 V
E22-6 (EFIO) - E22-8 (GND)	P - BR	ECM output signal	Engine switch on (IG)	Pulse generation (see waveform 2)

- If the result is not as specified, the ID code box (immobiliser code ECU) may have a malfunction.

(e) Inspect using an oscilloscope.

(1) Waveform 1 (Reference)

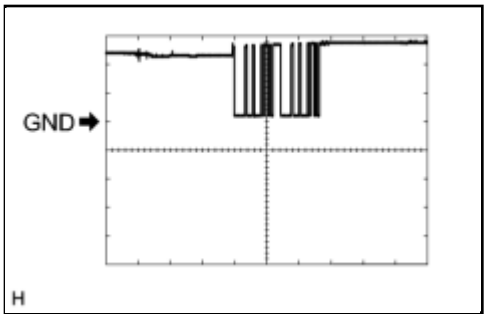

ITEM	CONTENT
Tester Connection	E22-5 (EFII) - E22-8 (GND)
Tool Setting	5 V/DIV., 500 ms./DIV.
Condition	Within 3 seconds after starter operates and initial combustion occurs, or within 3seconds after engine switch first turned on (IG) after battery disconnected and connected.

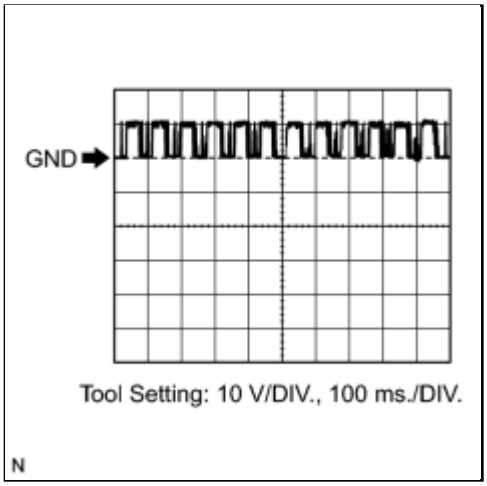

(2) Waveform 2 (Reference)

ITEM	CONTENT
Tester Connection	E22-6 (EFIO) - E22-8 (GND)
Tool Setting	10 V/DIV., 100 ms./DIV.
Condition	Engine switch on (IG)

4. CHECK STEERING LOCK ECU

(a) Disconnect the E39 steering lock ECU connector.

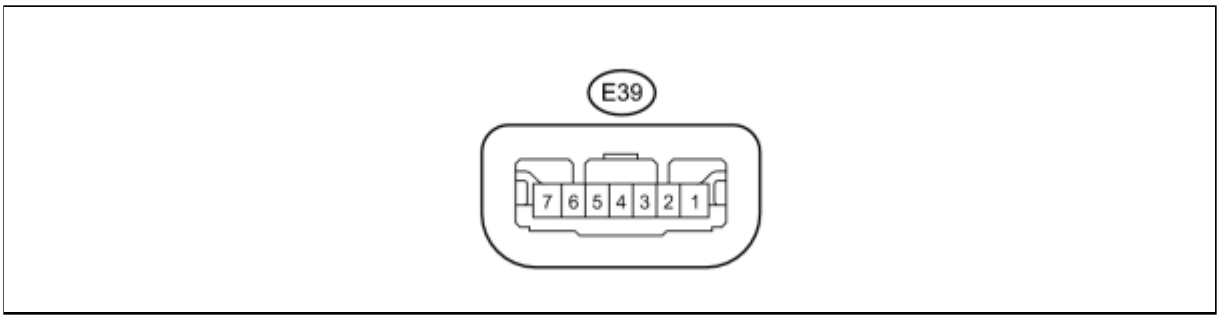

(b) Measure the resistance and voltage according to the value(s) in the table below.

TESTER CONNECTION	WIRING COLOR	TERMINAL DESCRIPTION	CONDITION	SPECIFIED CONDITION
E39-2 (SGND) - Body ground	BR - Body ground*1 W-B - Body ground*2	Ground	Always	Below 1 Ω
E39-1 (GND) - Body ground	W-B - Body ground	Ground	Always	Below 1 Ω
E39-7 (B) - Body ground	L - Body ground	+B power supply	Always	11 to 14 V
E39-6 (IG2) - Body ground	B - Body ground	Ignition power supply	Engine switch off	0 V
			Engine switch on (IG)	11 to 14 V

- *1: for TMC Made
- *2: Except for TMC Made

- If the result is not as specified, there may be a malfunction on the wire harness side.

5. CHECK ECM

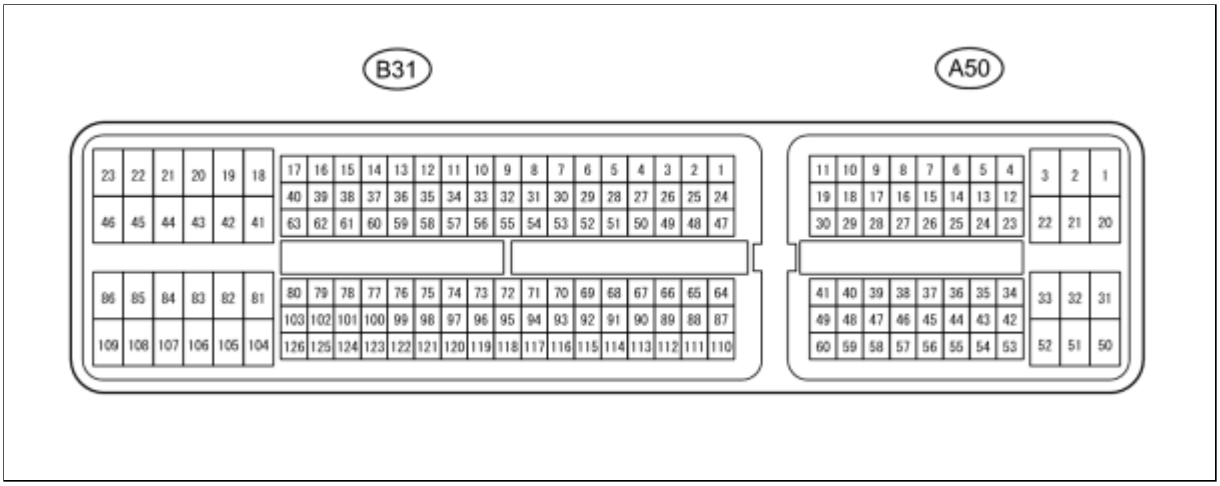

(a) Measure the resistance and voltage according to the value(s) in the table below.

TESTER CONNECTION	WIRING COLOR	TERMINAL DESCRIPTION	CONDITION	SPECIFIED CONDITION
A50-11 (IMI) - B31-104 (E1)	P - BR	ID code box (immobiliser code ECU) input signal	Engine switch off	Below 1 V
A50-11 (IMI) - B31-104 (E1)	P - BR	ID code box (immobiliser code ECU) input signal	Engine switch on (IG)	Pulse generation (See waveform 1)
A50-10 (IMO) - B31-104 (E1)	LG-B - BR	ID code box (immobiliser code ECU) output signal	Engine switch off	10 to 14 V
A50-10 (IMO) - B31-104 (E1)	LG-B - BR	ID code box (immobiliser code ECU) output signal	Within 3 seconds after starter operates and initial combustion occurs, or within 3seconds after engine switch first turned on (IG) after battery disconnected and connected.	Pulse generation (See waveform 2)

If the result is not as specified, the ECM may have a malfunction.

(b) Inspect using an oscilloscope.

(1) Waveform 1 (Reference)

ITEM	CONTENT
Tester Connection	A50-11 (IMI) - B31-104 (E1)
Tool Setting	10 V/DIV., 100 ms./DIV.
Condition	Engine switch on (IG)

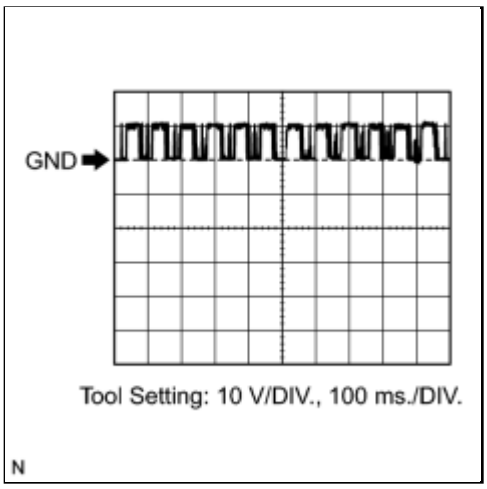

(2) Waveform 2 (Reference)

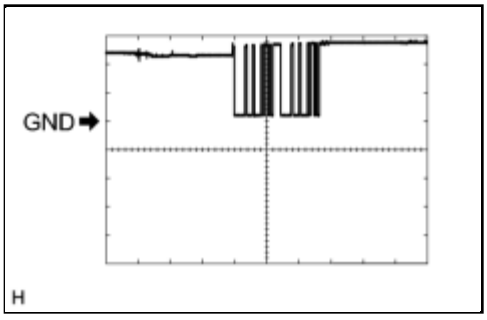

ITEM	CONTENT
Tester Connection	A50-10 (IMO) - B31-104 (E1)
Tool Setting	5 V/DIV., 500 ms./DIV.
Condition	Within 3 seconds after starter operates and initial combustion occurs, or within 3seconds after engine switch first turned on (IG) after battery disconnected and connected.

6. CHECK MAIN BODY ECU (INSTRUMENT PANEL JUNCTION BLOCK)

(a) Disconnect the 2B and 2E instrument panel junction block connectors.

(b) Disconnect the E50 and E51 main body ECU connectors.

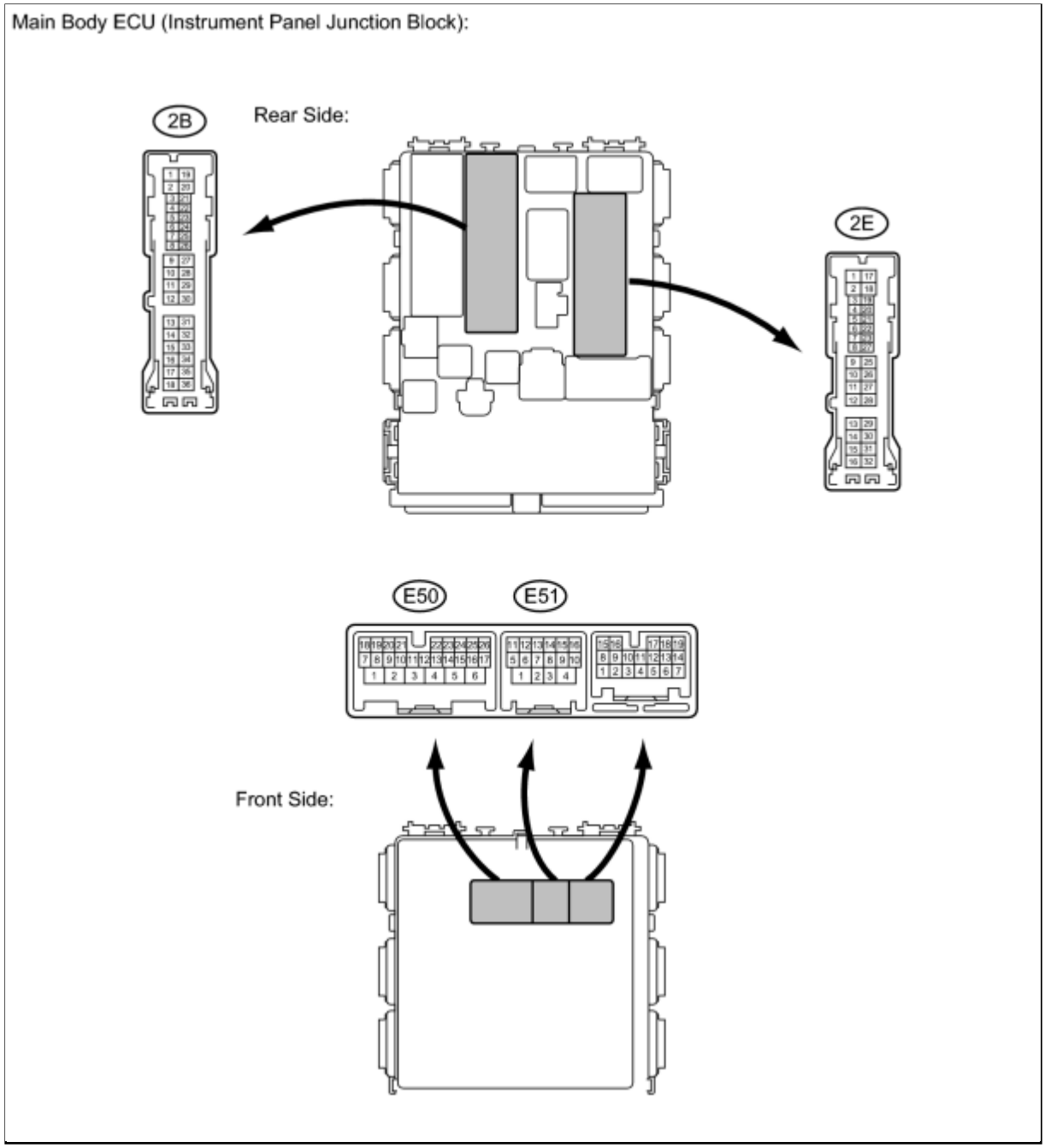

(c) Measure the resistance and voltage according to the value(s) in the table below.

TESTER CONNECTION	WIRING COLOR	TERMINAL DESCRIPTION	CONDITION	SPECIFIED CONDITION
2E-17 (GND1) - Body ground	W-B - Body ground	Ground	Always	Below 1 Ω
E51-4 (GND2) - Body ground	W-B - Body ground	Ground	Always	Below 1 Ω
E51-1 (AM1) - Body ground	Y - Body ground*1 L - Body	+B power supply	Always	11 to 14 V

TESTER CONNECTION	WIRING COLOR	TERMINAL DESCRIPTION	CONDITION	SPECIFIED CONDITION
	ground*2			
E50-6 (AM2) - Body ground	W - Body ground*1 L - Body ground*2	+B power supply	Always	11 to 14 V
2B-30 (BECU) - Body ground	W - Body ground	+B power supply	Always	11 to 14 V

- *1: for TMC Made
- *2: Except for TMC Made

If the result is not as specified, there may be a malfunction on the wire harness side.

Last Modified: 3-10-2010	6.4 T	**From:** 200901
Model Year: 2010	**Model:** Corolla	**Doc ID:** RM0000027KK01FX
Title: THEFT DETERRENT / KEYLESS ENTRY: ENGINE IMMOBILISER SYSTEM (w/ Smart Key System): PROBLEM SYMPTOMS TABLE (2010 Corolla)		

PROBLEM SYMPTOMS TABLE

HINT:

- Use the table below to help determine the cause of problem symptoms. If multiple suspected areas are listed, the potential causes of the symptoms are listed in order of probability in the "Suspected Area" column of the table. Check each symptom by checking the suspected areas in the order they are listed. Replace parts as necessary.
- Inspect the fuses and relays related to this system before inspecting the suspected areas below.

Engine Immobiliser System

SYMPTOM	SUSPECTED AREA	SEE PAGE
Engine does not start.	Key	INFO
	ID code box power source circuit	INFO
	Certification ECU power source circuit	INFO
	Steering lock ECU power source circuit	INFO
	Smart key system	INFO
	SFI system	INFO
Security indicator is always ON.	Wire harness or connector	INFO
	Telltale light assembly	-
	Certification ECU (smart key ECU assembly)	-
Security indicator is OFF.	Wire harness or connector	INFO
	Telltale light assembly	-
	Certification ECU (smart key ECU assembly)	-

Last Modified: 3-10-2010	6.4 D	**From:** 200901
Model Year: 2010	**Model:** Corolla	**Doc ID:** RM000001GV7030X
Title: THEFT DETERRENT / KEYLESS ENTRY: ENGINE IMMOBILISER SYSTEM (w/ Smart Key System): DIAGNOSIS SYSTEM (2010 Corolla)		

DIAGNOSIS SYSTEM

1. DESCRIPTION

(a) The certification ECU (smart key ECU assembly) controls the vehicle's engine immobiliser system functions. Engine immobiliser system data and Diagnostic Trouble Code (DTC) can be read through the vehicle's Data Link Connector 3 (DLC3).

In some cases, a malfunction may be occurring in the immobiliser system even though the security indicator light is not illuminated.

When the system seems to be malfunctioning, use the Techstream to check for malfunctions and perform repairs.

2. CHECK DLC3

(a) Check the DLC3 INFO .

3. INSPECT BATTERY VOLTAGE

(a) Measure the battery voltage.

Standard Voltage:
11 to 14 V

If the voltage is below 11 V, recharge or replace the battery before proceeding to the next step.

Last Modified: 3-10-2010	6.4 D	**From:** 200901
Model Year: 2010	**Model:** Corolla	**Doc ID:** RM000001GV8024X
Title: THEFT DETERRENT / KEYLESS ENTRY: ENGINE IMMOBILISER SYSTEM (w/ Smart Key System): DTC CHECK / CLEAR (2010 Corolla)		

DTC CHECK / CLEAR

1. CHECK DTC

(a) Connect the Techstream to the DLC3.

(b) Turn the engine switch on (IG).

(c) Turn the Techstream on.

(d) Enter the following menus: Body Electrical / (desired system) / Trouble Codes.

(e) Check the details of the DTC(s) 

.

2. CLEAR DTC

(a) Connect the Techstream to the DLC3.

(b) Turn the engine switch on (IG).

(c) Turn the Techstream on.

(d) Enter the following menus: Body Electrical / (desired system) / Trouble Codes.

(e) Clear the DTCs.

Last Modified: 3-10-2010	6.4 U	**From:** 200901
Model Year: 2010	**Model:** Corolla	**Doc ID:** RM000000QYE02CX
Title: THEFT DETERRENT / KEYLESS ENTRY: ENGINE IMMOBILISER SYSTEM (w/ Smart Key System): DATA LIST / ACTIVE TEST (2010 Corolla)		

DATA LIST / ACTIVE TEST

1. DATA LIST

HINT:

Using the Techstream to read the Data List allows the values or states of switches, sensors, actuators and other items to be read without removing any parts. This non-intrusive inspection can be very useful because intermittent conditions or signals may be discovered before parts or wiring is disturbed. Reading the Data List information early in troubleshooting is one way to save diagnostic time.

NOTICE:

In the table below, the values listed under "Normal Condition" are reference values. Do not depend solely on these reference values when deciding whether a part is faulty or not.

(a) Connect the Techstream to the DLC3.

(b) Turn the engine switch on (IG).

(c) Turn the Techstream on.

(d) Enter the following menus: Body Electrical / Smart Key / Data List.

(e) Read the Data List according to the display on the Techstream.

Smart Key (Certification ECU (Smart Key ECU Assembly))

TESTER DISPLAY	MEASUREMENT ITEM/RANGE	NORMAL CONDITION	DIAGNOSTIC NOTE
Ignition Switch	Engine switch on (IG) signal / ON or OFF	ON: Engine switch on (ACC, IG) or engine started OFF: Engine switch off	-
ACC Switch	Engine switch on (ACC) signal / ON or OFF	ON: Engine switch on (ACC, IG) or engine started OFF: Engine switch off	-
Immobiliser	Immobiliser system status / SET or UNSET	SET: Key is not in cabin UNSET: Key is in cabin	-
Master Key	Master key code signal / MATCH or NO MATCH	MATCH: Master key code is sent NO MATCH: Unmatched master key code is sent	-
Sub Key	Sub-key (Master key) code signal / MATCH or NO MATCH	MATCH: Sub-key (master key) code is sent NO MATCH: Unmatched sub-key (master key) code is sent	-

TESTER DISPLAY	MEASUREMENT ITEM/RANGE	NORMAL CONDITION	DIAGNOSTIC NOTE
BCC Malfunction	Transponder chip signal / OK or NG	OK: Correct data sent NG: Incorrect data sent	-
Abnormal Status	Transponder chip data / OK or NG	OK: Data OK NG: Data error	-
Different Encrypt Code	Transponder chip signal / OK or NG	OK: Correct data sent NG: Incorrect data sent	-
Different Serial Number	Transponder chip signal / OK or NG	OK: Correct data sent NG: Incorrect data sent	-
Frame Error	Transponder chip signal / OK or NG	OK: Correct data sent NG: Incorrect data sent	-
Response	Transponder chip signal / OK or NG	OK: Correct data sent NG: Incorrect data sent	-

2. ACTIVE TEST

HINT:

Using the Techstream to perform Active Tests allows relays, VSVs, actuators and other items to be operated without removing any parts. This non-intrusive functional inspection can be very useful because intermittent operation may be discovered before parts or wiring is disturbed. Performing Active Tests early in troubleshooting is one way to save diagnostic time. Data List information can be displayed while performing Active Tests.

(a) Connect the Techstream to the DLC3.

(b) Turn the engine switch on (IG).

(c) Turn the Techstream on.

(d) Enter the following menus: Body Electrical / Smart Key / Active Test.

(e) Perform the Active Test according to the display on the Techstream.

Smart Key (Certification ECU (Smart Key ECU Assembly))

TESTER DISPLAY	TEST PART	CONTROL RANGE	DIAGNOSTIC NOTE
Security Indicator	Security indicator light	ON/OFF	-

Last Modified: 3-10-2010	6.4 S	**From:** 200901
Model Year: 2010	**Model:** Corolla	**Doc ID:** RM000000QY6027X
Title: THEFT DETERRENT / KEYLESS ENTRY: ENGINE IMMOBILISER SYSTEM (w/ Smart Key System): DIAGNOSTIC TROUBLE CODE CHART (2010 Corolla)		

DIAGNOSTIC TROUBLE CODE CHART

1. CERTIFICATION ECU (SMART KEY ECU ASSEMBLY) DIAGNOSTIC TROUBLE CODE CHART

Certification ECU (Smart Key ECU Assembly)

DTC CODE	DETECTION ITEM	TROUBLE AREA	SEE PAGE
B2784	Antenna Coil Open / Short	1. Wire harness or connector 2. Engine switch 3. Certification ECU (smart key ECU assembly)	INFO
B2785	Communication Malfunction between ECUs Connected by LIN	1. Certification ECU (smart key ECU assembly) 2. Main body ECU (instrument panel junction block) 3. Steering lock ECU 4. ID code box (immobiliser code ECU) 5. Wire harness or connector	INFO
B2786	No Response from Steering Lock ECU	1. Steering lock ECU 2. Certification ECU (smart key ECU assembly) 3. Wire harness or connector	INFO
B2789	No Response from ID BOX	1. ID code box (immobiliser code ECU) 2. Certification ECU (smart key ECU assembly) 3. Wire harness or connector	INFO
B278A	Short to GND in Immobiliser System Power Source Circuit	1. Wire harness or connector 2. Engine switch 3. Certification ECU (smart key ECU assembly)	INFO
B2790	ID BOX EEPROM Malfunction	ID code box (immobiliser code ECU)	INFO

2. ECM DIAGNOSTIC TROUBLE CODE CHART

HINT:

The DTCs for the engine immobiliser system are specified above. If other codes are output, check the DTC chart for the SFI system.

ECM

DTC CODE	DETECTION ITEM	TROUBLE AREA	SEE PAGE
B2799	Engine Immobiliser System Malfunction	1. Wire harness or connector 2. ECM 3. ID code box (immobiliser code ECU)	INFO
B279A	Theft Deterrent System Communication Line High Fixation	1. Wire harness or connector 2. ECM 3. ID code box (immobiliser code ECU)	INFO
B279C	Theft Deterrent System Presence Detection	ECM	INFO

Last Modified: 3-10-2010	6.4 C	**From:** 200901
Model Year: 2010	**Model:** Corolla	**Doc ID:** RM000000QYJ03DX
Title: THEFT DETERRENT / KEYLESS ENTRY: ENGINE IMMOBILISER SYSTEM (w/ Smart Key System): B2784: Antenna Coil Open / Short (2010 Corolla)		

DTC	**B2784**	**Antenna Coil Open / Short**

DESCRIPTION

This DTC is output when there is an open or short in the key coil (built into the engine switch).

DTC NO.	DTC DETECTION CONDITION	TROUBLE AREA
B2784	Antenna coil is open/shorted	• Wire harness or connector • Certification ECU (smart key ECU assembly) • Engine switch

WIRING DIAGRAM

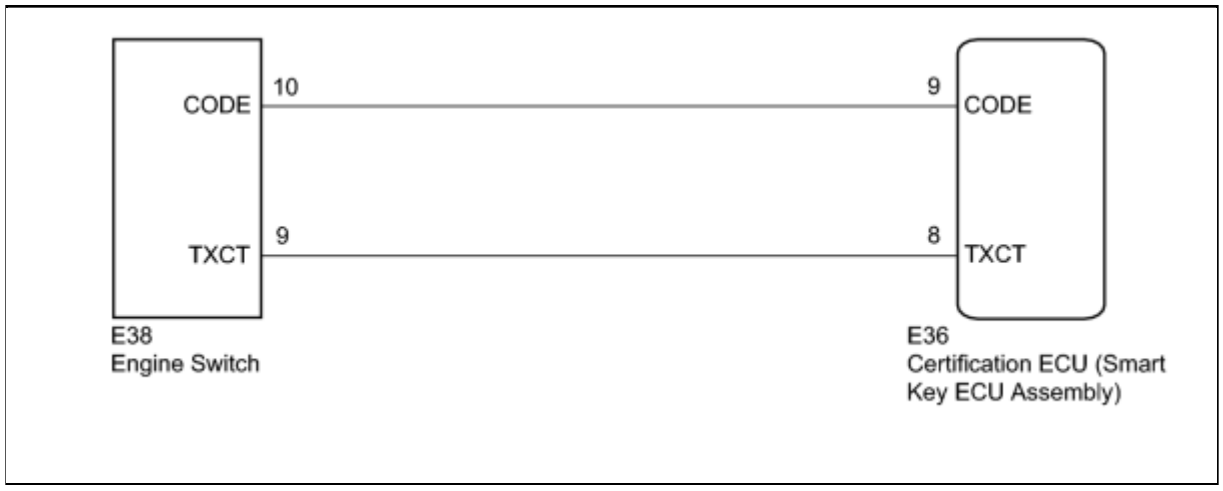

INSPECTION PROCEDURE

NOTICE:

If the certification ECU (smart key ECU assembly) is replaced, register the key and ECU communication ID INFO **.**

PROCEDURE

1.	**CHECK DTC OUTPUT**

(a) Clear the DTCs INFO .

(b) Recheck for DTCs.

OK:

B2784 is not reoutput.

NG ▶ **CHECK HARNESS AND CONNECTOR (CERTIFICATION ECU - ENGINE SWITCH)**

OK ▶ **USE SIMULATION METHOD TO CHECK**

2.	CHECK HARNESS AND CONNECTOR (CERTIFICATION ECU - ENGINE SWITCH)

(a) Disconnect the certification ECU (smart key ECU assembly) connector.

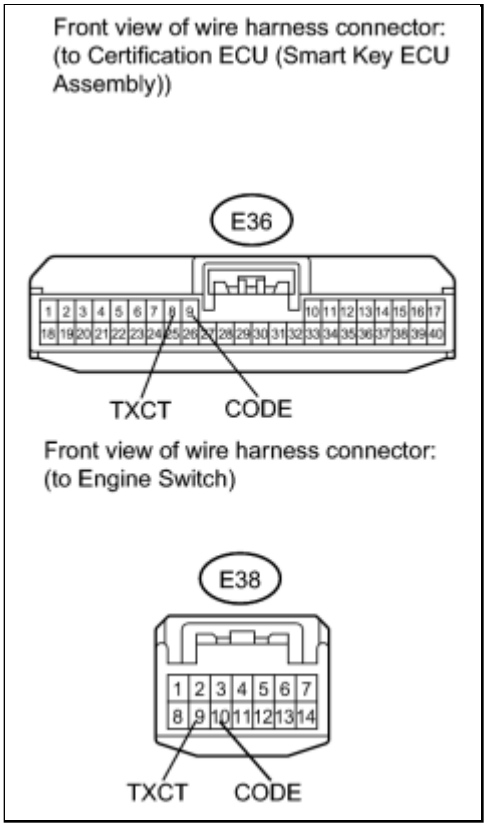

(b) Disconnect the engine switch connector.

(c) Measure the resistance according to the value(s) in the table below.

Standard Resistance:

TESTER CONNECTION	CONDITION	SPECIFIED CONDITION
E36-9 (CODE) - E38-10 (CODE)	Always	Below 1 Ω
E36-8 (TXCT) - E38-9 (TXCT)	Always	Below 1 Ω
E36-9 (CODE) - Body ground	Always	10 kΩ or higher

TESTER CONNECTION	CONDITION	SPECIFIED CONDITION
E36-8 (TXCT) - Body ground	Always	10 kΩ or higher

NG ▶ **REPAIR OR REPLACE HARNESS OR CONNECTOR**

OK ▼

3.	REPLACE ENGINE SWITCH

(a) Replace the engine switch INFO.

NEXT ▼

4.	CHECK DTC OUTPUT

(a) Clear the DTCs INFO.

(b) Recheck for DTCs.

OK:
B2784 is not reoutput.

NG ▶ **REPLACE CERTIFICATION ECU (SMART KEY ECU ASSEMBLY)**

OK ▶ **END (ENGINE SWITCH IS DEFECTIVE)**

Last Modified: 3-10-2010	6.4 C	**From:** 200901
Model Year: 2010	**Model:** Corolla	**Doc ID:** RM0000030N300MX
Title: THEFT DETERRENT / KEYLESS ENTRY: ENGINE IMMOBILISER SYSTEM (w/ Smart Key System): B2785: Communication Malfunction between ECUs Connected by LIN (2010 Corolla)		

DTC	**B2785**	**Communication Malfunction between ECUs Connected by LIN**

DESCRIPTION

Refer to DTC B2785 (LIN Communication System) INFO .

DTC NO.	DTC DETECTION CONDITION	TROUBLE AREA
B2785	• Error in LIN communication between ECUs and an open or short in communication lines • LIN communication from certification ECU stops for a set amount of time or more	• Certification ECU (smart key ECU assembly) • Main body ECU (Instrument panel junction block) • Steering lock ECU • ID code box (immobiliser code ECU) • Wire harness or connector

WIRING DIAGRAM

Refer to DTC B2785 (LIN Communication System) INFO .

INSPECTION PROCEDURE

Refer to DTC B2785 (LIN Communication System) INFO .

Last Modified: 3-10-2010	6.4 C	**From:** 200901
Model Year: 2010	**Model:** Corolla	**Doc ID:** RM0000030N400MX
Title: THEFT DETERRENT / KEYLESS ENTRY: ENGINE IMMOBILISER SYSTEM (w/ Smart Key System): B2786: No Response from Steering Lock ECU (2010 Corolla)		

DTC	**B2786**	**No Response from Steering Lock ECU**

DESCRIPTION

Refer to DTC B2786 (LIN Communication System) INFO .

DTC NO.	DTC DETECTION CONDITION	TROUBLE AREA
B2786	No communication between steering lock ECU and main body ECU (instrument panel junction block) for more than 10 seconds	• Steering lock ECU • Certification ECU (smart key ECU assembly) • Wire harness or connector

WIRING DIAGRAM

Refer to DTC B2786 (LIN Communication System) INFO .

INSPECTION PROCEDURE

Refer to DTC B2786 (LIN Communication System) INFO .

Last Modified: 3-10-2010	6.4 C	**From:** 200901
Model Year: 2010	**Model:** Corolla	**Doc ID:** RM0000030N500LX
Title: THEFT DETERRENT / KEYLESS ENTRY: ENGINE IMMOBILISER SYSTEM (w/ Smart Key System): B2789: No Response from ID BOX (2010 Corolla)		

DTC	**B2789**	**No Response from ID BOX**

DESCRIPTION

Refer to DTC B2789 (LIN Communication System) INFO .

DTC NO.	DTC DETECTION CONDITION	TROUBLE AREA
B2789	No communication between certification ECU (smart key ECU assembly) and ID code box (immobiliser code ECU) for more than 10 seconds	• ID code box (immobiliser code ECU) • Certification ECU (smart key ECU assembly) • Wire harness or connector

WIRING DIAGRAM

Refer to DTC B2789 (LIN Communication System) INFO .

INSPECTION PROCEDURE

Refer to DTC B2789 (LIN Communication System) INFO .

Last Modified: 3-10-2010	6.4 C	**From:** 200901
Model Year: 2010	**Model:** Corolla	**Doc ID:** RM000000TUF035X
Title: THEFT DETERRENT / KEYLESS ENTRY: ENGINE IMMOBILISER SYSTEM (w/ Smart Key System): B278A: Short to GND in Immobiliser System Power Source Circuit (2010 Corolla)		

DTC	**B278A**	**Short to GND in Immobiliser System Power Source Circuit**

DESCRIPTION

This DTC is output when the engine switch power source supply line is open or shorted.

DTC NO.	DTC DETECTION CONDITION	TROUBLE AREA
B278A	Engine switch power source supply line is open or shorted	• Wire harness or connector • Engine switch • Certification ECU (smart key ECU assembly)

WIRING DIAGRAM

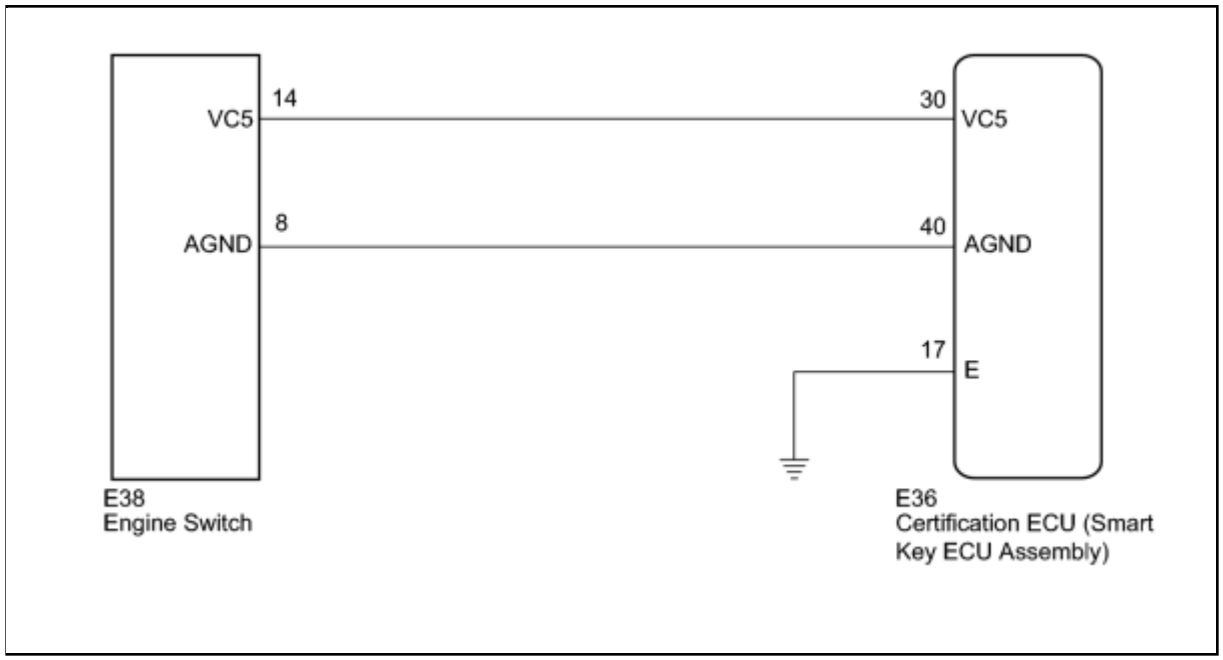

INSPECTION PROCEDURE

NOTICE:

If the certification ECU (smart key ECU assembly) is replaced, register the key and ECU communication ID INFO **.**

PROCEDURE

1.	**CHECK DTC OUTPUT**

(a) Clear the DTCs INFO.

(b) Recheck for DTCs.

OK:

B278A is not reoutput.

NG ▶ **CHECK HARNESS AND CONNECTOR (CERTIFICATION ECU - ENGINE SWITCH)**

OK ▶ **USE SIMULATION METHOD TO CHECK**

2.	**CHECK HARNESS AND CONNECTOR (CERTIFICATION ECU - ENGINE SWITCH)**

(a) Disconnect the certification ECU (smart key ECU assembly) connector.

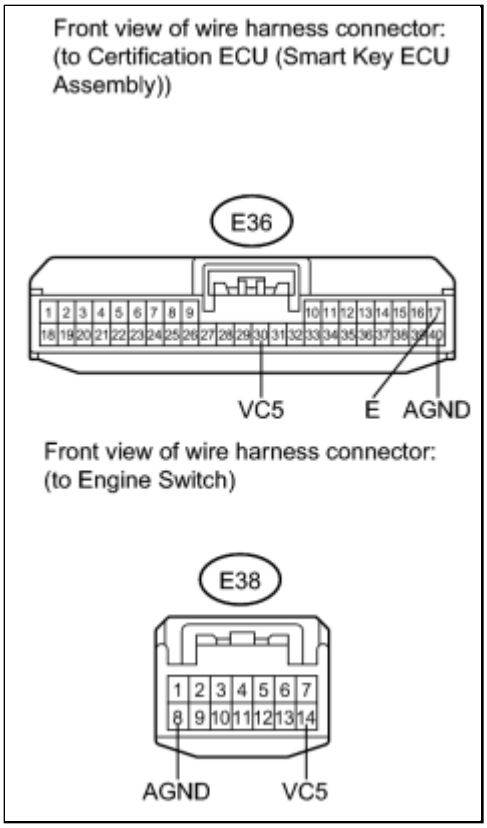

(b) Disconnect the engine switch connector.

(c) Measure the resistance according to the value(s) in the table below.

Standard Resistance:

TESTER CONNECTION	CONDITION	SPECIFIED CONDITION
E36-30 (VC5) - E38-14 (VC5)	Always	Below 1 Ω
E36-40 (AGND) - E38-8 (AGND)	Always	Below 1 Ω
E36-17 (E) - Body ground	Always	Below 1 Ω
E36-30 (VC5) - Body ground	Always	10 kΩ or higher
E36-40 (AGND) - Body ground	Always	10 kΩ or higher

NG ▶ **REPAIR OR REPLACE HARNESS OR CONNECTOR**

OK ▼

3.	CHECK HARNESS AND CONNECTOR (ENGINE SWITCH POWER SOURCE)

(a) Reconnect the certification ECU (smart key ECU assembly) connector.

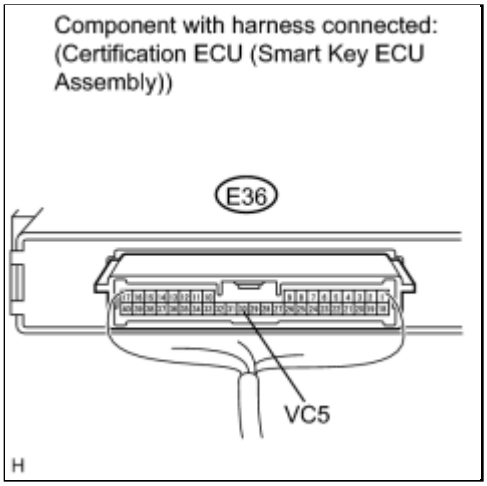

(b) Reconnect the engine switch connector.

(c) Measure the voltage according to the value(s) in the table below.

Standard Voltage:

TESTER CONNECTION	CONDITION	SPECIFIED CONDITION
E36-30 (VC5) - Body ground	Key is not in cabin	Below 1 V
E36-30 (VC5) - Body ground	Engine switch pressed	4.6 to 5.4 V

NG ▶ **REPLACE CERTIFICATION ECU (SMART KEY ECU**

ASSEMBLY)

OK

4.	CHECK HARNESS AND CONNECTOR (ENGINE SWITCH BODY GROUND)

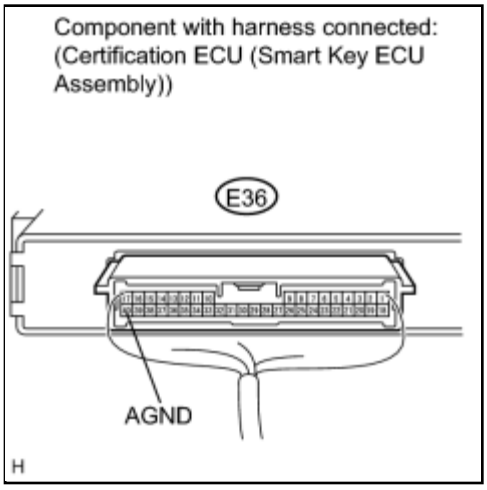

(a) Measure the resistance according to the value(s) in the table below.

Standard Resistance:

TESTER CONNECTION	CONDITION	SPECIFIED CONDITION
E36-40 (AGND) - Body ground	Always	Below 1 Ω

NG ▶ **REPLACE CERTIFICATION ECU (SMART KEY ECU ASSEMBLY)**

OK ▶ **REPLACE ENGINE SWITCH**

Last Modified: 3-10-2010	6.4 C	**From:** 200901
Model Year: 2010	**Model:** Corolla	**Doc ID:** RM000000TUG02PX
Title: THEFT DETERRENT / KEYLESS ENTRY: ENGINE IMMOBILISER SYSTEM (w/ Smart Key System): B2790: ID BOX EEPROM Malfunction (2010 Corolla)		

DTC	**B2790**	**ID BOX EEPROM Malfunction**

DESCRIPTION

This DTC is output when the ID code box (immobiliser code ECU) detects an internal malfunction.

DTC NO.	DTC DETECTION CONDITION	TROUBLE AREA
B2790	ID code box (immobiliser code ECU) detects internal malfunction	ID code box (immobiliser code ECU)

INSPECTION PROCEDURE

NOTICE:

If the ID code box (immobiliser code ECU) is replaced, register the ECU code and ECU communication ID INFO **.**

PROCEDURE

1.	**REPLACE ID CODE BOX (IMMOBILISER CODE ECU)**

(a) Replace the ID code box (immobiliser code ECU) INFO .

NEXT

2.	**ECU CODE REGISTRATION**

(a) Register the ECU code INFO .

NEXT

3.	ECU COMMUNICATION ID REGISTRATION

(a) Register the ECU communication ID INFO .

NEXT END (ID CODE BOX (IMMOBILISER CODE ECU) IS DEFECTIVE)

Last Modified: 3-10-2010	6.4 C	**From:** 200901
Model Year: 2010	**Model:** Corolla	**Doc ID:** RM000000SJV02YX
Title: THEFT DETERRENT / KEYLESS ENTRY: ENGINE IMMOBILISER SYSTEM (w/ Smart Key System): B2799: Engine Immobiliser System Malfunction (2010 Corolla)		

DTC	**B2799**	**Engine Immobiliser System Malfunction**

DESCRIPTION

This DTC is output when one of the following occurs: 1) the ECM detects errors in its own communications with the ID code box (immobiliser code ECU); 2) the ECM detects errors in the communication lines; or 3) the ECU communication ID between the ID code box (immobiliser code ECU) and ECM is different and an engine start is attempted. Before troubleshooting this DTC, make sure that no certification ECU (smart key ECU assembly) DTCs are present. If present, troubleshoot the certification ECU (smart key ECU assembly) DTCs first.

DTC NO.	DTC DETECTION CONDITION	TROUBLE AREA
B2799	One of the following conditions is met: • Error in communication between ECM and ID code box (immobiliser code ECU) • Error in communication lines • Communication ID is different between ID code box (immobiliser code ECU) and ECM during communication	• Wire harness or connector • ECM • ID code box (immobiliser code ECU)

WIRING DIAGRAM

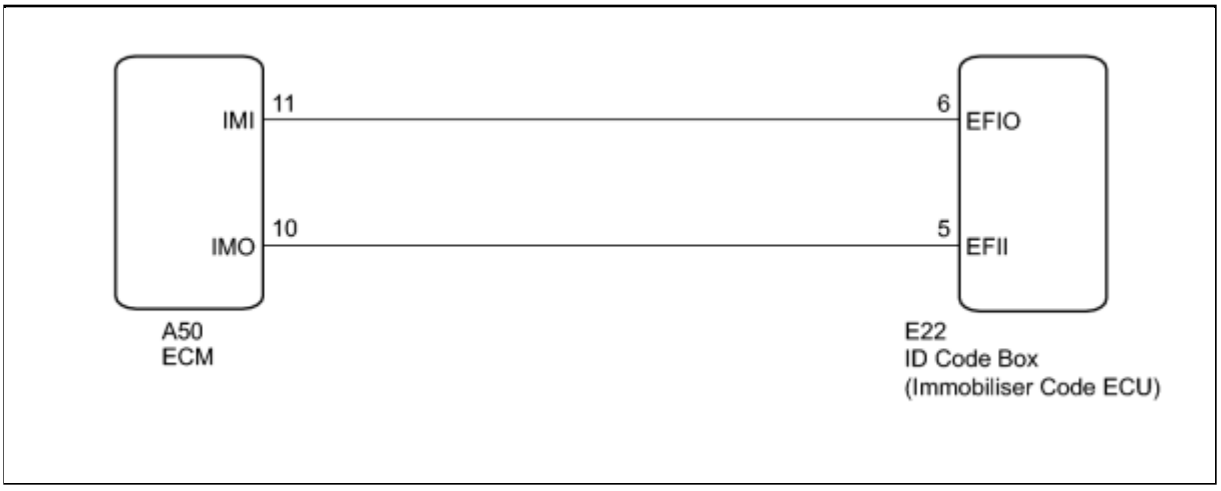

INSPECTION PROCEDURE

NOTICE:

- If the ID code box (immobiliser code ECU) is replaced, register the ECU code and ECU communication ID INFO .
- If the ECM is replaced, register the ECU communication ID INFO .

PROCEDURE

1.	**CHECK DTC OUTPUT**

(a) Clear the DTCs INFO .

(b) Recheck for DTCs.

OK:
B2799 is not reoutput.

NG ▶ **RE-REGISTER ECU COMMUNICATION ID**

OK ▶ **USE SIMULATION METHOD TO CHECK**

2.	**RE-REGISTER ECU COMMUNICATION ID**

(a) Re-register the ECU communication ID INFO .

NEXT ▼

3.	**CHECK DTC OUTPUT**

(a) Clear the DTCs INFO .

(b) Recheck for DTCs.

OK:
B2799 is not reoutput.

NG ▶ **CHECK CONNECTION OF CONNECTOR**

OK ▶ **END (ECU COMMUNICATION ID IS DEFECTIVE)**

4.	CHECK CONNECTION OF CONNECTOR

(a) Turn the engine switch off.

(b) Check that the connectors are properly connected to the ECM and ID code box (immobiliser code ECU).

OK:

Connectors are properly connected.

NG ▶ CONNECT CONNECTORS PROPERLY

OK ▼

5.	CHECK HARNESS AND CONNECTOR (ID CODE BOX - ECM)

(a) Disconnect the ID code box (immobiliser code ECU) connector.

(b) Disconnect the ECM connector.

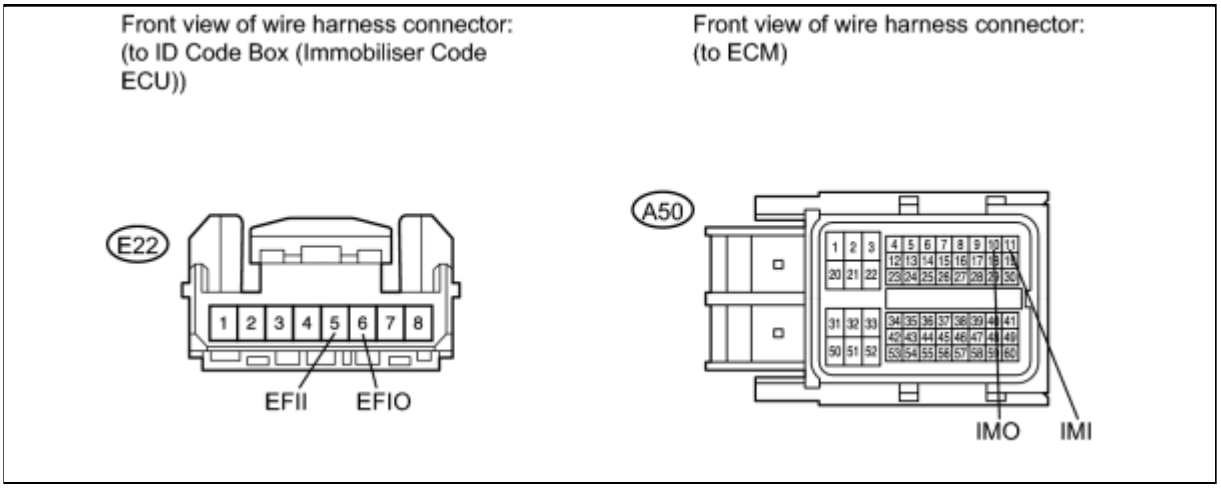

(c) Measure the resistance according to the value(s) in the table below.

Standard Resistance:

TESTER CONNECTION	CONDITION	SPECIFIED CONDITION
E22-5 (EFII) - A50-10 (IMO)	Always	Below 1 Ω
E22-6 (EFIO) - A50-11 (IMI)	Always	Below 1 Ω

TESTER CONNECTION	CONDITION	SPECIFIED CONDITION
E22-5 (EFII) - Body ground	Always	10 kΩ or higher
E22-6 (EFIO) - Body ground	Always	10 kΩ or higher

NG ▶ **REPAIR OR REPLACE HARNESS OR CONNECTOR**

OK
▼

6.	**REPLACE ECM**

(a) Replace the ECM INFO .

NEXT
▼

7.	**REGISTER ECU COMMUNICATION ID**

(a) Register the ECU communication ID INFO .

NEXT
▼

8.	**CHECK DTC OUTPUT**

(a) Clear the DTCs INFO .

(b) Recheck for DTCs.

OK:
B2799 is not reoutput.

NG ▶ **REPLACE ID CODE BOX (IMMOBILISER CODE ECU)**

OK ▶ **END (ECM IS DEFECTIVE)**

Last Modified: 3-10-2010	6.4 C	**From:** 200901
Model Year: 2010	**Model:** Corolla	**Doc ID:** RM000002UBW01AX
Title: THEFT DETERRENT / KEYLESS ENTRY: ENGINE IMMOBILISER SYSTEM (w/ Smart Key System): B279A: Theft Deterrent System Communication Line High Fixation (2010 Corolla)		

DTC	**B279A**	**Theft Deterrent System Communication Line High Fixation**

DESCRIPTION

If the communication line (EFIO-IMI) to the ID code box (immobiliser code ECU) is stuck on HI output, the ECM outputs this DTC.

DTC NO.	DTC DETECTION CONDITION	TROUBLE AREA
B279A	When communication line (EFIO-IMI) between ECM and the immobiliser code ECU is stuck on HI output	• Wire harness or connector • ID code box (immobiliser code ECU) • ECM

WIRING DIAGRAM

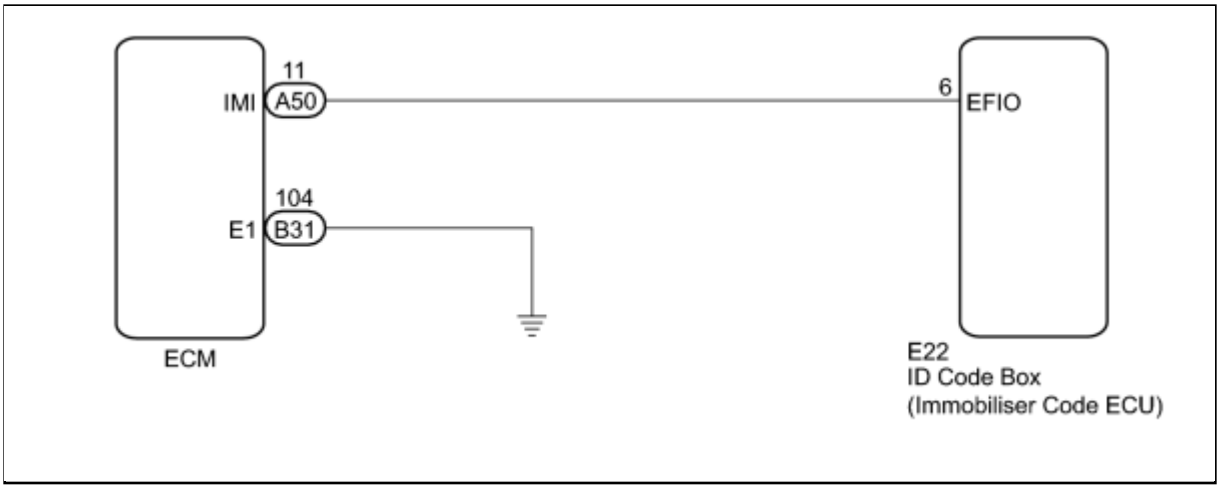

INSPECTION PROCEDURE

NOTICE:

- If the ID code box (immobiliser code ECU) is replaced, register the ECU code and ECU communication ID INFO .
- If the ECM is replaced, register the ECU communication ID INFO .

PROCEDURE

1.	**CHECK DTC OUTPUT**

(a) Recheck for DTCs INFO .

HINT:

If any DTCs other than DTC B279A are output, troubleshoot those DTCs first.

Result:

RESULT	PROCEED TO
DTC B279A is output	A
DTC B279A and other DTCs are output	B

B ▶ **GO TO DTC CHART**

A ▼

2.	**CHECK HARNESS AND CONNECTOR (ID CODE BOX - ECM)**

(a) Disconnect the ID code box (immobiliser code ECU) connector.

(b) Disconnect the ECM connector.

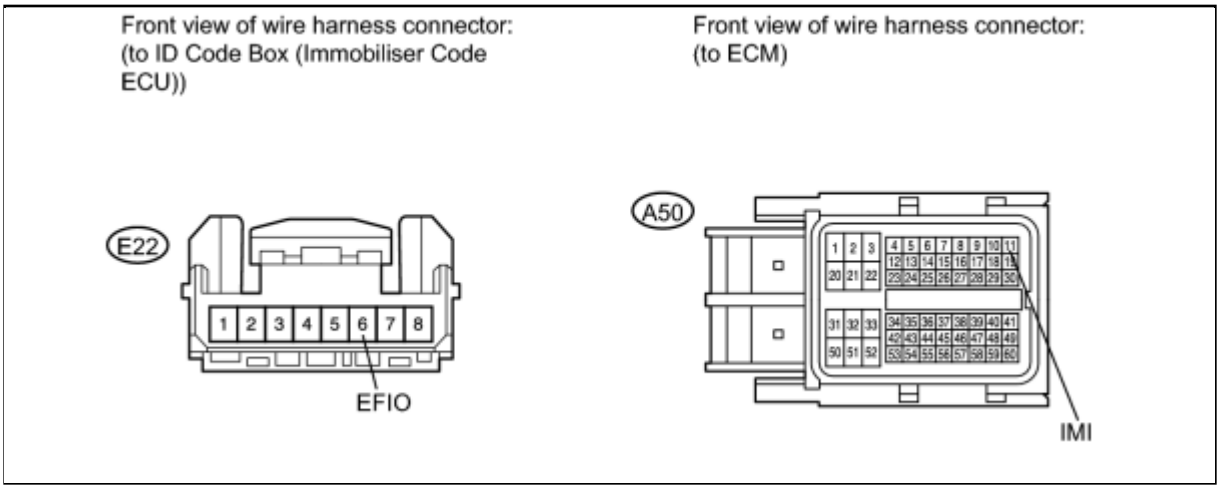

(c) Measure the resistance and voltage according to the value(s) in the table below.

Standard Resistance:

TESTER CONNECTION	CONDITION	SPECIFIED CONDITION
E22-6 (EFIO) - A50-11 (IMI)	Always	Below 1 Ω
E22-6 (EFIO) - Body ground	Always	10 kΩ or higher

Standard Voltage:

TESTER CONNECTION	CONDITION	SPECIFIED CONDITION
E22-6 (EFIO) - Body ground	Always	Below 1 V
A50-11 (IMI) - Body ground	Always	Below 1 V

NG ▶ **REPAIR OR REPLACE HARNESS OR CONNECTOR**

OK ▼

3.	**CHECK ECM (INPUT)**

(a) Reconnect the ID code box (immobiliser code ECU) connector.

(b) Reconnect the ECM connector.

(c) Measure the waveform.

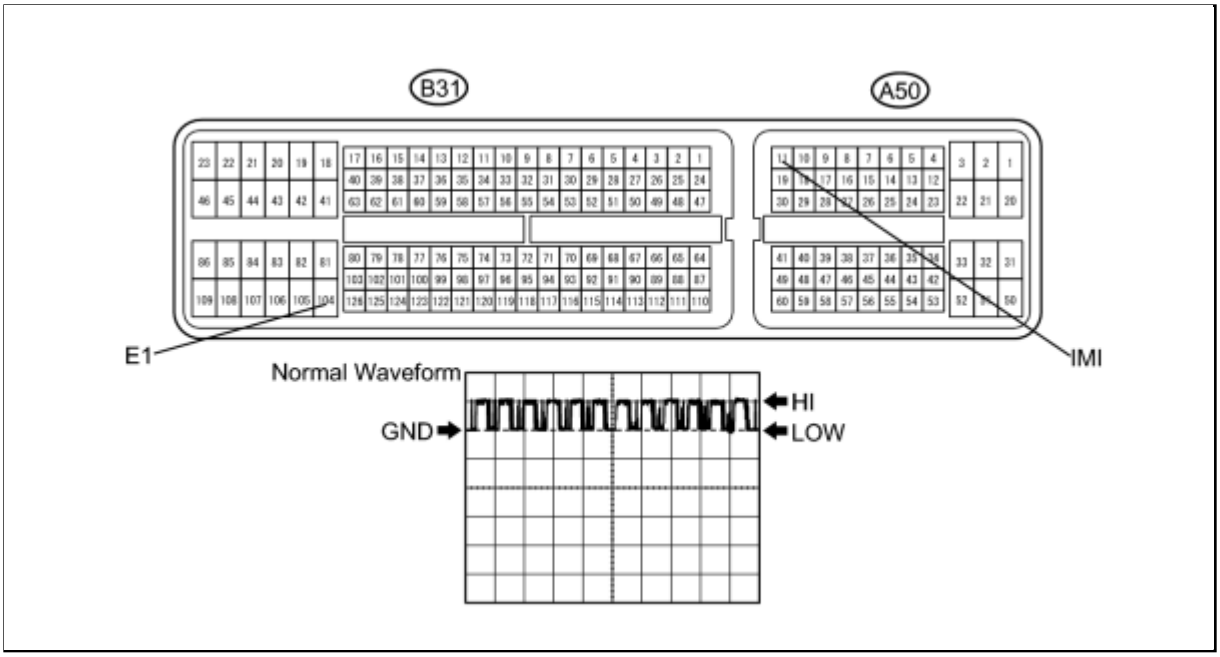

Waveform (Reference):

ITEM	CONTENT
Terminal No. (Symbols)	A50-11 (IMI) - B31-104 (E1)
Tool Setting	10 V/DIV., 100 msec./DIV.
Condition	Engine switch on (IG)

NG ▶ **REPLACE ID CODE BOX (IMMOBILISER CODE ECU)**

OK ▶ **REPLACE ECM**

4.	**REPLACE ID CODE BOX (IMMOBILISER CODE ECU)**

(a) Replace the ID code box (immobiliser code ECU) INFO .

NEXT

5.	**REGISTER ECU CODE**

(a) Register the ECU code INFO .

NEXT

6.	**REGISTER ECU COMMUNICATION ID**

(a) Register the ECU communication ID INFO.

NEXT

7.	**CHECK DTC OUTPUT**

(a) Clear the DTCs INFO.

(b) Recheck for DTCs.

OK:
B279A is not reoutput.

NG ▶ **REPLACE ECM**

OK ▶ **END (ID CODE BOX (IMMOBILISER CODE ECU) IS DEFECTIVE)**

Last Modified: 3-10-2010	6.4 C	**From:** 200901
Model Year: 2010	**Model:** Corolla	**Doc ID:** RM000002UBX019X
Title: THEFT DETERRENT / KEYLESS ENTRY: ENGINE IMMOBILISER SYSTEM (w/ Smart Key System): B279C: Theft Deterrent System Presence Detection (2010 Corolla)		

DTC	**B279C**	**Theft Deterrent System Presence Detection**

DESCRIPTION

If an ECM that is incompatible with the engine immobiliser system is installed, the ECM outputs this DTC.

DTC NO.	DTC DETECTION CONDITION	TROUBLE AREA
B279C	When ECM that is incompatible with engine immobiliser system is installed	ECM

INSPECTION PROCEDURE

NOTICE:

If the ECM is replaced, register the ECU communication ID INFO **.**

PROCEDURE

1.	**CHECK DTC OUTPUT**

(a) Clear the DTCs INFO .

(b) Recheck for DTCs.

OK:

DTC B279C is not reoutput.

NG ▶ **REPLACE ECM**

OK ▶ **USE SIMULATION METHOD TO CHECK**

Last Modified: 3-10-2010	6.4 J	**From:** 200901
Model Year: 2010	**Model:** Corolla	**Doc ID:** RM000001GV401YX
Title: THEFT DETERRENT / KEYLESS ENTRY: ENGINE IMMOBILISER SYSTEM (w/ Smart Key System): Security Indicator Light Circuit (2010 Corolla)		

Security Indicator Light Circuit

DESCRIPTION

The security indicator light blinks continuously due to a continuous signal received from the certification ECU (smart key ECU assembly) while in the armed state.

WIRING DIAGRAM

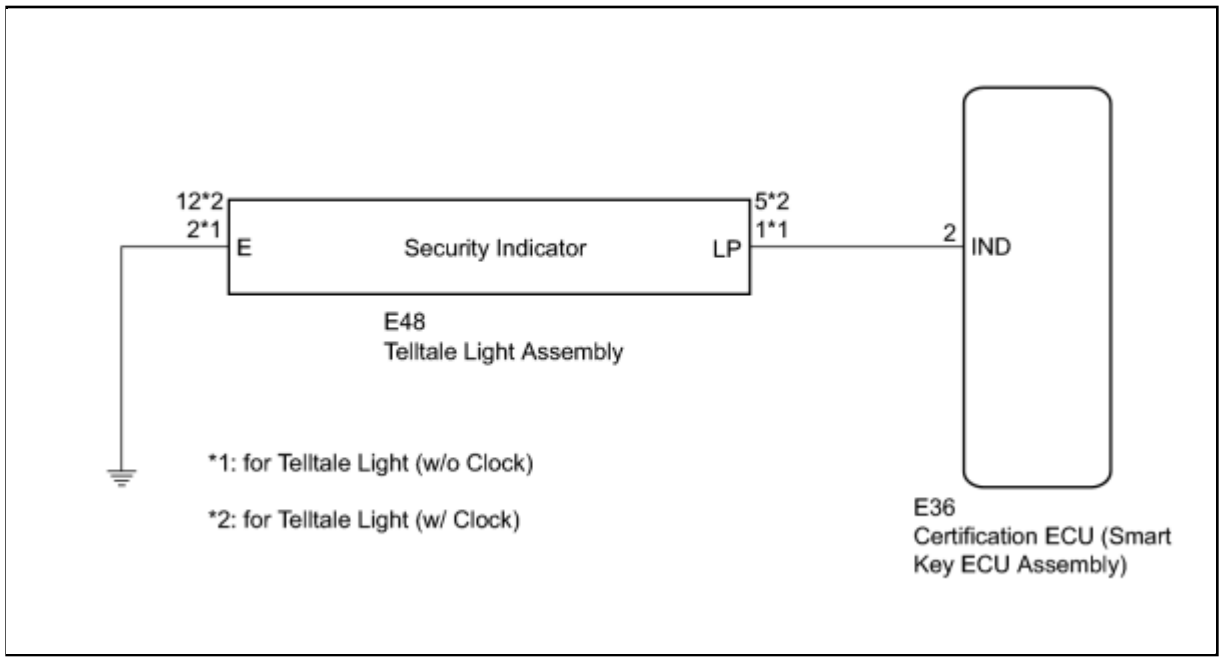

INSPECTION PROCEDURE

NOTICE:

If the certification ECU (smart key ECU assembly) is replaced, register the key and ECU communication ID INFO **.**

PROCEDURE

1.	**PERFORM ACTIVE TEST USING TECHSTREAM**

(a) Connect the Techstream to the DLC3.

(b) Turn the engine switch on (IG).

(c) Turn the Techstream on.

(d) Enter the following menus: Body Electrical / Smart Key / Active Test.

(e) Perform the Active Test according to the display on the Techstream.

Smart Key (Certification ECU (Smart Key ECU Assembly))

TESTER DISPLAY	TEST PART	CONTROL RANGE	DIAGNOSTIC NOTE
Security Indicator	Security indicator light	ON/OFF	-

OK:

The security indicator light turns on and off according to the Techstream operation.

NG ▶ **CHECK HARNESS AND CONNECTOR (CERTIFICATION ECU - TELLTALE LIGHT ASSEMBLY)**

OK ▶ **REPLACE CERTIFICATION ECU (SMART KEY ECU ASSEMBLY)**

2.	**CHECK HARNESS AND CONNECTOR (CERTIFICATION ECU - TELLTALE LIGHT ASSEMBLY)**

(a) Disconnect the certification ECU (smart key ECU assembly) connector.

(b) Disconnect the telltale light assembly connector.

(c) for Telltale Light (w/o Clock):

(1) Measure the resistance according to the value(s) in the table below.

Standard Resistance:

TESTER CONNECTION	CONDITION	SPECIFIED CONDITION
E36-2 (IND) - E48-1 (LP)	Always	Below 1 Ω
E36-2 (IND) - Body ground	Always	10 kΩ or higher

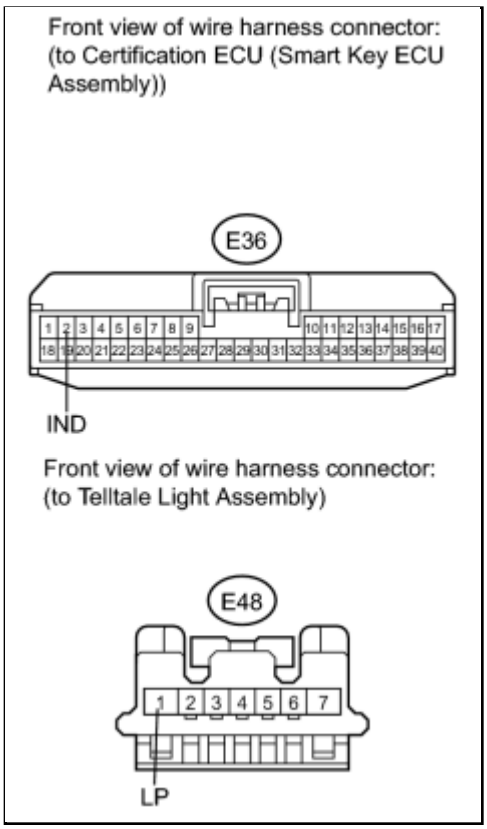

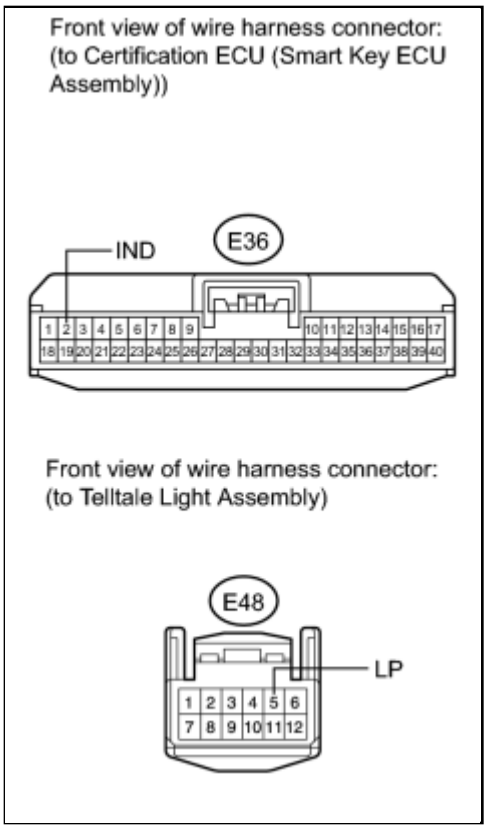

(d) for Telltale Light (w/ Clock):

(1) Measure the resistance according to the value(s) in the table below.

Standard Resistance:

TESTER CONNECTION	CONDITION	SPECIFIED CONDITION
E36-2 (IND) - E48-5 (LP)	Always	Below 1 Ω
E36-2 (IND) - Body ground	Always	10 kΩ or higher

NG ▶ **REPAIR OR REPLACE HARNESS OR CONNECTOR**

OK

3.	CHECK HARNESS AND CONNECTOR (TELLTALE LIGHT ASSEMBLY - BODY GROUND)

(a) for Telltale Light (w/o Clock):

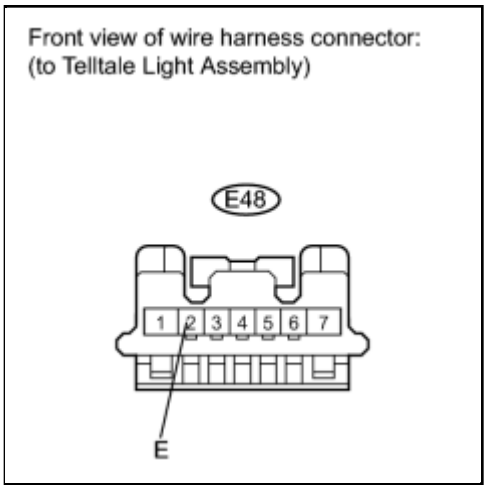

(1) Measure the resistance according to the value(s) in the table below.

Standard Resistance:

TESTER CONNECTION	CONDITION	SPECIFIED CONDITION
E48-2 (E) - Body ground	Always	Below 1 Ω

(b) for Telltale Light (w/ Clock):

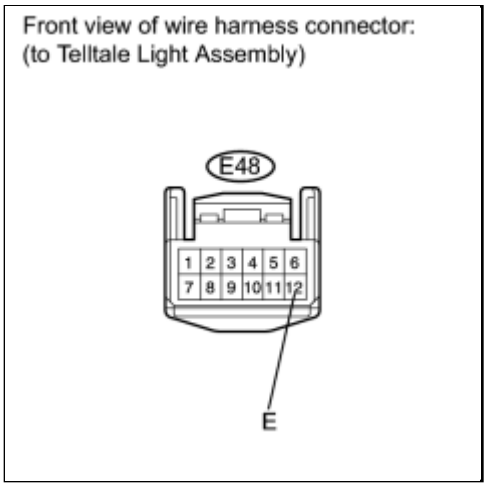

(1) Measure the resistance according to the value(s) in the table below.

Standard Resistance:

TESTER CONNECTION	CONDITION	SPECIFIED CONDITION
E48-12 (E) - Body ground	Always	Below 1 Ω

NG ▶ **REPAIR OR REPLACE HARNESS OR CONNECTOR**

OK ▶ **REPLACE TELLTALE LIGHT ASSEMBLY**

Last Modified: 3-10-2010	6.4 J	**From:** 200901
Model Year: 2010	**Model:** Corolla	**Doc ID:** RM000000W4502XX
Title: THEFT DETERRENT / KEYLESS ENTRY: ENGINE IMMOBILISER SYSTEM (w/ Smart Key System): ID Code Box Power Source Circuit (2010 Corolla)		

ID Code Box Power Source Circuit

DESCRIPTION

This circuit provides power to operate the ID code box (immobiliser code ECU).

WIRING DIAGRAM

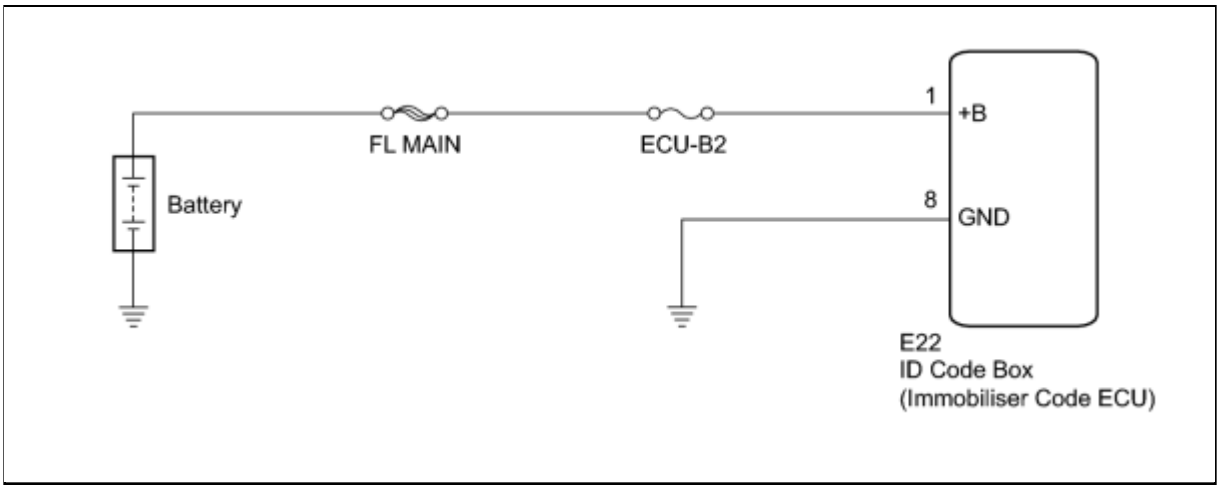

INSPECTION PROCEDURE

NOTICE:

If the ID code box (immobiliser code ECU) is replaced, register the ECU code and ECU communication ID INFO **.**

PROCEDURE

1.	**CHECK HARNESS AND CONNECTOR (ID CODE BOX - BATTERY)**

(a) Disconnect the ID code box (immobiliser code ECU) connector.

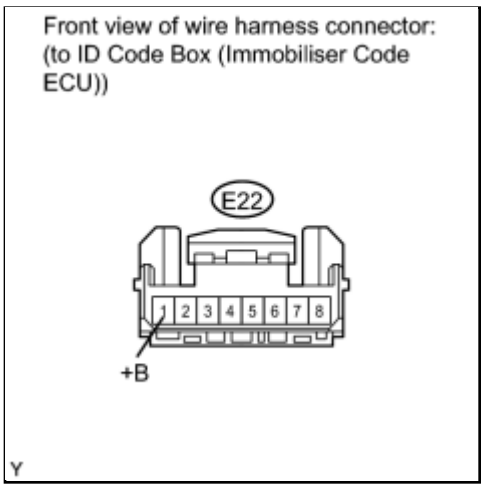

(b) Measure the voltage according to the value(s) in the table below.

Standard Voltage:

TESTER CONNECTION	CONDITION	SPECIFIED CONDITION
E22-1 (+B) - Body ground	Always	11 to 14 V

NG ▶ **REPAIR OR REPLACE HARNESS OR CONNECTOR, OR REPLACE FUSE**

OK ▼

2.	**CHECK HARNESS AND CONNECTOR (ID CODE BOX - BODY GROUND)**

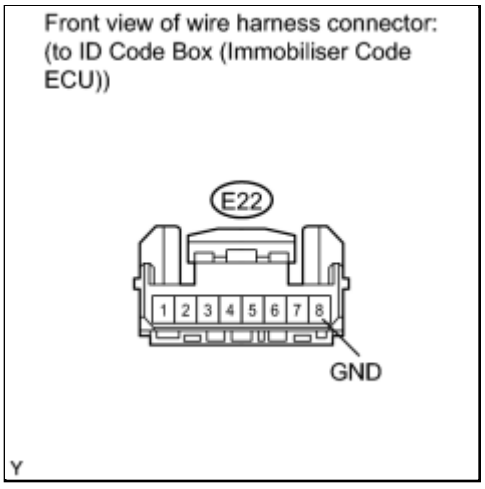

(a) Measure the resistance according to the value(s) in the table below.

Standard Resistance:

TESTER CONNECTION	CONDITION	SPECIFIED CONDITION
E22-8 (GND) - Body ground	Always	Below 1 Ω

NG ▶ **REPAIR OR REPLACE HARNESS OR CONNECTOR**

OK	PROCEED TO NEXT CIRCUIT INSPECTION SHOWN IN PROBLEM SYMPTOMS TABLE

Last Modified: 3-10-2010	6.4 J	**From:** 200901
Model Year: 2010	**Model:** Corolla	**Doc ID:** RM000001P8X01PX
Title: THEFT DETERRENT / KEYLESS ENTRY: ENGINE IMMOBILISER SYSTEM (w/ Smart Key System): Certification ECU Power Source Circuit (2010 Corolla)		

Certification ECU Power Source Circuit

DESCRIPTION

This is the power source circuit of the certification ECU (smart key ECU assembly).

The certification ECU (smart key ECU assembly) controls the following:

- Key verification confirmation
- Electrical key oscillator (door, indoor and outside) control
- Entry door LOCK/UNLOCK request to the main body ECU (instrument panel junction block)
- Steering LOCK/UNLOCK request
- Immobiliser SET/UNSET request to the ID code box (immobiliser code ECU)

WIRING DIAGRAM

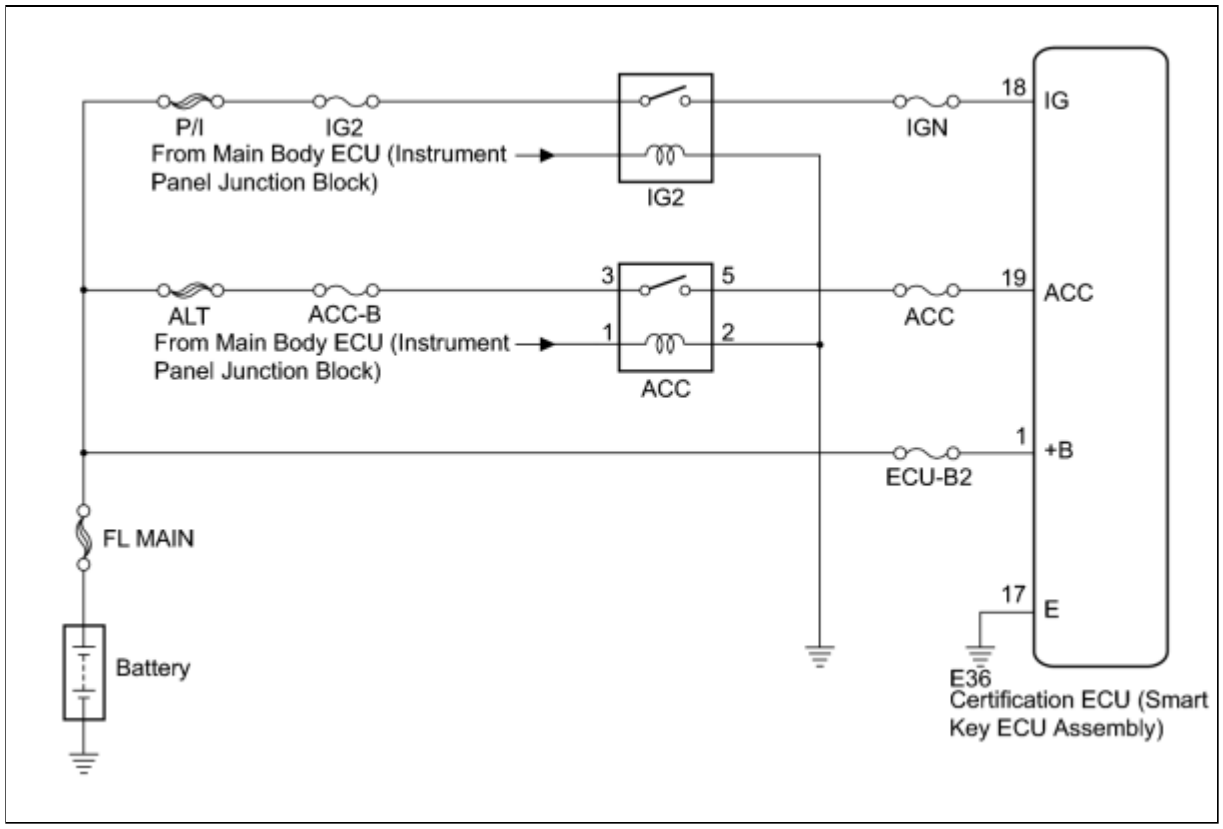

INSPECTION PROCEDURE

NOTICE:

If the certification ECU (smart key ECU assembly) is replaced, register the key and ECU communication ID INFO .

PROCEDURE

1.	CHECK HARNESS AND CONNECTOR (CERTIFICATION ECU - BATTERY)

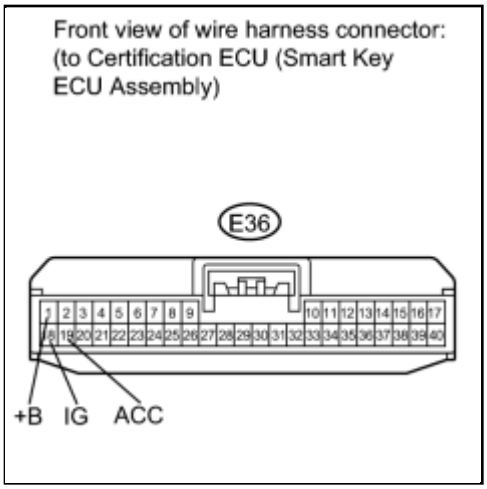

(a) Disconnect the certification ECU (smart key ECU assembly) connector.

(b) Measure the voltage according to the value(s) in the table below.

Standard Voltage:

TESTER CONNECTION	CONDITION	SPECIFIED CONDITION
E36-1 (+B) - Body ground	Always	11 to 14 V
E36-18 (IG) - Body ground	Engine switch off	Below 1 V
E36-18 (IG) - Body ground	Engine switch on (IG)	11 to 14 V
E36-19 (ACC) - Body ground	Engine switch off	Below 1 V
E36-19 (ACC) - Body ground	Engine switch on (ACC)	11 to 14 V

NG ▶ **REPAIR OR REPLACE HARNESS OR CONNECTOR, OR REPLACE FUSE**

OK ▼

2.	CHECK HARNESS AND CONNECTOR (CERTIFICATION ECU - BODY GROUND)

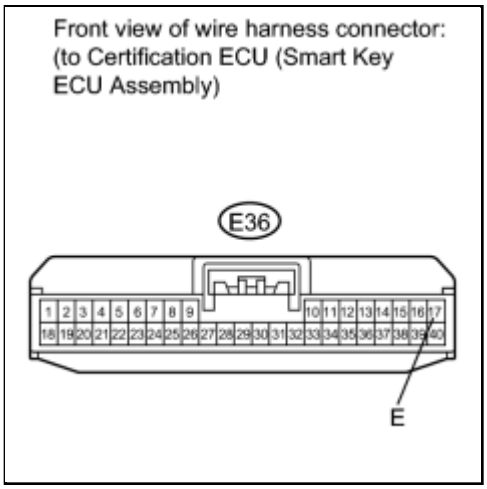

(a) Measure the resistance according to the value(s) in the table below.

Standard Resistance:

TESTER CONNECTION	CONDITION	SPECIFIED CONDITION
E36-17 (E) - Body ground	Always	Below 1 Ω

NG ▶ **REPAIR OR REPLACE HARNESS OR CONNECTOR**

OK ▶ **PROCEED TO NEXT CIRCUIT INSPECTION SHOWN IN PROBLEM SYMPTOMS TABLE**

Last Modified: 3-10-2010	6.4 L	**From:** 200901
Model Year: 2010	**Model:** Corolla	**Doc ID:** RM000001R4A015X
Title: THEFT DETERRENT / KEYLESS ENTRY: ENGINE IMMOBILISER SYSTEM (w/o Smart Key System): PRECAUTION (2010 Corolla)		

PRECAUTION

1. PRECAUTIONS FOR THE KEY

(a) The key is a precision instrument. Be sure to observe the following:

(1) Do not drop or strike the key.

(2) Do not allow the key to be kept in a high temperature place for a long time.

(3) Do not use an ultrasonic washing machine to clean the key.

(4) Keep the key away from magnets or magnetized items during use.

(5) Do not attach any stickers to the key.

2. PRECAUTION FOR RECONNECTING THE BATTERY CABLE

(a) When reconnecting the cable to the negative (-) battery terminal, before starting the engine, wait at least 5 seconds after turning the ignition switch to ON. The engine may start and stall if it is started immediately after reconnecting the battery cable.



Last Modified: 3-10-2010	6.4 R	**From:** 200901
Model Year: 2010	**Model:** Corolla	**Doc ID:** RM00000289L012X
Title: THEFT DETERRENT / KEYLESS ENTRY: ENGINE IMMOBILISER SYSTEM (w/o Smart Key System): PARTS LOCATION (2010 Corolla)		

PARTS LOCATION

ILLUSTRATION

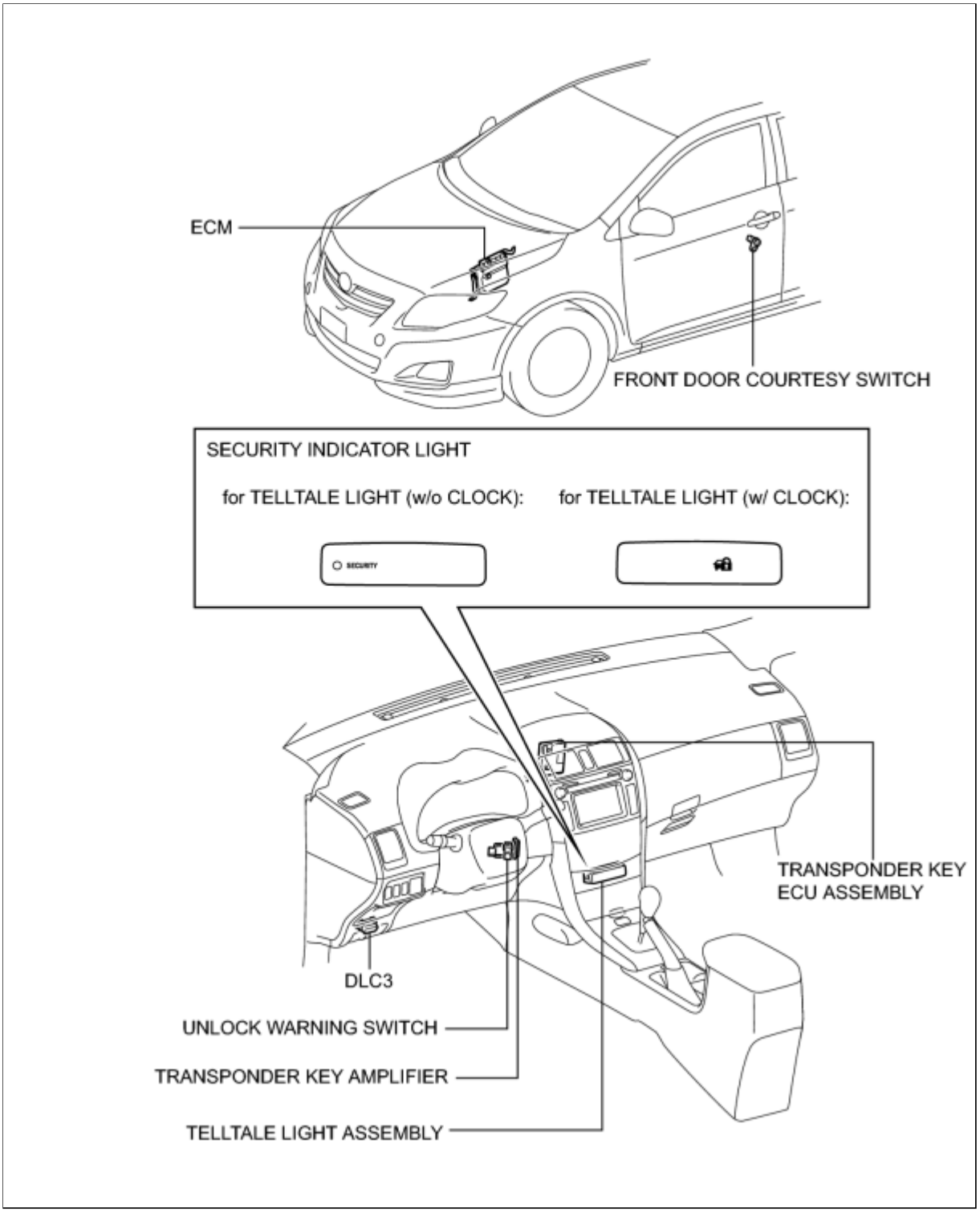
ECM
FRONT DOOR COURTESY SWITCH
SECURITY INDICATOR LIGHT
for TELLTALE LIGHT (w/o CLOCK):
for TELLTALE LIGHT (w/ CLOCK):
SECURITY
TRANSPONDER KEY ECU ASSEMBLY
DLC3
UNLOCK WARNING SWITCH
TRANSPONDER KEY AMPLIFIER
TELLTALE LIGHT ASSEMBLY

Last Modified: 3-10-2010	6.4 D	**From:** 200901
Model Year: 2010	**Model:** Corolla	**Doc ID:** RM000001GUQ01EX
Title: THEFT DETERRENT / KEYLESS ENTRY: ENGINE IMMOBILISER SYSTEM (w/o Smart Key System): HOW TO PROCEED WITH TROUBLESHOOTING (2010 Corolla)		

HOW TO PROCEED WITH TROUBLESHOOTING

HINT:

Use the following procedure to troubleshoot the engine immobiliser system.

***: Using the Techstream.**

1.	**VEHICLE BROUGHT TO WORKSHOP**

NEXT

2.	**CUSTOMER PROBLEM ANALYSIS**

HINT:

- In troubleshooting, confirm that the problem symptoms have been accurately identified. Preconceptions should be discarded in order to make an accurate judgment. To clearly understand what the problem symptoms are, it is extremely important to ask the customer about the problem and the conditions at the time the malfunction occurred.
- Gather as much information as possible for reference. Past problems that seem unrelated may also help in some cases.
- The following 5 items are important points in the problem analysis:

What	Vehicle model, system name
When	Date, time, occurrence frequency
Where	Road conditions
Under what conditions?	Driving conditions, weather conditions
How did it happen?	Problem symptoms

NEXT

3.	**INSPECT BATTERY VOLTAGE**

(a) Measure the battery voltage.

Standard Voltage:
11 to 14 V

If the voltage is below 11 V, recharge or replace the battery before proceeding to the next step.

NEXT

4.	**CRANK ENGINE FOR MORE THAN 10 SECONDS**

NEXT

5.	**CHECK FOR DTC***

(a) Check for DTCs and note any codes that are output.

(b) Clear the DTCs.

(c) Recheck for DTCs. Try to duplicate the DTCs (SFI system or ECD system and engine immobiliser system) by simulating the symptoms indicated by the DTCs.

Result:

RESULT	PROCEED TO
DTC (SFI system) recurs (for 2ZR-FE)	A
DTC (SFI system) recurs (for 2AZ-FE)	B
DTC (engine immobiliser system) recurs	C

RESULT	PROCEED TO
DTC does not recur	D

A ▶ INFO **Go to DIAGNOSTIC TROUBLE CODE CHART**

B ▶ INFO **Go to DIAGNOSTIC TROUBLE CODE CHART**

C ▶ INFO **Go to DIAGNOSTIC TROUBLE CODE CHART**

D
▼

6.	READ VALUE USING TECHSTREAM*

(a) Connect the Techstream to the DLC3.

(b) Turn the ignition switch to ON.

(c) Turn the Techstream on.

(d) Enter the following menus: Body Electrical / Immobiliser / Data List.

(e) Read the Data List according to the display on the Techstream.

Immobiliser (Transponder Key ECU Assembly)

TESTER DISPLAY	MEASUREMENT ITEM/RANGE	NORMAL CONDITION	DIAGNOSTIC NOTE
Key SW	Unlock warning switch signal/ON or OFF	ON: Key is in ignition key cylinder OFF: No key is in ignition key cylinder	-

OK:
On the Techstream screen, the item changes between ON and OFF according to the chart above.

NG ▶ INFO **Go to DTC B2780**

OK
▼

7.	PROBLEM SYMPTOMS TABLE

(a) Refer to Problem Symptoms Table INFO .

Result:

RESULT	PROCEED TO
Fault is not listed in problem symptoms table	A
Fault is listed in problem symptoms table	B

B ▶ **Go to step 9**

A

▼

8.	OVERALL ANALYSIS AND TROUBLESHOOTING*

(a) Data List / Active Test INFO

(b) Terminals of ECU INFO

NEXT

▼

9.	ADJUST, REPAIR OR REPLACE

NEXT

▼

10.	CONFIRMATION TEST


TOYOTA

Last Modified: 3-10-2010	6.4 M	**From:** 200901
Model Year: 2010	**Model:** Corolla	**Doc ID:** RM00000120Y013X
Title: THEFT DETERRENT / KEYLESS ENTRY: ENGINE IMMOBILISER SYSTEM (w/o Smart Key System): REGISTRATION (2010 Corolla)		

REGISTRATION

1. DESCRIPTION OF CODE REGISTRATION

HINT:

The key has 2 codes: the key code (immobiliser code) and the wireless code. Both of these codes need to be registered. For the wireless code registration procedures, refer to Wireless Door Lock Control System INFO **.**

(a) When adding master keys or sub keys (Additional registration):

(1) Register the key code (immobiliser code) in the transponder key ECU assembly.

TARGET ECU	REFER TO
Transponder key ECU assembly	Procedure "B"

(b) When replacing the transponder key ECU assembly (New registration):

(1) Register the key code (immobiliser code) in the transponder key ECU assembly.

TARGET ECU	REFER TO
Transponder key ECU assembly	Procedure "A"

(2) Register the ECU communication ID between the new transponder key ECU assembly and the ECM.

TARGET ECU	REFER TO
ECM	Procedure "D"

(c) When replacing the ECM:

(1) Register the ECU communication ID between the transponder key ECU assembly and the new ECM.

TARGET ECU	REFER TO
Transponder key ECU assembly	Procedure "E"

(d) When replacing the transponder key ECU assembly and the ECM:

(1) Register the key codes (immobiliser codes) in the new transponder key ECU assembly.

TARGET ECU	REFER TO
Transponder key ECU assembly	Procedure "A"

(2) Register the ECU communication ID between the new transponder key ECU assembly and the new ECM.

TARGET ECU	REFER TO
Transponder key ECU assembly	Procedure "E"

(e) When clearing the key code(s):

(1) Clear the key code(s) of lost key(s).

TARGET ECU	REFER TO
Transponder key ECU assembly	Procedure "C"

2. KEY REGISTRATION

(a) New key code registration (Procedure "A"):

NOTICE:

Make sure that no key codes are registered in the transponder key ECU assembly.

HINT:

- In this mode, a maximum of 3 key codes for 2 master keys and 1 sub-key can be registered. The master keys and sub-key can be registered in any order because the transponder key ECU assembly can distinguish between different types of keys.
- New key codes must be registered with the battery connected. The ignition switch can be either on or off.
- When a new transponder key ECU assembly is installed, key codes must be registered in the transponder key ECU assembly.

Automatic Key Code Registration (New Registration)

PROCEDURE	SECURITY INDICATOR LIGHT CONDITION
1. Start	Blinking **HINT:** **Until first key is inserted**
2. Insert the master key into the ignition key cylinder.	ON
3. Techstream operation 1. Select Body Electrical 2. Select Immobiliser 3. Select Utility	OFF for 1 second and then ON

PROCEDURE	SECURITY INDICATOR LIGHT CONDITION
4. Select Key Registration **HINT:** **After completing the above operation, proceed to the next step in accordance with the prompts on the Techstream screen.**	
4. Remove the key and then select Next on the Techstream.	ON
5. Insert the master key to be registered and then select Next on the Techstream.	OFF for 1 second and then ON
6. Remove the key and then select Next on the Techstream.	ON
7. Insert the sub-key to be registered and then select Next on the Techstream.	OFF for 1 second and then ON for 0.5 seconds and then OFF
8. Remove the key.	Blinking
9. End (Procedure "E")	

HINT:

- When the engine immobiliser system is operating normally and the key is pulled out, the security indicator light blinks continuously.
- If the new key code registration fails, code 2-1 will be output through the security indicator light. Trying to re-register an already registered key will cause code 2-2 to be output when the key is inserted. If the number of registered key codes exceeds the maximum limit, code 2-3 will be output through the security indicator light. The output details are shown below.

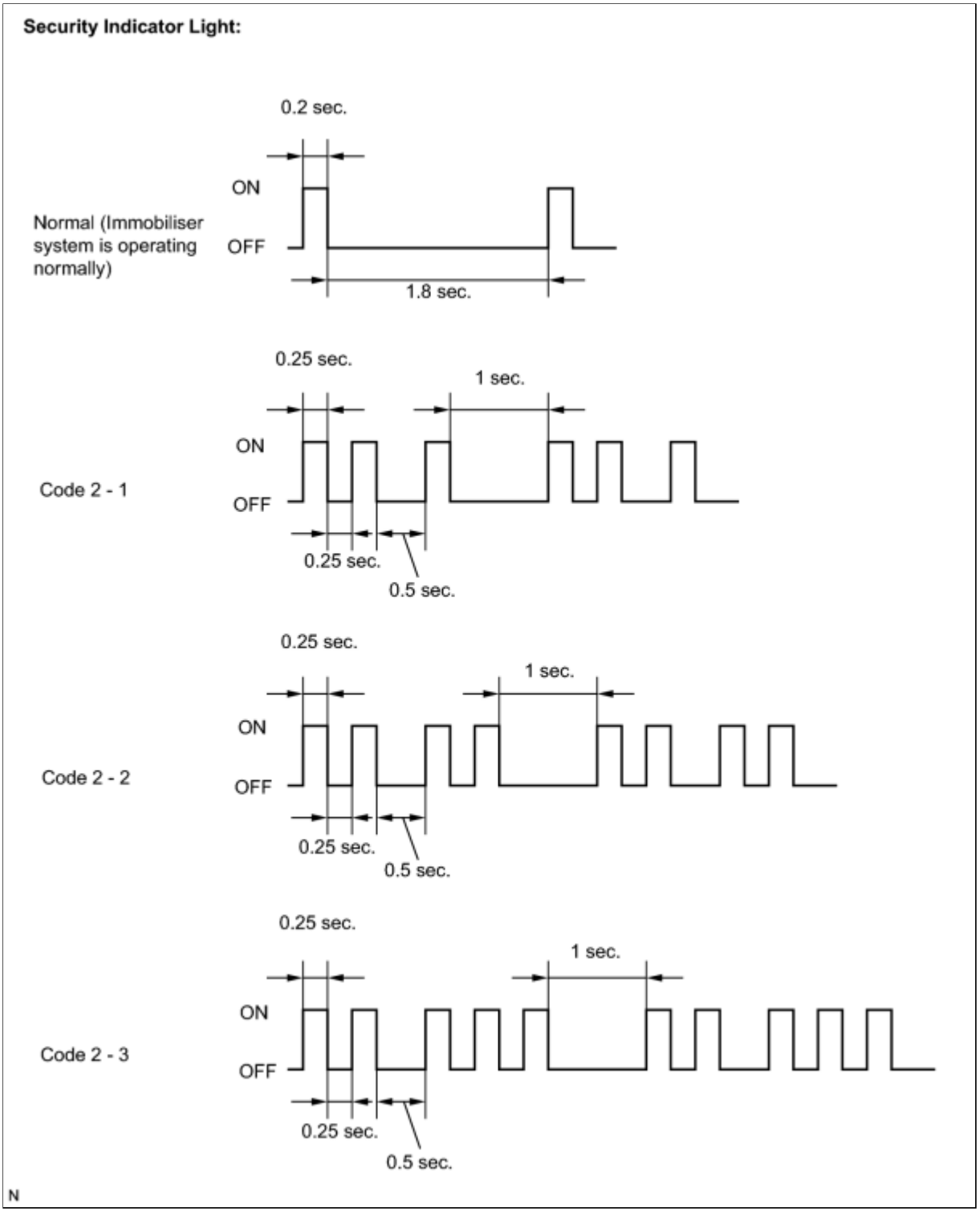

(b) Finish the automatic key code registration mode. The automatic key code registration mode can be forced to end when at least 1 key code (immobiliser code) for the master key has been registered.

HINT:

Follow the instruction on the Techstream screen to end new key code registration mode.

3. REGISTRATION OF ADDITIONAL KEY

(a) Additional registration (Procedure "B"):

HINT:

- A maximum of 5 key codes and 3 sub-key codes can be registered.
- Registration mode will end if any step is not completed within the specified time.
- When the ignition cylinder or the key cylinder set is replaced, remove the transmitter module from the original master key. Then install this transmitter module to a new key and use the new key as the master key. If necessary, use this master key to register other keys.

NOTICE:

When the ignition key cylinder has been replaced, locking and unlocking doors are possible with the new master key's transmitter module (removed from the original master key). However, the new master key will not be able to lock and unlock doors through the door key cylinder. Keep the original master key. If the battery in the new master key's transmitter module fails, the original master key can be used to lock and unlock doors through the door key cylinder.

Additional Registration

PROCEDURE	TIME TO COMPLETE OPERATION	SECURITY INDICATOR LIGHT CONDITION
1. Start	-	Blinking **HINT:** **Until first key is inserted**
2. Insert the already registered master key into the ignition key cylinder and turn the ignition switch to ON.	-	OFF
3. Techstream operation 1. Select Body Electrical 2. Select Immobiliser 3. Select Utility 4. Select Key Registration **HINT:** **After completing the above operation, proceed to the next step in accordance with the prompts on the Techstream screen.**	Within 120 sec.	ON
4. Remove the master key.	Within 20 sec. **HINT:** **After the Techstream instruction**	ON
5. Insert the key to be registered in the ignition key cylinder.	Within 10 sec.	Blinking
6. Wait for 60 sec. after the key is registered. **HINT:**	-	OFF

PROCEDURE	TIME TO COMPLETE OPERATION	SECURITY INDICATOR LIGHT CONDITION
The security indicator light goes off.		
7. Remove the key.	-	Blinking
8. End		

HINT:

- A brief outline of key code registration procedures is shown above. For detailed information, refer to the Techstream screen.
- When the engine immobiliser system is operating normally and the key is pulled out, the security indicator light blinks continuously.
- If the key code registration has failed in automatic key code registration mode, code 2-1 will be output through the security indicator light. Trying to re-register an already registered key will cause code 2-2 to be output when the key is inserted. If the number of registered key codes exceeds the maximum limit, code 2-3 will be output through the security indicator light. The details are shown in procedure "A".

4. ERASURE OF KEY CODE

(a) Key code erasure (Procedure "C"):

HINT:

- Performing this procedure will erase all key codes except for the master key, which is used for erasing the key codes. In order to use a key whose code has been erased, a new key code must be registered.
- This procedure will be canceled if each step is not completed within the specified time.

Key Code Erasure

PROCEDURE	TIME TO COMPLETE OPERATION	SECURITY INDICATOR LIGHT CONDITION
1. Start	-	Blinking **HINT:** **Until first key is inserted**
2. Insert the already registered master key in the ignition key cylinder and turn the ignition switch to ON.	-	OFF
3. Techstream operation 1. Select Body Electrical 2. Select Immobiliser 3. Select Utility 4. Select Transponder Code Erasure	Within 120 sec.	ON for 1 sec. then OFF

PROCEDURE	TIME TO COMPLETE OPERATION	SECURITY INDICATOR LIGHT CONDITION
HINT: **After completing the above operation, proceed to the next step in accordance with the prompts on the Techstream screen.**		
4. Remove the master key.	Within 10 sec. **HINT:** **After the Techstream instruction**	ON
5. End		

HINT:

- A brief outline of key code registration procedures is shown above. For detailed information, refer to the Techstream screen.
- When the engine immobiliser system is operating normally and the key is pulled out, the security indicator light blinks continuously.

5. ECU COMMUNICATION ID REGISTRATION

(a) ECU communication ID registration (Procedure "D"):

NOTICE:

- When the transponder key ECU assembly is replaced, the ECU communication ID of the ECM must be registered into the transponder key ECU assembly to match their ECU communication IDs.
- The engine cannot be started unless the ECU communication IDs match.
- Do not turn the ignition switch from on to off 20 times or more before registering the ECU communication ID. Turning the ignition switch from on to off 20 times or more will result in the engine not starting unless the transponder key ECU assembly is replaced with a new one.
- After the registration, turning the ignition switch to the START position may not start the engine on the first try. If so, turn the ignition switch to the START position again.
- After the engine is started, clear DTC B2799 (code for ECM's immobiliser communication error) by either of the following:

  - Using the Techstream.

  - Disconnecting the battery for 30 seconds.

(1) Using SST, connect terminals TC and CG of the DLC3.

SST: 09843-18040

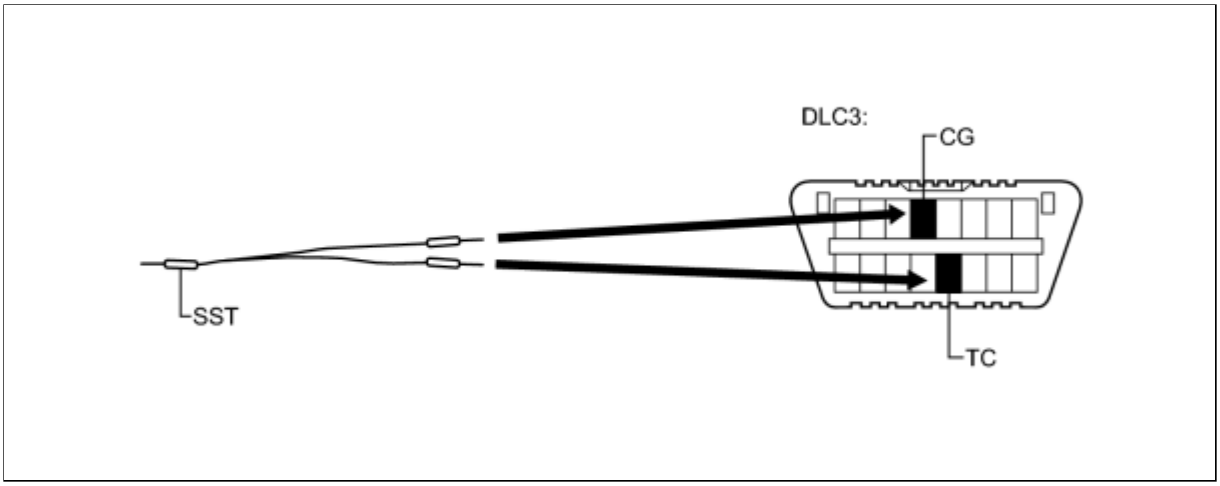

(2) Turn the ignition switch to ON and leave the vehicle as is for 30 minutes.

HINT:

Do not start the engine.

(3) Check that the engine starts.

(b) ECU communication ID registration (Procedure "E"):

NOTICE:

The ECU communication ID should be registered when the ECM and transponder key ECU assembly are replaced or when the ECM only is replaced in order to match the ECU communication ID.

ECU Communication ID Registration

PROCEDURE	SECURITY INDICATOR LIGHT CONDITION
1. Start	OFF
2. Insert an already registered key into the ignition key cylinder.	
3. Start the engine.	
4. Check that the engine starts and stays on for more than 3 seconds.	
5. End	

Last Modified: 3-10-2010	6.4 D	**From:** 200901
Model Year: 2010	**Model:** Corolla	**Doc ID:** RM000001GV6015X
Title: THEFT DETERRENT / KEYLESS ENTRY: ENGINE IMMOBILISER SYSTEM (w/o Smart Key System): SYSTEM DESCRIPTION (2010 Corolla)		

SYSTEM DESCRIPTION

1. ENGINE IMMOBILISER SYSTEM DESCRIPTION

The engine immobiliser system is designed to prevent the vehicle from being stolen. This system uses the transponder key ECU that stores the key codes of authorized ignition keys. If an attempt is made to start the engine using an unauthorized key, the ECU sends a signal to the ECM to prohibit fuel delivery and ignition, effectively disabling the engine.

2. FUNCTION OF MAIN COMPONENTS

COMPONENT	OUTLINE
Transponder key coil/amplifier	When key is inserted in ignition key cylinder, key coil receives key code. Then amplifier amplifies ID code and outputs it to transponder key ECU assembly.
Unlock warning switch assembly	Unlock warning switch assembly detects if key is in ignition key cylinder and outputs results to transponder key ECU assembly.
ECM	ECM receives ID verification results from transponder key ECU assembly. ECM also verifies ECUs. Then judgment of whether to immobiliser engine is made.
Security indicator	Depending on operation of transponder key ECU assembly, security indicator light comes on or starts blinking.

3. SYSTEM FUNCTION

(a) When the transponder key ECU assembly detects that the key unlock warning switch is ON, the ECU provides current to the transponder key coil and produces an electric wave. A transponder chip in the key grip receives the electric wave. Upon receiving the electric wave, the transponder chip outputs a key ID code signal. The transponder key coil receives this signal, which is amplified by the transponder key amplifier, and the signal is transmitted to the ECU.

The ECU matches the key ID code with the vehicle's ID code, which was previously registered in the ECU, and communicates the results to the ECM.

After the identification results show that the key ID code matches the vehicle's ID code and the ECU has confirmed their match: 1) the immobiliser system does not immobilise the engine and the engine starting controls (fuel injection control and ignition control) enter standby mode; and 2) the ECU transmits a security indicator signal that communicates "indicator off" to the clock. Then, the clock turns off the security indicator light.

(b) The security indicator blinking pattern is as shown below (when changing from the immobiliser set status to the unset status):

Security Indicator:

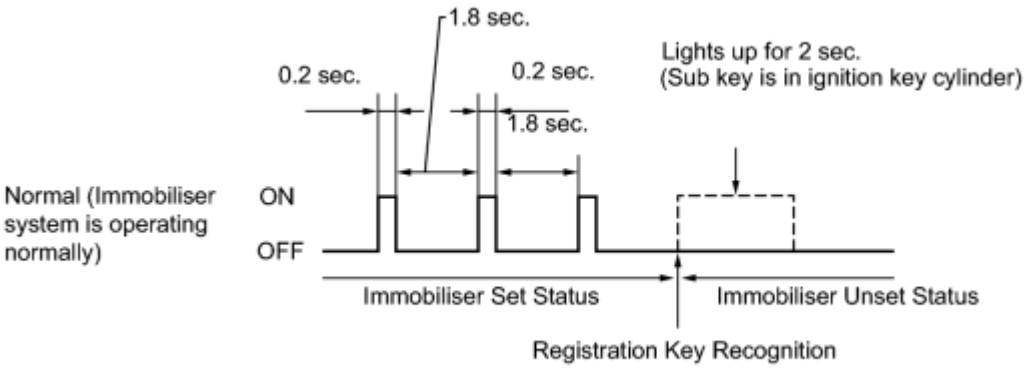

N

Last Modified: 3-10-2010	6.4 U	**From:** 200901
Model Year: 2010	**Model:** Corolla	**Doc ID:** RM0000014IP019X
Title: THEFT DETERRENT / KEYLESS ENTRY: ENGINE IMMOBILISER SYSTEM (w/o Smart Key System): SYSTEM DIAGRAM (2010 Corolla)		

SYSTEM DIAGRAM

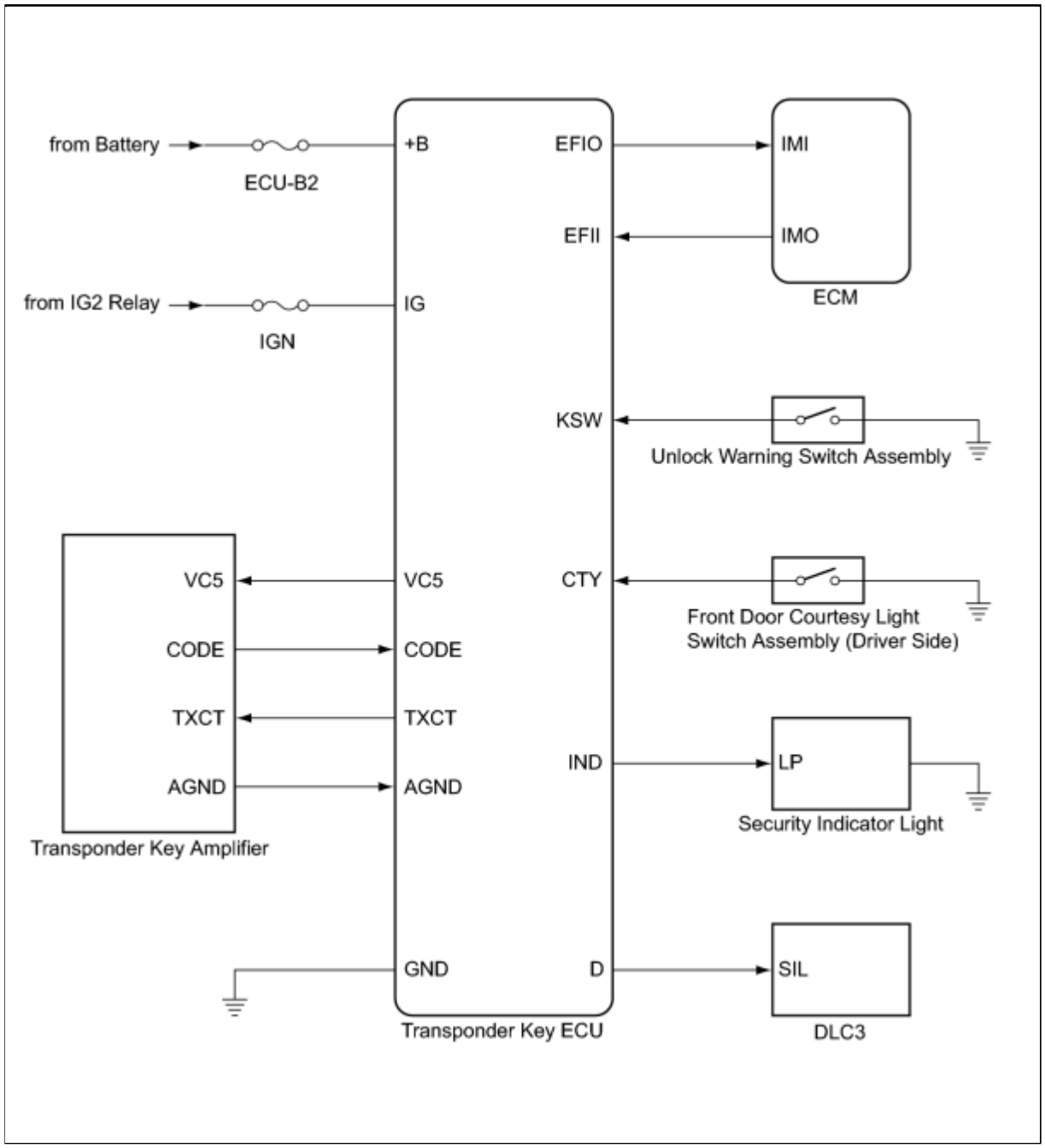

Last Modified: 3-10-2010	6.4 U	**From:** 200901
Model Year: 2010	**Model:** Corolla	**Doc ID:** RM000001GUS017X
Title: THEFT DETERRENT / KEYLESS ENTRY: ENGINE IMMOBILISER SYSTEM (w/o Smart Key System): TERMINALS OF ECU (2010 Corolla)		

TERMINALS OF ECU

1. CHECK TRANSPONDER KEY AMPLIFIER

(a) Disconnect the E29 transponder key amplifier connector.

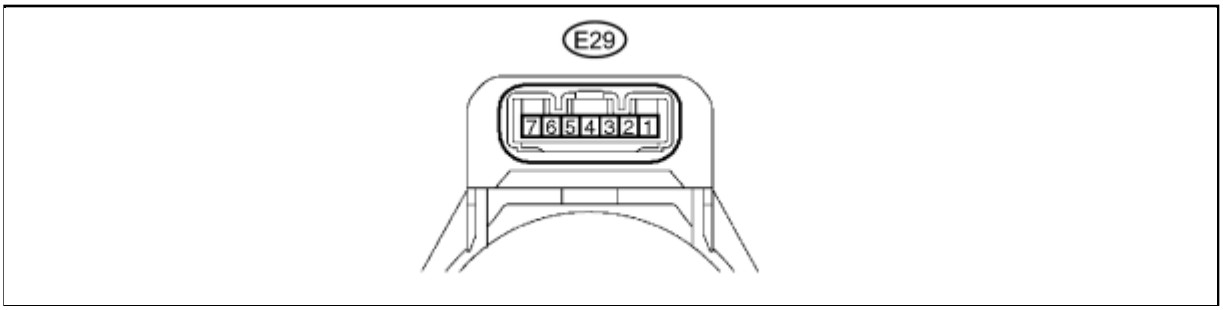

(b) Measure the resistance according to the value(s) in the table below.

TESTER CONNECTION	WIRING COLOR	TERMINAL DESCRIPTION	CONDITION	SPECIFIED CONDITION
E29-7 (AGND) - Body ground	R - Body ground*1 V - Body ground*2	Ground	Always	Below 1 Ω

- *1: for TMC Made
- *2: Except for TMC Made

If the result is not as specified, there may be a malfunction on the wire harness side.

(c) Reconnect the E29 transponder key amplifier connector.

(d) Measure the voltage according to the value(s) in the table below.

TESTER CONNECTION	WIRING COLOR	TERMINAL DESCRIPTION	CONDITION	SPECIFIED CONDITION
E29-1 (VC5) - E29-7 (AGND)	B - R*1 G - V*2	Power source	No key is in ignition key cylinder	Below 1 V
E29-1 (VC5) - E29-7 (AGND)	B - R*1 G - V*2	Power source	Key is in ignition key cylinder	4.6 to 5.4 V
E29-4 (CODE) - E29-7 (AGND)	P - R*1 SB - V*2	Demodulated signal of key code data	No key is in ignition key cylinder	Below 1 V

TESTER CONNECTION	WIRING COLOR	TERMINAL DESCRIPTION	CONDITION	SPECIFIED CONDITION
E29-4 (CODE) - E29-7 (AGND)	P - R*1 SB - V*2	Demodulated signal of key code data	Key is in ignition key cylinder	Waveform 1
E29-5 (TXCT) - E29-7 (AGND)	G - R*1 BE - V*2	Key code output signal	No key is in ignition key cylinder	Below 1 V
E29-5 (TXCT) - E29-7 (AGND)	G - R*1 BE - V*2	Key code output signal	Key is in ignition key cylinder	Waveform 2

- *1: for TMC Made
- *2: Except for TMC Made

If the result is not as specified, the transponder key amplifier may have a malfunction.

(e) Inspect using an oscilloscope.

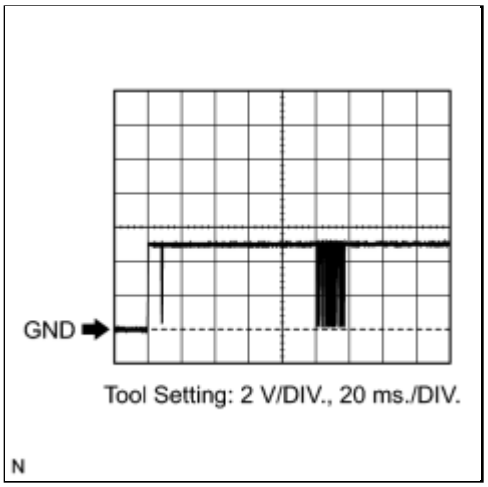

(1) Waveform 1 (Reference)

Tester Connection	E29-4 (CODE) - E29-7 (AGND)
Tool Setting	2 V/DIV., 20 ms./DIV.
Condition	Key is in ignition key cylinder

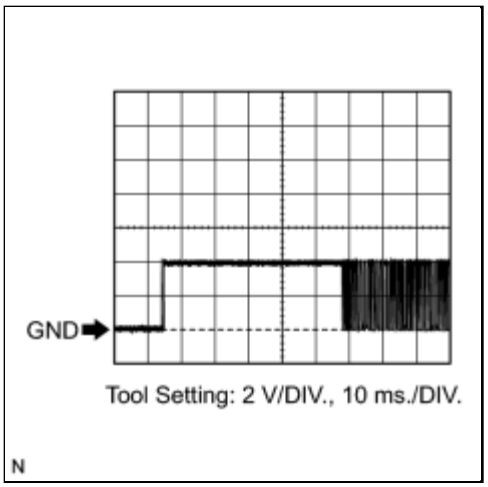

(2) Waveform 2 (Reference)

Tester Connection	E29-5 (TXCT) - E29-7 (AGND)
Tool Setting	2 V/DIV., 10 ms./DIV.
Condition	Key is in ignition key cylinder

2. CHECK TRANSPONDER KEY ECU ASSEMBLY

(a) Disconnect the E21 transponder key ECU assembly connector.

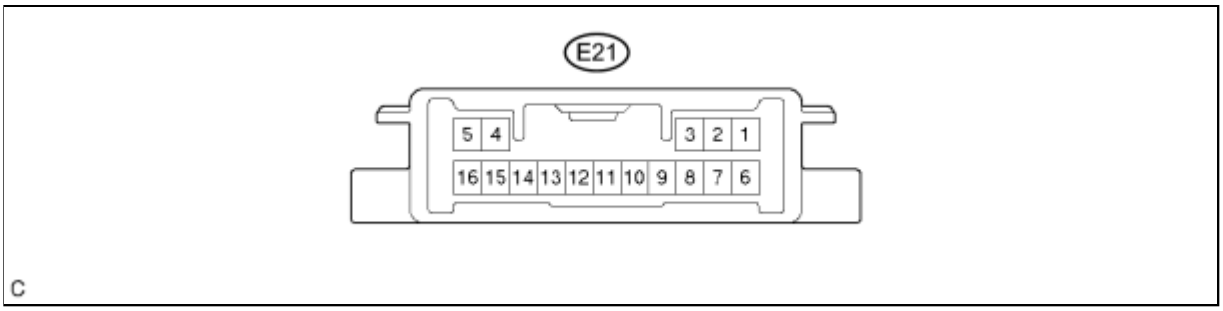

(b) Measure the resistance and voltage according to the value(s) in the table below.

TESTER CONNECTION	WIRING COLOR	TERMINAL DESCRIPTION	CONDITION	SPECIFIED CONDITION
E21-16 (GND) - Body ground	BR - Body ground	Ground	Always	Below 1 Ω
E21-1 (+B) - E21-16 (GND)	W - BR*1 BR - BR*2	Battery	Always	11 to 14 V
E21-2 (IG) - E21-16 (GND)	B - BR	Ignition switch signal	Ignition switch off	Below 1 V
E21-2 (IG) - E21-16 (GND)	B - BR	Ignition switch signal	Ignition switch ON	11 to 14 V
E21-3 (KSW) - E21-16 (GND)	L - BR	Unlock warning switch signal	No key is in ignition key cylinder	10 kΩ or higher
E21-3 (KSW) - E21-16 (GND)	L - BR	Unlock warning switch signal	Key is in ignition key cylinder	Below 1 Ω

- *1: for TMC Made
- *2: Except for TMC Made

If the result is not as specified, there may be a malfunction on the wire harness side.

(c) Reconnect the E21 transponder key ECU assembly connector.

(d) Measure the resistance and voltage according to the value(s) in the table below.

TESTER CONNECTION	WIRING COLOR	TERMINAL DESCRIPTION	CONDITION	SPECIFIED CONDITION
E21-5 (AGND) - Body ground	R - Body ground*1 V - Body ground*2	Ground	Always	Below 1 Ω
E21-3 (KSW) - E21-16 (GND)	L - BR	Unlock warning switch signal	No key is in ignition key cylinder	11 to 14 V
E21-3 (KSW) - E21-16 (GND)	L - BR	Unlock warning switch signal	Key is in ignition key cylinder	Below 1 V

TESTER CONNECTION	WIRING COLOR	TERMINAL DESCRIPTION	CONDITION	SPECIFIED CONDITION
E21-14 (VC5) - E21-5 (AGND)	B - R*1 G - V*2	Power source	No key is in ignition key cylinder	Below 1 V
E21-14 (VC5) - E21-5 (AGND)	B - R*1 G - V*2	Power source	Key is in ignition key cylinder	4.6 to 5.4 V
E21-4 (TXCT) - E21-5 (AGND)	G - R*1 BE - V*2	Transponder key amplifier communication signal	No key is in ignition key cylinder	Below 1 V
E21-4 (TXCT) - E21-5 (AGND)	G - R*1 BE - V*2	Transponder key amplifier communication signal	Key is in ignition key cylinder	Waveform 1
E21-15 (CODE) - E21-5 (AGND)	P - R*1 SB - V*2	Transponder key amplifier communication signal	No key is in ignition key cylinder	Below 1 V
E21-15 (CODE) - E21-5 (AGND)	P - R*1 SB - V*2	Transponder key amplifier communication signal	Key is in ignition key cylinder	Waveform 2
E21-13 (EFIO) - E21-16 (GND)	P - BR	ECM output signal	Ignition switch off	Below 1 V
E21-13 (EFIO) - E21-16 (GND)	P - BR	ECM output signal	Ignition switch ON	Waveform 3
E21-12 (EFII) - E21-16 (GND)	LG - BR	ECM input signal	Ignition switch off	10 to 14 V
E21-12 (EFII) - E21-16 (GND)	LG - BR	ECM input signal	Within 3 seconds after starter operates and initial combustion occurs, or within 3seconds after ignition switch first turned on (IG) after battery disconnected and connected.	Waveform 4
E21-9 (D) - E21-16 (GND)	W - BR	Diagnostic tester communication	Without communication	Below 1 V
E21-9 (D) - E21-16 (GND)	W - BR	Diagnostic tester communication	During communication	Pulse generation
E21-7 (CTY) - E21-16 (GND)	BR - BR*1 R - BR*2	Door courtesy signal	Switch pushed	11 to 14 V
E21-7 (CTY) - E21-16 (GND)	BR - BR*1 R - BR*2	Door courtesy signal	Switch free	Below 1 V

TESTER CONNECTION	WIRING COLOR	TERMINAL DESCRIPTION	CONDITION	SPECIFIED CONDITION
E21-8 (IND) - E21-16 (GND)	Y - BR	Security indicator signal	Security indicator light is on	11 to 14 V
E21-8 (IND) - E21-16 (GND)	Y - BR	Security indicator signal	Security indicator light is off	Below 1 V

- *1: for TMC Made
- *2: Except for TMC Made

If the result is not as specified, the transponder key ECU assembly may have a malfunction.

(e) Inspect using an oscilloscope.

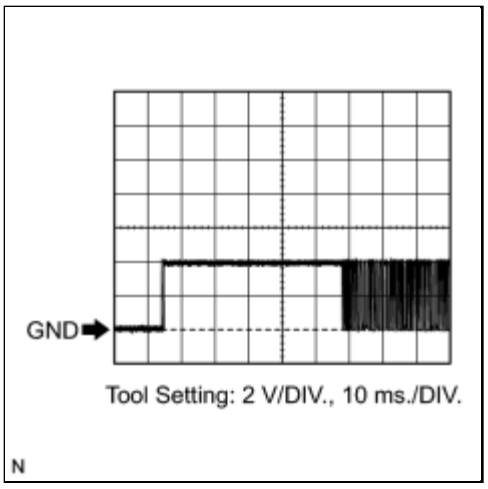

(1) Waveform 1 (Reference)

Tester Connection	E21-4 (TXCT) - E21-5 (AGND)
Tool Setting	2 V/DIV., 10 ms./DIV.
Condition	Key is in ignition key cylinder

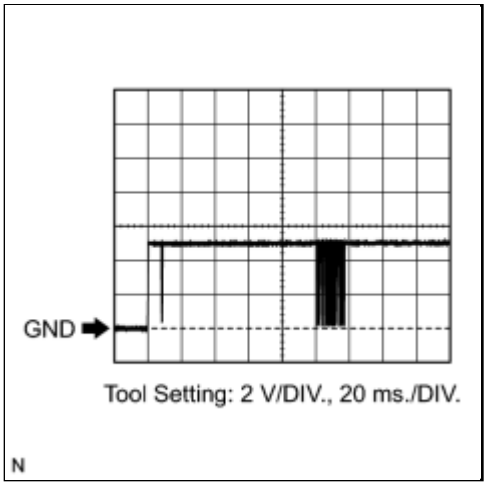

(2) Waveform 2 (Reference)

Tester Connection	E21-15 (CODE) - E21-5 (AGND)
Tool Setting	2 V/DIV., 20 ms./DIV.
Condition	Key is in ignition key cylinder

(3) Waveform 3 (Reference)

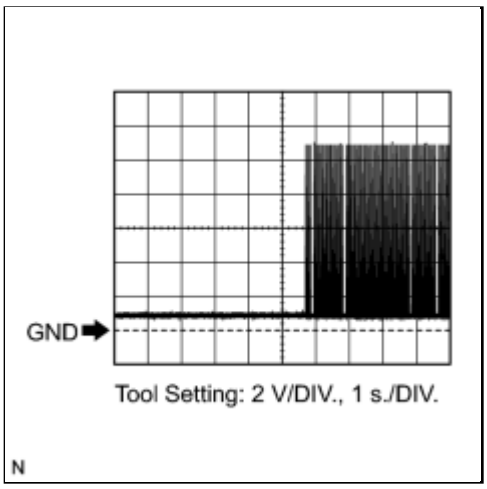

Tester Connection	E21-13 (EFIO) - E21-16 (GND)
Tool Setting	2 V/DIV., 1 s./DIV.
Condition	Ignition switch ON

(4) Waveform 4 (Reference)

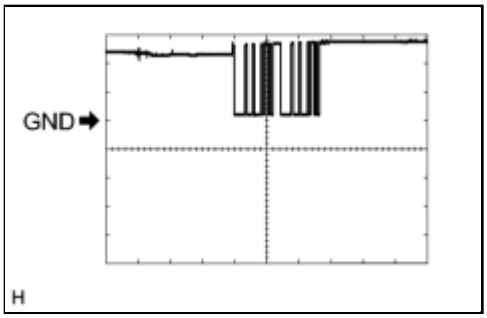

Tester Connection	E21-12 (EFII) - E21-16 (GND)
Tool Setting	5 V/DIV., 500 ms./DIV.
Condition	Within 3 seconds after starter operates and initial combustion occurs, or within 3seconds after ignition switch first turned on (IG) after battery disconnected and connected.

3. CHECK ECM

(a) Measure the voltage according to the value(s) in the table below.

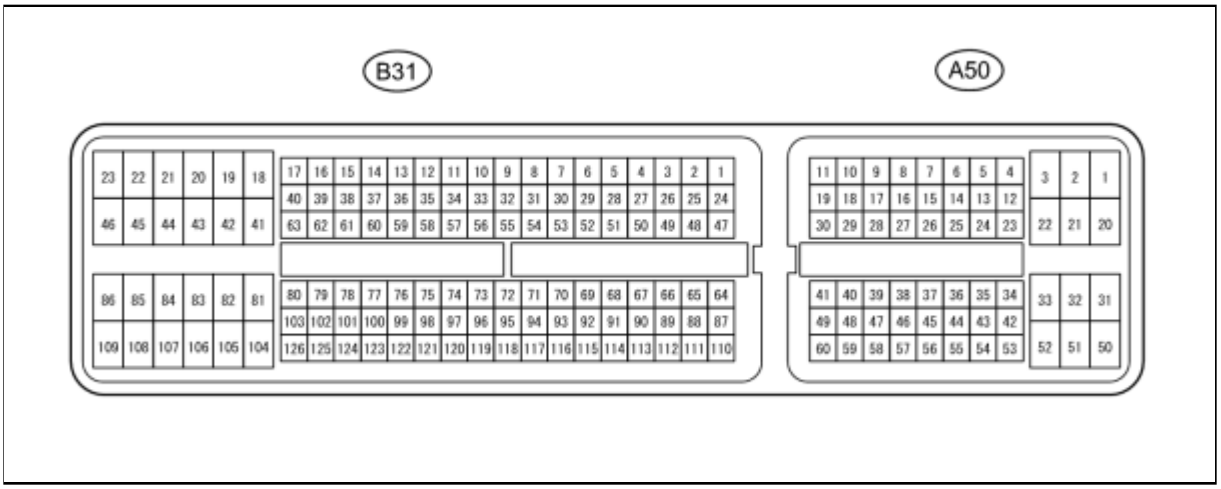

TESTER CONNECTION	WIRING COLOR	TERMINAL DESCRIPTION	CONDITION	SPECIFIED CONDITION
A50-11 (IMI) - B31-104 (E1)	P - BR	Transponder key ECU input signal	Ignition switch off	Below 1 V

TESTER CONNECTION	WIRING COLOR	TERMINAL DESCRIPTION	CONDITION	SPECIFIED CONDITION
A50-11 (IMI) - B31-104 (E1)	P - BR	Transponder key ECU input signal	Ignition switch ON	Waveform 1
A50-10 (IMO) - B31-104 (E1)	LG-B - BR	Transponder key ECU output signal	Ignition switch off	10 to 14 V
A50-10 (IMO) - B31-104 (E1)	LG-B - BR	Transponder key ECU output signal	Within 3 seconds after starter operates and initial combustion occurs, or within 3seconds after ignition switch first turned on (IG) after battery disconnected and connected.	Waveform 2

If the result is not as specified, the ECM may have a malfunction.

(b) Inspect using an oscilloscope.

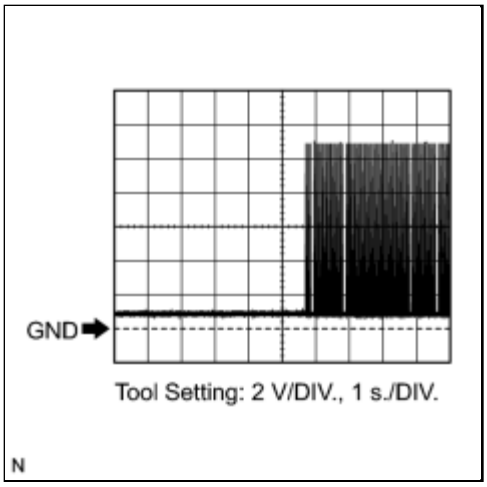

(1) Waveform 1 (Reference)

Tester Connection	A50-11 (IMI) - B31-104 (E1)
Tool Setting	2 V/DIV., 1 s./DIV.
Condition	Ignition switch ON

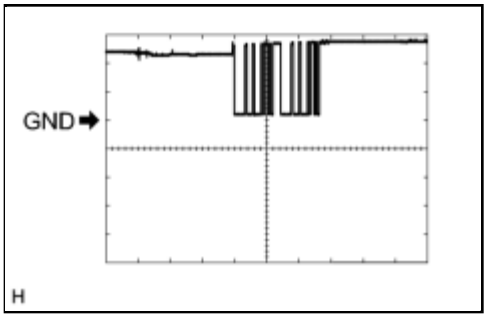

(2) Waveform 2 (Reference)

Tester Connection	A50-10 (IMO) - B31-104 (E1)
Tool Setting	5 V/DIV., 500 ms./DIV.
Condition	Within 3 seconds after starter operates and initial combustion occurs, or within 3seconds after ignition switch first turned on (IG) after battery disconnected and connected.

Last Modified: 3-10-2010	6.4 T	**From:** 200901
Model Year: 2010	**Model:** Corolla	**Doc ID:** RM000000292I017X
Title: THEFT DETERRENT / KEYLESS ENTRY: ENGINE IMMOBILISER SYSTEM (w/o Smart Key System): PROBLEM SYMPTOMS TABLE (2010 Corolla)		

PROBLEM SYMPTOMS TABLE

HINT:

- Use the table below to help determine the cause of problem symptoms. If multiple suspected areas are listed, the potential causes of the symptoms are listed in order of probability in the "Suspected Area" column of the table. Check each symptom by checking the suspected areas in the order they are listed. Replace parts as necessary.
- Inspect the fuses and relays related to this system before inspecting the suspected areas below.

Engine Immobiliser System

SYMPTOM	SUSPECTED AREA	SEE PAGE
Unable to register the key.	Door courtesy switch circuit	INFO
	Wire harness or connector	INFO
	Transponder key ECU assembly	-
Engine does not start.	Key	INFO
	ECU power source circuit	INFO
	SFI system (for 2AZ-FE)	INFO
	SFI system (for 2ZR-FE)	INFO
	Transponder key ECU assembly	-
Security indicator is always ON.	Transponder key ECU assembly	INFO
	Wire harness or connector	-
	Telltale light assembly	-
Security indicator is OFF.	Transponder key ECU assembly	INFO
	Wire harness or connector	-
	Telltale light assembly	-
Security indicator is blinking abnormally.	Transponder key ECU assembly	-
Engine immobiliser system DTCs are not output.	Wire harness or connector	INFO
	Transponder key ECU assembly	-

Last Modified: 3-10-2010	6.4 D	**From:** 200901
Model Year: 2010	**Model:** Corolla	**Doc ID:** RM000001GV7031X
Title: THEFT DETERRENT / KEYLESS ENTRY: ENGINE IMMOBILISER SYSTEM (w/o Smart Key System): DIAGNOSIS SYSTEM (2010 Corolla)		

DIAGNOSIS SYSTEM

1. DESCRIPTION

(a) The transponder key ECU controls the vehicle's immobiliser system functions. Immobiliser system data and Diagnostic Trouble Code (DTC) can be read through the vehicle's Data Link Connector 3 (DLC3).

In some cases, a malfunction may be occurring in the immobiliser system even though the security indicator light is not illuminated.

When the system seems to be malfunctioning, use the Techstream to check for malfunctions and perform repairs.

2. CHECK DLC3

(a) Check the DLC3 INFO .

3. INSPECT BATTERY VOLTAGE

(a) Measure the battery voltage.

Standard Voltage:
11 to 14 V

If the voltage is below 11 V, recharge or replace the battery before proceeding to the next step.

Last Modified: 3-10-2010	6.4 U	**From:** 200901
Model Year: 2010	**Model:** Corolla	**Doc ID:** RM000001GVA015X
Title: THEFT DETERRENT / KEYLESS ENTRY: ENGINE IMMOBILISER SYSTEM (w/o Smart Key System): DATA LIST / ACTIVE TEST (2010 Corolla)		

DATA LIST / ACTIVE TEST

1. DATA LIST

HINT:

Using the Techstream to read the Data List allows the values or states of switches, sensors, actuators and other items to be read without removing any parts. This non-intrusive inspection can be very useful because intermittent conditions or signals may be discovered before parts or wiring is disturbed. Reading the Data List information early in troubleshooting is one way to save diagnostic time.

NOTICE:

In the table below, the values listed under "Normal Condition" are reference values. Do not depend solely on these reference values when deciding whether a part is faulty or not.

(a) Connect the Techstream to the DLC3.

(b) Turn the ignition switch to ON.

(c) Turn the Techstream on.

(d) Enter the following menus: Body Electrical / Immobiliser / Data List.

(e) Read the Data List according to the display on the Techstream.

Immobiliser (Transponder Key ECU Assembly)

TESTER DISPLAY	MEASUREMENT ITEM/RANGE	NORMAL CONDITION	DIAGNOSTIC NOTE
Key SW	Unlock warning switch signal/ON or OFF	ON: Key is in ignition key cylinder OFF: No key is in ignition key cylinder	-
IG SW	Ignition switch signal/ON or OFF	ON: Ignition switch ON or START OFF: Ignition switch ACC or OFF	-
Immobiliser	Immobiliser system status/SET or UNSET	UNSET: Ignition switch ON SET: Without key	-
Permit (Start)	Permit (Start) signal/OK or NG	NG: No permission for engine start OK: Engine start permission	-
Response	Transponder chip data/NG or OK	NG: Data error OK: Data OK	-
Frame Error	Transponder chip data/NG or OK	NG: Data error OK: Data OK	-

TESTER DISPLAY	MEASUREMENT ITEM/RANGE	NORMAL CONDITION	DIAGNOSTIC NOTE
Different Serial Number	Transponder chip data/NG or OK	NG: Data error OK: Data OK	-
Different Encrypt Code	Transponder chip data/NG or OK	NG: Data error OK: Data OK	-
Abnormal Status	Transponder chip data/NG or OK	NG: Data error OK: Data OK	-
Bcc Malfunction	Transponder chip data/NG or OK	NG: Incorrect data being sent OK: Correct data being sent	-
Sub Key	Sub key code signal/NOMATCH or MATCH	NOMATCH: Non-matching sub key code is sent MATCH: Sub key code is sent	-
Master Key	Master key code signal/NOMATCH or MATCH	NOMATCH: Non-matching master key code is sent MATCH: Master key code is sent	-
Transponder S-Code	Number of registered sub key/min. 0, max. 15	Number of registered sub key	-
Transponder M-Code	Number of registered master key/min. 0, max. 15	Number of registered master key	-
Reg Code Space Full	Memory space for key codes registration/NOT FULL or FULL	NOT FULL: More key code registration possible FULL: No more key code registration possible	-
+B	Power source/BRAKE or Normal	BRAKE: Power source open NORMAL: Power source normal	-
Antenna Coil Status	Transponder key amplifier coil condition/Normal or Fail	NORMAL: Antenna coil is normal FAIL: Antenna coil is malfunctioning	-

2. ACTIVE TEST

HINT:

Using the Techstream to perform Active Tests allows relays, VSVs, actuators and other items to be operated without removing any parts. This non-intrusive functional inspection can be very useful because intermittent operation may be discovered before parts or wiring is disturbed. Performing Active Tests early in troubleshooting is one way to save diagnostic time. Data List information can be displayed while performing Active Tests.

(a) Connect the Techstream to the DLC3.

(b) Turn the ignition switch to ON.

(c) Turn the Techstream on.

(d) Enter the following menus: Body Electrical / Immobiliser / Active Test.

(e) Perform the Active Test according to the display on the Techstream.

Immobiliser (Transponder Key ECU Assembly)

TESTER DISPLAY	TEST PART	CONTROL RANGE	DIAGNOSTIC NOTE
Security Indicator	Security indicator Light	ON/OFF	-

Last Modified: 3-10-2010	6.4 D	**From:** 200901
Model Year: 2010	**Model:** Corolla	**Doc ID:** RM000001GV8025X
Title: THEFT DETERRENT / KEYLESS ENTRY: ENGINE IMMOBILISER SYSTEM (w/o Smart Key System): DTC CHECK / CLEAR (2010 Corolla)		

DTC CHECK / CLEAR

1. CHECK DTC

(a) Connect the Techstream to the DLC3.

(b) Turn the ignition switch to ON.

(c) Turn the Techstream on.

(d) Enter the following menus: Body Electrical / (desired system) / Trouble Codes.

(e) Check the details of the DTC(s) 

.

2. CLEAR DTC

(a) Connect the Techstream to the DLC3.

(b) Turn the ignition switch to ON.

(c) Turn the Techstream on.

(d) Enter the following menus: Body Electrical / (desired system) / Trouble Codes.

(e) Clear the DTCs.

Last Modified: 3-10-2010	6.4 C	**From:** 200901
Model Year: 2010	**Model:** Corolla	**Doc ID:** RM000001GV001EX
Title: THEFT DETERRENT / KEYLESS ENTRY: ENGINE IMMOBILISER SYSTEM (w/o Smart Key System): B2780: Push Switch / Key Unlock Warning Switch Malfunction (2010 Corolla)		

DTC	**B2780**	**Push Switch / Key Unlock Warning Switch Malfunction**

DESCRIPTION

This DTC will be output if the transponder key ECU assembly does not detect that the unlock warning switch is ON even when the ignition switch is ON. Under normal conditions, the unlock warning switch assembly is ON when the ignition switch is ON.

DTC NO.	DTC DETECTION CONDITION	TROUBLE AREA
B2780	"Unlock warning switch ON" is not detected when ignition switch is ON	• Wire harness or connector • Unlock warning switch assembly • Transponder key ECU assembly

WIRING DIAGRAM

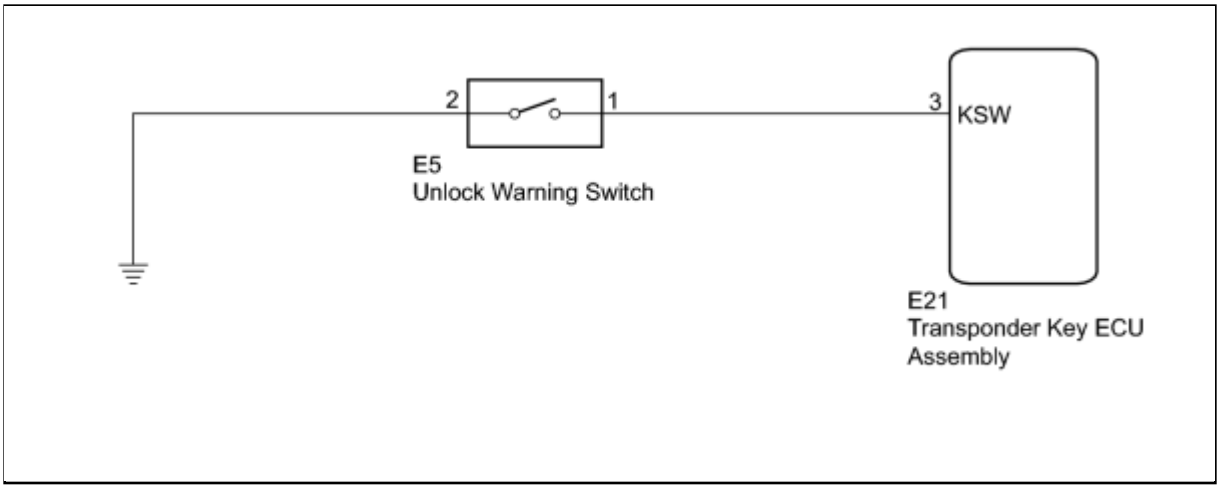

INSPECTION PROCEDURE

NOTICE:

If the transponder key ECU assembly is replaced, register the key and ECU communication ID INFO **.**

PROCEDURE

1.	READ VALUE USING TECHSTREAM

(a) Connect the Techstream to the DLC3.

(b) Turn the ignition switch to ON.

(c) Turn the Techstream on.

(d) Enter the following menus: Body Electrical / Immobiliser / Data List.

(e) Read the Data List according to the display on the Techstream.

Immobiliser (Transponder Key ECU Assembly)

TESTER DISPLAY	MEASUREMENT ITEM/RANGE	NORMAL CONDITION	DIAGNOSTIC NOTE
Key SW	Unlock warning switch signal/ON or OFF	ON: Key is in ignition key cylinder OFF: No key is in ignition key cylinder	-

OK:

On the Techstream screen, the item changes between ON and OFF according to the chart above.

NG ▶ **INSPECT UNLOCK WARNING SWITCH ASSEMBLY**

OK ▶ **REPLACE TRANSPONDER KEY ECU ASSEMBLY**

2.	INSPECT UNLOCK WARNING SWITCH ASSEMBLY

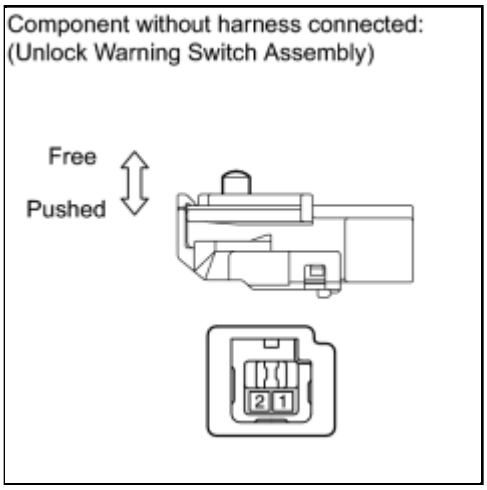

(a) Remove the unlock warning switch assembly INFO .

(b) Measure the resistance according to the value(s) in the table below.

Standard Resistance:

TESTER CONNECTION	SWITCH POSITION	SPECIFIED CONDITION
1 - 2	Switch pushed (Key set)	Below 1 Ω
1 - 2	Switch free (Key removed)	10 kΩ or higher

NG ▶ **REPLACE UNLOCK WARNING SWITCH ASSEMBLY**

OK ▼

3.	**CHECK HARNESS AND CONNECTOR (UNLOCK WARNING SWITCH - BODY GROUND)**

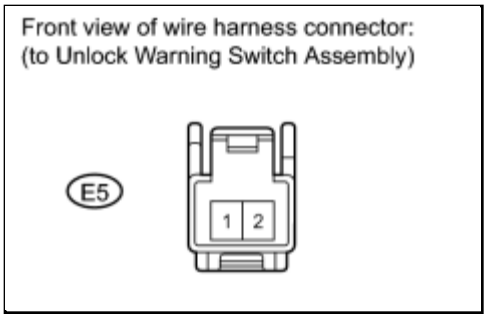

(a) Measure the resistance according to the value(s) in the table below.

Standard Resistance:

TESTER CONNECTION	CONDITION	SPECIFIED CONDITION
E5-2 - Body ground	Always	Below 1 Ω

NG ▶ **REPAIR OR REPLACE HARNESS OR CONNECTOR**

OK ▼

4.	**CHECK HARNESS AND CONNECTOR (TRANSPONDER KEY ECU - UNLOCK WARNING SWITCH)**

(a) Disconnect the transponder key ECU assembly connector.

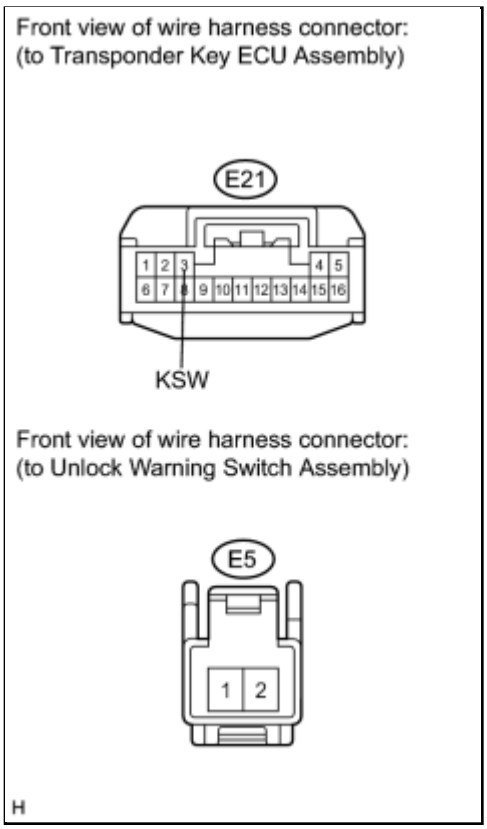

(b) Measure the resistance according to the value(s) in the table below.

Standard Resistance:

TESTER CONNECTION	CONDITION	SPECIFIED CONDITION
E21-3 (KSW) - E5-1	Always	Below 1 Ω
E5-1 - Body ground	Always	10 kΩ or higher

NG ▶ **REPAIR OR REPLACE HARNESS OR CONNECTOR**

OK ▶ **REPLACE TRANSPONDER KEY ECU ASSEMBLY**

Last Modified: 3-10-2010	6.4 S	**From:** 200901
Model Year: 2010	**Model:** Corolla	**Doc ID:** RM00000292H018X
Title: THEFT DETERRENT / KEYLESS ENTRY: ENGINE IMMOBILISER SYSTEM (w/o Smart Key System): DIAGNOSTIC TROUBLE CODE CHART (2010 Corolla)		

DIAGNOSTIC TROUBLE CODE CHART

1. TRANSPONDER KEY ECU DIAGNOSTIC TROUBLE CODE CHART

Transponder Key ECU Assembly

DTC CODE	DETECTION ITEM	TROUBLE AREA	SEE PAGE
B2780	Push Switch / Key Unlock Warning Switch Malfunction	1. Wire harness or connector 2. Unlock warning switch assembly 3. Transponder key ECU assembly	INFO
B2784	Antenna Coil Open / Short	1. Wire harness or connector 2. Transponder key amplifier 3. Transponder key ECU assembly	INFO
B2793	Transponder Chip Malfunction	Key	INFO
B2794	Unmatched Encryption Code	Key	INFO
B2795	Unmatched Key Code	Key	INFO
B2796	No Communication in Immobiliser System	1. Key 2. Transponder key amplifier 3. Transponder key ECU assembly	INFO
B2797	Communication Malfunction No. 1	1. Key 2. Transponder key amplifier 3. Transponder key ECU assembly	INFO
B2798	Communication Malfunction No. 2	1. Key 2. Transponder key amplifier 3. Transponder key ECU assembly	INFO

2. ECM DIAGNOSTIC TROUBLE CODE CHART

HINT:

The DTCs for the engine immobiliser system are specified above. If other codes are output, check the DTC chart for the SFI system.

ECM

DTC CODE	DETECTION ITEM	TROUBLE AREA	SEE PAGE
B2799	Engine Immobiliser System Malfunction	1. Wire harness or connector 2. ECM 3. Transponder key ECU assembly	INFO
B279A	Theft Deterrent System Communication Line High Fixation	1. Wire harness or connector 2. Transponder key ECU assembly 3. ECM	INFO
B279C	Theft Deterrent System Presence Detection	ECM	INFO

Last Modified: 3-10-2010	6.4 C	**From:** 200901
Model Year: 2010	**Model:** Corolla	**Doc ID:** RM000001GV501DX
Title: THEFT DETERRENT / KEYLESS ENTRY: ENGINE IMMOBILISER SYSTEM (w/o Smart Key System): B2784: Antenna Coil Open / Short (2010 Corolla)		

DTC	**B2784**	**Antenna Coil Open / Short**

DESCRIPTION

The transponder key coil is built into the transponder key amplifier and receives a key code signal from the transponder chip in the key. This signal is amplified by the amplifier, then it is output to the transponder key ECU assembly.

DTC NO.	DTC DETECTION CONDITION	TROUBLE AREA
B2784	Antenna coil is open/shorted	• Wire harness or connector • Transponder key amplifier • Transponder key ECU assembly

WIRING DIAGRAM

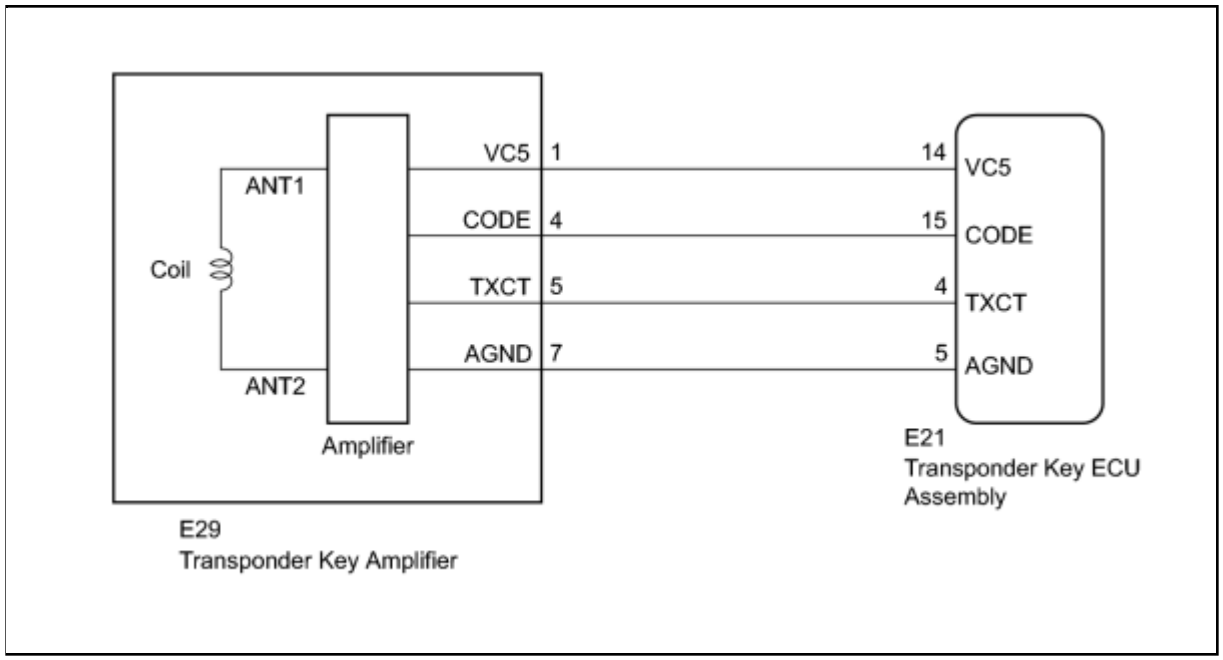

INSPECTION PROCEDURE

NOTICE:

If the transponder key ECU assembly is replaced, register the key and ECU communication ID INFO **.**

PROCEDURE

1.	**READ VALUE USING TECHSTREAM**

(a) Connect the Techstream to the DLC3.

(b) Turn the ignition switch to ON.

(c) Turn the Techstream on.

(d) Enter the following menus: Body Electrical / Immobiliser / Data List.

(e) Read the Data List according to the display on the Techstream.

Immobiliser (Transponder Key ECU Assembly)

TESTER DISPLAY	MEASUREMENT ITEM/RANGE	NORMAL CONDITION	DIAGNOSTIC NOTE
Antenna Coil Status	Transponder key amplifier coil condition/Normal or Fail	Normal: Antenna coil is normal Fail: Antenna coil is malfunctioning	-

OK:

On the Techstream screen, the item displays Normal according to the chart above.

NG ▶ **CHECK HARNESS AND CONNECTOR (TRANSPONDER KEY ECU - TRANSPONDER KEY AMPLIFIER)**

OK ▶ **REPLACE TRANSPONDER KEY ECU ASSEMBLY**

2.	**CHECK HARNESS AND CONNECTOR (TRANSPONDER KEY ECU - TRANSPONDER KEY AMPLIFIER)**

(a) Disconnect the transponder key ECU assembly connector.

(b) Disconnect the transponder key amplifier connector.

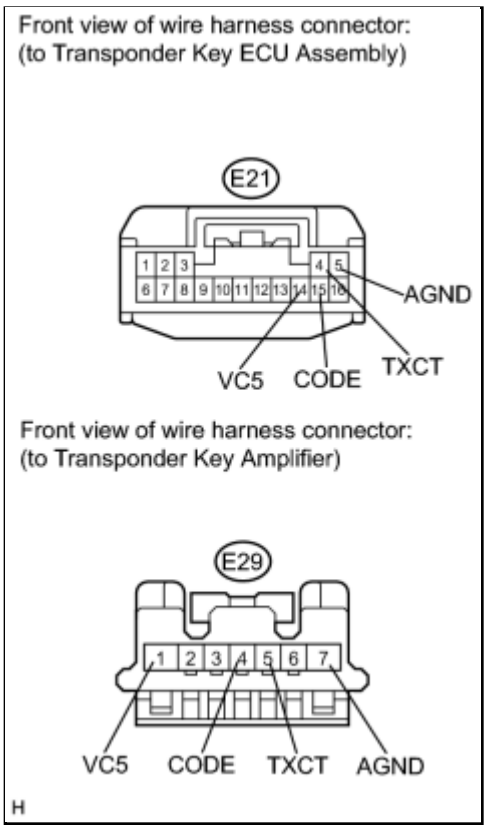

(c) Measure the resistance according to the value(s) in the table below.

Standard Resistance:

TESTER CONNECTION	CONDITION	SPECIFIED CONDITION
E21-4 (TXCT) - E29-5 (TXCT)	Always	Below 1 Ω
E21-5 (AGND) - E29-7 (AGND)	Always	Below 1 Ω
E21-14 (VC5) - E29-1 (VC5)	Always	Below 1 Ω
E21-15 (CODE) - E29-4 (CODE)	Always	Below 1 Ω
E21-4 (TXCT) - Body ground	Always	10 kΩ or higher
E21-5 (AGND) - Body ground	Always	10 kΩ or higher
E21-14 (VC5) - Body ground	Always	10 kΩ or higher
E21-15 (CODE) - Body ground	Always	10 kΩ or higher

NG ▶ **REPAIR OR REPLACE HARNESS OR CONNECTOR**

OK ▼

3.	**INSPECT TRANSPONDER KEY ECU ASSEMBLY (TRANSPONDER KEY AMPLIFIER POWER SOURCE)**

(a) Reconnect the transponder key ECU assembly connector.

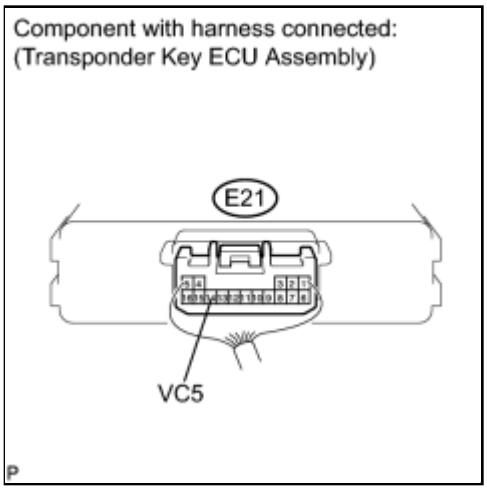

(b) Reconnect the transponder key amplifier connector.

(c) Measure the voltage according to the value(s) in the table below.

Standard Voltage:

TESTER CONNECTION	CONDITION	SPECIFIED CONDITION
E21-14 (VC5) - Body ground	No key is in ignition key cylinder	Below 1 V
E21-14 (VC5) - Body ground	Key is in ignition key cylinder	4.6 to 5.4 V

NG ▶ **REPLACE TRANSPONDER KEY ECU ASSEMBLY**

OK ▼

4.	**INSPECT TRANSPONDER KEY ECU ASSEMBLY (TRANSPONDER KEY AMPLIFIER GROUND)**

(a) Measure the resistance according to the value(s) in the table below.

Standard Resistance:

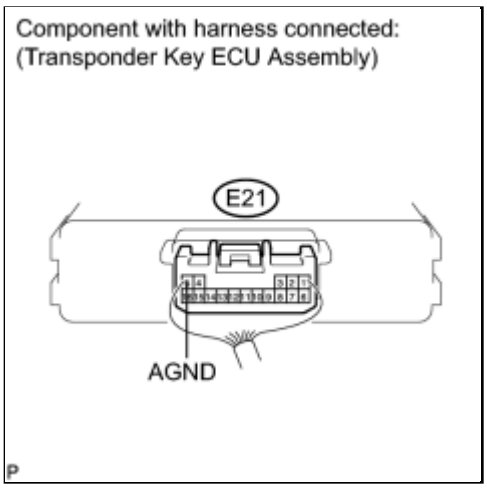

TESTER CONNECTION	CONDITION	SPECIFIED CONDITION
E21-5 (AGND) - Body ground	Always	Below 1 Ω

NG ▶ **REPLACE TRANSPONDER KEY ECU ASSEMBLY**

OK ▶ **REPLACE TRANSPONDER KEY AMPLIFIER**

TOYOTA

Last Modified: 3-10-2010	6.4 C	**From:** 200901
Model Year: 2010	**Model:** Corolla	**Doc ID:** RM000001GV1016X
Title: THEFT DETERRENT / KEYLESS ENTRY: ENGINE IMMOBILISER SYSTEM (w/o Smart Key System): B2793: Transponder Chip Malfunction (2010 Corolla)		

DTC	**B2793**	**Transponder Chip Malfunction**

DESCRIPTION

This DTC is output when a malfunction is found in the key during key code registration or a key code is not registered normally. Replace the key if the key code registration is not performed normally and this DTC is detected.

DTC NO.	DTC DETECTION CONDITION	TROUBLE AREA
B2793	Transponder chip malfunction	Key

INSPECTION PROCEDURE

NOTICE:

If the key is replaced, register the key INFO .

PROCEDURE

1.	**CLEAR DTC**

(a) Clear the DTCs INFO .

NEXT

2.	**RE-REGISTER KEY**

(a) Re-register the key INFO .

NEXT

3.	**CHECK ENGINE START**

(a) Check that the engine starts.

OK:

The engine starts.

NG ▶ **REPLACE KEY**

OK ▶ **END (KEY REGISTRATION IS DEFECTIVE)**

Last Modified: 3-10-2010	6.4 C	**From:** 200901
Model Year: 2010	**Model:** Corolla	**Doc ID:** RM000001GV2011X
Title: THEFT DETERRENT / KEYLESS ENTRY: ENGINE IMMOBILISER SYSTEM (w/o Smart Key System): B2794: Unmatched Encryption Code (2010 Corolla)		

DTC	**B2794**	**Unmatched Encryption Code**

DESCRIPTION

This DTC is output when a key with an incomplete key code is inserted into the ignition key cylinder.

DTC NO.	DTC DETECTION CONDITION	TROUBLE AREA
B2794	Key with incomplete key code is inserted	Key

INSPECTION PROCEDURE

NOTICE:

If the key is replaced, register the key INFO .

PROCEDURE

1.	**REPLACE KEY**

(a) Replace the key.

NEXT

2.	**KEY REGISTRATION**

(a) Register the key INFO .

NEXT **END (KEY IS DEFECTIVE)**

Last Modified: 3-10-2010	6.4 C	**From:** 200901
Model Year: 2010	**Model:** Corolla	**Doc ID:** RM000001GUW011X
Title: THEFT DETERRENT / KEYLESS ENTRY: ENGINE IMMOBILISER SYSTEM (w/o Smart Key System): B2795: Unmatched Key Code (2010 Corolla)		

DTC	**B2795**	**Unmatched Key Code**

DESCRIPTION

This DTC is output when a key with a key code that has not been registered in the ECU is inserted into the ignition key cylinder.

DTC NO.	DTC DETECTION CONDITION	TROUBLE AREA
B2795	Key with unregistered key code is inserted	Key

INSPECTION PROCEDURE

NOTICE:

If the key is replaced, register the key INFO **.**

PROCEDURE

1.	**CLEAR DTC**

(a) Clear the DTCs INFO .

NEXT

2.	**RE-REGISTER KEY**

(a) Re-register the key INFO .

NEXT

3.	**CHECK ENGINE START**

(a) Check that the engine starts.

OK:

The engine starts.

NG ▶ **REPLACE KEY**

OK ▶ **END (KEY REGISTRATION IS DEFECTIVE)**

Last Modified: 3-10-2010	6.4 C	**From:** 200901
Model Year: 2010	**Model:** Corolla	**Doc ID:** RM000001GUX01EX
Title: THEFT DETERRENT / KEYLESS ENTRY: ENGINE IMMOBILISER SYSTEM (w/o Smart Key System): B2796,B2798: No Communication in Immobiliser System (2010 Corolla)		

DTC	**B2796**	**No Communication in Immobiliser System**

DTC	**B2798**	**Communication Malfunction No. 2**

DESCRIPTION

These DTCs are output if a key that does not have a transponder chip is inserted into the ignition key cylinder or if communication between the key and the transponder key ECU assembly is impossible.

DTC NO.	DTC DETECTION CONDITION	TROUBLE AREA
B2796	The key code cannot be transmitted	• Key • Transponder key amplifier • Transponder key ECU assembly
B2798	Key code identification cannot be completed within the specified time (0.15 to 0.5 sec.)	• Key • Transponder key amplifier • Transponder key ECU assembly

WIRING DIAGRAM

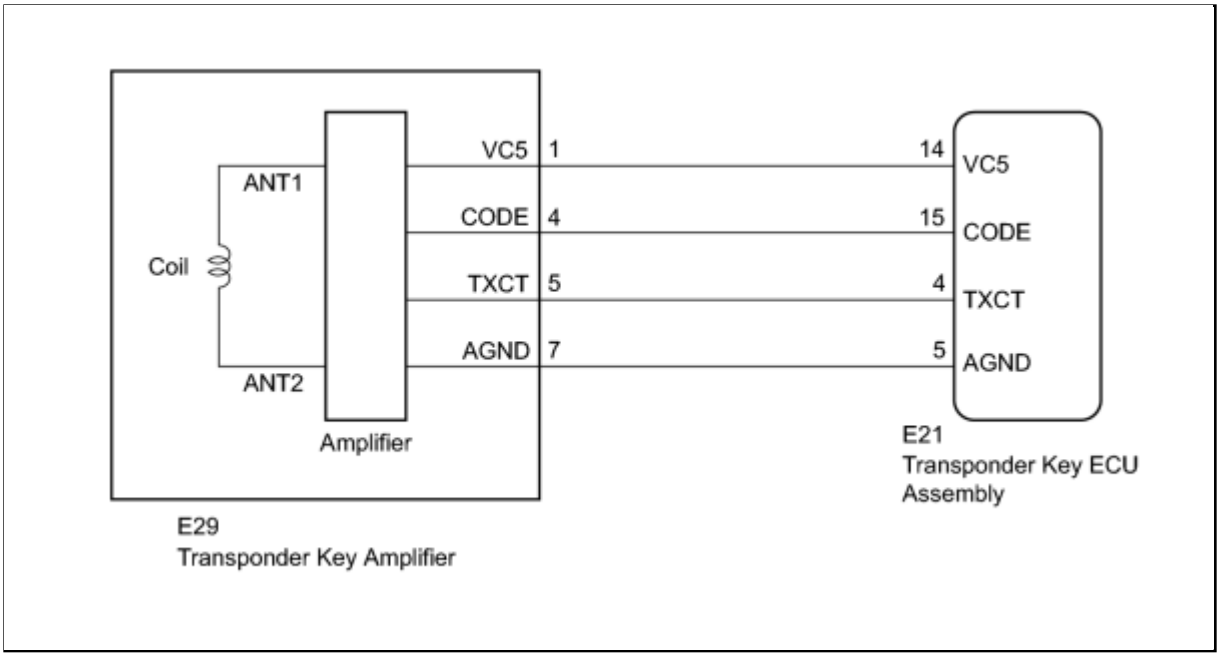

INSPECTION PROCEDURE

NOTICE:

- If the transponder key ECU assembly is replaced, register the key and ECU communication ID INFO .
- If the key is replaced, register the key INFO .

PROCEDURE

1.	**READ VALUE USING TECHSTREAM**

(a) Connect the Techstream to the DLC3.

(b) Turn the ignition switch to ON.

(c) Turn the Techstream on.

(d) Enter the following menus: Body Electrical / Immobiliser / Data List.

(e) Read the Data List according to the display on the Techstream.

Immobiliser (Transponder Key ECU Assembly)

TESTER DISPLAY	MEASUREMENT ITEM/RANGE	NORMAL CONDITION	DIAGNOSTIC NOTE
Immobiliser	Immobiliser system status/SET or UNSET	UNSET: Ignition switch ON SET: Without key	-

OK:

On the Techstream screen, the item changes between UNSET and SET according to the chart above.

NG ▶ **CHECK KEY**

OK ▶ **REPLACE TRANSPONDER KEY ECU ASSEMBLY**

2.	**CHECK KEY**

(a) Insert the vehicle's other key into the ignition key cylinder.

(b) Check that the engine starts with this key.

OK:

The engine starts.

NG ▶ **REPLACE TRANSPONDER KEY AMPLIFIER**

OK
▼

3.	**RE-REGISTER KEY**

(a) Re-register the key INFO .

NEXT
▼

4.	**CHECK ENGINE START**

(a) Check that the engine starts.

OK:

The engine starts.

NG ▶ **REPLACE KEY**

OK ▶ **END (KEY REGISTRATION IS DEFECTIVE)**

5.	REPLACE TRANSPONDER KEY AMPLIFIER

(a) Replace the transponder key amplifier INFO .

NEXT

6.	CHECK ENGINE START

(a) Check that the engine starts.

OK:

The engine starts.

NG ▶ **REPLACE TRANSPONDER KEY ECU ASSEMBLY**

OK ▶ **END (TRANSPONDER KEY AMPLIFIER IS DEFECTIVE)**

Last Modified: 3-10-2010	6.4 C	**From:** 200901
Model Year: 2010	**Model:** Corolla	**Doc ID:** RM000001GUY01EX
Title: THEFT DETERRENT / KEYLESS ENTRY: ENGINE IMMOBILISER SYSTEM (w/o Smart Key System): B2797: Communication Malfunction No. 1 (2010 Corolla)		

DTC	**B2797**	**Communication Malfunction No. 1**

DESCRIPTION

This DTC is output when an error occurs in communication between the transponder key amplifier and the transponder key ECU assembly.

HINT:

Some noise is found in the communication line.

DTC NO.	DTC DETECTION CONDITION	TROUBLE AREA
B2797	Keys are positioned too close to each other, or noise occurs in communication line	• Key • Transponder key amplifier • Transponder key ECU assembly

WIRING DIAGRAM

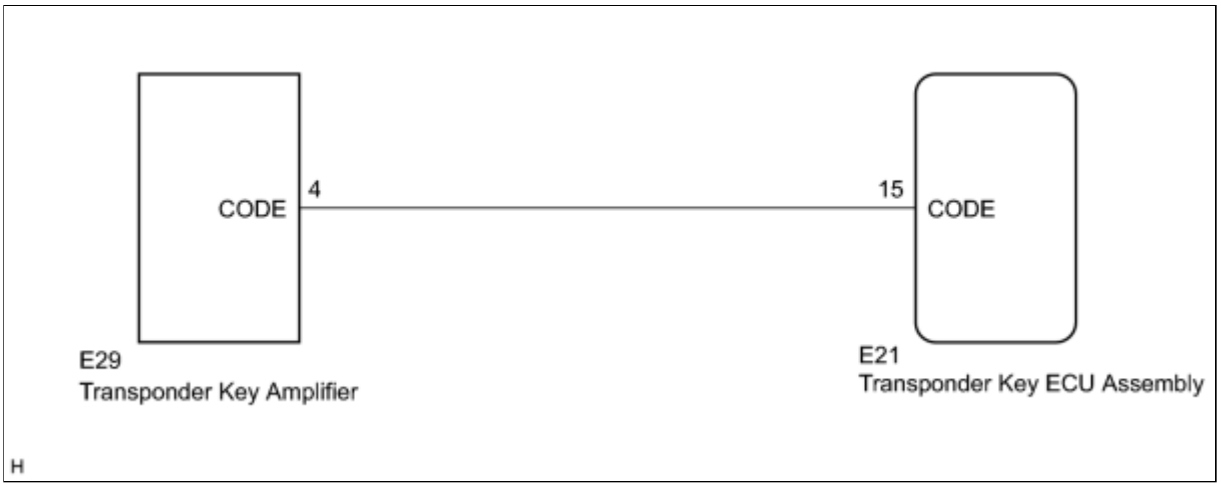

INSPECTION PROCEDURE

NOTICE:

If the transponder key ECU assembly is replaced, register the key and ECU communication ID INFO .

PROCEDURE

1.	**CHECK KEY**

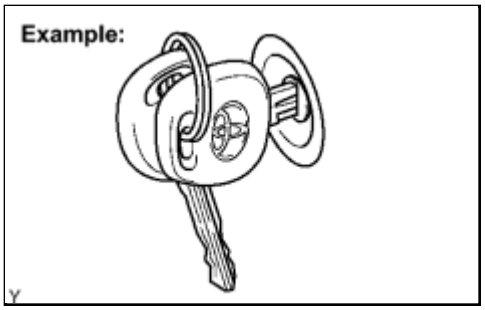

(a) Check whether the ignition key being used is near other ignition keys, as shown in the illustration. Also, check whether the key ring is in contact with the key grip.

Result:

RESULT	PROCEED TO
Key is not near other keys and key ring is not in contact with key grip.	A
Key is near other keys and/or key ring is in contact with key grip.	B

A ▶ **REPLACE TRANSPONDER KEY AMPLIFIER**

B ▼

2.	**CHECK DTC OUTPUT**

(a) Separate the keys from each other, or remove the key ring.

(b) Clear the DTCs INFO.

(c) Insert a key into the ignition key cylinder and remove the key. Repeat for all the other keys of the vehicle.

OK:

No code is output.

NG ▶ **REPLACE TRANSPONDER KEY AMPLIFIER**

OK ▶ **END (KEYS ARE POSITIONED TOO CLOSE TO EACH OTHER)**

3.	REPLACE TRANSPONDER KEY AMPLIFIER

(a) Replace the transponder key amplifier INFO .

NEXT

4.	CHECK ENGINE START

(a) Check that the engine starts.

OK:

The engine starts.

NG ▶ **REPLACE TRANSPONDER KEY ECU ASSEMBLY**

OK ▶ **END (TRANSPONDER KEY AMPLIFIER IS DEFECTIVE)**

Last Modified: 3-10-2010	6.4 C	**From:** 200901
Model Year: 2010	**Model:** Corolla	**Doc ID:** RM000002M6X01DX
Title: THEFT DETERRENT / KEYLESS ENTRY: ENGINE IMMOBILISER SYSTEM (w/o Smart Key System): B2799: Engine Immobiliser System Malfunction (2010 Corolla)		

DTC	**B2799**	**Engine Immobiliser System Malfunction**

DESCRIPTION

This DTC is output when one of the following occurs: 1) the ECM detects errors in its own communications with the transponder key ECU assembly; 2) the ECM detects errors in the communication lines; or 3) the ECU communication ID between the transponder key ECU assembly and ECM is different and an engine start is attempted.

Before troubleshooting for this DTC, make sure that no transponder key ECU assembly DTCs are present. If present, troubleshoot the transponder key ECU assembly DTCs first.

DTC NO.	DTC DETECTION CONDITION	TROUBLE AREA
B2799	One of following conditions is met: • Error in communication between ECM and transponder key ECU assembly • Error in communication lines • Communication ID is different during communication with transponder key ECU assembly	• Wire harness or connector • ECM • Transponder key ECU assembly

WIRING DIAGRAM

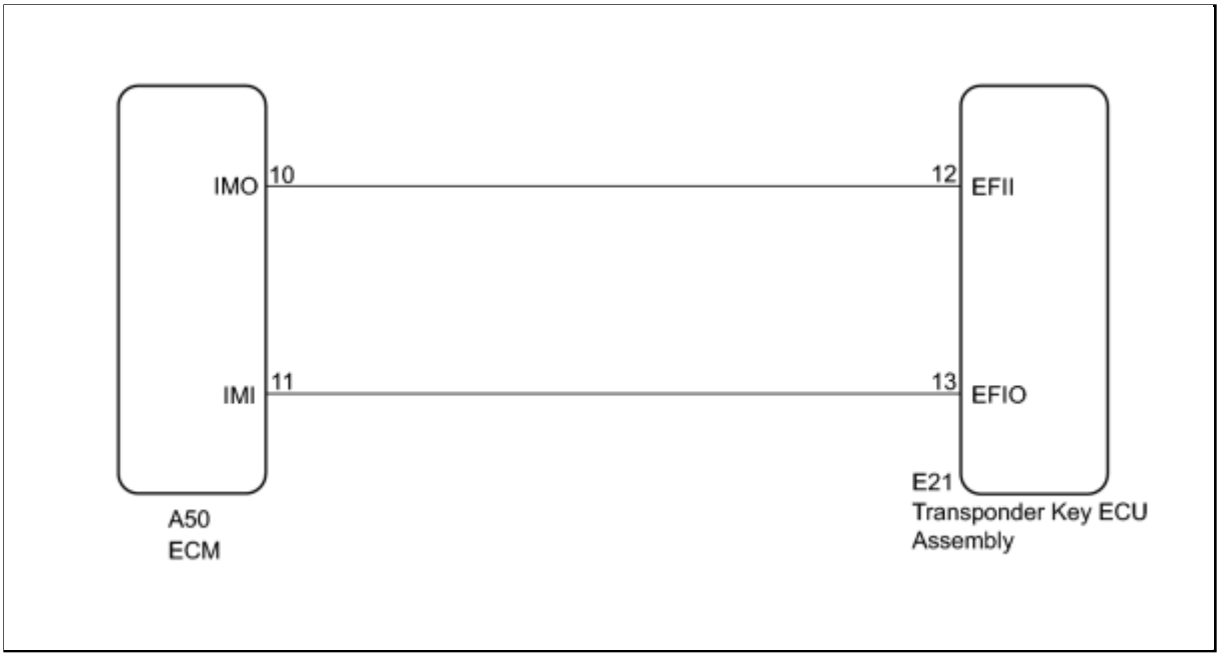

INSPECTION PROCEDURE

NOTICE:

- If the transponder key ECU assembly is replaced, register the key and ECU communication ID INFO .
- If the ECM is replaced, register the ECU communication ID INFO .

PROCEDURE

1.	**CHECK DTC OUTPUT**

(a) Clear the DTCs INFO .

(b) Recheck for DTCs.

OK:

DTC B2799 is not reoutput.

NG ▶ **RE-REGISTER ECU COMMUNICATION ID**

OK ▶ **USE SIMULATION METHOD TO CHECK**

2.	**RE-REGISTER ECU COMMUNICATION ID**

(a) Re-register the ECU communication ID INFO .

NEXT

3.	CHECK DTC OUTPUT

(a) Clear the DTCs INFO.

(b) Recheck for DTCs.

OK:

DTC B2799 is not reoutput.

NG ▶ **CHECK CONNECTION OF CONNECTOR**

OK ▶ **END (ECU COMMUNICATION ID IS DEFECTIVE)**

4.	CHECK CONNECTION OF CONNECTOR

(a) Turn the ignition switch off.

(b) Check that the connectors are properly connected to the ECM and the transponder key ECU.

OK:

Connectors are properly connected.

NG ▶ **CONNECT CONNECTORS PROPERLY**

OK

5.	CHECK HARNESS AND CONNECTOR (TRANSPONDER KEY ECU - ECM)

(a) Disconnect the transponder key ECU assembly connector.

(b) Disconnect the ECM connector.

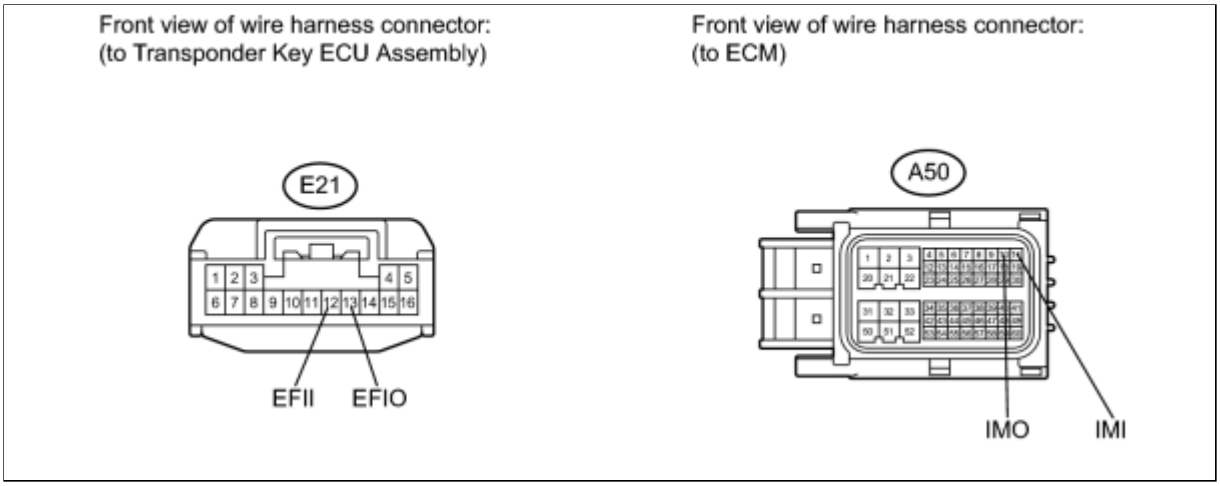

(c) Measure the resistance according to the value(s) in the table below.

Standard Resistance:

TESTER CONNECTION	CONDITION	SPECIFIED CONDITION
E21-12 (EFII) - A50-10 (IMO)	Always	Below 1 Ω
E21-13 (EFIO) - A50-11 (IMI)	Always	Below 1 Ω
E21-12 (EFII) - Body ground	Always	10 kΩ or higher
E21-13 (EFIO) - Body ground	Always	10 kΩ or higher

NG ▶ **REPAIR OR REPLACE HARNESS OR CONNECTOR**

OK ▼

6.	**REPLACE ECM**

(a) Replace the ECM.

INFO for 2ZR-FE)

INFO for 2AZ-FE)

NEXT ▼

7.	REGISTER ECU COMMUNICATION ID

(a) Register the ECU communication ID INFO .

NEXT

8.	CHECK DTC OUTPUT

(a) Clear the DTCs INFO .

(b) Recheck for DTCs.

OK:
DTC B2799 is not reoutput.

NG ▶ **REPLACE TRANSPONDER KEY ECU ASSEMBLY**

OK ▶ **END (ECM IS DEFECTIVE)**

Last Modified: 3-10-2010	6.4 C	**From:** 200901
Model Year: 2010	**Model:** Corolla	**Doc ID:** RM000002UEB00OX
Title: THEFT DETERRENT / KEYLESS ENTRY: ENGINE IMMOBILISER SYSTEM (w/o Smart Key System): B279A: Theft Deterrent System Communication Line High Fixation (2010 Corolla)		

DTC	**B279A**	**Theft Deterrent System Communication Line High Fixation**

DESCRIPTION

If the communication line (EFIO-IMI) to the transponder key ECU assembly is stuck on HI output, the ECM outputs this DTC.

DTC NO.	DTC DETECTION CONDITION	TROUBLE AREA
B279A	Communication line (EFIO-IMI) between ECM and the transponder key ECU assembly is stuck on HI output	• Wire harness or connector • Transponder key ECU assembly • ECM

WIRING DIAGRAM

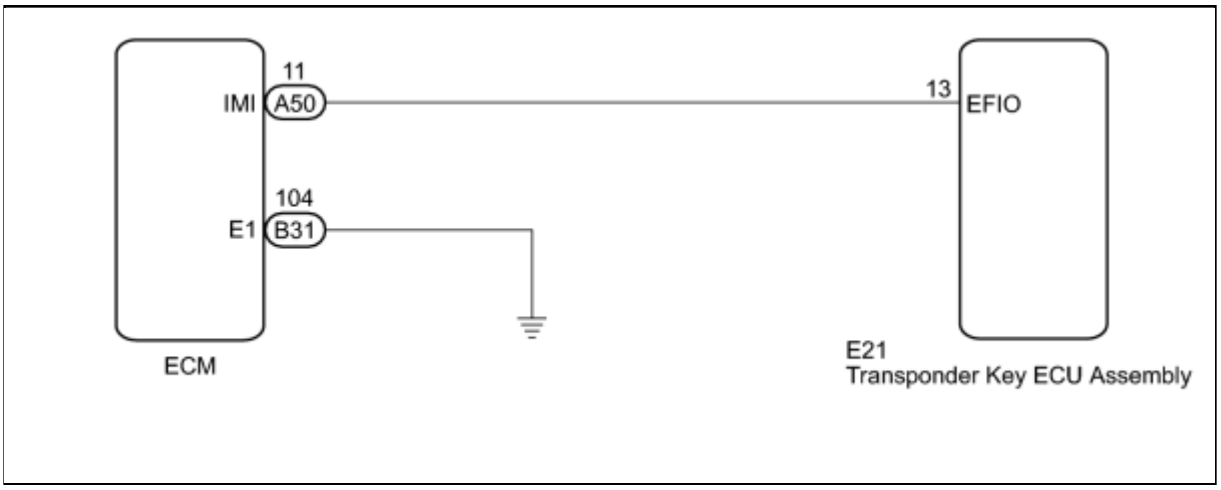

INSPECTION PROCEDURE

NOTICE:

- If the transponder key ECU assembly is replaced, register the key and ECU communication ID INFO .
- If the ECM is replaced, register the ECU communication ID INFO .

PROCEDURE

1.	**CHECK DTC OUTPUT**

(a) Recheck for DTCs INFO .

HINT:

If any DTCs other than DTC B279A are output, troubleshoot those DTCs first.

Result:

RESULT	PROCEED TO
DTC B279A and other DTCs reoutput	A
DTC B279A reoutput	B

A ▶ **GO TO DTC CHART**

B ▼

2.	**CHECK HARNESS AND CONNECTOR (TRANSPONDER KEY ECU - ECM)**

(a) Disconnect the transponder key ECU assembly connector.

(b) Disconnect the ECM connector.

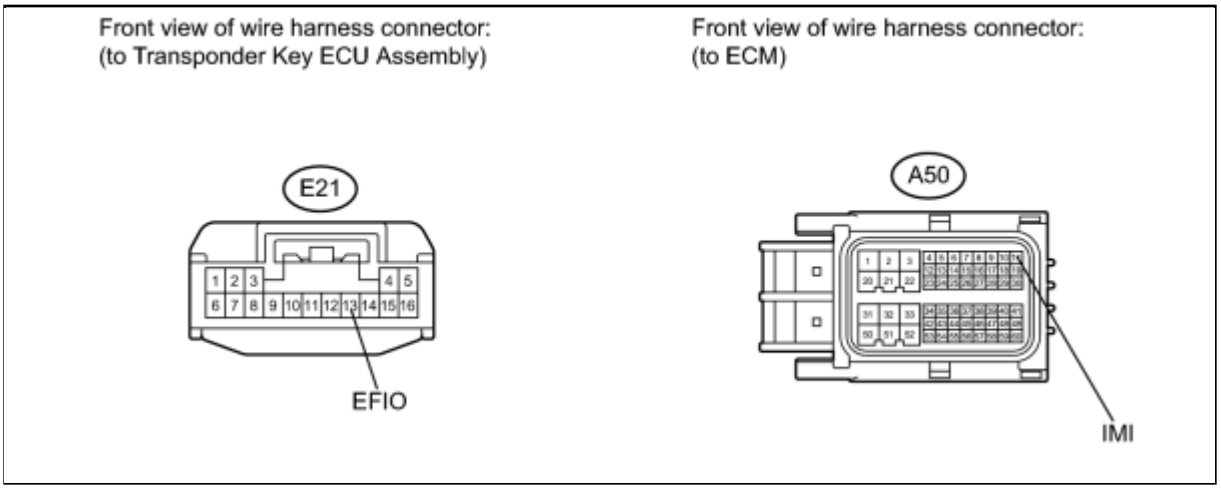

(c) Measure the resistance and voltage according to the value(s) in the table below.

Standard Resistance:

TESTER CONNECTION	CONDITION	SPECIFIED CONDITION
E21-13 (EFIO) - A50-11 (IMI)	Always	Below 1 Ω
E21-13 (EFIO) - Body ground	Always	10 kΩ or higher

Standard Voltage:

TESTER CONNECTION	CONDITION	SPECIFIED CONDITION
E21-13 (EFIO) - Body ground	Always	Below 1 V

NG ▶ **REPAIR OR REPLACE HARNESS OR CONNECTOR**

OK ▼

3.	**CHECK ECM (INPUT)**

(a) Reconnect the transponder key ECU assembly connector.

(b) Reconnect the ECM connector.

(c) Measure the waveform.

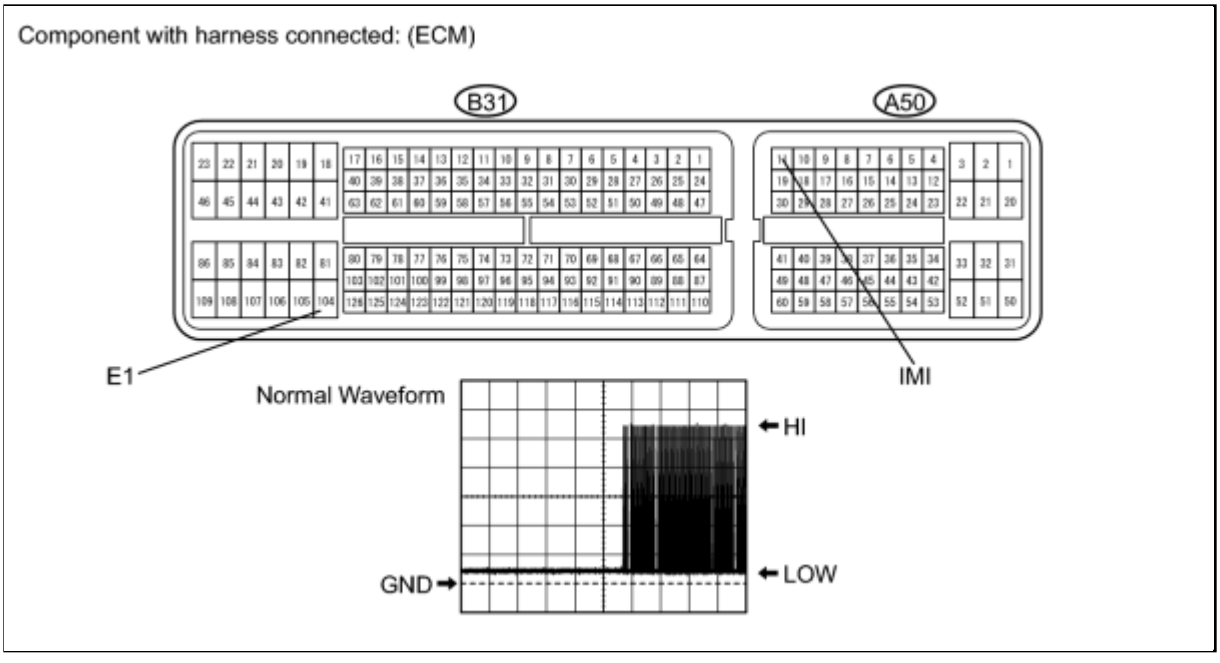

Waveform 1 (Reference):

ITEM	CONTENT
Terminal No. (Symbols)	A50-11 (IMI) - B31-104 (E1)
Tool Setting	2 V/DIV., 1 s./DIV.
Condition	Ignition switch ON

Result:

RESULT	PROCEED TO
OK (for 2ZR-FE)	A
OK (for 2AZ-FE)	B
NG	C

B ▶ **REPLACE ECM**

A ▶ **REPLACE ECM**

C
▼

4.	**REPLACE TRANSPONDER KEY ECU ASSEMBLY**

(a) Replace the transponder key ECU assembly INFO .

NEXT
▼

5.	**REGISTER KEY**

(a) Register the key INFO .

NEXT

6.	REGISTER ECU COMMUNICATION ID

(a) Register the ECU communication ID INFO .

NEXT

7.	CHECK DTC OUTPUT

(a) Clear the DTCs INFO .

(b) Recheck for DTCs.

OK:

B279A is not reoutput.

Result:

RESULT	PROCEED TO
NG (for 2ZR-FE)	A
NG (for 2ZA-FE)	B
OK	C

B **REPLACE ECM**

A **REPLACE ECM**

C **END (TRANSPONDER KEY ECU IS DEFECTIVE)**

Last Modified: 3-10-2010	6.4 J	**From:** 200901
Model Year: 2010	**Model:** Corolla	**Doc ID:** RM000001GV401ZX
Title: THEFT DETERRENT / KEYLESS ENTRY: ENGINE IMMOBILISER SYSTEM (w/o Smart Key System): Security Indicator Light Circuit (2010 Corolla)		

Security Indicator Light Circuit

DESCRIPTION

The security indicator light blinks continuously due to a continuous signal received from the transponder key ECU assembly while in the armed state.

WIRING DIAGRAM

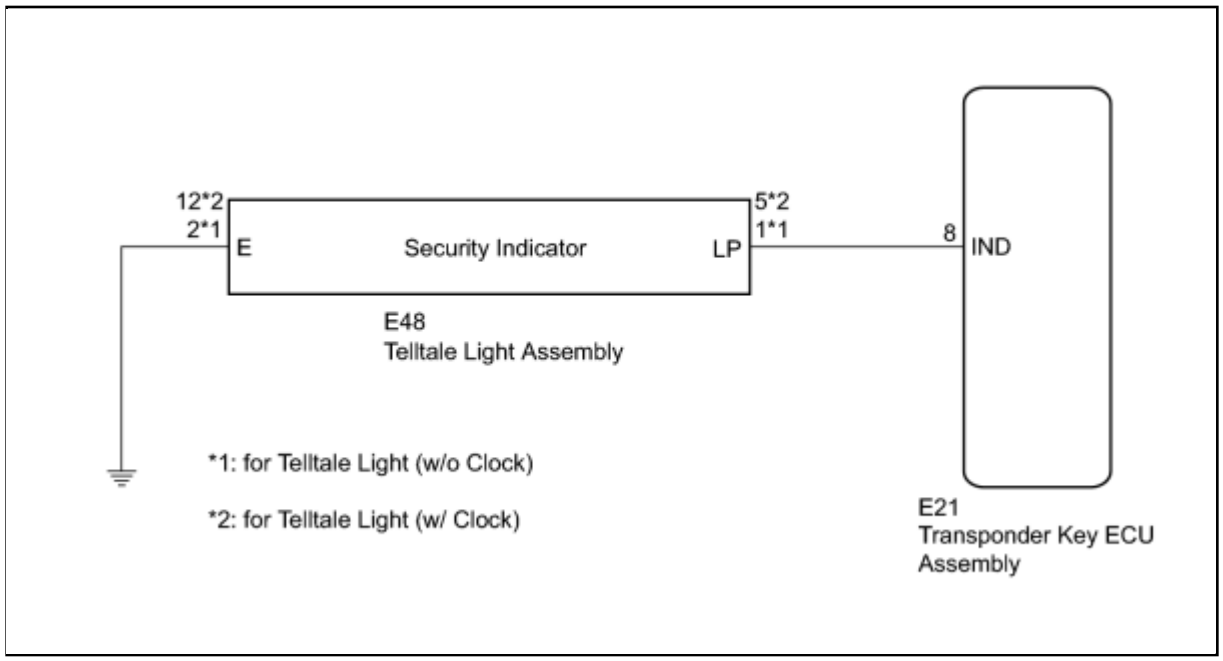

INSPECTION PROCEDURE

NOTICE:

If the transponder key ECU assembly is replaced, register the key and ECU communication ID INFO **.**

PROCEDURE

1.	**PERFORM ACTIVE TEST USING TECHSTREAM**

(a) Connect the Techstream to the DLC3.

(b) Turn the ignition switch to ON.

(c) Turn the Techstream on.

(d) Enter the following menus: Body Electrical / Immobiliser / Active Test.

(e) Perform the Active Test according to the display on the Techstream.

Immobiliser (Transponder Key ECU Assembly)

TESTER DISPLAY	TEST PART	CONTROL RANGE	DIAGNOSTIC NOTE
Security Indicator	Security indicator light	ON/OFF	-

OK:

The security indicator turns on and off according to the Techstream operation.

NG ▶ **CHECK HARNESS AND CONNECTOR (TRANSPONDER KEY ECU - SECURITY INDICATOR LIGHT)**

OK ▶ **REPLACE TRANSPONDER KEY ECU ASSEMBLY**

2.	**CHECK HARNESS AND CONNECTOR (TRANSPONDER KEY ECU - SECURITY INDICATOR LIGHT)**

(a) Disconnect the transponder key ECU assembly connector.

(b) Disconnect the telltale light assembly connector.

(c) for Telltale Light (w/o Clock):

(1) Measure the resistance according to the value(s) in the table below.

Standard Resistance:

TESTER CONNECTION	CONDITION	SPECIFIED CONDITION
E21-8 (IND) - E48-1 (LP)	Always	Below 1 Ω
E21-8 (IND) - Body ground	Always	10 kΩ or higher

Front view of wire harness connector:
(to Transponder Key ECU Assembly)

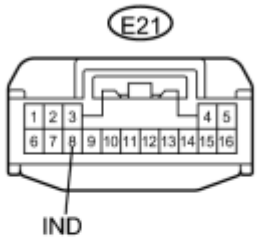

Front view of wire harness connector:
(to Telltale Light Assembly)

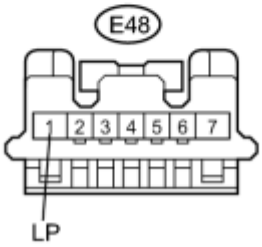

H

Front view of wire harness connector:
(to Transponder Key ECU Assembly)

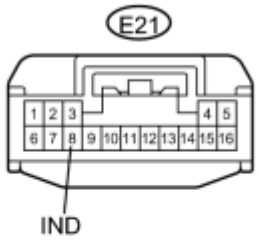

Front view of wire harness connector:
(to Telltale Light Assembly)

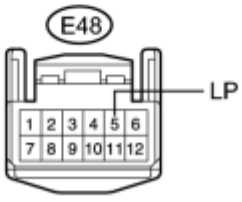

(d) for Telltale Light (w/ Clock):

(1) Measure the resistance according to the value(s) in the table below.

Standard Resistance:

TESTER CONNECTION	CONDITION	SPECIFIED CONDITION
E21-8 (IND) - E48-5 (LP)	Always	Below 1 Ω
E21-8 (IND) - Body ground	Always	10 kΩ or higher

NG ▶ **REPAIR OR REPLACE HARNESS OR CONNECTOR**

OK

3.	CHECK HARNESS AND CONNECTOR (SECURITY INDICATOR LIGHT - BODY GROUND)

(a) for Telltale Light (w/o Clock):

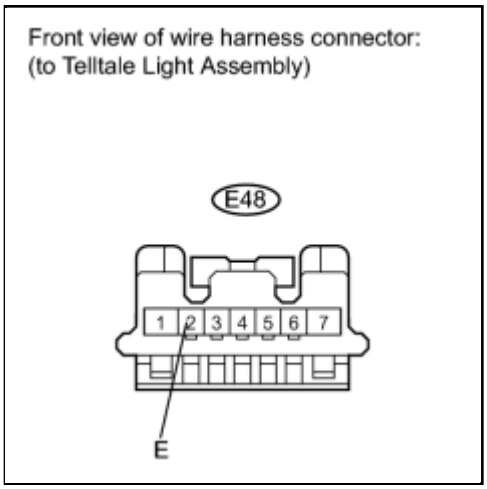

(1) Measure the resistance according to the value(s) in the table below.

Standard Resistance:

TESTER CONNECTION	CONDITION	SPECIFIED CONDITION
E48-2 (E) - Body ground	Always	Below 1 Ω

(b) for Telltale Light (w/ Clock):

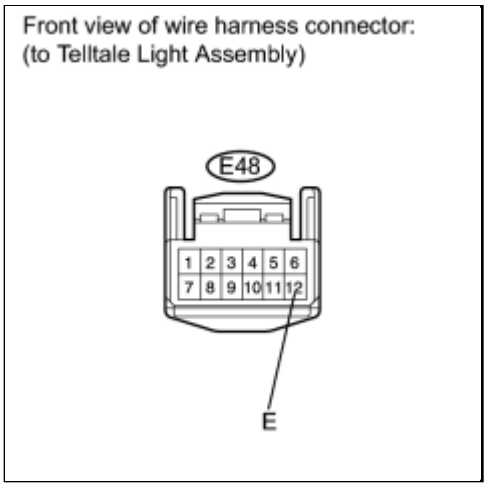

(1) Measure the resistance according to the value(s) in the table below.

Standard Resistance:

TESTER CONNECTION	CONDITION	SPECIFIED CONDITION
E48-12 (E) - Body ground	Always	Below 1 Ω

NG ▶ **REPAIR OR REPLACE HARNESS OR CONNECTOR**

OK ▶ **REPLACE TELLTALE LIGHT ASSEMBLY**

Last Modified: 3-10-2010	6.4 C	**From:** 200901
Model Year: 2010	**Model:** Corolla	**Doc ID:** RM000002UEC00OX
Title: THEFT DETERRENT / KEYLESS ENTRY: ENGINE IMMOBILISER SYSTEM (w/o Smart Key System): B279C: Theft Deterrent System Presence Detection (2010 Corolla)		

DTC	**B279C**	**Theft Deterrent System Presence Detection**

DESCRIPTION

If an ECM that is incompatible with the engine immobiliser system is installed, the ECM outputs this DTC.

DTC NO.	DTC DETECTION CONDITION	TROUBLE AREA
B279C	ECM that is incompatible with engine immobiliser system is installed	ECM

INSPECTION PROCEDURE

NOTICE:

If the ECM is replaced, register the ECU communication ID INFO .

PROCEDURE

1.	**CHECK DTC OUTPUT**

(a) Clear the DTCs INFO .

(b) Recheck for DTCs.

OK:

DTC B279C is not reoutput.

Result:

RESULT	PROCEED TO
DTC B279C is reoutput (for 2ZR-FE)	A
DTC B279C is reoutput (for 2AZ-FE)	B
DTC B279C is not reoutput	C

B ▶ REPLACE ECM

A ▶ USE SIMULATION METHOD TO CHECK

Last Modified: 3-10-2010	6.4 J	**From:** 200901
Model Year: 2010	**Model:** Corolla	**Doc ID:** RM000001GUZ00SX
Title: THEFT DETERRENT / KEYLESS ENTRY: ENGINE IMMOBILISER SYSTEM (w/o Smart Key System): Door Courtesy Switch Circuit (2010 Corolla)		

Door Courtesy Switch Circuit

DESCRIPTION

When an additional transponder key is registered, the transponder key ECU assembly detects the front door courtesy light switch open/close condition, and enters the key registration mode.

WIRING DIAGRAM

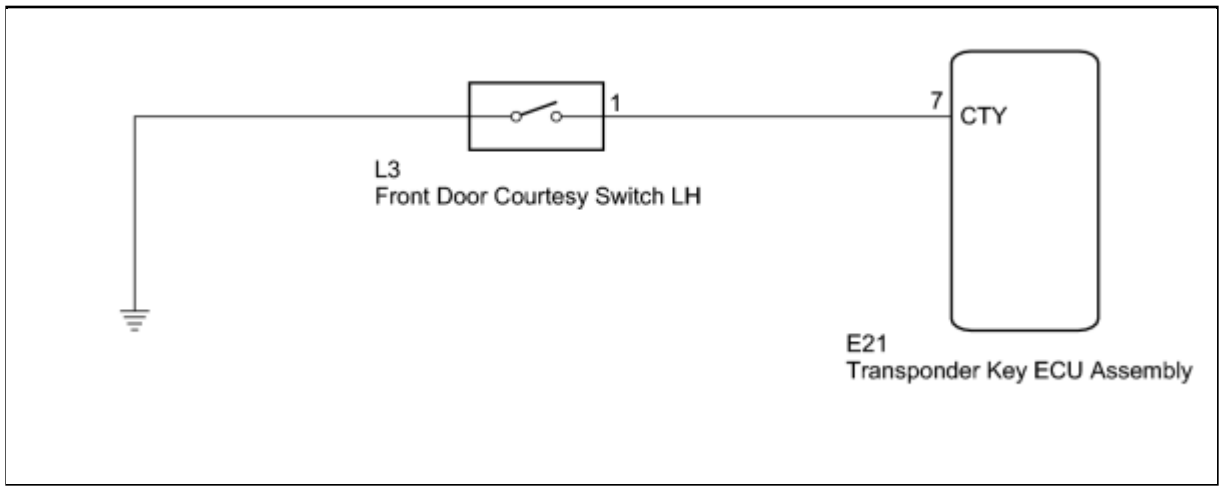

INSPECTION PROCEDURE

NOTICE:

If the transponder key ECU assembly is replaced, register the key and ECU communication ID INFO **.**

PROCEDURE

1.	**CHECK HARNESS AND CONNECTOR (FRONT DOOR COURTESY LIGHT SWITCH CIRCUIT)**

(a) Disconnect the transponder key ECU assembly connector.

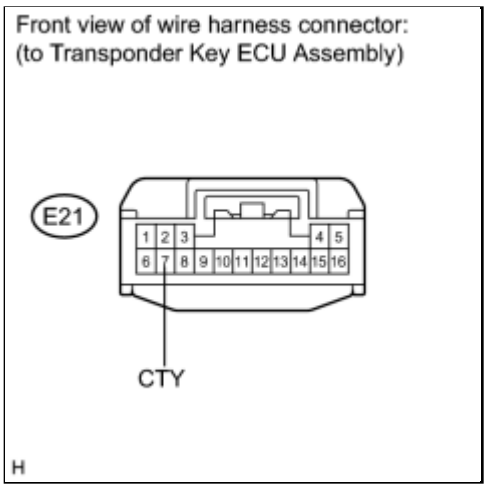

(b) Measure the resistance according to the value(s) in the table below.

Standard Resistance:

TESTER CONNECTION	CONDITION	SPECIFIED CONDITION
E21-7 (CTY) - Body ground	Courtesy switch pushed (Door closed)	10 kΩ or higher
E21-7 (CTY) - Body ground	Courtesy switch free (Door open)	Below 1 Ω

NG ▶ **INSPECT FRONT DOOR COURTESY LIGHT SWITCH ASSEMBLY**

OK ▶ **REPLACE TRANSPONDER KEY ECU ASSEMBLY**

2.	**INSPECT FRONT DOOR COURTESY LIGHT SWITCH ASSEMBLY**

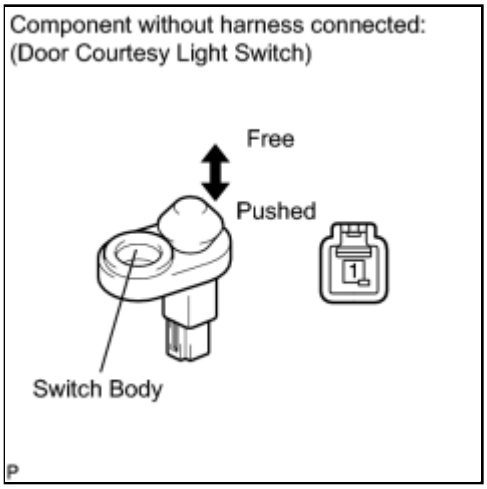

(a) Remove the driver side front door courtesy light switch INFO .

(b) Measure the resistance according to the value(s) in the table below.

Standard Resistance:

TESTER CONNECTION	SWITCH CONDITION	SPECIFIED CONDITION
1 - Switch body	Courtesy switch pushed (Door closed)	10 kΩ or higher
1 - Switch body	Courtesy switch free (Door open)	Below 1 Ω

NG ▶ **REPLACE FRONT DOOR COURTESY LIGHT SWITCH ASSEMBLY**

OK ▶ **REPAIR OR REPLACE HARNESS OR CONNECTOR (TRANSPONDER KEY ECU - FRONT DOOR COURTESY LIGHT SWITCH)**

Last Modified: 3-10-2010	6.4 J	**From:** 200901
Model Year: 2010	**Model:** Corolla	**Doc ID:** RM000001GUU017X
Title: THEFT DETERRENT / KEYLESS ENTRY: ENGINE IMMOBILISER SYSTEM (w/o Smart Key System): ECU Power Source Circuit (2010 Corolla)		

ECU Power Source Circuit

DESCRIPTION

This circuit provides power to operate the transponder key ECU assembly.

WIRING DIAGRAM

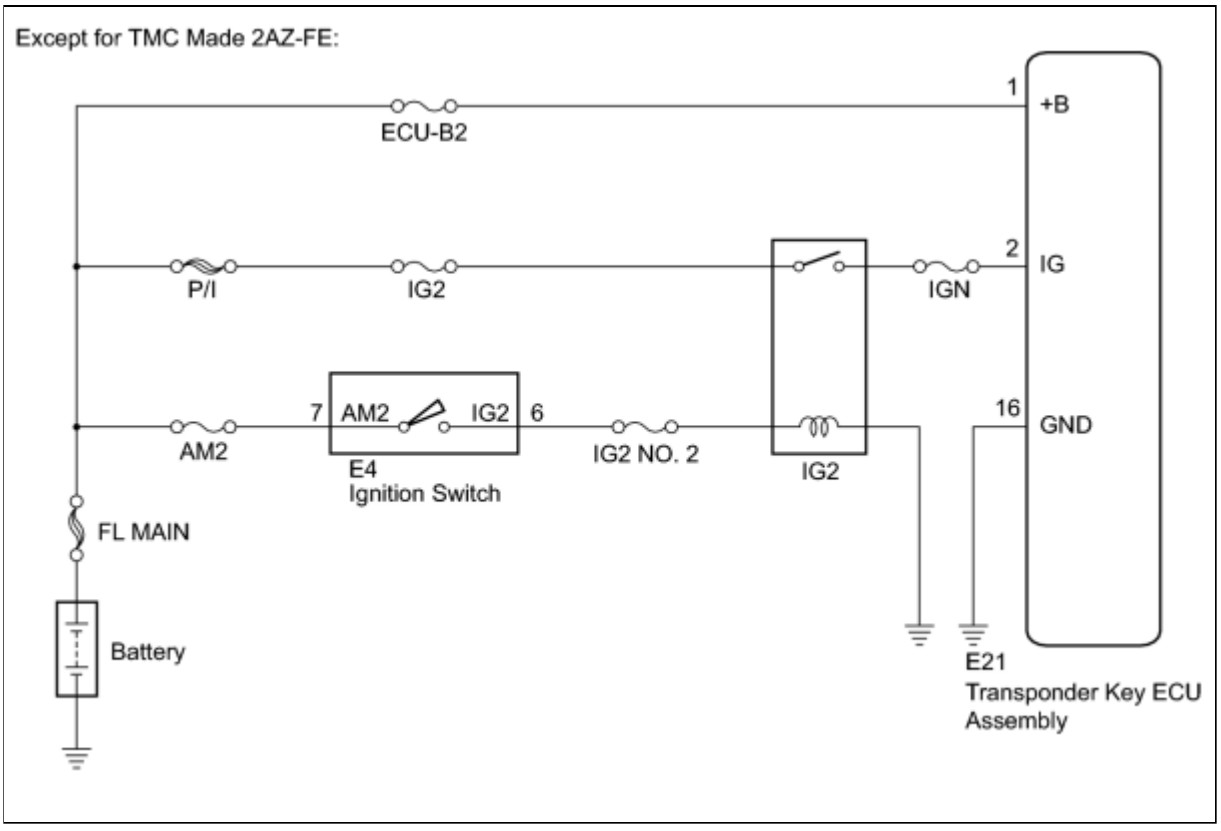

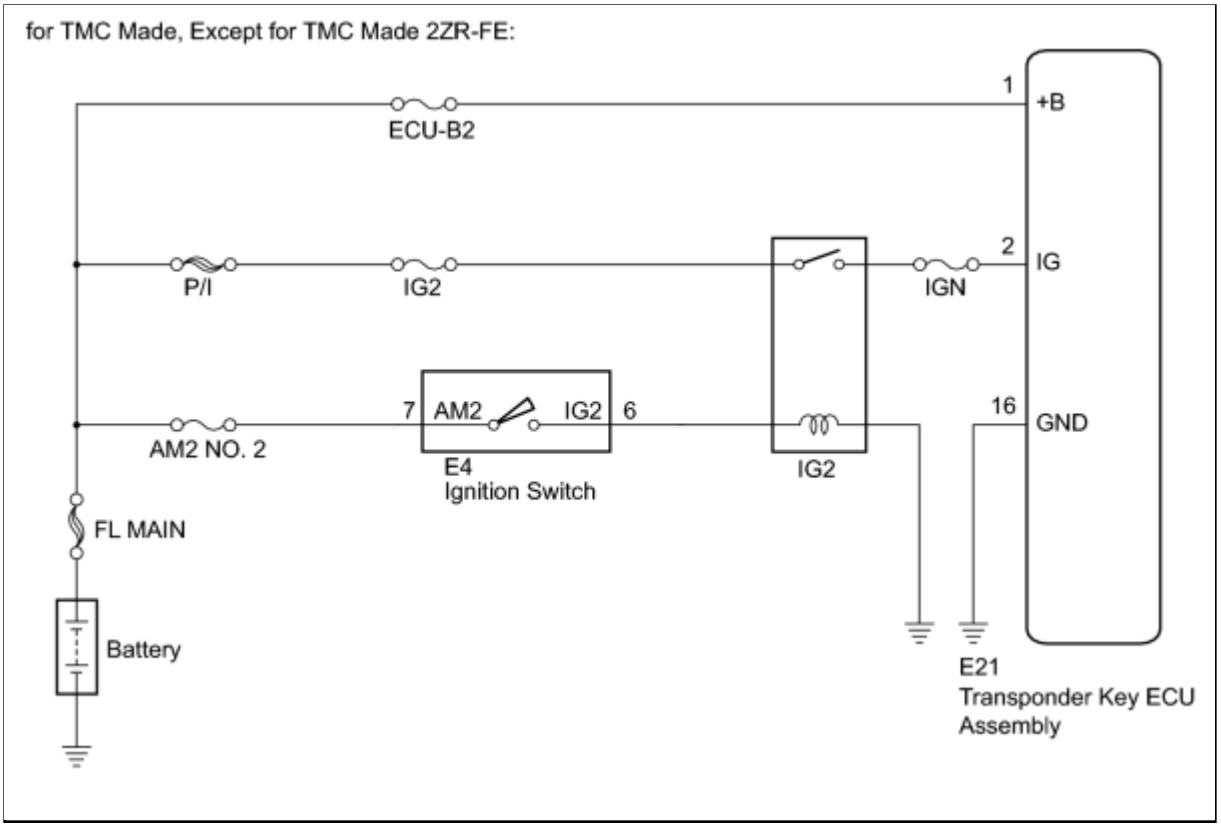

INSPECTION PROCEDURE

NOTICE:

If the transponder key ECU assembly is replaced, register the key and ECU communication ID INFO **.**

PROCEDURE

1.	**CHECK HARNESS AND CONNECTOR (TRANSPONDER KEY ECU - BATTERY)**

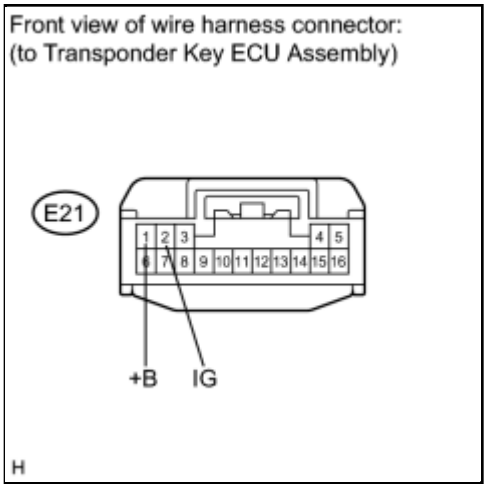

(a) Disconnect the transponder key ECU assembly connector.

(b) Measure the voltage according to the value(s) in the table below.

Standard Voltage:

TESTER CONNECTION	CONDITION	SPECIFIED CONDITION
E21-1 (+B) - Body ground	Always	11 to 14 V
E21-2 (IG) - Body ground	Ignition switch off	Below 1 V
E21-2 (IG) - Body ground	Ignition switch ON	11 to 14 V

NG ▶ **REPAIR OR REPLACE HARNESS OR CONNECTOR, OR REPLACE FUSE**

OK ▼

2.	**CHECK HARNESS AND CONNECTOR (TRANSPONDER KEY ECU - BODY GROUND)**

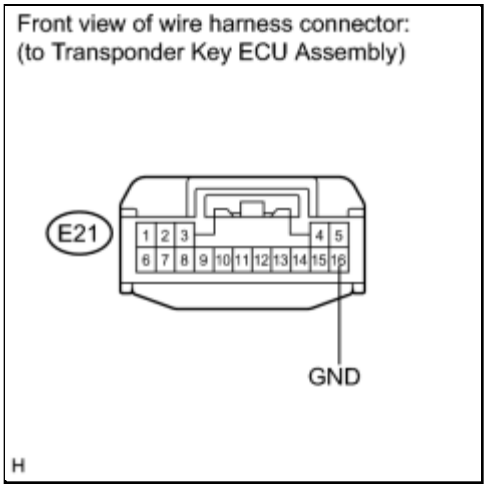

(a) Measure the resistance according to the value(s) in the table below.

Standard Resistance:

TESTER CONNECTION	CONDITION	SPECIFIED CONDITION
E21-16 (GND) - Body ground	Always	Below 1 Ω

NG ▶ **REPAIR OR REPLACE HARNESS OR CONNECTOR**

OK ▶ **PROCEED TO NEXT CIRCUIT INSPECTION SHOWN IN PROBLEM SYMPTOMS TABLE**

Last Modified: 3-10-2010	6.4 J	**From:** 200901
Model Year: 2010	**Model:** Corolla	**Doc ID:** RM000001GUV00ZX
Title: THEFT DETERRENT / KEYLESS ENTRY: ENGINE IMMOBILISER SYSTEM (w/o Smart Key System): Diagnosis Circuit (2010 Corolla)		

Diagnosis Circuit

DESCRIPTION

This circuit is used to read the DTCs that are output from the transponder key ECU assembly with the Techstream.

WIRING DIAGRAM

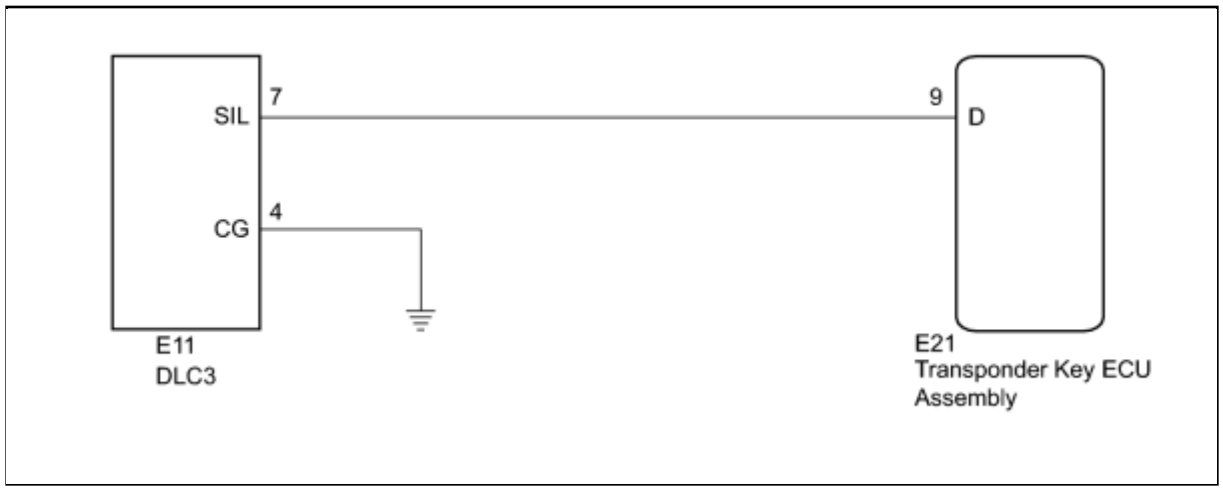

INSPECTION PROCEDURE

NOTICE:

If the transponder key ECU assembly is replaced, register the key and ECU communication ID INFO **.**

PROCEDURE

1.	**CHECK HARNESS AND CONNECTOR (DLC3 - TRANSPONDER KEY ECU AND BODY GROUND)**

(a) Disconnect the transponder key ECU assembly connector.

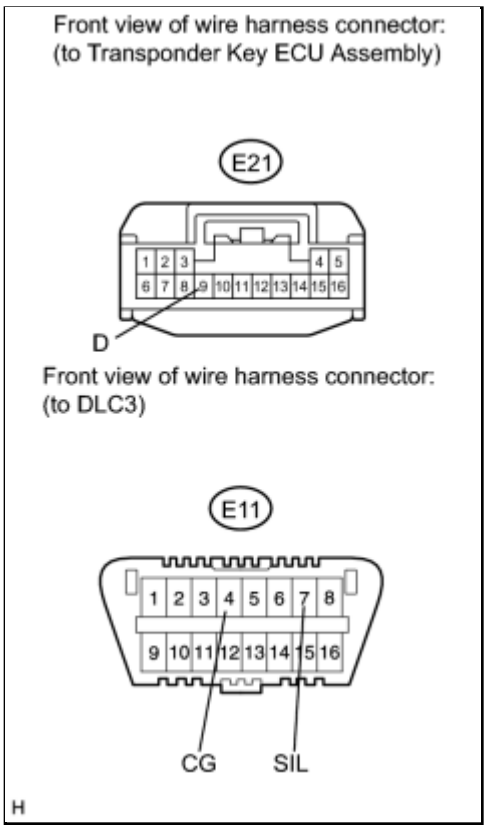

(b) Measure the resistance according to the value(s) in the table below.

Standard Resistance:

TESTER CONNECTION	CONDITION	SPECIFIED CONDITION
E21-9 (D) - E11-7 (SIL)	Always	Below 1 Ω
E11-4 (CG) - Body ground	Always	Below 1 Ω
E21-9 (D) - Body ground	Always	10 kΩ or higher

NG ▶ **REPAIR OR REPLACE HARNESS OR CONNECTOR**

OK ▶ **REPLACE TRANSPONDER KEY ECU ASSEMBLY**

Last Modified: 3-10-2010	6.4 K	**From:** 200901
Model Year: 2010	**Model:** Corolla	**Doc ID:** RM000002Y7Z00GX
Title: THEFT DETERRENT / KEYLESS ENTRY: ENTRY LOCK AND UNLOCK SWITCH: COMPONENTS (2010 Corolla)		

COMPONENTS

ILLUSTRATION

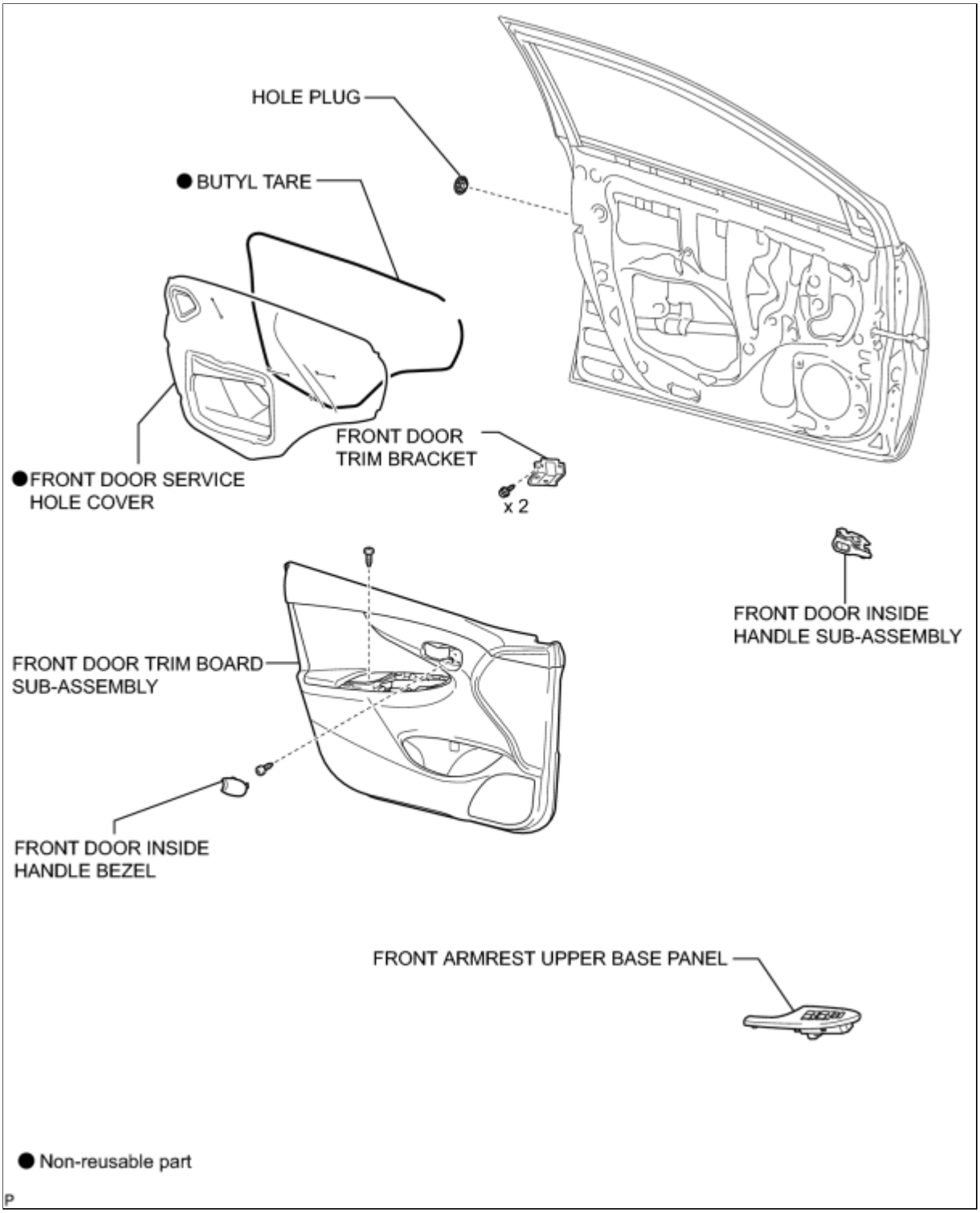

ILLUSTRATION

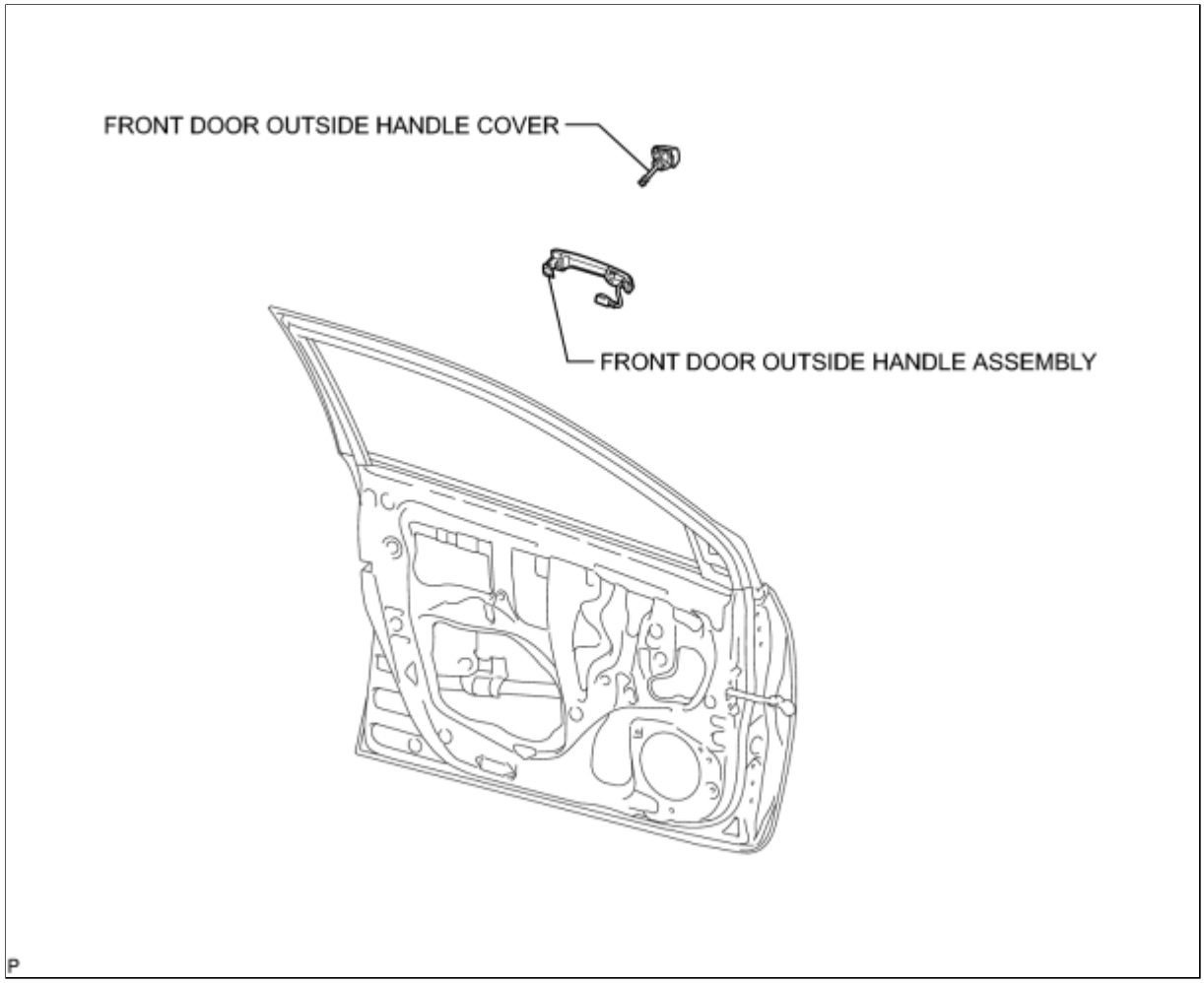
FRONT DOOR OUTSIDE HANDLE COVER
FRONT DOOR OUTSIDE HANDLE ASSEMBLY
P

Last Modified: 3-10-2010	6.4 A	**From:** 200901
Model Year: 2010	**Model:** Corolla	**Doc ID:** RM000002Y8000CX
Title: THEFT DETERRENT / KEYLESS ENTRY: ENTRY LOCK AND UNLOCK SWITCH: REMOVAL (2010 Corolla)		

REMOVAL

1. REMOVE FRONT DOOR INSIDE HANDLE BEZEL INFO

2. REMOVE FRONT ARMREST UPPER BASE PANEL INFO

3. REMOVE FRONT DOOR TRIM BOARD SUB-ASSEMBLY INFO

4. REMOVE FRONT DOOR INSIDE HANDLE SUB-ASSEMBLY INFO

5. REMOVE FRONT DOOR TRIM BRACKET INFO

6. REMOVE FRONT DOOR SERVICE HOLE COVER INFO

7. REMOVE FRONT DOOR OUTSIDE HANDLE COVER INFO

8. REMOVE FRONT DOOR OUTSIDE HANDLE ASSEMBLY

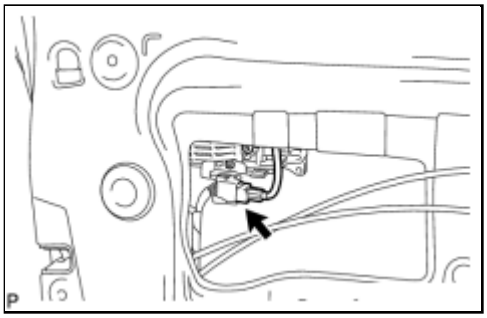

(a) Disconnect the connector.

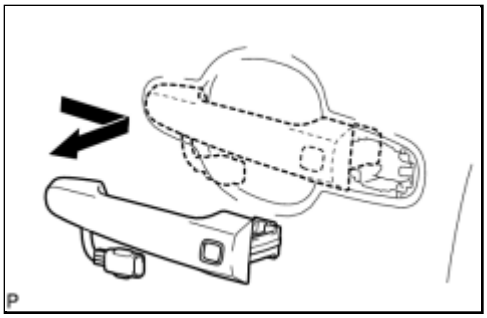

(b) Remove the front door outside handle assembly as shown in the illustration.

Last Modified: 3-10-2010	6.4 G	**From:** 200901
Model Year: 2010	**Model:** Corolla	**Doc ID:** RM000002Y7Y00HX
Title: THEFT DETERRENT / KEYLESS ENTRY: ENTRY LOCK AND UNLOCK SWITCH: INSPECTION (2010 Corolla)		

INSPECTION

1. INSPECT FRONT DOOR OUTSIDE HANDLE ASSEMBLY LH

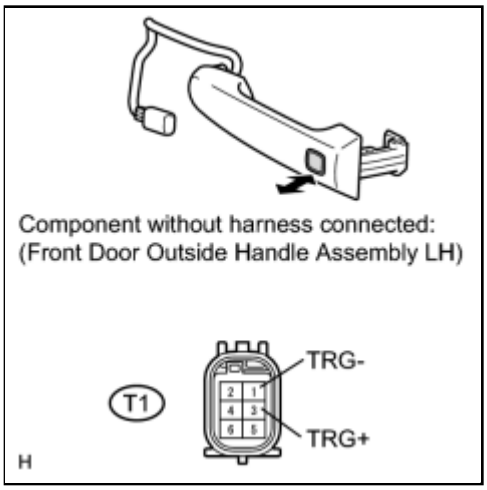

(a) Measure the resistance according to the value(s) in the table below.

Standard Resistance:

TESTER CONNECTION	CONDITION	SPECIFIED CONDITION
T1-1 (TRG-) - T1-3 (TRG+)	Lock switch not pushed	10 kΩ or higher
T1-1 (TRG-) - T1-3 (TRG+)	Lock switch pushed	Below 1 Ω

If the result is not specified, replace the front door outside handle assembly LH.

2. INSPECT FRONT DOOR OUTSIDE HANDLE ASSEMBLY RH

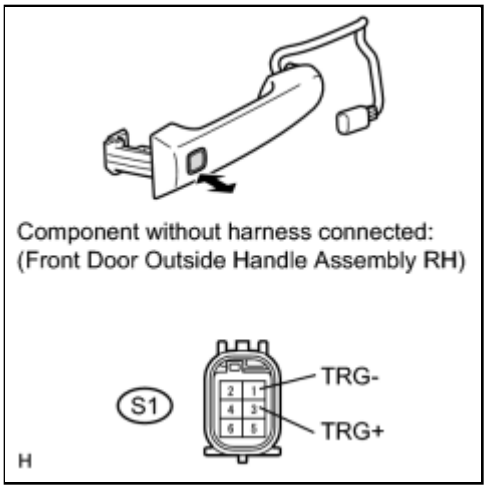

(a) Measure the resistance according to the value(s) in the table below.

Standard Resistance:

TESTER CONNECTION	CONDITION	SPECIFIED CONDITION
S1-1 (TRG-) - S1-3 (TRG+)	Lock switch not pushed	10 kΩ or higher
S1-1 (TRG-) - S1-3 (TRG+)	Lock switch pushed	Below 1 Ω

If the result is not specified, replace the front door outside handle assembly RH.

Last Modified: 3-10-2010	6.4 A	**From:** 200901
Model Year: 2010	**Model:** Corolla	**Doc ID:** RM000002Y7X00CX
Title: THEFT DETERRENT / KEYLESS ENTRY: ENTRY LOCK AND UNLOCK SWITCH: INSTALLATION (2010 Corolla)		

INSTALLATION

1. INSTALL FRONT DOOR OUTSIDE HANDLE ASSEMBLY

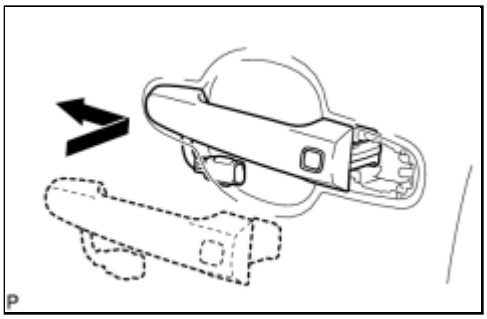

(a) Insert the front end of the front door outside handle assembly into the front door outside handle frame.

(b) Insert the rear end of the front door outside handle assembly into the front door outside handle frame. Next, slide the front door outside handle assembly toward the front of the vehicle to install it.

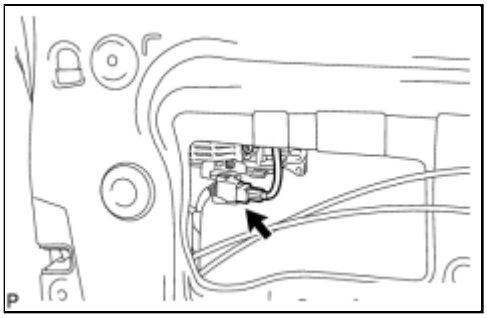

(c) Connect the connector.

2. INSTALL FRONT DOOR OUTSIDE HANDLE COVER INFO

3. INSTALL FRONT DOOR SERVICE HOLE COVER INFO

4. INSTALL FRONT DOOR TRIM BRACKET INFO

5. INSTALL FRONT DOOR INSIDE HANDLE SUB-ASSEMBLY INFO

6. INSTALL FRONT DOOR TRIM BOARD SUB-ASSEMBLY INFO

7. INSTALL FRONT ARMREST UPPER BASE PANEL (for Driver Side without Power Window) INFO

8. INSTALL FRONT DOOR INSIDE HANDLE BEZEL INFO

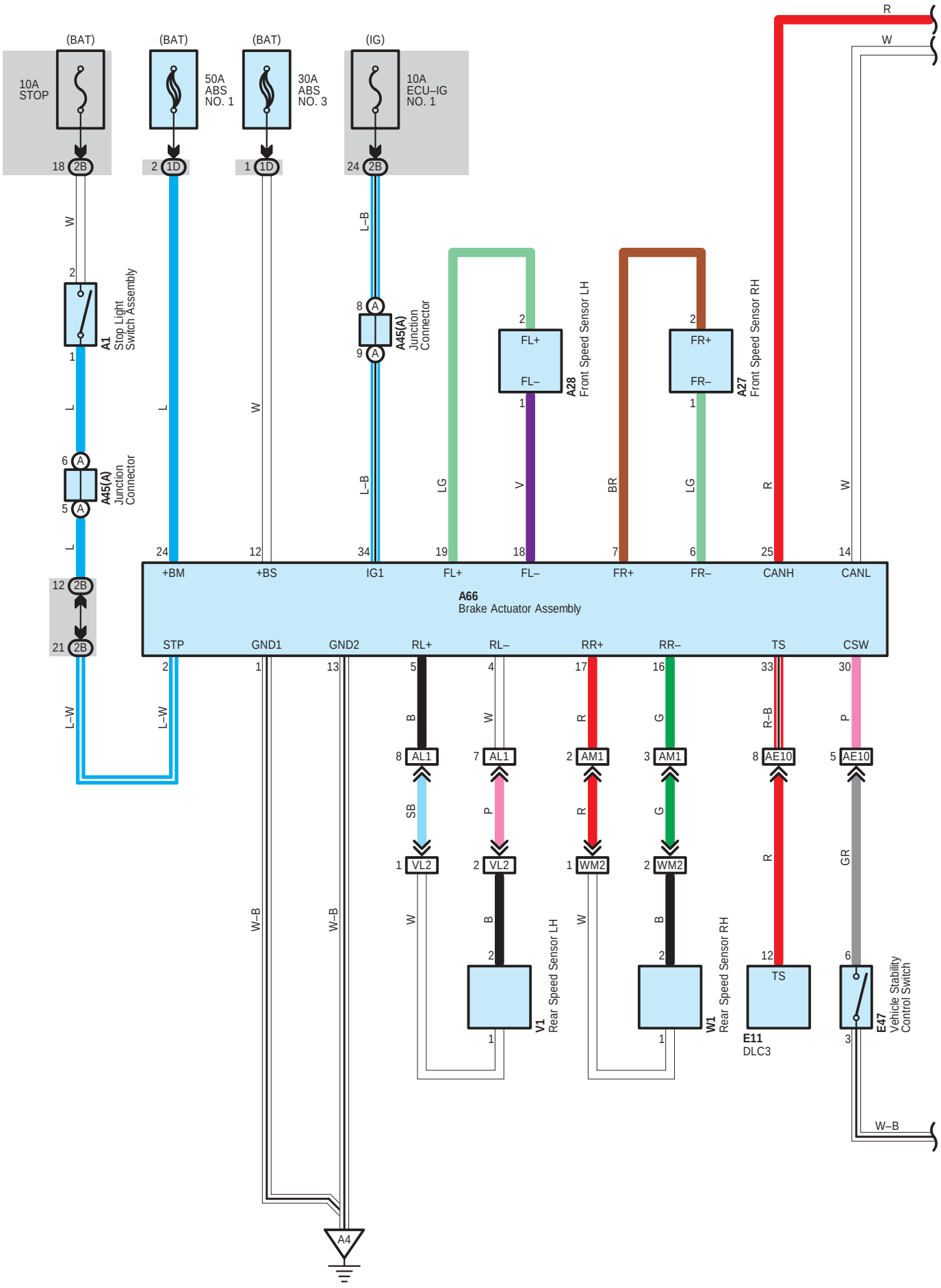
(BAT)
10A
STOP
18 2B
(BAT)
50A
ABS
NO. 1
2 1D
(BAT)
30A
ABS
NO. 3
1 1D
(IG)
10A
ECU–IG
NO. 1
24 2B
R
W
W
2
1
A1
Stop Light
Switch Assembly
L
6 A
5 A
A45(A)
Junction
Connector
L
12 2B
21 2B
L
L
L–B
8 A
9 A
A45(A)
Junction
Connector
L–B
W
LG
2
FL+
FL–
1
A28
Front Speed Sensor LH
V
BR
2
FR+
FR–
1
A27
Front Speed Sensor RH
LG
R
W
24
12
34
19
18
7
6
25
14
+BM
+BS
IG1
FL+
FL–
FR+
FR–
CANH
CANL
A66
Brake Actuator Assembly
STP
GND1
GND2
RL+
RL–
RR+
RR–
TS
CSW
2
1
13
5
4
17
16
33
30
L–W
L–W
W–B
W–B
B
W
R
G
R–B
P
8 AL1
7 AL1
2 AM1
3 AM1
8 AE10
5 AE10
SB
P
R
G
R
GR
1 VL2
2 VL2
1 WM2
2 WM2
W
B
W
B
2
1
V1
Rear Speed Sensor LH
W1
Rear Speed Sensor RH
12
TS
E11
DLC3
6
3
E47
Vehicle Stability
Control Switch
W–B
A4

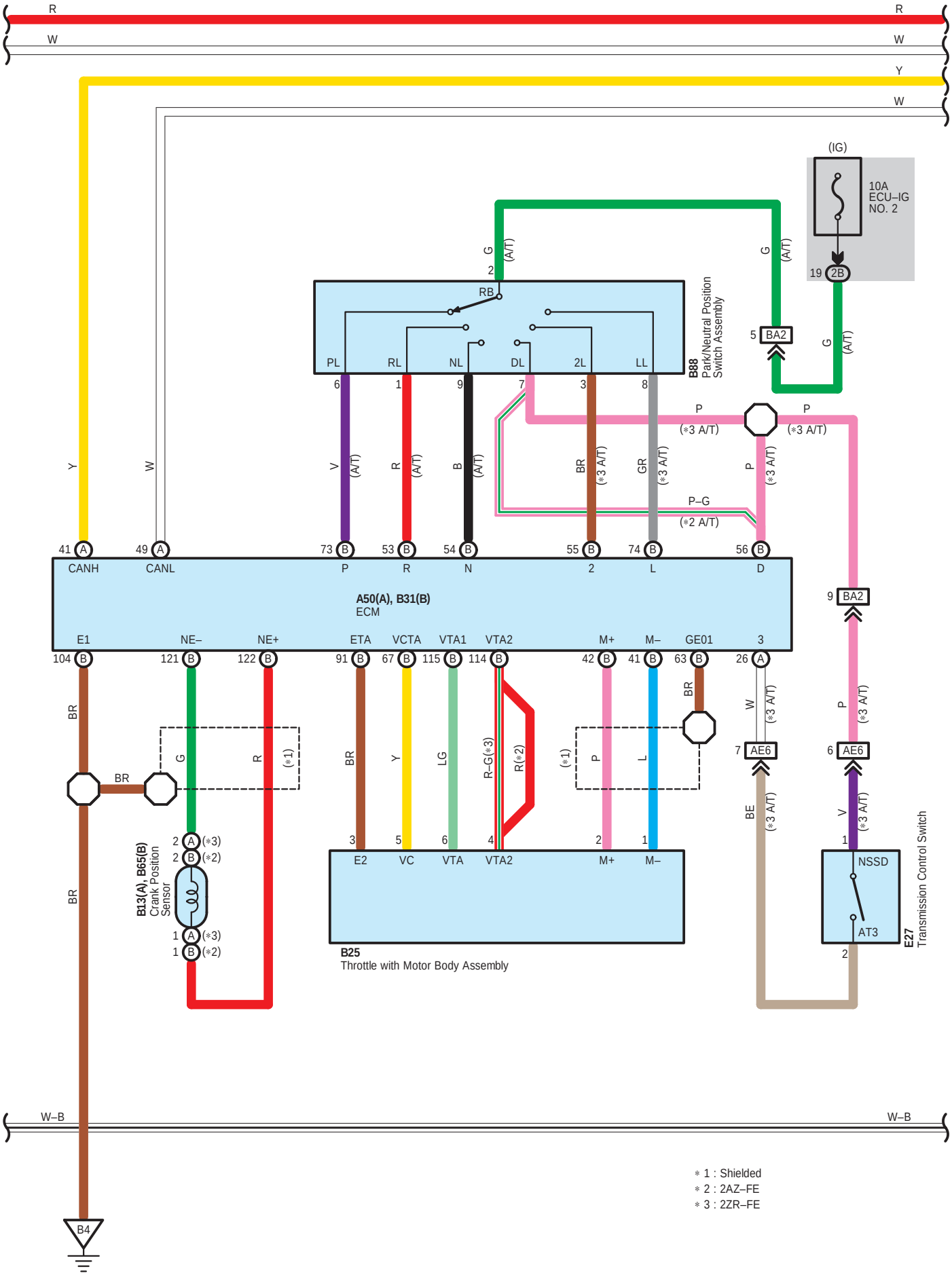
R
W
Y
(IG)
10A
ECU–IG
NO. 2
19 2B
G (A/T)
2
RB
PL RL NL DL 2L LL
B88
Park/Neutral Position
Switch Assembly
5 BA2
6 1 9 7 3 8
V (A/T)
R (A/T)
B (A/T)
BR (*3 A/T)
GR (*3 A/T)
P (*3 A/T)
P–G (*2 A/T)
41 A CANH
49 A CANL
73 B P
53 B R
54 B N
55 B 2
74 B L
56 B D
A50(A), B31(B)
ECM
E1 NE– NE+ ETA VCTA VTA1 VTA2 M+ M– GE01 3
104 B 121 B 122 B 91 B 67 B 115 B 114 B 42 B 41 B 63 B 26 A
BR
G
R (*1)
BR
B13(A), B65(B)
Crank Position
Sensor
2 A (*3)
2 B (*2)
1 A (*3)
1 B (*2)
BR
BR
Y
LG
R–G(*3)
R(*2)
(*1)
P
L
W (*3 A/T)
BE (*3 A/T)
7 AE6
9 BA2
P (*3 A/T)
6 AE6
V (*3 A/T)
3 5 6 4 2 1
E2 VC VTA VTA2 M+ M–
B25
Throttle with Motor Body Assembly
NSSD
AT3
E27
Transmission Control Switch
2
W–B
B4
* 1 : Shielded
* 2 : 2AZ–FE
* 3 : 2ZR–FE

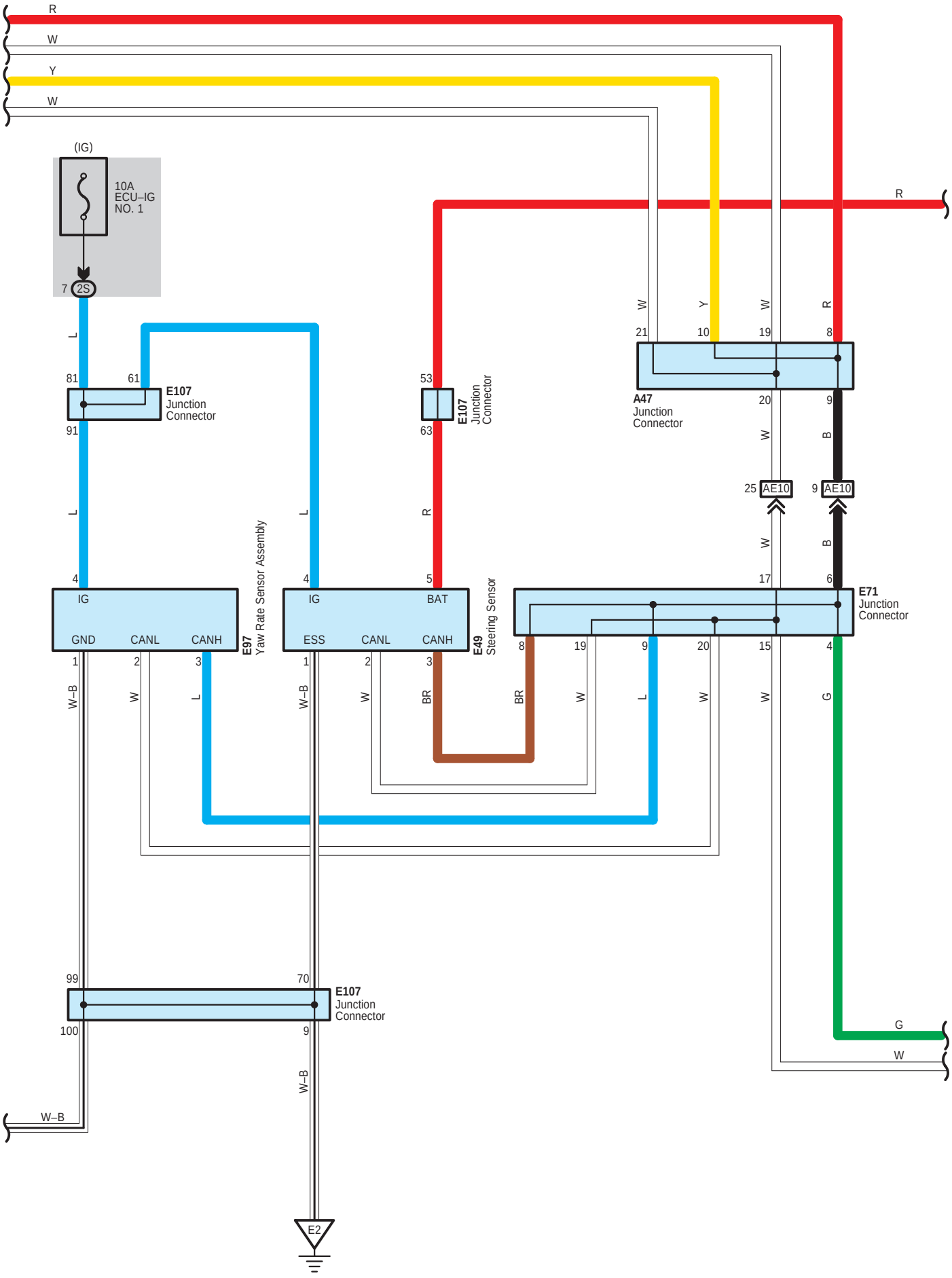
R
W
Y
W
(IG)
10A
ECU–IG
NO. 1
7 2S
L
81
61
E107
Junction
Connector
91
L
4
IG
GND
CANL
CANH
1
2
3
W–B
W
L
E97
Yaw Rate Sensor Assembly
L
4
IG
ESS
CANL
CANH
1
2
3
W–B
W
BR
53
R
E107
Junction
Connector
63
R
5
BAT
E49
Steering Sensor
8
BR
W
21
10
19
8
A47
Junction
Connector
20
9
W
B
25 AE10
9 AE10
W
B
17
6
E71
Junction
Connector
19
9
20
15
4
W
L
W
W
G
R
G
W
99
70
E107
Junction
Connector
100
9
W–B
W–B
E2

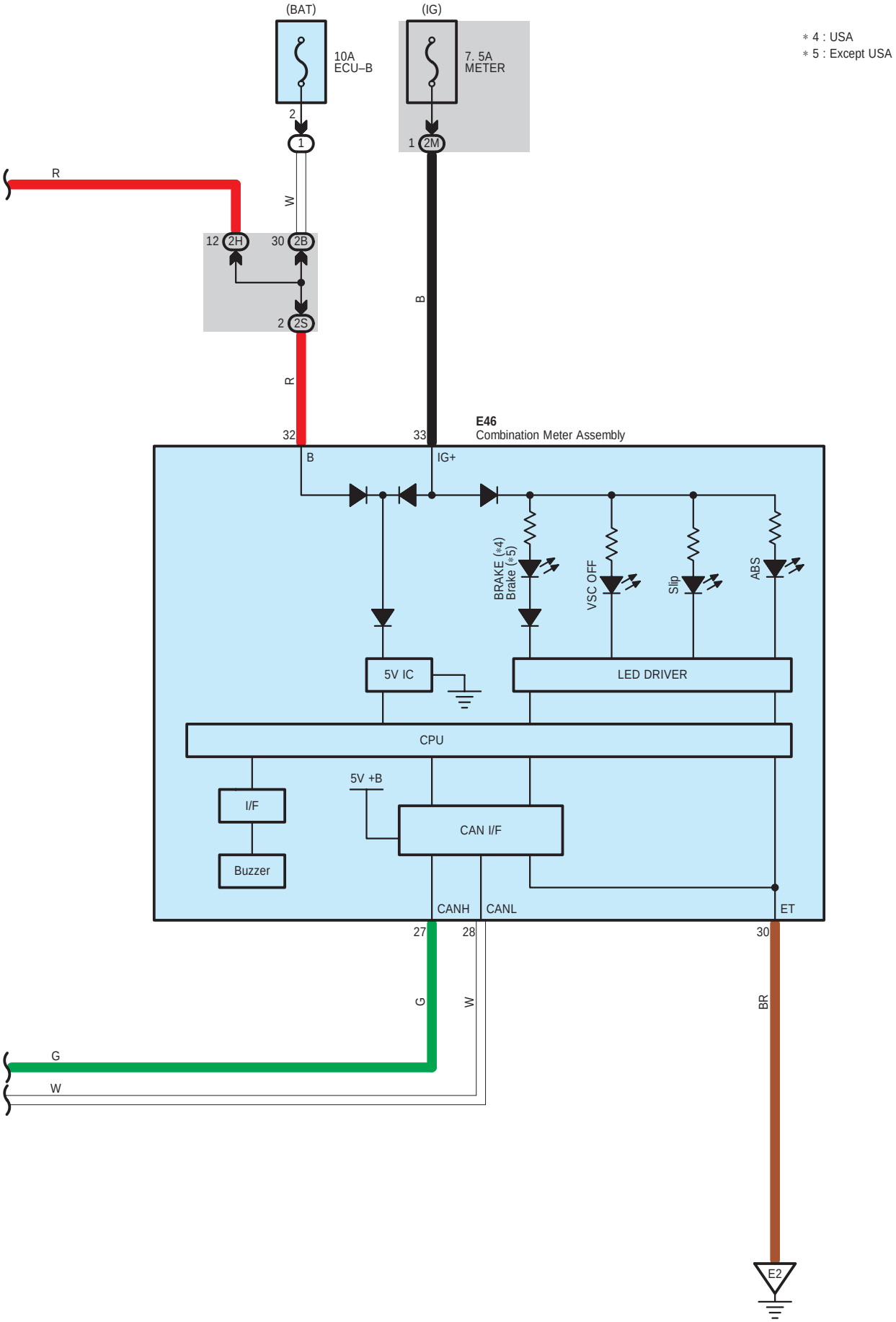
(BAT)
(IG)
10A
ECU–B
7. 5A
METER
2
1
1
2M
R
W
12
2H
30
2B
2
2S
B
R
32
33
E46
Combination Meter Assembly
B
IG+
BRAKE (*4)
Brake (*5)
VSC OFF
Slip
ABS
5V IC
LED DRIVER
CPU
5V +B
I/F
CAN I/F
Buzzer
CANH
CANL
ET
27
28
30
G
W
BR
G
W
E2
* 4 : USA
* 5 : Except USA

A 1
Black

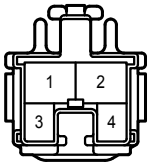

A 27
Black

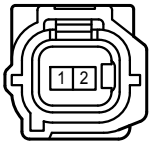

A 28
Black

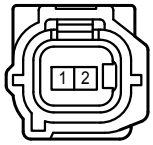

A 45
White

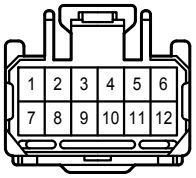

A 47
White

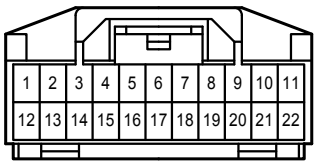

A 50
Black

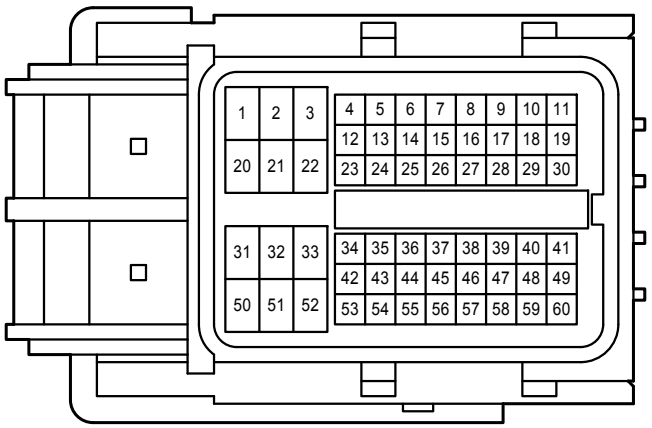

A 66
Black

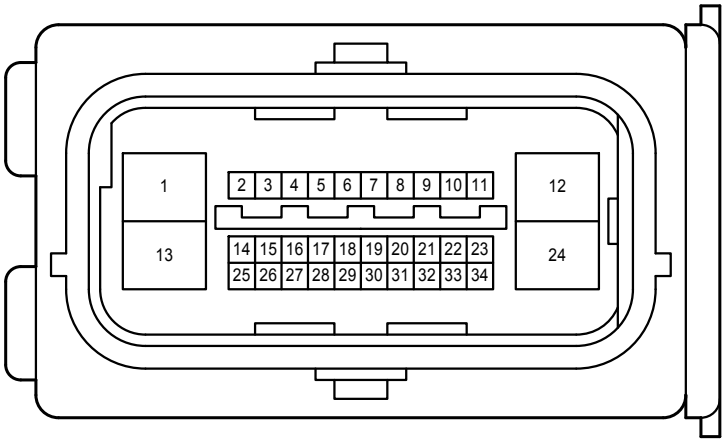

B 13
Black

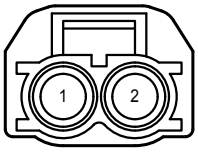

B 25
Black

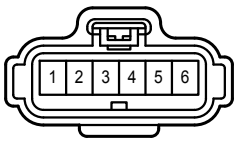

B 31
Black

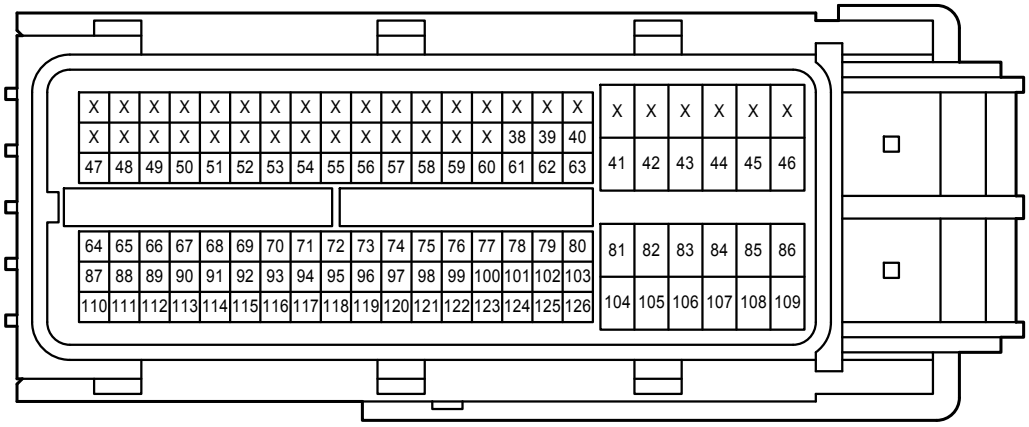

B 65
Gray



B 88
Gray

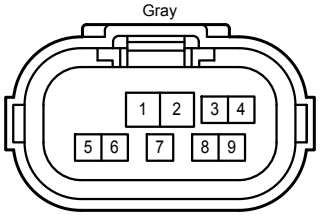

E 11
White

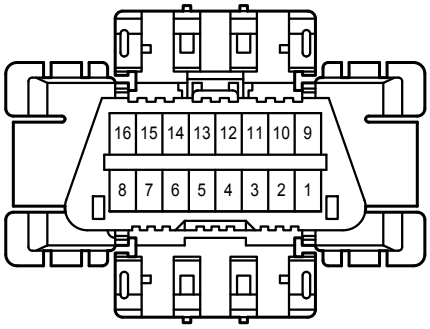

E 27
White

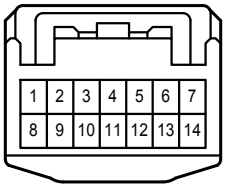

E 46
White

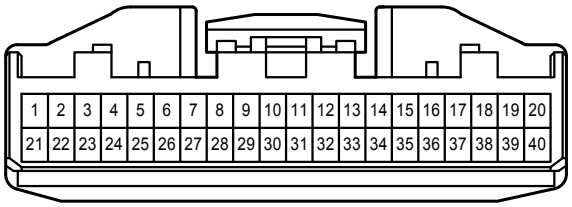

E 47
White

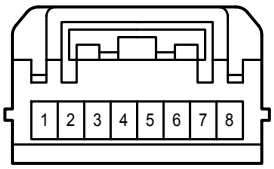

E 49
Black

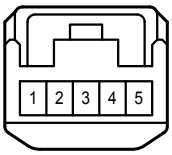

E 71
White

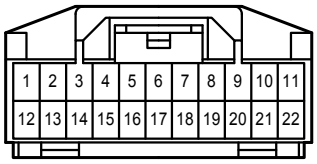

E 97
Black

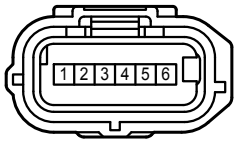

E107
White

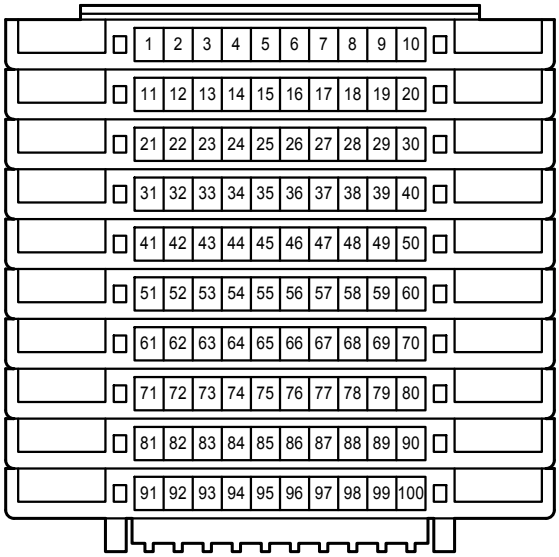

V 1
Black

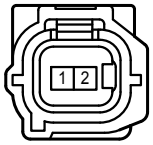

W 1
Black

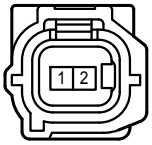

1D
White

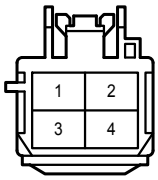

2B
White

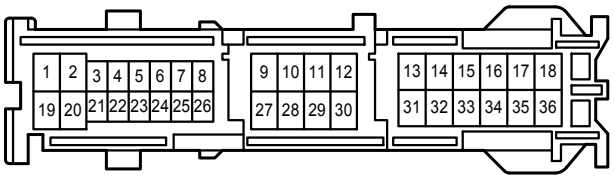

2H
White

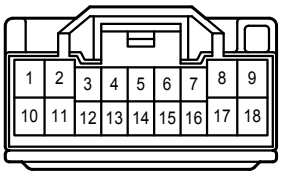

2M
White

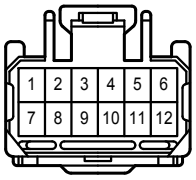

2S
White

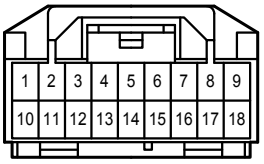

AE6
Gray

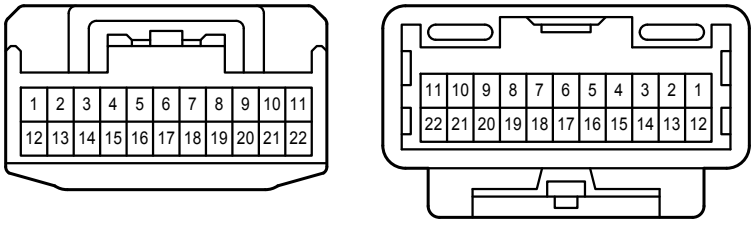

AE10
Gray

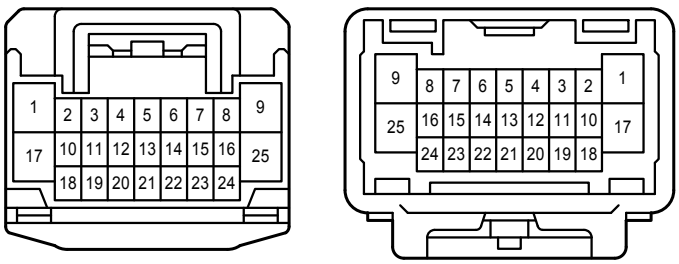

AL1
White

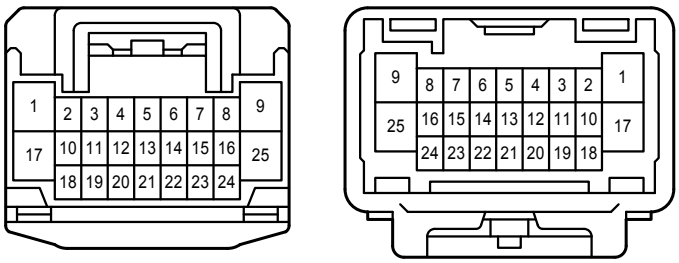

AM1
White

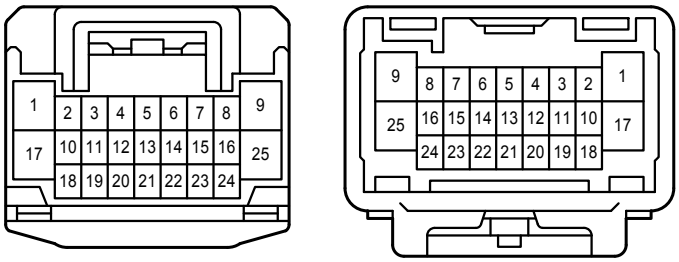

BA2
White

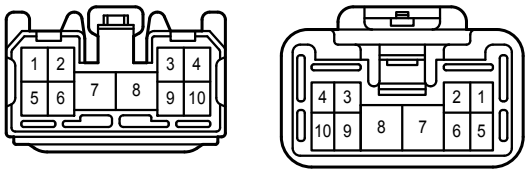

VL2
Black White

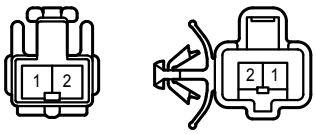

WM2
Black White

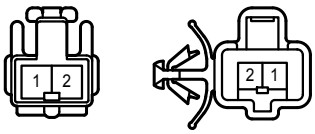

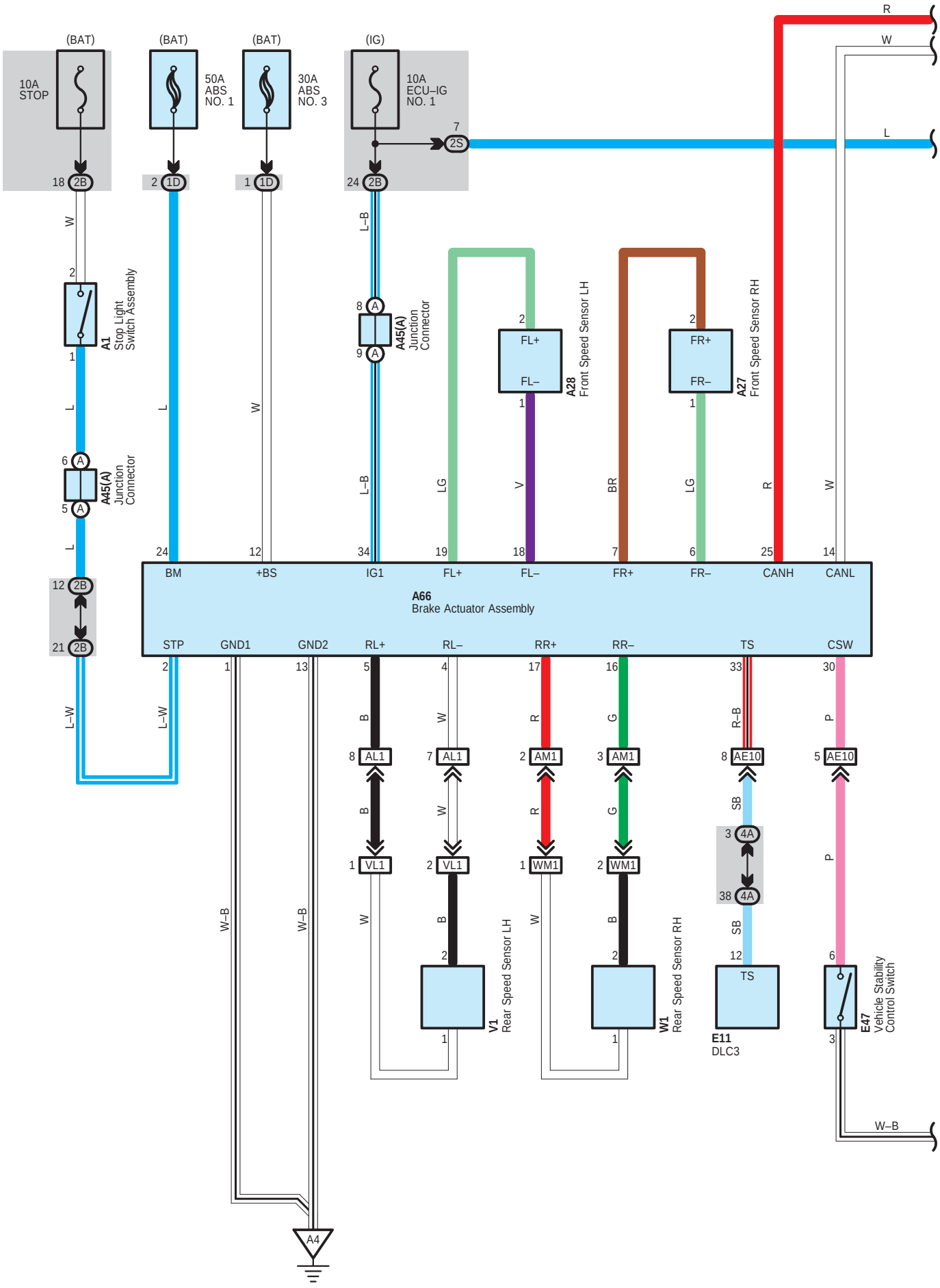
(BAT)
10A
STOP
18 2B
(BAT)
50A
ABS
NO. 1
2 1D
(BAT)
30A
ABS
NO. 3
1 1D
(IG)
10A
ECU–IG
NO. 1
24 2B
7 2S
R
W
L
W
2
1
A1
Stop Light
Switch Assembly
L
6 A
5 A
A45(A)
Junction
Connector
L
12 2B
21 2B
L–W
L–W
L
24
W
12
L–B
8 A
9 A
A45(A)
Junction
Connector
L–B
34
LG
19
2
FL+
FL–
1
A28
Front Speed Sensor LH
V
18
BR
7
2
FR+
FR–
1
A27
Front Speed Sensor RH
LG
6
R
25
W
14
BM
+BS
IG1
FL+
FL–
FR+
FR–
CANH
CANL
A66
Brake Actuator Assembly
STP
2
GND1
1
GND2
13
RL+
5
RL–
4
RR+
17
RR–
16
TS
33
CSW
30
B
8 AL1
B
1 VL1
W
W
7 AL1
W
2 VL1
B
2
1
V1
Rear Speed Sensor LH
R
2 AM1
R
1 WM1
W
G
3 AM1
G
2 WM1
B
2
1
W1
Rear Speed Sensor RH
R–B
8 AE10
SB
3 4A
38 4A
SB
12
TS
E11
DLC3
P
5 AE10
P
6
3
E47
Vehicle Stability
Control Switch
W–B
W–B
W–B
A4

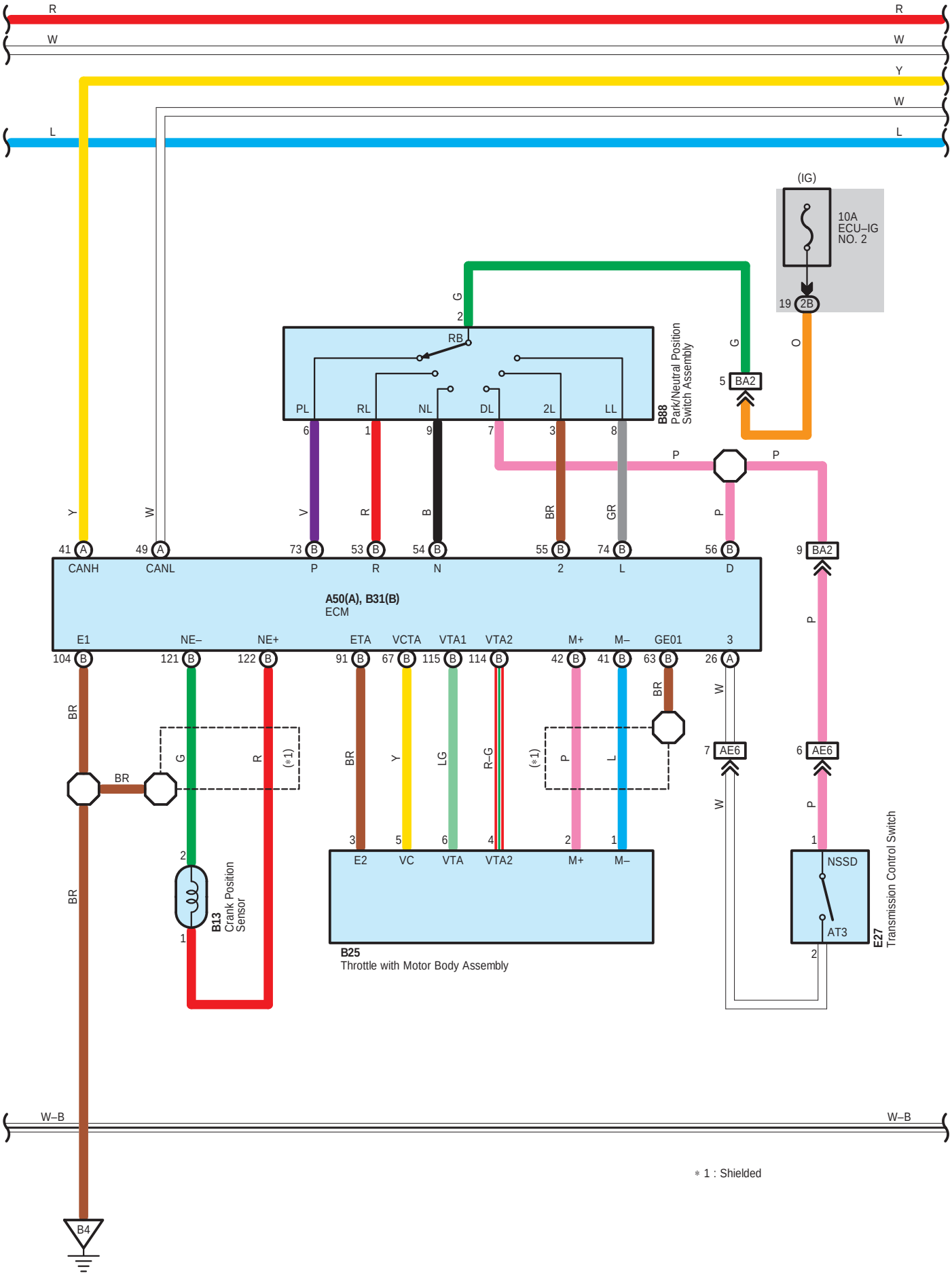
R
W
Y
L
(IG)
10A
ECU–IG
NO. 2
19 2B
G
2
RB
PL
RL
NL
DL
2L
LL
B88
Park/Neutral Position
Switch Assembly
5 BA2
O
6
1
9
7
3
8
P
V
R
B
BR
GR
41 A
CANH
49 A
CANL
73 B
P
53 B
R
54 B
N
55 B
2
74 B
L
56 B
D
9 BA2
A50(A), B31(B)
ECM
E1
NE–
NE+
ETA
VCTA
VTA1
VTA2
M+
M–
GE01
3
104 B
121 B
122 B
91 B
67 B
115 B
114 B
42 B
41 B
63 B
26 A
W
7 AE6
6 AE6
G
(*1)
2
B13
Crank Position
Sensor
1
E2
VC
VTA
VTA2
M+
M–
B25
Throttle with Motor Body Assembly
NSSD
AT3
E27
Transmission Control Switch
W–B
B4
* 1 : Shielded

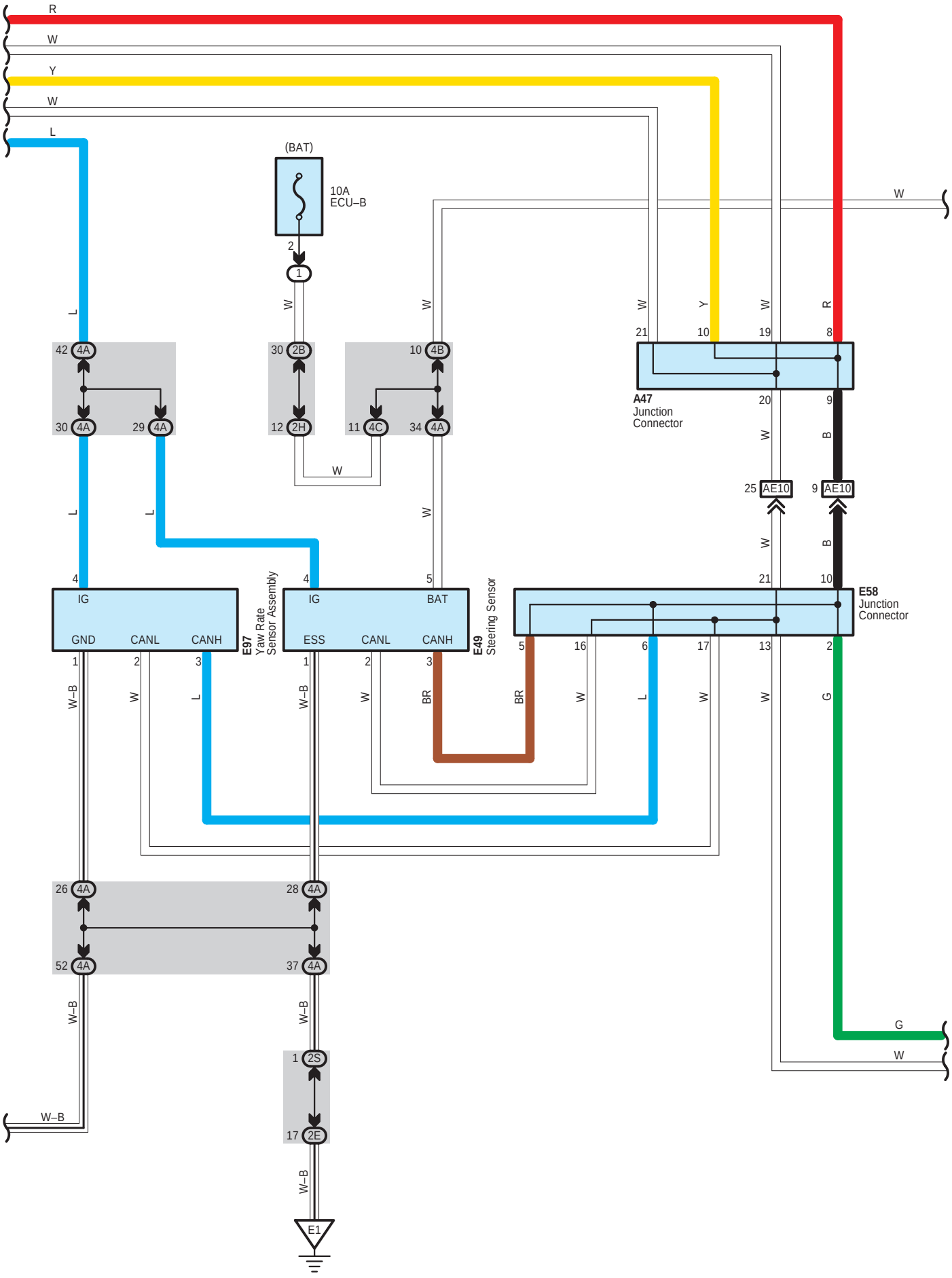
R
W
Y
W
L
(BAT)
10A
ECU–B
2
1
W
W
W
Y
W
R
21
10
19
8
A47
Junction
Connector
20
9
W
B
25
AE10
9
AE10
W
B
21
10
E58
Junction
Connector
5
16
6
17
13
2
L
42
4A
30
4A
29
4A
30
2B
12
2H
10
4B
11
4C
34
4A
W
L
L
W
4
IG
GND
CANL
CANH
1
2
3
E97
Yaw Rate
Sensor Assembly
4
IG
ESS
CANL
CANH
1
2
3
5
BAT
E49
Steering Sensor
W–B
W
L
W–B
W
BR
BR
W
L
W
W
G
26
4A
52
4A
28
4A
37
4A
W–B
W–B
1
2S
17
2E
W–B
E1
G
W
W–B

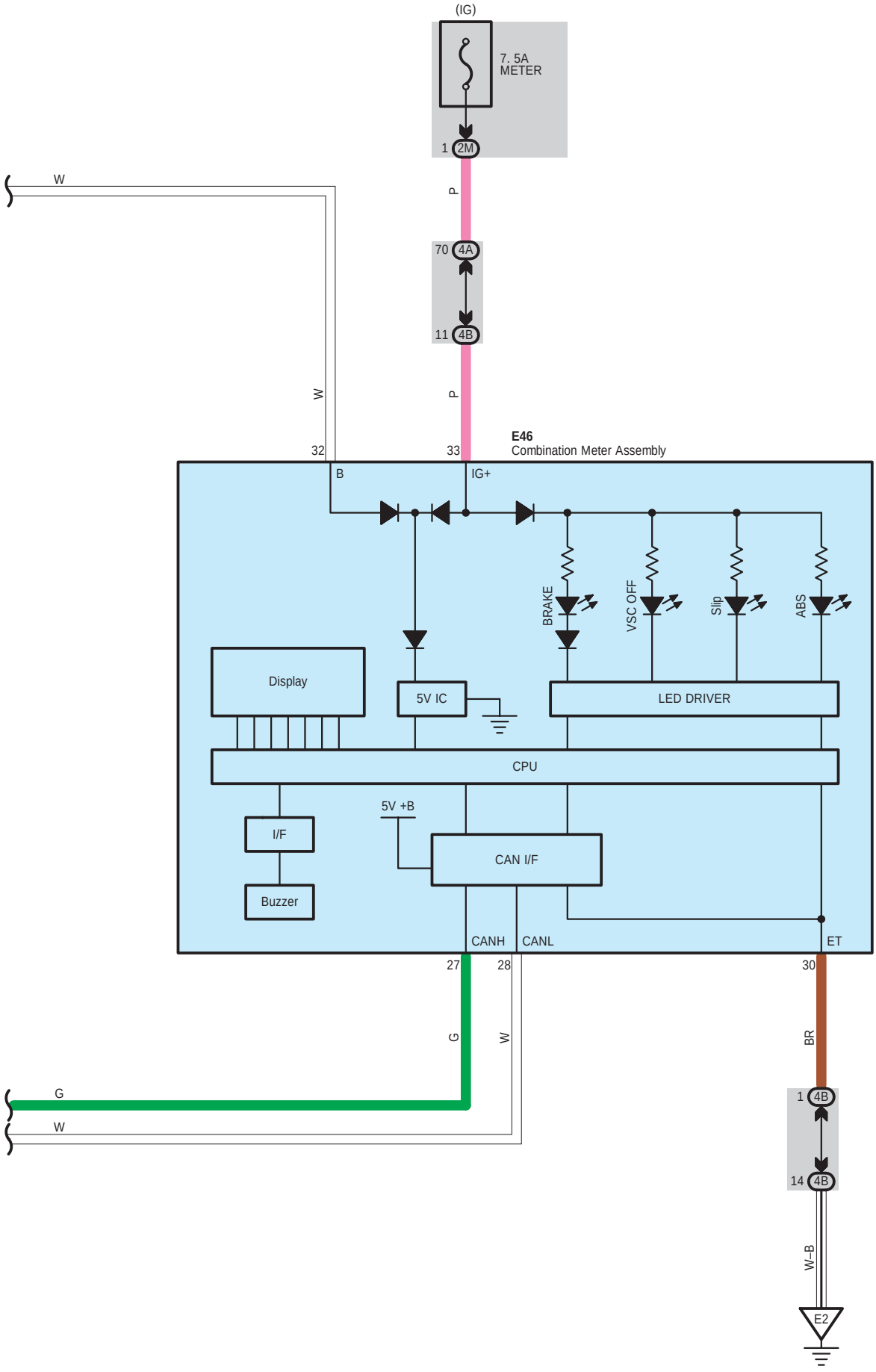
(IG)
7. 5A
METER
1 2M
W
P
70 4A
11 4B
W
P
32
33
E46
Combination Meter Assembly
B
IG+
BRAKE
VSC OFF
Slip
ABS
Display
5V IC
LED DRIVER
CPU
5V +B
I/F
CAN I/F
Buzzer
CANH
CANL
ET
27
28
30
G
W
BR
G
W
1 4B
14 4B
W–B
E2

A 1
Black

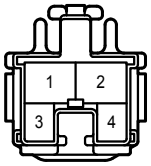

A 27
Black

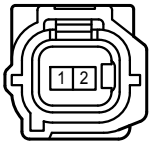

A 28
Black

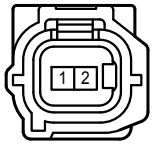

A 45
White

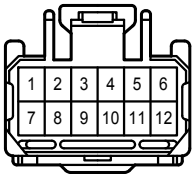

A 47
White

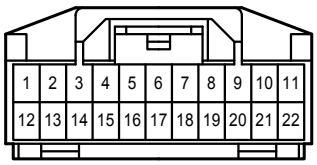

A 50
Black

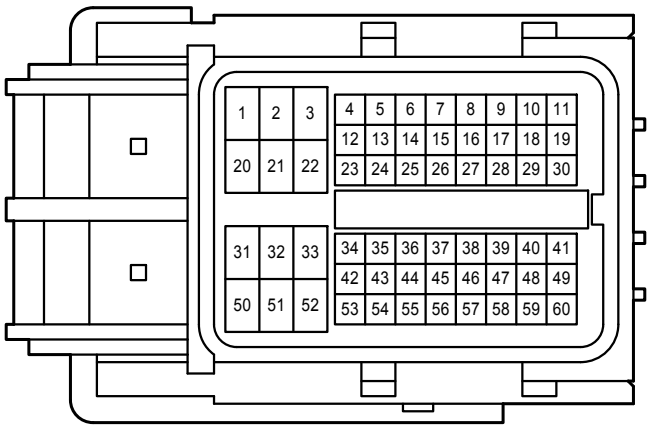

A 66
Black

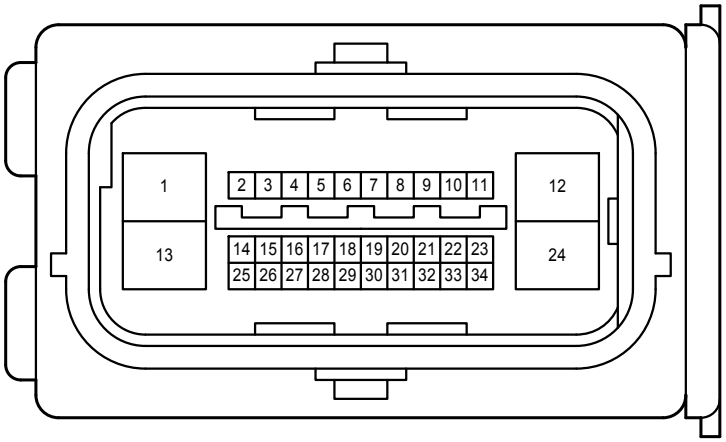

B 13
Black

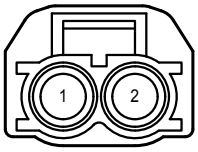

B 25
Black

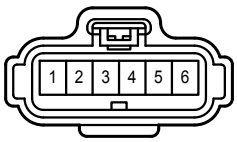

B 31
Black

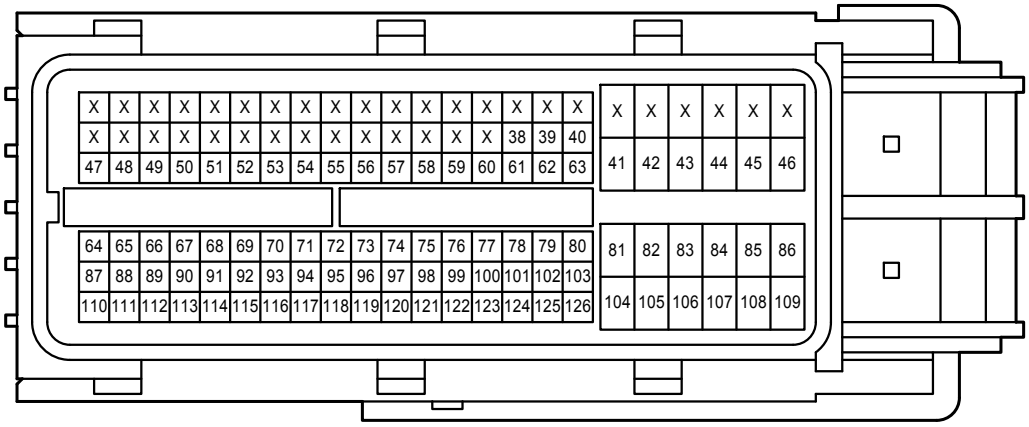

B 88
Gray

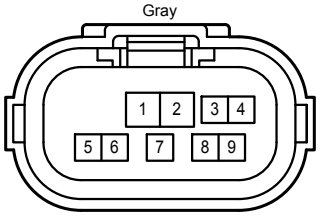

E 11
White

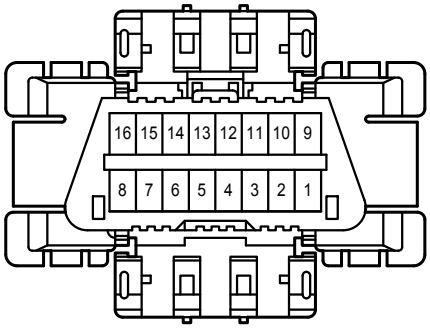

E 27
White

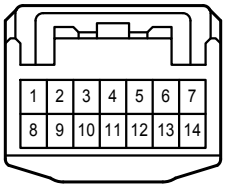

E 46
White

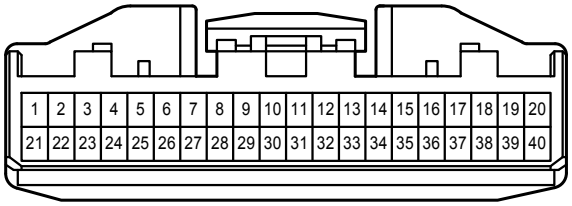

E 47
White

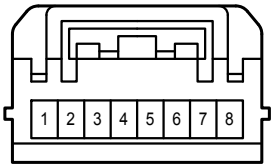

E 49
Black

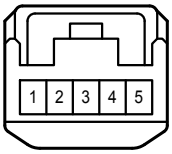

E 58
Gray

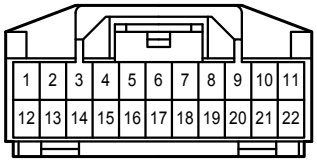

E 97
Black

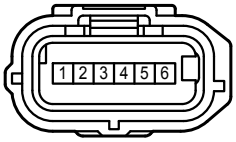

V 1
Black

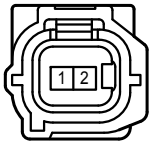

W 1
Black



1D
White

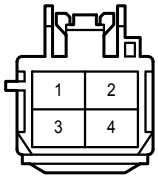

2B
White

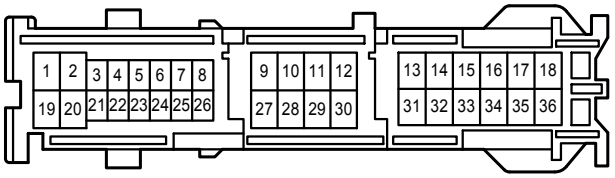

2E
White

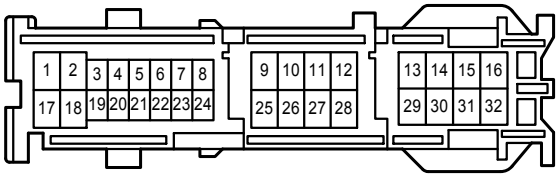

2H
White

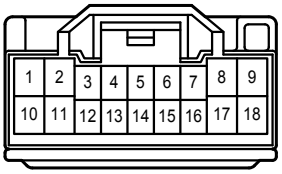

2M
White

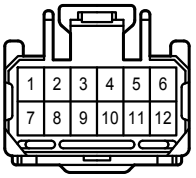

2S
White

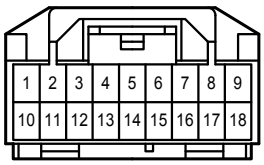

4A
White

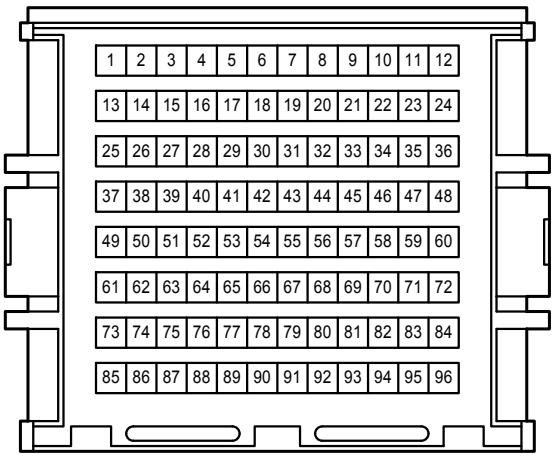

4B
White

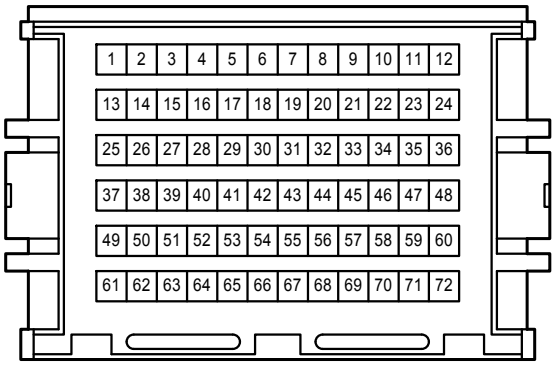

4C
White

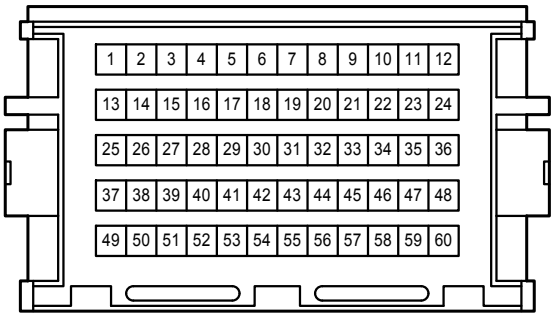

AE6
Gray

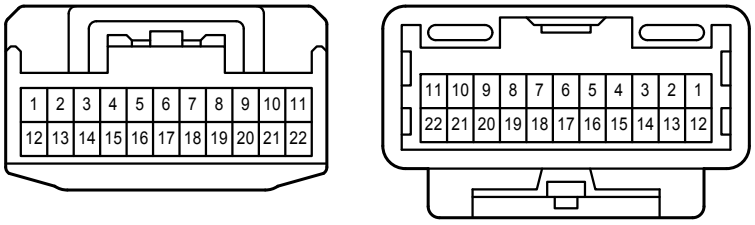

AE10
Gray

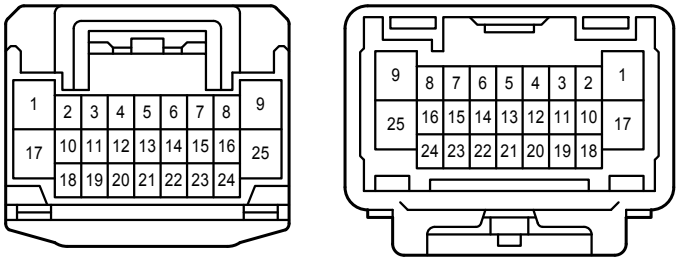

AL1
White

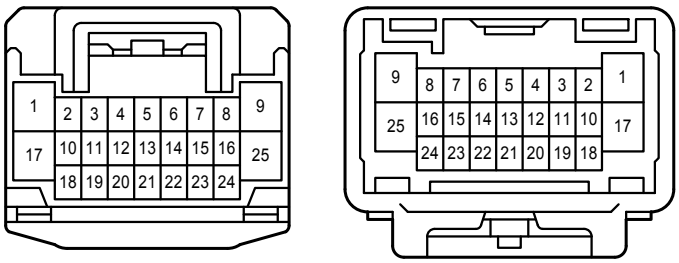

AM1
White

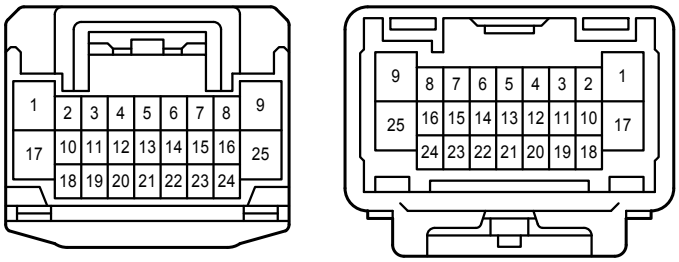

BA2
White

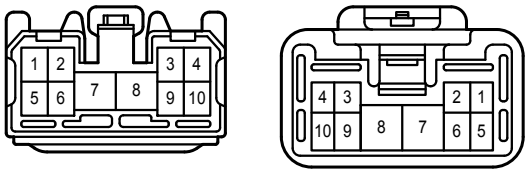

VL1
Black

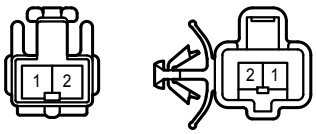

WM1
Black

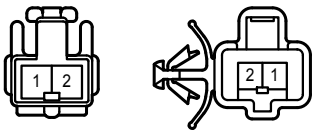

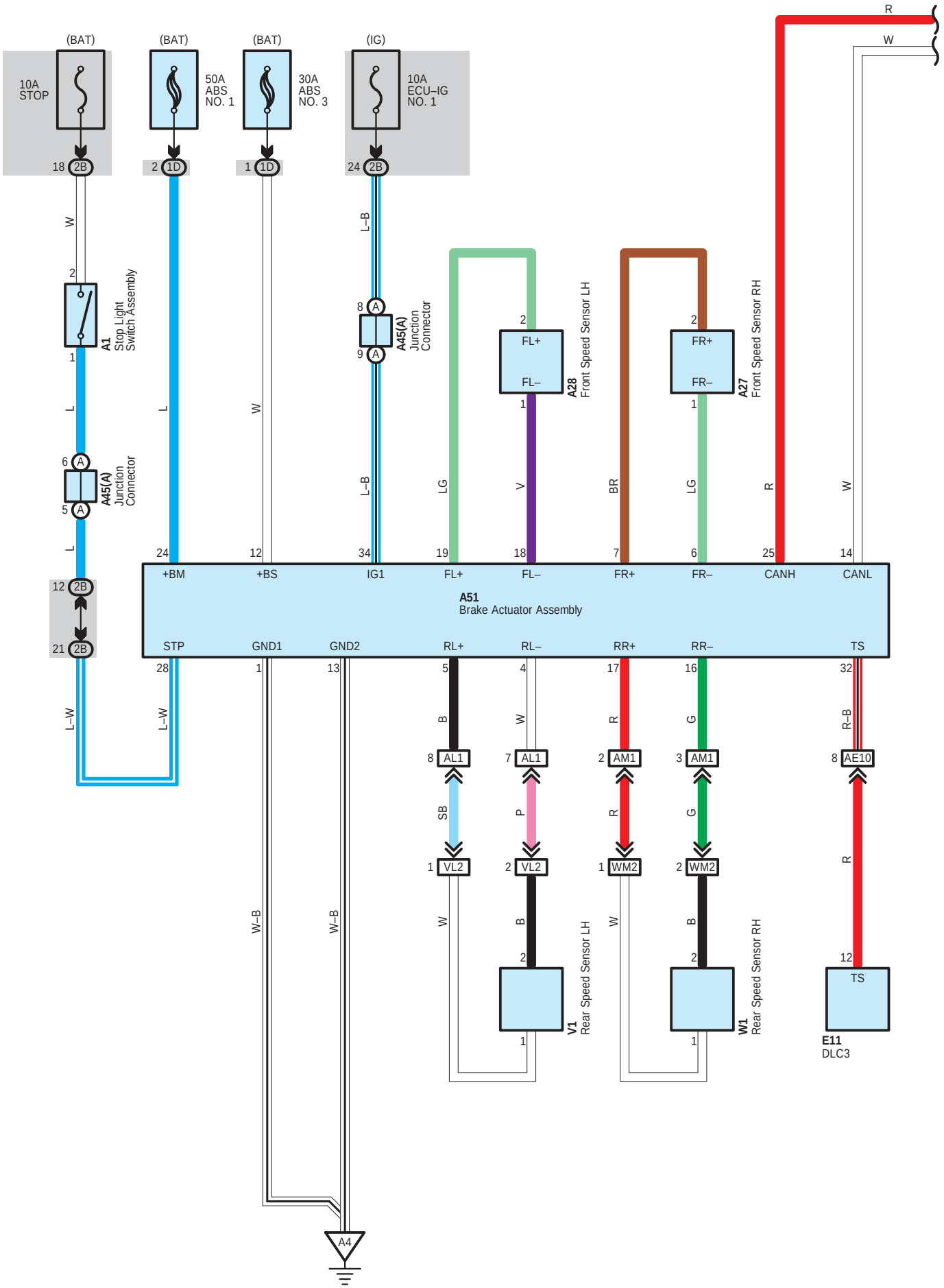
(BAT)
(BAT)
(BAT)
(IG)
10A
STOP
50A
ABS
NO. 1
30A
ABS
NO. 3
10A
ECU–IG
NO. 1
18 2B
2 1D
1 1D
24 2B
W
2
1
A1
Stop Light
Switch Assembly
L
6 A
5 A
A45(A)
Junction
Connector
L
12 2B
21 2B
L–W
L
L–W
L–B
8 A
9 A
A45(A)
Junction
Connector
L–B
LG
V
2
FL+
FL–
1
A28
Front Speed Sensor LH
BR
LG
2
FR+
FR–
1
A27
Front Speed Sensor RH
R
W
R
W
24
12
34
19
18
7
6
25
14
+BM
+BS
IG1
FL+
FL–
FR+
FR–
CANH
CANL
A51
Brake Actuator Assembly
STP
GND1
GND2
RL+
RL–
RR+
RR–
TS
28
1
13
5
4
17
16
32
W–B
W–B
B
W
R
G
R–B
8 AL1
7 AL1
2 AM1
3 AM1
8 AE10
SB
P
R
G
R
1 VL2
2 VL2
1 WM2
2 WM2
W
B
W
B
2
1
2
1
12
TS
V1
Rear Speed Sensor LH
W1
Rear Speed Sensor RH
E11
DLC3
A4

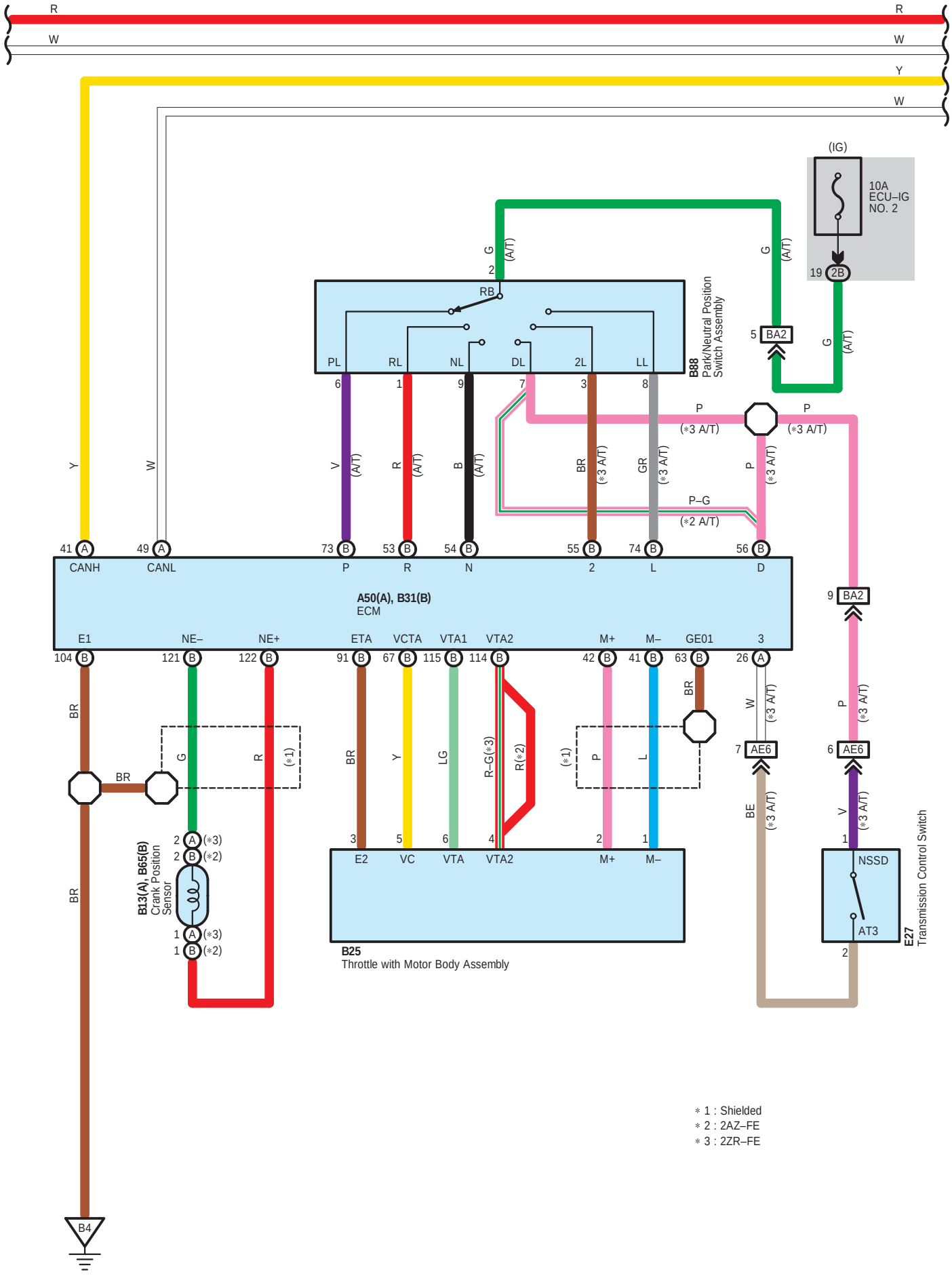
R
W
R
W
Y
W
(IG)
10A
ECU–IG
NO. 2
19 2B
G (A/T)
2
RB
PL RL NL DL 2L LL
B88
Park/Neutral Position
Switch Assembly
5 BA2
6 1 9 7 3 8
V (A/T)
R (A/T)
B (A/T)
BR (*3 A/T)
GR (*3 A/T)
P (*3 A/T)
P–G (*2 A/T)
Y
W
41 A CANH
49 A CANL
73 B P
53 B R
54 B N
55 B 2
74 B L
56 B D
A50(A), B31(B)
ECM
E1 NE– NE+ ETA VCTA VTA1 VTA2 M+ M– GE01 3
104 B 121 B 122 B 91 B 67 B 115 B 114 B 42 B 41 B 63 B 26 A
BR
G
R (*1)
BR
BR
B13(A), B65(B)
Crank Position
Sensor
2 A (*3)
2 B (*2)
1 A (*3)
1 B (*2)
BR
Y
LG
R–G(*3)
R(*2)
P
L
(*1)
W (*3 A/T)
BE (*3 A/T)
P (*3 A/T)
V (*3 A/T)
9 BA2
7 AE6
6 AE6
3 E2 5 VC 6 VTA 4 VTA2 2 M+ 1 M–
B25
Throttle with Motor Body Assembly
NSSD
AT3
2
E27
Transmission Control Switch
B4
* 1 : Shielded
* 2 : 2AZ–FE
* 3 : 2ZR–FE

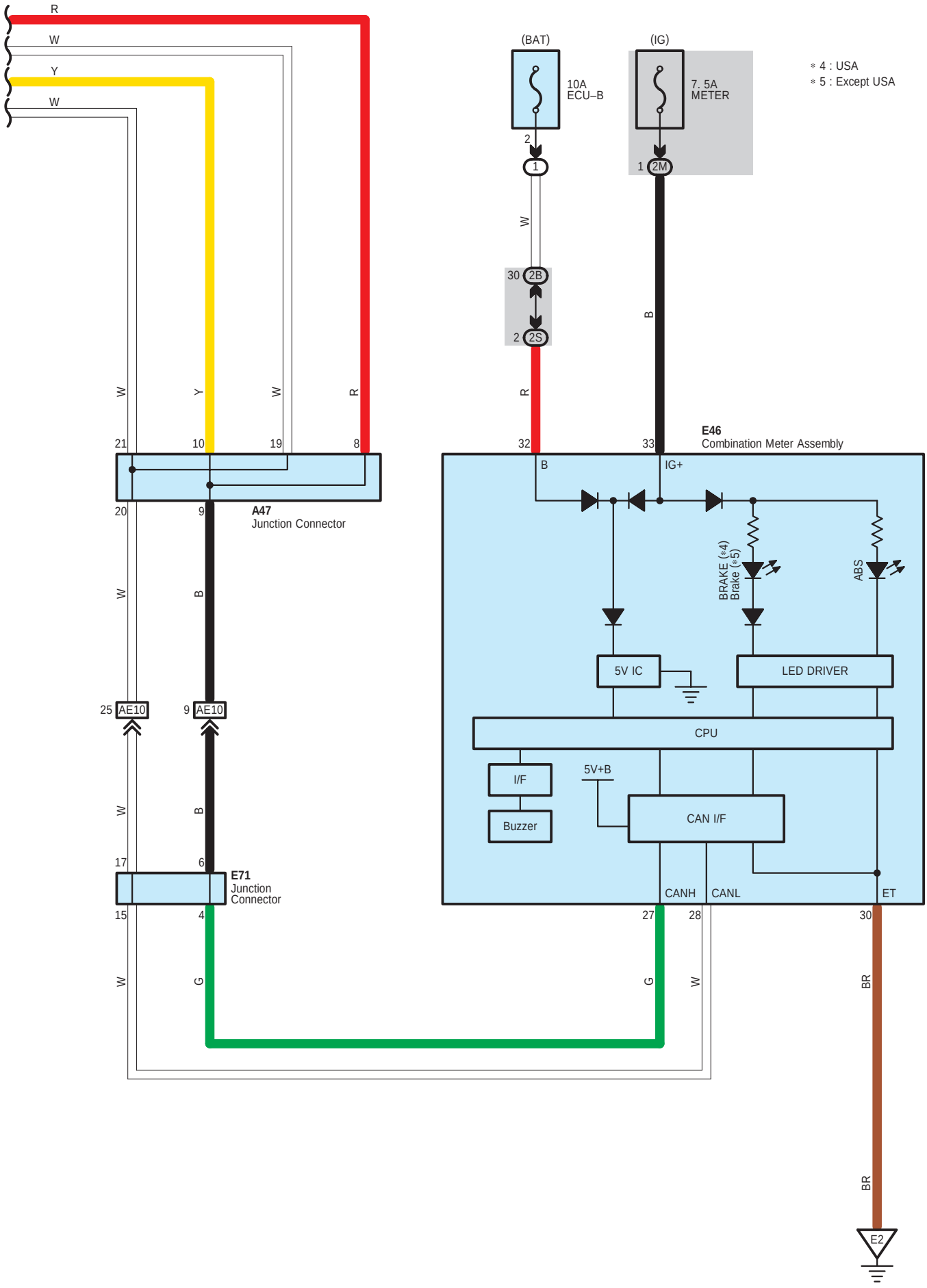
R
W
Y
W
(BAT)
(IG)
10A
ECU–B
7. 5A
METER
* 4 : USA
* 5 : Except USA
2
1
1
2M
W
30
2B
2
2S
B
R
W
Y
W
R
21
10
19
8
32
33
E46
Combination Meter Assembly
B
IG+
A47
Junction Connector
20
9
BRAKE (*4)
Brake (*5)
ABS
5V IC
LED DRIVER
CPU
I/F
5V+B
Buzzer
CAN I/F
25
AE10
9
AE10
W
B
17
6
E71
Junction
Connector
CANH
CANL
ET
15
4
27
28
30
W
G
G
W
BR
BR
E2

A 1
Black

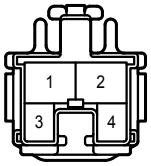

A 27
Black

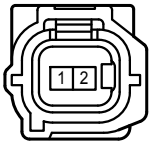

A 28
Black

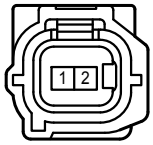

A 45
White

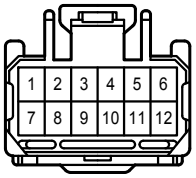

A 47
White

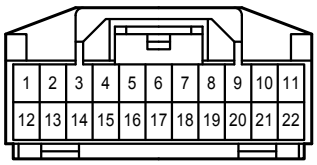

A 50
Black

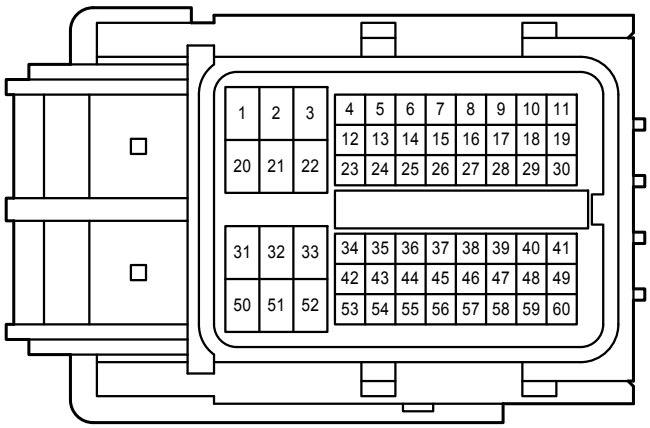

A 51
Gray

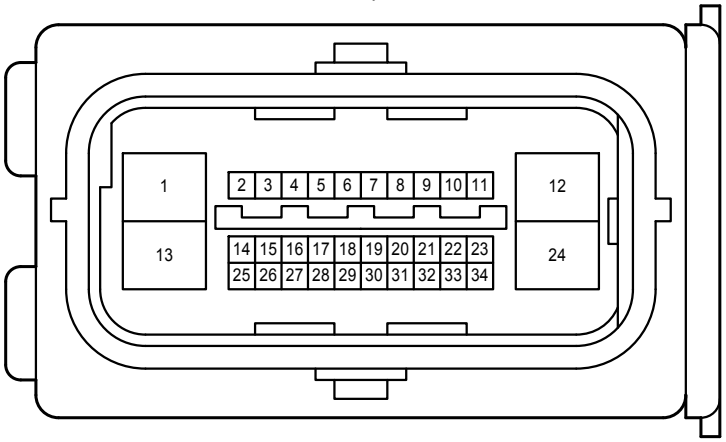

B 13
Black

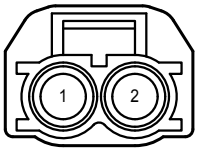

B 25
Black

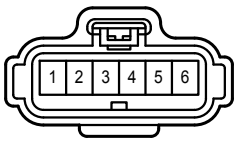

B 31
Black

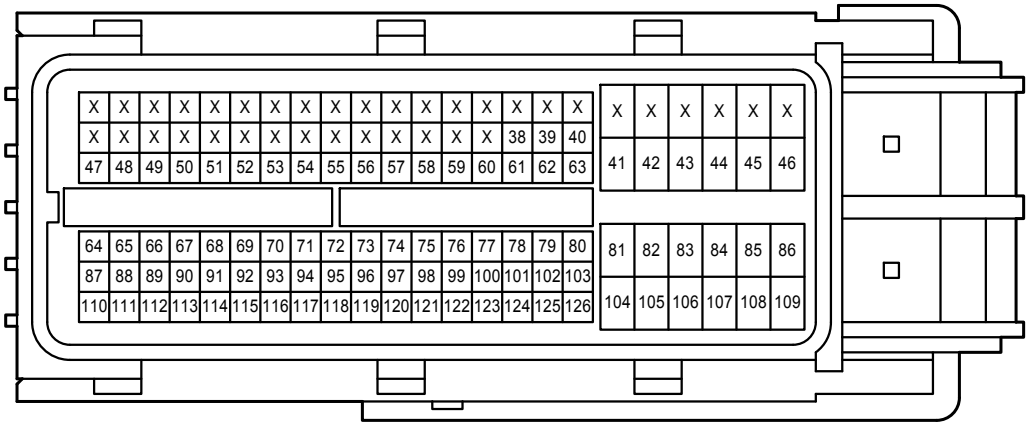

B 65
Gray



B 88
Gray

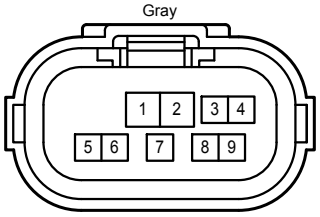

E 11
White

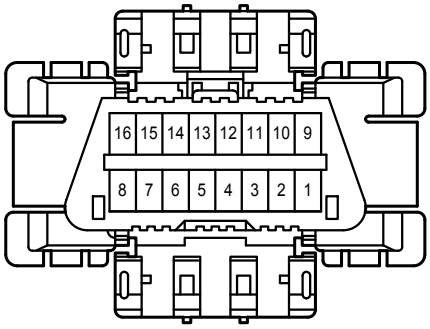

E 27
White

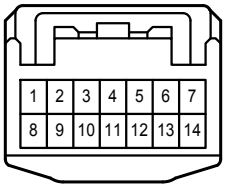

E 46
White

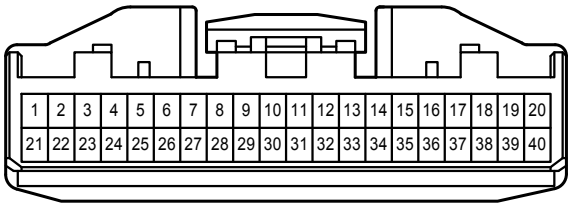

E 71
White

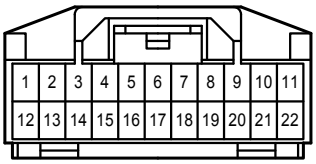

V 1
Black

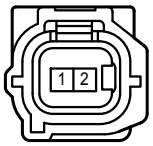

W 1
Black

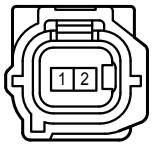

1D
White

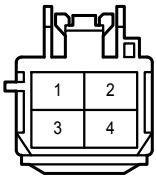

2B
White

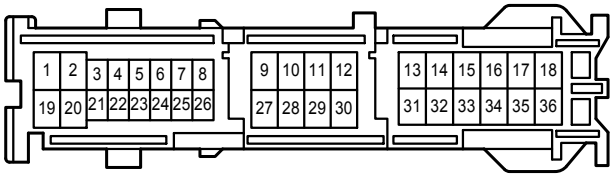

2M
White

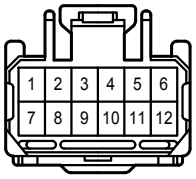

2S
White

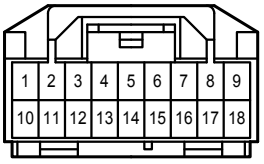

AE6
Gray

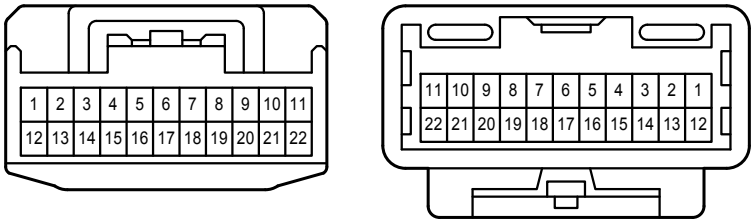

AE10
Gray

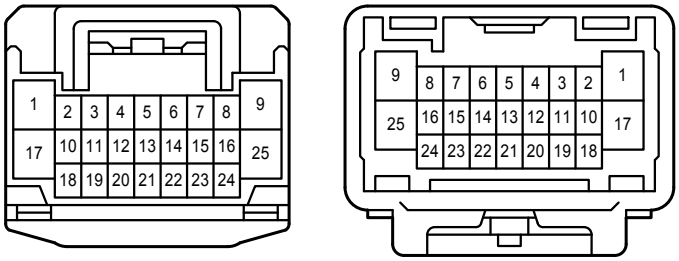

AL1
White

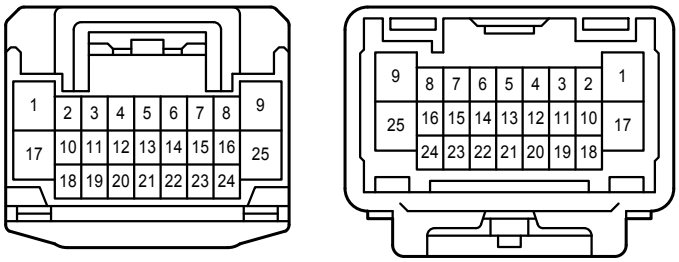

AM1
White

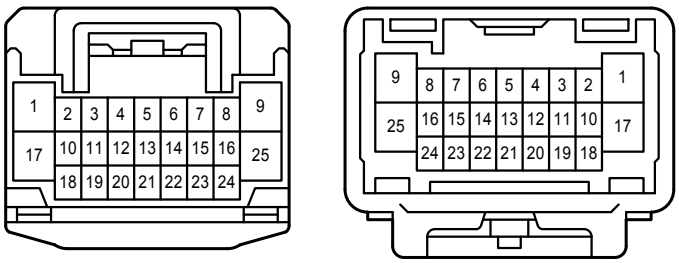

BA2
White

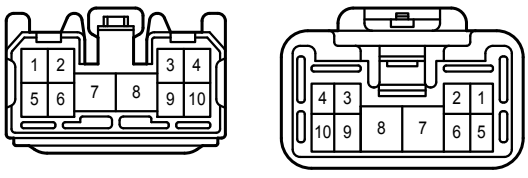

VL2
Black White

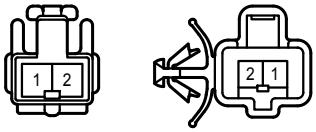

WM2
Black White

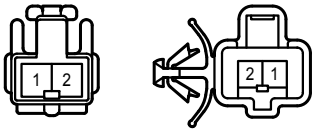

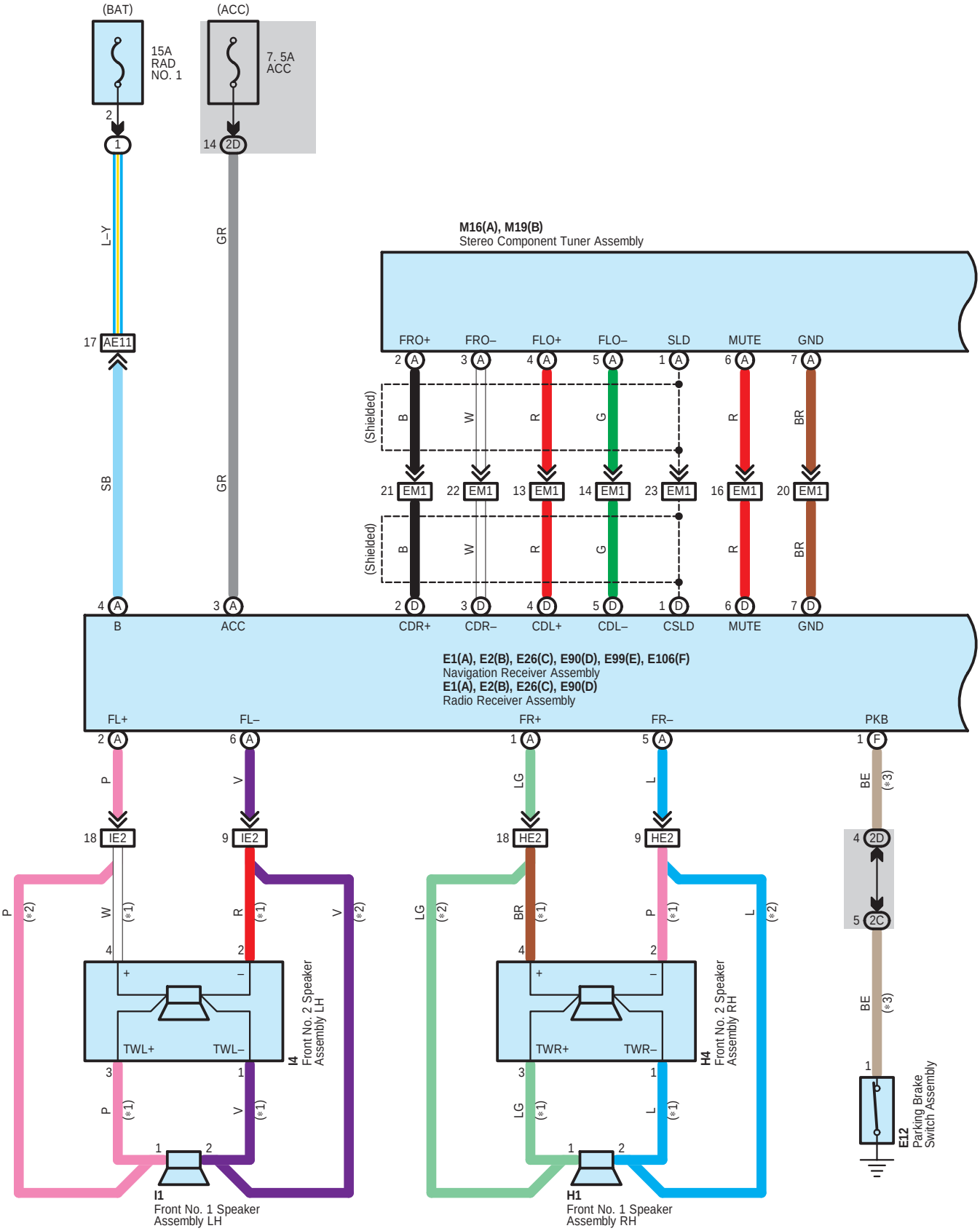
(BAT)
(ACC)
15A
RAD
NO. 1
7. 5A
ACC
2
1
14 2D
L–Y
GR
17 AE11
SB
GR
4 A
3 A
B
ACC
M16(A), M19(B)
Stereo Component Tuner Assembly
FRO+
FRO–
FLO+
FLO–
SLD
MUTE
GND
2 A
3 A
4 A
5 A
1 A
6 A
7 A
(Shielded)
B
W
R
G
R
BR
21 EM1
22 EM1
13 EM1
14 EM1
23 EM1
16 EM1
20 EM1
2 D
3 D
4 D
5 D
1 D
6 D
7 D
CDR+
CDR–
CDL+
CDL–
CSLD
MUTE
GND
E1(A), E2(B), E26(C), E90(D), E99(E), E106(F)
Navigation Receiver Assembly
E1(A), E2(B), E26(C), E90(D)
Radio Receiver Assembly
FL+
FL–
FR+
FR–
PKB
2 A
6 A
1 A
5 A
1 F
P
V
LG
L
BE
(*3)
18 IE2
9 IE2
18 HE2
9 HE2
4 2D
5 2C
P
(*2)
W
(*1)
R
(*1)
V
(*2)
LG
(*2)
BR
(*1)
P
(*1)
L
(*2)
4
2
+
–
TWL+
TWL–
I4
Front No. 2 Speaker
Assembly LH
TWR+
TWR–
H4
Front No. 2 Speaker
Assembly RH
3
1
P
(*1)
V
(*1)
LG
(*1)
L
(*1)
1
2
I1
Front No. 1 Speaker
Assembly LH
H1
Front No. 1 Speaker
Assembly RH
E12
Parking Brake
Switch Assembly

* 1 : 6 Speaker
* 2 : 4 Speaker
* 3 : w/ Navigation System
* 5 : w/ Steering Pad Switch

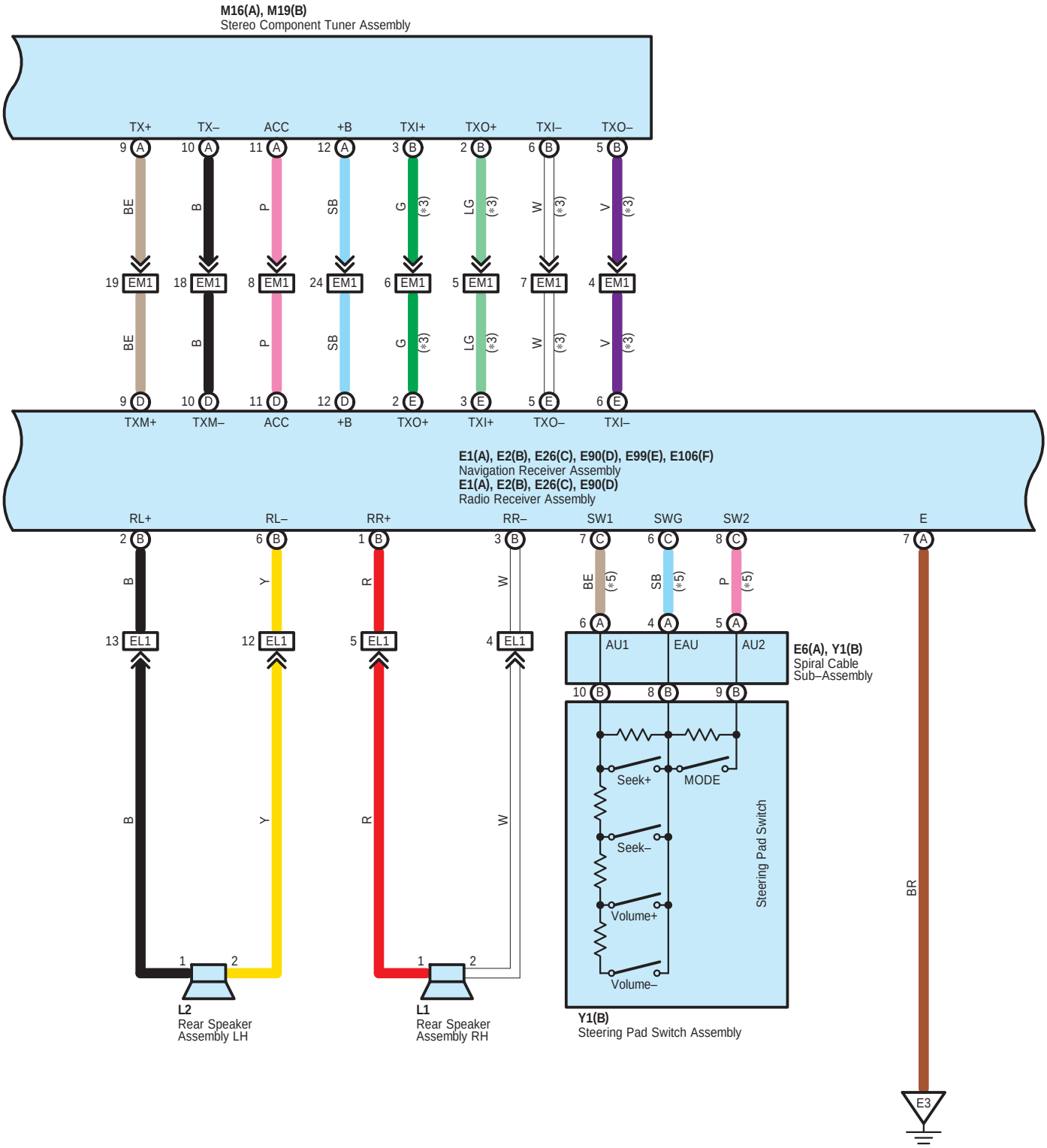

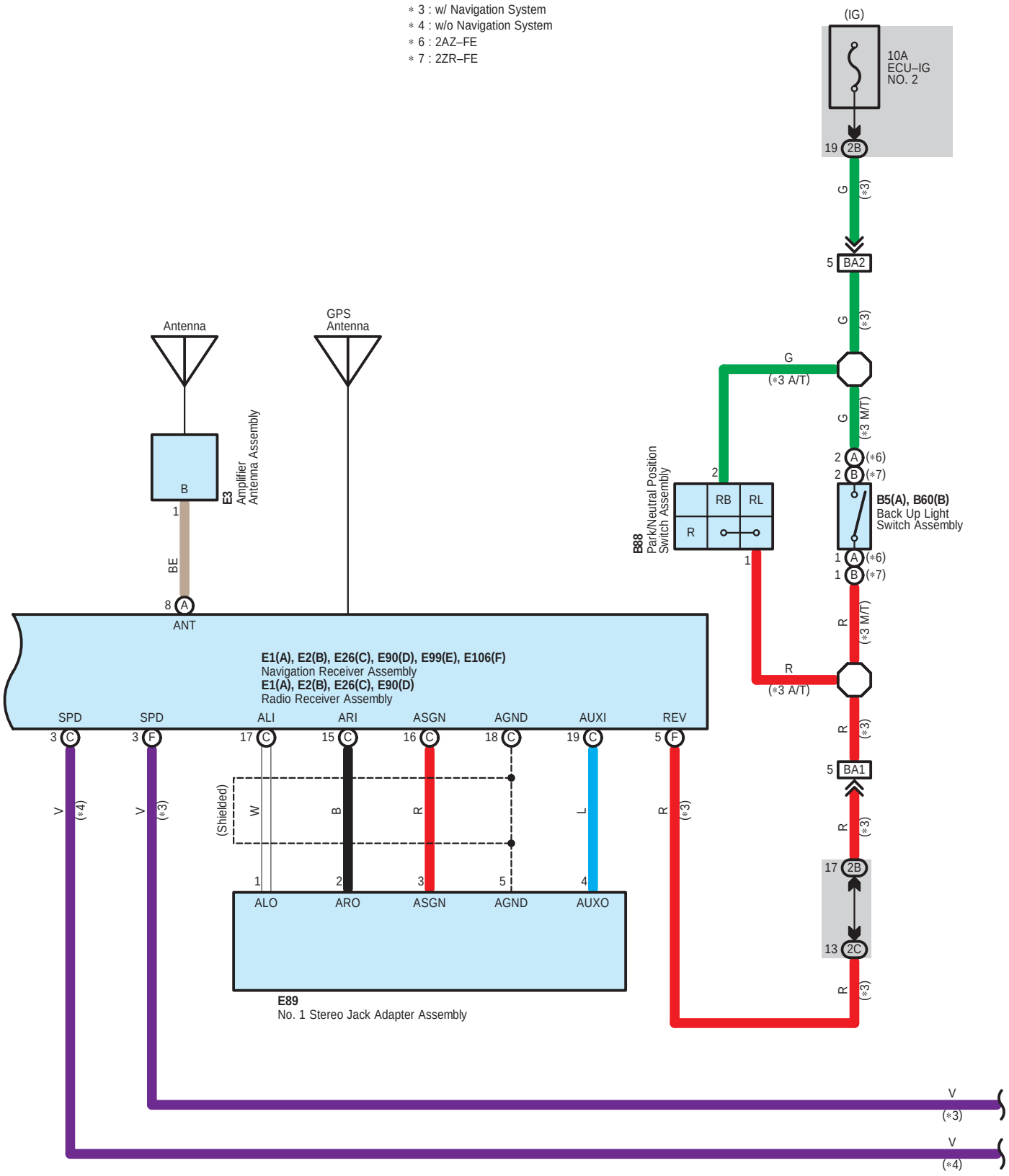
∗ 3 : w/ Navigation System
∗ 4 : w/o Navigation System
∗ 6 : 2AZ–FE
∗ 7 : 2ZR–FE
(IG)
10A
ECU–IG
NO. 2
19 2B
G
(∗3)
5 BA2
G
(∗3)
G
(∗3 A/T)
G
(∗3 M/T)
2 A (∗6)
2 B (∗7)
B5(A), B60(B)
Back Up Light
Switch Assembly
1 A (∗6)
1 B (∗7)
R
(∗3 M/T)
R
(∗3 A/T)
R
(∗3)
5 BA1
R
(∗3)
17 2B
13 2C
R
(∗3)
B88
Park/Neutral Position
Switch Assembly
2
RB
RL
R
1
Antenna
GPS
Antenna
B
E3
Amplifier
Antenna Assembly
1
BE
8 A
ANT
E1(A), E2(B), E26(C), E90(D), E99(E), E106(F)
Navigation Receiver Assembly
E1(A), E2(B), E26(C), E90(D)
Radio Receiver Assembly
SPD
SPD
ALI
ARI
ASGN
AGND
AUXI
REV
3 C
3 F
17 C
15 C
16 C
18 C
19 C
5 F
V
(∗4)
V
(∗3)
(Shielded)
W
B
R
L
R
(∗3)
1
2
3
5
4
ALO
ARO
ASGN
AGND
AUXO
E89
No. 1 Stereo Jack Adapter Assembly
V
(∗3)
V
(∗4)

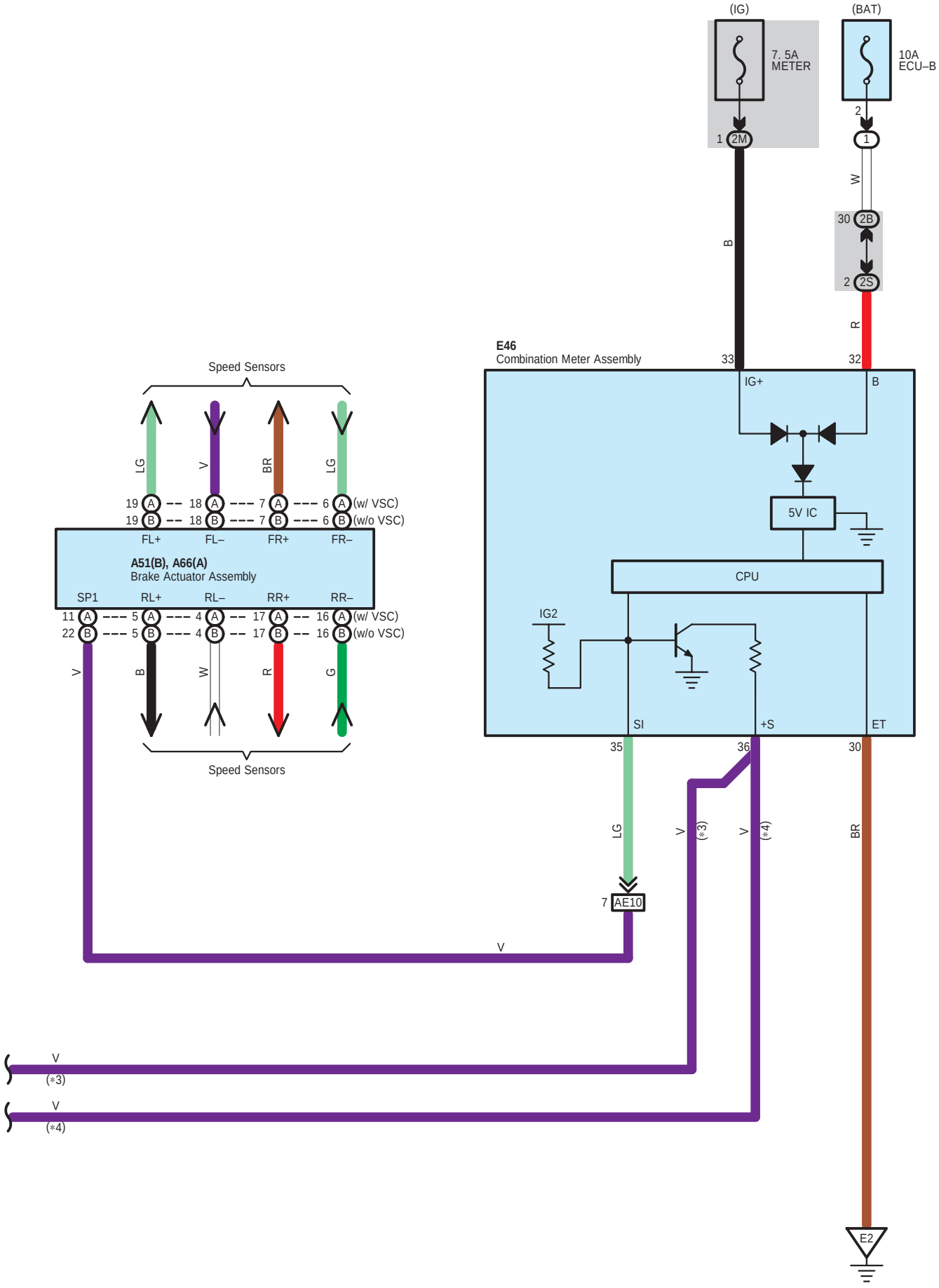
(IG)
(BAT)
7. 5A
METER
10A
ECU–B
1 2M
2
1
W
30 2B
2 2S
B
R
E46
Combination Meter Assembly
33
32
IG+
B
5V IC
CPU
IG2
SI
+S
ET
35
36
30
Speed Sensors
LG
V
BR
LG
19 A 18 A 7 A 6 A (w/ VSC)
19 B 18 B 7 B 6 B (w/o VSC)
FL+
FL–
FR+
FR–
A51(B), A66(A)
Brake Actuator Assembly
SP1
RL+
RL–
RR+
RR–
11 A 5 A 4 A 17 A 16 A (w/ VSC)
22 B 5 B 4 B 17 B 16 B (w/o VSC)
V
B
W
R
G
Speed Sensors
LG
7 AE10
V
V
(*3)
V
(*4)
BR
V
(*3)
V
(*4)
E2

A 51
Gray

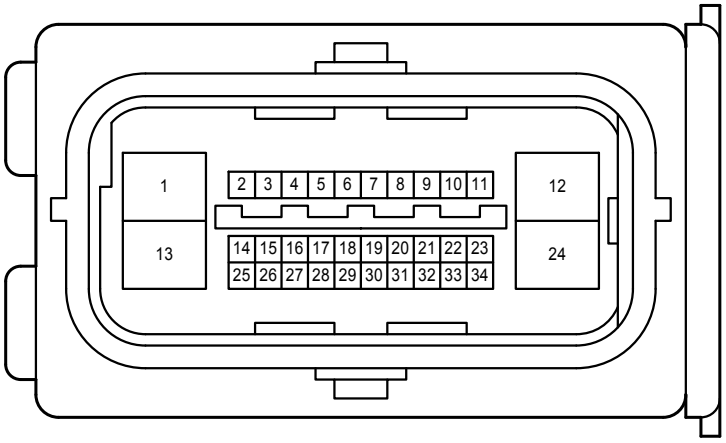

A 66
Black

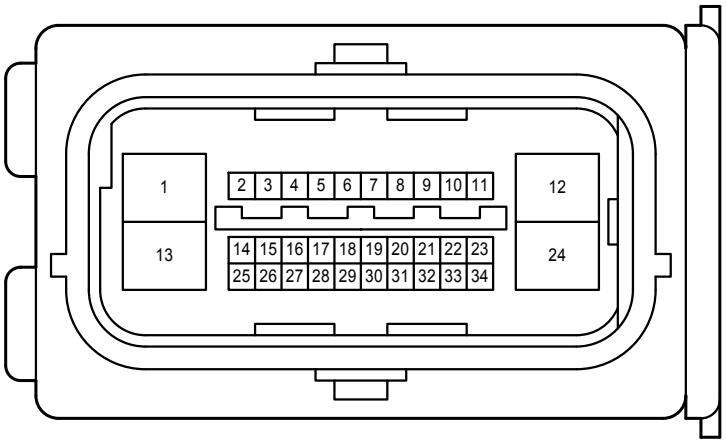

B 5
Gray

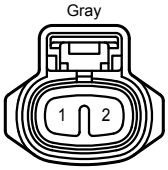

B 60
Gray

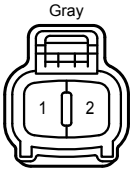

B 88
Gray

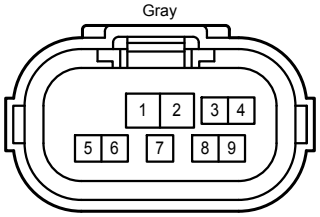

E 1
White

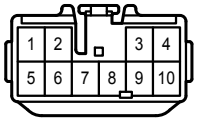

E 2
White



E 3
White



E 6
Black



E 12
White



E 26
White

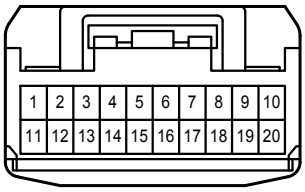

E 46
White

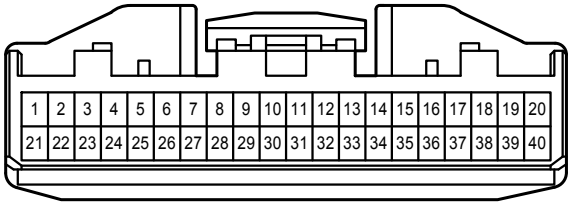

E 89
White

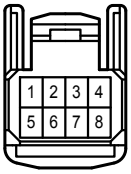

E 90
White



E 99
Blue

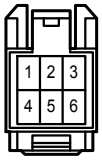

E106
Gray

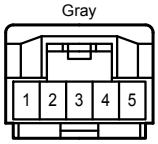

H 1
White



H 4
White

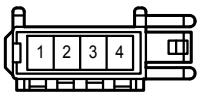

I 1
White



I 4
White

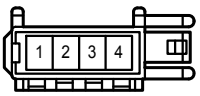

L 1
White

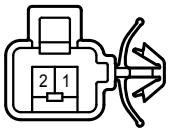

L 2
White

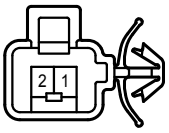

M 16
White



M 19
Blue

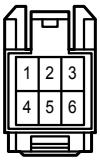

Y 1
White

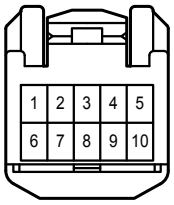

2B
White

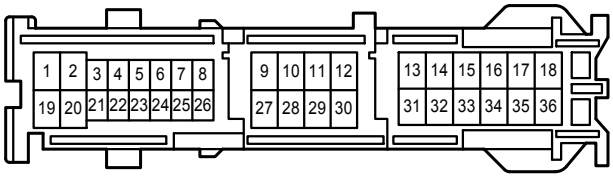

2C
White

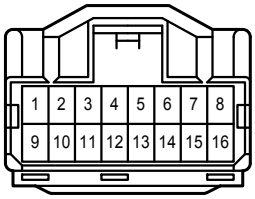

2D
White

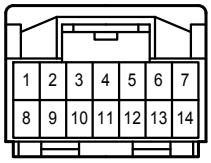

2M
White

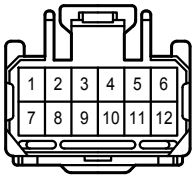

2S
White

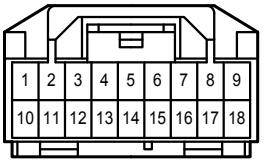

AE10
Gray

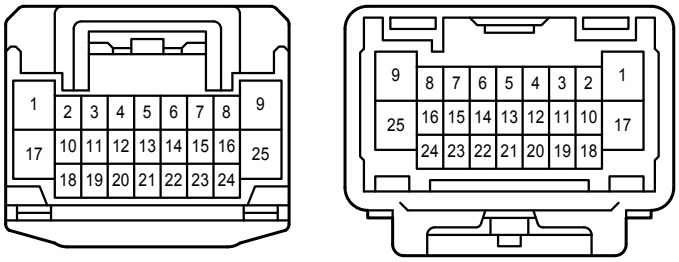

AE11
White

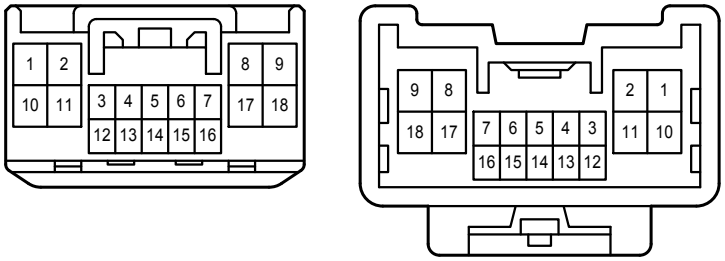

BA1
White

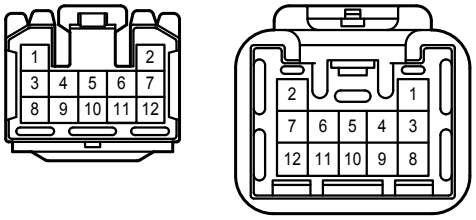

BA2
White

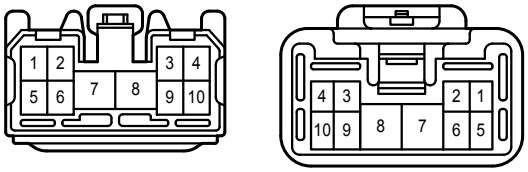

EL1
White

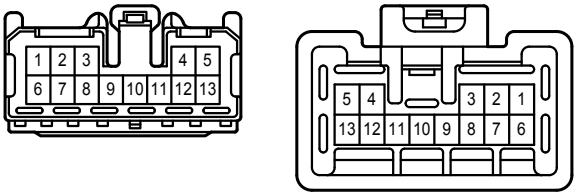

EM1
Gray

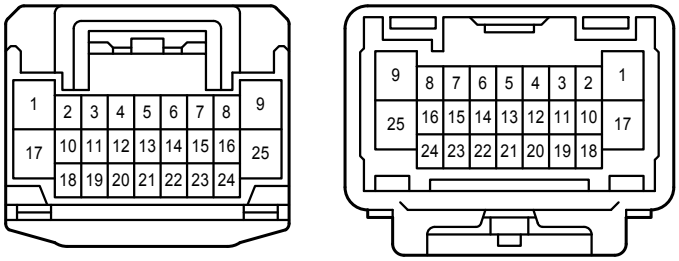

HE2
White

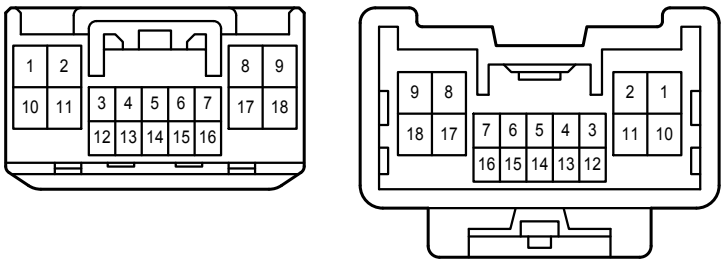

IE2
White

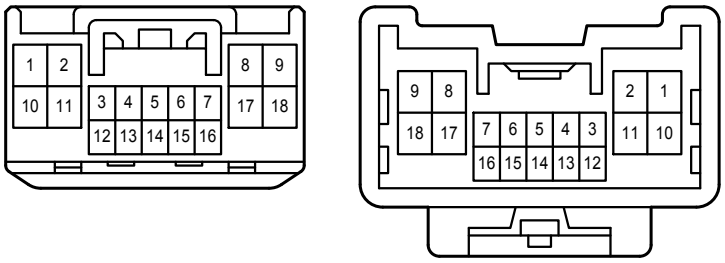

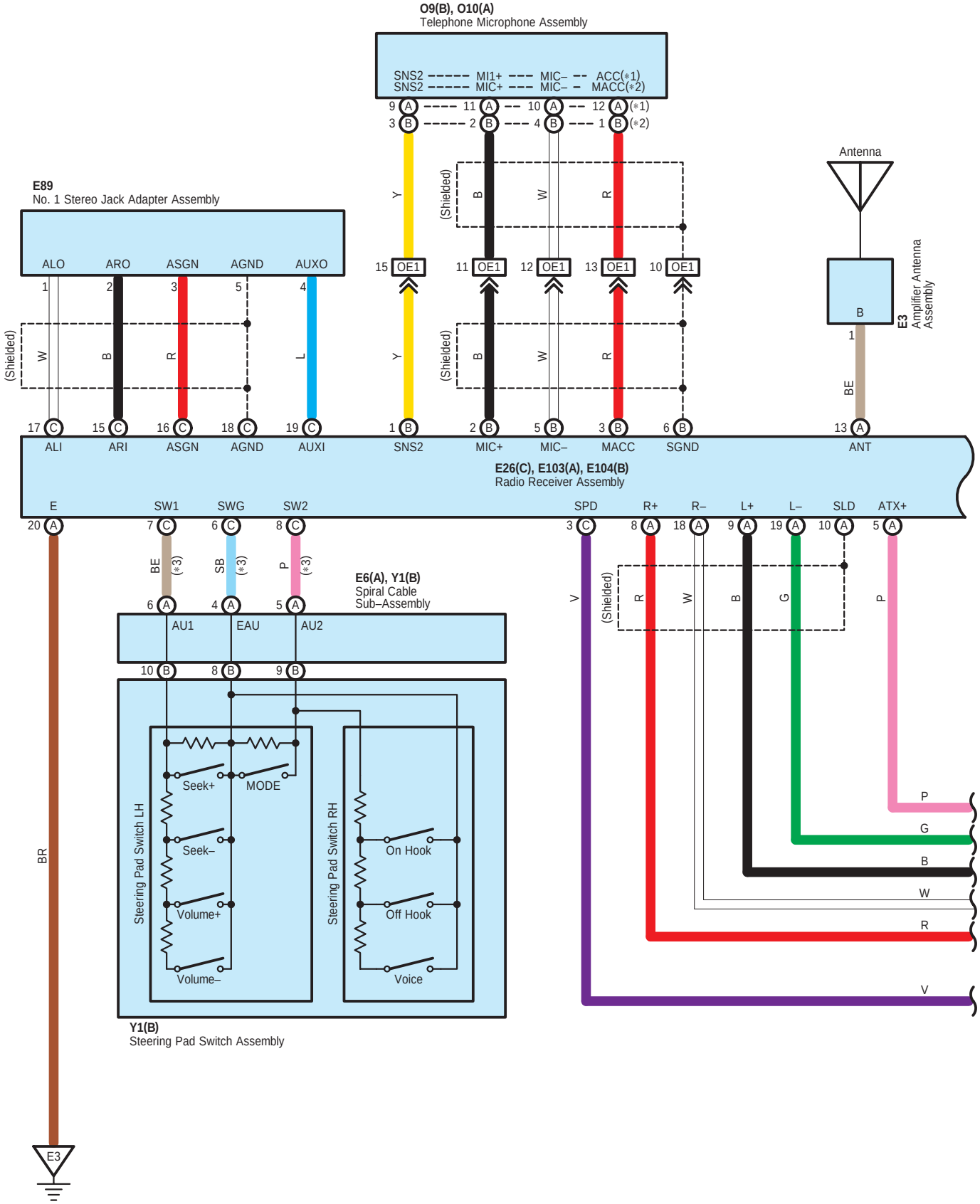
O9(B), O10(A)
Telephone Microphone Assembly
SNS2 MI1+ MIC– ACC(*1)
SNS2 MIC+ MIC– MACC(*2)
E89
No. 1 Stereo Jack Adapter Assembly
ALO ARO ASGN AGND AUXO
Antenna
E3
Amplifier Antenna Assembly
(Shielded)
ALI ARI ASGN AGND AUXI SNS2 MIC+ MIC– MACC SGND ANT
E26(C), E103(A), E104(B)
Radio Receiver Assembly
E SW1 SWG SW2 SPD R+ R– L+ L– SLD ATX+
E6(A), Y1(B)
Spiral Cable
Sub–Assembly
AU1 EAU AU2
Seek+ MODE
Seek–
Volume+
Volume–
On Hook
Off Hook
Voice
Steering Pad Switch LH
Steering Pad Switch RH
Y1(B)
Steering Pad Switch Assembly
BR
E3

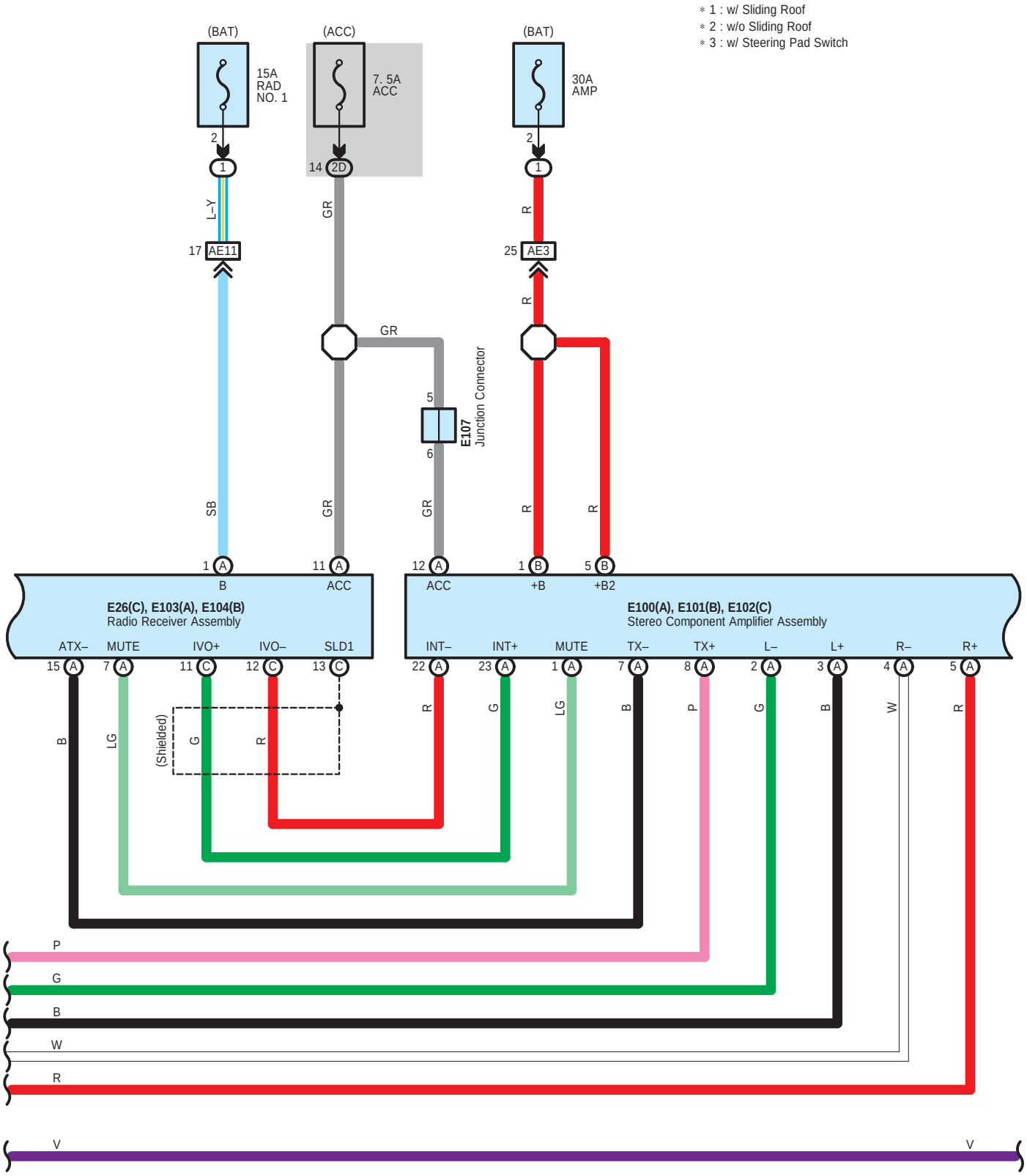
* 1 : w/ Sliding Roof
* 2 : w/o Sliding Roof
* 3 : w/ Steering Pad Switch
(BAT)
15A RAD NO. 1
(ACC)
7. 5A ACC
(BAT)
30A AMP
L–Y
GR
R
17 AE11
25 AE3
E107 Junction Connector
SB
1 A B
11 A ACC
12 A ACC
1 B +B
5 B +B2
E26(C), E103(A), E104(B)
Radio Receiver Assembly
E100(A), E101(B), E102(C)
Stereo Component Amplifier Assembly
ATX– MUTE IVO+ IVO– SLD1
INT– INT+ MUTE TX– TX+ L– L+ R– R+
(Shielded)
P
G
B
W
R
V

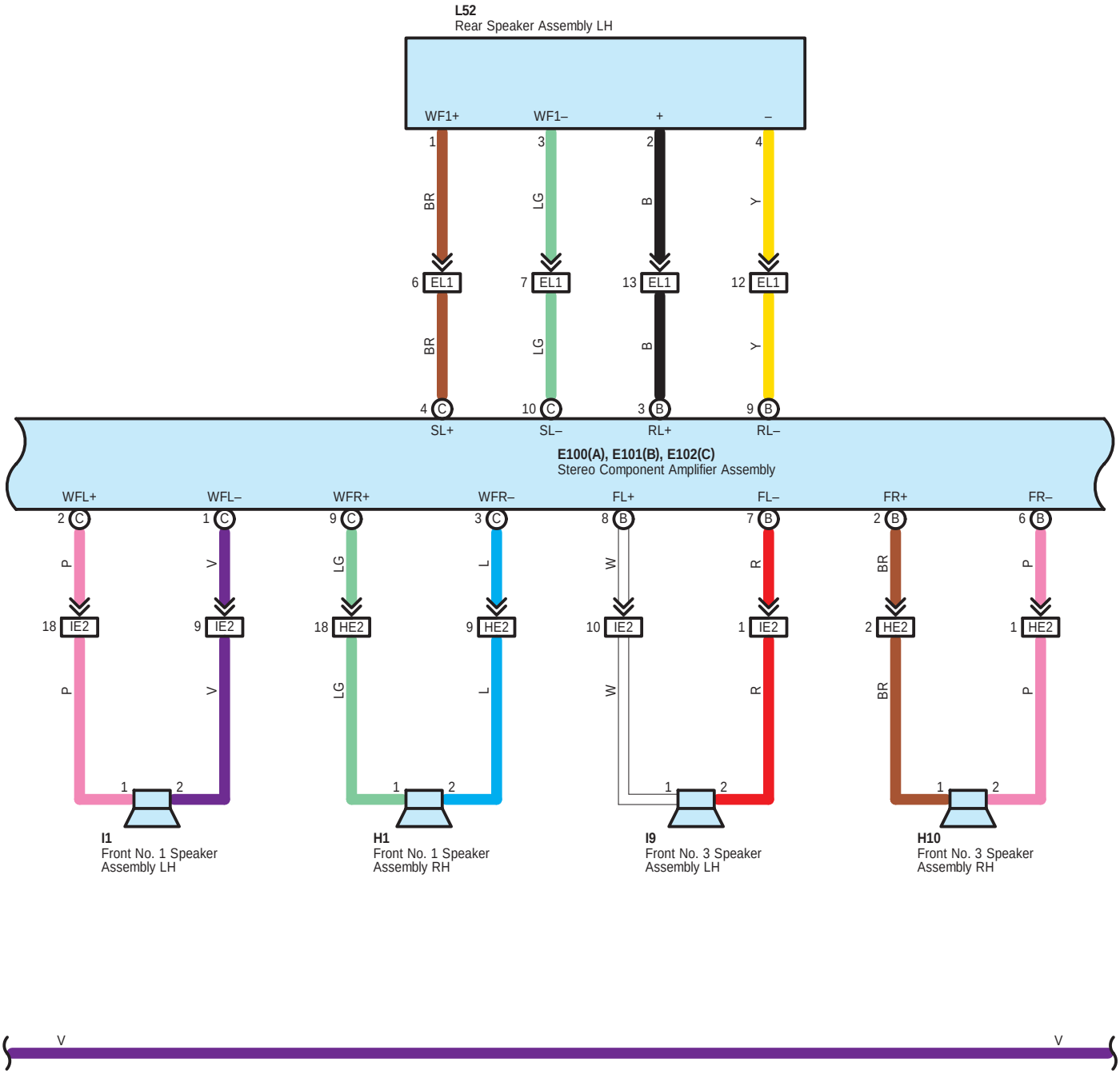
L52
Rear Speaker Assembly LH
WF1+
WF1–
+
–
1
3
2
4
BR
LG
B
Y
6 EL1
7 EL1
13 EL1
12 EL1
BR
LG
B
Y
4 C
10 C
3 B
9 B
SL+
SL–
RL+
RL–
E100(A), E101(B), E102(C)
Stereo Component Amplifier Assembly
WFL+
WFL–
WFR+
WFR–
FL+
FL–
FR+
FR–
2 C
1 C
9 C
3 C
8 B
7 B
2 B
6 B
P
V
LG
L
W
R
BR
P
18 IE2
9 IE2
18 HE2
9 HE2
10 IE2
1 IE2
2 HE2
1 HE2
P
V
LG
L
W
R
BR
P
1
2
1
2
1
2
1
2
I1
Front No. 1 Speaker Assembly LH
H1
Front No. 1 Speaker Assembly RH
I9
Front No. 3 Speaker Assembly LH
H10
Front No. 3 Speaker Assembly RH
V
V

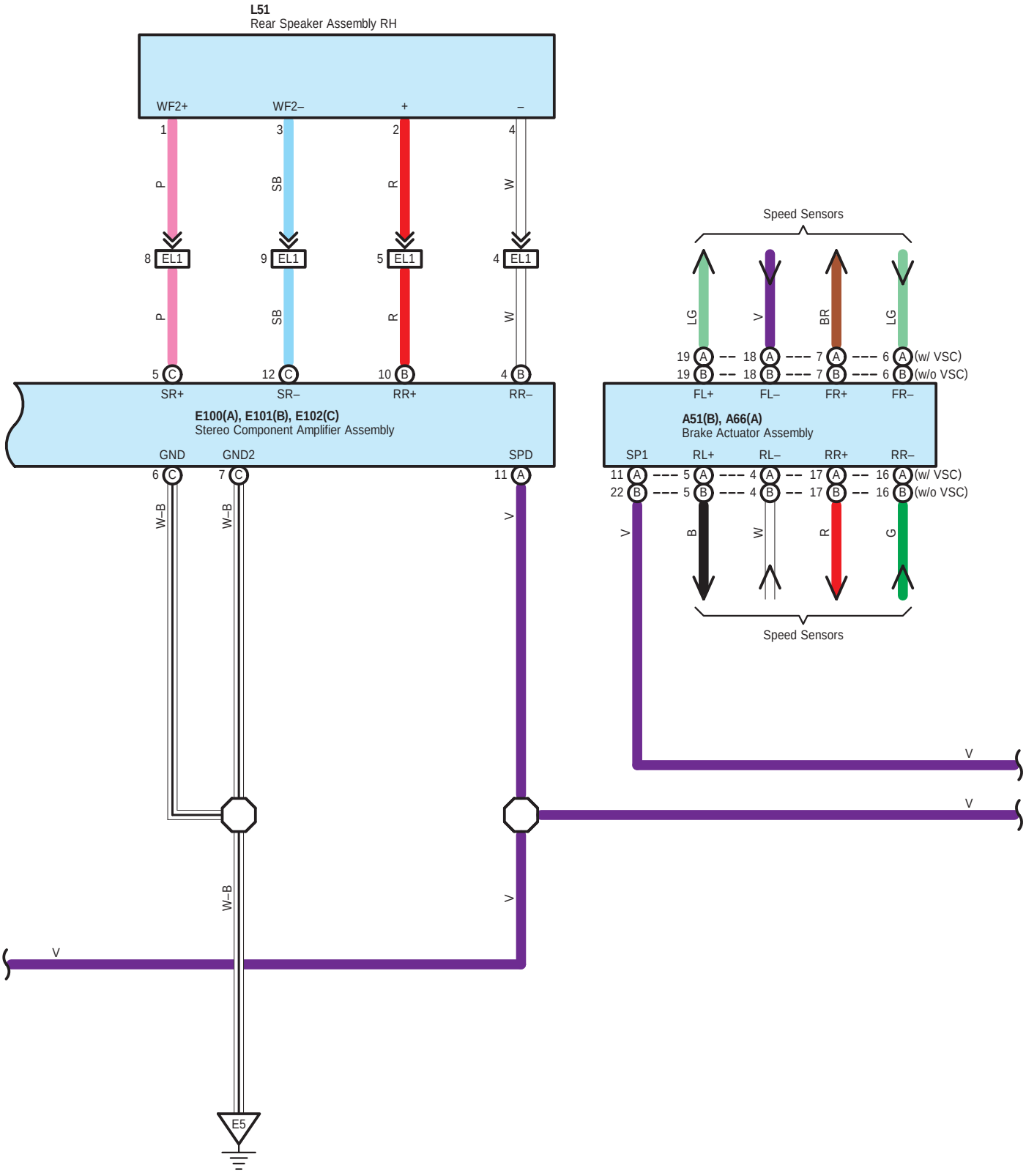
L51
Rear Speaker Assembly RH
WF2+
WF2–
+
–
1
3
2
4
P
SB
R
W
8 EL1
9 EL1
5 EL1
4 EL1
5 C
12 C
10 B
4 B
SR+
SR–
RR+
RR–
E100(A), E101(B), E102(C)
Stereo Component Amplifier Assembly
GND
GND2
SPD
6 C
7 C
11 A
W–B
V
E5
Speed Sensors
LG
V
BR
LG
19 A
19 B
18 A
18 B
7 A
7 B
6 A
6 B
(w/ VSC)
(w/o VSC)
FL+
FL–
FR+
FR–
A51(B), A66(A)
Brake Actuator Assembly
SP1
RL+
RL–
RR+
RR–
11 A
22 B
5 A
5 B
4 A
4 B
17 A
17 B
16 A
16 B
B
W
R
G
Speed Sensors

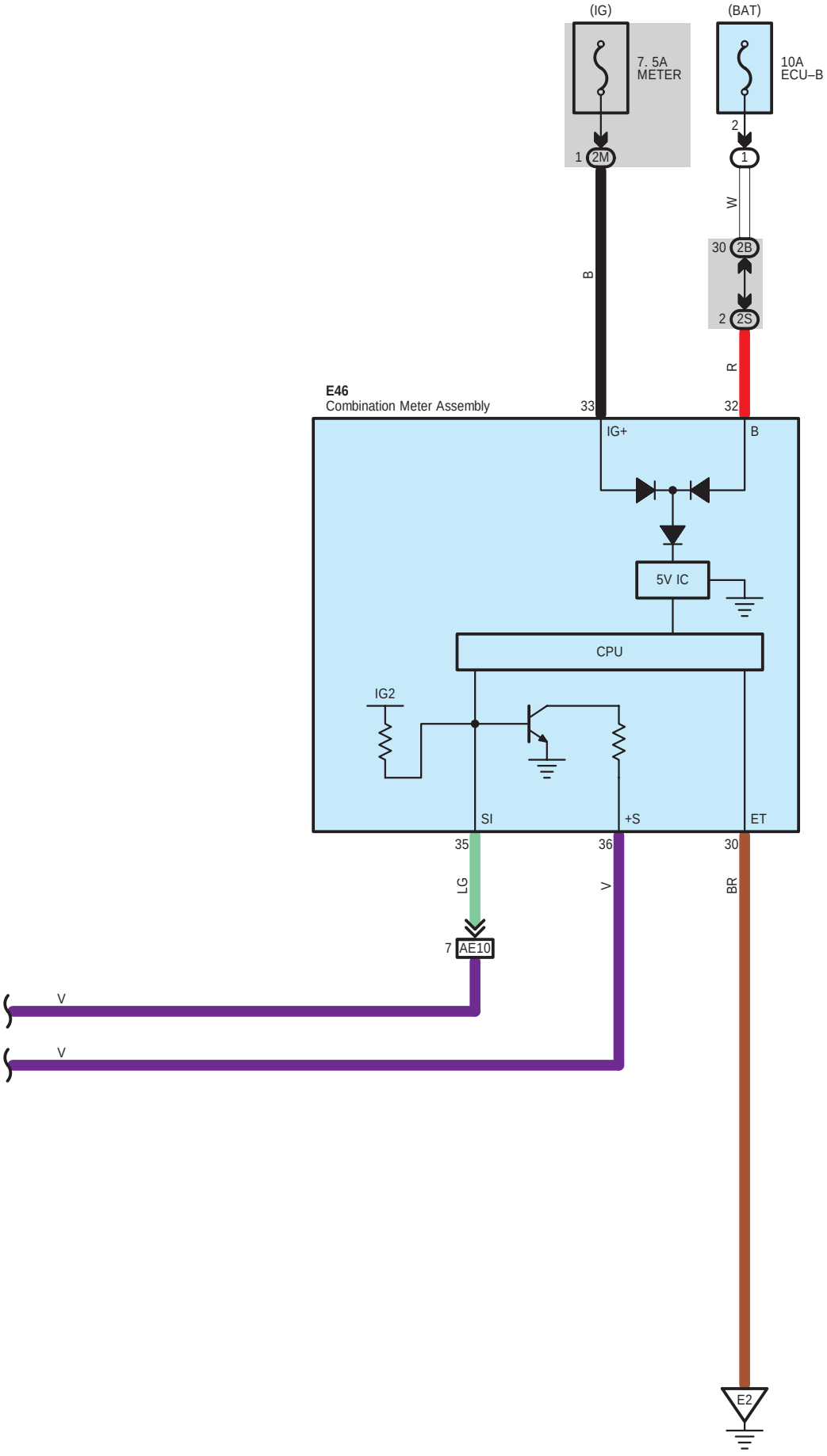
(IG)
(BAT)
7. 5A
METER
10A
ECU–B
2
1 2M
1
W
30 2B
B
2 2S
R
E46
Combination Meter Assembly
33
32
IG+
B
5V IC
CPU
IG2
SI
+S
ET
35
36
30
LG
V
BR
7 AE10
V
V
E2

A 51
Gray

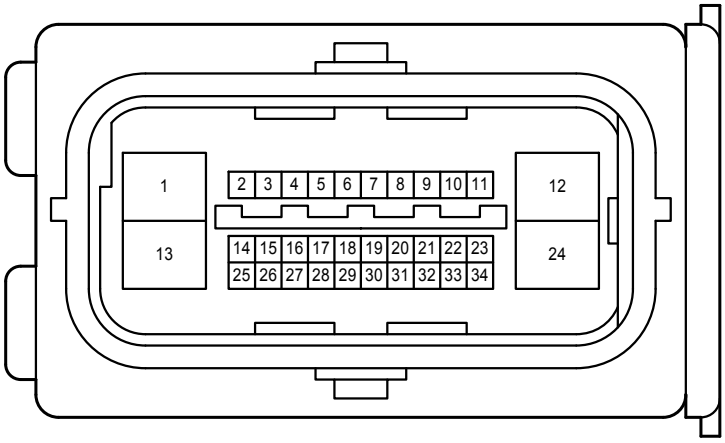

A 66
Black

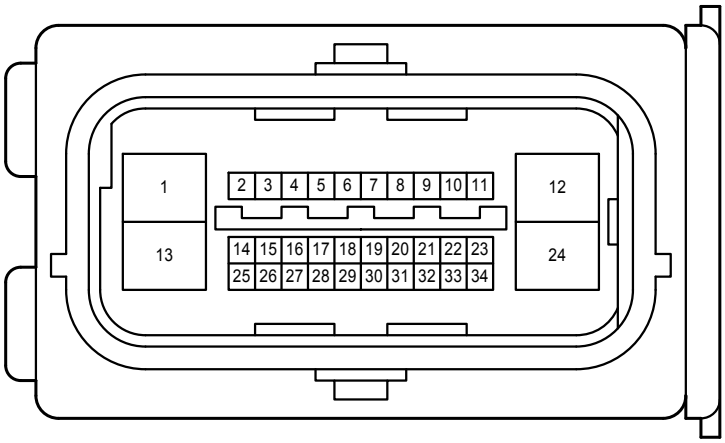

E 3
White



E 6
Black



E 26
White

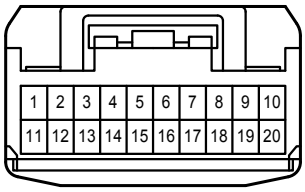

E 46
White

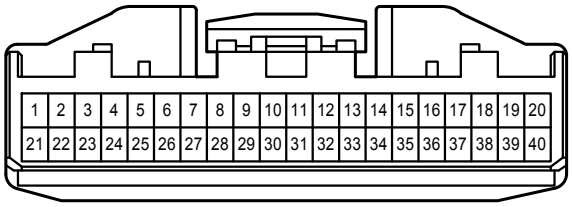

E 89
White

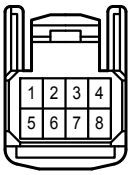

E100
White

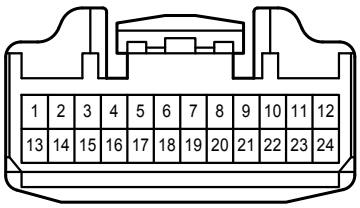

E101
Blue

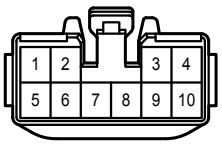

E102
White

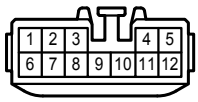

E103
White

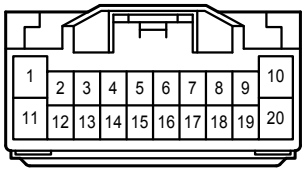

E104
White

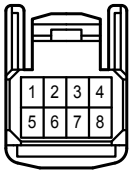

E107
White

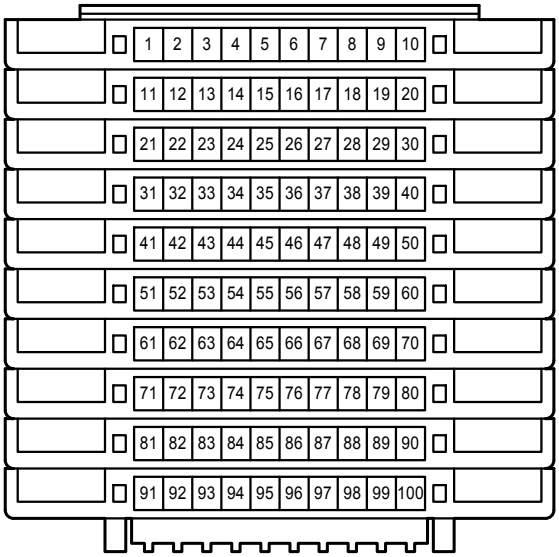

H 1
White



H 10
White

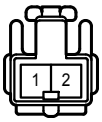

I 1
White



I 9
White

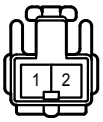

L 51
White

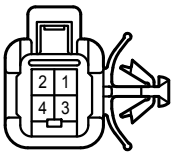

L 52
White

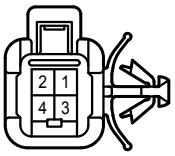

O 9
White

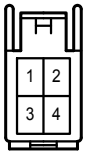

O 10
Black

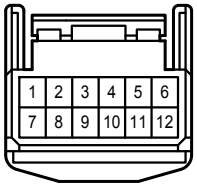

Y 1
White

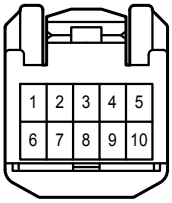

2B
White

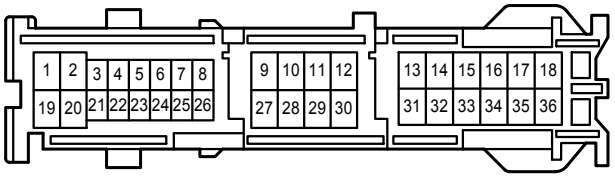

2D
White

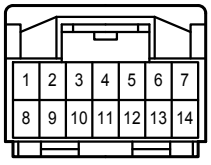

2M
White

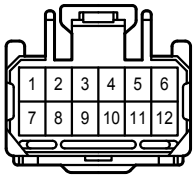

2S
White

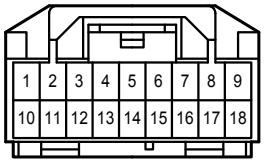

AE3
White

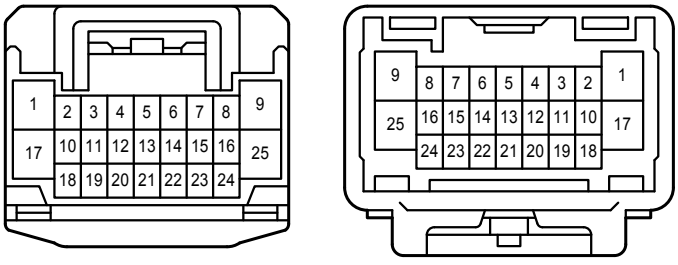

AE10
Gray

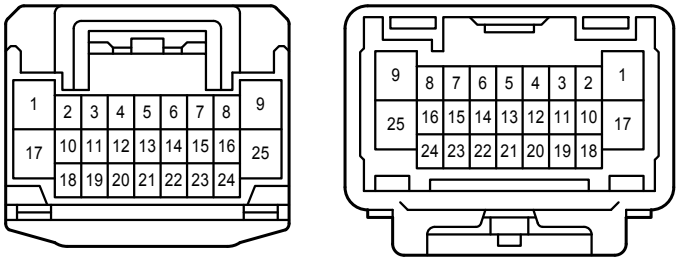

AE11
White

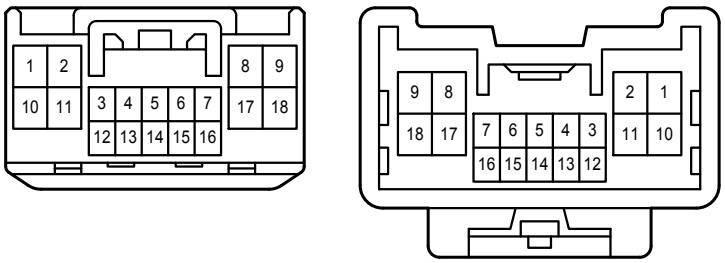

EL1
White

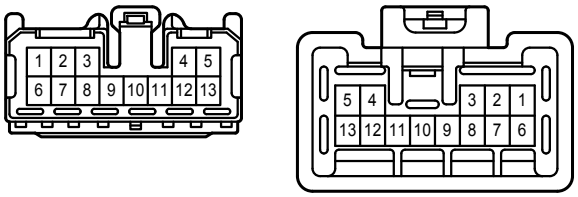

HE2
White

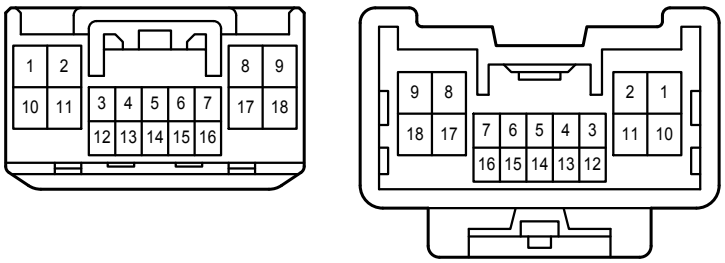

IE2
White

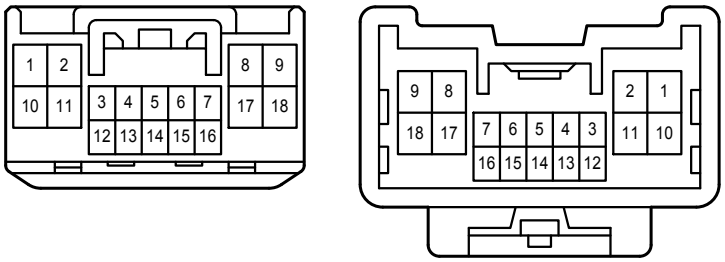

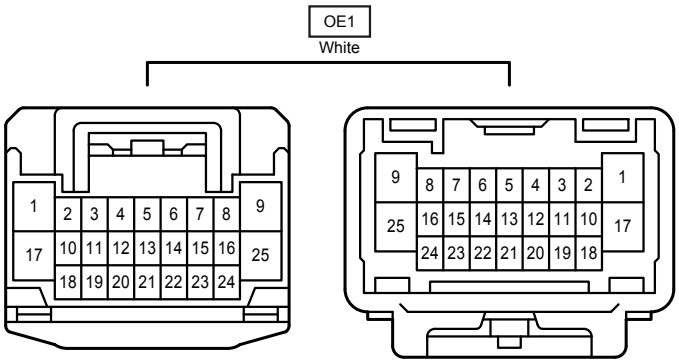
OE1
White
1
2
3
4
5
6
7
8
9
17
10
11
12
13
14
15
16
25
18
19
20
21
22
23
24
9
8
7
6
5
4
3
2
1
25
16
15
14
13
12
11
10
17
24
23
22
21
20
19
18

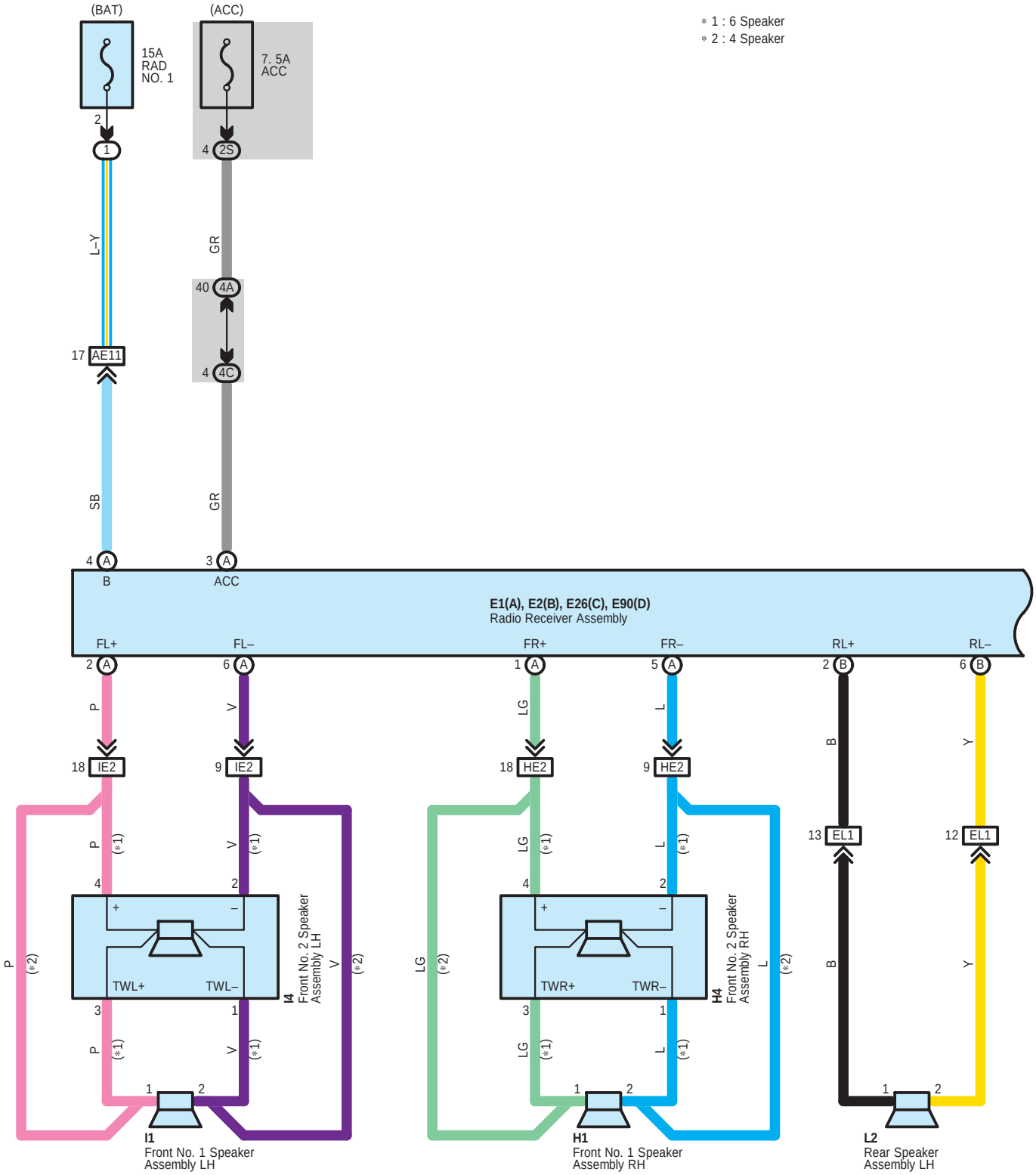
(BAT)
(ACC)
15A
RAD
NO. 1
7. 5A
ACC
2
1
4
2S
L–Y
GR
40
4A
4
4C
17
AE11
SB
GR
4
A
B
3
A
ACC
* 1 : 6 Speaker
* 2 : 4 Speaker
E1(A), E2(B), E26(C), E90(D)
Radio Receiver Assembly
FL+
FL–
FR+
FR–
RL+
RL–
2
A
6
A
1
A
5
A
2
B
6
B
P
V
LG
L
B
Y
18
IE2
9
IE2
18
HE2
9
HE2
13
EL1
12
EL1
(*1)
4
2
+
–
TWL+
TWL–
I4
Front No. 2 Speaker
Assembly LH
TWR+
TWR–
H4
Front No. 2 Speaker
Assembly RH
3
1
(*2)
I1
Front No. 1 Speaker
Assembly LH
H1
Front No. 1 Speaker
Assembly RH
L2
Rear Speaker
Assembly LH

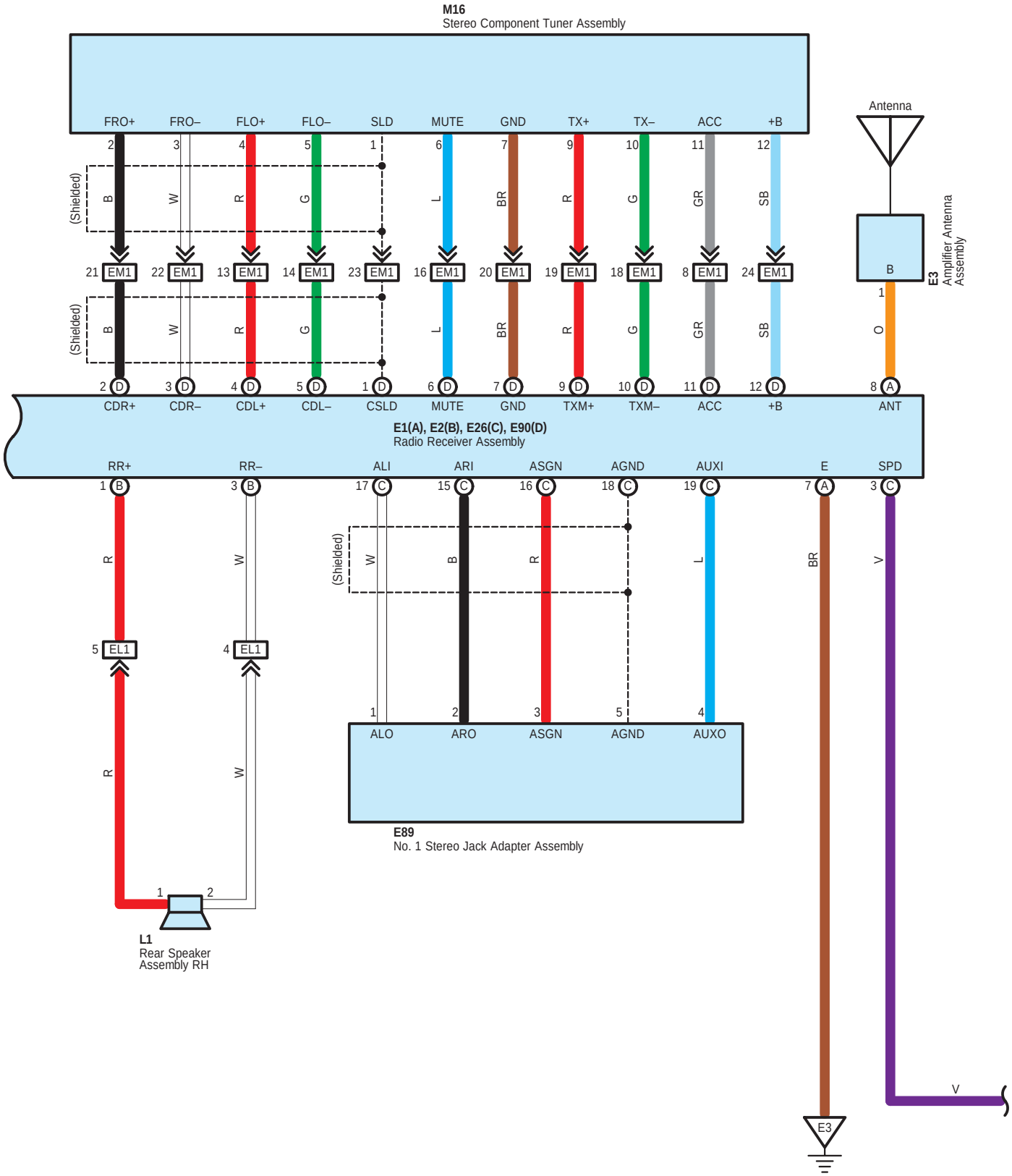
M16
Stereo Component Tuner Assembly
FRO+
FRO–
FLO+
FLO–
SLD
MUTE
GND
TX+
TX–
ACC
+B
(Shielded)
CDR+
CDR–
CDL+
CDL–
CSLD
MUTE
GND
TXM+
TXM–
ACC
+B
ANT
Antenna
E3
Amplifier Antenna Assembly
E1(A), E2(B), E26(C), E90(D)
Radio Receiver Assembly
RR+
RR–
ALI
ARI
ASGN
AGND
AUXI
E
SPD
ALO
ARO
ASGN
AGND
AUXO
E89
No. 1 Stereo Jack Adapter Assembly
L1
Rear Speaker Assembly RH
E3

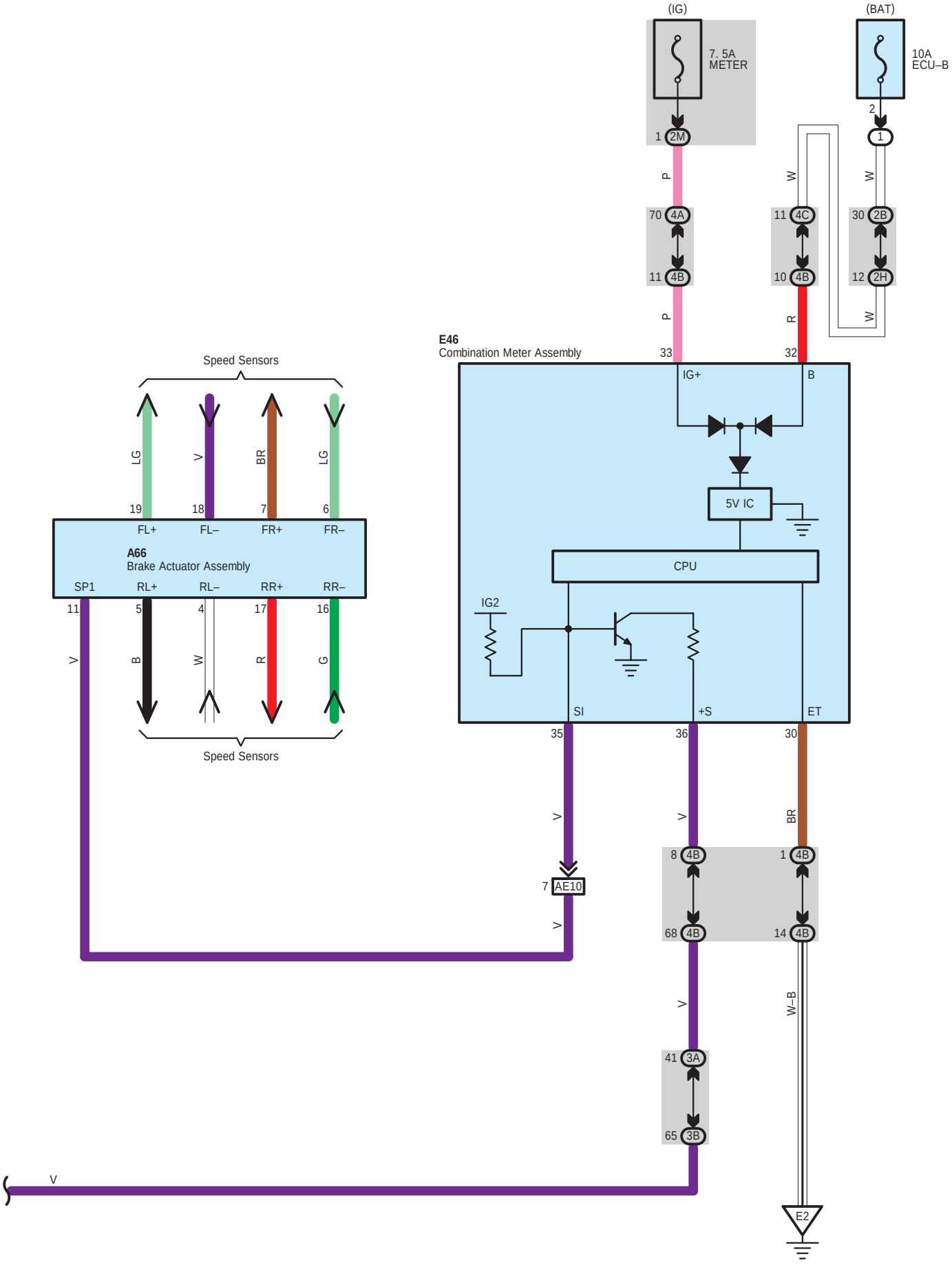
(IG)
7. 5A
METER
(BAT)
10A
ECU–B
2
1
1 2M
P
70 4A
11 4B
P
33
W
11 4C
10 4B
R
32
W
30 2B
12 2H
W
E46
Combination Meter Assembly
IG+
B
5V IC
CPU
IG2
SI
+S
ET
35
36
30
V
V
BR
7 AE10
V
8 4B
68 4B
1 4B
14 4B
V
W–B
41 3A
65 3B
V
E2
Speed Sensors
LG
V
BR
LG
19
18
7
6
FL+
FL–
FR+
FR–
A66
Brake Actuator Assembly
SP1
RL+
RL–
RR+
RR–
11
5
4
17
16
V
B
W
R
G
Speed Sensors

A 66
Black

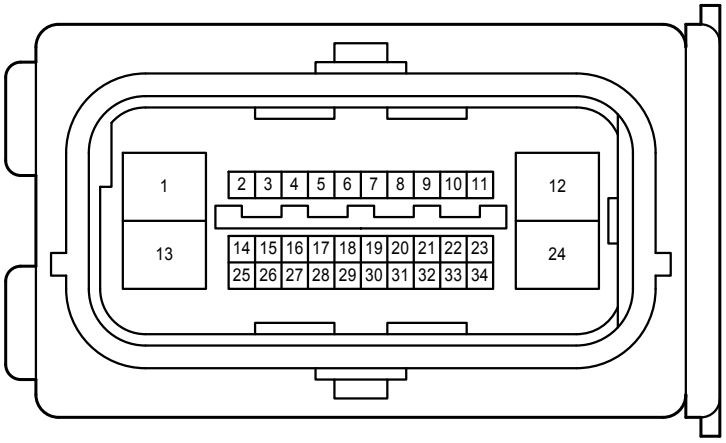

E 1
White

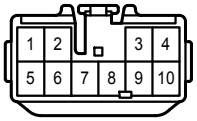

E 2
White



E 3
White



E 26
White

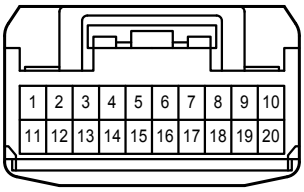

E 46
White

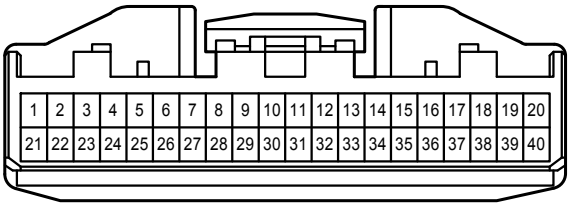

E 89
White

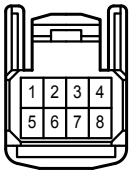

E 90
White



H 1
White



H 4
White

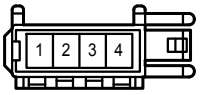

I 1
White



I 4
White

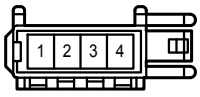

L 1
White

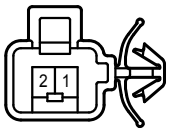

L 2
White

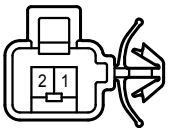

M 16
White



2B
White

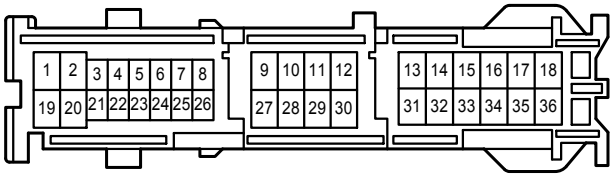

2H
White

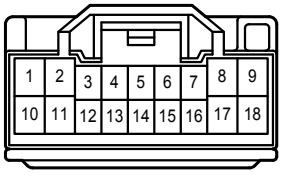

2M
White

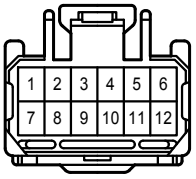

2S
White

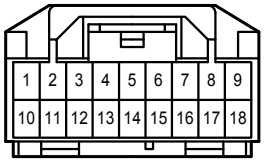

3A
White

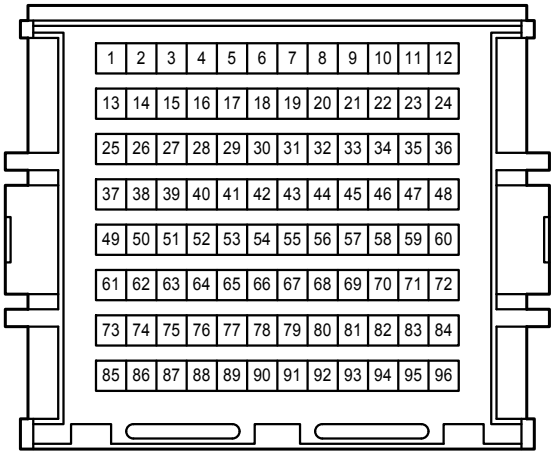

3B
White

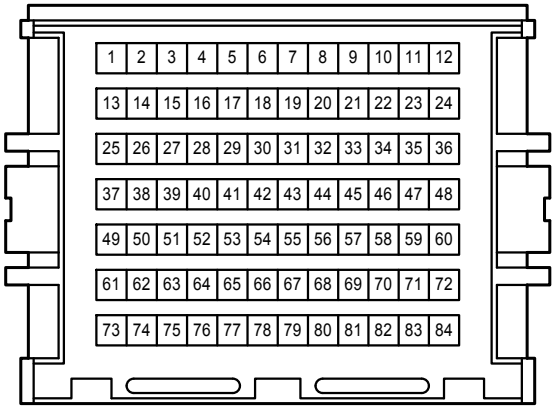

4A
White

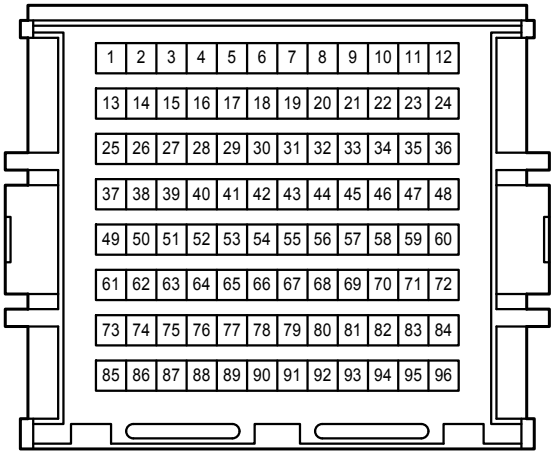

4B
White

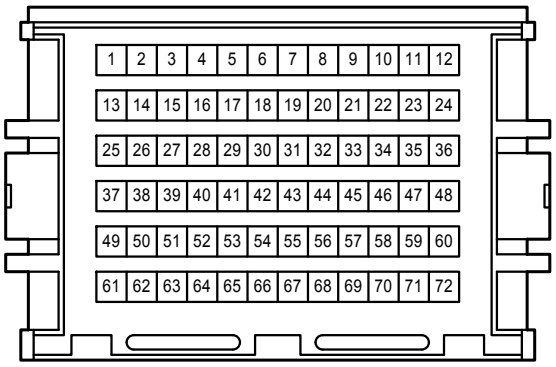

4C
White

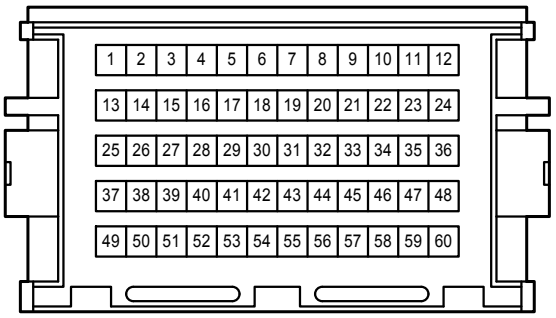

AE10
Gray

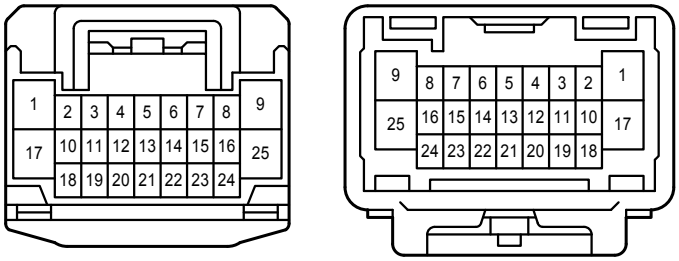

AE11
White

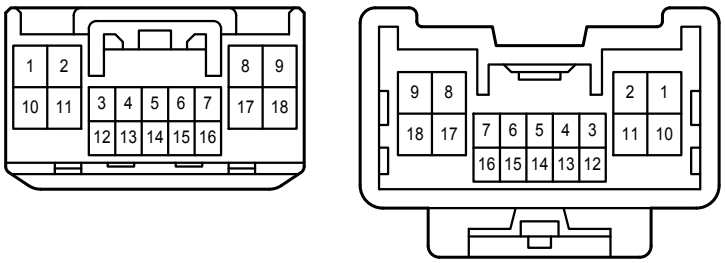

EL1
White

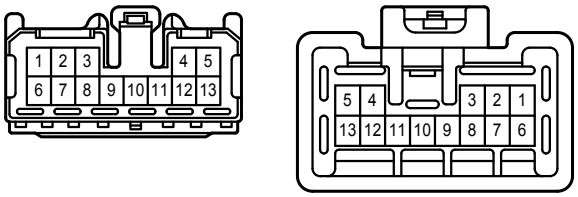

EM1
Gray

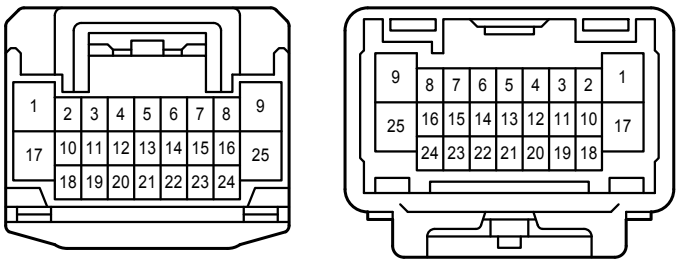

HE2
White

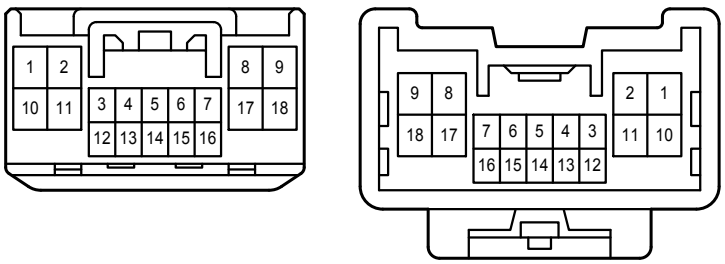

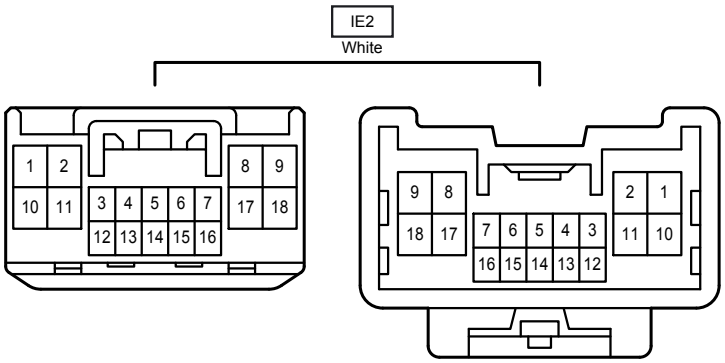
IE2
White
1 2
10 11
3 4 5 6 7
12 13 14 15 16
8 9
17 18
9 8
18 17
7 6 5 4 3
16 15 14 13 12
2 1
11 10

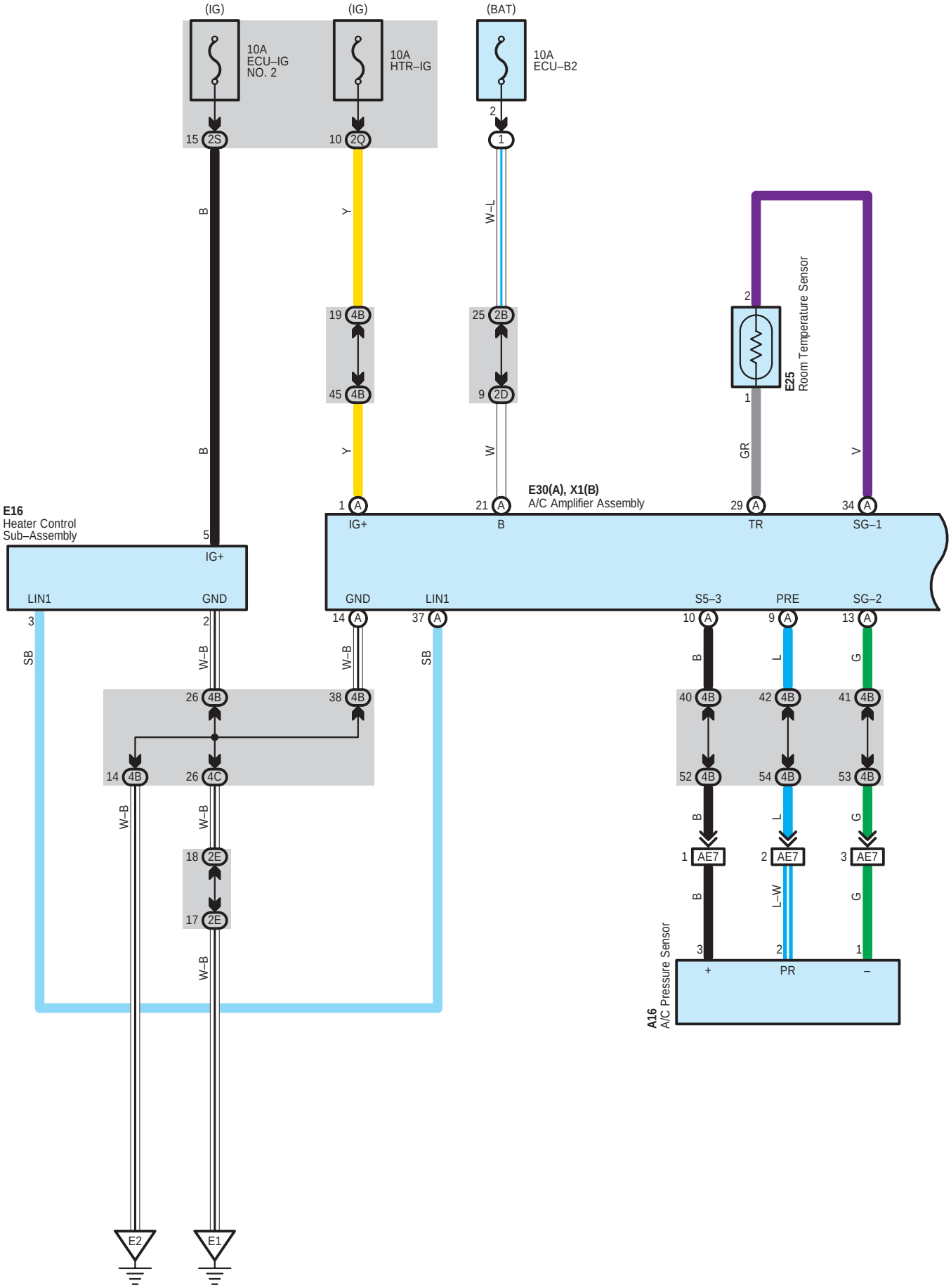
(IG)
(IG)
(BAT)
10A
ECU–IG
NO. 2
10A
HTR–IG
10A
ECU–B2
15 2S
10 2Q
2
1
B
Y
W–L
19 4B
45 4B
25 2B
9 2D
2
1
E25
Room Temperature Sensor
GR
V
B
Y
W
E30(A), X1(B)
A/C Amplifier Assembly
1 A
21 A
29 A
34 A
IG+
B
TR
SG–1
E16
Heater Control
Sub–Assembly
5
IG+
LIN1
GND
GND
LIN1
S5–3
PRE
SG–2
3
2
14 A
37 A
10 A
9 A
13 A
SB
W–B
W–B
SB
B
L
G
26 4B
38 4B
40 4B
42 4B
41 4B
14 4B
26 4C
52 4B
54 4B
53 4B
W–B
W–B
B
L
G
18 2E
17 2E
1 AE7
2 AE7
3 AE7
W–B
B
L–W
G
3
2
1
+
PR
–
A16
A/C Pressure Sensor
E2
E1

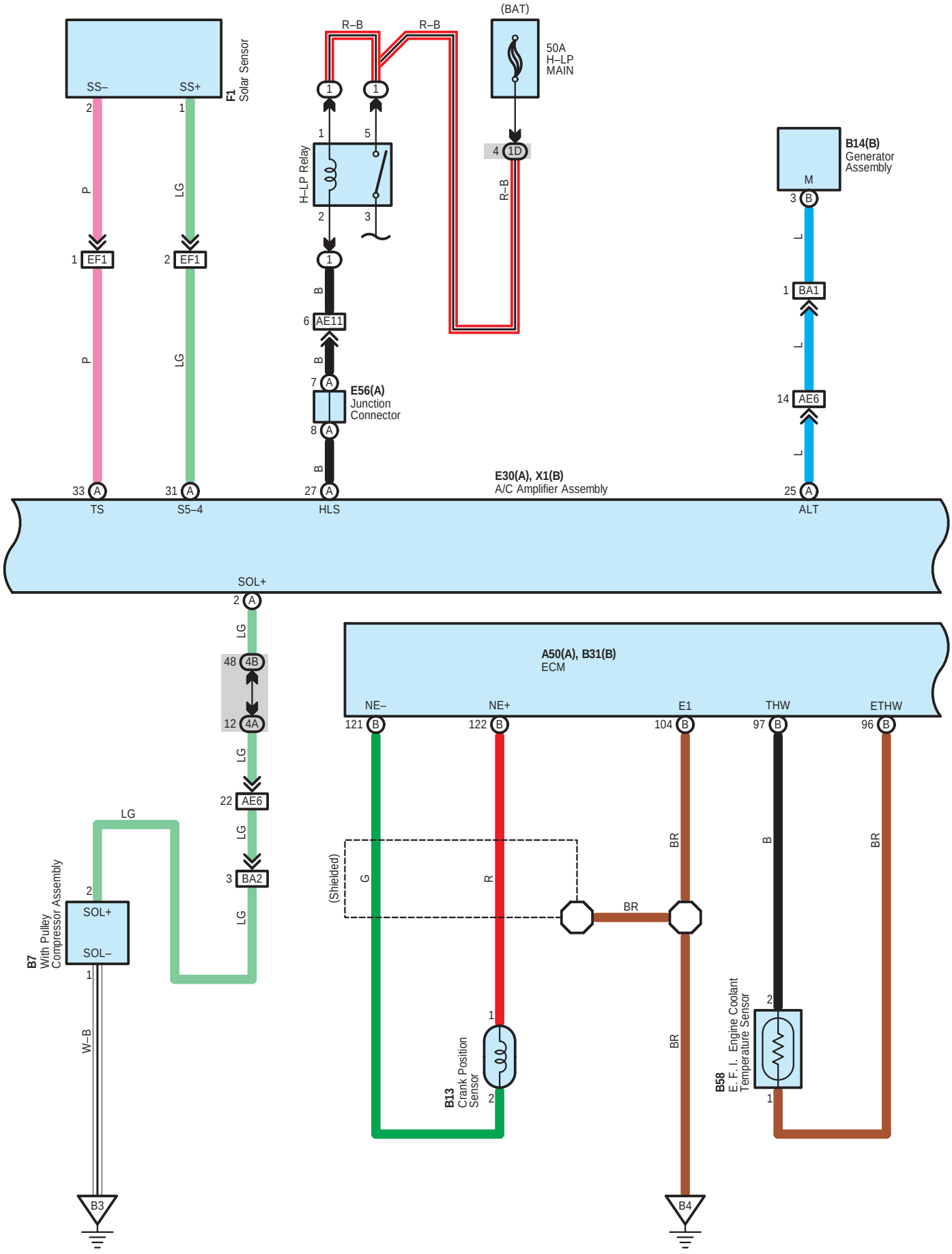
F1
Solar Sensor
SS–
SS+
2
1
P
LG
1 EF1
2 EF1
P
LG
33 A
31 A
TS
S5–4
R–B
R–B
(BAT)
50A
H–LP
MAIN
1
1
1
5
H–LP Relay
2
3
4 1D
R–B
1
B
6 AE11
B
7 A
E56(A)
Junction
Connector
8 A
B
27 A
HLS
E30(A), X1(B)
A/C Amplifier Assembly
B14(B)
Generator
Assembly
M
3 B
L
1 BA1
L
14 AE6
L
25 A
ALT
SOL+
2 A
LG
48 4B
12 4A
LG
22 AE6
LG
3 BA2
LG
LG
2
SOL+
SOL–
1
W–B
B7
With Pulley
Compressor Assembly
B3
A50(A), B31(B)
ECM
NE–
NE+
E1
THW
ETHW
121 B
122 B
104 B
97 B
96 B
(Shielded)
G
R
BR
BR
BR
B
BR
1
2
B13
Crank Position
Sensor
2
1
B58
E. F. I. Engine Coolant
Temperature Sensor
B4

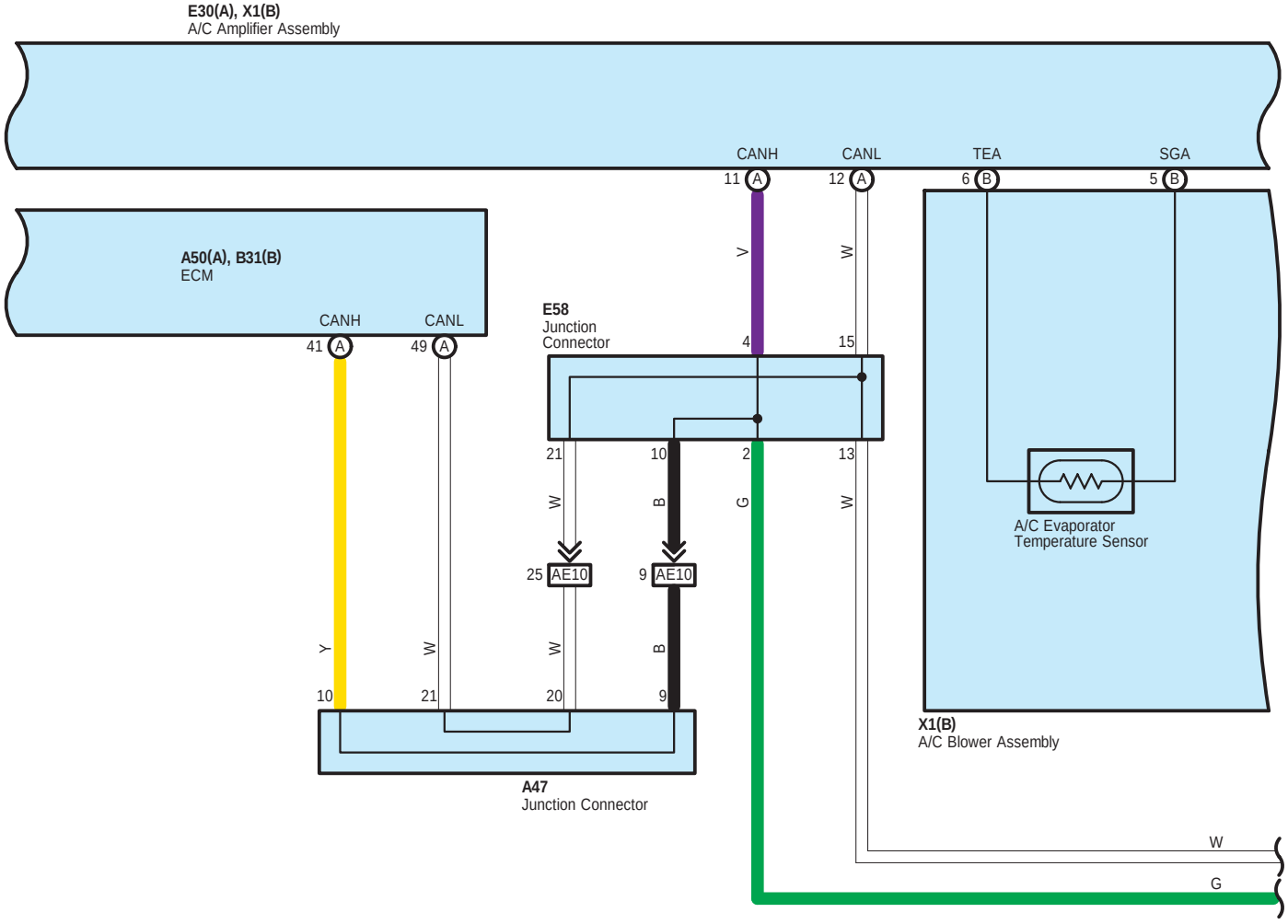
E30(A), X1(B)
A/C Amplifier Assembly
CANH
CANL
TEA
SGA
11 A
12 A
6 B
5 B
V
W
A50(A), B31(B)
ECM
CANH
CANL
41 A
49 A
E58
Junction
Connector
4
15
21
10
2
13
W
B
G
W
25 AE10
9 AE10
A/C Evaporator
Temperature Sensor
Y
W
W
B
10
21
20
9
X1(B)
A/C Blower Assembly
A47
Junction Connector
W
G

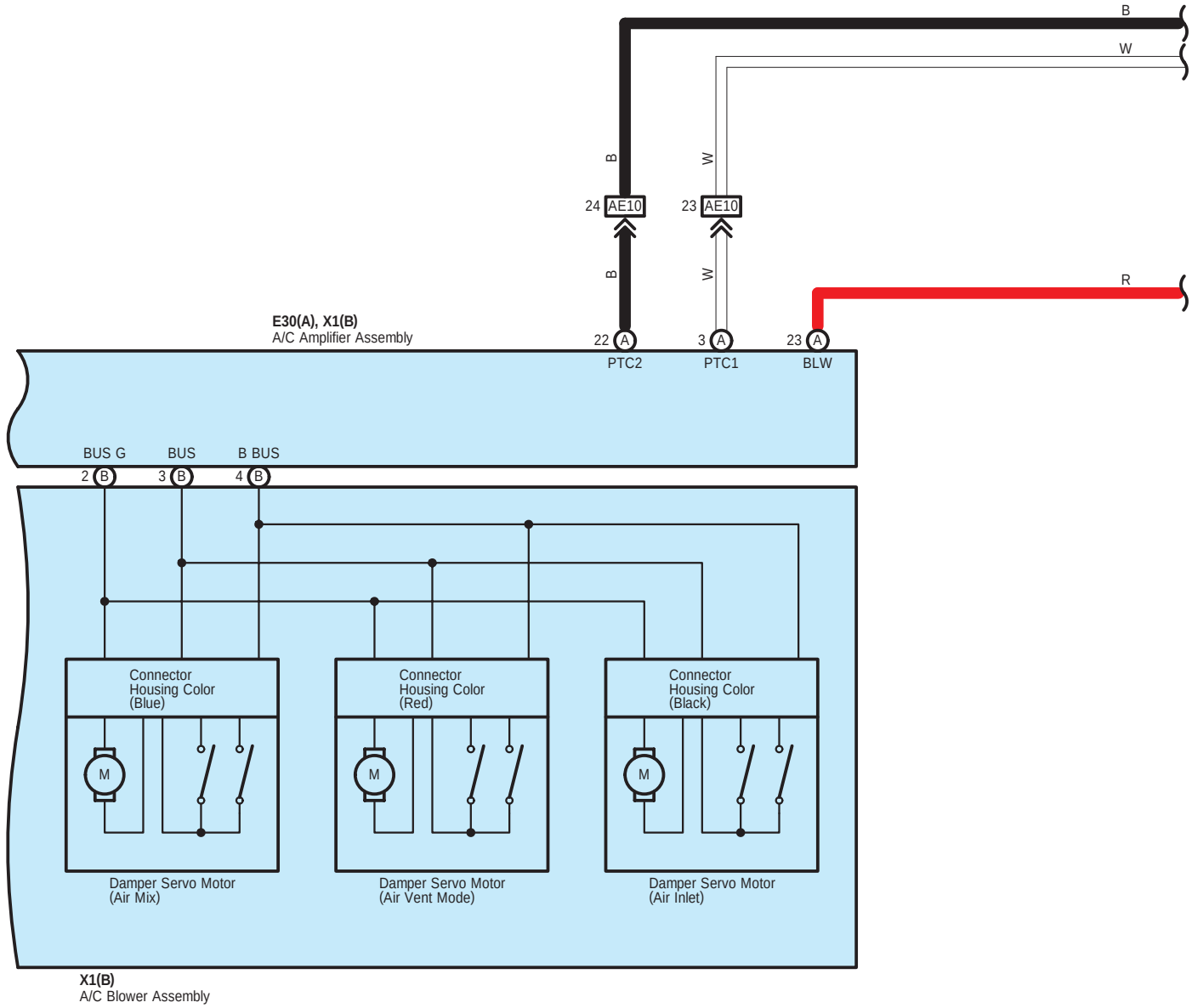
B
W
B
W
24 AE10
23 AE10
B
W
R
E30(A), X1(B)
A/C Amplifier Assembly
22 A
3 A
23 A
PTC2
PTC1
BLW
BUS G
BUS
B BUS
2 B
3 B
4 B
Connector
Housing Color
(Blue)
Connector
Housing Color
(Red)
Connector
Housing Color
(Black)
M
M
M
Damper Servo Motor
(Air Mix)
Damper Servo Motor
(Air Vent Mode)
Damper Servo Motor
(Air Inlet)
X1(B)
A/C Blower Assembly

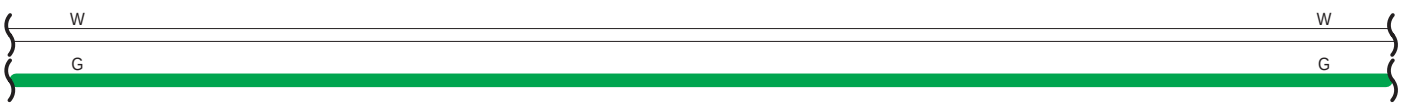
W
W
G
G

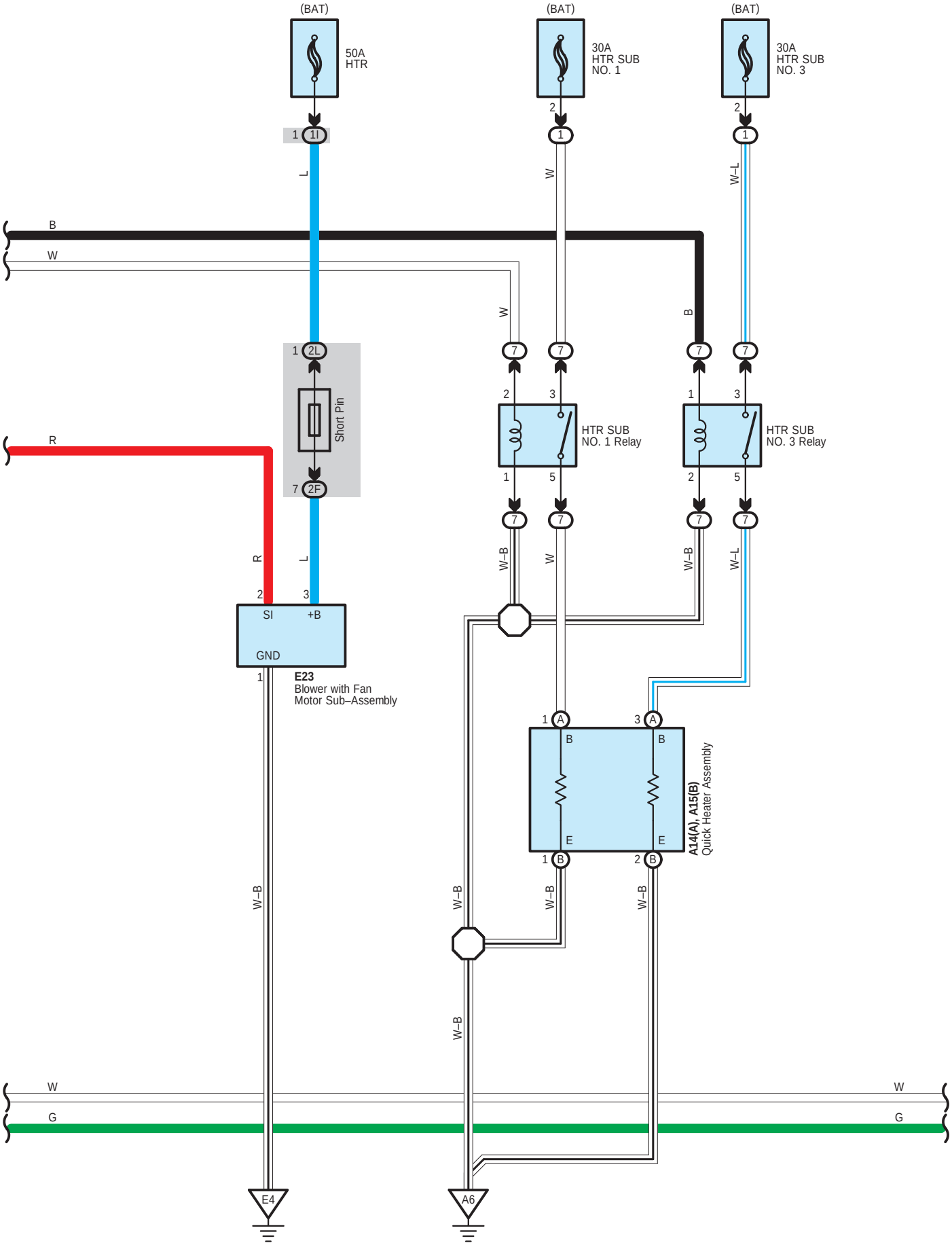
(BAT)
50A
HTR
1
1I
L
B
W
1
2L
Short Pin
7
2F
R
R
L
2
3
SI
+B
GND
1
E23
Blower with Fan
Motor Sub–Assembly
W–B
(BAT)
30A
HTR SUB
NO. 1
2
1
W
W
7
7
2
3
HTR SUB
NO. 1 Relay
1
5
7
7
W–B
W
(BAT)
30A
HTR SUB
NO. 3
2
1
W–L
B
7
7
1
3
HTR SUB
NO. 3 Relay
2
5
7
7
W–B
W–L
1
A
3
A
B
B
E
E
A14(A), A15(B)
Quick Heater Assembly
1
B
2
B
W–B
W–B
W–B
W–B
W
G
W
G
E4
A6

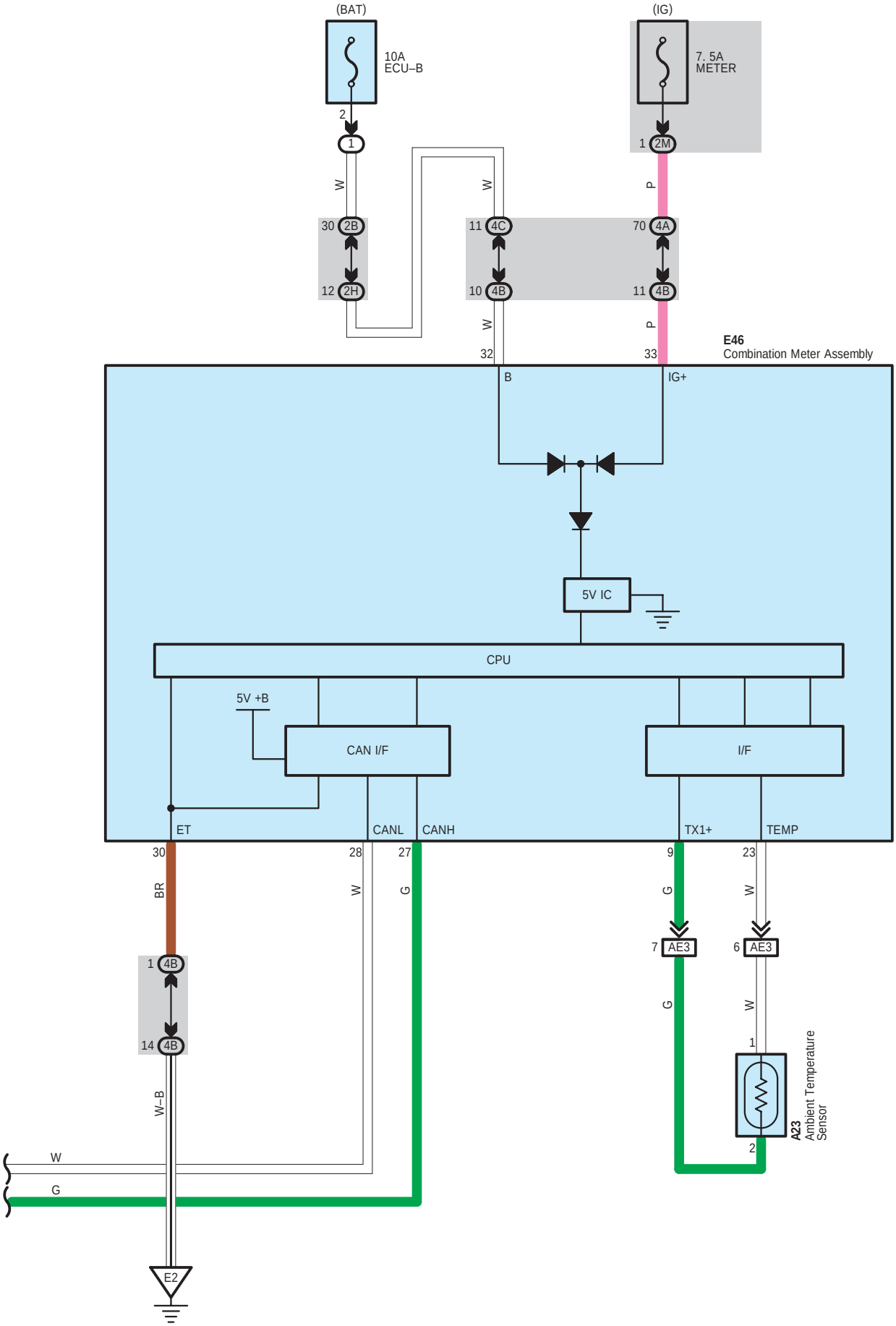
(BAT)
10A
ECU–B
2
1
W
30
2B
12
2H
W
11
4C
10
4B
W
32
(IG)
7. 5A
METER
1
2M
P
70
4A
11
4B
P
33
E46
Combination Meter Assembly
B
IG+
5V IC
CPU
5V +B
CAN I/F
I/F
ET
CANL
CANH
TX1+
TEMP
30
BR
28
W
27
G
9
G
23
W
7
AE3
6
AE3
G
W
1
2
A23
Ambient Temperature
Sensor
1
4B
14
4B
W–B
W
G
E2

A 14
White

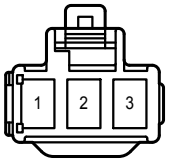

A 15
White

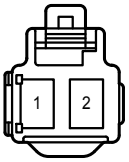

A 16
Black

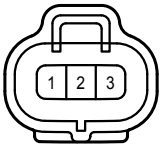

A 23
Black



A 47
White

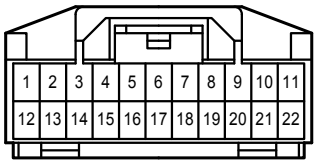

A 50
Black

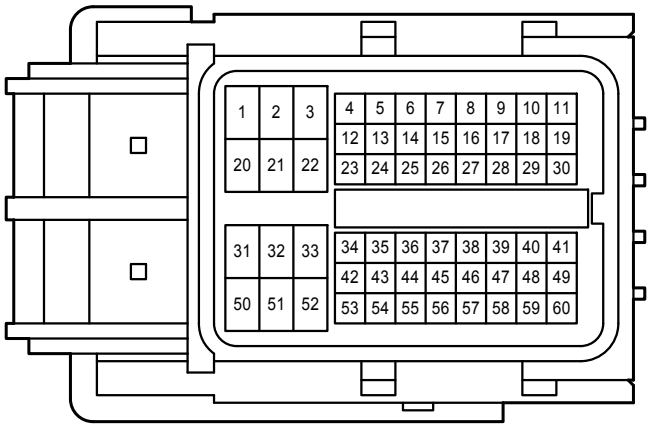

B 7
Black

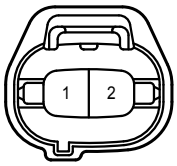

B 13
Black

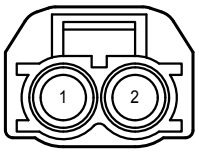

B 14
Black



B 31
Black

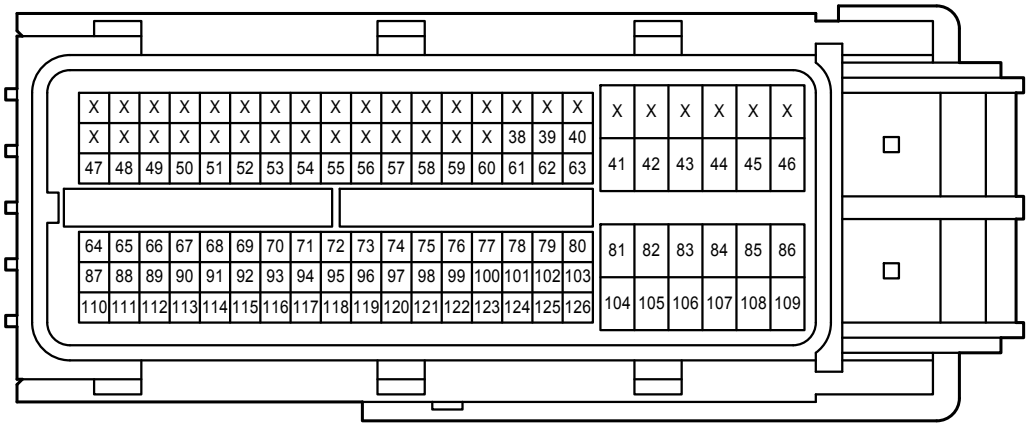

B 58
Gray



E 16
White

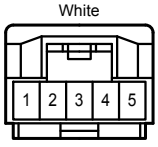

E 23
Black

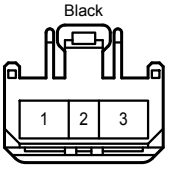

E 25
Black

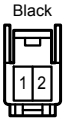

E 30
White

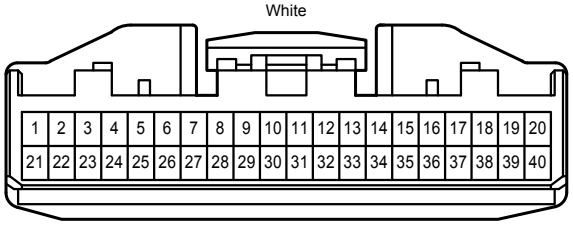

E 46
White

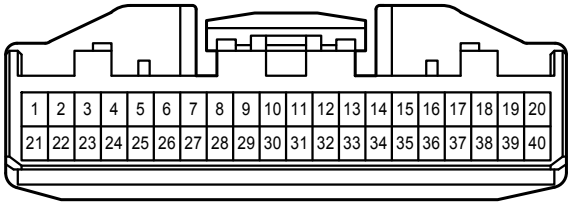

E 56
White

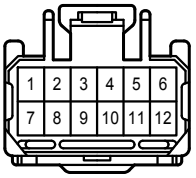

E 58
Gray

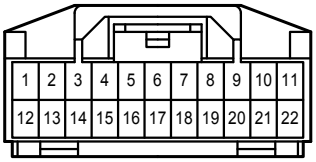

F 1
Black

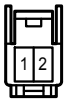

X 1
White

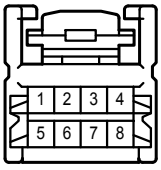

1D
White

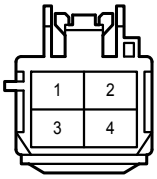

1I

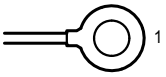

2B
White

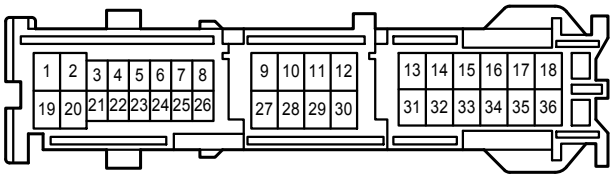

2D
White

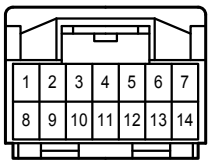

2E
White

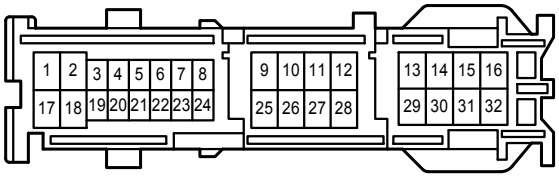

2F
White

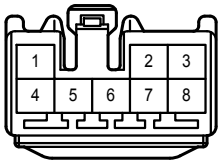

2H
White

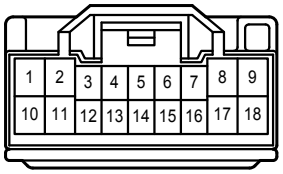

2L
White

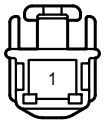

2M
White

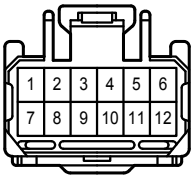

2Q
White

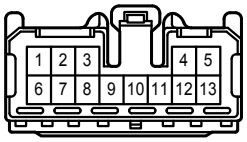

2S
White

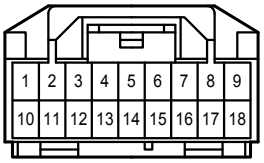

4A
White

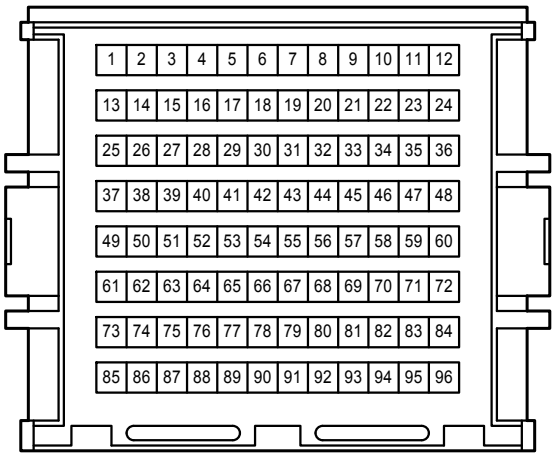

4B
White

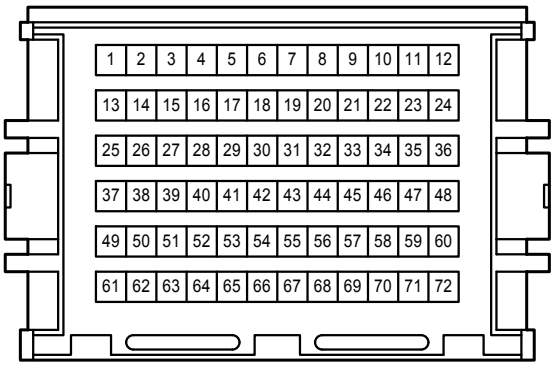

4C
White

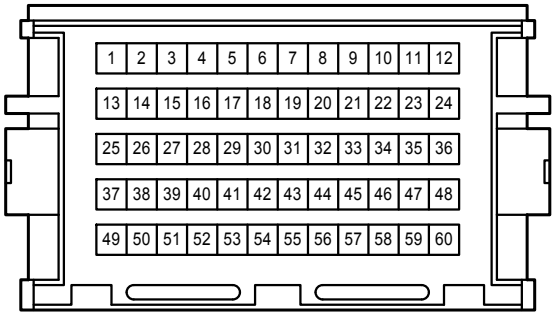

AE3
White

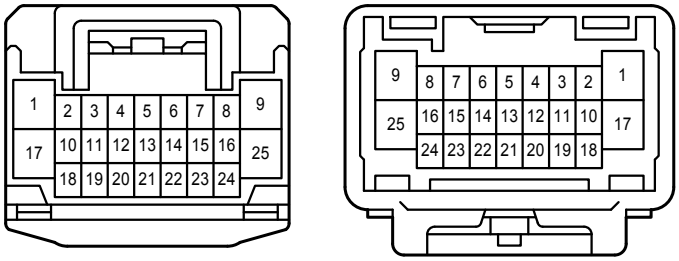

AE6
Gray

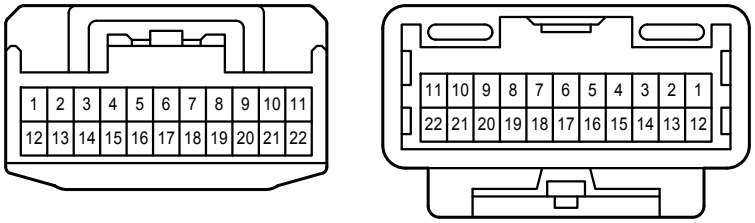

AE7
Blue

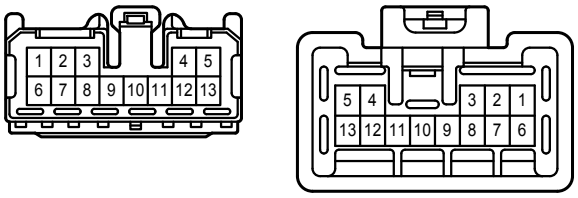

AE10
Gray

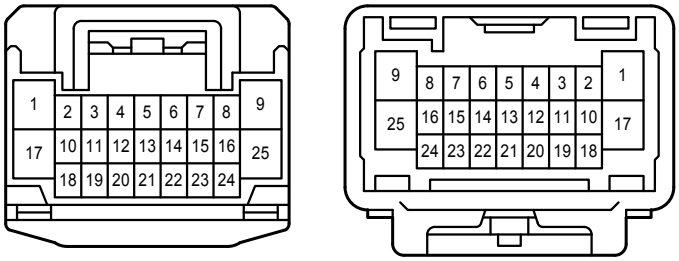

AE11
White

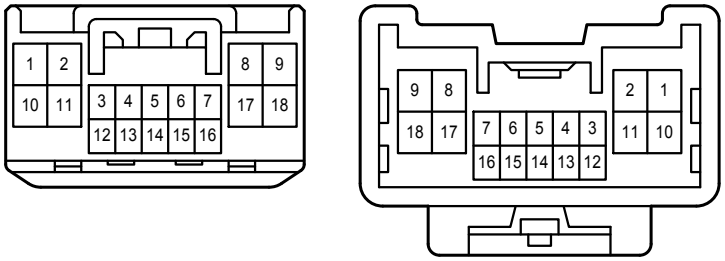

BA1
White

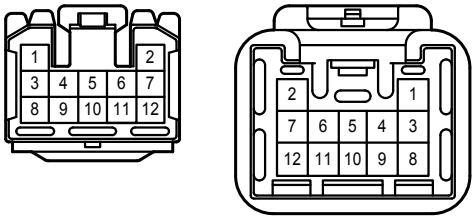

BA2
White

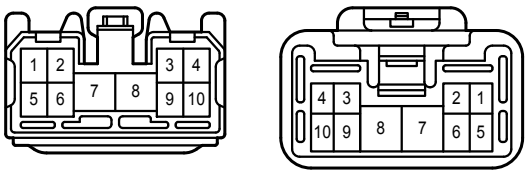

EF1
White

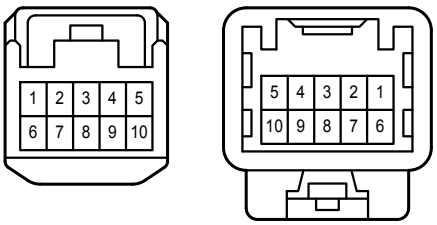

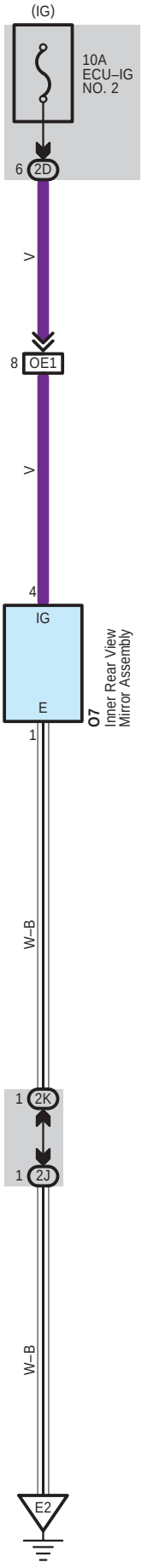
(IG)
10A
ECU–IG
NO. 2
6
2D
V
8
OE1
V
4
IG
E
O7
Inner Rear View
Mirror Assembly
1
W–B
1
2K
1
2J
W–B
E2

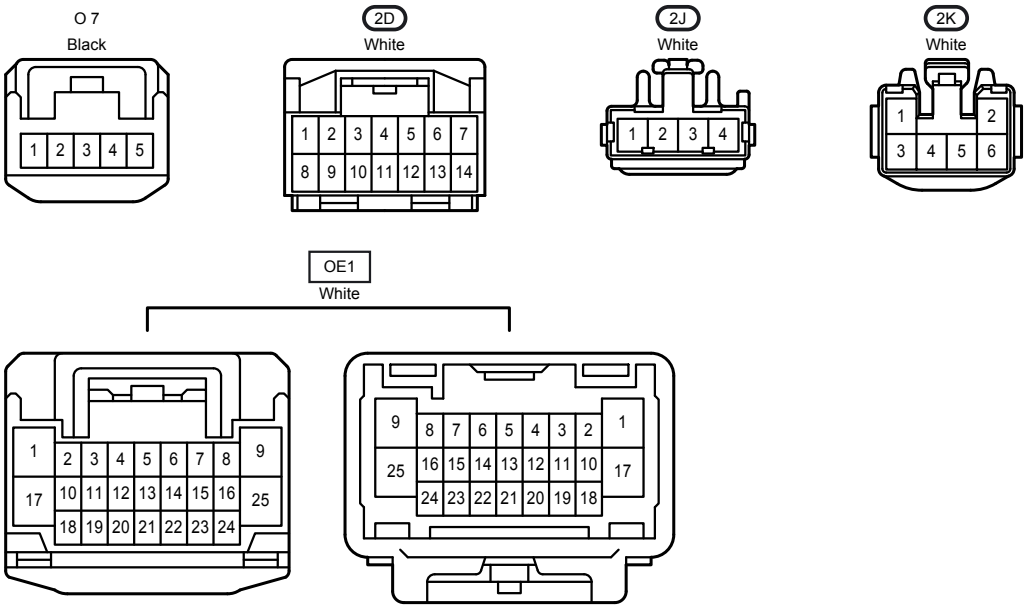
O 7
Black
1 2 3 4 5
2D
White
1 2 3 4 5 6 7
8 9 10 11 12 13 14
2J
White
1 2 3 4
2K
White
1 2
3 4 5 6
OE1
White
1 2 3 4 5 6 7 8 9
17 10 11 12 13 14 15 16 25
18 19 20 21 22 23 24
9 8 7 6 5 4 3 2 1
25 16 15 14 13 12 11 10 17
24 23 22 21 20 19 18

* 1 : 2AZ–FE
* 2 : 2ZR–FE

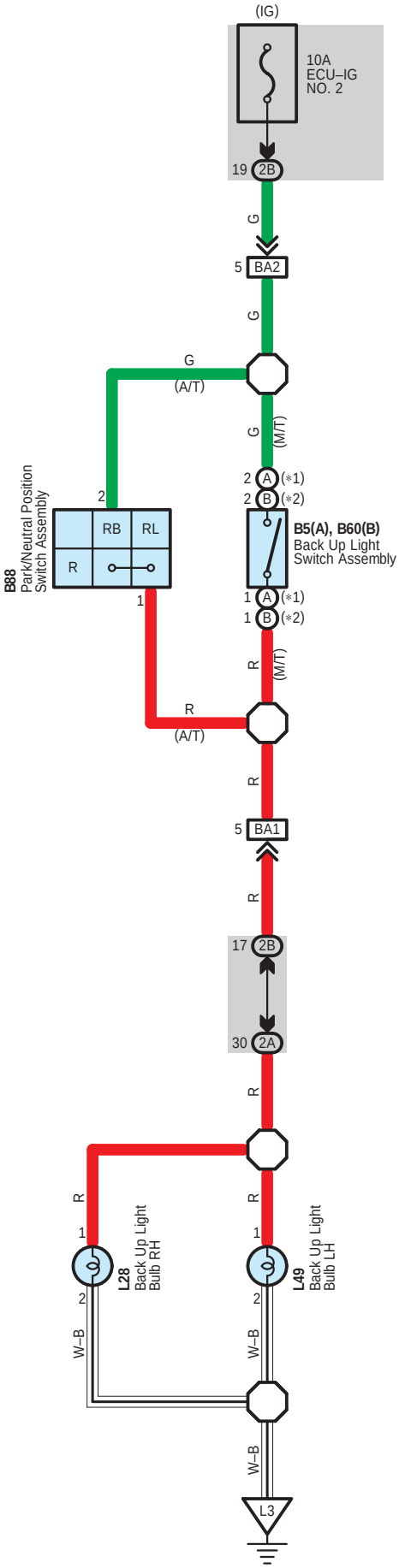

B 5
Gray

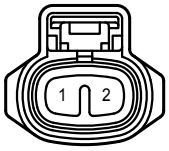

B 60
Gray

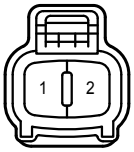

B 88
Gray

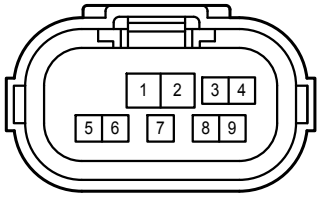

L 28
Gray



L 49
Gray



2A
White

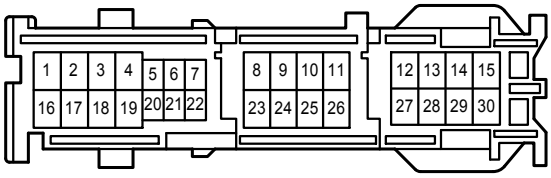

2B
White

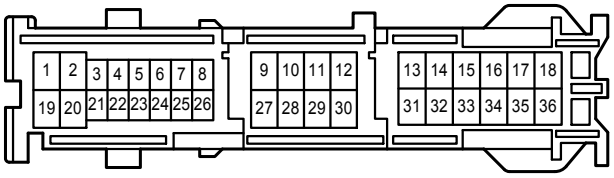

BA1
White

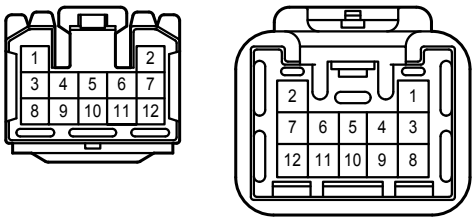

BA2
White

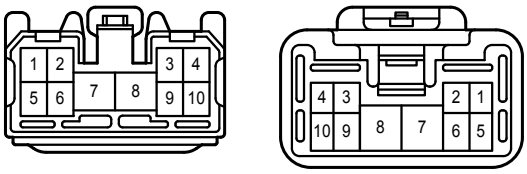

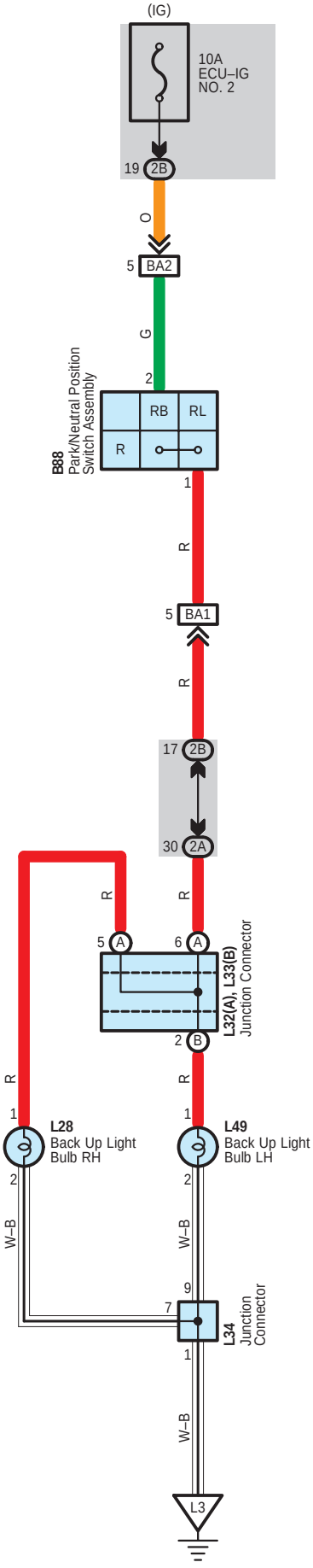
(IG)
10A
ECU–IG
NO. 2
19 2B
O
5 BA2
G
2
B88
Park/Neutral Position
Switch Assembly
RB
RL
R
1
R
5 BA1
R
17 2B
30 2A
R
R
5 A
6 A
L32(A), L33(B)
Junction Connector
2 B
R
R
1
1
L28
Back Up Light
Bulb RH
L49
Back Up Light
Bulb LH
2
2
W–B
W–B
9
7
L34
Junction
Connector
1
W–B
L3

B 88
Gray

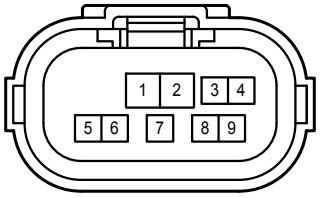

L 28
Gray



L 32
White

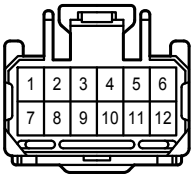

L 33
White

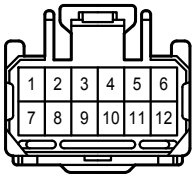

L 34
Blue

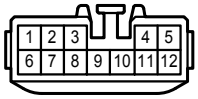

L 49
Gray



2A
White

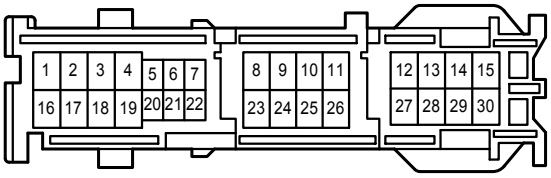

2B
White

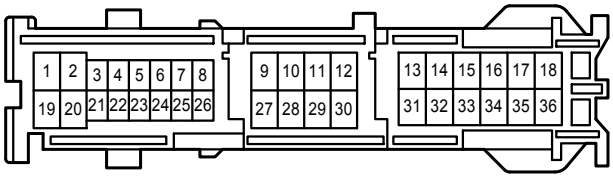

BA1
White

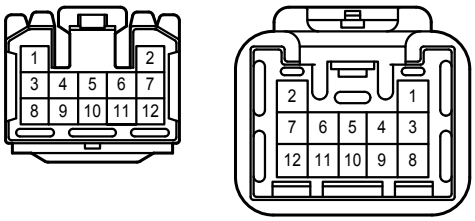

BA2
White

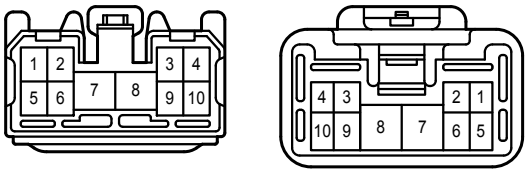

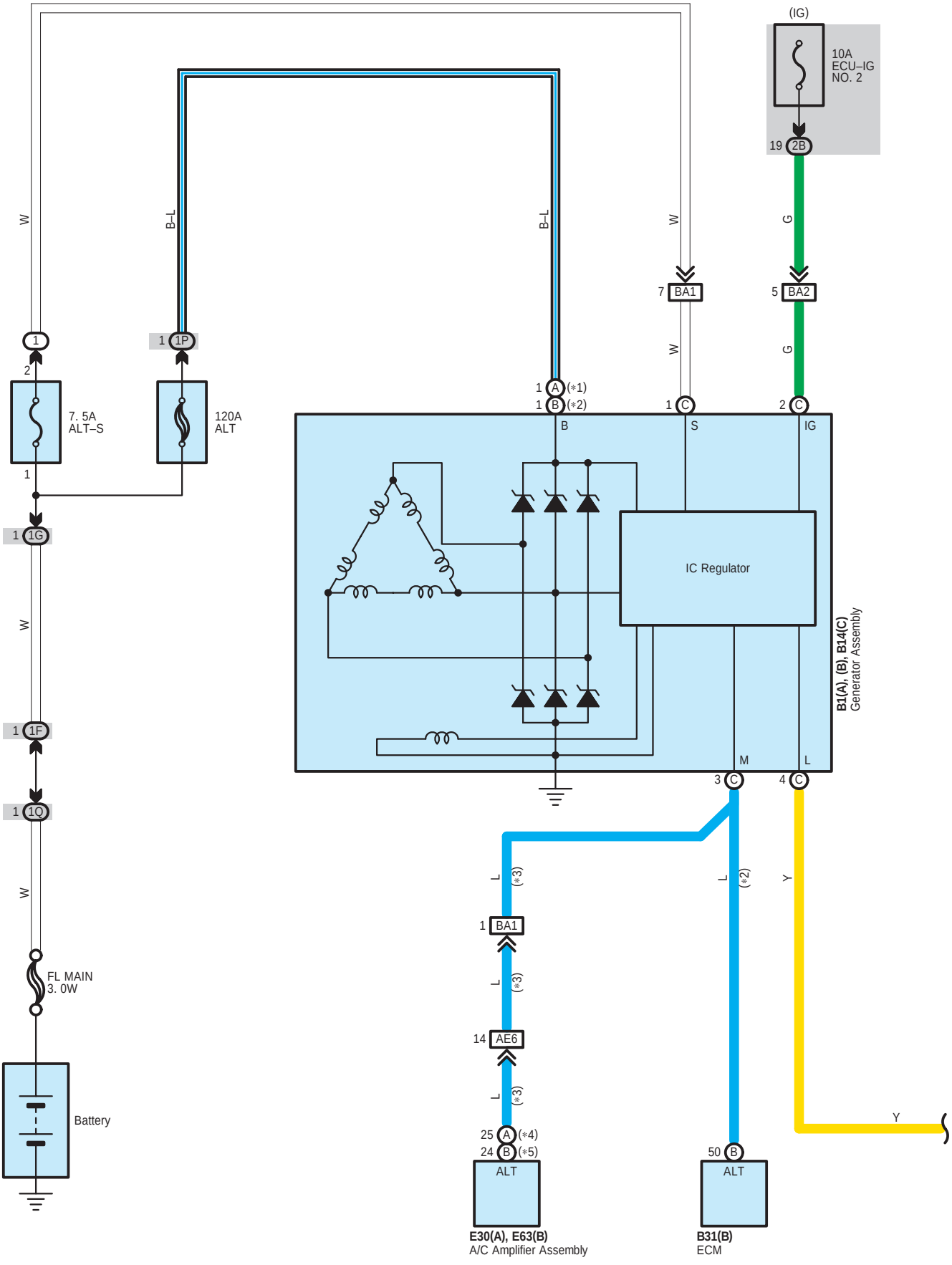
(IG)
10A
ECU–IG
NO. 2
19 2B
G
5 BA2
G
2 C
IG
7 BA1
W
1 C
S
W
B–L
1 A (*1)
1 B (*2)
B
B–L
W
1 1P
1
2
7. 5A
ALT–S
120A
ALT
1
1 1G
W
1 1F
1 1Q
W
FL MAIN
3. 0W
Battery
IC Regulator
B1(A), (B), B14(C)
Generator Assembly
M
3 C
L
4 C
L (*3)
1 BA1
L (*3)
14 AE6
L (*3)
25 A (*4)
24 B (*5)
ALT
E30(A), E63(B)
A/C Amplifier Assembly
L (*2)
50 B
ALT
B31(B)
ECM
Y
Y

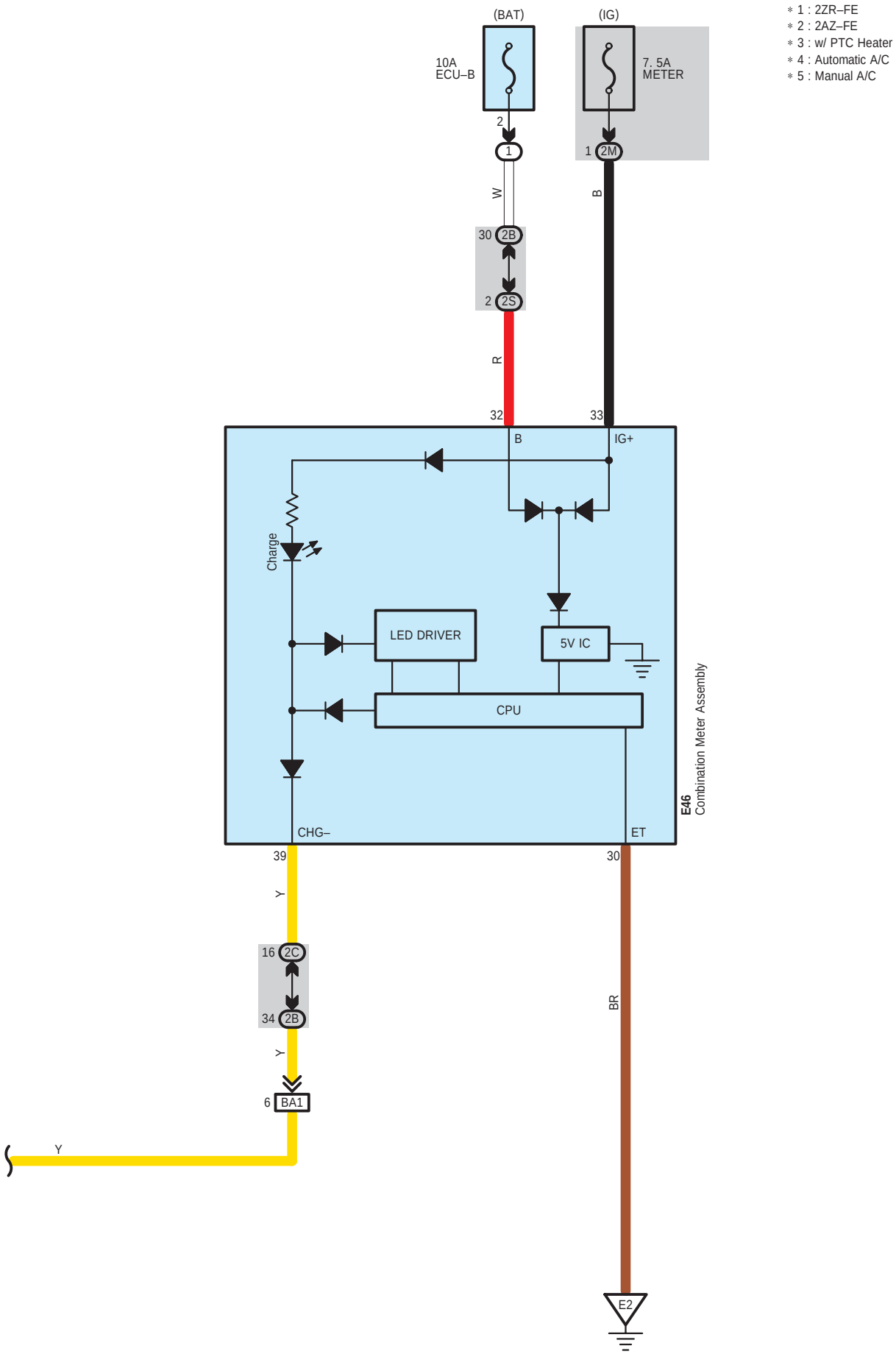

* 1 : 2ZR–FE
* 2 : 2AZ–FE
* 3 : w/ PTC Heater
* 4 : Automatic A/C
* 5 : Manual A/C

B 1

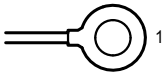

(2AZ-FE)

B 1

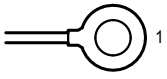

(2ZR-FE)

B 14

Black



B 31

Black

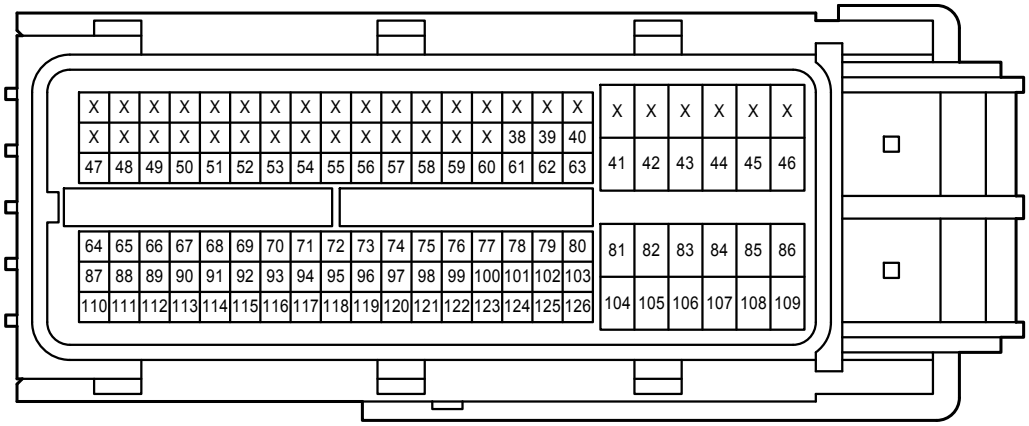

E 30

White

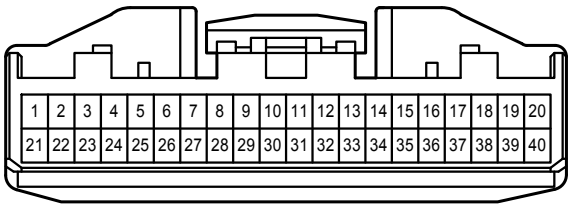

E 46

White

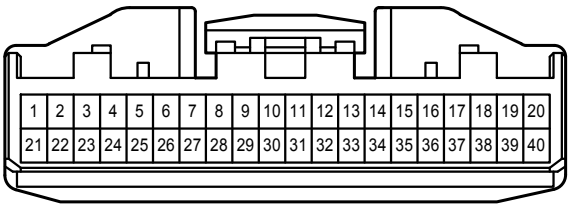

E 63

White

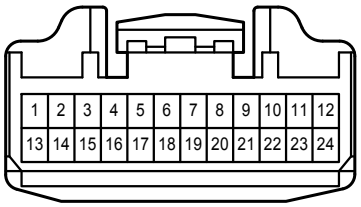

1F

Black

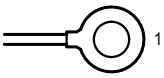

1G

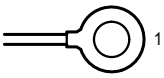

1P

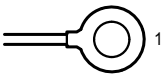

1Q

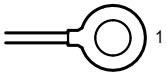

2B

White

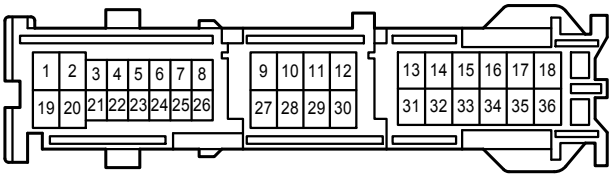

2C

White

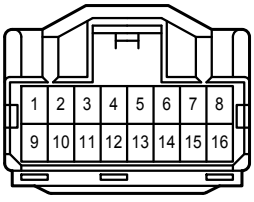

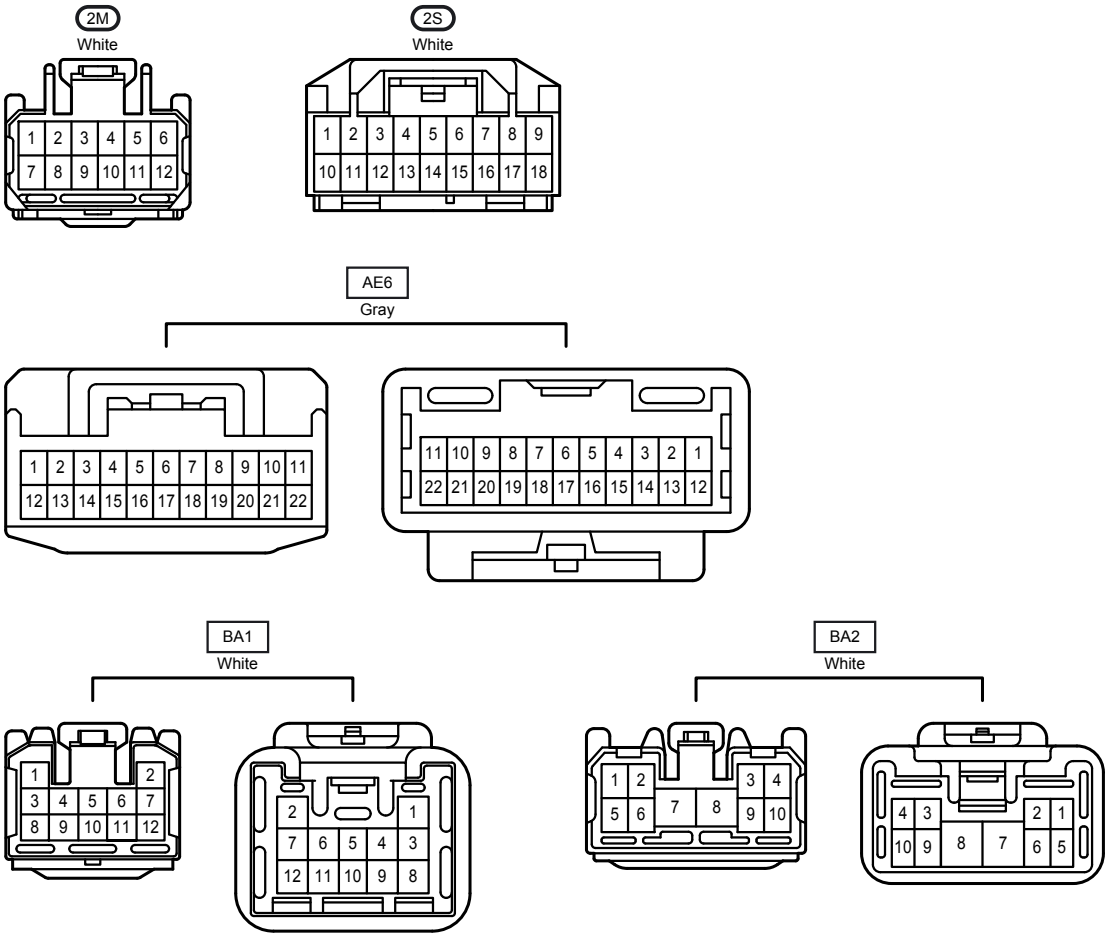
2M
White
1 2 3 4 5 6
7 8 9 10 11 12
2S
White
1 2 3 4 5 6 7 8 9
10 11 12 13 14 15 16 17 18
AE6
Gray
1 2 3 4 5 6 7 8 9 10 11
12 13 14 15 16 17 18 19 20 21 22
11 10 9 8 7 6 5 4 3 2 1
22 21 20 19 18 17 16 15 14 13 12
BA1
White
1 2
3 4 5 6 7
8 9 10 11 12
2 1
7 6 5 4 3
12 11 10 9 8
BA2
White
1 2 3 4
5 6 7 8 9 10
4 3 2 1
10 9 8 7 6 5

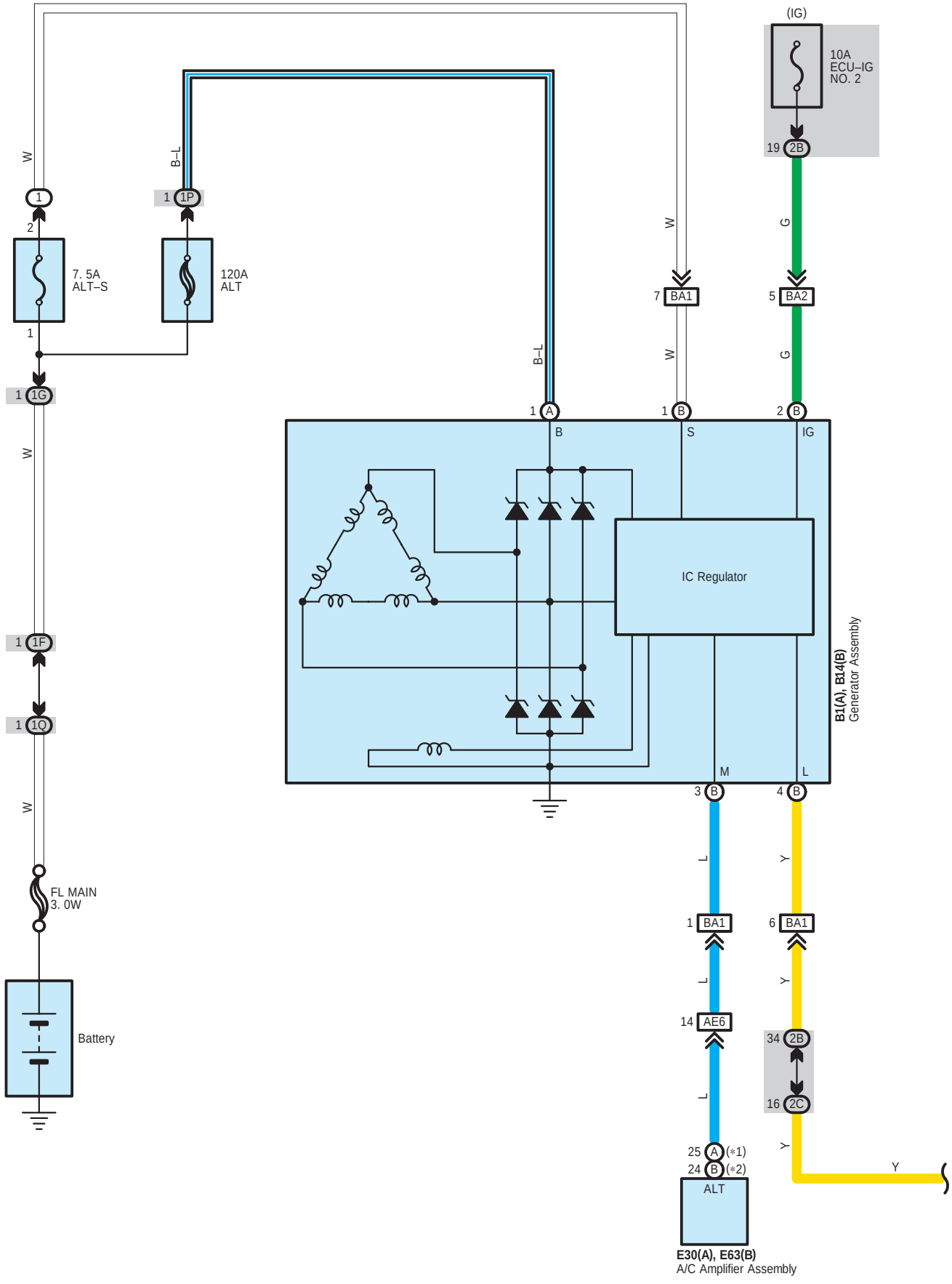
(IG)
10A
ECU–IG
NO. 2
19 2B
G
5 BA2
G
2 B
IG
W
1
2
7. 5A
ALT–S
1
1 1G
W
1 1F
1 1Q
W
FL MAIN
3. 0W
Battery
B–L
1 1P
120A
ALT
W
7 BA1
W
1 B
S
B–L
1 A
B
IC Regulator
B1(A), B14(B)
Generator Assembly
M
L
3 B
4 B
L
Y
1 BA1
6 BA1
L
Y
14 AE6
34 2B
16 2C
L
Y
25 A (*1)
24 B (*2)
ALT
Y
E30(A), E63(B)
A/C Amplifier Assembly

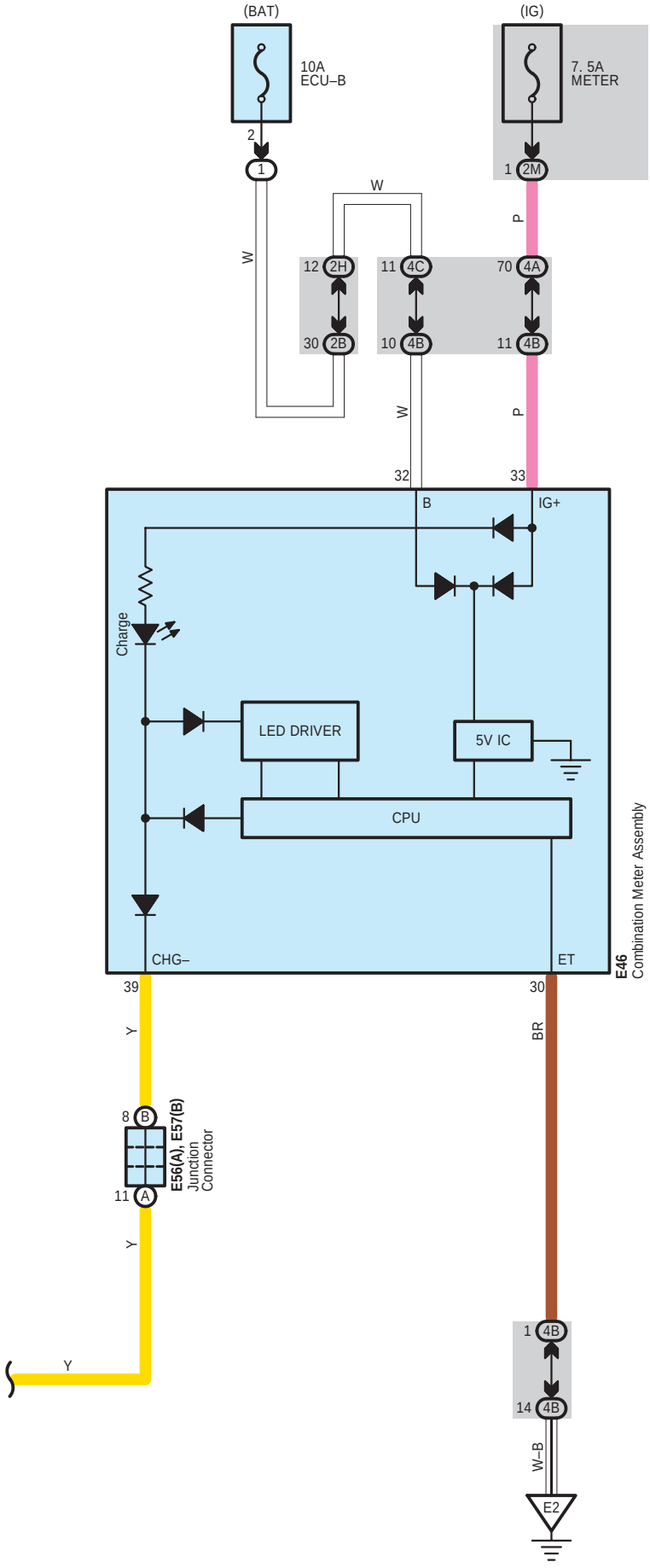

∗ 1 : Automatic A/C
∗ 2 : Manual A/C

B 1

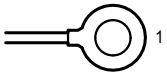

(2ZR-FE)

B 14

Black



E 30

White

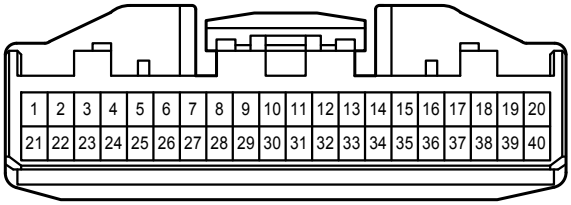

E 46

White

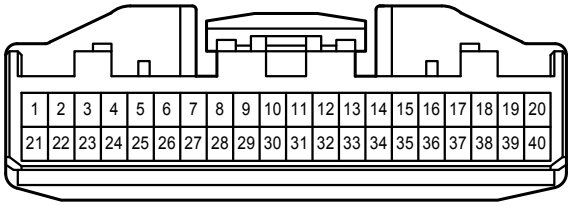

E 56

White

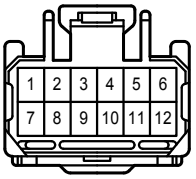

E 57

White

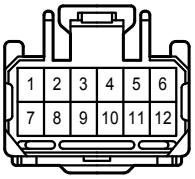

E 63

White

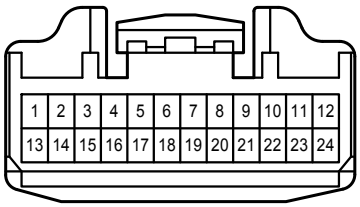

1F

Black

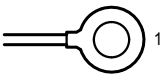

1G

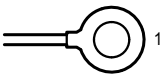

1P

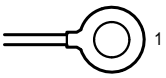

1Q

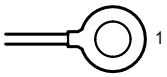

2B

White

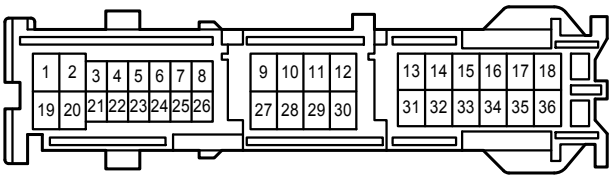

2C

White

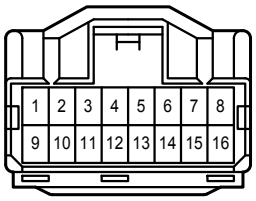

2H

White

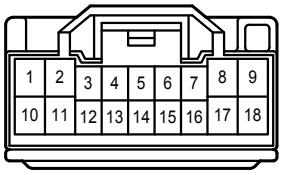

2M

White

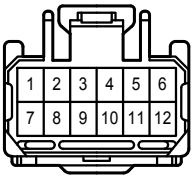

4A

White

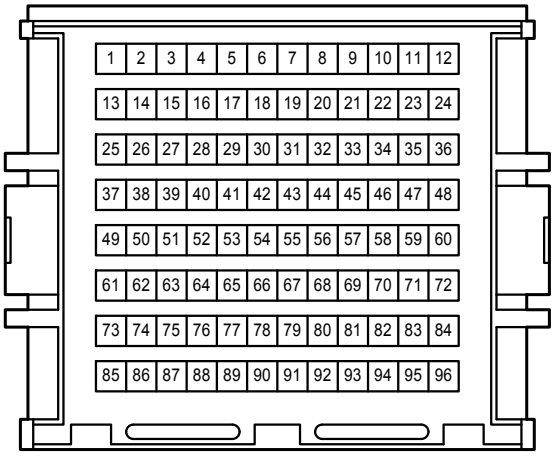

4B
White

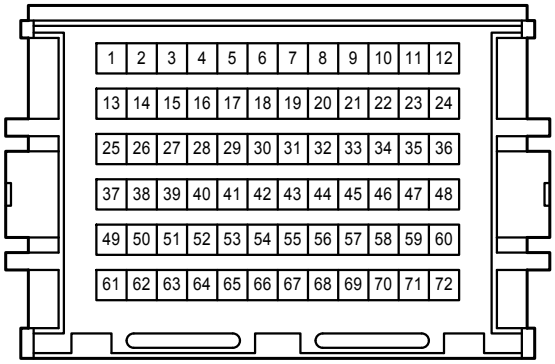

4C
White

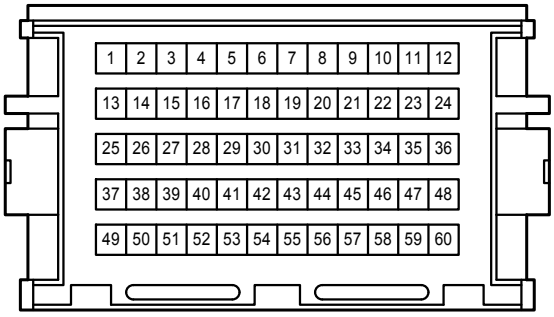

AE6
Gray

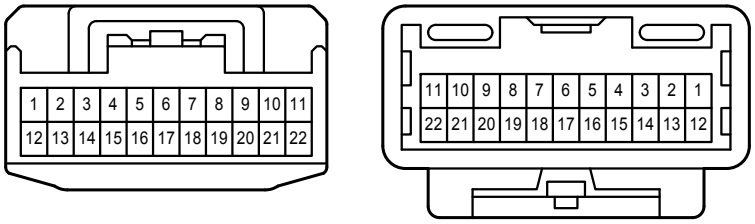

BA1
White

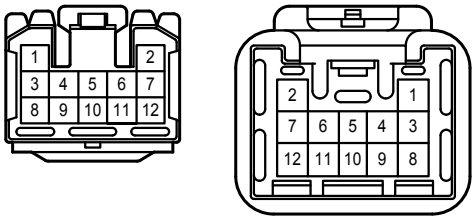

BA2
White

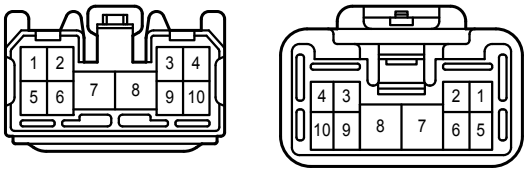

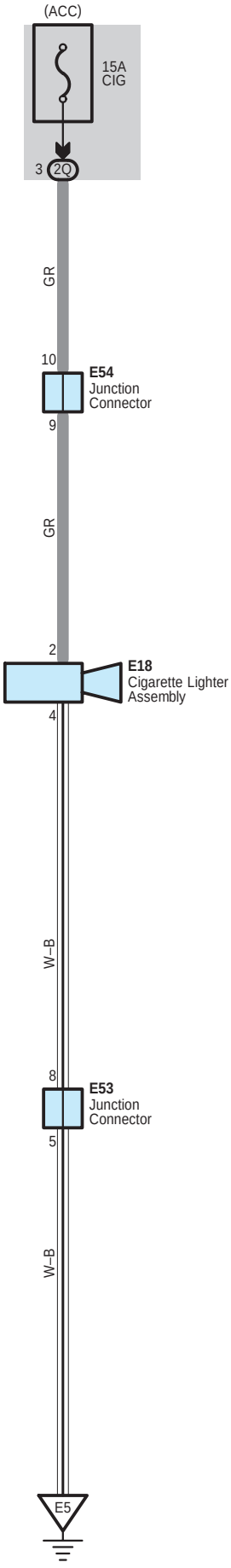
(ACC)
15A
CIG
3
2Q
GR
10
E54
Junction
Connector
9
GR
2
E18
Cigarette Lighter
Assembly
4
W–B
8
E53
Junction
Connector
5
W–B
E5

E 18
Blue

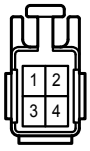

E 53
White

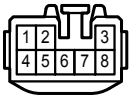

E 54
White

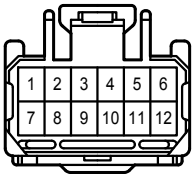

2Q
White

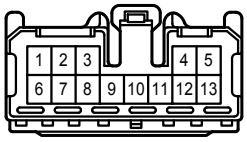

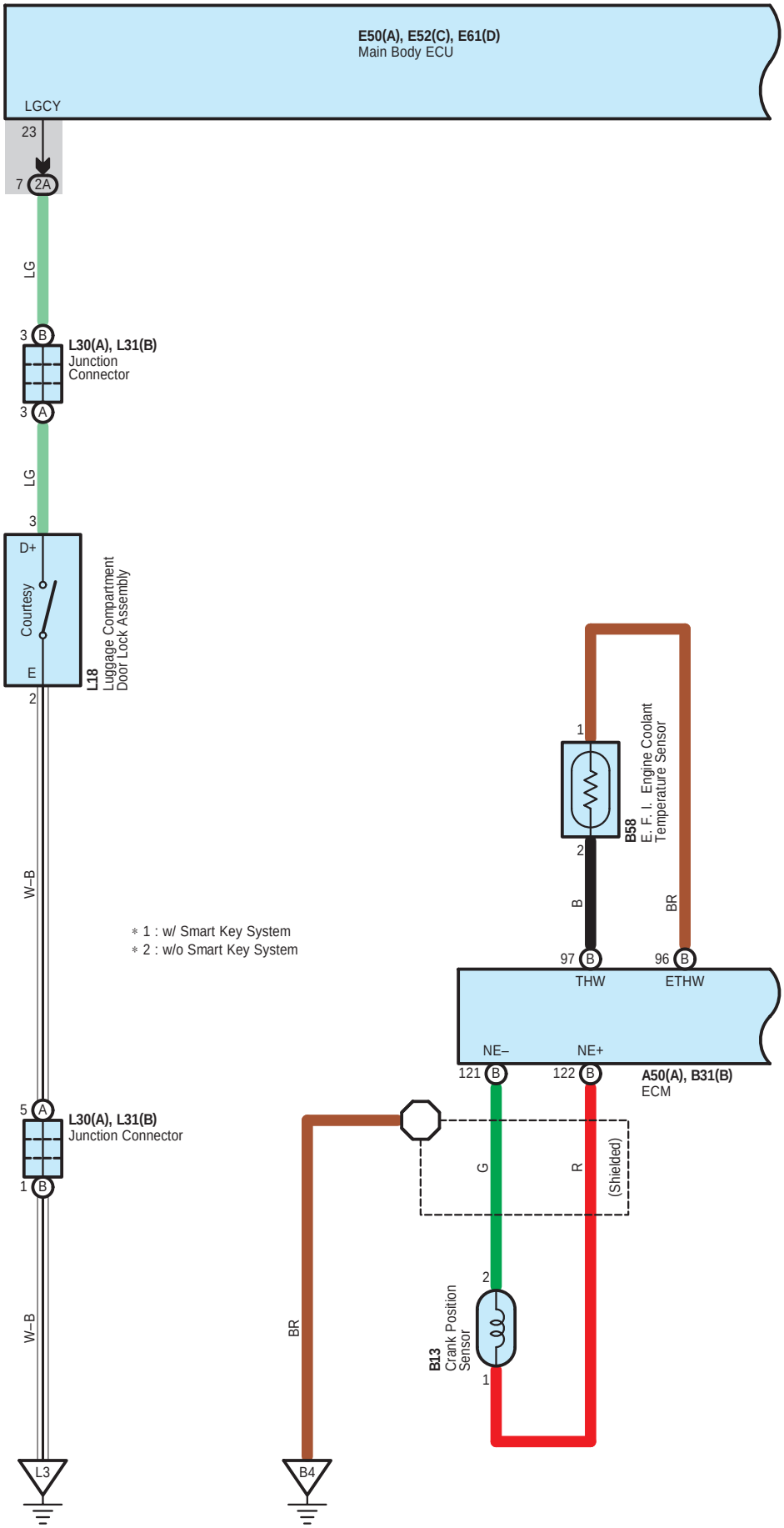
E50(A), E52(C), E61(D)
Main Body ECU
LGCY
23
7 2A
LG
3 B
L30(A), L31(B)
Junction
Connector
3 A
LG
3
D+
Courtesy
E
L18
Luggage Compartment
Door Lock Assembly
2
W–B
5 A
L30(A), L31(B)
Junction Connector
1 B
W–B
L3
∗ 1 : w/ Smart Key System
∗ 2 : w/o Smart Key System
1
2
B58
E. F. I. Engine Coolant
Temperature Sensor
B
BR
97 B
96 B
THW
ETHW
NE–
NE+
121 B
122 B
A50(A), B31(B)
ECM
G
R
(Shielded)
2
B13
Crank Position
Sensor
1
BR
B4

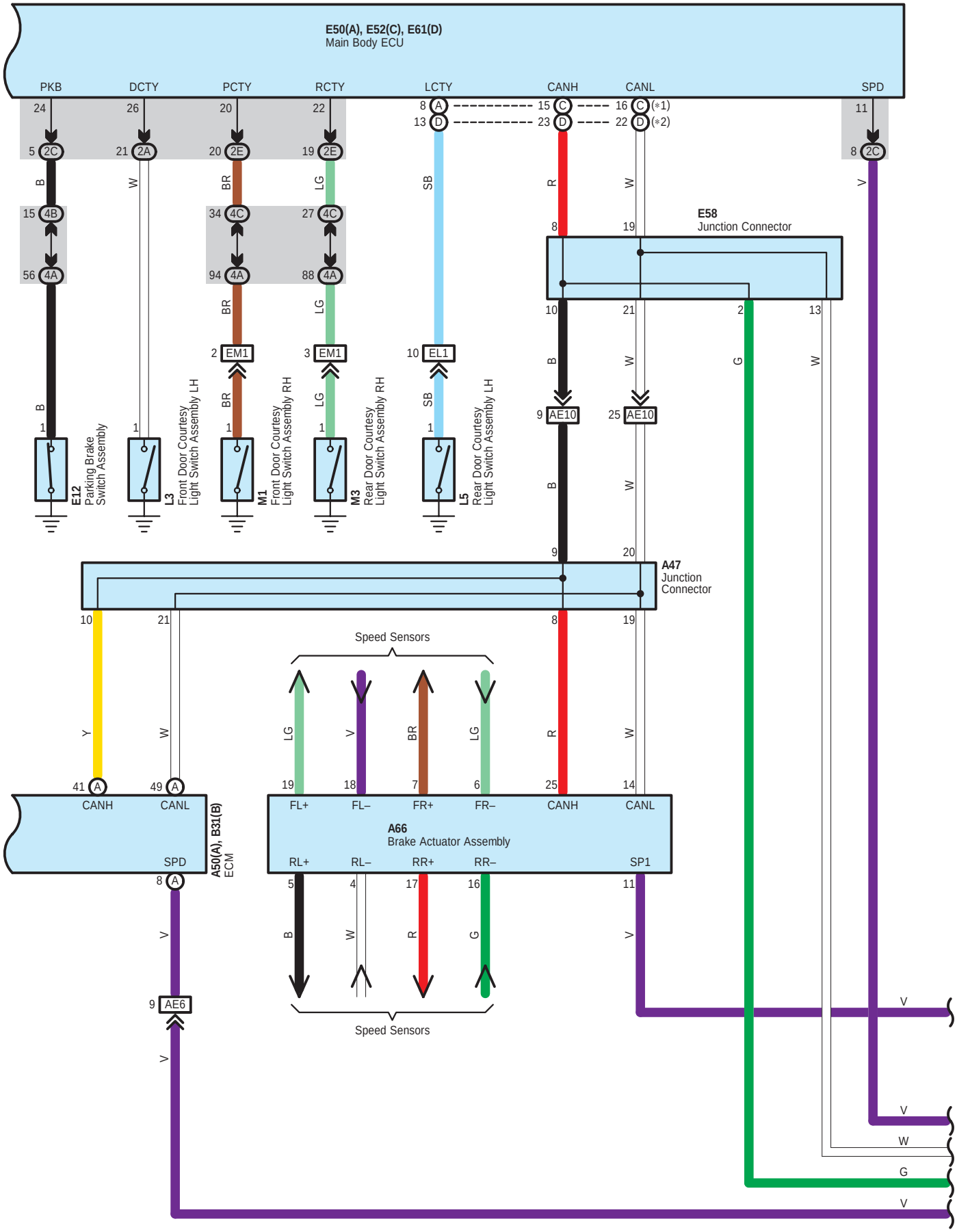
E50(A), E52(C), E61(D)
Main Body ECU
PKB
DCTY
PCTY
RCTY
LCTY
CANH
CANL
SPD
E12
Parking Brake
Switch Assembly
L3
Front Door Courtesy
Light Switch Assembly LH
M1
Front Door Courtesy
Light Switch Assembly RH
M3
Rear Door Courtesy
Light Switch Assembly RH
L5
Rear Door Courtesy
Light Switch Assembly LH
E58
Junction Connector
A47
Junction
Connector
Speed Sensors
A66
Brake Actuator Assembly
FL+
FL–
FR+
FR–
RL+
RL–
RR+
RR–
SP1
A50(A), B31(B)
ECM
AE10
AE6
EM1
EL1

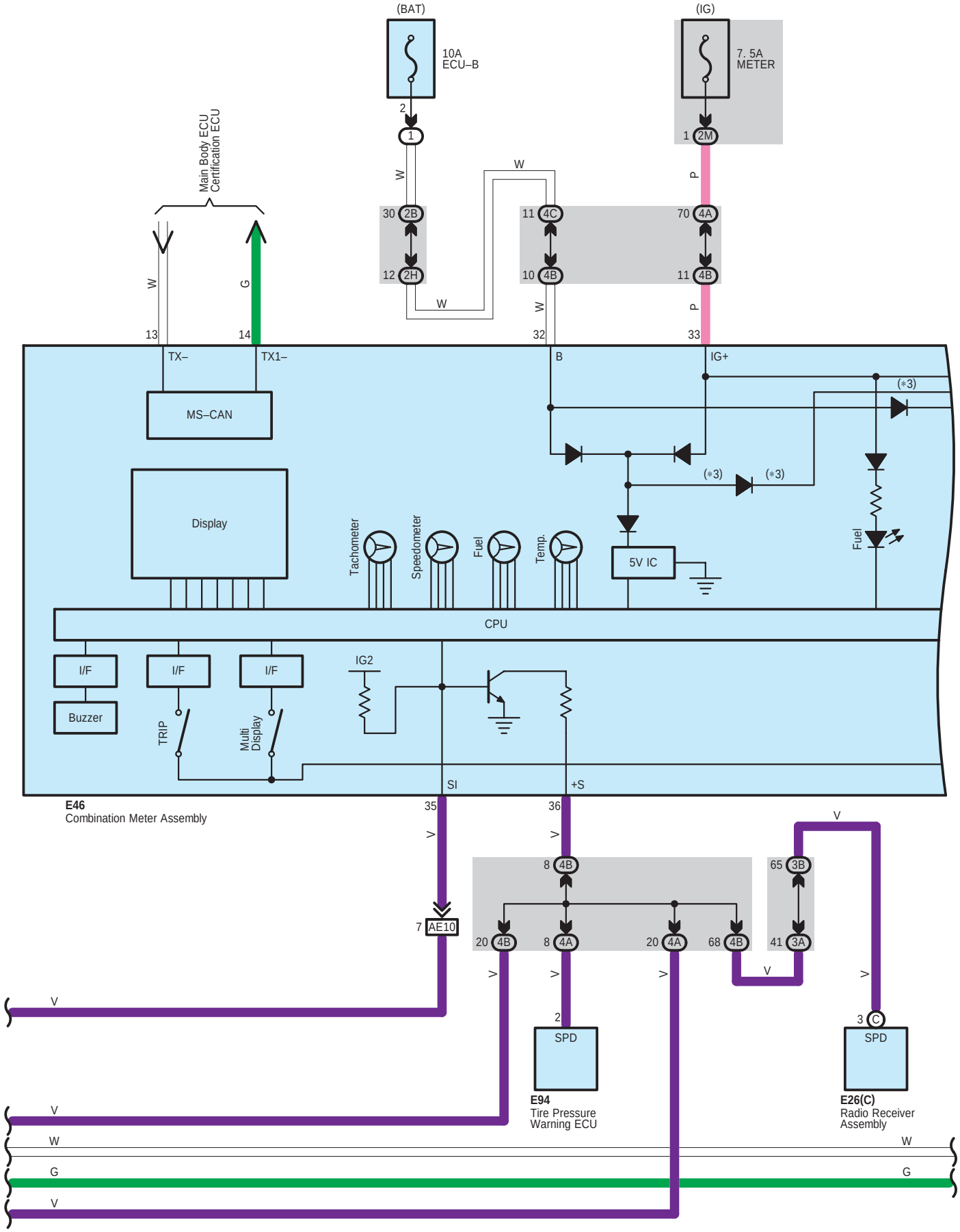
(BAT)
10A
ECU–B
2
1
W
30 2B
12 2H
W
W
11 4C
10 4B
W
32
(IG)
7. 5A
METER
1 2M
P
70 4A
11 4B
P
33
Main Body ECU
Certification ECU
W
13
G
14
TX–
TX1–
MS–CAN
B
IG+
(*3)
(*3)
(*3)
Display
Tachometer
Speedometer
Fuel
Temp.
5V IC
Fuel
CPU
I/F
Buzzer
I/F
TRIP
I/F
Multi
Display
IG2
SI
+S
E46
Combination Meter Assembly
35
36
V
V
8 4B
7 AE10
20 4B
8 4A
20 4A
68 4B
65 3B
41 3A
V
V
V
V
V
2
SPD
E94
Tire Pressure
Warning ECU
3 C
SPD
E26(C)
Radio Receiver
Assembly
V
V
W
W
G
G
V

∗ 3 : Optitron Meter
∗ 4 : Except Optitron Meter

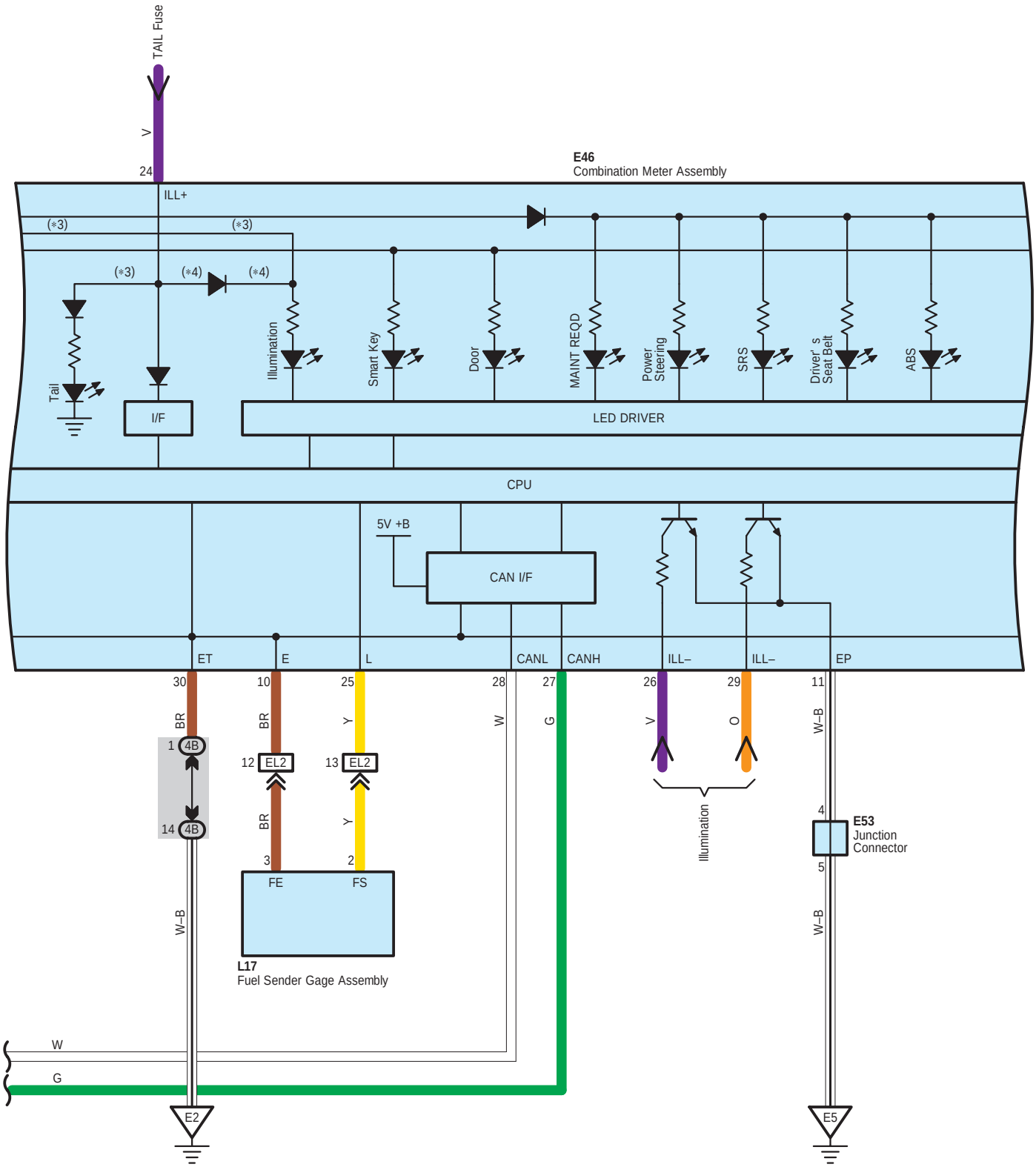

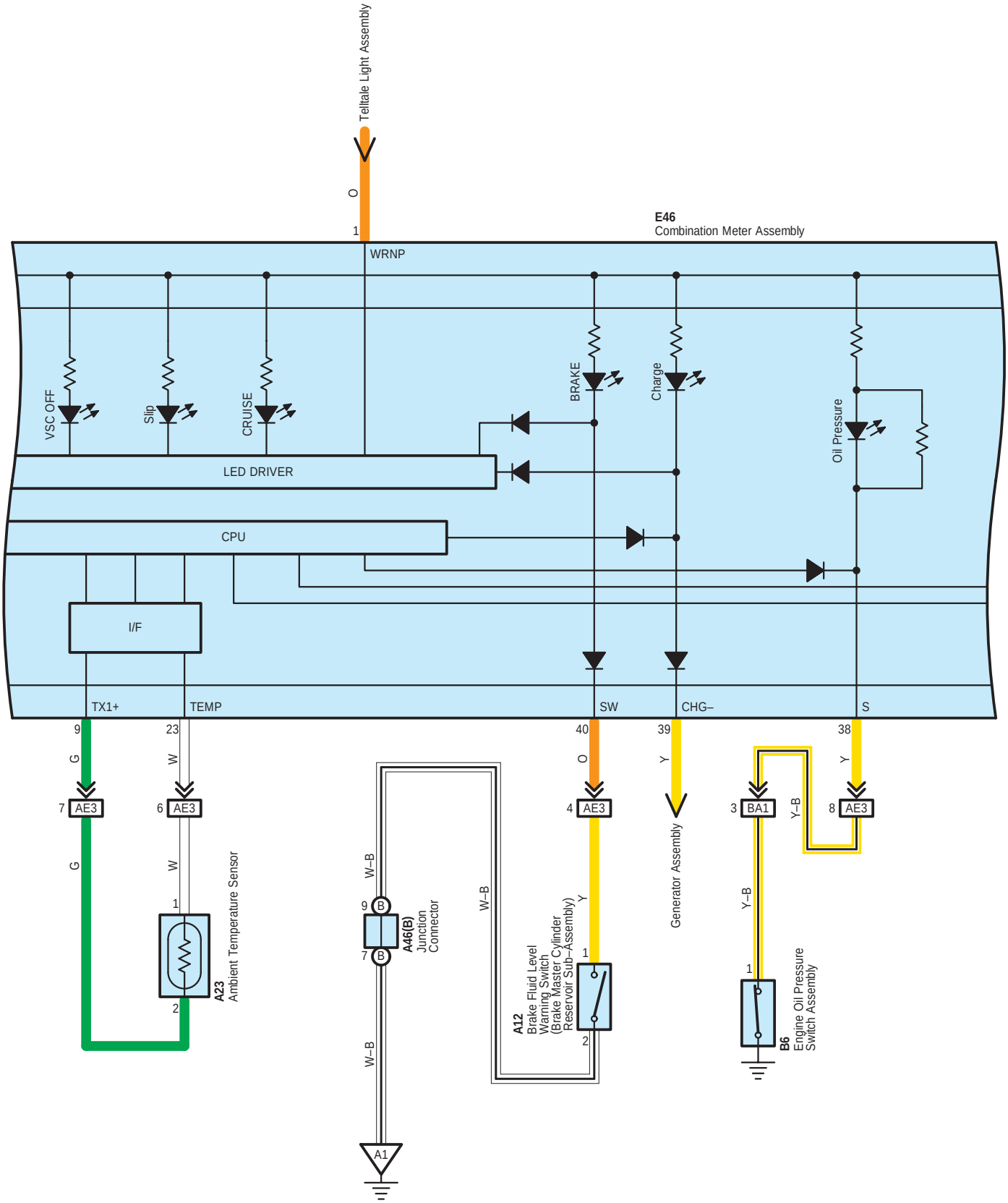
Telltale Light Assembly
O
1
E46
Combination Meter Assembly
WRNP
VSC OFF
Slip
CRUISE
BRAKE
Charge
Oil Pressure
LED DRIVER
CPU
I/F
TX1+
TEMP
SW
CHG–
S
9
G
7
AE3
23
W
6
AE3
40
O
4
AE3
39
Y
38
Y
3
BA1
Y–B
8
AE3
Generator Assembly
G
W
1
2
A23
Ambient Temperature Sensor
W–B
9
B
7
B
A46(B)
Junction
Connector
W–B
A12
Brake Fluid Level
Warning Switch
(Brake Master Cylinder
Reservoir Sub–Assembly)
Y
1
2
Y–B
1
B6
Engine Oil Pressure
Switch Assembly
W–B
A1

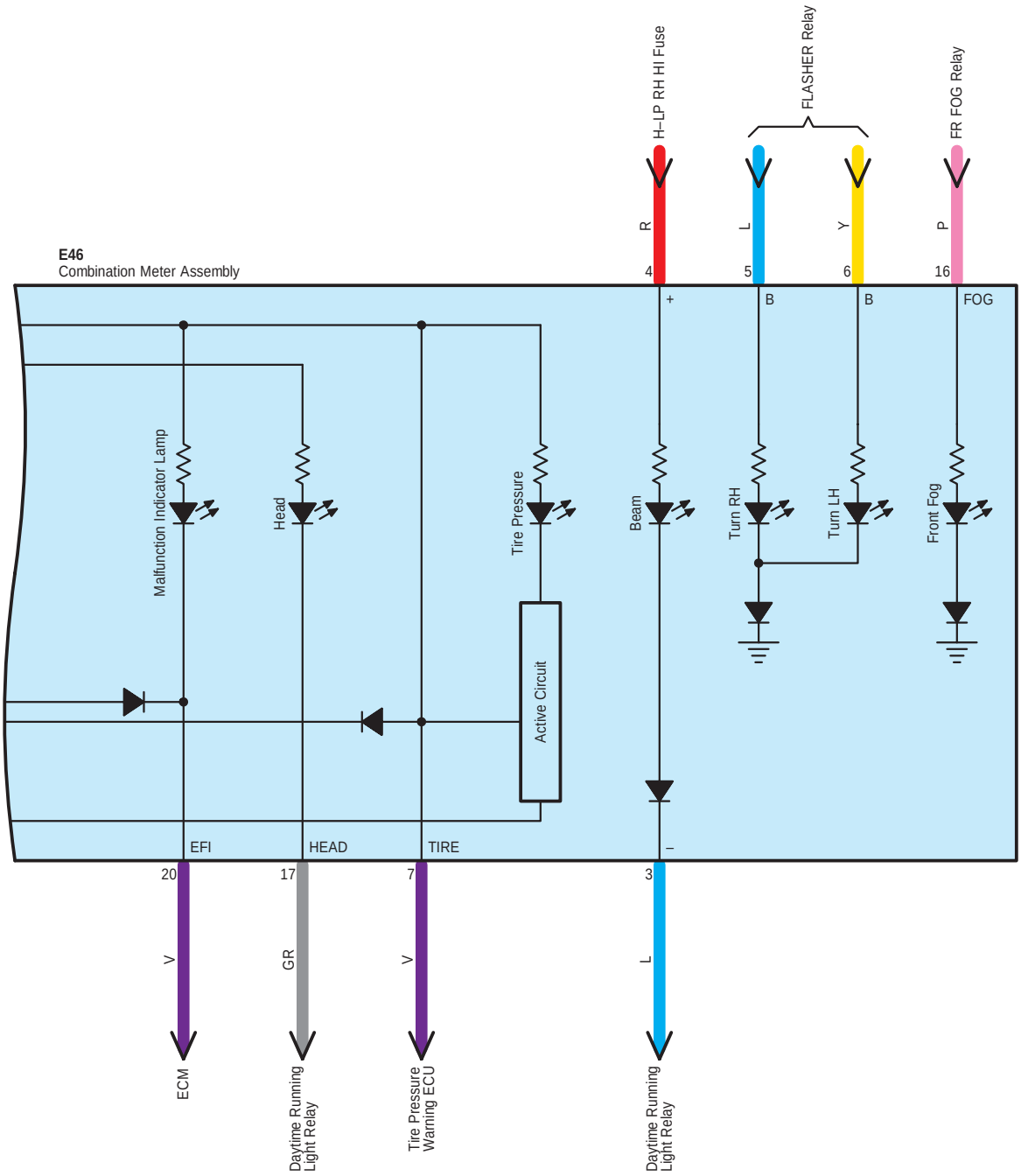
E46
Combination Meter Assembly
H–LP RH HI Fuse
FLASHER Relay
FR FOG Relay
R
L
Y
P
4
5
6
16
+
B
B
FOG
Malfunction Indicator Lamp
Head
Tire Pressure
Beam
Turn RH
Turn LH
Front Fog
Active Circuit
EFI
HEAD
TIRE
–
20
17
7
3
V
GR
V
L
ECM
Daytime Running Light Relay
Tire Pressure Warning ECU
Daytime Running Light Relay

A 12
Gray



A 23
Black



A 46
White

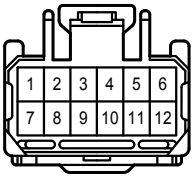

A 47
White

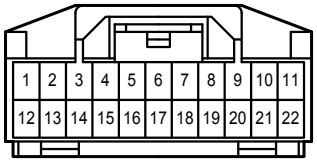

A 50
Black

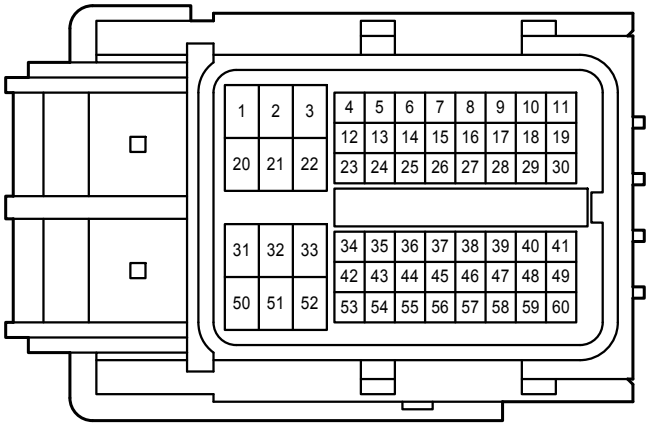

A 66
Black

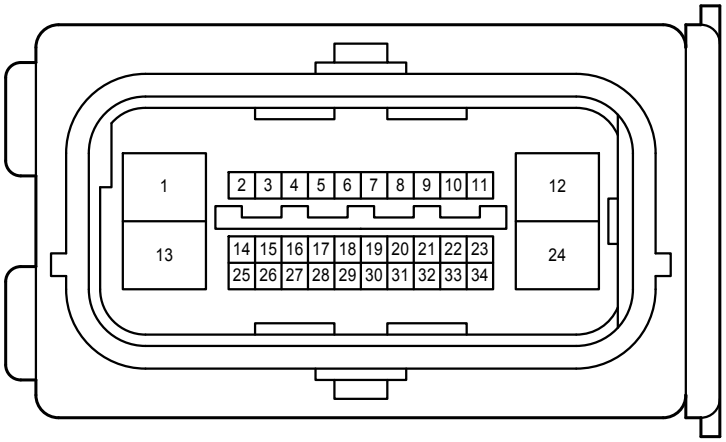

B 6
Gray



B 13
Black

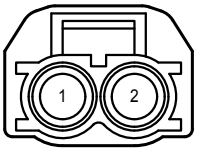

B 31
Black

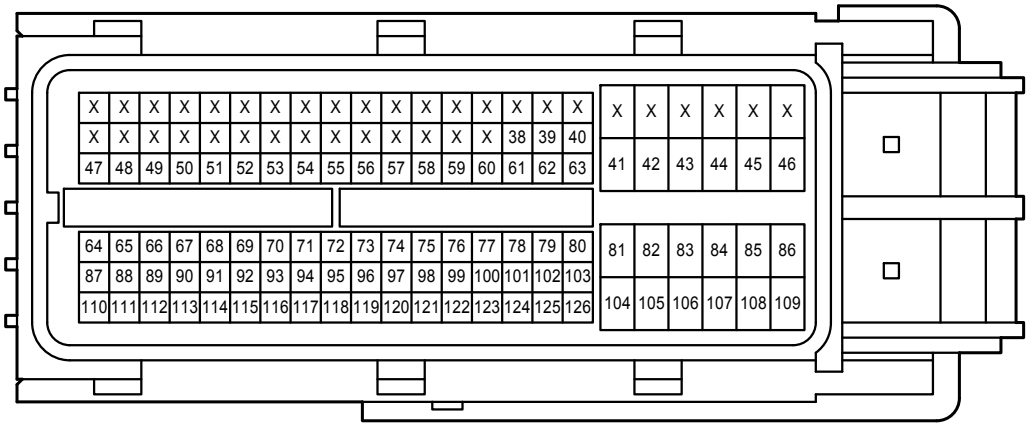

B 58
Gray



E 12
White



E 26
White

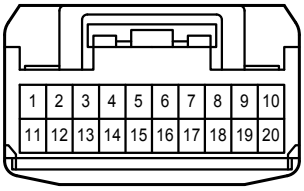

E 46
White

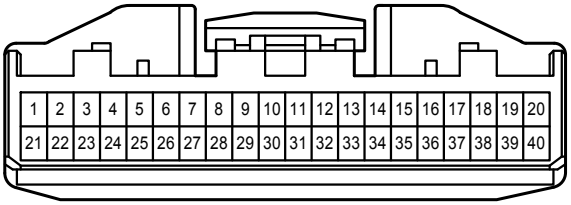

E 50
White

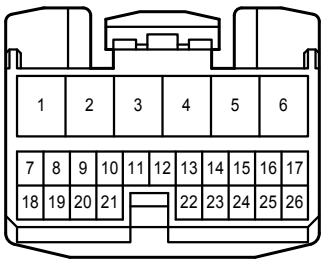

E 52
White

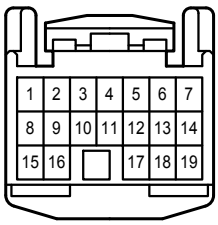

E 53
White



E 58
Gray

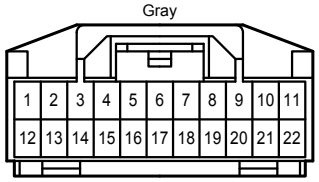

E 61
White

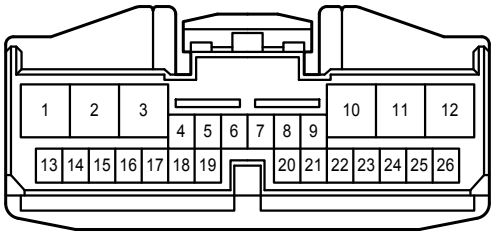

E 94
Black



L 3
Black



L 5
Black



L 17
White



L 18
Black

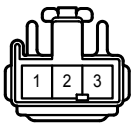

L 30
White

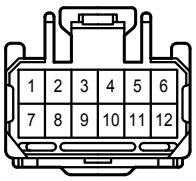

L 31
White

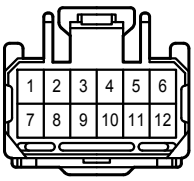

M 1
Black



M 3
Black



2A
White

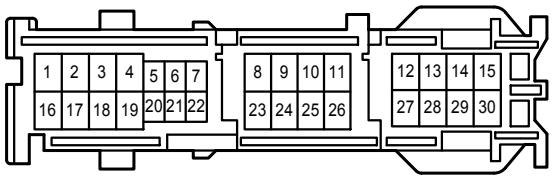

2B
White

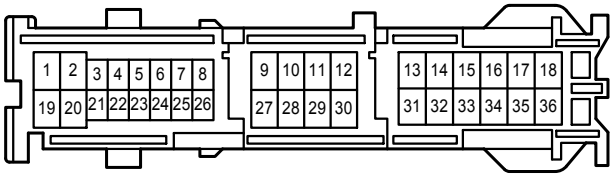

2C
White

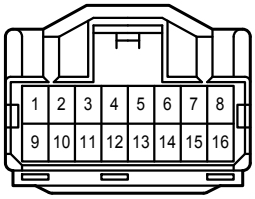

2E
White

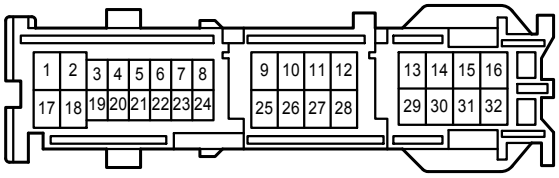

2H
White

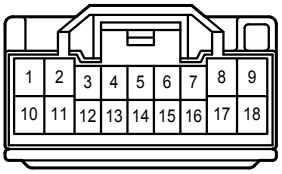

2M
White

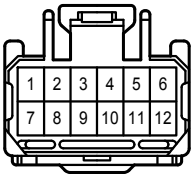

3A
White

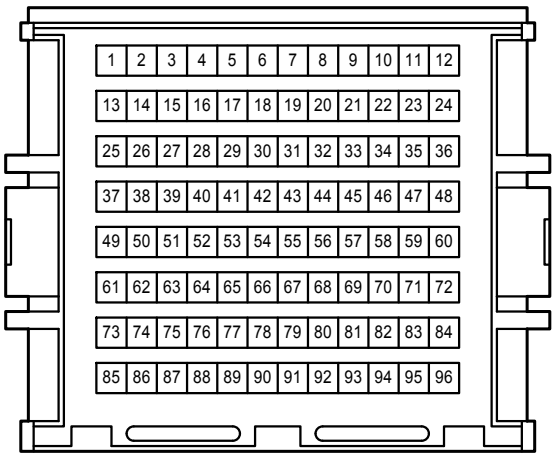

3B
White

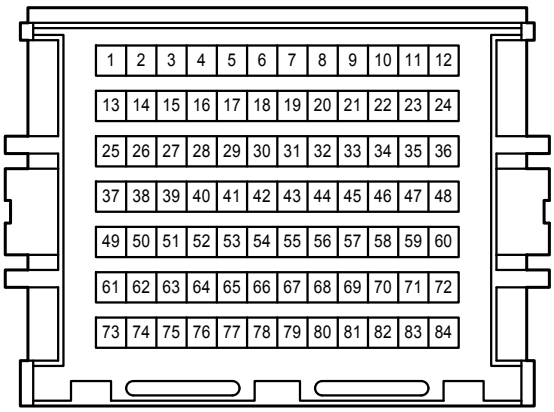

4A
White

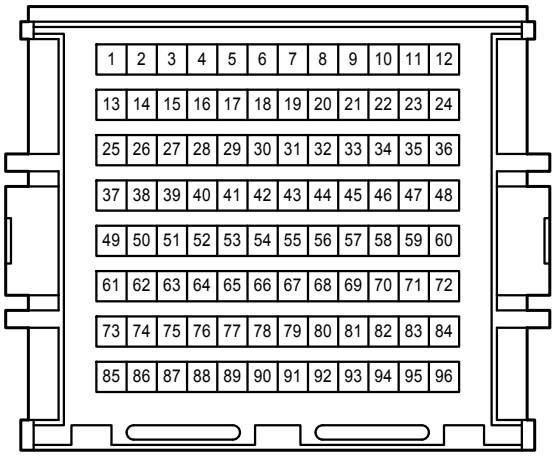

4B
White

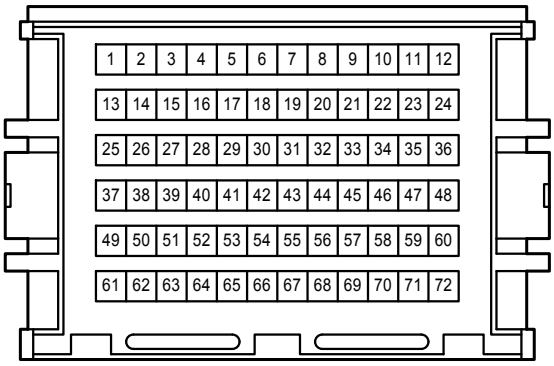

4C
White

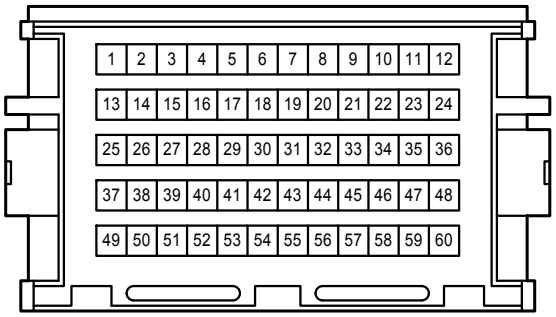

AE3
White

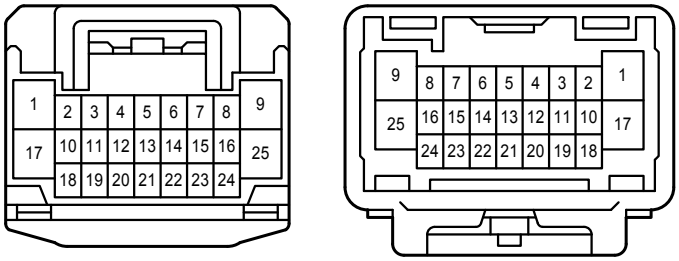

AE6
Gray

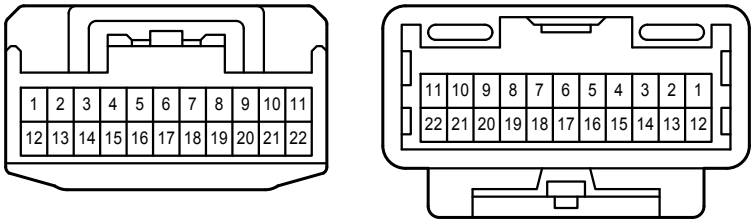

AE10
Gray

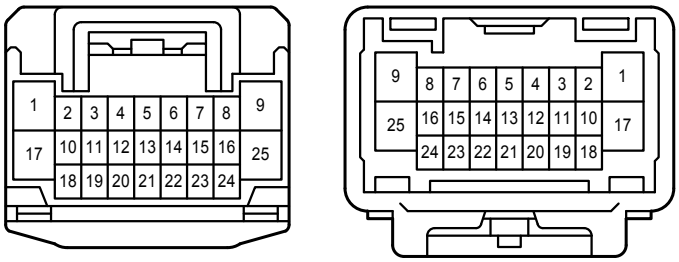

BA1
White

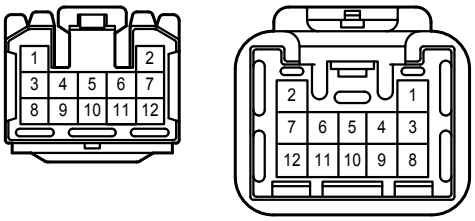

EL1
White

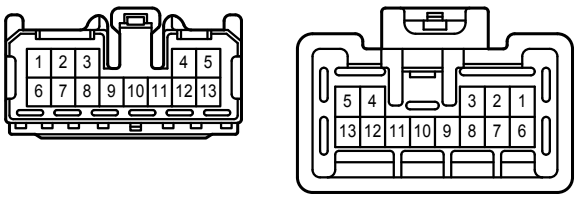

EL2
White

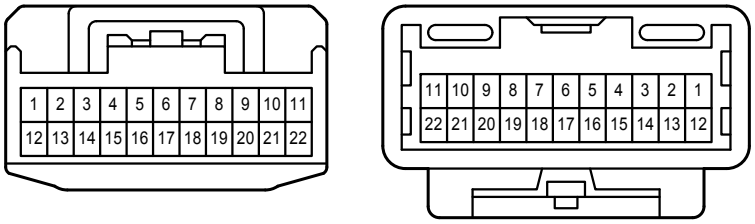

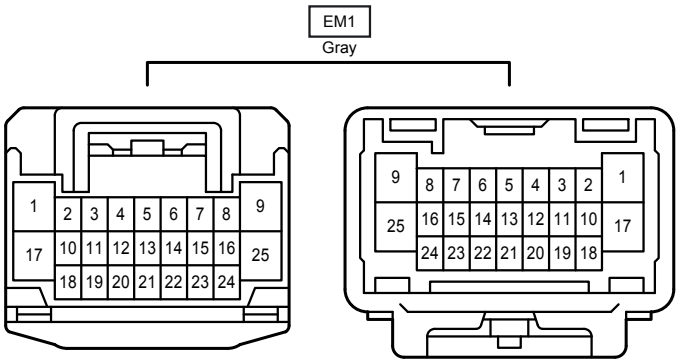
EM1
Gray
1
2
3
4
5
6
7
8
9
17
10
11
12
13
14
15
16
25
18
19
20
21
22
23
24
9
8
7
6
5
4
3
2
1
25
16
15
14
13
12
11
10
17
24
23
22
21
20
19
18

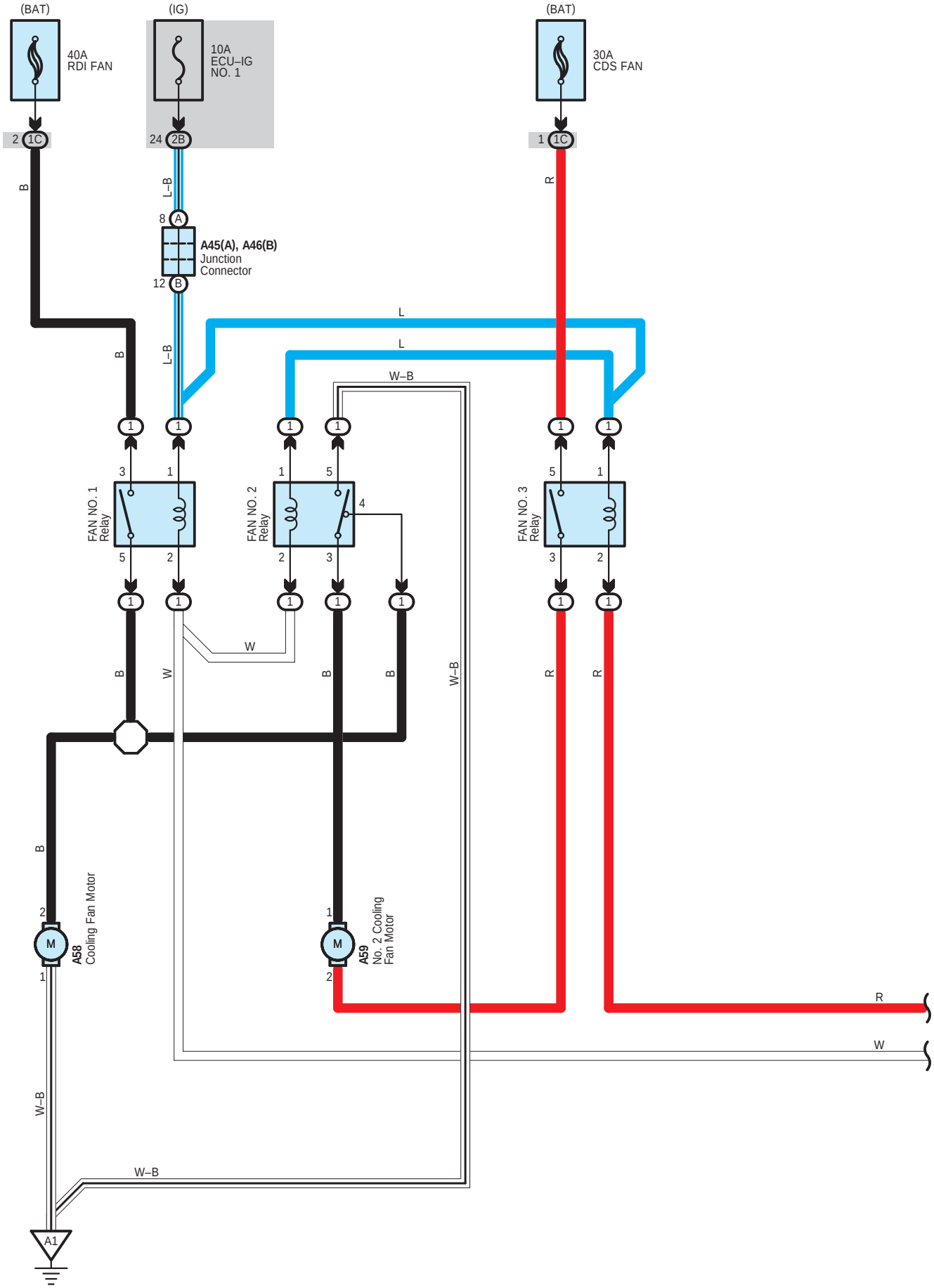
(BAT)
(IG)
(BAT)
40A
RDI FAN
10A
ECU–IG
NO. 1
30A
CDS FAN
2 1C
24 2B
1 1C
B
L–B
R
8 A
A45(A), A46(B)
Junction
Connector
12 B
L
L
W–B
B
L–B
FAN NO. 1
Relay
FAN NO. 2
Relay
FAN NO. 3
Relay
W
B
W
B
B
W–B
R
R
B
A58
Cooling Fan Motor
A59
No. 2 Cooling
Fan Motor
R
W
W–B
W–B
A1

∗ 1 : Automatic A/C
∗ 2 : Manual A/C

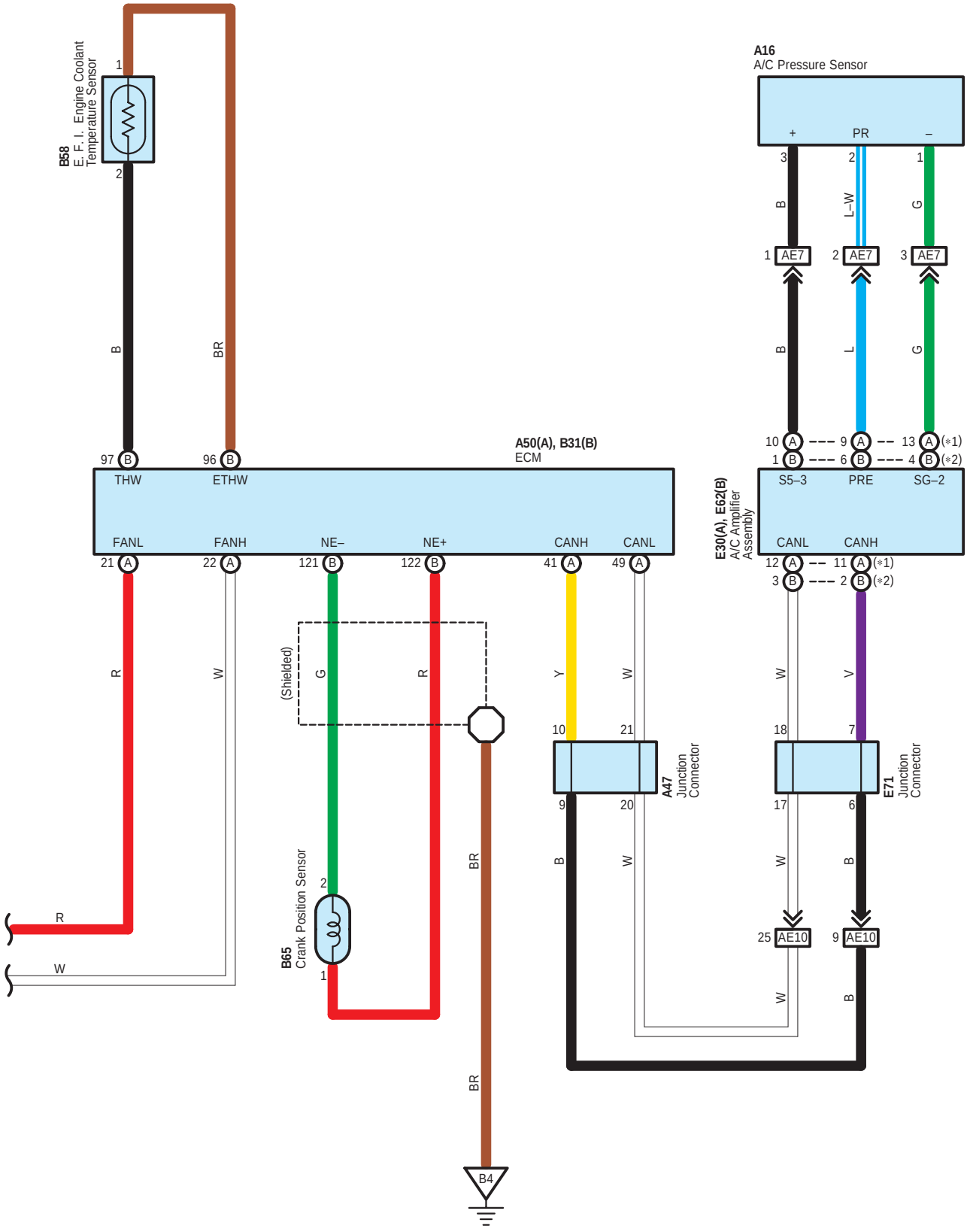

A 16
Black

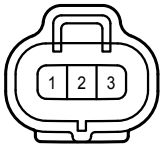

A 45
White

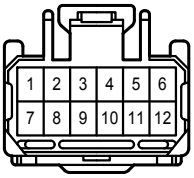

A 46
White

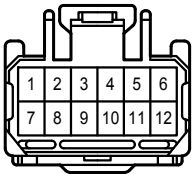

A 47
White

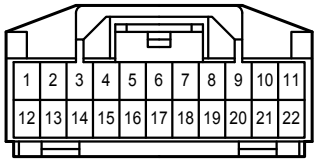

A 50
Black

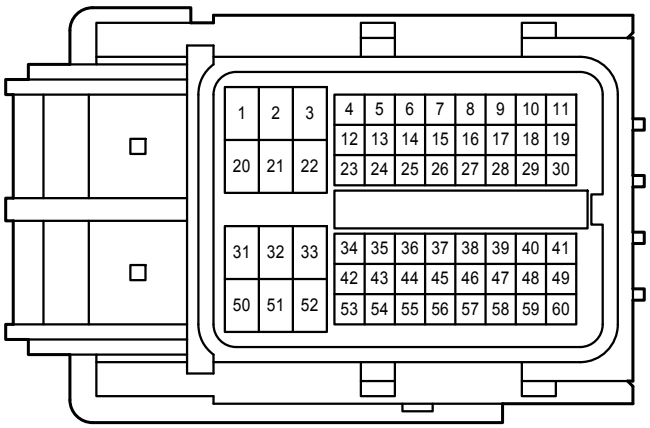

A 58
Gray

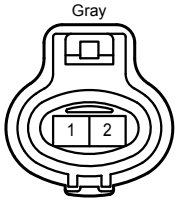

A 59
Black

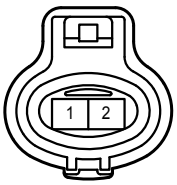

B 31
Black

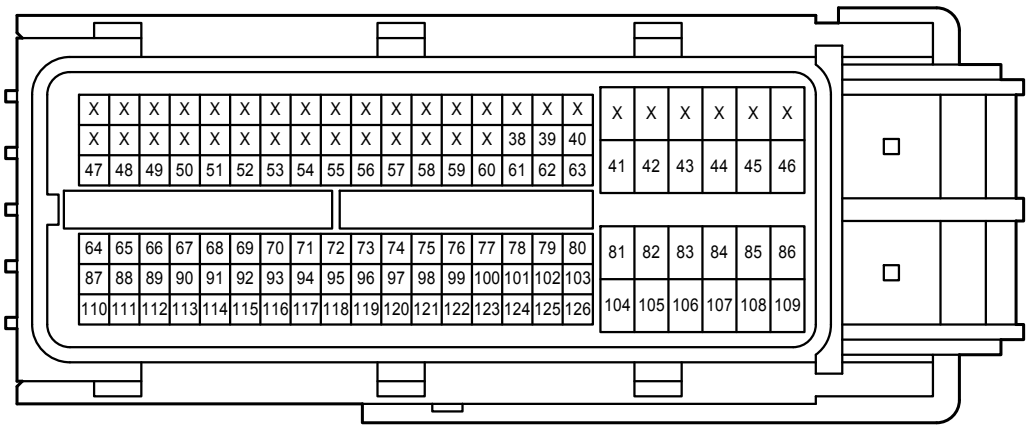

B 58
Gray



B 65
Gray



E 30
White

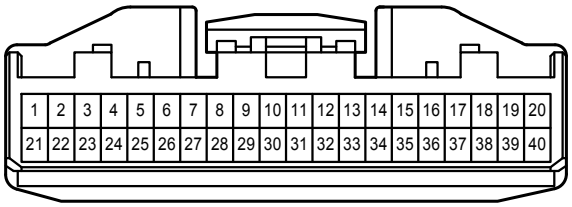

E 62
White

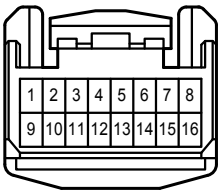

E 71
White

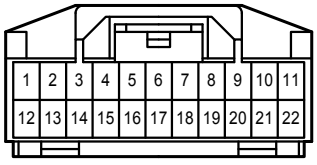

1C
White

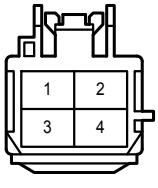

2B
White

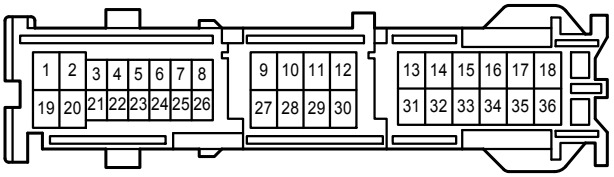

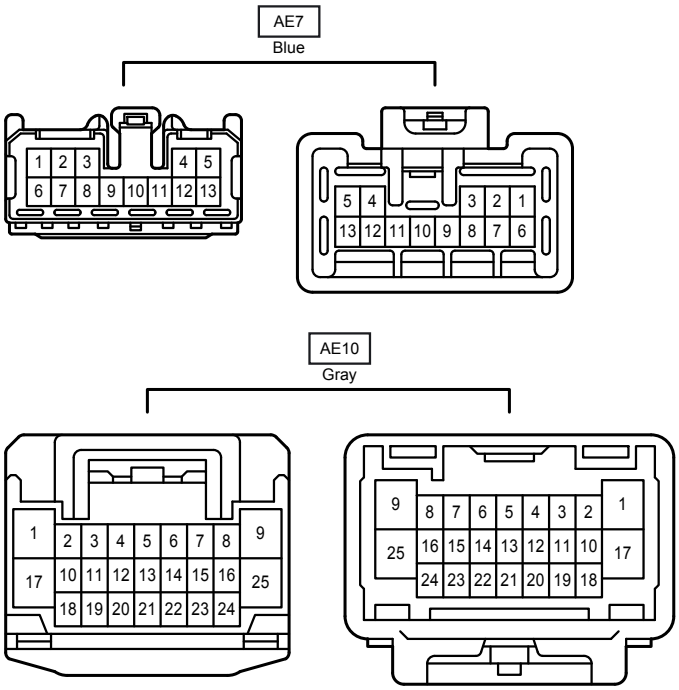
AE7
Blue
1 2 3 4 5
6 7 8 9 10 11 12 13
5 4 3 2 1
13 12 11 10 9 8 7 6
AE10
Gray
1 2 3 4 5 6 7 8 9
17 10 11 12 13 14 15 16 25
18 19 20 21 22 23 24
9 8 7 6 5 4 3 2 1
25 16 15 14 13 12 11 10 17
24 23 22 21 20 19 18

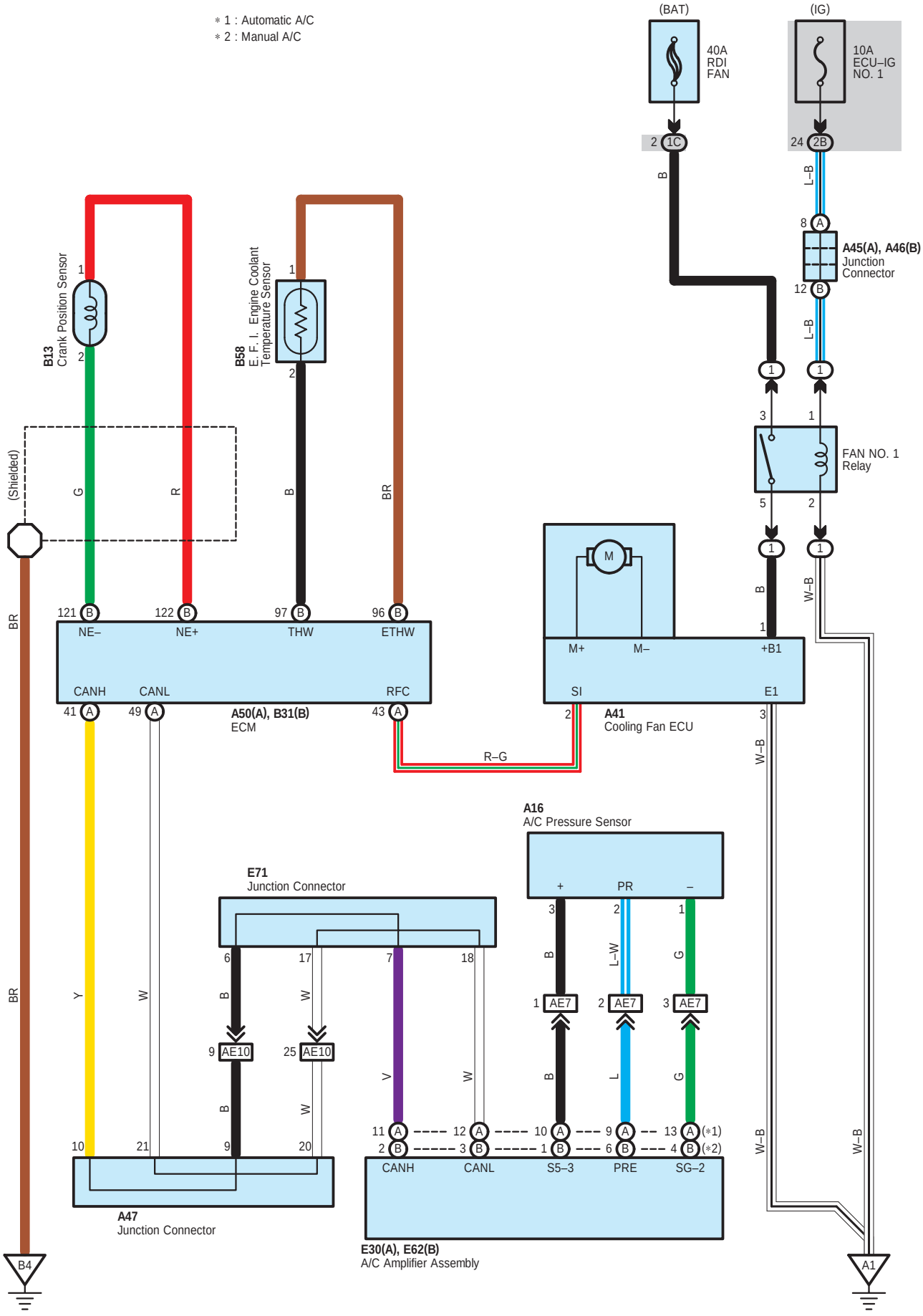
* 1 : Automatic A/C
* 2 : Manual A/C
(BAT)
(IG)
40A
RDI
FAN
10A
ECU–IG
NO. 1
2 1C
24 2B
B
L–B
8 A
A45(A), A46(B)
Junction
Connector
12 B
L–B
1
1
3
1
FAN NO. 1
Relay
5
2
1
1
B
W–B
1
B13
Crank Position Sensor
1
2
G
R
B58
E. F. I. Engine Coolant
Temperature Sensor
1
2
B
BR
(Shielded)
BR
121 B
122 B
97 B
96 B
NE–
NE+
THW
ETHW
CANH
CANL
RFC
41 A
49 A
43 A
A50(A), B31(B)
ECM
R–G
M
M+
M–
+B1
SI
E1
2
A41
Cooling Fan ECU
3
W–B
A16
A/C Pressure Sensor
+
PR
–
3
2
1
B
L–W
G
E71
Junction Connector
6
17
7
18
B
W
V
W
9 AE10
25 AE10
1 AE7
2 AE7
3 AE7
B
L
G
BR
Y
W
B
W
V
W
11 A
2 B
12 A
3 B
10 A
1 B
9 A
6 B
13 A (*1)
4 B (*2)
10
21
9
20
CANH
CANL
S5–3
PRE
SG–2
W–B
W–B
A47
Junction Connector
E30(A), E62(B)
A/C Amplifier Assembly
B4
A1

A 16
Black

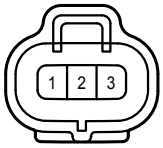

A 41
Black

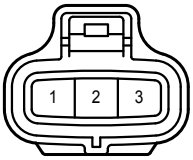

A 45
White

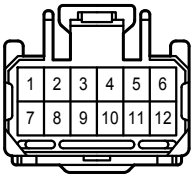

A 46
White

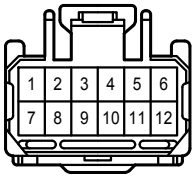

A 47
White

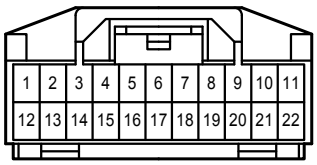

A 50
Black

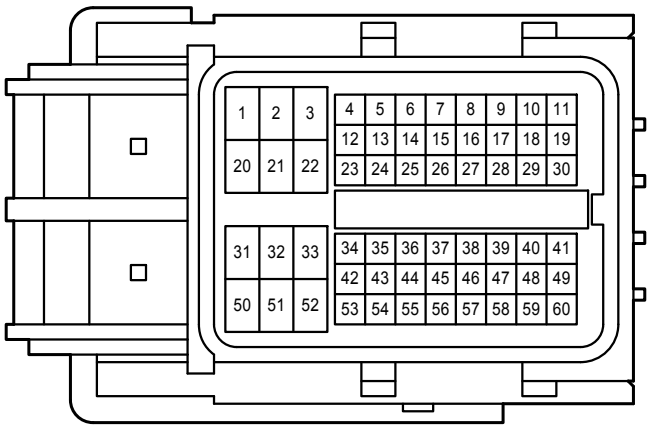

B 13
Black

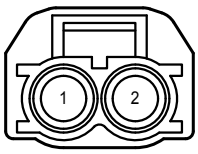

B 31
Black

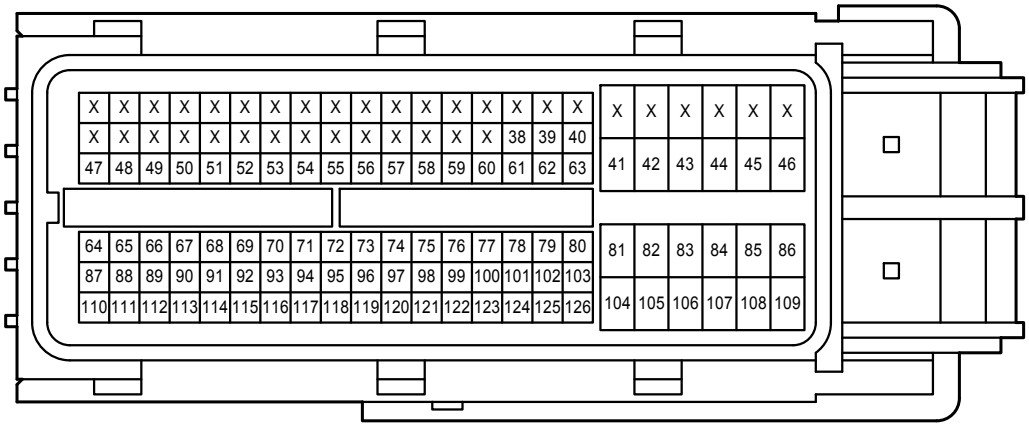

B 58
Gray



E 30
White

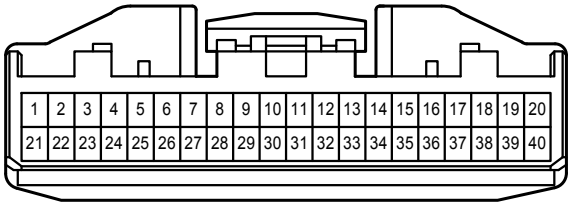

E 62
White

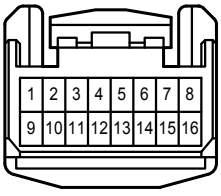

E 71
White

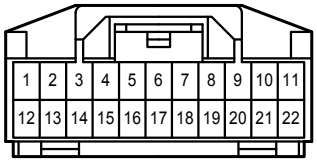

1C
White

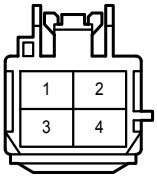

2B
White

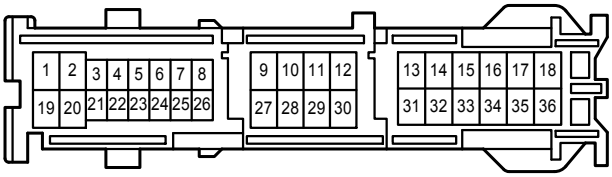

AE7
Blue

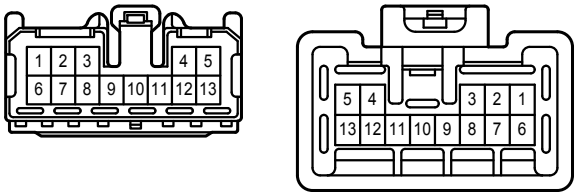

AE10
Gray

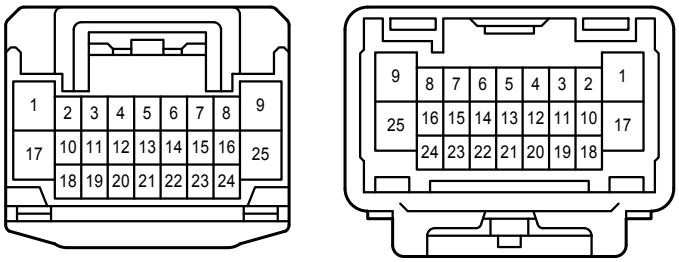

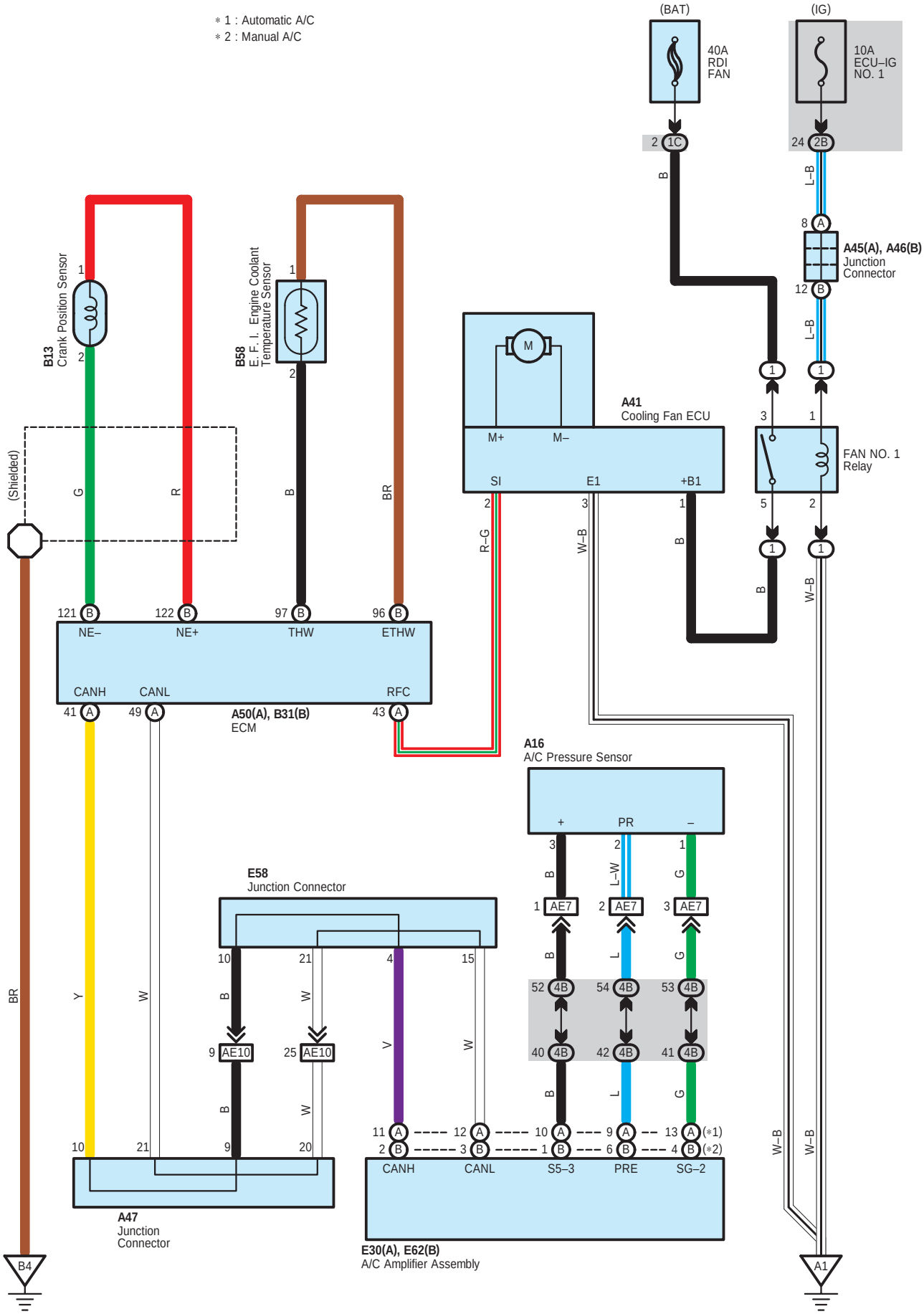
* 1 : Automatic A/C
* 2 : Manual A/C
(BAT)
(IG)
40A
RDI
FAN
10A
ECU–IG
NO. 1
2 1C
24 2B
B
L–B
8 A
A45(A), A46(B)
Junction
Connector
12 B
L–B
B13
Crank Position Sensor
1
2
B58
E. F. I. Engine Coolant
Temperature Sensor
1
2
M
M+
M–
A41
Cooling Fan ECU
SI
E1
+B1
2
3
1
R–G
W–B
B
3
1
5
2
FAN NO. 1
Relay
1
1
1
1
B
W–B
(Shielded)
G
R
B
BR
121 B
122 B
97 B
96 B
NE–
NE+
THW
ETHW
CANH
CANL
RFC
41 A
49 A
43 A
A50(A), B31(B)
ECM
A16
A/C Pressure Sensor
+
PR
–
3
2
1
B
L–W
G
1 AE7
2 AE7
3 AE7
B
L
G
52 4B
54 4B
53 4B
40 4B
42 4B
41 4B
B
L
G
E58
Junction Connector
10
21
4
15
B
W
V
W
9 AE10
25 AE10
B
W
BR
Y
W
10
21
9
20
11 A
2 B
12 A
3 B
10 A
1 B
9 A
6 B
13 A (*1)
4 B (*2)
CANH
CANL
S5–3
PRE
SG–2
A47
Junction
Connector
E30(A), E62(B)
A/C Amplifier Assembly
W–B
W–B
B4
A1

A 16
Black

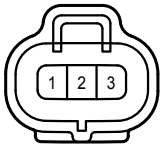

A 41
Black

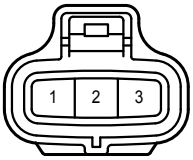

A 45
White

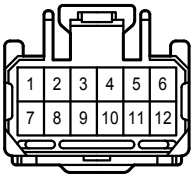

A 46
White

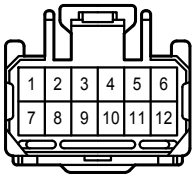

A 47
White

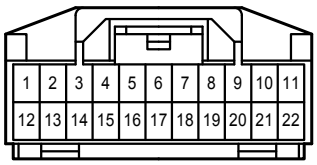

A 50
Black

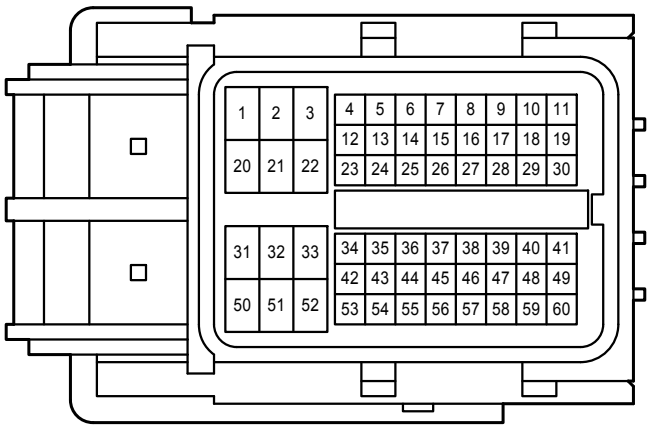

B 13
Black

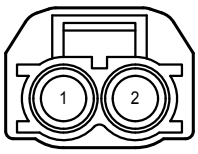

B 31
Black

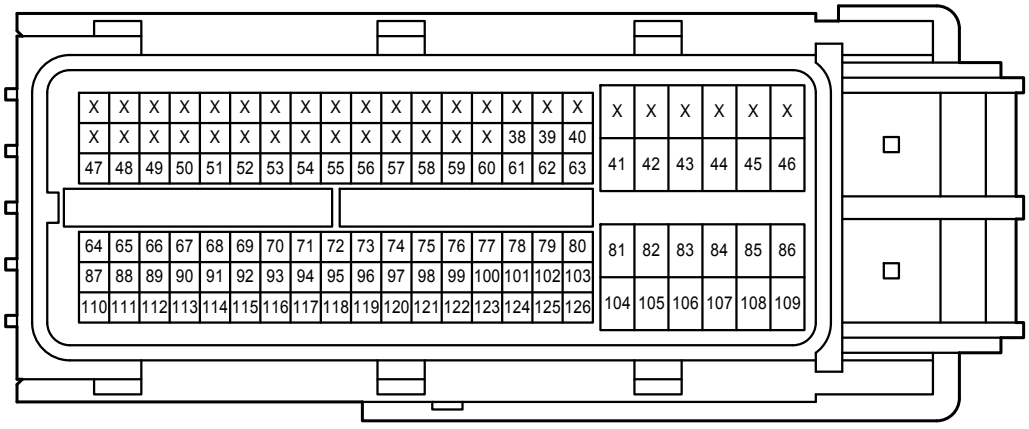

B 58
Gray



E 30
White

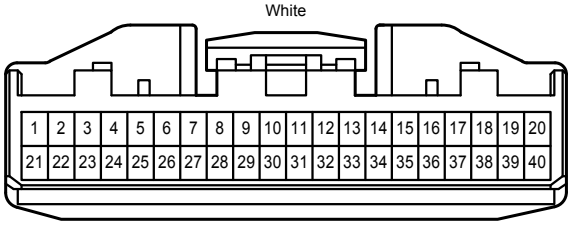

E 58
Gray

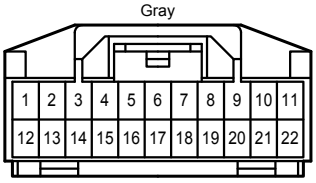

E 62
White

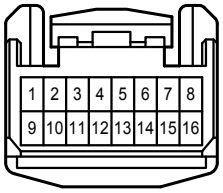

1C
White

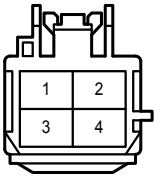

2B
White

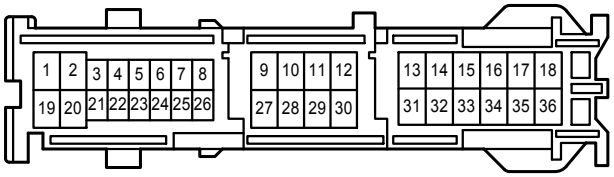

4B
White

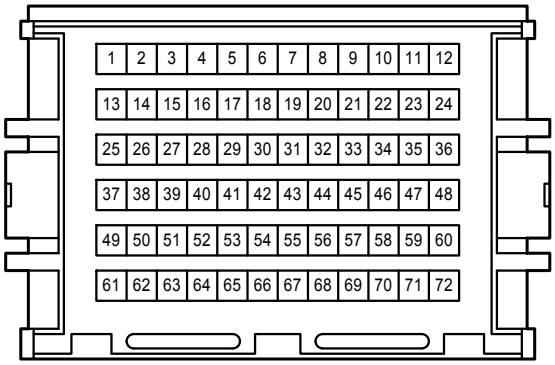

AE7
Blue

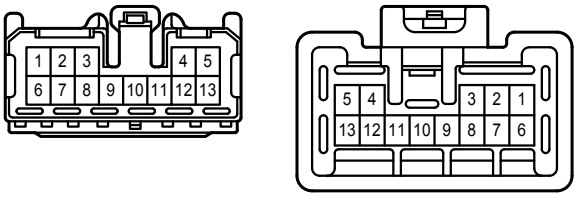

AE10
Gray

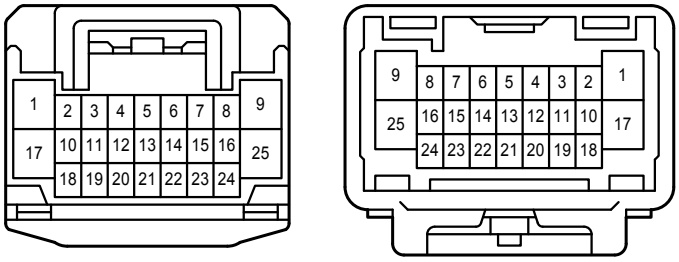

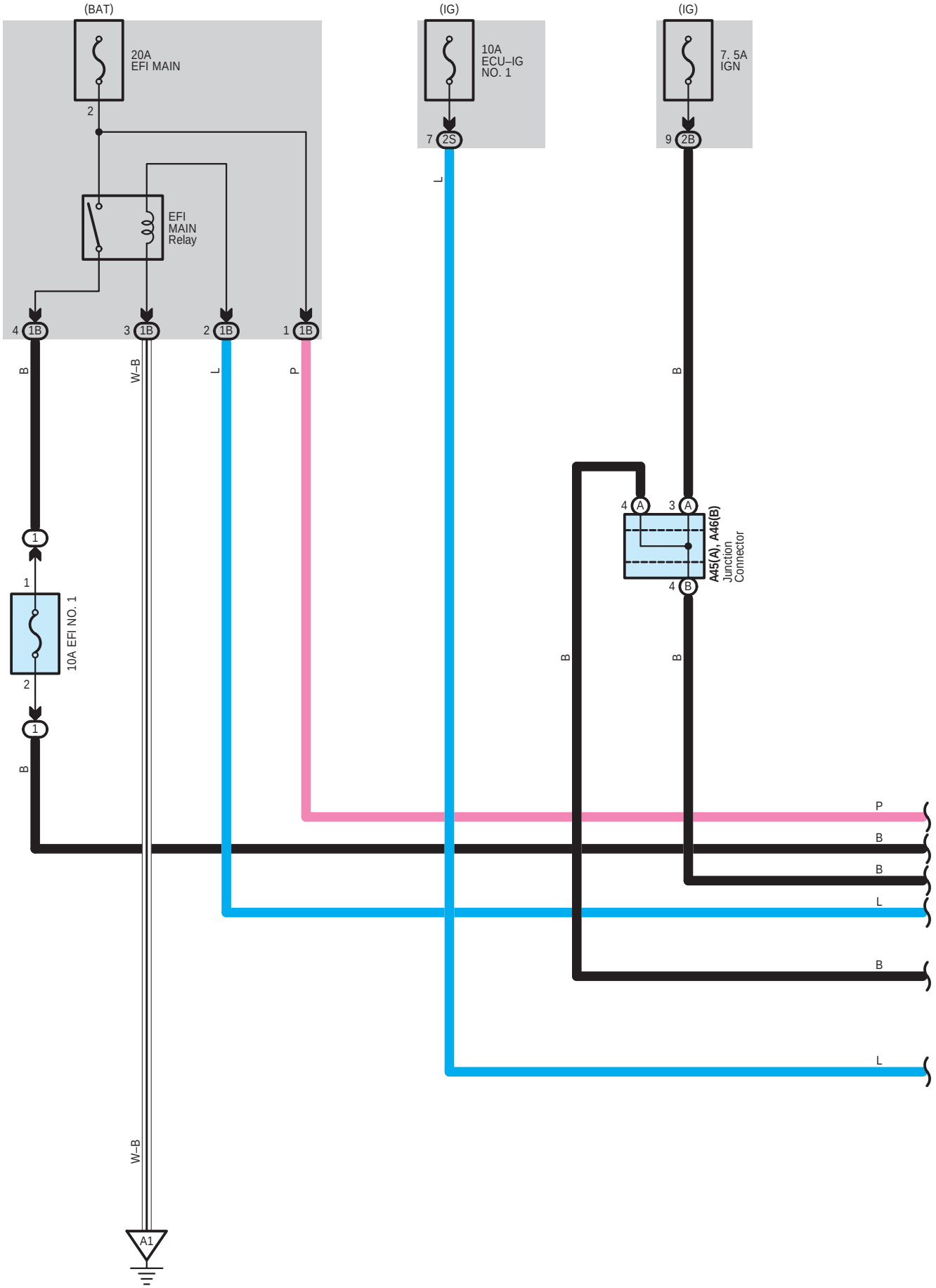
(BAT)
20A
EFI MAIN
2
EFI
MAIN
Relay
4 1B
3 1B
2 1B
1 1B
B
W–B
L
P
1
1
10A EFI NO. 1
2
1
B
W–B
A1
(IG)
10A
ECU–IG
NO. 1
7 2S
L
(IG)
7. 5A
IGN
9 2B
B
4 A
3 A
4 B
A45(A), A46(B)
Junction
Connector
B
B
P
B
B
L
B
L

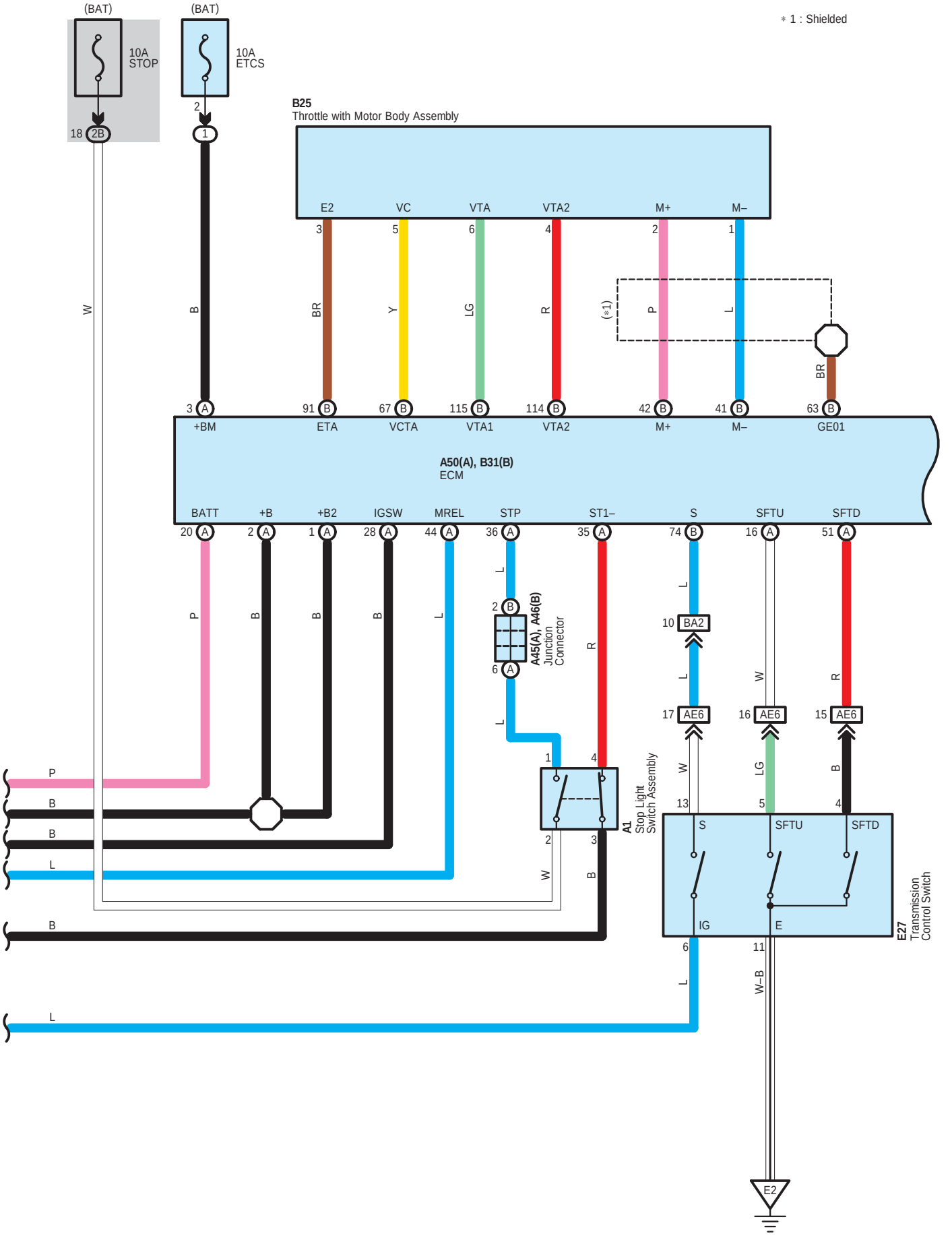
(BAT)
10A
STOP
18
2B
(BAT)
10A
ETCS
2
1
∗ 1 : Shielded
B25
Throttle with Motor Body Assembly
E2
VC
VTA
VTA2
M+
M–
3
5
6
4
2
1
W
B
BR
Y
LG
R
(∗1)
P
L
BR
3 A
91 B
67 B
115 B
114 B
42 B
41 B
63 B
+BM
ETA
VCTA
VTA1
VTA2
M+
M–
GE01
A50(A), B31(B)
ECM
BATT
+B
+B2
IGSW
MREL
STP
ST1–
S
SFTU
SFTD
20 A
2 A
1 A
28 A
44 A
36 A
35 A
74 B
16 A
51 A
P
B
B
B
L
L
R
L
W
R
2 B
6 A
A45(A), A46(B)
Junction
Connector
10 BA2
17 AE6
16 AE6
15 AE6
1
4
2
3
W
B
A1
Stop Light
Switch Assembly
13
5
4
S
SFTU
SFTD
IG
E
E27
Transmission
Control Switch
6
11
L
W–B
E2

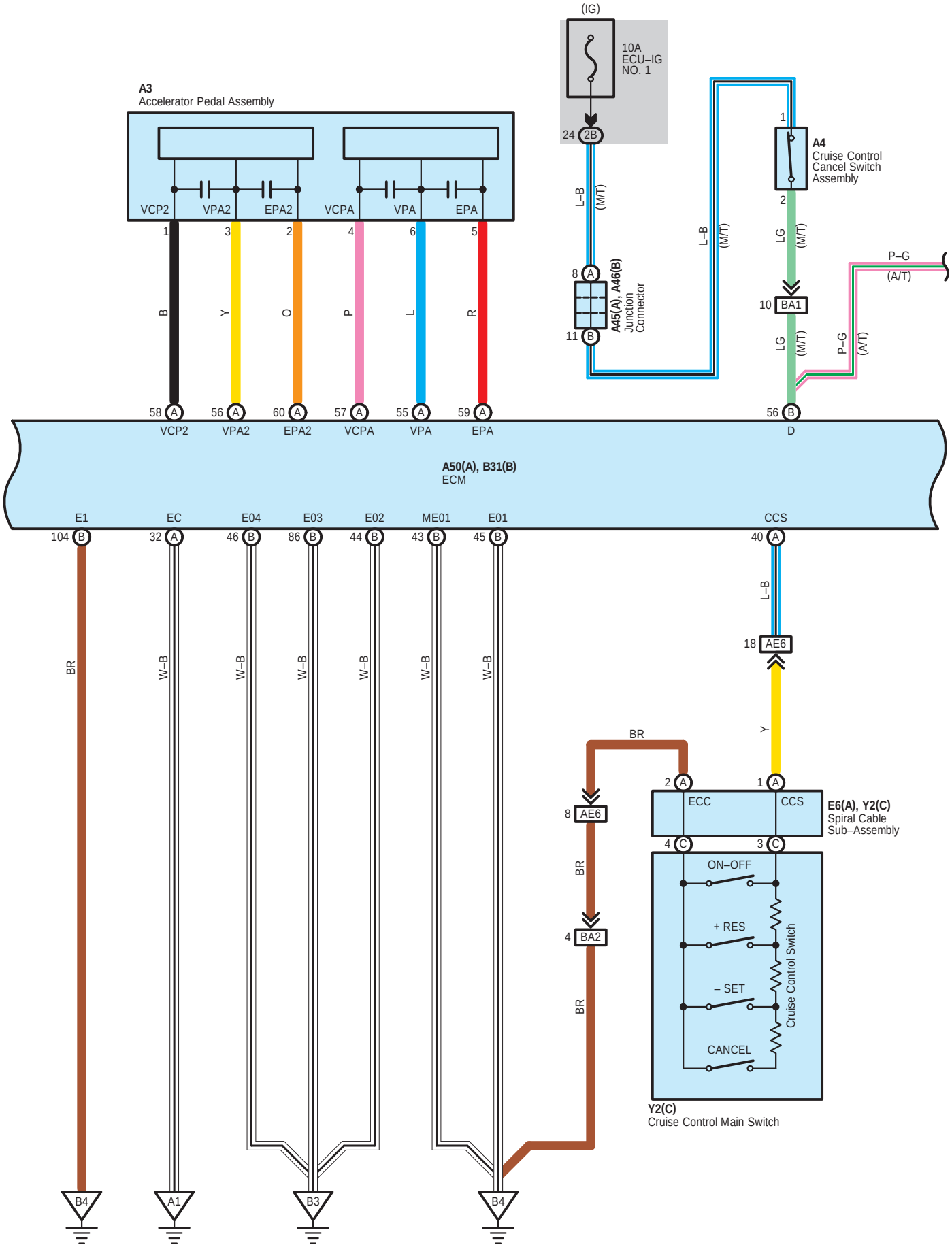
(IG)
10A
ECU–IG
NO. 1
24 2B
A3
Accelerator Pedal Assembly
VCP2
VPA2
EPA2
VCPA
VPA
EPA
1
3
2
4
6
5
B
Y
O
P
L
R
58 A
56 A
60 A
57 A
55 A
59 A
VCP2
VPA2
EPA2
VCPA
VPA
EPA
L–B
(M/T)
8 A
11 B
A45(A), A46(B)
Junction
Connector
L–B
(M/T)
1
A4
Cruise Control
Cancel Switch
Assembly
2
LG
(M/T)
10 BA1
LG
(M/T)
P–G
(A/T)
P–G
(A/T)
56 B
D
A50(A), B31(B)
ECM
E1
EC
E04
E03
E02
ME01
E01
104 B
32 A
46 B
86 B
44 B
43 B
45 B
BR
W–B
W–B
W–B
W–B
W–B
W–B
B4
A1
B3
B4
CCS
40 A
L–B
18 AE6
Y
BR
8 AE6
BR
4 BA2
BR
2 A
1 A
ECC
CCS
E6(A), Y2(C)
Spiral Cable
Sub–Assembly
4 C
3 C
ON–OFF
+ RES
– SET
CANCEL
Cruise Control Switch
Y2(C)
Cruise Control Main Switch

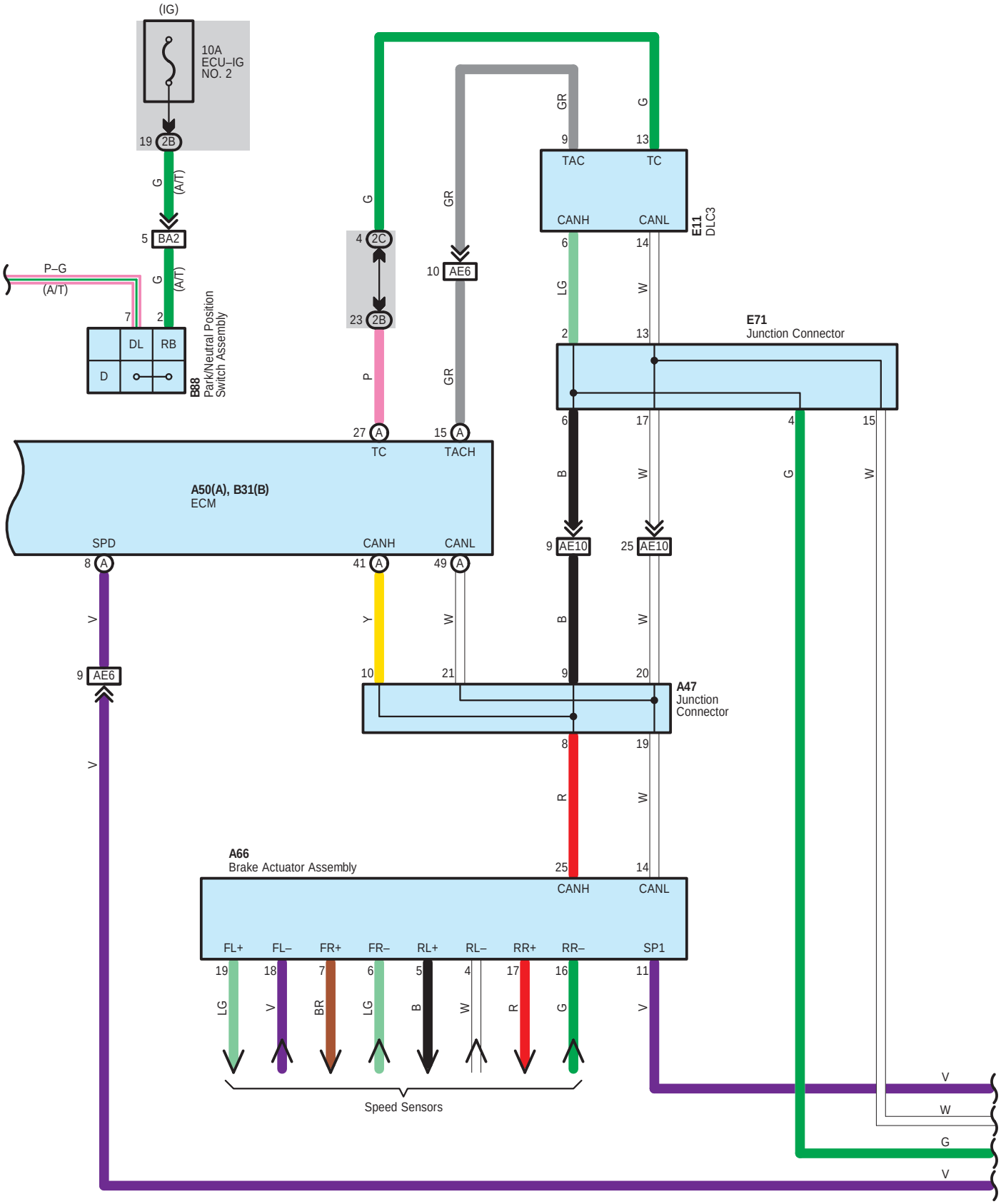
(IG)
10A
ECU–IG
NO. 2
19 2B
G
(A/T)
5 BA2
G
(A/T)
P–G
(A/T)
7
2
DL
RB
D
B88
Park/Neutral Position
Switch Assembly
4 2C
23 2B
P
27 A
TC
G
GR
10 AE6
GR
15 A
TACH
9
13
TAC
TC
CANH
CANL
E11
DLC3
6
14
LG
W
2
13
E71
Junction Connector
6
17
4
15
B
W
G
W
A50(A), B31(B)
ECM
SPD
CANH
CANL
8 A
41 A
49 A
9 AE10
25 AE10
V
Y
W
B
W
9 AE6
10
21
9
20
A47
Junction
Connector
8
19
V
R
W
A66
Brake Actuator Assembly
25
14
CANH
CANL
FL+
FL–
FR+
FR–
RL+
RL–
RR+
RR–
SP1
19
18
7
6
5
4
17
16
11
LG
V
BR
LG
B
W
R
G
V
Speed Sensors
V
W
G
V

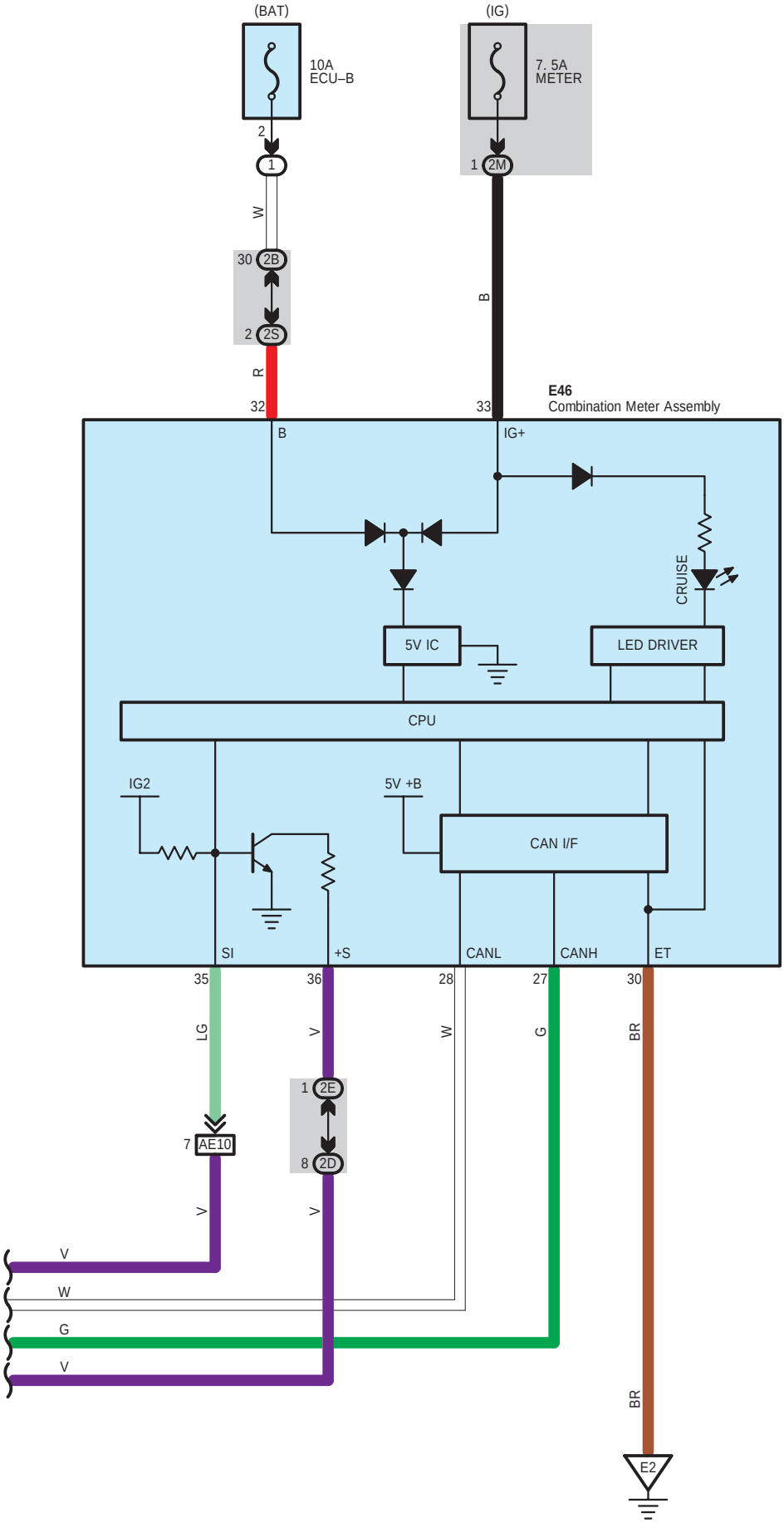
(BAT)
10A
ECU–B
2
1
W
30
2B
2
2S
R
32
(IG)
7. 5A
METER
1
2M
B
33
E46
Combination Meter Assembly
B
IG+
CRUISE
5V IC
LED DRIVER
CPU
IG2
5V +B
CAN I/F
SI
+S
CANL
CANH
ET
35
36
28
27
30
LG
V
W
G
BR
1
2E
8
2D
7
AE10
V
W
G
V
BR
E2

A 1
Black

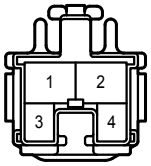

A 3
Black

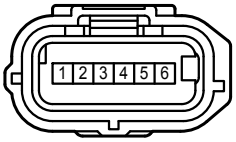

A 4
White

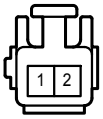

A 45
White

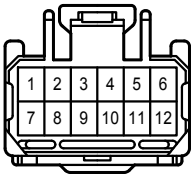

A 46
White

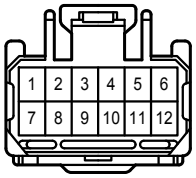

A 47
White

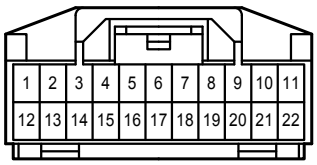

A 50
Black

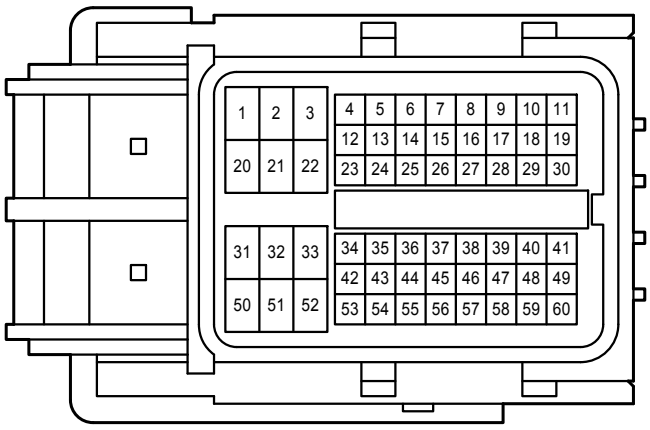

A 66
Black

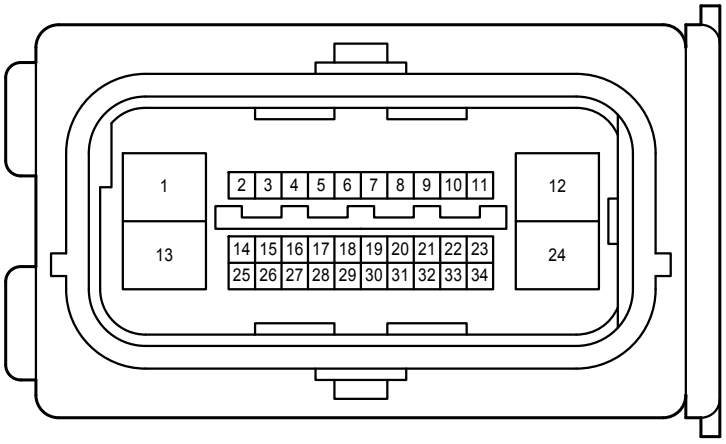

B 25
Black

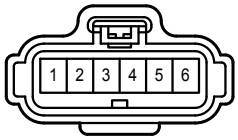

B 31
Black

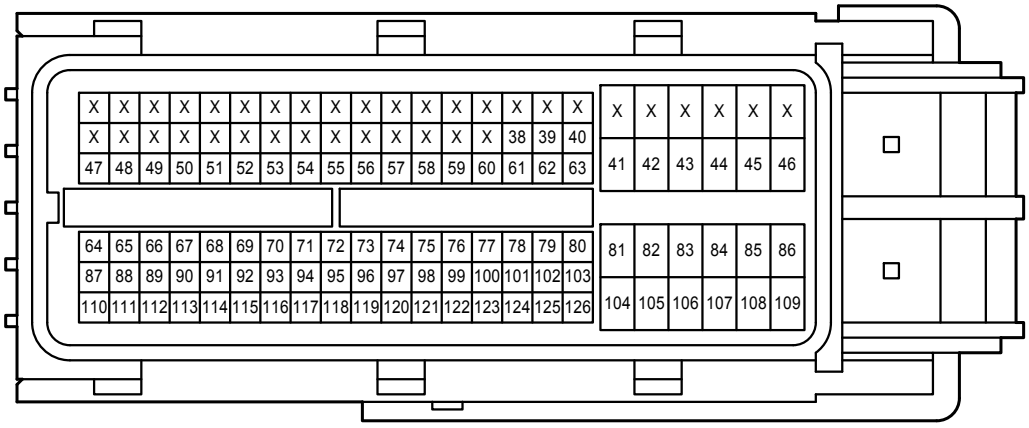

B 88
Gray

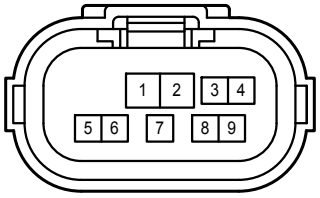

E 6
Black



E 11
White

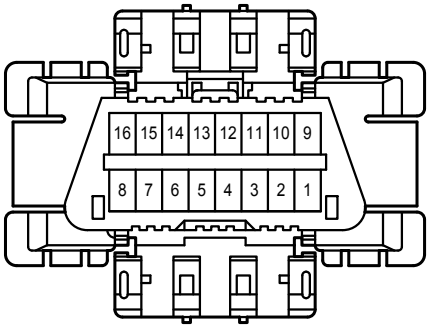

E 27
White

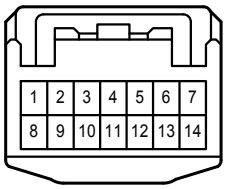

E 46
White

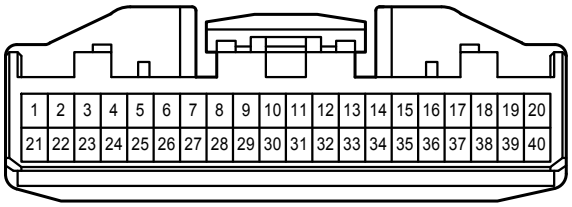

E 71
White

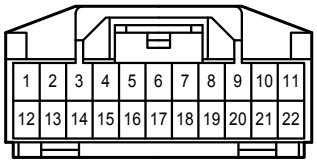

Y 2
White

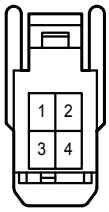

1B
White

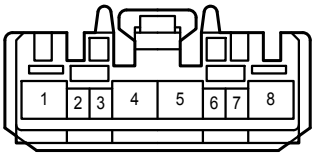

2B
White

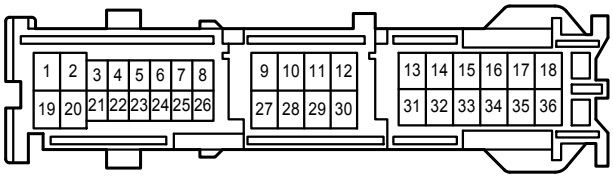

2C
White

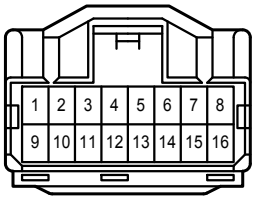

2D
White

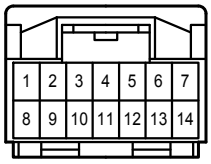

2E
White

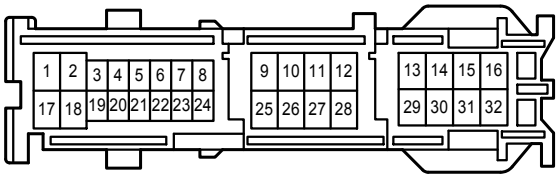

2M
White

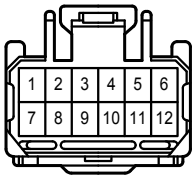

2S
White

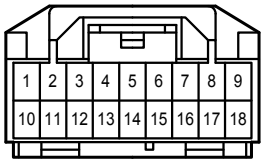

AE6
Gray

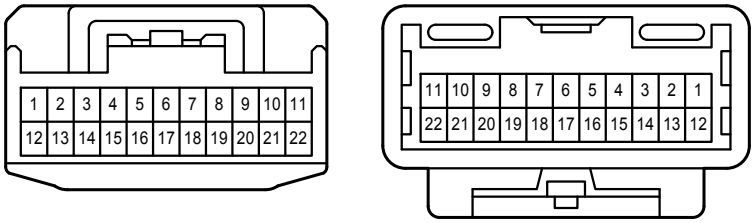

AE10
Gray

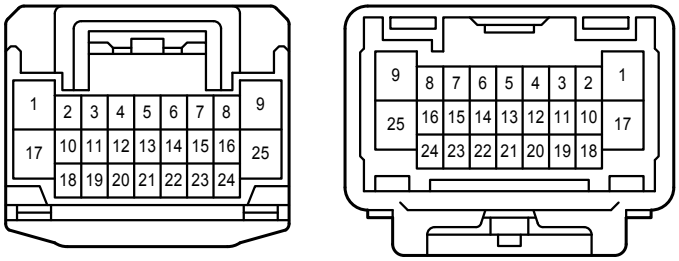

BA1
White

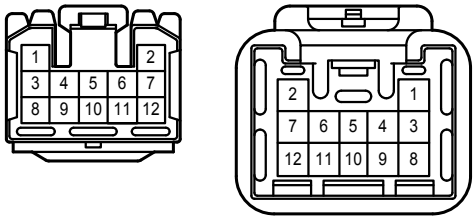

BA2
White

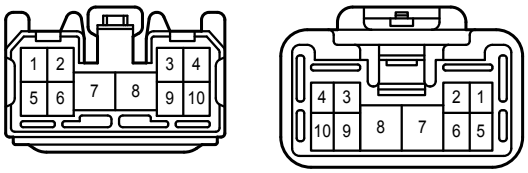

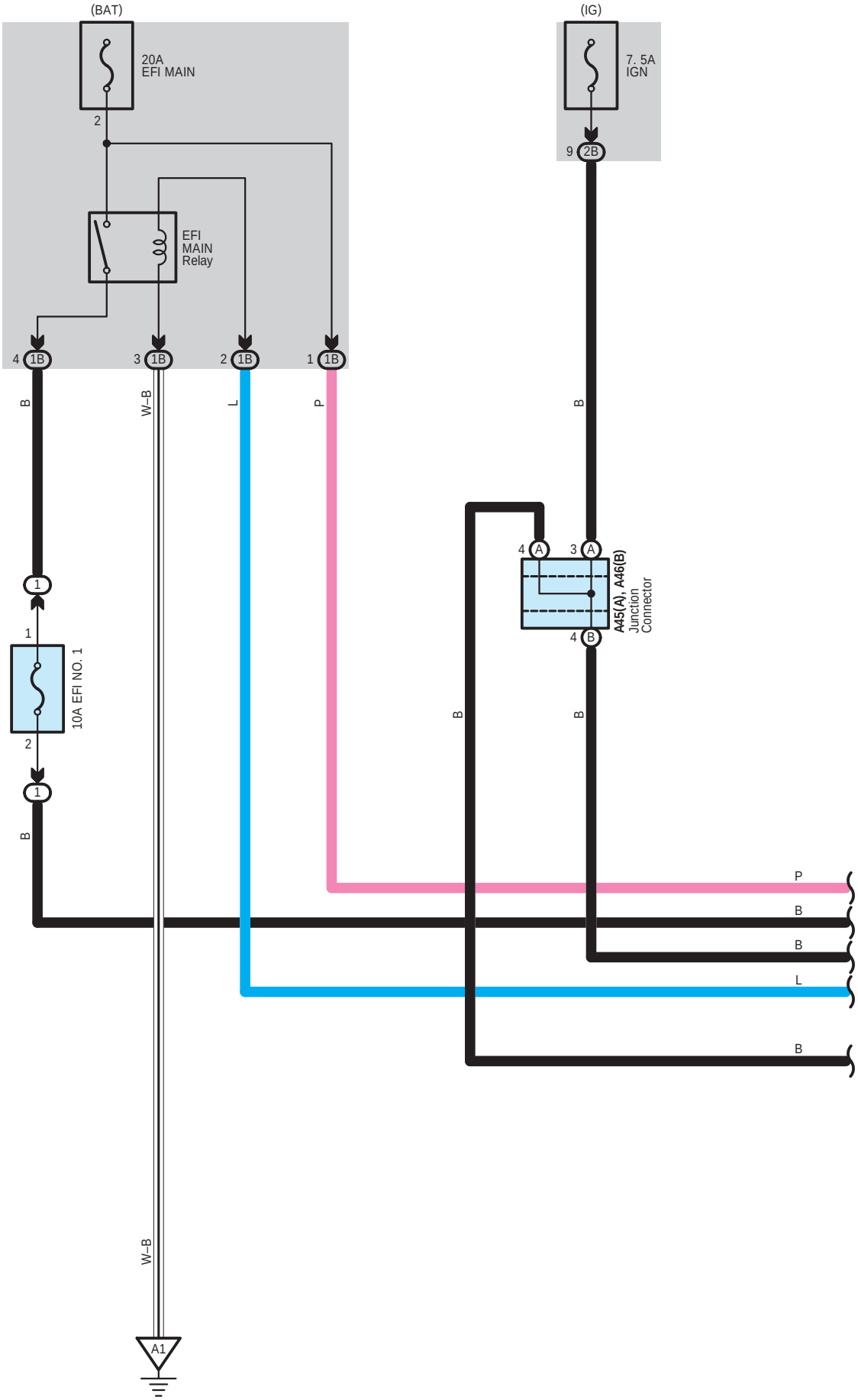
(BAT)
20A
EFI MAIN
2
EFI
MAIN
Relay
4 1B
3 1B
2 1B
1 1B
B
W-B
L
P
(IG)
7. 5A
IGN
9 2B
B
4 A
3 A
A45(A), A46(B)
Junction
Connector
4 B
B
B
1
1
10A EFI NO. 1
2
1
B
P
B
B
L
B
W-B
A1

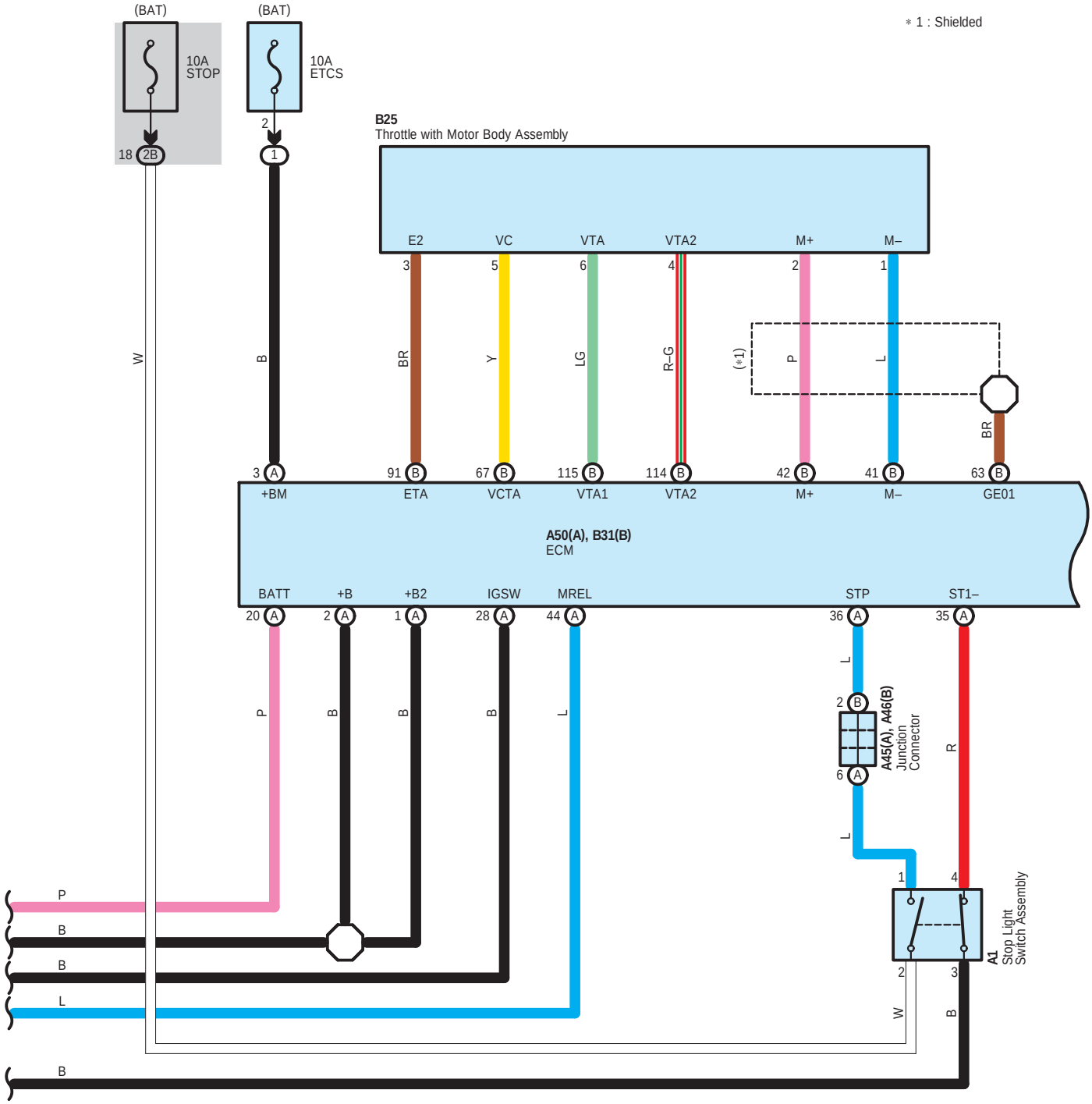
(BAT)
(BAT)
10A
STOP
10A
ETCS
2
18 2B
1
∗1 : Shielded
B25
Throttle with Motor Body Assembly
E2
VC
VTA
VTA2
M+
M–
3
5
6
4
2
1
W
B
BR
Y
LG
R–G
(∗1)
P
L
BR
3 A
91 B
67 B
115 B
114 B
42 B
41 B
63 B
+BM
ETA
VCTA
VTA1
VTA2
M+
M–
GE01
A50(A), B31(B)
ECM
BATT
+B
+B2
IGSW
MREL
STP
ST1–
20 A
2 A
1 A
28 A
44 A
36 A
35 A
P
B
B
B
L
L
R
2 B
6 A
A45(A), A46(B)
Junction
Connector
L
1
4
2
3
A1
Stop Light
Switch Assembly
W
B
P
B
B
L
B

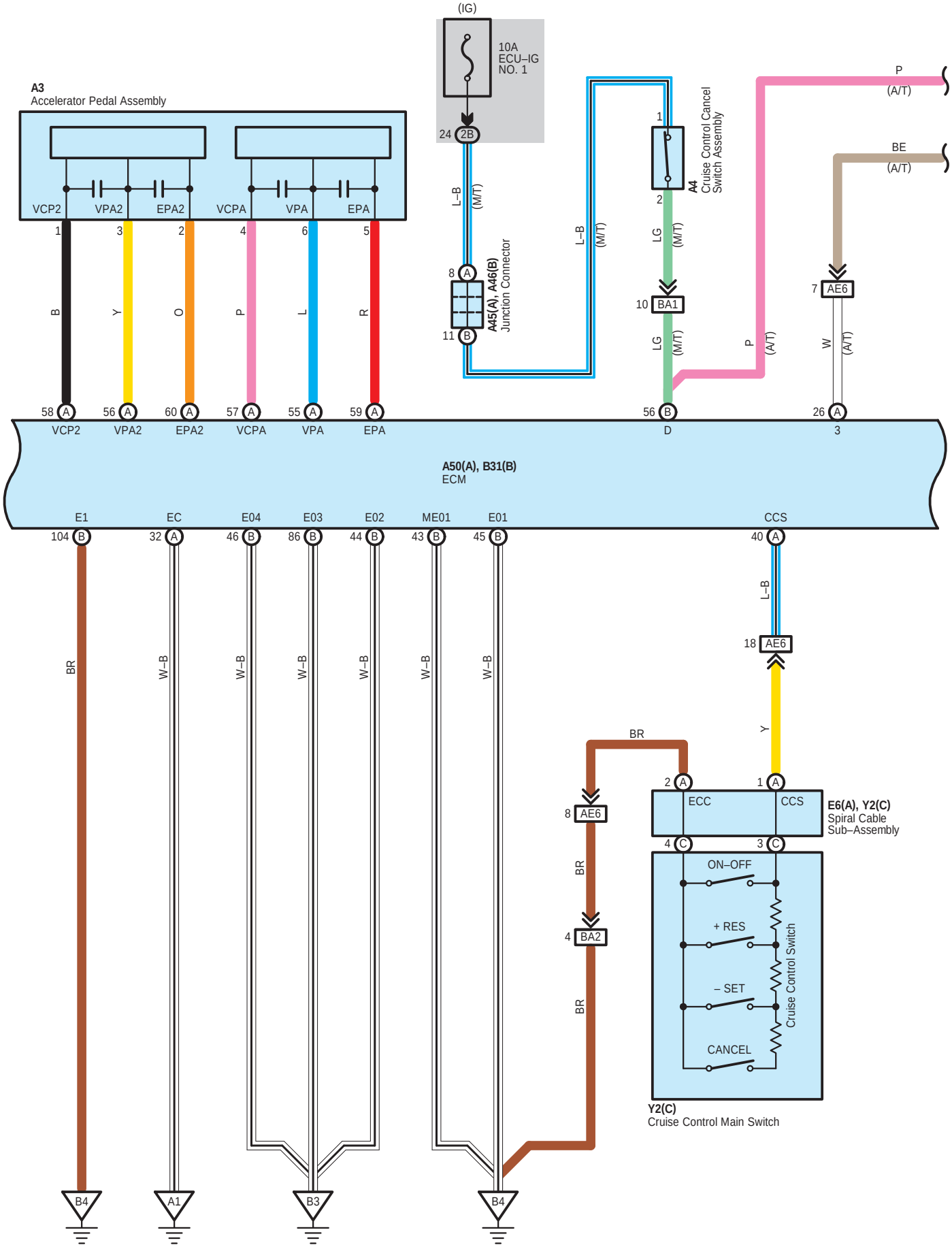
(IG)
10A
ECU–IG
NO. 1
24 2B
A3
Accelerator Pedal Assembly
VCP2
VPA2
EPA2
VCPA
VPA
EPA
1
3
2
4
6
5
B
Y
O
P
L
R
58 A
56 A
60 A
57 A
55 A
59 A
L–B
(M/T)
8 A
11 B
A45(A), A46(B)
Junction Connector
L–B
(M/T)
1
2
A4
Cruise Control Cancel
Switch Assembly
LG
(M/T)
10 BA1
LG
(M/T)
56 B
D
P
(A/T)
P
(A/T)
BE
(A/T)
7 AE6
W
(A/T)
26 A
3
A50(A), B31(B)
ECM
E1
EC
E04
E03
E02
ME01
E01
104 B
32 A
46 B
86 B
44 B
43 B
45 B
BR
W–B
W–B
W–B
W–B
W–B
W–B
B4
A1
B3
B4
CCS
40 A
L–B
18 AE6
Y
BR
8 AE6
BR
4 BA2
BR
2 A
1 A
ECC
CCS
E6(A), Y2(C)
Spiral Cable
Sub–Assembly
4 C
3 C
ON–OFF
+ RES
– SET
CANCEL
Cruise Control Switch
Y2(C)
Cruise Control Main Switch

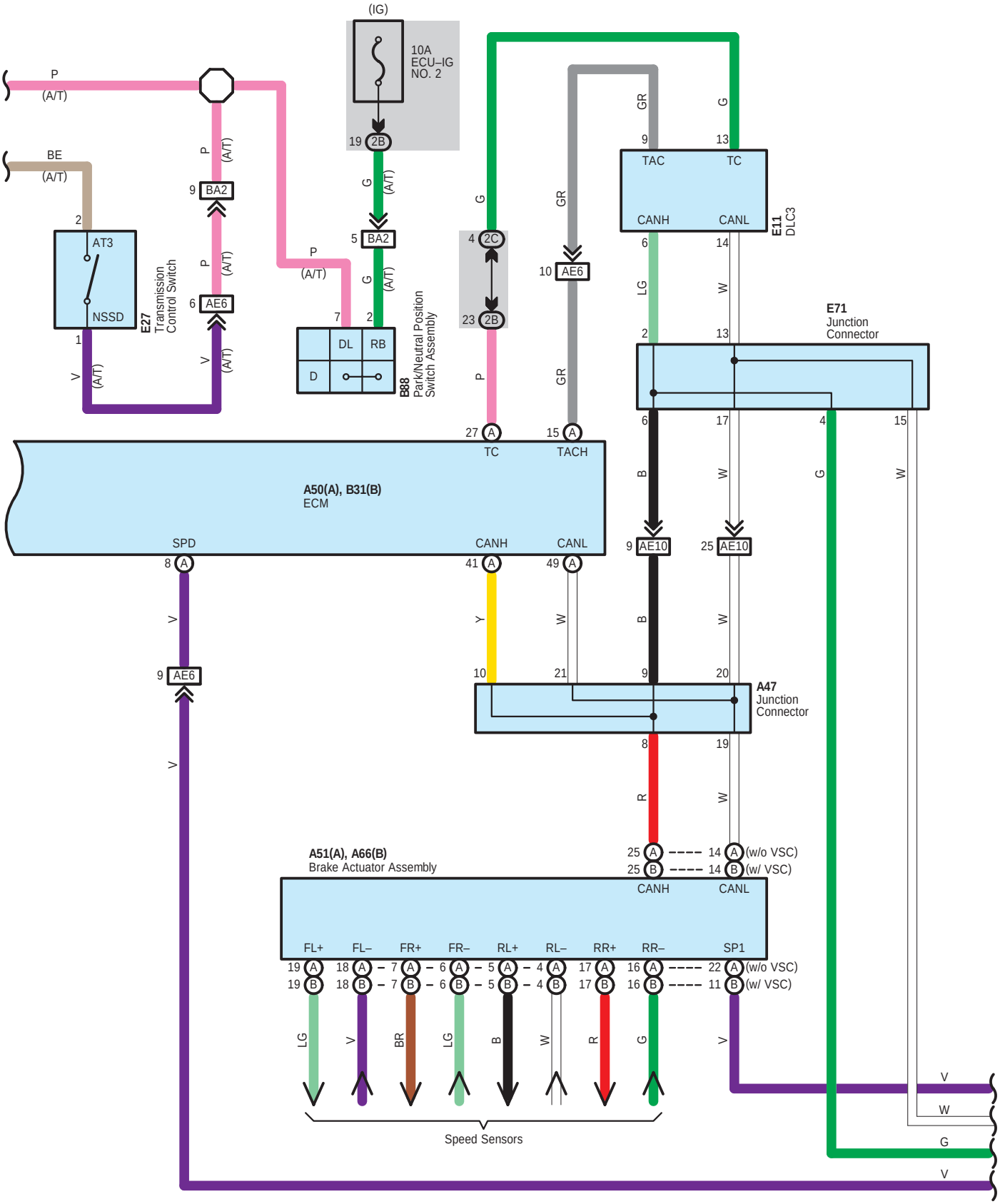
(IG)
10A
ECU–IG
NO. 2
19 2B
P
(A/T)
BE
(A/T)
2
AT3
NSSD
E27
Transmission
Control Switch
1
V
(A/T)
9 BA2
P
(A/T)
6 AE6
V
(A/T)
G
(A/T)
5 BA2
G
(A/T)
7
2
DL
RB
D
B88
Park/Neutral Position
Switch Assembly
P
(A/T)
4 2C
23 2B
P
27 A
TC
GR
10 AE6
GR
15 A
TACH
G
9
13
TAC
TC
CANH
CANL
E11
DLC3
6
LG
14
W
2
13
E71
Junction
Connector
6
17
4
15
B
W
G
W
A50(A), B31(B)
ECM
SPD
8 A
CANH
41 A
CANL
49 A
9 AE10
25 AE10
V
9 AE6
Y
10
W
21
B
9
W
20
A47
Junction
Connector
8
19
R
W
V
A51(A), A66(B)
Brake Actuator Assembly
25 A ---- 14 A (w/o VSC)
25 B ---- 14 B (w/ VSC)
CANH
CANL
FL+
FL–
FR+
FR–
RL+
RL–
RR+
RR–
SP1
19 A
19 B
18 A – 7
18 B – 7
A – 6
B – 6
A – 5
B – 5
A – 4
B – 4
17 A
17 B
16 A ---- 22 A (w/o VSC)
16 B ---- 11 B (w/ VSC)
LG
V
BR
LG
B
W
R
G
V
Speed Sensors
V
W
G
V

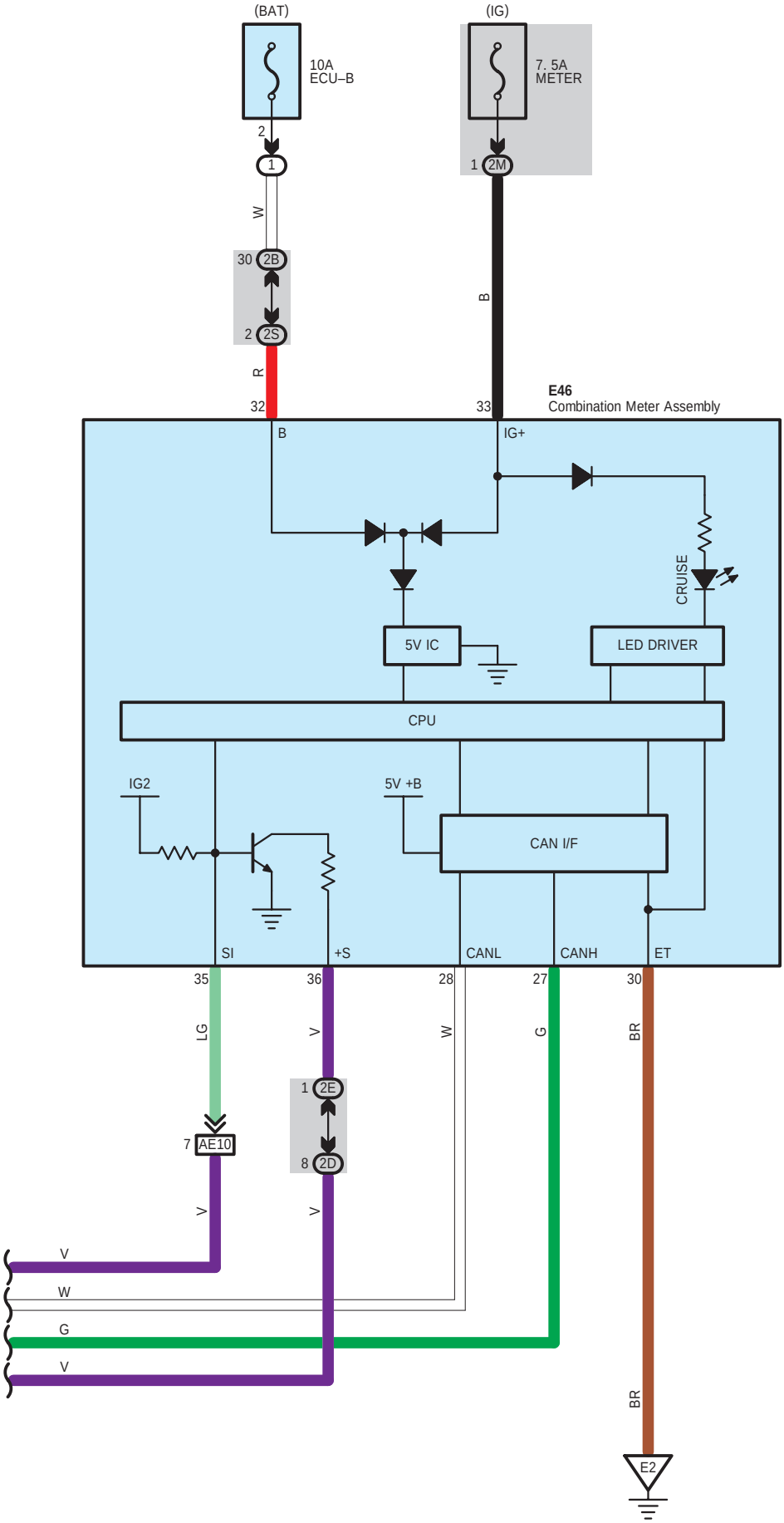
(BAT)
10A
ECU–B
2
1
W
30
2B
2
2S
R
32
(IG)
7. 5A
METER
1
2M
B
33
E46
Combination Meter Assembly
B
IG+
CRUISE
5V IC
LED DRIVER
CPU
IG2
5V +B
CAN I/F
SI
+S
CANL
CANH
ET
35
36
28
27
30
LG
V
W
G
BR
1
2E
8
2D
7
AE10
V
W
G
V
BR
E2

A 1
Black

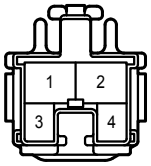

A 3
Black

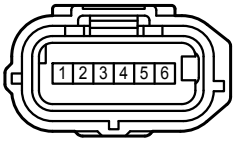

A 4
White

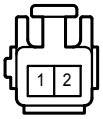

A 45
White

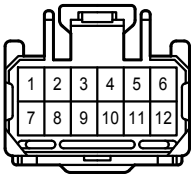

A 46
White

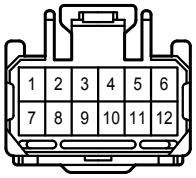

A 47
White

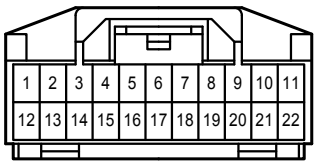

A 50
Black

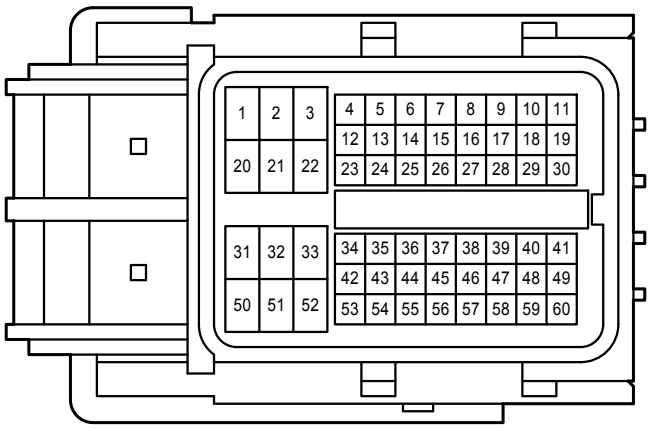

A 51
Gray

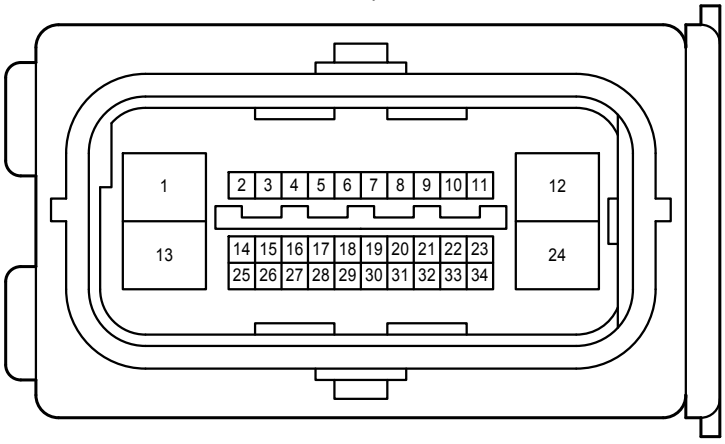

A 66
Black

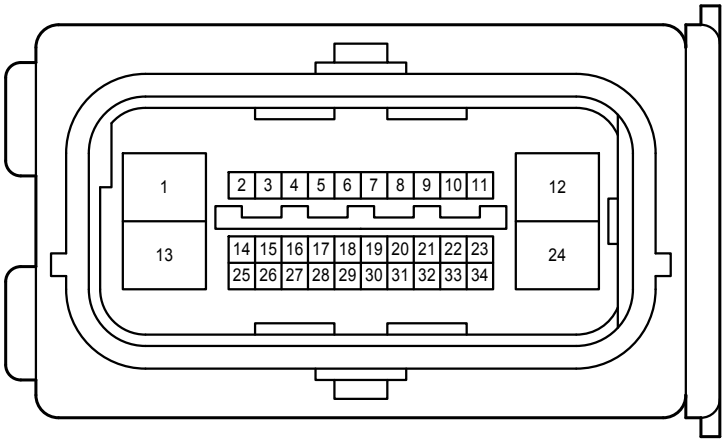

B 25
Black

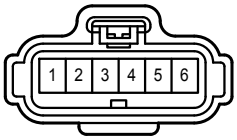

B 31
Black

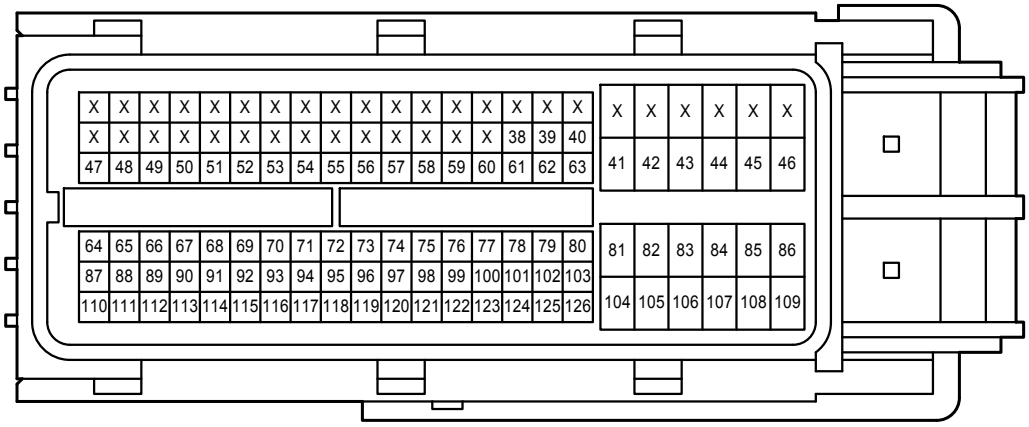

B 88
Gray

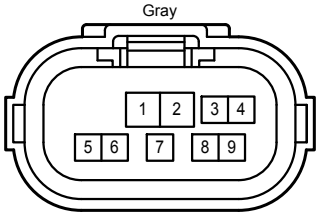

E 6
Black



E 11
White

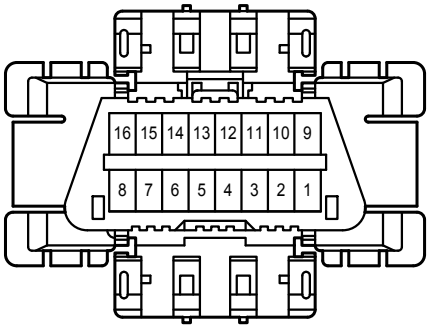

E 27
White

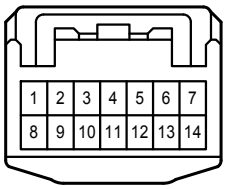

E 46
White

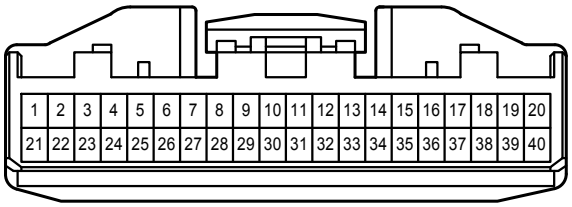

E 71
White

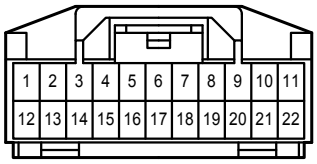

Y 2
White

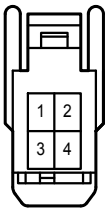

1B
White

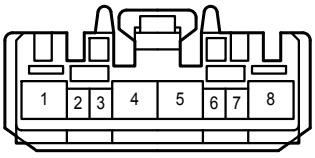

2B
White

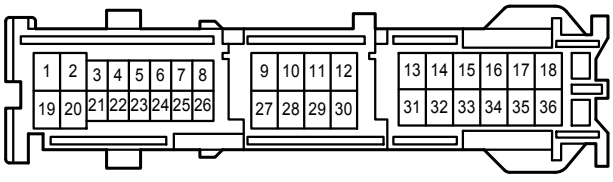

2C
White

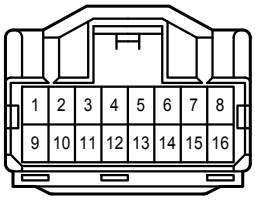

2D
White

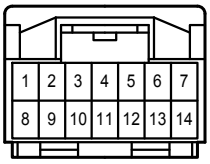

2E
White

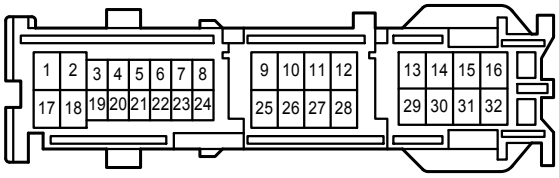

2M
White

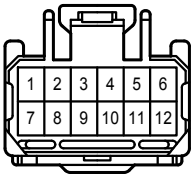

2S
White

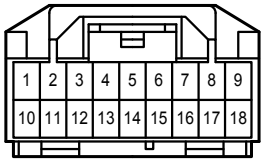

AE6
Gray

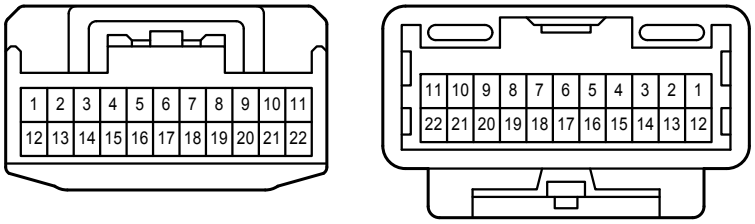

AE10
Gray

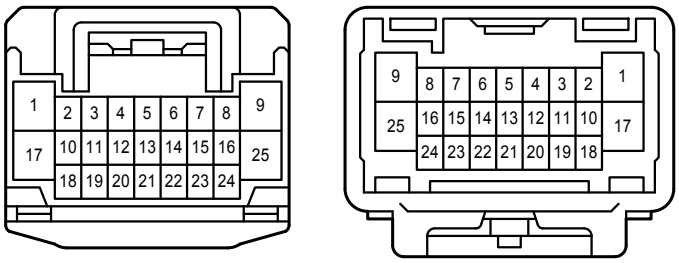

BA1
White

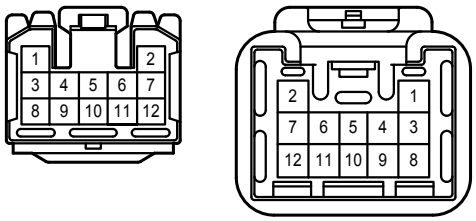

BA2
White

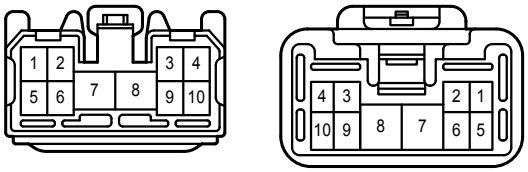

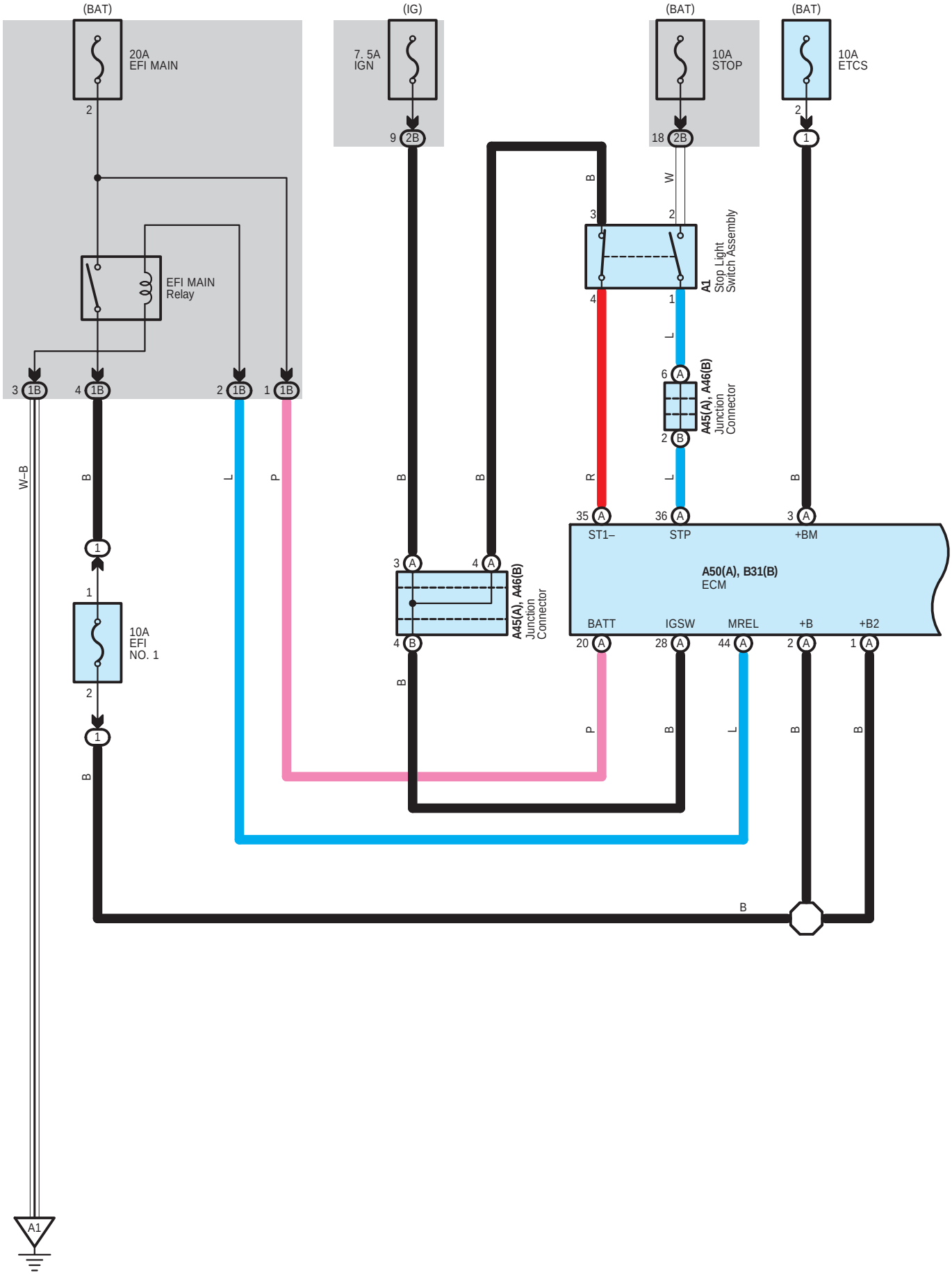
(BAT)
20A
EFI MAIN
2
EFI MAIN
Relay
3 1B
4 1B
2 1B
1 1B
W–B
B
1
1
10A
EFI
NO. 1
2
1
B
(IG)
7. 5A
IGN
9 2B
B
B
3 A
4 A
A45(A), A46(B)
Junction
Connector
4 B
B
L
P
(BAT)
10A
STOP
18 2B
B
W
3
2
4
1
A1
Stop Light
Switch Assembly
L
6 A
2 B
A45(A), A46(B)
Junction
Connector
R
L
35 A
36 A
ST1–
STP
(BAT)
10A
ETCS
2
1
B
3 A
+BM
A50(A), B31(B)
ECM
BATT
IGSW
MREL
+B
+B2
20 A
28 A
44 A
2 A
1 A
P
B
L
B
B
B
A1

* 1 : Shielded

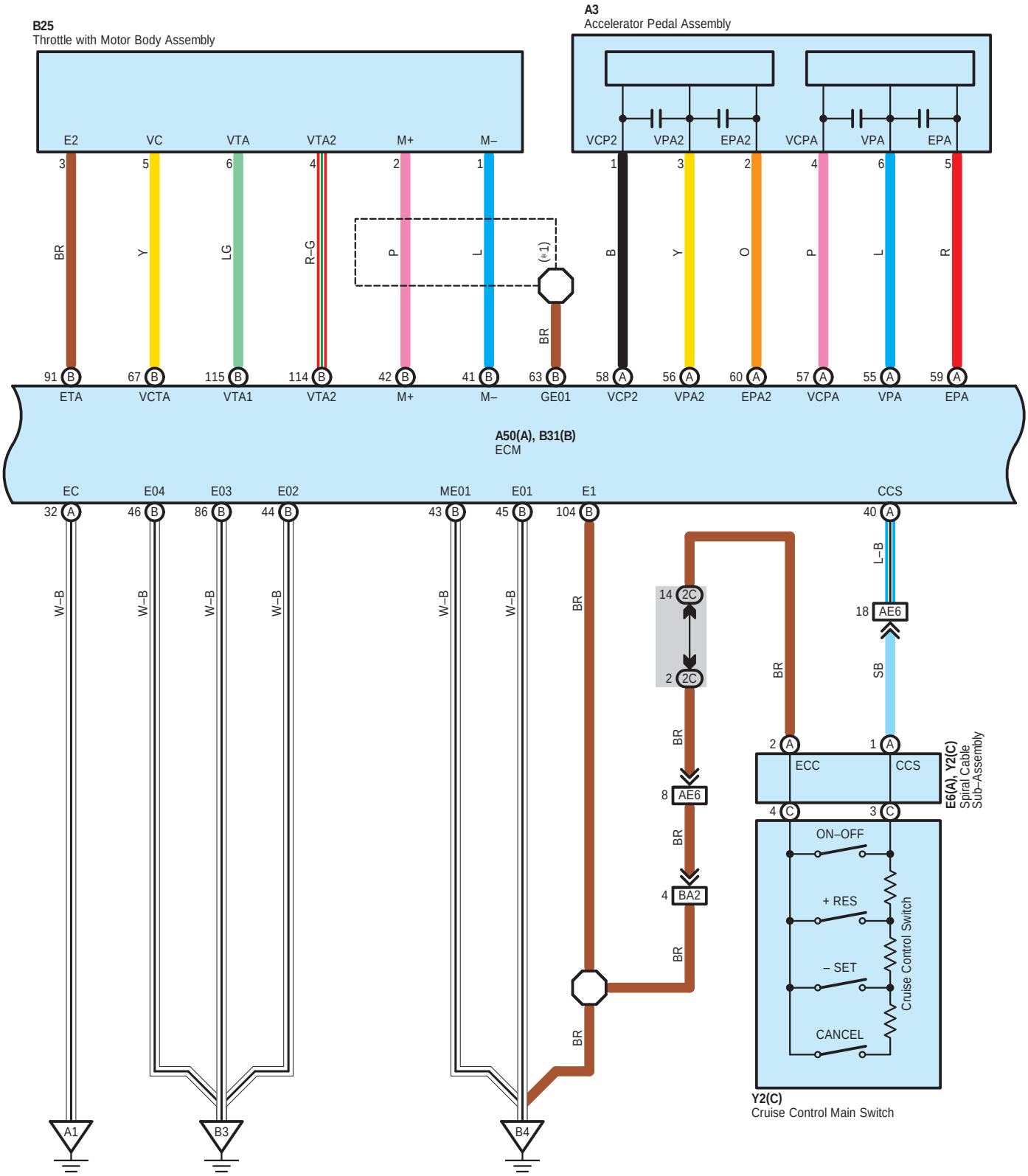
B25
Throttle with Motor Body Assembly
E2
VC
VTA
VTA2
M+
M–
3
5
6
4
2
1
BR
Y
LG
R–G
P
L
(*1)
BR
91 B ETA
67 B VCTA
115 B VTA1
114 B VTA2
42 B M+
41 B M–
63 B GE01
A3
Accelerator Pedal Assembly
VCP2
VPA2
EPA2
VCPA
VPA
EPA
1
3
2
4
6
5
B
Y
O
P
L
R
58 A VCP2
56 A VPA2
60 A EPA2
57 A VCPA
55 A VPA
59 A EPA
A50(A), B31(B)
ECM
EC
E04
E03
E02
ME01
E01
E1
CCS
32 A
46 B
86 B
44 B
43 B
45 B
104 B
40 A
W–B
BR
L–B
SB
14 2C
2 2C
8 AE6
4 BA2
18 AE6
2 A ECC
1 A CCS
4 C
3 C
E6(A), Y2(C)
Spiral Cable
Sub–Assembly
ON–OFF
+ RES
– SET
CANCEL
Cruise Control Switch
Y2(C)
Cruise Control Main Switch
A1
B3
B4

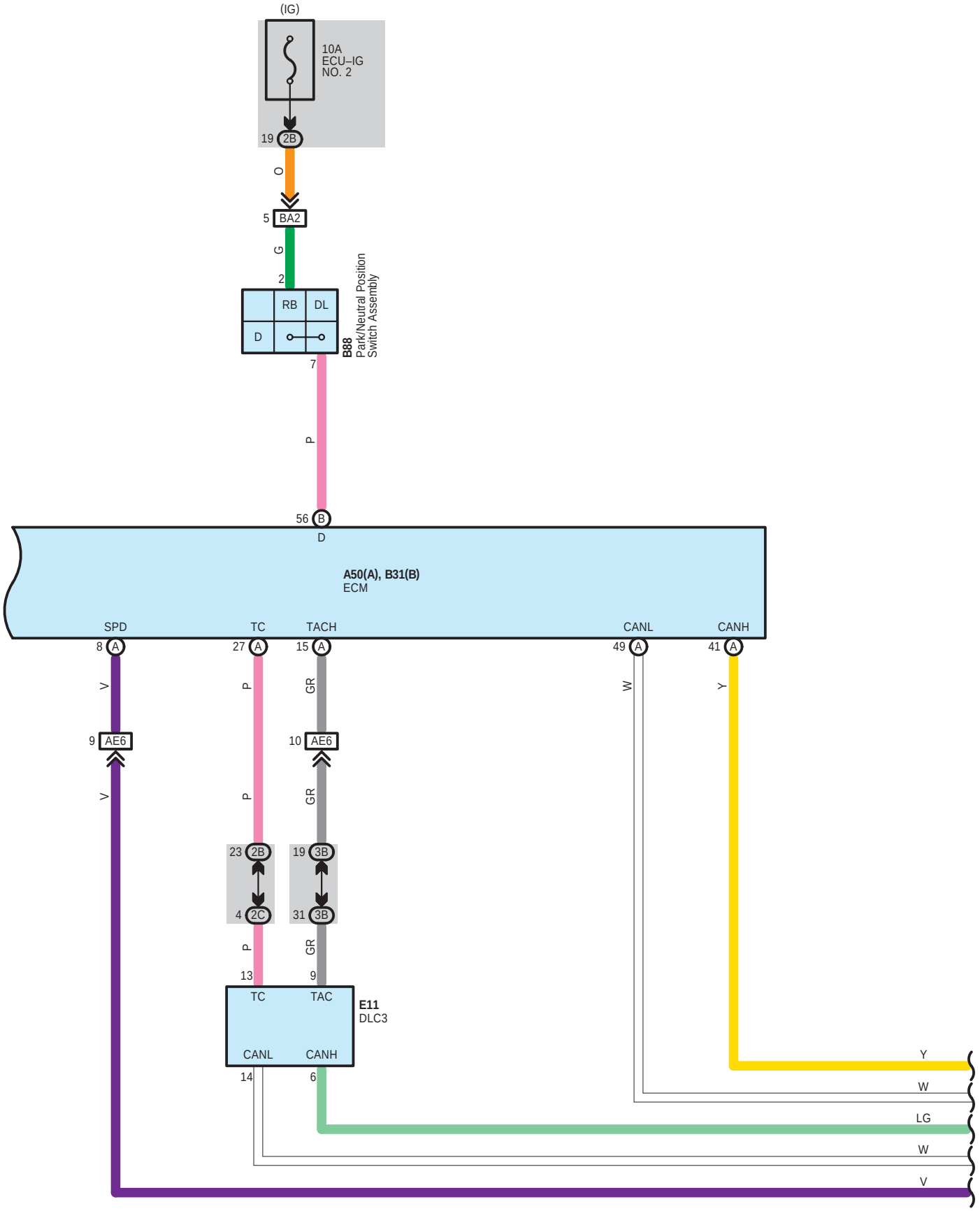
(IG)
10A
ECU–IG
NO. 2
19 2B
O
5 BA2
G
2
RB
DL
D
B88
Park/Neutral Position
Switch Assembly
7
P
56 B
D
A50(A), B31(B)
ECM
SPD
TC
TACH
CANL
CANH
8 A
27 A
15 A
49 A
41 A
V
P
GR
W
Y
9 AE6
10 AE6
V
P
GR
23 2B
19 3B
4 2C
31 3B
P
GR
13
9
TC
TAC
CANL
CANH
E11
DLC3
14
6
Y
W
LG
W
V

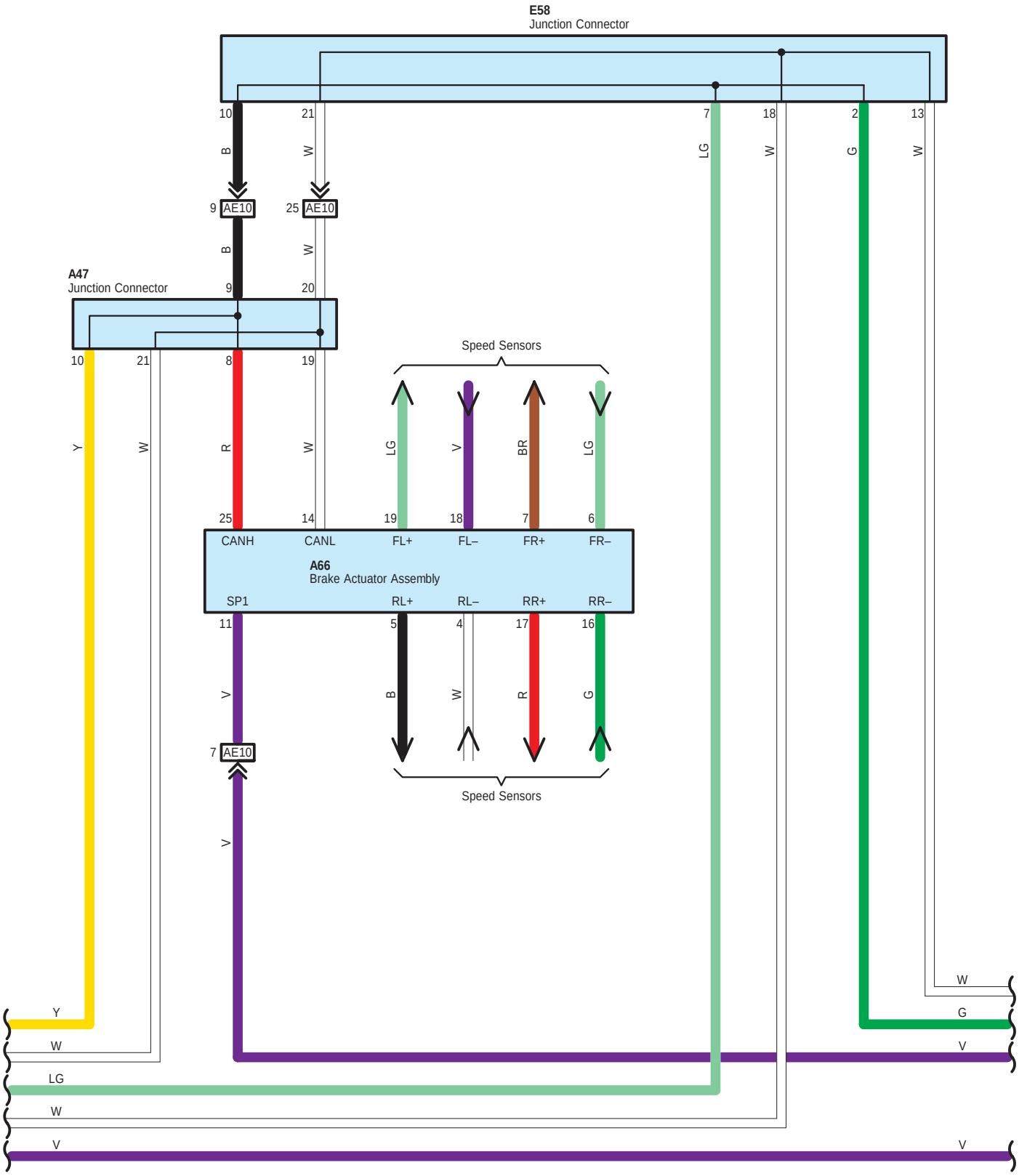
E58
Junction Connector
10
21
7
18
2
13
B
W
LG
W
G
W
9 AE10
25 AE10
B
W
A47
Junction Connector
9
20
10
21
8
19
Y
W
R
W
Speed Sensors
LG
V
BR
LG
25
14
19
18
7
6
CANH
CANL
FL+
FL–
FR+
FR–
A66
Brake Actuator Assembly
SP1
RL+
RL–
RR+
RR–
11
5
4
17
16
V
B
W
R
G
7 AE10
Speed Sensors
V
Y
W
LG
W
V
W
G
V
V
V

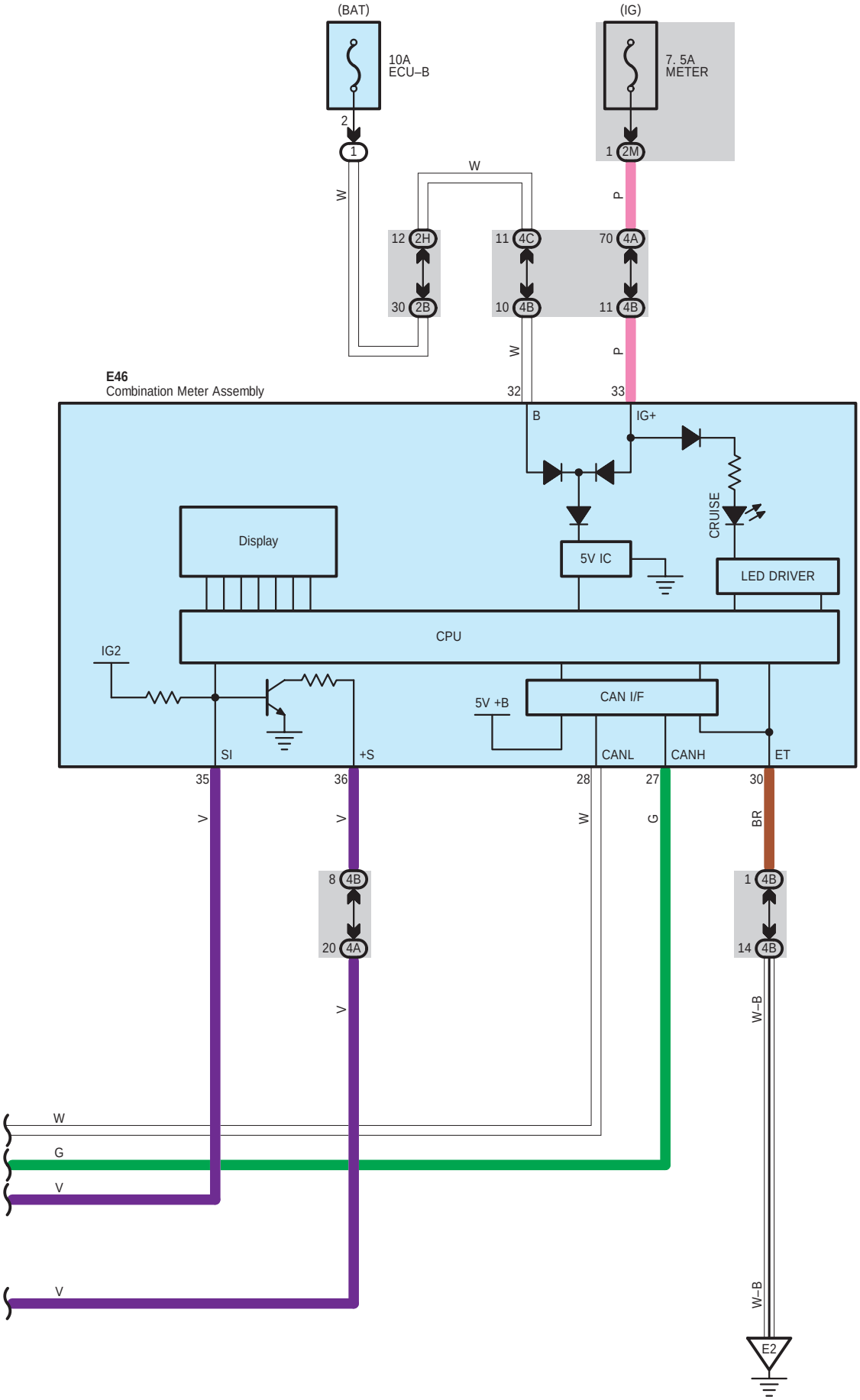
(BAT)
10A
ECU–B
2
1
W
(IG)
7. 5A
METER
1 2M
P
W
12 2H
30 2B
11 4C
10 4B
70 4A
11 4B
W
P
32
33
E46
Combination Meter Assembly
B
IG+
Display
5V IC
CRUISE
LED DRIVER
CPU
IG2
5V +B
CAN I/F
SI
+S
CANL
CANH
ET
35
36
28
27
30
V
V
W
G
BR
8 4B
20 4A
1 4B
14 4B
V
W–B
W
G
V
V
W–B
E2

A 1
Black

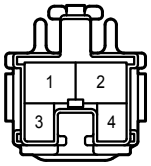

A 3
Black

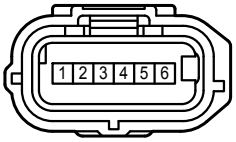

A 45
White

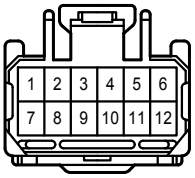

A 46
White

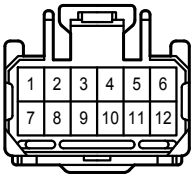

A 47
White

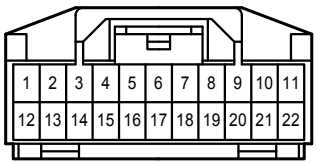

A 50
Black

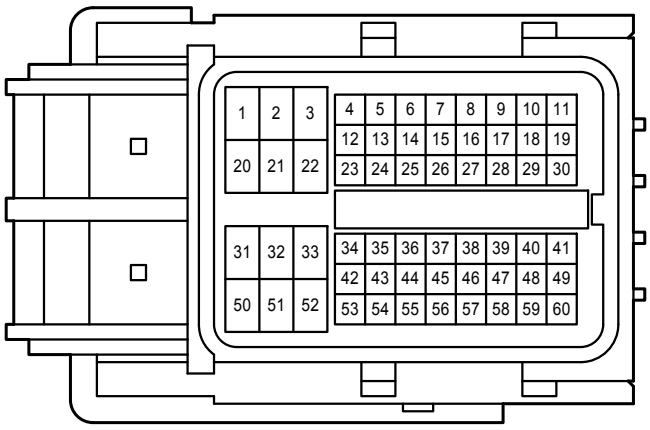

A 66
Black

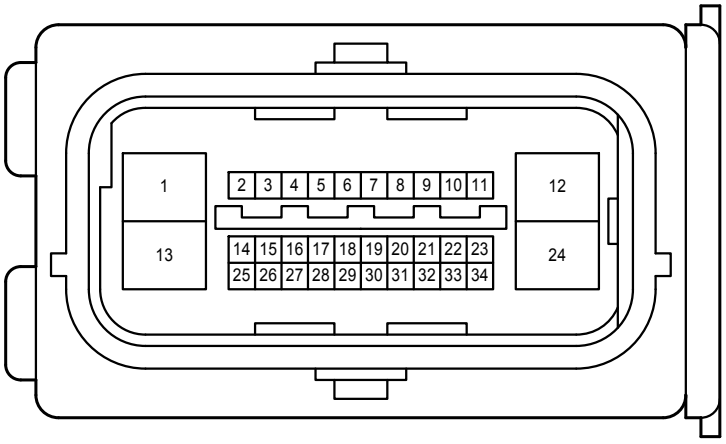

B 25
Black

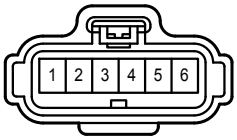

B 31
Black

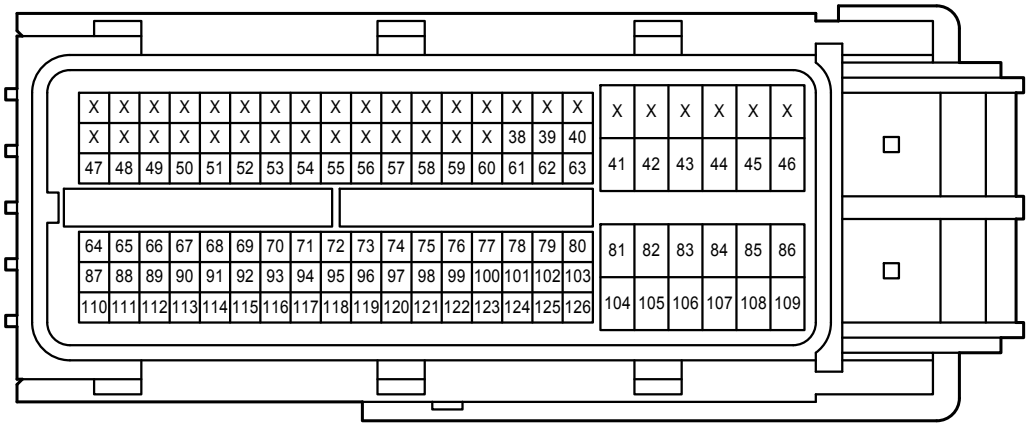

B 88
Gray

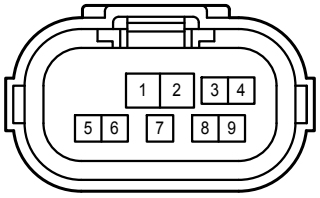

E 6
Black



E 11
White

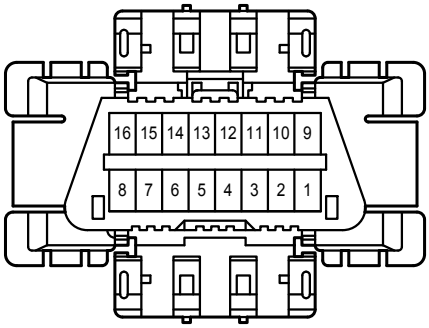

E 46
White

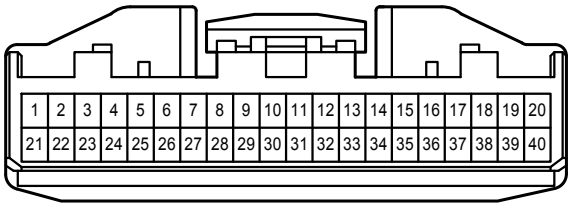

E 58
Gray

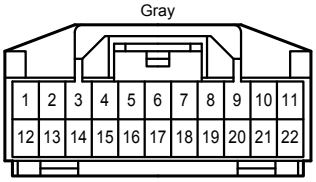

Y 2
White

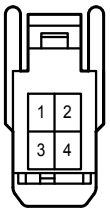

1B
White

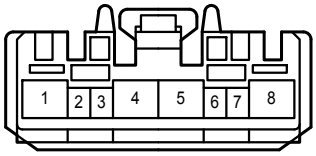

2B
White

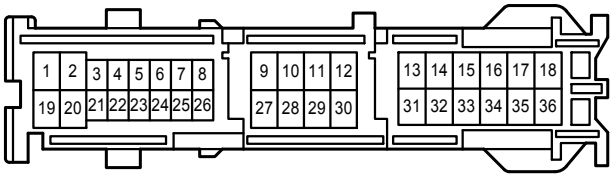

2C
White

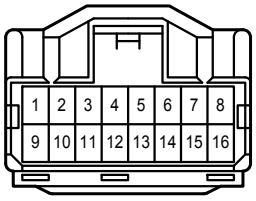

2H
White

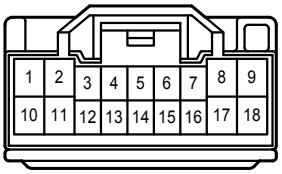

2M
White

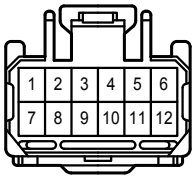

3B
White

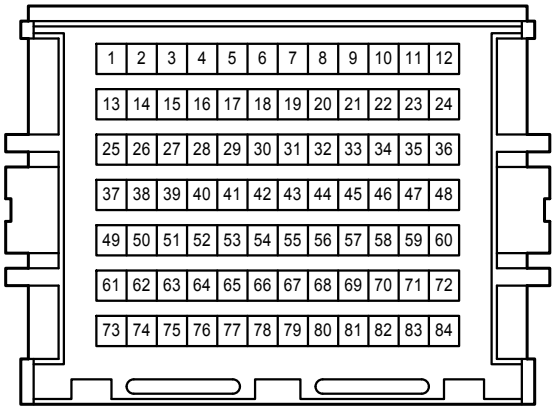

4A
White

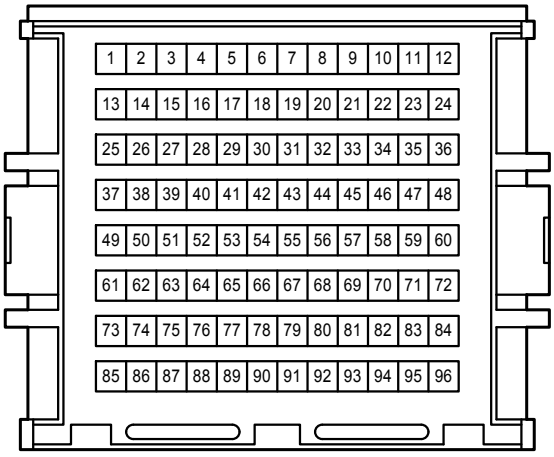

4B
White

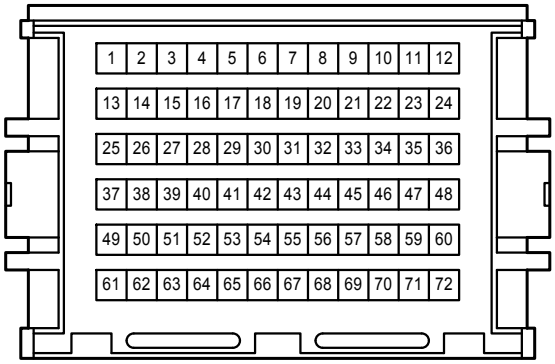

4C
White

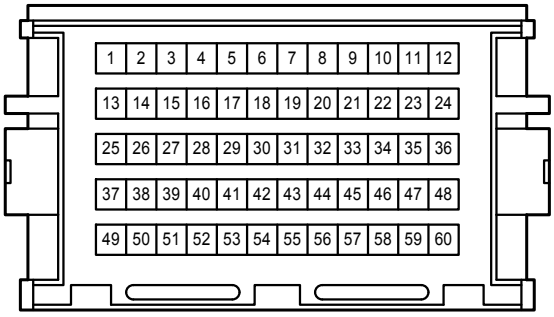

AE6
Gray

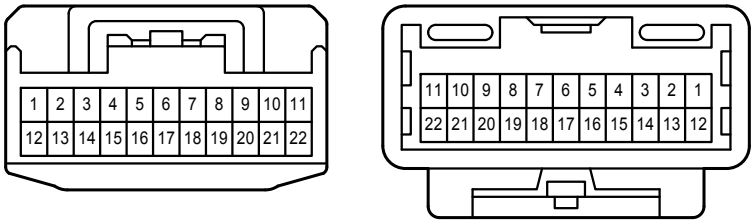

AE10
Gray

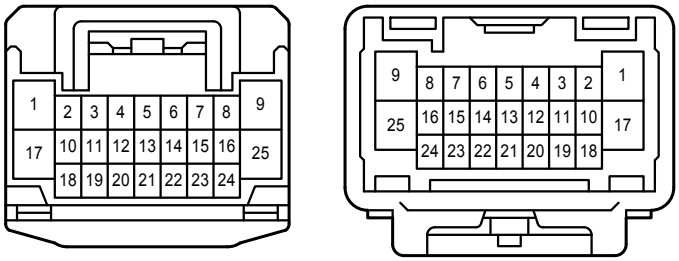

BA2
White

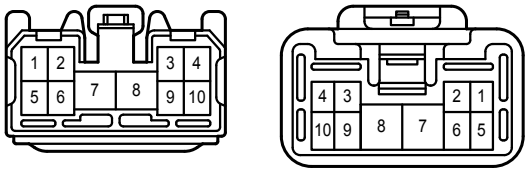

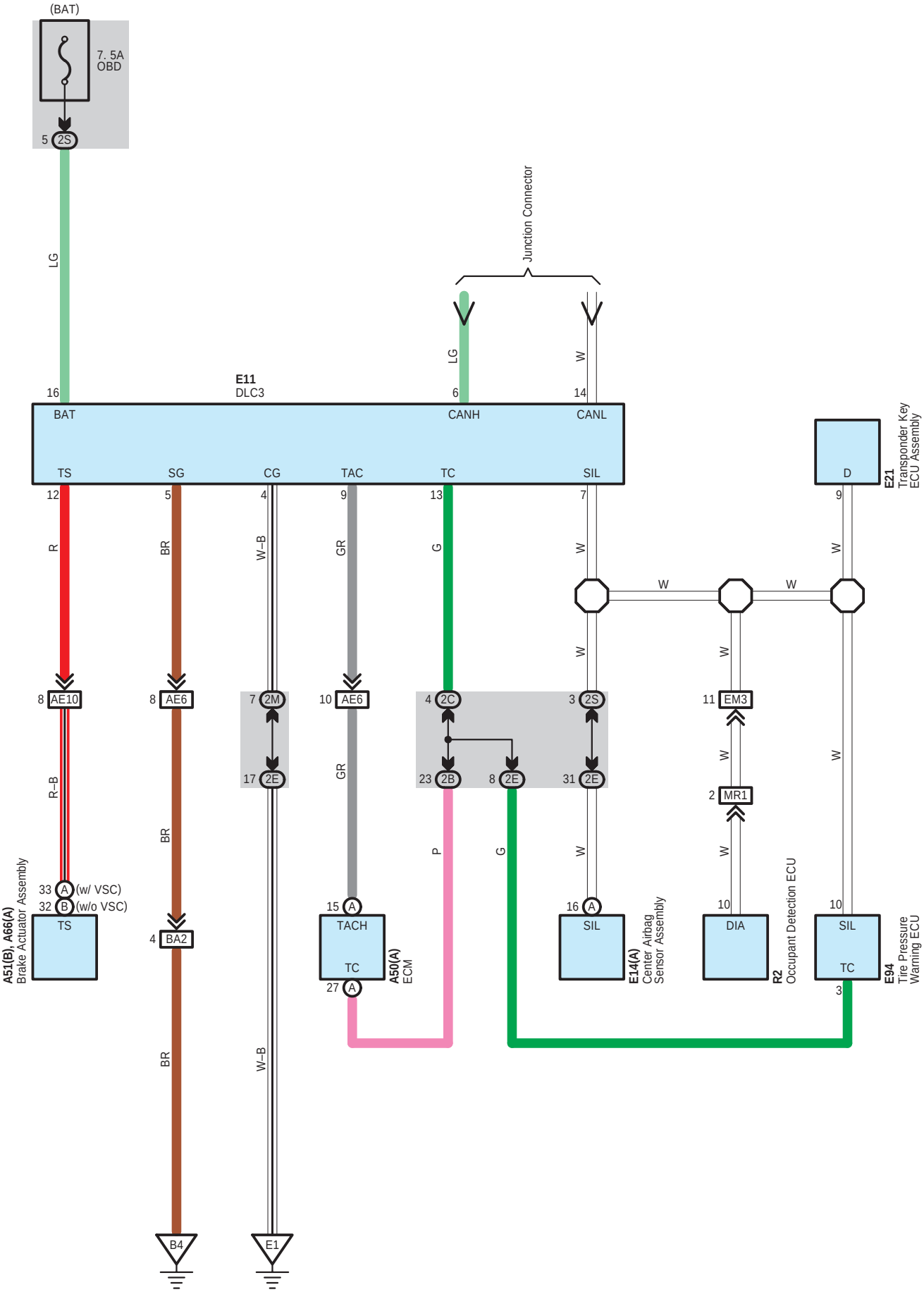
(BAT)
7. 5A
OBD
5
2S
LG
Junction Connector
LG
W
E11
DLC3
16
BAT
6
CANH
14
CANL
TS
SG
CG
TAC
TC
SIL
D
E21
Transponder Key
ECU Assembly
12
R
5
BR
4
W–B
9
GR
13
G
7
W
9
W
W
W
W
W
8
AE10
R–B
8
AE6
BR
BR
7
2M
17
2E
10
AE6
GR
4
2C
23
2B
8
2E
P
G
3
2S
31
2E
W
11
EM3
W
2
MR1
W
10
W
33
A
(w/ VSC)
32
B
(w/o VSC)
TS
A51(B), A66(A)
Brake Actuator Assembly
4
BA2
15
A
TACH
TC
27
A
A50(A)
ECM
16
A
SIL
E14(A)
Center Airbag
Sensor Assembly
10
DIA
R2
Occupant Detection ECU
10
SIL
TC
3
E94
Tire Pressure
Warning ECU
B4
E1

A 50
Black

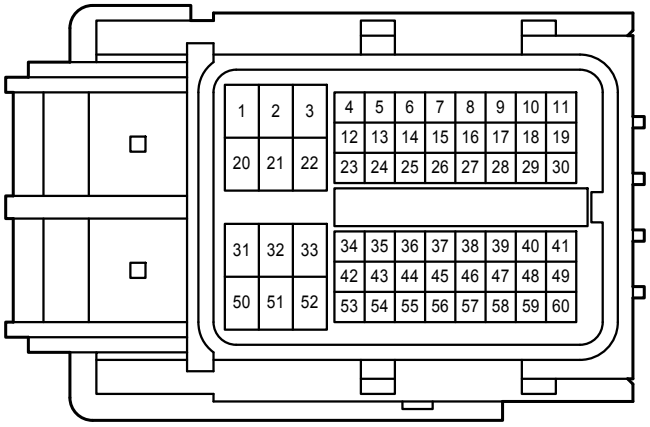

A 51
Gray

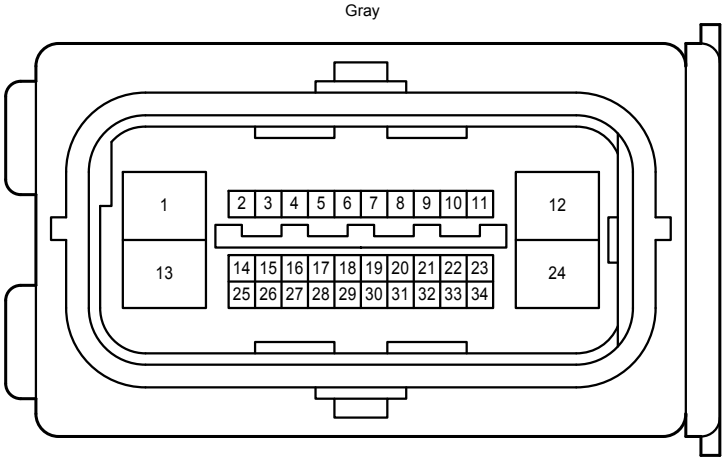

A 66
Black

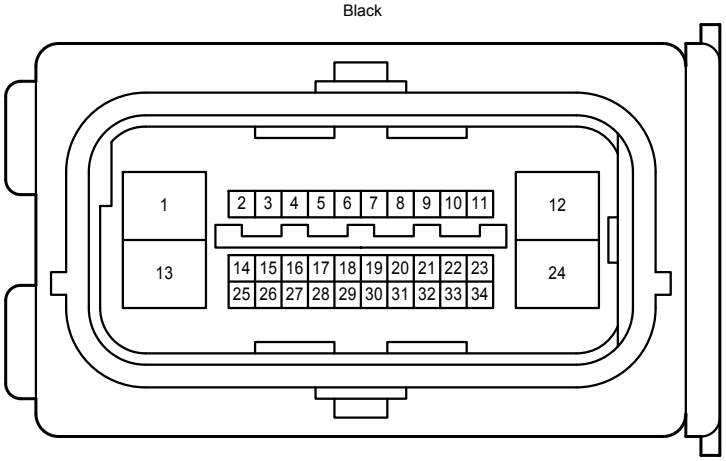

E 11
White

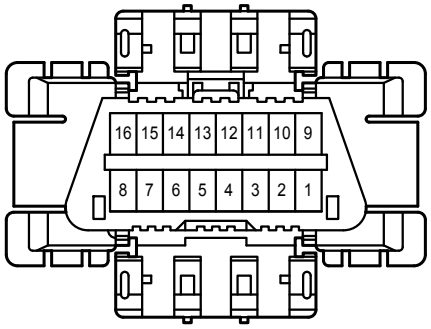

E 14
Yellow

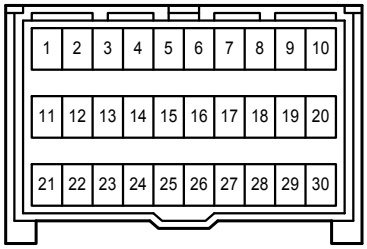

E 21
White

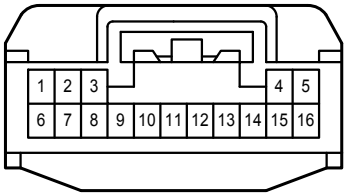

E 94
Black



R 2
Black

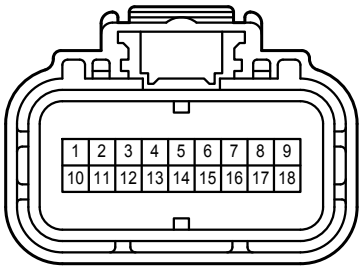

2B
White

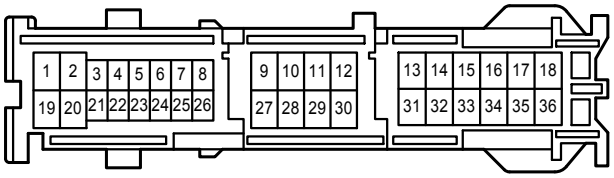

2C
White

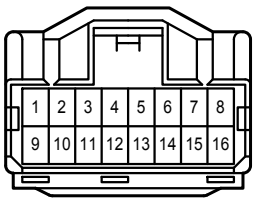

2E
White

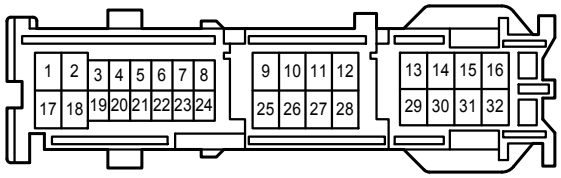

2M
White

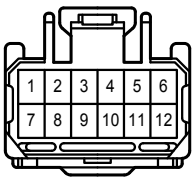

2S
White

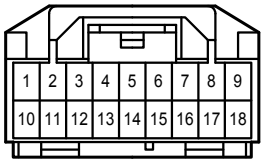

AE6
Gray

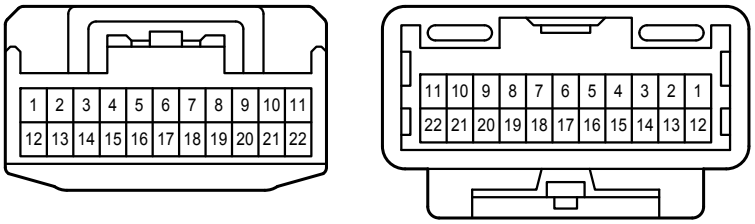

AE10
Gray

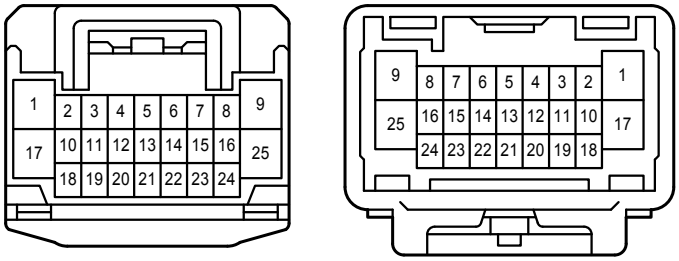

BA2
White

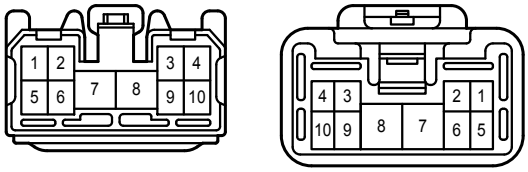

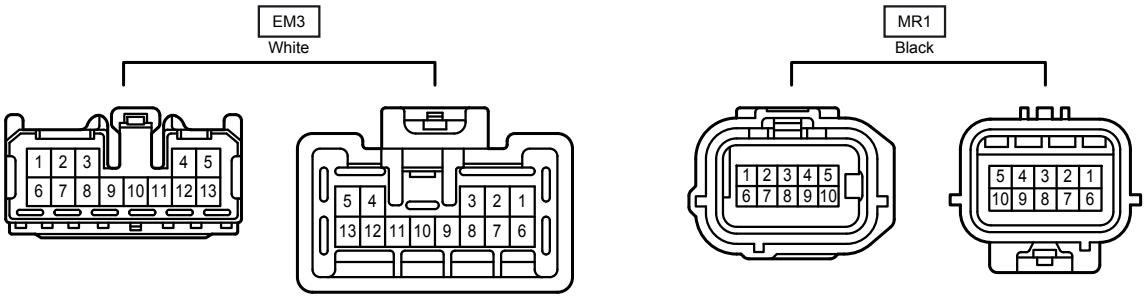
EM3
White
1 2 3 4 5
6 7 8 9 10 11 12 13
5 4 3 2 1
13 12 11 10 9 8 7 6
MR1
Black
1 2 3 4 5
6 7 8 9 10
5 4 3 2 1
10 9 8 7 6

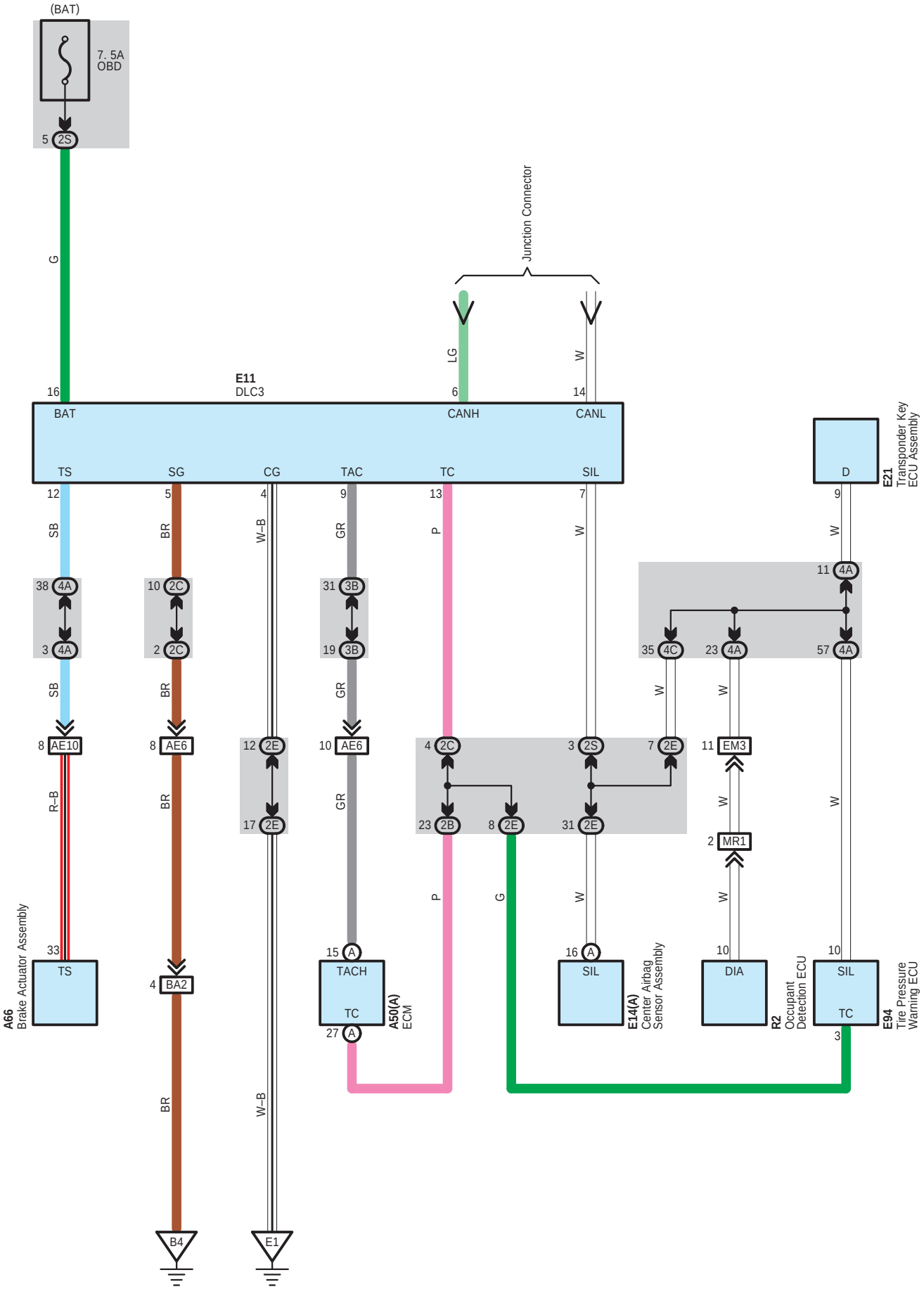
(BAT)
7. 5A
OBD
5 2S
G
16
E11
DLC3
BAT
TS
SG
CG
TAC
TC
SIL
Junction Connector
LG
W
6
14
CANH
CANL
D
E21
Transponder Key
ECU Assembly
12
5
4
9
13
7
9
SB
BR
W-B
GR
P
W
W
38 4A
3 4A
10 2C
2 2C
31 3B
19 3B
11 4A
35 4C
23 4A
57 4A
SB
BR
GR
W
8 AE10
8 AE6
12 2E
17 2E
10 AE6
4 2C
23 2B
8 2E
3 2S
31 2E
7 2E
11 EM3
2 MR1
R-B
BR
P
G
W
33
TS
A66
Brake Actuator Assembly
4 BA2
15 A
TACH
TC
27 A
A50(A)
ECM
16 A
SIL
E14(A)
Center Airbag
Sensor Assembly
10
DIA
R2
Occupant
Detection ECU
10
SIL
TC
3
E94
Tire Pressure
Warning ECU
B4
E1

A 50
Black

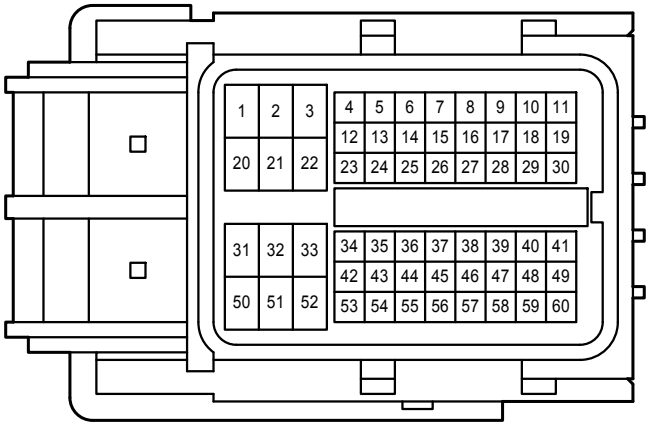

A 66
Black

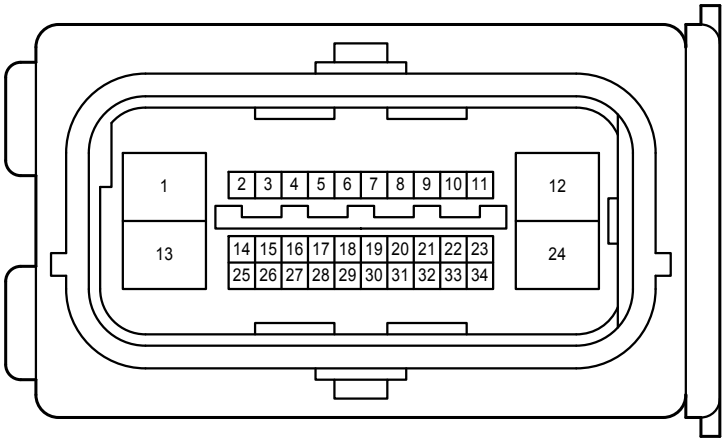

E 11
White

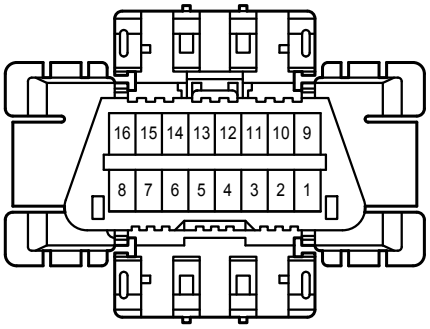

E 14
Yellow

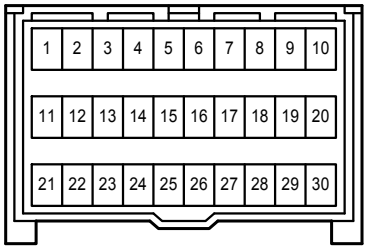

E 21
White

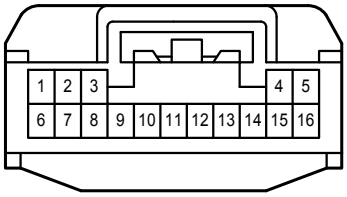

E 94
Black



R 2
Black

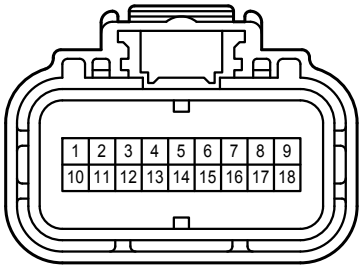

2B
White

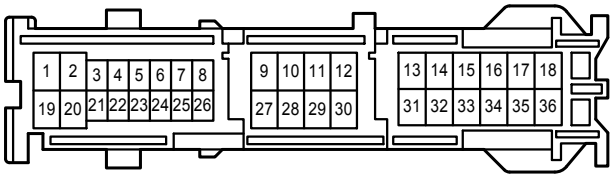

2C
White

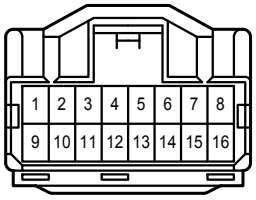

2E
White

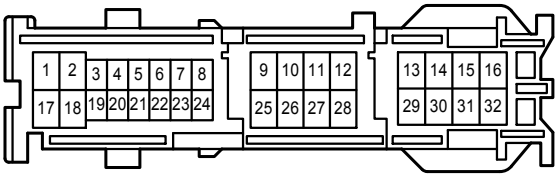

2S
White

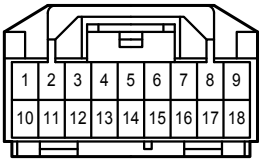

3B
White

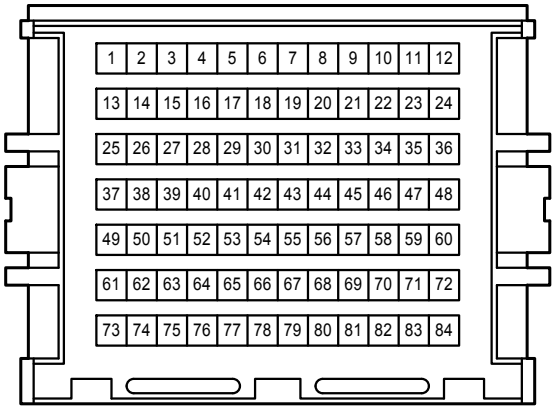

4A
White

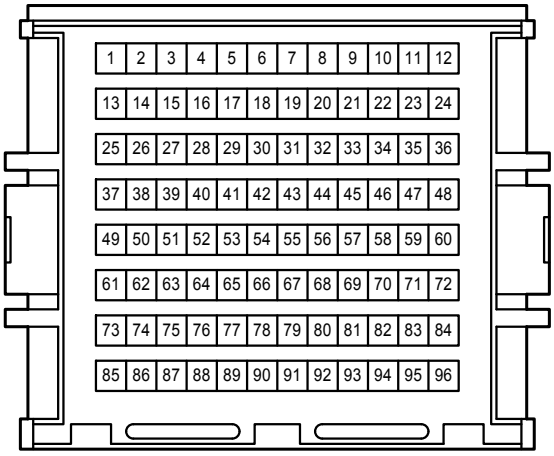

4C
White

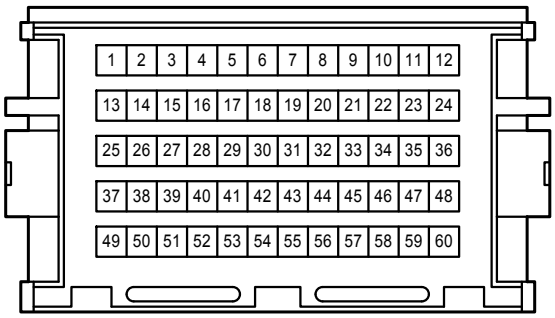

AE6
Gray

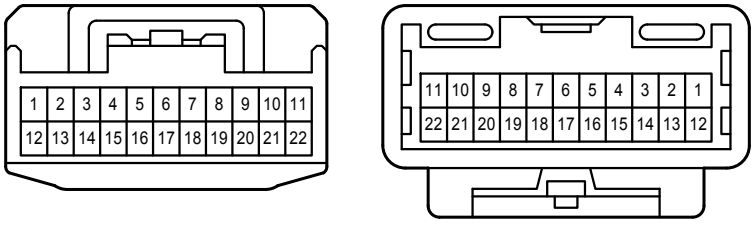

AE10
Gray

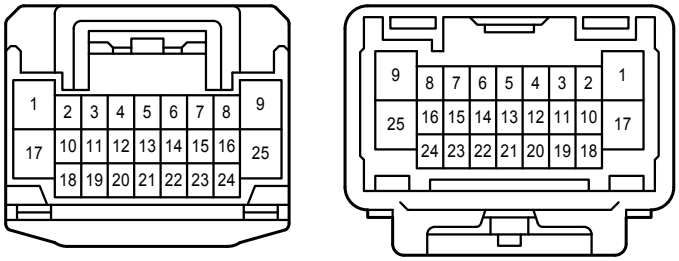

BA2
White

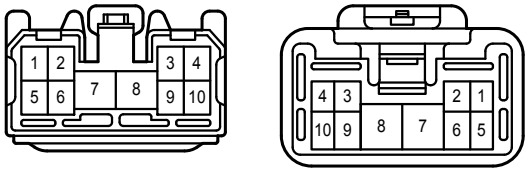

EM3
White

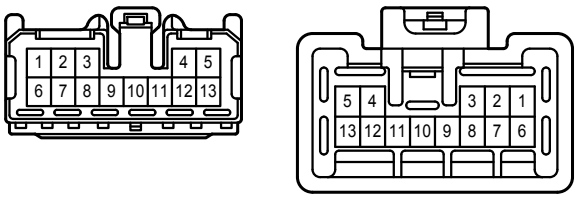

MR1
Black

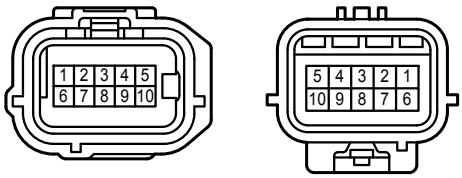

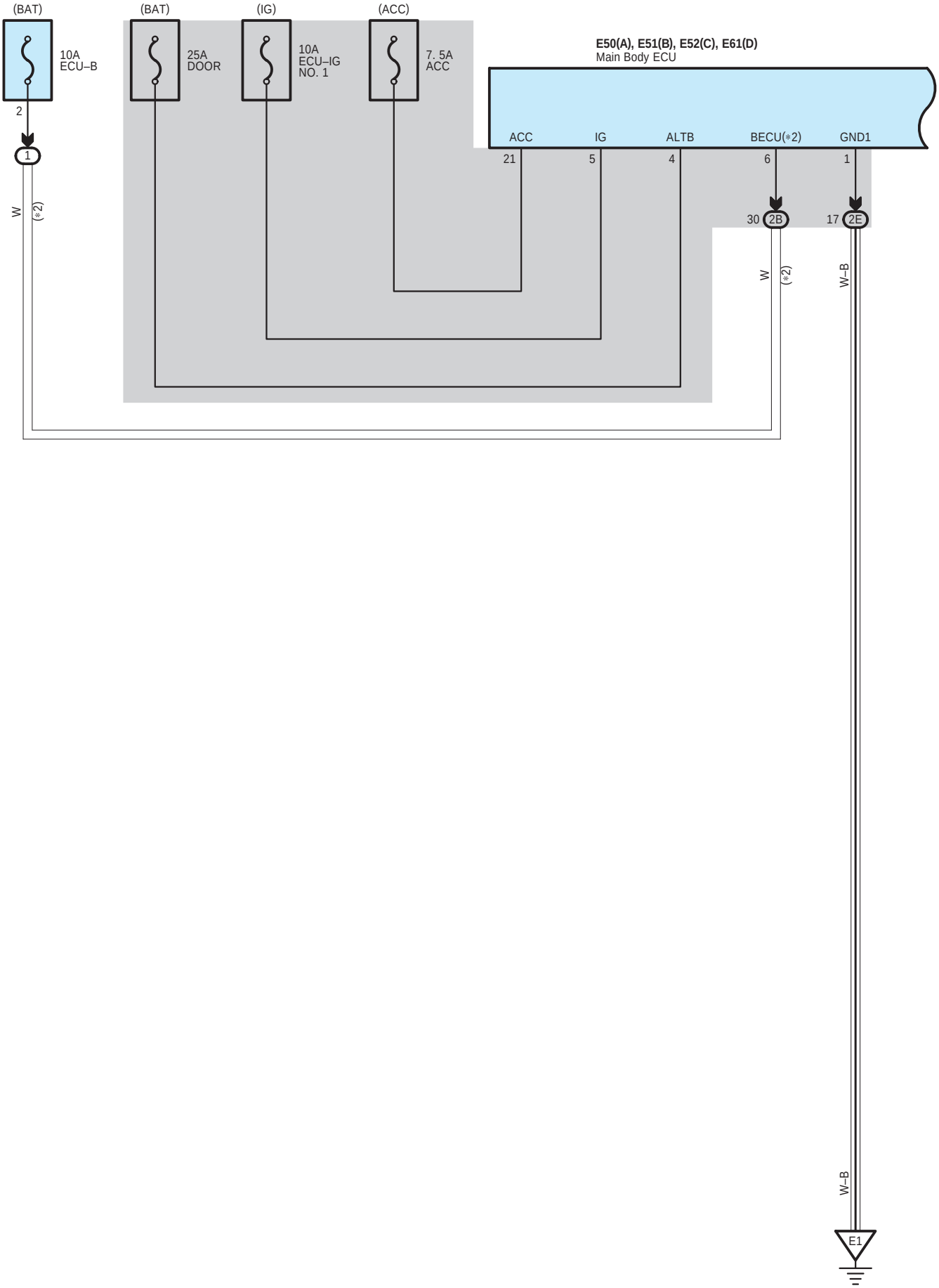
(BAT)
10A
ECU–B
2
1
W
(*2)
(BAT)
25A
DOOR
(IG)
10A
ECU–IG
NO. 1
(ACC)
7. 5A
ACC
E50(A), E51(B), E52(C), E61(D)
Main Body ECU
ACC
IG
ALTB
BECU(*2)
GND1
21
5
4
6
1
30
2B
17
2E
W
(*2)
W–B
W–B
E1

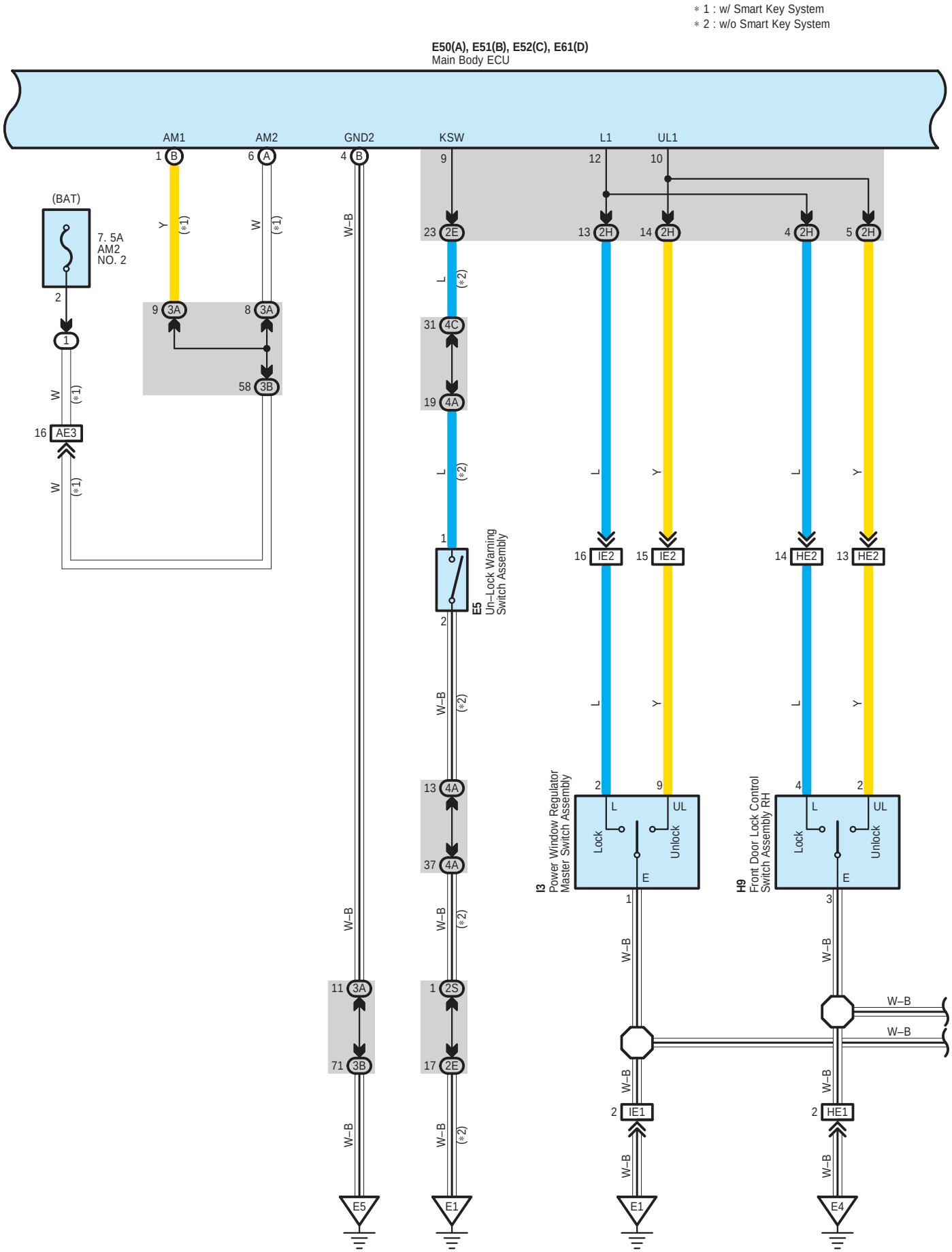
* 1 : w/ Smart Key System
* 2 : w/o Smart Key System
E50(A), E51(B), E52(C), E61(D)
Main Body ECU
AM1
AM2
GND2
KSW
L1
UL1
(BAT)
7. 5A
AM2
NO. 2
AE3
E5
Un–Lock Warning
Switch Assembly
I3
Power Window Regulator
Master Switch Assembly
H9
Front Door Lock Control
Switch Assembly RH
Lock
Unlock
IE2
HE2
IE1
HE1
E1
E4
E5
W–B

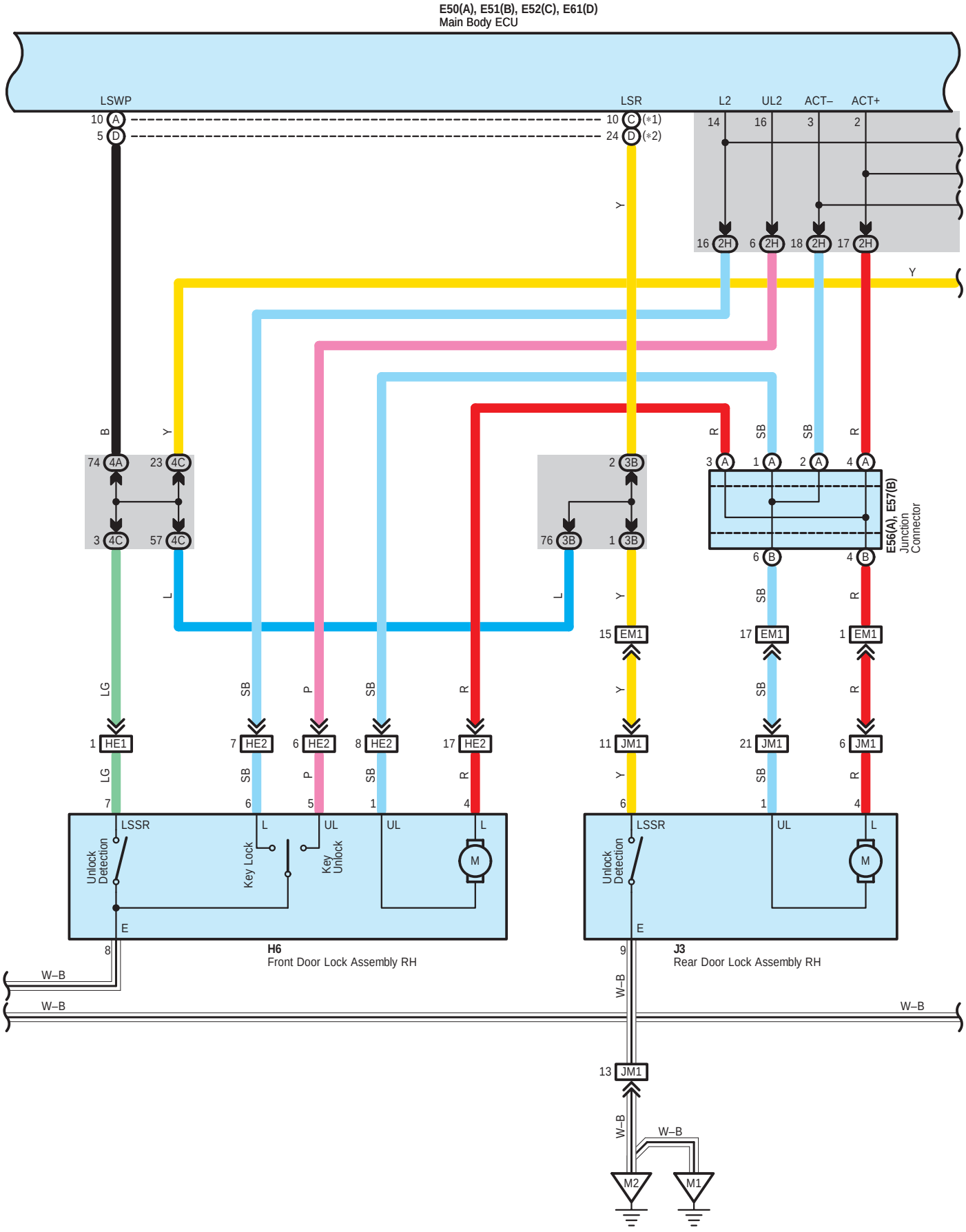
E50(A), E51(B), E52(C), E61(D)
Main Body ECU
LSWP
LSR
L2
UL2
ACT–
ACT+
10 A
5 D
10 C (*1)
24 D (*2)
14
16
3
2
16 2H
6 2H
18 2H
17 2H
Y
B
74 4A
23 4C
3 4C
57 4C
2 3B
76 3B
1 3B
3 A
1 A
2 A
4 A
R
SB
SB
R
E56(A), E57(B)
Junction
Connector
6 B
4 B
L
L
Y
SB
R
15 EM1
17 EM1
1 EM1
LG
SB
P
SB
R
Y
SB
R
1 HE1
7 HE2
6 HE2
8 HE2
17 HE2
11 JM1
21 JM1
6 JM1
LG
SB
P
SB
R
Y
SB
R
7
6
5
1
4
6
1
4
LSSR
L
UL
UL
L
LSSR
UL
L
Unlock
Detection
Key Lock
Key
Unlock
M
Unlock
Detection
M
E
E
8
9
H6
Front Door Lock Assembly RH
J3
Rear Door Lock Assembly RH
W–B
W–B
W–B
W–B
13 JM1
W–B
W–B
M2
M1

∗ 1 : w/ Smart Key System
∗ 2 : w/o Smart Key System

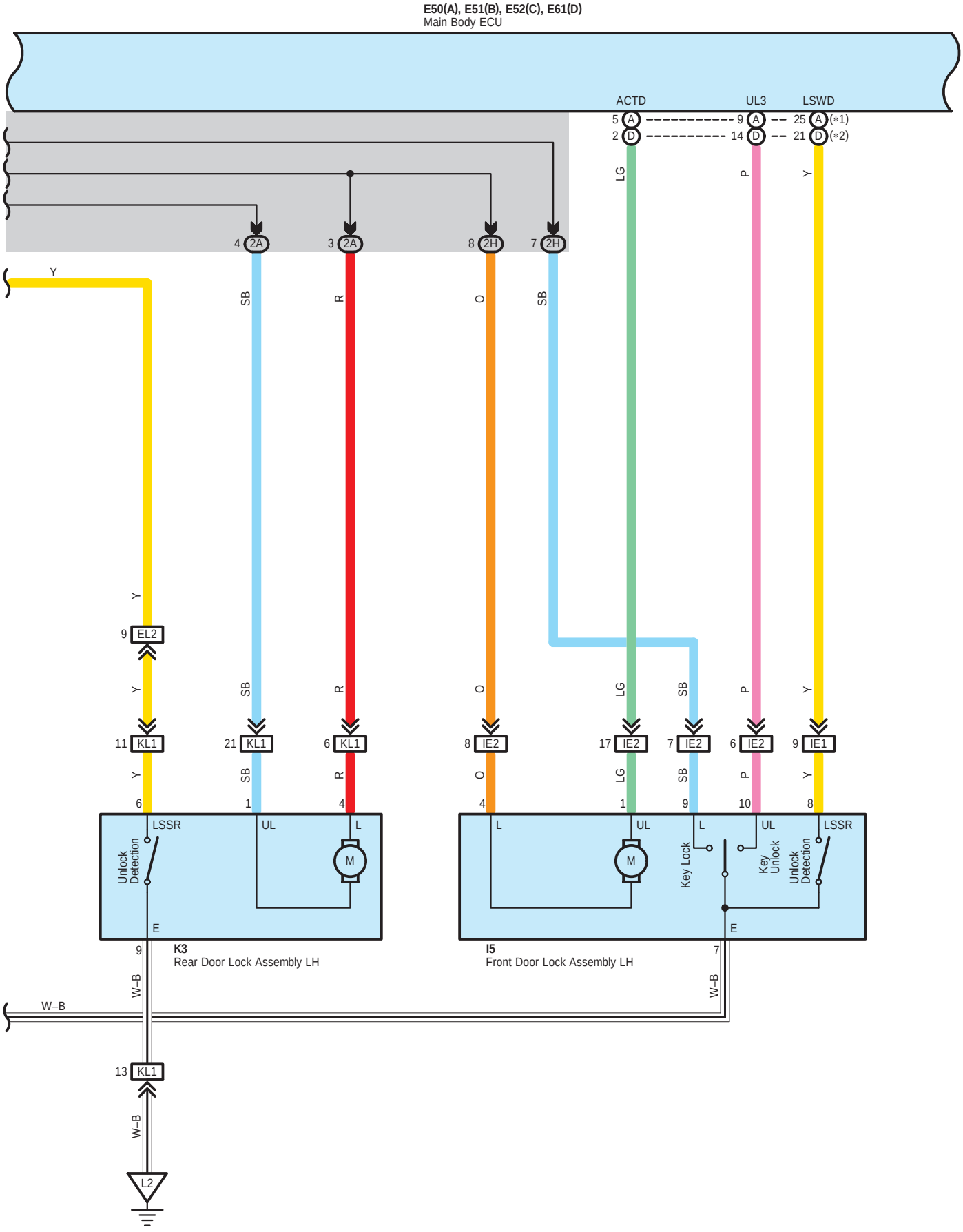

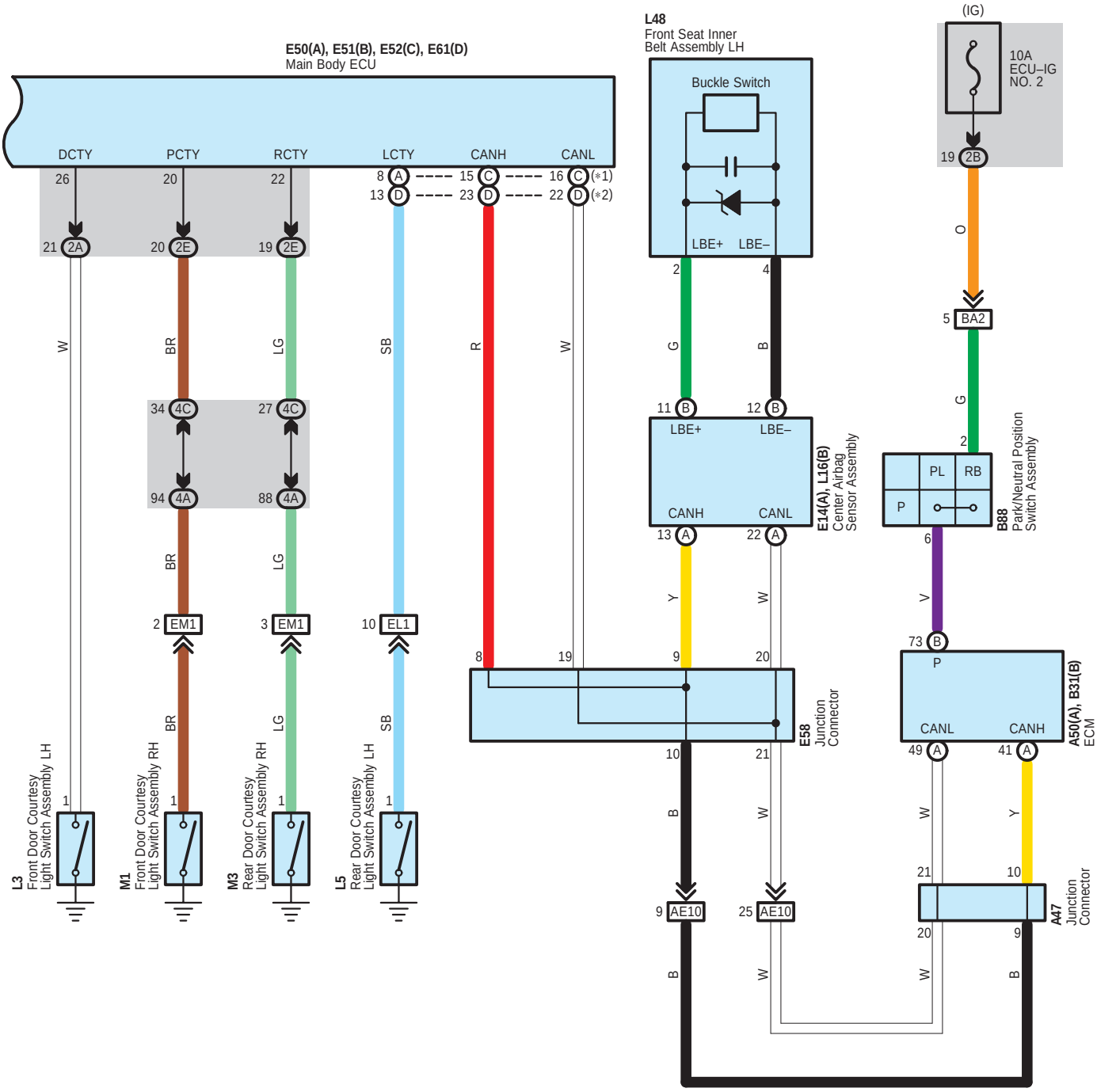

* 1 : w/ Smart Key System
* 2 : w/o Smart Key System

A 47
White

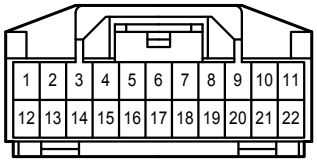

A 50
Black

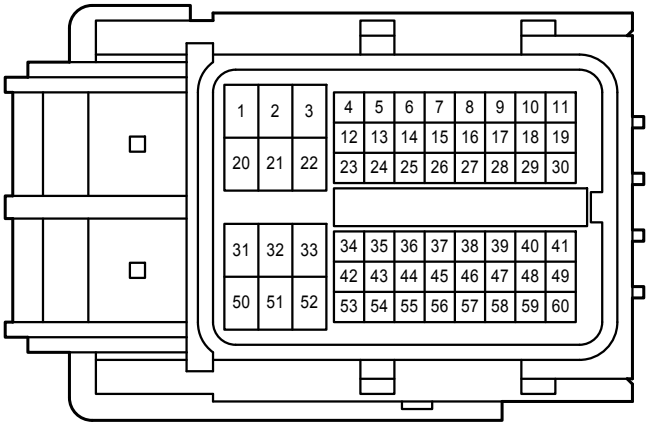

B 31
Black

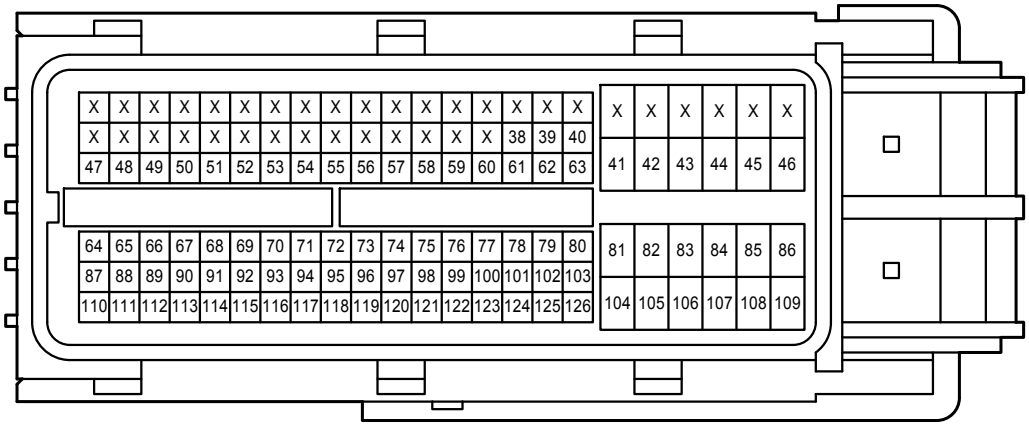

B 88
Gray

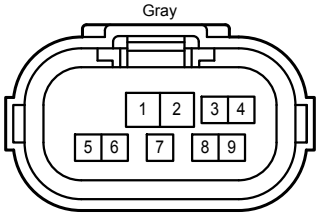

E 5
White

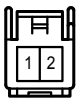

E 14
Yellow

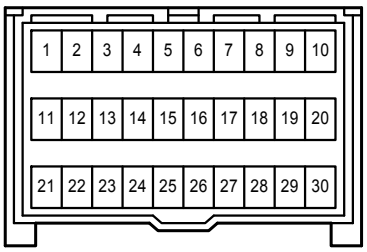

E 50
White

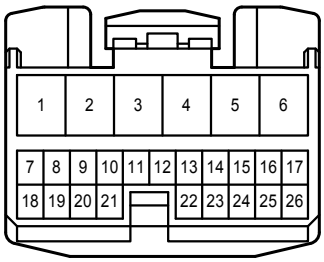

E 51
White

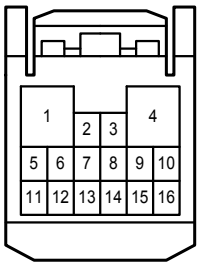

E 52
White

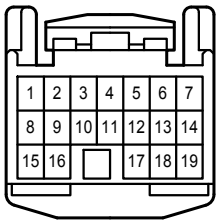

E 56
White

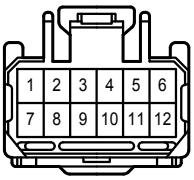

E 57
White

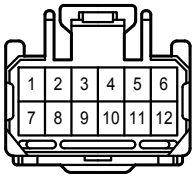

E 58
Gray

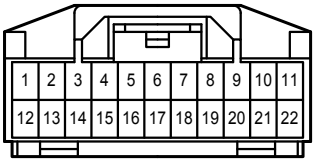

E 61
White

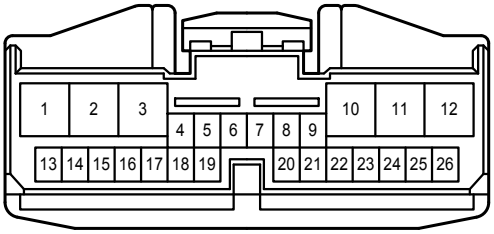

H 6
White

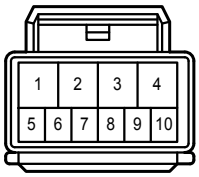

H 9
White

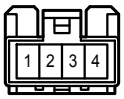

I 3
White

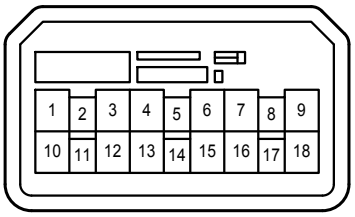

I 5
White

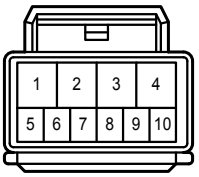

J 3
White

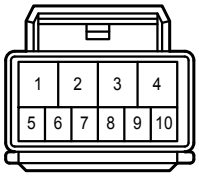

K 3
White

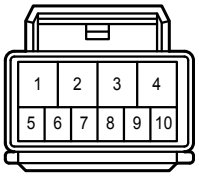

L 3
Black



L 5
Black



L 16
Yellow

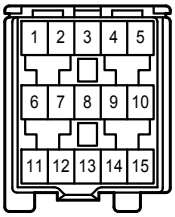

L 48
White



M 1
Black



M 3
Black



2A
White

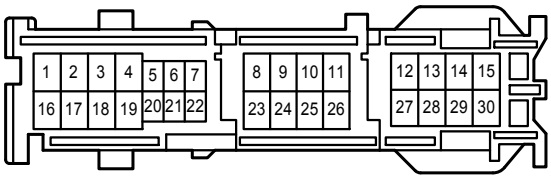

2B
White

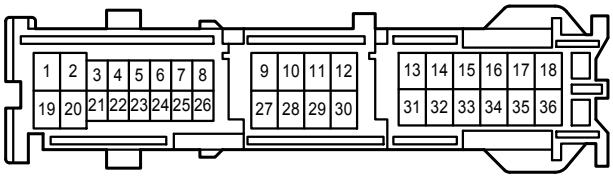

2E
White

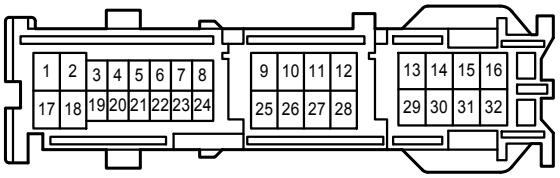

2H
White

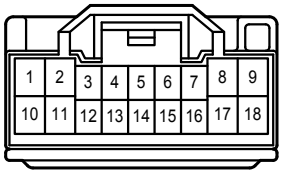

2S
White

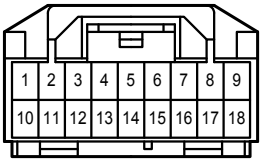

3A
White

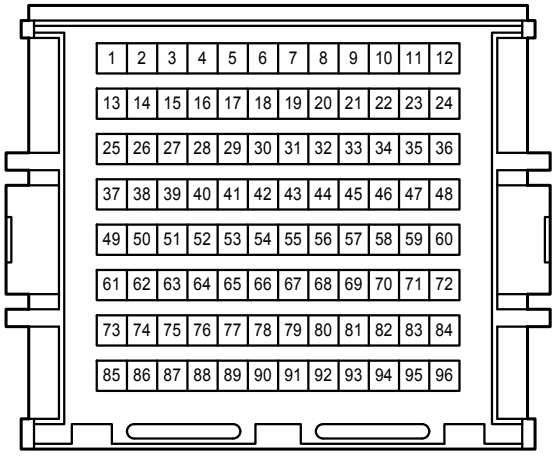

3B
White

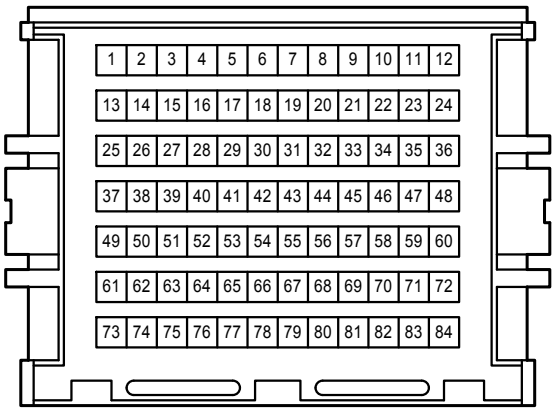

4A
White

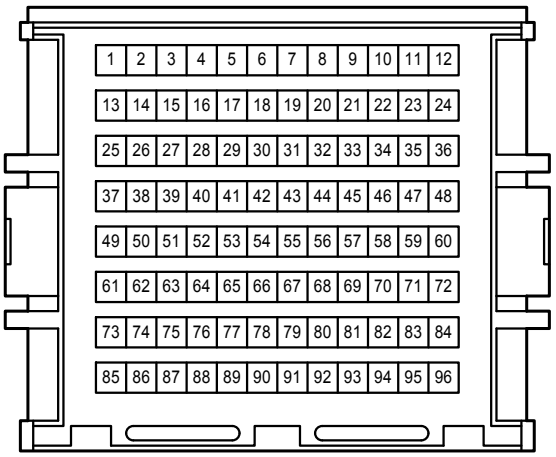

4C
White

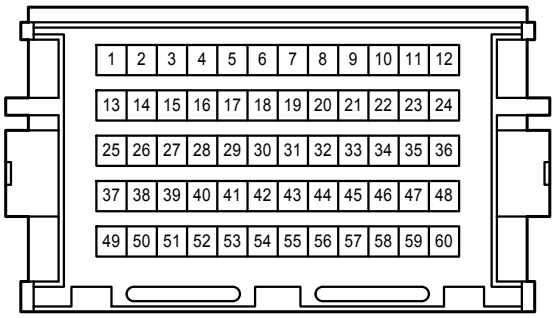

AE3
White

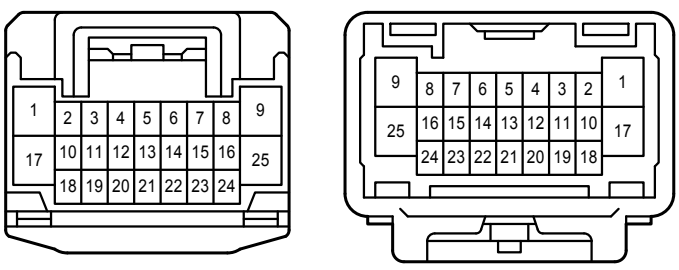

AE10
Gray

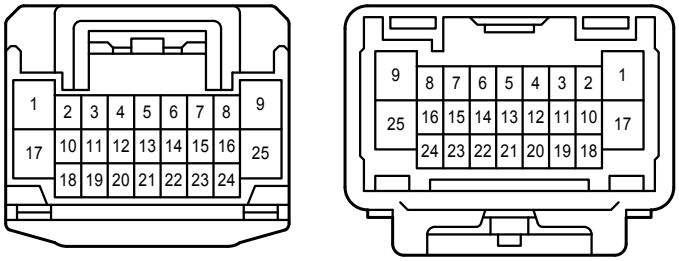

BA2
White

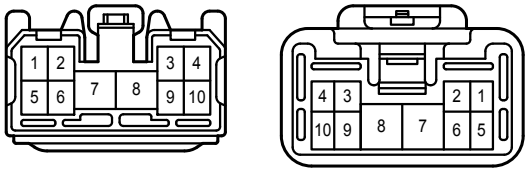

EL1
White

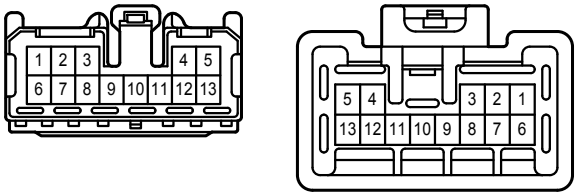

EL2
White

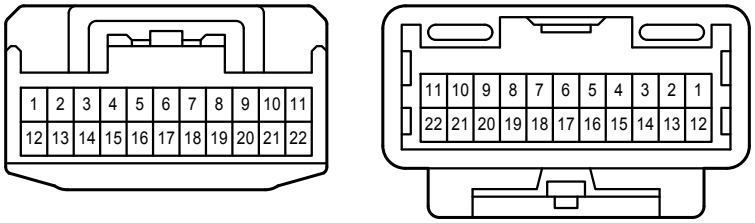

EM1
Gray

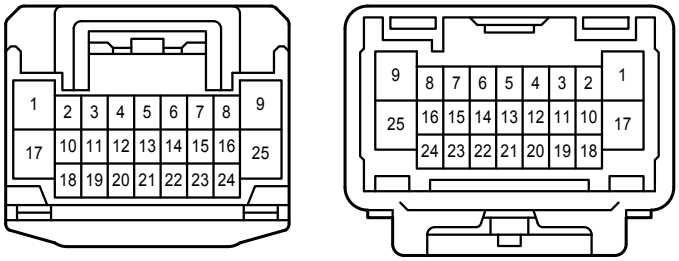

HE1
Blue

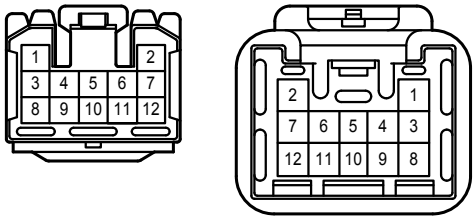

HE2
White

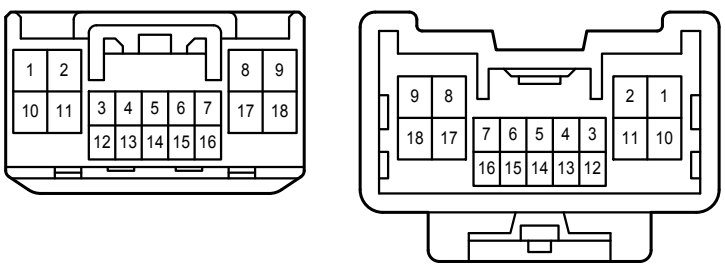

IE1
Blue

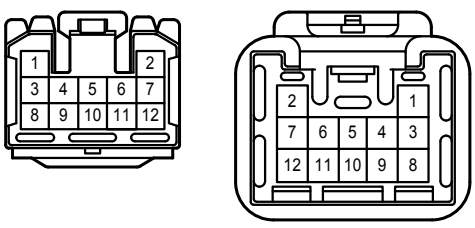

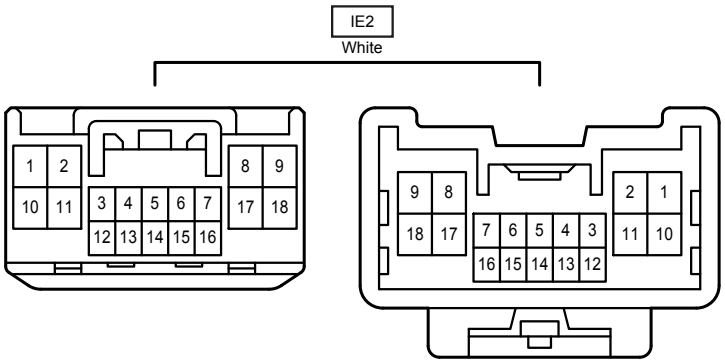
IE2
White
1 2 8 9
10 11 3 4 5 6 7 17 18
12 13 14 15 16
9 8 2 1
18 17 7 6 5 4 3 11 10
16 15 14 13 12

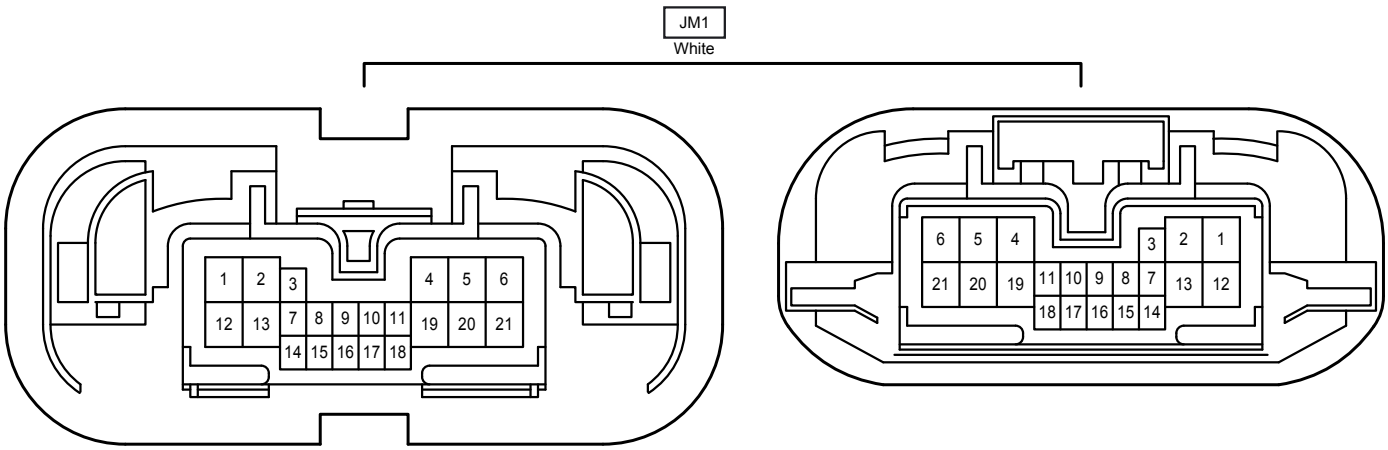
JM1
White
1 2 3 4 5 6
12 13 7 8 9 10 11 19 20 21
14 15 16 17 18
6 5 4 3 2 1
21 20 19 11 10 9 8 7 13 12
18 17 16 15 14

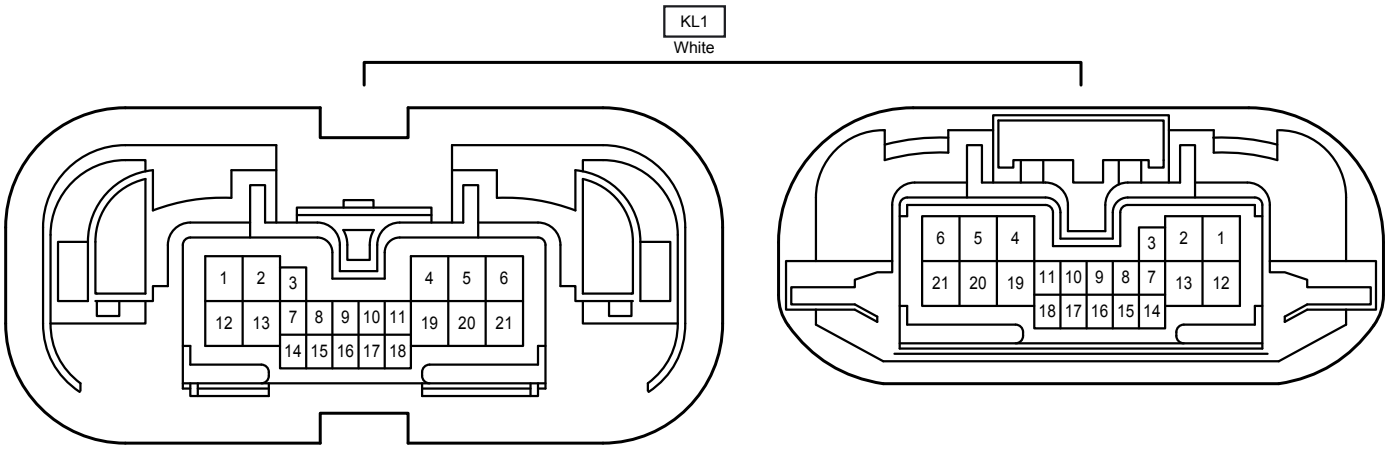
KL1
White
1 2 3 4 5 6
12 13 7 8 9 10 11 19 20 21
14 15 16 17 18
6 5 4 3 2 1
21 20 19 11 10 9 8 7 13 12
18 17 16 15 14

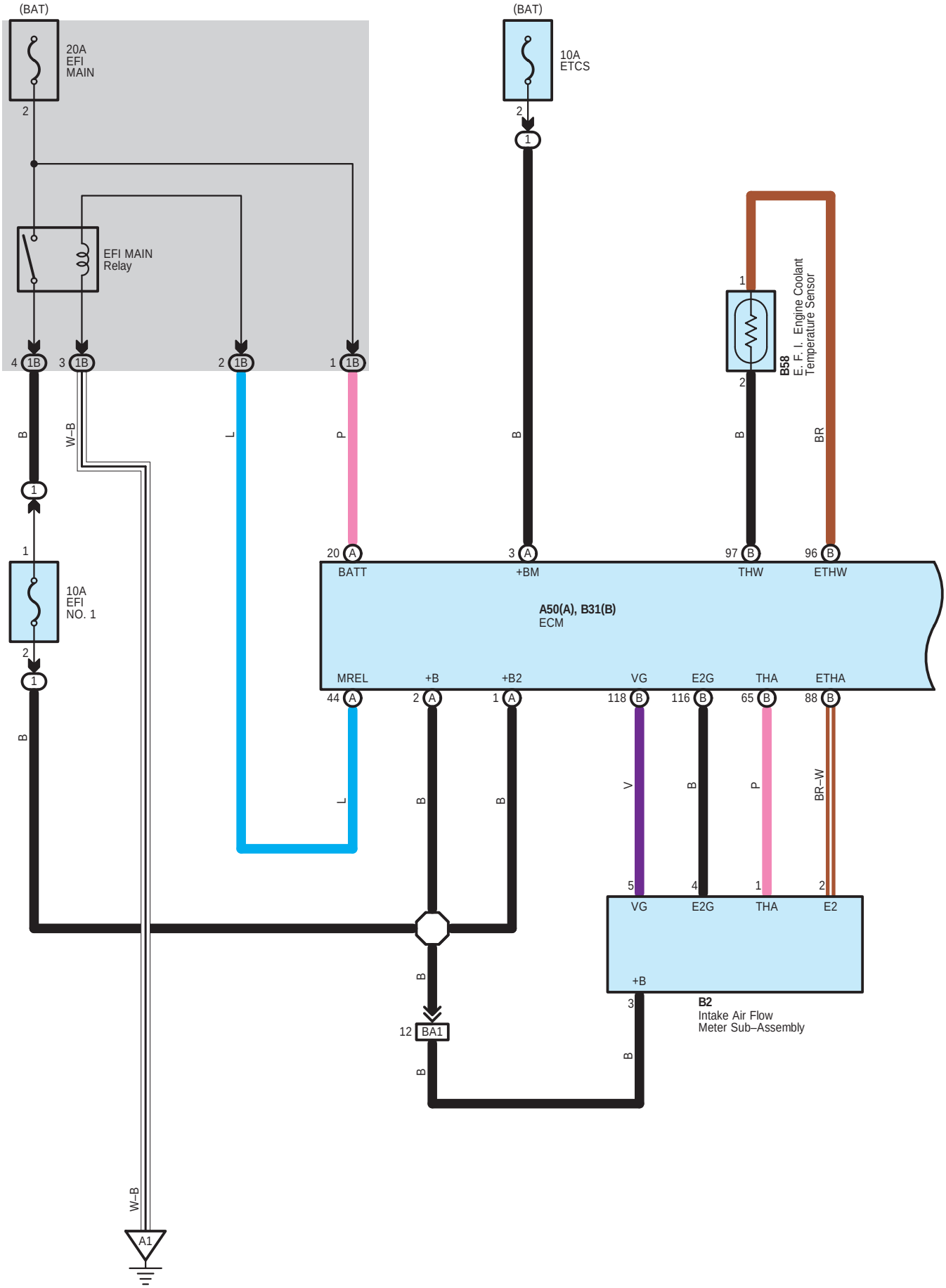
(BAT)
20A
EFI
MAIN
2
EFI MAIN
Relay
4 1B
3 1B
2 1B
1 1B
B
W–B
L
P
1
1
10A
EFI
NO. 1
2
1
B
W–B
A1
(BAT)
10A
ETCS
2
1
B
20 A
BATT
3 A
+BM
1
2
B
BR
B58
E. F. I. Engine Coolant
Temperature Sensor
97 B
THW
96 B
ETHW
A50(A), B31(B)
ECM
MREL
+B
+B2
VG
E2G
THA
ETHA
44 A
2 A
1 A
118 B
116 B
65 B
88 B
L
B
B
V
B
P
BR–W
12 BA1
B
B
5
4
1
2
VG
E2G
THA
E2
+B
3
B2
Intake Air Flow
Meter Sub–Assembly
B

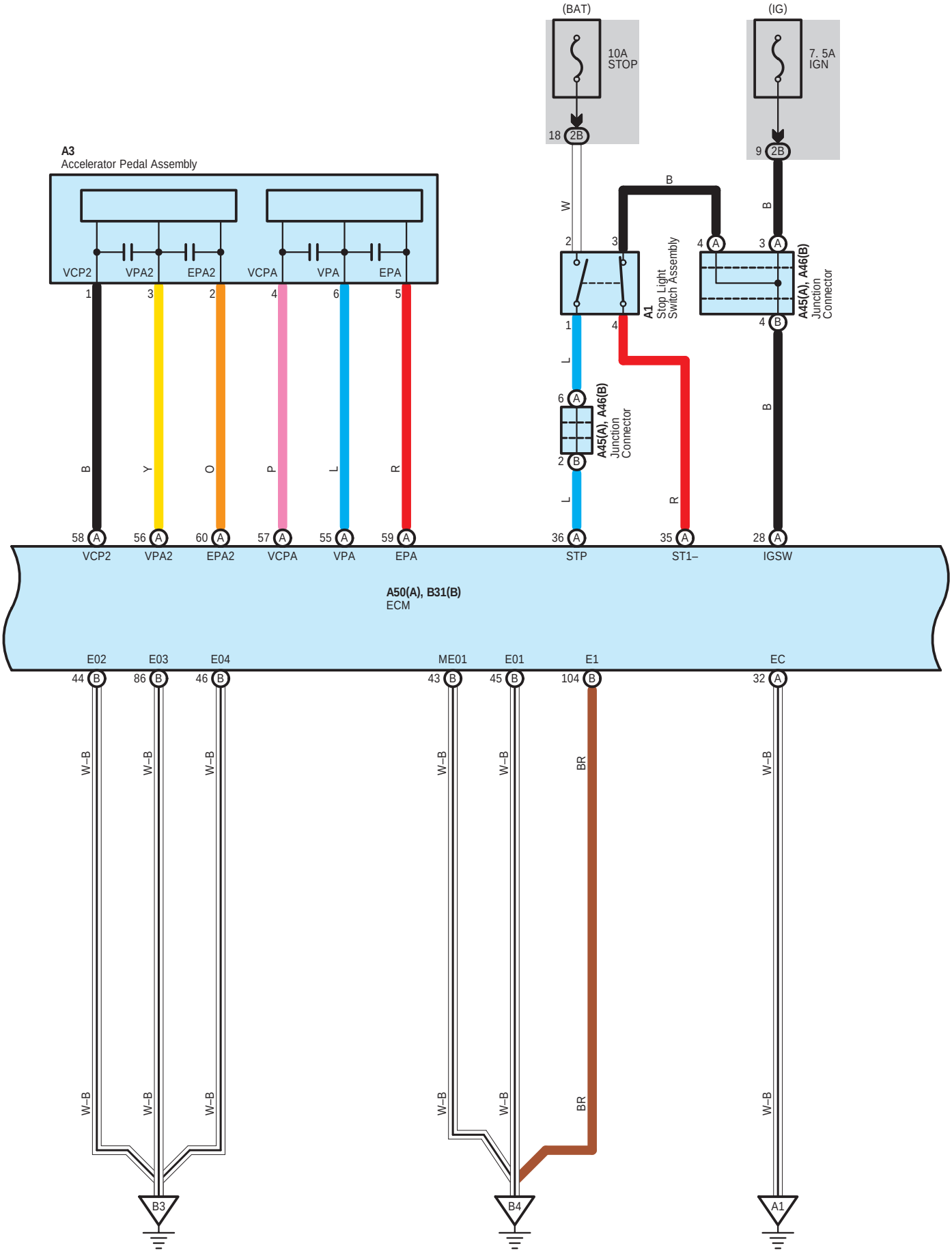
(BAT)
10A
STOP
18 2B
(IG)
7. 5A
IGN
9 2B
A3
Accelerator Pedal Assembly
VCP2
VPA2
EPA2
VCPA
VPA
EPA
1
3
2
4
6
5
B
Y
O
P
L
R
58 A
56 A
60 A
57 A
55 A
59 A
VCP2
VPA2
EPA2
VCPA
VPA
EPA
W
B
2
3
4 A
3 A
A1
Stop Light
Switch Assembly
A45(A), A46(B)
Junction
Connector
1
4
4 B
L
6 A
2 B
A45(A), A46(B)
Junction
Connector
L
R
B
36 A
35 A
28 A
STP
ST1–
IGSW
A50(A), B31(B)
ECM
E02
E03
E04
ME01
E01
E1
EC
44 B
86 B
46 B
43 B
45 B
104 B
32 A
W–B
W–B
W–B
W–B
W–B
BR
W–B
W–B
W–B
W–B
W–B
BR
W–B
B3
B4
A1

∗ 1 : Shielded

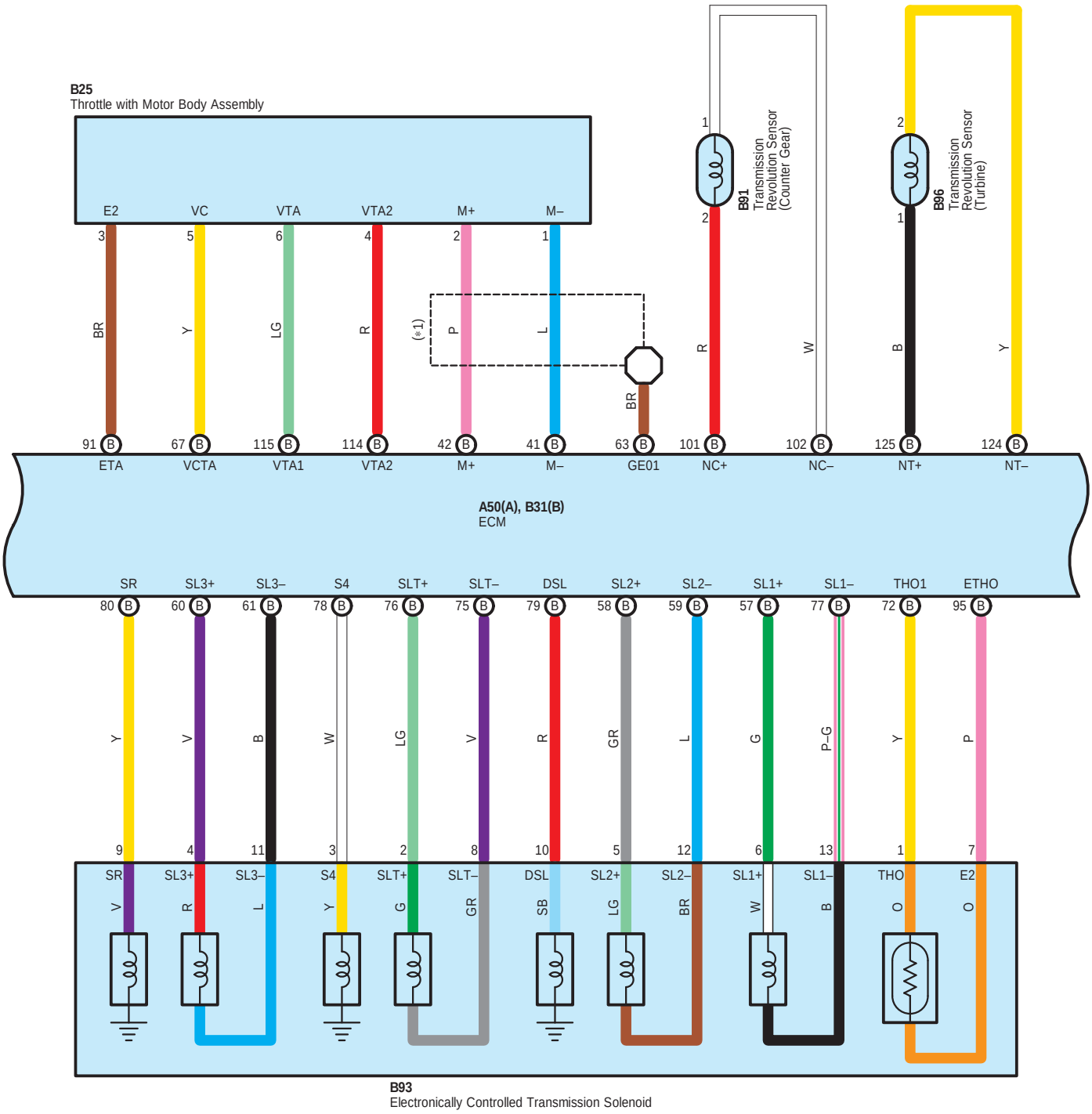
B25
Throttle with Motor Body Assembly
E2
VC
VTA
VTA2
M+
M–
3
5
6
4
2
1
BR
Y
LG
R
(∗1)
P
L
BR
B91
Transmission Revolution Sensor (Counter Gear)
1
2
R
W
B96
Transmission Revolution Sensor (Turbine)
2
1
B
Y
91 B ETA
67 B VCTA
115 B VTA1
114 B VTA2
42 B M+
41 B M–
63 B GE01
101 B NC+
102 B NC–
125 B NT+
124 B NT–
A50(A), B31(B)
ECM
SR
SL3+
SL3–
S4
SLT+
SLT–
DSL
SL2+
SL2–
SL1+
SL1–
THO1
ETHO
80 B
60 B
61 B
78 B
76 B
75 B
79 B
58 B
59 B
57 B
77 B
72 B
95 B
Y
V
B
W
LG
V
R
GR
L
G
P–G
Y
P
9
4
11
3
2
8
10
5
12
6
13
1
7
SR
SL3+
SL3–
S4
SLT+
SLT–
DSL
SL2+
SL2–
SL1+
SL1–
THO
E2
V
R
L
Y
G
GR
SB
LG
BR
W
B
O
O
B93
Electronically Controlled Transmission Solenoid

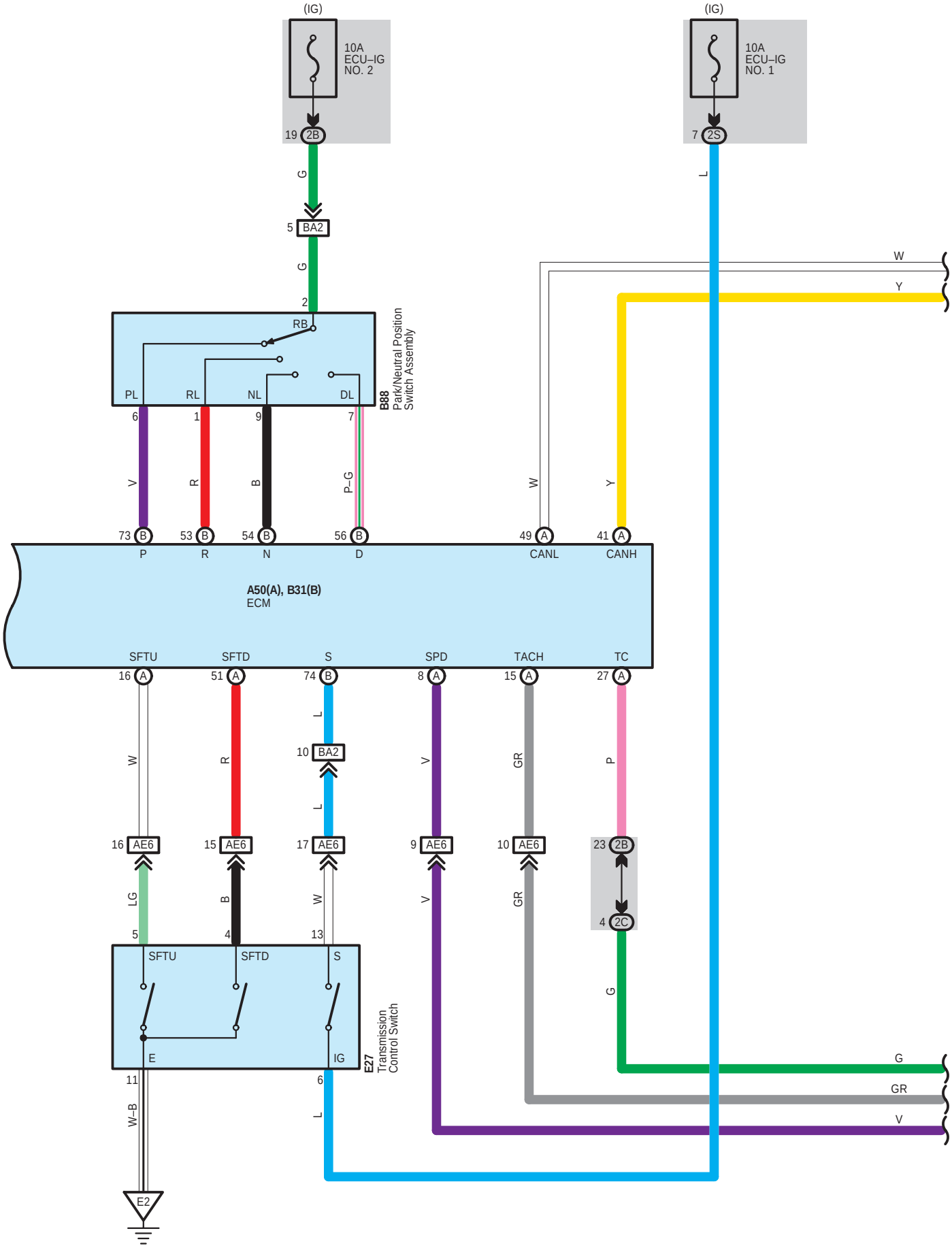
(IG)
10A
ECU–IG
NO. 2
19 2B
G
5 BA2
G
2
RB
PL
RL
NL
DL
B88
Park/Neutral Position
Switch Assembly
6
1
9
7
V
R
B
P–G
73 B
53 B
54 B
56 B
P
R
N
D
(IG)
10A
ECU–IG
NO. 1
7 2S
L
W
Y
W
Y
49 A
41 A
CANL
CANH
A50(A), B31(B)
ECM
SFTU
SFTD
S
SPD
TACH
TC
16 A
51 A
74 B
8 A
15 A
27 A
W
R
L
10 BA2
L
V
GR
P
16 AE6
15 AE6
17 AE6
9 AE6
10 AE6
23 2B
4 2C
LG
B
W
V
GR
5
4
13
G
SFTU
SFTD
S
E
IG
E27
Transmission
Control Switch
11
6
W–B
L
G
GR
V
E2

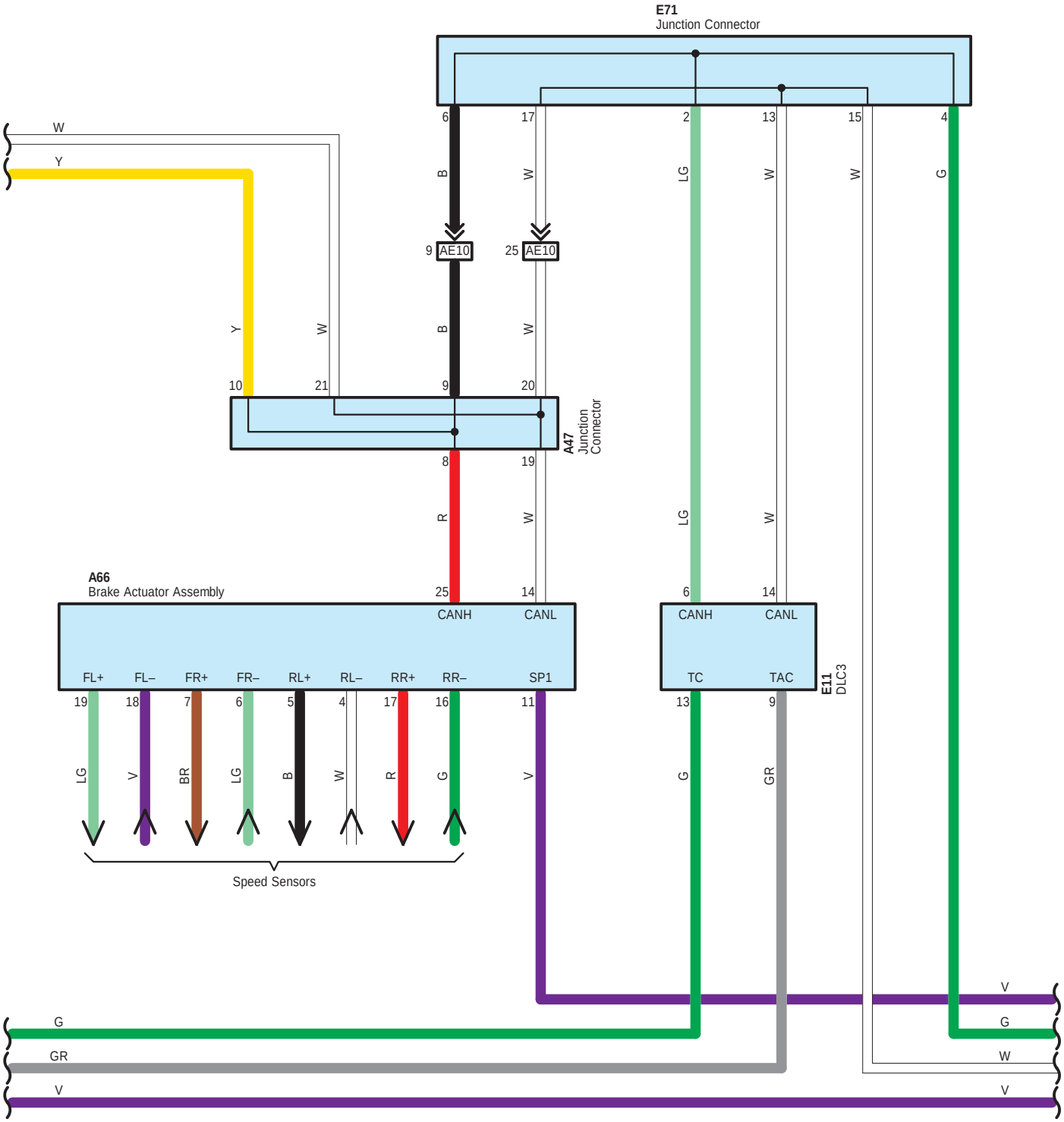
E71
Junction Connector
6
17
2
13
15
4
W
Y
B
W
LG
W
W
G
9 AE10
25 AE10
Y
W
B
W
10
21
9
20
A47
Junction
Connector
8
19
R
W
LG
W
A66
Brake Actuator Assembly
25
14
6
14
CANH
CANL
CANH
CANL
FL+
FL–
FR+
FR–
RL+
RL–
RR+
RR–
SP1
TC
TAC
E11
DLC3
19
18
7
6
5
4
17
16
11
13
9
LG
V
BR
LG
B
W
R
G
V
G
GR
Speed Sensors
V
G
G
GR
W
V
V

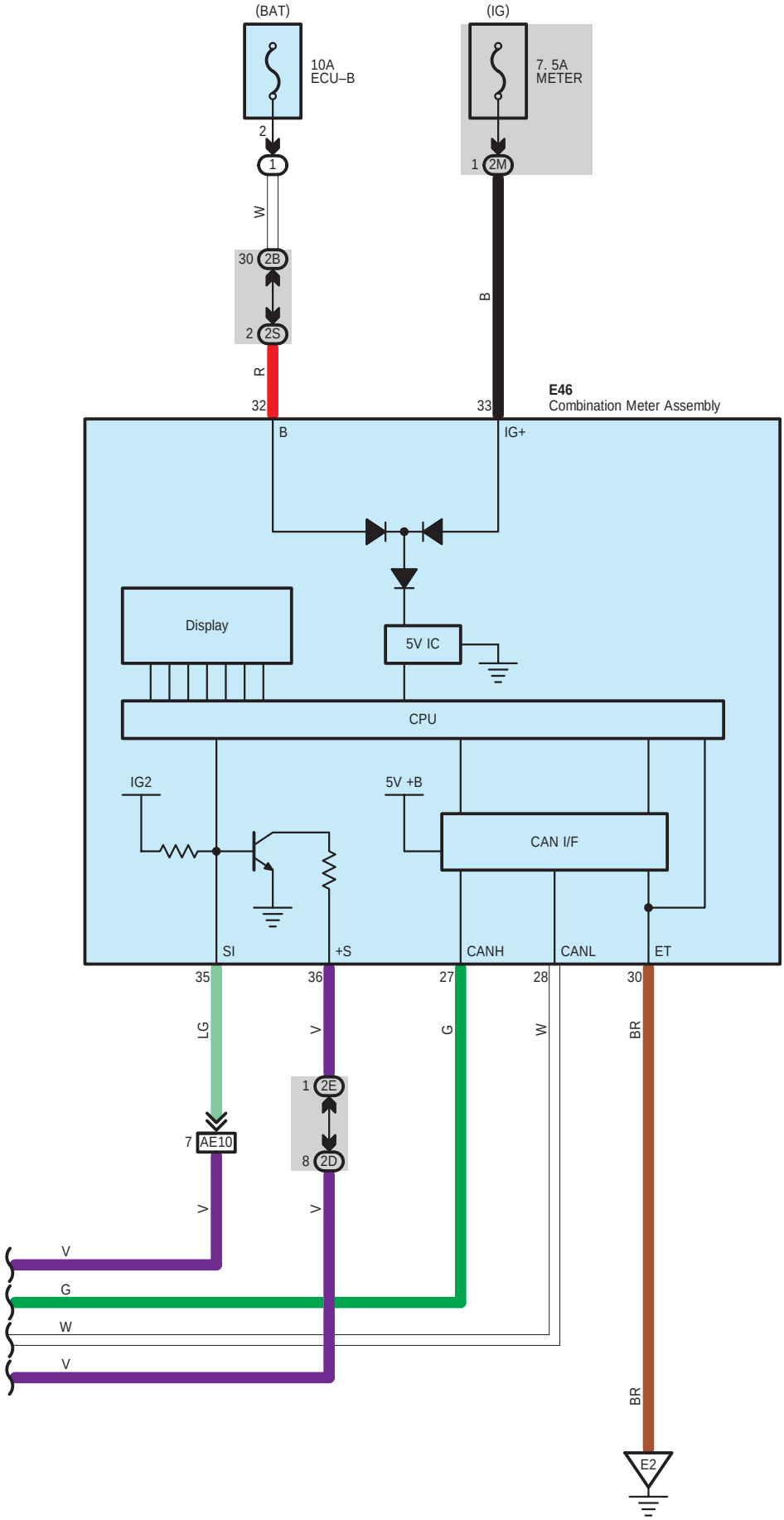
(BAT)
10A
ECU–B
2
1
W
30
2B
2
2S
R
32
(IG)
7. 5A
METER
1
2M
B
33
E46
Combination Meter Assembly
B
IG+
Display
5V IC
CPU
IG2
5V +B
CAN I/F
SI
+S
CANH
CANL
ET
35
36
27
28
30
LG
V
G
W
BR
1
2E
7
AE10
8
2D
V
G
W
V
BR
E2

A 1
Black

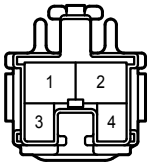

A 3
Black

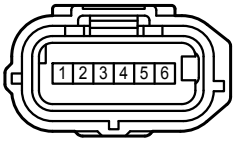

A 45
White

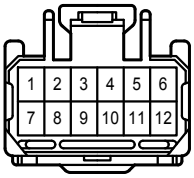

A 46
White

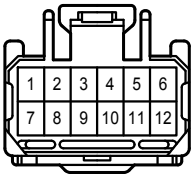

A 47
White

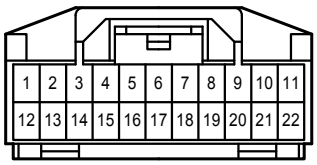

A 50
Black

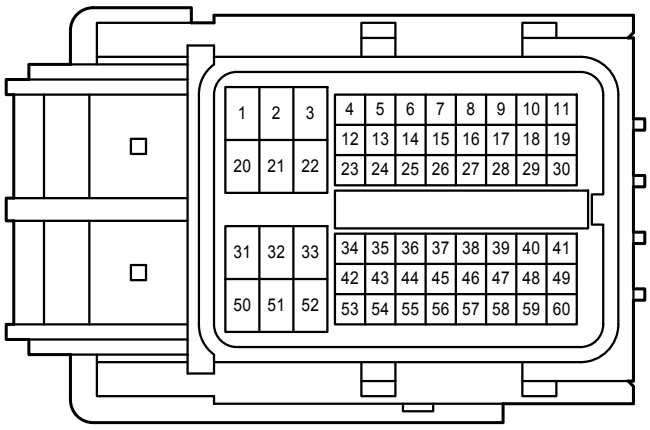

A 66
Black

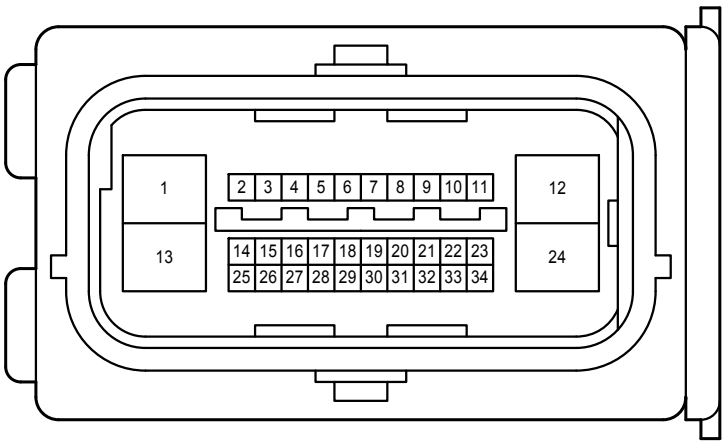

B 2
Black



B 25
Black

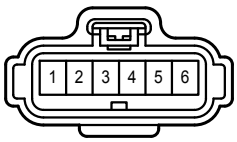

B 31
Black

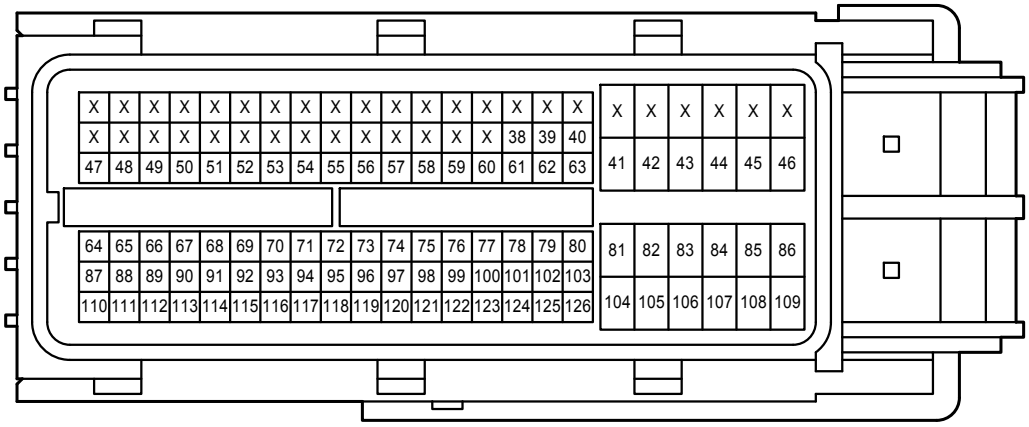

B 58
Gray



B 88
Gray

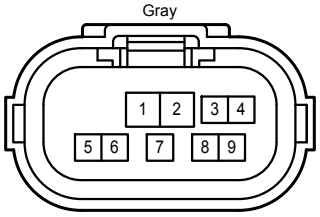

B 91
Black

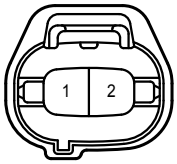

B 93
Gray

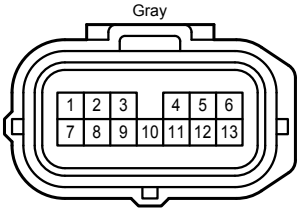

B 96
Black

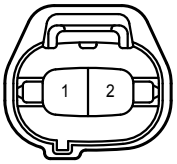

E 11
White

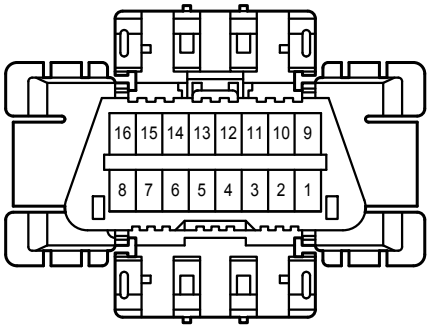

E 27
White

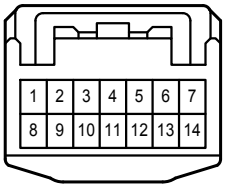

E 46
White

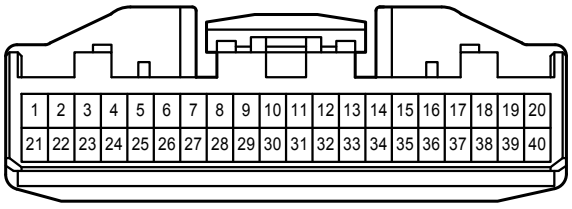

E 71
White

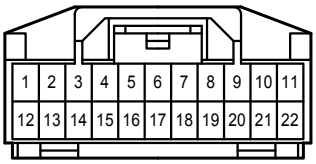

1B
White

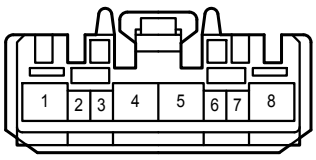

2B
White

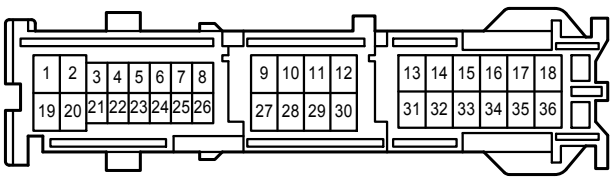

2C
White

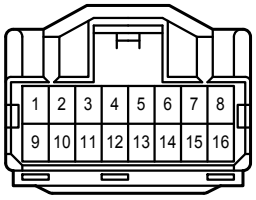

2D
White

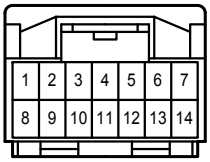

2E
White

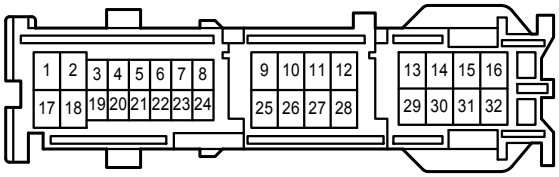

2M
White

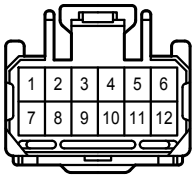

2S
White

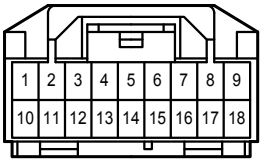

AE6
Gray

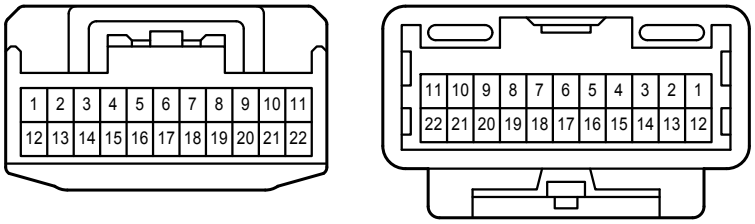

AE10
Gray

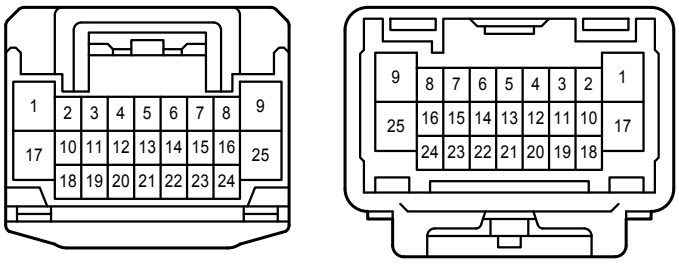

BA1
White

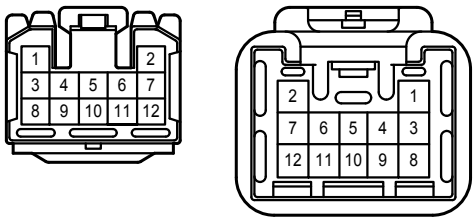

BA2
White

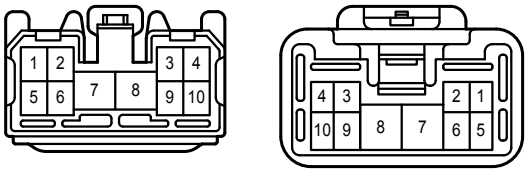

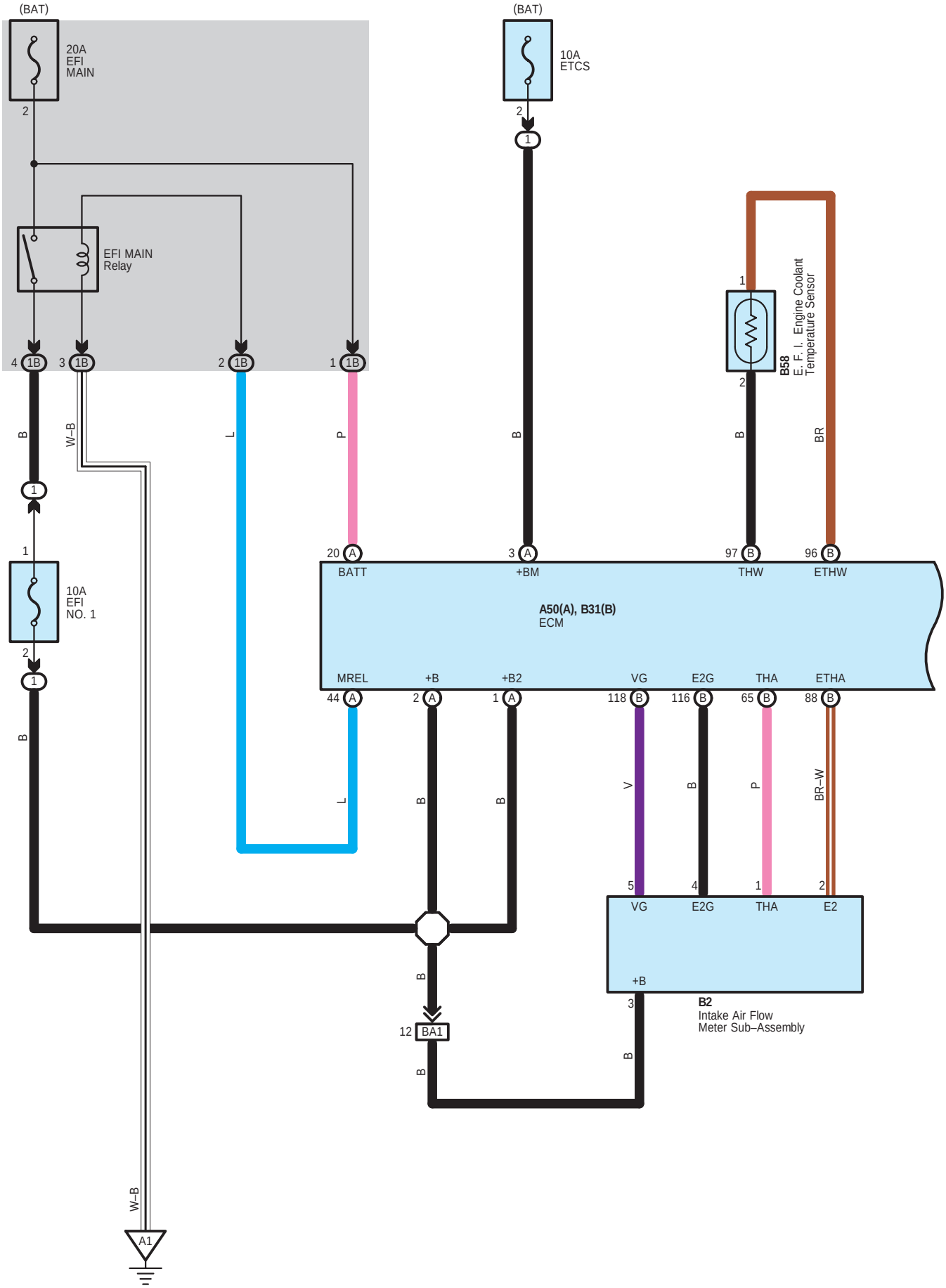
(BAT)
20A
EFI
MAIN
2
EFI MAIN
Relay
4 1B
3 1B
2 1B
1 1B
B
W–B
L
P
1
1
10A
EFI
NO. 1
2
1
B
W–B
A1
(BAT)
10A
ETCS
2
1
B
20 A
BATT
3 A
+BM
1
2
B
B58
E. F. I. Engine Coolant
Temperature Sensor
BR
97 B
THW
96 B
ETHW
A50(A), B31(B)
ECM
MREL
+B
+B2
VG
E2G
THA
ETHA
44 A
2 A
1 A
118 B
116 B
65 B
88 B
L
B
B
V
B
P
BR–W
5
4
1
2
VG
E2G
THA
E2
+B
3
B2
Intake Air Flow
Meter Sub–Assembly
B
12 BA1
B

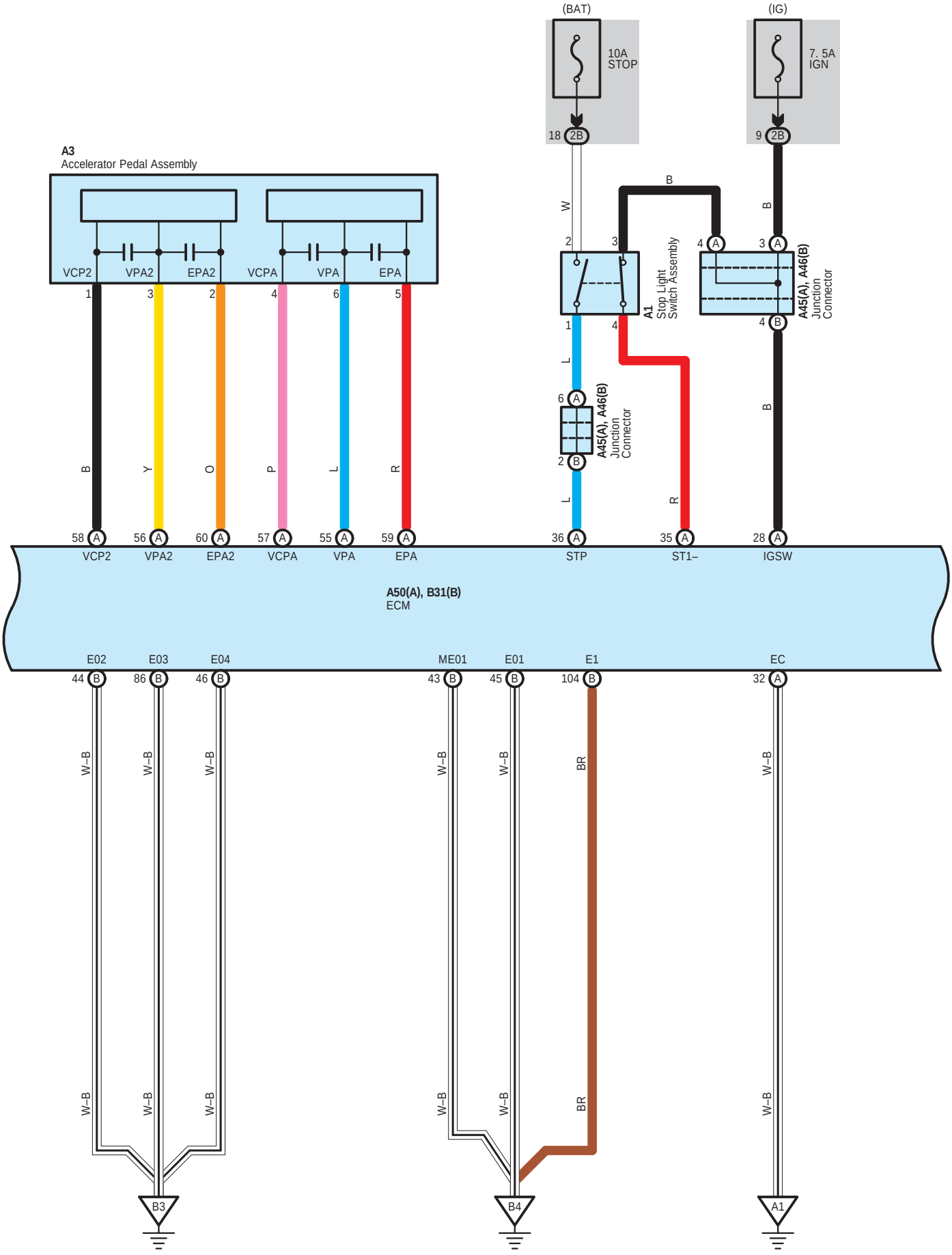
(BAT)
10A
STOP
18 2B
(IG)
7. 5A
IGN
9 2B
A3
Accelerator Pedal Assembly
VCP2
VPA2
EPA2
VCPA
VPA
EPA
1
3
2
4
6
5
B
Y
O
P
L
R
58 A
56 A
60 A
57 A
55 A
59 A
VCP2
VPA2
EPA2
VCPA
VPA
EPA
W
B
2
3
4 A
3 A
A1
Stop Light
Switch Assembly
A45(A), A46(B)
Junction
Connector
1
4
4 B
L
6 A
2 B
A45(A), A46(B)
Junction
Connector
L
R
B
36 A
35 A
28 A
STP
ST1–
IGSW
A50(A), B31(B)
ECM
E02
E03
E04
ME01
E01
E1
EC
44 B
86 B
46 B
43 B
45 B
104 B
32 A
W–B
W–B
W–B
W–B
W–B
BR
W–B
W–B
W–B
W–B
W–B
BR
W–B
B3
B4
A1

∗ 1 : Shielded

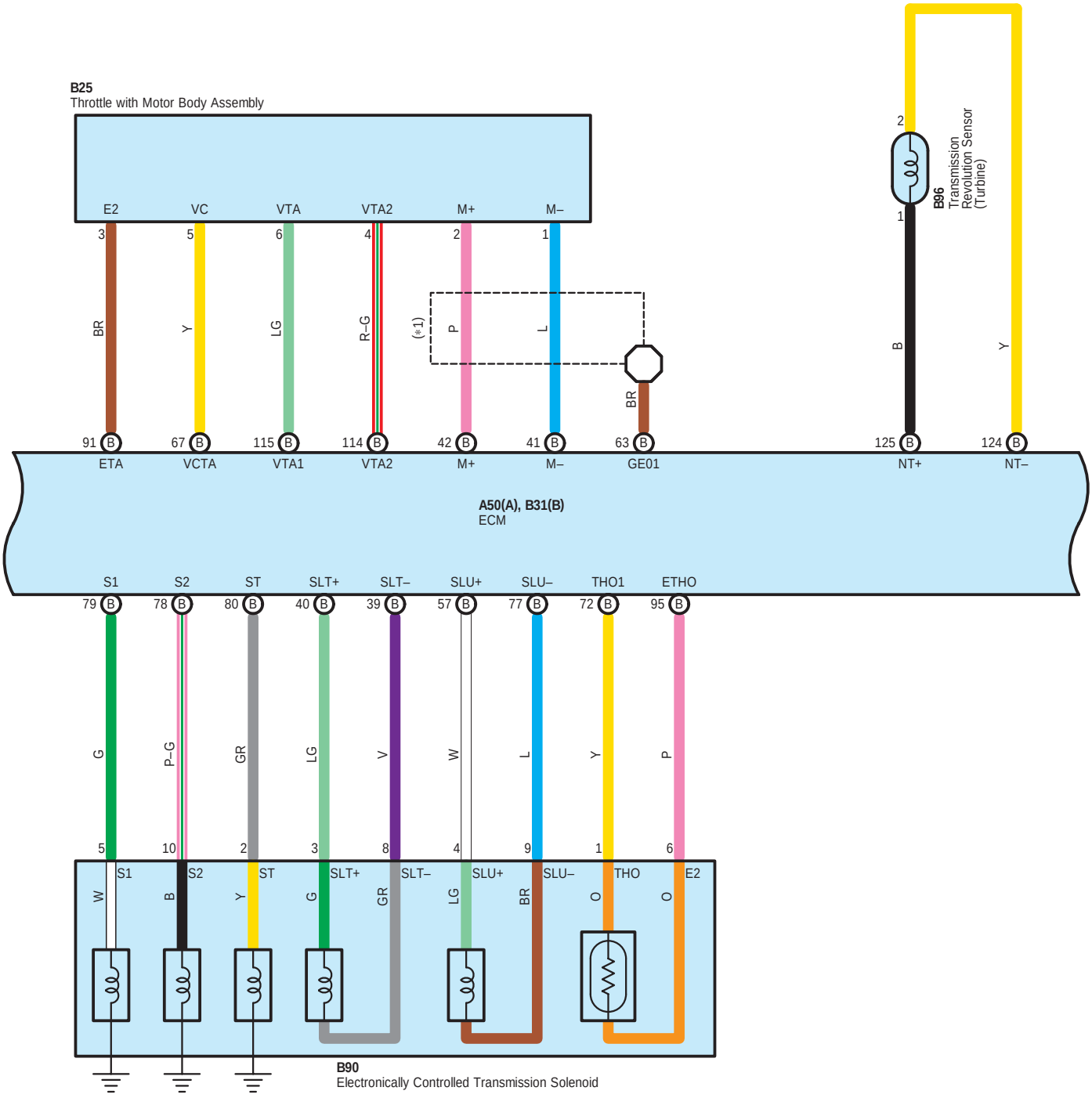
B25
Throttle with Motor Body Assembly
E2
VC
VTA
VTA2
M+
M–
3
5
6
4
2
1
BR
Y
LG
R–G
(∗1)
P
L
BR
91 B
67 B
115 B
114 B
42 B
41 B
63 B
ETA
VCTA
VTA1
VTA2
M+
M–
GE01
B96
Transmission Revolution Sensor (Turbine)
2
1
B
Y
125 B
124 B
NT+
NT–
A50(A), B31(B)
ECM
S1
S2
ST
SLT+
SLT–
SLU+
SLU–
THO1
ETHO
79 B
78 B
80 B
40 B
39 B
57 B
77 B
72 B
95 B
G
P–G
GR
LG
V
W
L
Y
P
5
10
2
3
8
4
9
1
6
W
B
Y
G
GR
LG
BR
O
O
S1
S2
ST
SLT+
SLT–
SLU+
SLU–
THO
E2
B90
Electronically Controlled Transmission Solenoid

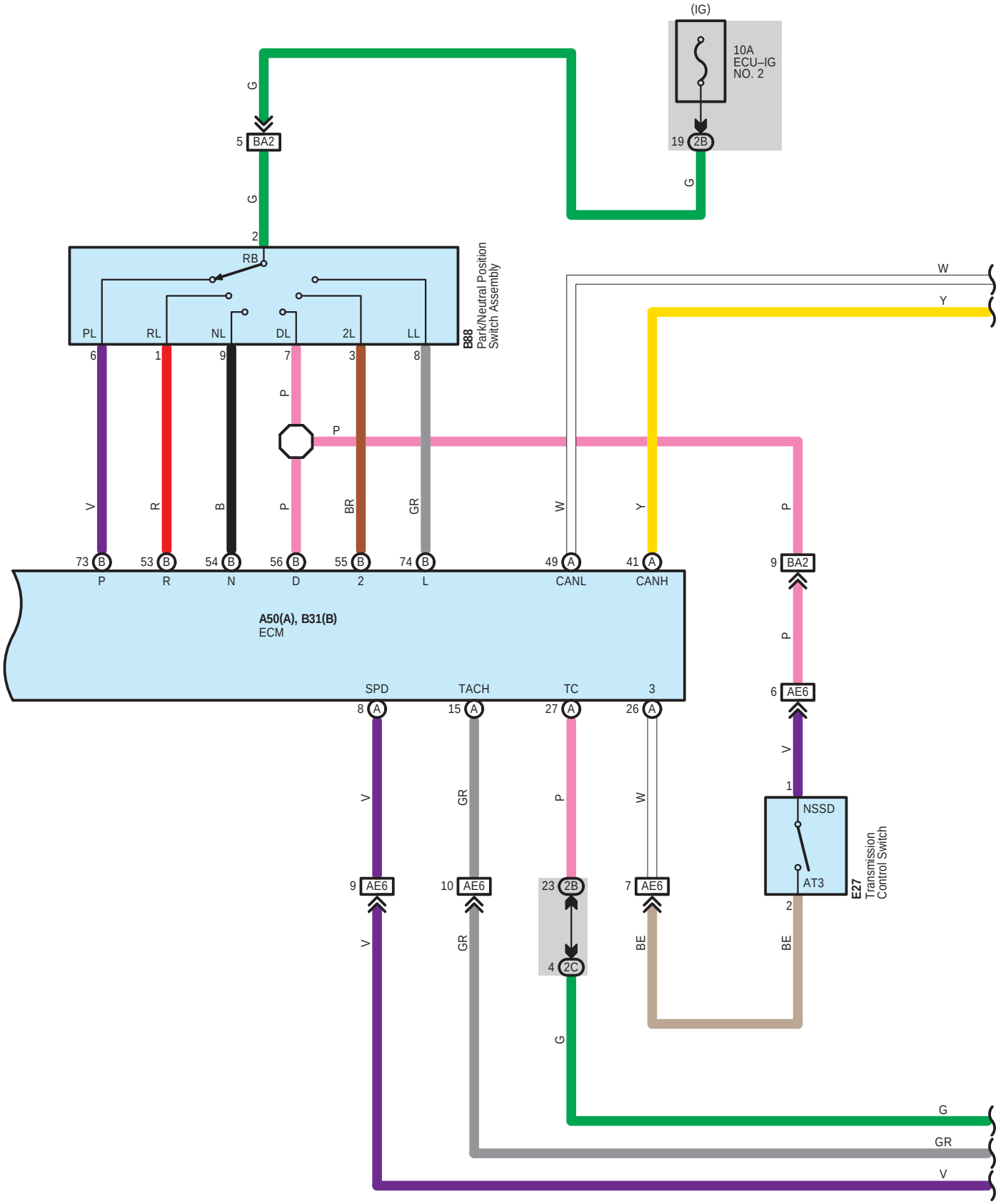
(IG)
10A
ECU–IG
NO. 2
19 2B
G
5 BA2
G
2
RB
PL
RL
NL
DL
2L
LL
6
1
9
7
3
8
B88
Park/Neutral Position
Switch Assembly
W
Y
P
P
V
R
B
P
BR
GR
W
Y
P
73 B
53 B
54 B
56 B
55 B
74 B
49 A
41 A
9 BA2
P
R
N
D
2
L
CANL
CANH
A50(A), B31(B)
ECM
SPD
TACH
TC
3
8 A
15 A
27 A
26 A
6 AE6
V
1
NSSD
AT3
E27
Transmission
Control Switch
2
V
GR
P
W
9 AE6
10 AE6
23 2B
7 AE6
BE
BE
GR
4 2C
G
G
GR
V

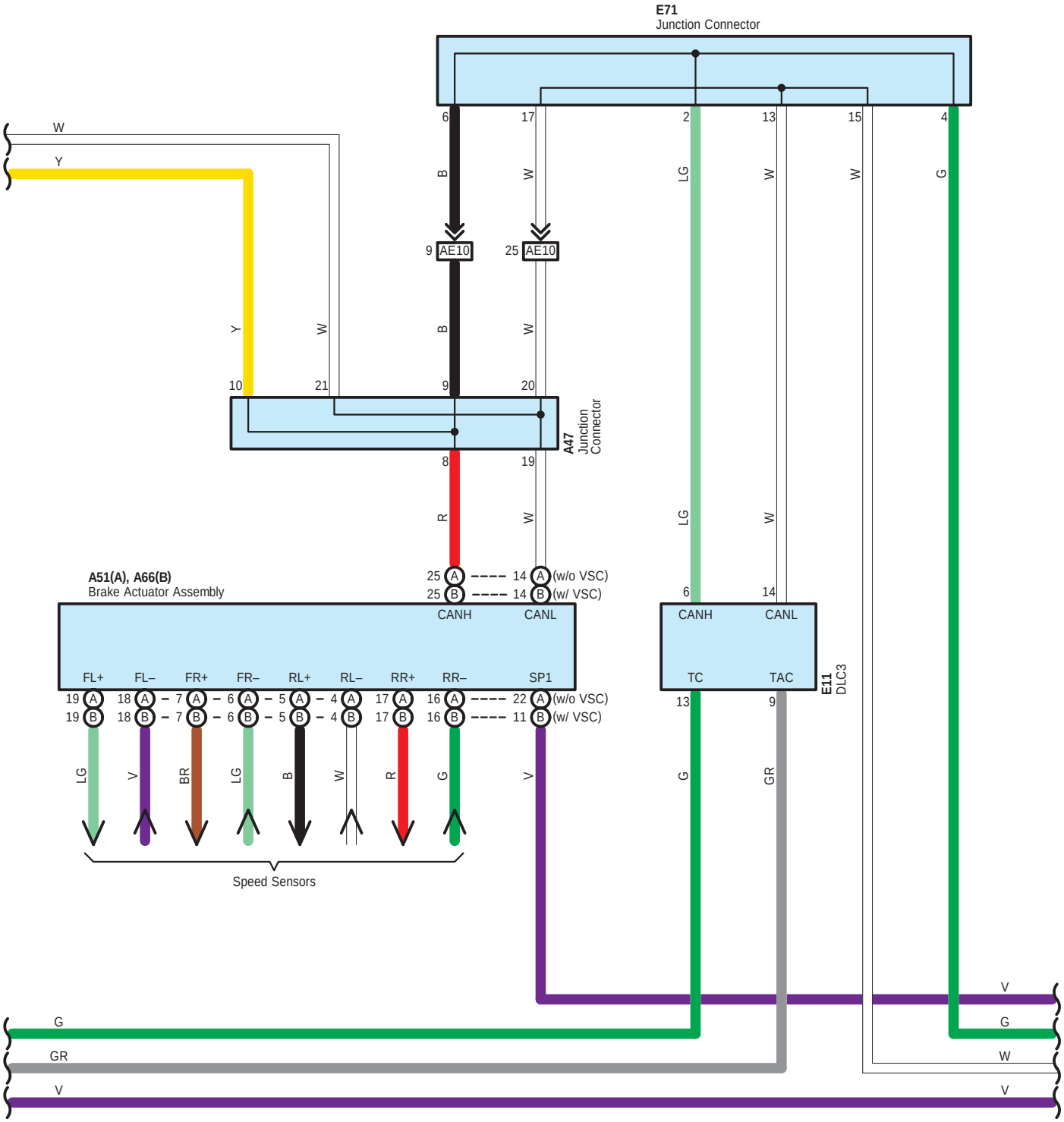
E71
Junction Connector
6
17
2
13
15
4
W
Y
B
W
LG
W
W
G
9 AE10
25 AE10
Y
W
B
W
10
21
9
20
A47
Junction
Connector
8
19
R
W
LG
W
A51(A), A66(B)
Brake Actuator Assembly
25 A ---- 14 A (w/o VSC)
25 B ---- 14 B (w/ VSC)
CANH
CANL
6
14
CANH
CANL
FL+
FL–
FR+
FR–
RL+
RL–
RR+
RR–
SP1
TC
TAC
E11
DLC3
19 A
19 B
18 A
18 B
7 A
7 B
6 A
6 B
5 A
5 B
4 A
4 B
17 A
17 B
16 A
16 B
22 A (w/o VSC)
11 B (w/ VSC)
13
9
LG
V
BR
LG
B
W
R
G
V
G
GR
LG
GR
Speed Sensors
V
G
GR
V
G
W
V

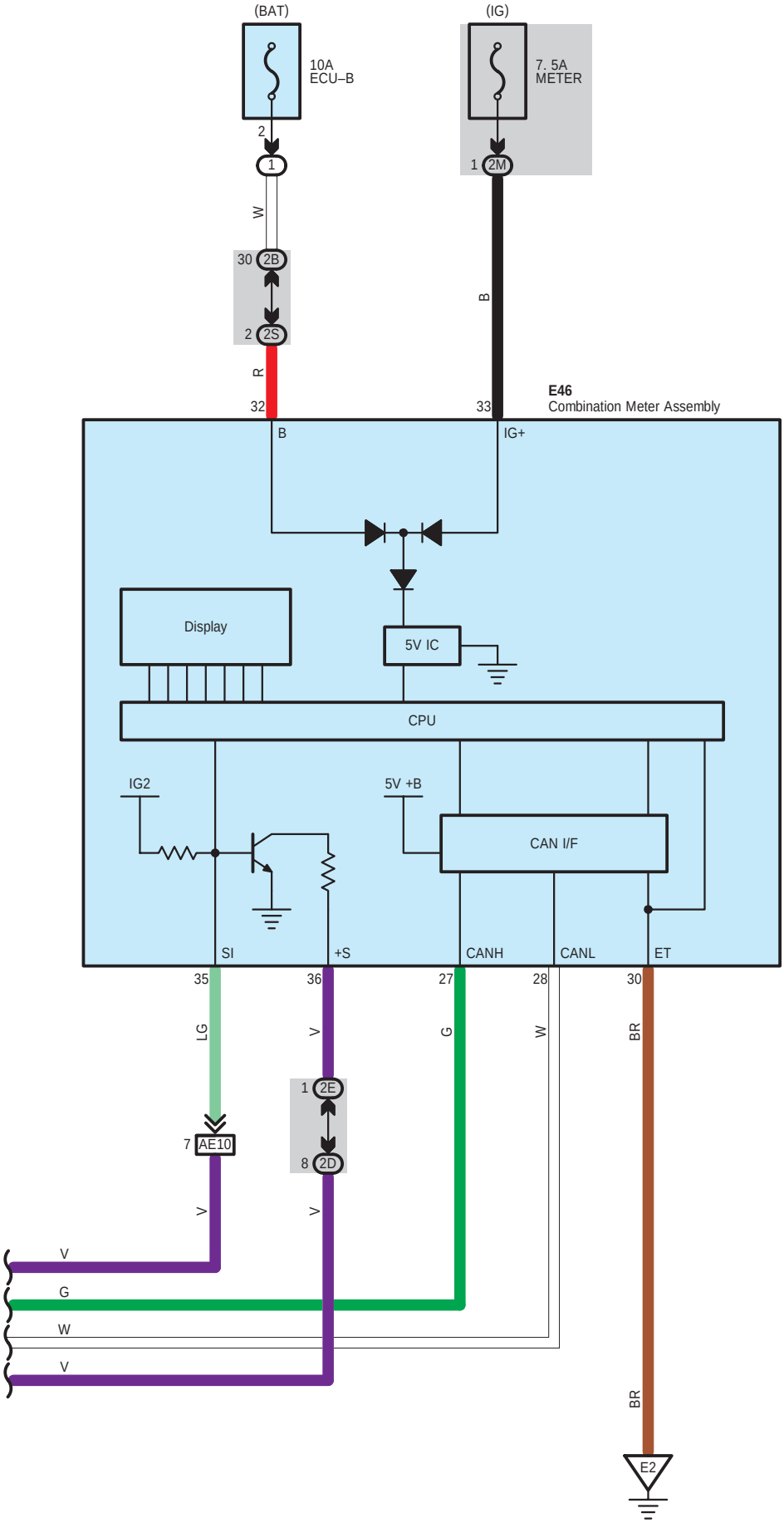
(BAT)
10A
ECU–B
2
1
W
30
2B
2
2S
R
32
(IG)
7. 5A
METER
1
2M
B
33
E46
Combination Meter Assembly
B
IG+
Display
5V IC
CPU
IG2
5V +B
CAN I/F
SI
+S
CANH
CANL
ET
35
36
27
28
30
LG
V
G
W
BR
1
2E
7
AE10
8
2D
V
G
W
V
BR
E2

A 1
Black

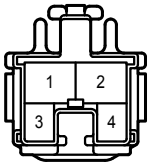

A 3
Black

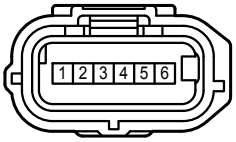

A 45
White

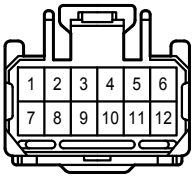

A 46
White

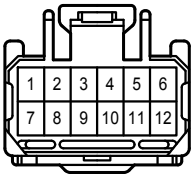

A 47
White

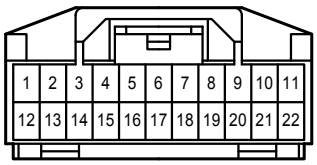

A 50
Black

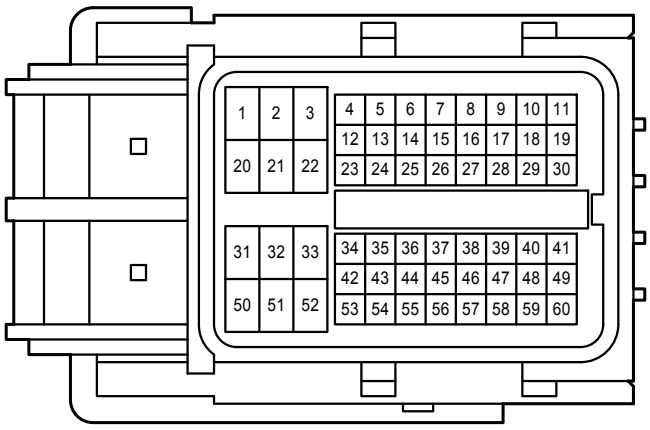

A 51
Gray

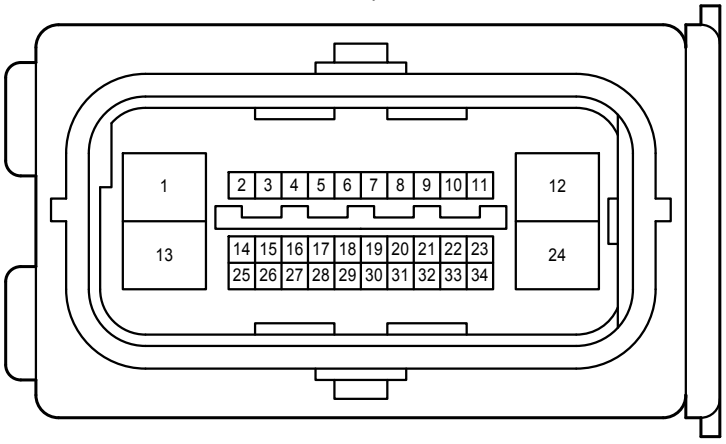

A 66
Black

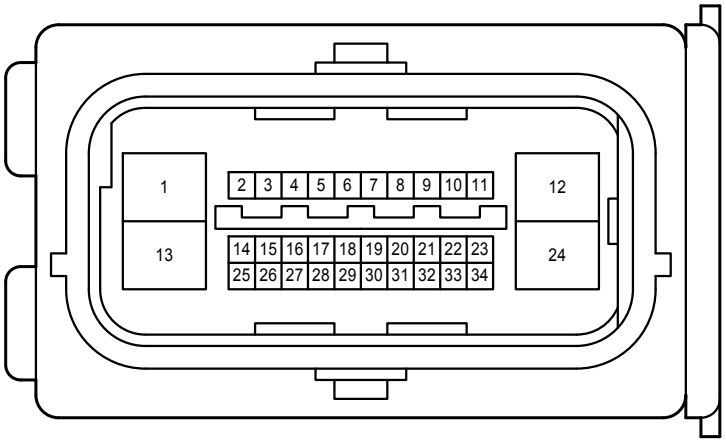

B 2
Black



B 25
Black

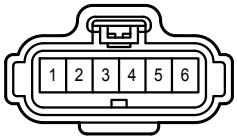

B 31
Black

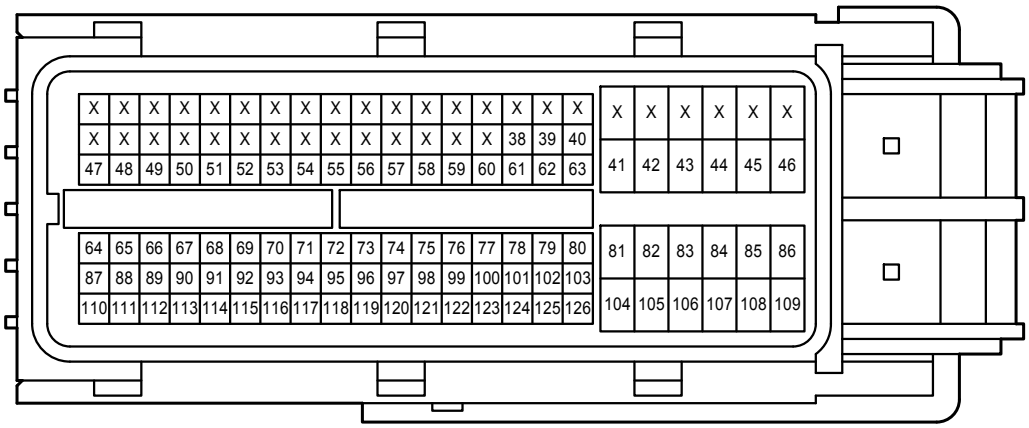

B 58
Gray



B 88
Gray

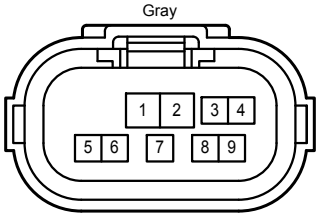

B 90
Gray

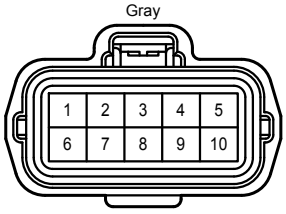

B 96
Black

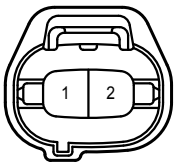

E 11
White

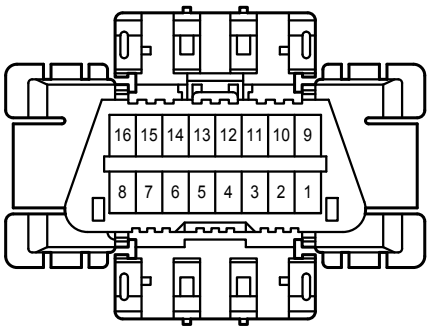

E 27
White

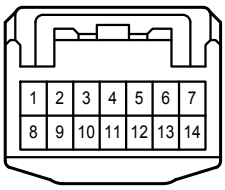

E 46
White

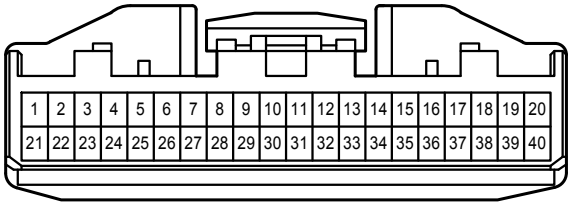

E 71
White

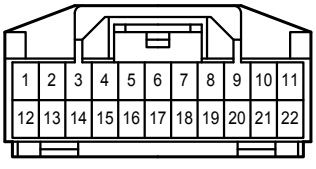

1B
White

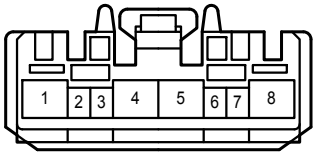

2B
White

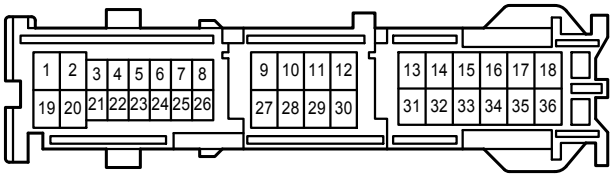

2C
White

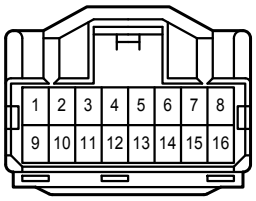

2D
White

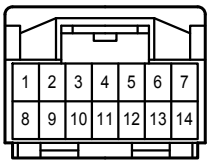

2E
White

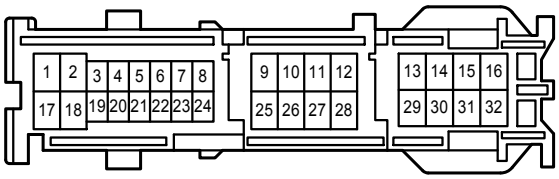

2M
White

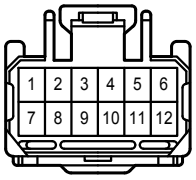

2S
White

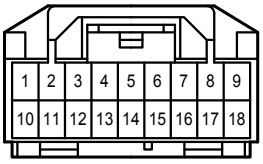

AE6
Gray

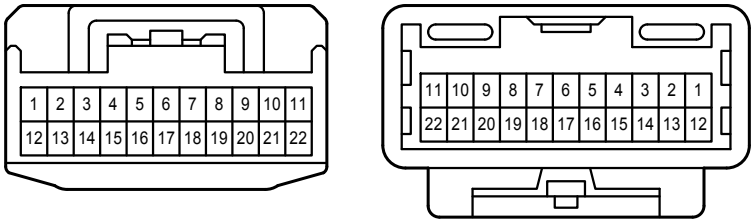

AE10
Gray

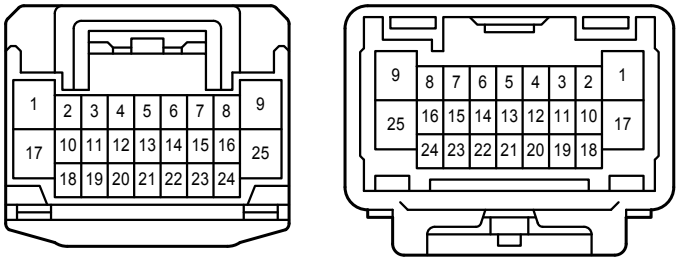

BA1
White

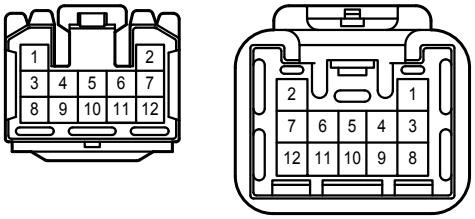

BA2
White

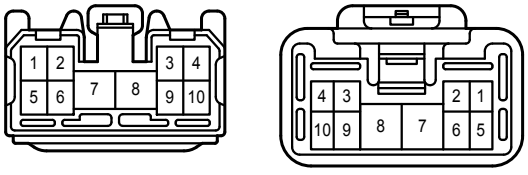

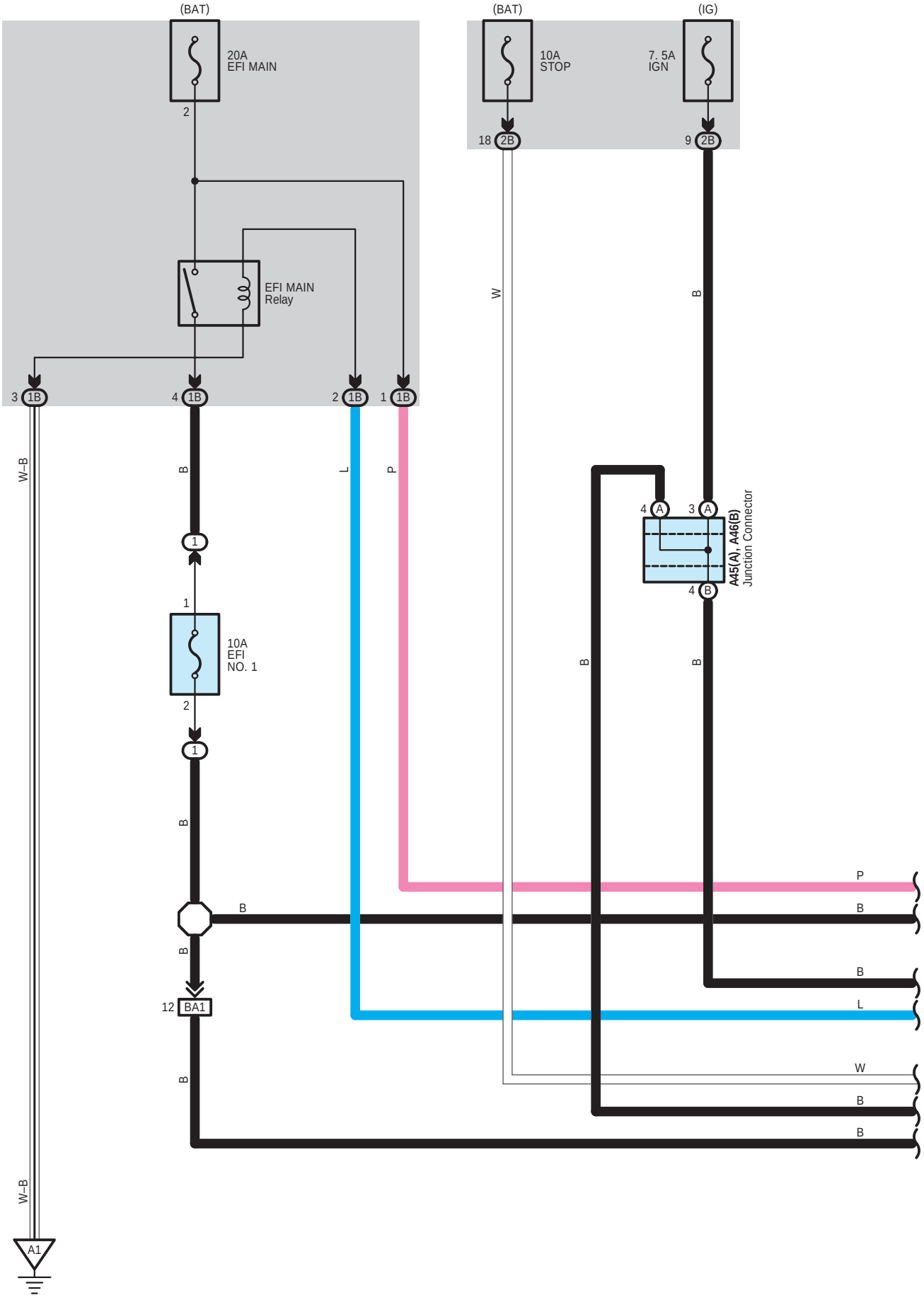
(BAT)
20A
EFI MAIN
2
EFI MAIN
Relay
3 1B
4 1B
2 1B
1 1B
W–B
B
L
P
1
1
10A
EFI
NO. 1
2
1
B
B
12 BA1
B
W–B
A1
(BAT)
10A
STOP
18 2B
(IG)
7. 5A
IGN
9 2B
W
B
4 A
3 A
4 B
A45(A), A46(B)
Junction Connector
B
B
P
B
B
L
W
B
B

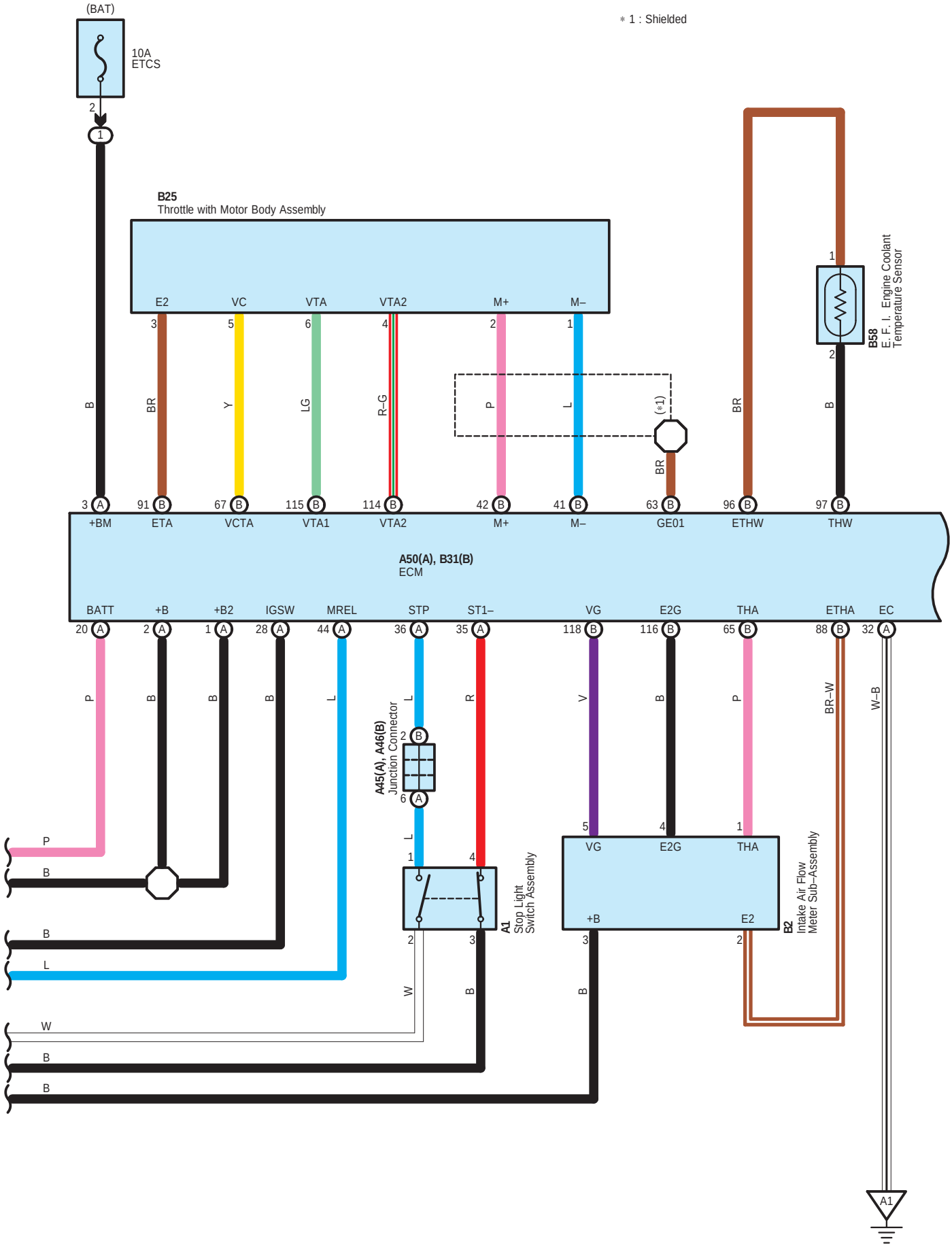
(BAT)
10A
ETCS
2
1
* 1 : Shielded
B25
Throttle with Motor Body Assembly
E2
VC
VTA
VTA2
M+
M–
3
5
6
4
2
1
B
BR
Y
LG
R–G
P
L
(*1)
BR
BR
B
1
2
B58
E. F. I. Engine Coolant
Temperature Sensor
3 A
91 B
67 B
115 B
114 B
42 B
41 B
63 B
96 B
97 B
+BM
ETA
VCTA
VTA1
VTA2
M+
M–
GE01
ETHW
THW
A50(A), B31(B)
ECM
BATT
+B
+B2
IGSW
MREL
STP
ST1–
VG
E2G
THA
ETHA
EC
20 A
2 A
1 A
28 A
44 A
36 A
35 A
118 B
116 B
65 B
88 B
32 A
P
B
B
B
L
L
R
V
B
P
BR–W
W–B
A45(A), A46(B)
Junction Connector
2 B
6 A
L
1
4
A1
Stop Light
Switch Assembly
5
4
1
VG
E2G
THA
+B
E2
B2
Intake Air Flow
Meter Sub–Assembly
2
3
3
2
W
B
B
B
A1

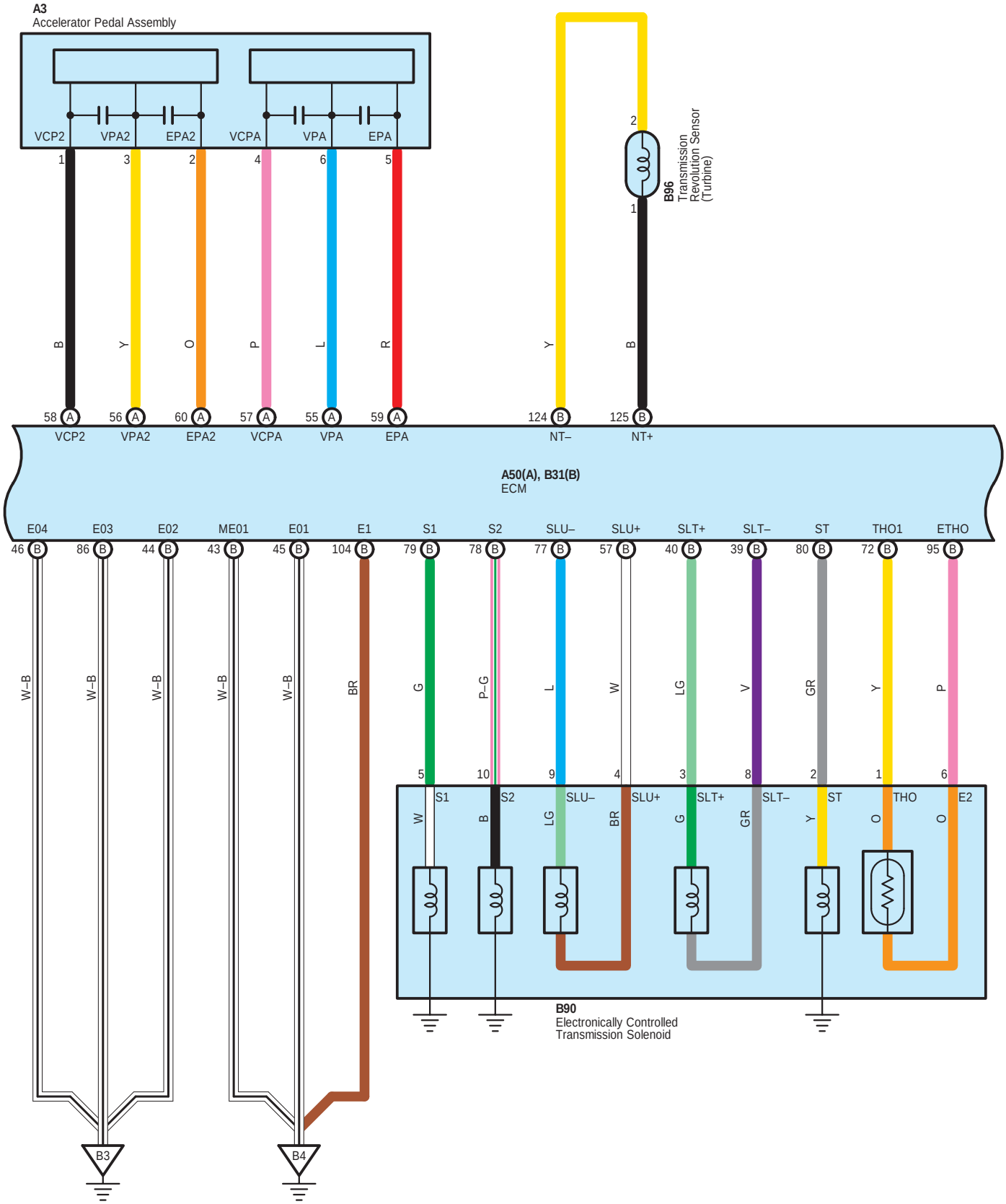
A3
Accelerator Pedal Assembly
VCP2
VPA2
EPA2
VCPA
VPA
EPA
1
3
2
4
6
5
B
Y
O
P
L
R
58 A
56 A
60 A
57 A
55 A
59 A
VCP2
VPA2
EPA2
VCPA
VPA
EPA
2
1
B96
Transmission
Revolution Sensor
(Turbine)
Y
B
124 B
125 B
NT–
NT+
A50(A), B31(B)
ECM
E04
E03
E02
ME01
E01
E1
S1
S2
SLU–
SLU+
SLT+
SLT–
ST
THO1
ETHO
46 B
86 B
44 B
43 B
45 B
104 B
79 B
78 B
77 B
57 B
40 B
39 B
80 B
72 B
95 B
W–B
W–B
W–B
W–B
W–B
BR
G
P–G
L
W
LG
V
GR
Y
P
5
10
9
4
3
8
2
1
6
S1
S2
SLU–
SLU+
SLT+
SLT–
ST
THO
E2
W
B
LG
BR
G
GR
Y
O
O
B3
B4
B90
Electronically Controlled
Transmission Solenoid

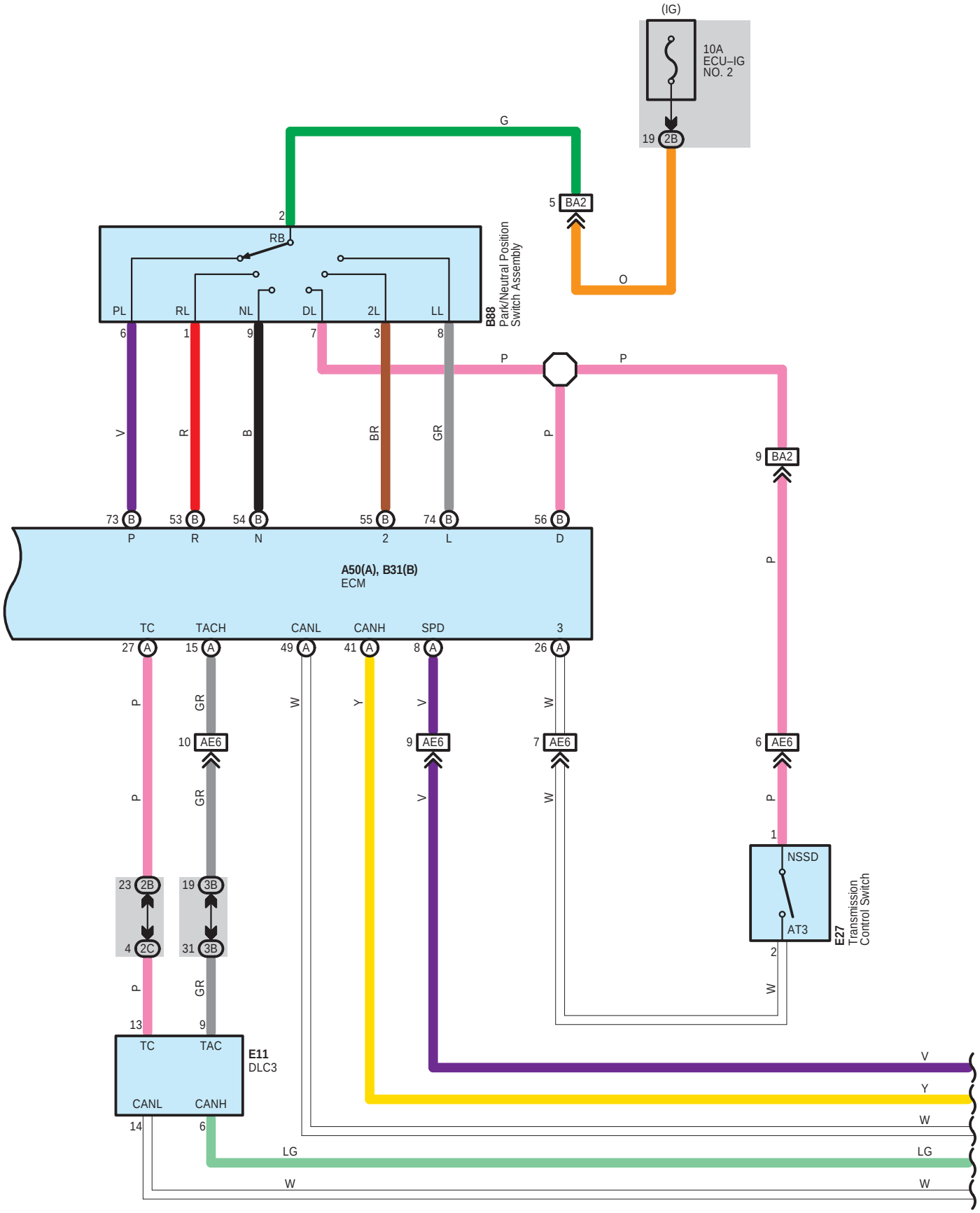
(IG)
10A
ECU–IG
NO. 2
19 2B
G
5 BA2
O
2
RB
PL
RL
NL
DL
2L
LL
B88
Park/Neutral Position
Switch Assembly
6
1
9
7
3
8
P
P
V
R
B
BR
GR
P
9 BA2
P
73 B
53 B
54 B
55 B
74 B
56 B
P
R
N
2
L
D
A50(A), B31(B)
ECM
TC
TACH
CANL
CANH
SPD
3
27 A
15 A
49 A
41 A
8 A
26 A
P
GR
W
Y
V
W
10 AE6
9 AE6
7 AE6
6 AE6
P
GR
V
W
P
1
NSSD
AT3
E27
Transmission
Control Switch
2
W
23 2B
4 2C
19 3B
31 3B
P
GR
13
9
TC
TAC
CANL
CANH
E11
DLC3
14
6
V
Y
W
LG
LG
W
W

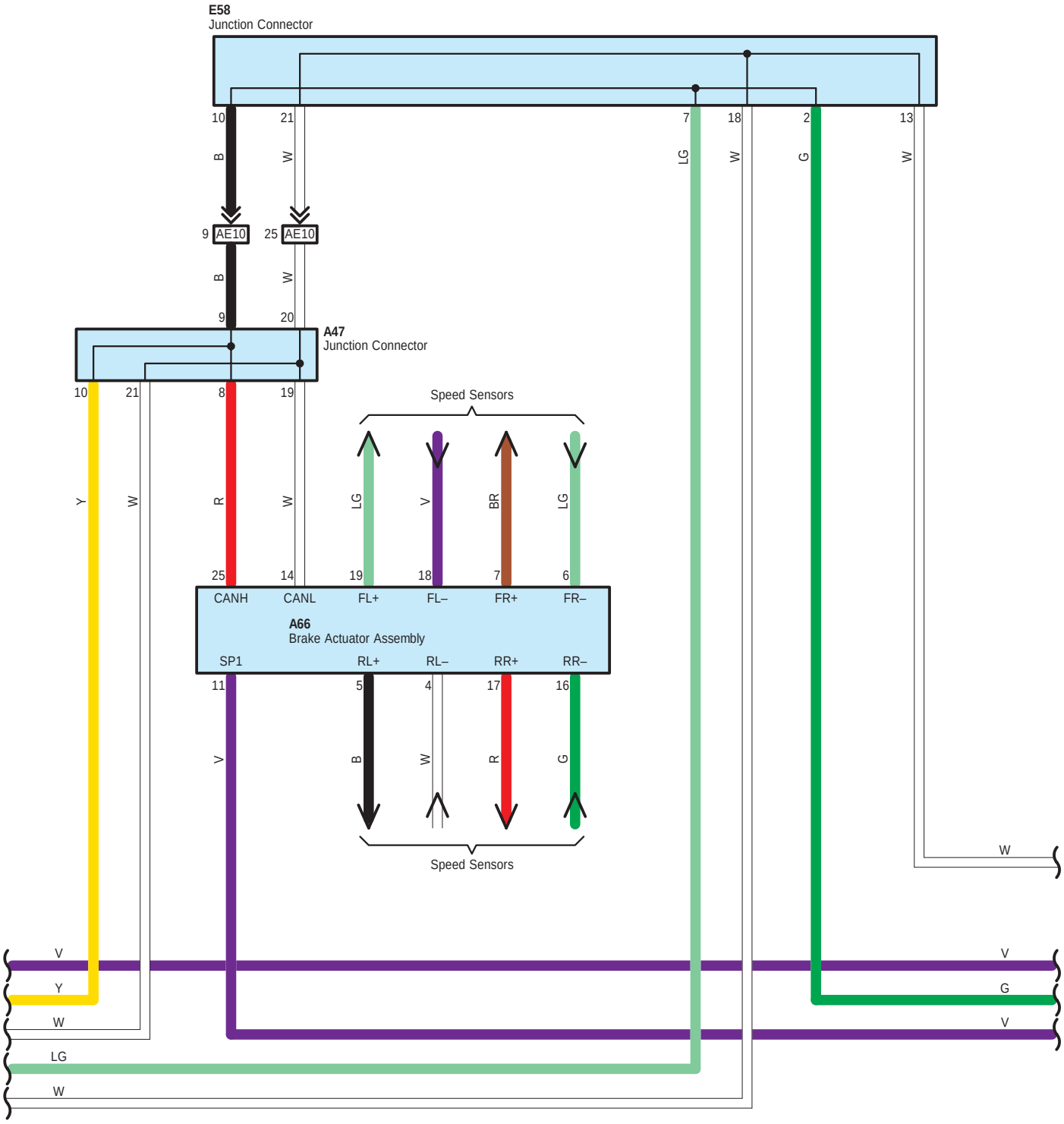
E58
Junction Connector
10
21
7
18
2
13
B
W
LG
W
G
W
9 AE10
25 AE10
B
W
9
20
A47
Junction Connector
10
21
8
19
Speed Sensors
Y
W
R
W
LG
V
BR
LG
25
14
19
18
7
6
CANH
CANL
FL+
FL–
FR+
FR–
A66
Brake Actuator Assembly
SP1
RL+
RL–
RR+
RR–
11
5
4
17
16
V
B
W
R
G
Speed Sensors
W
V
Y
W
LG
W
V
G
V

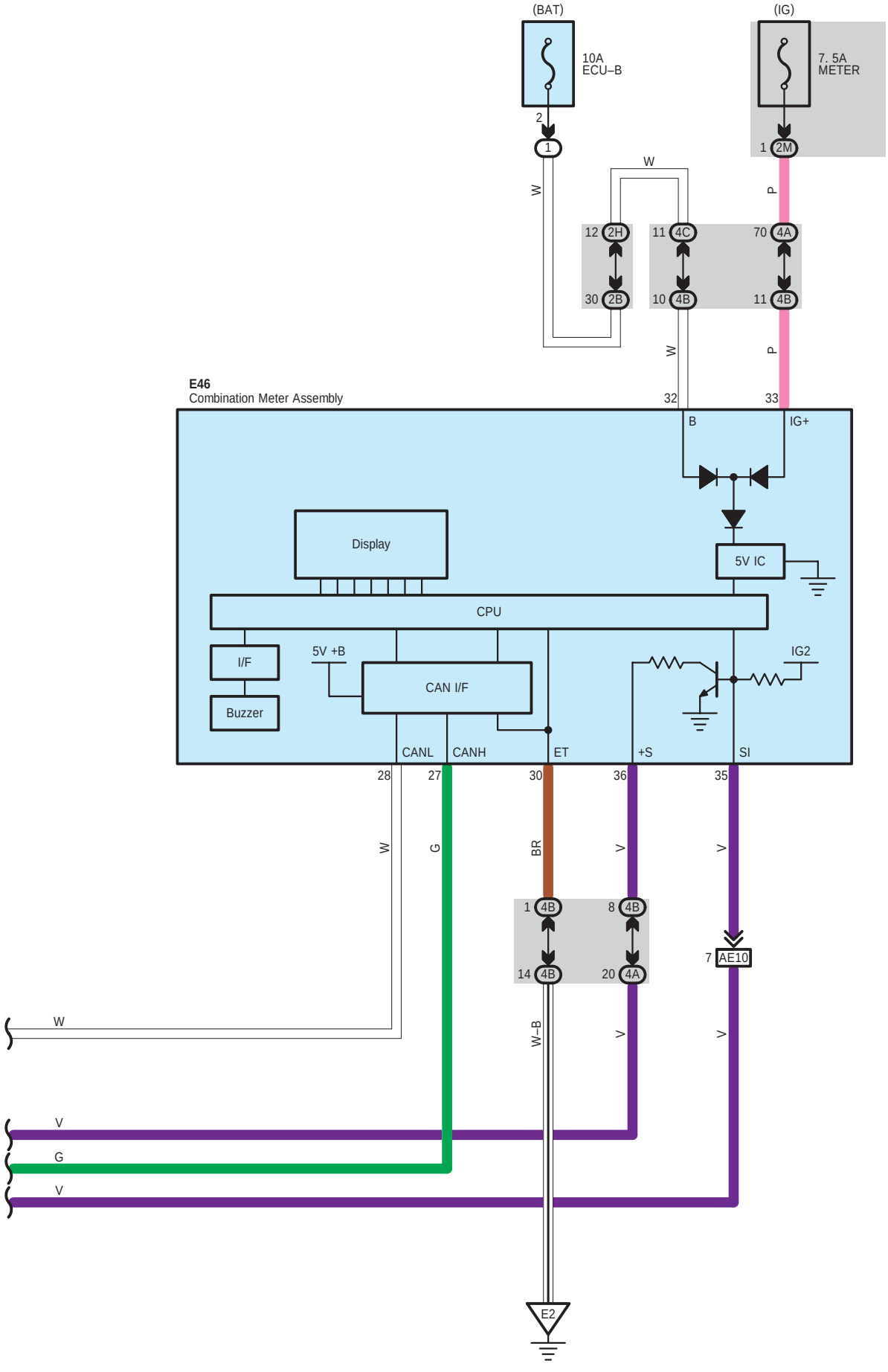
(BAT)
10A
ECU–B
2
1
W
W
12 2H
30 2B
(IG)
7. 5A
METER
1 2M
P
11 4C
10 4B
70 4A
11 4B
W
P
E46
Combination Meter Assembly
32
33
B
IG+
Display
5V IC
CPU
I/F
Buzzer
5V +B
CAN I/F
IG2
CANL
CANH
ET
+S
SI
28
27
30
36
35
W
G
BR
V
V
1 4B
14 4B
8 4B
20 4A
7 AE10
W
W–B
V
V
V
G
V
E2

A 1
Black

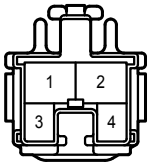

A 3
Black

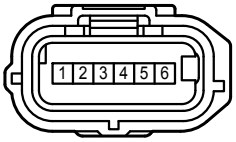

A 45
White

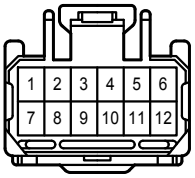

A 46
White

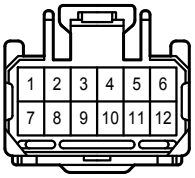

A 47
White

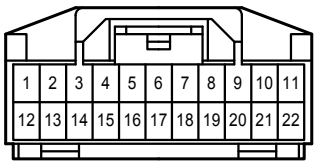

A 50
Black

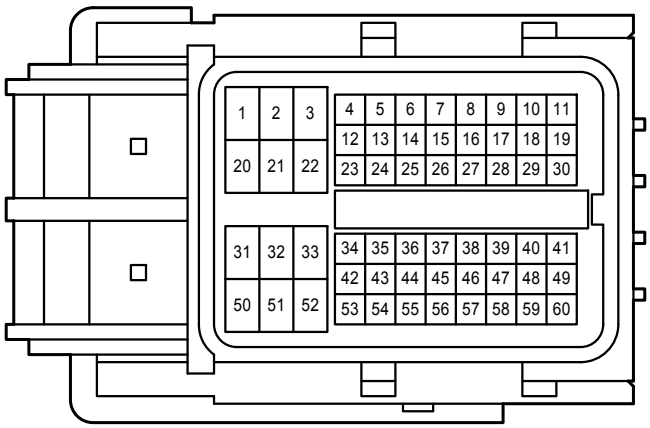

A 66
Black

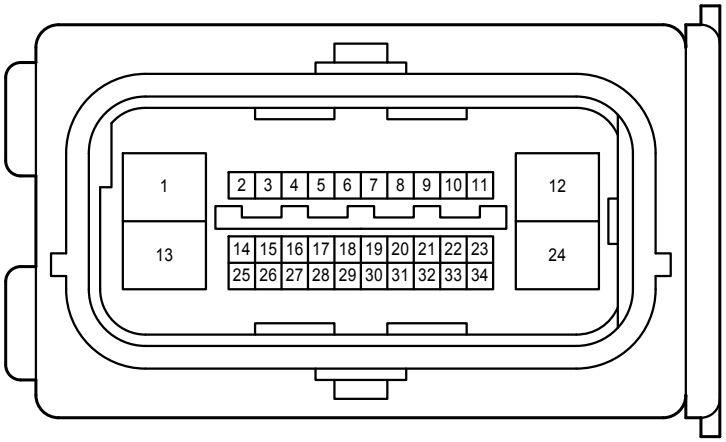

B 2
Black



B 25
Black

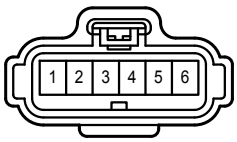

B 31
Black

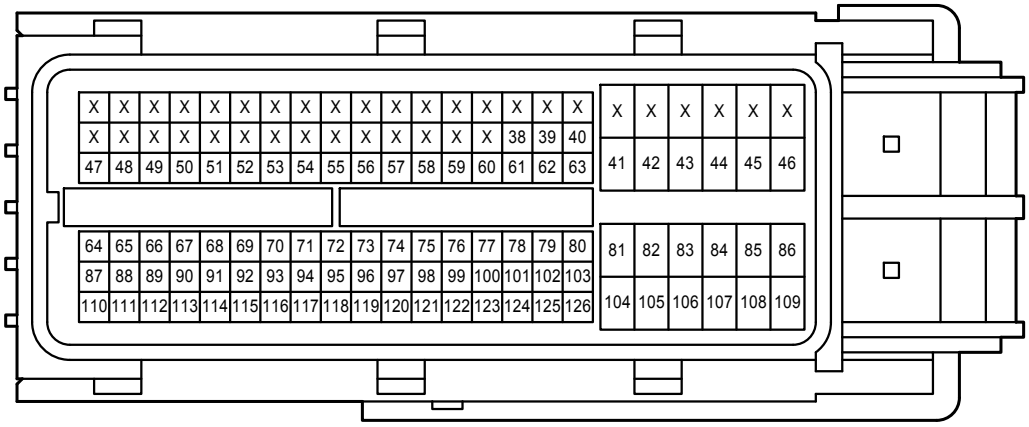

B 58
Gray



B 88
Gray

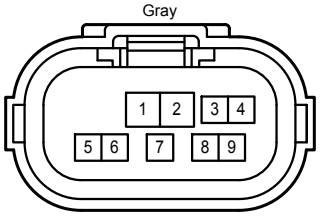

B 90
Gray

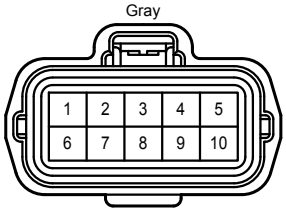

B 96
Black

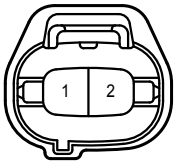

E 11
White

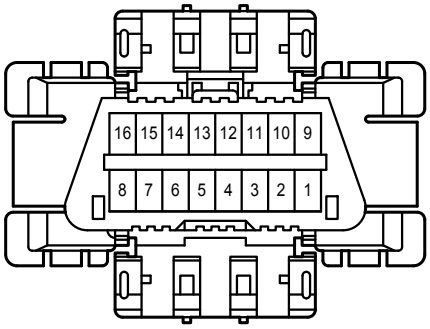

E 27
White

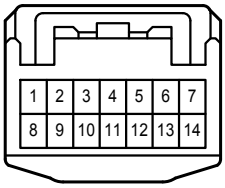

E 46
White

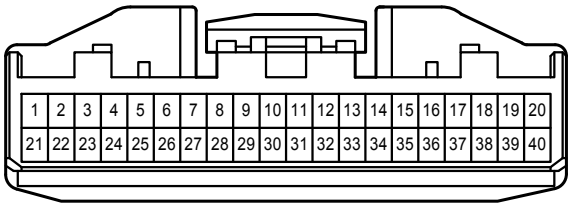

E 58
Gray

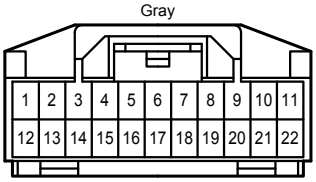

1B
White

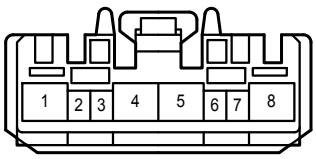

2B
White

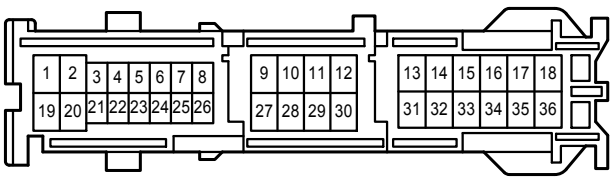

2C
White

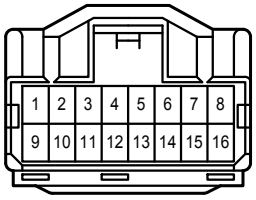

2H
White

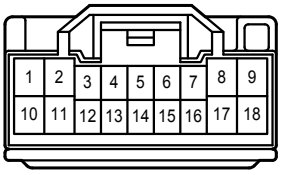

2M
White

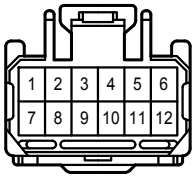

3B
White

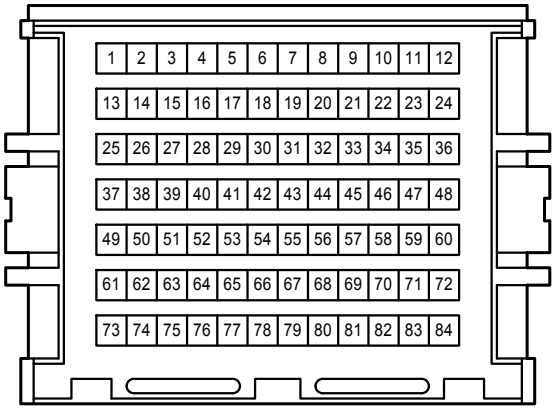

4A
White

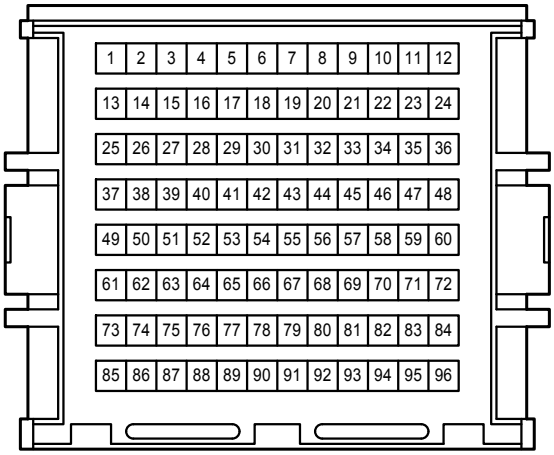

4B
White

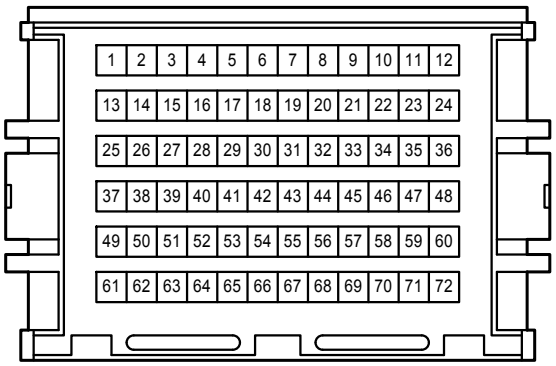

4C
White

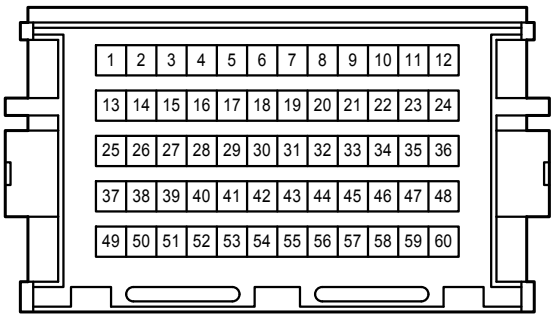

AE6
Gray

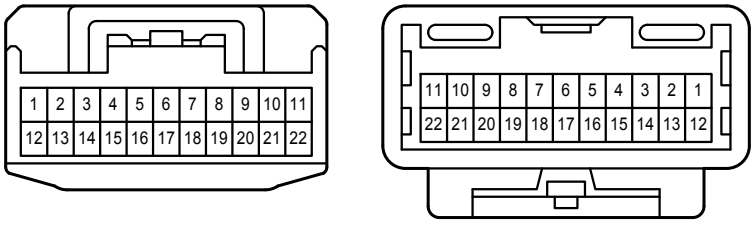

AE10
Gray

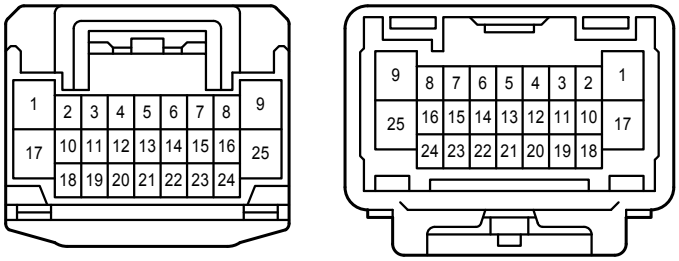

BA1
White

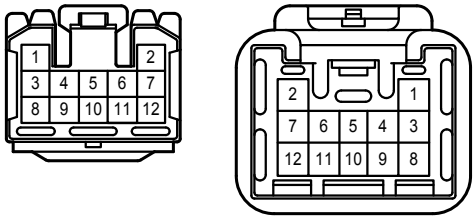

BA2
White

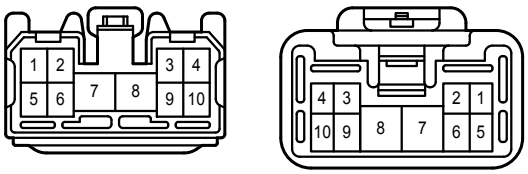

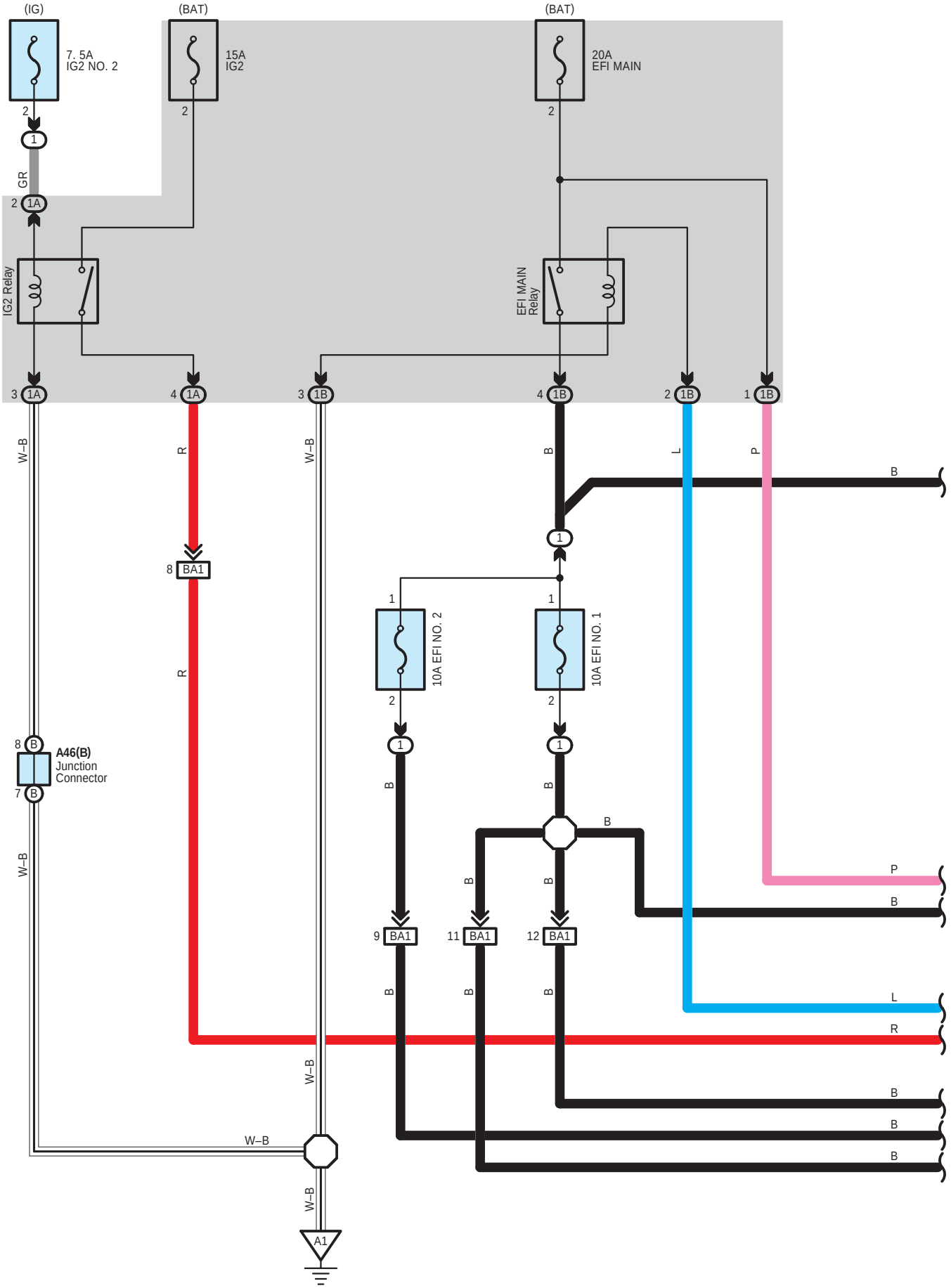
(IG)
(BAT)
(BAT)
7. 5A
IG2 NO. 2
15A
IG2
20A
EFI MAIN
GR
IG2 Relay
EFI MAIN
Relay
W–B
R
B
L
P
8 BA1
10A EFI NO. 2
10A EFI NO. 1
A46(B)
Junction
Connector
9 BA1
11 BA1
12 BA1
A1

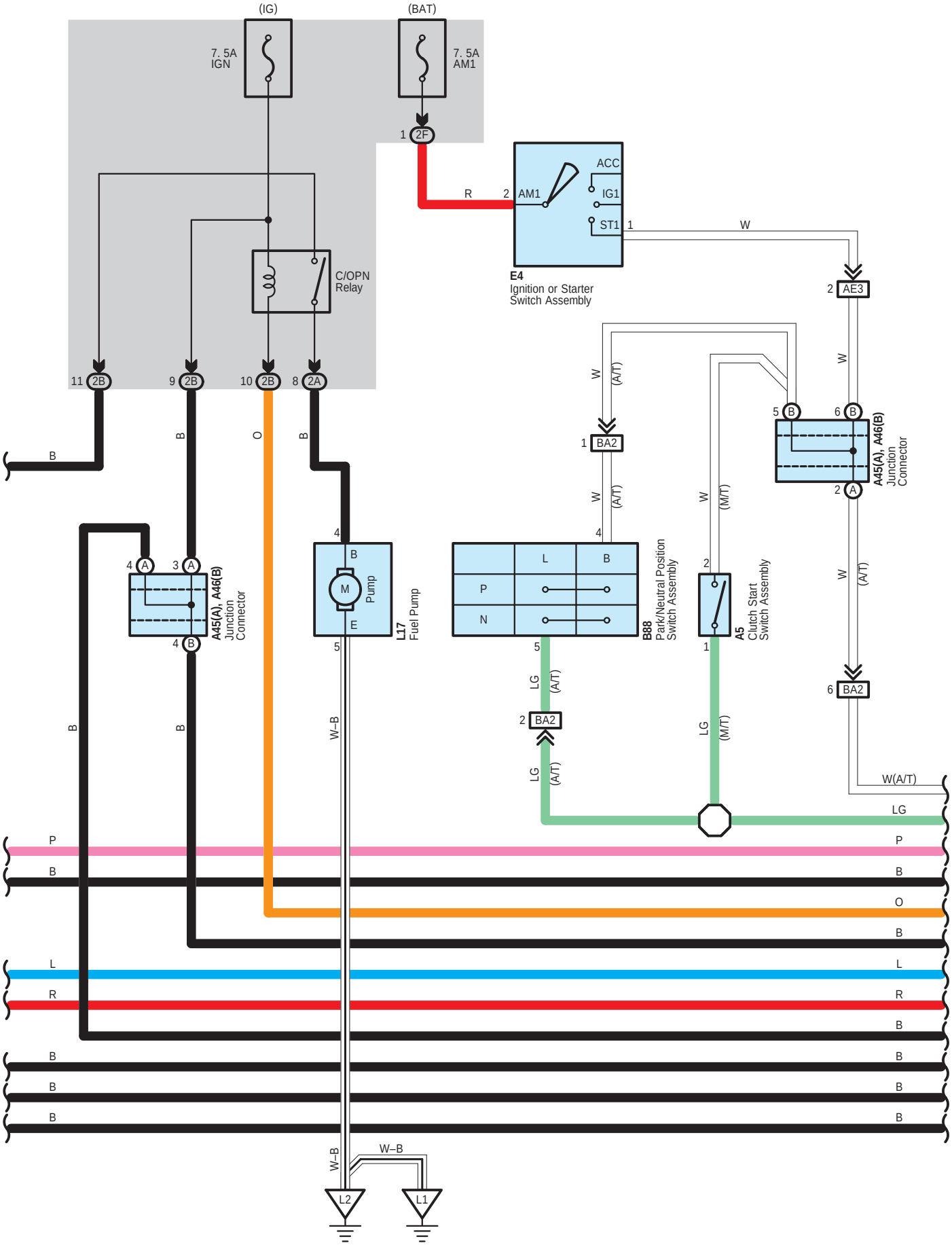
(IG)
(BAT)
7. 5A
IGN
7. 5A
AM1
1 2F
C/OPN
Relay
R
2 AM1
ACC
IG1
ST1 1
W
E4
Ignition or Starter
Switch Assembly
2 AE3
11 2B
9 2B
10 2B
8 2A
W
(A/T)
1 BA2
5 B
6 B
A45(A), A46(B)
Junction
Connector
2 A
4 A
3 A
4 B
A45(A), A46(B)
Junction
Connector
4
B
M
Pump
E
L17
Fuel Pump
5
L
B
P
N
B88
Park/Neutral Position
Switch Assembly
W
(M/T)
2
1
A5
Clutch Start
Switch Assembly
LG
2 BA2
6 BA2
W(A/T)
B
O
L
R
P
W–B
L2
L1

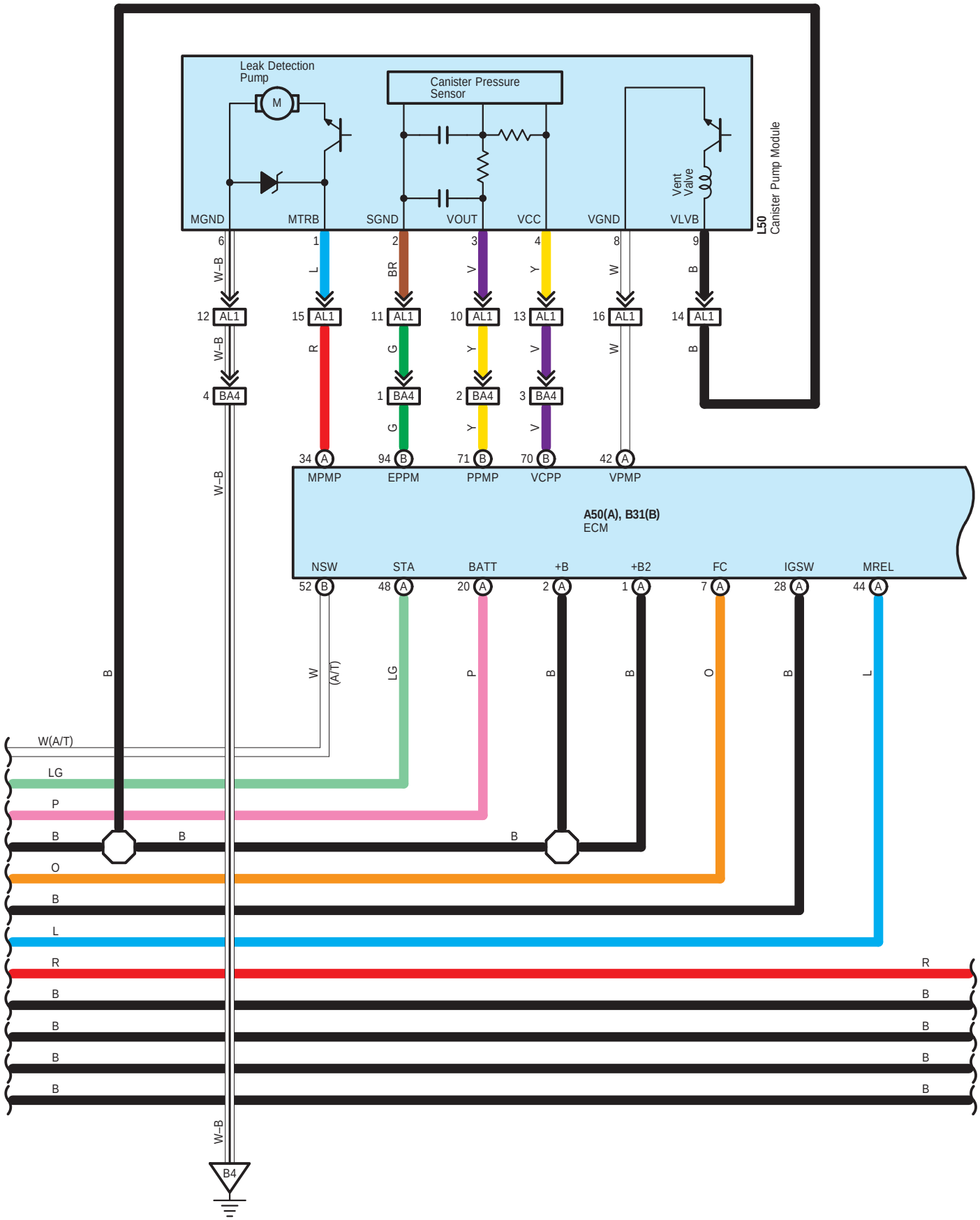
Leak Detection Pump
M
Canister Pressure Sensor
Vent Valve
MGND
MTRB
SGND
VOUT
VCC
VGND
VLVB
L50
Canister Pump Module
6
1
2
3
4
8
9
W–B
L
BR
V
Y
W
B
12 AL1
15 AL1
11 AL1
10 AL1
13 AL1
16 AL1
14 AL1
W–B
R
G
Y
V
W
B
4 BA4
1 BA4
2 BA4
3 BA4
G
Y
V
34 A
94 B
71 B
70 B
42 A
MPMP
EPPM
PPMP
VCPP
VPMP
A50(A), B31(B)
ECM
NSW
STA
BATT
+B
+B2
FC
IGSW
MREL
52 B
48 A
20 A
2 A
1 A
7 A
28 A
44 A
B
W
(A/T)
LG
P
B
O
L
W–B
B4
W(A/T)
LG
P
B
O
B
L
R
B
B
B
B
R
B
B
B
B

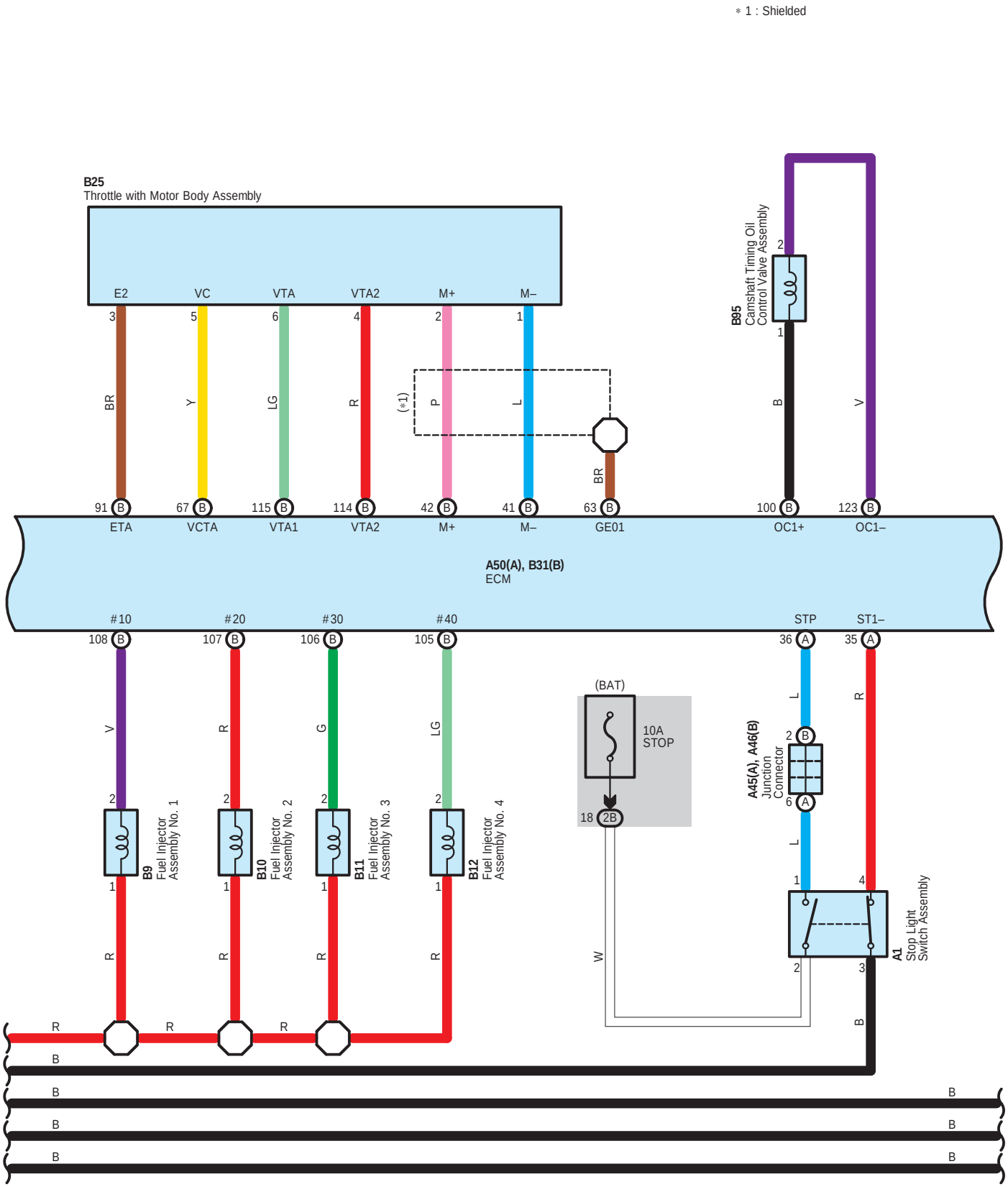

∗ 1 : Shielded
B25
Throttle with Motor Body Assembly
E2
VC
VTA
VTA2
M+
M–
3
5
6
4
2
1
BR
Y
LG
R
(∗1)
P
L
BR
B95
Camshaft Timing Oil
Control Valve Assembly
2
1
B
V
91
67
115
114
42
41
63
100
123
ETA
VCTA
VTA1
VTA2
M+
M–
GE01
OC1+
OC1–
A50(A), B31(B)
ECM
#10
#20
#30
#40
STP
ST1–
108
107
106
105
36
35
V
R
G
LG
L
R
(BAT)
10A
STOP
18
2B
A45(A), A46(B)
Junction
Connector
2
6
B9
Fuel Injector
Assembly No. 1
B10
Fuel Injector
Assembly No. 2
B11
Fuel Injector
Assembly No. 3
B12
Fuel Injector
Assembly No. 4
W
A1
Stop Light
Switch Assembly
4
3
B

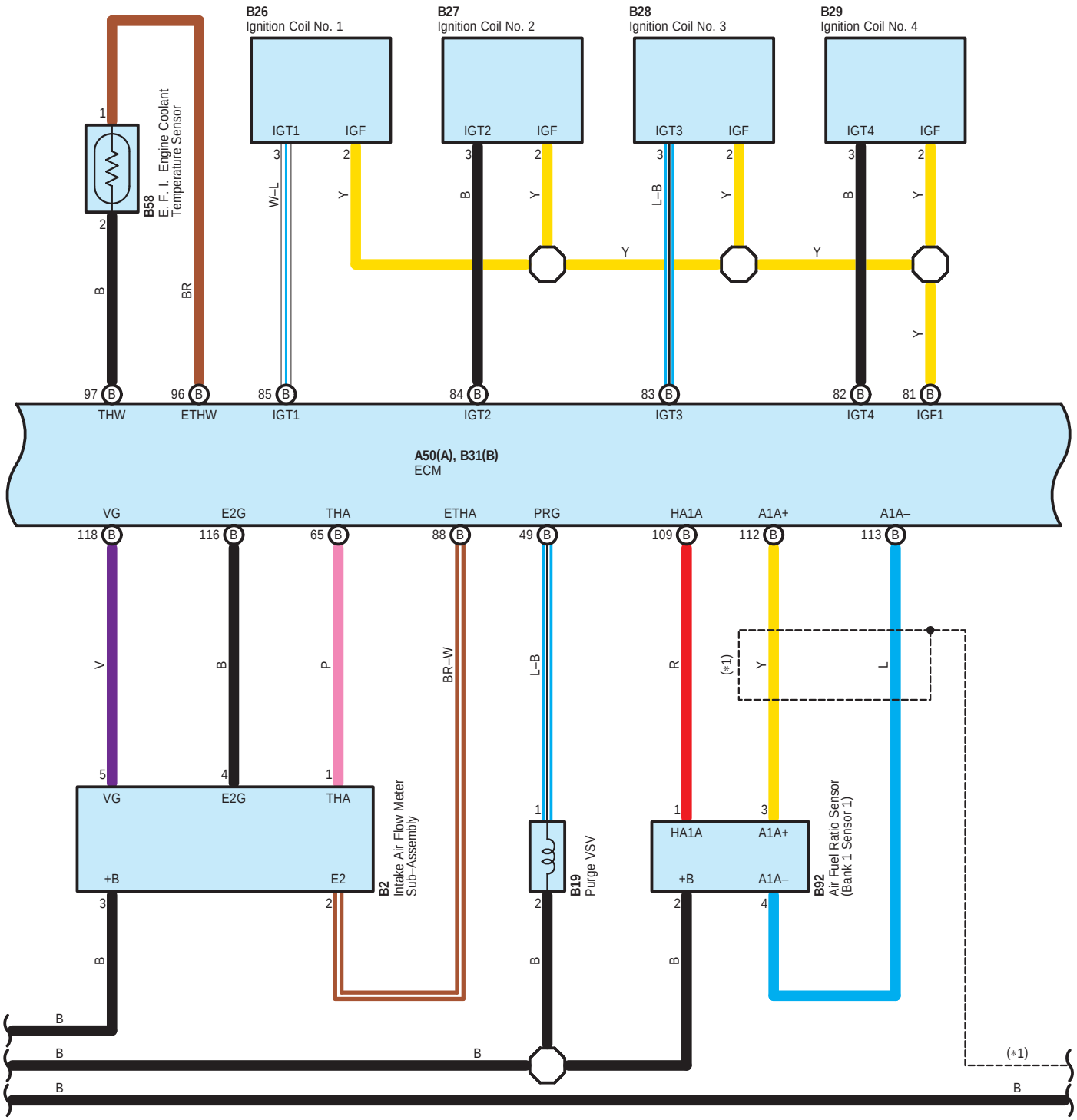
B26
Ignition Coil No. 1
B27
Ignition Coil No. 2
B28
Ignition Coil No. 3
B29
Ignition Coil No. 4
IGT1
IGF
IGT2
IGF
IGT3
IGF
IGT4
IGF
B58
E. F. I. Engine Coolant Temperature Sensor
W–L
Y
B
L–B
BR
97 B THW
96 B ETHW
85 B IGT1
84 B IGT2
83 B IGT3
82 B IGT4
81 B IGF1
A50(A), B31(B)
ECM
VG
E2G
THA
ETHA
PRG
HA1A
A1A+
A1A–
118 B
116 B
65 B
88 B
49 B
109 B
112 B
113 B
V
P
BR–W
R
L
(*1)
B2
Intake Air Flow Meter Sub–Assembly
B19
Purge VSV
B92
Air Fuel Ratio Sensor (Bank 1 Sensor 1)
+B
E2
HA1A
A1A+
A1A–

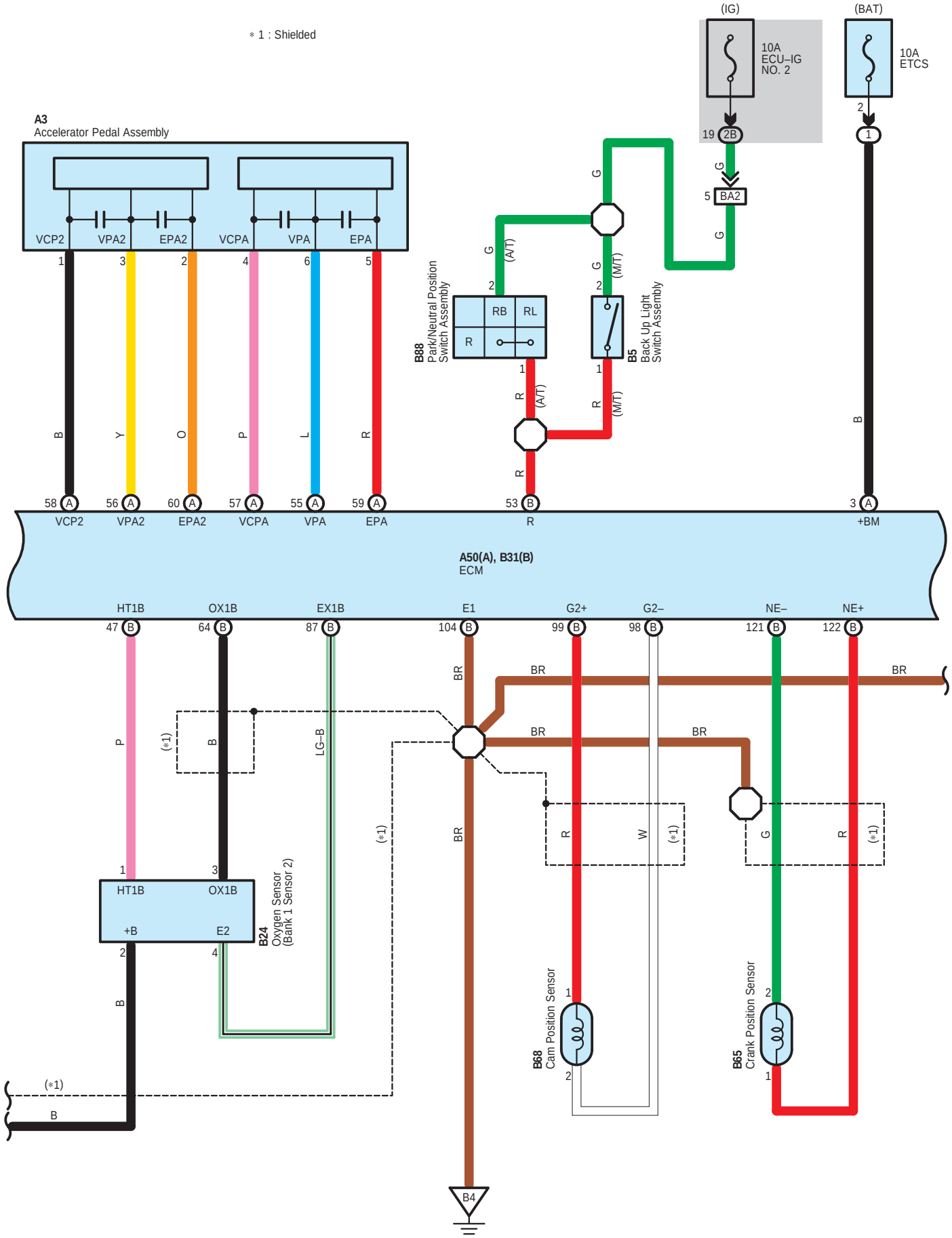
* 1 : Shielded
(IG)
10A
ECU–IG
NO. 2
(BAT)
10A
ETCS
A3
Accelerator Pedal Assembly
VCP2
VPA2
EPA2
VCPA
VPA
EPA
B88
Park/Neutral Position
Switch Assembly
RB
RL
R
B5
Back Up Light
Switch Assembly
BA2
A50(A), B31(B)
ECM
HT1B
OX1B
EX1B
E1
G2+
G2–
NE–
NE+
+BM
B24
Oxygen Sensor
(Bank 1 Sensor 2)
+B
E2
B68
Cam Position Sensor
B65
Crank Position Sensor
B4

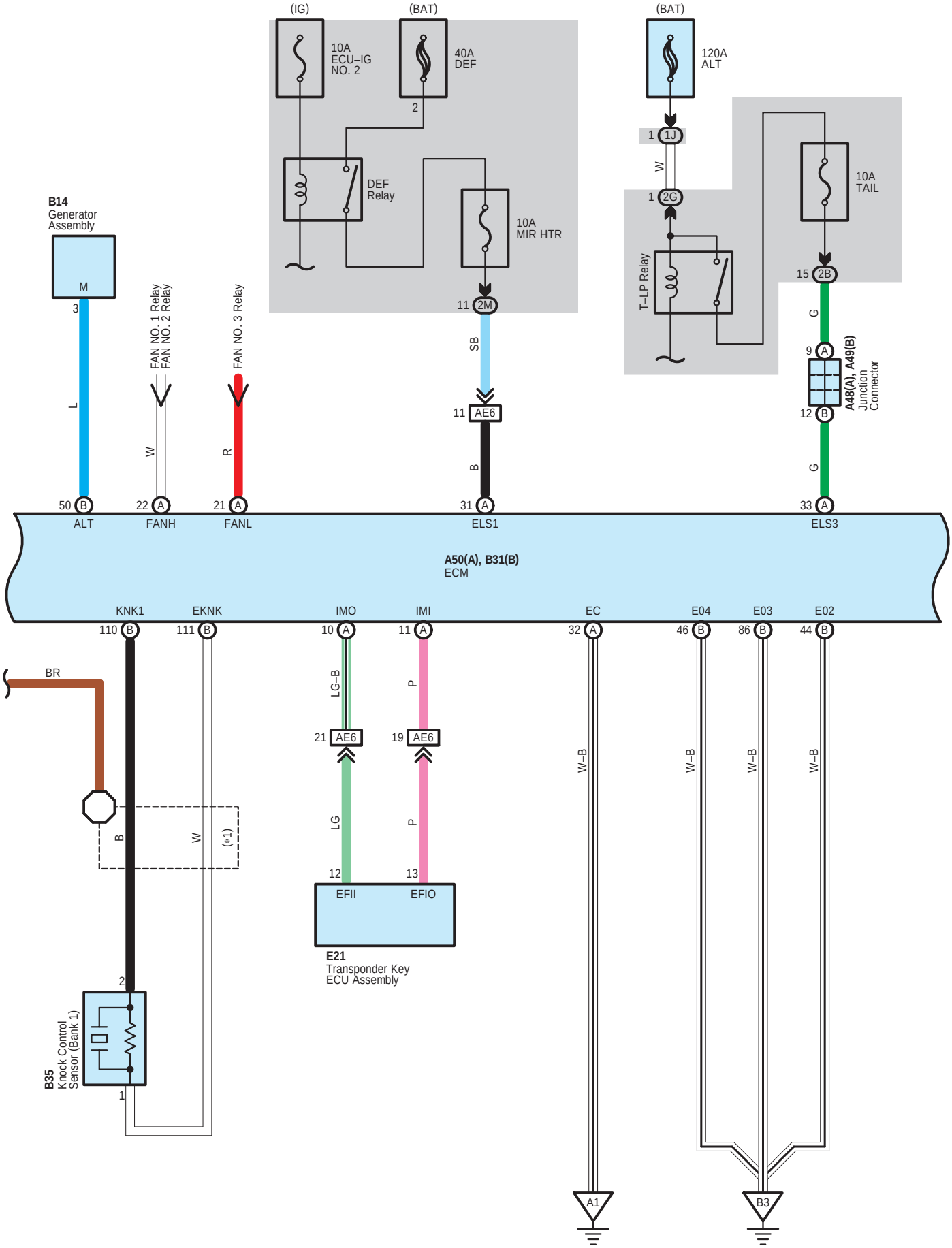
(IG)
(BAT)
10A
ECU–IG
NO. 2
40A
DEF
2
DEF
Relay
10A
MIR HTR
11 2M
SB
11 AE6
B
31 A
ELS1
(BAT)
120A
ALT
1 1J
W
1 2G
T–LP Relay
10A
TAIL
15 2B
G
9 A
A48(A), A49(B)
Junction
Connector
12 B
G
33 A
ELS3
B14
Generator
Assembly
M
3
L
50 B
ALT
FAN NO. 1 Relay
FAN NO. 2 Relay
W
22 A
FANH
FAN NO. 3 Relay
R
21 A
FANL
A50(A), B31(B)
ECM
KNK1
EKNK
IMO
IMI
EC
E04
E03
E02
110 B
111 B
10 A
11 A
32 A
46 B
86 B
44 B
BR
B
W
(*1)
2
1
B35
Knock Control
Sensor (Bank 1)
LG–B
21 AE6
LG
12
P
19 AE6
P
13
EFII
EFIO
E21
Transponder Key
ECU Assembly
W–B
W–B
W–B
W–B
A1
B3

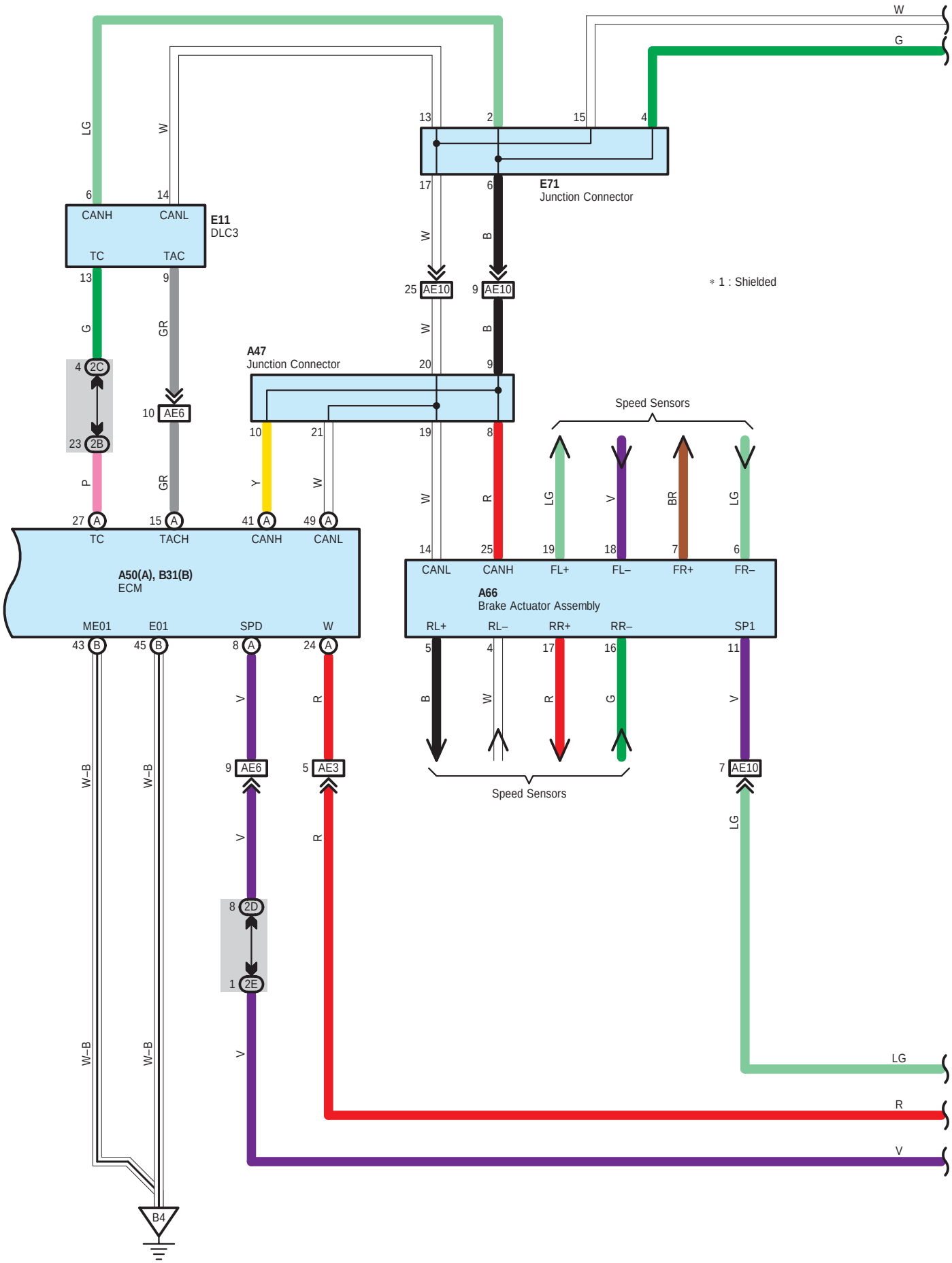
W
G
LG
W
13
2
15
4
6
14
17
6
E71
Junction Connector
CANH
CANL
E11
DLC3
TC
TAC
W
B
13
9
25 AE10
9 AE10
∗ 1 : Shielded
G
GR
W
B
A47
Junction Connector
4 2C
20
9
10 AE6
23 2B
10
21
19
8
Speed Sensors
P
GR
Y
W
W
R
LG
V
BR
LG
27 A
15 A
41 A
49 A
14
25
19
18
7
6
TC
TACH
CANH
CANL
CANL
CANH
FL+
FL–
FR+
FR–
A50(A), B31(B)
ECM
A66
Brake Actuator Assembly
ME01
E01
SPD
W
RL+
RL–
RR+
RR–
SP1
43 B
45 B
8 A
24 A
5
4
17
16
11
B
W
R
G
V
W–B
W–B
V
R
9 AE6
5 AE3
7 AE10
Speed Sensors
LG
8 2D
1 2E
LG
R
V
W–B
W–B
V
B4

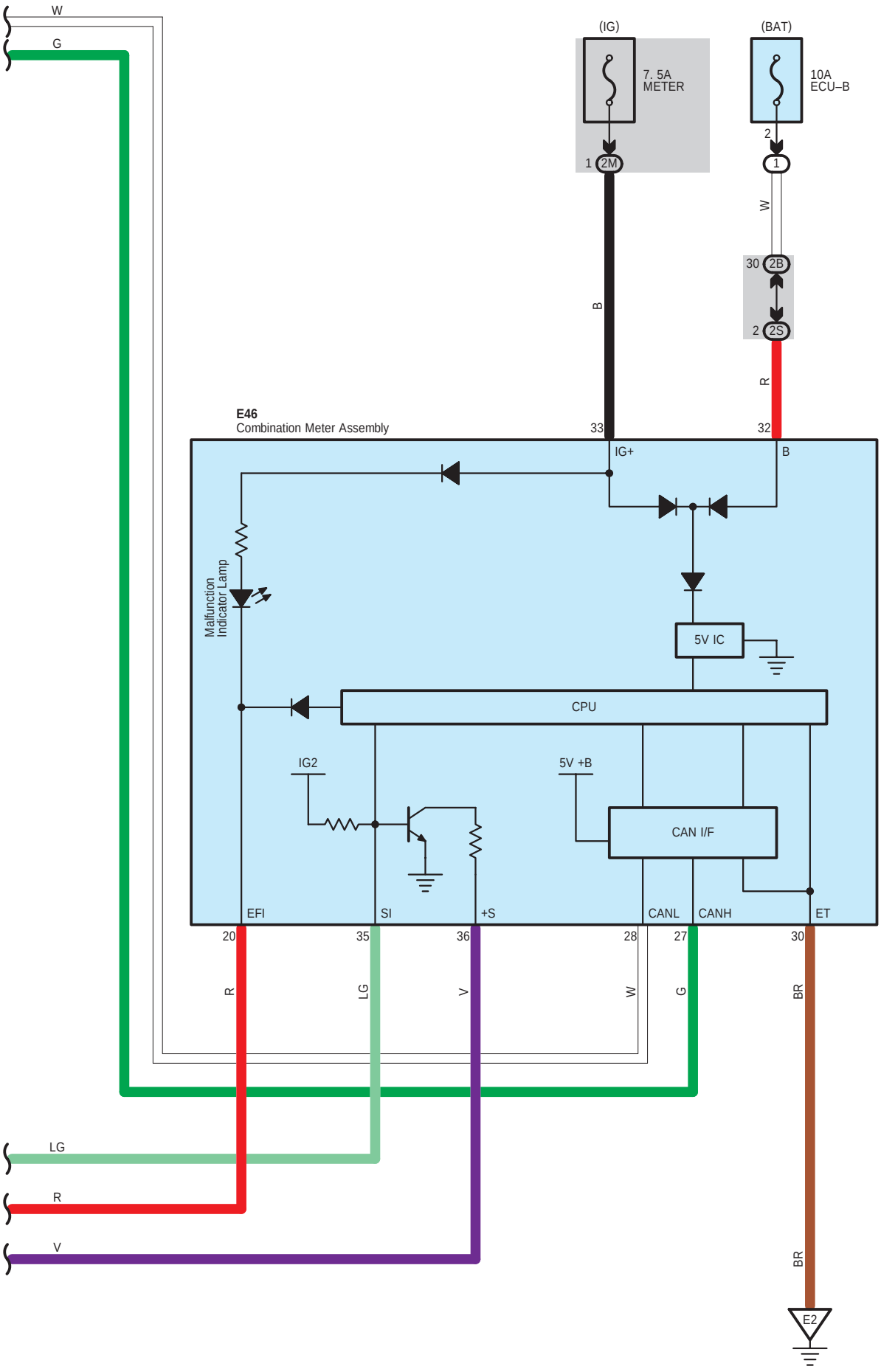
W
G
(IG)
7. 5A
METER
1
2M
(BAT)
10A
ECU–B
2
1
W
30
2B
2
2S
B
R
E46
Combination Meter Assembly
33
32
IG+
B
Malfunction
Indicator Lamp
5V IC
CPU
IG2
5V +B
CAN I/F
EFI
SI
+S
CANL
CANH
ET
20
35
36
28
27
30
R
LG
V
W
G
BR
LG
R
V
BR
E2

A 1
Black

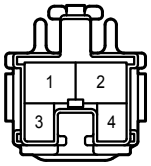

A 3
Black

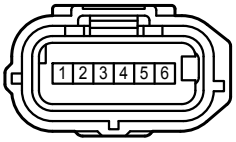

A 5
Black

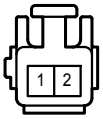

A 45
White

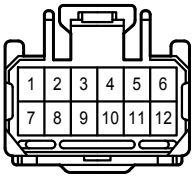

A 46
White

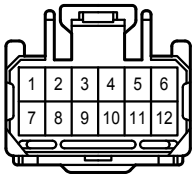

A 47
White

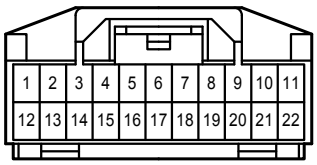

A 48
White

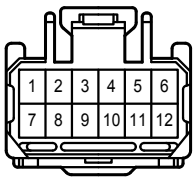

A 49
White

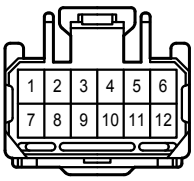

A 50
Black

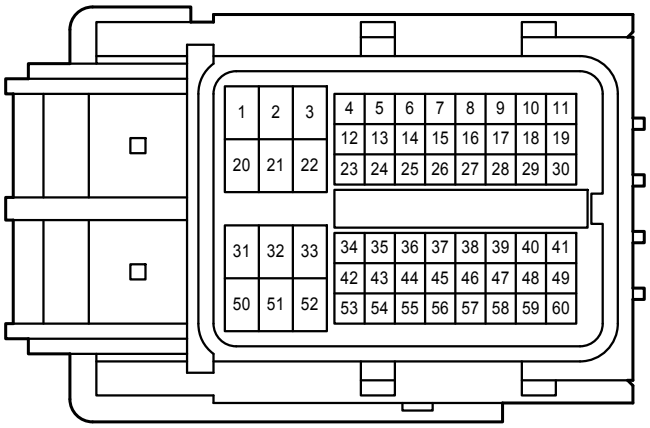

A 66
Black

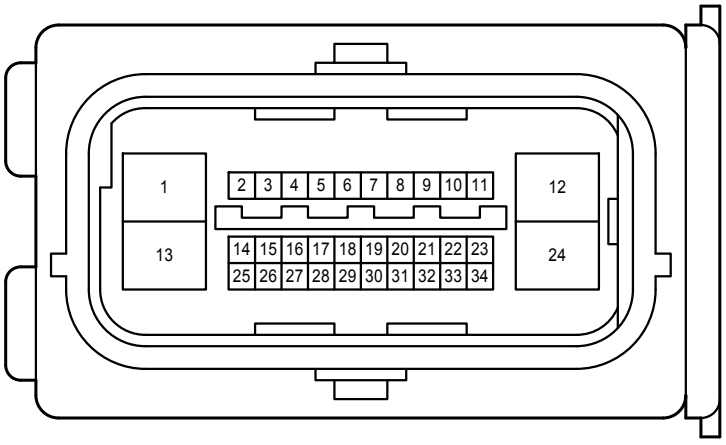

B 2
Black



B 5
Gray

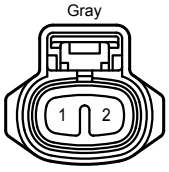

B 9
Black

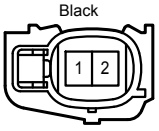

B 10
Gray

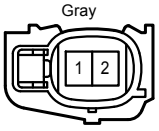

B 11
Black

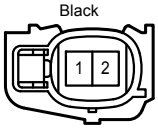

B 12
Gray

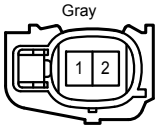

B 14
Black



B 19
Blue

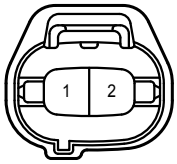

B 24
Gray



B 25
Black

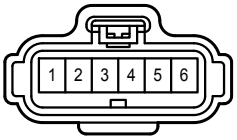

B 26
Black

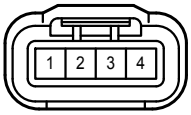

B 27
Gray

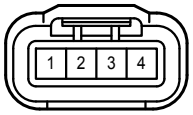

B 28
Black

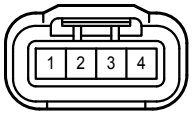

B 29
Gray

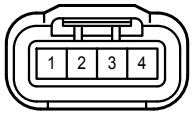

B 31
Black

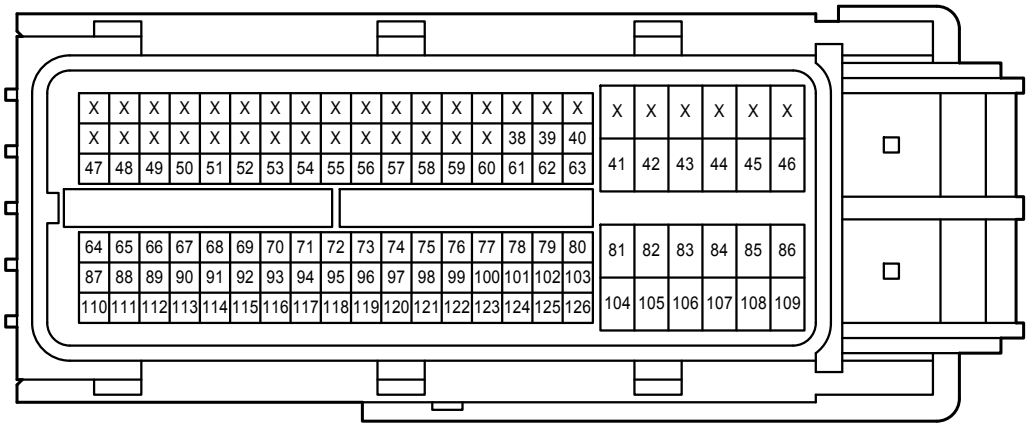

B 35
Black

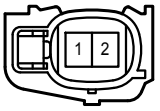

B 58
Gray



B 65
Gray



B 68
Black



B 88
Gray

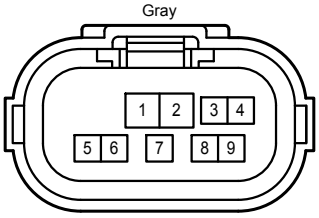

B 92
Gray



B 95
Black



E 4
White

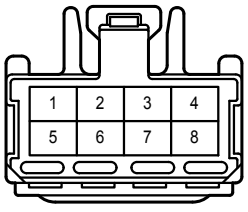

E 11
White

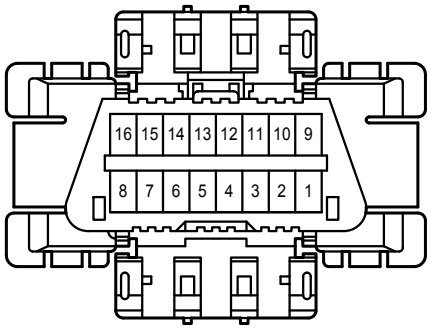

E 21
White

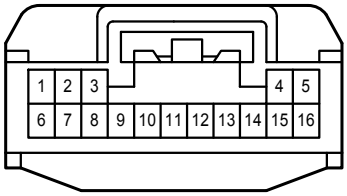

E 46
White

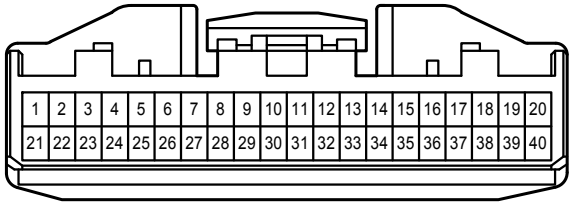

E 71
White

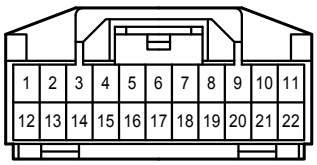

L 17
White



L 50
Black

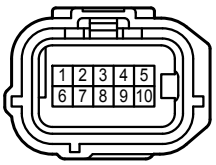

1A
White

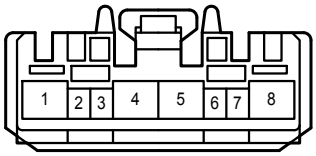

1B
White

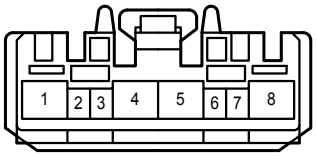

1J

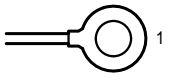

2A
White

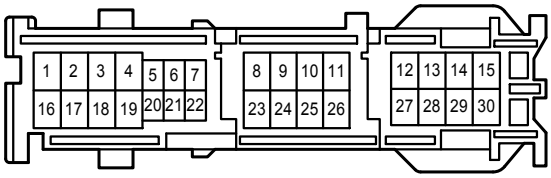

2B
White

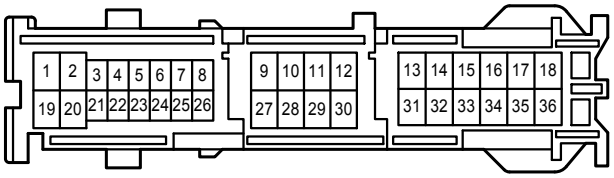

2C
White

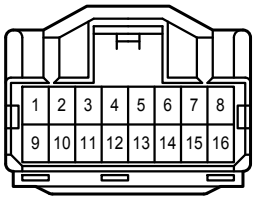

2D
White

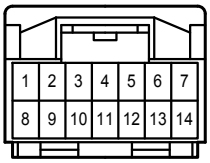

2E
White

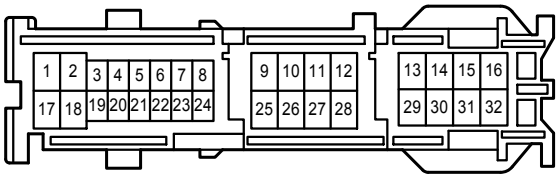

2F
White

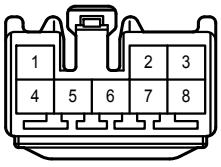

2G
White

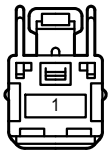

2M
White

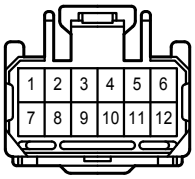

2S
White

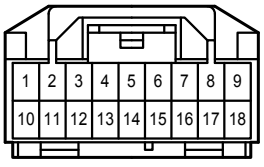

AE3
White

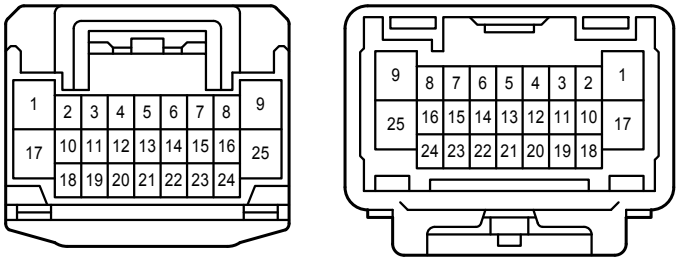

AE6
Gray

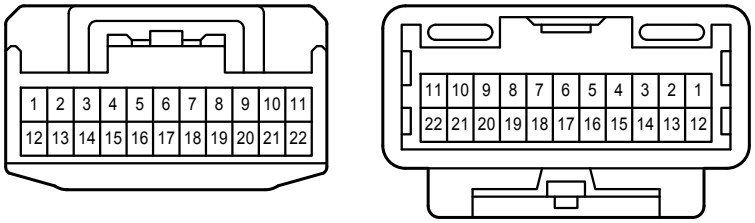

AE10
Gray

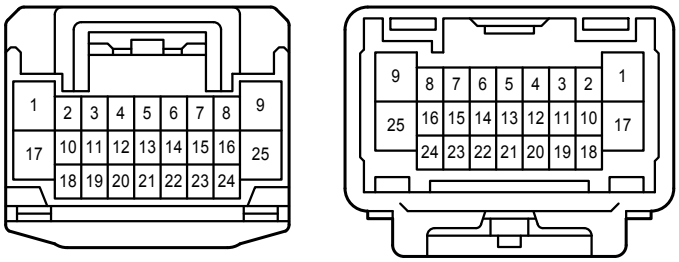

AL1
White

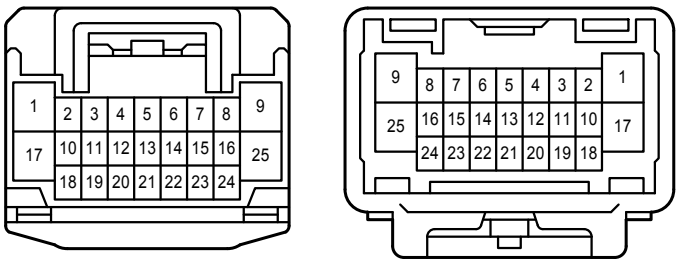

BA1
White

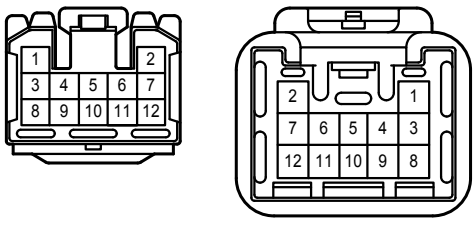

BA2
White

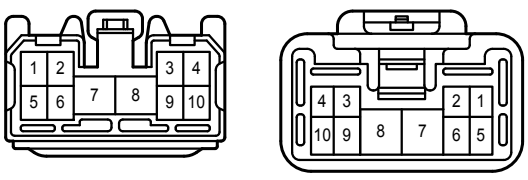

BA4
Gray

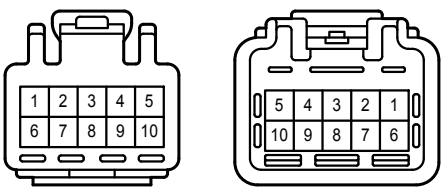

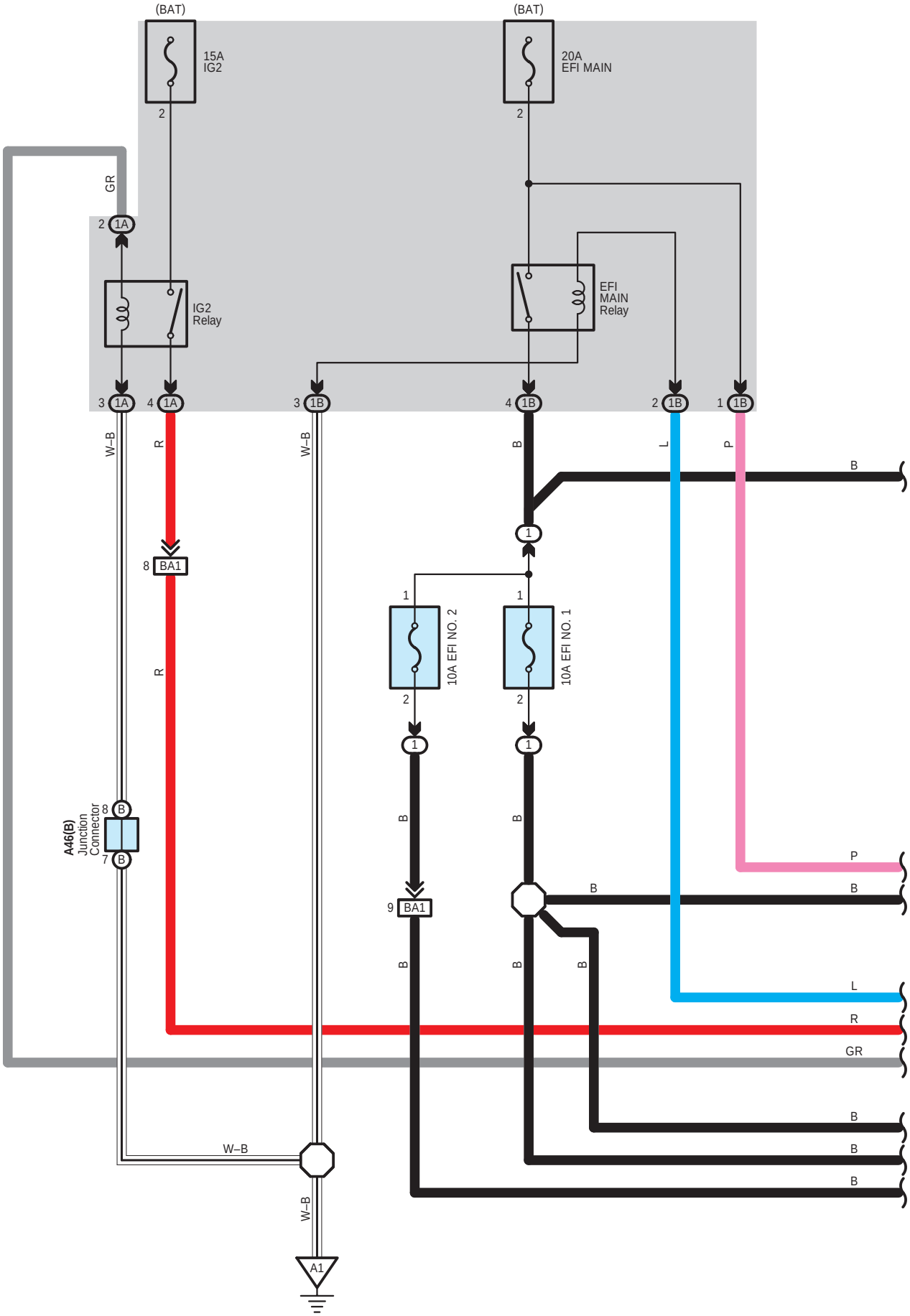
(BAT)
15A
IG2
2
(BAT)
20A
EFI MAIN
2
GR
2 1A
IG2
Relay
EFI
MAIN
Relay
3 1A
4 1A
3 1B
4 1B
2 1B
1 1B
W–B
R
W–B
B
L
P
B
1
8 BA1
1
1
10A EFI NO. 2
10A EFI NO. 1
2
2
1
1
R
B
B
A46(B)
Junction
Connector
8 B
7 B
9 BA1
P
B
B
B
B
L
R
GR
B
B
B
W–B
W–B
A1

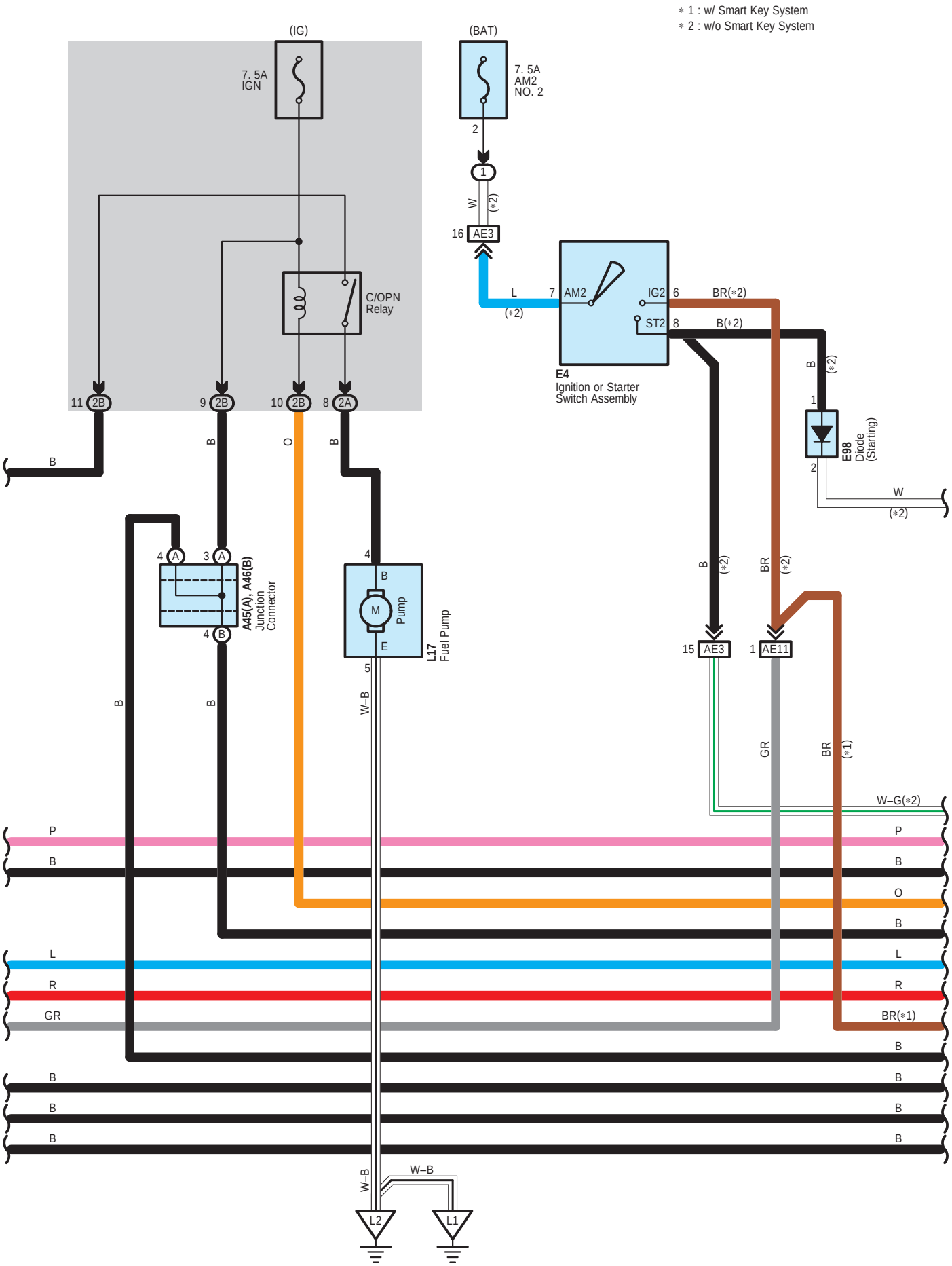
* 1 : w/ Smart Key System
* 2 : w/o Smart Key System
(IG)
7. 5A
IGN
(BAT)
7. 5A
AM2
NO. 2
C/OPN
Relay
11 2B
9 2B
10 2B
8 2A
2
1
W
(*2)
16 AE3
L
(*2)
7 AM2
IG2 6
BR(*2)
ST2 8
B(*2)
E4
Ignition or Starter
Switch Assembly
B
(*2)
1
E98
Diode
(Starting)
2
W
(*2)
B
B
O
B
4 A
3 A
4 B
A45(A), A46(B)
Junction
Connector
4
B
M
Pump
E
5
L17
Fuel Pump
W–B
B
(*2)
BR
(*2)
15 AE3
1 AE11
GR
BR
(*1)
W–G(*2)
P
B
O
B
L
R
GR
BR(*1)
B
B
B
B
B
B
W–B
W–B
L2
L1

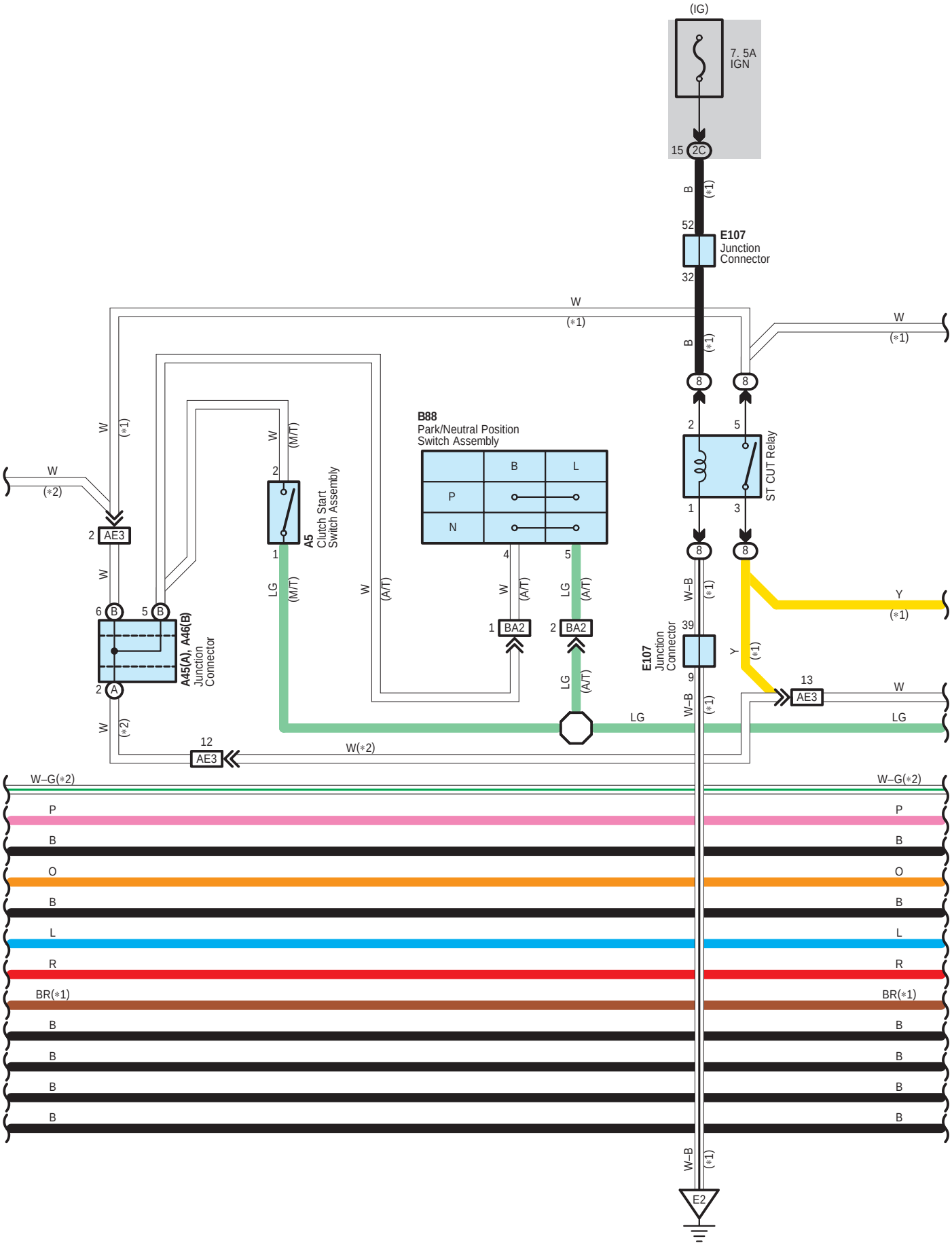
(IG)
7. 5A
IGN
15 2C
B (*1)
52
E107
Junction
Connector
32
W (*1)
W (*1)
B (*1)
8
8
2
5
ST CUT Relay
1
3
8
8
W (*1)
W (*2)
2 AE3
W (*1)
W (M/T)
2
1
A5
Clutch Start
Switch Assembly
LG (M/T)
W (A/T)
B88
Park/Neutral Position
Switch Assembly
B
L
P
N
4
5
W (A/T)
LG (A/T)
1 BA2
2 BA2
LG (A/T)
W–B (*1)
39
E107
Junction
Connector
Y (*1)
Y (*1)
9
W–B (*1)
13
AE3
W
LG
LG
6 B
5 B
2 A
A45(A), A46(B)
Junction
Connector
W (*2)
12
AE3
W(*2)
W–G(*2)
P
B
O
B
L
R
BR(*1)
B
B
B
B
W–G(*2)
P
B
O
B
L
R
BR(*1)
B
B
B
B
W–B (*1)
E2

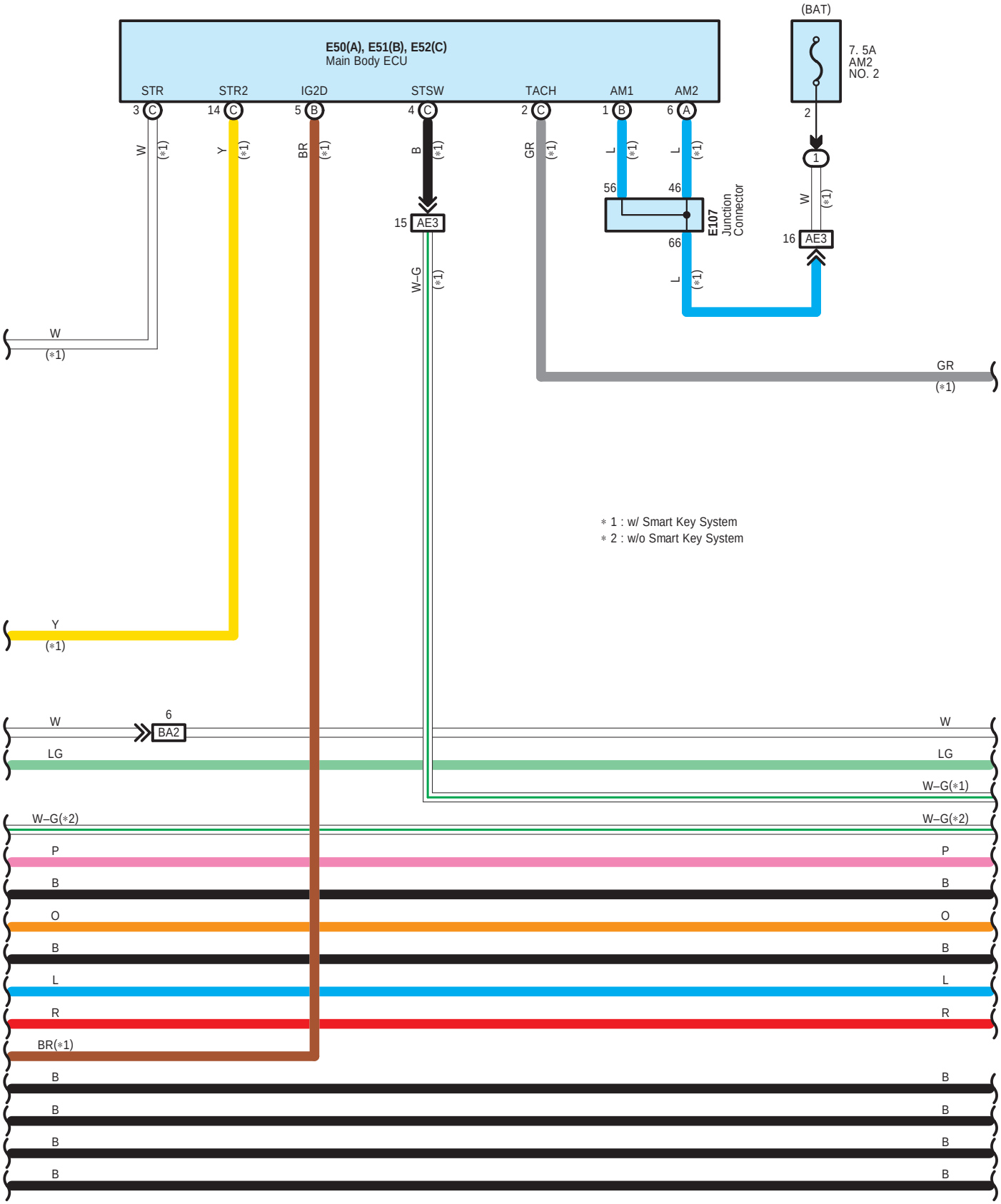
E50(A), E51(B), E52(C)
Main Body ECU
STR
STR2
IG2D
STSW
TACH
AM1
AM2
3 C
14 C
5 B
4 C
2 C
1 B
6 A
(BAT)
7. 5A
AM2
NO. 2
2
1
W
(*1)
Y
(*1)
BR
(*1)
B
(*1)
GR
(*1)
L
(*1)
L
(*1)
56
46
66
E107
Junction
Connector
15 AE3
16 AE3
W–G
(*1)
W
(*1)
GR
(*1)
* 1 : w/ Smart Key System
* 2 : w/o Smart Key System
Y
(*1)
W
6
BA2
LG
W–G(*2)
P
B
O
B
L
R
BR(*1)
B
B
B
B
W
LG
W–G(*1)
W–G(*2)
P
B
O
B
L
R
B
B
B
B

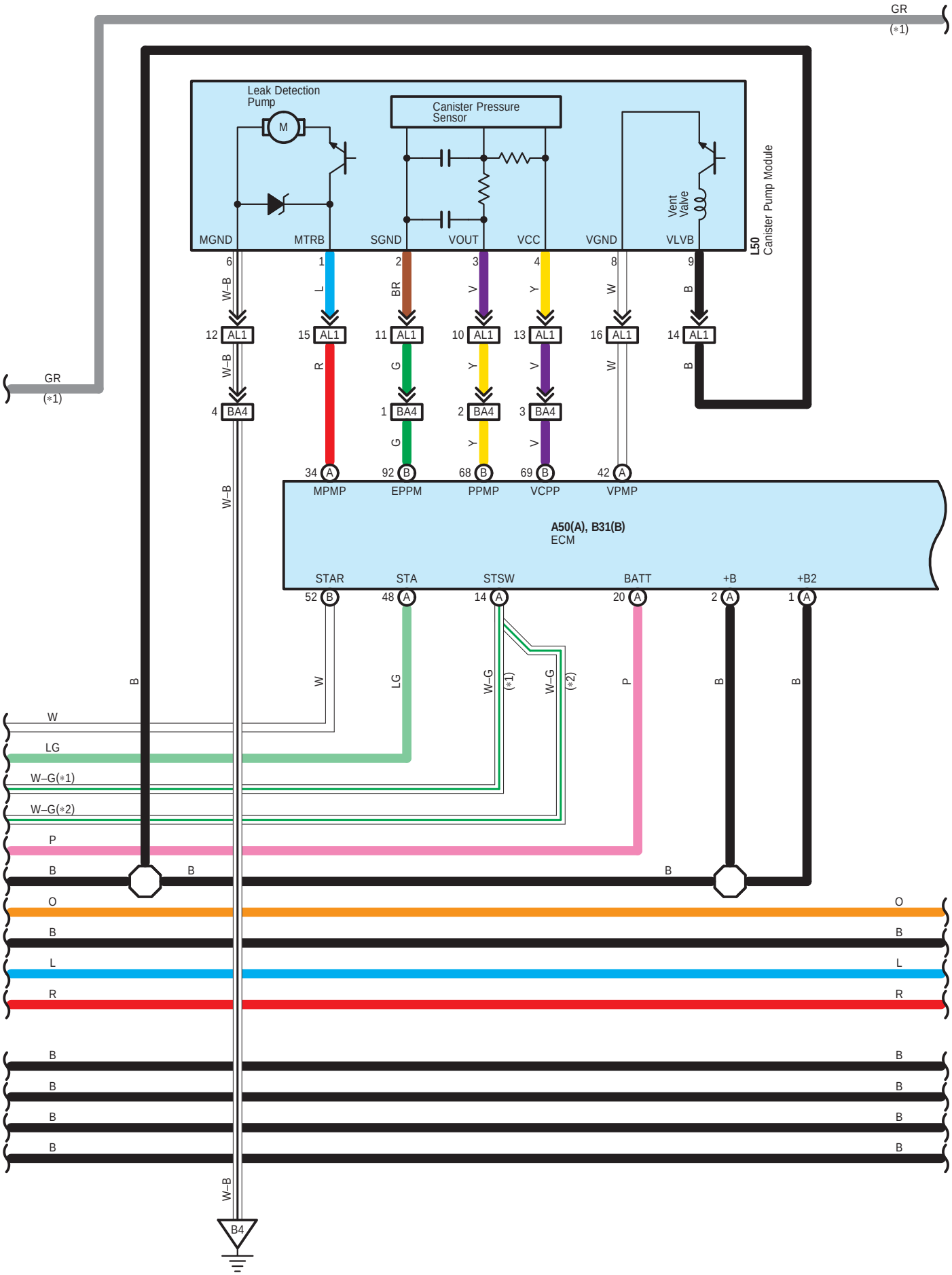
GR
(*1)
Leak Detection Pump
M
Canister Pressure Sensor
Vent Valve
MGND
MTRB
SGND
VOUT
VCC
VGND
VLVB
L50
Canister Pump Module
6
1
2
3
4
8
9
W–B
L
BR
V
Y
W
B
12 AL1
15 AL1
11 AL1
10 AL1
13 AL1
16 AL1
14 AL1
4 BA4
1 BA4
2 BA4
3 BA4
R
G
34 A
92 B
68 B
69 B
42 A
MPMP
EPPM
PPMP
VCPP
VPMP
A50(A), B31(B)
ECM
STAR
STA
STSW
BATT
+B
+B2
52 B
48 A
14 A
20 A
2 A
1 A
W
LG
W–G
(*1)
(*2)
P
B
W
LG
W–G(*1)
W–G(*2)
P
B
O
B
L
R
B4

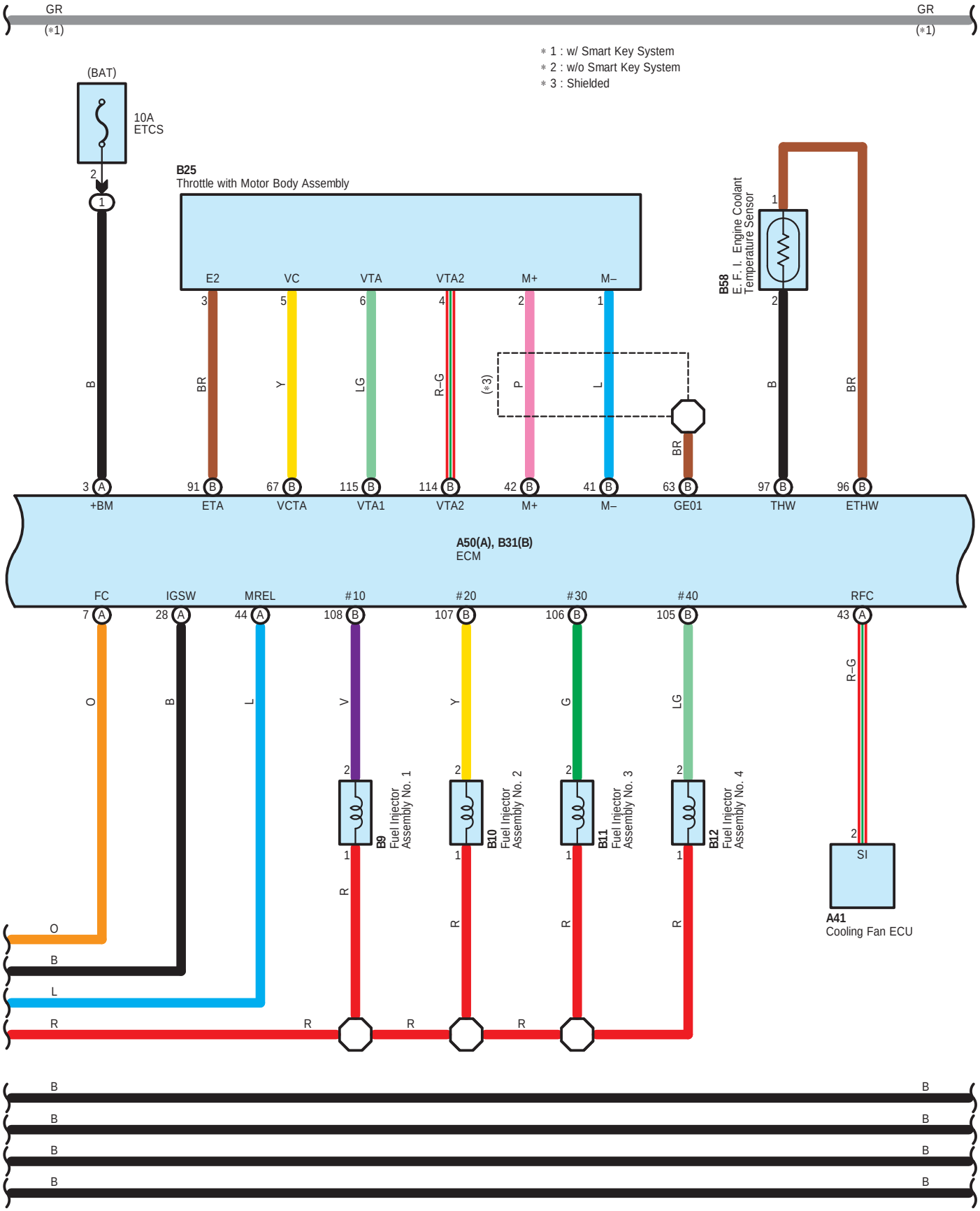
GR
(*1)
GR
(*1)
* 1 : w/ Smart Key System
* 2 : w/o Smart Key System
* 3 : Shielded
(BAT)
10A
ETCS
B25
Throttle with Motor Body Assembly
E2
VC
VTA
VTA2
M+
M–
B58
E. F. I. Engine Coolant Temperature Sensor
A50(A), B31(B)
ECM
+BM
ETA
VCTA
VTA1
VTA2
M+
M–
GE01
THW
ETHW
FC
IGSW
MREL
#10
#20
#30
#40
RFC
B9
Fuel Injector Assembly No. 1
B10
Fuel Injector Assembly No. 2
B11
Fuel Injector Assembly No. 3
B12
Fuel Injector Assembly No. 4
SI
A41
Cooling Fan ECU

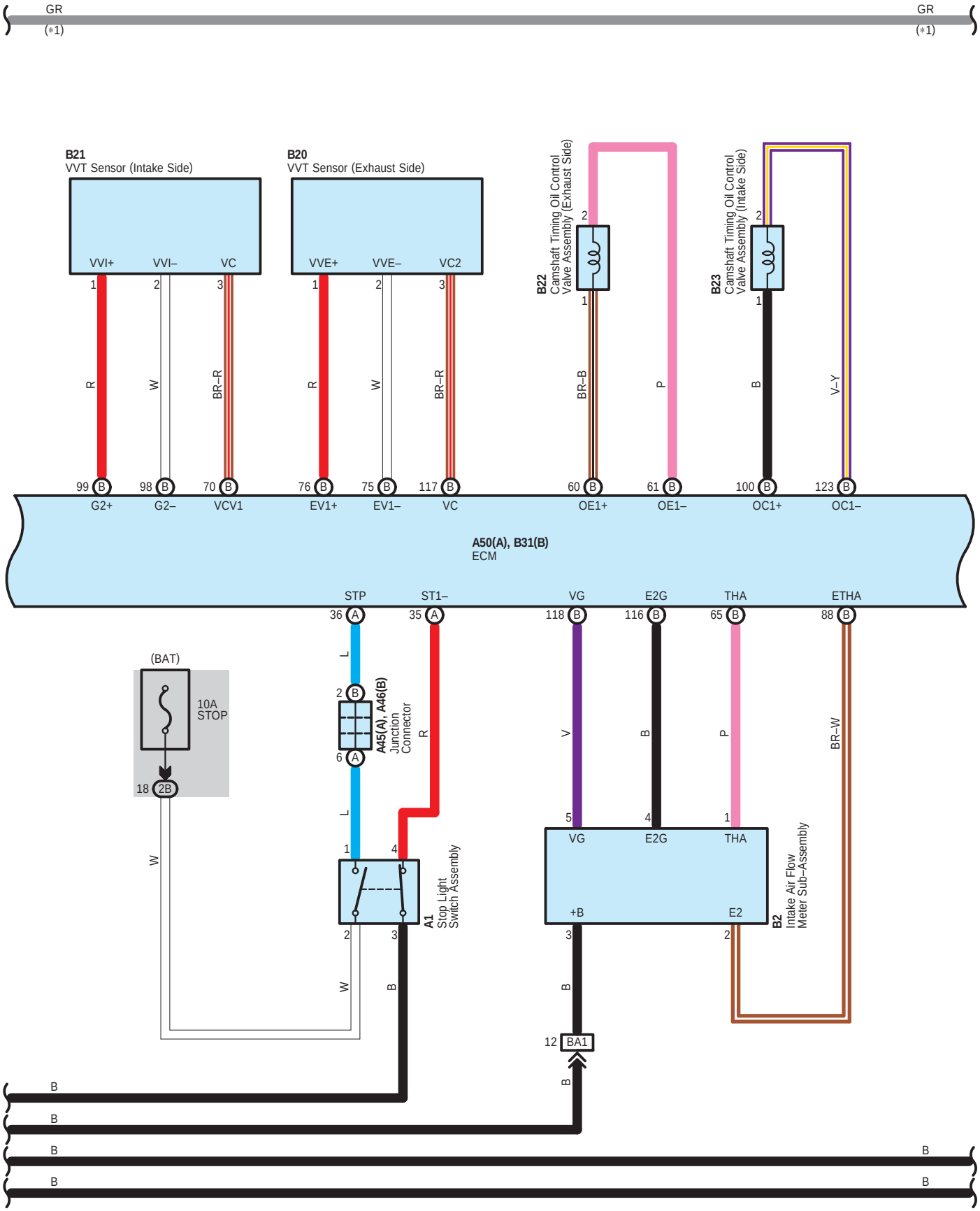
GR
(*1)
GR
(*1)
B21
VVT Sensor (Intake Side)
VVI+
VVI–
VC
B20
VVT Sensor (Exhaust Side)
VVE+
VVE–
VC2
B22
Camshaft Timing Oil Control Valve Assembly (Exhaust Side)
B23
Camshaft Timing Oil Control Valve Assembly (Intake Side)
R
W
BR–R
BR–B
P
B
V–Y
99 G2+
98 G2–
70 VCV1
76 EV1+
75 EV1–
117 VC
60 OE1+
61 OE1–
100 OC1+
123 OC1–
A50(A), B31(B)
ECM
STP
ST1–
VG
E2G
THA
ETHA
36
35
118
116
65
88
(BAT)
10A
STOP
18 2B
L
A45(A), A46(B)
Junction Connector
R
V
B
P
BR–W
A1
Stop Light Switch Assembly
B2
Intake Air Flow Meter Sub–Assembly
+B
E2
12 BA1
B

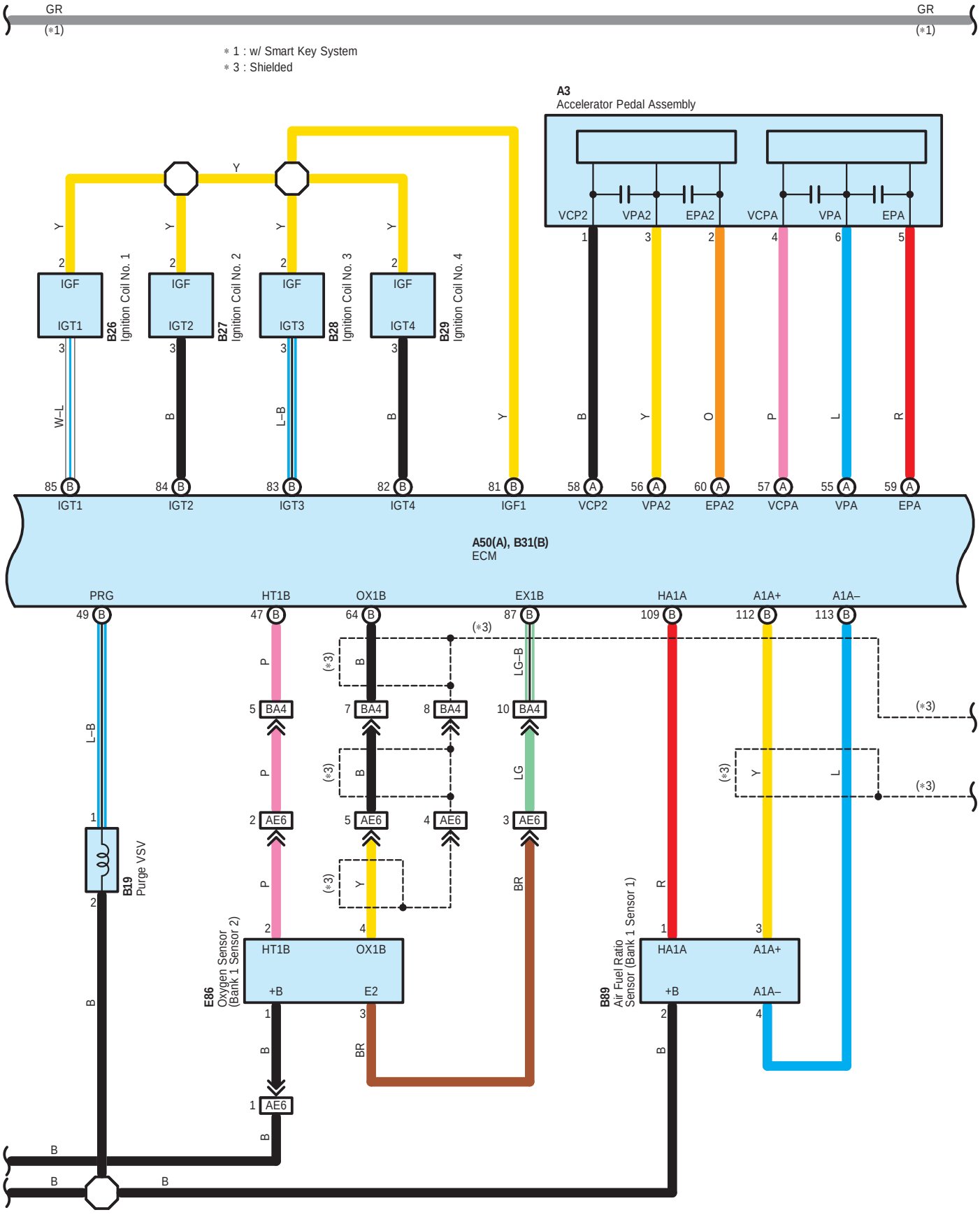
GR
(*1)
GR
(*1)
* 1 : w/ Smart Key System
* 3 : Shielded
A3
Accelerator Pedal Assembly
VCP2
VPA2
EPA2
VCPA
VPA
EPA
B26 Ignition Coil No. 1
B27 Ignition Coil No. 2
B28 Ignition Coil No. 3
B29 Ignition Coil No. 4
IGF
IGT1
IGT2
IGT3
IGT4
A50(A), B31(B)
ECM
PRG
HT1B
OX1B
EX1B
HA1A
A1A+
A1A–
B19 Purge VSV
E86 Oxygen Sensor (Bank 1 Sensor 2)
B89 Air Fuel Ratio Sensor (Bank 1 Sensor 1)
BA4
AE6
(*3)

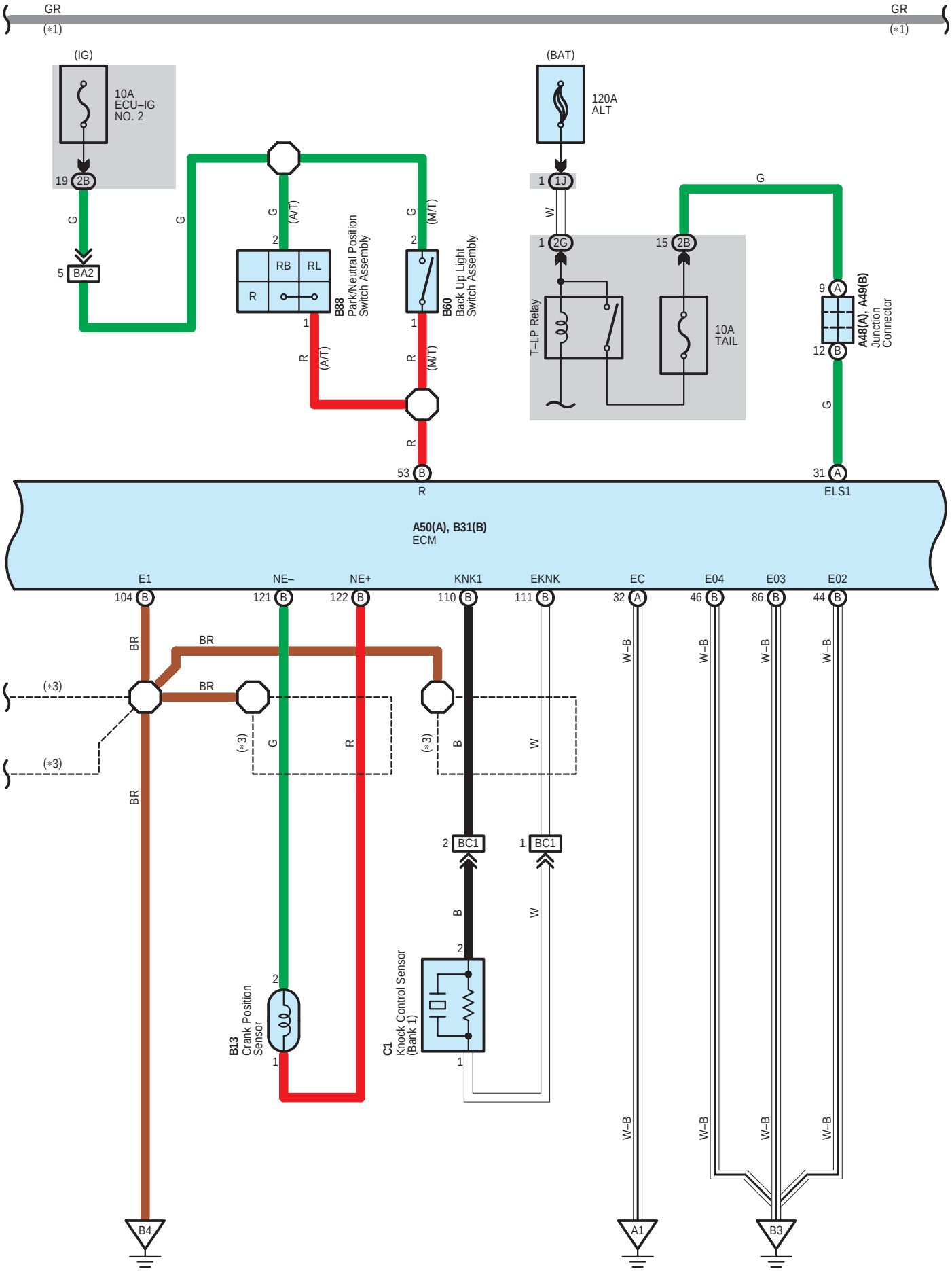
GR
(*1)
GR
(*1)
(IG)
10A
ECU–IG
NO. 2
19 2B
G
5 BA2
G
G
(A/T)
2
RB
RL
R
1
R
(A/T)
B88
Park/Neutral Position
Switch Assembly
G
(M/T)
2
1
R
(M/T)
B60
Back Up Light
Switch Assembly
R
53 B
R
(BAT)
120A
ALT
1 1J
W
1 2G
15 2B
G
T–LP Relay
10A
TAIL
9 A
12 B
G
A48(A), A49(B)
Junction
Connector
31 A
ELS1
A50(A), B31(B)
ECM
E1
104 B
NE–
121 B
NE+
122 B
KNK1
110 B
EKNK
111 B
EC
32 A
E04
46 B
E03
86 B
E02
44 B
BR
BR
BR
BR
(*3)
(*3)
(*3)
G
R
B
W
W–B
2 BC1
1 BC1
B
W
2
1
B13
Crank Position
Sensor
2
1
C1
Knock Control Sensor
(Bank 1)
B4
A1
B3

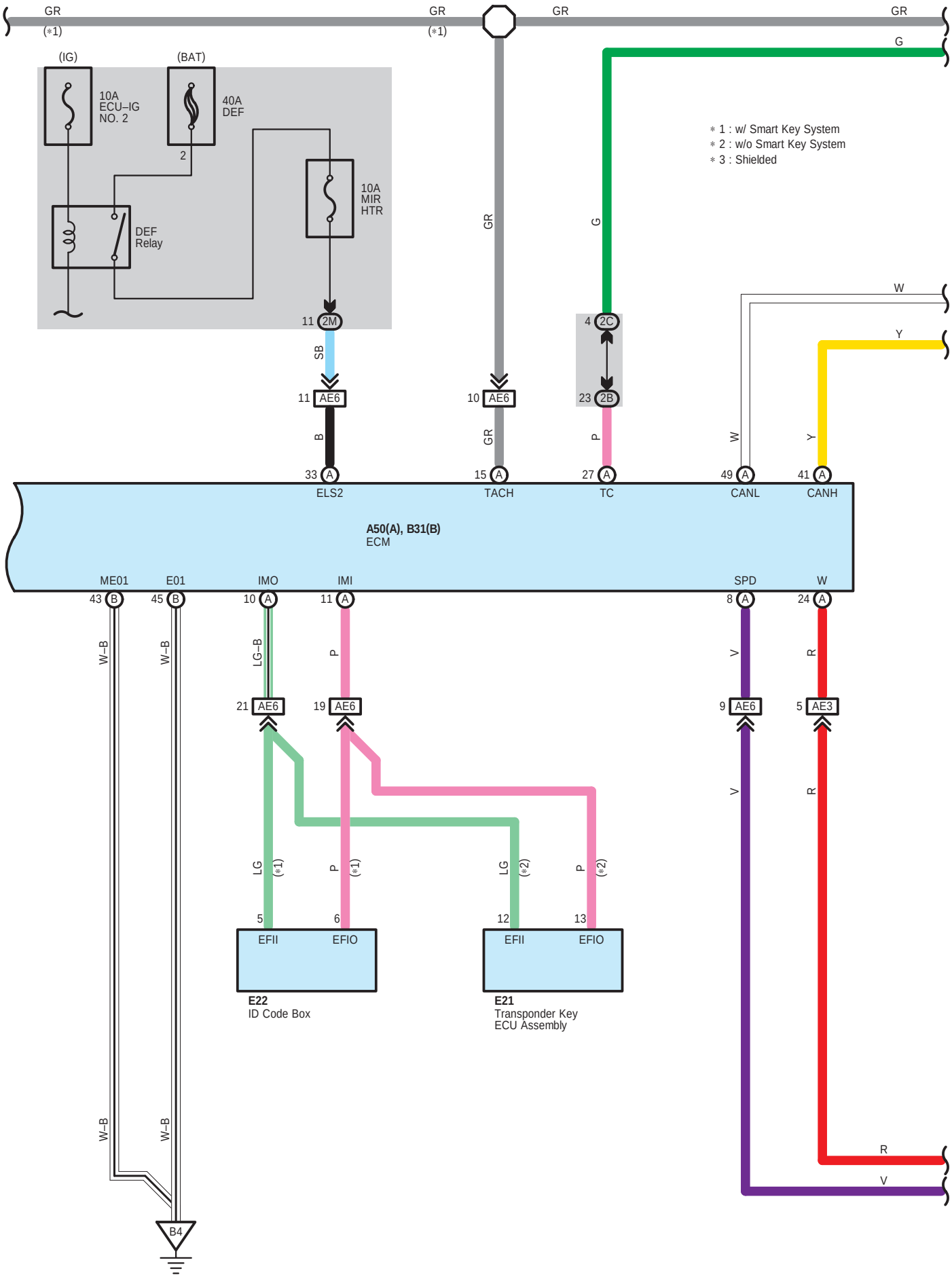
GR
(*1)
GR
(*1)
GR
GR
G
(IG)
(BAT)
10A
ECU–IG
NO. 2
40A
DEF
2
DEF
Relay
10A
MIR
HTR
* 1 : w/ Smart Key System
* 2 : w/o Smart Key System
* 3 : Shielded
GR
G
W
Y
11 2M
SB
4 2C
11 AE6
10 AE6
23 2B
B
GR
P
W
Y
33 A
15 A
27 A
49 A
41 A
ELS2
TACH
TC
CANL
CANH
A50(A), B31(B)
ECM
ME01
E01
IMO
IMI
SPD
W
43 B
45 B
10 A
11 A
8 A
24 A
W–B
W–B
LG–B
P
V
R
21 AE6
19 AE6
9 AE6
5 AE3
V
R
LG
(*1)
P
(*1)
LG
(*2)
P
(*2)
5
6
12
13
EFII
EFIO
EFII
EFIO
E22
ID Code Box
E21
Transponder Key
ECU Assembly
R
V
W–B
W–B
B4

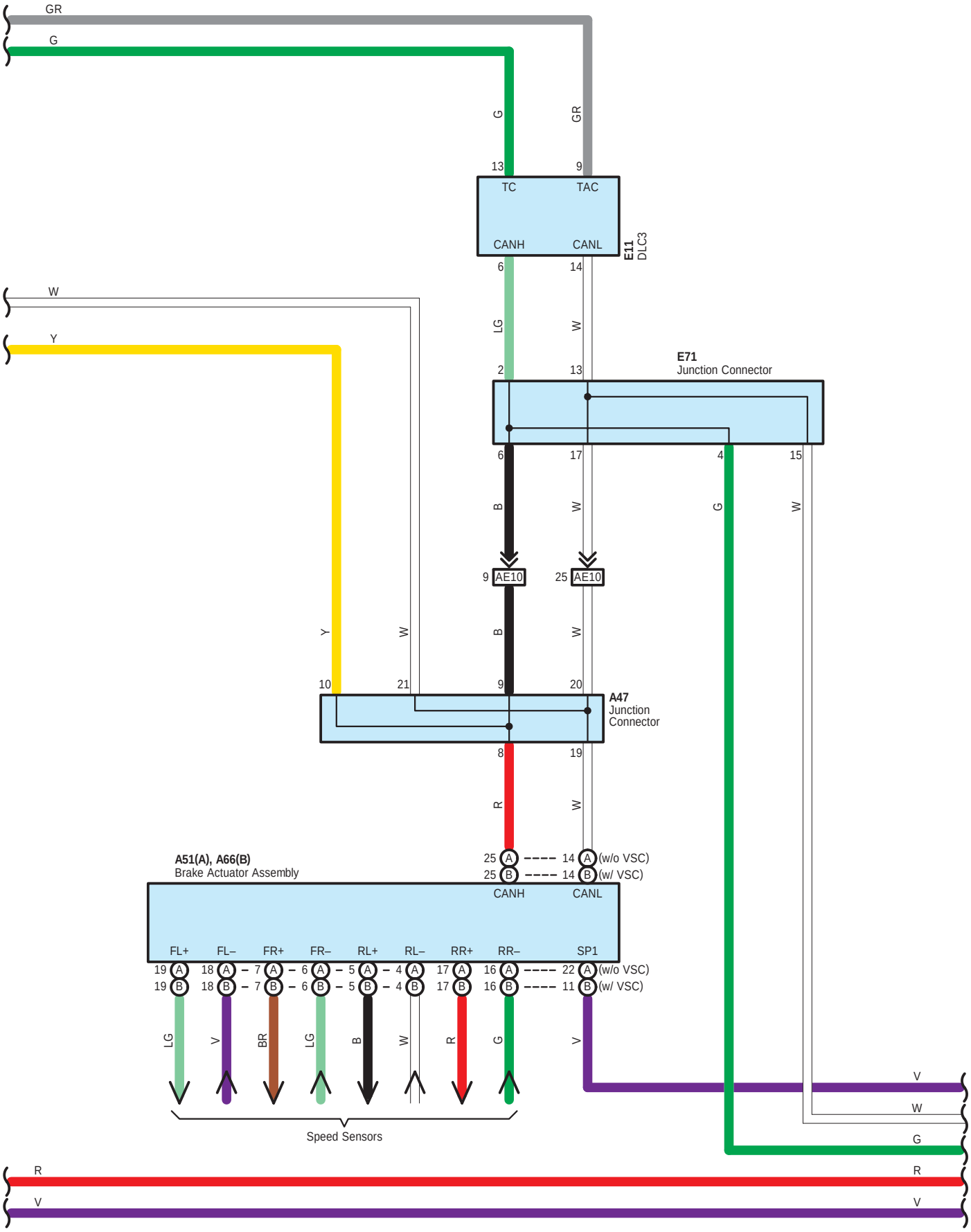
GR
G
G
GR
13
9
TC
TAC
CANH
CANL
E11
DLC3
6
14
LG
W
W
Y
2
13
E71
Junction Connector
6
17
4
15
B
W
G
W
9 AE10
25 AE10
Y
W
B
W
10
21
9
20
A47
Junction
Connector
8
19
R
W
A51(A), A66(B)
Brake Actuator Assembly
25 A ---- 14 A (w/o VSC)
25 B ---- 14 B (w/ VSC)
CANH
CANL
FL+
FL–
FR+
FR–
RL+
RL–
RR+
RR–
SP1
19 A
19 B
18 A – 7 A
18 B – 7 B
6 A – 5 A
6 B – 5 B
4 A
4 B
17 A
17 B
16 A ---- 22 A (w/o VSC)
16 B ---- 11 B (w/ VSC)
LG
V
BR
LG
B
W
R
G
V
Speed Sensors
V
W
G
R
V
R
V

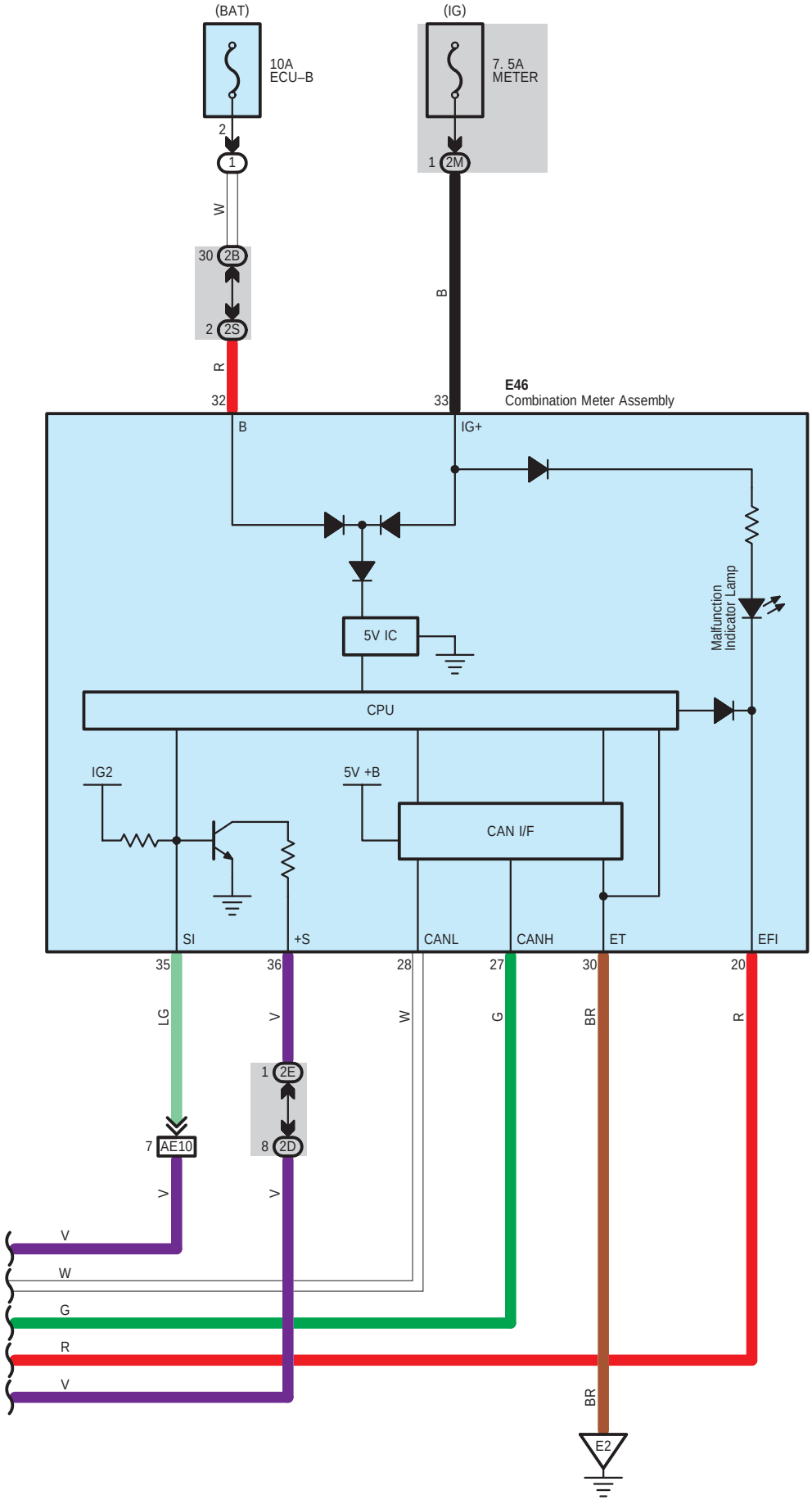
(BAT)
10A
ECU–B
2
1
W
30
2B
2
2S
R
32
(IG)
7. 5A
METER
1
2M
B
33
E46
Combination Meter Assembly
B
IG+
5V IC
Malfunction
Indicator Lamp
CPU
IG2
5V +B
CAN I/F
SI
+S
CANL
CANH
ET
EFI
35
36
28
27
30
20
LG
V
W
G
BR
R
1
2E
8
2D
7
AE10
V
V
V
W
G
R
V
BR
E2

A 1
Black

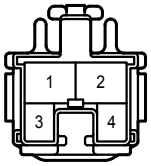

A 3
Black

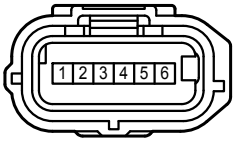

A 5
Black

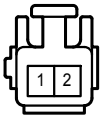

A 41
Black

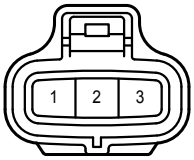

A 45
White

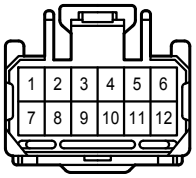

A 46
White

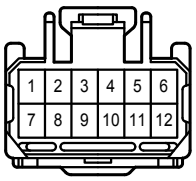

A 47
White

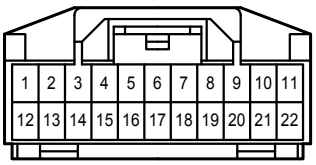

A 48
White

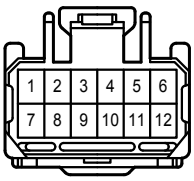

A 49
White

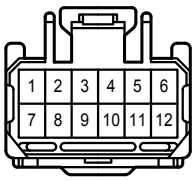

A 50
Black

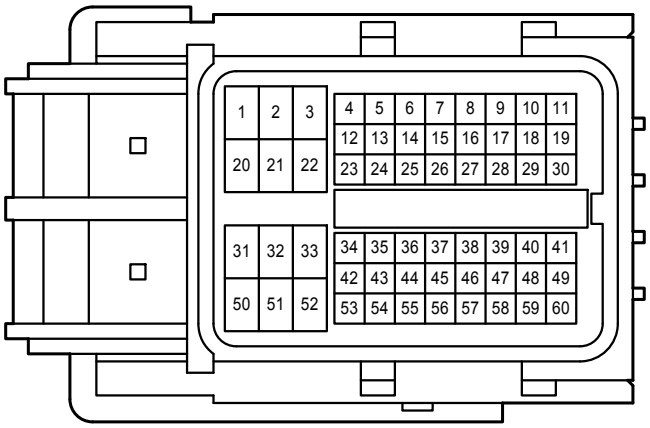

A 51
Gray

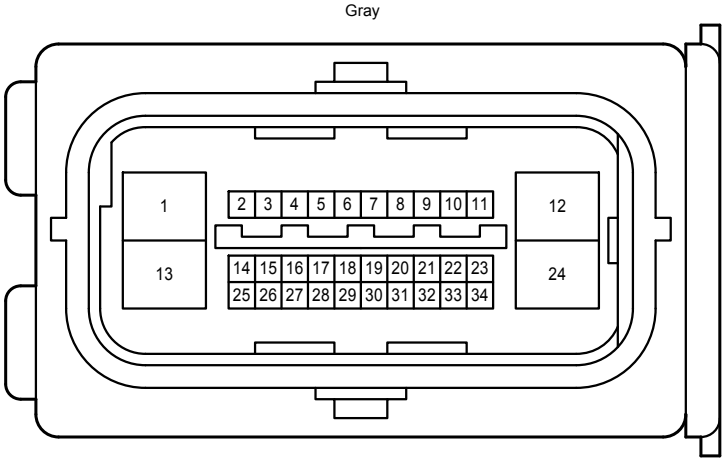

A 66
Black

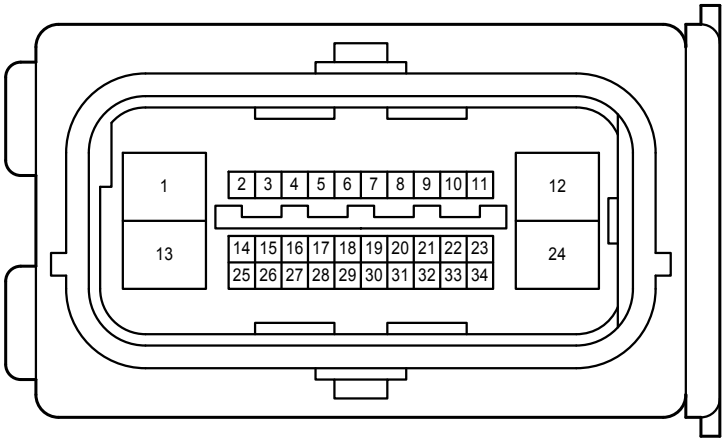

B 2
Black



B 9
Black

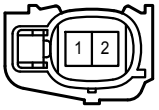

B 10
Gray

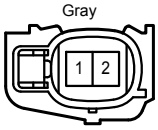

B 11
Black

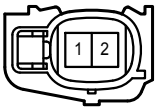

B 12
Gray

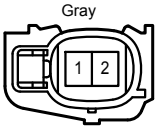

B 13
Black

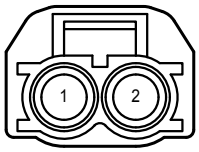

B 19
Blue

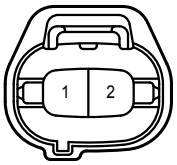

B 20
Black

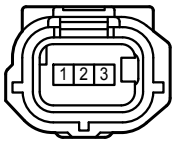

B 21
Gray

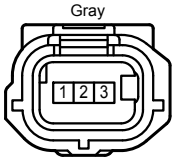

B 22
Black



B 23
Gray



B 25
Black

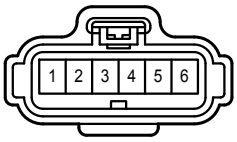

B 26
Black

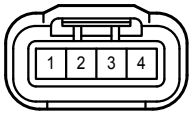

B 27
Gray



B 28
Black

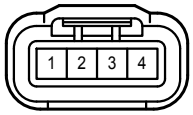

B 29
Gray



B 31
Black

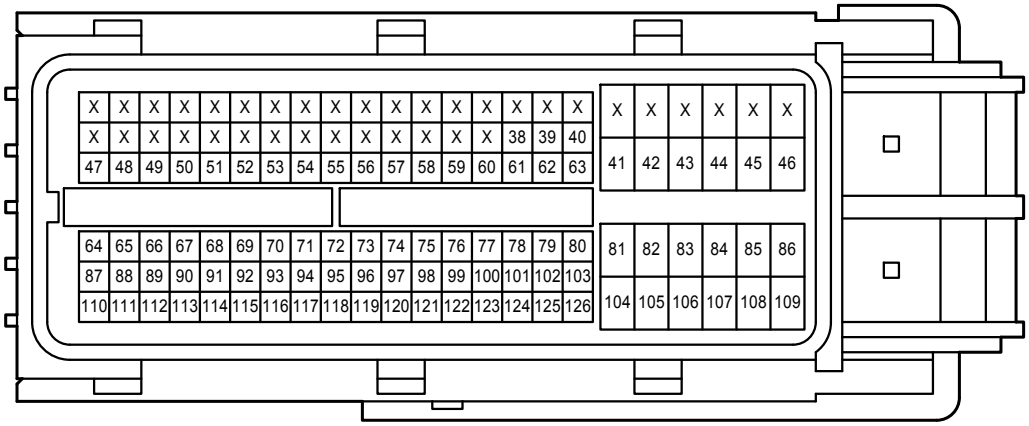

B 58
Gray



B 60
Gray

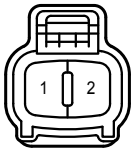

B 88
Gray

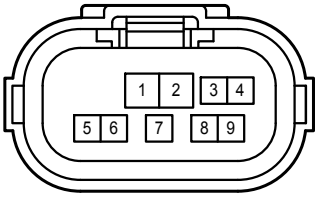

B 89
Gray



C 1
Black

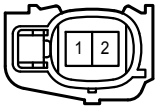

E 4
White

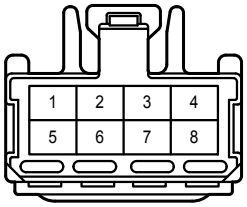

E 11
White

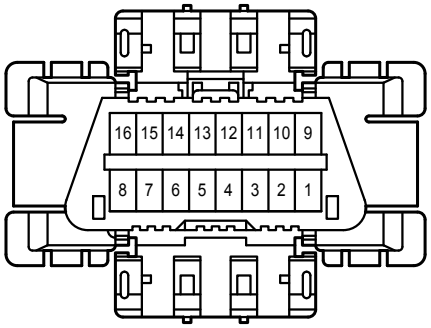

E 21
White

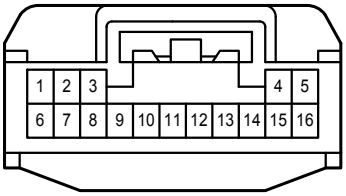

E 22
White

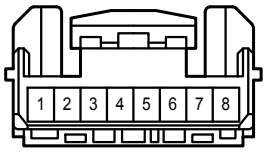

E 46
White

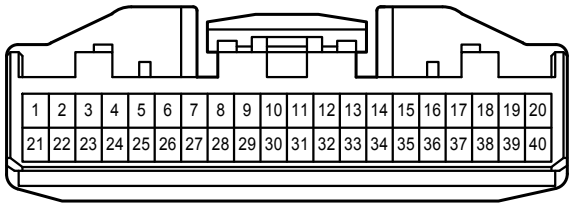

E 50
White

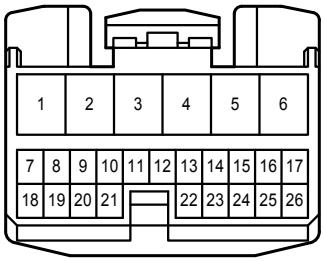

E 51
White

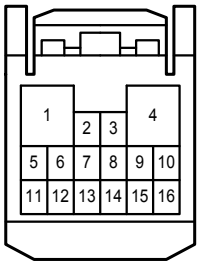

E 52
White

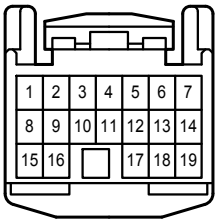

E 71
White

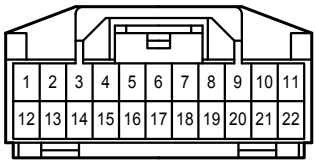

E 86
Gray

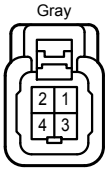

E 98
Black



E107
White

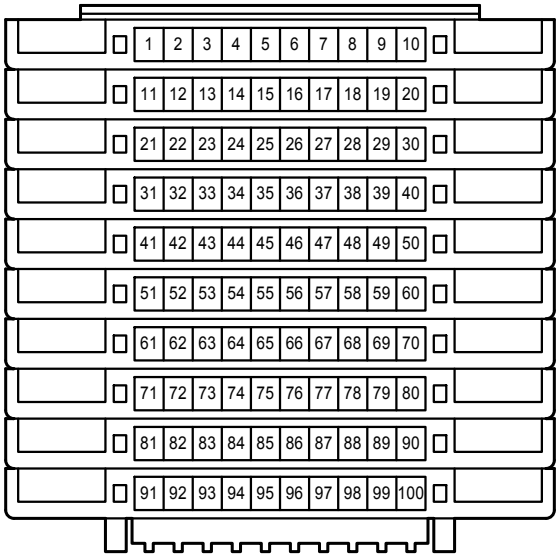

L 17
White



L 50
Black

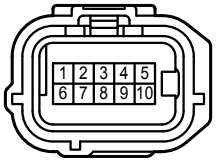

1A
White

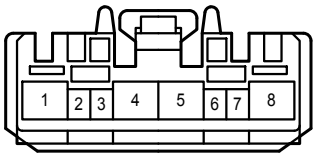

1B
White

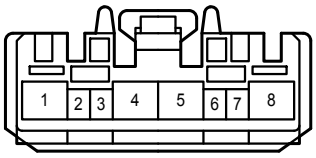

1J

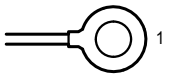

2A
White

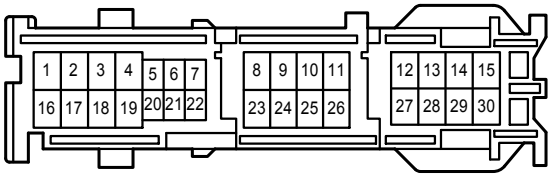

2B
White

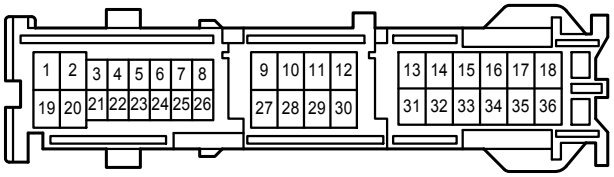

2C
White

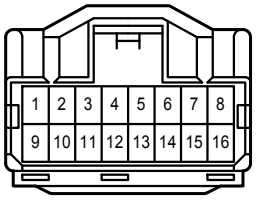

2D
White

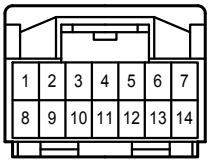

2E
White

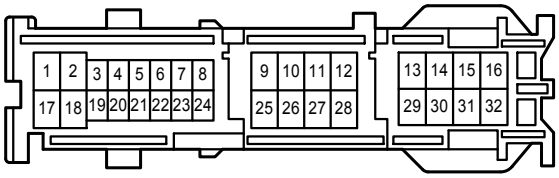

2G
White

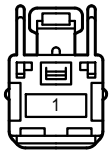

2M
White

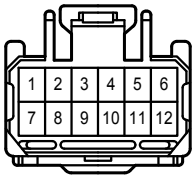

2S
White

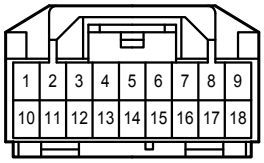

AE3
White

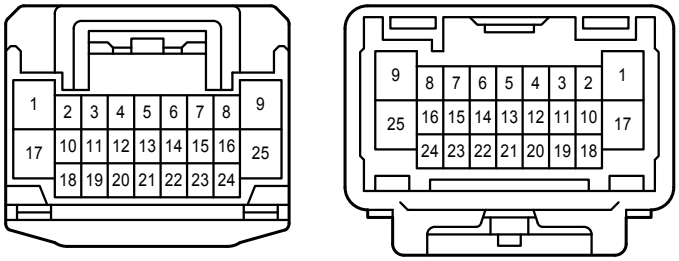

AE6
Gray

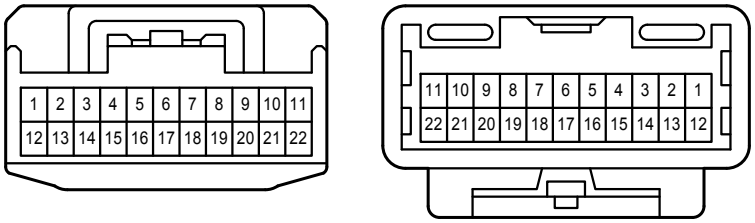

AE10
Gray

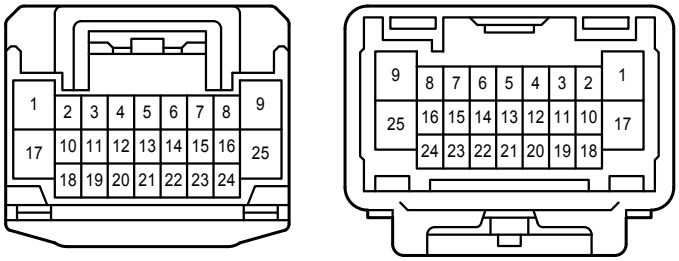

AE11
White

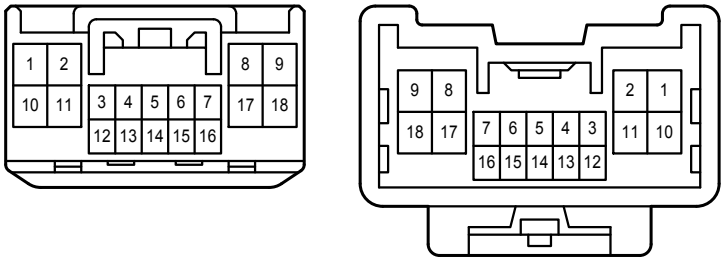

AL1
White

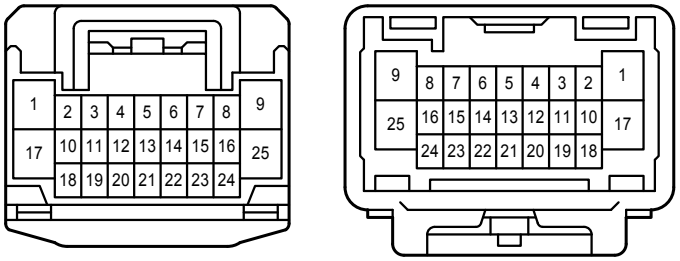

BA1
White

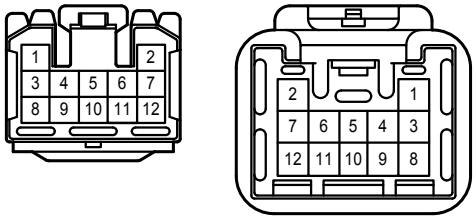

BA2
White

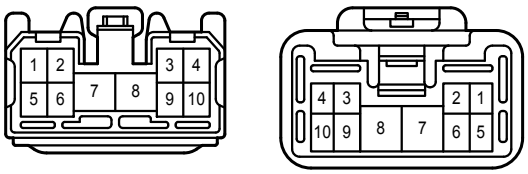

BA4
Gray

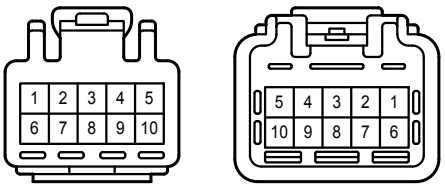

BC1
Gray

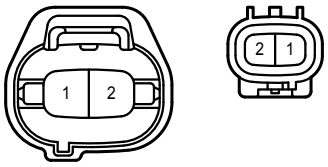

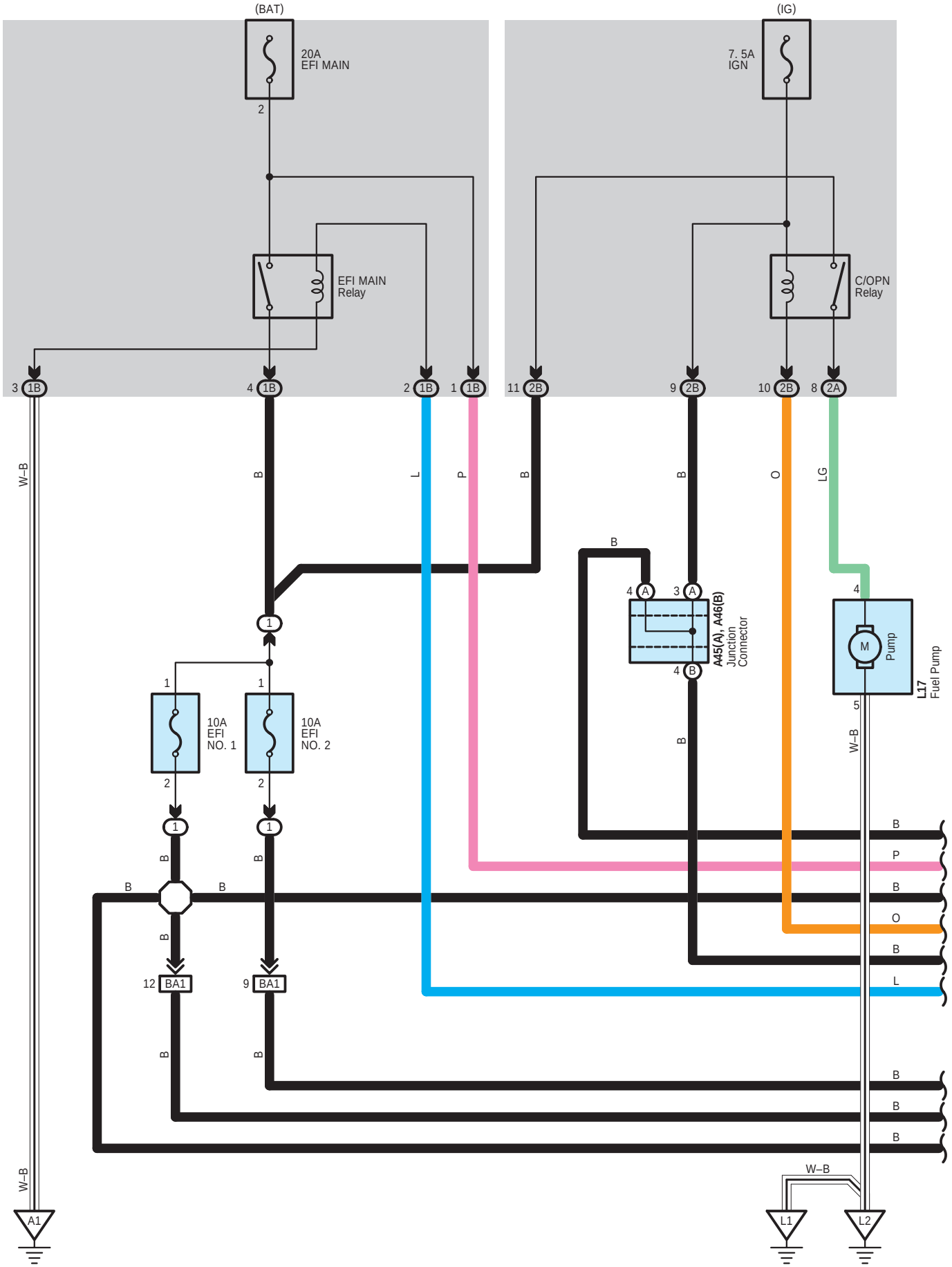
(BAT)
(IG)
20A
EFI MAIN
7. 5A
IGN
EFI MAIN
Relay
C/OPN
Relay
3 1B
4 1B
2 1B
1 1B
11 2B
9 2B
10 2B
8 2A
W–B
B
L
P
O
LG
A45(A), A46(B)
Junction
Connector
Pump
L17
Fuel Pump
10A
EFI
NO. 1
10A
EFI
NO. 2
12 BA1
9 BA1
A1
L1
L2

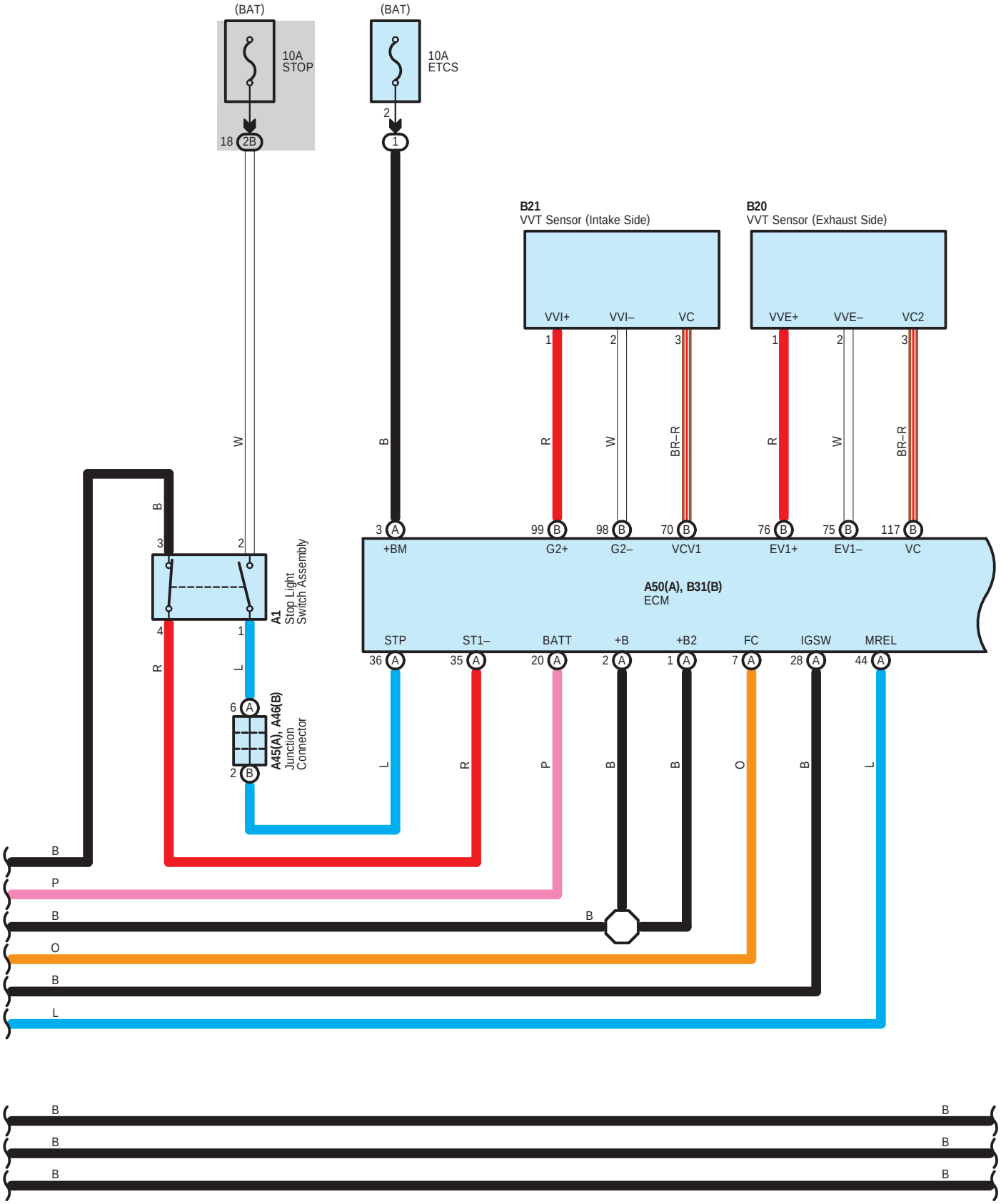
(BAT)
10A
STOP
18 2B
(BAT)
10A
ETCS
2
1
B21
VVT Sensor (Intake Side)
VVI+
VVI–
VC
1
2
3
B20
VVT Sensor (Exhaust Side)
VVE+
VVE–
VC2
1
2
3
W
B
R
W
BR–R
R
W
BR–R
B
3
2
A1
Stop Light
Switch Assembly
4
1
R
L
3 A
+BM
99 B
G2+
98 B
G2–
70 B
VCV1
76 B
EV1+
75 B
EV1–
117 B
VC
A50(A), B31(B)
ECM
STP
ST1–
BATT
+B
+B2
FC
IGSW
MREL
36 A
35 A
20 A
2 A
1 A
7 A
28 A
44 A
6 A
2 B
A45(A), A46(B)
Junction
Connector
L
R
P
B
B
O
B
L
B
P
B
O
B
L
B
B
B
B
B
B

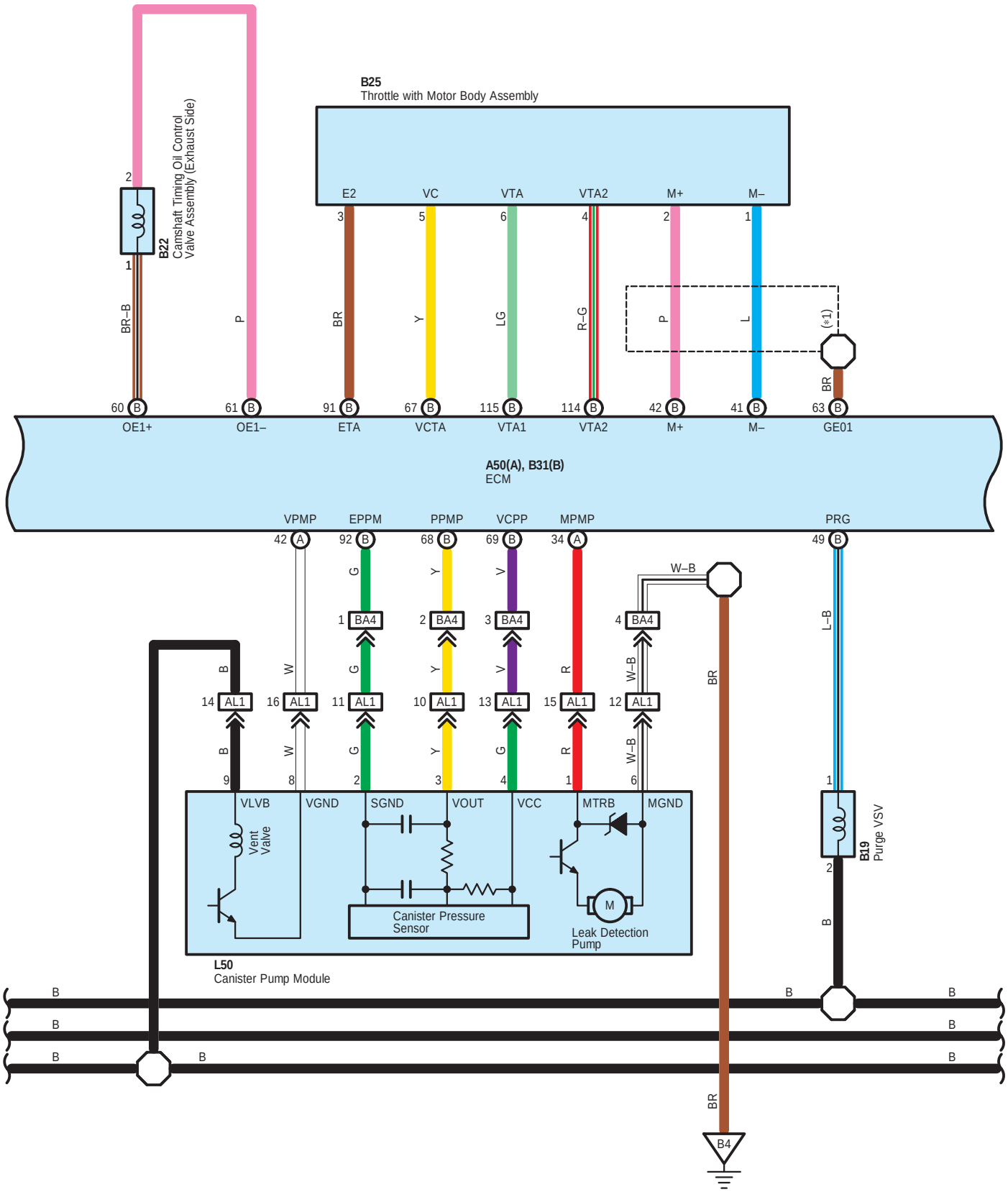
B25
Throttle with Motor Body Assembly
E2
VC
VTA
VTA2
M+
M–
B22
Camshaft Timing Oil Control Valve Assembly (Exhaust Side)
BR–B
P
BR
Y
LG
R–G
P
L
(*1)
OE1+
OE1–
ETA
VCTA
VTA1
VTA2
M+
M–
GE01
A50(A), B31(B)
ECM
VPMP
EPPM
PPMP
VCPP
MPMP
PRG
W–B
L–B
B19
Purge VSV
L50
Canister Pump Module
VLVB
VGND
SGND
VOUT
VCC
MTRB
MGND
Vent Valve
Canister Pressure Sensor
Leak Detection Pump
M
B4

∗ 1 : Shielded

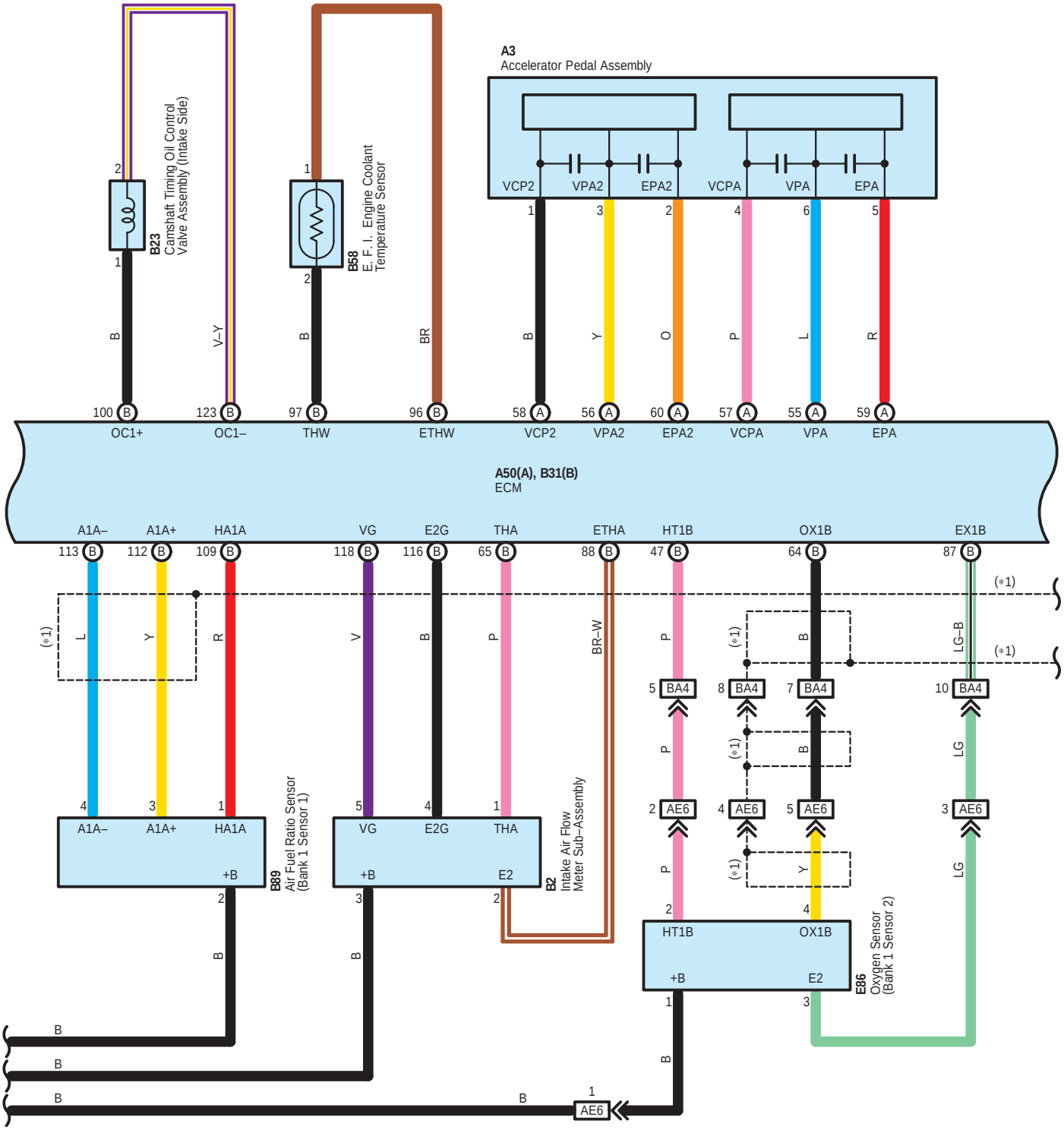
A3
Accelerator Pedal Assembly
VCP2
VPA2
EPA2
VCPA
VPA
EPA
B23
Camshaft Timing Oil Control Valve Assembly (Intake Side)
B58
E. F. I. Engine Coolant Temperature Sensor
OC1+
OC1–
THW
ETHW
A50(A), B31(B)
ECM
A1A–
A1A+
HA1A
VG
E2G
THA
ETHA
HT1B
OX1B
EX1B
B89
Air Fuel Ratio Sensor (Bank 1 Sensor 1)
B2
Intake Air Flow Meter Sub–Assembly
E86
Oxygen Sensor (Bank 1 Sensor 2)
BA4
AE6
(∗1)

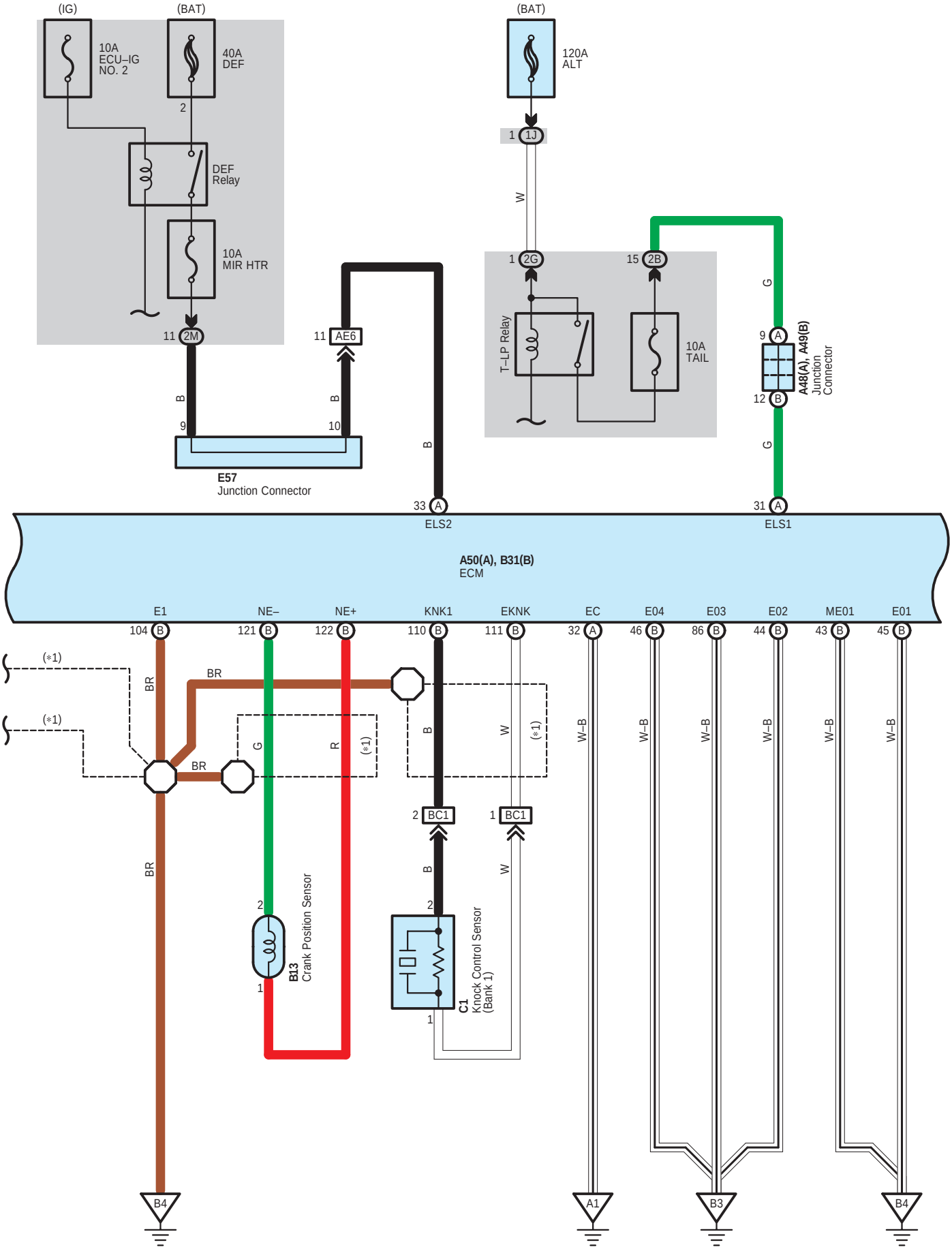
(IG)
(BAT)
10A
ECU–IG
NO. 2
40A
DEF
2
DEF
Relay
10A
MIR HTR
11 2M
11 AE6
B
9
10
E57
Junction Connector
33 A
ELS2
(BAT)
120A
ALT
1 1J
W
1 2G
15 2B
T–LP Relay
10A
TAIL
G
9 A
12 B
A48(A), A49(B)
Junction
Connector
31 A
ELS1
A50(A), B31(B)
ECM
E1
NE–
NE+
KNK1
EKNK
EC
E04
E03
E02
ME01
E01
104 B
121 B
122 B
110 B
111 B
32 A
46 B
86 B
44 B
43 B
45 B
(*1)
BR
G
R
W–B
2 BC1
1 BC1
2
1
B13
Crank Position Sensor
C1
Knock Control Sensor
(Bank 1)
B4
A1
B3
B4

＊1 : Shielded
＊2 : w/ Smart Key System
＊3 : w/o Smart Key System

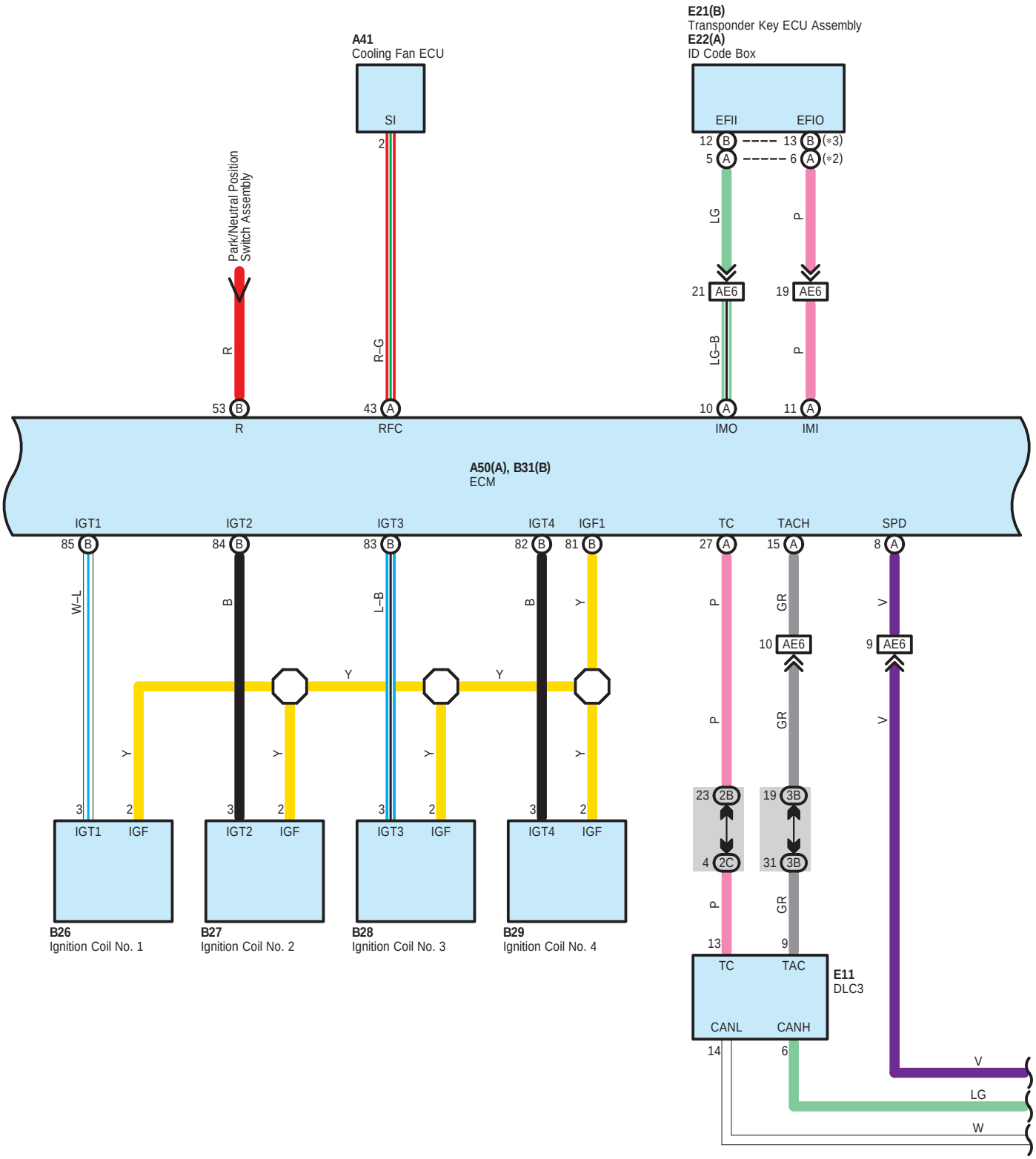

∗ 2 : w/ Smart Key System
∗ 3 : w/o Smart Key System

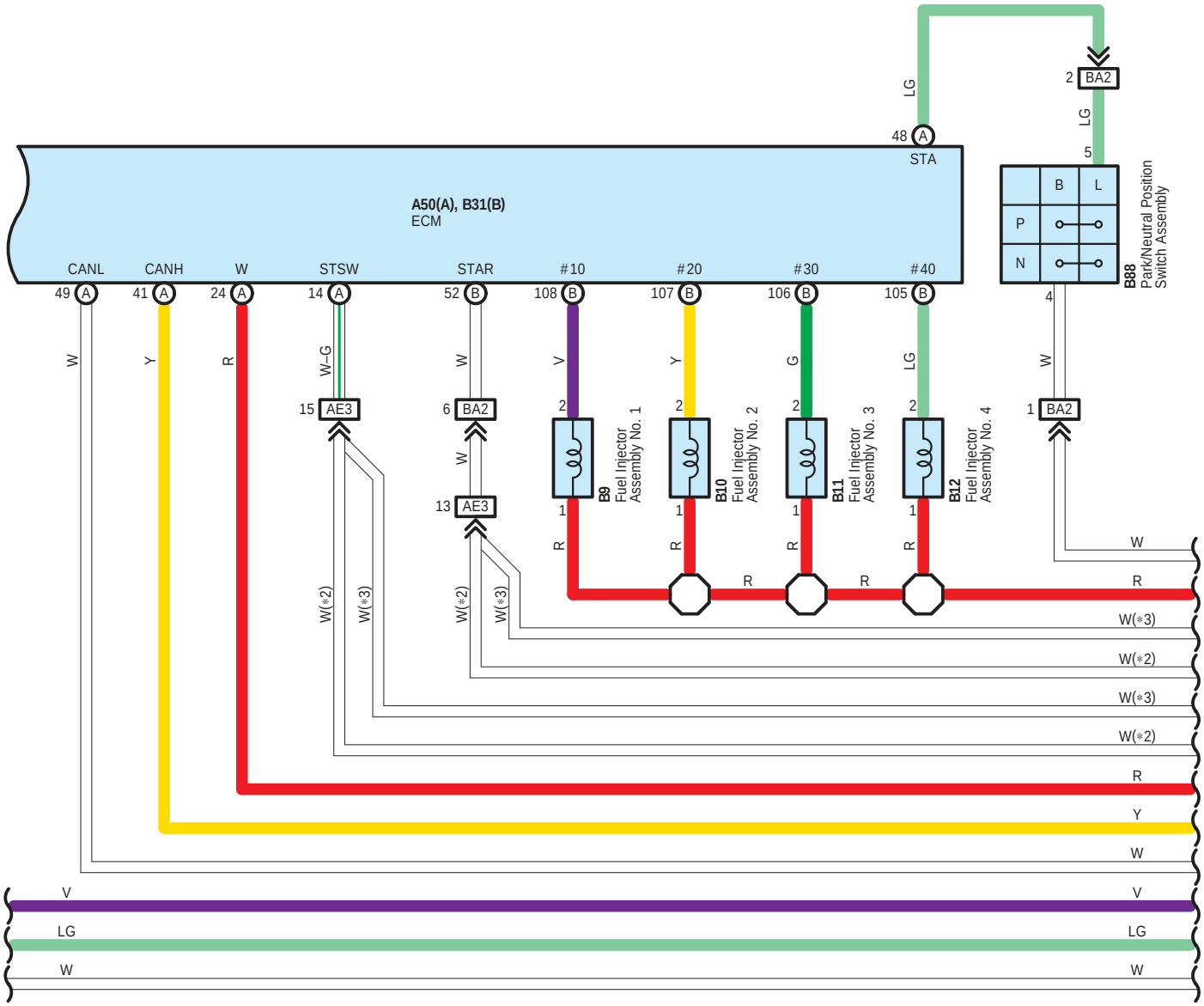

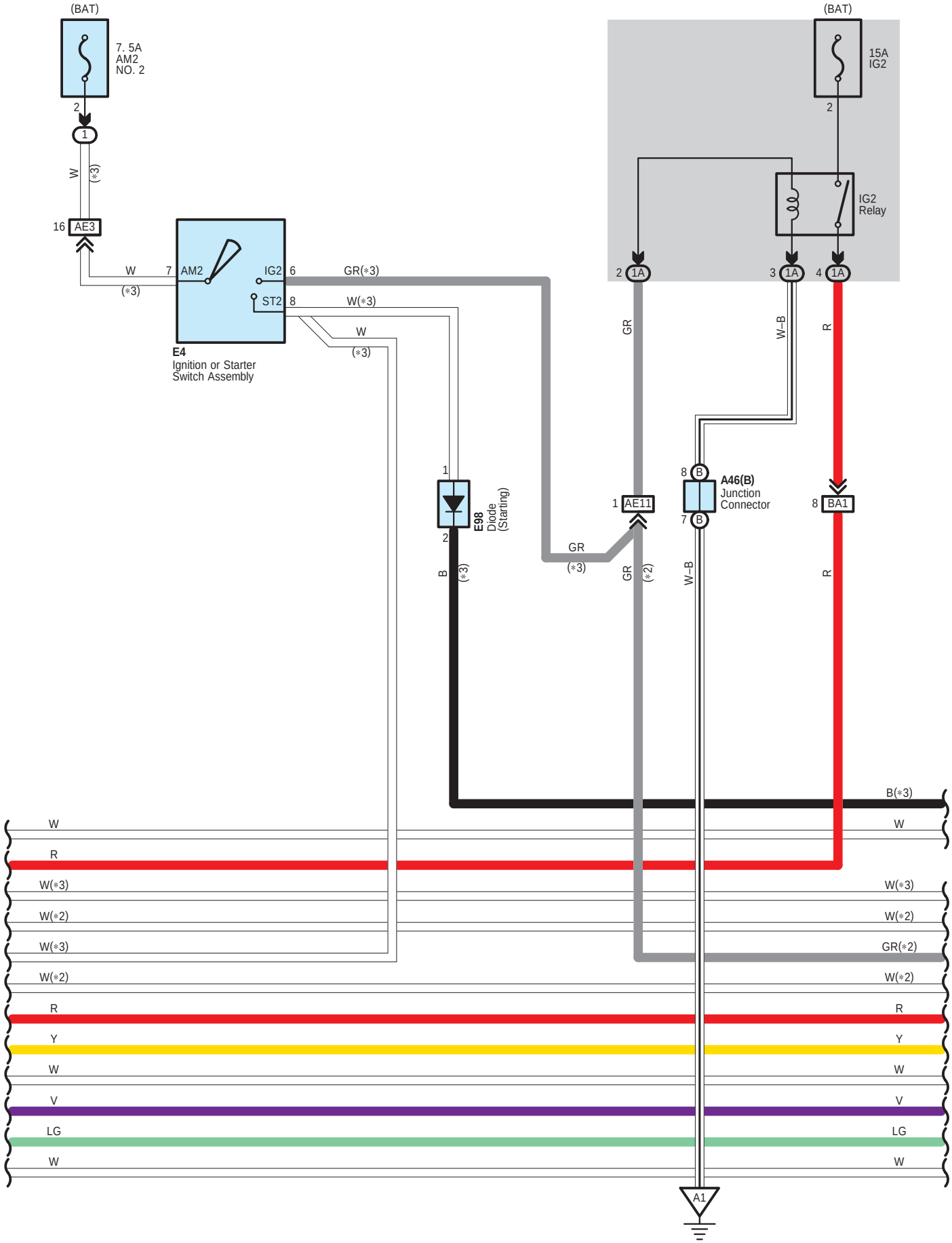
(BAT)
7. 5A
AM2
NO. 2
2
1
W
(*3)
16
AE3
W
(*3)
7
AM2
IG2
6
GR(*3)
ST2
8
W(*3)
W
(*3)
E4
Ignition or Starter
Switch Assembly
(BAT)
15A
IG2
2
IG2
Relay
2
1A
3
1A
4
1A
GR
W–B
R
1
E98
Diode
(Starting)
2
B
(*3)
GR
(*3)
1
AE11
GR
(*2)
8
B
A46(B)
Junction
Connector
7
B
W–B
8
BA1
R
B(*3)
W
R
W(*3)
W(*2)
W(*3)
W(*2)
R
Y
W
V
LG
W
W
W(*3)
W(*2)
GR(*2)
W(*2)
R
Y
W
V
LG
W
A1

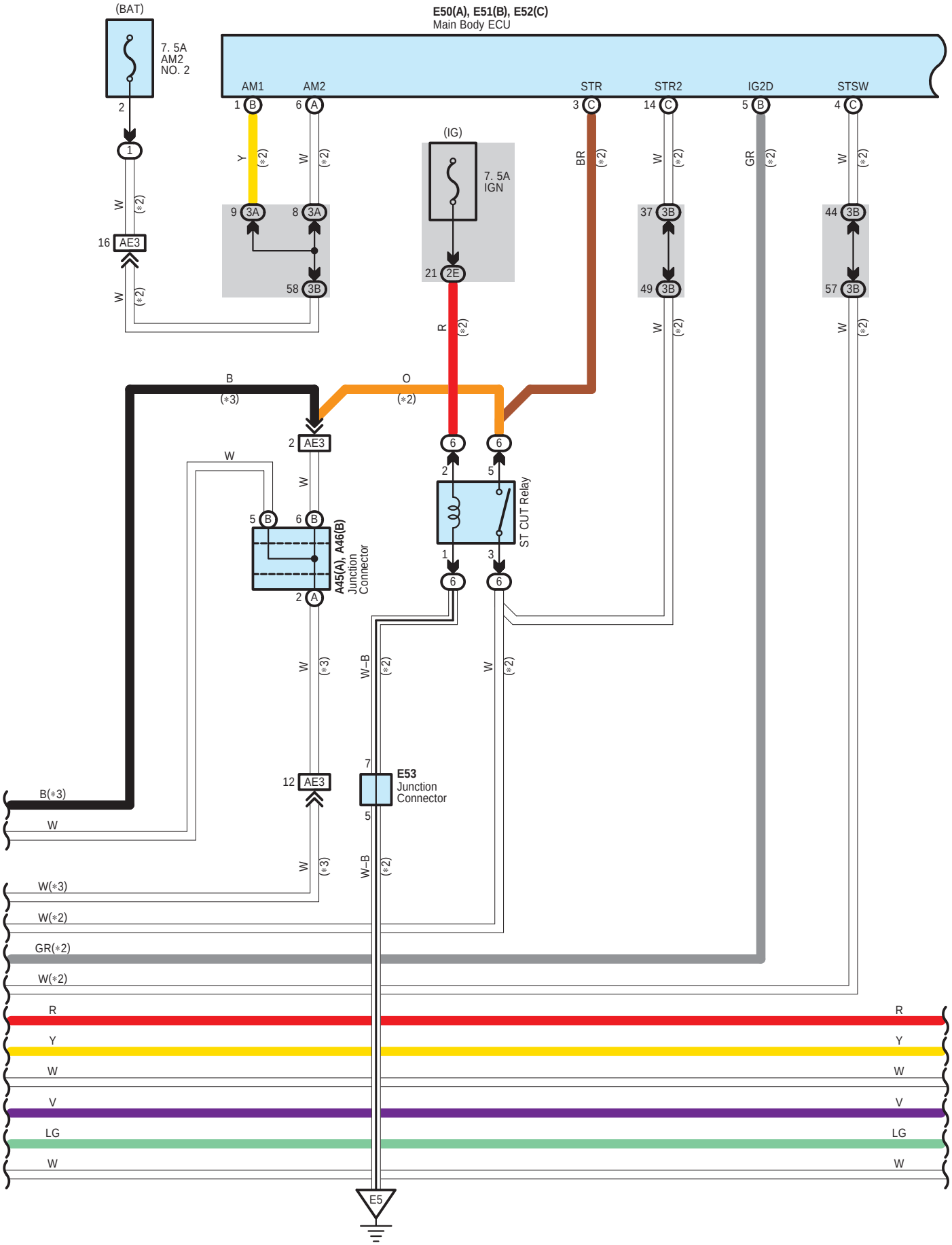
(BAT)
7. 5A
AM2
NO. 2
E50(A), E51(B), E52(C)
Main Body ECU
AM1
AM2
STR
STR2
IG2D
STSW
(IG)
7. 5A
IGN
ST CUT Relay
A45(A), A46(B)
Junction
Connector
E53
Junction
Connector
B(∗3)
W
W(∗3)
W(∗2)
GR(∗2)
W(∗2)
R
Y
W
V
LG
W
E5

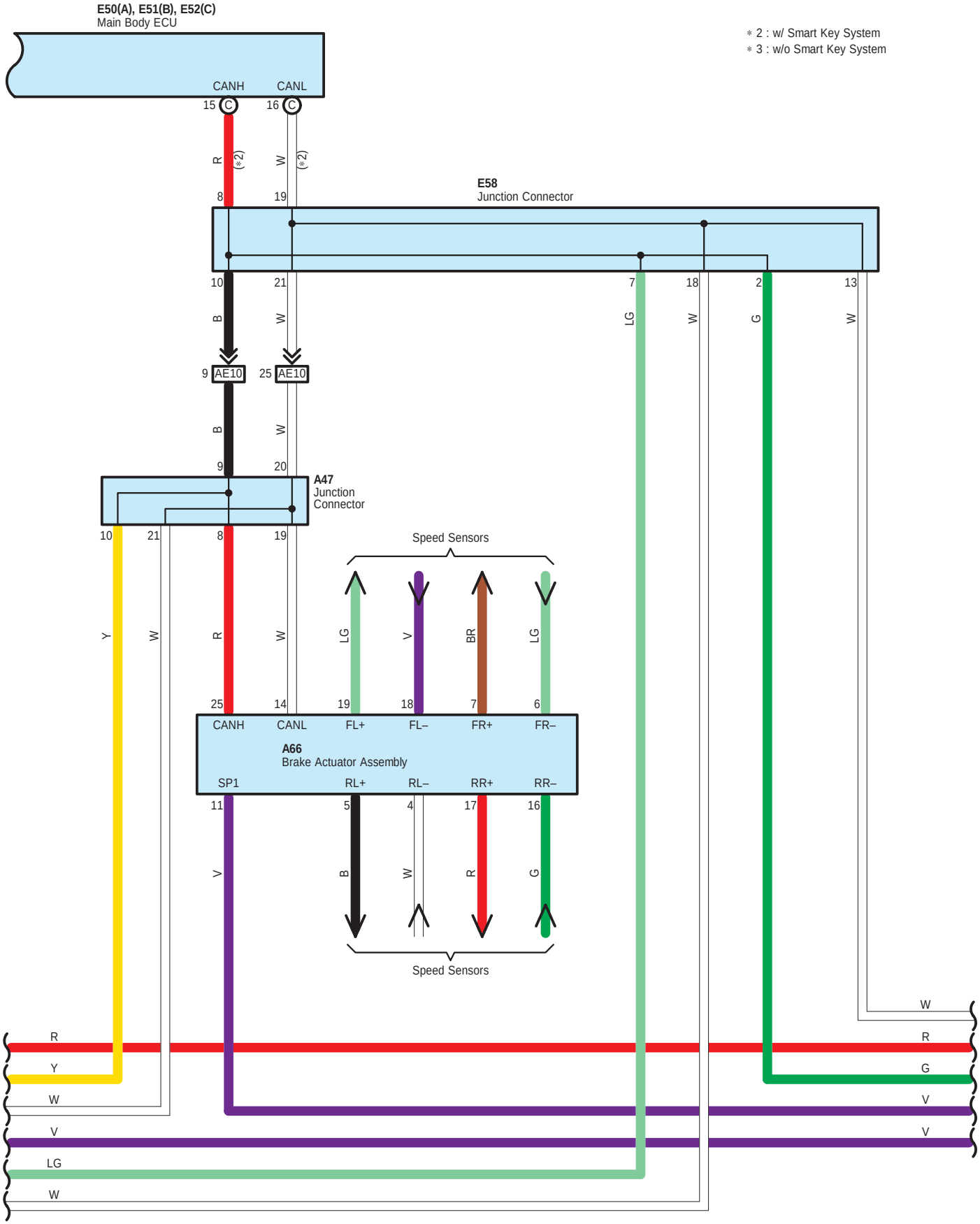
E50(A), E51(B), E52(C)
Main Body ECU
CANH
CANL
15
16
C
R
W
(*2)
8
19
E58
Junction Connector
10
21
7
18
2
13
B
W
LG
W
G
W
9
AE10
25
AE10
A47
Junction
Connector
20
Speed Sensors
Y
W
R
W
LG
V
BR
LG
25
14
19
18
7
6
CANH
CANL
FL+
FL–
FR+
FR–
A66
Brake Actuator Assembly
SP1
RL+
RL–
RR+
RR–
11
5
4
17
16
V
B
W
R
G
Speed Sensors
R
Y
W
V
LG
W
W
R
G
V
V
* 2 : w/ Smart Key System
* 3 : w/o Smart Key System

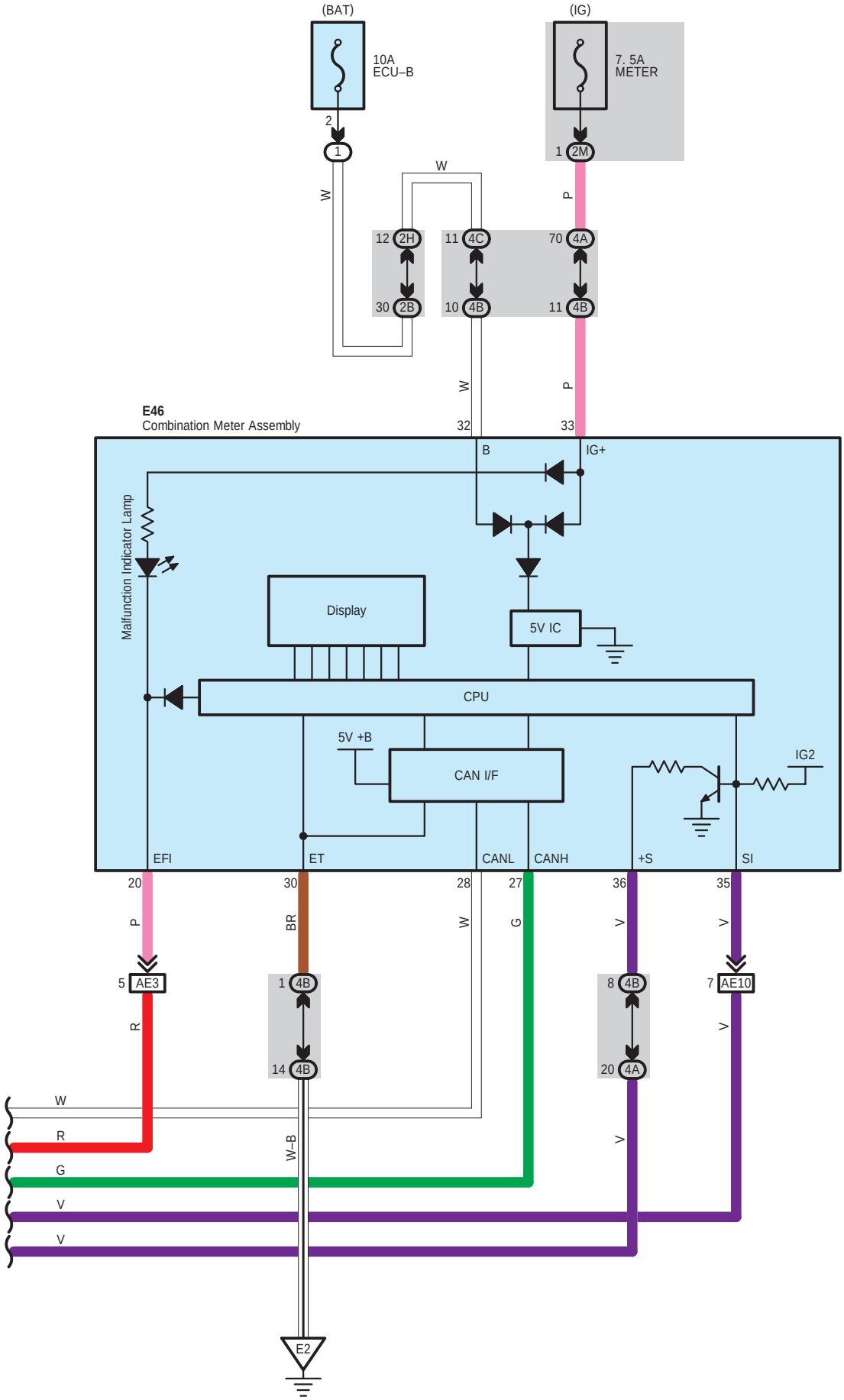
(BAT)
10A
ECU–B
2
1
W
W
12 2H
30 2B
(IG)
7. 5A
METER
1 2M
P
11 4C
10 4B
70 4A
11 4B
W
P
E46
Combination Meter Assembly
32
33
B
IG+
Malfunction Indicator Lamp
Display
5V IC
CPU
5V +B
CAN I/F
IG2
EFI
ET
CANL
CANH
+S
SI
20
30
28
27
36
35
P
BR
W
G
V
V
5 AE3
1 4B
14 4B
8 4B
20 4A
7 AE10
R
V
W
R
G
V
V
W–B
E2

A 1
Black

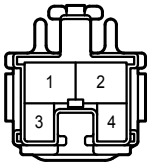

A 3
Black

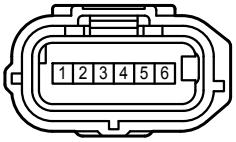

A 41
Black

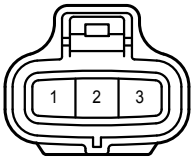

A 45
White

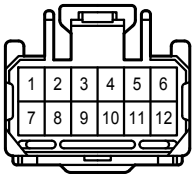

A 46
White

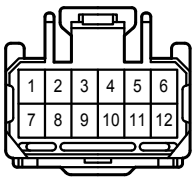

A 47
White

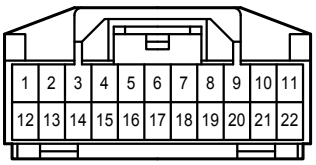

A 48
White

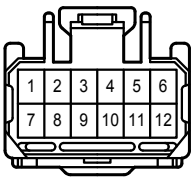

A 49
White

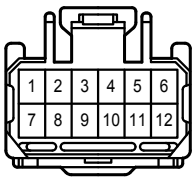

A 50
Black

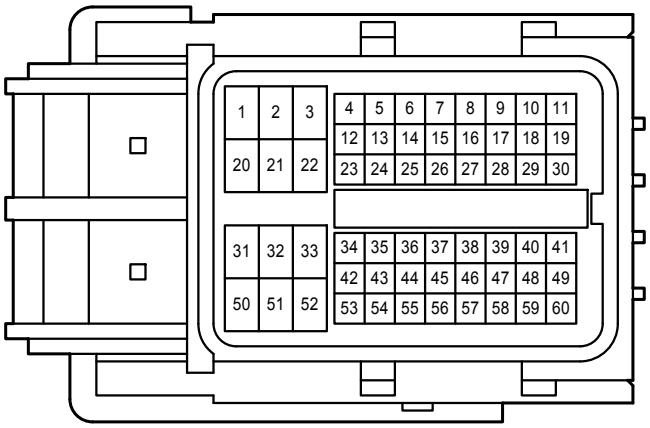

A 66
Black

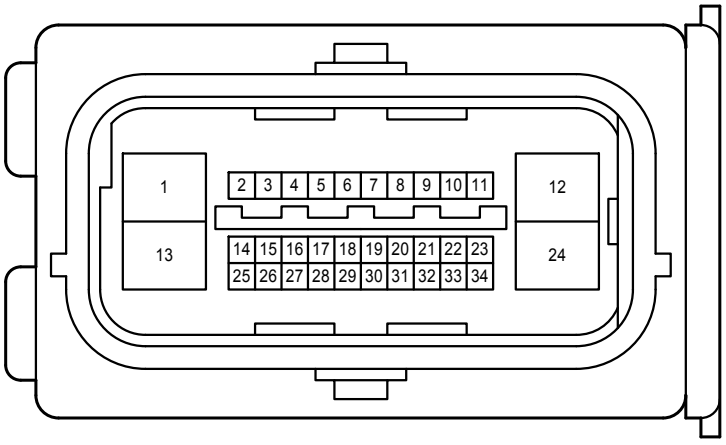

B 2
Black



B 9
Black

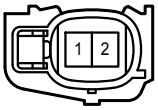

B 10
Gray

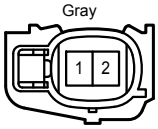

B 11
Black

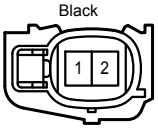

B 12
Gray

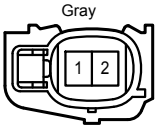

B 13
Black

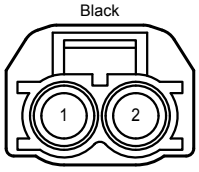

B 19
Blue

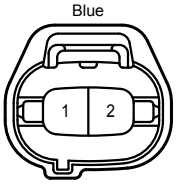

B 20
Black

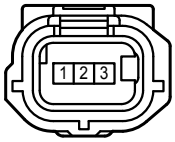

B 21
Gray

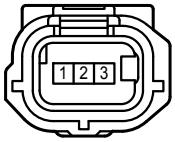

B 22
Black



B 23
Gray



B 25
Black

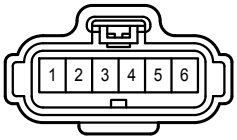

B 26
Black

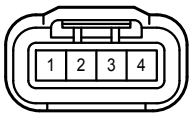

B 27
Gray



B 28
Black

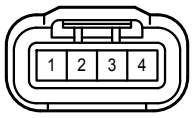

B 29
Gray



B 31
Black

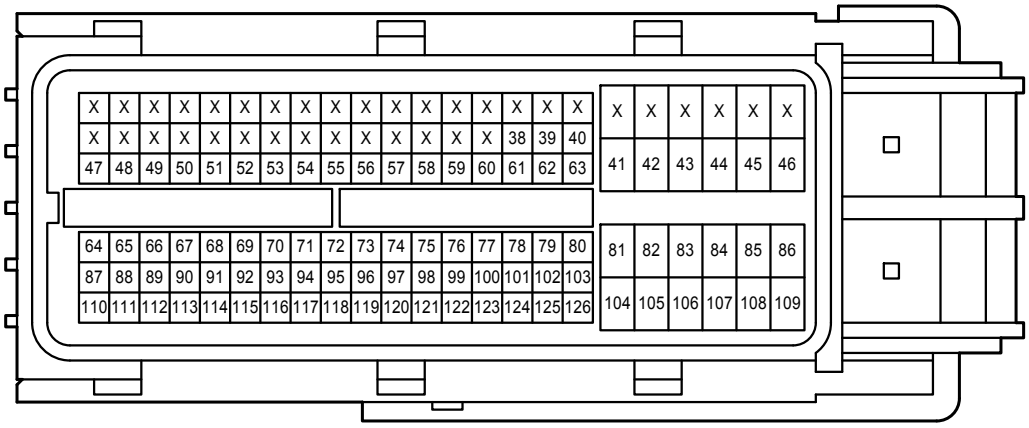

B 58
Gray



B 88
Gray

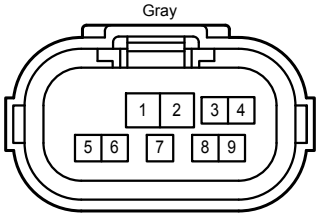

B 89
Gray



C 1
Black

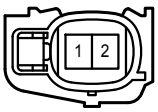

E 4
White

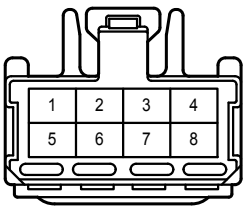

E 11
White

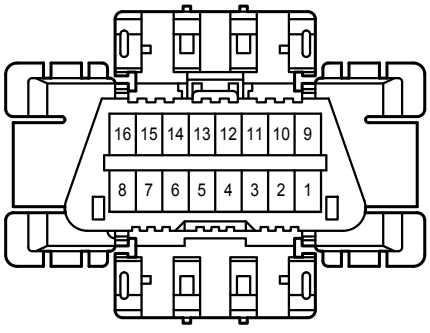

E 21
White

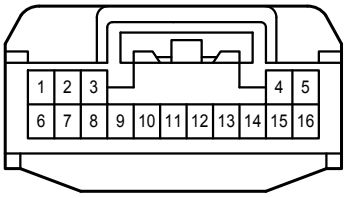

E 22
White

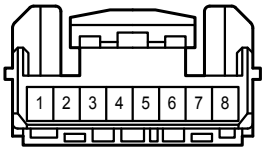

E 46
White

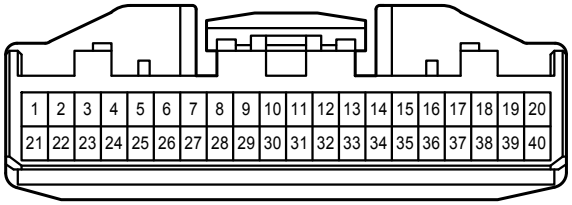

E 50
White

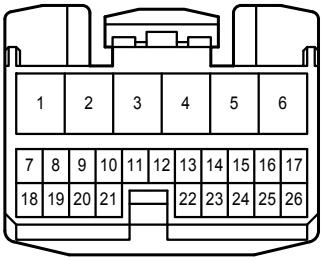

E 51
White

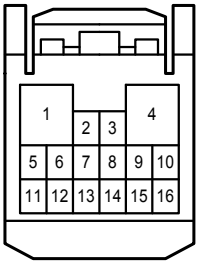

E 52
White

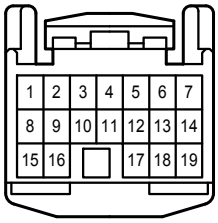

E 53
White



E 57
White

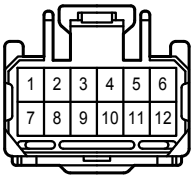

E 58
Gray

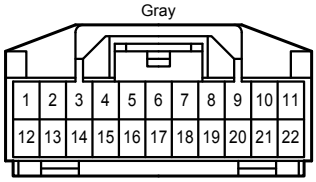

E 86
Gray

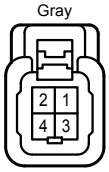

E 98
Black



L 17
White



L 50
Black

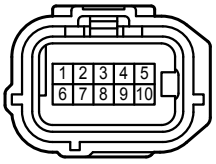

1A
White

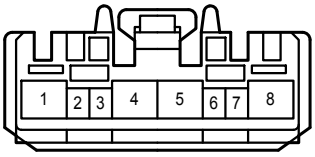

1B
White

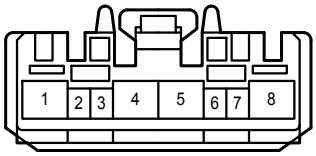

1J

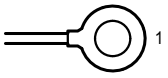

2A
White

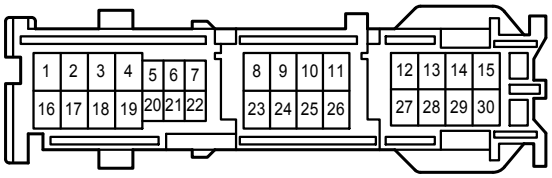

2B
White

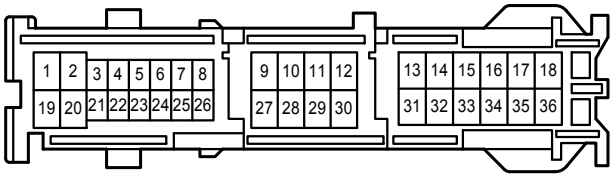

2C
White

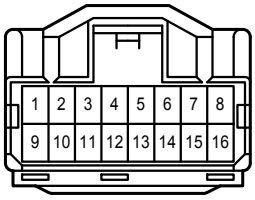

2E
White

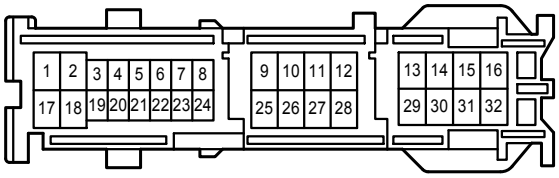

2G
White

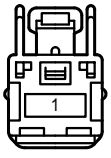

2H
White

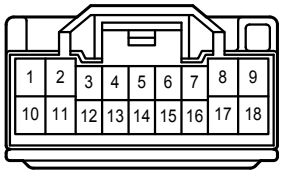

2M
White

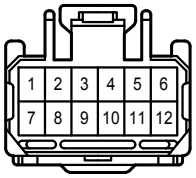

3A
White

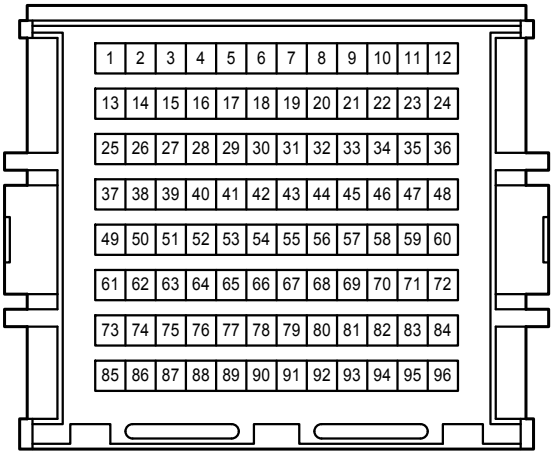

3B
White

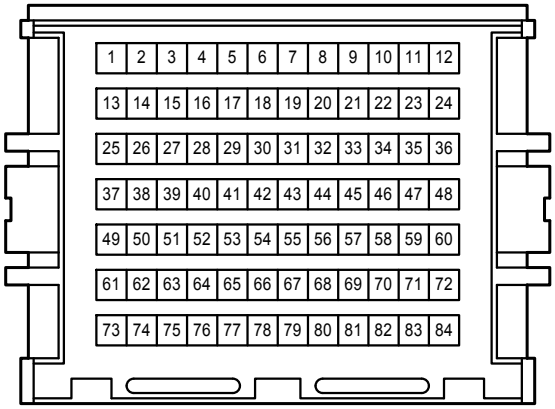

4A
White

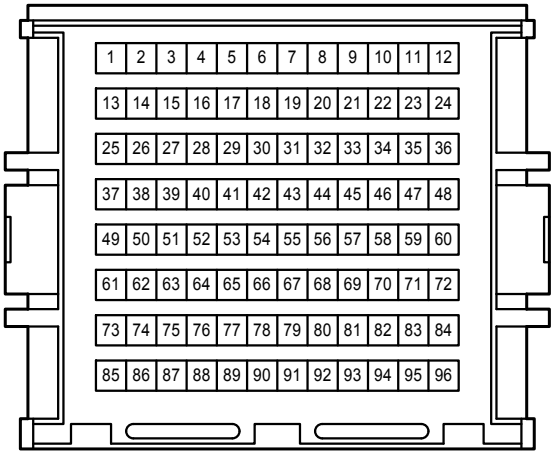

4B
White

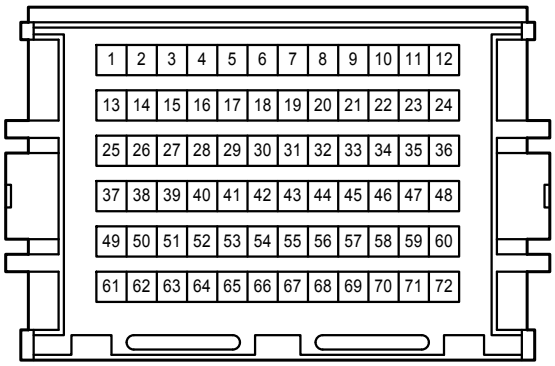

4C
White

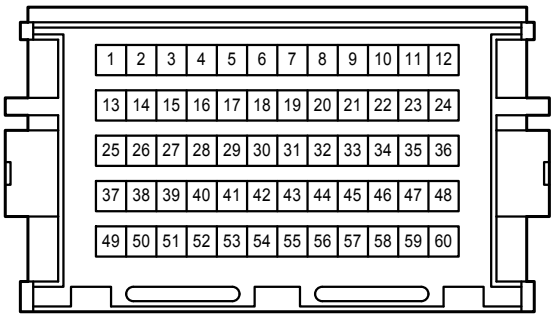

AE3
White

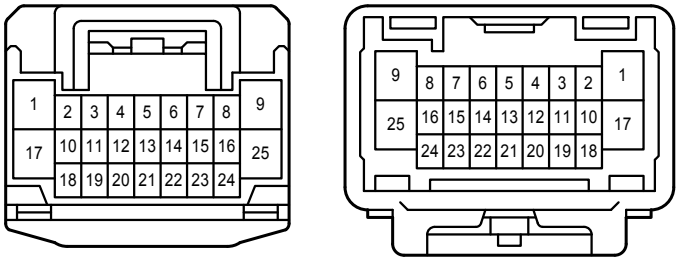

AE6
Gray

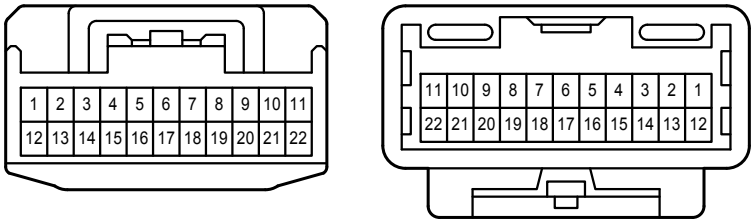

AE10
Gray

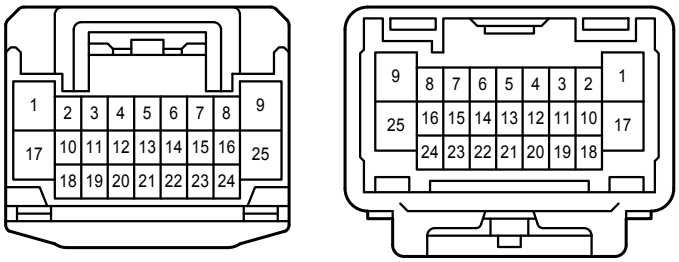

AE11
White

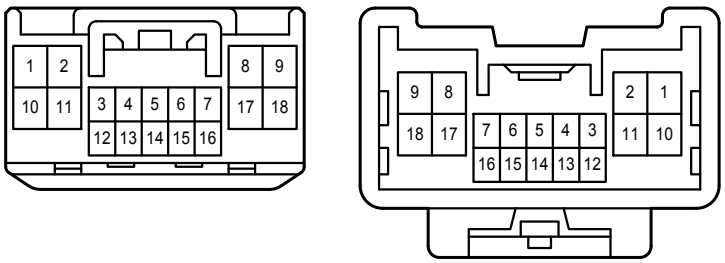

AL1
White

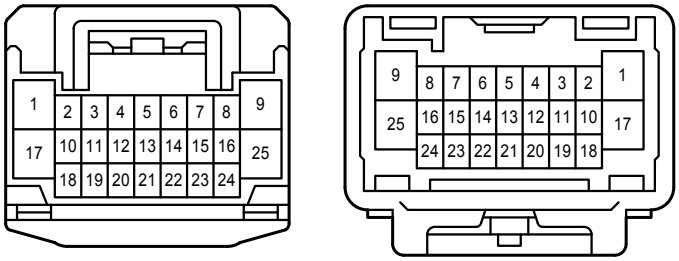

BA1
White

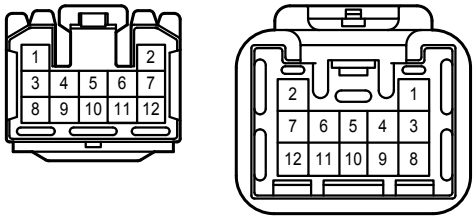

BA2
White

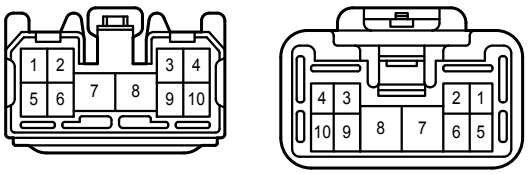

BA4
Gray

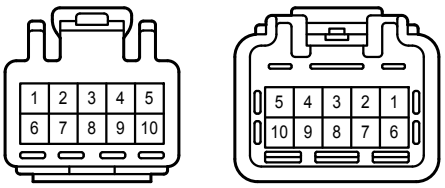

BC1
Gray

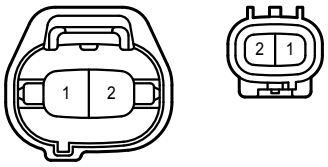

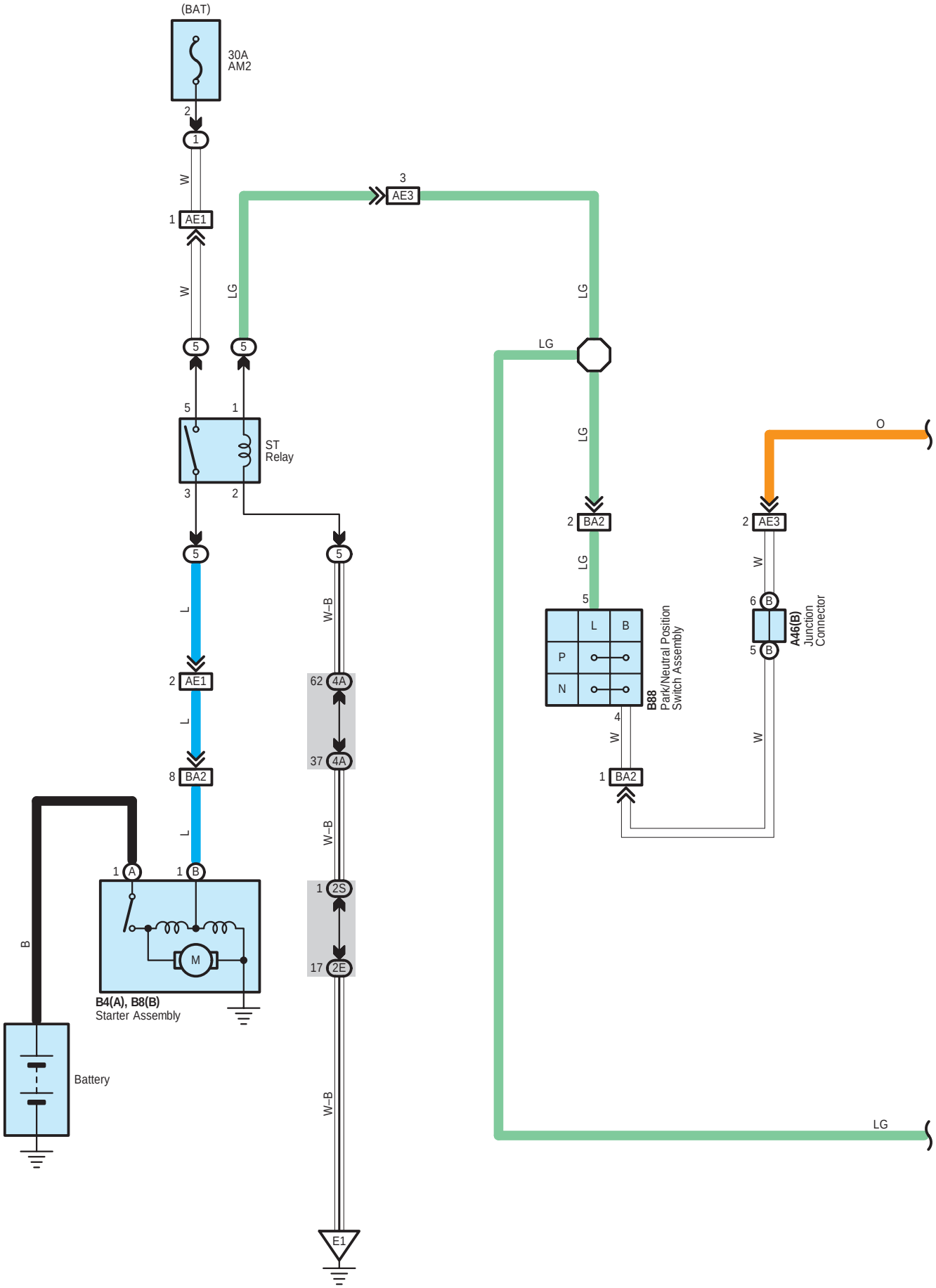
(BAT)
30A
AM2
2
1
W
1
AE1
W
5
5
LG
3
AE3
LG
LG
LG
5
1
ST
Relay
3
2
5
5
L
2
AE1
L
8
BA2
L
1
A
1
B
M
B4(A), B8(B)
Starter Assembly
B
Battery
W–B
62
4A
37
4A
W–B
1
2S
17
2E
W–B
E1
2
BA2
LG
5
L
B
P
N
B88
Park/Neutral Position
Switch Assembly
4
W
1
BA2
O
2
AE3
W
6
B
5
B
A46(B)
Junction
Connector
W
LG

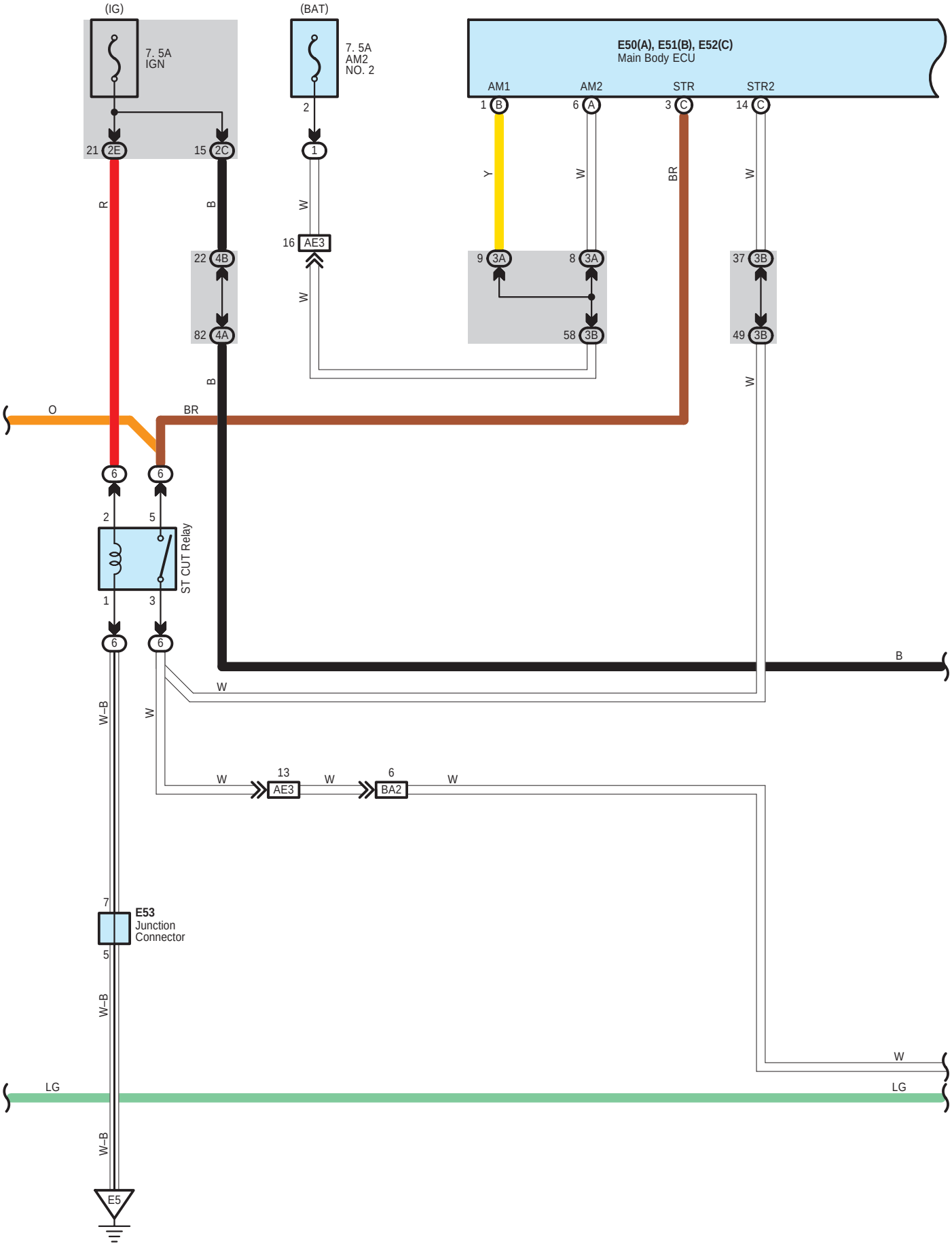
(IG)
7. 5A
IGN
(BAT)
7. 5A
AM2
NO. 2
E50(A), E51(B), E52(C)
Main Body ECU
AM1
AM2
STR
STR2
21 2E
15 2C
2
1
1 B
6 A
3 C
14 C
R
B
W
Y
W
BR
W
16 AE3
22 4B
82 4A
9 3A
8 3A
58 3B
37 3B
49 3B
B
O
BR
W
6
6
2
5
ST CUT Relay
1
3
6
6
B
W
W–B
W
W
13
AE3
W
6
BA2
W
7
E53
Junction
Connector
5
W–B
W
LG
LG
W–B
E5

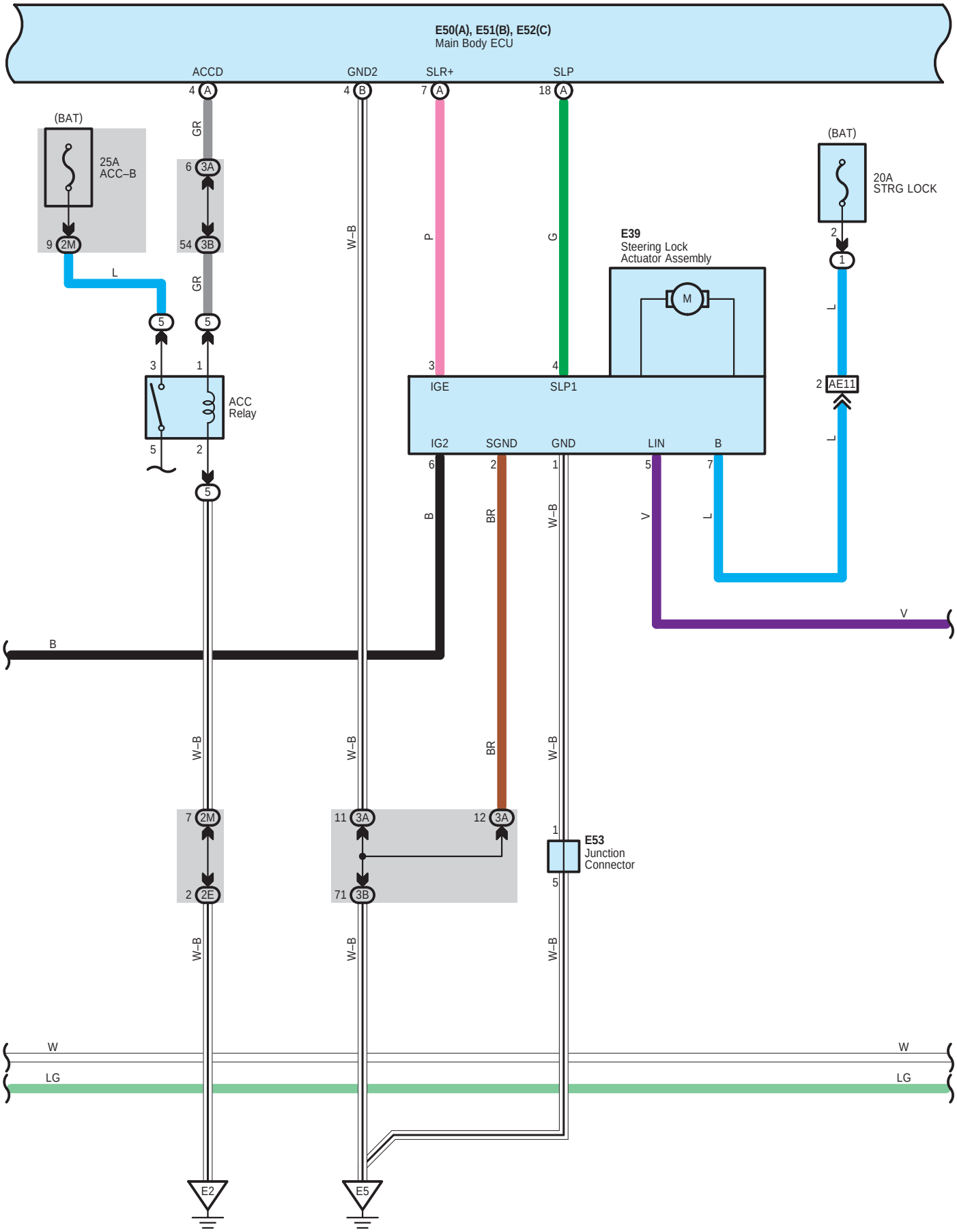
E50(A), E51(B), E52(C)
Main Body ECU
ACCD
GND2
SLR+
SLP
(BAT)
25A
ACC–B
ACC
Relay
(BAT)
20A
STRG LOCK
E39
Steering Lock
Actuator Assembly
IGE
SLP1
IG2
SGND
GND
LIN
B
E53
Junction
Connector
E2
E5
GR
W–B
L
P
G
B
BR
V
W
LG

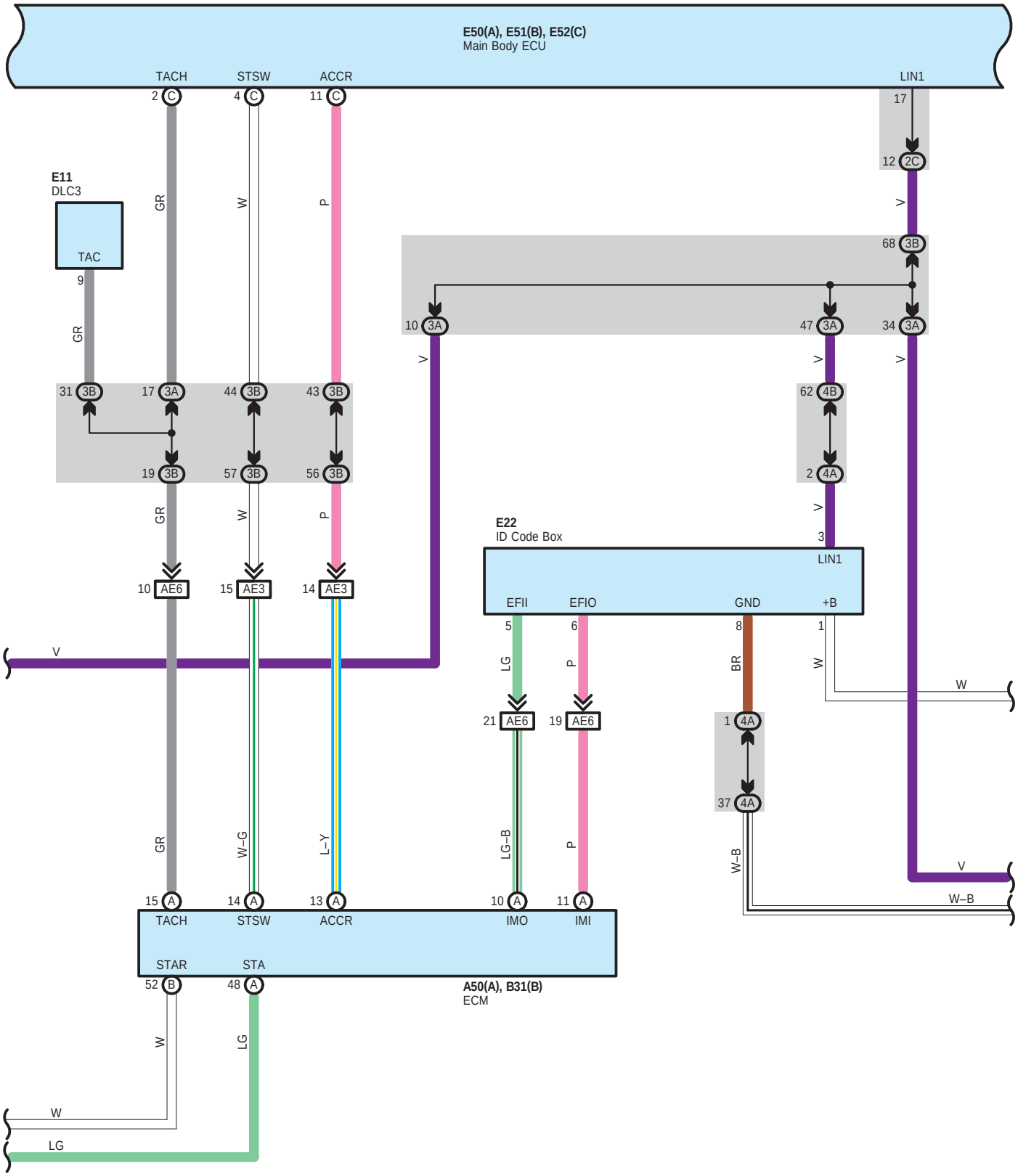
E50(A), E51(B), E52(C)
Main Body ECU
TACH
STSW
ACCR
LIN1
E11
DLC3
TAC
E22
ID Code Box
EFII
EFIO
GND
+B
A50(A), B31(B)
ECM
STAR
STA
IMO
IMI
GR
W
P
V
LG
BR
W–G
L–Y
LG–B
W–B

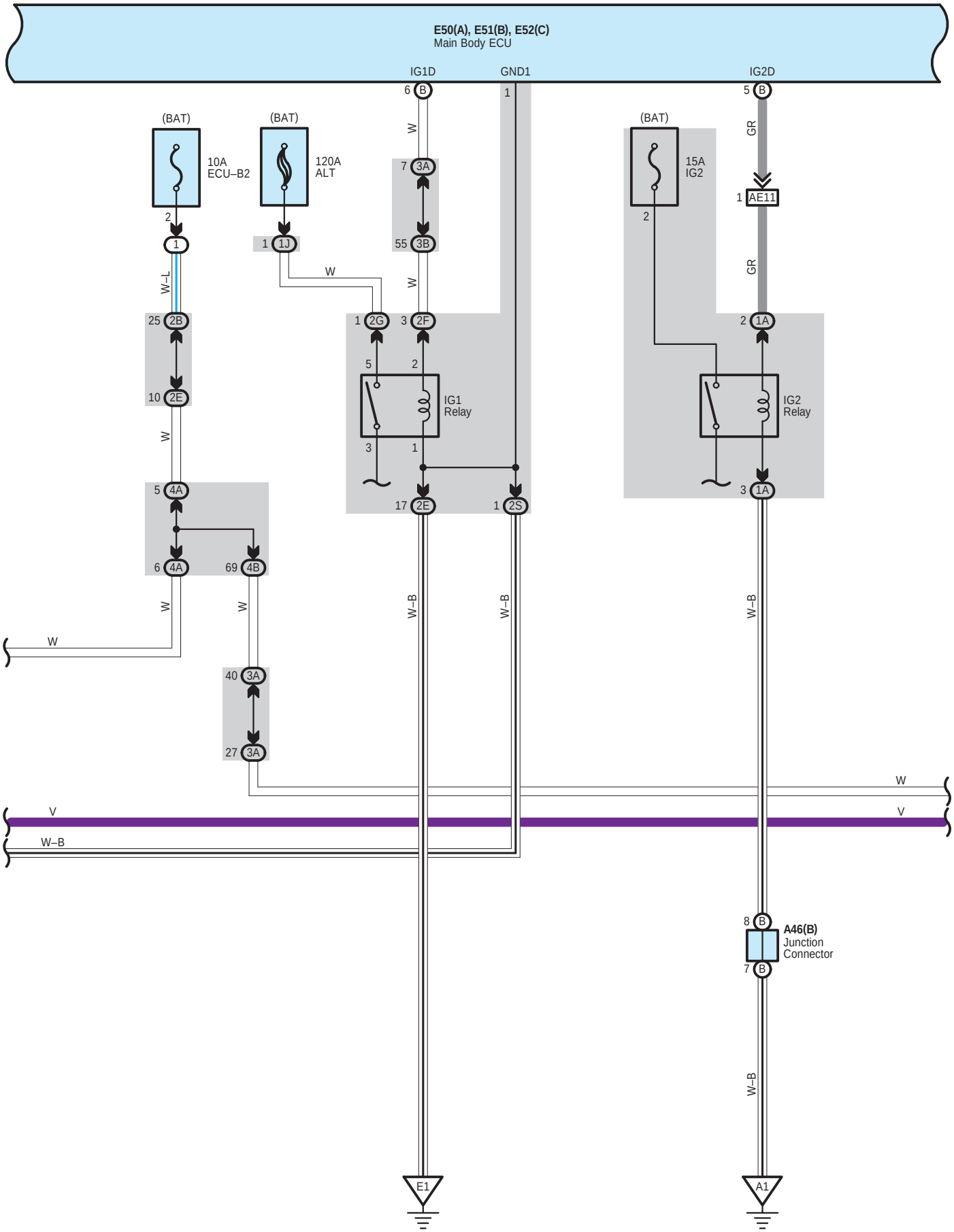
E50(A), E51(B), E52(C)
Main Body ECU
IG1D
GND1
IG2D
(BAT)
10A
ECU–B2
120A
ALT
15A
IG2
IG1
Relay
IG2
Relay
W–L
W
GR
W–B
V
A46(B)
Junction
Connector
E1
A1

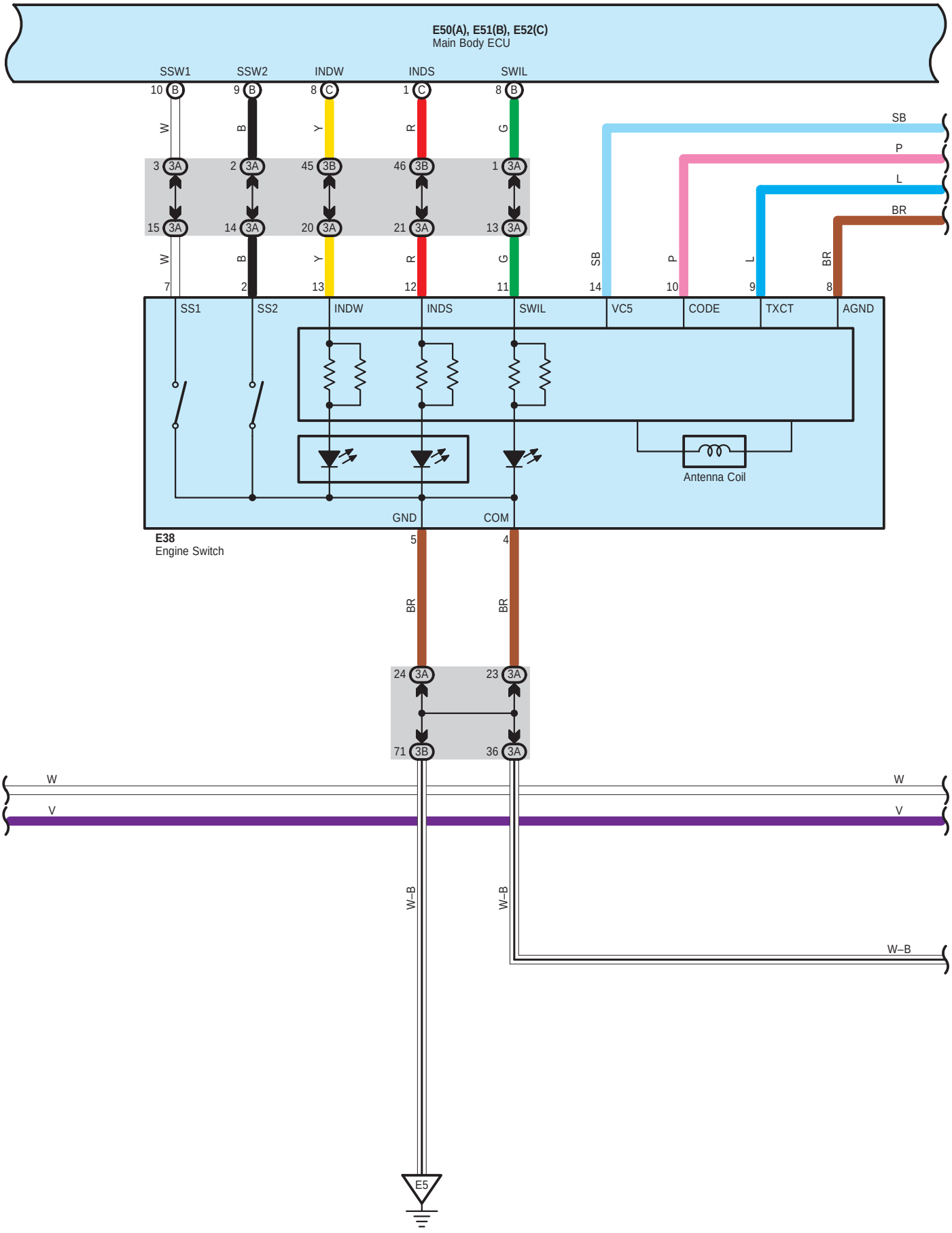
E50(A), E51(B), E52(C)
Main Body ECU
SSW1
SSW2
INDW
INDS
SWIL
SB
P
L
BR
SS1
SS2
INDW
INDS
SWIL
VC5
CODE
TXCT
AGND
GND
COM
Antenna Coil
E38
Engine Switch
W
V
W–B
E5

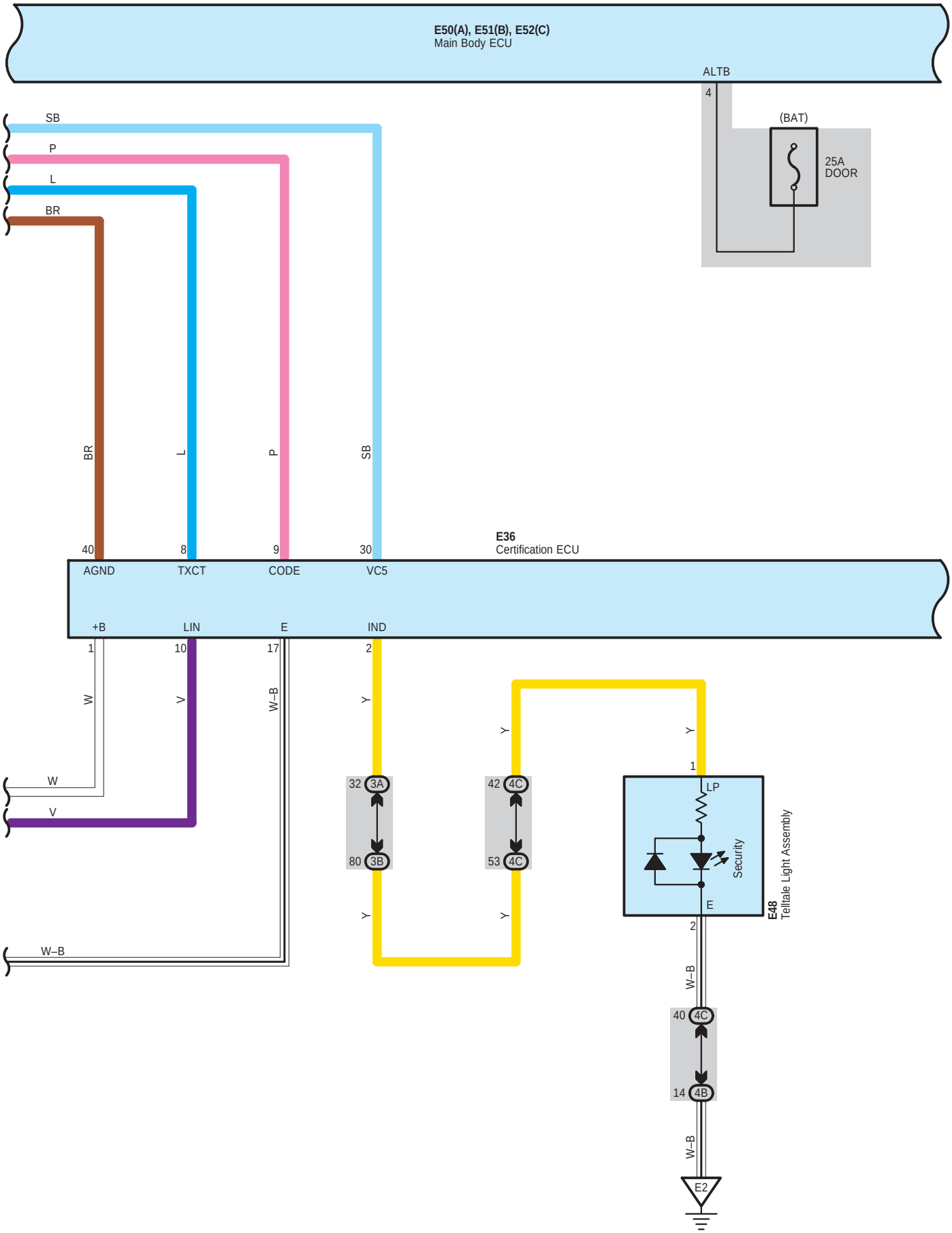
E50(A), E51(B), E52(C)
Main Body ECU
ALTB
4
(BAT)
25A
DOOR
SB
P
L
BR
BR
L
P
SB
40
8
9
30
E36
Certification ECU
AGND
TXCT
CODE
VC5
+B
LIN
E
IND
1
10
17
2
W
V
W–B
Y
32 3A
80 3B
42 4C
53 4C
LP
Security
E
E48
Telltale Light Assembly
40 4C
14 4B
E2

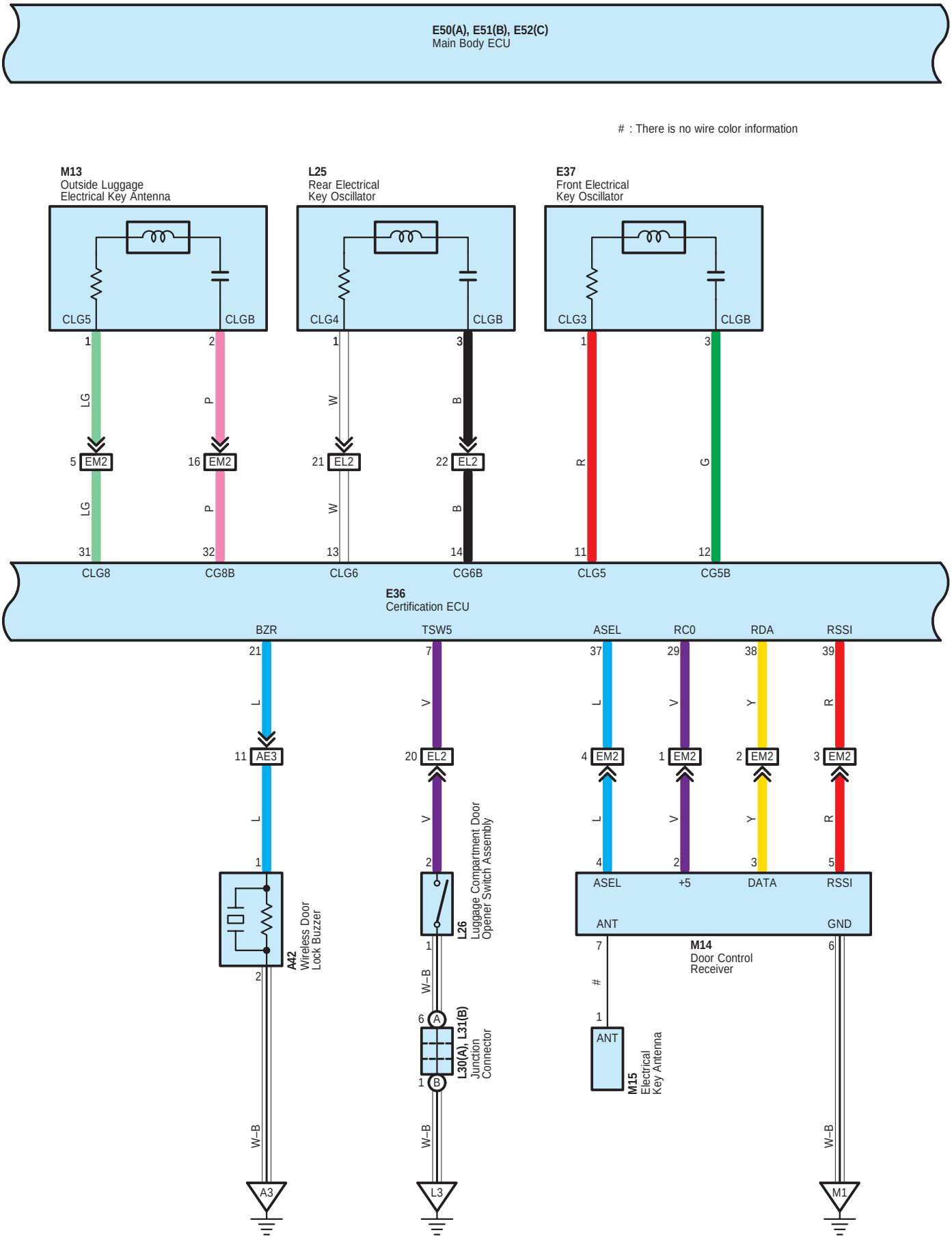
E50(A), E51(B), E52(C)
Main Body ECU
: There is no wire color information
M13
Outside Luggage
Electrical Key Antenna
L25
Rear Electrical
Key Oscillator
E37
Front Electrical
Key Oscillator
CLG5
CLGB
CLG4
CLGB
CLG3
CLGB
1
2
1
3
1
3
LG
P
W
B
R
G
5 EM2
16 EM2
21 EL2
22 EL2
LG
P
W
B
31
32
13
14
11
12
CLG8
CG8B
CLG6
CG6B
CLG5
CG5B
E36
Certification ECU
BZR
TSW5
ASEL
RC0
RDA
RSSI
21
7
37
29
38
39
L
V
L
V
Y
R
11 AE3
20 EL2
4 EM2
1 EM2
2 EM2
3 EM2
L
V
L
V
Y
R
1
2
4
2
3
5
ASEL
+5
DATA
RSSI
ANT
GND
A42
Wireless Door
Lock Buzzer
L26
Luggage Compartment Door
Opener Switch Assembly
M14
Door Control
Receiver
7
6
#
1
W–B
6 A
1 B
L30(A), L31(B)
Junction
Connector
ANT
M15
Electrical
Key Antenna
W–B
W–B
A3
L3
M1

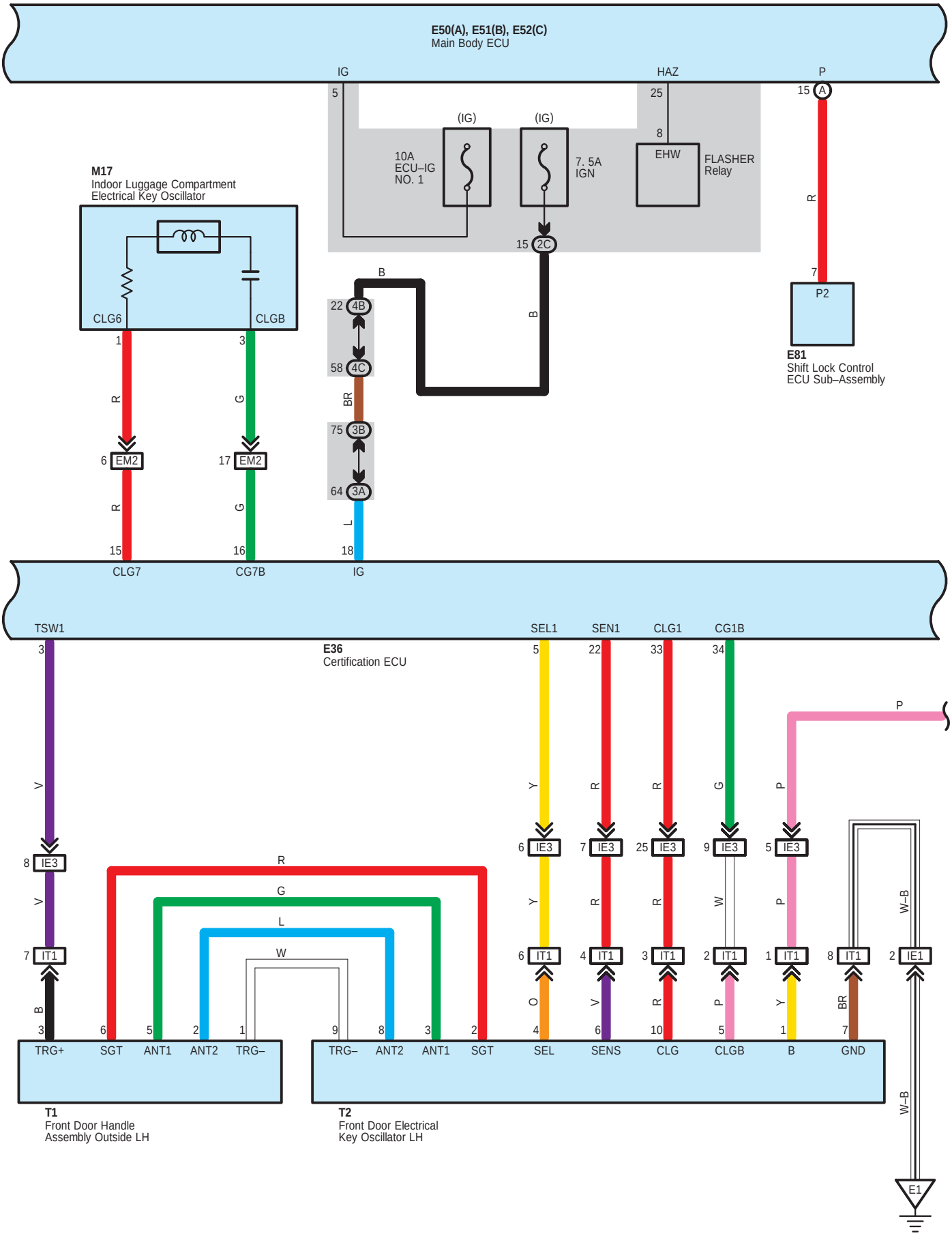
E50(A), E51(B), E52(C)
Main Body ECU
IG
HAZ
P
5
25
15 A
(IG)
(IG)
8
10A
ECU–IG
NO. 1
7. 5A
IGN
EHW
FLASHER
Relay
R
15 2C
7
P2
M17
Indoor Luggage Compartment
Electrical Key Oscillator
B
E81
Shift Lock Control
ECU Sub–Assembly
CLG6
CLGB
22 4B
58 4C
75 3B
64 3A
1
3
R
G
BR
L
6 EM2
17 EM2
R
G
15
16
18
CLG7
CG7B
IG
TSW1
E36
Certification ECU
SEL1
SEN1
CLG1
CG1B
3
5
22
33
34
V
Y
R
R
G
P
8 IE3
6 IE3
7 IE3
25 IE3
9 IE3
5 IE3
V
Y
R
R
W
P
R
G
L
W
B
7 IT1
6 IT1
4 IT1
3 IT1
2 IT1
1 IT1
8 IT1
2 IE1
O
V
R
P
Y
BR
W–B
3
6
5
2
1
9
8
3
2
4
6
10
5
1
7
TRG+
SGT
ANT1
ANT2
TRG–
TRG–
ANT2
ANT1
SGT
SEL
SENS
CLG
CLGB
B
GND
W–B
T1
Front Door Handle
Assembly Outside LH
T2
Front Door Electrical
Key Oscillator LH
E1

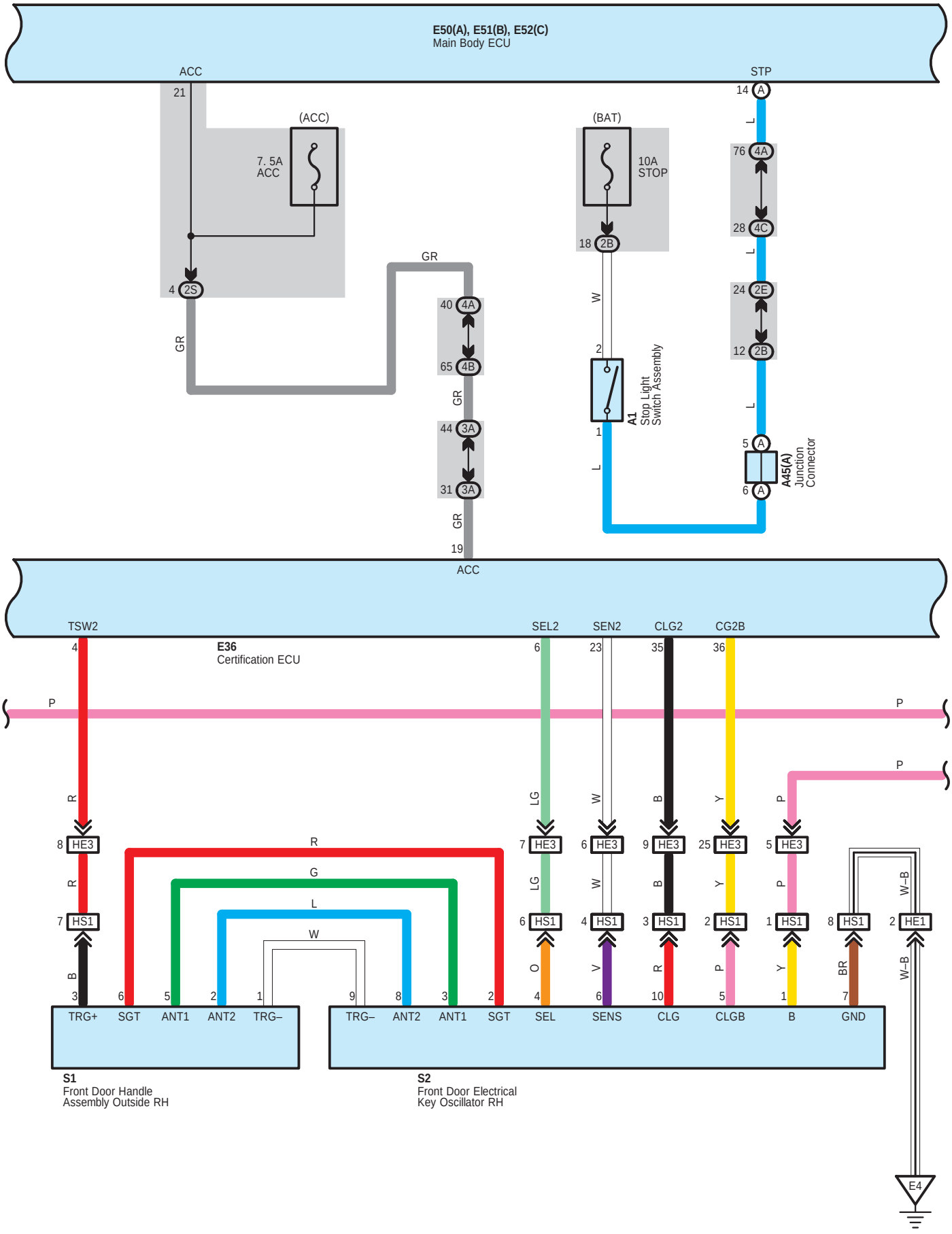
E50(A), E51(B), E52(C)
Main Body ECU
ACC
21
(ACC)
7. 5A
ACC
4 2S
GR
40 4A
65 4B
GR
44 3A
31 3A
GR
19
ACC
(BAT)
10A
STOP
18 2B
W
2
A1
Stop Light
Switch Assembly
1
L
STP
14 A
L
76 4A
28 4C
L
24 2E
12 2B
L
5 A
6 A
A45(A)
Junction
Connector
TSW2
4
E36
Certification ECU
SEL2
SEN2
CLG2
CG2B
6
23
35
36
P
P
P
R
LG
W
B
Y
P
8 HE3
7 HE3
6 HE3
9 HE3
25 HE3
5 HE3
R
G
L
W
R
LG
W
B
Y
P
7 HS1
6 HS1
4 HS1
3 HS1
2 HS1
1 HS1
8 HS1
2 HE1
B
O
V
R
P
Y
BR
W–B
W–B
3
6
5
2
1
9
8
3
2
4
6
10
5
1
7
TRG+
SGT
ANT1
ANT2
TRG–
TRG–
ANT2
ANT1
SGT
SEL
SENS
CLG
CLGB
B
GND
S1
Front Door Handle
Assembly Outside RH
S2
Front Door Electrical
Key Oscillator RH
E4

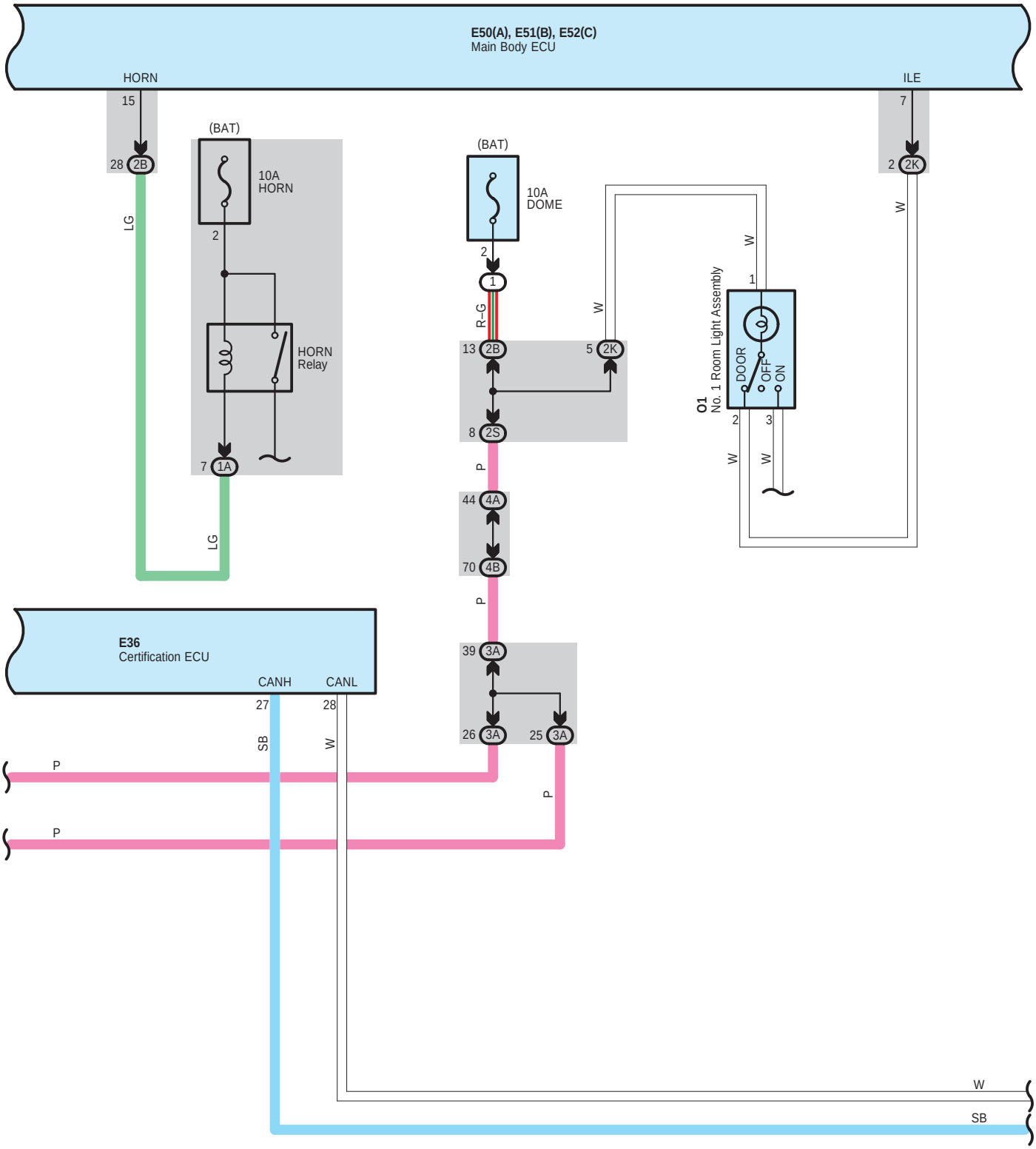
E50(A), E51(B), E52(C)
Main Body ECU
HORN
15
28 2B
LG
(BAT)
10A
HORN
2
HORN
Relay
7 1A
LG
(BAT)
10A
DOME
2
1
R–G
13 2B
5 2K
W
8 2S
P
44 4A
70 4B
P
39 3A
26 3A
25 3A
P
P
ILE
7
2 2K
W
W
1
O1
No. 1 Room Light Assembly
DOOR
OFF
ON
2
3
W
W
E36
Certification ECU
CANH
CANL
27
28
SB
W
W
SB

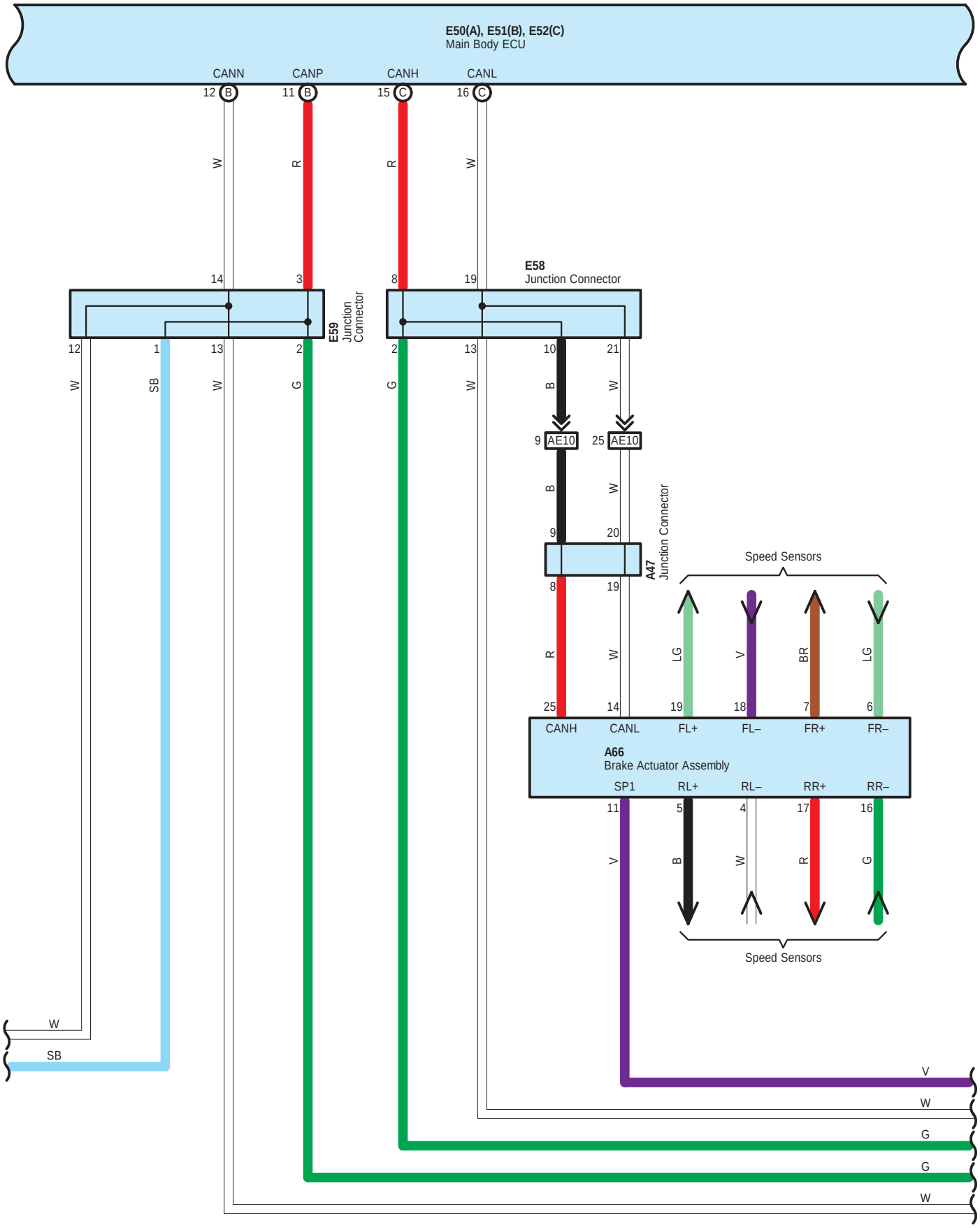
E50(A), E51(B), E52(C)
Main Body ECU
CANN
CANP
CANH
CANL
12 B
11 B
15 C
16 C
W
R
R
W
E58
Junction Connector
14
3
8
19
E59
Junction
Connector
12
1
13
2
2
13
10
21
W
SB
W
G
G
W
B
W
9 AE10
25 AE10
B
W
9
20
A47
Junction Connector
8
19
R
W
25
14
Speed Sensors
LG
V
BR
LG
19
18
7
6
CANH
CANL
FL+
FL–
FR+
FR–
A66
Brake Actuator Assembly
SP1
RL+
RL–
RR+
RR–
11
5
4
17
16
V
B
W
R
G
Speed Sensors
W
SB
V
W
G
G
W

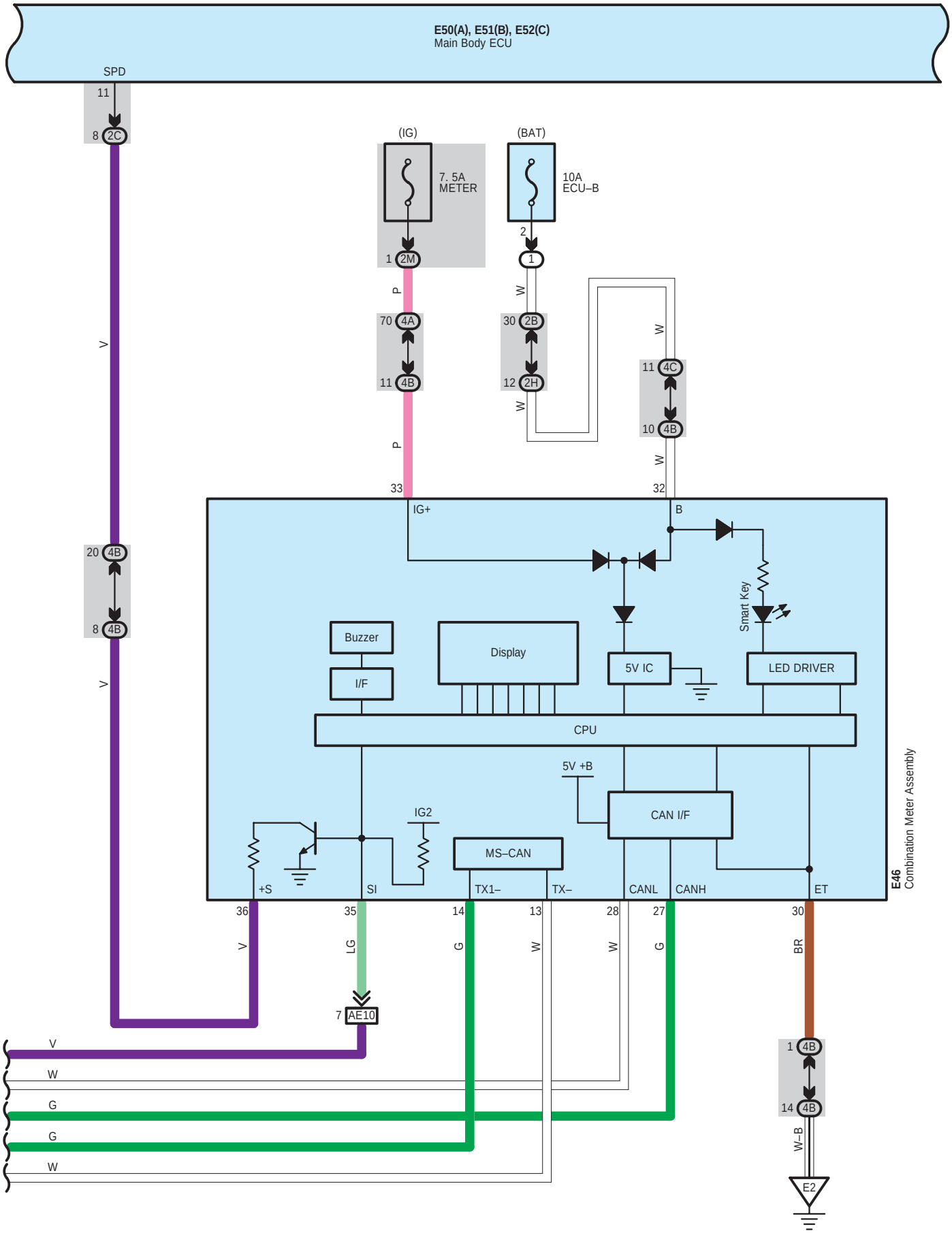
E50(A), E51(B), E52(C)
Main Body ECU
SPD
11
8 2C
(IG)
7. 5A
METER
1 2M
(BAT)
10A
ECU–B
2
1
P
W
70 4A
11 4B
30 2B
12 2H
W
11 4C
10 4B
W
P
33
32
IG+
B
20 4B
8 4B
V
Smart Key
Buzzer
I/F
Display
5V IC
LED DRIVER
CPU
5V +B
CAN I/F
IG2
MS–CAN
+S
SI
TX1–
TX–
CANL
CANH
ET
E46
Combination Meter Assembly
36
35
14
13
28
27
30
V
LG
G
W
W
G
BR
7 AE10
V
W
G
G
W
1 4B
14 4B
W–B
E2

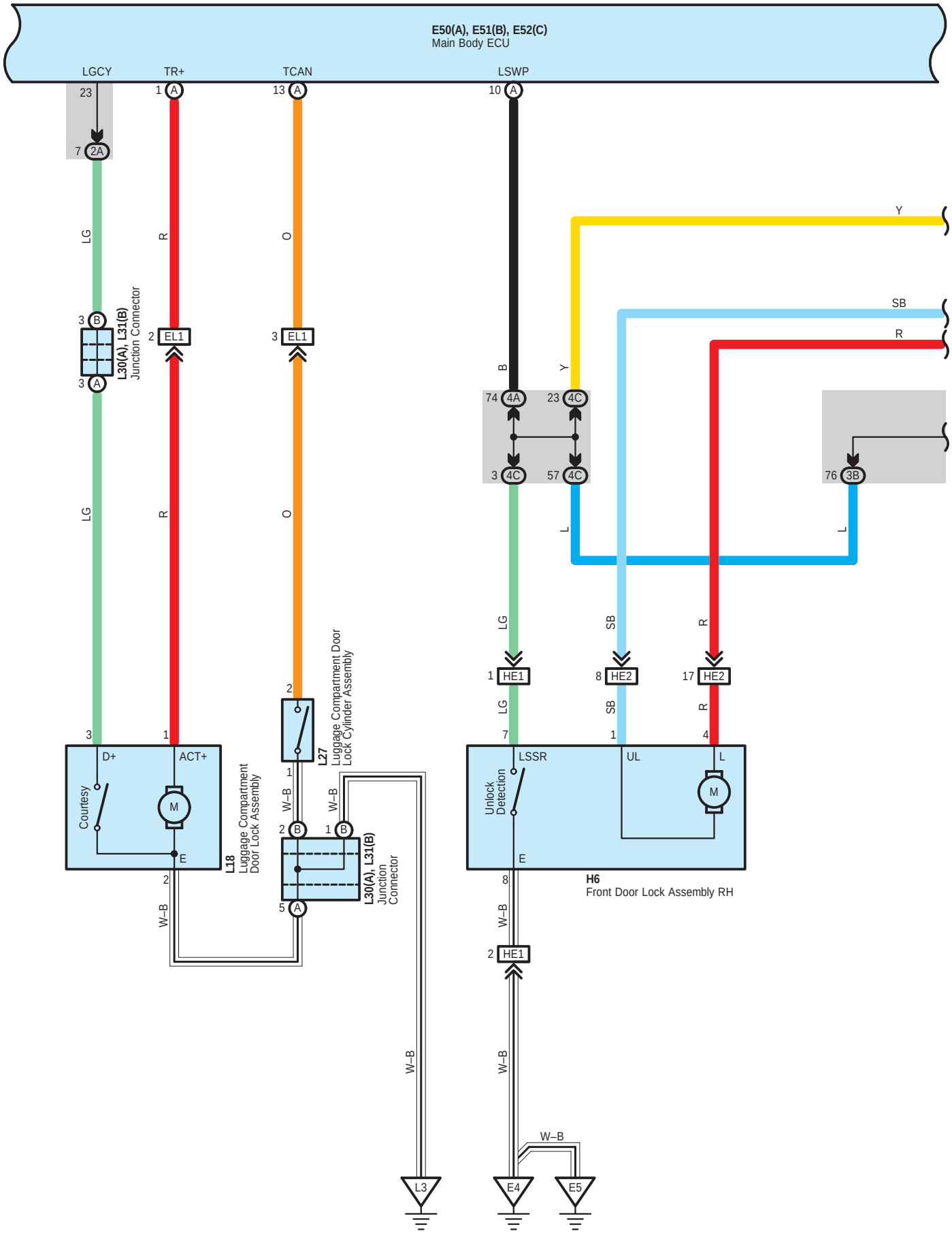
E50(A), E51(B), E52(C)
Main Body ECU
LGCY
TR+
TCAN
LSWP
23
7 2A
1 A
13 A
10 A
LG
R
O
B
Y
SB
R
L
3 B
2 EL1
3 EL1
3 A
L30(A), L31(B)
Junction Connector
74 4A
23 4C
3 4C
57 4C
76 3B
1 HE1
8 HE2
17 HE2
7
1
4
3
1
D+
ACT+
Courtesy
M
E
L18
Luggage Compartment
Door Lock Assembly
2
L27
Luggage Compartment Door
Lock Cylinder Assembly
W–B
2 B
1 B
5 A
L30(A), L31(B)
Junction
Connector
LSSR
UL
L
Unlock
Detection
M
E
H6
Front Door Lock Assembly RH
8
2 HE1
L3
E4
E5

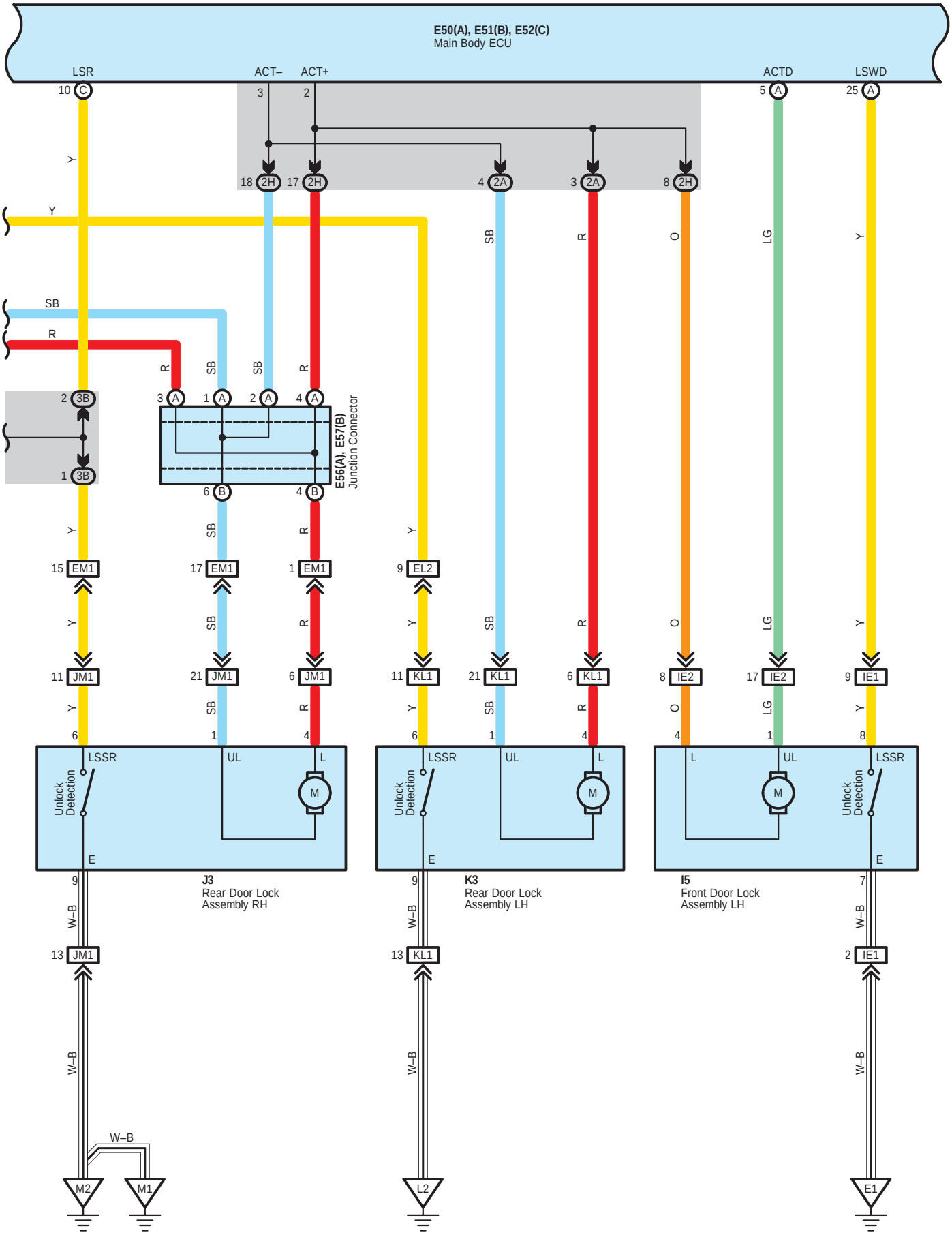
E50(A), E51(B), E52(C)
Main Body ECU
LSR
ACT–
ACT+
ACTD
LSWD
E56(A), E57(B)
Junction Connector
J3
Rear Door Lock
Assembly RH
K3
Rear Door Lock
Assembly LH
I5
Front Door Lock
Assembly LH
Unlock
Detection
LSSR
UL
L
M
E
W–B
M2
M1
L2
E1

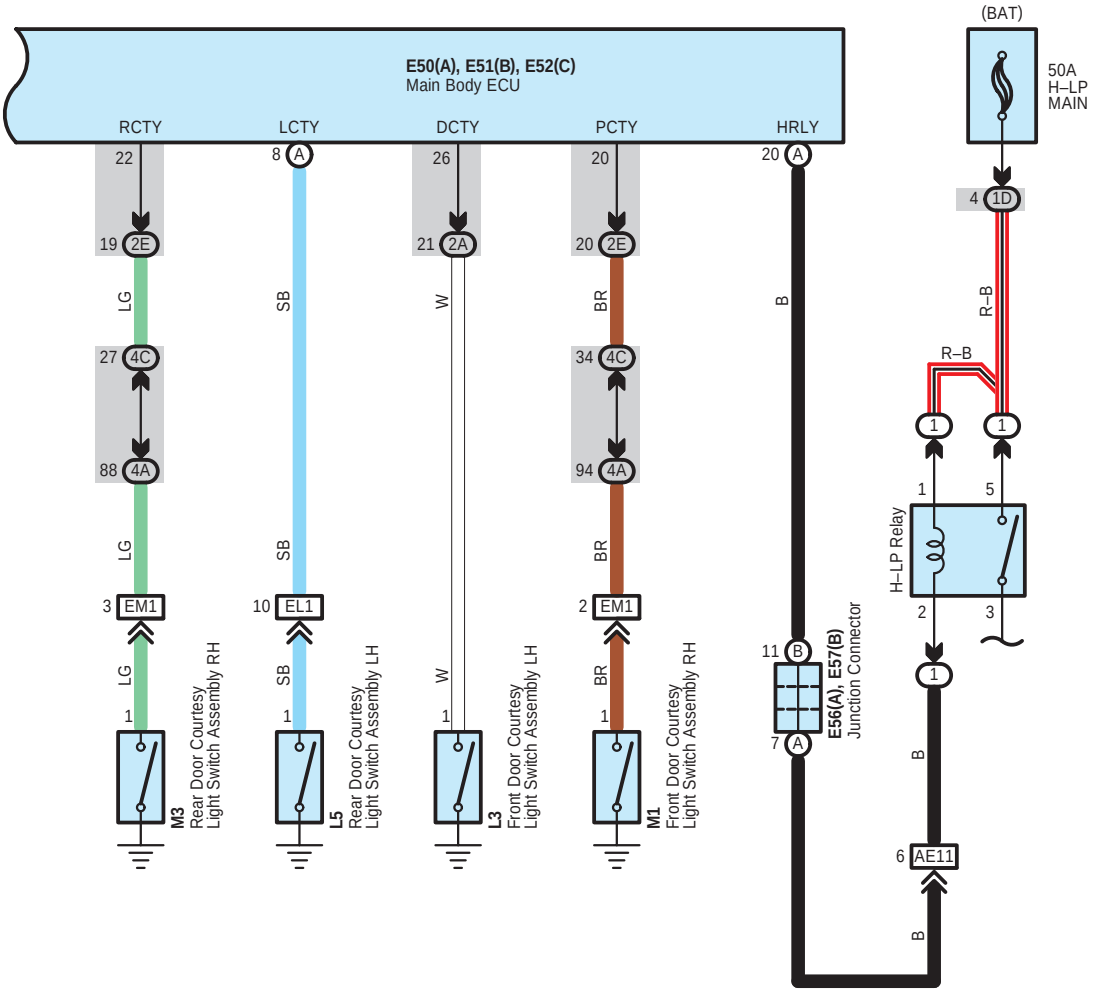
E50(A), E51(B), E52(C)
Main Body ECU
RCTY
LCTY
DCTY
PCTY
HRLY
22
19 2E
LG
27 4C
88 4A
LG
3 EM1
LG
1
M3
Rear Door Courtesy Light Switch Assembly RH
8 A
SB
SB
10 EL1
SB
1
L5
Rear Door Courtesy Light Switch Assembly LH
26
21 2A
W
W
1
L3
Front Door Courtesy Light Switch Assembly LH
20
20 2E
BR
34 4C
94 4A
BR
2 EM1
BR
1
M1
Front Door Courtesy Light Switch Assembly RH
20 A
B
11 B
7 A
E56(A), E57(B)
Junction Connector
(BAT)
50A
H–LP
MAIN
4 1D
R–B
R–B
1
1
1
5
H–LP Relay
2
3
1
B
6 AE11
B

A 1
Black

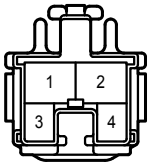

A 42
Black



A 45
White

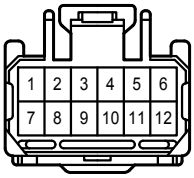

A 46
White

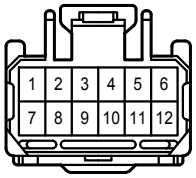

A 47
White

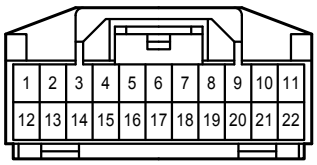

A 50
Black

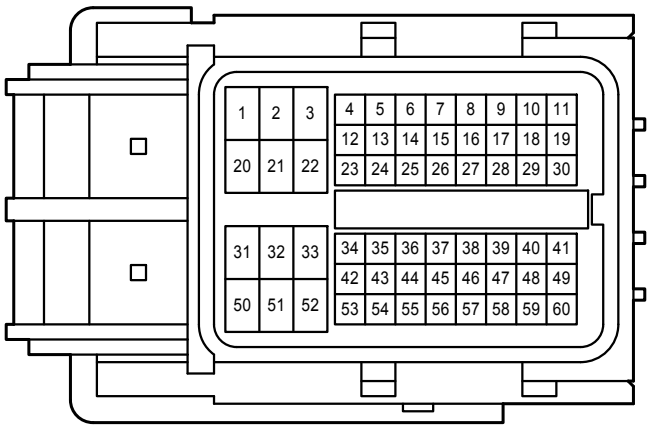

A 66
Black

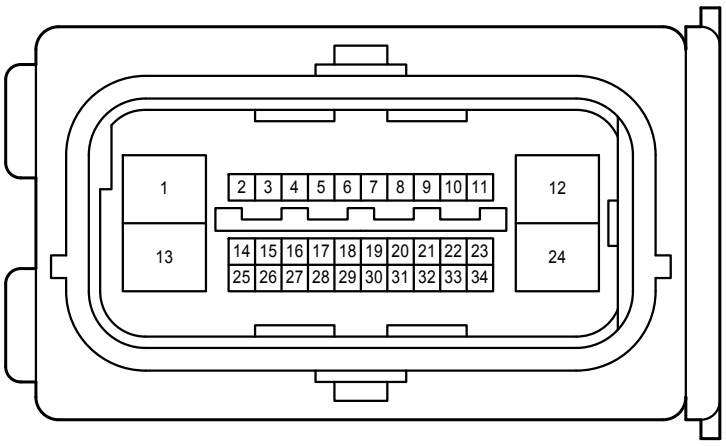

B 4

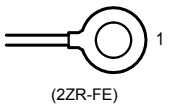

(2ZR-FE)

B 8
Black



B 31
Black

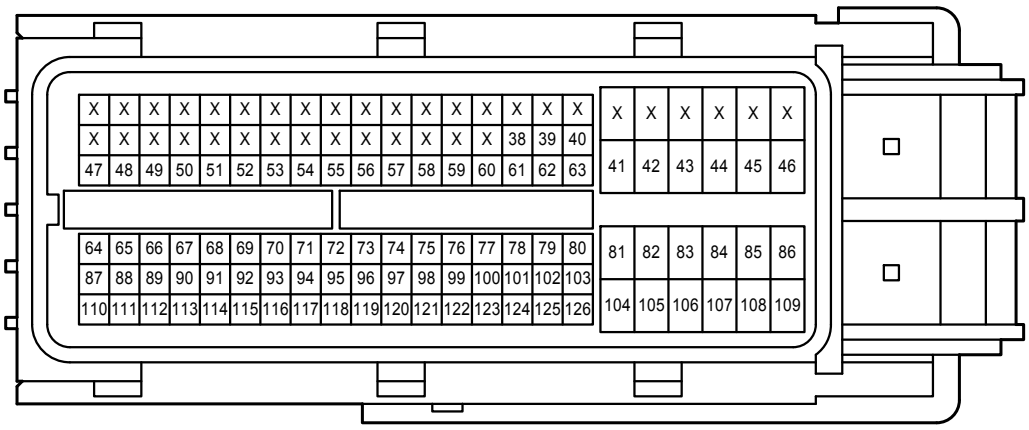

B 88
Gray

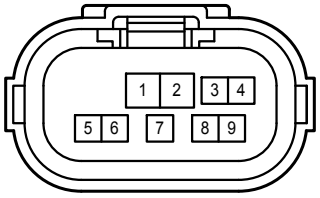

E 11
White

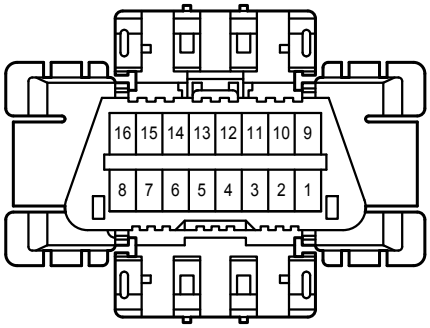

E 22
White

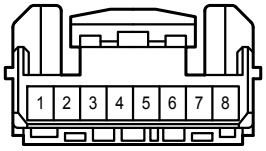

E 36
White

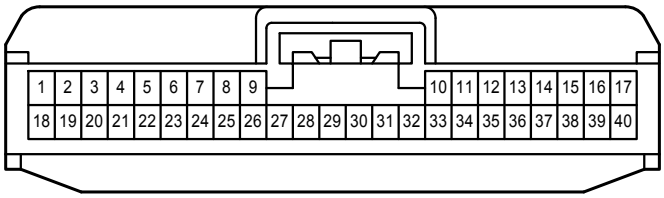

E 37
White

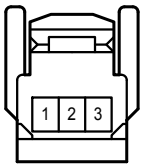

E 38
Black

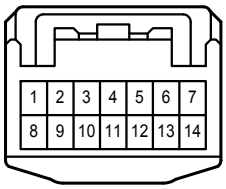

E 39
Black

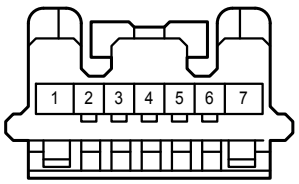

E 46
White

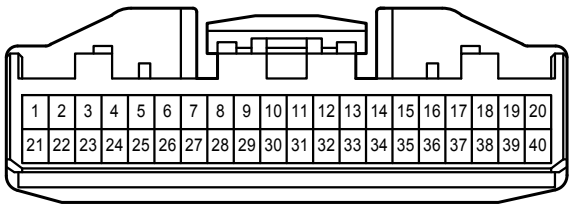

E 48
Black

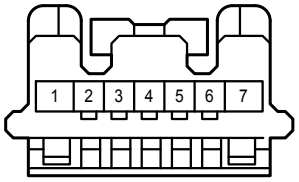

E 50
White

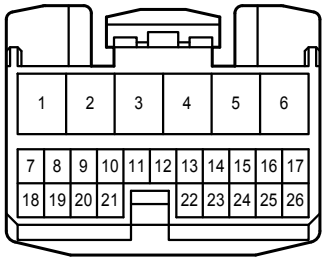

E 51
White

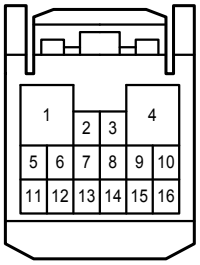

E 52
White

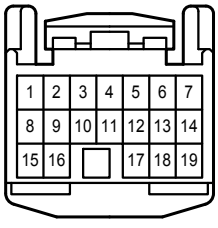

E 53
White



E 56
White

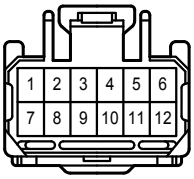

E 57
White

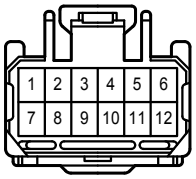

E 58
Gray

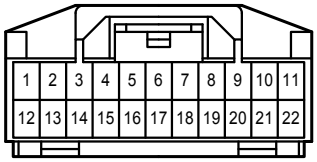

E 59
White

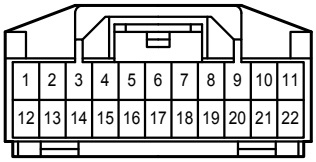

E 81
White

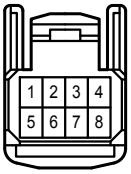

H 6
White

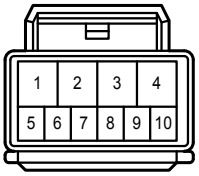

I 5
White

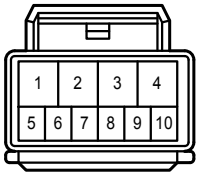

J 3
White

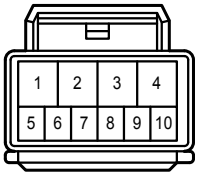

K 3
White

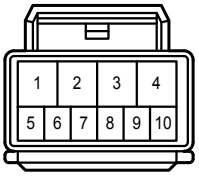

L 3
Black



L 5
Black



L 18
Black

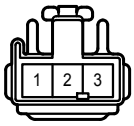

L 25
White

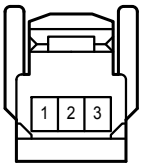

L 26
White

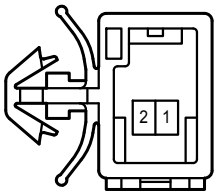

L 27
Gray

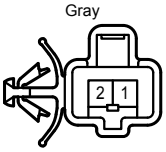

L 30
White

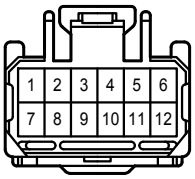

L 31
White

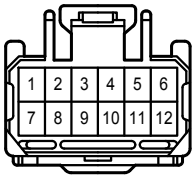

M 1
Black



M 3
Black



M 13
White

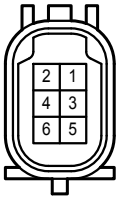

M 14
White

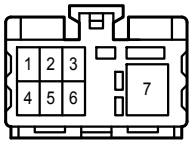

M 15
Gray



M 17
White

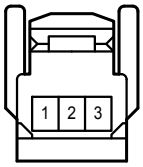

O 1
Gray



S 1
White

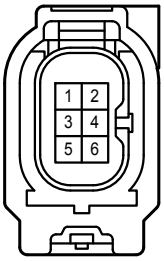

S 2
Black



T 1
White

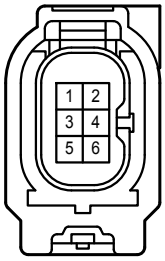

T 2
Black



1A
White

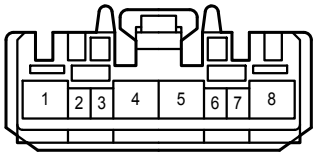

1D
White

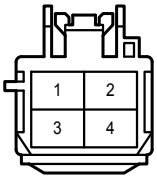

1J

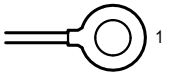

2A
White

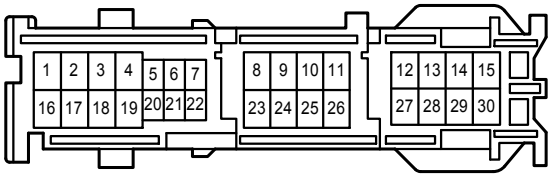

2B
White

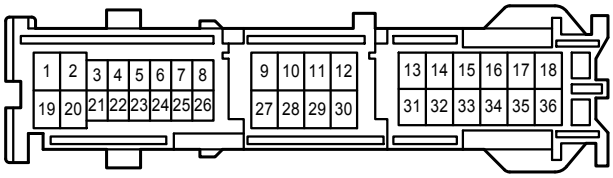

2C
White

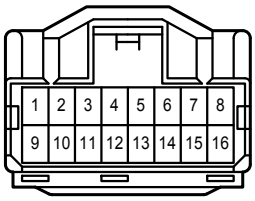

2E
White

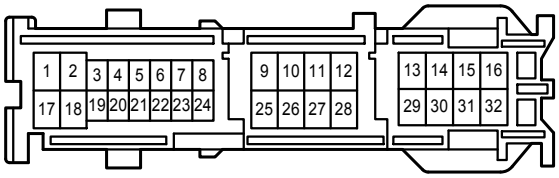

2F
White

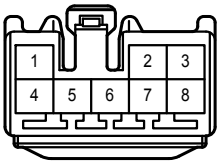

2G
White

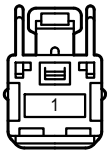

2H
White

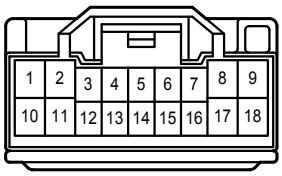

2K
White



2M
White

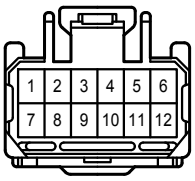

2S
White

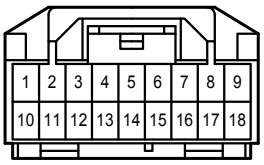

3A
White

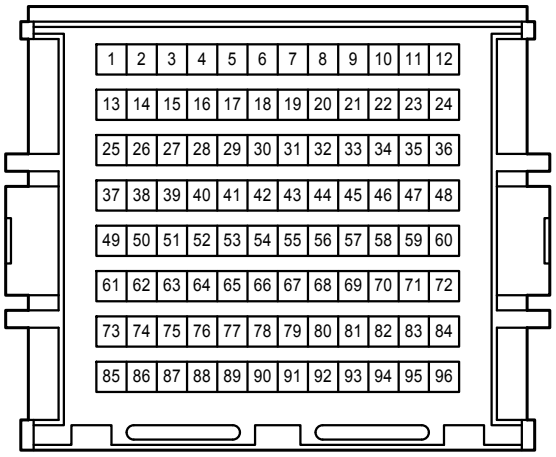

3B
White

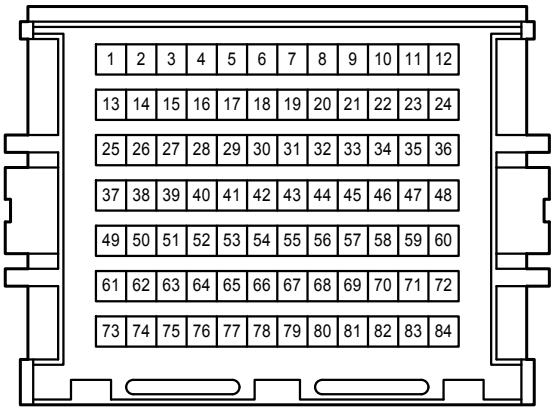

4A
White

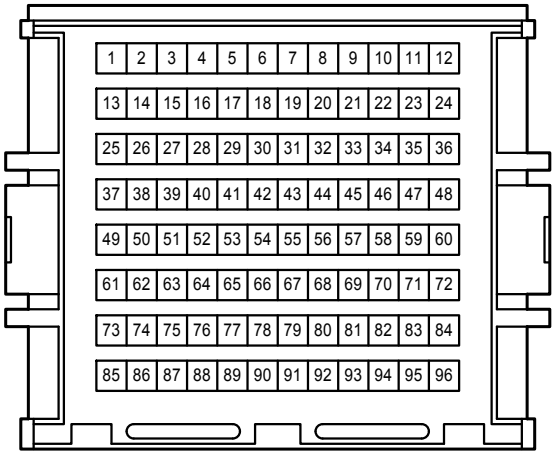

4B
White

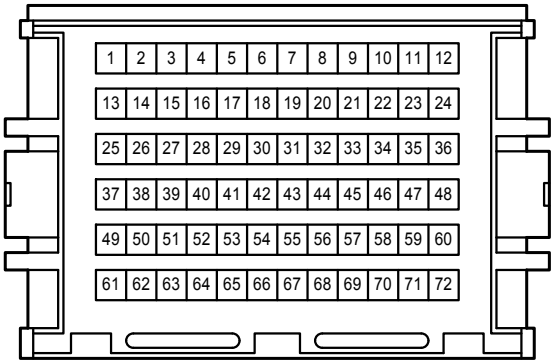

4C
White

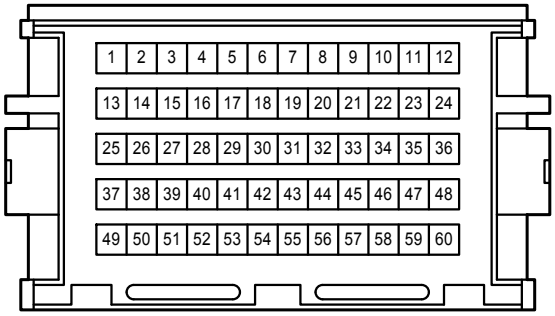

AE1
White

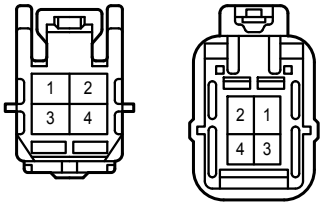

AE3
White

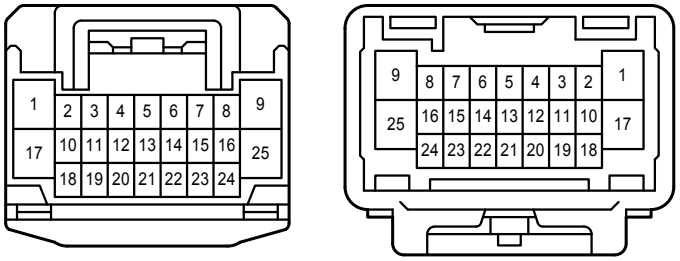

AE6
Gray

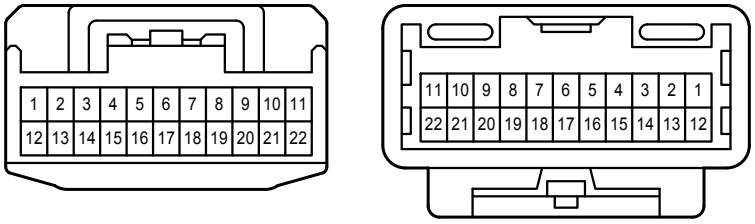

AE10
Gray

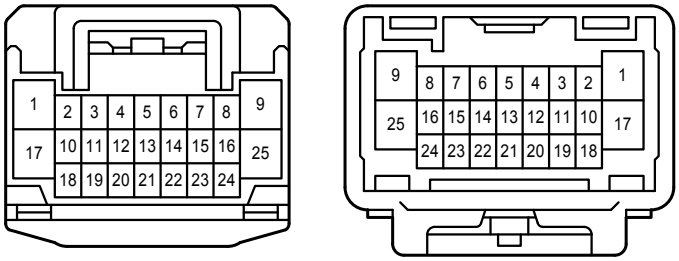

AE11
White

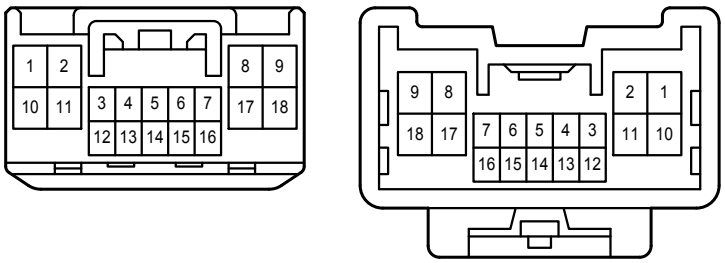

BA2
White

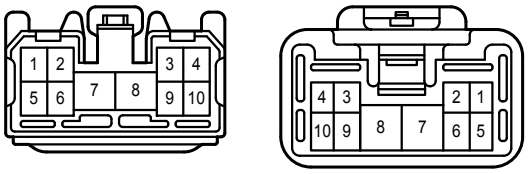

EL1
White

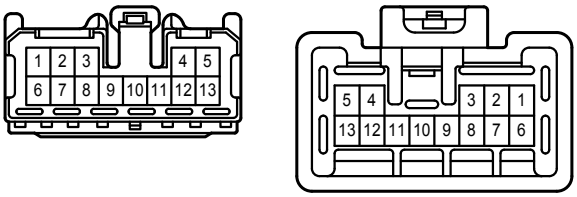

EL2
White

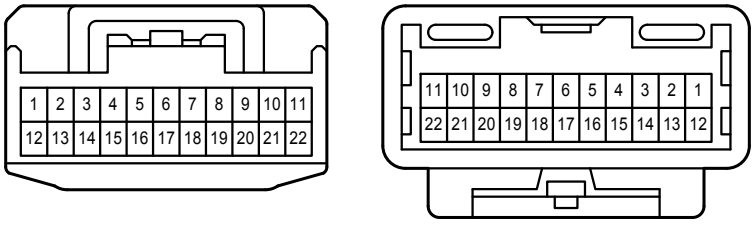

EM1
Gray

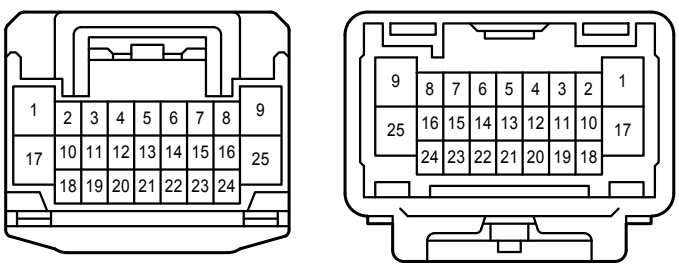

EM2
White

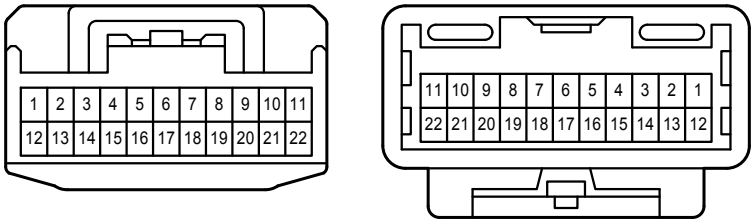

HE1
Blue

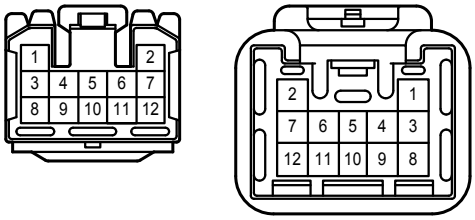

HE2
White

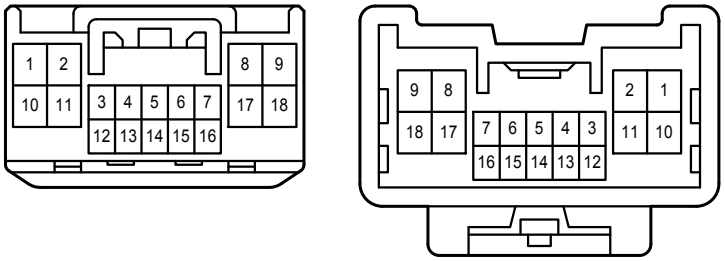

HE3
White

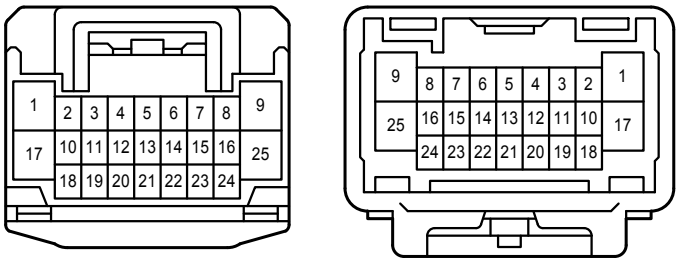

HS1
Gray

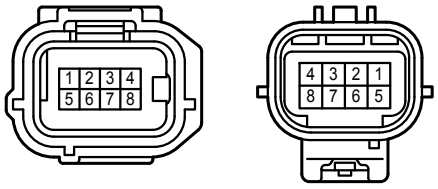

IE1
Blue

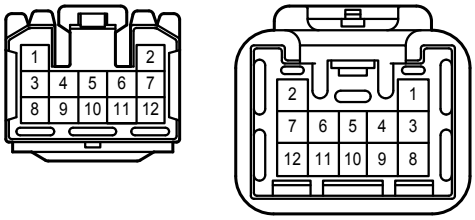

IE2
White

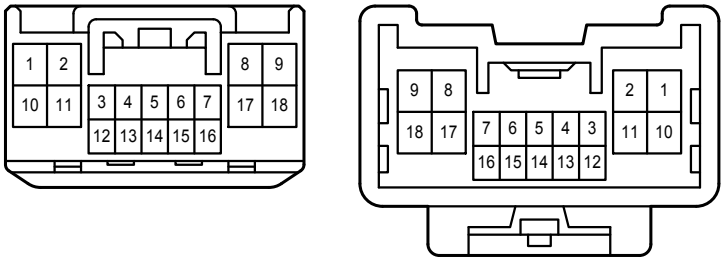

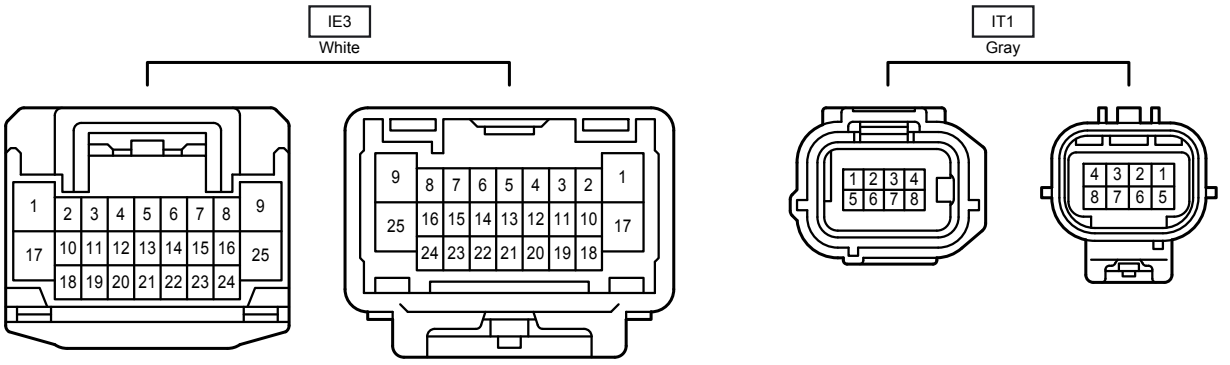
IE3
White
IT1
Gray

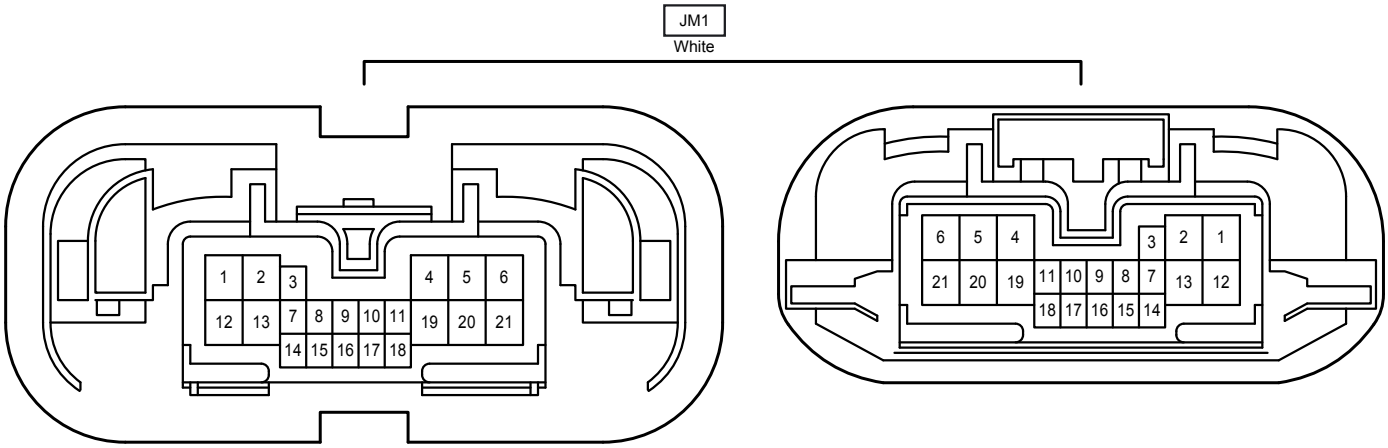
JM1
White

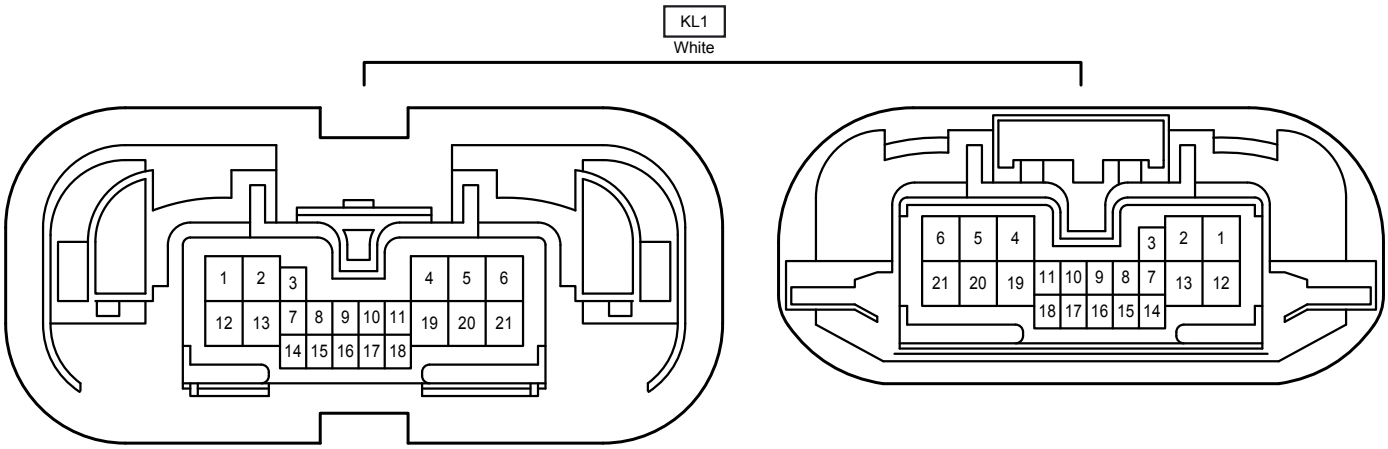
KL1
White

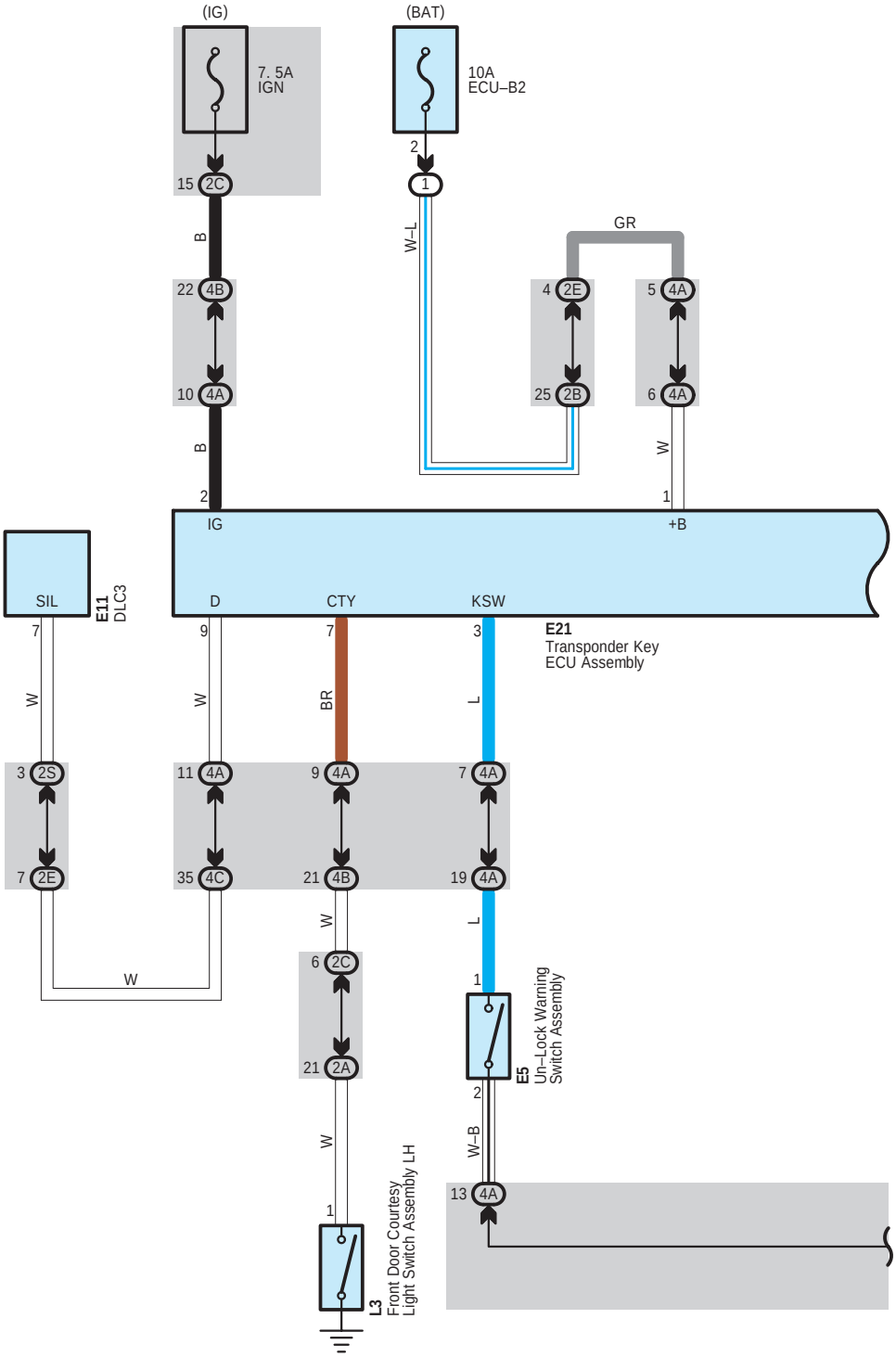
(IG)
(BAT)
7. 5A
IGN
10A
ECU–B2
15 2C
2
1
B
W–L
GR
22 4B
4 2E
5 4A
10 4A
25 2B
6 4A
B
W
2
1
IG
+B
SIL
E11
DLC3
D
CTY
KSW
E21
Transponder Key
ECU Assembly
7
9
7
3
W
W
BR
L
3 2S
11 4A
9 4A
7 4A
7 2E
35 4C
21 4B
19 4A
W
L
6 2C
1
W
21 2A
E5
Un–Lock Warning
Switch Assembly
2
W–B
W
13 4A
1
L3
Front Door Courtesy
Light Switch Assembly LH

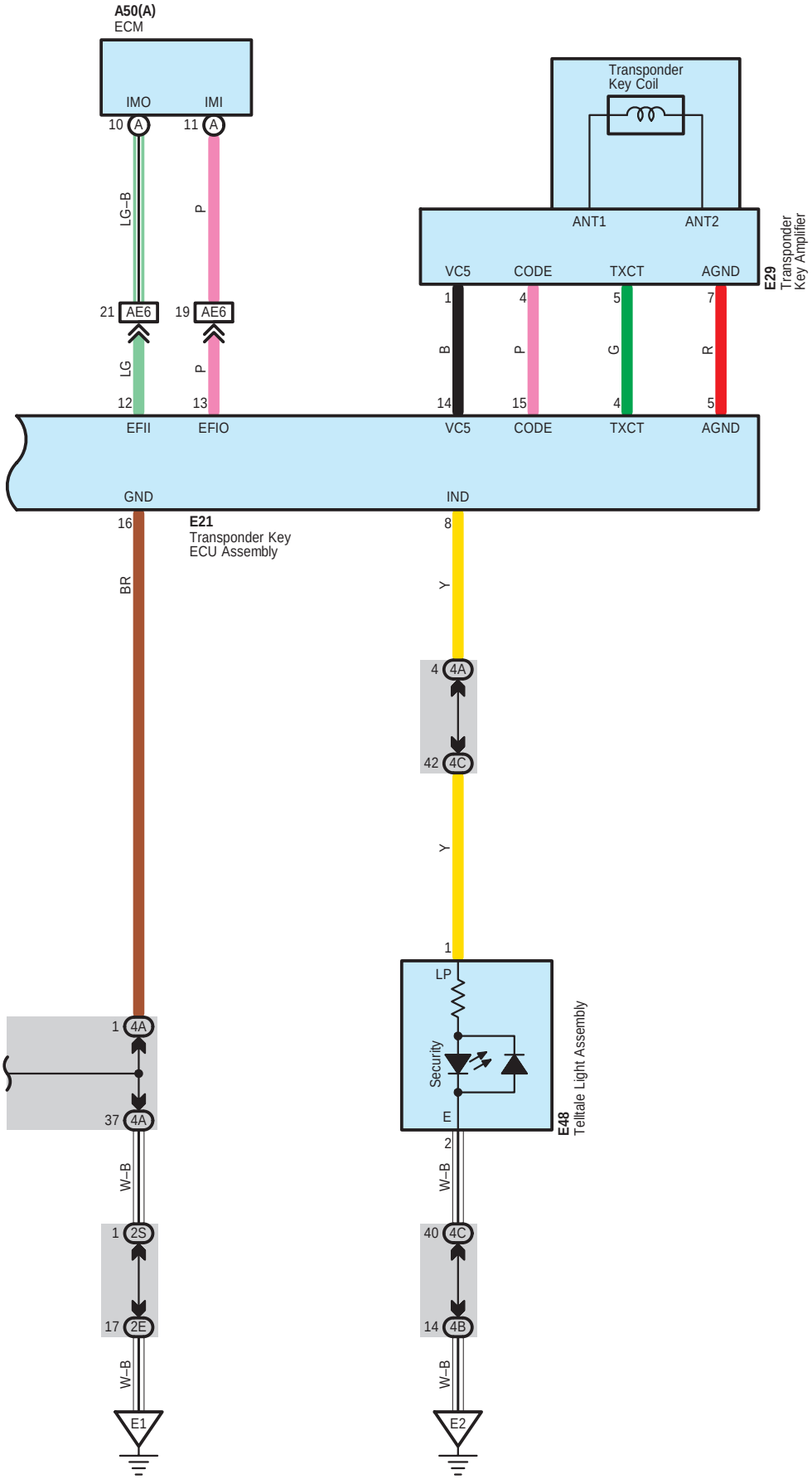
A50(A)
ECM
IMO
IMI
10 A
11 A
LG–B
P
21 AE6
19 AE6
LG
P
12
13
EFII
EFIO
Transponder
Key Coil
ANT1
ANT2
VC5
CODE
TXCT
AGND
E29
Transponder
Key Amplifier
1
4
5
7
B
P
G
R
14
15
4
5
VC5
CODE
TXCT
AGND
GND
IND
16
8
E21
Transponder Key
ECU Assembly
BR
Y
4 4A
42 4C
Y
1
LP
Security
E
E48
Telltale Light Assembly
1 4A
37 4A
2
W–B
W–B
1 2S
40 4C
17 2E
14 4B
W–B
W–B
E1
E2

A 50
Black

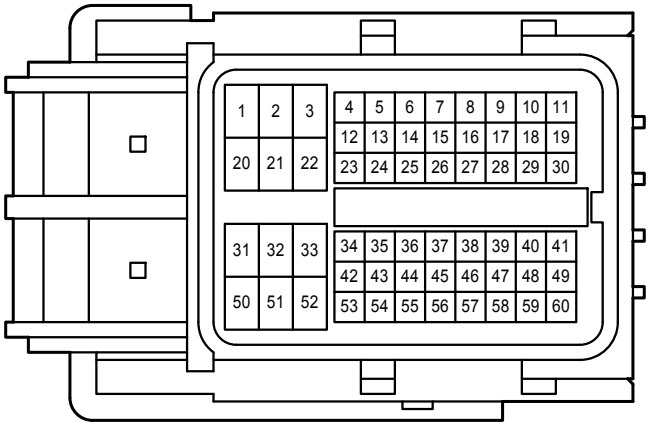

E 5
White

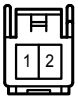

E 21
White

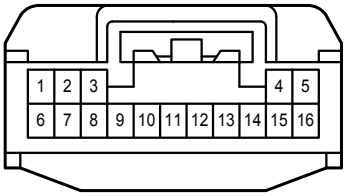

E 29
Black

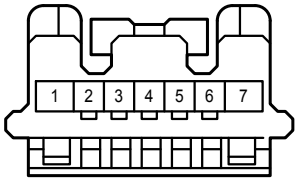

E 48
Black

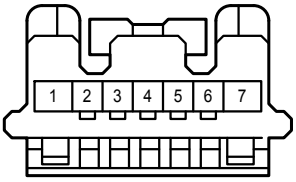

L 3
Black



2A
White

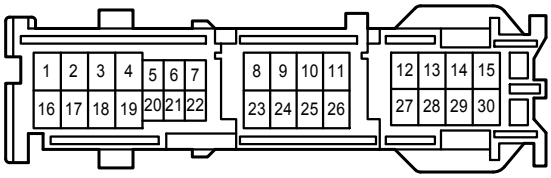

2B
White

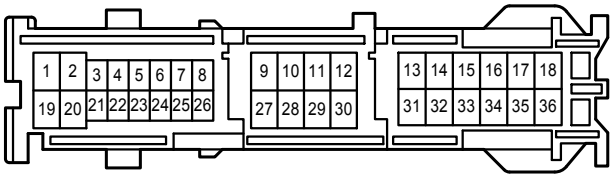

2C
White

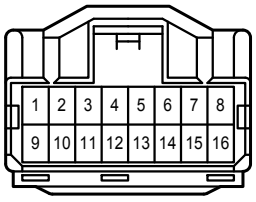

2E
White

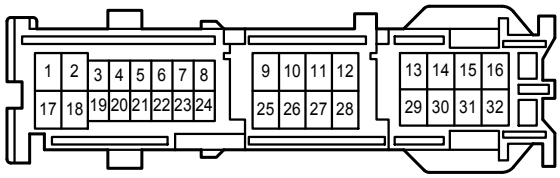

2S
White

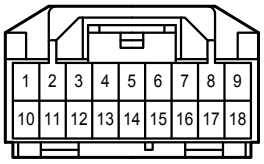

4A
White

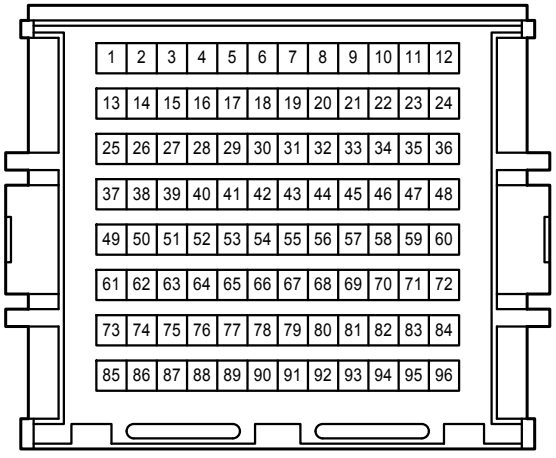

4B
White

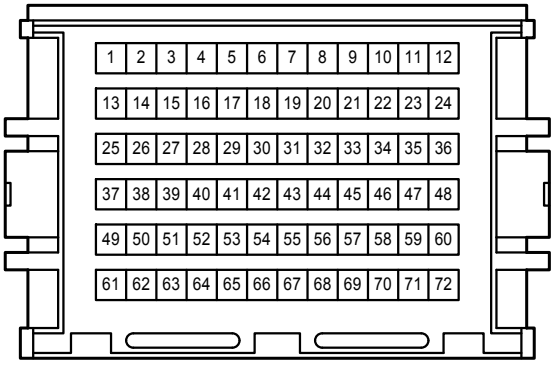

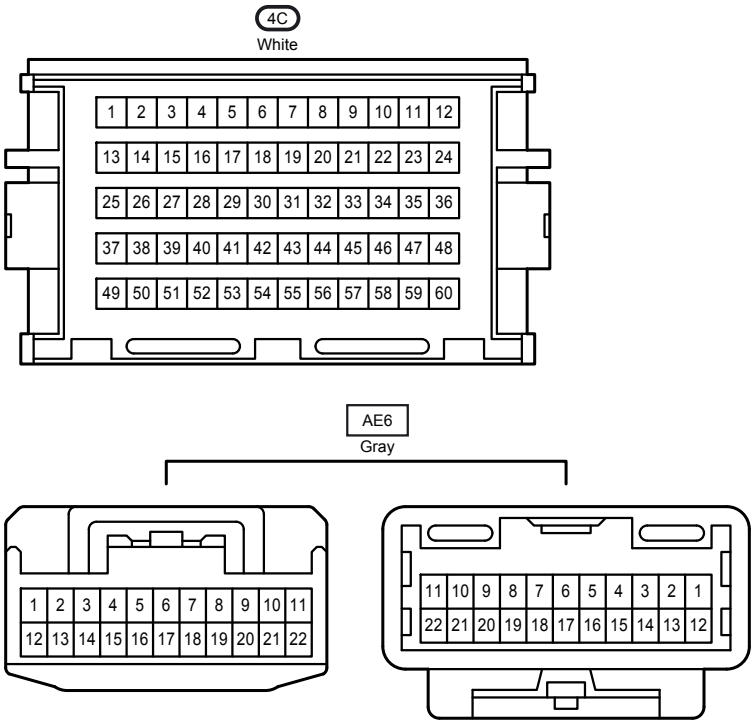
4C
White
1 2 3 4 5 6 7 8 9 10 11 12
13 14 15 16 17 18 19 20 21 22 23 24
25 26 27 28 29 30 31 32 33 34 35 36
37 38 39 40 41 42 43 44 45 46 47 48
49 50 51 52 53 54 55 56 57 58 59 60
AE6
Gray
1 2 3 4 5 6 7 8 9 10 11
12 13 14 15 16 17 18 19 20 21 22
11 10 9 8 7 6 5 4 3 2 1
22 21 20 19 18 17 16 15 14 13 12

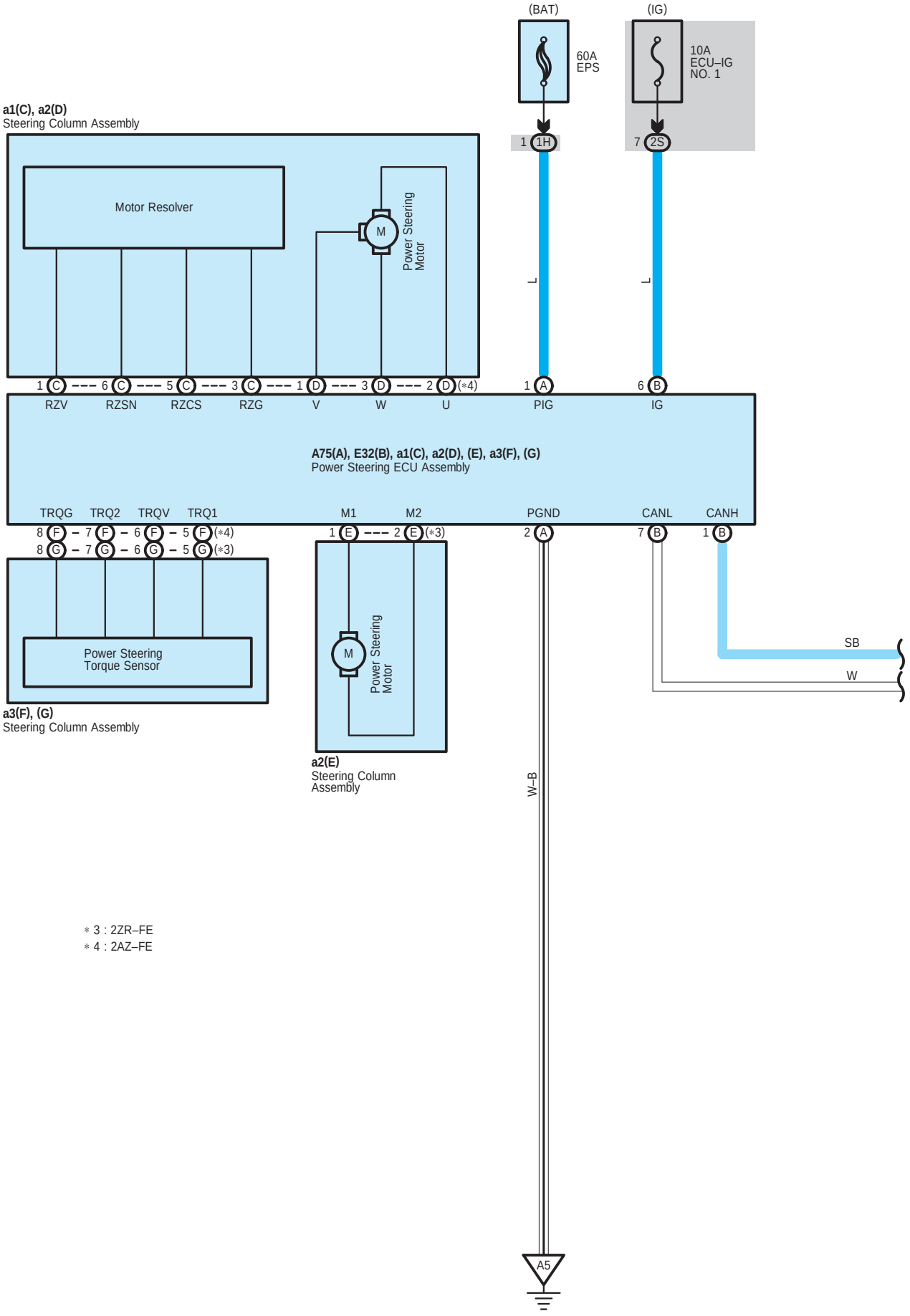

* 3 : 2ZR–FE
* 4 : 2AZ–FE

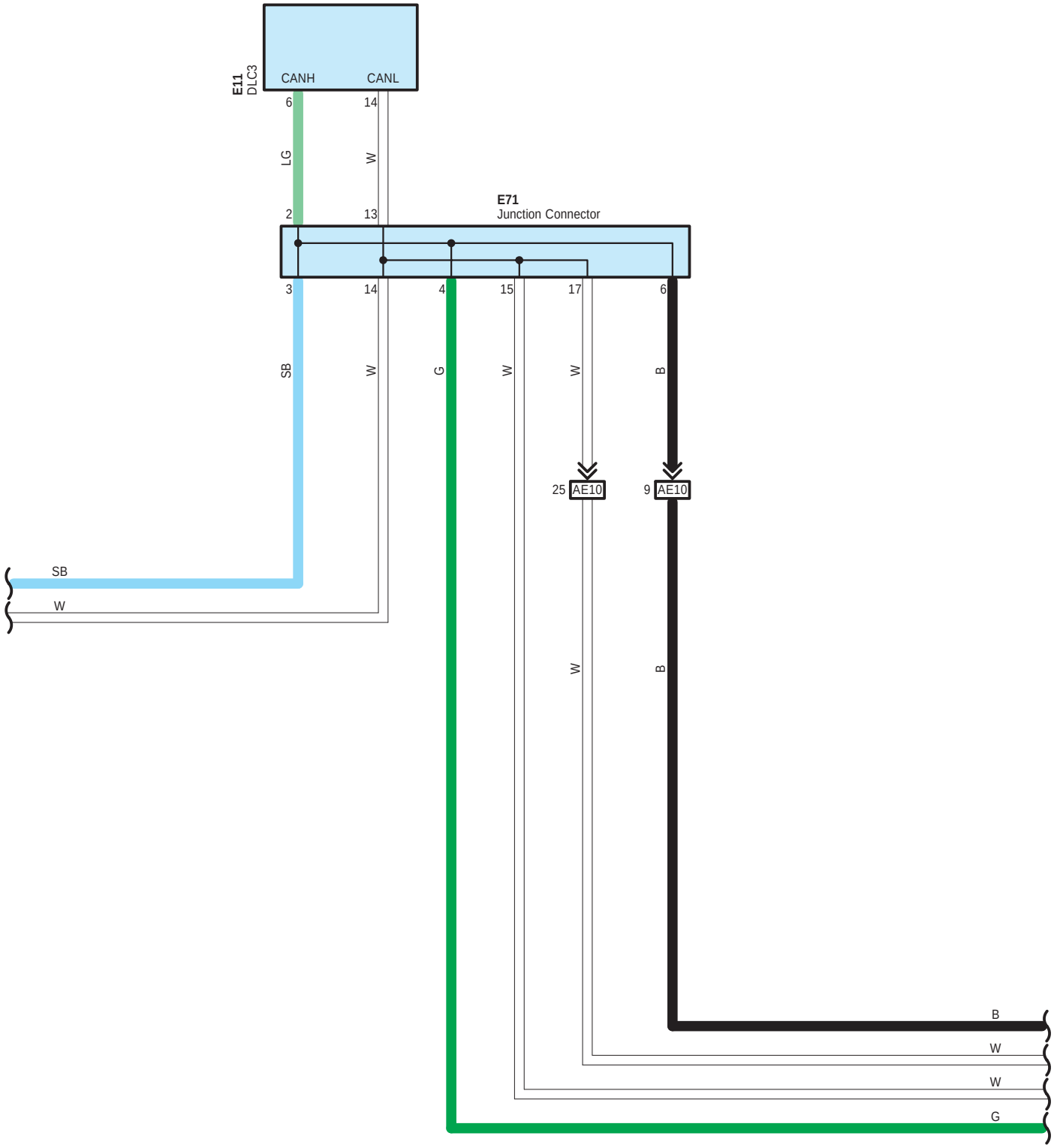
E11
DLC3
CANH
CANL
6
14
LG
W
2
13
E71
Junction Connector
3
14
4
15
17
6
SB
W
G
W
W
B
25 AE10
9 AE10
SB
W
W
B
B
W
W
G

∗ 1 : w/o VSC
∗ 2 : w/ VSC
∗ 3 : 2ZR–FE
∗ 4 : 2AZ–FE

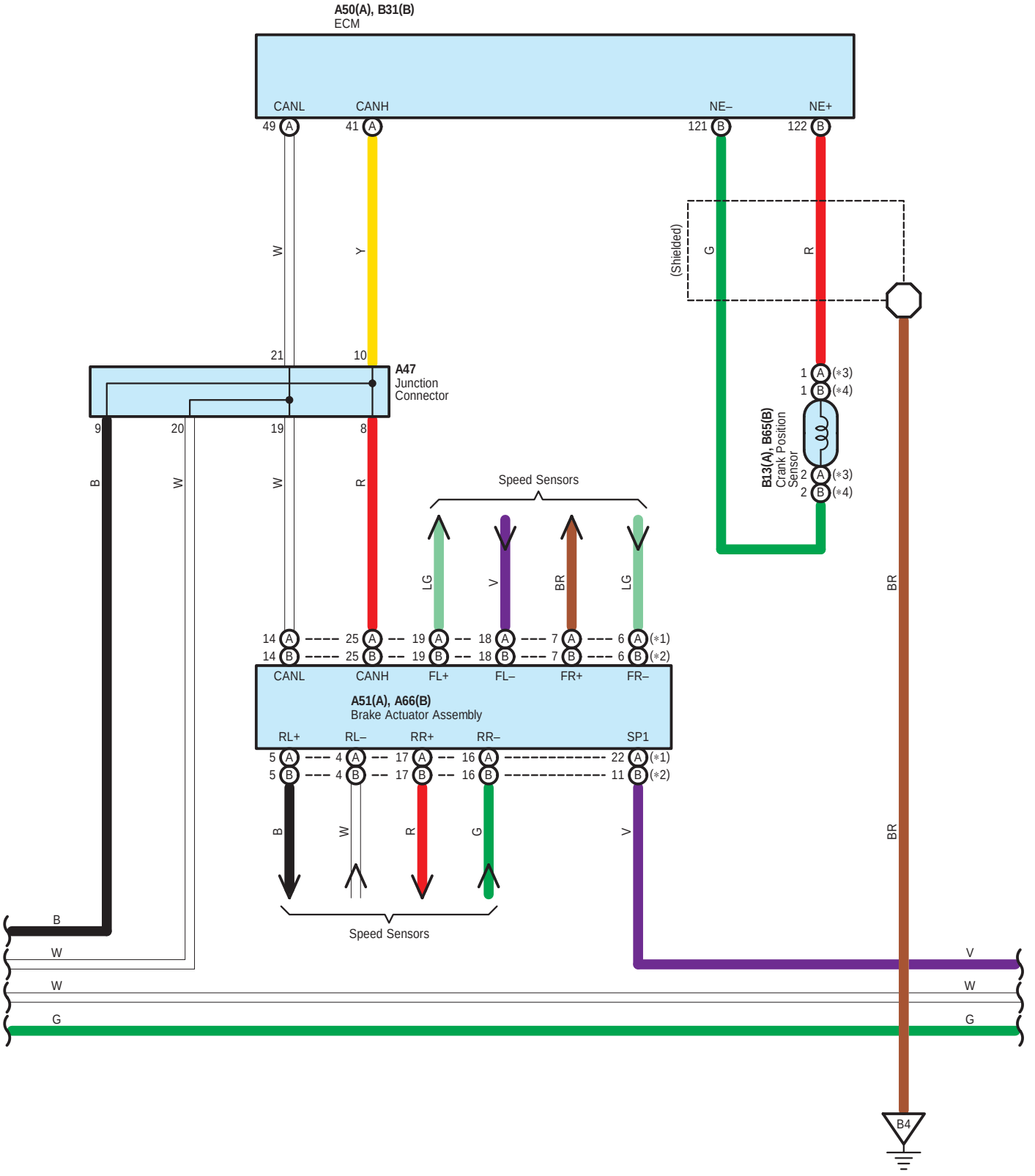

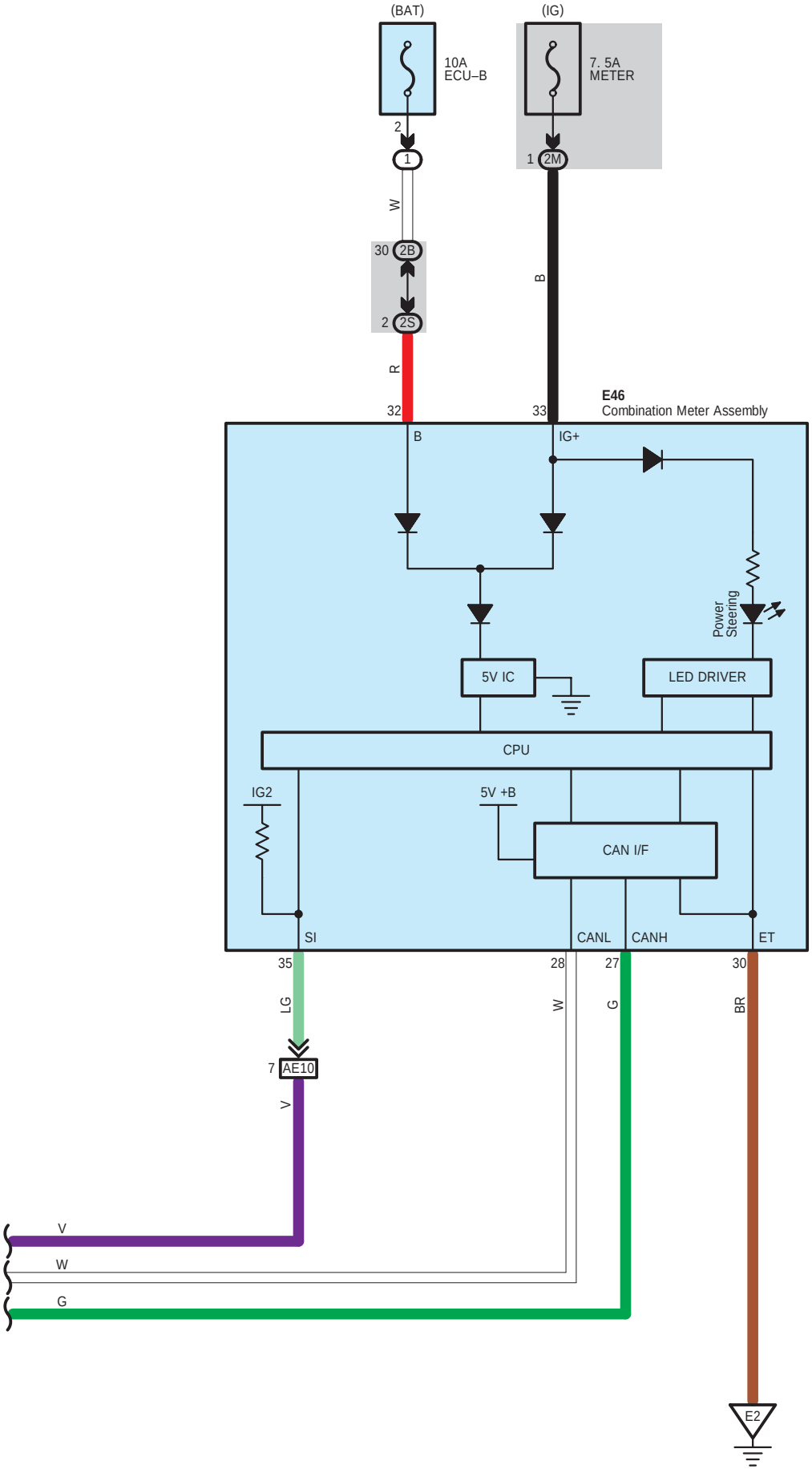
(BAT)
(IG)
10A
ECU–B
7. 5A
METER
2
1
1
2M
W
30
2B
2
2S
B
R
32
33
E46
Combination Meter Assembly
B
IG+
Power
Steering
5V IC
LED DRIVER
CPU
IG2
5V +B
CAN I/F
SI
CANL
CANH
ET
35
28
27
30
LG
W
G
BR
7
AE10
V
V
W
G
E2

A 47
White

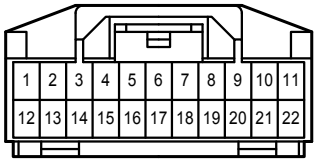

A 50
Black

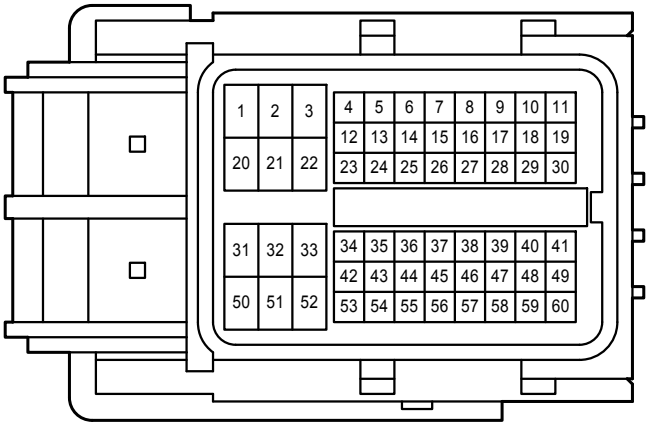

A 51
Gray

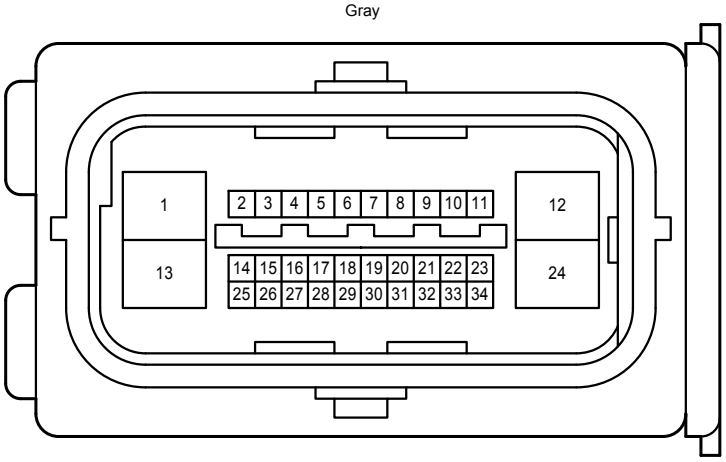

A 66
Black

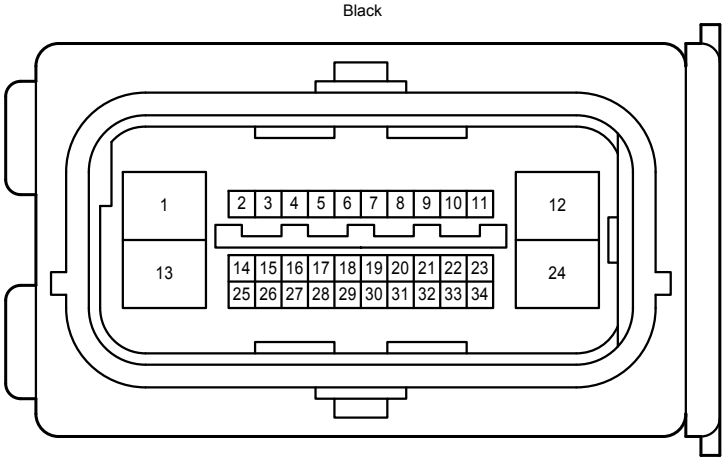

A 75
Gray

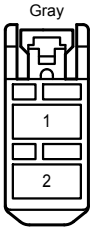

B 13
Black

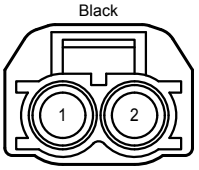

B 31
Black

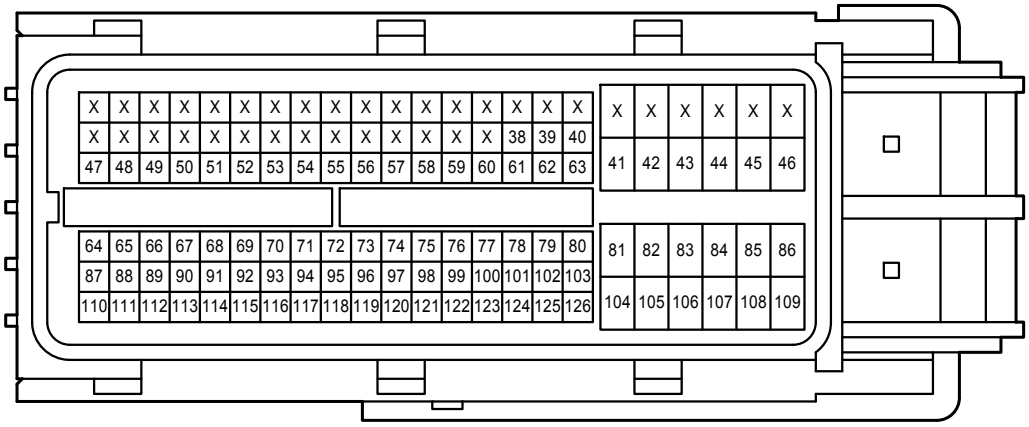

B 65
Gray



E 11
White

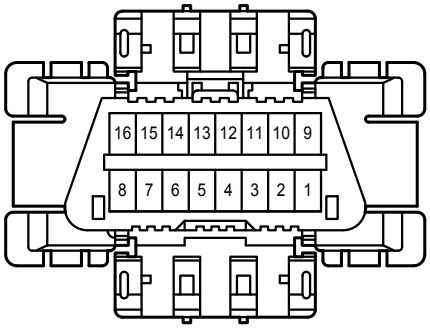

E 32
White

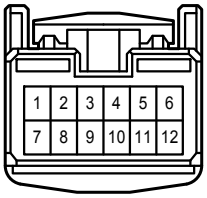

E 46
White

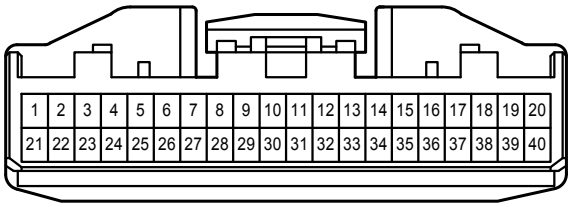

E 71
White

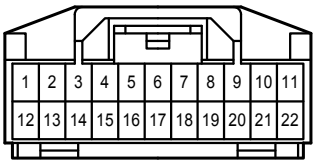

a 1
White

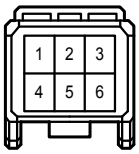

a 2
White

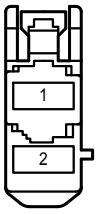

(2ZR-FE)

a 2
White

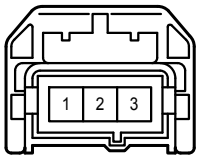

(2AZ-FE)

a 3
White

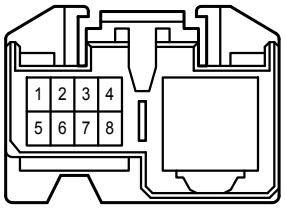

(2AZ-FE)

a 3
Black

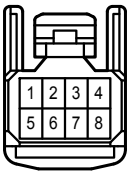

(2ZR-FE)

1H

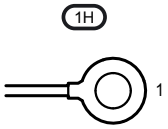

2B
White

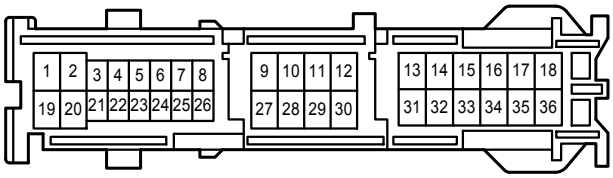

2M
White

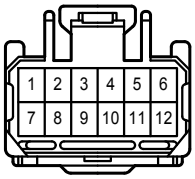

2S
White

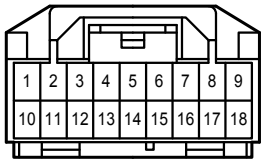

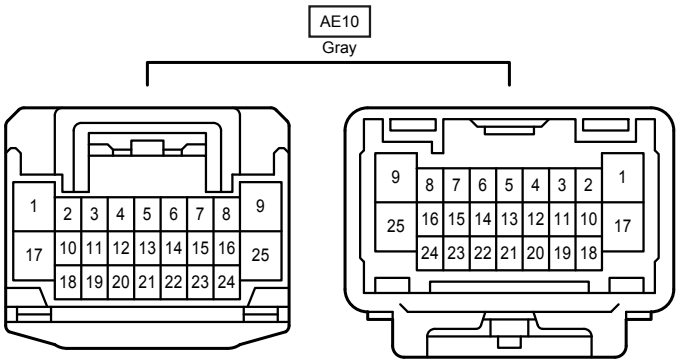
AE10
Gray
1
2
3
4
5
6
7
8
9
17
10
11
12
13
14
15
16
25
18
19
20
21
22
23
24
9
8
7
6
5
4
3
2
1
25
16
15
14
13
12
11
10
17
24
23
22
21
20
19
18

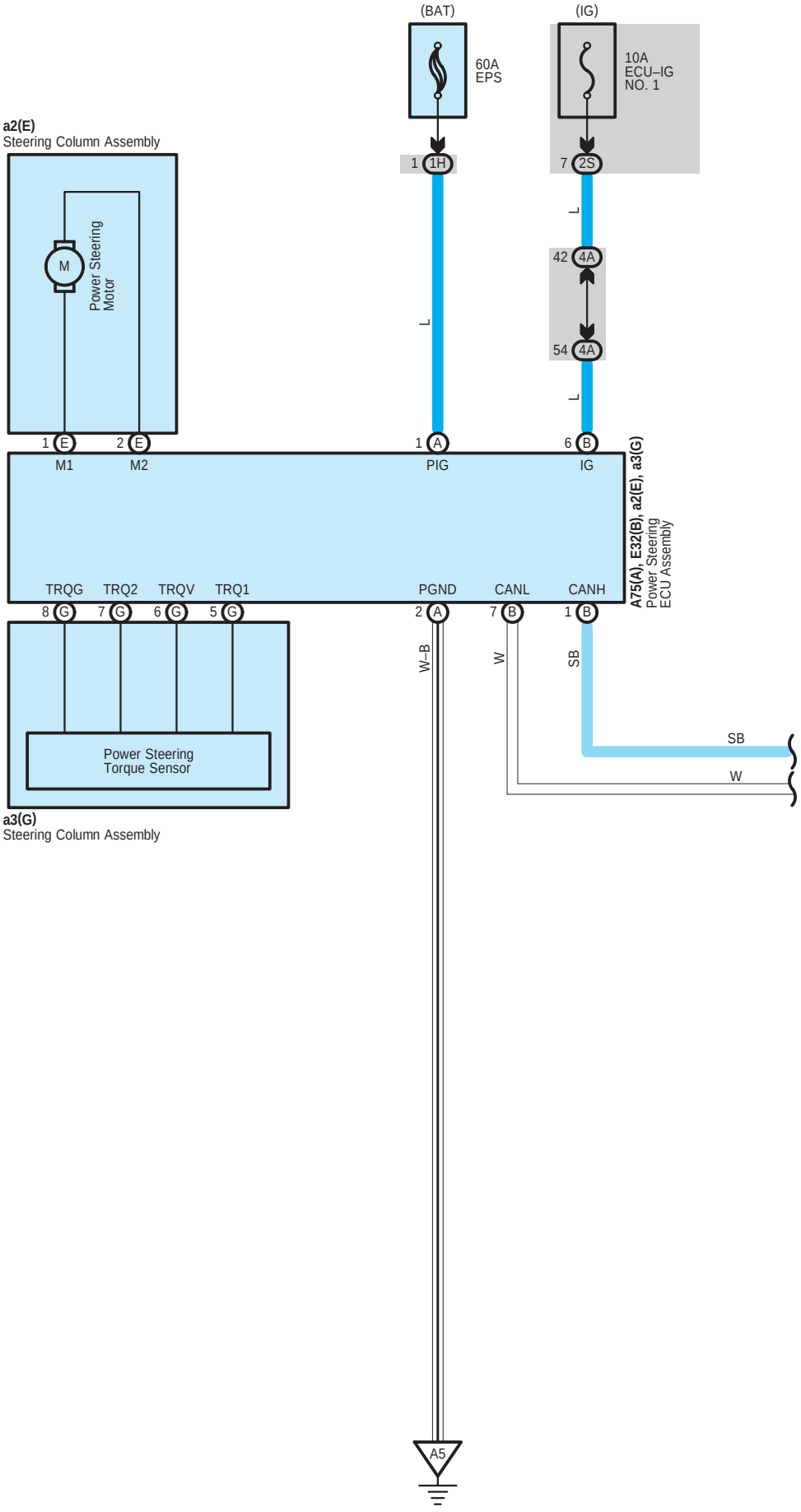
(BAT)
(IG)
60A
EPS
10A
ECU–IG
NO. 1
a2(E)
Steering Column Assembly
M
Power Steering
Motor
1 1H
7 2S
L
42 4A
54 4A
L
L
1 E
2 E
M1
M2
1 A
PIG
6 B
IG
A75(A), E32(B), a2(E), a3(G)
Power Steering
ECU Assembly
TRQG
TRQ2
TRQV
TRQ1
PGND
CANL
CANH
8 G
7 G
6 G
5 G
2 A
7 B
1 B
W–B
W
SB
SB
W
Power Steering
Torque Sensor
a3(G)
Steering Column Assembly
A5

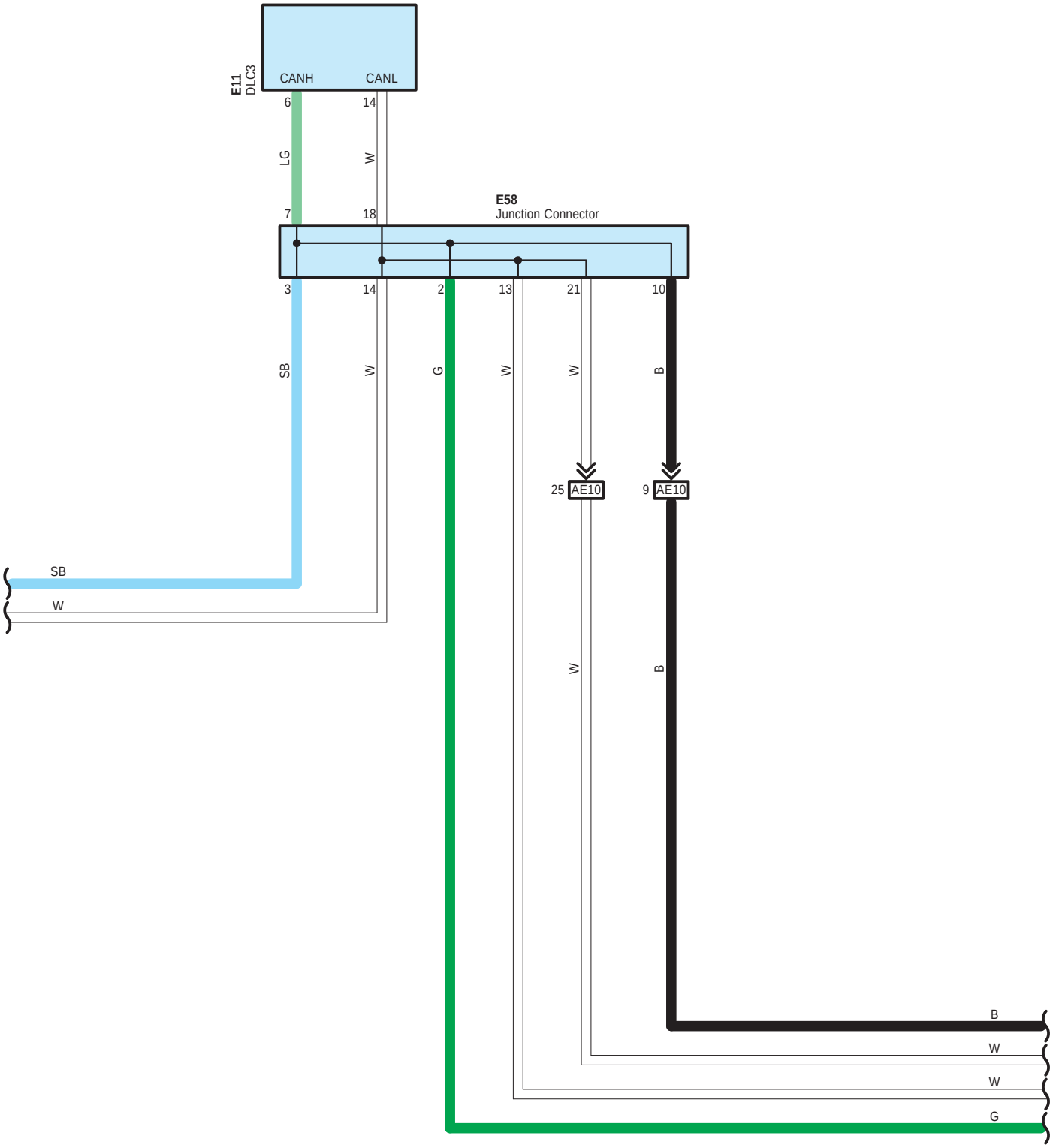
E11
DLC3
CANH
CANL
6
14
LG
W
7
18
E58
Junction Connector
3
14
2
13
21
10
SB
W
G
W
W
B
25 AE10
9 AE10
SB
W
W
B
B
W
W
G

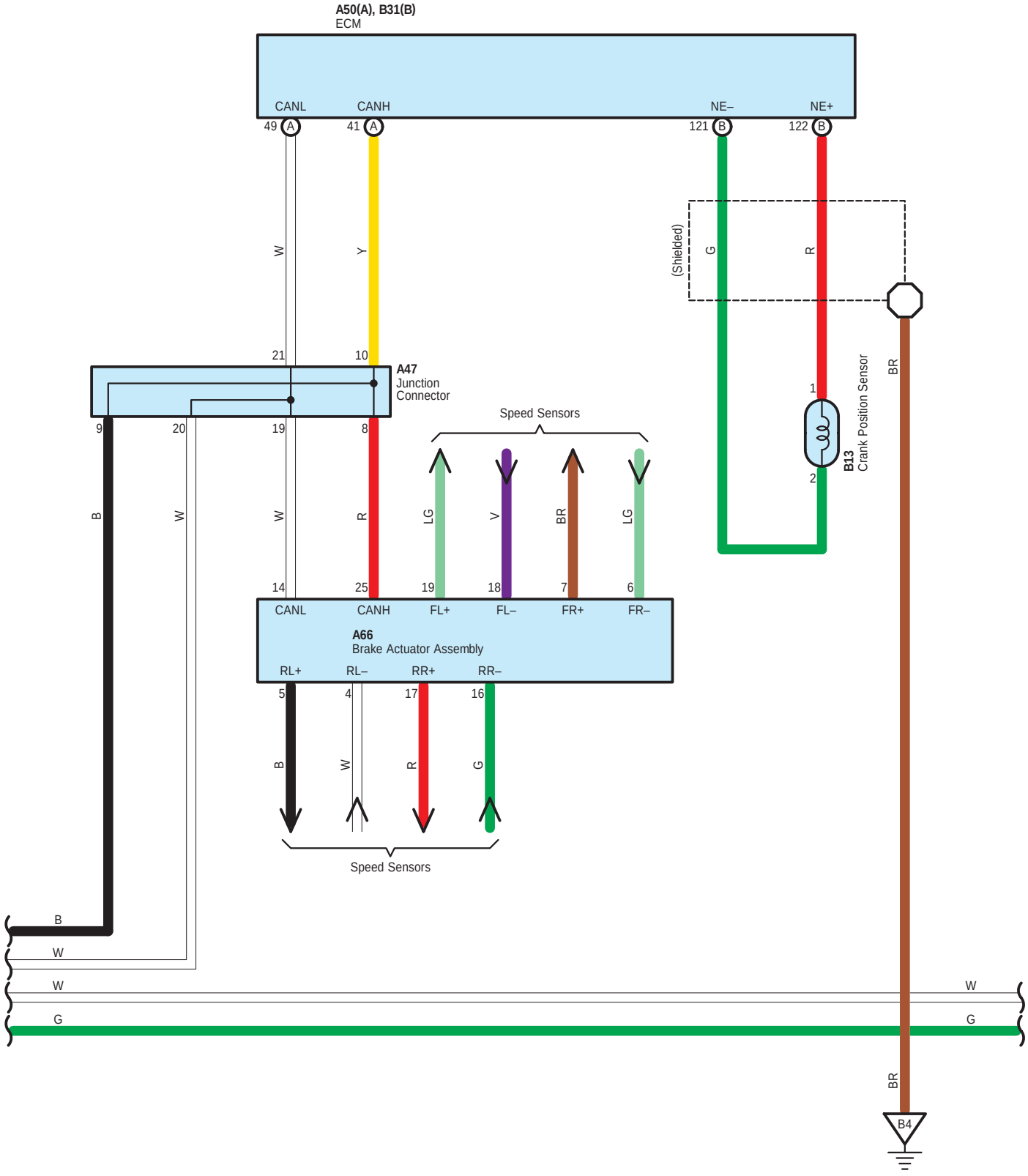
A50(A), B31(B)
ECM
CANL
CANH
NE–
NE+
49 A
41 A
121 B
122 B
(Shielded)
G
R
W
Y
21
10
A47
Junction
Connector
9
20
19
8
Speed Sensors
B
W
W
R
LG
V
BR
LG
14
25
19
18
7
6
CANL
CANH
FL+
FL–
FR+
FR–
A66
Brake Actuator Assembly
RL+
RL–
RR+
RR–
5
4
17
16
B
W
R
G
Speed Sensors
1
2
B13
Crank Position Sensor
BR
B
W
W
G
W
G
BR
B4

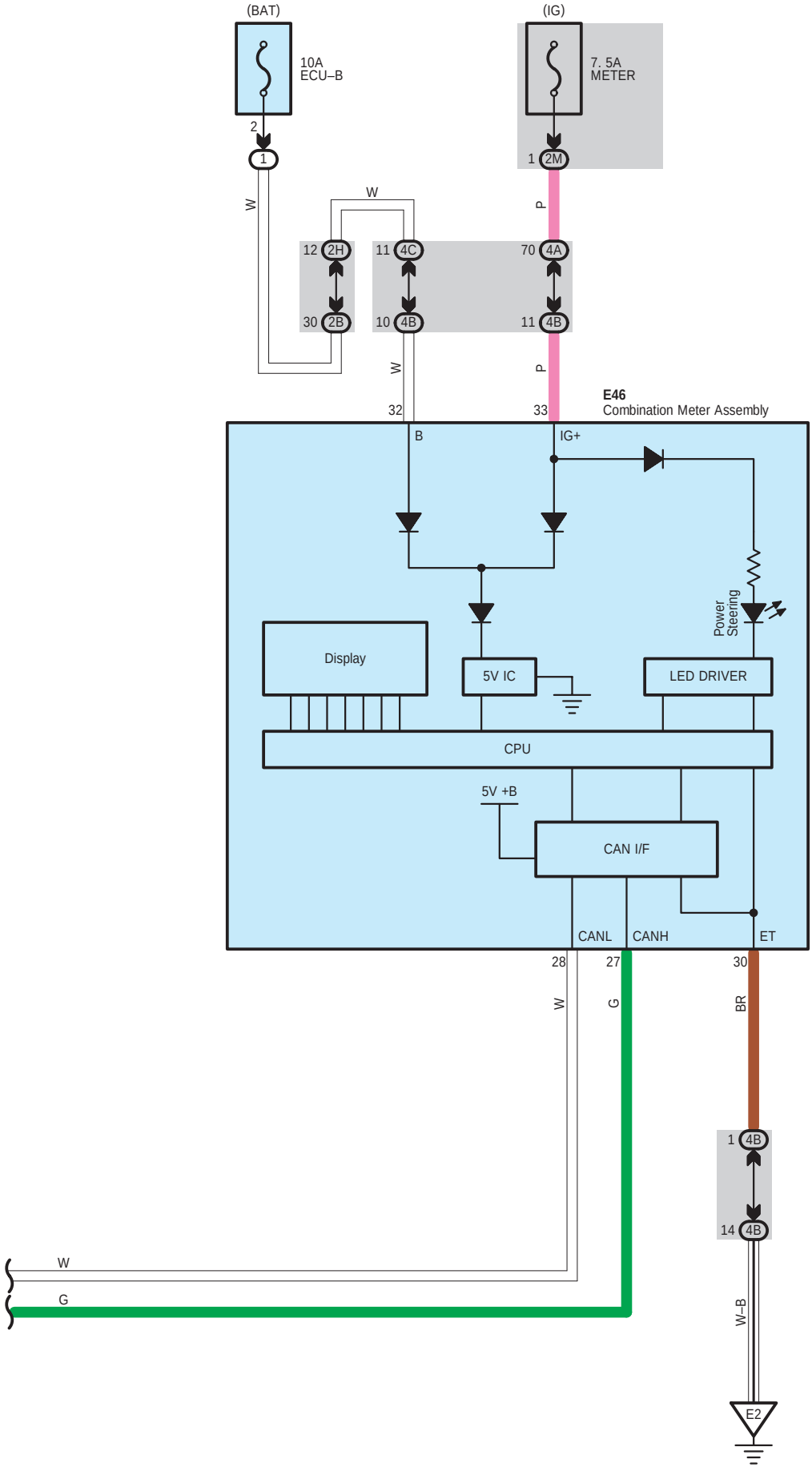
(BAT)
10A
ECU–B
2
1
W
(IG)
7. 5A
METER
1 2M
P
W
12 2H
30 2B
11 4C
10 4B
70 4A
11 4B
W
P
32
33
E46
Combination Meter Assembly
B
IG+
Power
Steering
Display
5V IC
LED DRIVER
CPU
5V +B
CAN I/F
CANL
CANH
ET
28
27
30
W
G
BR
1 4B
14 4B
W
G
W–B
E2

A 47
White

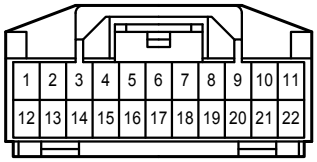

A 50
Black

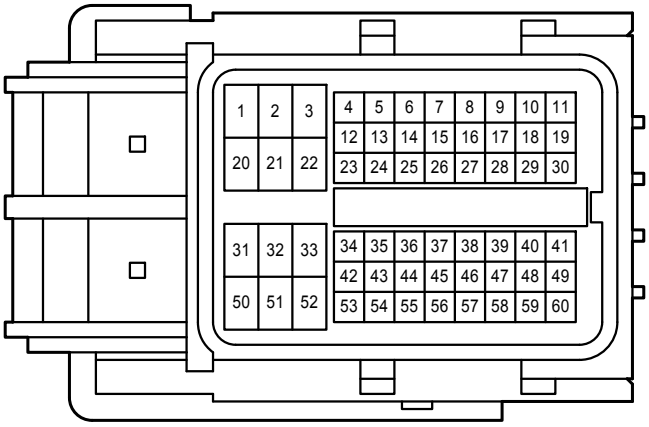

A 66
Black

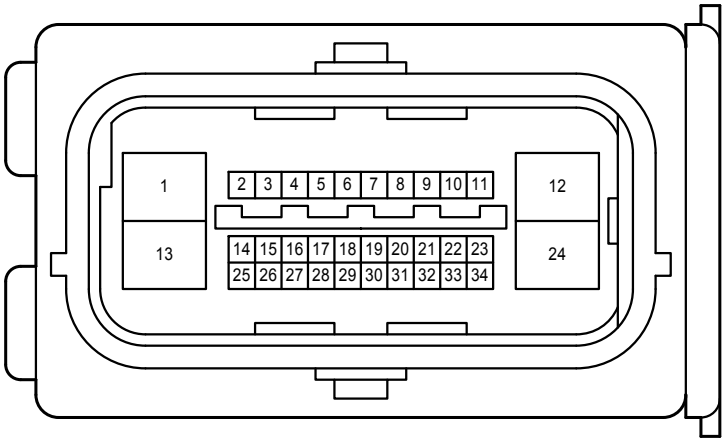

A 75
Gray

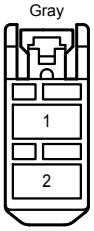

B 13
Black

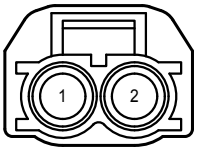

B 31
Black

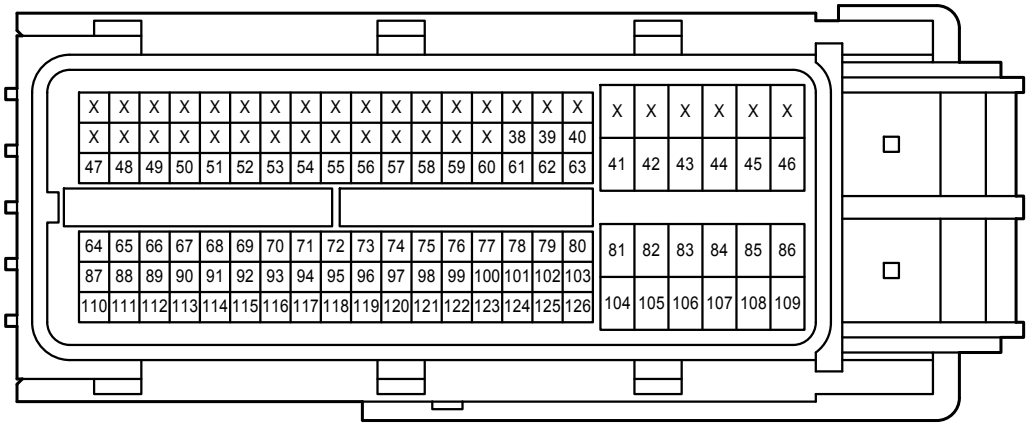

E 32
White

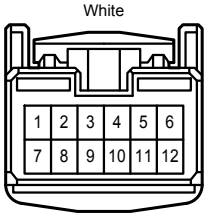

E 46
White

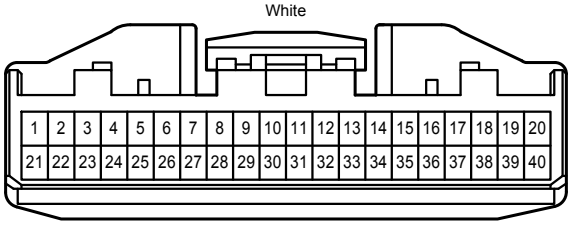

E 58
Gray

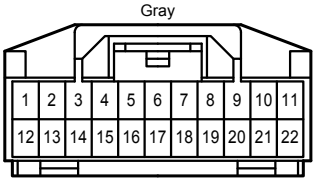

a 2
White

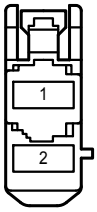

(2ZR-FE)

a 3
Black

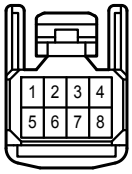

(2ZR-FE)

1H

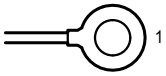

2B
White

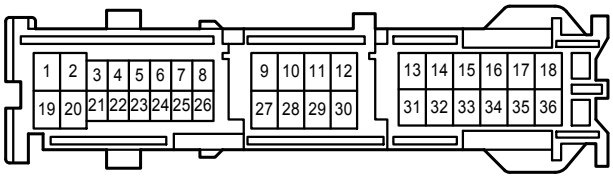

2H
White

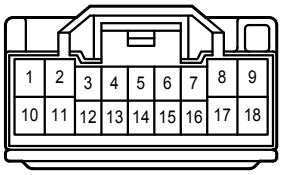

2M
White

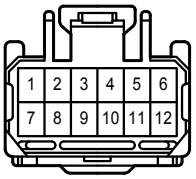

2S
White

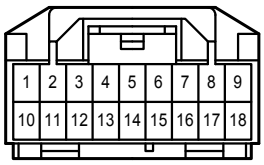

4A
White

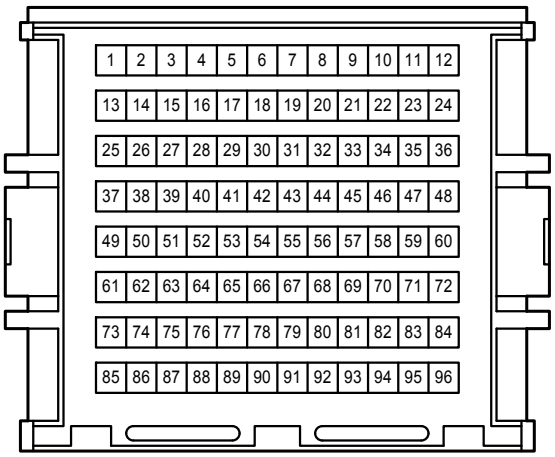

4B
White

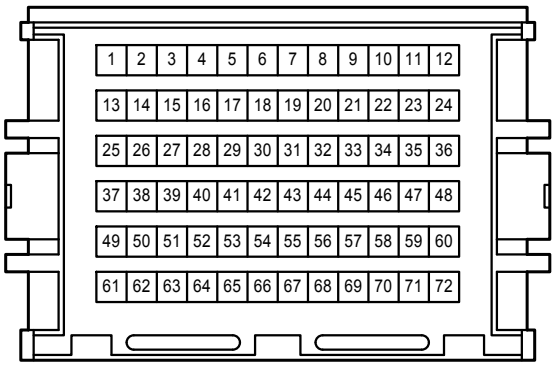

4C
White

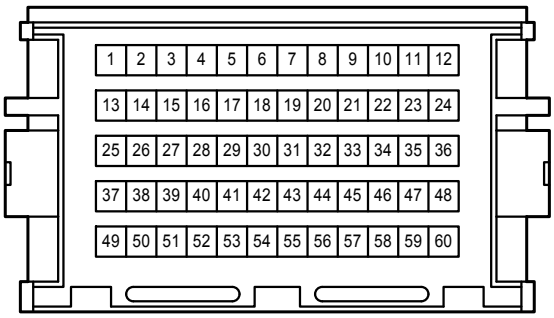

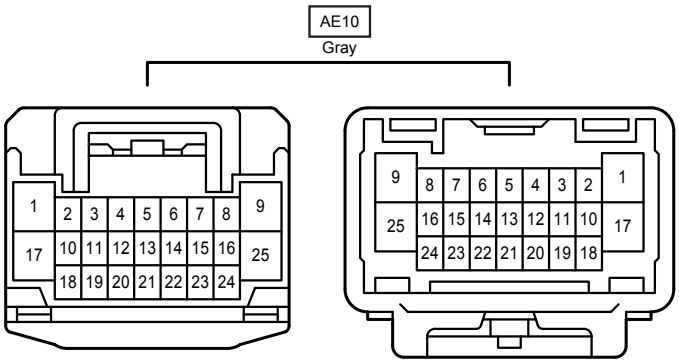
AE10
Gray
1
2
3
4
5
6
7
8
9
17
10
11
12
13
14
15
16
25
18
19
20
21
22
23
24
9
8
7
6
5
4
3
2
1
25
16
15
14
13
12
11
10
17
24
23
22
21
20
19
18

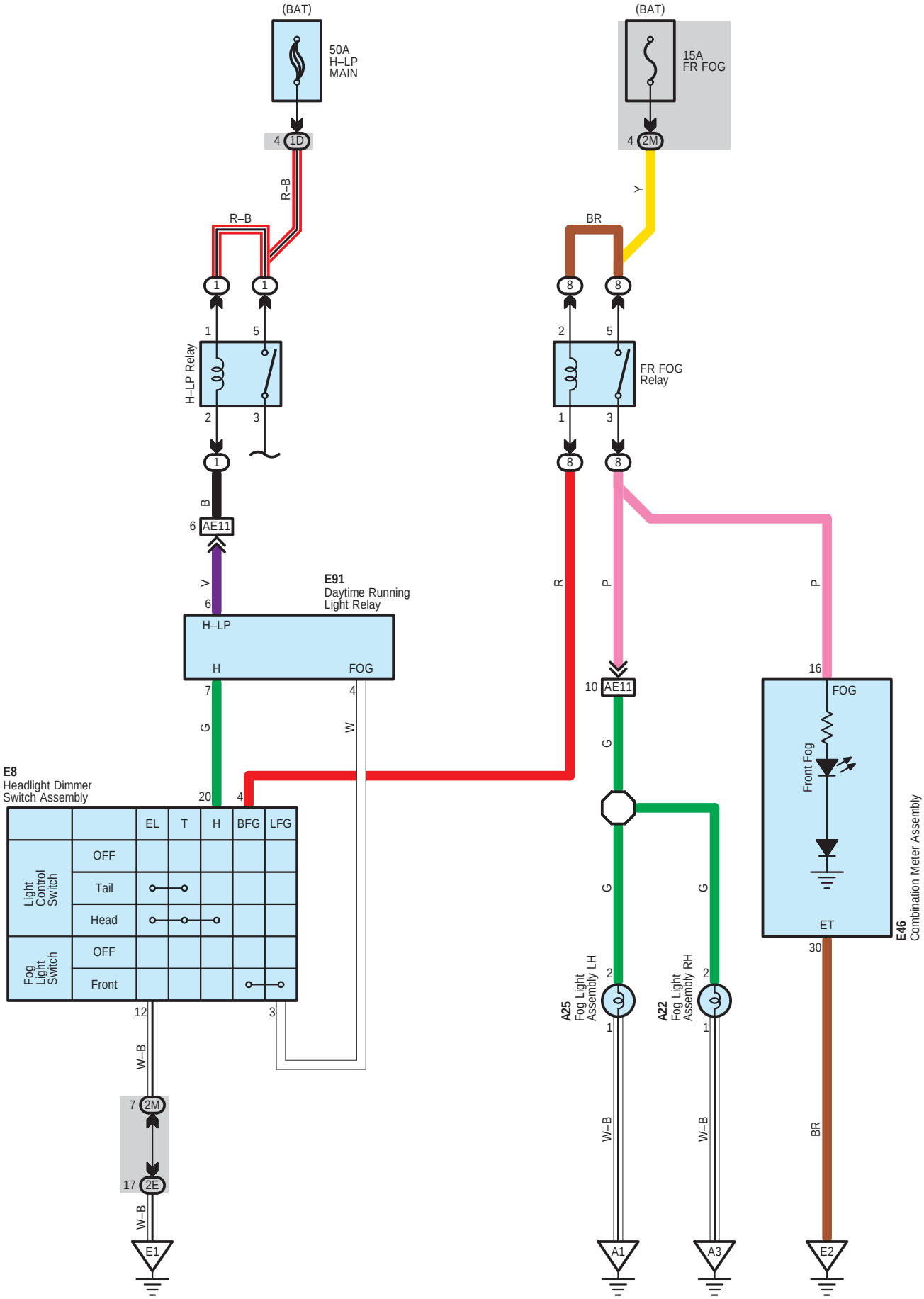
(BAT)
50A
H–LP
MAIN
4 1D
R–B
R–B
1
1
1
5
H–LP Relay
2
3
1
B
6 AE11
V
6
E91
Daytime Running
Light Relay
H–LP
H
FOG
7
4
G
W
E8
Headlight Dimmer
Switch Assembly
20
4
EL
T
H
BFG
LFG
Light Control Switch
OFF
Tail
Head
Fog Light Switch
OFF
Front
12
3
W–B
7 2M
17 2E
W–B
E1
(BAT)
15A
FR FOG
4 2M
Y
BR
8
8
2
5
FR FOG
Relay
1
3
8
8
R
P
P
10 AE11
G
G
G
A25
Fog Light
Assembly LH
2
1
W–B
A22
Fog Light
Assembly RH
2
1
W–B
A1
A3
16
FOG
Front Fog
ET
30
E46
Combination Meter Assembly
BR
E2

A 22
Black

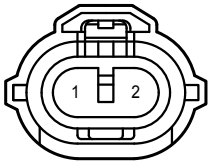

A 25
Black

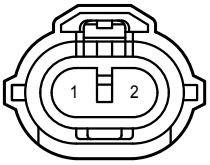

E 8
White

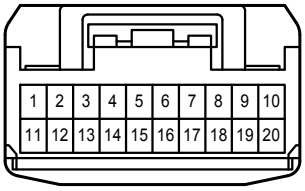

E 46
White

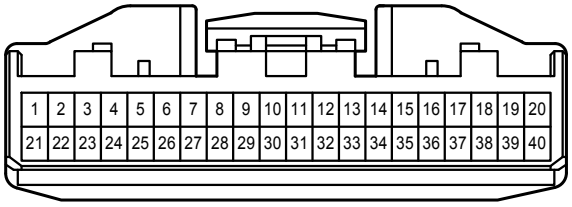

E 91
White

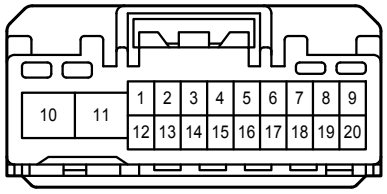

1D
White

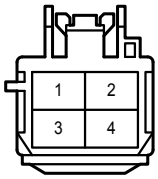

2E
White

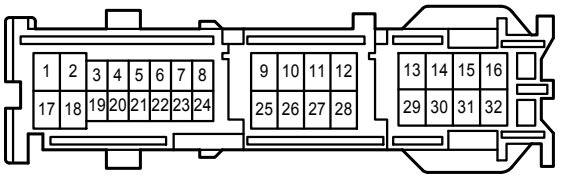

2M
White

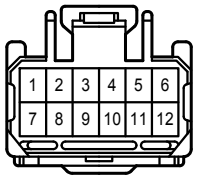

AE11
White

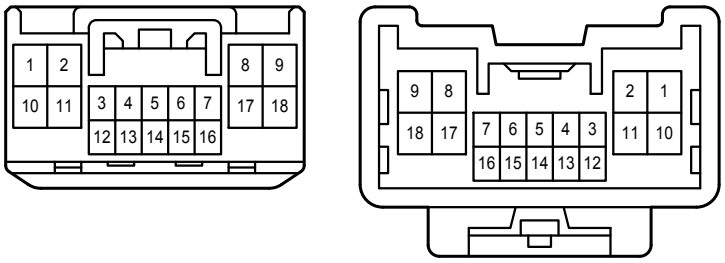

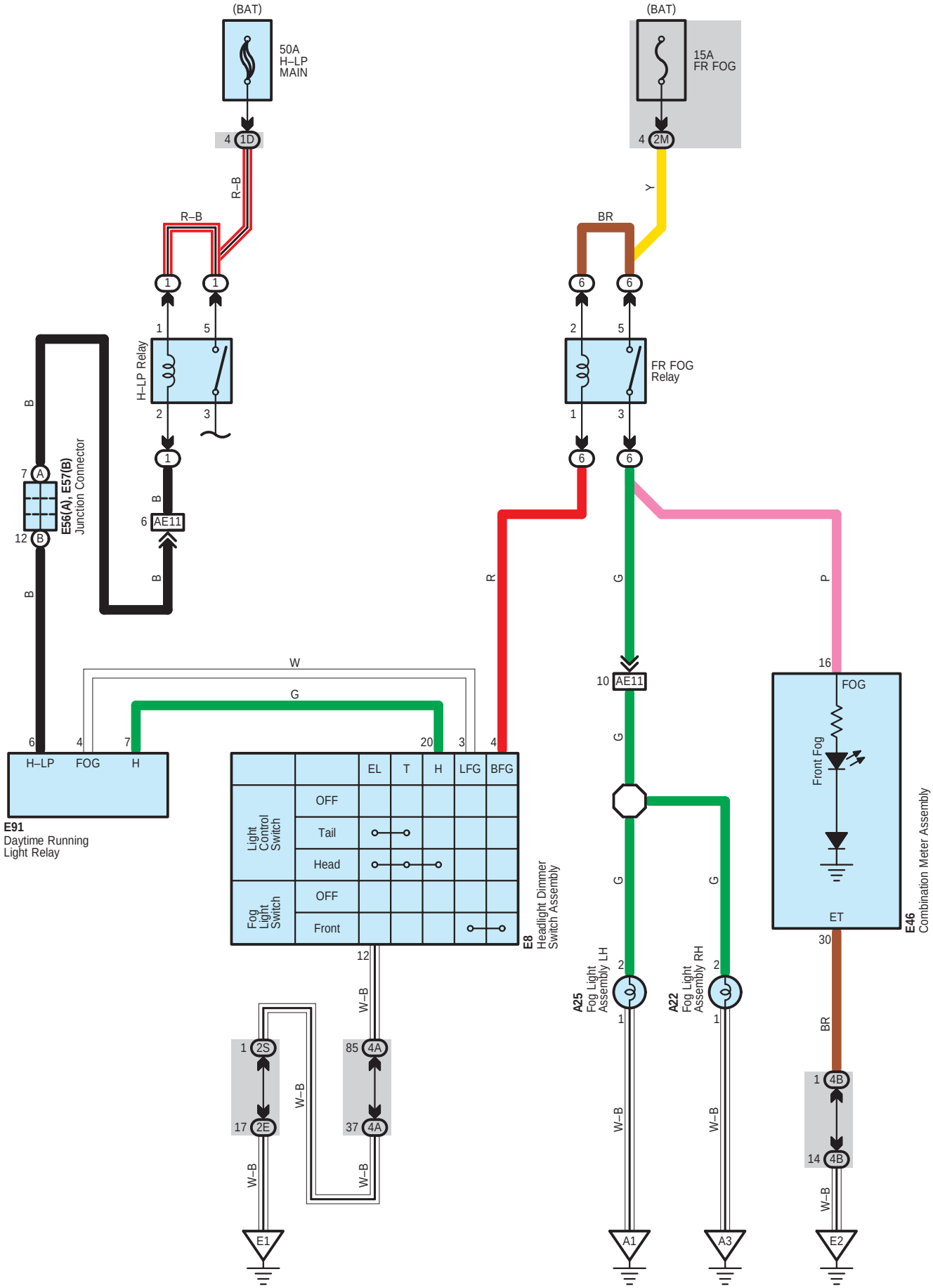
(BAT)
50A
H–LP
MAIN
4 1D
R–B
R–B
1
1
1
5
H–LP Relay
2
3
1
B
B
6 AE11
B
B
7 A
12 B
E56(A), E57(B)
Junction Connector
W
G
6
4
7
H–LP
FOG
H
E91
Daytime Running
Light Relay
20
3
4
EL
T
H
LFG
BFG
Light Control Switch
OFF
Tail
Head
Fog Light Switch
OFF
Front
E8
Headlight Dimmer
Switch Assembly
12
W–B
1 2S
17 2E
W–B
W–B
85 4A
37 4A
W–B
E1
(BAT)
15A
FR FOG
4 2M
Y
BR
6
6
2
5
FR FOG
Relay
1
3
6
6
R
G
P
10 AE11
G
G
G
A25
Fog Light
Assembly LH
2
1
W–B
A1
A22
Fog Light
Assembly RH
2
1
W–B
A3
16
FOG
Front Fog
ET
E46
Combination Meter Assembly
30
BR
1 4B
14 4B
W–B
E2

A 22
Black

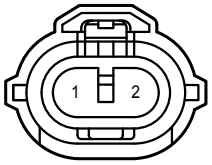

A 25
Black

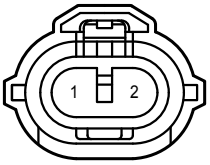

E 8
White

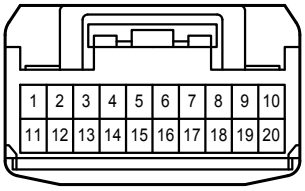

E 46
White

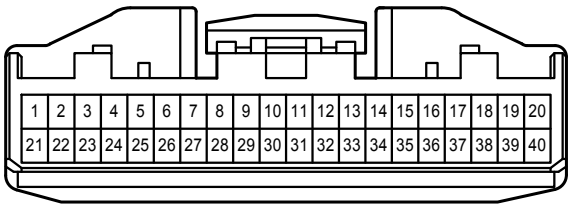

E 56
White

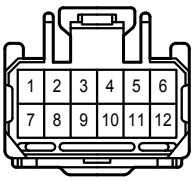

E 57
White

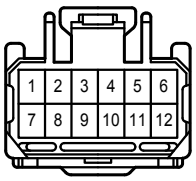

E 91
White

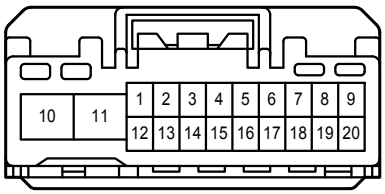

1D
White

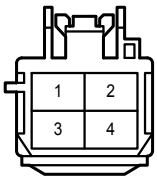

2E
White

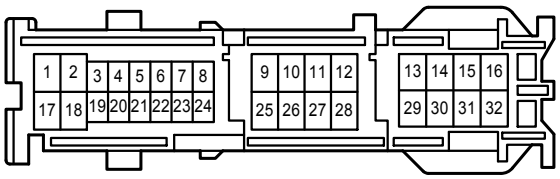

2M
White

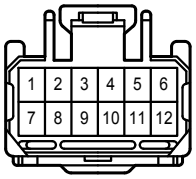

2S
White

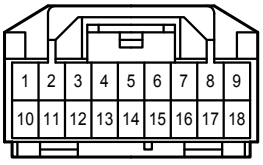

4A
White

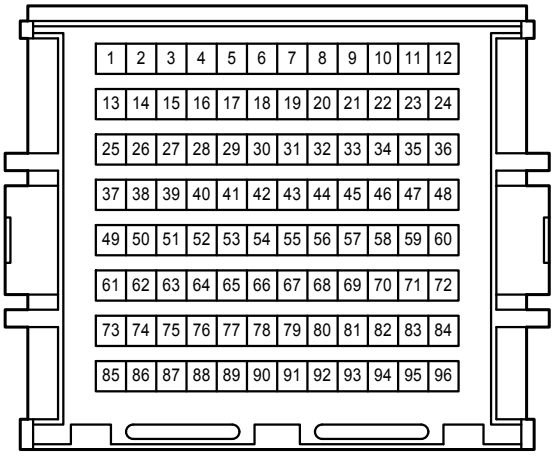

4B
White

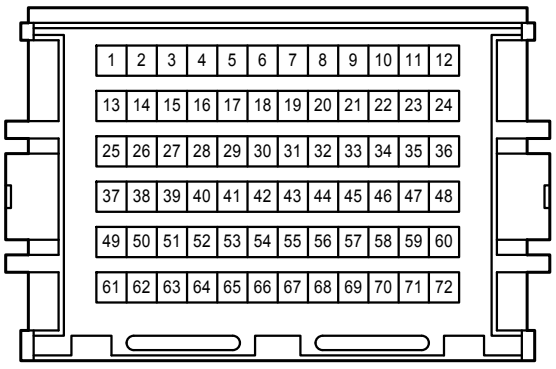

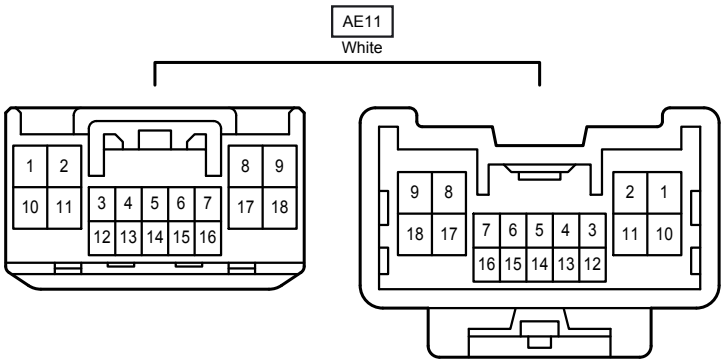
AE11
White
1 2
10 11
3 4 5 6 7
12 13 14 15 16
8 9
17 18
9 8
18 17
7 6 5 4 3
16 15 14 13 12
2 1
11 10

E9(A), E10(B)
Windshield Wiper Switch Assembly

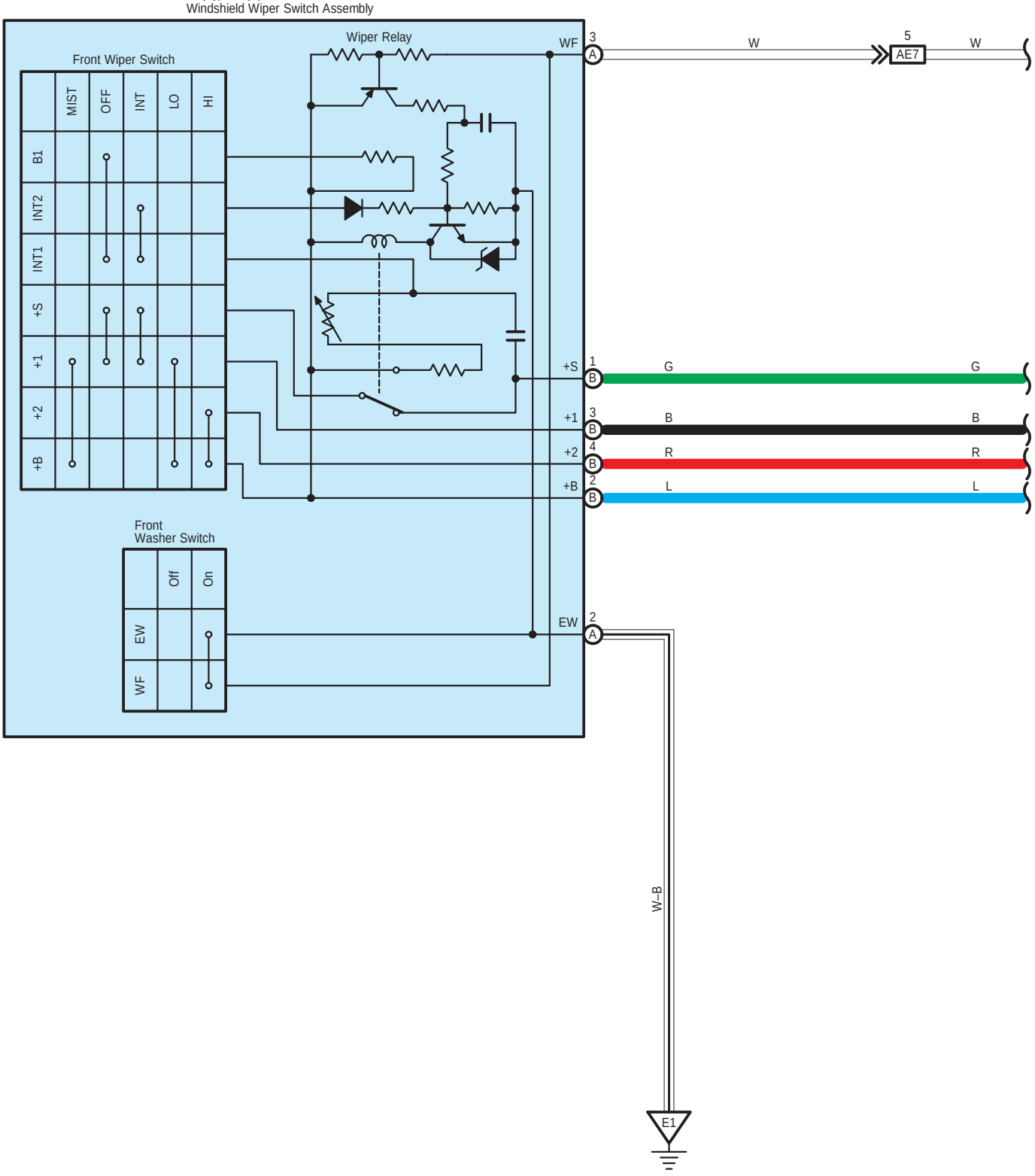

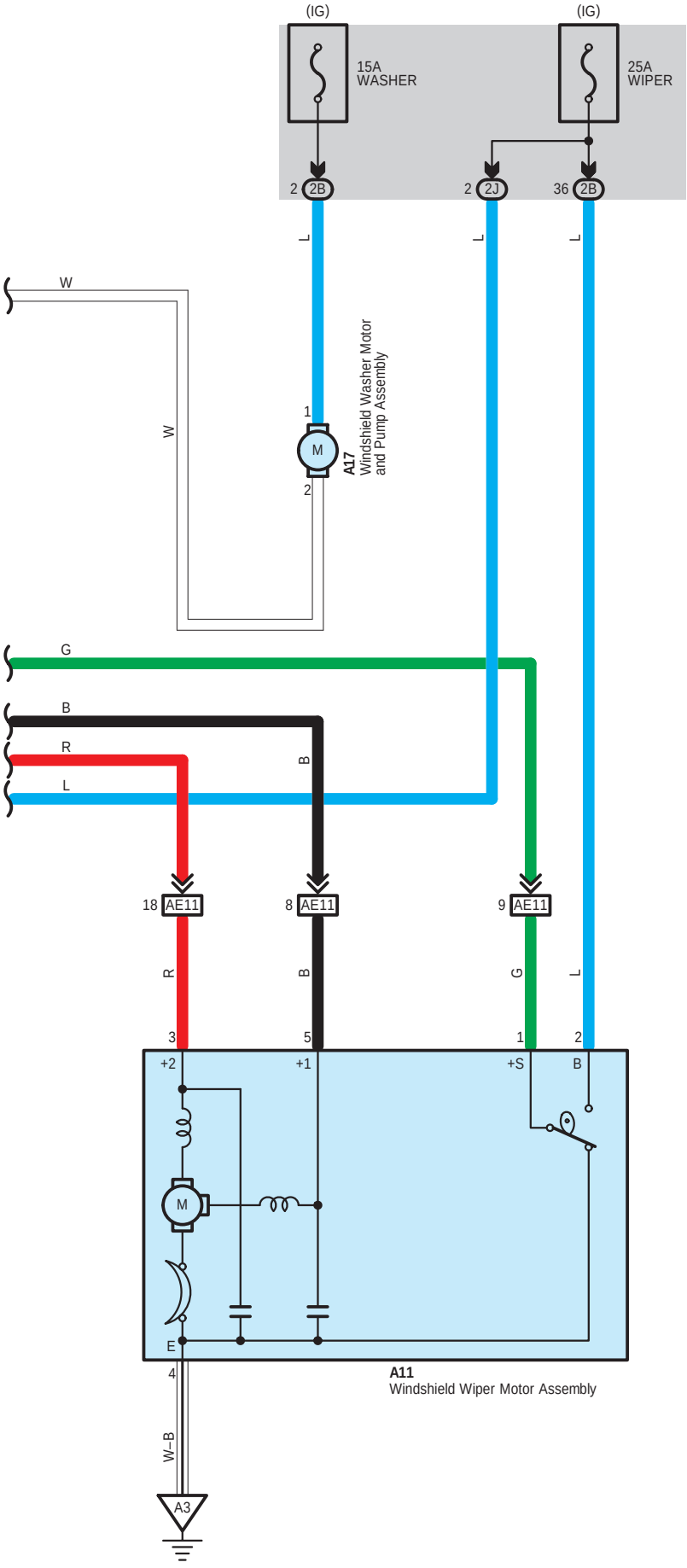
(IG)
(IG)
15A
WASHER
25A
WIPER
2 2B
2 2J
36 2B
L
L
L
W
W
1
M
2
A17
Windshield Washer Motor
and Pump Assembly
G
B
R
L
B
18 AE11
8 AE11
9 AE11
R
B
G
L
3
5
1
2
+2
+1
+S
B
M
E
4
A11
Windshield Wiper Motor Assembly
W–B
A3

A 11
White



A 17
White

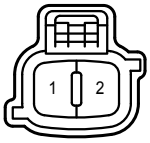

E 9
White

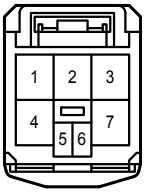

E 10
White



2B
White

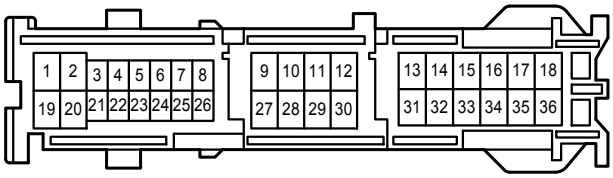

2J
White

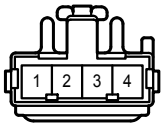

AE7
Blue

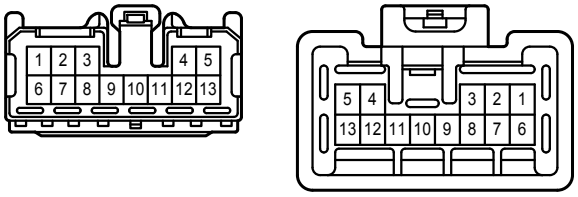

AE11
White

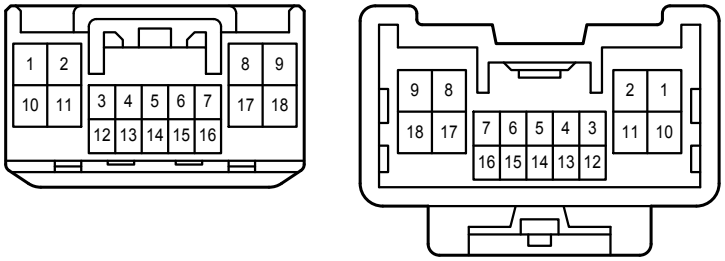

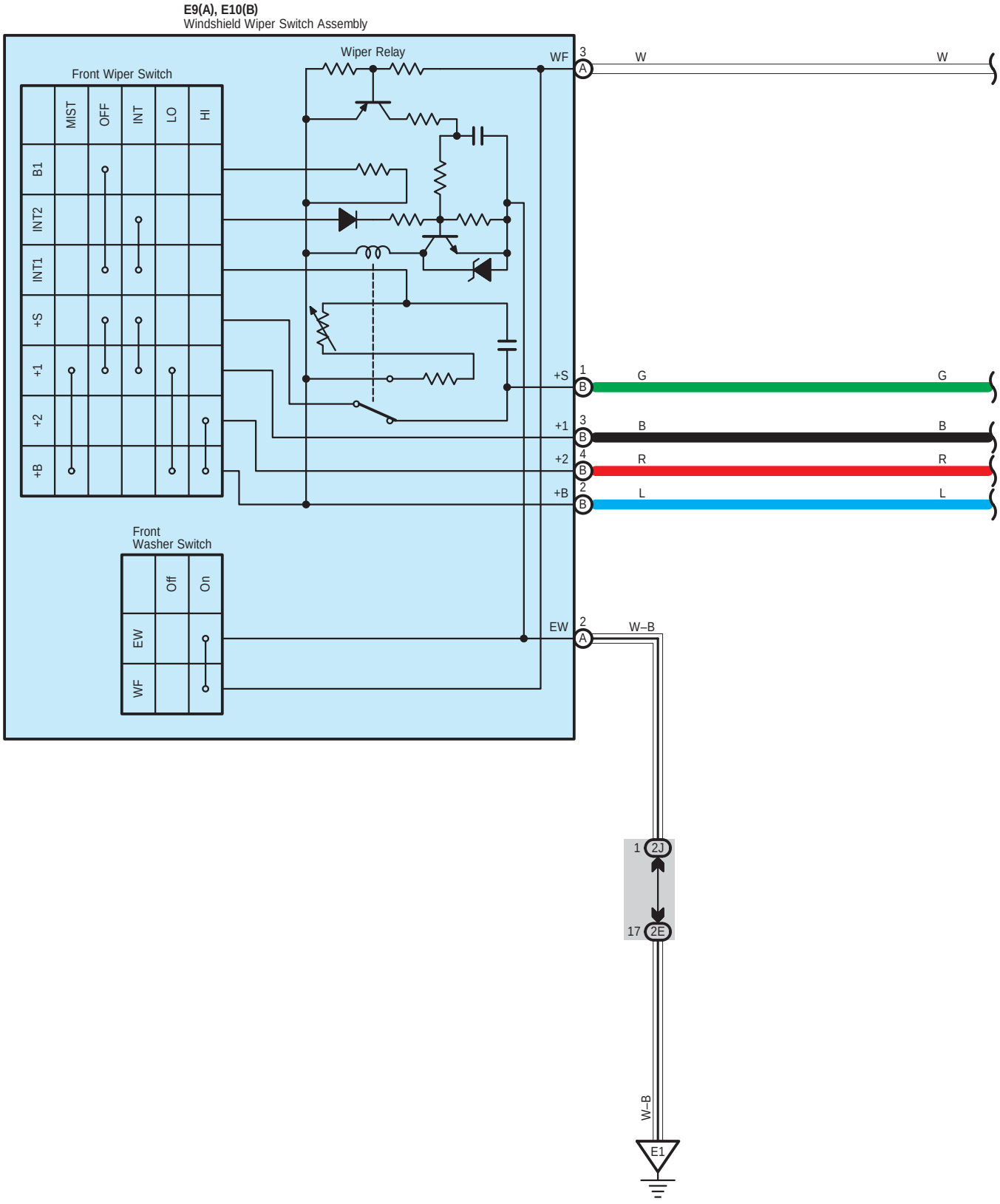
E9(A), E10(B)
Windshield Wiper Switch Assembly
Wiper Relay
Front Wiper Switch
MIST
OFF
INT
LO
HI
B1
INT2
INT1
+S
+1
+2
+B
Front
Washer Switch
Off
On
EW
WF
WF
3
A
W
W
+S
1
B
G
G
+1
3
B
B
B
+2
4
B
R
R
+B
2
B
L
L
EW
2
A
W–B
1
2J
17
2E
W–B
E1

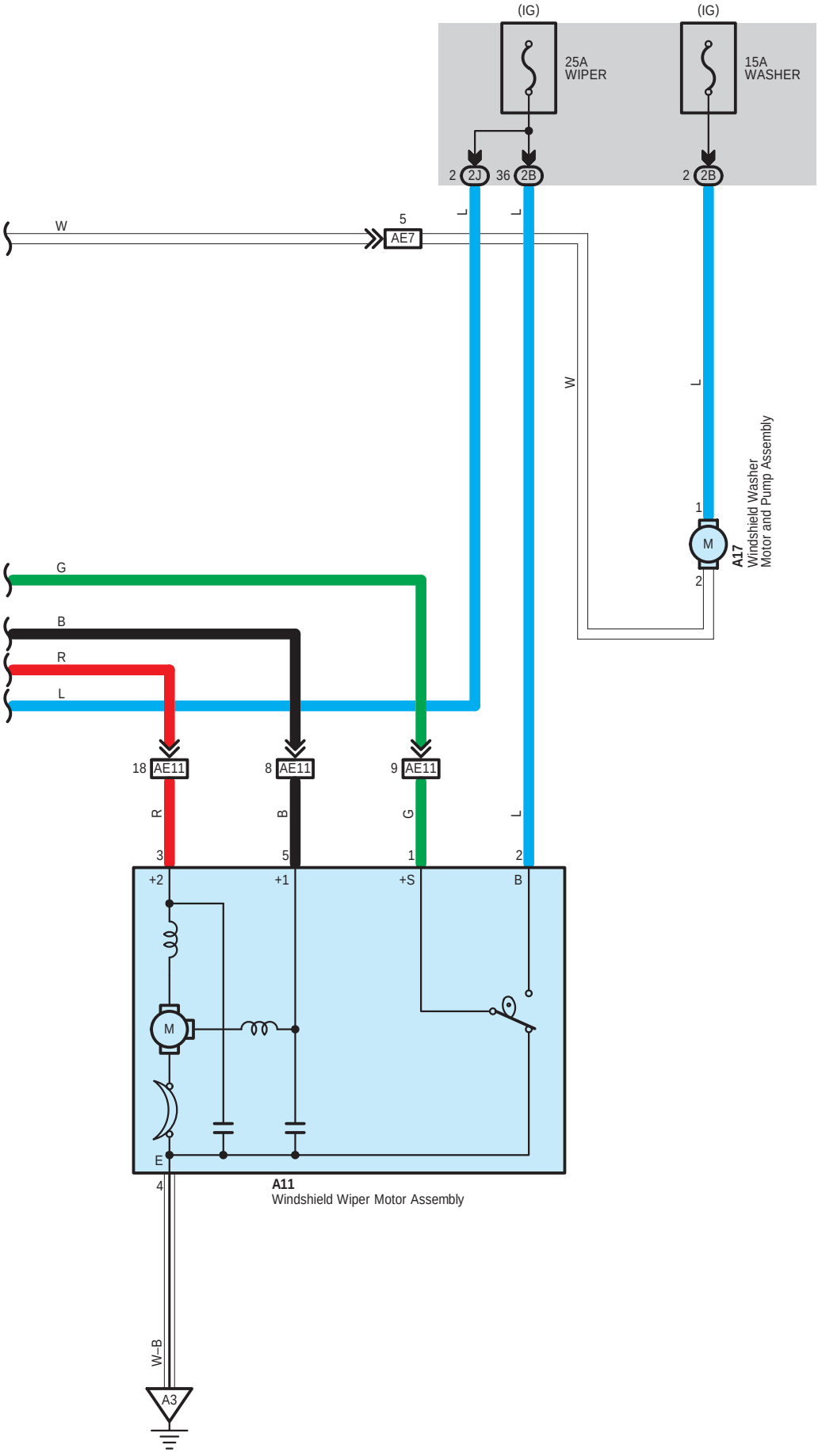
(IG)
(IG)
25A
WIPER
15A
WASHER
2 2J
36 2B
2 2B
W
5
AE7
L
L
W
L
1
M
2
A17
Windshield Washer
Motor and Pump Assembly
G
B
R
L
18 AE11
8 AE11
9 AE11
R
B
G
L
3
5
1
2
+2
+1
+S
B
M
E
4
A11
Windshield Wiper Motor Assembly
W–B
A3

A 11
White



A 17
White

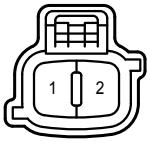

E 9
White

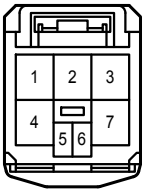

E 10
White



2B
White

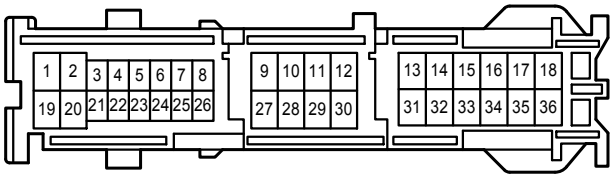

2E
White

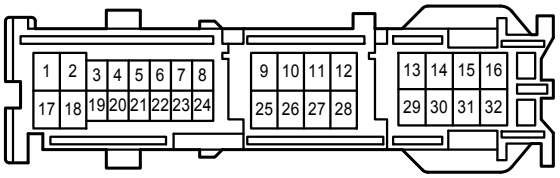

2J
White

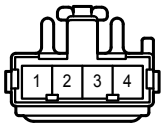

AE7
Blue

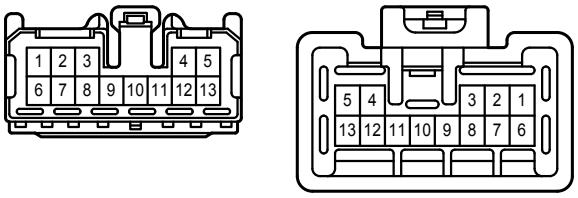

AE11
White

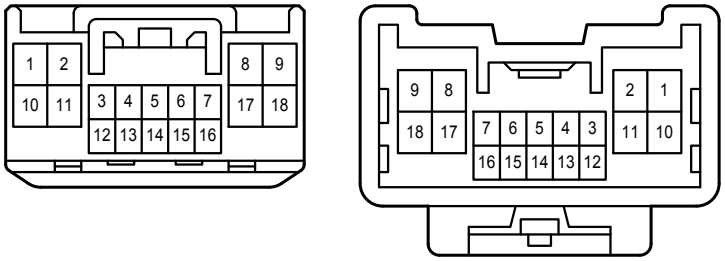

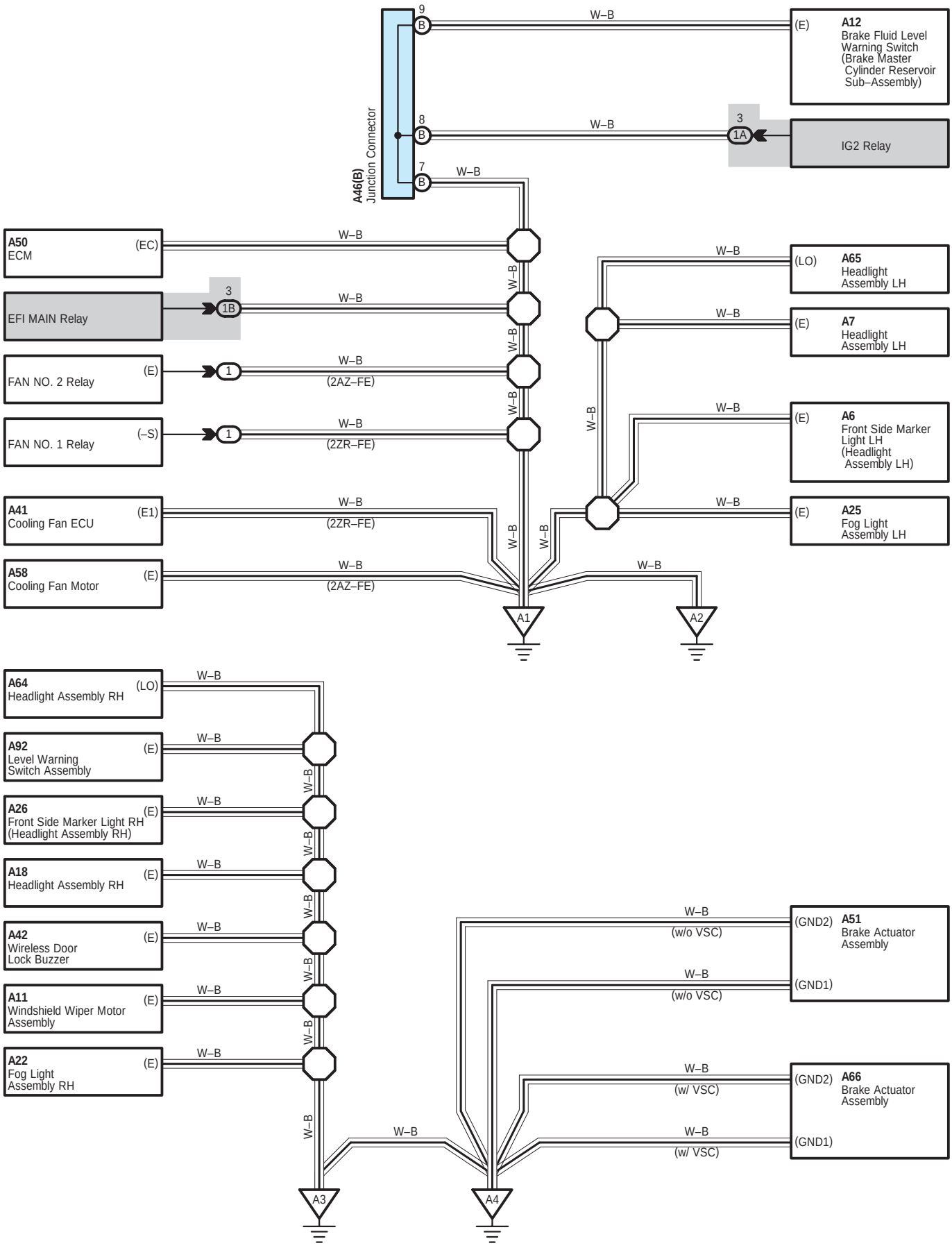
A46(B) Junction Connector
9
B
8
B
7
B
W–B
(E)
A12
Brake Fluid Level Warning Switch (Brake Master Cylinder Reservoir Sub–Assembly)
3
1A
IG2 Relay
A50
ECM
(EC)
EFI MAIN Relay
3
1B
FAN NO. 2 Relay
(E)
1
(2AZ–FE)
FAN NO. 1 Relay
(–S)
1
(2ZR–FE)
A41
Cooling Fan ECU
(E1)
(2ZR–FE)
A58
Cooling Fan Motor
(E)
(2AZ–FE)
(LO)
A65
Headlight Assembly LH
(E)
A7
Headlight Assembly LH
(E)
A6
Front Side Marker Light LH (Headlight Assembly LH)
(E)
A25
Fog Light Assembly LH
A1
A2
A64
Headlight Assembly RH
(LO)
A92
Level Warning Switch Assembly
(E)
A26
Front Side Marker Light RH (Headlight Assembly RH)
(E)
A18
Headlight Assembly RH
(E)
A42
Wireless Door Lock Buzzer
(E)
A11
Windshield Wiper Motor Assembly
(E)
A22
Fog Light Assembly RH
(E)
A3
A4
(GND2)
A51
Brake Actuator Assembly
(GND1)
(w/o VSC)
(GND2)
A66
Brake Actuator Assembly
(GND1)
(w/ VSC)

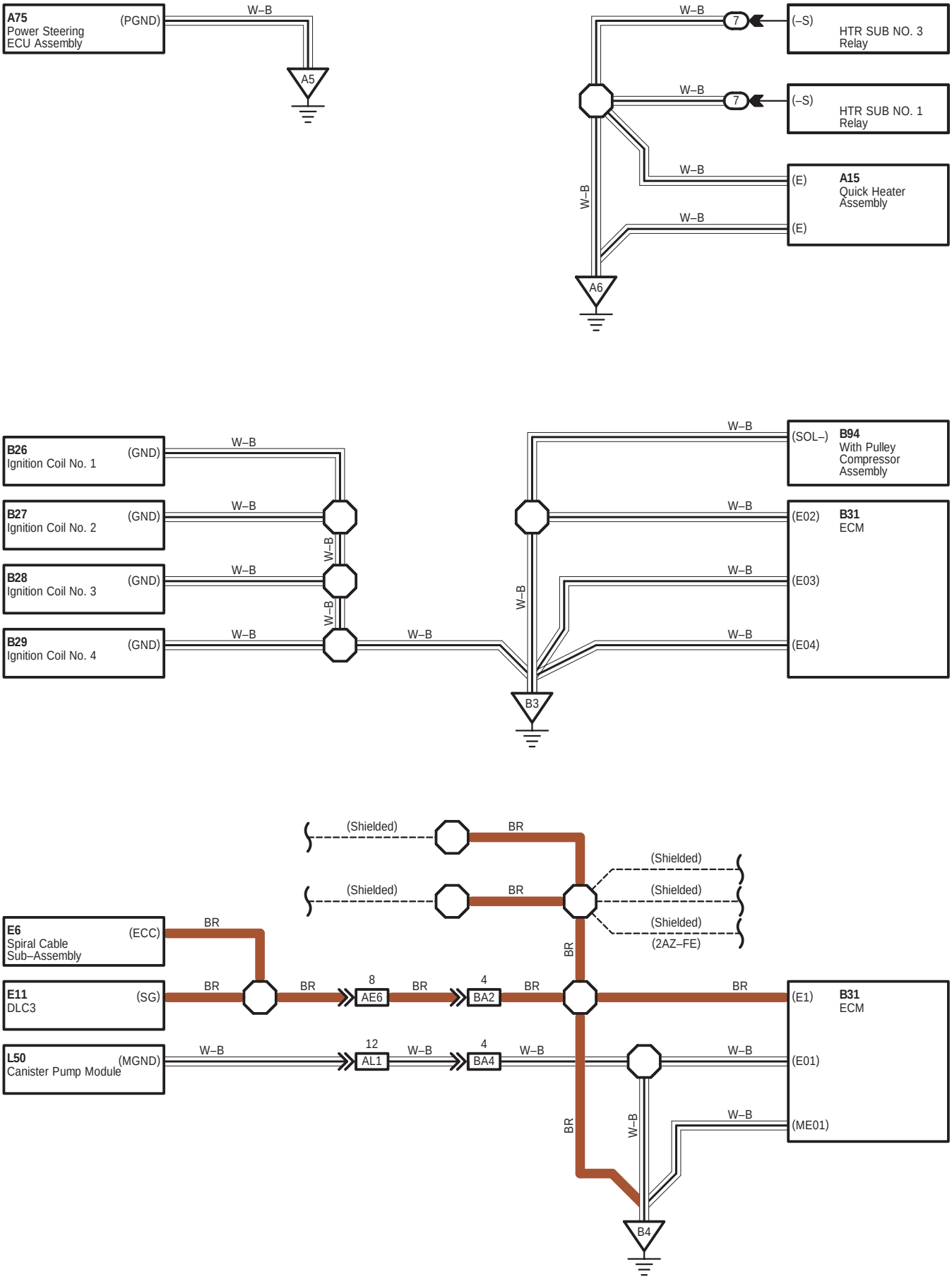
A75
Power Steering
ECU Assembly
(PGND)
W–B
A5
W–B
7
(–S)
HTR SUB NO. 3
Relay
W–B
7
(–S)
HTR SUB NO. 1
Relay
W–B
(E)
A15
Quick Heater
Assembly
W–B
(E)
W–B
A6
B26
Ignition Coil No. 1
(GND)
B27
Ignition Coil No. 2
(GND)
B28
Ignition Coil No. 3
(GND)
B29
Ignition Coil No. 4
(GND)
W–B
W–B
W–B
B3
W–B
(SOL–)
B94
With Pulley
Compressor
Assembly
W–B
(E02)
B31
ECM
W–B
(E03)
W–B
(E04)
(Shielded)
BR
(Shielded)
BR
(Shielded)
(Shielded)
(Shielded)
(2AZ–FE)
E6
Spiral Cable
Sub–Assembly
(ECC)
E11
DLC3
(SG)
L50
Canister Pump Module
(MGND)
BR
BR
BR
8
AE6
BR
4
BA2
BR
BR
12
AL1
W–B
4
BA4
W–B
W–B
B4
(E1)
B31
ECM
W–B
(E01)
W–B
(ME01)

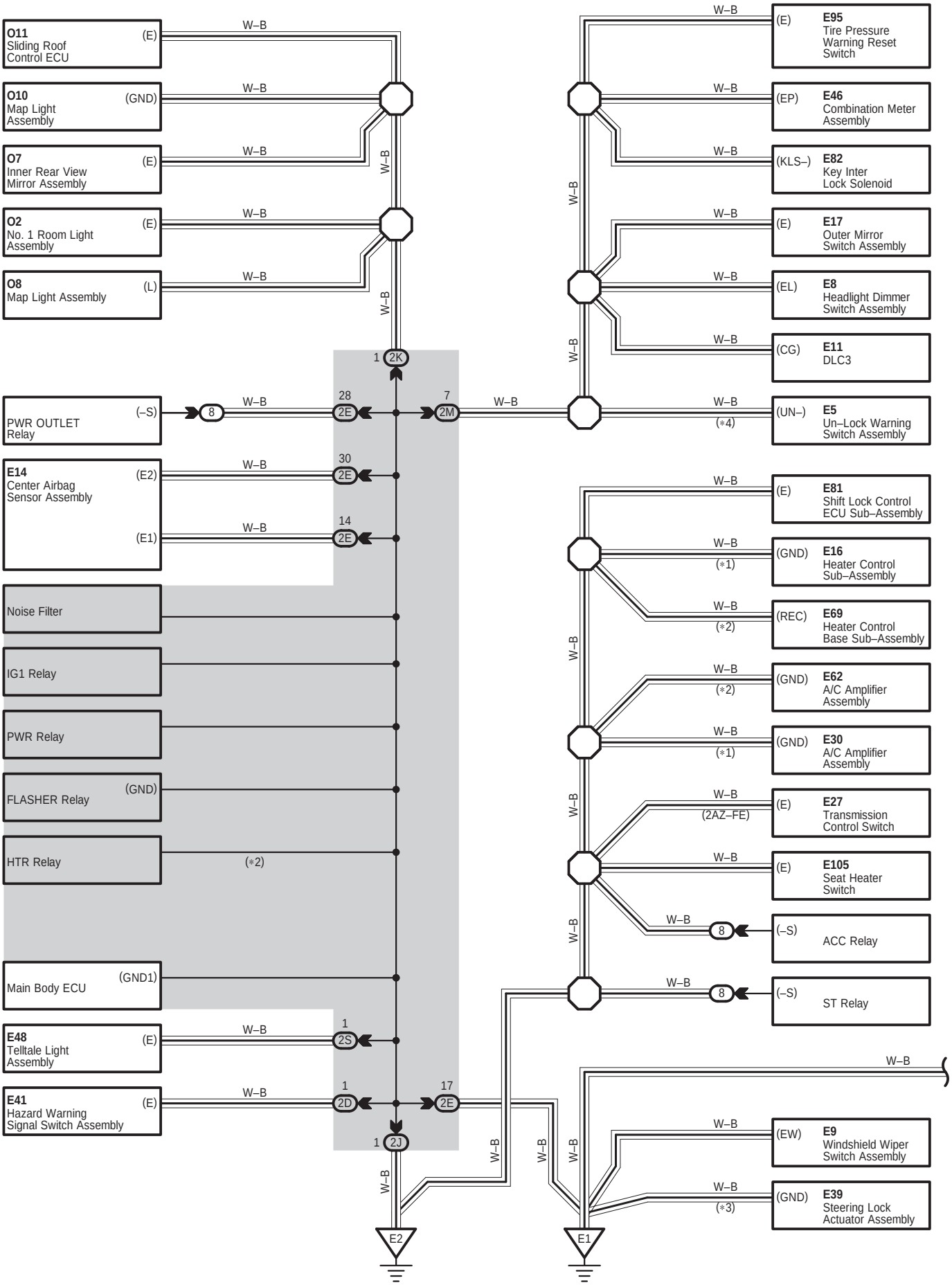
O11 Sliding Roof Control ECU (E)
O10 Map Light Assembly (GND)
O7 Inner Rear View Mirror Assembly (E)
O2 No. 1 Room Light Assembly (E)
O8 Map Light Assembly (L)
PWR OUTLET Relay (–S)
E14 Center Airbag Sensor Assembly (E2) (E1)
Noise Filter
IG1 Relay
PWR Relay
FLASHER Relay (GND)
HTR Relay (*2)
Main Body ECU (GND1)
E48 Telltale Light Assembly (E)
E41 Hazard Warning Signal Switch Assembly (E)
W–B
1 2K
28 2E
7 2M
30 2E
14 2E
1 2S
1 2D
17 2E
1 2J
8
E2
E1
E95 Tire Pressure Warning Reset Switch (E)
E46 Combination Meter Assembly (EP)
E82 Key Inter Lock Solenoid (KLS–)
E17 Outer Mirror Switch Assembly (E)
E8 Headlight Dimmer Switch Assembly (EL)
E11 DLC3 (CG)
E5 Un–Lock Warning Switch Assembly (UN–) (*4)
E81 Shift Lock Control ECU Sub–Assembly (E)
E16 Heater Control Sub–Assembly (GND) (*1)
E69 Heater Control Base Sub–Assembly (REC) (*2)
E62 A/C Amplifier Assembly (GND) (*2)
E30 A/C Amplifier Assembly (GND) (*1)
E27 Transmission Control Switch (E) (2AZ–FE)
E105 Seat Heater Switch (E)
ACC Relay (–S)
ST Relay (–S)
E9 Windshield Wiper Switch Assembly (EW)
E39 Steering Lock Actuator Assembly (GND) (*3)

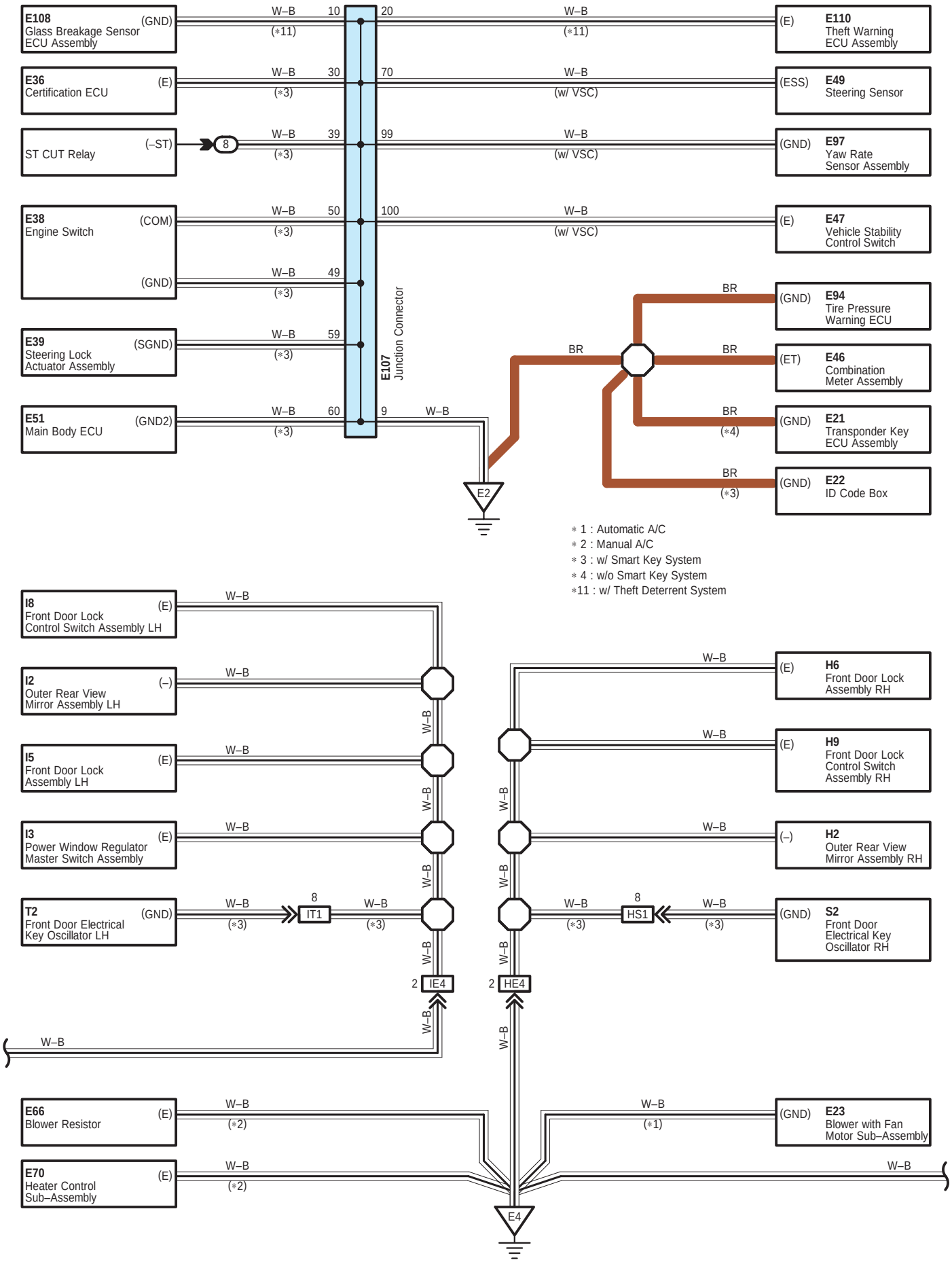
E108 (GND) Glass Breakage Sensor ECU Assembly
E36 (E) Certification ECU
(–ST) ST CUT Relay
E38 (COM) Engine Switch
(GND)
E39 (SGND) Steering Lock Actuator Assembly
E51 (GND2) Main Body ECU
E107 Junction Connector
E2
E110 (E) Theft Warning ECU Assembly
E49 (ESS) Steering Sensor
E97 (GND) Yaw Rate Sensor Assembly
E47 (E) Vehicle Stability Control Switch
E94 (GND) Tire Pressure Warning ECU
E46 (ET) Combination Meter Assembly
E21 (GND) Transponder Key ECU Assembly
E22 (GND) ID Code Box
W–B
BR
(*11)
(*3)
(w/ VSC)
(*4)
* 1 : Automatic A/C
* 2 : Manual A/C
* 3 : w/ Smart Key System
* 4 : w/o Smart Key System
*11 : w/ Theft Deterrent System
I8 (E) Front Door Lock Control Switch Assembly LH
I2 (–) Outer Rear View Mirror Assembly LH
I5 (E) Front Door Lock Assembly LH
I3 (E) Power Window Regulator Master Switch Assembly
T2 (GND) Front Door Electrical Key Oscillator LH
IT1
IE4
HE4
HS1
E4
H6 (E) Front Door Lock Assembly RH
H9 (E) Front Door Lock Control Switch Assembly RH
H2 (–) Outer Rear View Mirror Assembly RH
S2 (GND) Front Door Electrical Key Oscillator RH
E66 (E) Blower Resistor
E70 (E) Heater Control Sub–Assembly
E23 (GND) Blower with Fan Motor Sub–Assembly
(*1)
(*2)

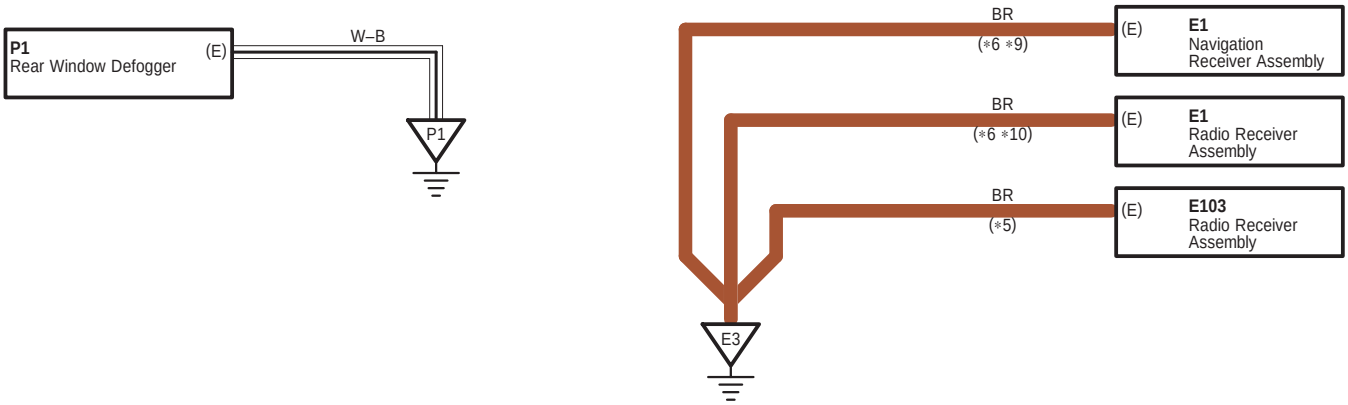

∗ 3 : w/ Smart Key System
∗ 4 : w/o Smart Key System
∗ 5 : Separate Type Amplifier
∗ 6 : Built–In Type Amplifier
∗ 7 : w/ Rear Spoiler
∗ 8 : w/o Rear Spoiler
∗ 9 : w/ Navigation System
∗10 : w/o Navigation System

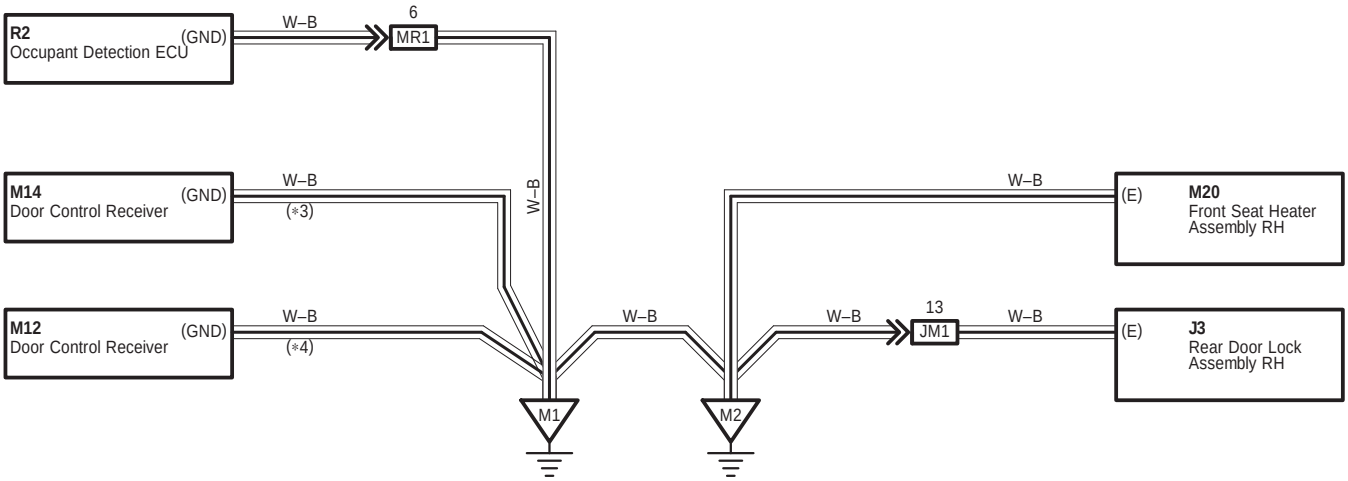

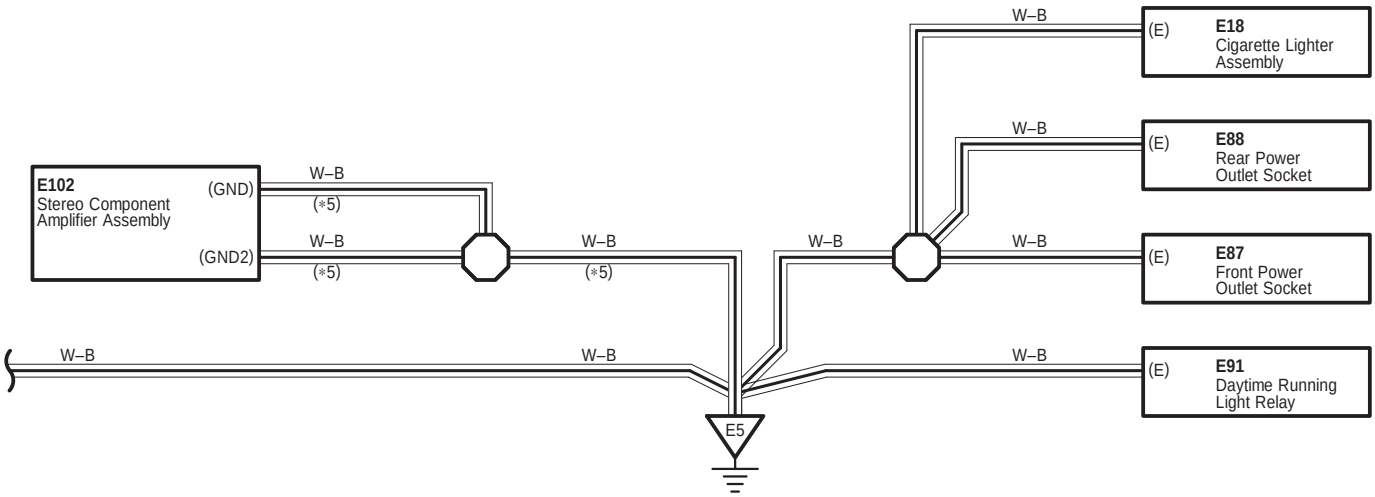

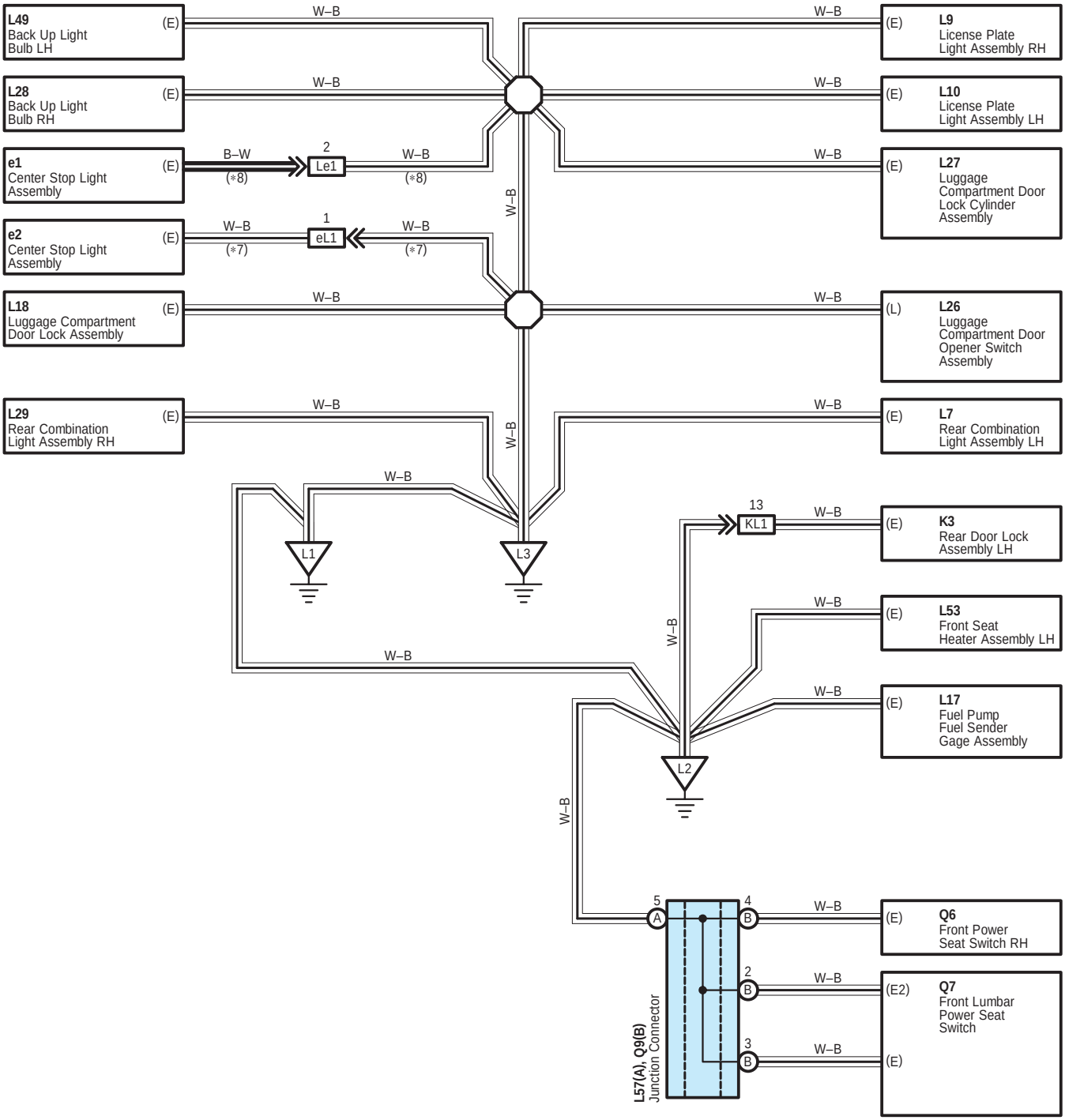
L49
Back Up Light
Bulb LH
(E)
W–B
L28
Back Up Light
Bulb RH
(E)
W–B
e1
Center Stop Light
Assembly
(E)
B–W
(∗8)
2
Le1
W–B
(∗8)
e2
Center Stop Light
Assembly
(E)
W–B
(∗7)
1
eL1
W–B
(∗7)
L18
Luggage Compartment
Door Lock Assembly
(E)
W–B
L29
Rear Combination
Light Assembly RH
(E)
W–B
W–B
W–B
L1
L3
W–B
W–B
W–B
(E)
L9
License Plate
Light Assembly RH
W–B
(E)
L10
License Plate
Light Assembly LH
W–B
(E)
L27
Luggage
Compartment Door
Lock Cylinder
Assembly
W–B
(L)
L26
Luggage
Compartment Door
Opener Switch
Assembly
W–B
(E)
L7
Rear Combination
Light Assembly LH
13
KL1
W–B
(E)
K3
Rear Door Lock
Assembly LH
W–B
(E)
L53
Front Seat
Heater Assembly LH
W–B
(E)
L17
Fuel Pump
Fuel Sender
Gage Assembly
L2
W–B
5
A
4
B
W–B
(E)
Q6
Front Power
Seat Switch RH
2
B
W–B
(E2)
Q7
Front Lumbar
Power Seat
Switch
3
B
W–B
(E)
L57(A), Q9(B)
Junction Connector

A 46
White

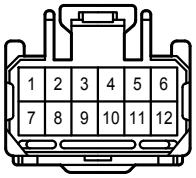

E107
White

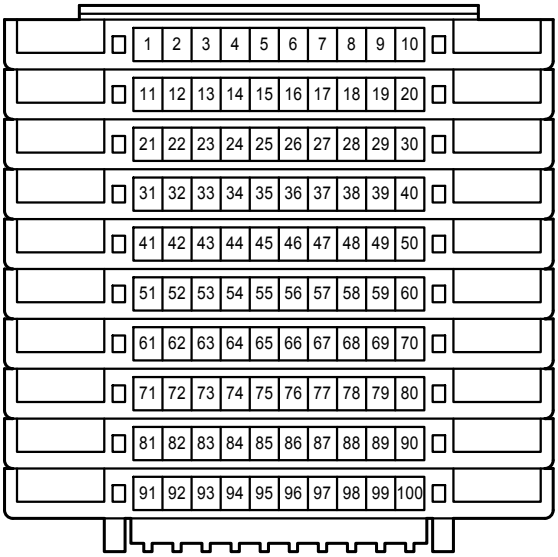

L 57
White

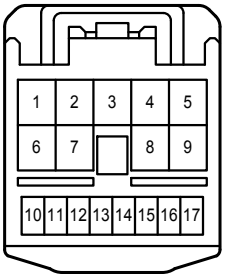

Q 9
White

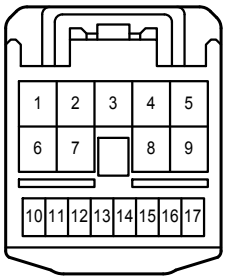

1A
White

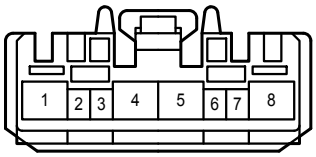

1B
White

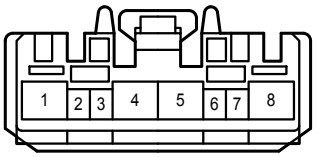

2D
White

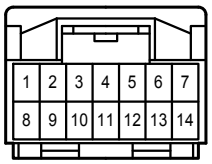

2E
White

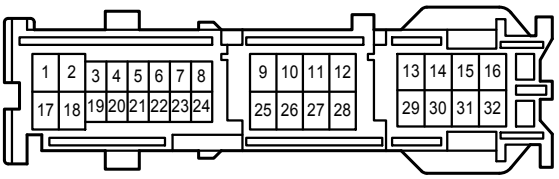

2J
White

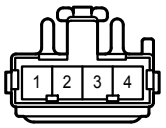

2K
White



2M
White

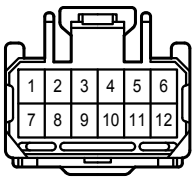

2S
White

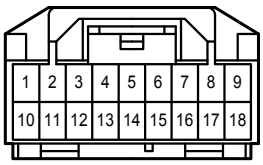

AE6
Gray

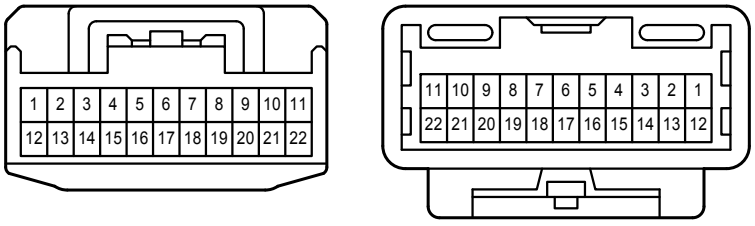

AL1
White

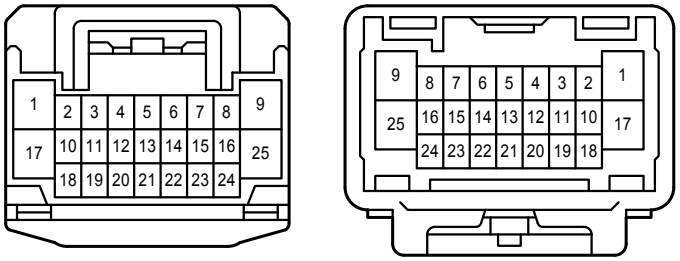

BA2
White

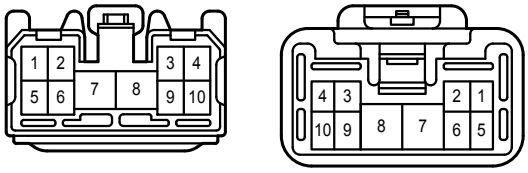

BA4
Gray

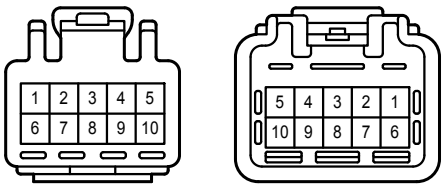

HE4
White

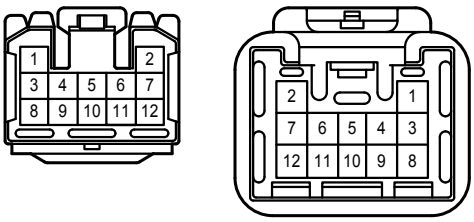

HS1
Gray

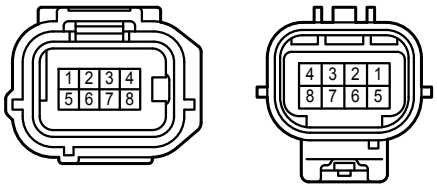

IE4
White

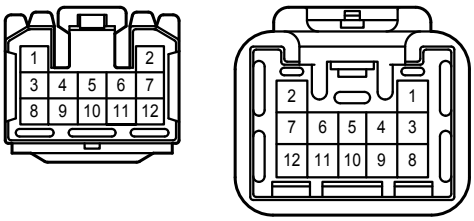

IT1
Gray

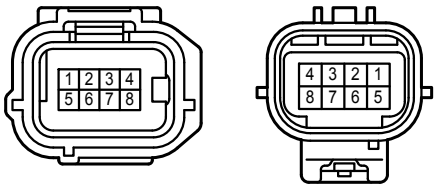

JM1
White

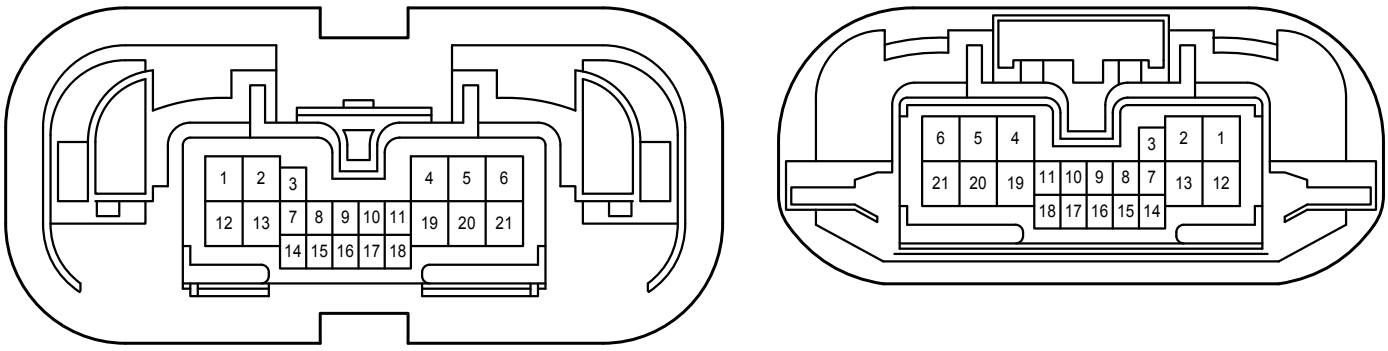

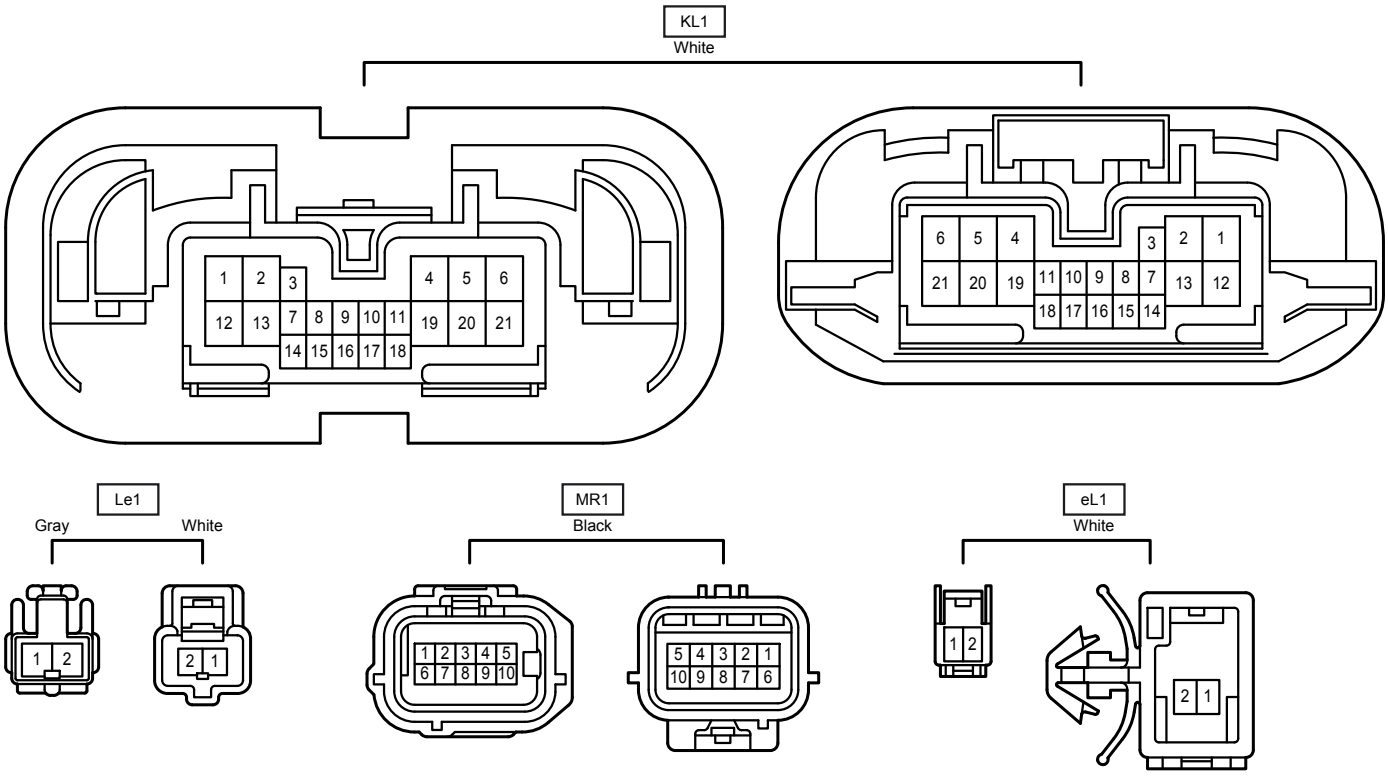
KL1
White
1 2 3 4 5 6
12 13 7 8 9 10 11 19 20 21
14 15 16 17 18
6 5 4 3 2 1
21 20 19 11 10 9 8 7 13 12
18 17 16 15 14
Le1
Gray
White
1 2
2 1
MR1
Black
1 2 3 4 5
6 7 8 9 10
5 4 3 2 1
10 9 8 7 6
eL1
White
1 2
2 1

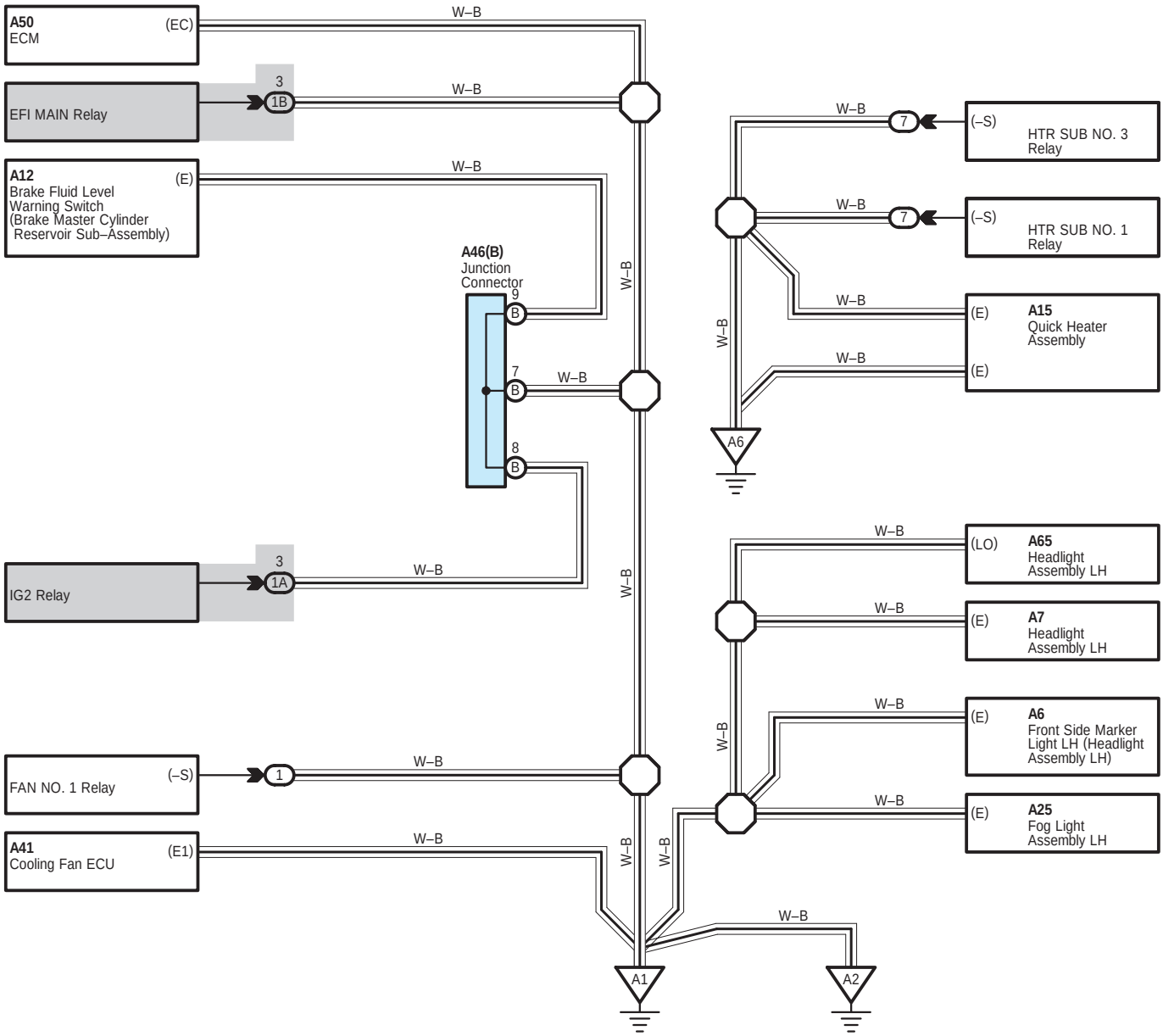
A50
ECM
(EC)
W–B
EFI MAIN Relay
3
1B
A12
Brake Fluid Level
Warning Switch
(Brake Master Cylinder
Reservoir Sub–Assembly)
(E)
A46(B)
Junction
Connector
9
B
7
B
8
B
IG2 Relay
3
1A
FAN NO. 1 Relay
(–S)
1
A41
Cooling Fan ECU
(E1)
A1
A2
A6
7
(–S)
HTR SUB NO. 3
Relay
HTR SUB NO. 1
Relay
(E)
A15
Quick Heater
Assembly
(LO)
A65
Headlight
Assembly LH
A7
A6
Front Side Marker
Light LH (Headlight
Assembly LH)
A25
Fog Light
Assembly LH

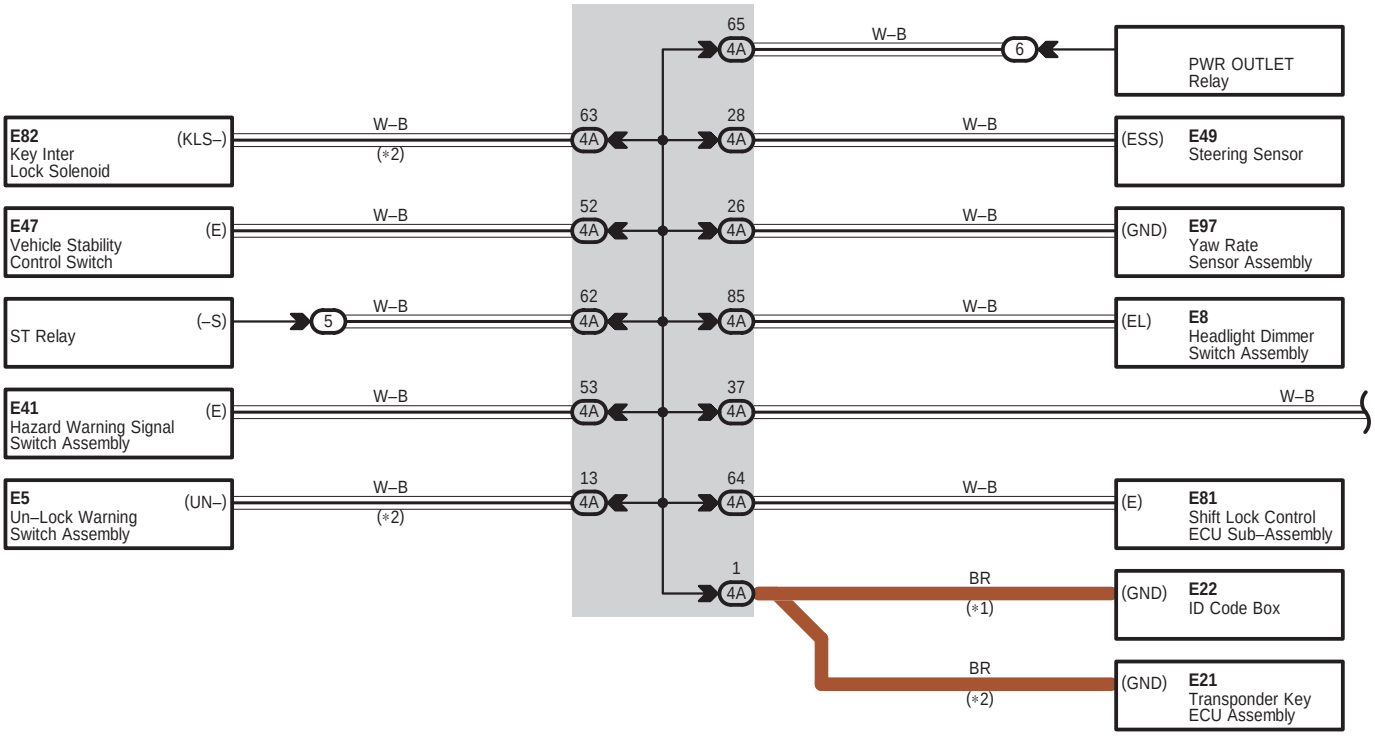

* 1 : w/ Smart Key System
* 2 : w/o Smart Key System

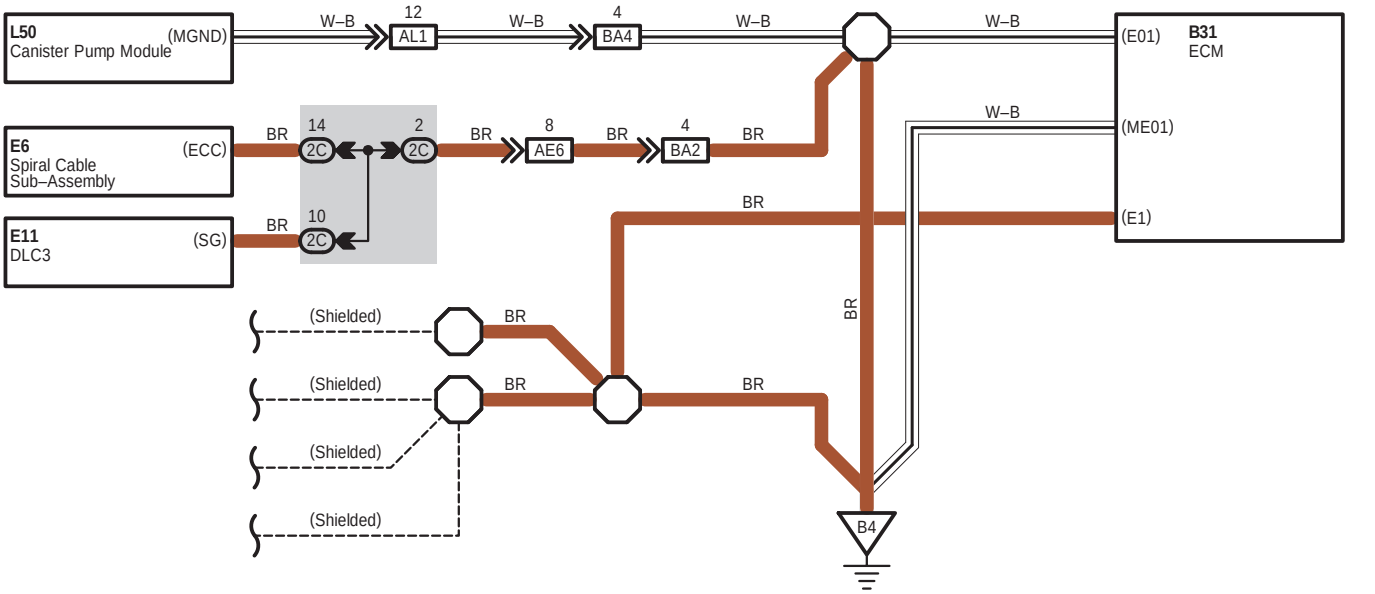

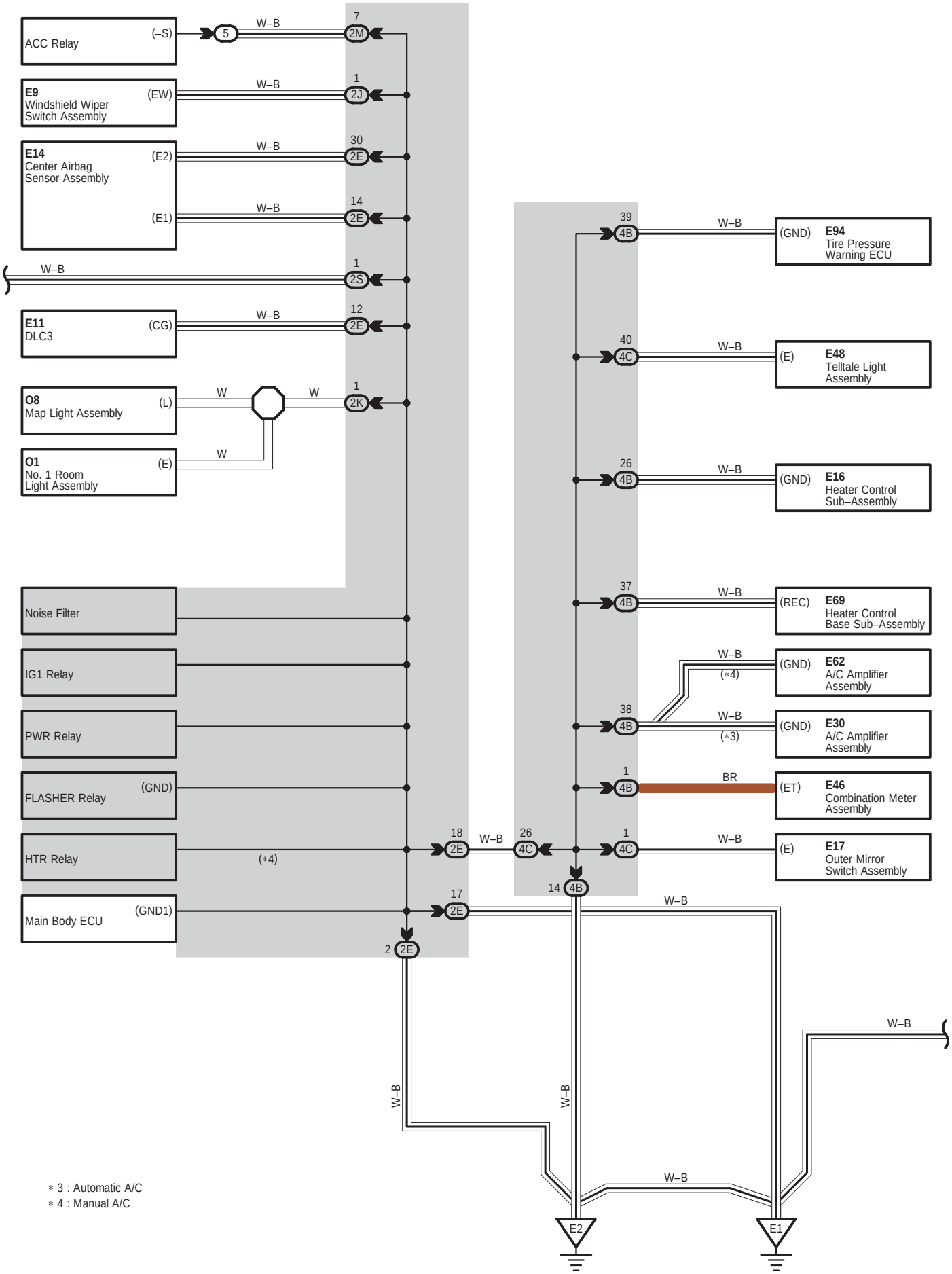

* 3 : Automatic A/C
* 4 : Manual A/C

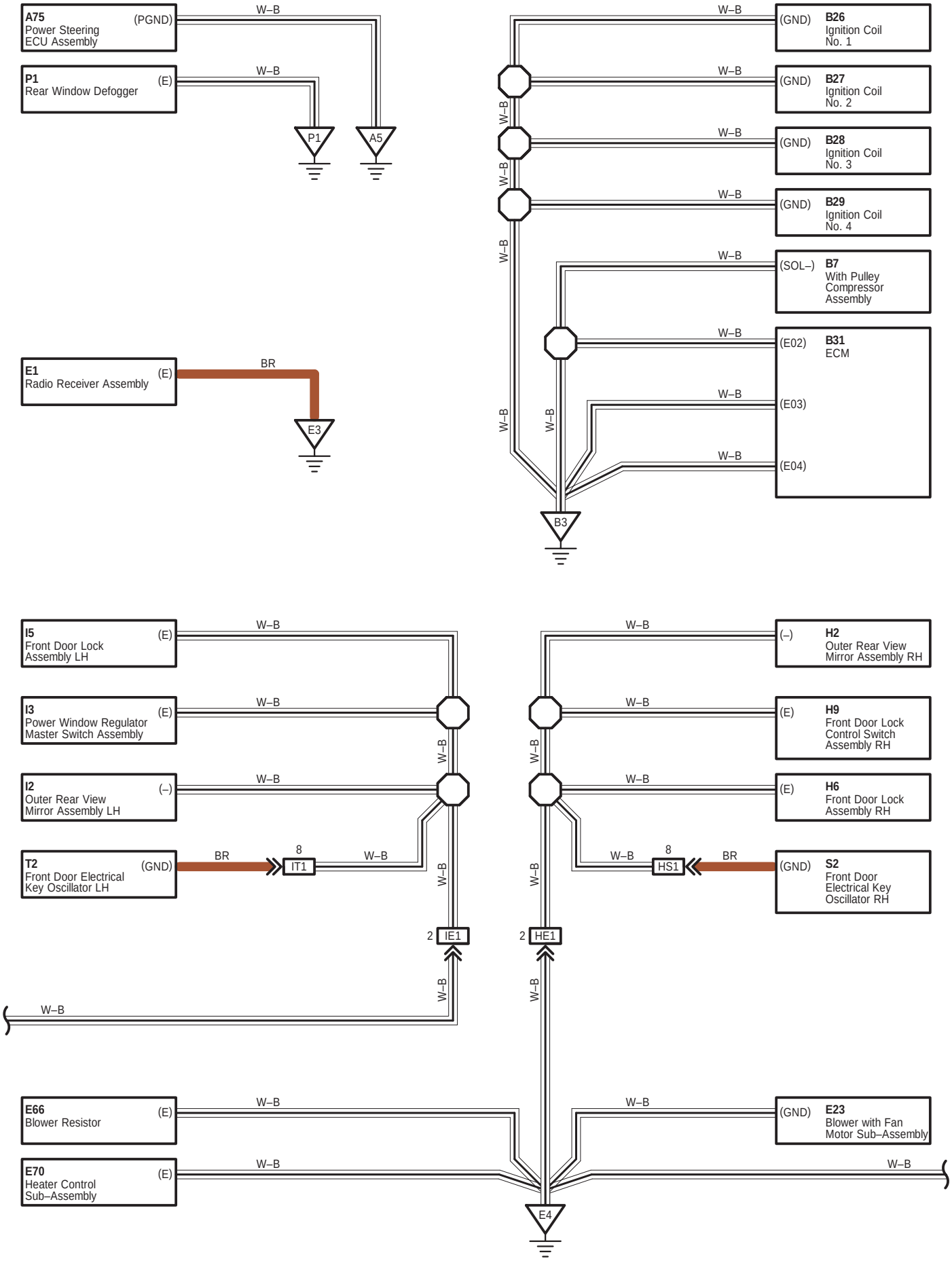
A75
Power Steering
ECU Assembly
(PGND)
W–B
P1
Rear Window Defogger
(E)
W–B
P1
A5
E1
Radio Receiver Assembly
(E)
BR
E3
W–B
(GND)
B26
Ignition Coil
No. 1
W–B
(GND)
B27
Ignition Coil
No. 2
W–B
(GND)
B28
Ignition Coil
No. 3
W–B
(GND)
B29
Ignition Coil
No. 4
W–B
(SOL–)
B7
With Pulley
Compressor
Assembly
W–B
(E02)
B31
ECM
W–B
(E03)
W–B
(E04)
B3
I5
Front Door Lock
Assembly LH
(E)
W–B
I3
Power Window Regulator
Master Switch Assembly
(E)
W–B
I2
Outer Rear View
Mirror Assembly LH
(–)
W–B
T2
Front Door Electrical
Key Oscillator LH
(GND)
BR
8
IT1
W–B
2
IE1
W–B
(–)
H2
Outer Rear View
Mirror Assembly RH
W–B
(E)
H9
Front Door Lock
Control Switch
Assembly RH
W–B
(E)
H6
Front Door Lock
Assembly RH
W–B
8
HS1
BR
(GND)
S2
Front Door
Electrical Key
Oscillator RH
2
HE1
E66
Blower Resistor
(E)
W–B
W–B
(GND)
E23
Blower with Fan
Motor Sub–Assembly
E70
Heater Control
Sub–Assembly
(E)
W–B
W–B
E4

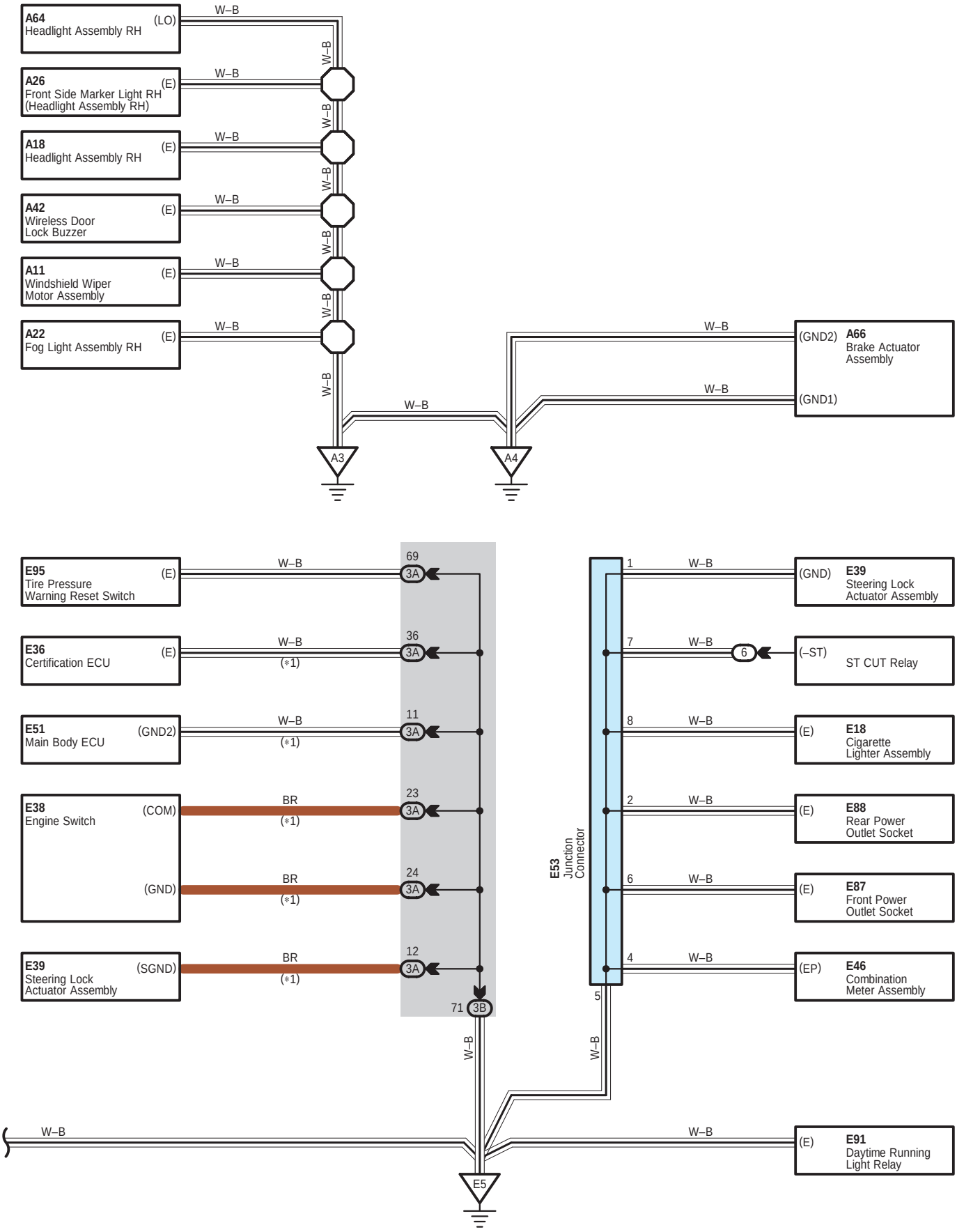
A64
Headlight Assembly RH
(LO)
A26
Front Side Marker Light RH
(Headlight Assembly RH)
(E)
A18
Headlight Assembly RH
(E)
A42
Wireless Door
Lock Buzzer
(E)
A11
Windshield Wiper
Motor Assembly
(E)
A22
Fog Light Assembly RH
(E)
W–B
A3
A4
(GND2)
A66
Brake Actuator
Assembly
(GND1)
E95
Tire Pressure
Warning Reset Switch
(E)
E36
Certification ECU
(E)
E51
Main Body ECU
(GND2)
E38
Engine Switch
(COM)
(GND)
E39
Steering Lock
Actuator Assembly
(SGND)
BR
(*1)
3A
3B
69
36
11
23
24
12
71
E53
Junction
Connector
1
7
8
2
6
4
5
(GND)
E39
Steering Lock
Actuator Assembly
(–ST)
6
ST CUT Relay
(E)
E18
Cigarette
Lighter Assembly
(E)
E88
Rear Power
Outlet Socket
(E)
E87
Front Power
Outlet Socket
(EP)
E46
Combination
Meter Assembly
(E)
E91
Daytime Running
Light Relay
E5

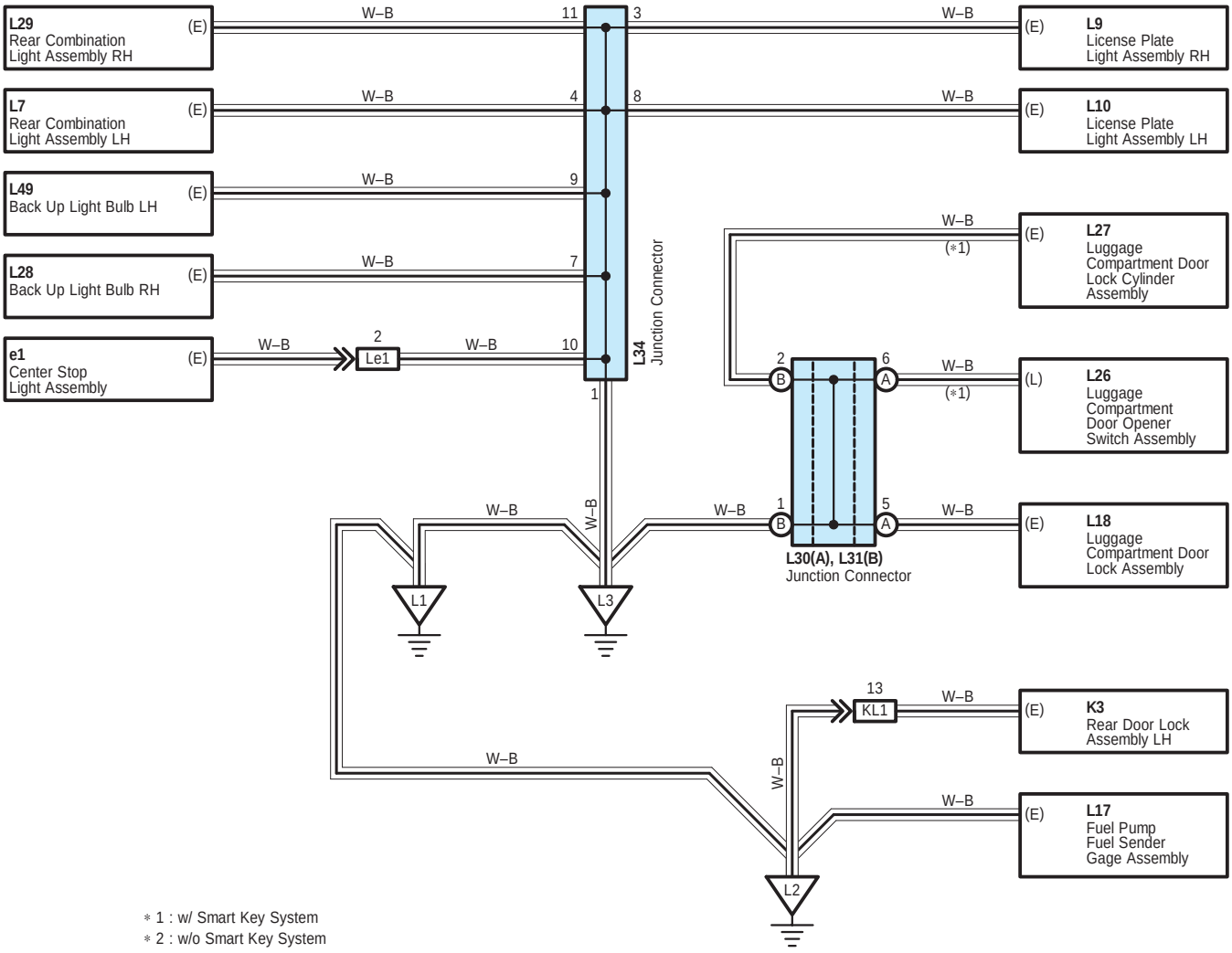
L29
Rear Combination
Light Assembly RH
(E)
W–B
11
3
L9
License Plate
Light Assembly RH
L7
Rear Combination
Light Assembly LH
4
8
L10
License Plate
Light Assembly LH
L49
Back Up Light Bulb LH
9
L28
Back Up Light Bulb RH
7
e1
Center Stop
Light Assembly
2
Le1
10
L34
Junction Connector
1
L27
Luggage
Compartment Door
Lock Cylinder
Assembly
(*1)
2
6
B
A
L26
Luggage
Compartment
Door Opener
Switch Assembly
(L)
1
5
L18
Luggage
Compartment Door
Lock Assembly
L30(A), L31(B)
Junction Connector
L1
L3
13
KL1
K3
Rear Door Lock
Assembly LH
L17
Fuel Pump
Fuel Sender
Gage Assembly
L2
* 1 : w/ Smart Key System
* 2 : w/o Smart Key System

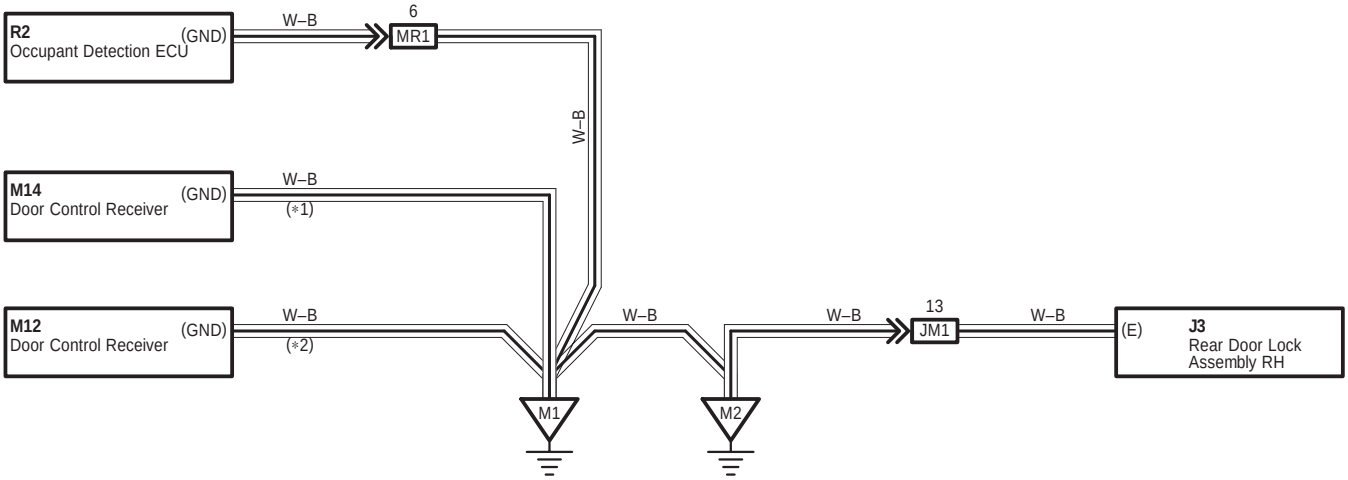
R2
Occupant Detection ECU
(GND)
W–B
6
MR1
M14
Door Control Receiver
(*1)
M12
Door Control Receiver
(*2)
M1
M2
13
JM1
J3
Rear Door Lock
Assembly RH
(E)

A 46
White

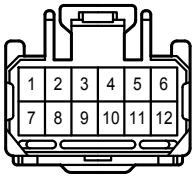

E 53
White

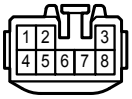

L 30
White

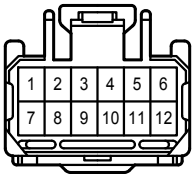

L 31
White

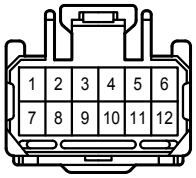

L 34
Blue

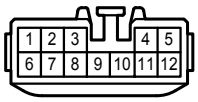

1A
White

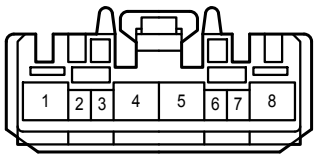

1B
White

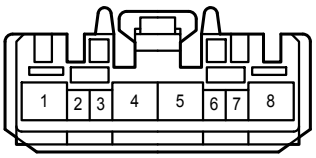

2C
White

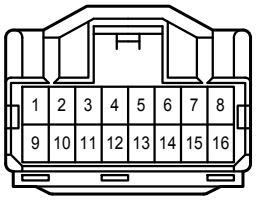

2E
White

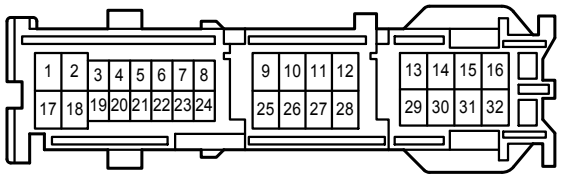

2J
White

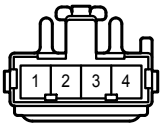

2K
White



2M
White

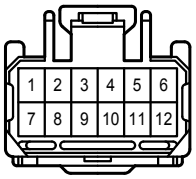

2S
White

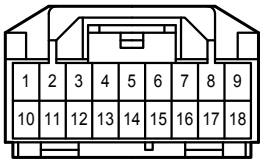

3A
White

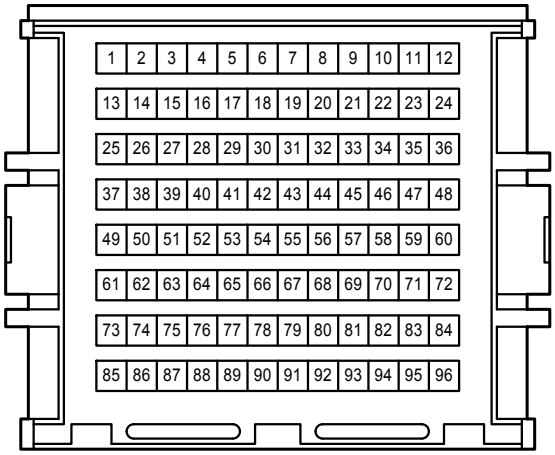

3B
White

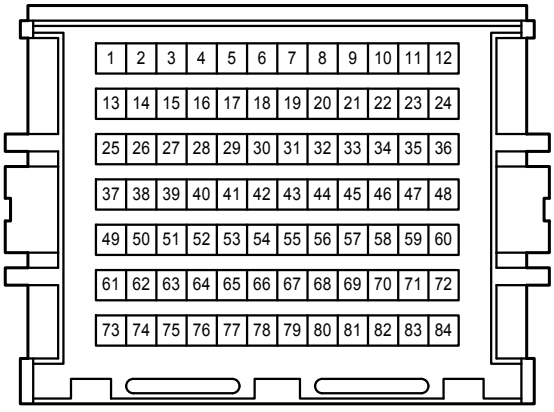

4A
White

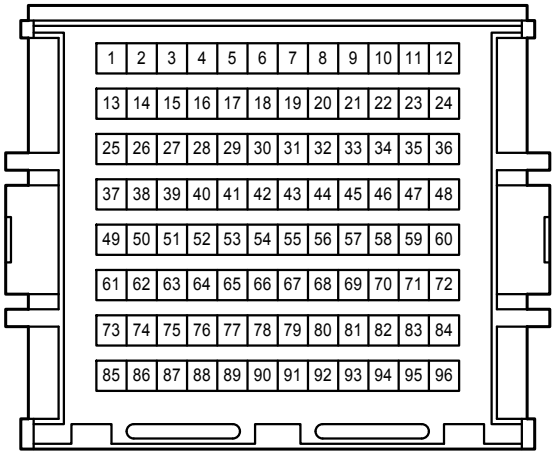

4B
White

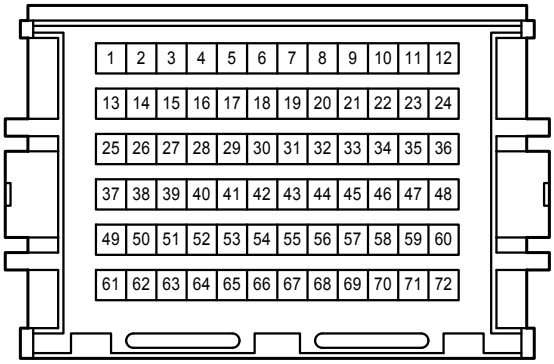

4C
White

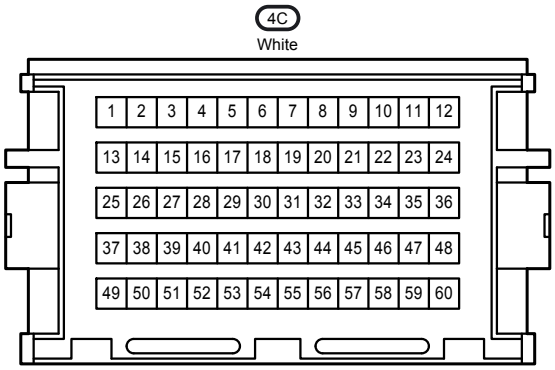

AE6
Gray

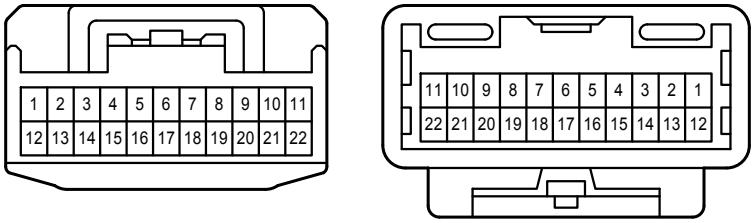

AL1
White

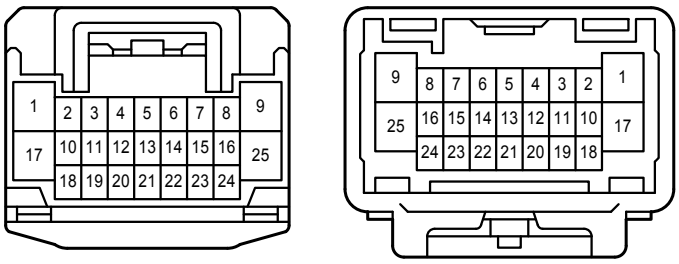

BA2
White

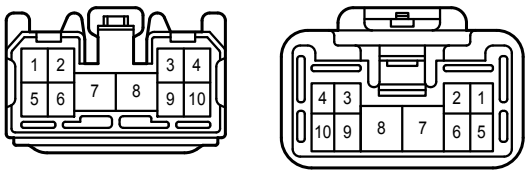

BA4
Gray

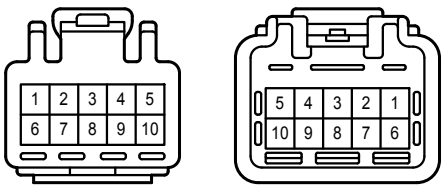

HE1
Blue

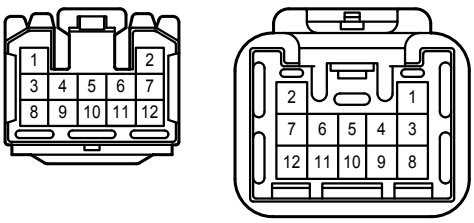

HS1
Gray

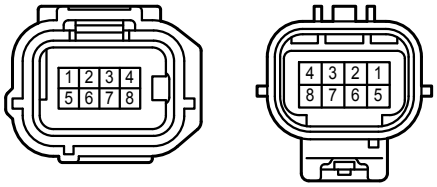

IE1
Blue

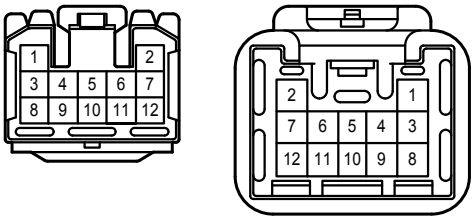

IT1
Gray

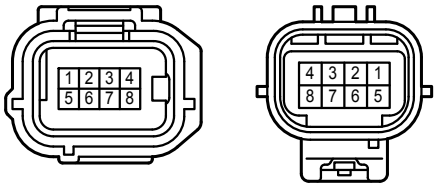

JM1
White

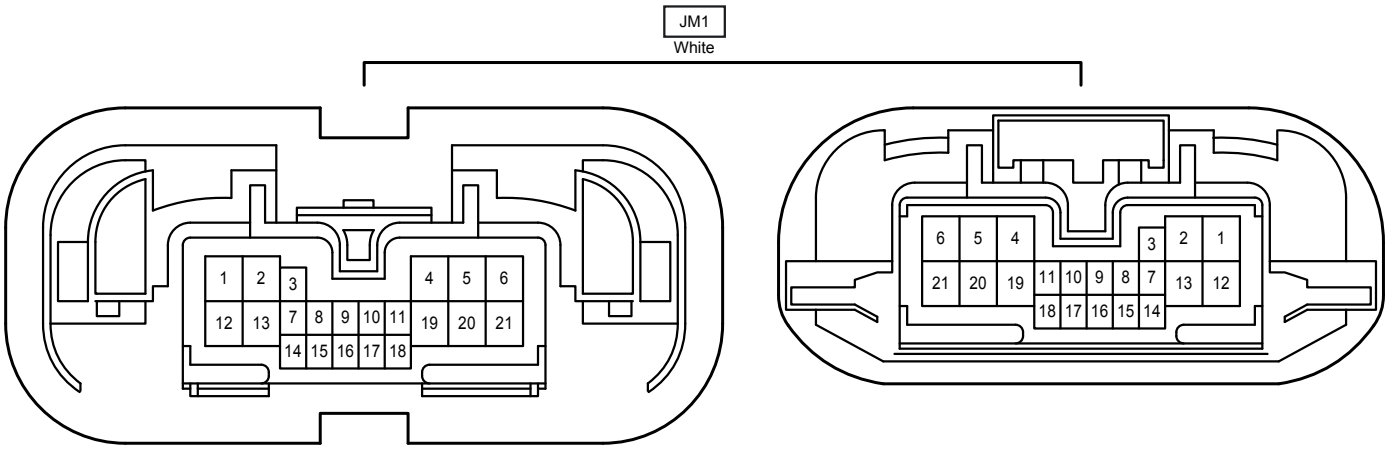

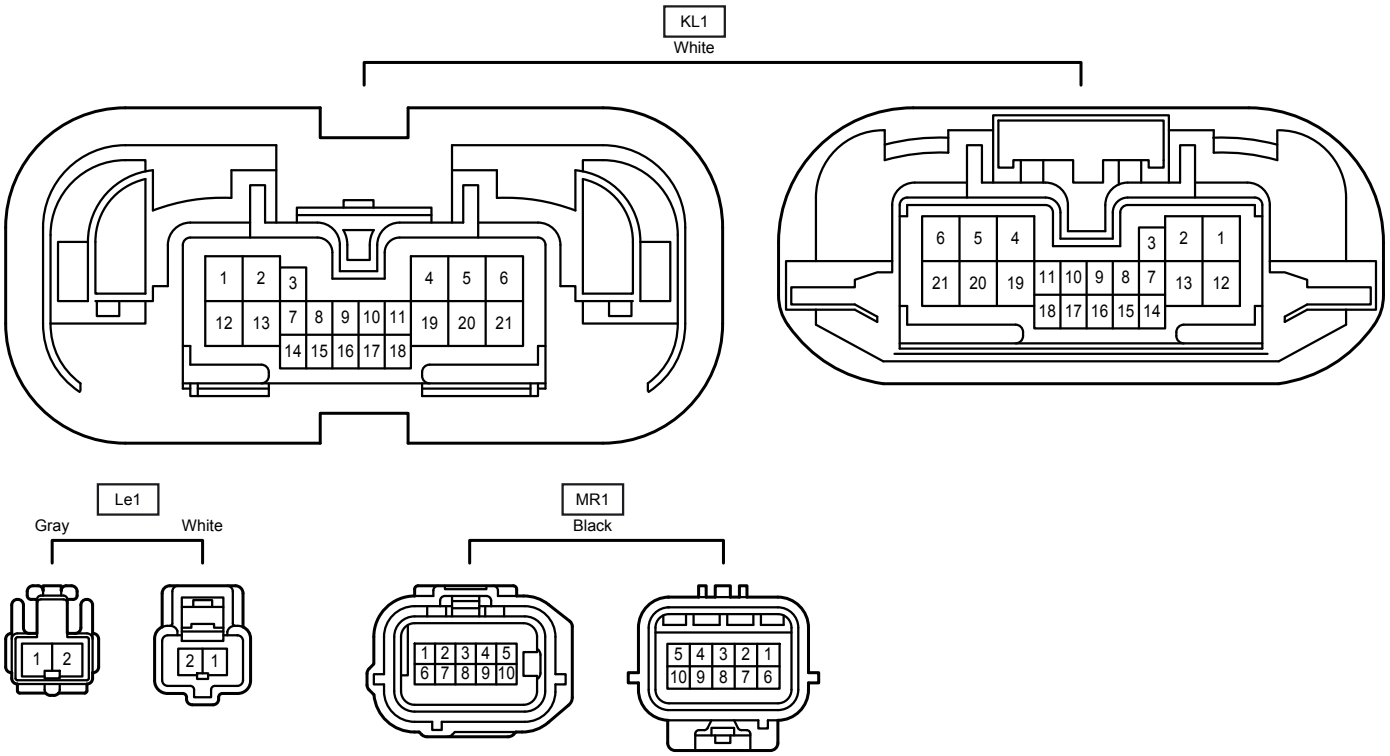
KL1
White
1 2 3 4 5 6
12 13 7 8 9 10 11 19 20 21
14 15 16 17 18
6 5 4 3 2 1
21 20 19 11 10 9 8 7 13 12
18 17 16 15 14

Le1
Gray
White
1 2
2 1
MR1
Black
1 2 3 4 5
6 7 8 9 10
5 4 3 2 1
10 9 8 7 6

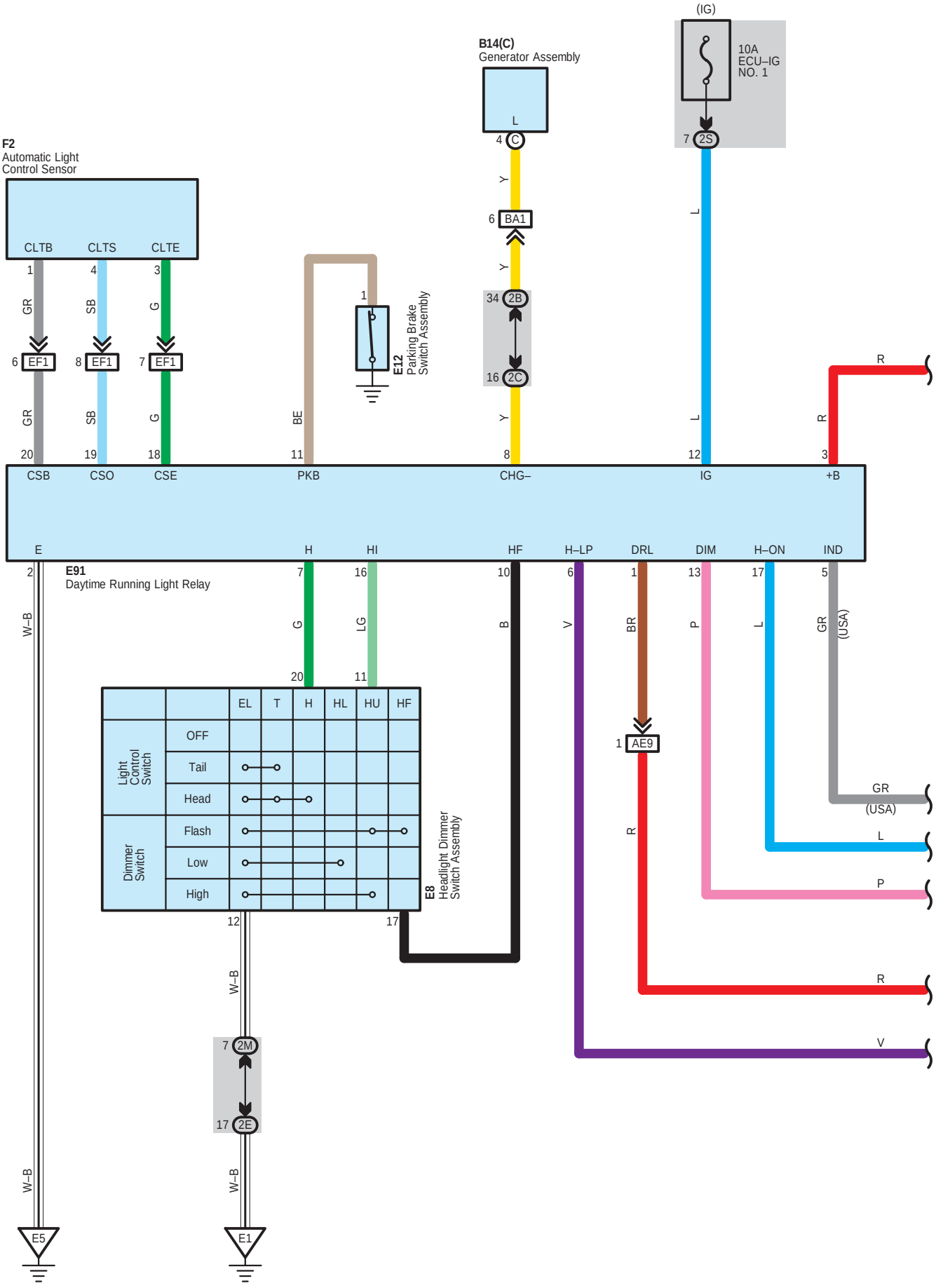
(IG)
10A
ECU–IG
NO. 1
7 2S
B14(C)
Generator Assembly
L
4 C
Y
6 BA1
Y
34 2B
16 2C
Y
8
F2
Automatic Light
Control Sensor
CLTB
CLTS
CLTE
1
4
3
GR
SB
G
6 EF1
8 EF1
7 EF1
GR
SB
G
20
19
18
CSB
CSO
CSE
1
E12
Parking Brake
Switch Assembly
BE
11
PKB
CHG–
L
L
12
IG
R
R
3
+B
E
H
HI
HF
H–LP
DRL
DIM
H–ON
IND
2
W–B
E91
Daytime Running Light Relay
7
G
20
16
LG
11
10
B
6
V
1
BR
13
P
17
L
5
GR
(USA)
EL
T
H
HL
HU
HF
Light Control Switch
OFF
Tail
Head
Dimmer Switch
Flash
Low
High
E8
Headlight Dimmer
Switch Assembly
12
17
1 AE9
R
GR
(USA)
L
P
R
V
W–B
7 2M
17 2E
W–B
W–B
E5
E1

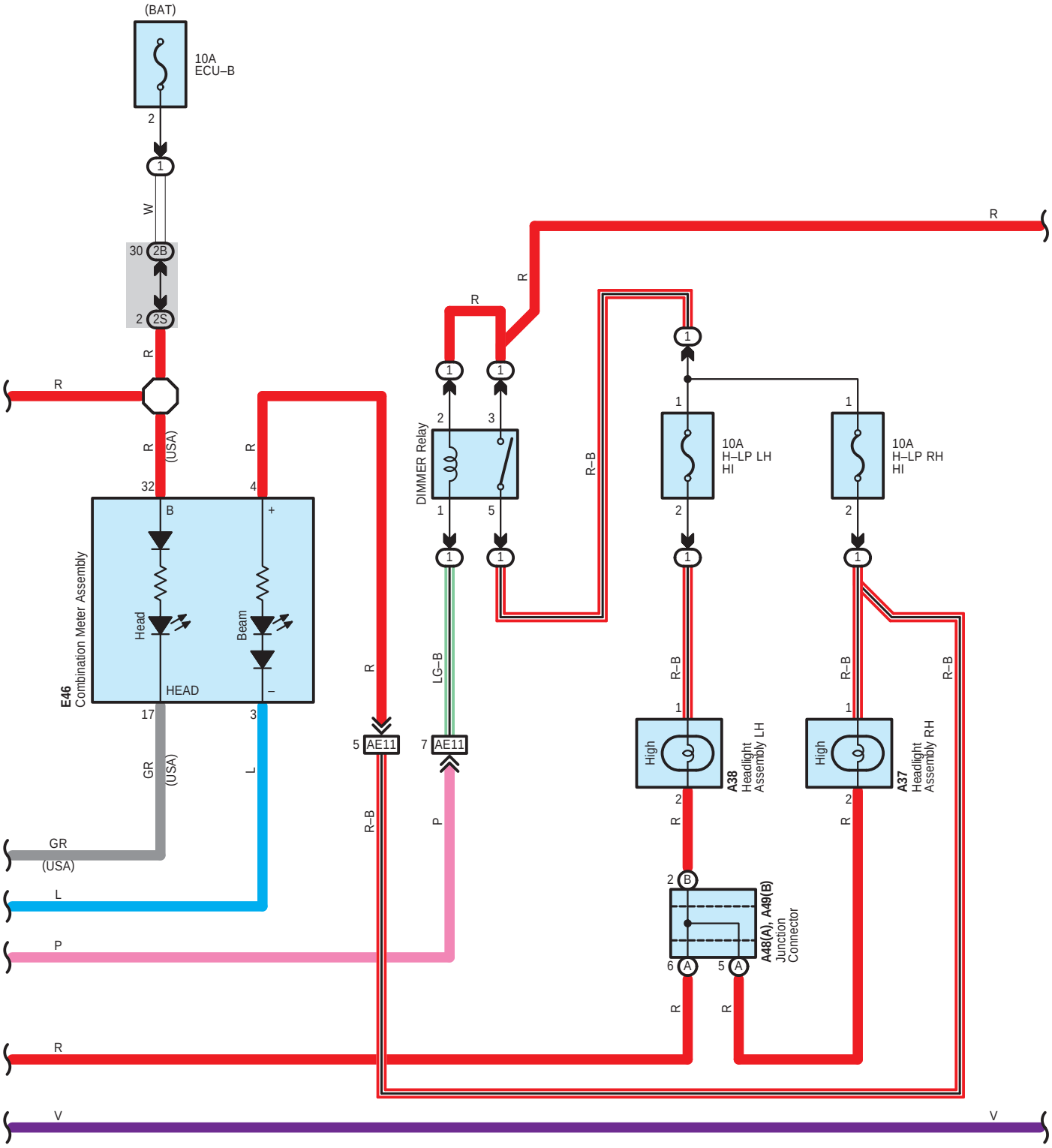
(BAT)
10A
ECU–B
2
1
W
30
2B
2
2S
R
R
R
(USA)
R
32
4
B
+
Head
Beam
HEAD
–
E46
Combination Meter Assembly
17
3
GR
(USA)
L
GR
(USA)
L
P
R
5
AE11
7
AE11
R–B
LG–B
P
R
R
DIMMER Relay
1
2
3
5
R–B
1
10A
H–LP LH
HI
2
R–B
1
High
A38
Headlight
Assembly LH
2
R
2
B
6
A
5
A
A48(A), A49(B)
Junction
Connector
R
R
1
10A
H–LP RH
HI
2
R–B
1
High
A37
Headlight
Assembly RH
2
R
R–B
R
V
V

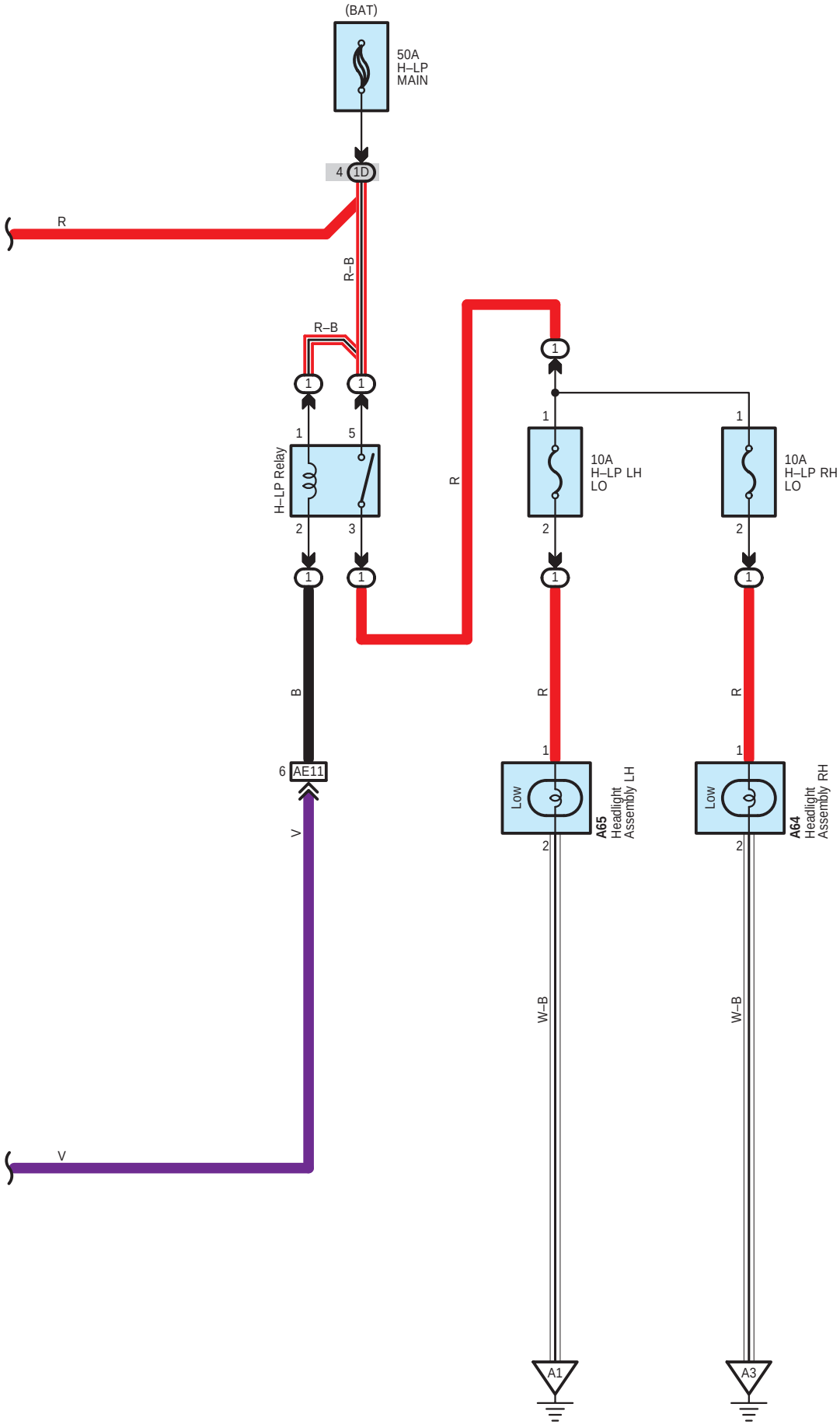
(BAT)
50A
H–LP
MAIN
4
1D
R
R–B
R–B
1
1
1
5
H–LP Relay
2
3
1
1
B
6
AE11
V
V
R
1
1
10A
H–LP LH
LO
2
1
R
1
Low
A65
Headlight
Assembly LH
2
W–B
A1
1
1
10A
H–LP RH
LO
2
1
R
1
Low
A64
Headlight
Assembly RH
2
W–B
A3

A 37
Black

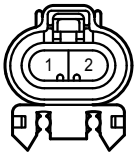

A 38
Black

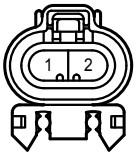

A 48
White

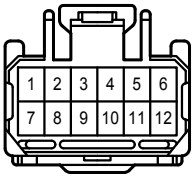

A 49
White

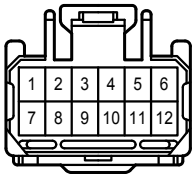

A 64
Brown

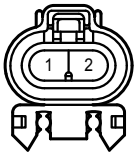

A 65
Brown

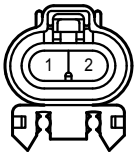

B 14
Black



E 8
White

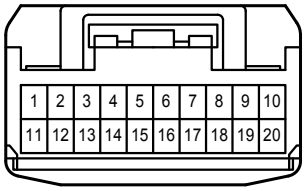

E 12
White



E 46
White

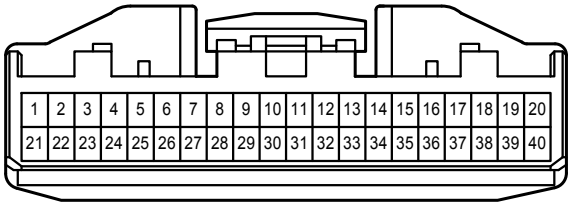

E 91
White

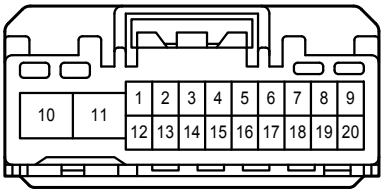

F 2
Black

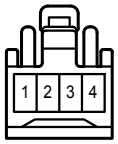

1D
White

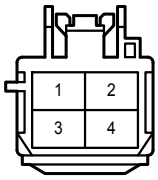

2B
White

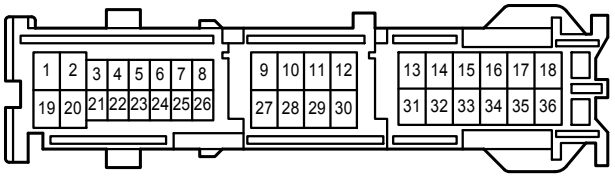

2C
White

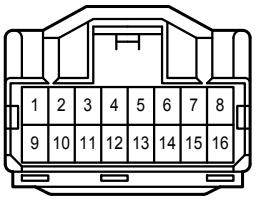

2E
White

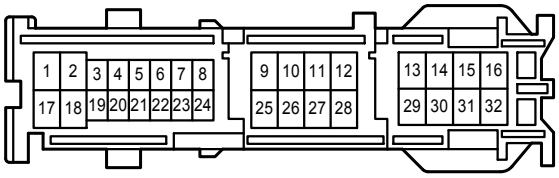

2M
White

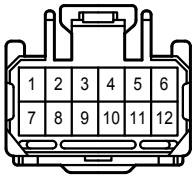

2S
White

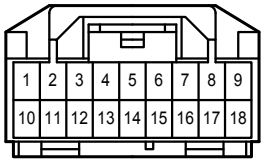

AE9
White

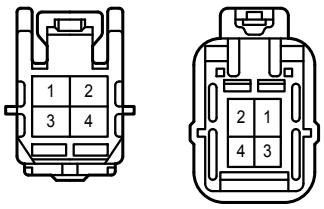

AE11
White

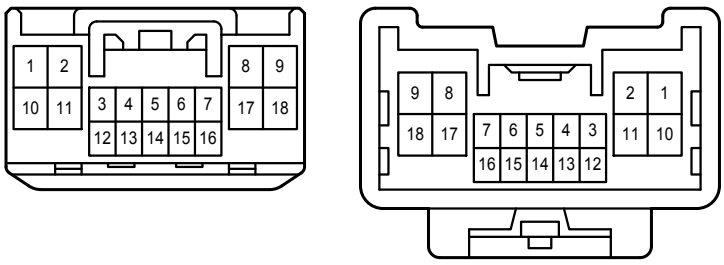

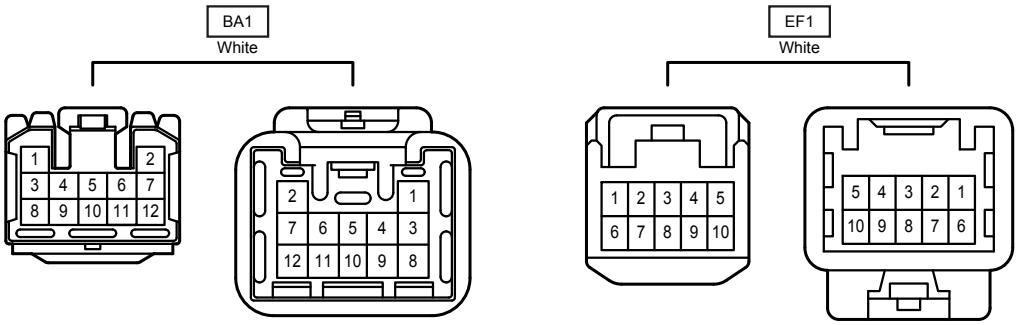
BA1
White
1 2 3 4 5 6 7 8 9 10 11 12
2 1 7 6 5 4 3 12 11 10 9 8
EF1
White
1 2 3 4 5 6 7 8 9 10
5 4 3 2 1 10 9 8 7 6

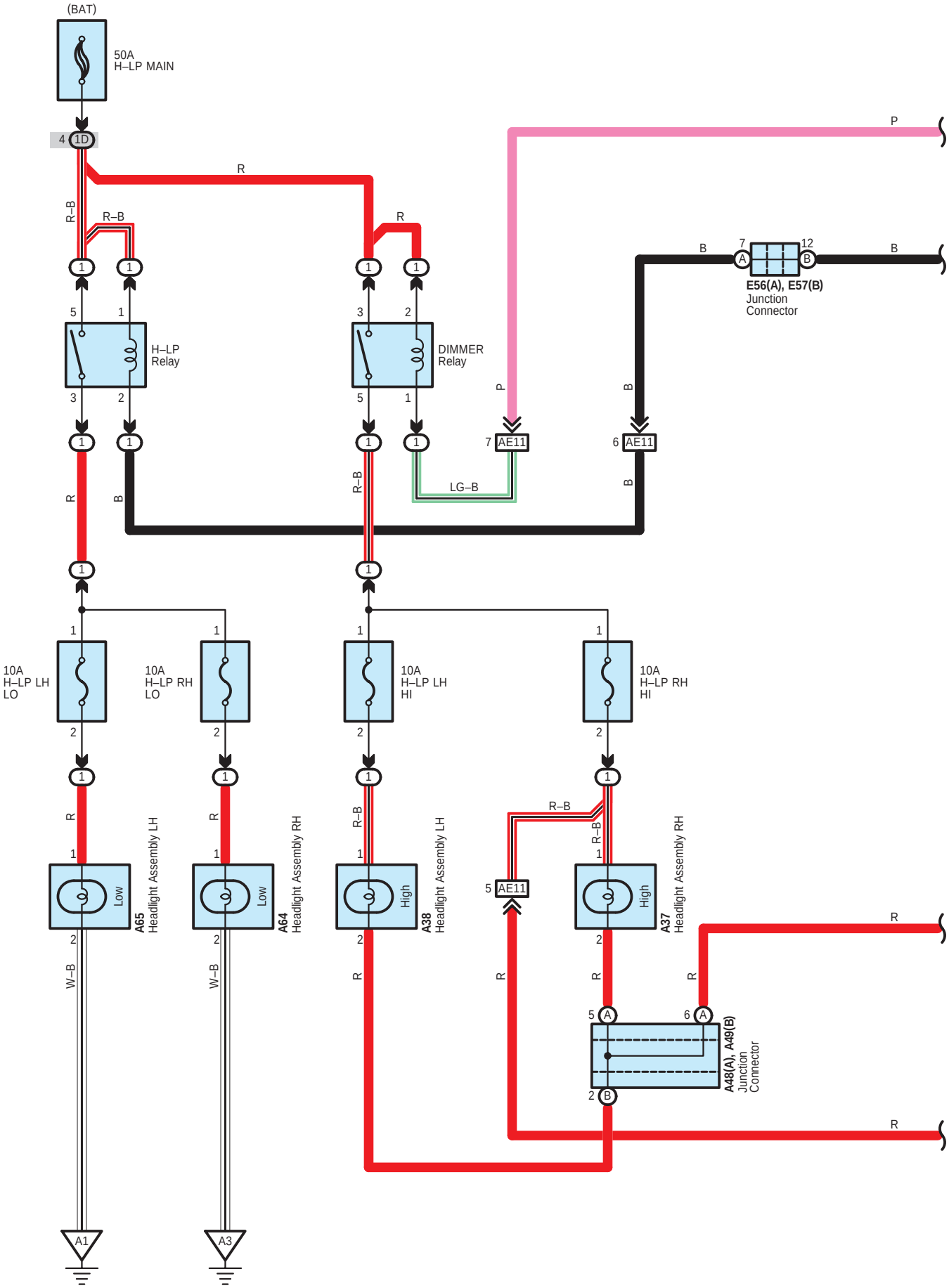
(BAT)
50A
H–LP MAIN
4 1D
R
R–B
R–B
R
P
B
7
12
A
B
B
E56(A), E57(B)
Junction
Connector
H–LP
Relay
DIMMER
Relay
P
B
7 AE11
6 AE11
LG–B
R
B
R–B
B
10A
H–LP LH
LO
10A
H–LP RH
LO
10A
H–LP LH
HI
10A
H–LP RH
HI
R
R
R–B
R–B
R–B
Low
A65
Headlight Assembly LH
Low
A64
Headlight Assembly RH
High
A38
Headlight Assembly LH
5 AE11
High
A37
Headlight Assembly RH
W–B
W–B
R
R
R
R
R
5 A
6 A
A48(A), A49(B)
Junction
Connector
2 B
R
A1
A3

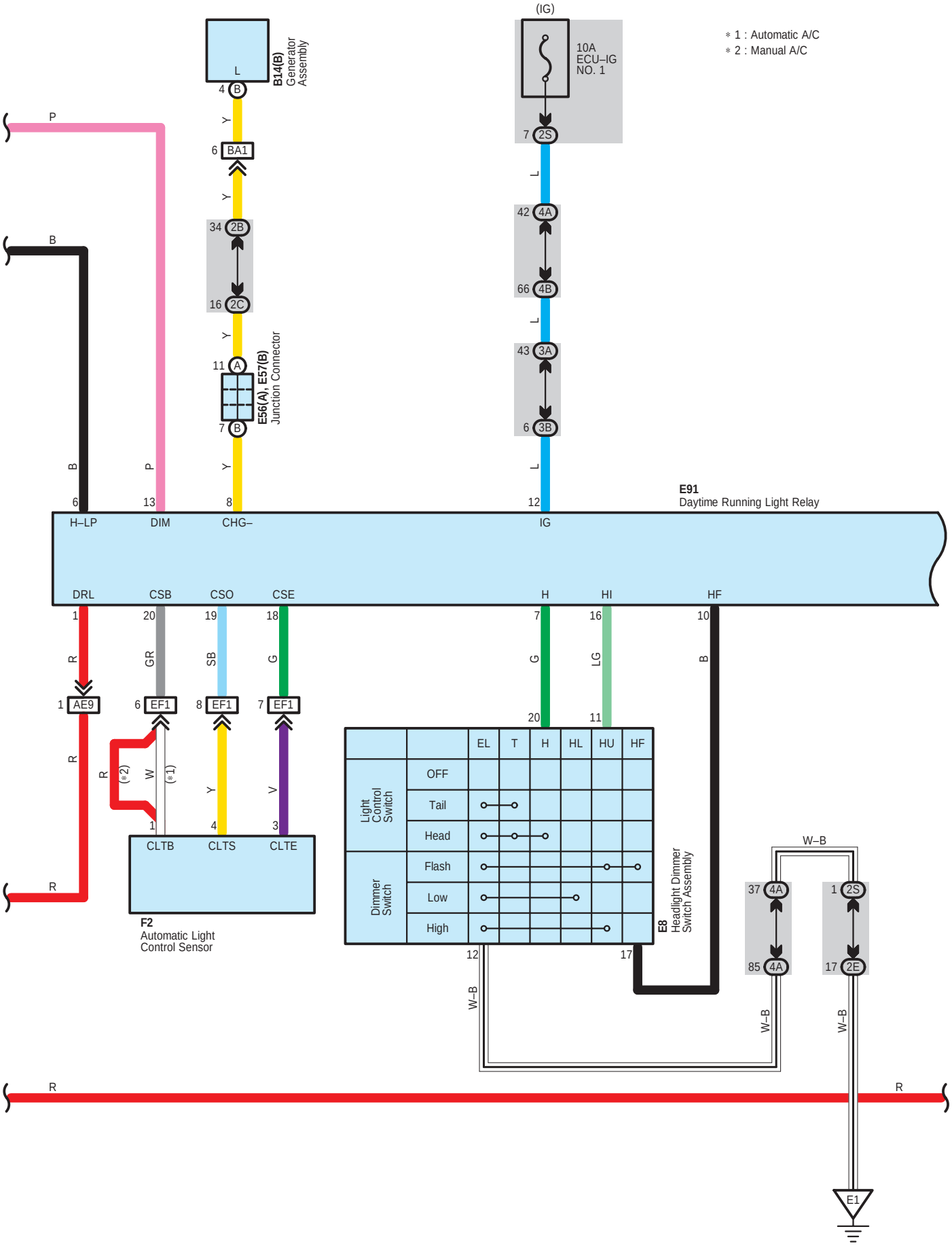
(IG)
10A
ECU–IG
NO. 1
7 2S
L
42 4A
66 4B
L
43 3A
6 3B
L
12
IG
∗ 1 : Automatic A/C
∗ 2 : Manual A/C
B14(B)
Generator
Assembly
L
4 B
Y
6 BA1
Y
34 2B
16 2C
Y
11 A
7 B
E56(A), E57(B)
Junction Connector
B
6
H–LP
P
13
DIM
Y
8
CHG–
E91
Daytime Running Light Relay
DRL
CSB
CSO
CSE
H
HI
HF
1
R
1 AE9
R
R
20
GR
6 EF1
19
SB
8 EF1
18
G
7 EF1
7
G
20
16
LG
11
10
B
R
(∗2)
W
(∗1)
1
Y
4
V
3
CLTB
CLTS
CLTE
F2
Automatic Light
Control Sensor
EL
T
H
HL
HU
HF
Light Control Switch
OFF
Tail
Head
Dimmer Switch
Flash
Low
High
12
17
E8
Headlight Dimmer
Switch Assembly
W–B
37 4A
85 4A
1 2S
17 2E
W–B
W–B
R
R
E1

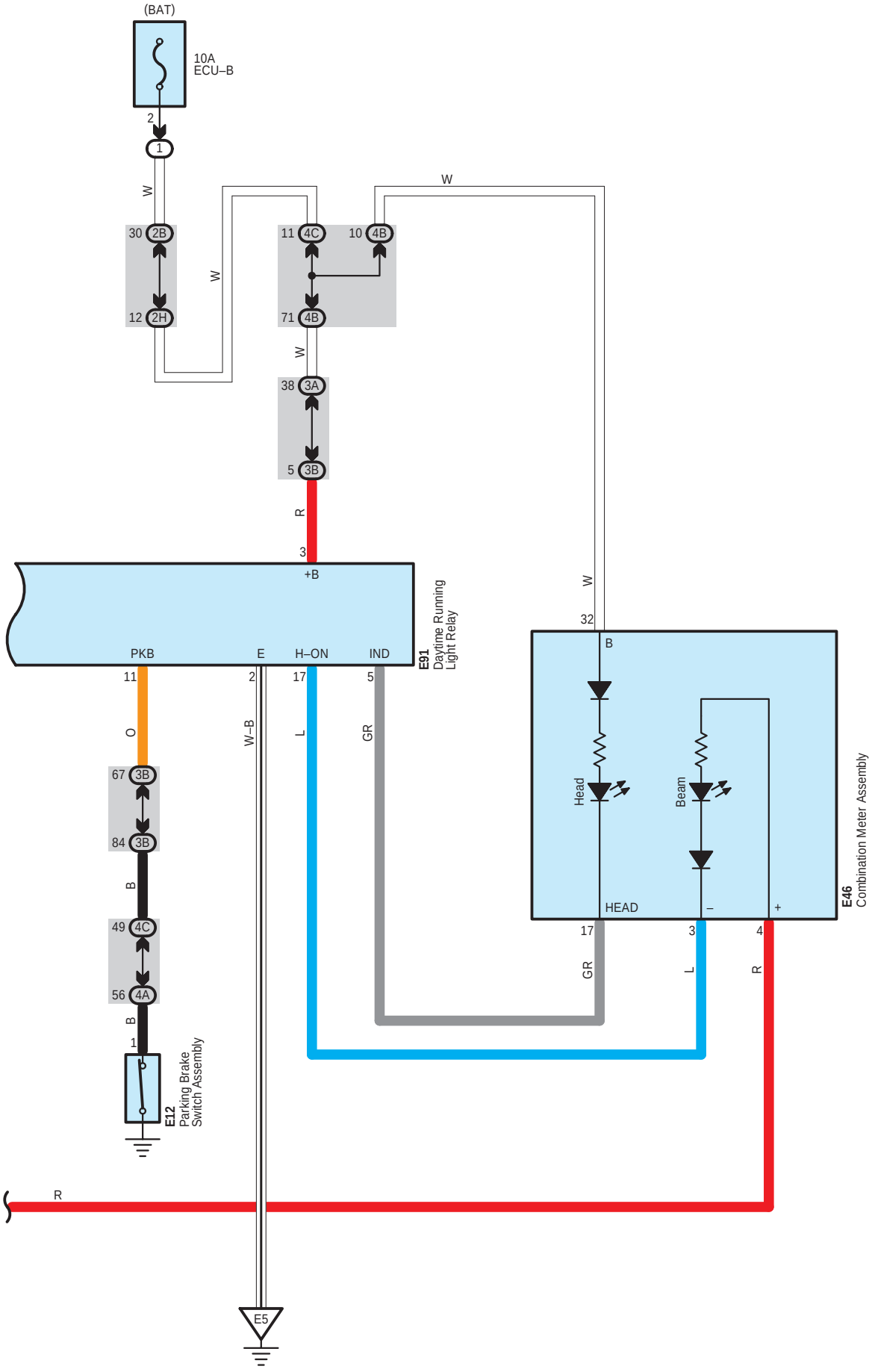
(BAT)
10A
ECU–B
2
1
W
30 2B
12 2H
W
11 4C
10 4B
71 4B
W
W
38 3A
5 3B
R
3
+B
PKB
E
H–ON
IND
E91
Daytime Running
Light Relay
11
2
17
5
O
W–B
L
GR
67 3B
84 3B
B
49 4C
56 4A
B
1
E12
Parking Brake
Switch Assembly
R
E5
W
32
B
Head
Beam
HEAD
–
+
E46
Combination Meter Assembly
17
3
4
GR
L
R

A 37
Black

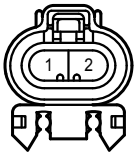

A 38
Black

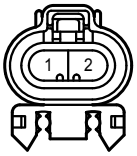

A 48
White

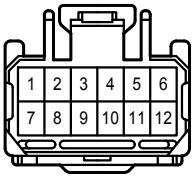

A 49
White

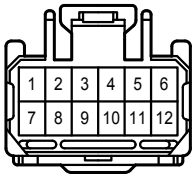

A 64
Brown

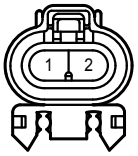

A 65
Brown

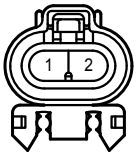

B 14
Black



E 8
White

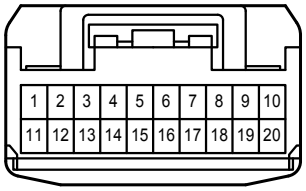

E 12
White



E 46
White

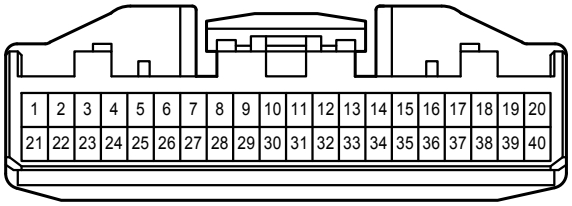

E 56
White

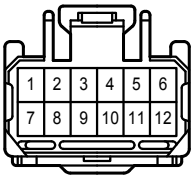

E 57
White

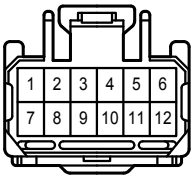

E 91
White

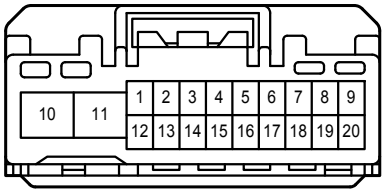

F 2
Black

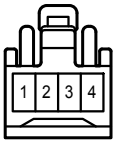

1D
White

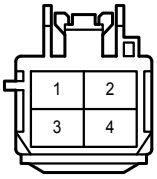

2B
White

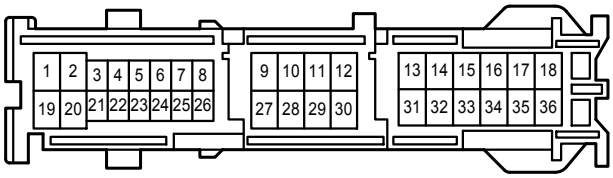

2C
White

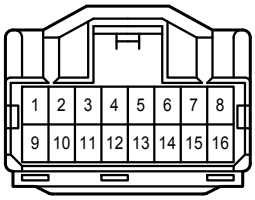

2E
White

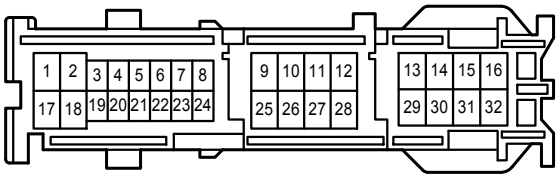

2H
White

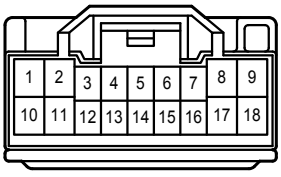

2S
White

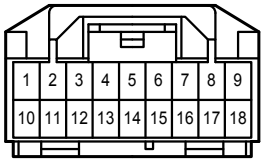

3A
White

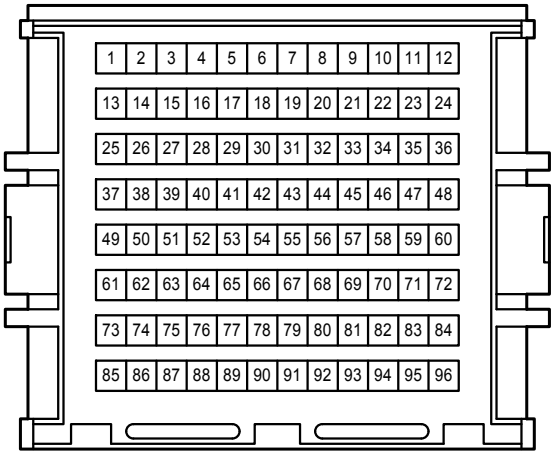

3B
White

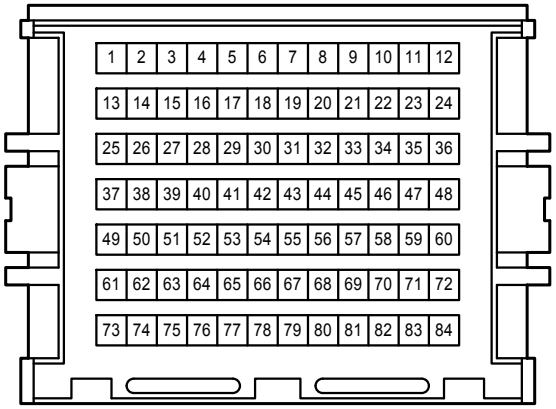

4A
White

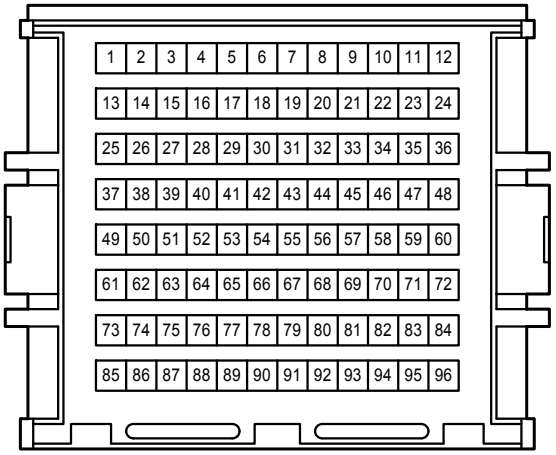

4B
White

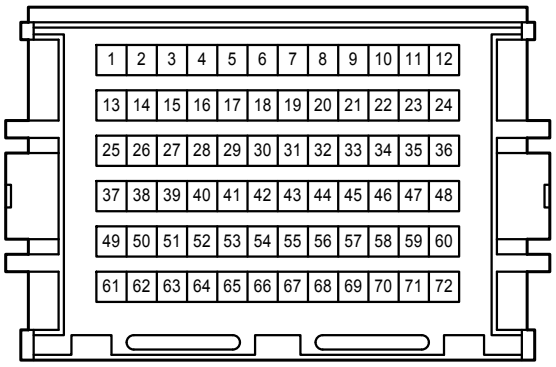

4C
White

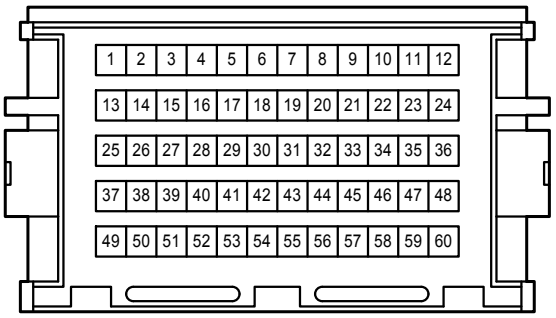

AE9
White

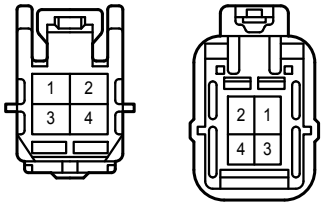

AE11
White

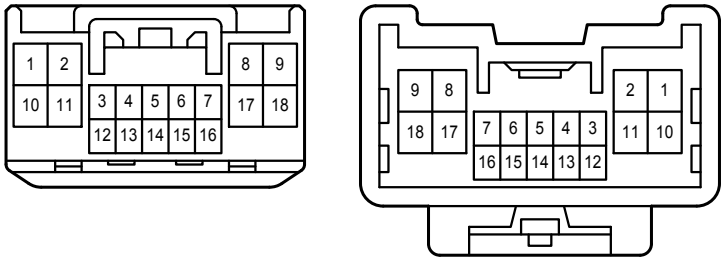

BA1
White

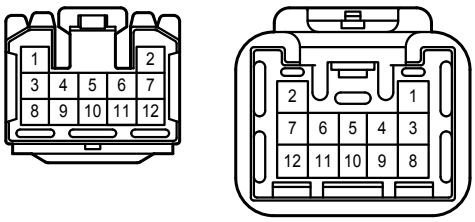

EF1
White

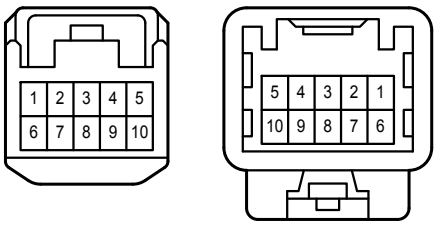

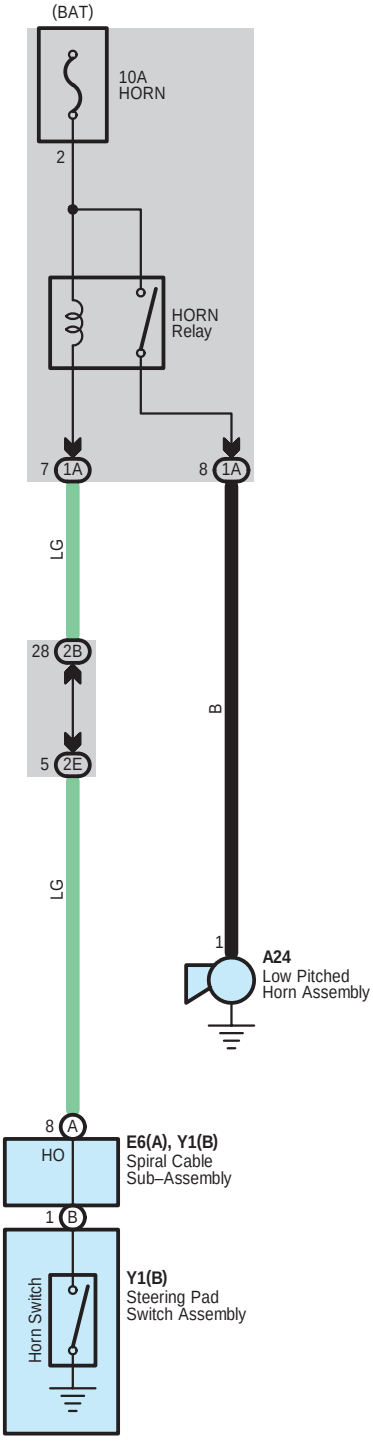
(BAT)
10A
HORN
2
HORN
Relay
7
1A
8
1A
LG
28
2B
5
2E
B
LG
1
A24
Low Pitched
Horn Assembly
8
A
HO
E6(A), Y1(B)
Spiral Cable
Sub–Assembly
1
B
Horn Switch
Y1(B)
Steering Pad
Switch Assembly

A 24
Black

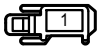

E 6
Black



Y 1
White

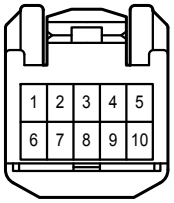

1A
White

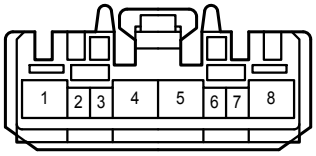

2B
White

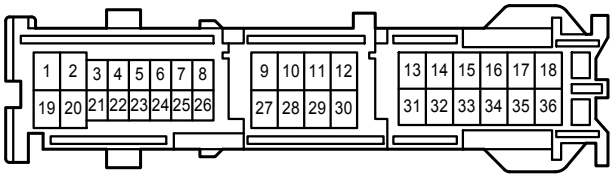

2E
White

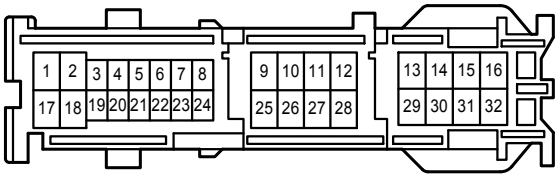

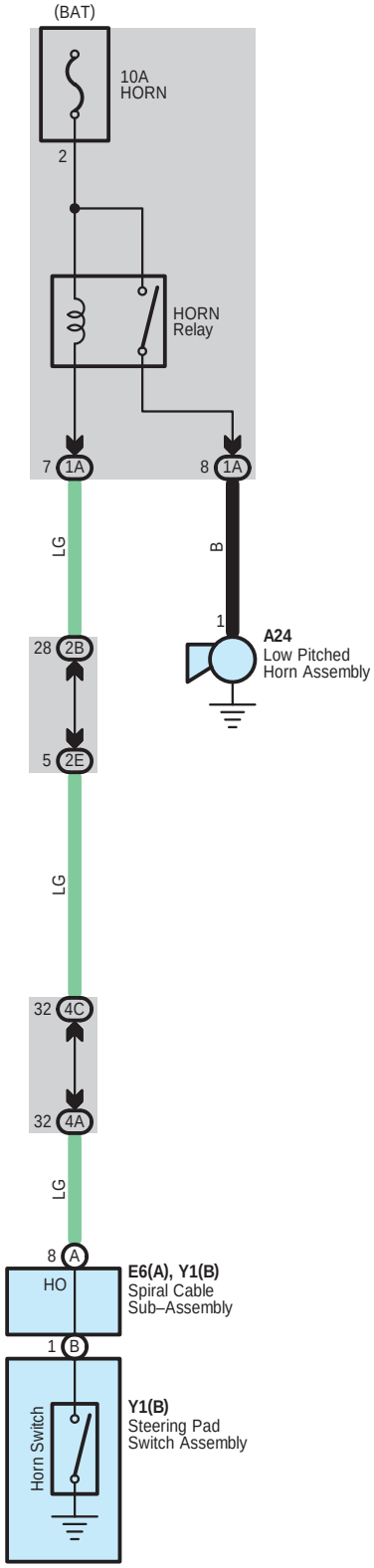
(BAT)
10A
HORN
2
HORN
Relay
7 1A
8 1A
LG
B
1
A24
Low Pitched
Horn Assembly
28 2B
5 2E
LG
32 4C
32 4A
LG
8 A
HO
E6(A), Y1(B)
Spiral Cable
Sub–Assembly
1 B
Horn Switch
Y1(B)
Steering Pad
Switch Assembly

A 24
Black

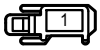

E 6
Black



Y 1
White

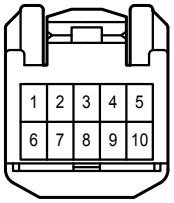

1A
White

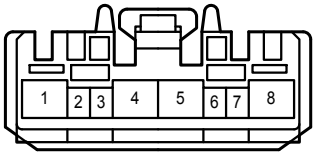

2B
White

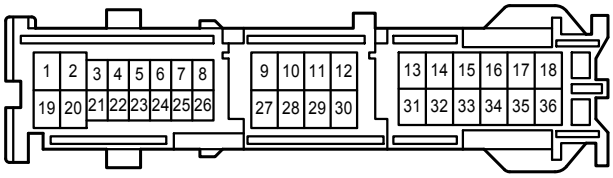

2E
White

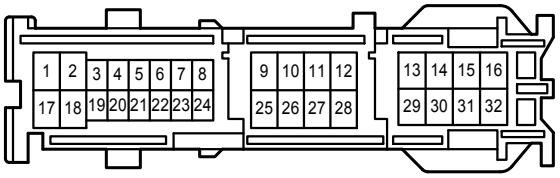

4A
White

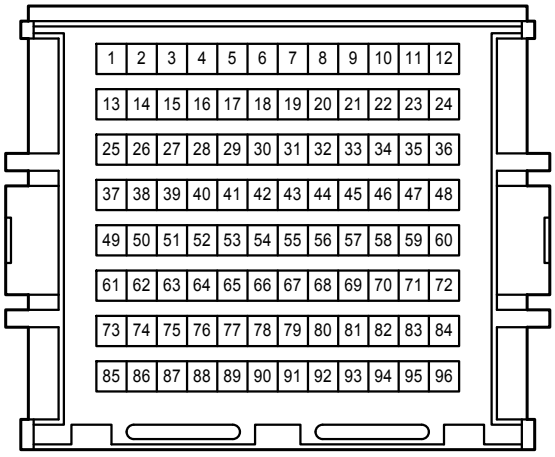

4C
White

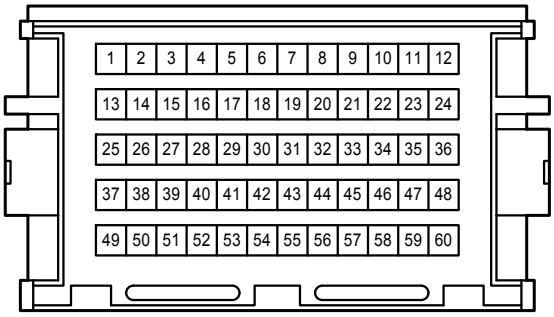

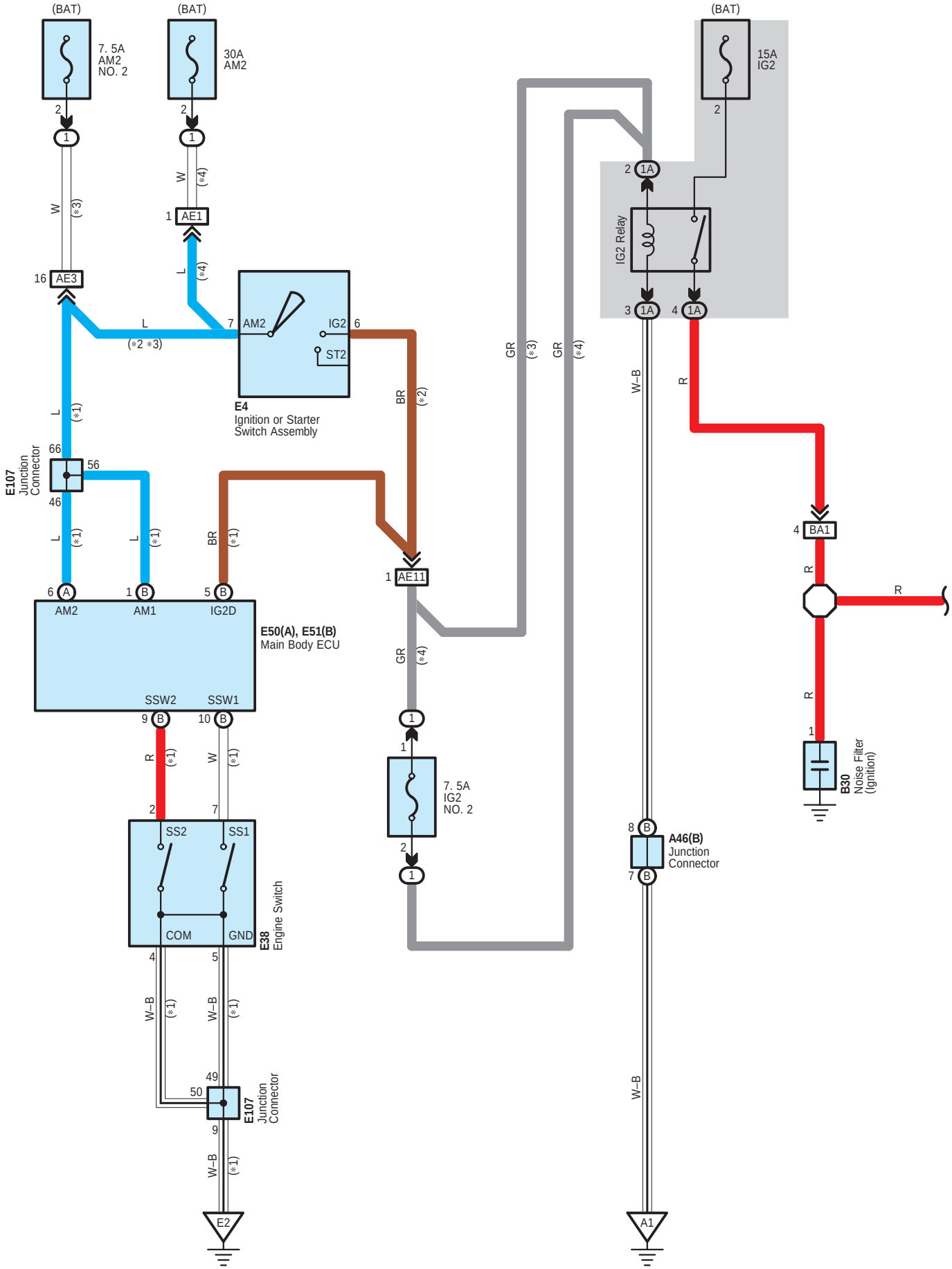
(BAT)
7. 5A
AM2
NO. 2
(BAT)
30A
AM2
(BAT)
15A
IG2
IG2 Relay
E4
Ignition or Starter
Switch Assembly
AM2
IG2
ST2
E107
Junction
Connector
E50(A), E51(B)
Main Body ECU
AM2
AM1
IG2D
SSW2
SSW1
E38
Engine Switch
SS2
SS1
COM
GND
E107
Junction
Connector
7. 5A
IG2
NO. 2
A46(B)
Junction
Connector
B30
Noise Filter
(Ignition)
E2
A1

* 1 : w/ Smart Key System
* 2 : w/o Smart Key System
* 3 : 2ZR–FE
* 4 : 2AZ–FE

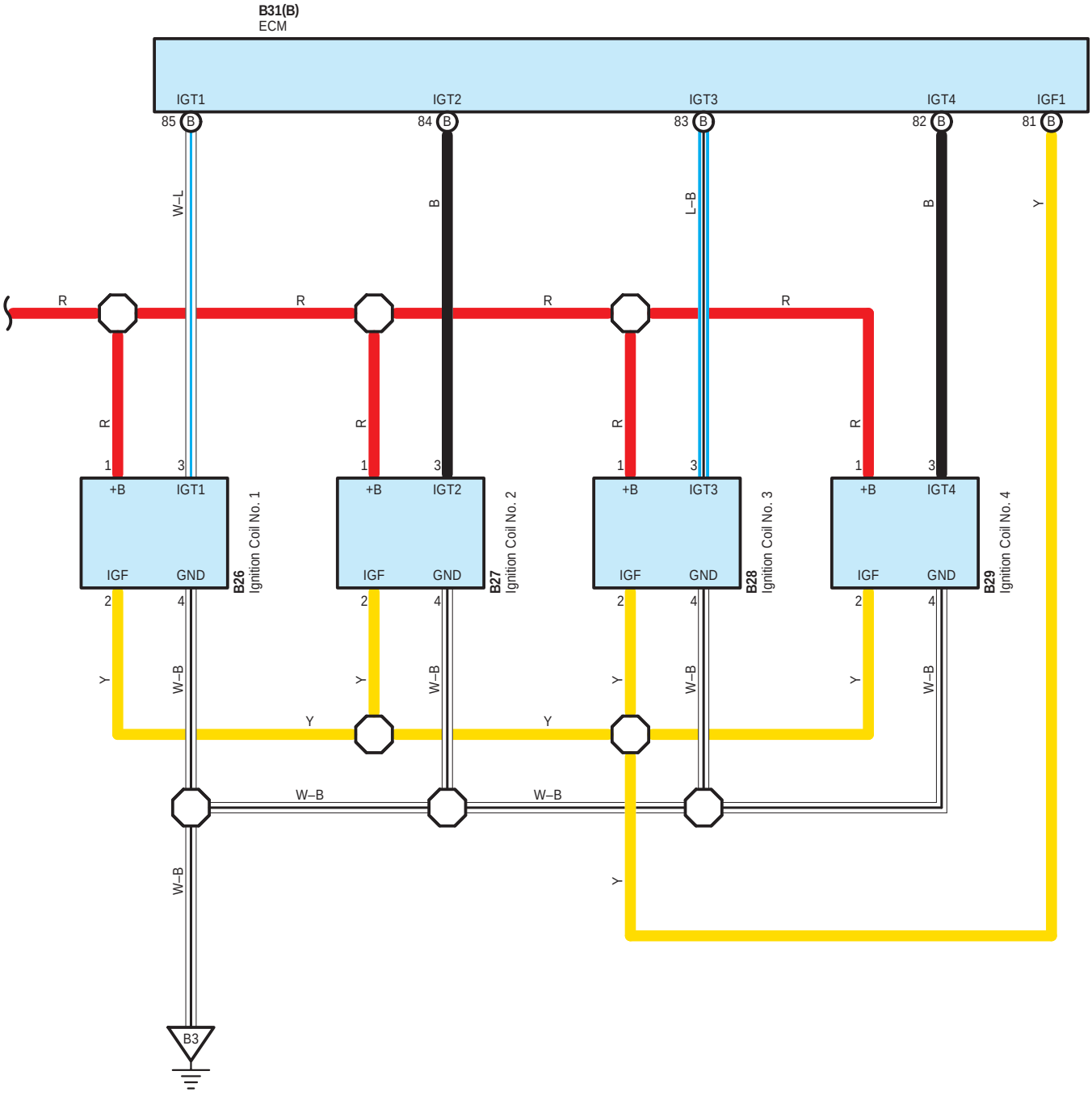

A 46
White

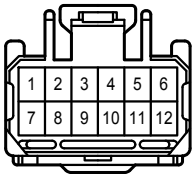

B 26
Black

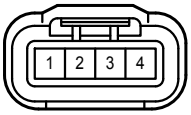

B 27
Gray

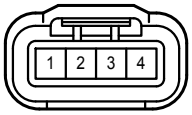

B 28
Black

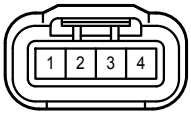

B 29
Gray



B 30
Gray



B 31
Black

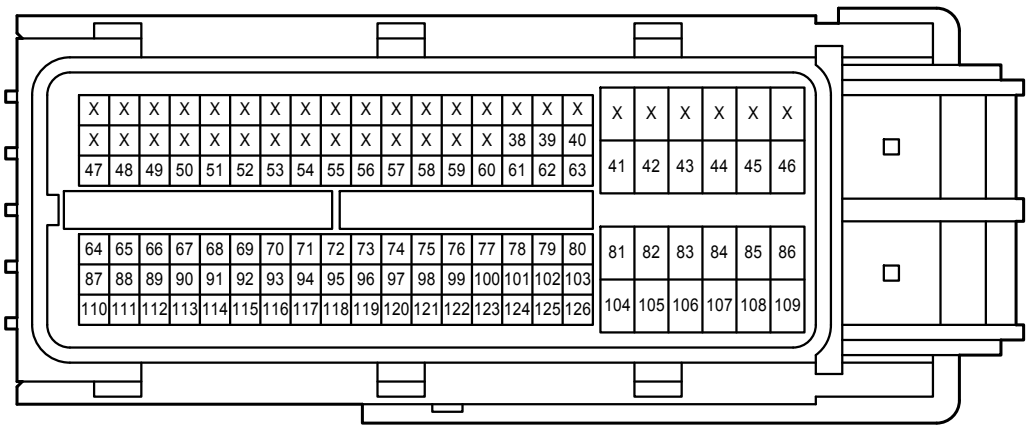

E 4
White

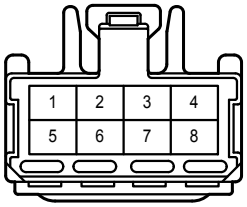

E 38
Black

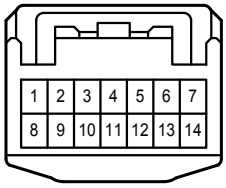

E 50
White

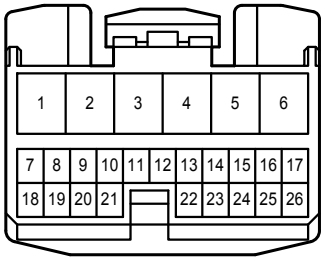

E 51
White

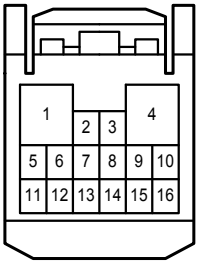

E107
White

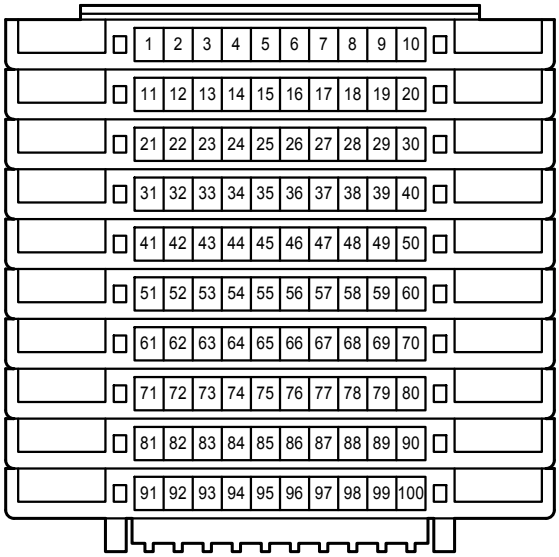

1A
White

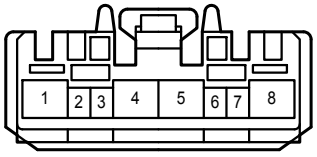

AE1
White

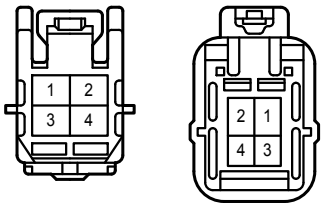

AE3
White

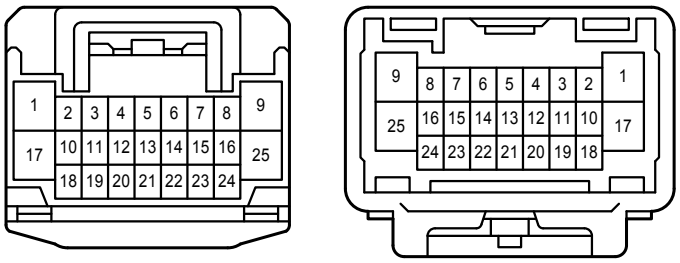

AE11
White

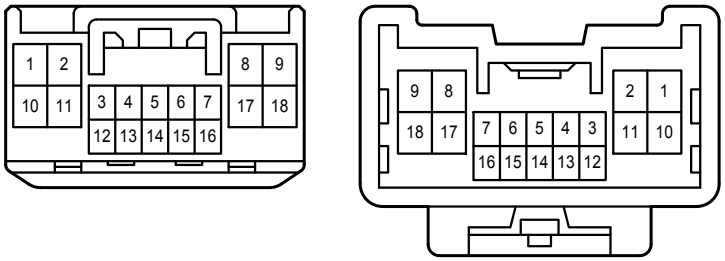

BA1
White

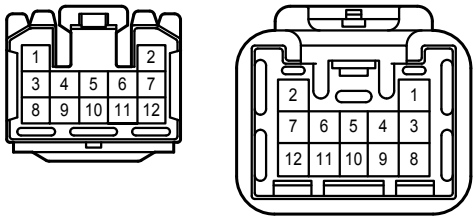

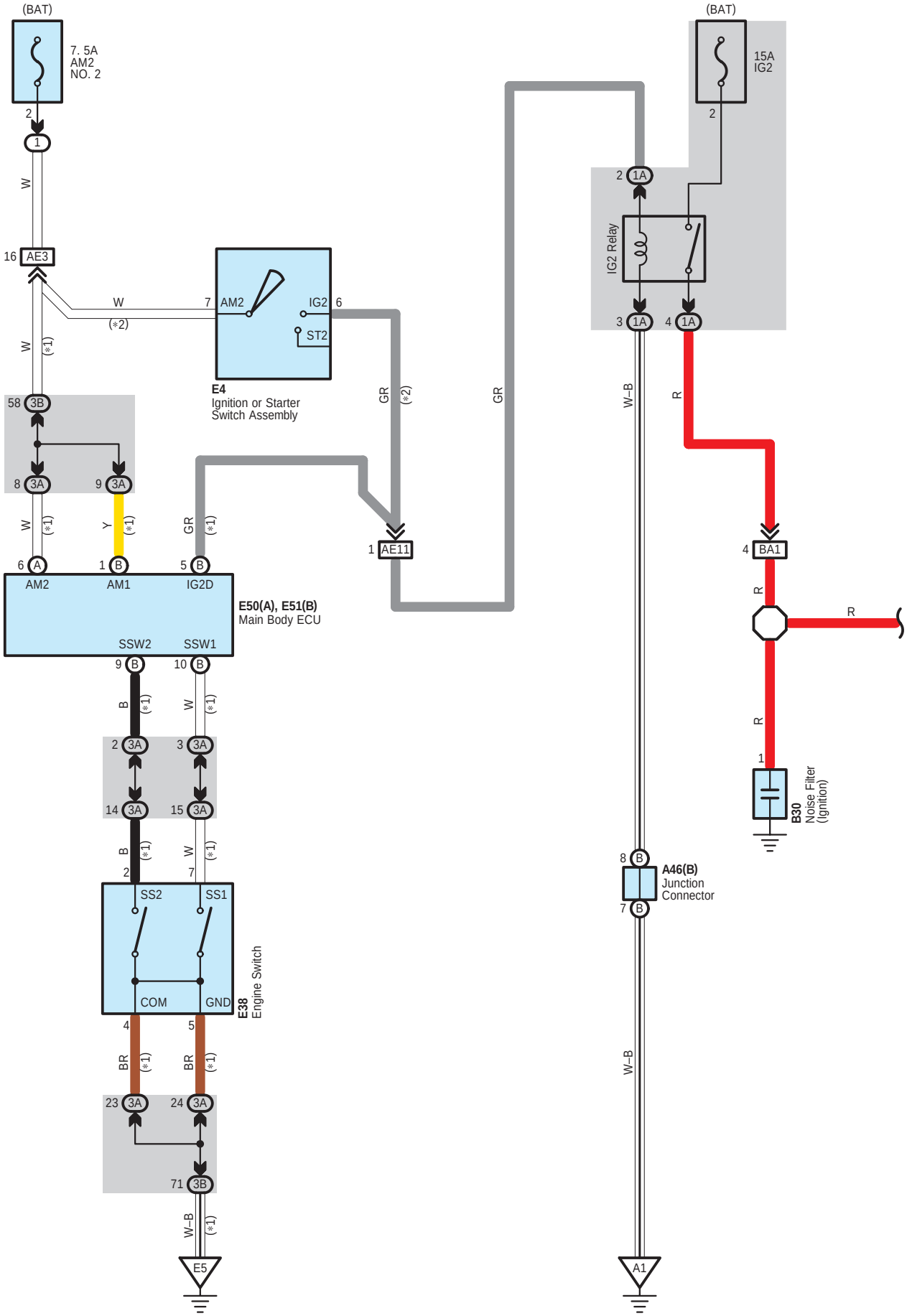
(BAT)
7. 5A
AM2
NO. 2
2
1
W
16 AE3
W
(*2)
W
(*1)
7 AM2
IG2 6
ST2
E4
Ignition or Starter
Switch Assembly
GR
(*2)
GR
58 3B
8 3A
9 3A
W
(*1)
Y
(*1)
GR
(*1)
6 A
1 B
5 B
AM2
AM1
IG2D
E50(A), E51(B)
Main Body ECU
1 AE11
SSW2
SSW1
9 B
10 B
B
(*1)
W
(*1)
2 3A
3 3A
14 3A
15 3A
B
(*1)
W
(*1)
2
7
SS2
SS1
COM
GND
E38
Engine Switch
4
5
BR
(*1)
BR
(*1)
23 3A
24 3A
71 3B
W–B
(*1)
E5
(BAT)
15A
IG2
2
2 1A
IG2 Relay
3 1A
4 1A
W–B
R
4 BA1
R
R
R
1
B30
Noise Filter
(Ignition)
8 B
7 B
A46(B)
Junction
Connector
W–B
A1

* 1 : w/ Smart Key System
* 2 : w/o Smart Key System

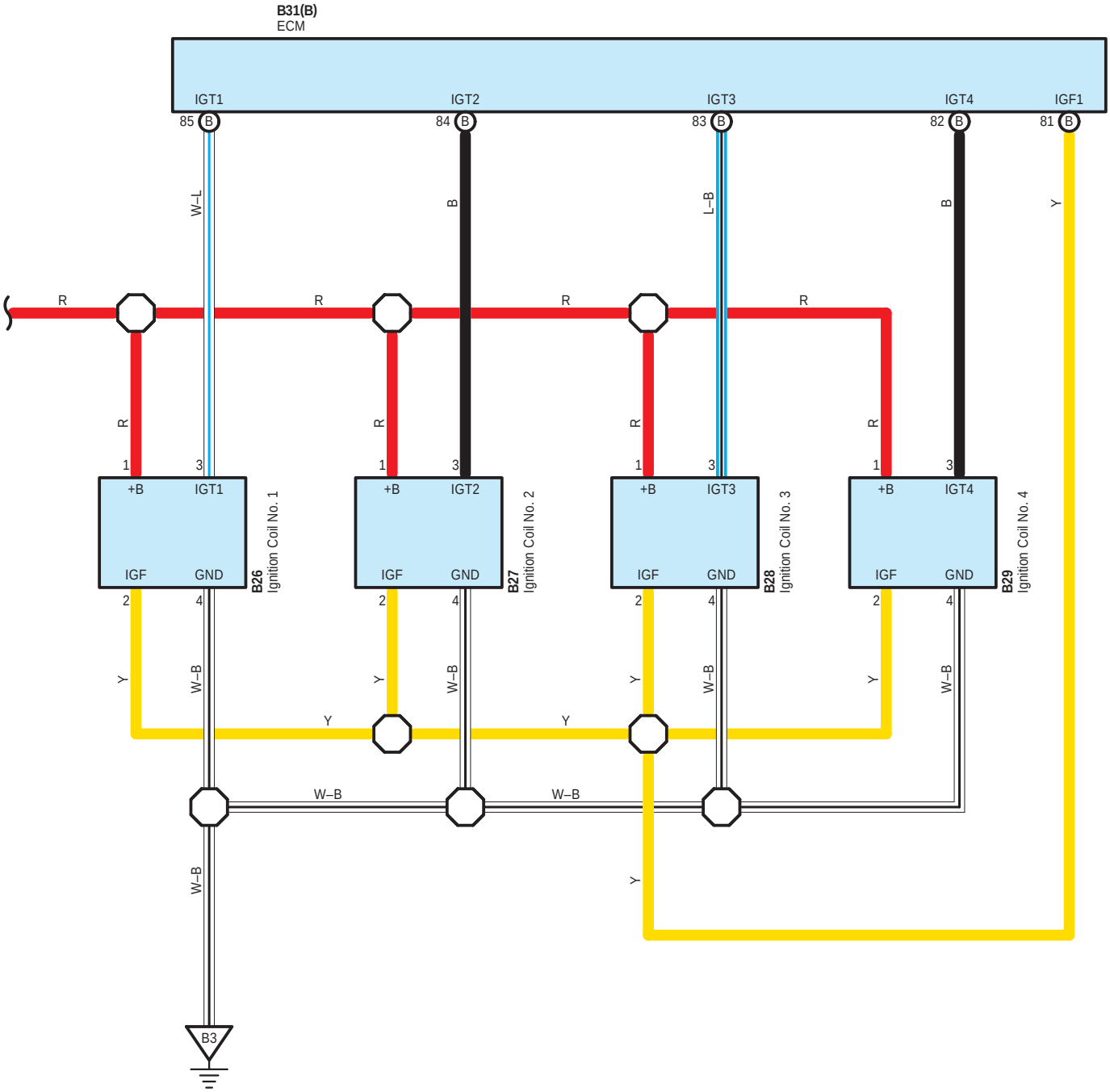

A 46
White

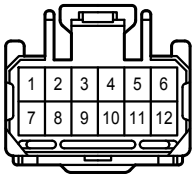

B 26
Black

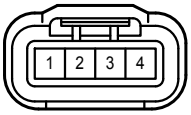

B 27
Gray

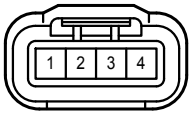

B 28
Black

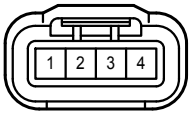

B 29
Gray



B 30
Gray



B 31
Black

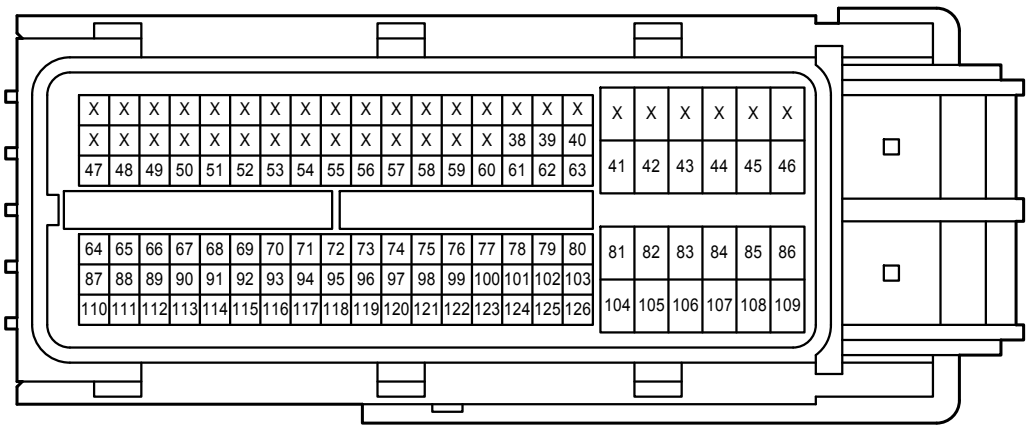

E 4
White

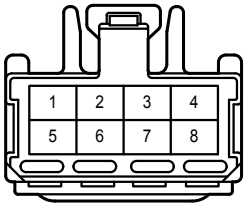

E 38
Black

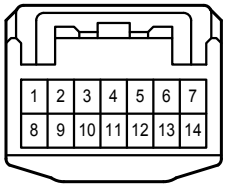

E 50
White

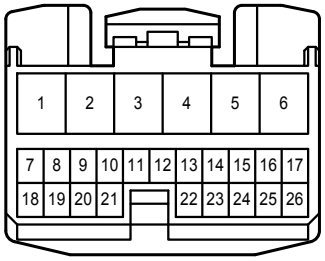

E 51
White

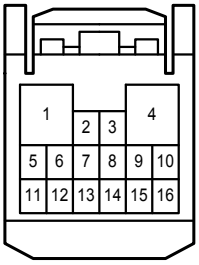

1A
White

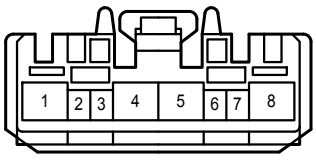

3A
White

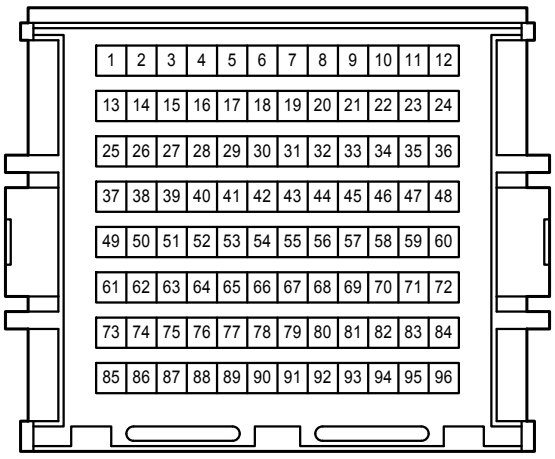

3B
White

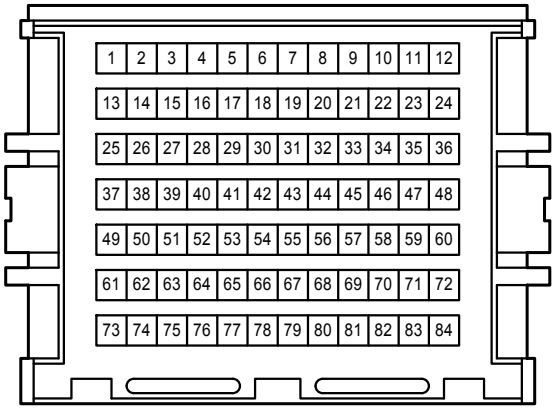

AE3
White

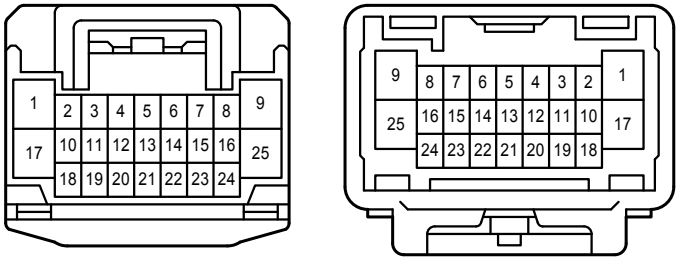

AE11
White

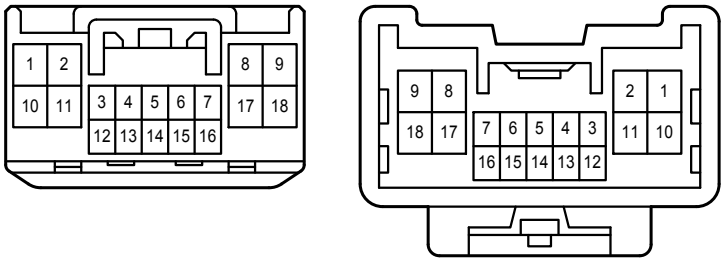

BA1
White

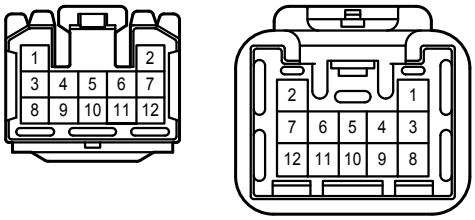

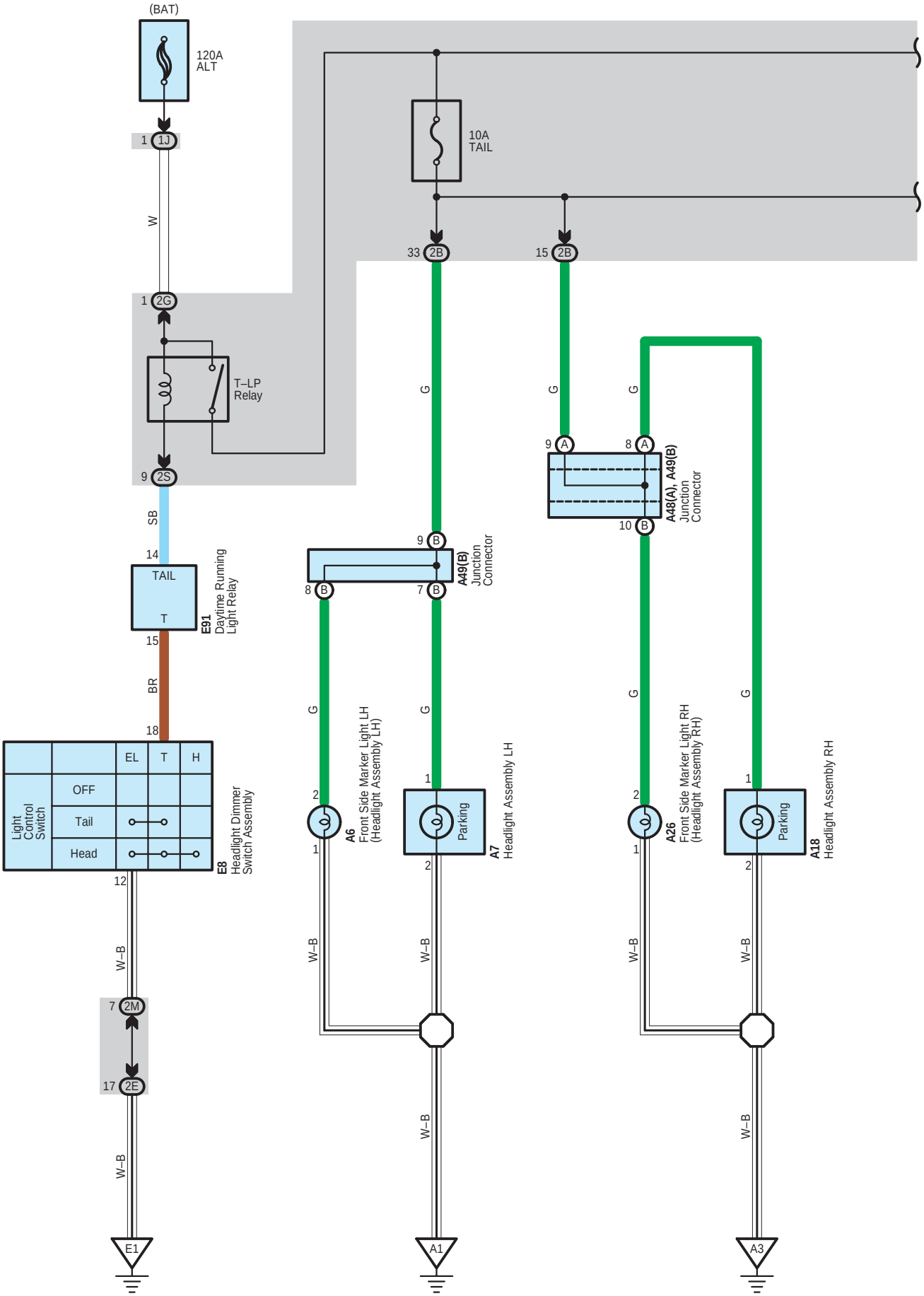
(BAT)
120A
ALT
1 1J
W
1 2G
T–LP
Relay
9 2S
SB
14
TAIL
T
E91
Daytime Running
Light Relay
15
BR
18
EL T H
OFF
Tail
Head
Light
Control
Switch
E8
Headlight Dimmer
Switch Assembly
12
W–B
7 2M
17 2E
W–B
E1
10A
TAIL
33 2B
15 2B
G
9 B
8 B
7 B
A49(B)
Junction
Connector
G
2
A6
Front Side Marker Light LH
(Headlight Assembly LH)
1
W–B
1
Parking
2
A7
Headlight Assembly LH
W–B
A1
G
9 A
8 A
A48(A), A49(B)
Junction
Connector
10 B
G
2
A26
Front Side Marker Light RH
(Headlight Assembly RH)
1
W–B
G
1
Parking
2
A18
Headlight Assembly RH
W–B
A3

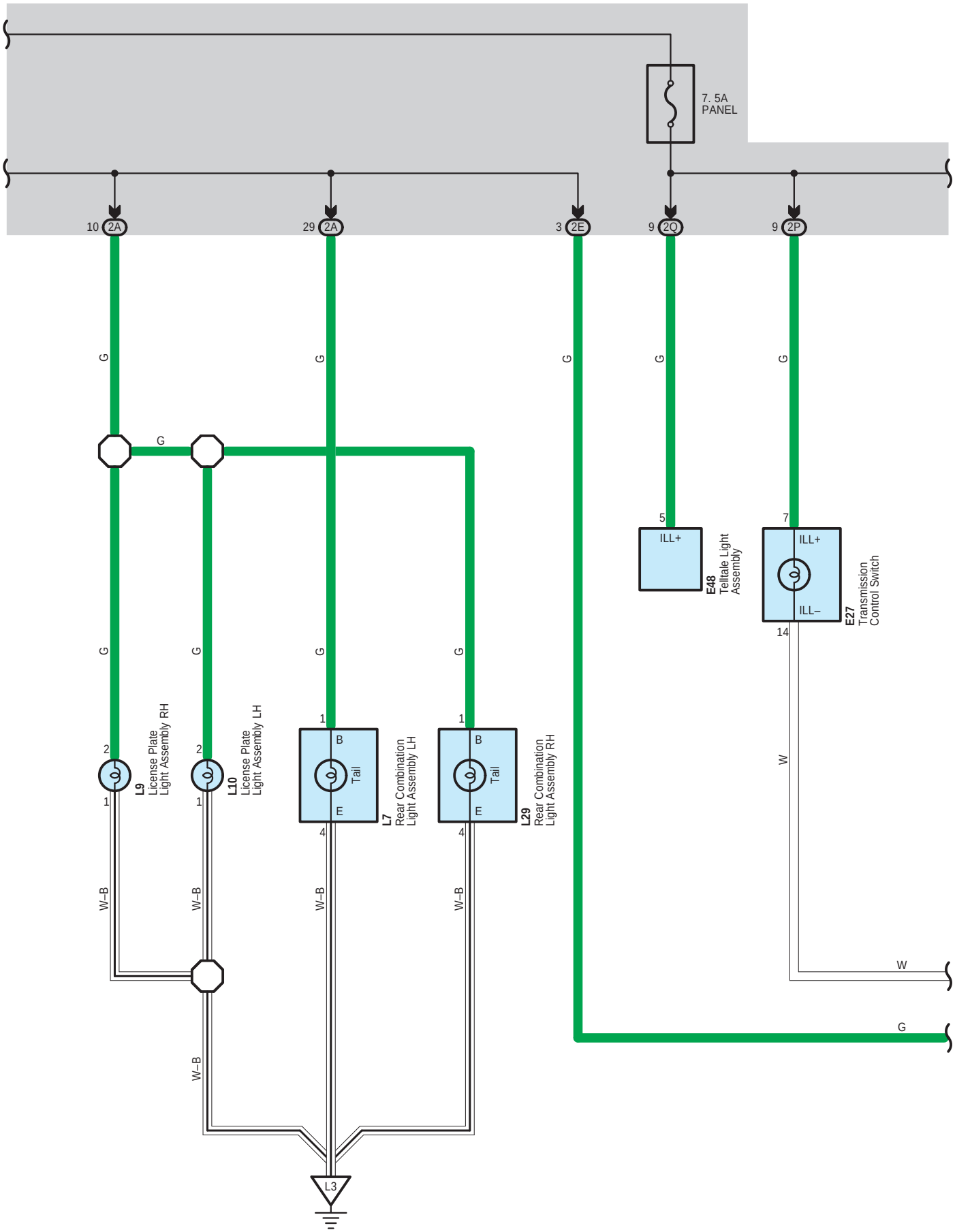
7. 5A
PANEL
10 2A
29 2A
3 2E
9 2Q
9 2P
G
W–B
W
5
ILL+
E48
Telltale Light
Assembly
7
ILL+
ILL–
E27
Transmission
Control Switch
14
2
1
L9
License Plate
Light Assembly RH
L10
License Plate
Light Assembly LH
B
Tail
E
L7
Rear Combination
Light Assembly LH
L29
Rear Combination
Light Assembly RH
4
L3

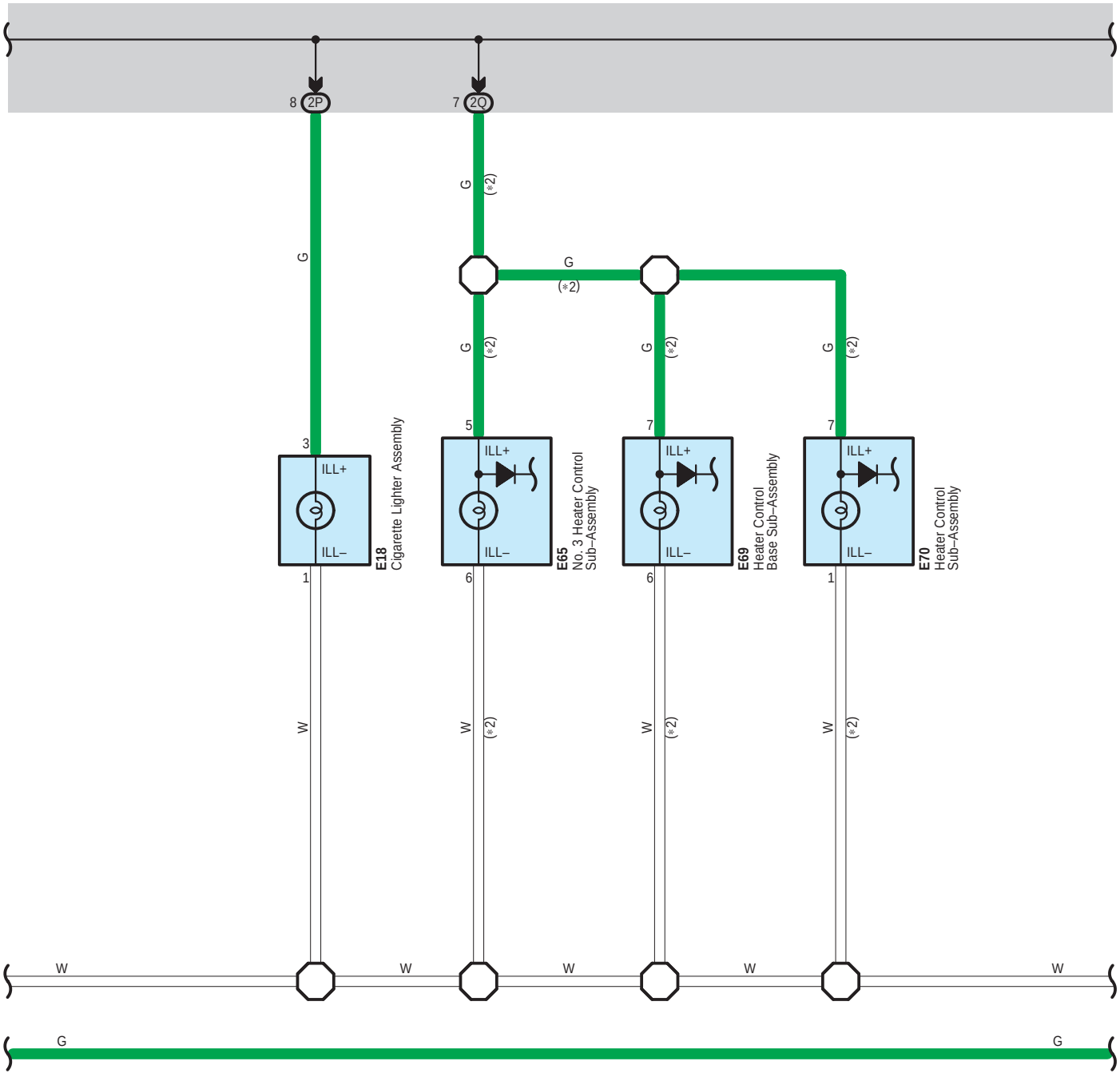
8 2P
7 2Q
G
(*2)
3
ILL+
ILL–
1
E18
Cigarette Lighter Assembly
5
6
E65
No. 3 Heater Control Sub–Assembly
7
E69
Heater Control Base Sub–Assembly
E70
Heater Control Sub–Assembly
W
W
W
W
W
G
G

∗ 2 : Manual A/C
∗ 3 : w/ Steering Pad Switch
∗ 4 : Separate Type Amplifier
∗ 5 : Built–In Type Amplifier

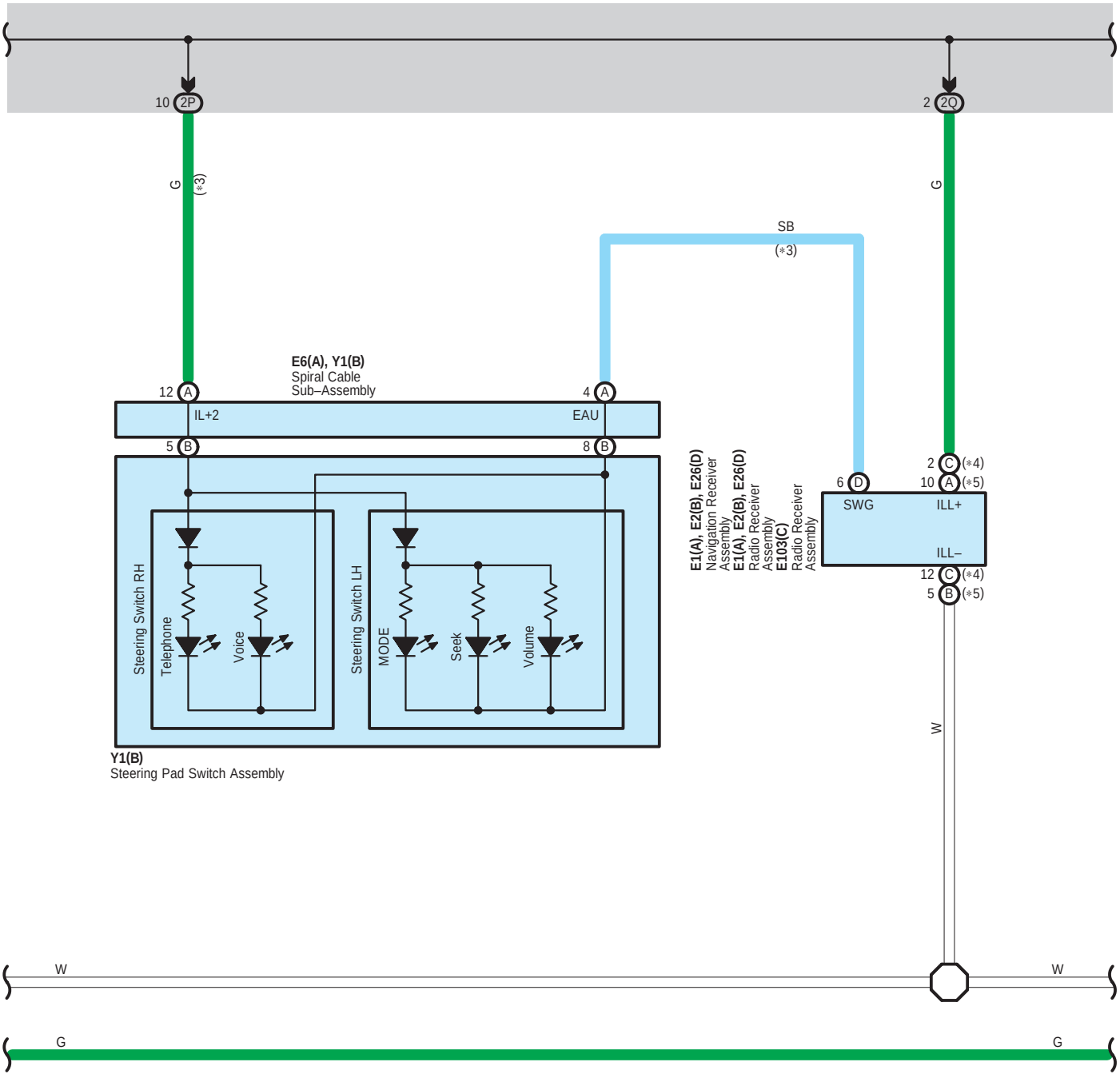

∗ 1 : Automatic A/C
∗ 6 : w/ Smart Key System
∗ 7 : Optitron Meter
∗ 8 : Except Optitron Meter
∗ 9 : Optitron Meter Except USA

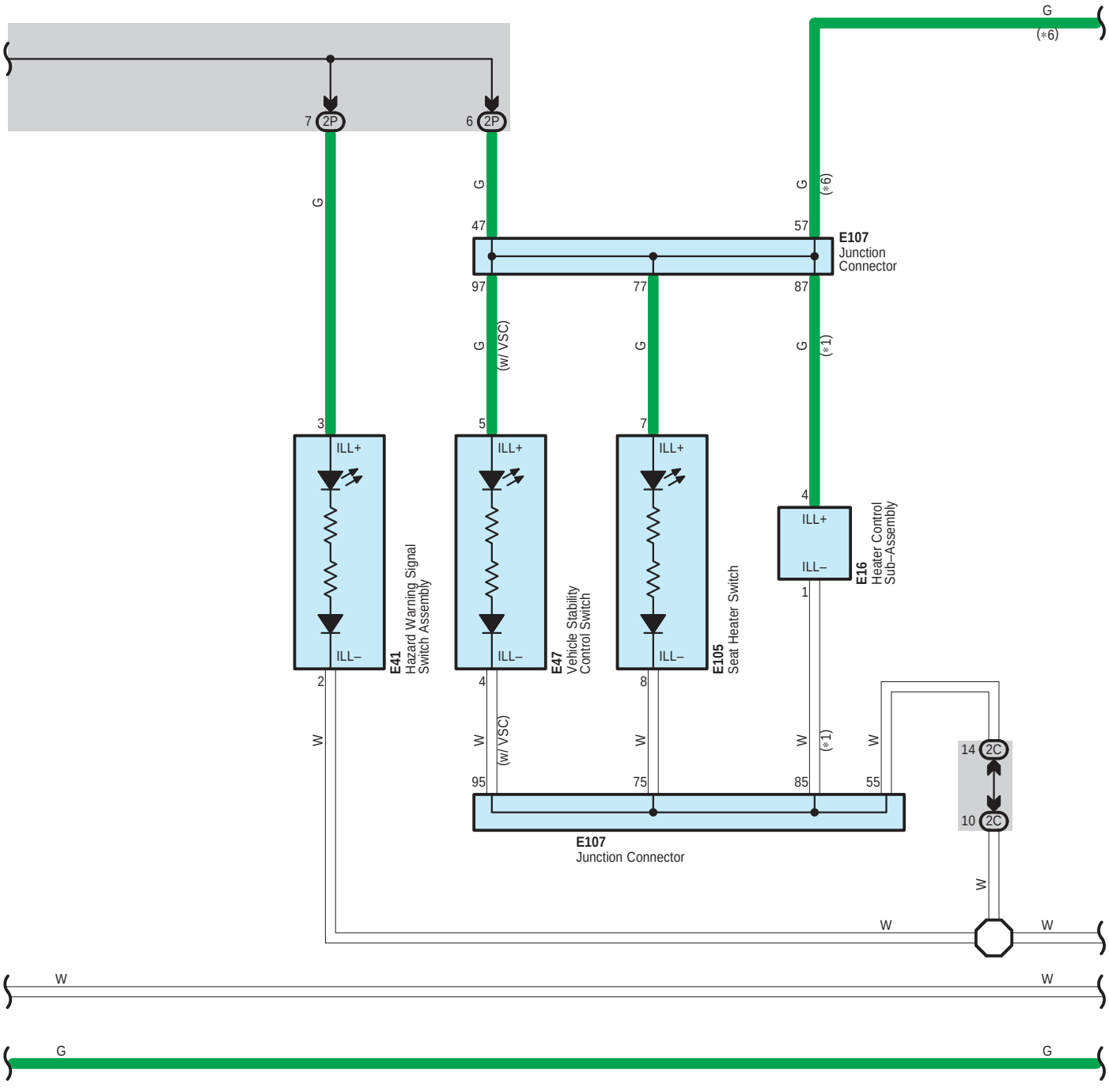

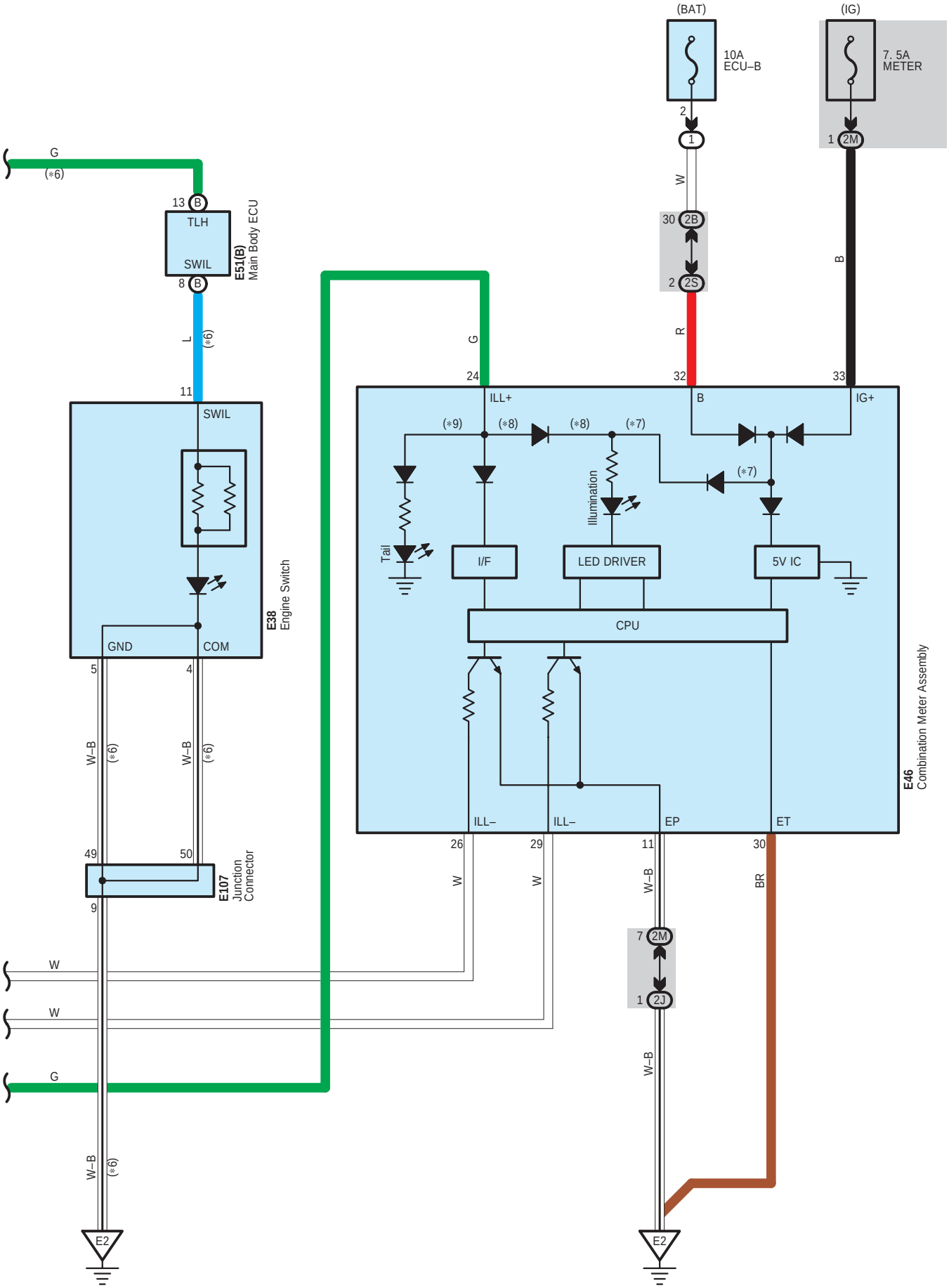
(BAT)
10A
ECU–B
2
1
W
30 2B
2 2S
R
(IG)
7. 5A
METER
1 2M
B
G
(*6)
13 B
TLH
SWIL
8 B
E51(B)
Main Body ECU
L
(*6)
11
SWIL
GND
COM
E38
Engine Switch
5
4
W–B
(*6)
W–B
(*6)
49
50
E107
Junction
Connector
9
W
W
G
W–B
(*6)
E2
G
24
ILL+
(*9)
(*8)
(*8)
(*7)
(*7)
Illumination
Tail
I/F
LED DRIVER
5V IC
CPU
ILL–
ILL–
EP
ET
26
29
11
30
W
W
W–B
BR
7 2M
1 2J
W–B
E2
32
B
33
IG+
E46
Combination Meter Assembly

A 6
Black

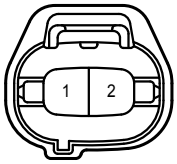

A 7
Gray



A 18
Gray



A 26
Black

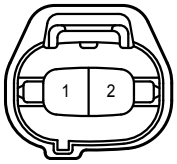

A 48
White

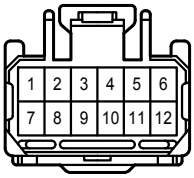

A 49
White

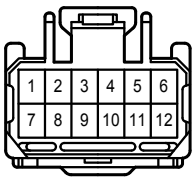

E 1
White

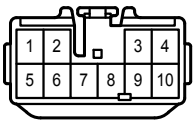

E 2
White



E 6
Black



E 8
White

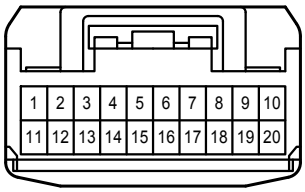

E 16
White

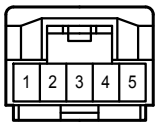

E 18
Blue

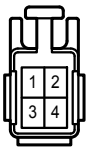

E 26
White

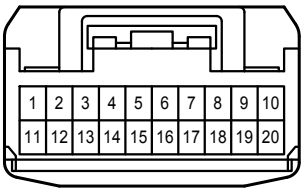

E 27
White

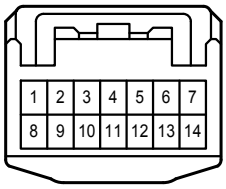

E 38
Black

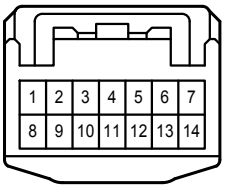

E 41
Gray

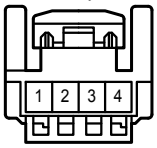

E 46
White

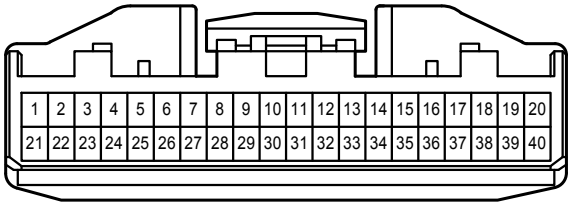

E 47
White

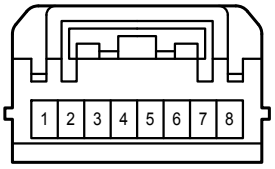

E 48
Black

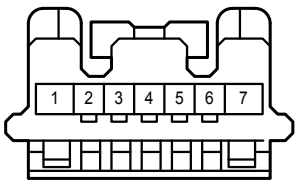

E 51
White

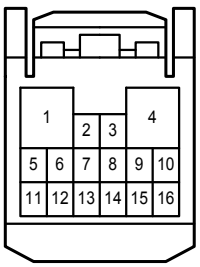

E 65
Black

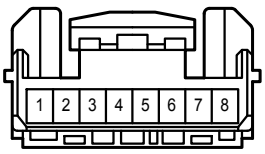

E 69
Gray

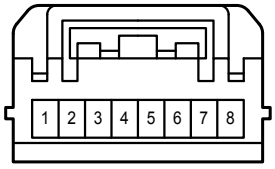

E 70
Gray

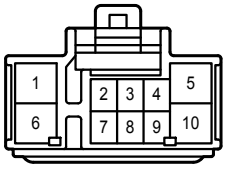

E 91
White

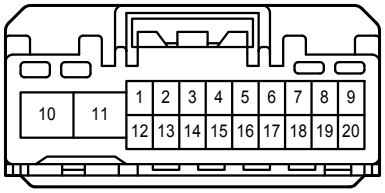

E103
White

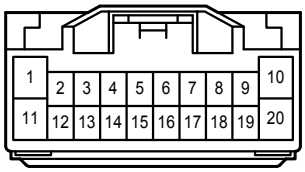

E105
Black

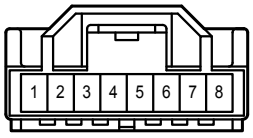

E107
White

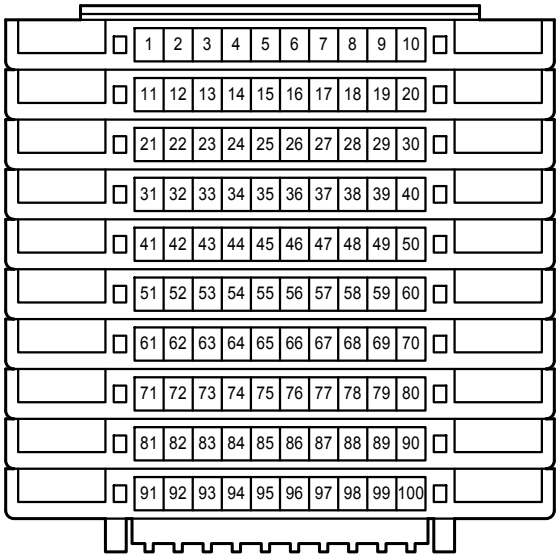

L 7
White

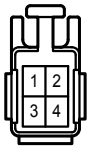

L 9
Black



L 10
Black



L 29
White

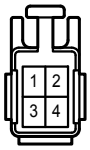

Y 1
White

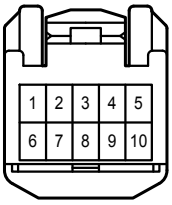

1J

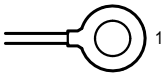

2A
White

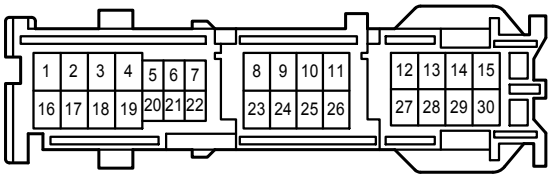

2B
White

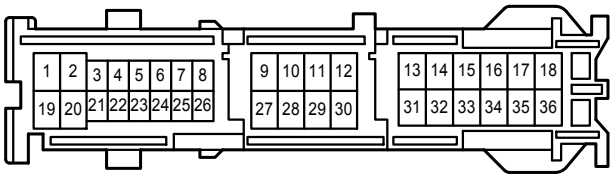

2C
White

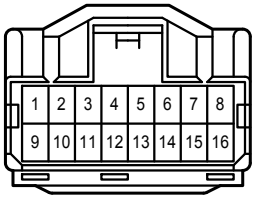

2E
White

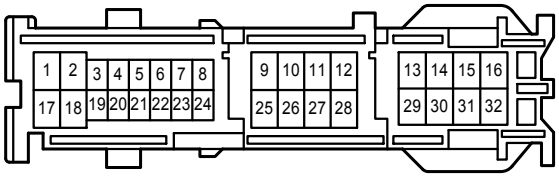

2G
White

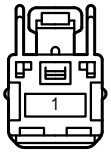

2J
White

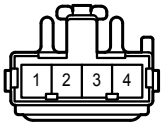

2M
White

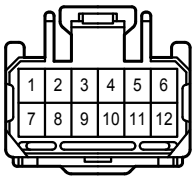

2P
White

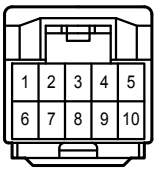

2Q
White

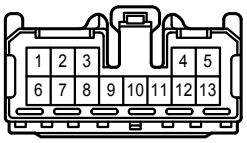

2S
White

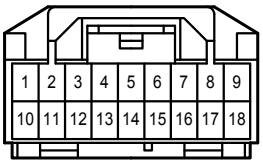

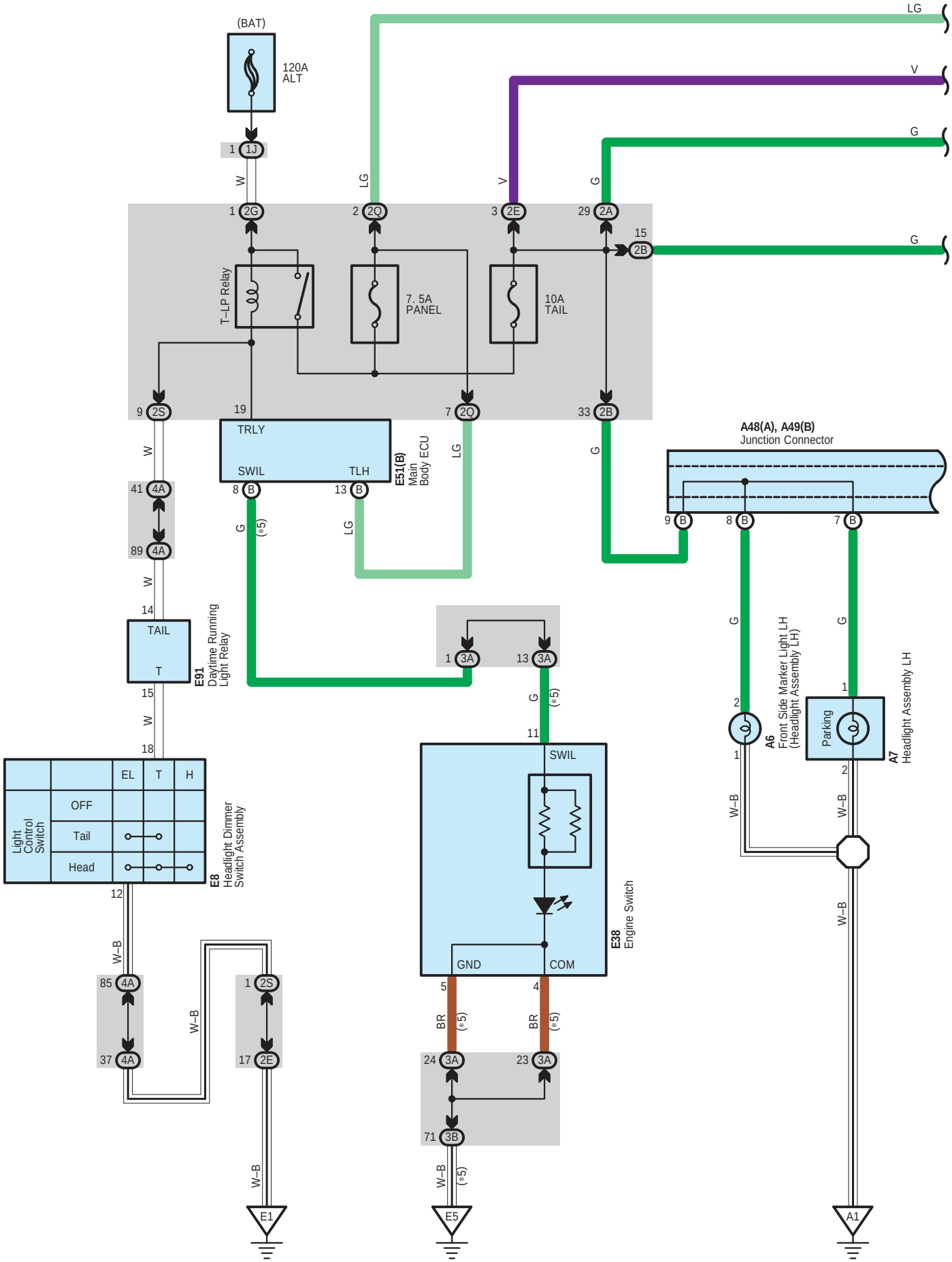
(BAT)
120A
ALT
1 1J
W
1 2G
LG
2 2Q
V
3 2E
G
29 2A
15
2B
G
T–LP Relay
7. 5A
PANEL
10A
TAIL
9 2S
19
7 2Q
33 2B
TRLY
SWIL
TLH
8 B
13 B
E51(B)
Main
Body ECU
LG
G
A48(A), A49(B)
Junction Connector
9 B
8 B
7 B
41 4A
89 4A
W
14
TAIL
T
E91
Daytime Running
Light Relay
15
W
18
1 3A
13 3A
G
(*5)
11
SWIL
GND
COM
E38
Engine Switch
5
4
BR
(*5)
24 3A
23 3A
71 3B
W–B
E5
G
2
1
A6
Front Side Marker Light LH
(Headlight Assembly LH)
Parking
A7
Headlight Assembly LH
W–B
A1
EL
T
H
OFF
Tail
Head
Light
Control
Switch
E8
Headlight Dimmer
Switch Assembly
12
W–B
85 4A
37 4A
1 2S
17 2E
W–B
E1

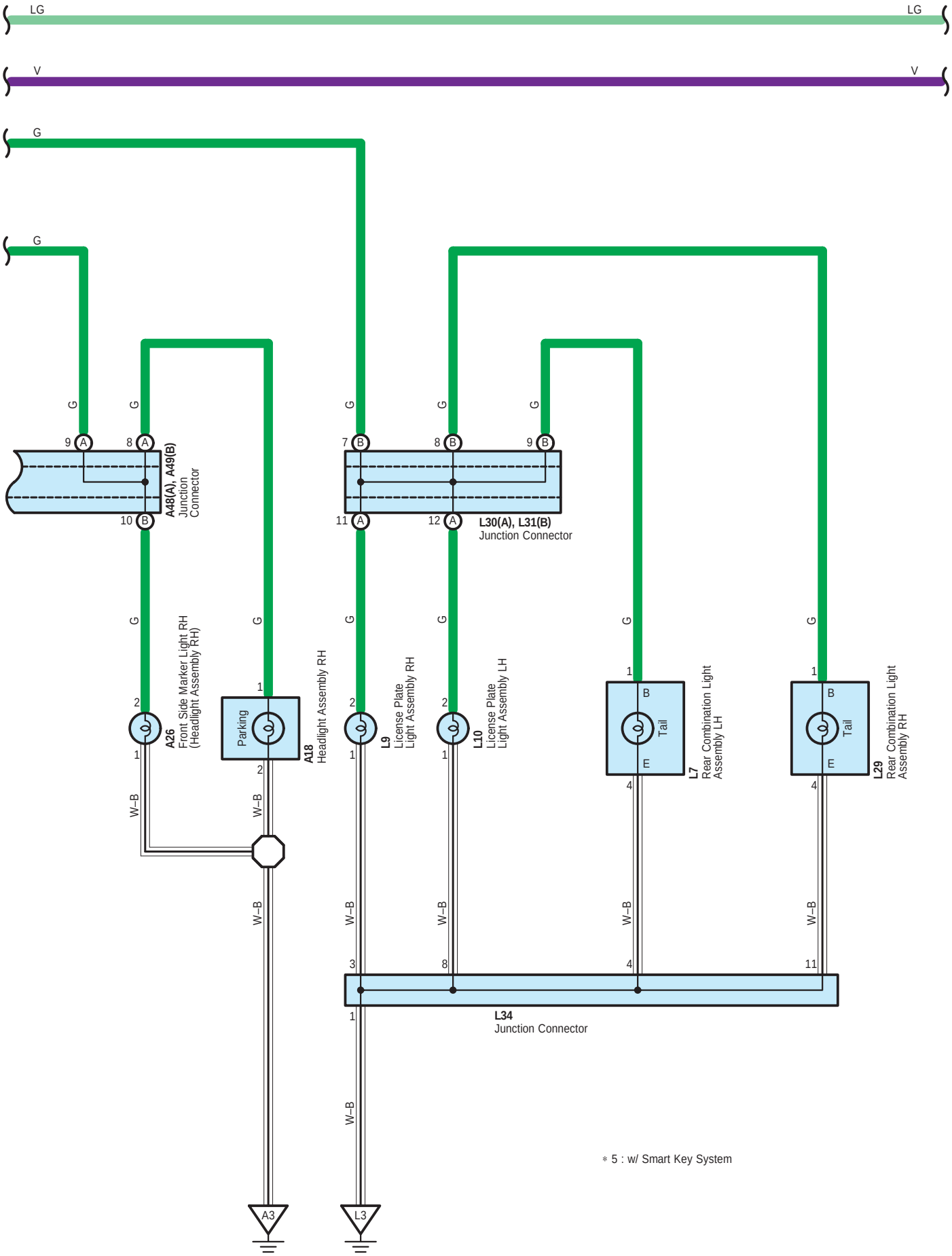
LG
LG
V
V
G
G
A48(A), A49(B)
Junction
Connector
L30(A), L31(B)
Junction Connector
A26
Front Side Marker Light RH
(Headlight Assembly RH)
Parking
A18
Headlight Assembly RH
L9
License Plate
Light Assembly RH
L10
License Plate
Light Assembly LH
Tail
L7
Rear Combination Light
Assembly LH
L29
Rear Combination Light
Assembly RH
W–B
L34
Junction Connector
A3
L3
* 5 : w/ Smart Key System

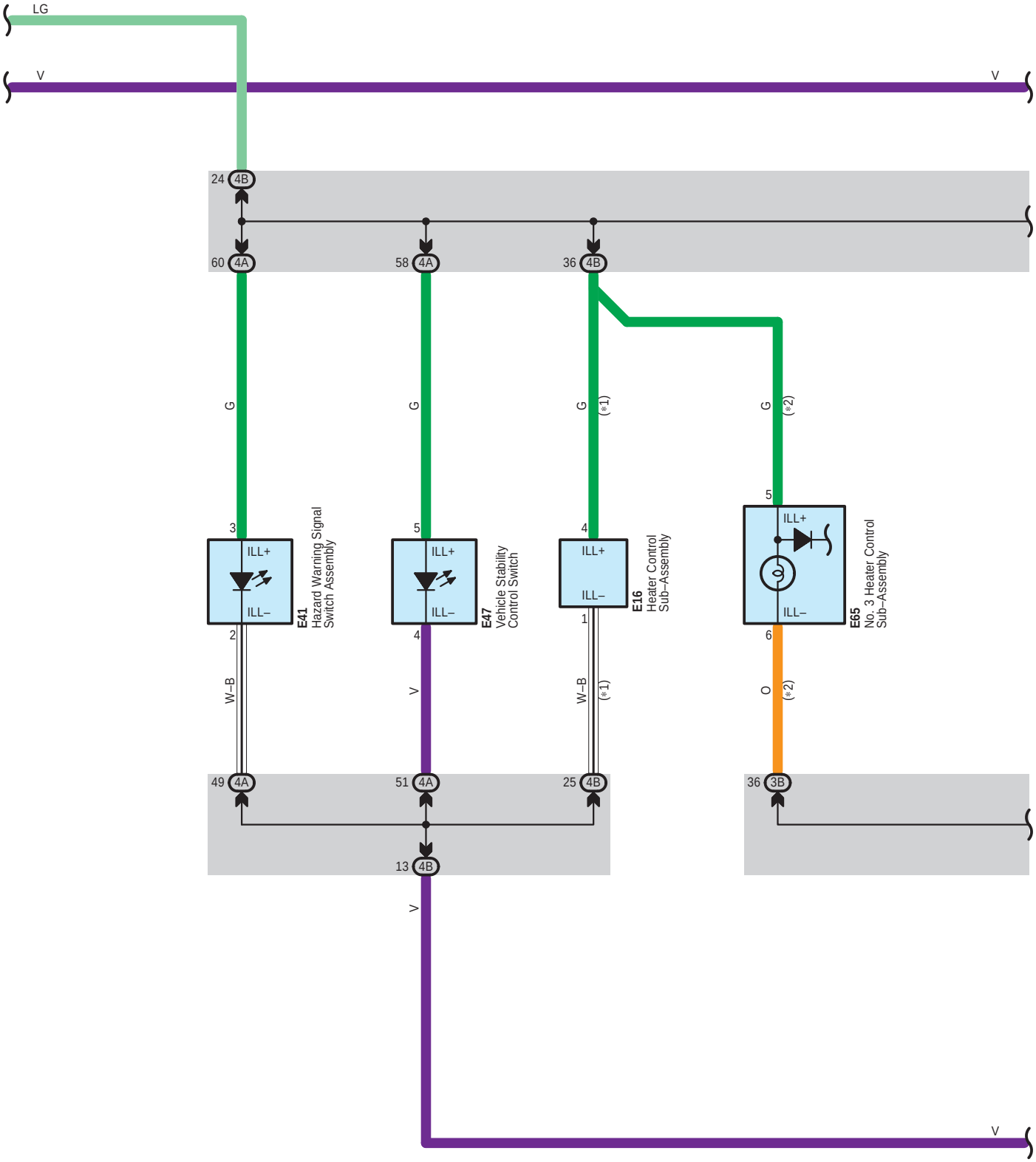
LG
V
V
24 4B
60 4A
58 4A
36 4B
G
G
G (*1)
G (*2)
3
5
4
5
ILL+
ILL–
E41
Hazard Warning Signal Switch Assembly
E47
Vehicle Stability Control Switch
E16
Heater Control Sub–Assembly
E65
No. 3 Heater Control Sub–Assembly
2
4
1
6
W–B
V
W–B (*1)
O (*2)
49 4A
51 4A
25 4B
36 3B
13 4B
V
V

* 1 : Automatic A/C
* 2 : Manual A/C

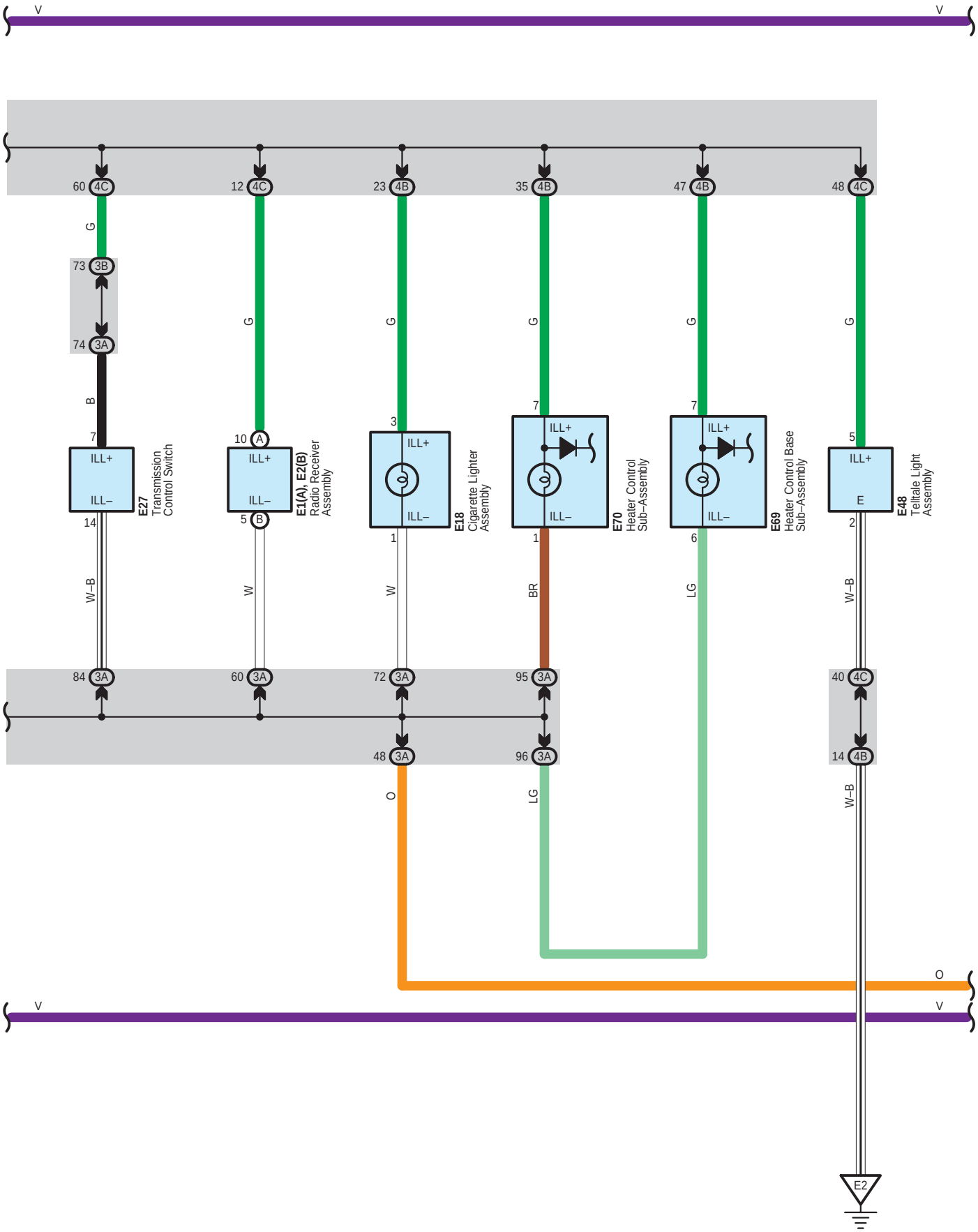

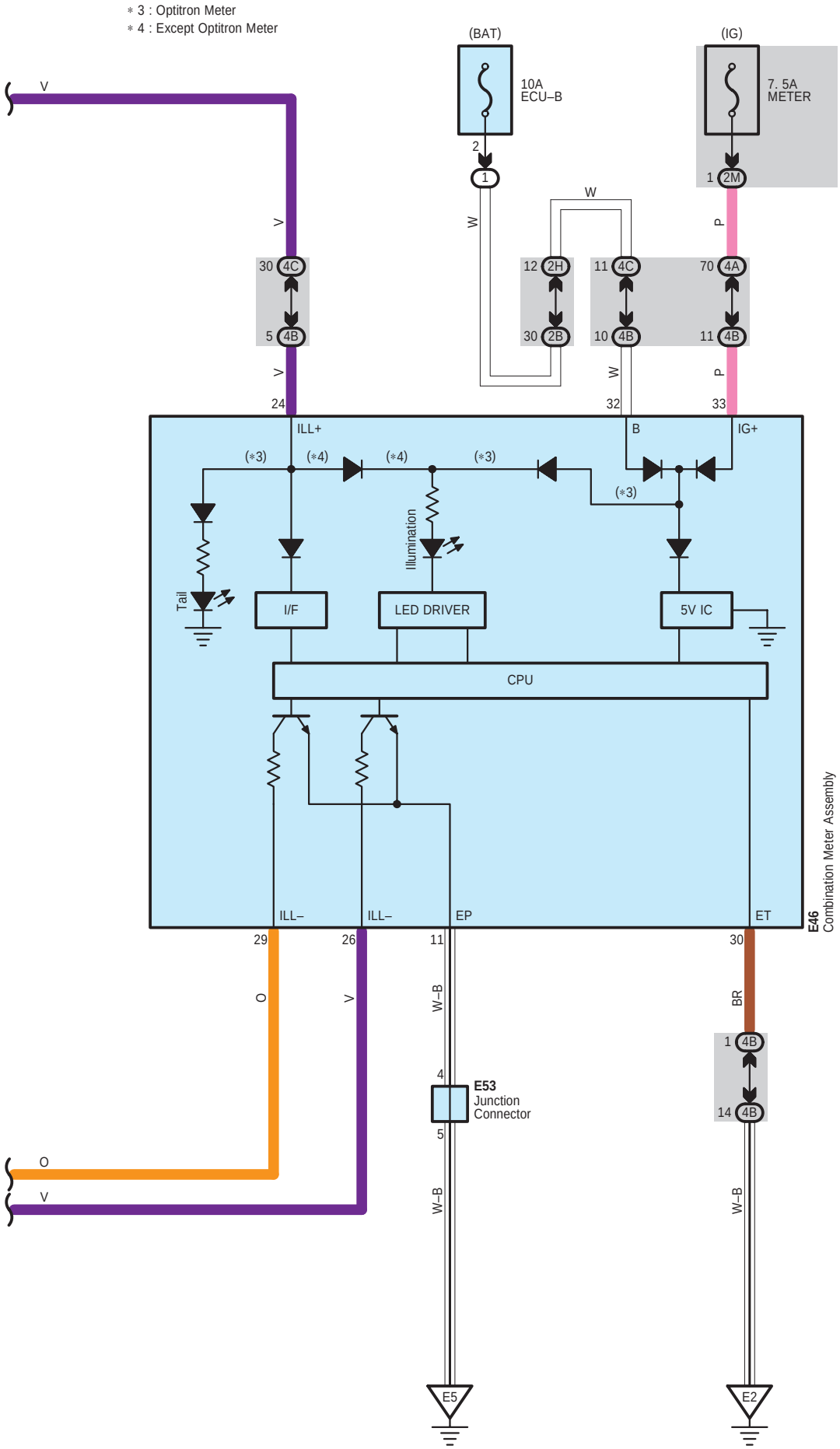
* 3 : Optitron Meter
* 4 : Except Optitron Meter
(BAT)
(IG)
10A
ECU–B
7. 5A
METER
V
W
P
30 4C
5 4B
12 2H
30 2B
11 4C
10 4B
70 4A
11 4B
24
32
33
ILL+
B
IG+
(*3)
(*4)
Illumination
Tail
I/F
LED DRIVER
5V IC
CPU
ILL–
EP
ET
E46
Combination Meter Assembly
29
26
11
30
O
W–B
BR
1 4B
14 4B
4
5
E53
Junction
Connector
E5
E2

A 6
Black

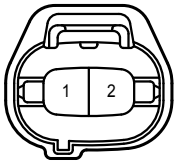

A 7
Gray



A 18
Gray



A 26
Black

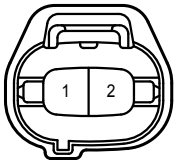

A 48
White

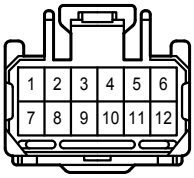

A 49
White

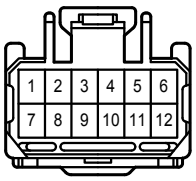

E 1
White

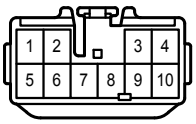

E 2
White



E 8
White

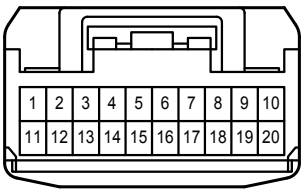

E 16
White

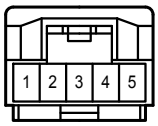

E 18
Blue

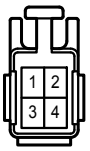

E 27
White

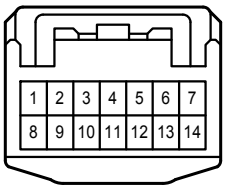

E 38
Black

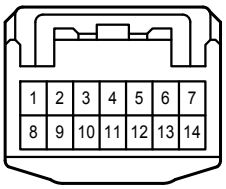

E 41
Gray

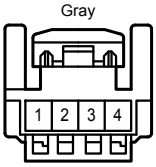

E 46
White

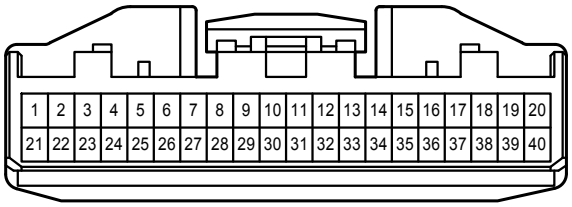

E 47
White

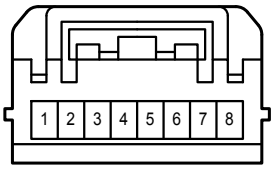

E 48
Black

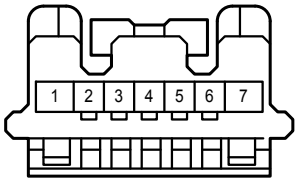

E 51
White

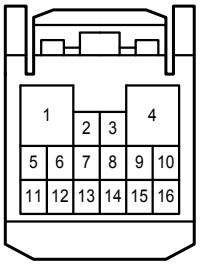

E 53
White

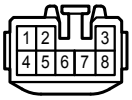

E 65
Black

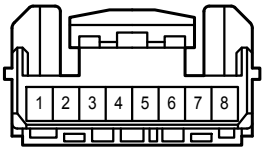

E 69
Gray

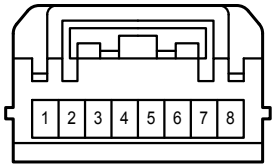

E 70
Gray

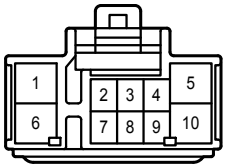

E 91
White

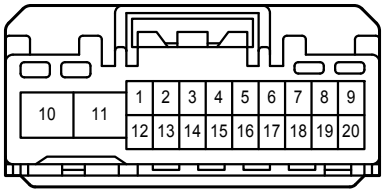

L 7
White

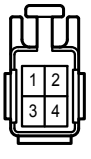

L 9
Black



L 10
Black



L 29
White

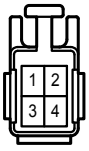

L 30
White

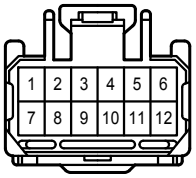

L 31
White

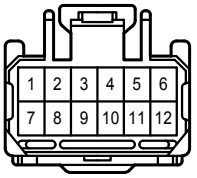

L 34
Blue

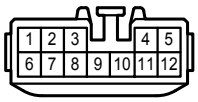

1J

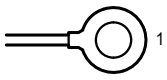

2A
White

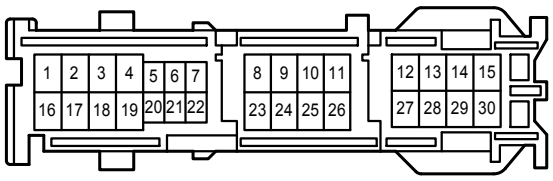

2B
White

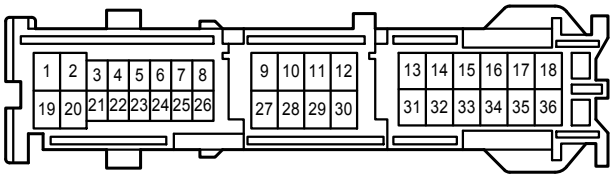

2E
White

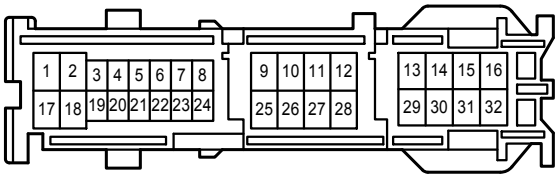

2G
White

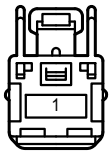

2H
White

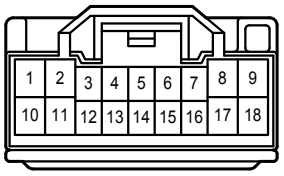

2M
White

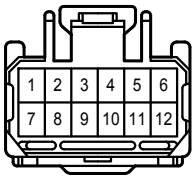

2Q
White

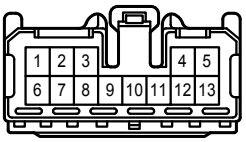

2S
White

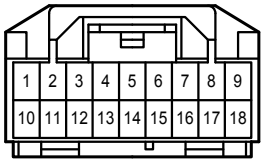

3A
White

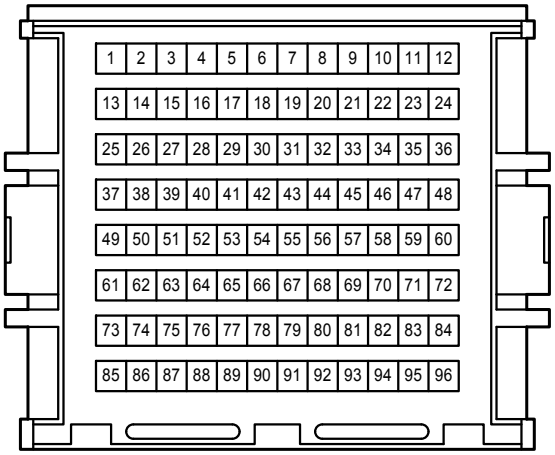

3B
White

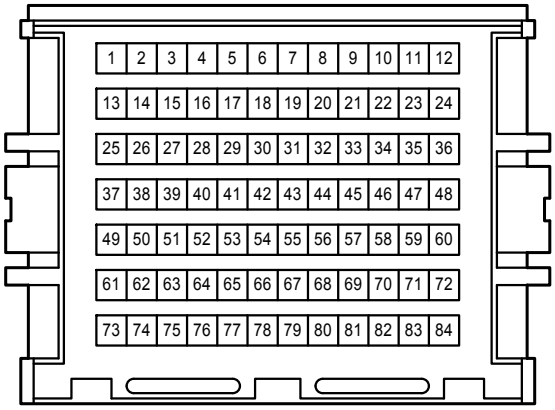

4A
White

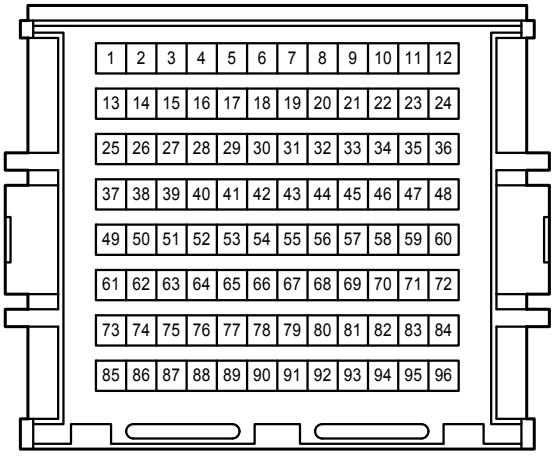

4B
White

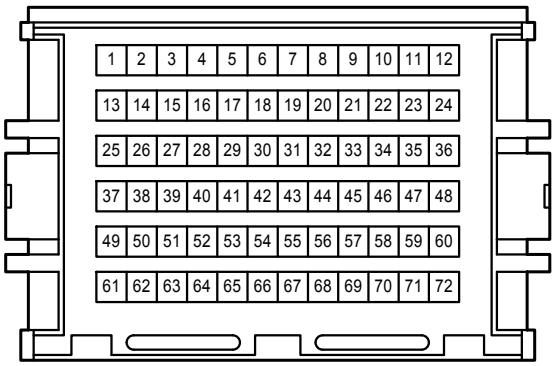

4C
White

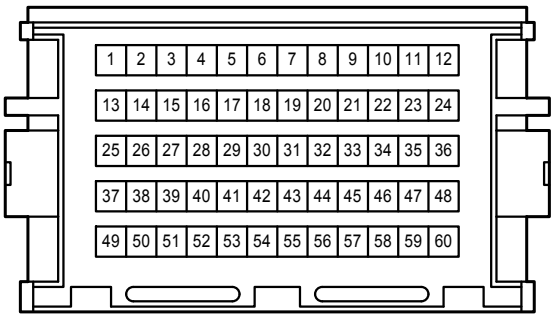

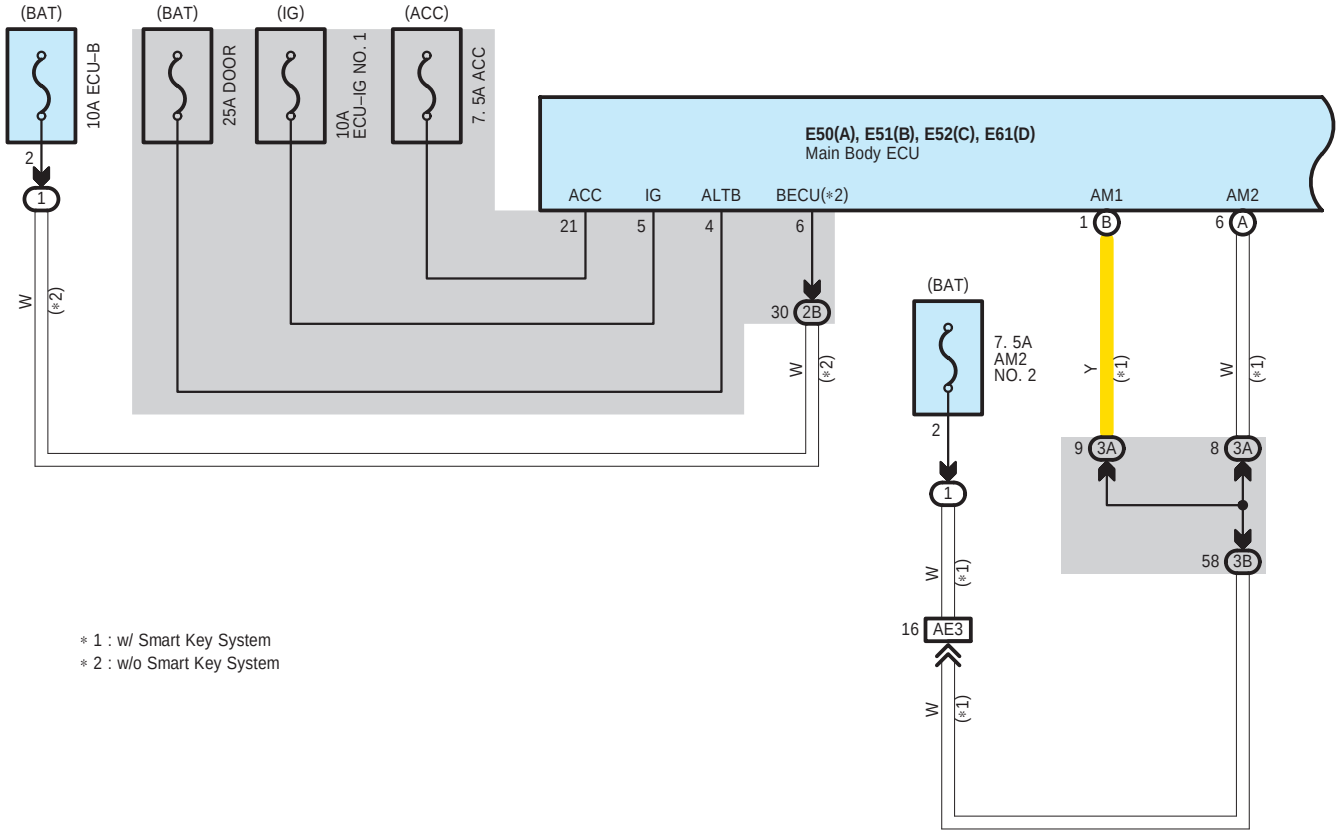
(BAT)
10A ECU–B
2
1
W
(*2)
(BAT)
25A DOOR
(IG)
10A ECU–IG NO. 1
(ACC)
7. 5A ACC
E50(A), E51(B), E52(C), E61(D)
Main Body ECU
ACC
IG
ALTB
BECU(*2)
AM1
AM2
21
5
4
6
1 B
6 A
30 2B
W
(*2)
(BAT)
7. 5A
AM2
NO. 2
2
1
Y
(*1)
W
(*1)
9 3A
8 3A
58 3B
W
(*1)
16 AE3
W
(*1)
* 1 : w/ Smart Key System
* 2 : w/o Smart Key System

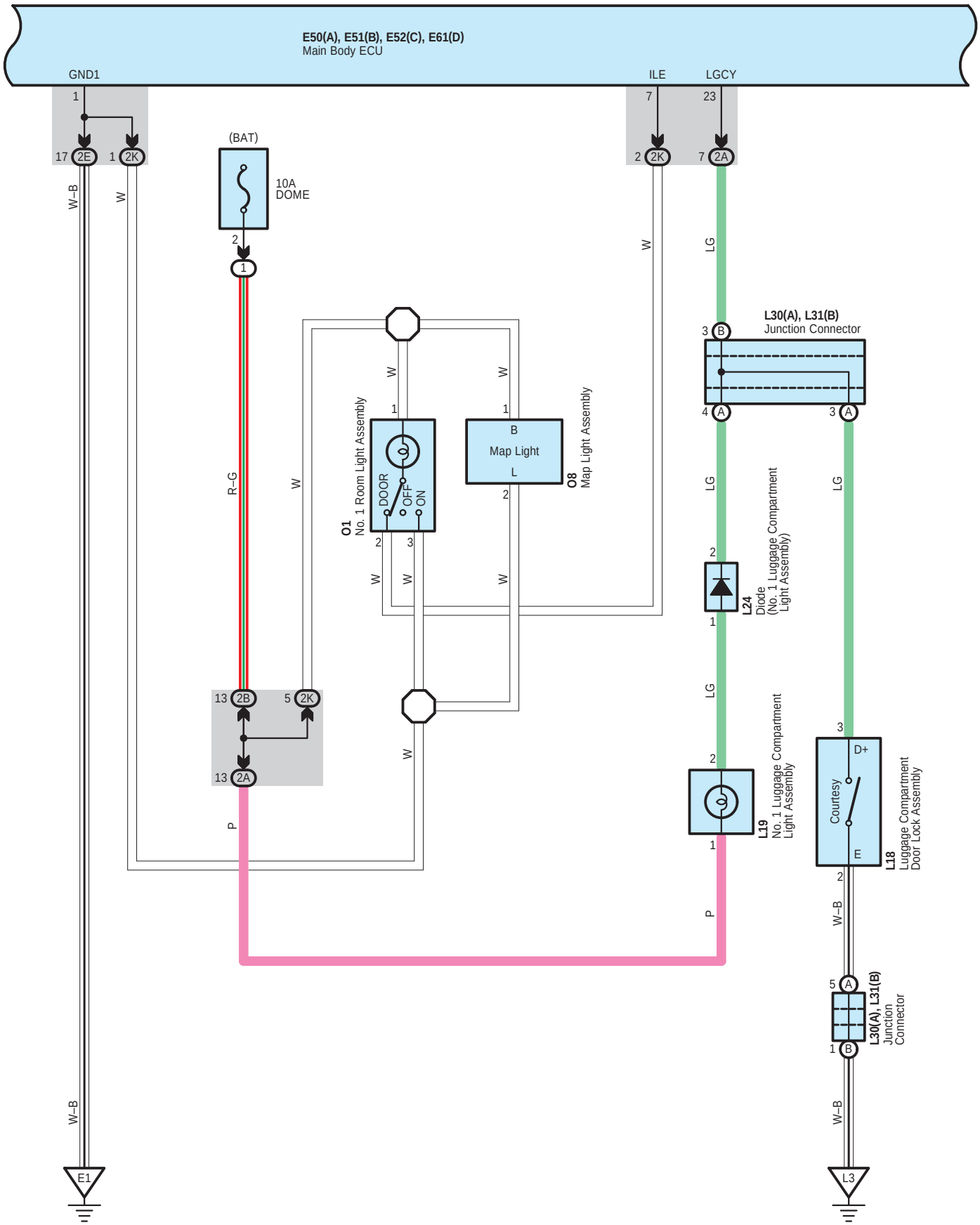
E50(A), E51(B), E52(C), E61(D)
Main Body ECU
GND1
ILE
LGCY
(BAT)
10A
DOME
O1
No. 1 Room Light Assembly
DOOR
OFF
ON
O8
Map Light Assembly
Map Light
L30(A), L31(B)
Junction Connector
L24
Diode
(No. 1 Luggage Compartment Light Assembly)
L19
No. 1 Luggage Compartment Light Assembly
L18
Luggage Compartment Door Lock Assembly
Courtesy
D+
E
L30(A), L31(B)
Junction Connector
E1
L3
W–B
W
R–G
LG
P

∗ 1 : w/ Smart Key System
∗ 2 : w/o Smart Key System

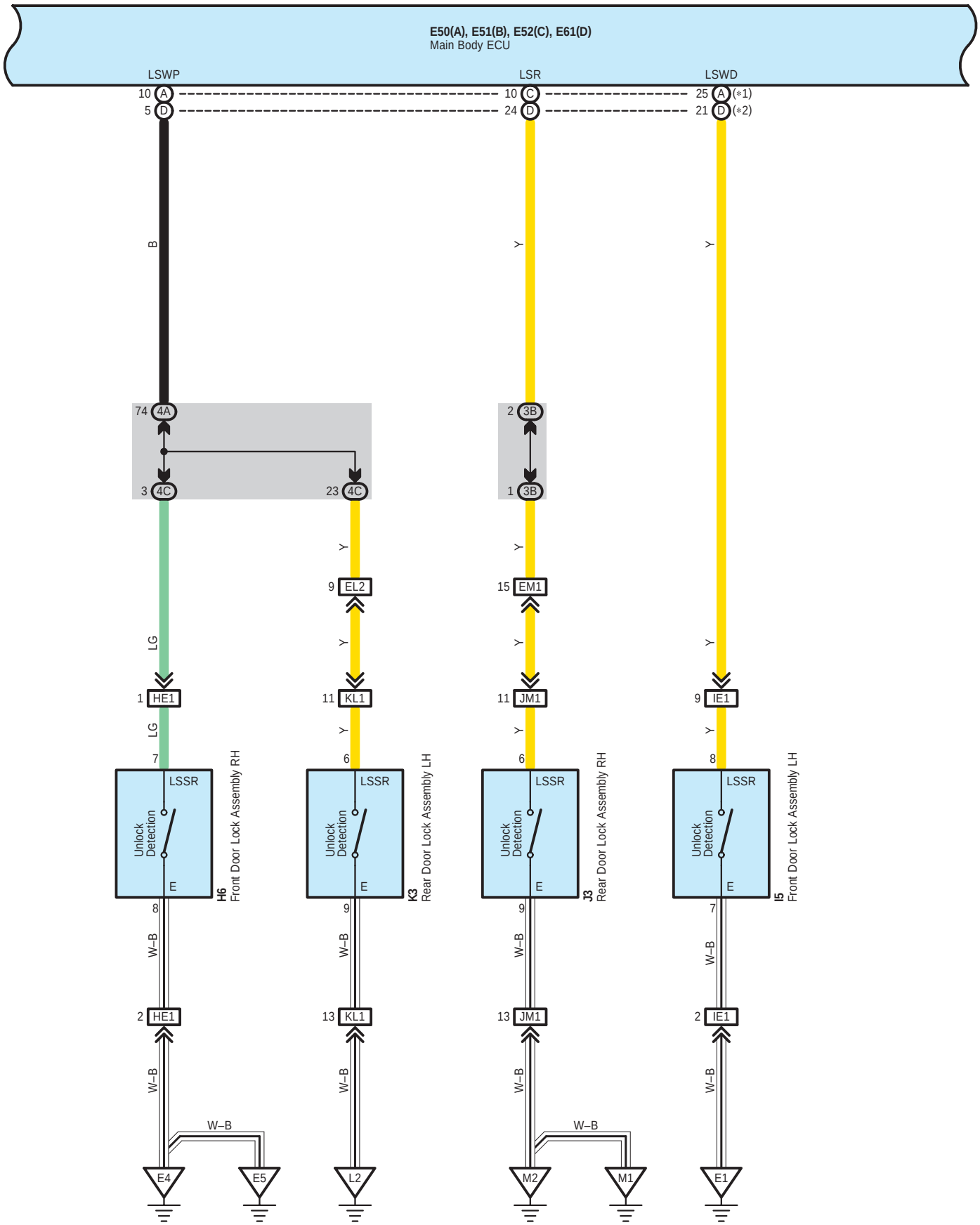

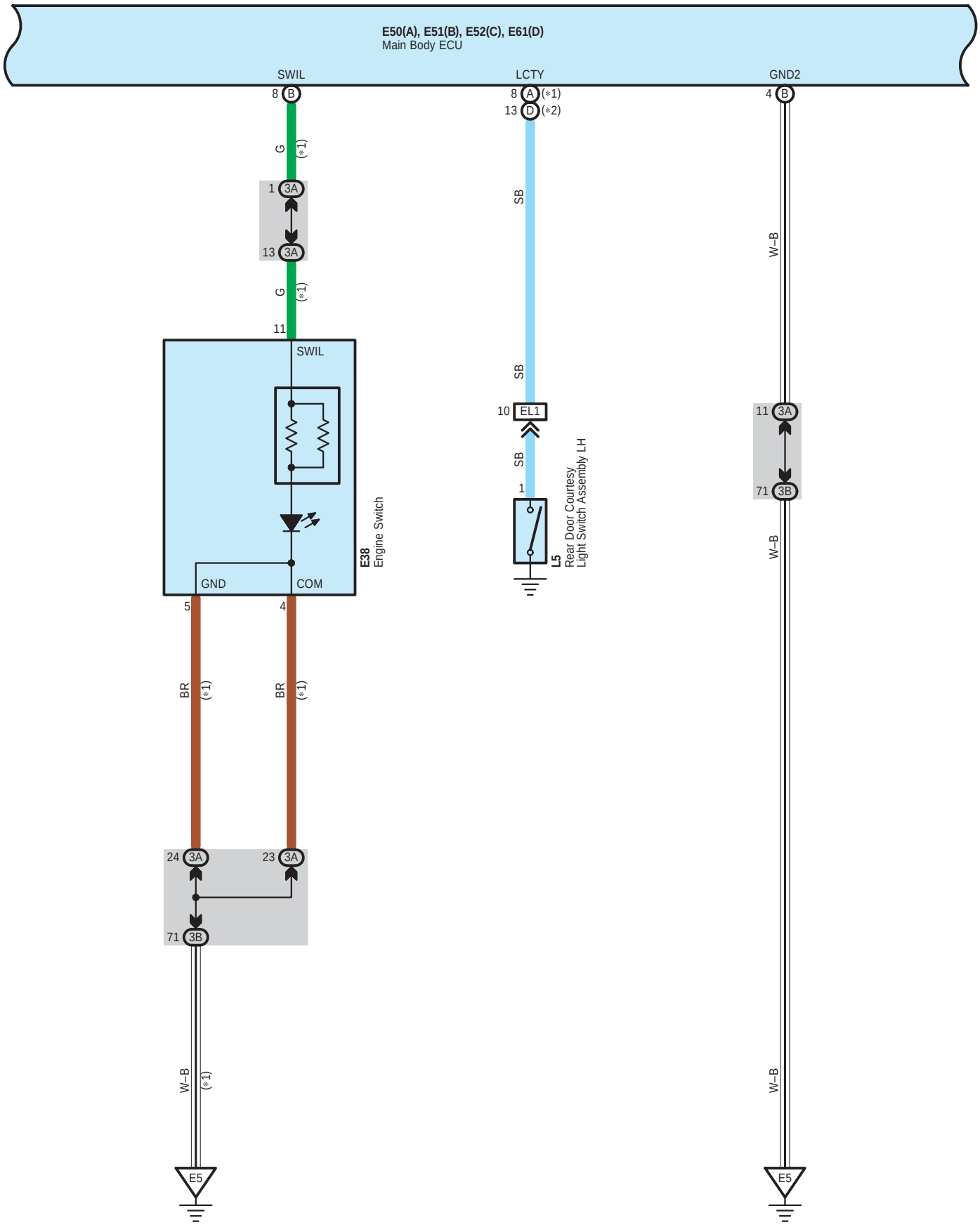
E50(A), E51(B), E52(C), E61(D)
Main Body ECU
SWIL
LCTY
GND2
8 B
8 A (*1)
13 D (*2)
4 B
G (*1)
SB
W–B
1 3A
13 3A
11 3A
71 3B
10 EL1
1
11
SWIL
GND
COM
5
4
E38
Engine Switch
L5
Rear Door Courtesy
Light Switch Assembly LH
BR (*1)
24 3A
23 3A
71 3B
W–B (*1)
E5

＊2 : w/o Smart Key System

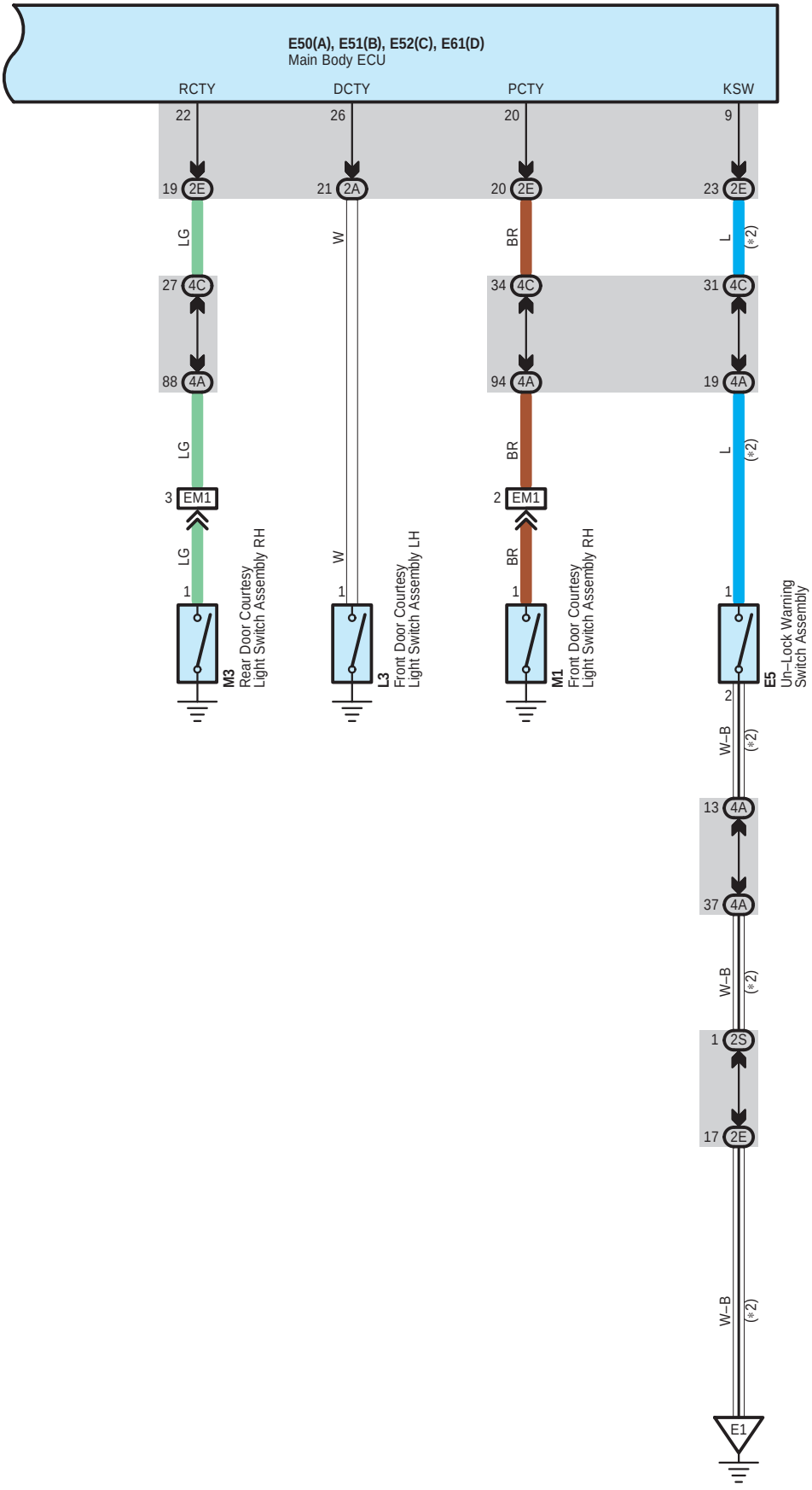

E 5
White

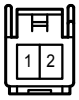

E 38
Black

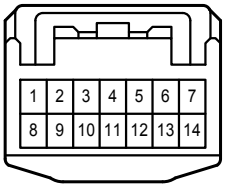

E 50
White

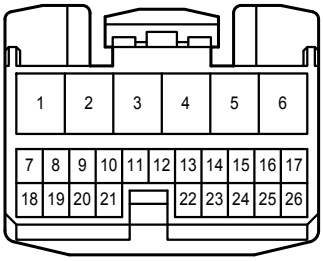

E 51
White

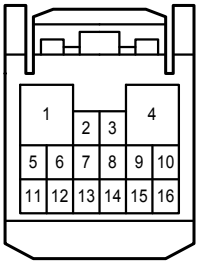

E 52
White

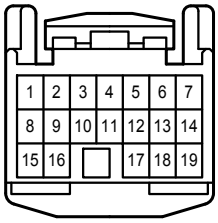

E 61
White

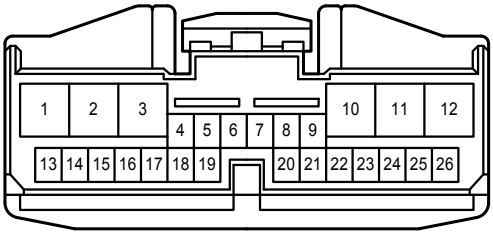

H 6
White

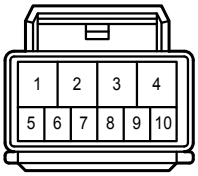

I 5
White



J 3
White

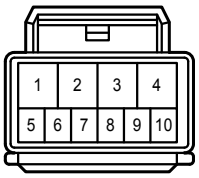

K 3
White

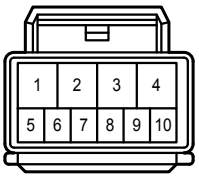

L 3
Black



L 5
Black



L 18
Black

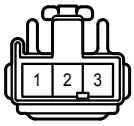

L 19
Gray

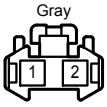

L 24
Black



L 30
White

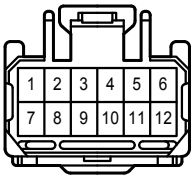

L 31
White

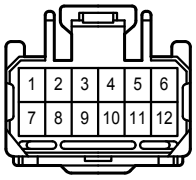

M 1
Black



M 3
Black



O 1
Gray

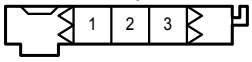

O 8
Gray

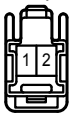

2A
White

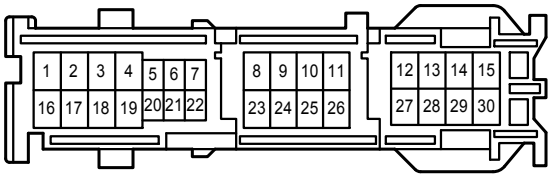

2B
White

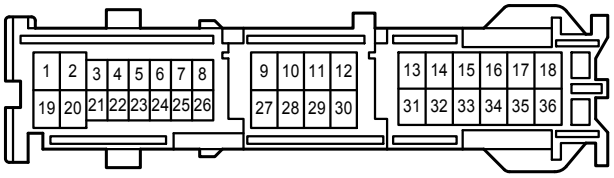

2E
White

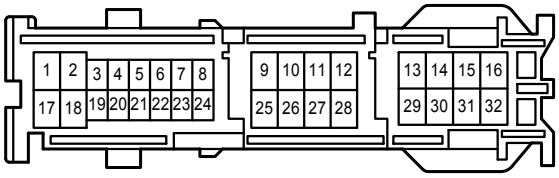

2K
White



2S
White

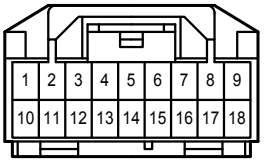

3A
White

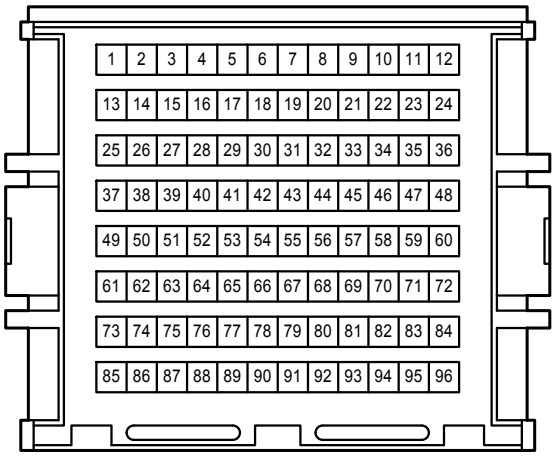

3B
White

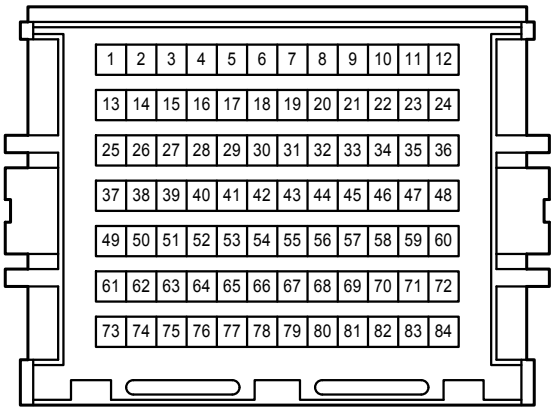

4A
White

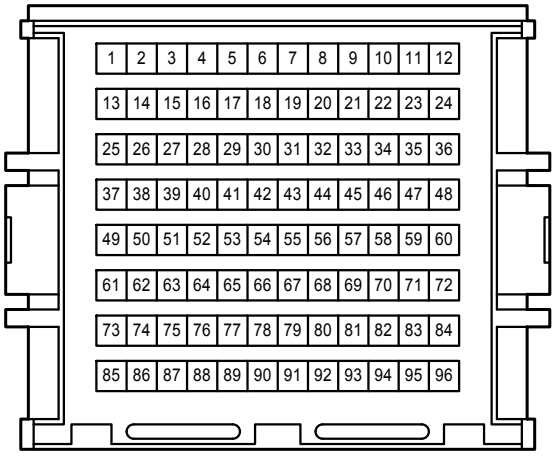

4C
White

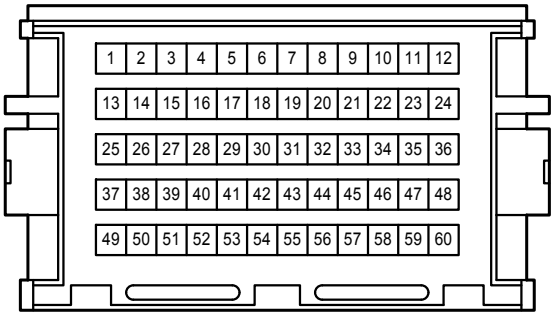

AE3
White

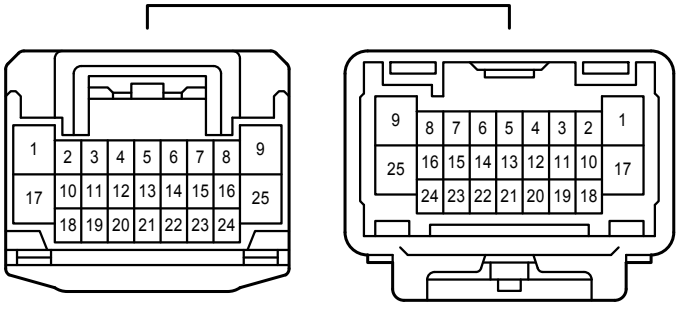

EL1
White

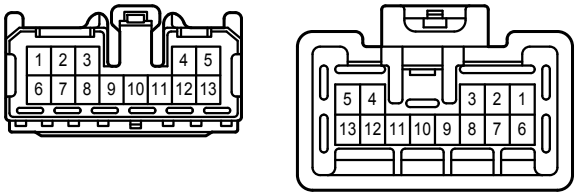

EL2
White

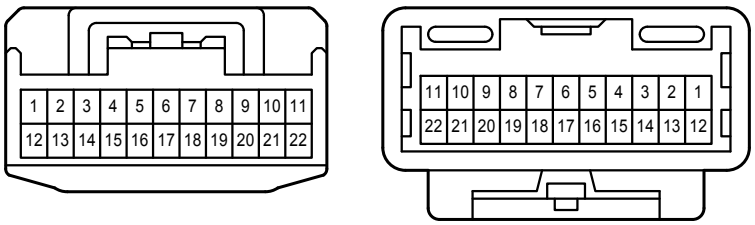

EM1
Gray

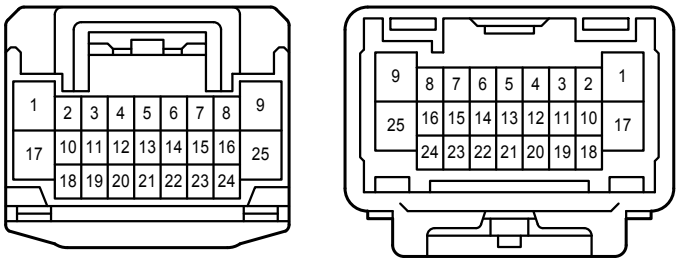

HE1
Blue

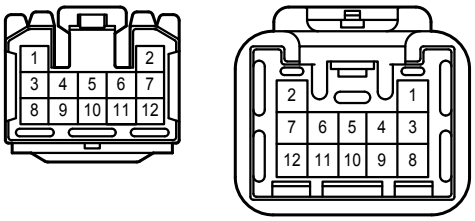

IE1
Blue

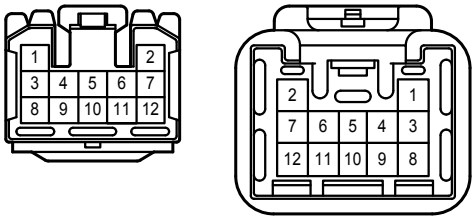

JM1
White

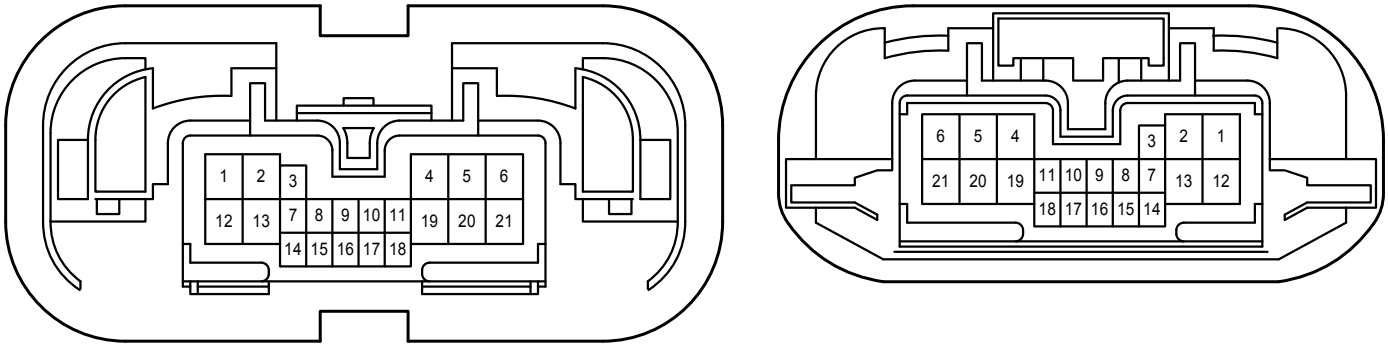

KL1
White

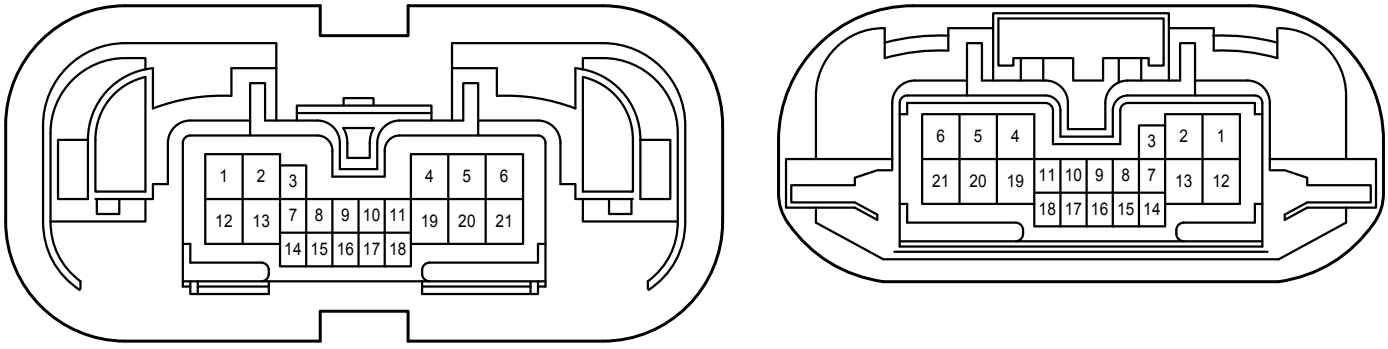

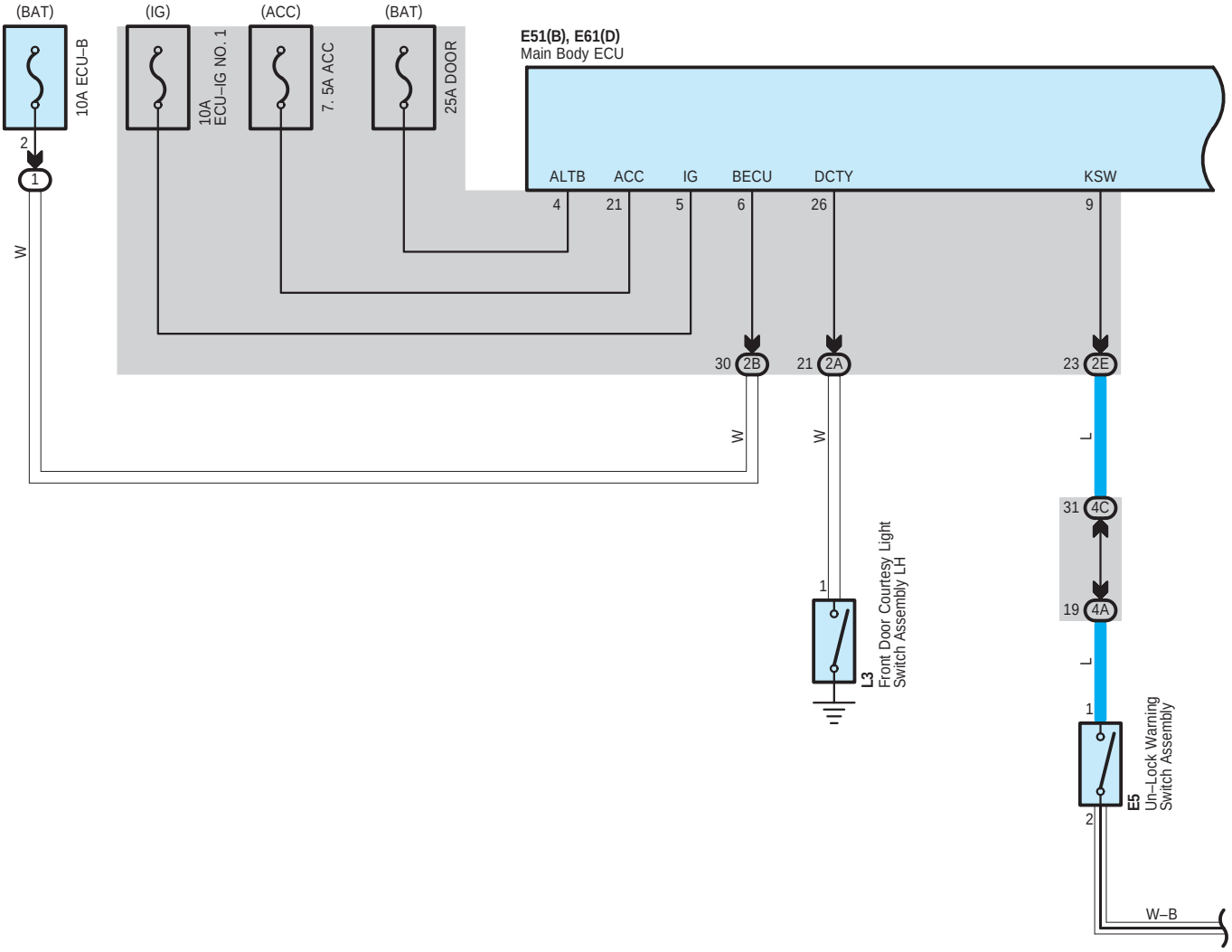
(BAT)
(IG)
(ACC)
(BAT)
10A ECU–B
10A ECU–IG NO. 1
7. 5A ACC
25A DOOR
E51(B), E61(D)
Main Body ECU
ALTB
ACC
IG
BECU
DCTY
KSW
4
21
5
6
26
9
2
1
W
30 2B
21 2A
23 2E
W
W
L
31 4C
19 4A
L
1
1
L3
Front Door Courtesy Light Switch Assembly LH
1
E5
Un–Lock Warning Switch Assembly
2
W–B

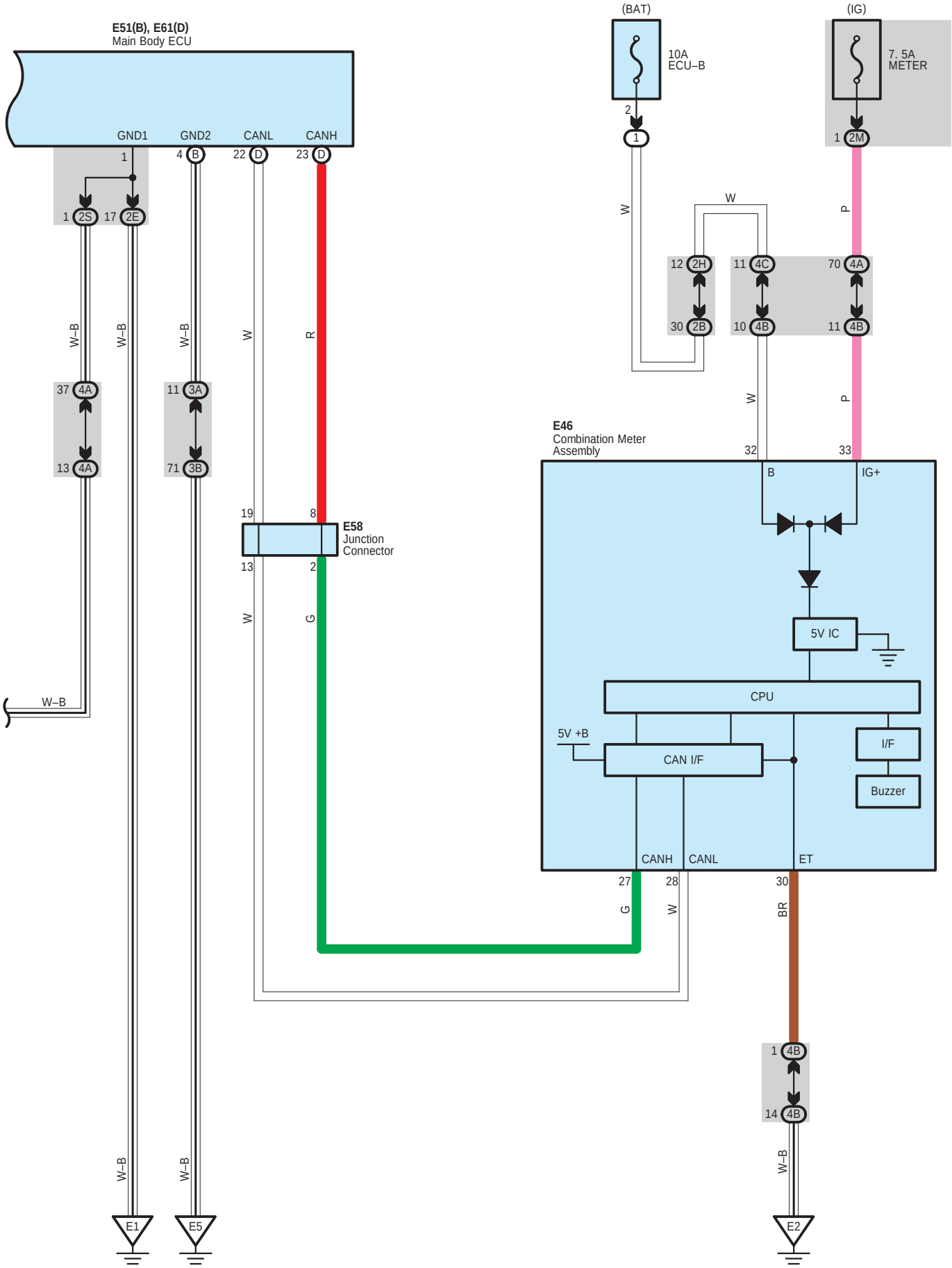
E51(B), E61(D)
Main Body ECU
GND1
GND2
CANL
CANH
(BAT)
(IG)
10A
ECU–B
7. 5A
METER
E58
Junction
Connector
E46
Combination Meter
Assembly
B
IG+
5V IC
CPU
5V +B
CAN I/F
I/F
Buzzer
CANH
CANL
ET
W–B
W
R
G
P
BR
E1
E5
E2

E 5
White

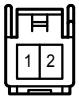

E 46
White

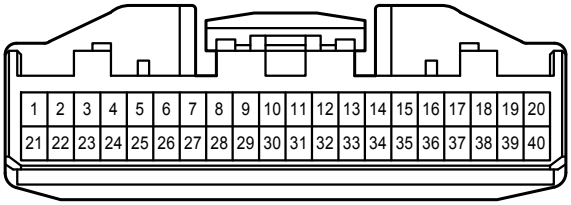

E 51
White

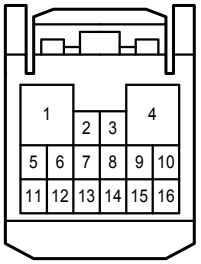

E 58
Gray

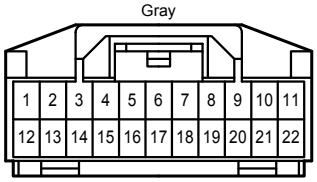

E 61
White

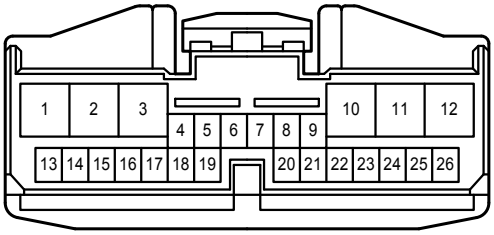

L 3
Black



2A
White

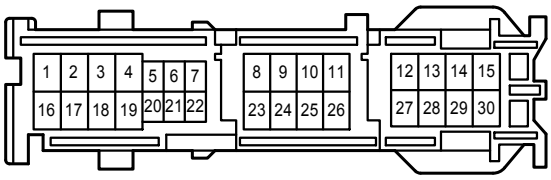

2B
White

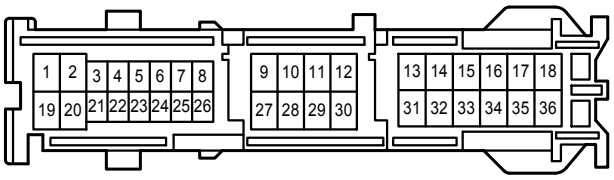

2E
White

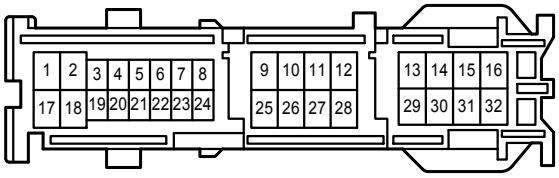

2H
White

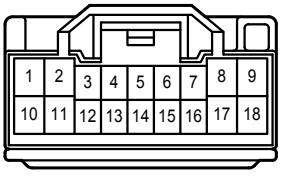

2M
White

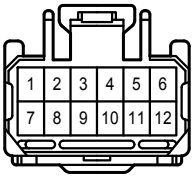

2S
White

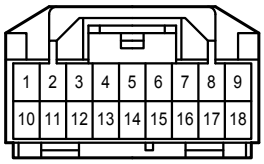

3A
White

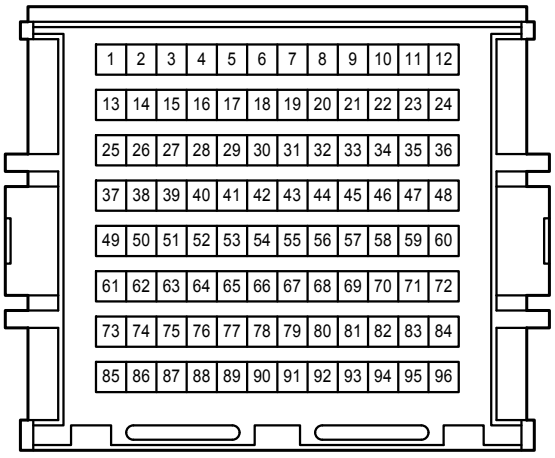

3B
White

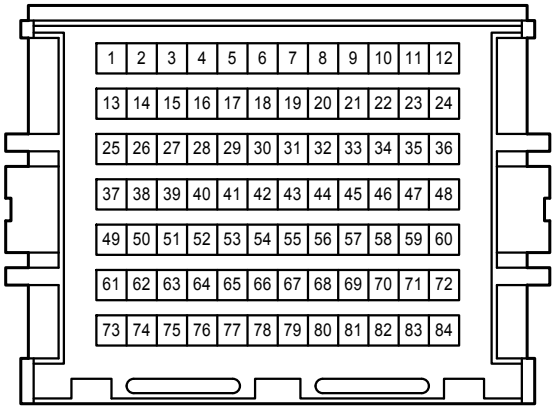

4A
White

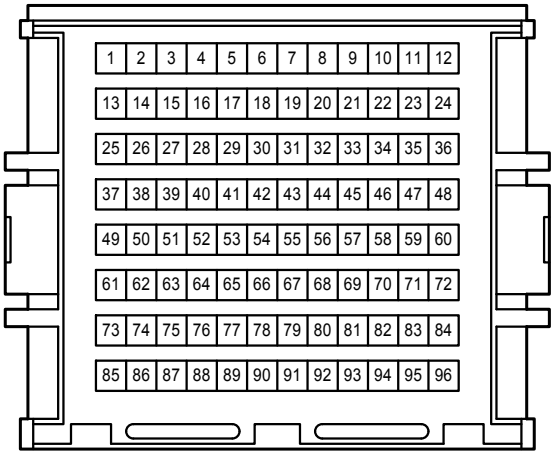

4B
White

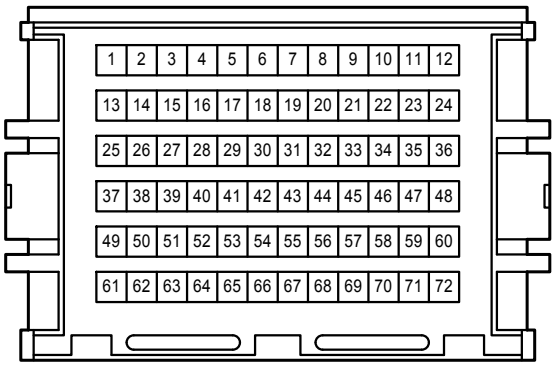

4C
White

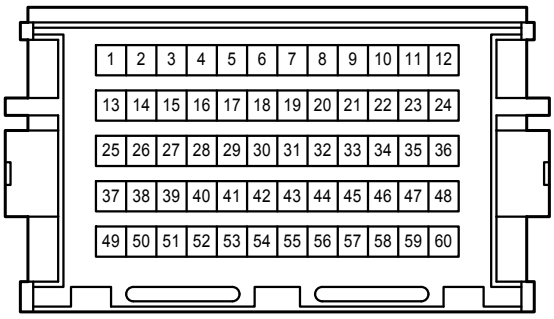

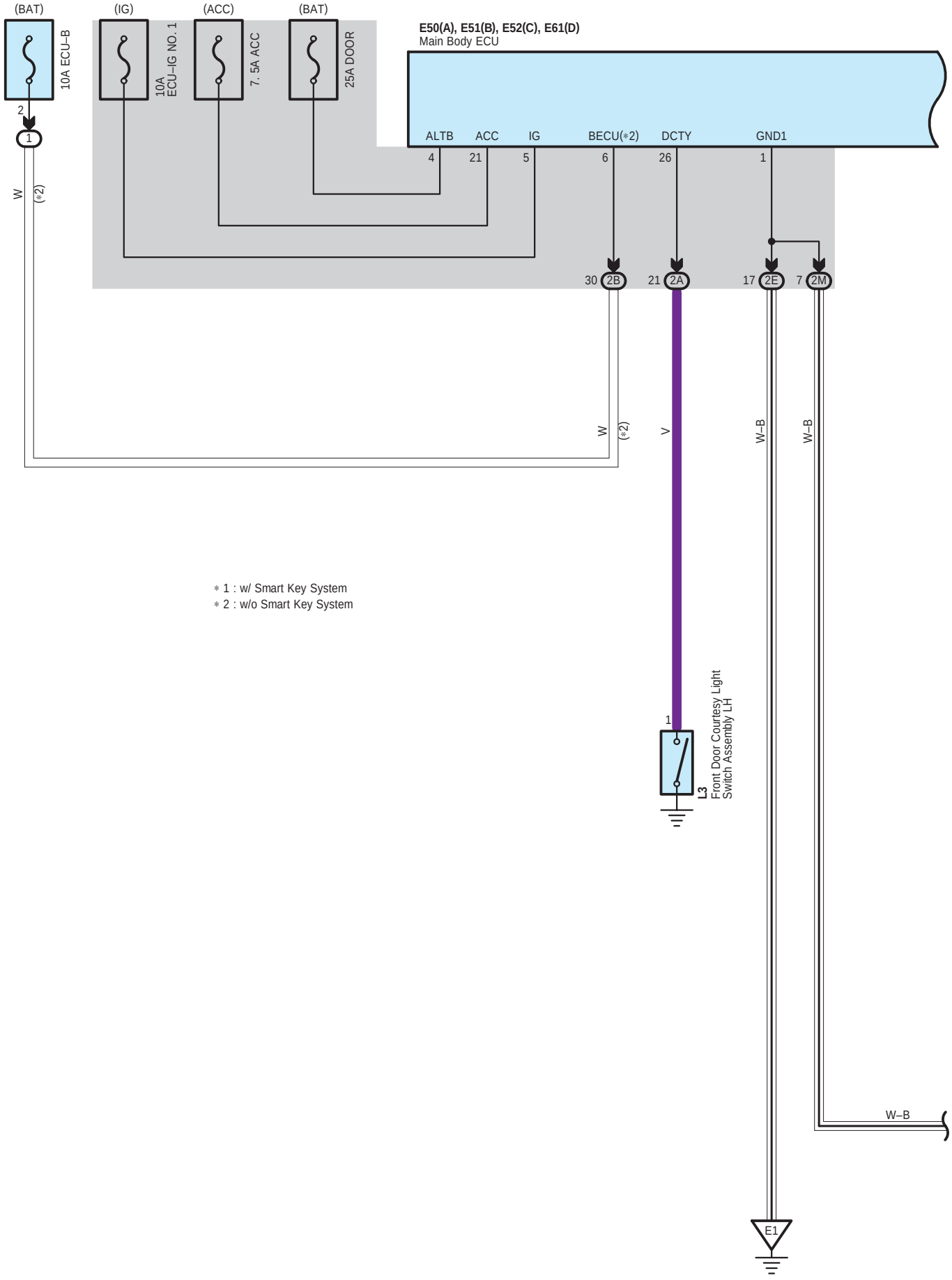

* 1 : w/ Smart Key System
* 2 : w/o Smart Key System

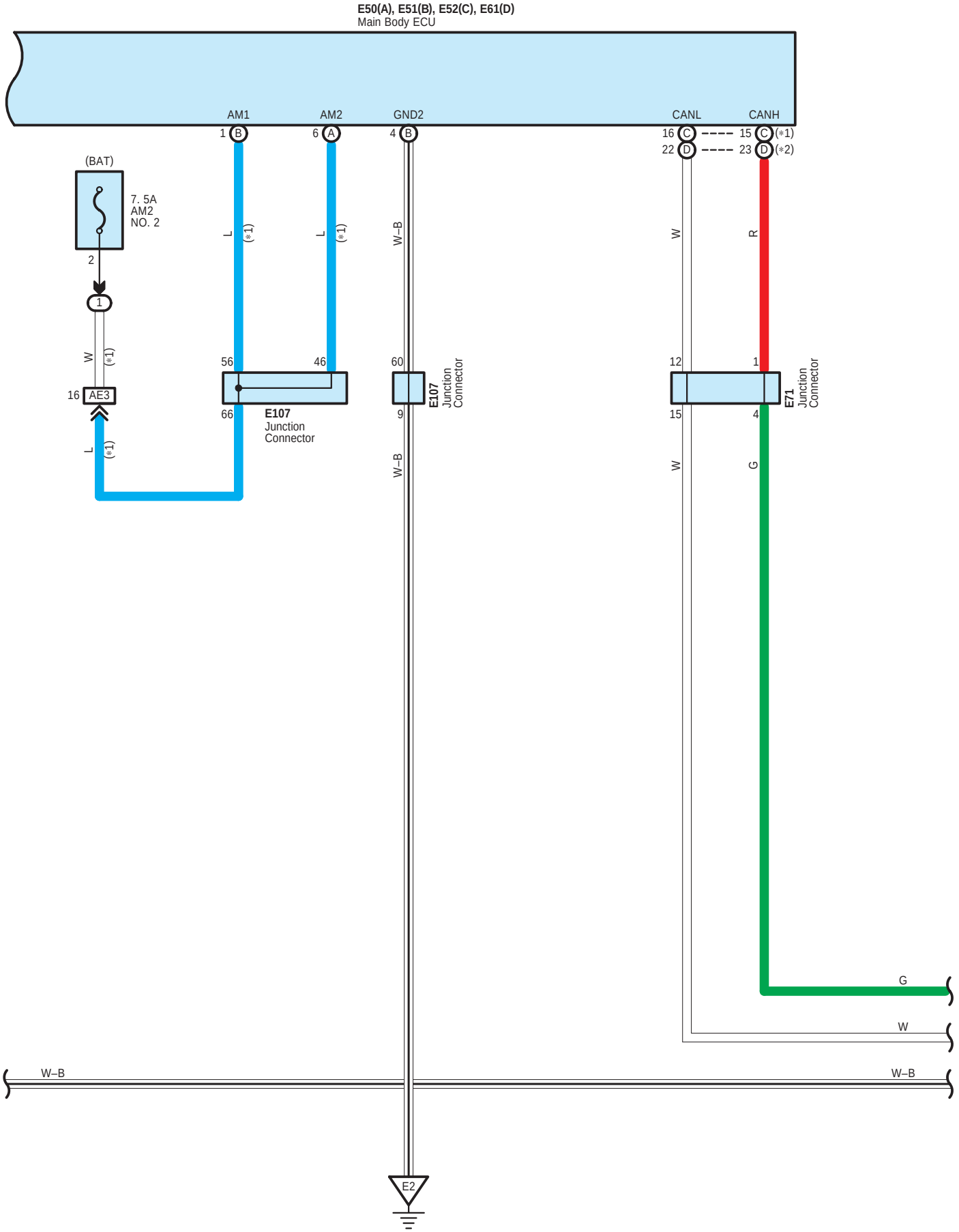
E50(A), E51(B), E52(C), E61(D)
Main Body ECU
AM1
AM2
GND2
CANL
CANH
1 B
6 A
4 B
16 C
22 D
15 C (*1)
23 D (*2)
(BAT)
7. 5A
AM2
NO. 2
2
1
W
(*1)
16 AE3
L
(*1)
L
(*1)
L
(*1)
W–B
W
R
56
46
60
12
1
66
E107
Junction
Connector
9
E107
Junction
Connector
15
4
E71
Junction
Connector
W–B
W
G
G
W
W–B
W–B
E2

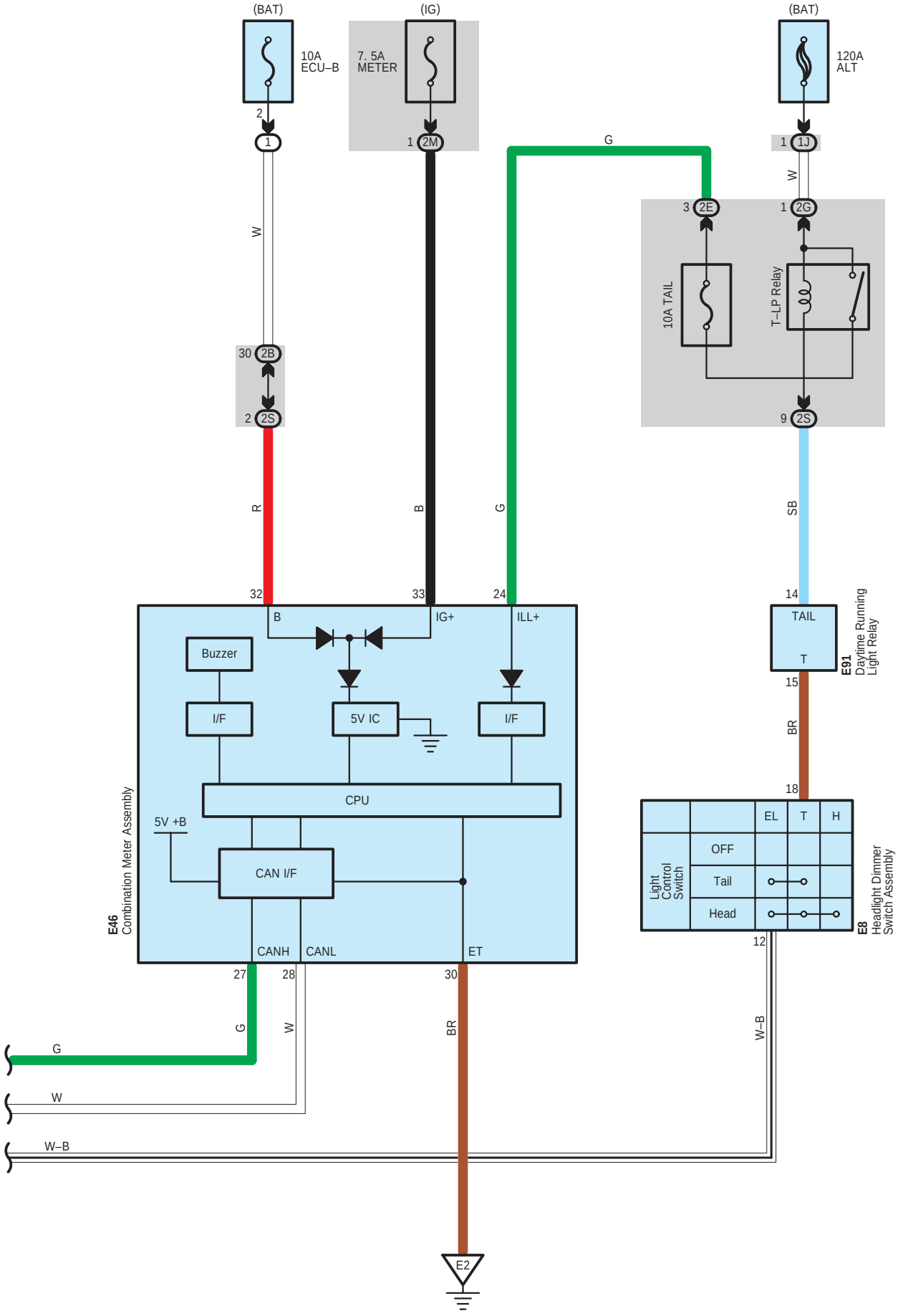
(BAT)
10A
ECU–B
2
1
W
30
2B
2
2S
R
32
(IG)
7. 5A
METER
1
2M
B
33
G
24
(BAT)
120A
ALT
1
1J
W
3
2E
1
2G
10A TAIL
T–LP Relay
9
2S
SB
14
TAIL
T
E91
Daytime Running
Light Relay
15
BR
18
B
IG+
ILL+
Buzzer
I/F
5V IC
I/F
CPU
5V +B
CAN I/F
CANH
CANL
ET
E46
Combination Meter Assembly
27
28
30
G
W
BR
EL
T
H
OFF
Tail
Head
Light
Control
Switch
12
W–B
E8
Headlight Dimmer
Switch Assembly
G
W
W–B
E2

E 8
White

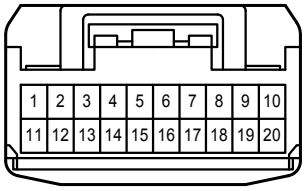

E 46
White

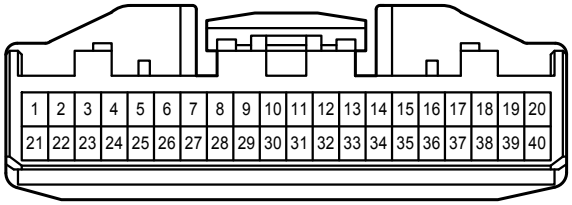

E 50
White

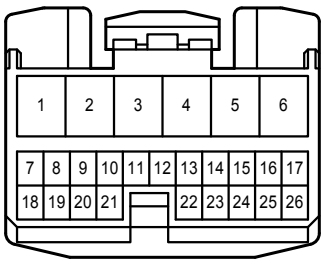

E 51
White

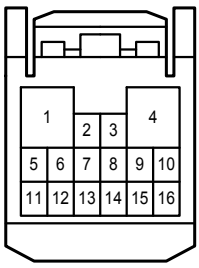

E 52
White

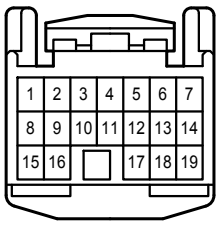

E 61
White

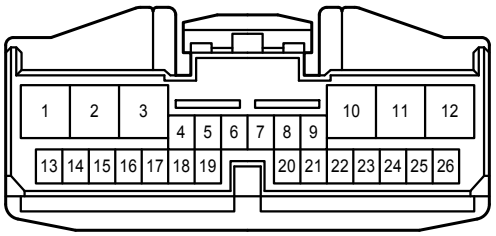

E 71
White

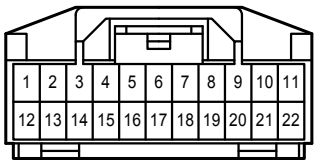

E 91
White

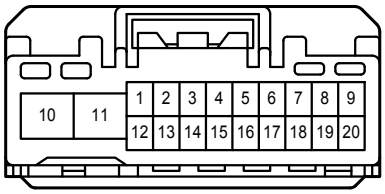

E107
White

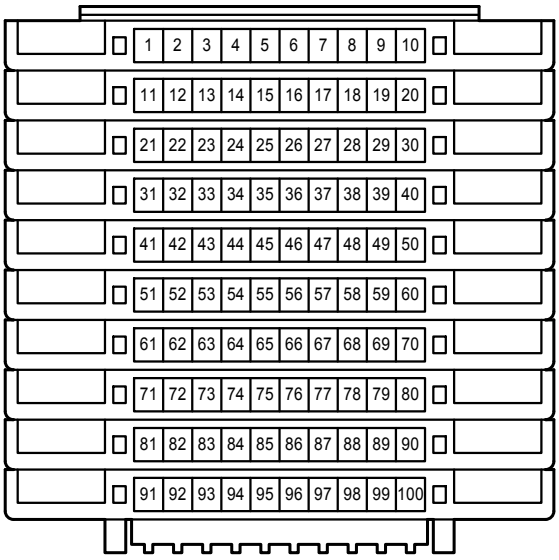

L 3
Black



1J

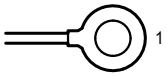

2A
White

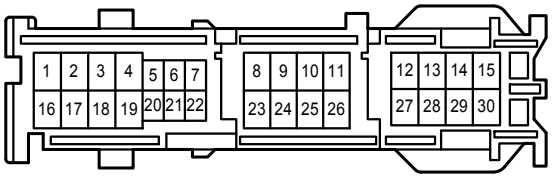

2B
White

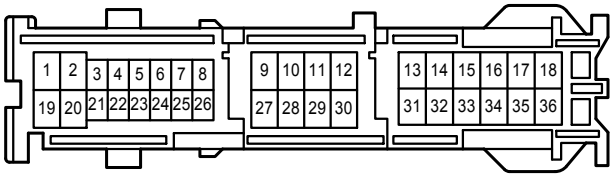

2E
White

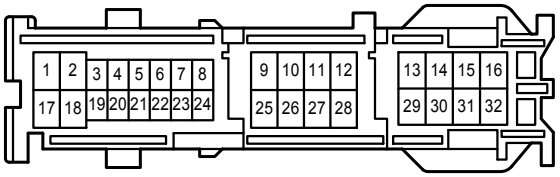

2G
White

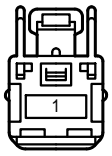

2M
White

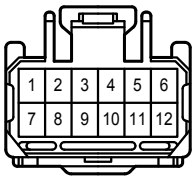

2S
White

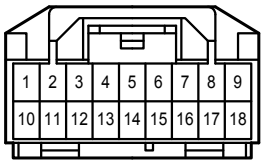

AE3
White

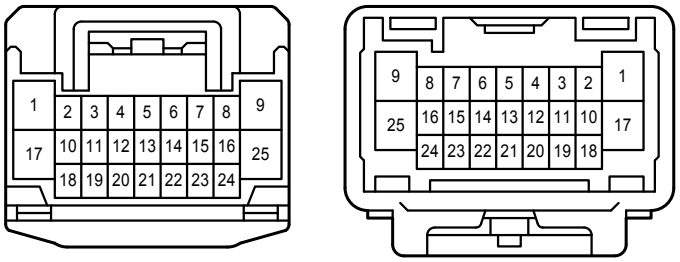

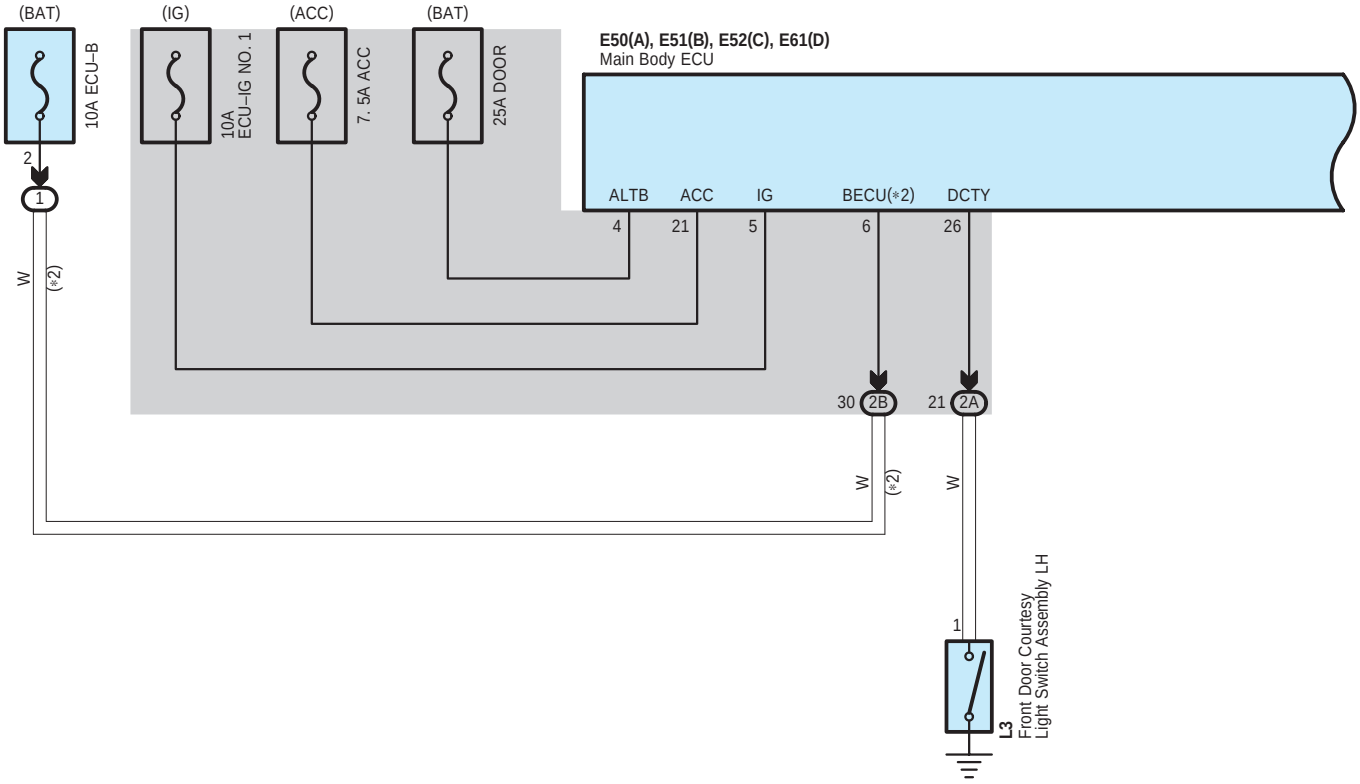

* 1 : w/ Smart Key System
* 2 : w/o Smart Key System

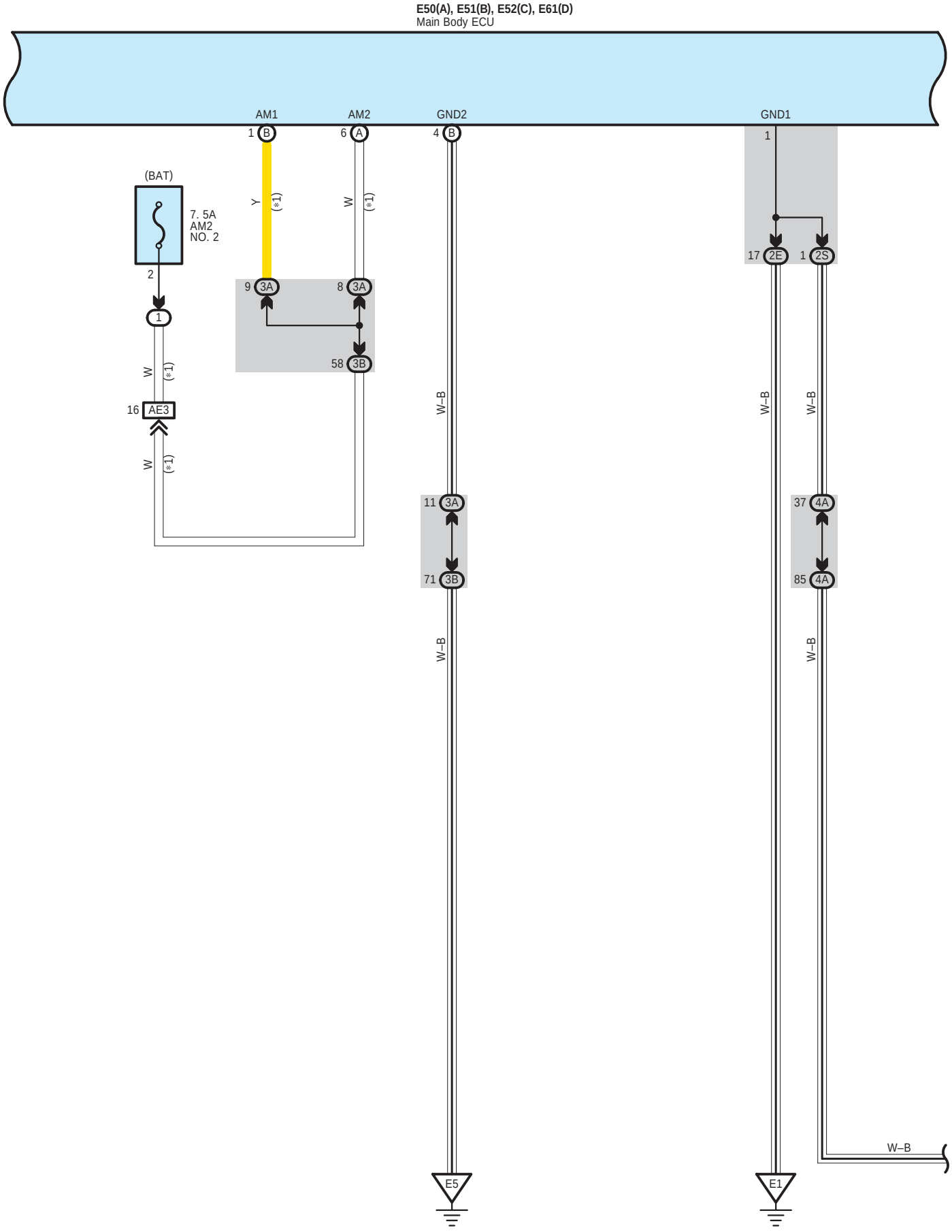
E50(A), E51(B), E52(C), E61(D)
Main Body ECU
AM1
AM2
GND2
GND1
(BAT)
7. 5A
AM2
NO. 2
Y
W
(*1)
W–B
E5
E1

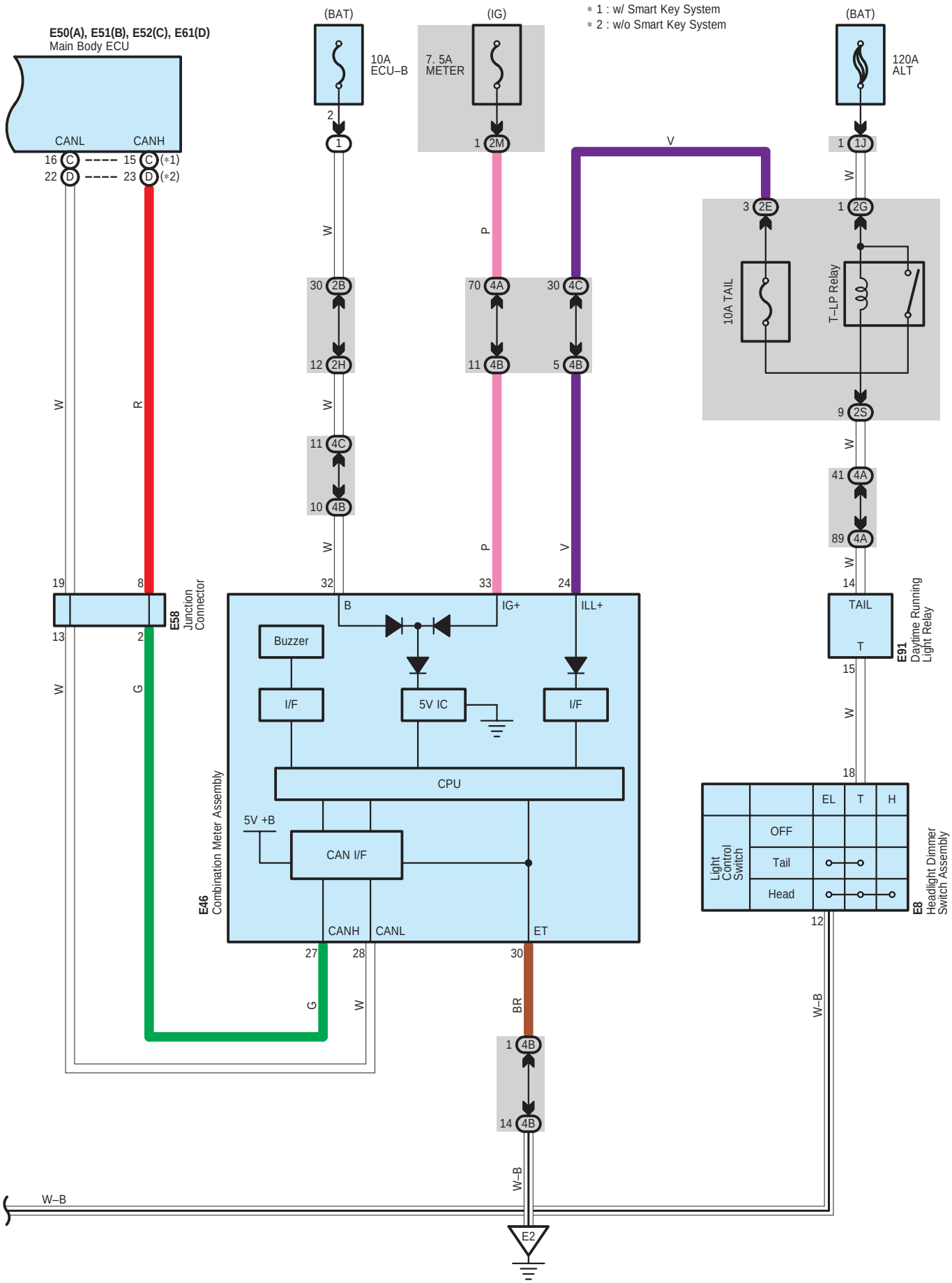
* 1 : w/ Smart Key System
* 2 : w/o Smart Key System
E50(A), E51(B), E52(C), E61(D)
Main Body ECU
CANL
CANH
16 C
22 D
15 C (*1)
23 D (*2)
(BAT)
10A
ECU–B
2
1
(IG)
7. 5A
METER
1 2M
(BAT)
120A
ALT
1 1J
W
P
V
3 2E
1 2G
10A TAIL
T–LP Relay
9 2S
30 2B
12 2H
70 4A
11 4B
30 4C
5 4B
11 4C
10 4B
41 4A
89 4A
14
TAIL
T
E91
Daytime Running
Light Relay
15
18
19
8
13
2
E58
Junction
Connector
32
33
24
B
IG+
ILL+
Buzzer
I/F
5V IC
I/F
CPU
5V +B
CAN I/F
CANH
CANL
ET
E46
Combination Meter Assembly
27
28
30
G
W
BR
1 4B
14 4B
Light
Control
Switch
EL
T
H
OFF
Tail
Head
12
E8
Headlight Dimmer
Switch Assembly
W–B
E2

E 8
White

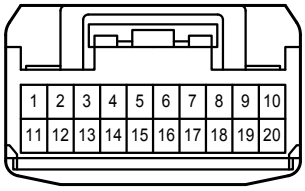

E 46
White

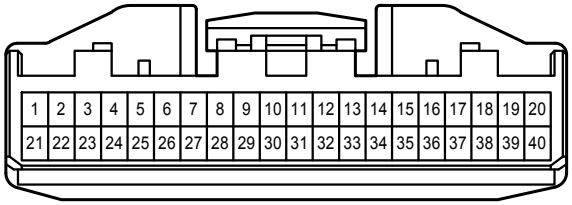

E 50
White

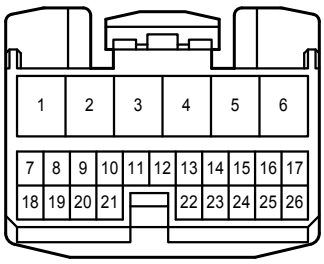

E 51
White

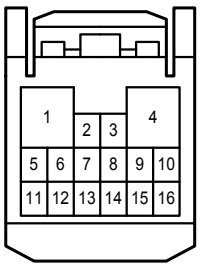

E 52
White

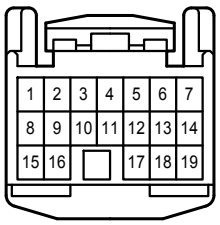

E 58
Gray

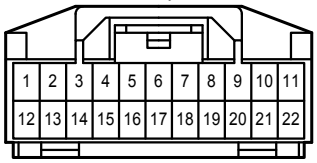

E 61
White

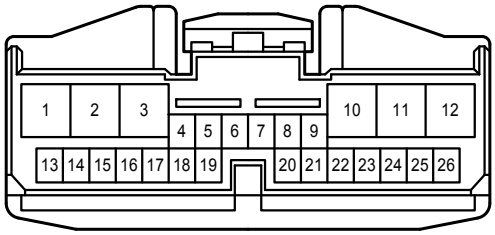

E 91
White

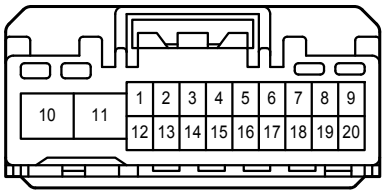

L 3
Black



1J

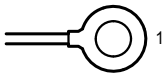

2A
White

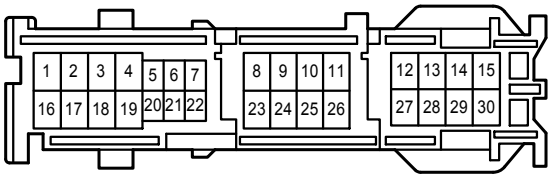

2B
White

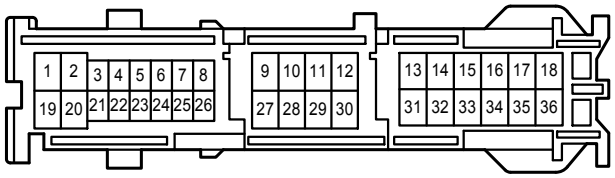

2E
White

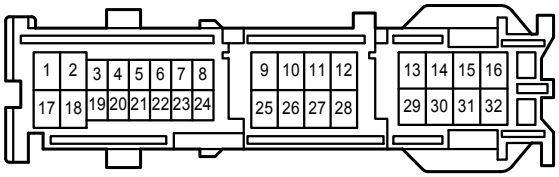

2G
White

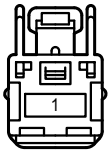

2H
White

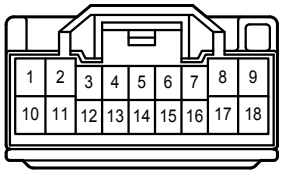

2M
White

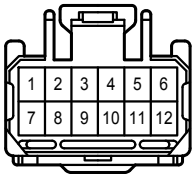

2S
White

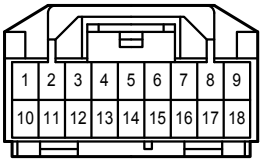

3A
White

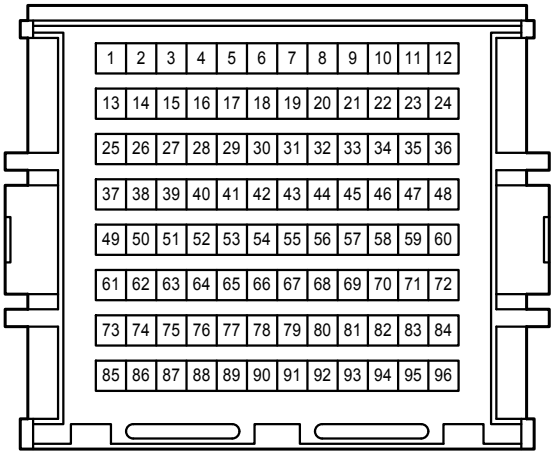

3B
White

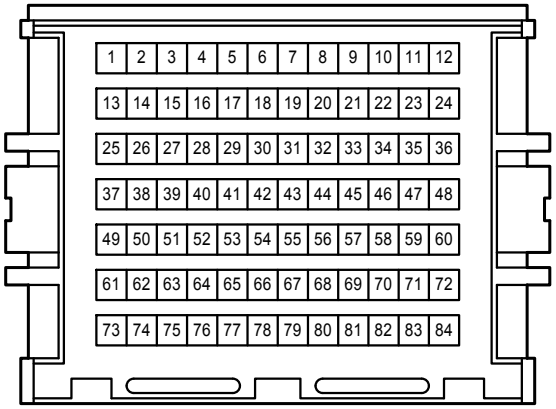

4A
White

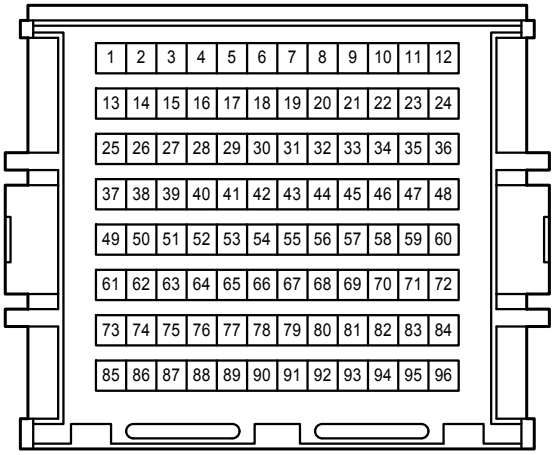

4B
White

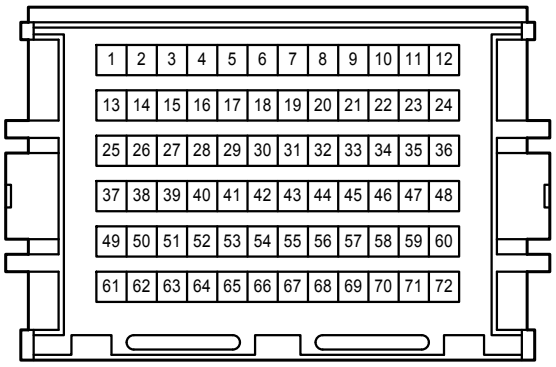

4C
White

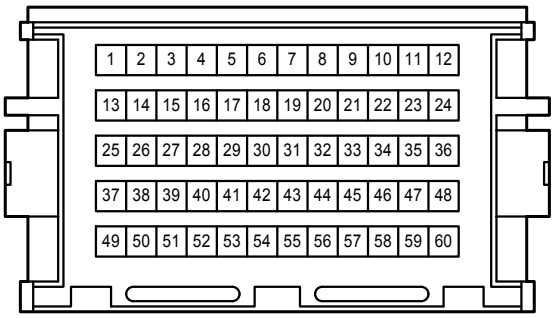

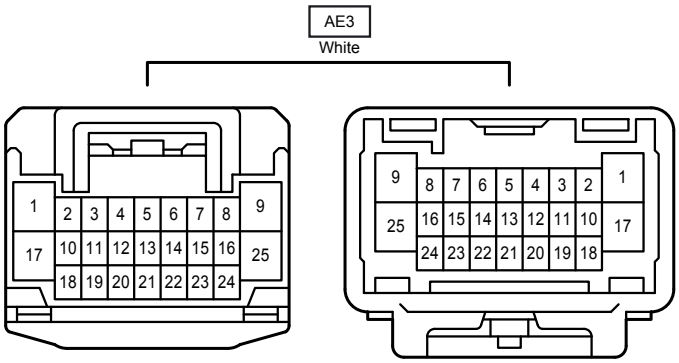
AE3
White
1
2
3
4
5
6
7
8
9
17
10
11
12
13
14
15
16
25
18
19
20
21
22
23
24
9
8
7
6
5
4
3
2
1
25
16
15
14
13
12
11
10
17
24
23
22
21
20
19
18

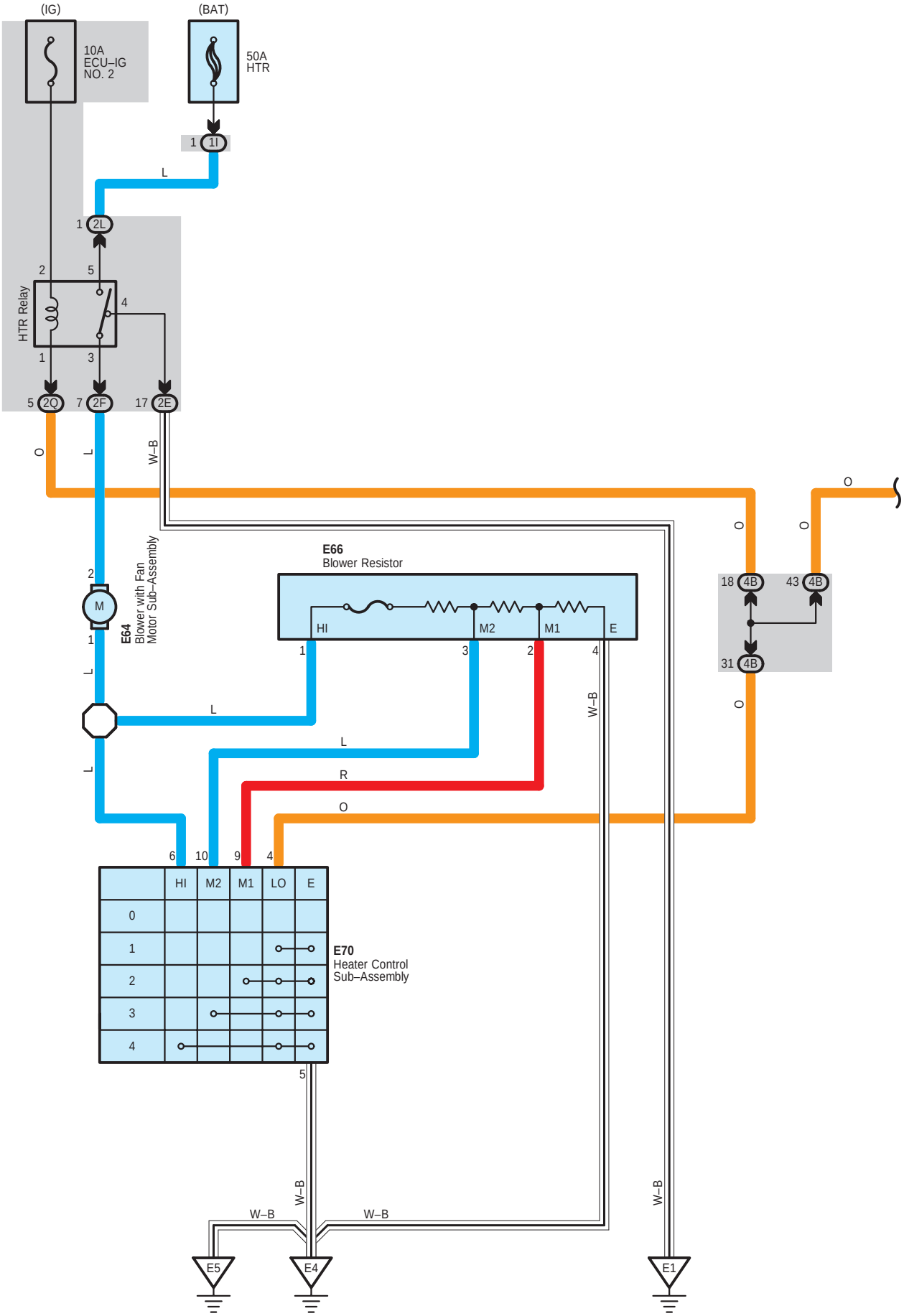
(IG)
(BAT)
10A
ECU–IG
NO. 2
50A
HTR
1 1I
L
1 2L
2
5
4
HTR Relay
1
3
5 2Q
7 2F
17 2E
O
L
W–B
O
O
O
18 4B
43 4B
31 4B
E66
Blower Resistor
HI
M2
M1
E
1
3
2
4
2
M
1
E64
Blower with Fan
Motor Sub–Assembly
L
L
L
R
O
W–B
6
10
9
4
HI
M2
M1
LO
E
0
1
2
3
4
E70
Heater Control
Sub–Assembly
5
W–B
W–B
W–B
W–B
E5
E4
E1

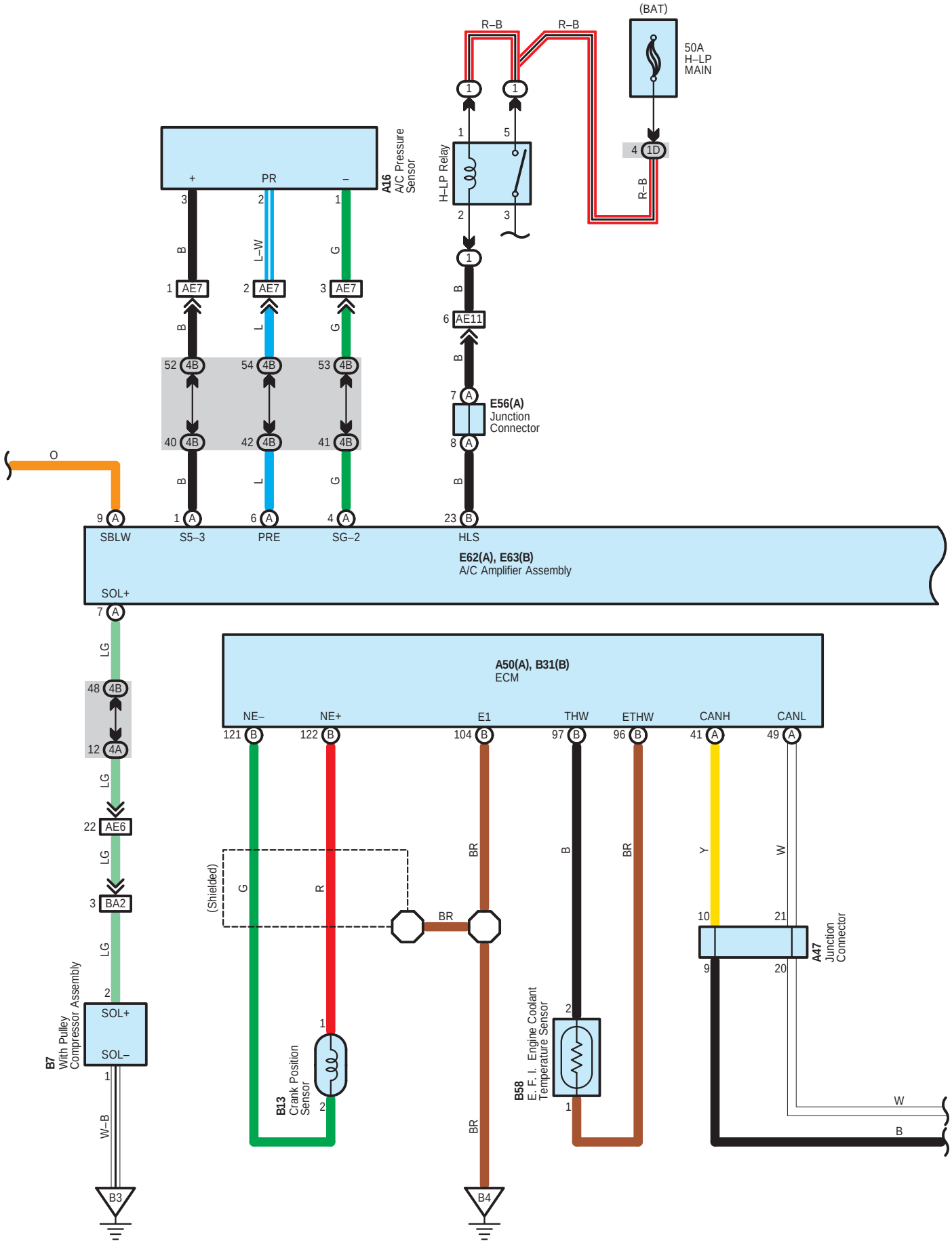
(BAT)
R–B
R–B
50A
H–LP
MAIN
4 1D
R–B
H–LP Relay
1 5
2 3
1
B
6 AE11
B
7 A
E56(A)
Junction
Connector
8 A
B
23 B
HLS
A16
A/C Pressure
Sensor
+
PR
–
3 2 1
B L–W G
1 AE7 2 AE7 3 AE7
B L G
52 4B 54 4B 53 4B
40 4B 42 4B 41 4B
B L G
1 A 6 A 4 A
S5–3 PRE SG–2
O
9 A
SBLW
E62(A), E63(B)
A/C Amplifier Assembly
SOL+
7 A
LG
48 4B
12 4A
LG
22 AE6
LG
3 BA2
LG
2
SOL+
SOL–
B7
With Pulley
Compressor Assembly
1
W–B
B3
A50(A), B31(B)
ECM
NE– NE+ E1 THW ETHW CANH CANL
121 B 122 B 104 B 97 B 96 B 41 A 49 A
(Shielded)
G R BR B BR Y W
BR
10 21
9 20
A47
Junction
Connector
B13
Crank Position
Sensor
1
2
B58
E. F. I. Engine Coolant
Temperature Sensor
2
1
W
B
BR
B4

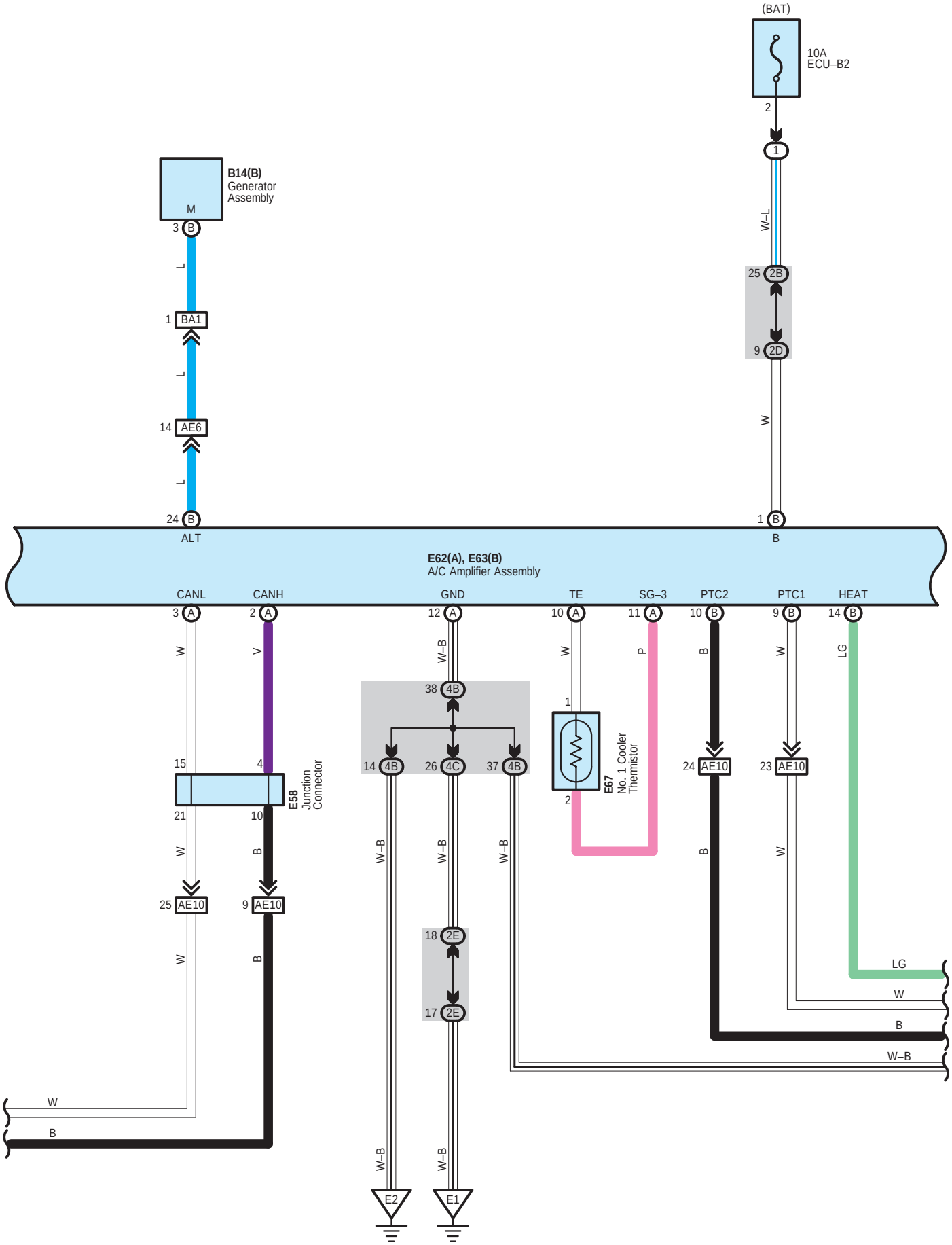
(BAT)
10A
ECU–B2
2
1
W–L
25 2B
9 2D
W
1 B
B
B14(B)
Generator
Assembly
M
3 B
L
1 BA1
L
14 AE6
L
24 B
ALT
E62(A), E63(B)
A/C Amplifier Assembly
CANL
CANH
GND
TE
SG–3
PTC2
PTC1
HEAT
3 A
2 A
12 A
10 A
11 A
10 B
9 B
14 B
W
V
W–B
W
P
B
W
LG
38 4B
14 4B
26 4C
37 4B
1
2
E67
No. 1 Cooler
Thermistor
15
4
21
10
E58
Junction
Connector
24 AE10
23 AE10
W
B
25 AE10
9 AE10
W
B
18 2E
17 2E
LG
W
B
W–B
W
B
W–B
W–B
W–B
E2
E1

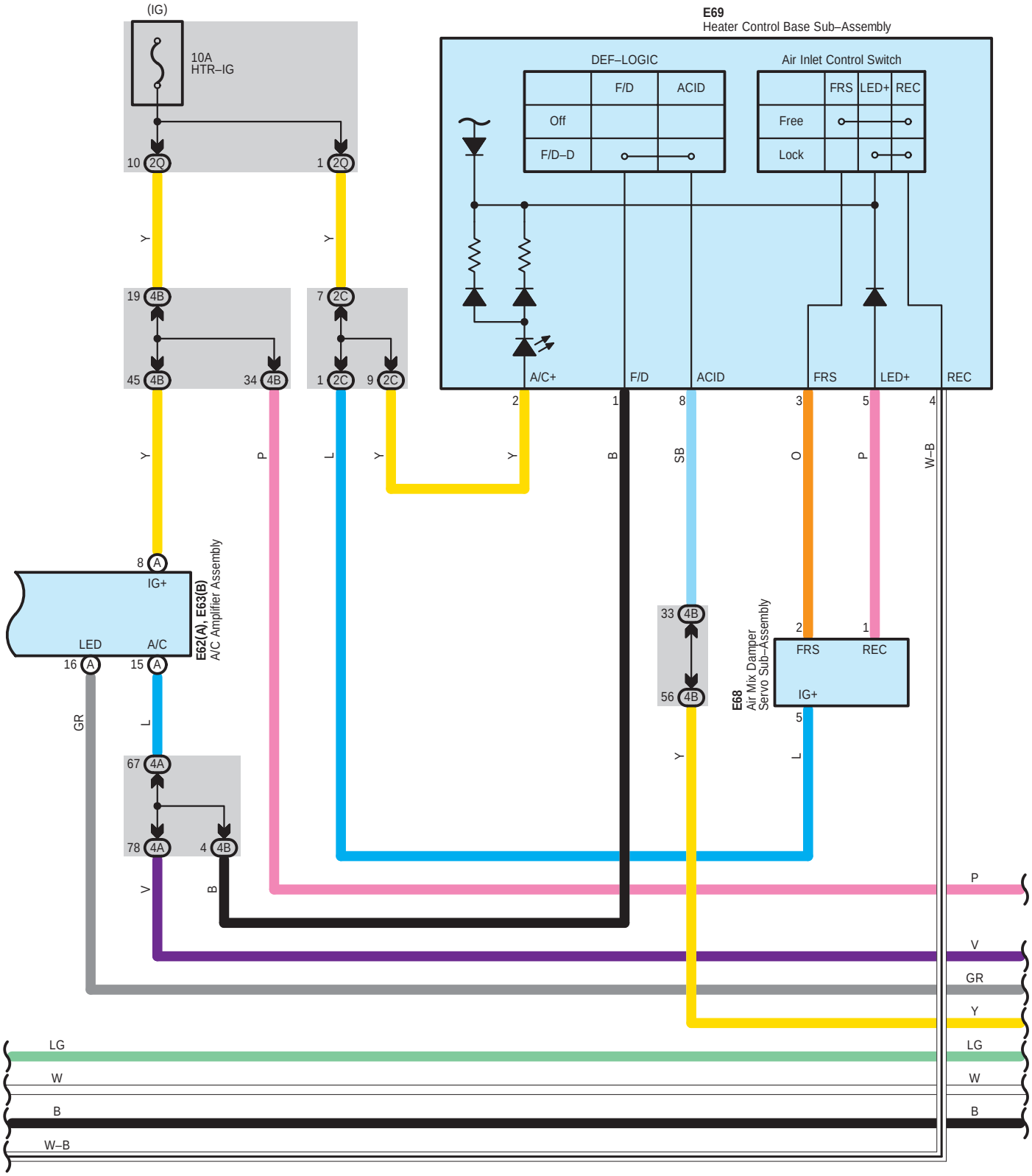
(IG)
10A
HTR–IG
10 2Q
1 2Q
Y
Y
19 4B
45 4B
34 4B
7 2C
1 2C
9 2C
E69
Heater Control Base Sub–Assembly
DEF–LOGIC
F/D
ACID
Off
F/D–D
Air Inlet Control Switch
FRS
LED+
REC
Free
Lock
A/C+
F/D
ACID
FRS
LED+
REC
2
1
8
3
5
4
Y
P
L
Y
Y
B
SB
O
P
W–B
8 A
IG+
LED
A/C
16 A
15 A
E62(A), E63(B)
A/C Amplifier Assembly
33 4B
56 4B
2
1
FRS
REC
IG+
5
E68
Air Mix Damper
Servo Sub–Assembly
GR
L
Y
L
67 4A
78 4A
4 4B
V
B
P
V
GR
Y
LG
W
B
W–B
LG
W
B

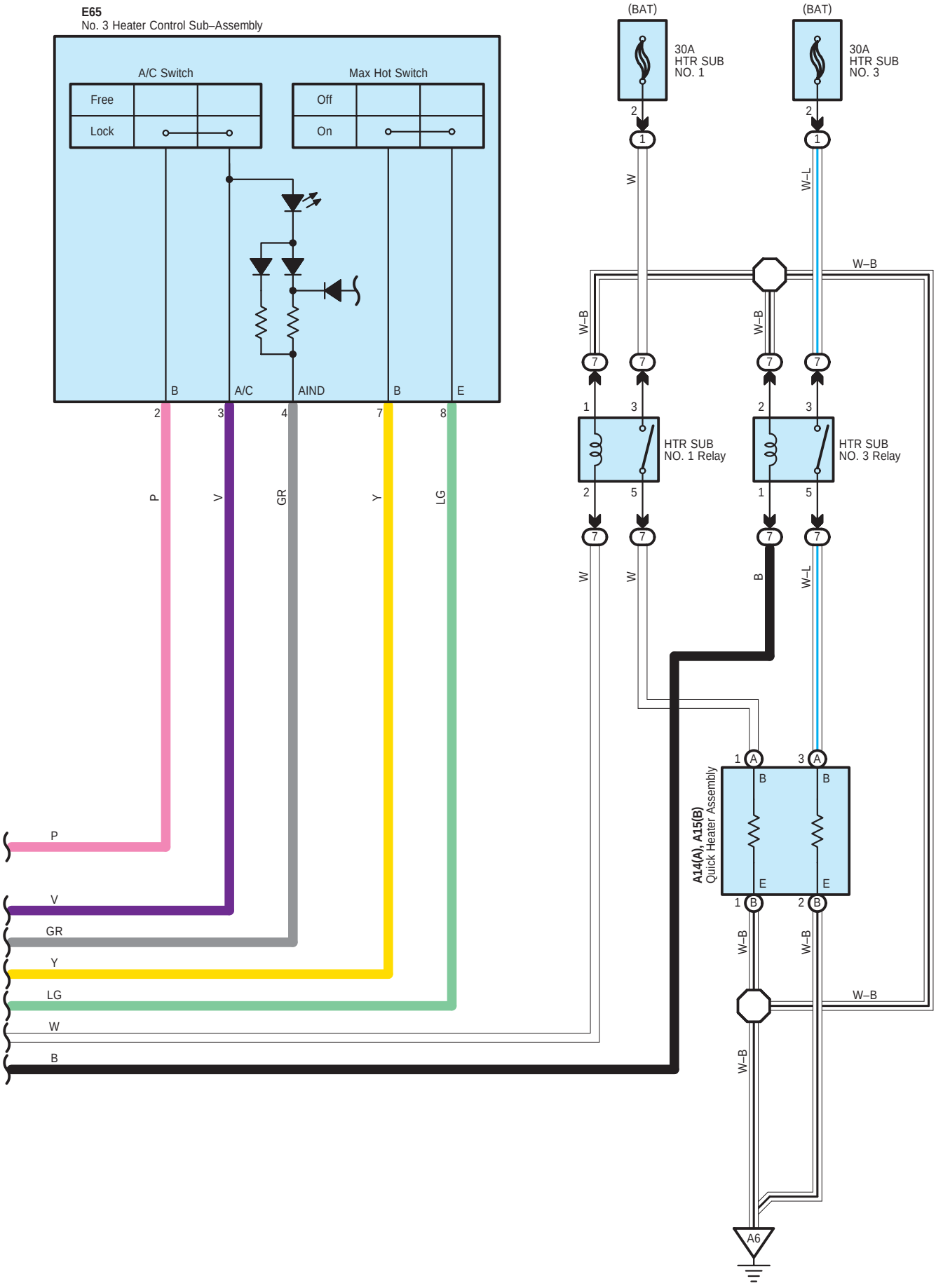
E65
No. 3 Heater Control Sub–Assembly
A/C Switch
Free
Lock
Max Hot Switch
Off
On
B
A/C
AIND
B
E
2
3
4
7
8
P
V
GR
Y
LG
W
B
(BAT)
(BAT)
30A
HTR SUB
NO. 1
30A
HTR SUB
NO. 3
W
W–L
W–B
HTR SUB
NO. 1 Relay
HTR SUB
NO. 3 Relay
A14(A), A15(B)
Quick Heater Assembly
A6

A 14
White

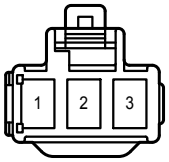

A 15
White

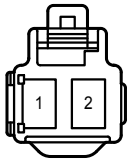

A 16
Black

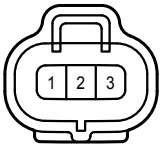

A 47
White

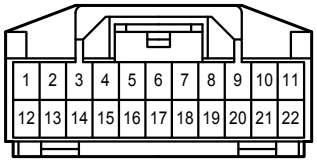

A 50
Black

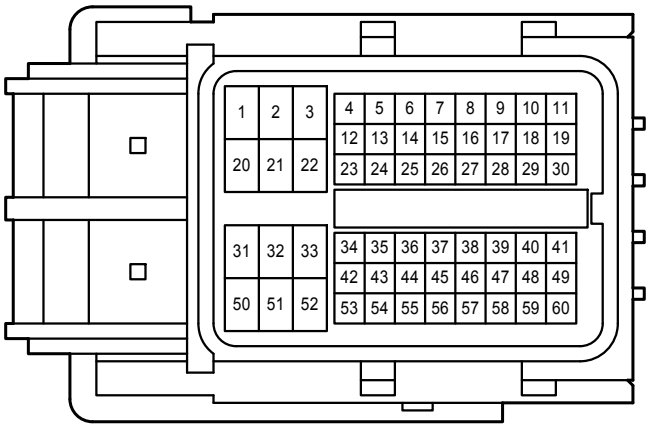

B 7
Black

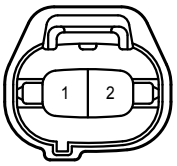

B 13
Black

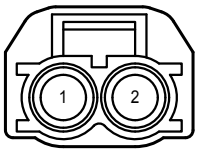

B 14
Black



B 31
Black

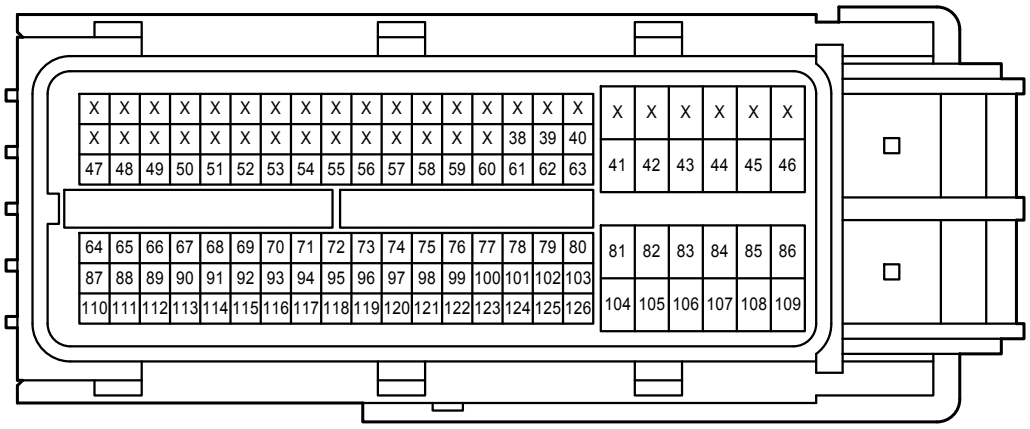
X X X

E 67
White

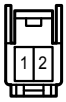

E 68
Black

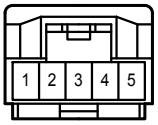

E 69
Gray

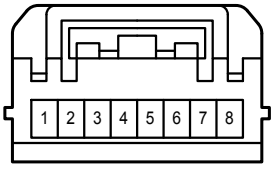

E 70
Gray

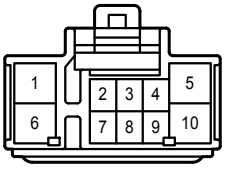

1D
White

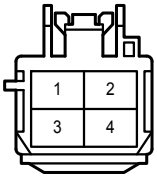

1I

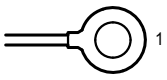

2B
White

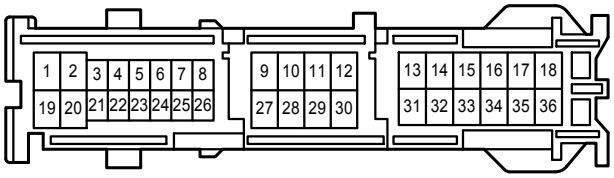

2C
White

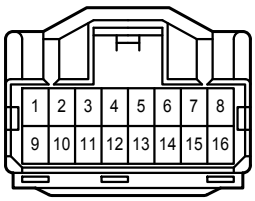

2D
White

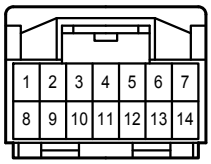

2E
White

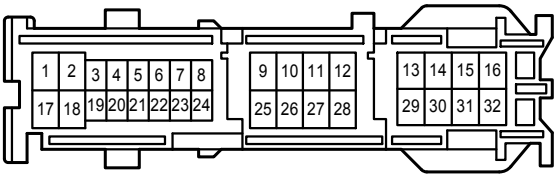

2F
White

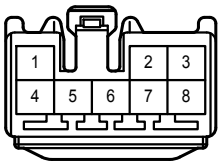

2L
White

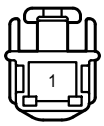

2Q
White

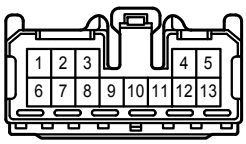

4A
White

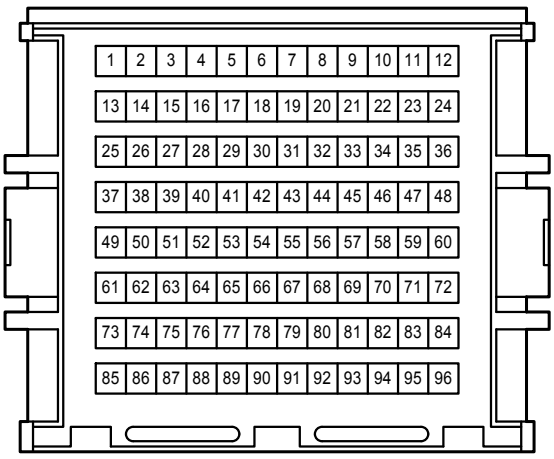

4B
White

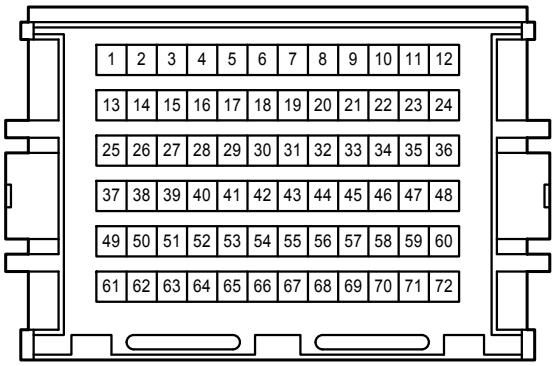

4C
White

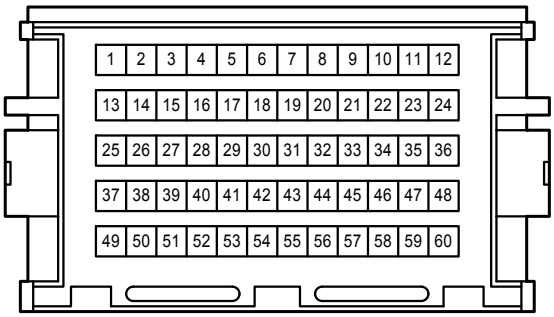

AE6
Gray

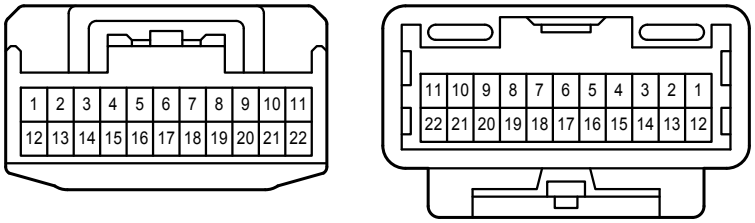

AE7
Blue

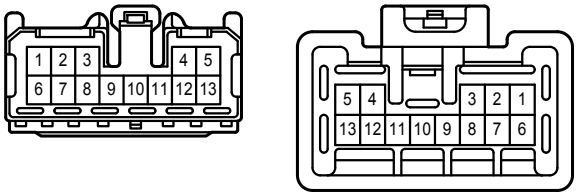

AE10
Gray

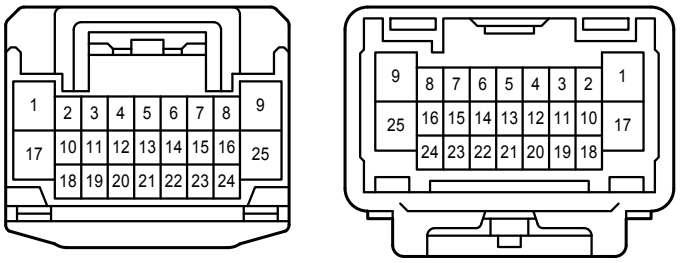

AE11
White

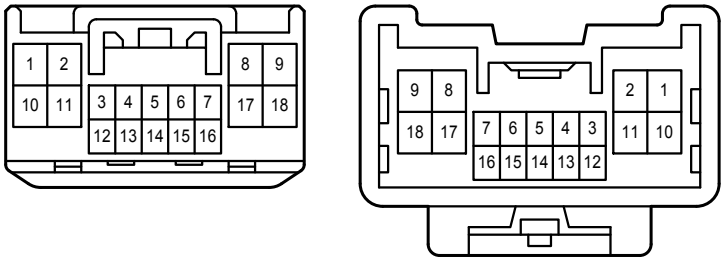

BA1
White

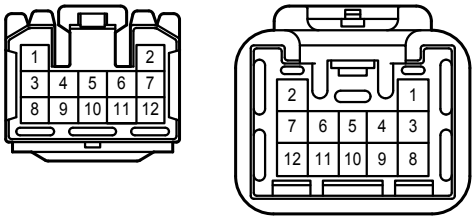

BA2
White

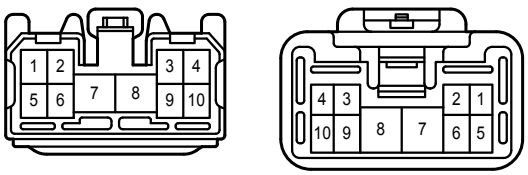

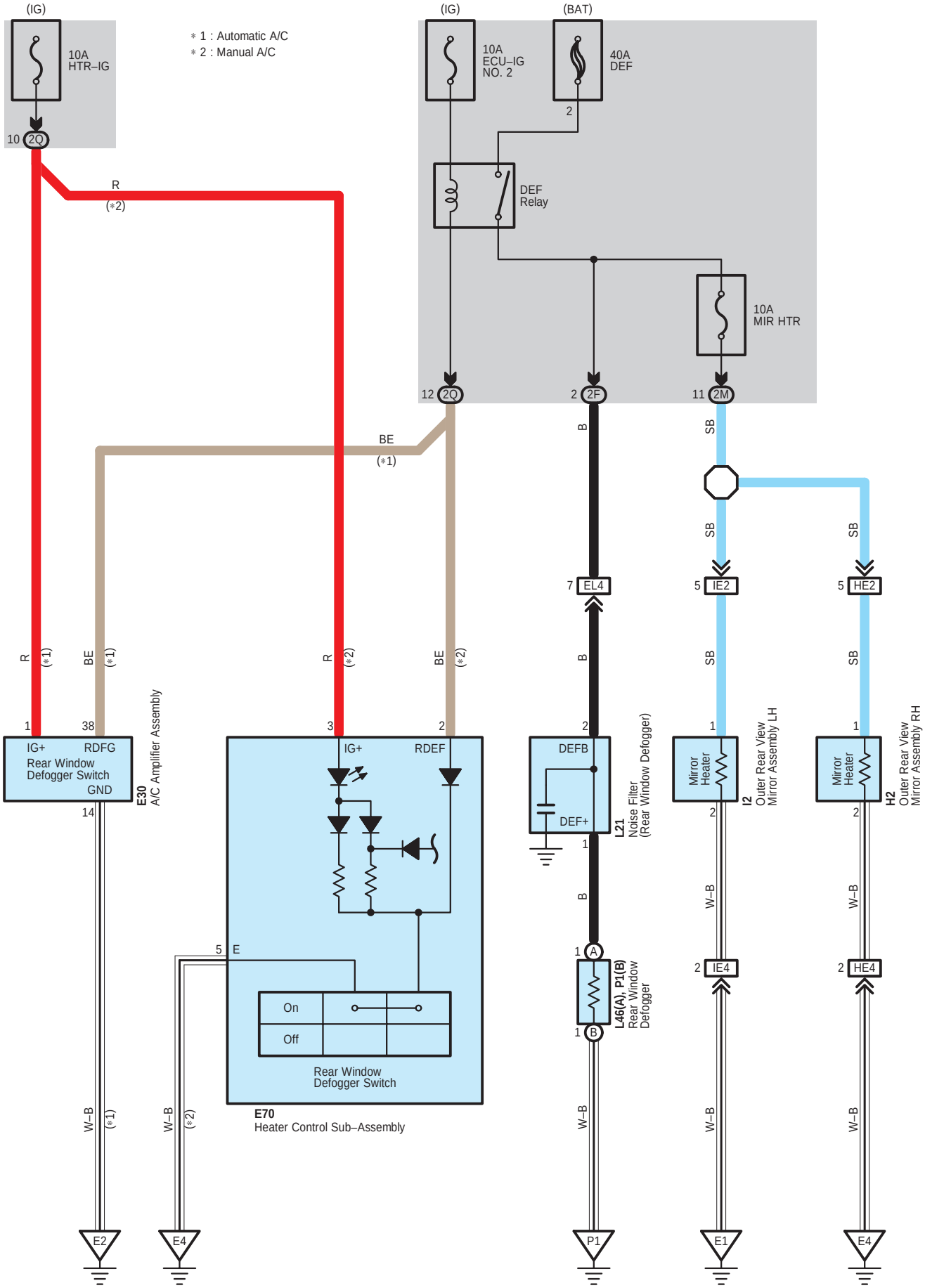
(IG)
10A
HTR–IG
10
2Q
∗1 : Automatic A/C
∗2 : Manual A/C
(IG)
(BAT)
10A
ECU–IG
NO. 2
40A
DEF
2
DEF
Relay
10A
MIR HTR
12
2Q
2
2F
11
2M
R
(∗2)
BE
(∗1)
B
SB
7
EL4
5
IE2
5
HE2
R
(∗1)
BE
(∗1)
R
(∗2)
BE
(∗2)
1
38
3
2
IG+
RDFG
Rear Window
Defogger Switch
GND
14
E30
A/C Amplifier Assembly
IG+
RDEF
5
E
On
Off
Rear Window
Defogger Switch
E70
Heater Control Sub–Assembly
DEFB
DEF+
L21
Noise Filter
(Rear Window Defogger)
1
A
1
B
L46(A), P1(B)
Rear Window
Defogger
Mirror
Heater
I2
Outer Rear View
Mirror Assembly LH
Mirror
Heater
H2
Outer Rear View
Mirror Assembly RH
W–B
(∗1)
W–B
(∗2)
W–B
W–B
W–B
W–B
E2
E4
P1
E1
E4
IE4
HE4

E 30
White

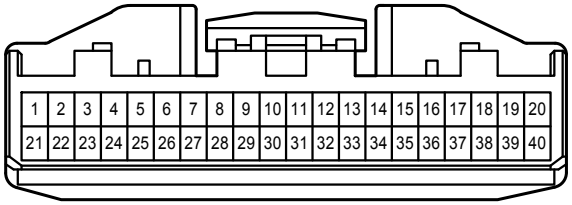

E 70
Gray

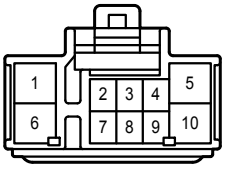

H 2
White

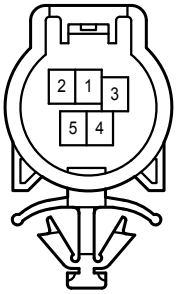

I 2
White

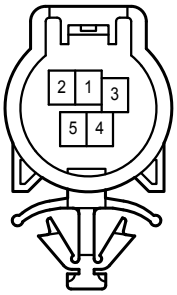

L 21
Gray

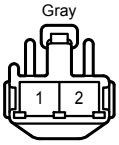

L 46
Black



P 1
Black



2F
White

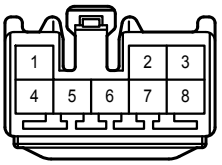

2M
White

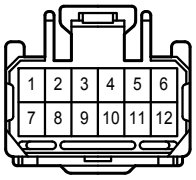

2Q
White

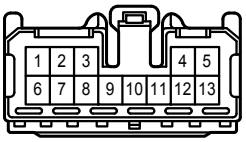

EL4
Gray

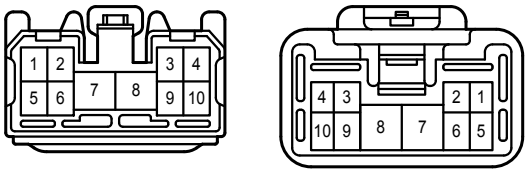

HE2
White

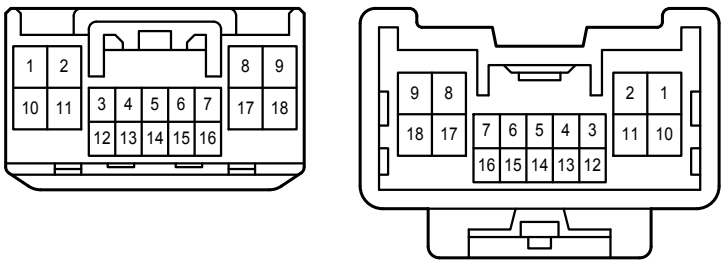

HE4
White

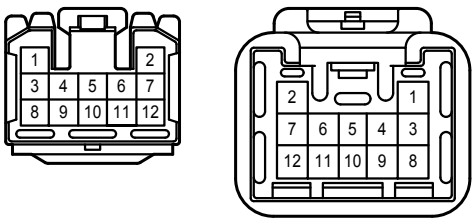

IE2
White

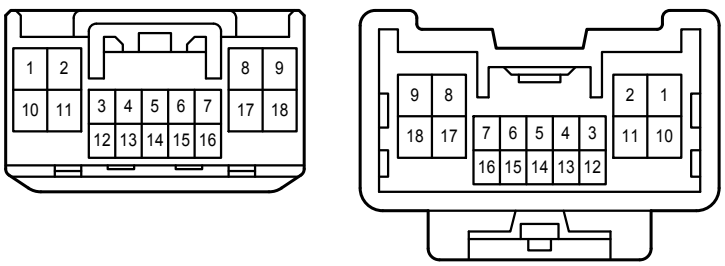

IE4
White

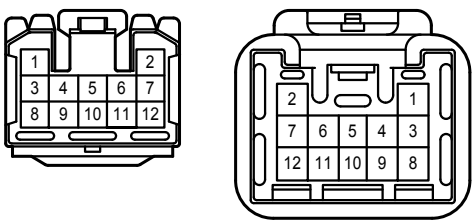

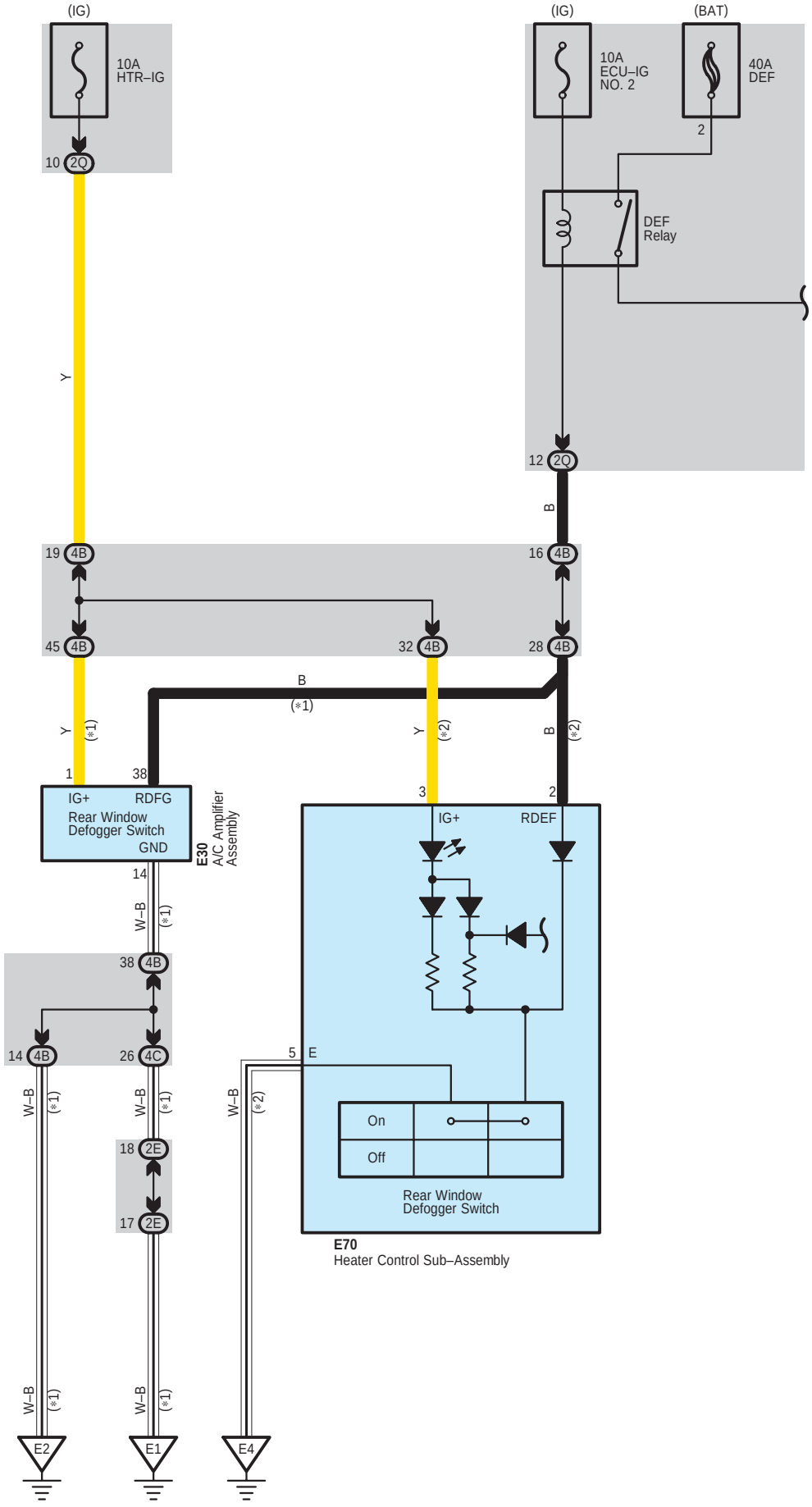
(IG)
10A
HTR–IG
10
2Q
(IG)
(BAT)
10A
ECU–IG
NO. 2
40A
DEF
2
DEF
Relay
12
2Q
Y
B
19
4B
16
4B
45
4B
32
4B
28
4B
B
(*1)
Y
(*1)
Y
(*2)
B
(*2)
1
38
3
2
IG+
RDFG
Rear Window
Defogger Switch
GND
E30
A/C Amplifier
Assembly
IG+
RDEF
14
W–B
(*1)
38
4B
14
4B
26
4C
5
E
W–B
(*1)
W–B
(*1)
W–B
(*2)
On
Off
Rear Window
Defogger Switch
18
2E
17
2E
E70
Heater Control Sub–Assembly
W–B
(*1)
W–B
(*1)
E2
E1
E4

* 1 : Automatic A/C
* 2 : Manual A/C

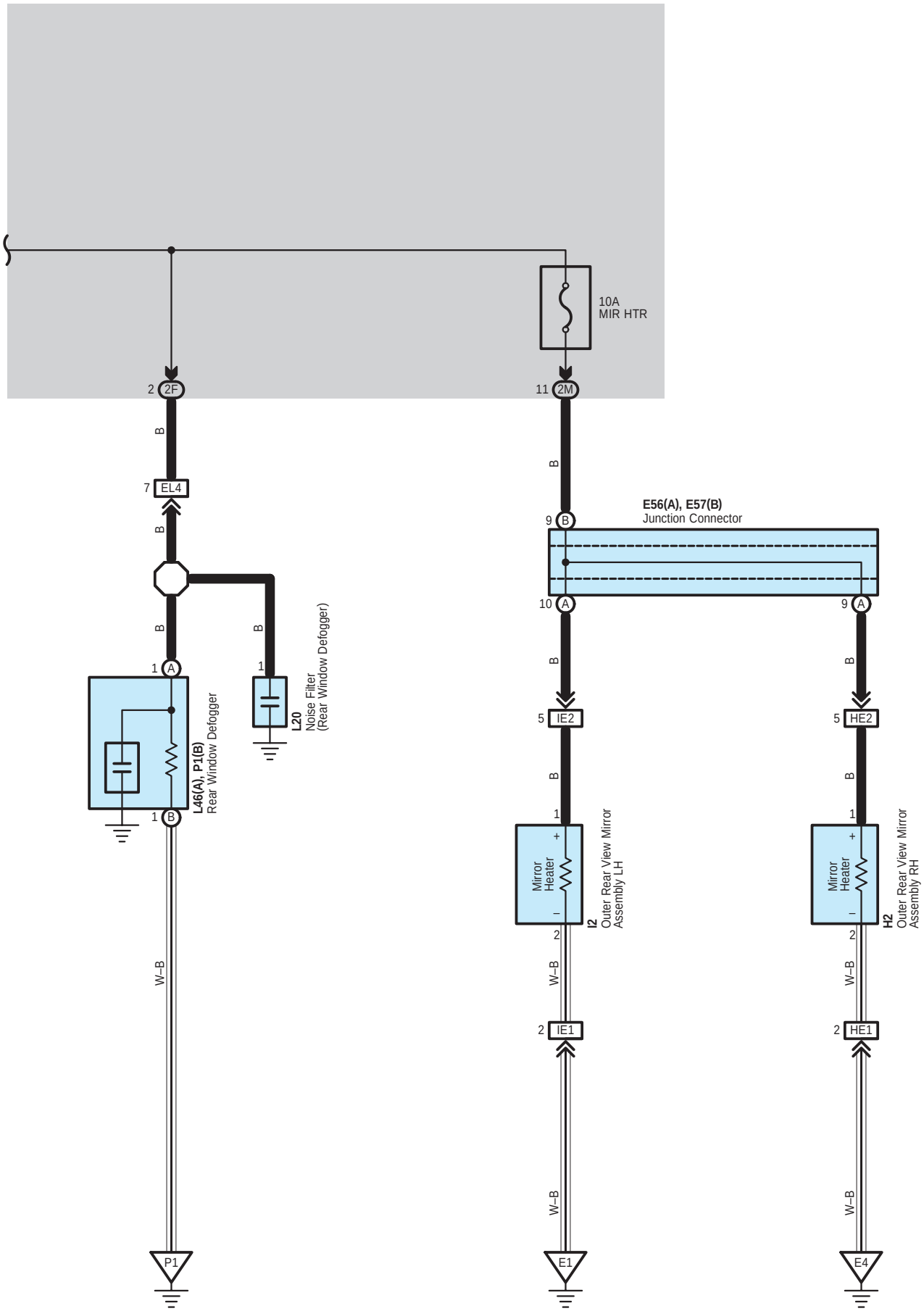

E 30
White

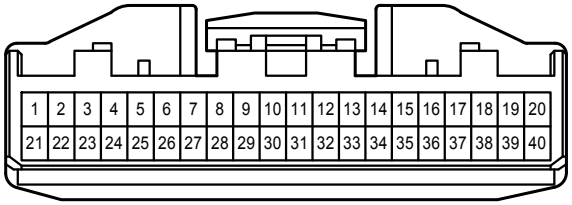

E 56
White

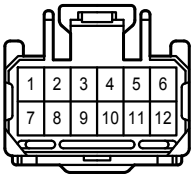

E 57
White

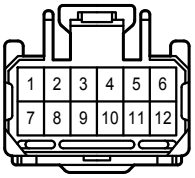

E 70
Gray

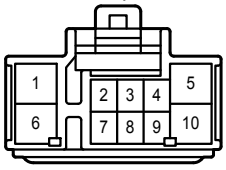

H 2
White

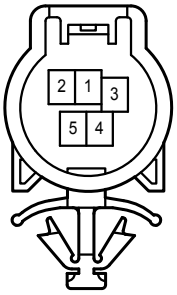

I 2
White

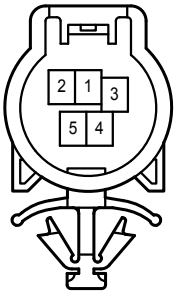

L 20
White

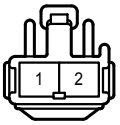

L 46
Black



P 1
Black



2E
White

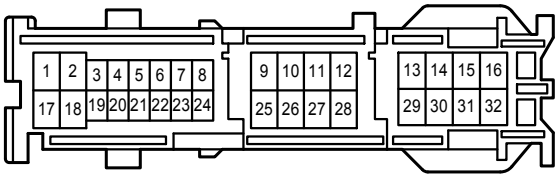

2F
White

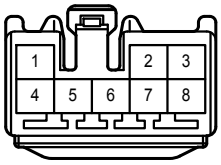

2M
White

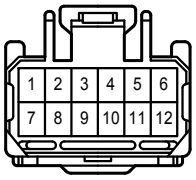

2Q
White

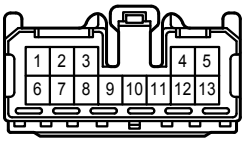

4B
White

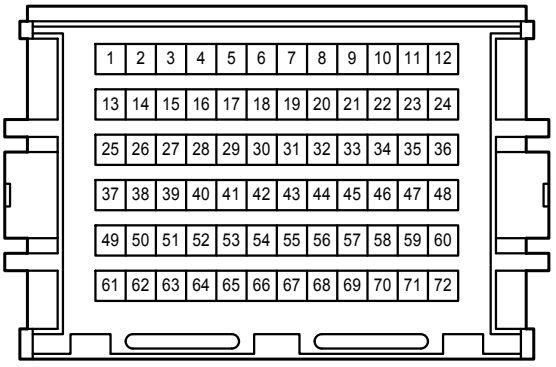

4C
White

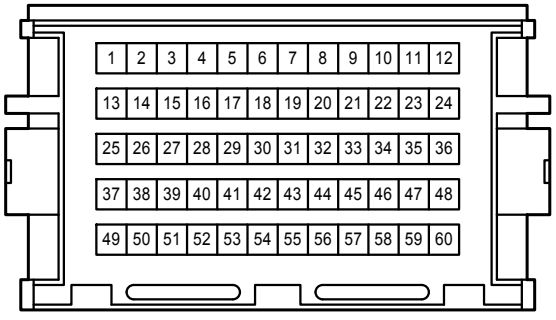

EL4
Gray

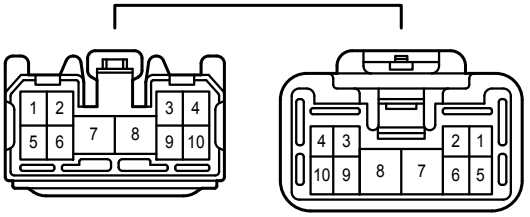

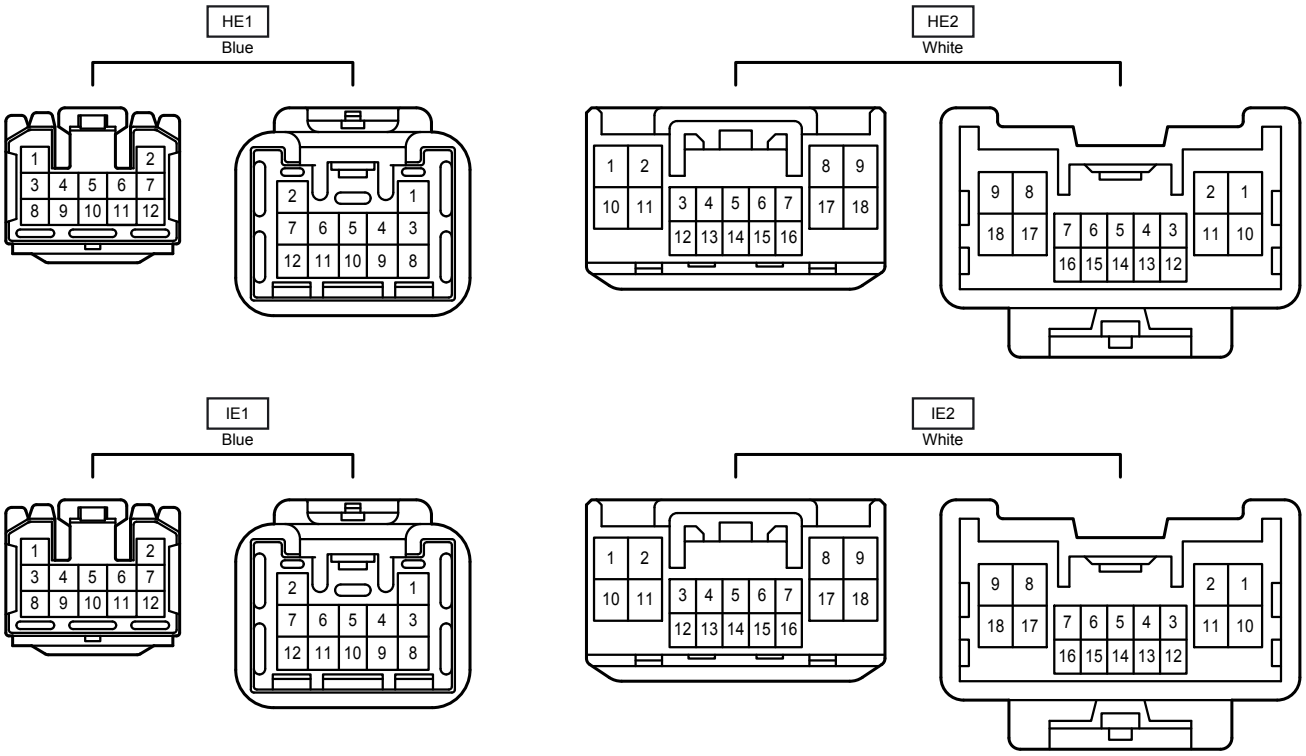
HE1
Blue
HE2
White
IE1
Blue
IE2
White

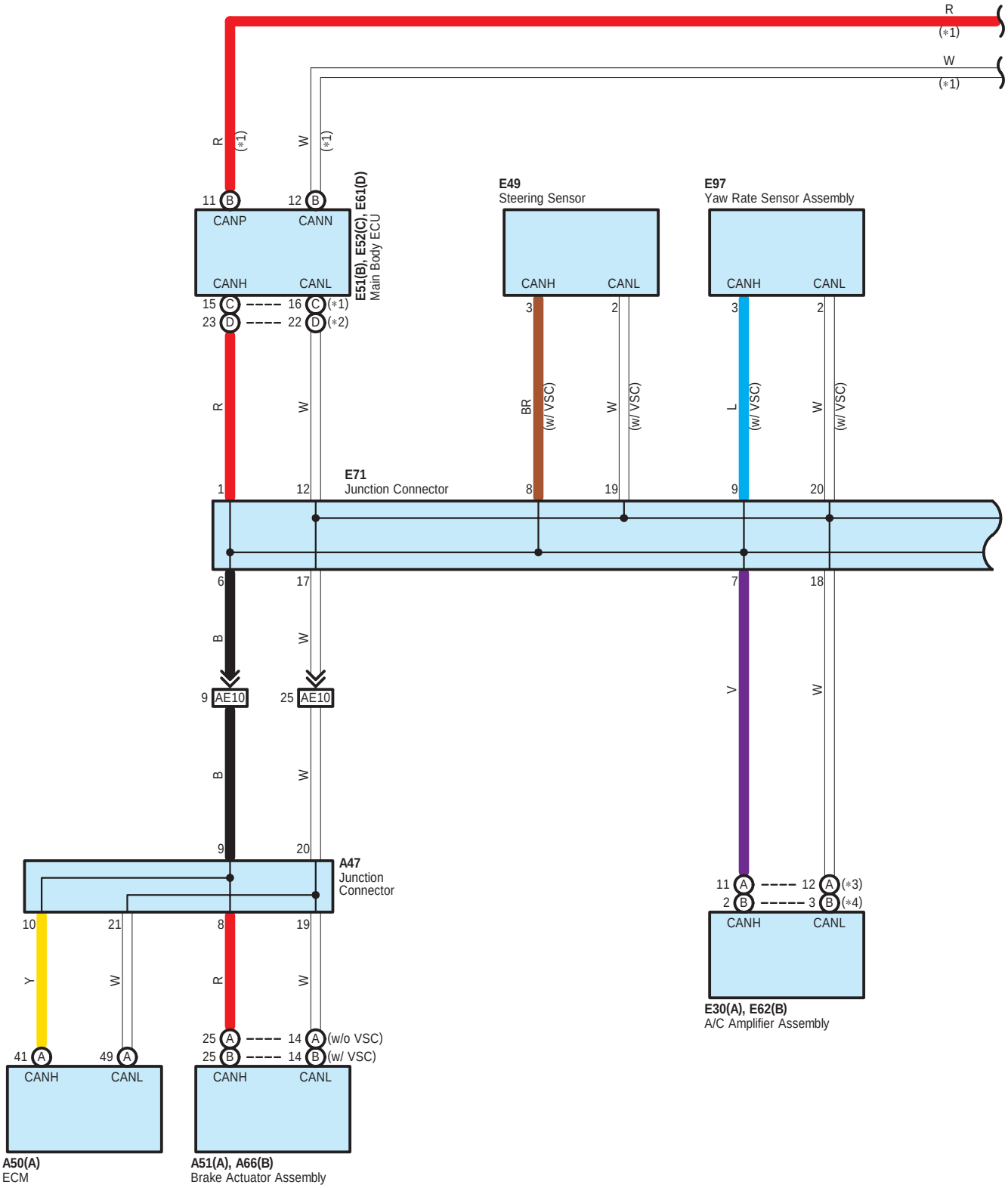
R
(*1)
W
(*1)
R
(*1)
W
(*1)
11 B
12 B
CANP
CANN
CANH
CANL
E51(B), E52(C), E61(D)
Main Body ECU
15 C
16 C
(*1)
23 D
22 D
(*2)
E49
Steering Sensor
CANH
CANL
3
2
E97
Yaw Rate Sensor Assembly
CANH
CANL
3
2
BR
(w/ VSC)
W
(w/ VSC)
L
(w/ VSC)
W
(w/ VSC)
E71
Junction Connector
1
12
8
19
9
20
6
17
7
18
B
W
V
W
9 AE10
25 AE10
A47
Junction
Connector
9
20
10
21
8
19
Y
W
R
W
11 A
12 A
(*3)
2 B
3 B
(*4)
CANH
CANL
E30(A), E62(B)
A/C Amplifier Assembly
25 A
14 A
(w/o VSC)
25 B
14 B
(w/ VSC)
41 A
49 A
CANH
CANL
CANH
CANL
A50(A)
ECM
A51(A), A66(B)
Brake Actuator Assembly

∗ 1 : w/ Smart Key System
∗ 2 : w/o Smart Key System
∗ 3 : Automatic A/C
∗ 4 : Manual A/C

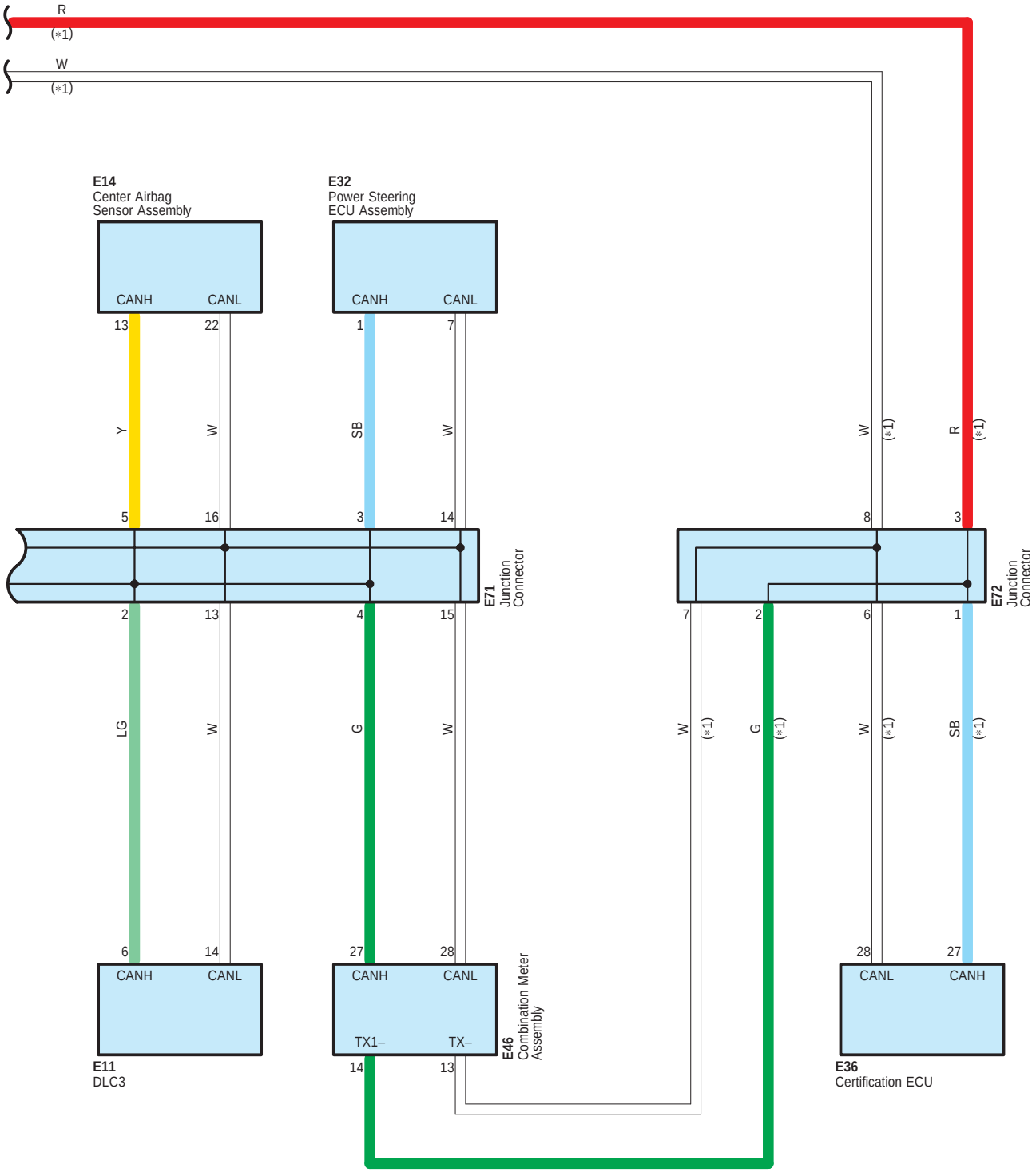

A 47
White

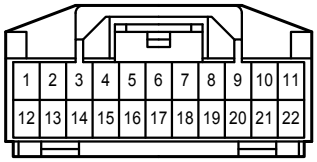

A 50
Black

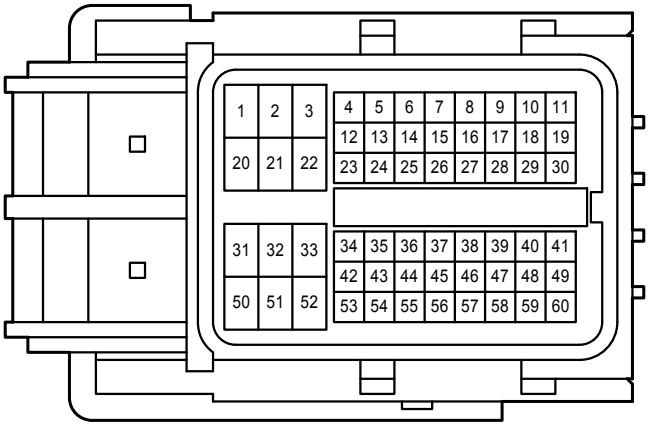

A 51
Gray

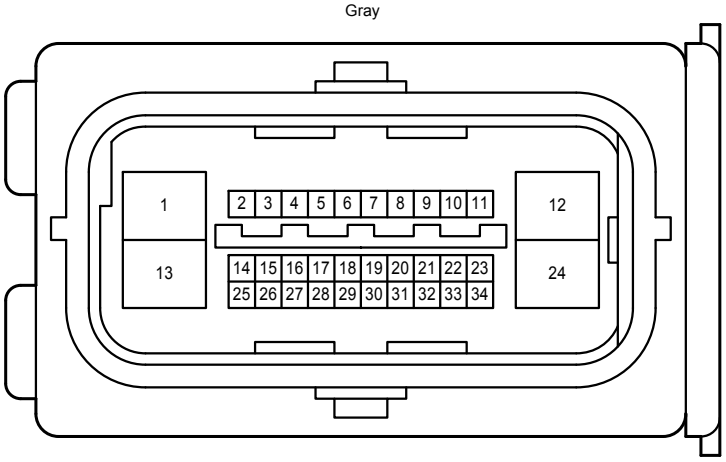

A 66
Black

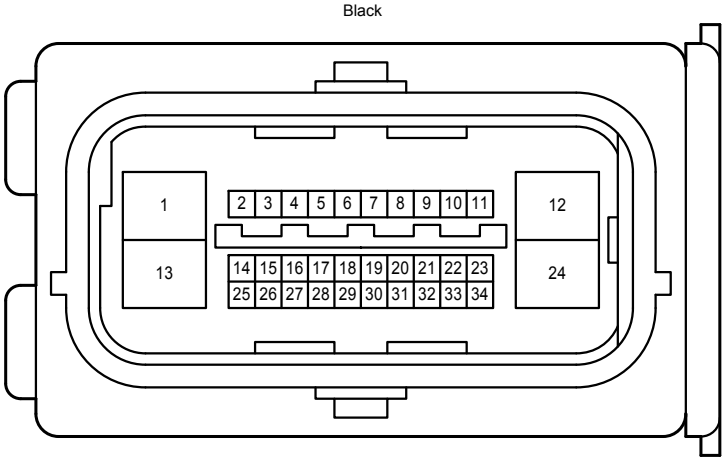

E 11
White

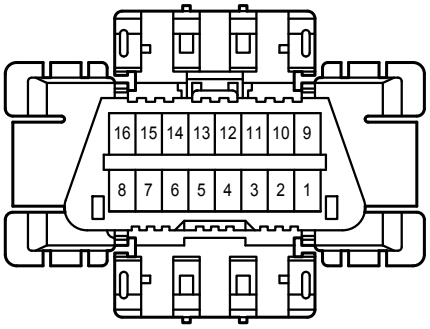

E 14
Yellow

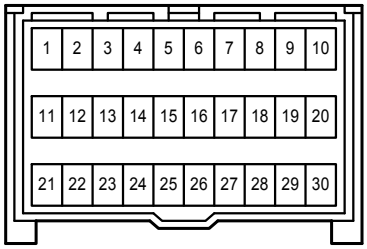

E 30
White

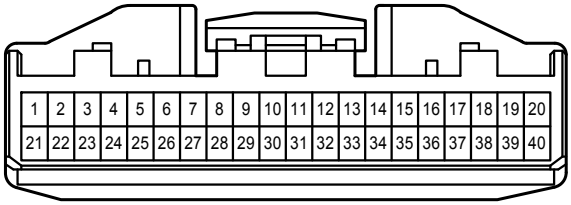

E 32
White

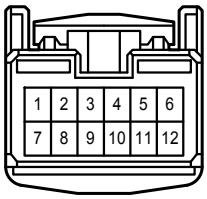

E 36
White

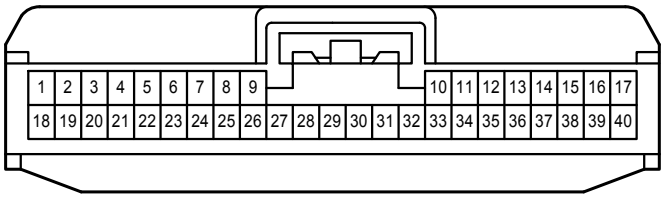

E 46
White

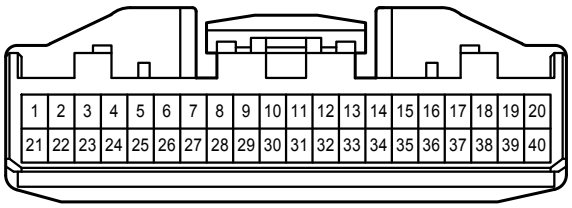

E 49
Black

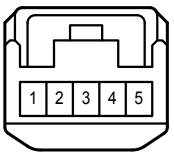

E 51
White

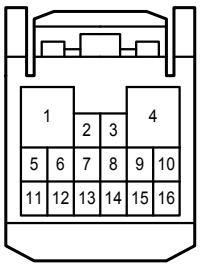

E 52
White

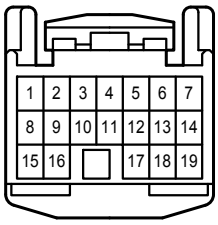

E 61
White

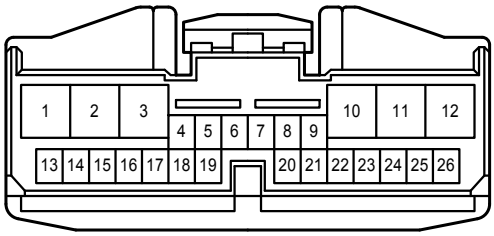

E 62
White

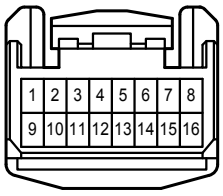

E 71
White

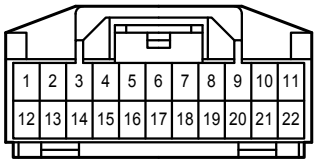

E 72
Black

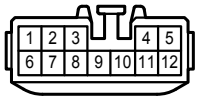

E 97
Black

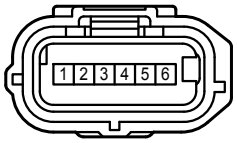

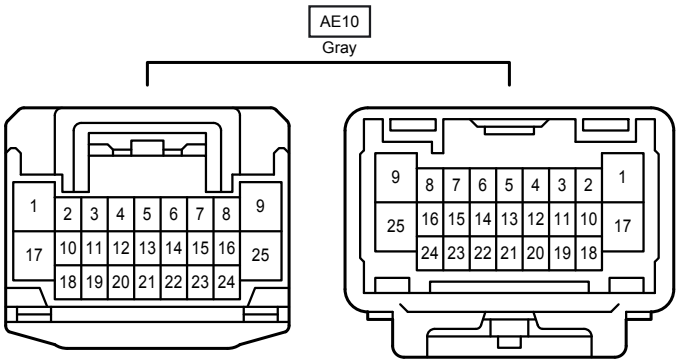
AE10
Gray
1
2
3
4
5
6
7
8
9
17
10
11
12
13
14
15
16
25
18
19
20
21
22
23
24
9
8
7
6
5
4
3
2
1
25
16
15
14
13
12
11
10
17
24
23
22
21
20
19
18

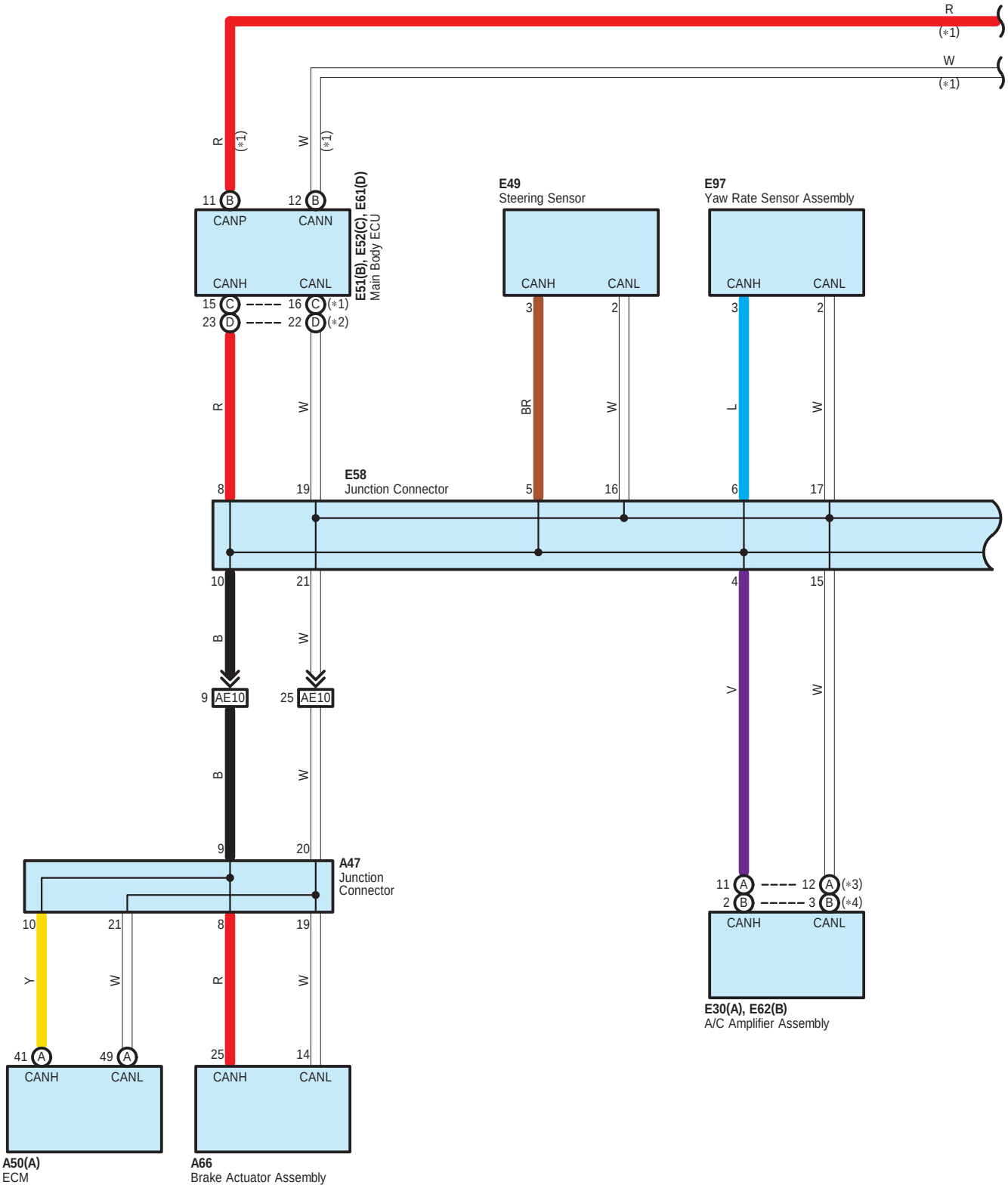
R
(*1)
W
(*1)
R
(*1)
W
(*1)
11 B
12 B
CANP
CANN
CANH
CANL
E51(B), E52(C), E61(D)
Main Body ECU
15 C
16 C
(*1)
23 D
22 D
(*2)
E49
Steering Sensor
CANH
CANL
3
2
E97
Yaw Rate Sensor Assembly
CANH
CANL
3
2
R
W
BR
W
L
W
E58
Junction Connector
8
19
5
16
6
17
10
21
4
15
B
W
V
W
9 AE10
25 AE10
B
W
9
20
A47
Junction
Connector
10
21
8
19
11 A
12 A
(*3)
2 B
3 B
(*4)
Y
W
R
W
CANH
CANL
41 A
49 A
25
14
CANH
CANL
CANH
CANL
A50(A)
ECM
A66
Brake Actuator Assembly
E30(A), E62(B)
A/C Amplifier Assembly

* 1 : w/ Smart Key System
* 2 : w/o Smart Key System
* 3 : Automatic A/C
* 4 : Manual A/C

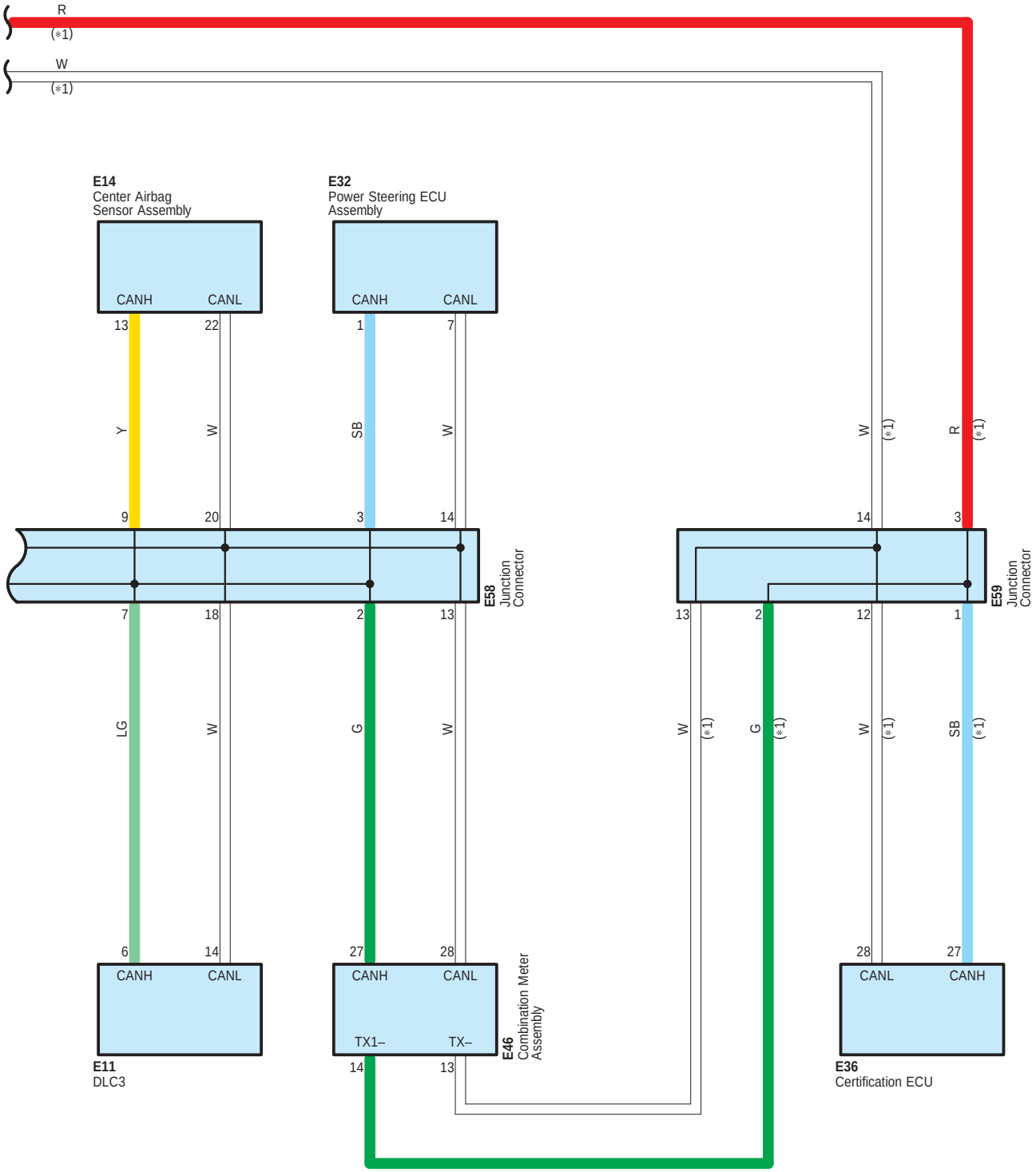

A 47
White

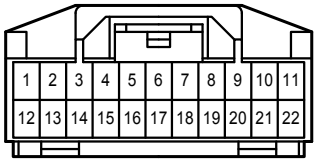

A 50
Black

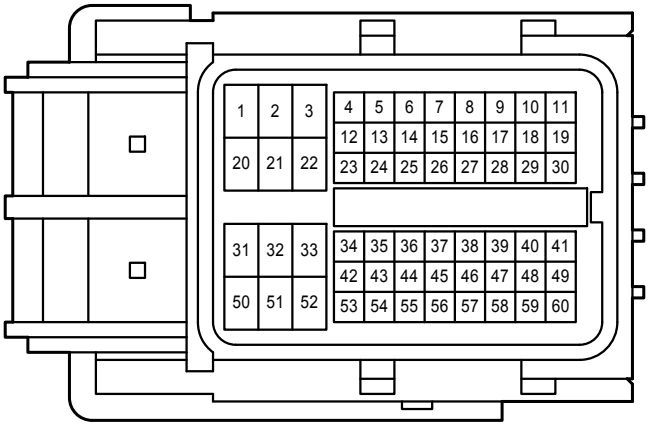

A 66
Black

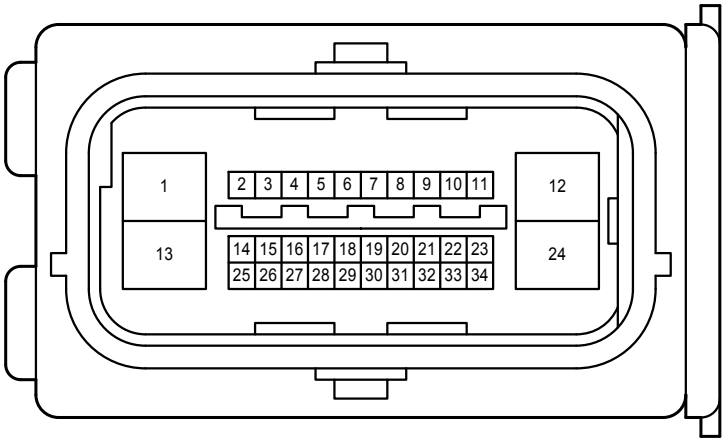

E 11
White

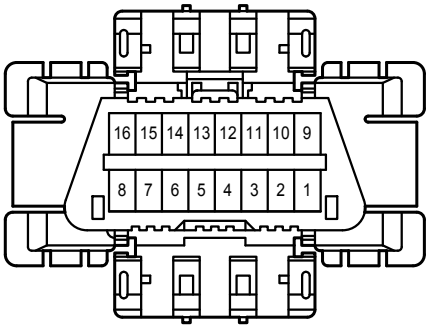

E 14
Yellow

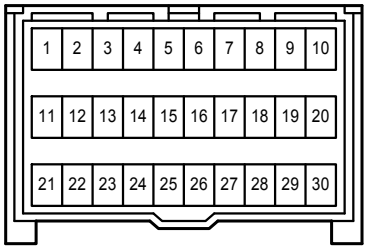

E 30
White

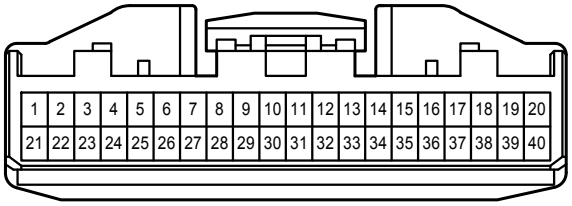

E 32
White

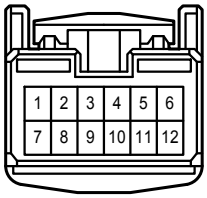

E 36
White

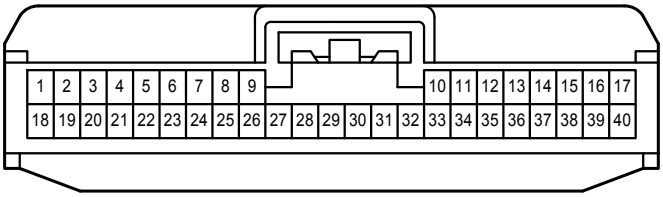

E 46
White

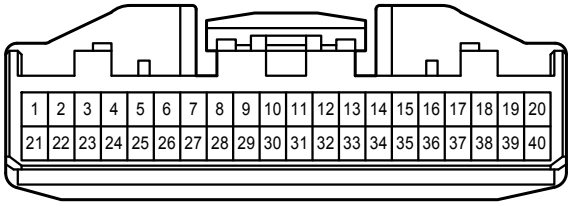

E 49
Black

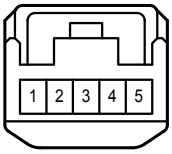

E 51
White

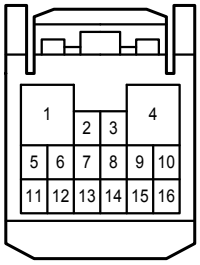

E 52
White

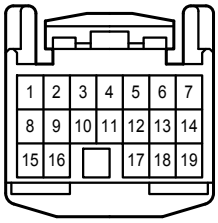

E 58
Gray

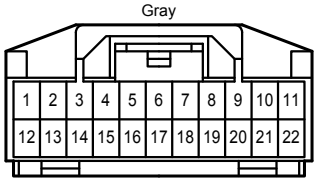

E 59
White

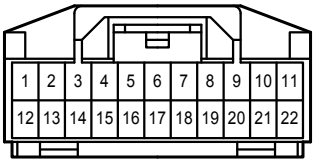

E 61
White

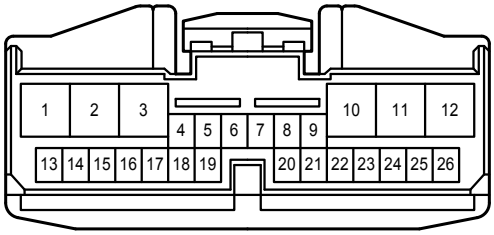

E 62
White

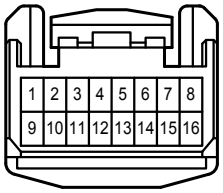

E 97
Black

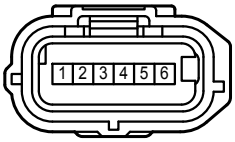

AE10
Gray

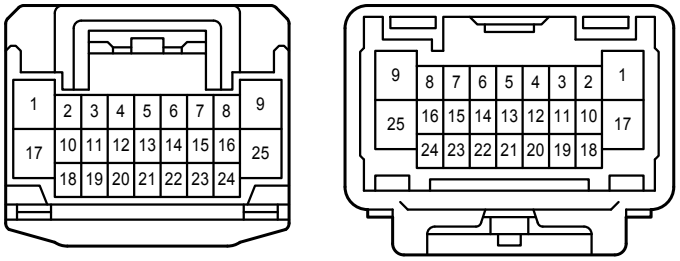

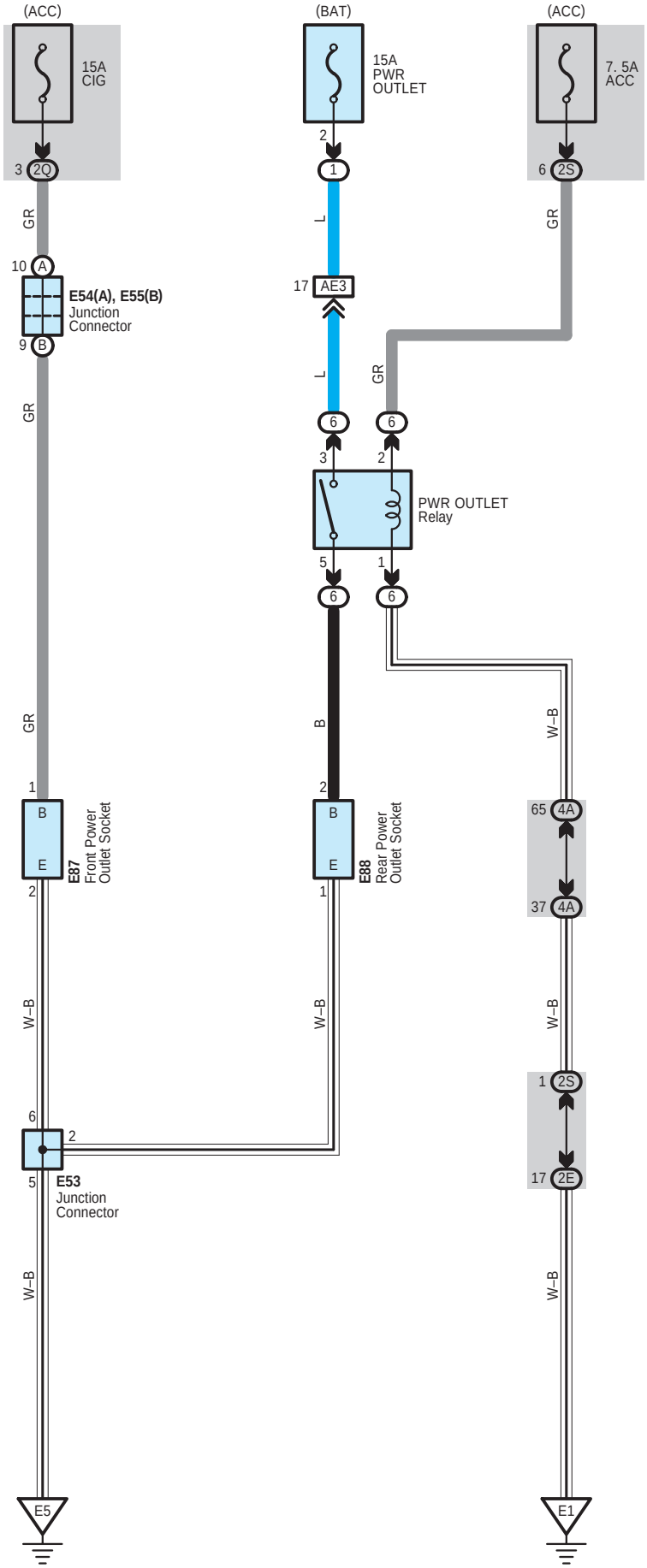
(ACC)
15A
CIG
3 2Q
GR
10 A
E54(A), E55(B)
Junction
Connector
9 B
GR
GR
1
B
E
E87
Front Power
Outlet Socket
2
W–B
6
2
5
E53
Junction
Connector
W–B
E5
(BAT)
15A
PWR
OUTLET
2
1
L
17 AE3
L
6
3
PWR OUTLET
Relay
5
6
B
2
B
E
E88
Rear Power
Outlet Socket
1
W–B
(ACC)
7. 5A
ACC
6 2S
GR
GR
6
2
1
6
W–B
65 4A
37 4A
W–B
1 2S
17 2E
W–B
E1

E 53
White

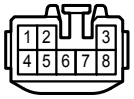

E 54
White

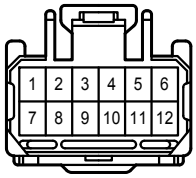

E 55
White

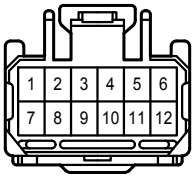

E 87
White

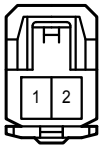

E 88
White



2E
White

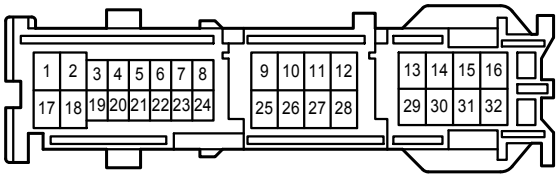

2Q
White

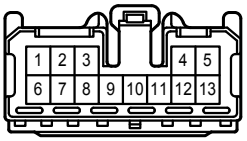

2S
White

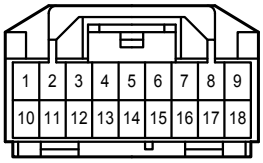

4A
White

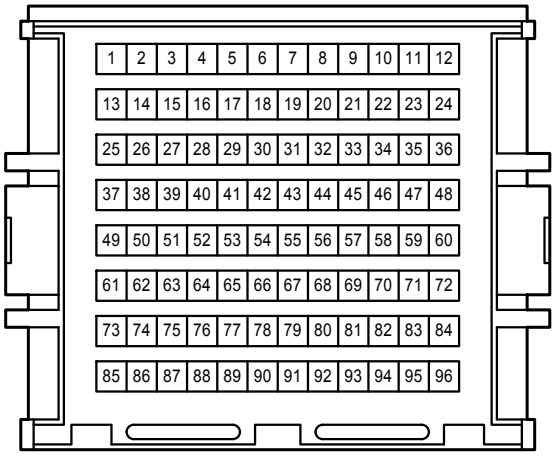

AE3
White

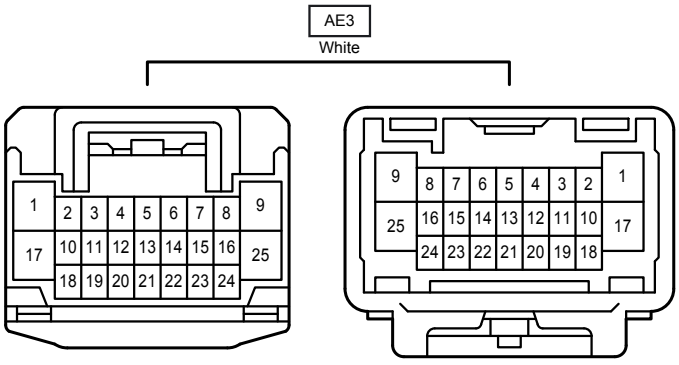

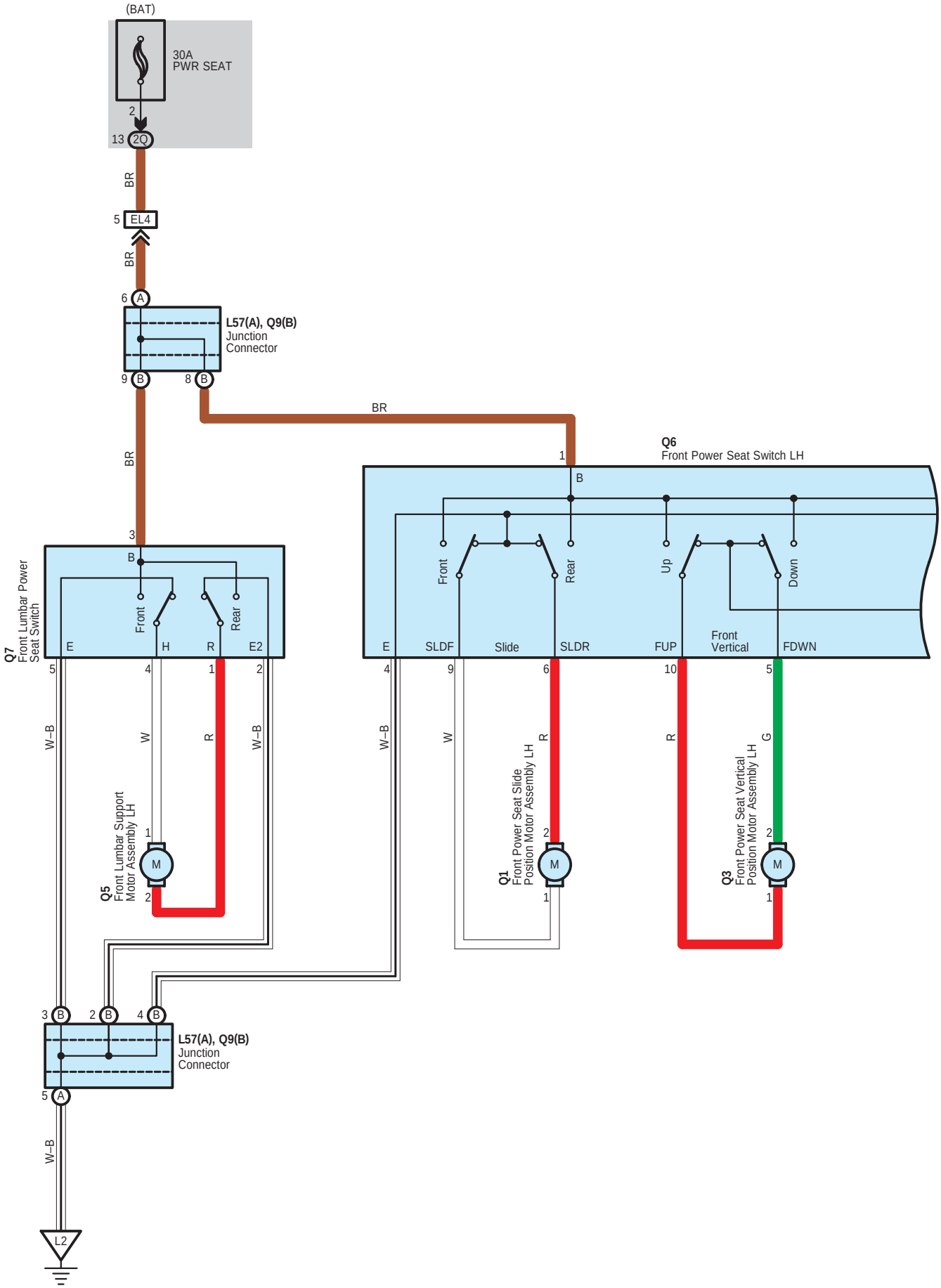
(BAT)
30A
PWR SEAT
2
13 2Q
BR
5 EL4
BR
6 A
L57(A), Q9(B)
Junction
Connector
9 B
8 B
BR
BR
3
B
Q7
Front Lumbar Power
Seat Switch
Front
Rear
E
H
R
E2
5
4
1
2
W–B
W
R
W–B
Q5
Front Lumbar Support
Motor Assembly LH
M
1
2
BR
1
Q6
Front Power Seat Switch LH
B
Front
Rear
Up
Down
E
SLDF
Slide
SLDR
FUP
Front
Vertical
FDWN
4
9
6
10
5
W–B
W
R
R
G
Q1
Front Power Seat Slide
Position Motor Assembly LH
Q3
Front Power Seat Vertical
Position Motor Assembly LH
M
2
1
3 B
2 B
4 B
L57(A), Q9(B)
Junction
Connector
5 A
W–B
L2

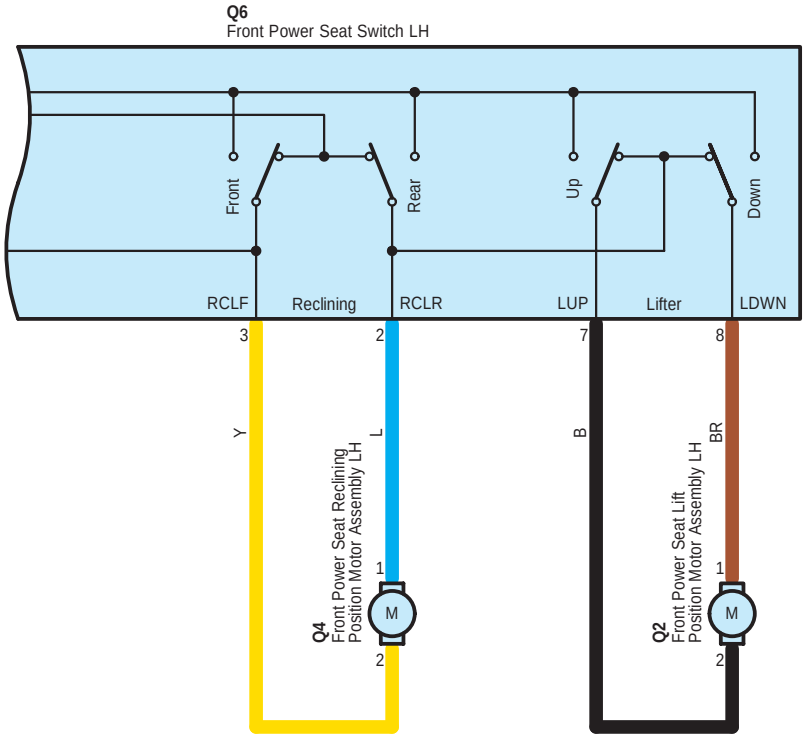
Q6
Front Power Seat Switch LH
Front
Rear
Up
Down
RCLF
Reclining
RCLR
LUP
Lifter
LDWN
3
2
7
8
Y
L
B
BR
Q4
Front Power Seat Reclining
Position Motor Assembly LH
Q2
Front Power Seat Lift
Position Motor Assembly LH
M
M
1
2
1
2

L 57
White

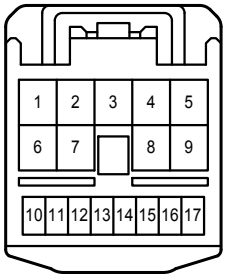

Q 1
Black

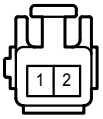

Q 2
Black

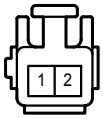

Q 3
Black

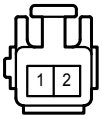

Q 4
Black

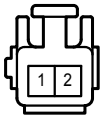

Q 5
White

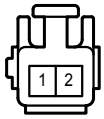

Q 6
White

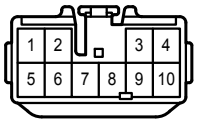

Q 7
White

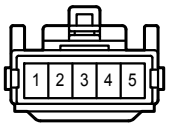

Q 9
White

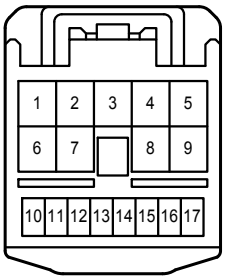

2Q
White

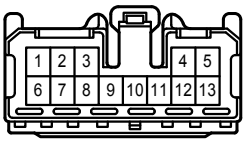

EL4
Gray

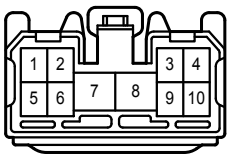

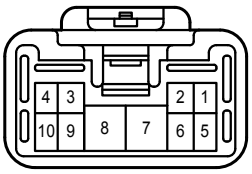

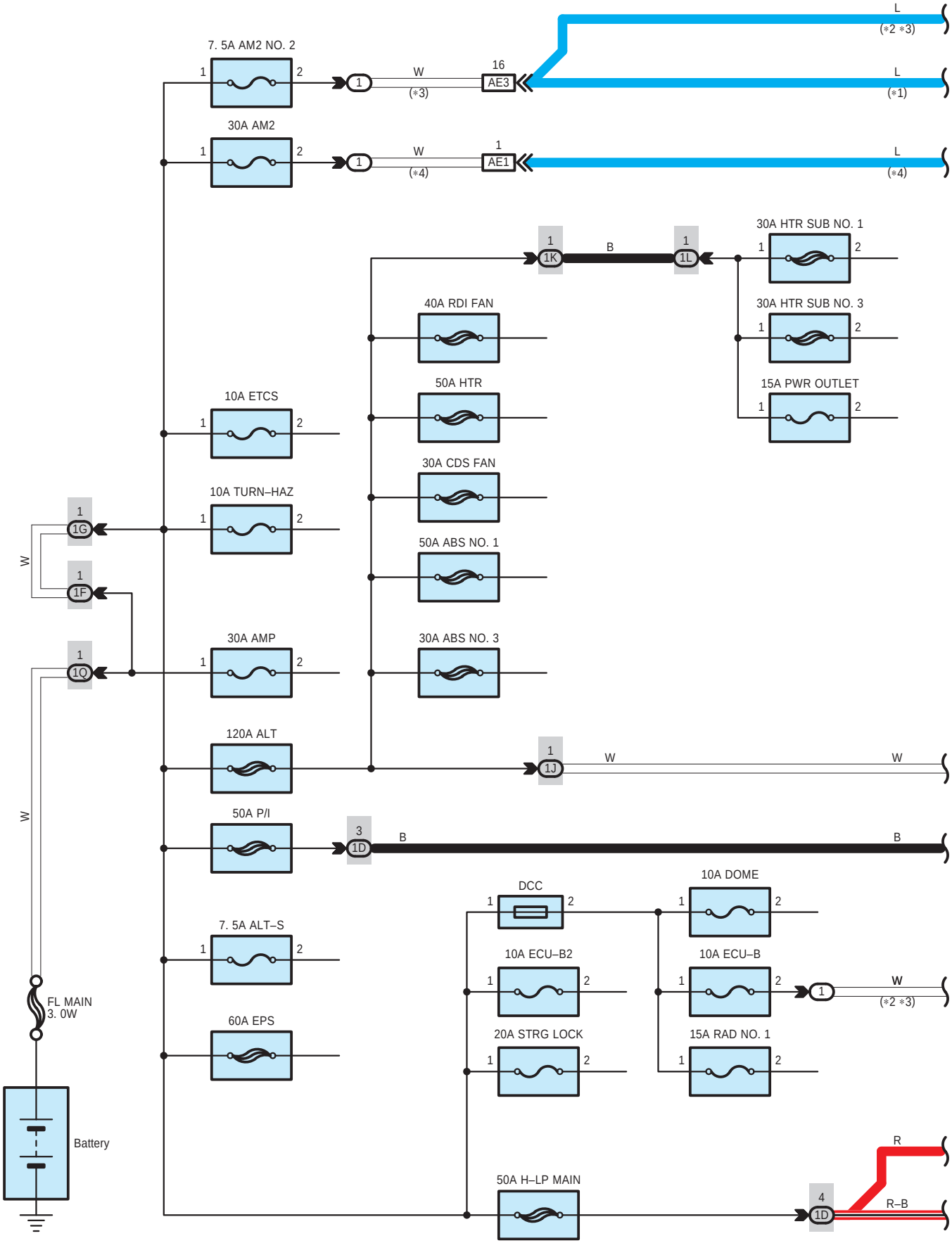
7. 5A AM2 NO. 2
30A AM2
10A ETCS
10A TURN–HAZ
30A AMP
120A ALT
50A P/I
7. 5A ALT–S
60A EPS
40A RDI FAN
50A HTR
30A CDS FAN
50A ABS NO. 1
30A ABS NO. 3
30A HTR SUB NO. 1
30A HTR SUB NO. 3
15A PWR OUTLET
DCC
10A DOME
10A ECU–B2
10A ECU–B
20A STRG LOCK
15A RAD NO. 1
50A H–LP MAIN
FL MAIN
3. 0W
Battery
W
B
L
R
R–B
(∗1)
(∗2 ∗3)
(∗4)

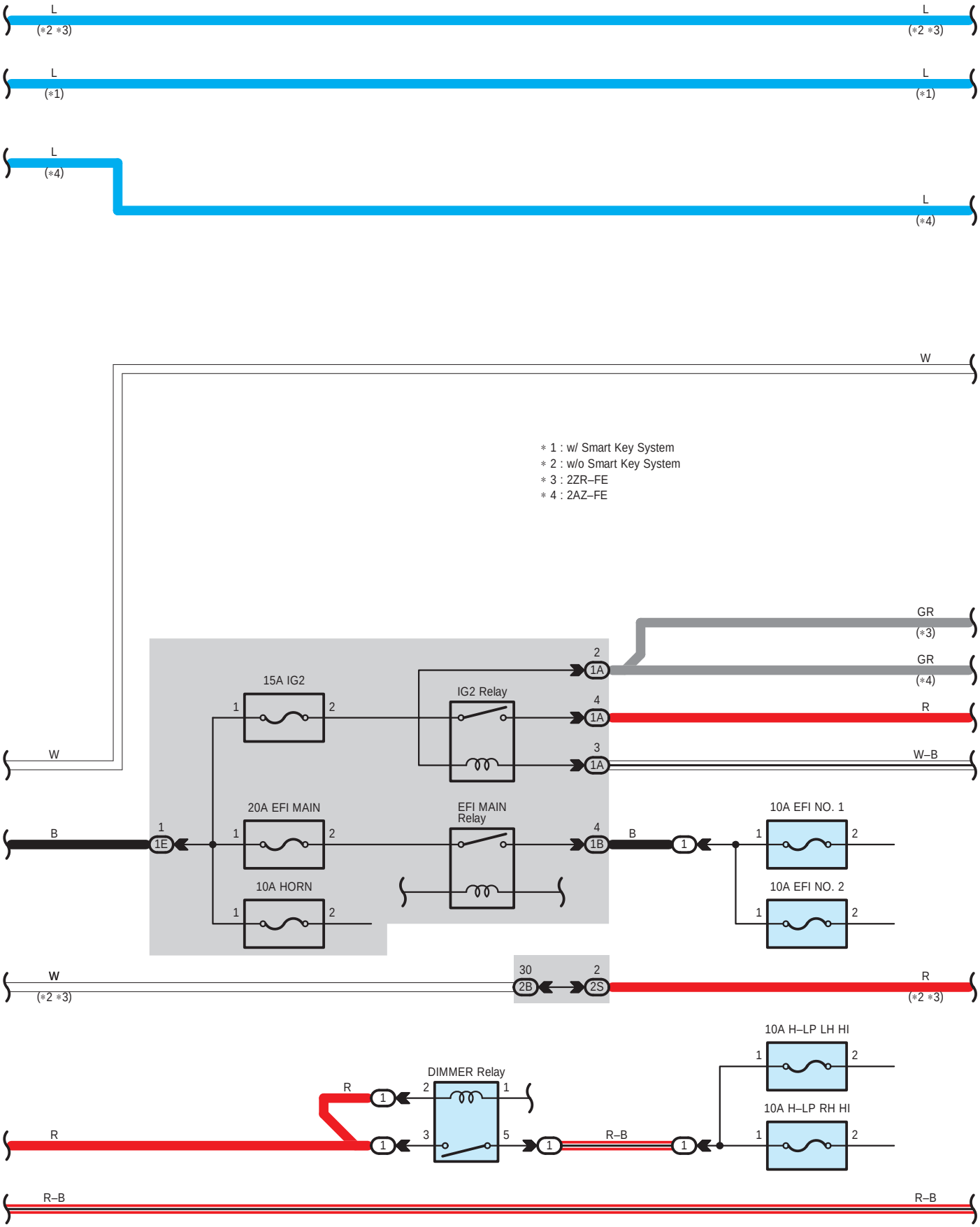
L
(*2 *3)
L
(*2 *3)
L
(*1)
L
(*1)
L
(*4)
L
(*4)
W
* 1 : w/ Smart Key System
* 2 : w/o Smart Key System
* 3 : 2ZR–FE
* 4 : 2AZ–FE
GR
(*3)
GR
(*4)
R
W–B
W
15A IG2
IG2 Relay
20A EFI MAIN
EFI MAIN
Relay
10A HORN
B
10A EFI NO. 1
10A EFI NO. 2
W
(*2 *3)
R
(*2 *3)
10A H–LP LH HI
10A H–LP RH HI
DIMMER Relay
R
R–B
R–B

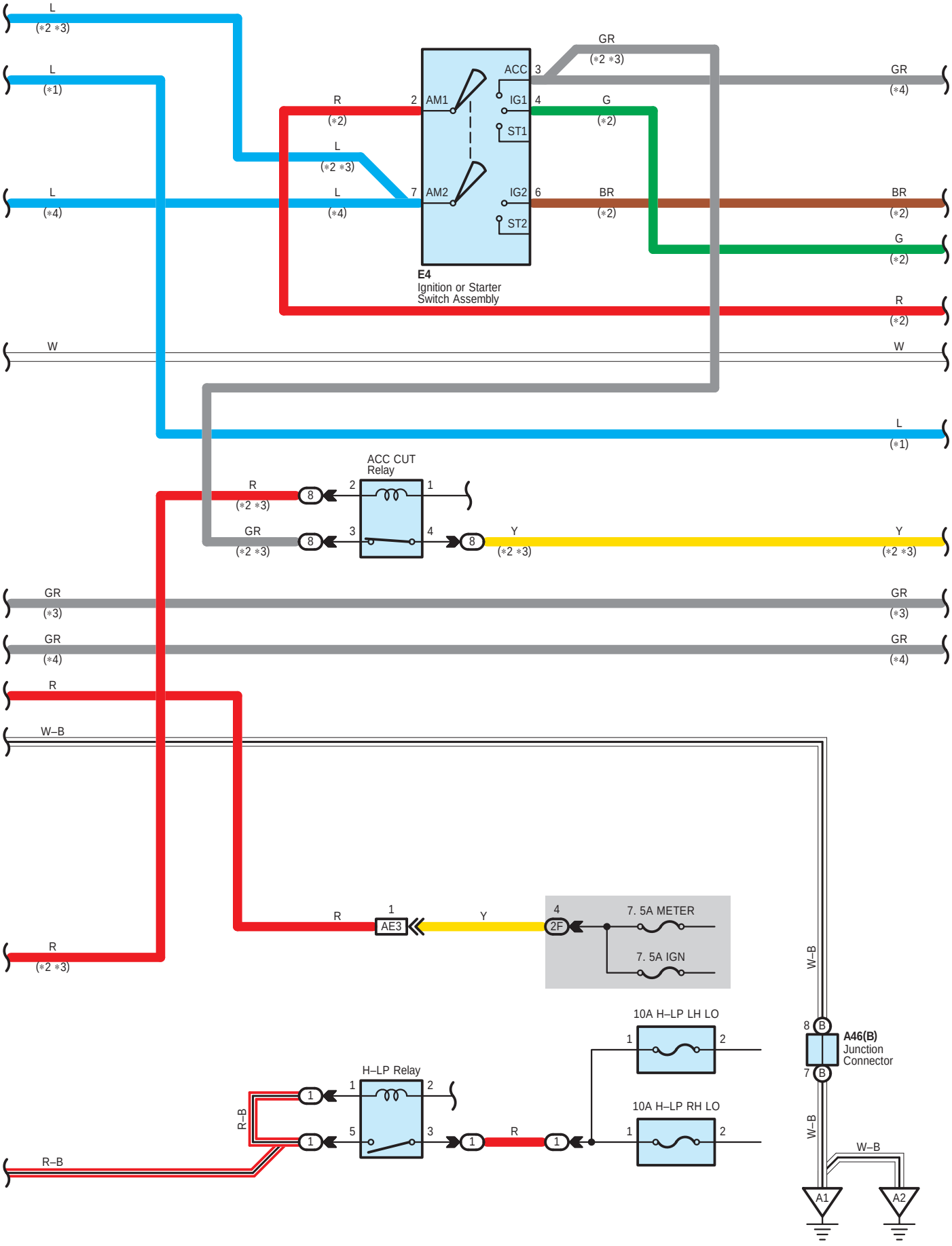
L
(*2 *3)
L
(*1)
L
(*4)
R
(*2)
L
(*2 *3)
L
(*4)
2
AM1
7
AM2
ACC
3
IG1
4
ST1
IG2
6
ST2
GR
(*2 *3)
G
(*2)
BR
(*2)
GR
(*4)
BR
(*2)
G
(*2)
R
(*2)
E4
Ignition or Starter
Switch Assembly
W
W
L
(*1)
ACC CUT
Relay
R
(*2 *3)
GR
(*2 *3)
8
2
1
3
4
8
Y
(*2 *3)
Y
(*2 *3)
GR
(*3)
GR
(*4)
GR
(*3)
GR
(*4)
R
W–B
R
(*2 *3)
R
1
AE3
Y
4
2F
7. 5A METER
7. 5A IGN
10A H–LP LH LO
10A H–LP RH LO
H–LP Relay
R–B
R–B
1
2
5
3
R
W–B
W–B
8
B
A46(B)
Junction
Connector
7
B
W–B
A1
A2

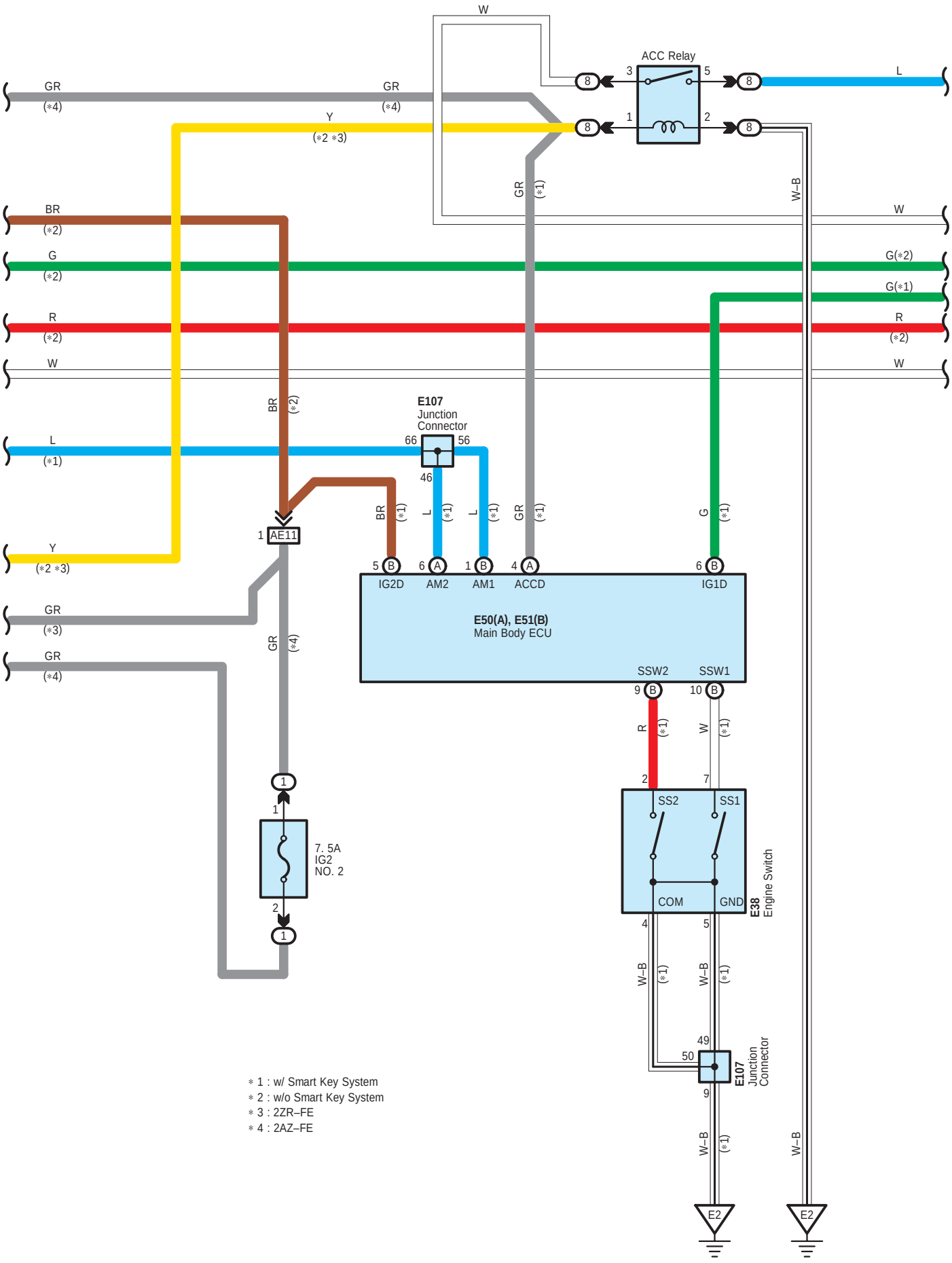
W
ACC Relay
3
5
1
2
8
L
GR
(*4)
Y
(*2 *3)
GR (*1)
W–B
BR
(*2)
G
(*2)
G(*2)
G(*1)
R
(*2)
W
E107
Junction
Connector
66
56
46
L
(*1)
BR (*1)
L (*1)
GR (*1)
G (*1)
1 AE11
5 B IG2D
6 A AM2
1 B AM1
4 A ACCD
6 B IG1D
E50(A), E51(B)
Main Body ECU
SSW2
SSW1
9 B
10 B
R (*1)
W (*1)
2
7
SS2
SS1
COM
GND
E38
Engine Switch
GR (*3)
GR (*4)
GR (*4)
1
1
7. 5A
IG2
NO. 2
2
1
4
5
W–B (*1)
49
50
E107
Junction
Connector
9
W–B (*1)
E2
E2
* 1 : w/ Smart Key System
* 2 : w/o Smart Key System
* 3 : 2ZR–FE
* 4 : 2AZ–FE

∗ 1 : w/ Smart Key System
∗ 2 : w/o Smart Key System

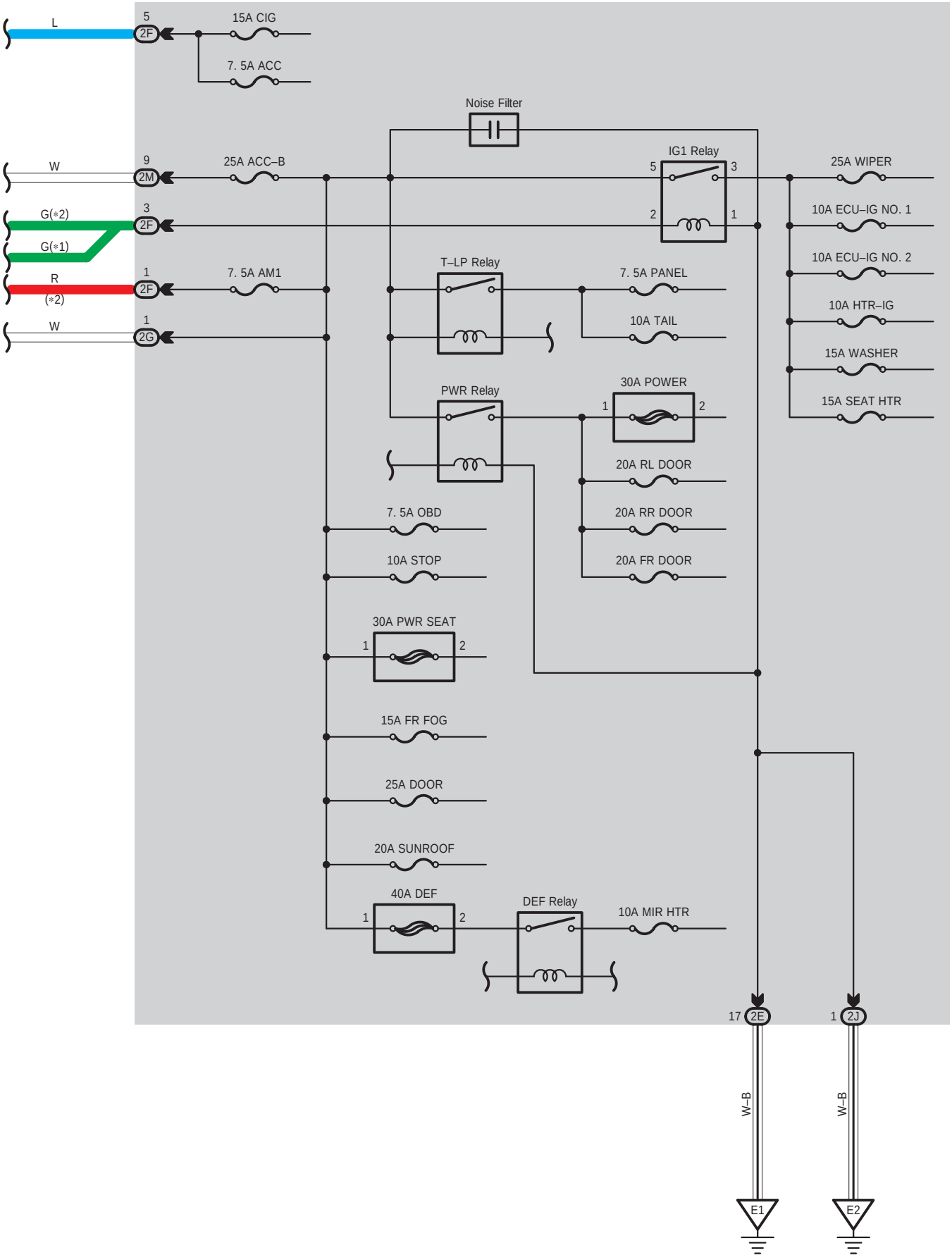

A 46
White

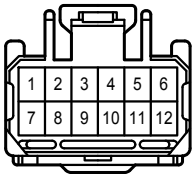

E 4
White

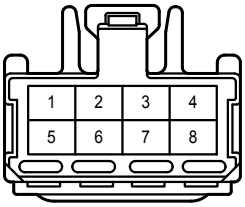

E 38
Black

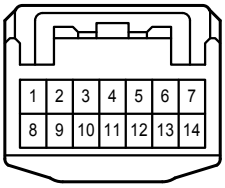

E 50
White

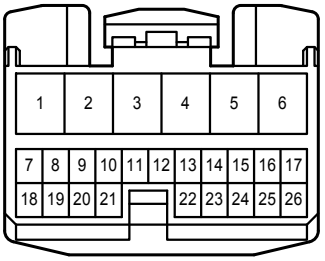

E 51
White

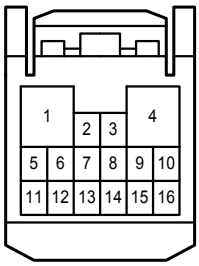

E107
White

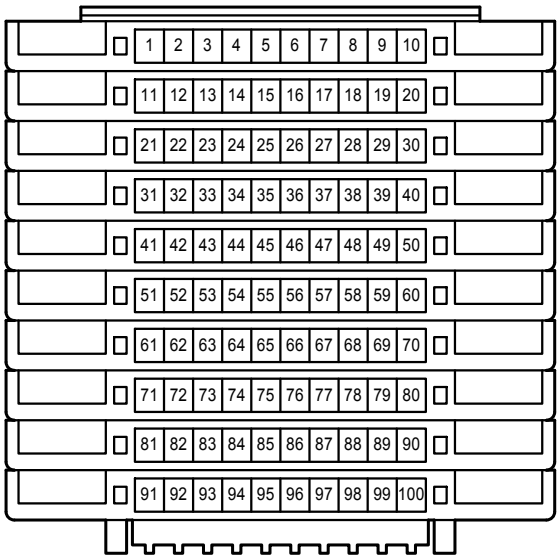

1A
White

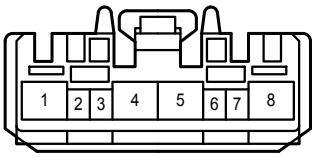

1B
White

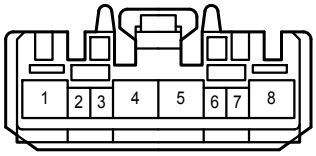

1D
White

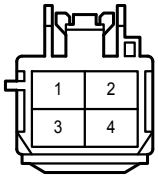

1E
White



1F
Black

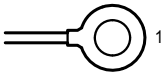

1G

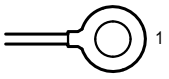

1J

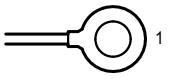

1K

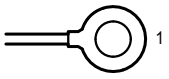

1L
White

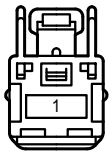

1Q

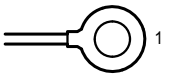

2B
White

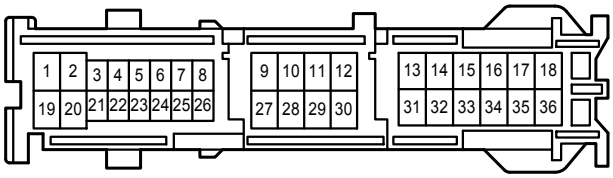

2E
White

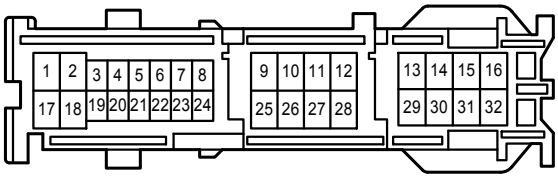

2F
White

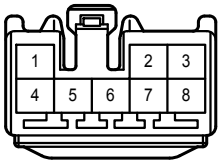

2G
White

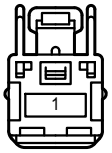

2J
White

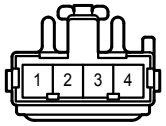

2M
White

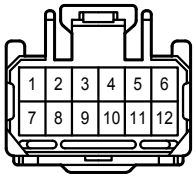

2S
White

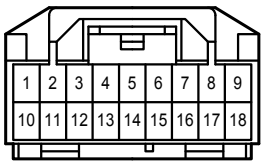

AE1
White

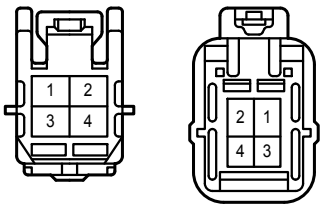

AE3
White

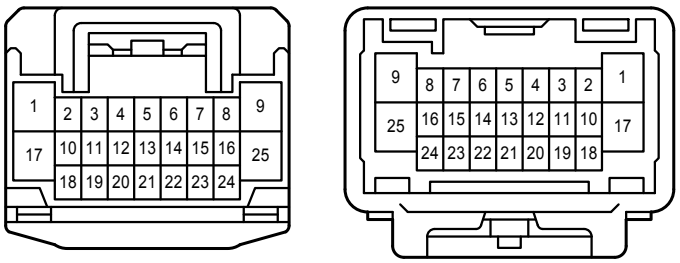

AE11
White

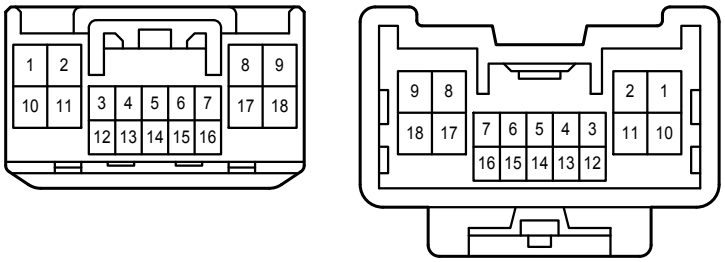

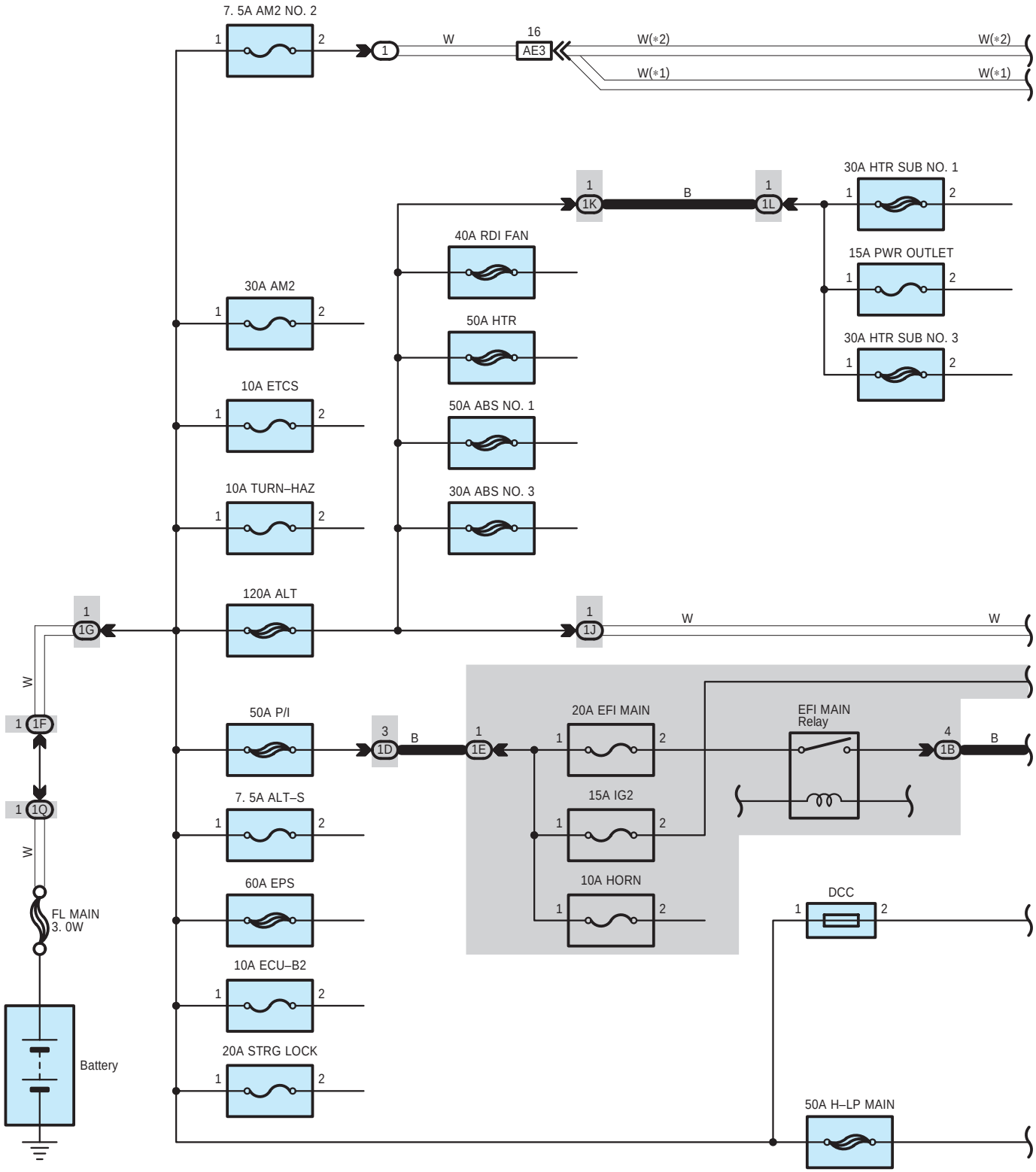
7. 5A AM2 NO. 2
1
2
1
W
16
AE3
W(*2)
W(*1)
W(*2)
W(*1)
1
1K
B
1
1L
30A HTR SUB NO. 1
1
2
15A PWR OUTLET
1
2
30A HTR SUB NO. 3
1
2
40A RDI FAN
50A HTR
50A ABS NO. 1
30A ABS NO. 3
30A AM2
1
2
10A ETCS
1
2
10A TURN–HAZ
1
2
120A ALT
1
1G
1
1J
W
W
W
1
1F
1
1Q
W
FL MAIN
3. 0W
Battery
50A P/I
3
1D
B
1
1E
20A EFI MAIN
1
2
EFI MAIN
Relay
4
1B
B
15A IG2
1
2
10A HORN
1
2
7. 5A ALT–S
1
2
60A EPS
10A ECU–B2
1
2
20A STRG LOCK
1
2
DCC
1
2
50A H–LP MAIN

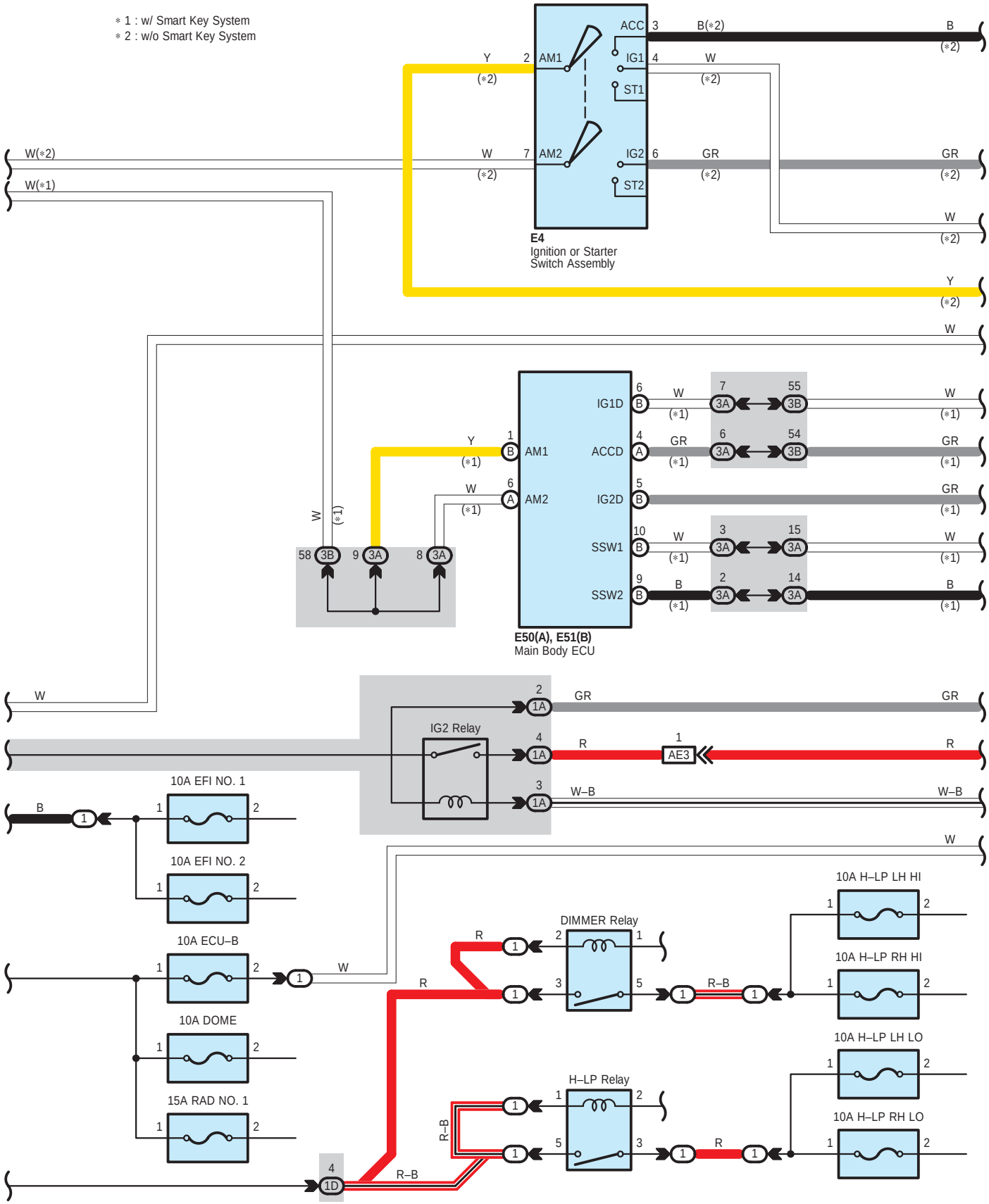
* 1 : w/ Smart Key System
* 2 : w/o Smart Key System
E4
Ignition or Starter Switch Assembly
E50(A), E51(B)
Main Body ECU
IG2 Relay
10A EFI NO. 1
10A EFI NO. 2
10A ECU–B
10A DOME
15A RAD NO. 1
DIMMER Relay
H–LP Relay
10A H–LP LH HI
10A H–LP RH HI
10A H–LP LH LO
10A H–LP RH LO

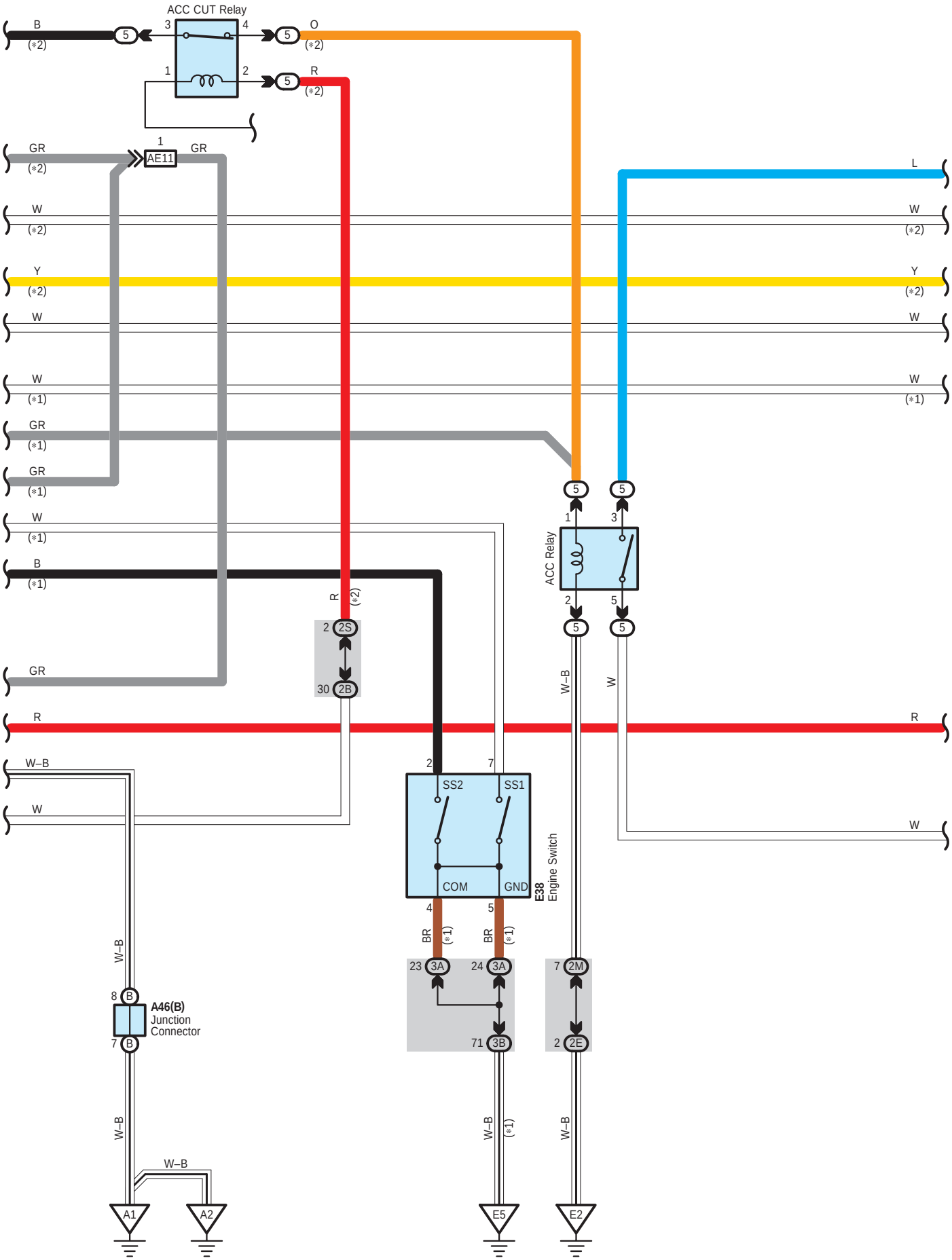
ACC CUT Relay
B
(*2)
O
R
GR
AE11
W
Y
L
(*1)
ACC Relay
2S
2B
SS2
SS1
COM
GND
E38
Engine Switch
BR
W–B
A46(B)
Junction
Connector
2M
2E
3A
3B
A1
A2
E5
E2

∗ 1 : w/ Smart Key System
∗ 2 : w/o Smart Key System

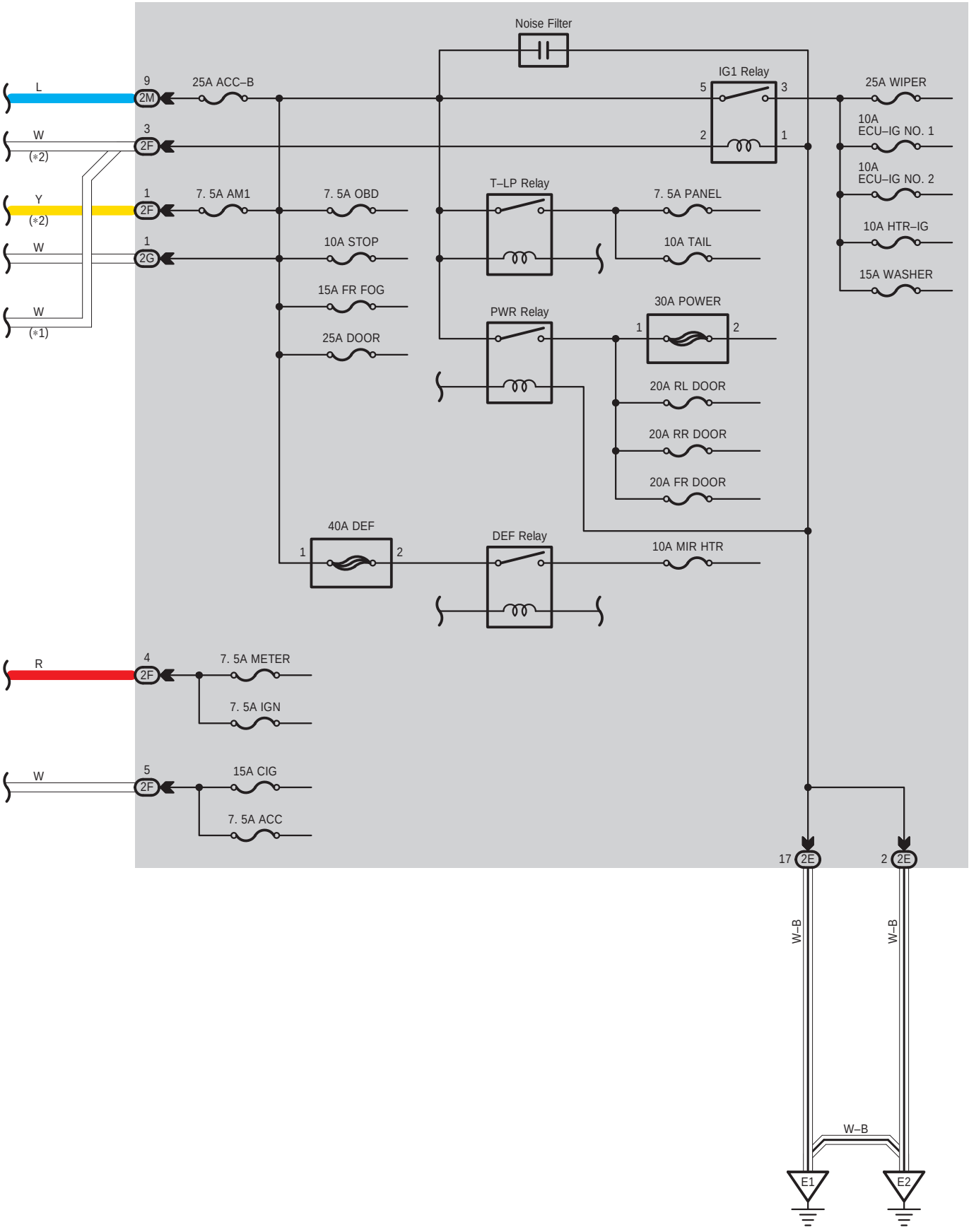

A 46
White

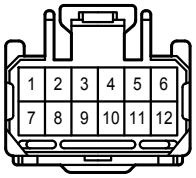

E 4
White

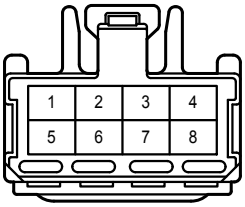

E 38
Black

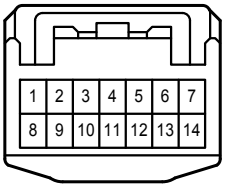

E 50
White

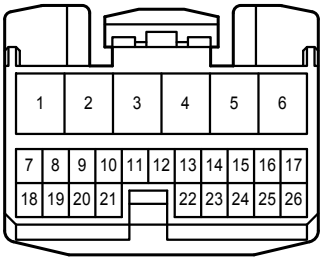

E 51
White

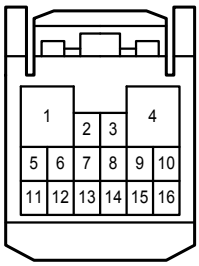

1A
White

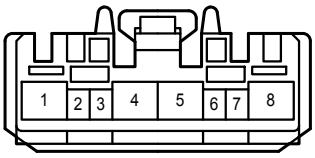

1B
White

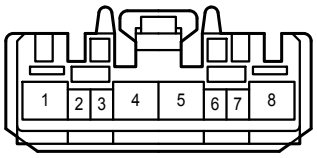

1D
White

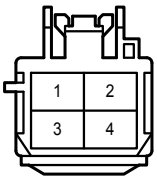

1E
White



1F
Black

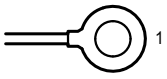

1G

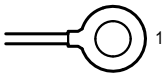

1J

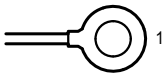

1K

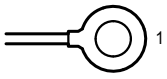

1L
White

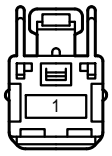

1Q

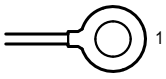

2B
White

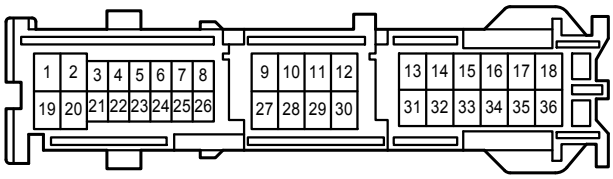

2E
White

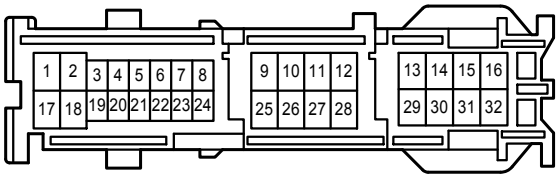

2F
White

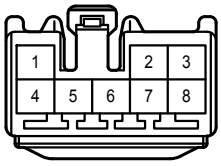

2G
White

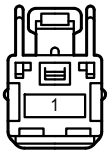

2M
White

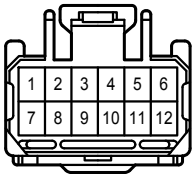

2S
White

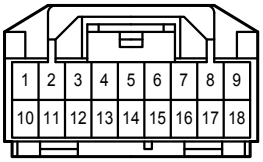

3A
White

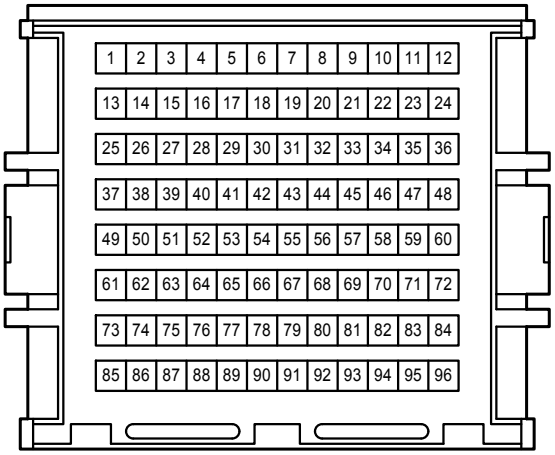

3B
White

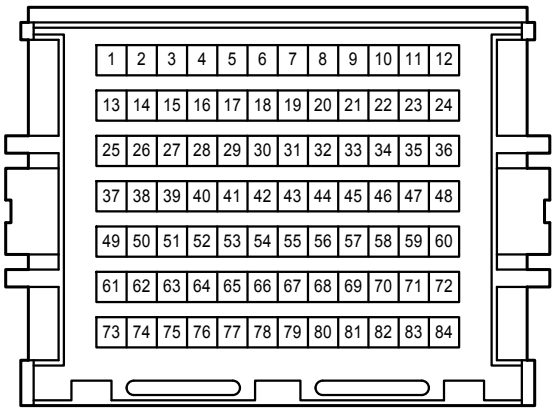

AE3
White

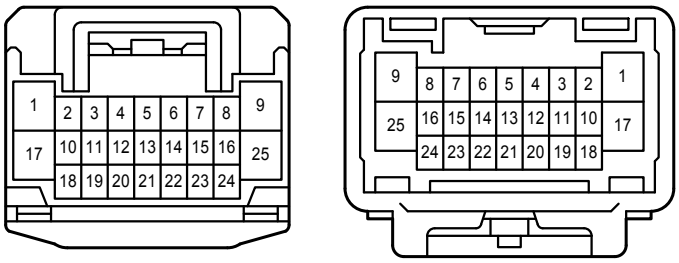

AE11
White

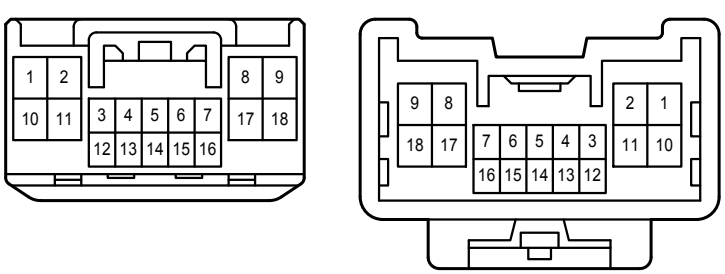

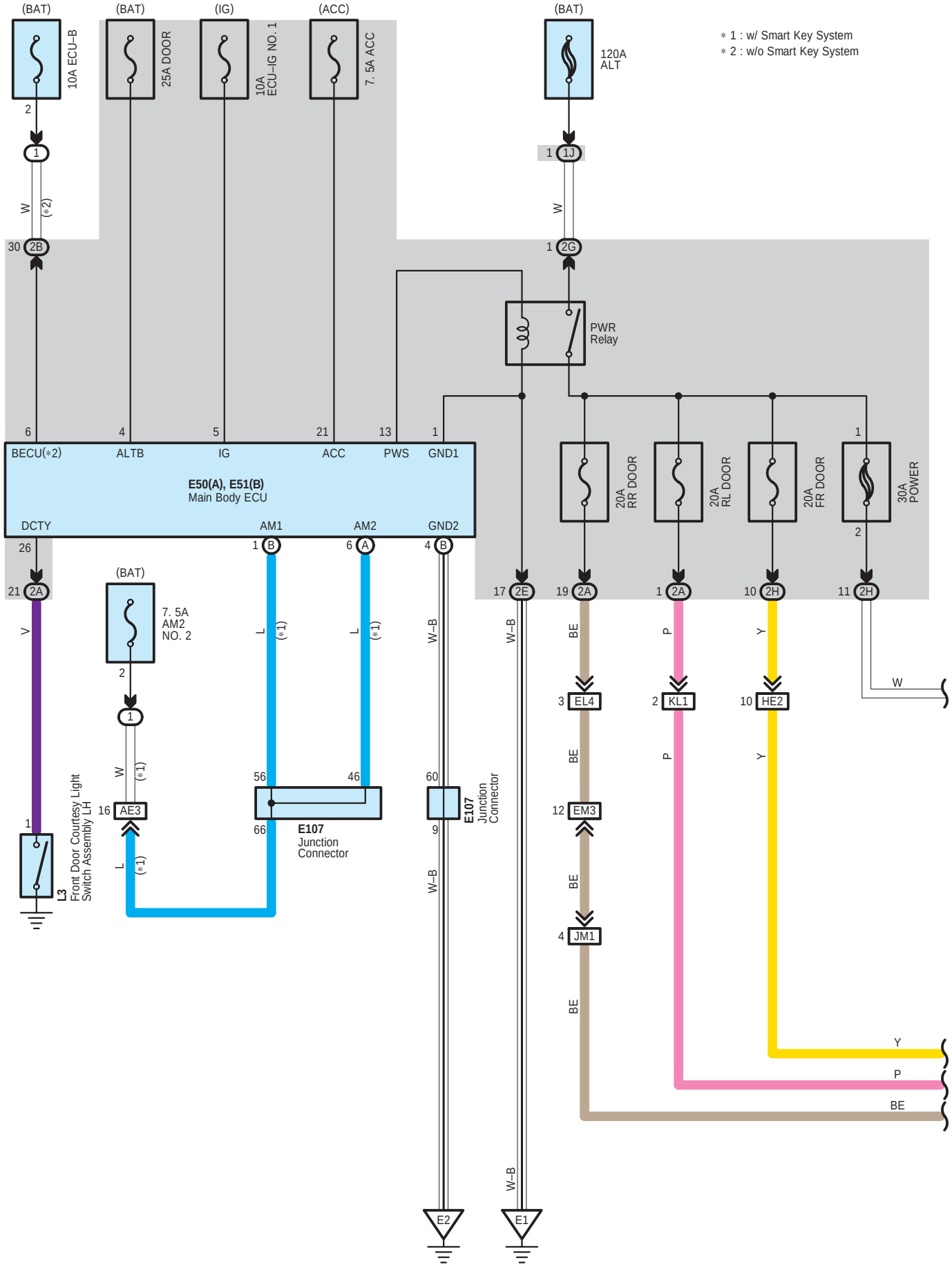
(BAT)
(BAT)
(IG)
(ACC)
(BAT)
10A ECU–B
25A DOOR
10A ECU–IG NO. 1
7. 5A ACC
120A ALT
∗ 1 : w/ Smart Key System
∗ 2 : w/o Smart Key System
PWR Relay
BECU(∗2)
ALTB
IG
ACC
PWS
GND1
E50(A), E51(B)
Main Body ECU
DCTY
AM1
AM2
GND2
20A RR DOOR
20A RL DOOR
20A FR DOOR
30A POWER
7. 5A AM2 NO. 2
Front Door Courtesy Light Switch Assembly LH
L3
E107 Junction Connector
E107 Junction Connector
EL4
KL1
HE2
EM3
JM1
E2
E1

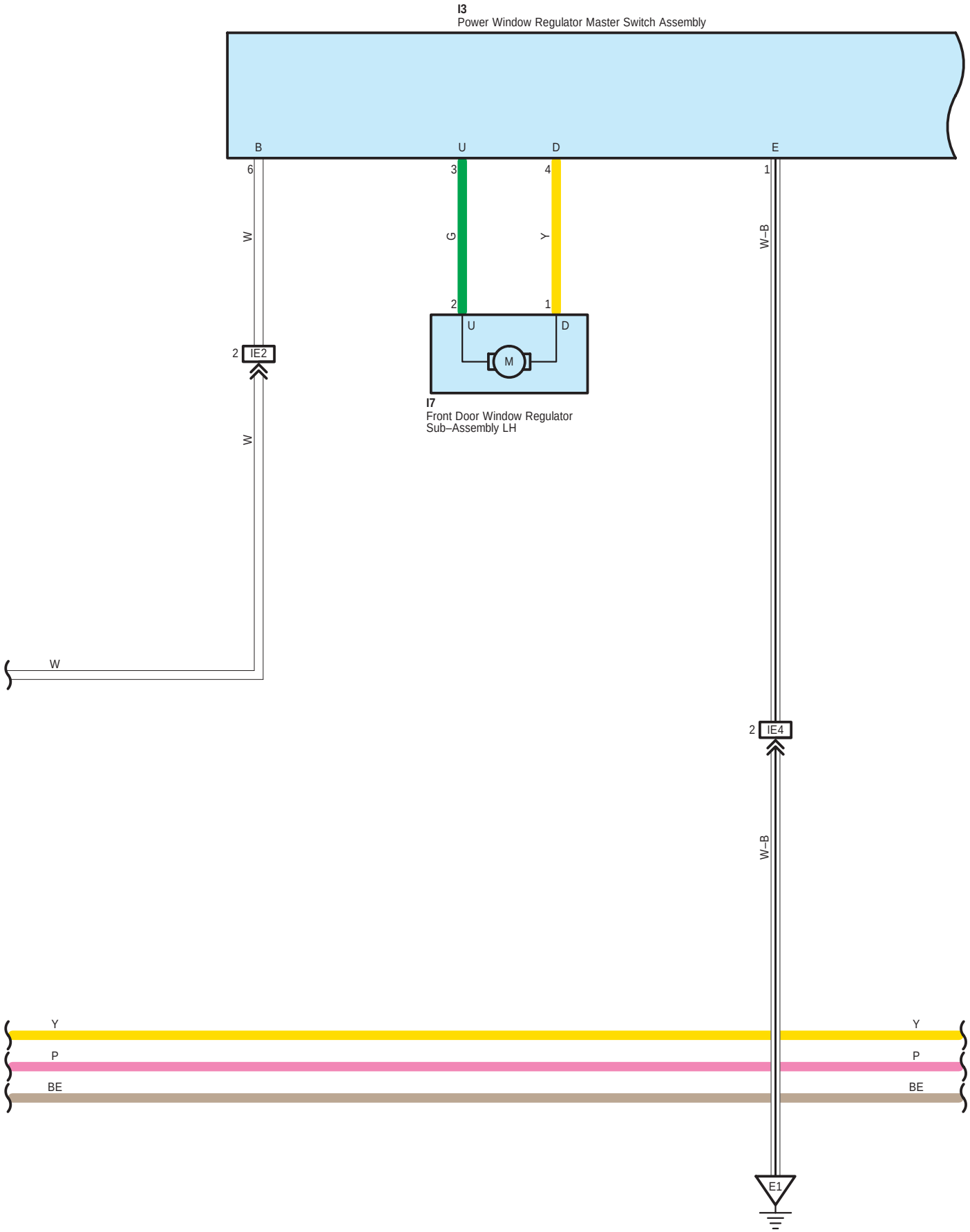
I3
Power Window Regulator Master Switch Assembly
B
U
D
E
6
3
4
1
W
G
Y
W–B
2
1
U
D
M
2
IE2
I7
Front Door Window Regulator
Sub–Assembly LH
W
W
2
IE4
W–B
Y
P
BE
Y
P
BE
E1

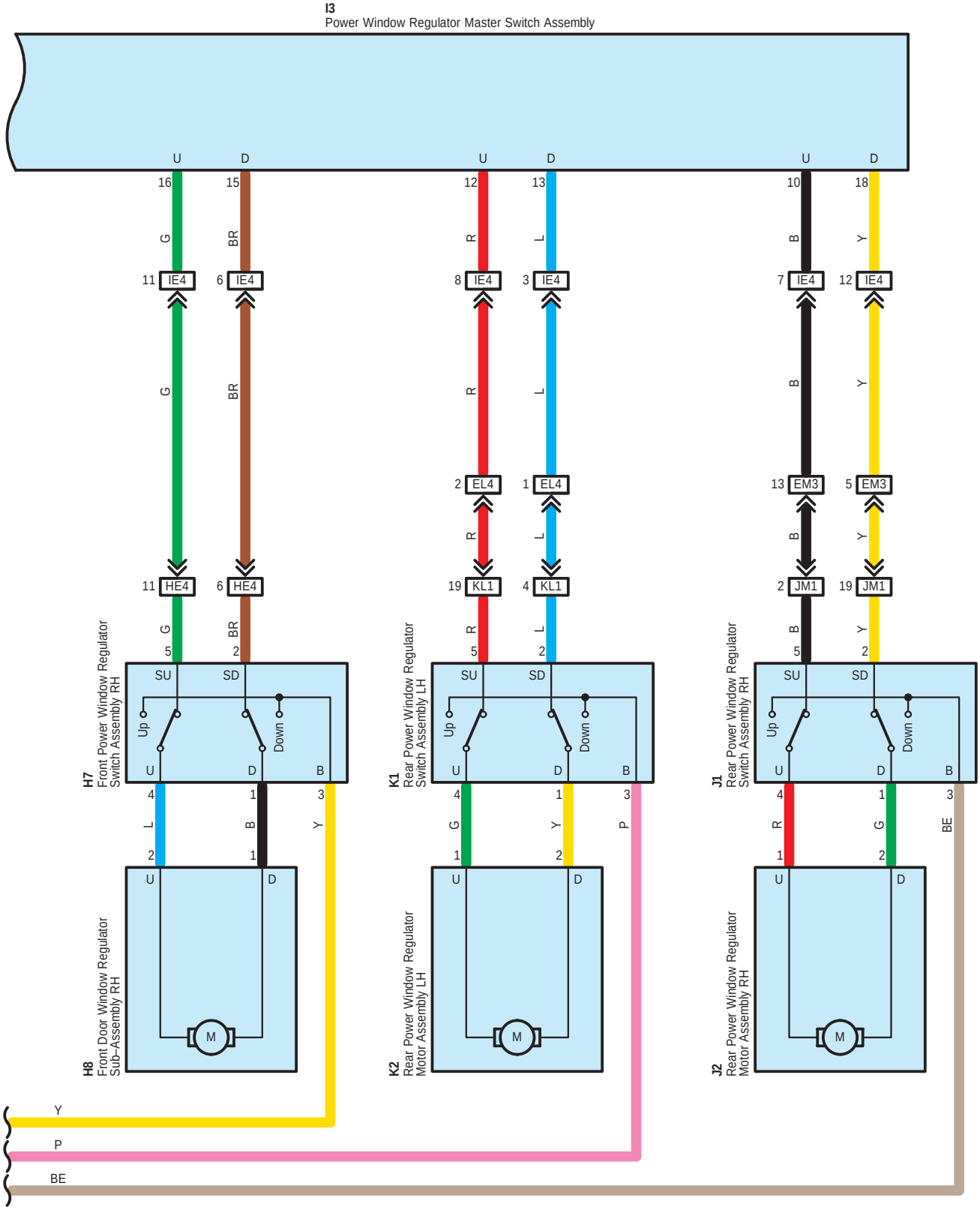
I3
Power Window Regulator Master Switch Assembly
U
D
16
15
G
BR
11 IE4
6 IE4
G
BR
11 HE4
6 HE4
G
BR
5
2
SU
SD
Up
Down
U
D
B
H7
Front Power Window Regulator Switch Assembly RH
4
1
3
L
B
Y
2
1
U
D
H8
Front Door Window Regulator Sub-Assembly RH
M
12
13
R
L
8 IE4
3 IE4
R
L
2 EL4
1 EL4
R
L
19 KL1
4 KL1
5
2
K1
Rear Power Window Regulator Switch Assembly LH
G
Y
P
K2
Rear Power Window Regulator Motor Assembly LH
10
18
B
Y
7 IE4
12 IE4
B
Y
13 EM3
5 EM3
B
Y
2 JM1
19 JM1
J1
Rear Power Window Regulator Switch Assembly RH
R
G
BE
J2
Rear Power Window Regulator Motor Assembly RH
Y
P
BE

E 50
White

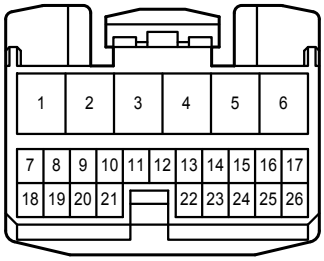

E 51
White

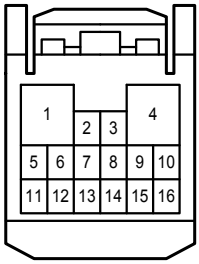

E107
White

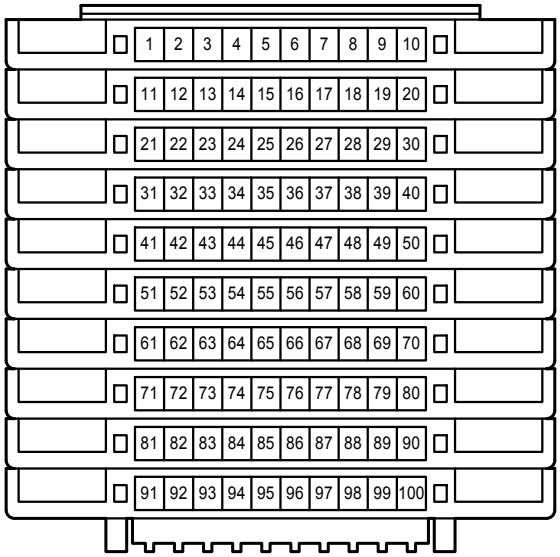

H 7
White

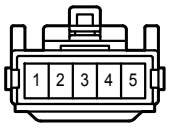

H 8
Black



I 3
White

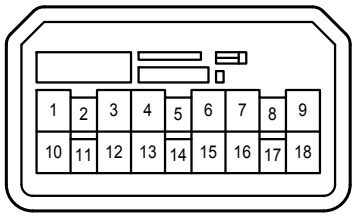

I 7
Black



J 1
White

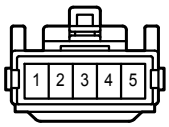

J 2
Black



K 1
White

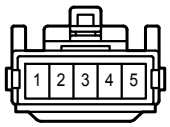

K 2
Black



L 3
Black



1J

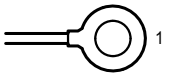

2A
White

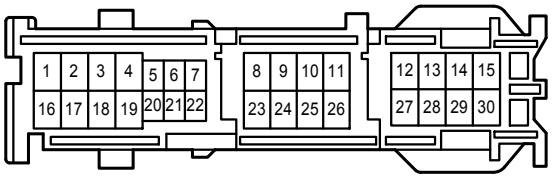

2B
White

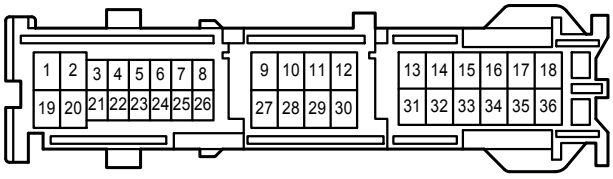

2E
White

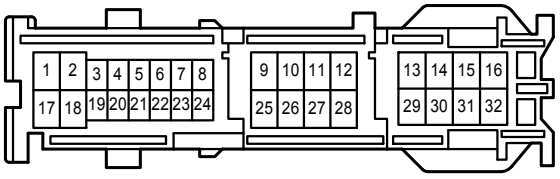

2G
White

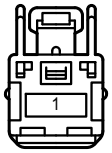

2H
White

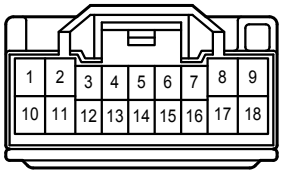

AE3
White

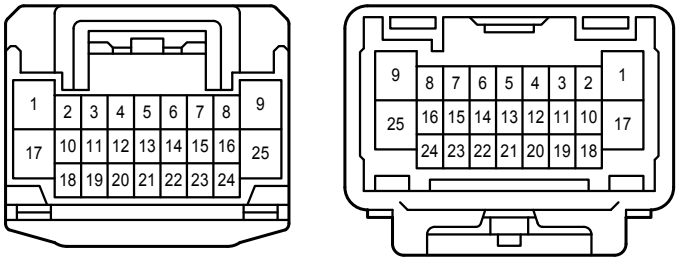

EL4
Gray

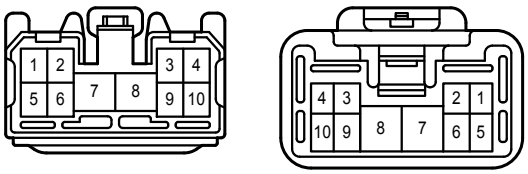

EM3
White

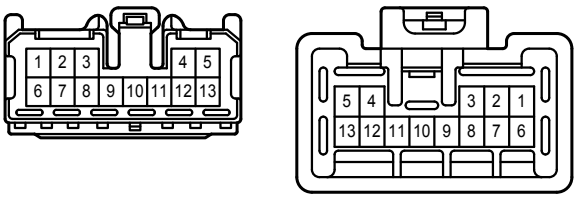

HE2
White

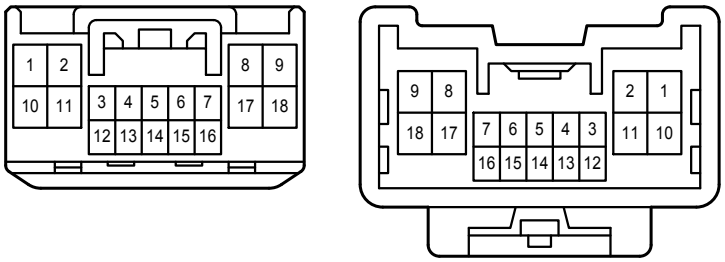

HE4
White

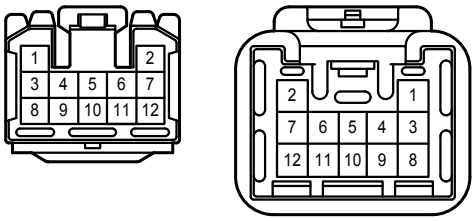

IE2
White

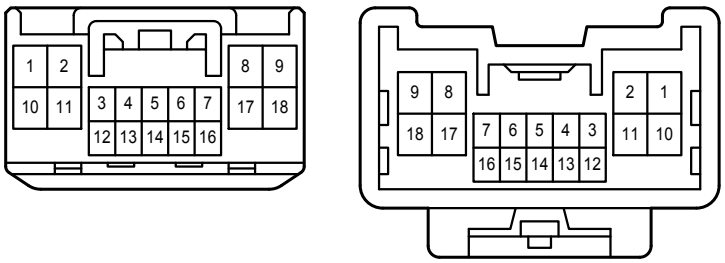

IE4
White

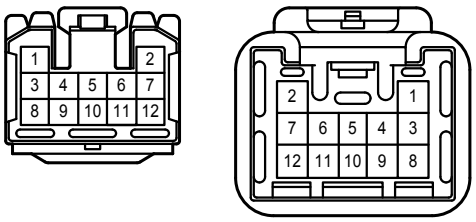

JM1
White

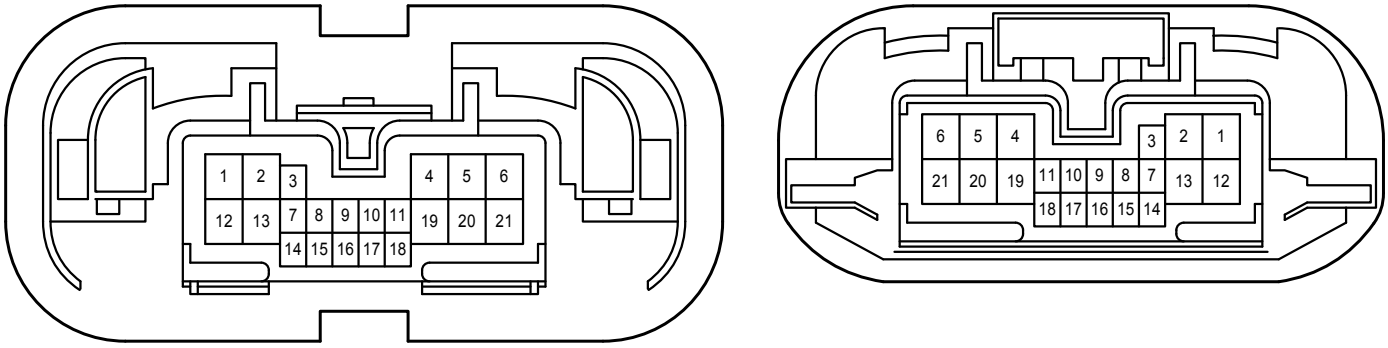

KL1
White

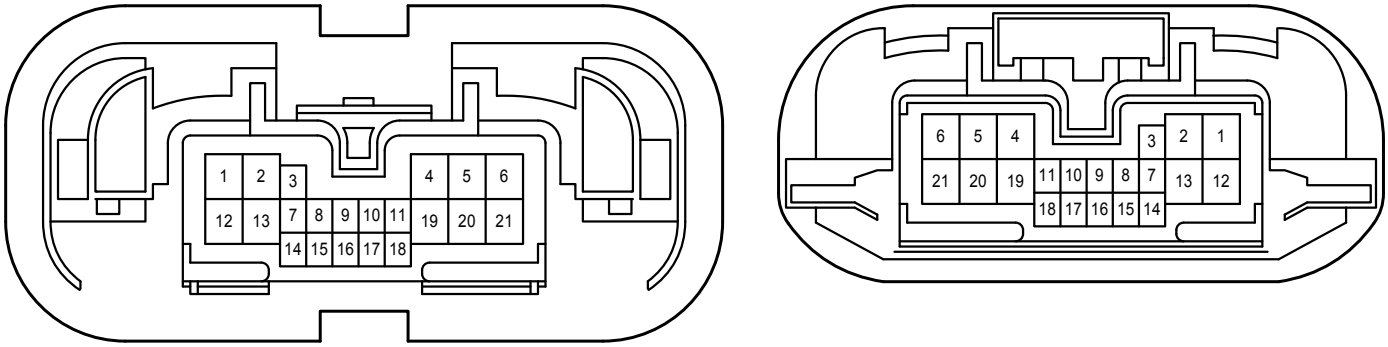

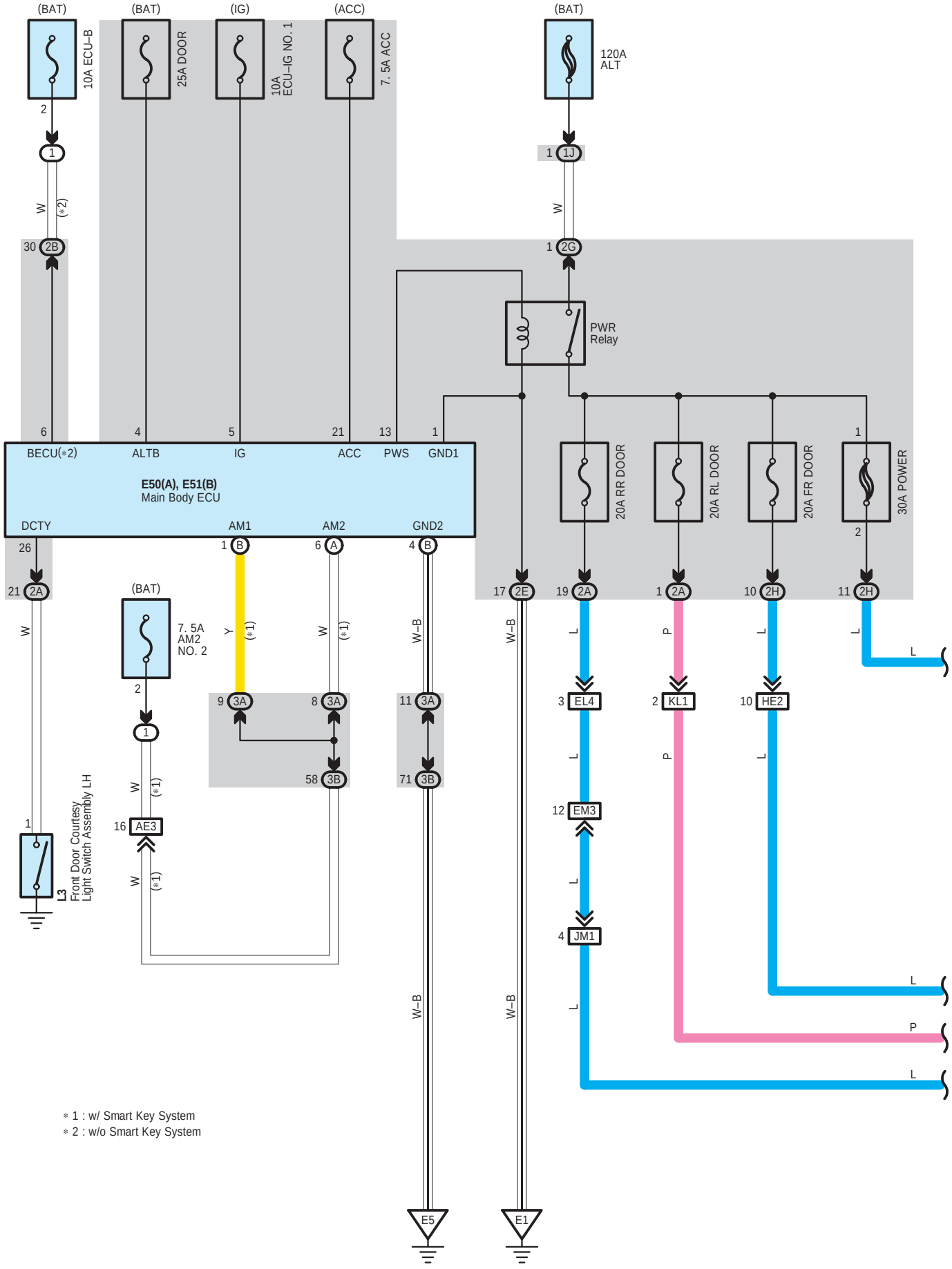
(BAT)
10A ECU–B
(BAT)
25A DOOR
(IG)
10A ECU–IG NO. 1
(ACC)
7. 5A ACC
(BAT)
120A ALT
PWR Relay
BECU(∗2)
ALTB
IG
ACC
PWS
GND1
E50(A), E51(B)
Main Body ECU
DCTY
AM1
AM2
GND2
20A RR DOOR
20A RL DOOR
20A FR DOOR
30A POWER
(BAT)
7. 5A AM2 NO. 2
Front Door Courtesy Light Switch Assembly LH
L3
E5
E1
∗ 1 : w/ Smart Key System
∗ 2 : w/o Smart Key System

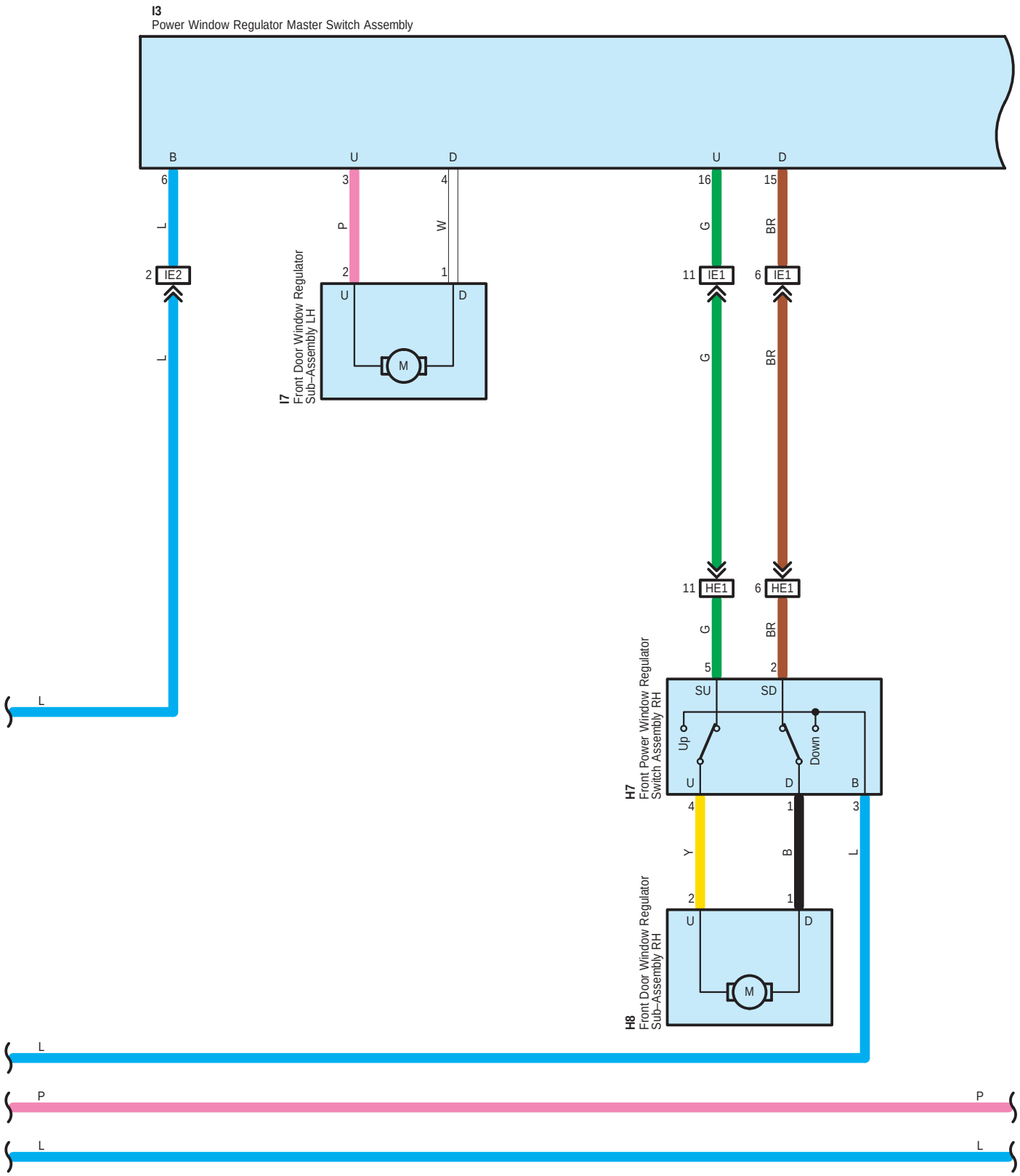
I3
Power Window Regulator Master Switch Assembly
B
U
D
U
D
6
3
4
16
15
L
P
W
G
BR
2
IE2
2
1
11
IE1
6
IE1
L
G
BR
I7
Front Door Window Regulator
Sub–Assembly LH
U
D
M
11
HE1
6
HE1
G
BR
5
2
SU
SD
Up
Down
H7
Front Power Window Regulator
Switch Assembly RH
U
D
B
4
1
3
Y
B
L
2
1
U
D
M
H8
Front Door Window Regulator
Sub–Assembly RH
L
L
P
P
L
L

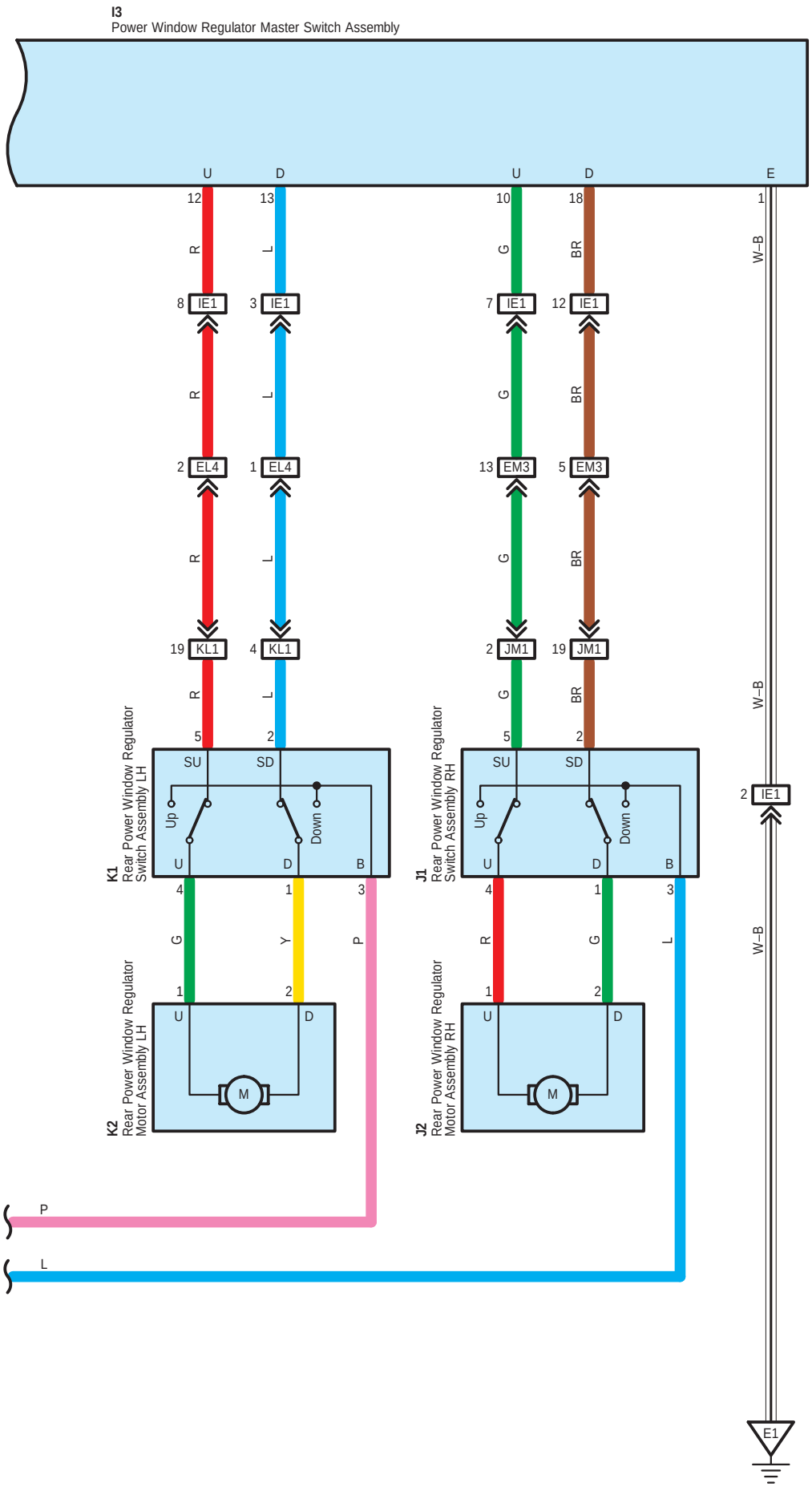
I3
Power Window Regulator Master Switch Assembly
U
D
U
D
E
12
13
10
18
1
R
L
G
BR
W-B
8 IE1
3 IE1
7 IE1
12 IE1
2 EL4
1 EL4
13 EM3
5 EM3
19 KL1
4 KL1
2 JM1
19 JM1
5
2
5
2
SU
SD
SU
SD
Up
Down
Up
Down
U
D
B
U
D
B
K1
Rear Power Window Regulator Switch Assembly LH
J1
Rear Power Window Regulator Switch Assembly RH
4
1
3
4
1
3
G
Y
P
R
G
L
1
2
1
2
U
D
U
D
M
M
K2
Rear Power Window Regulator Motor Assembly LH
J2
Rear Power Window Regulator Motor Assembly RH
2 IE1
E1
P
L

E 50
White

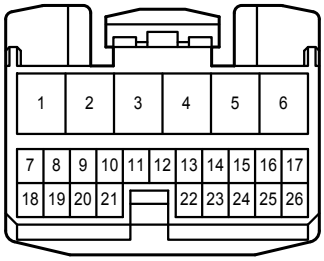

E 51
White

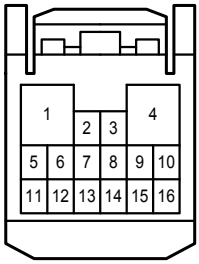

H 7
White

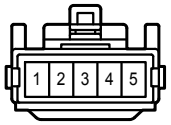

H 8
Black



I 3
White

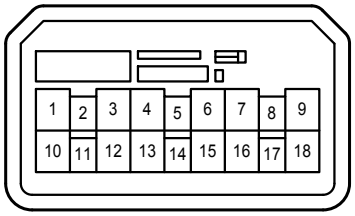

I 7
Black



J 1
White

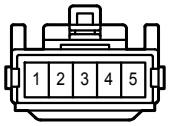

J 2
Black



K 1
White

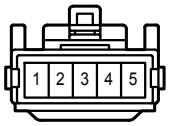

K 2
Black



L 3
Black



1J

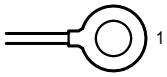

2A
White

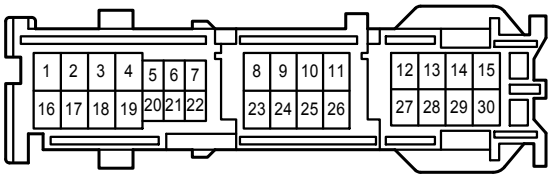

2B
White

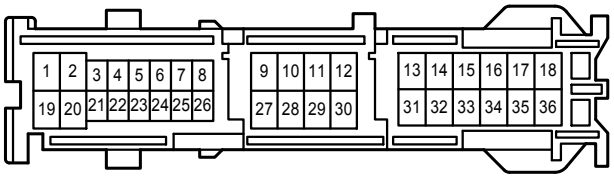

2E
White

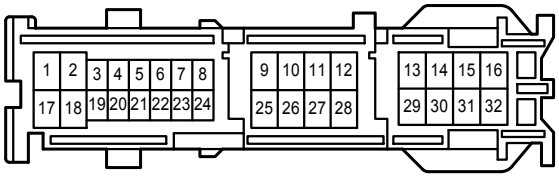

2G
White

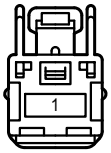

2H
White

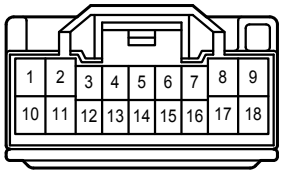

3A
White

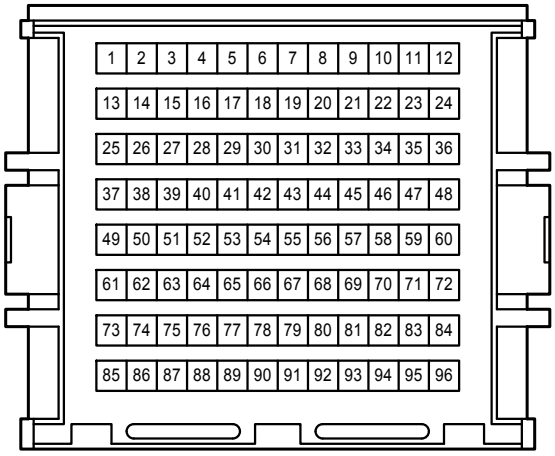

3B
White

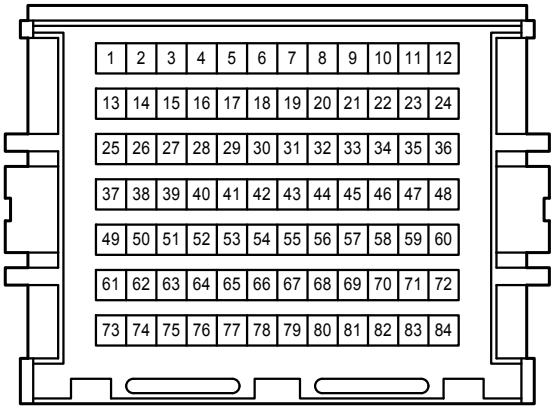

AE3
White

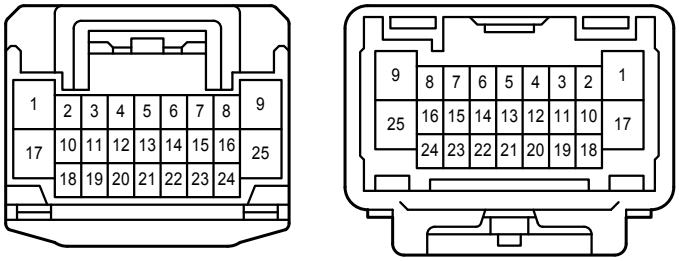

EL4
Gray

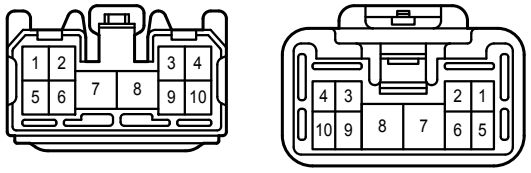

EM3
White

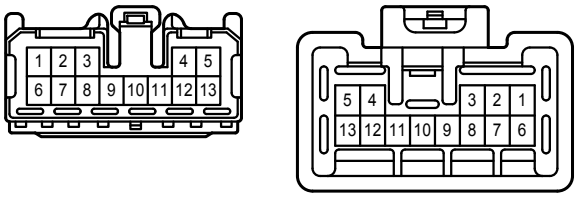

HE1
Blue

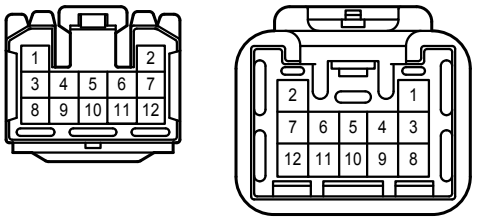

HE2
White

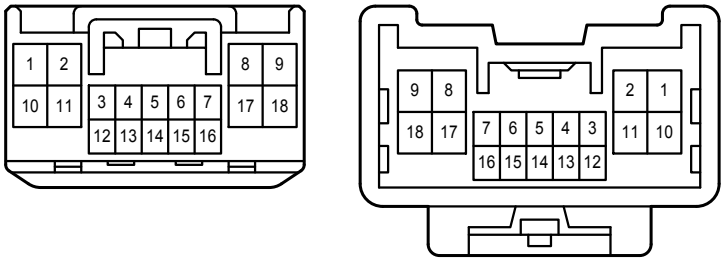

IE1
Blue

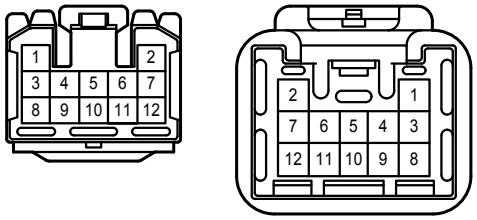

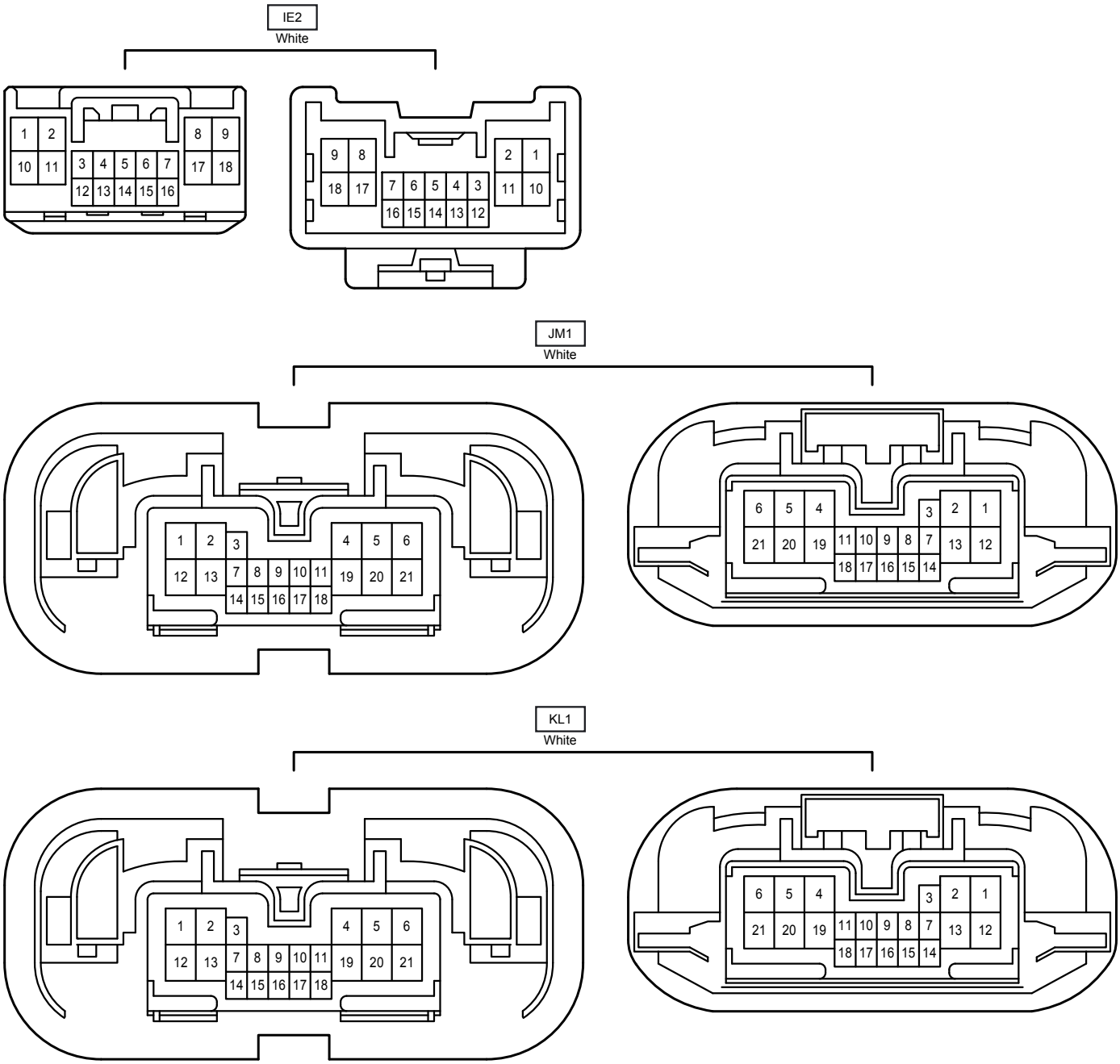
IE2
White
1 2 8 9
10 11 3 4 5 6 7 17 18
12 13 14 15 16
9 8 2 1
18 17 7 6 5 4 3 11 10
16 15 14 13 12
JM1
White
1 2 3 4 5 6
12 13 7 8 9 10 11 19 20 21
14 15 16 17 18
6 5 4 3 2 1
21 20 19 11 10 9 8 7 13 12
18 17 16 15 14
KL1
White
1 2 3 4 5 6
12 13 7 8 9 10 11 19 20 21
14 15 16 17 18
6 5 4 3 2 1
21 20 19 11 10 9 8 7 13 12
18 17 16 15 14

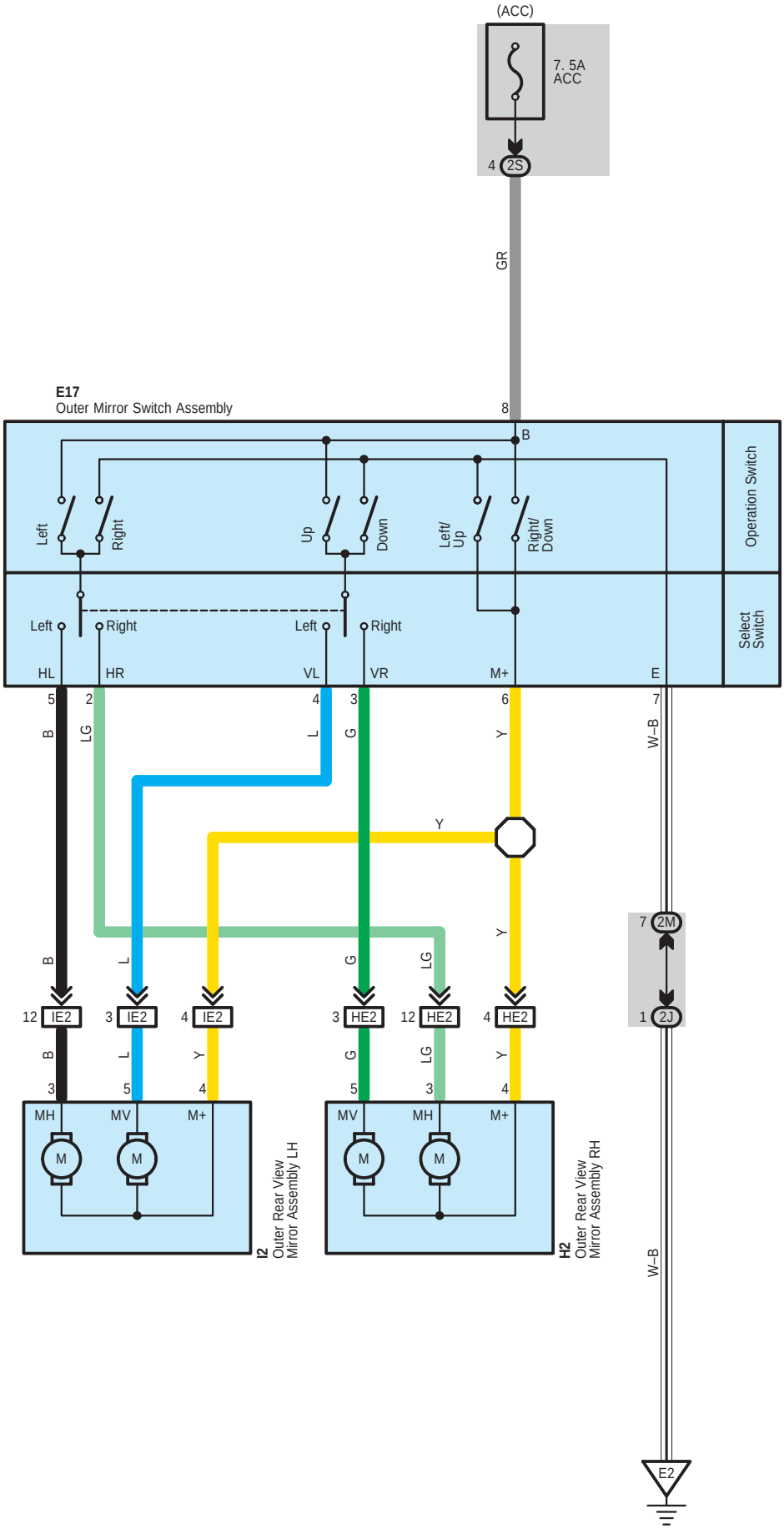
(ACC)
7. 5A
ACC
4 2S
GR
E17
Outer Mirror Switch Assembly
8
B
Left
Right
Up
Down
Left/
Up
Right/
Down
Operation Switch
Left
Right
Left
Right
Select
Switch
HL
HR
VL
VR
M+
E
5
2
4
3
6
7
B
LG
L
G
Y
W–B
Y
7 2M
1 2J
B
L
G
LG
Y
12 IE2
3 IE2
4 IE2
3 HE2
12 HE2
4 HE2
3
5
4
5
3
4
MH
MV
M+
MV
MH
M+
M
M
M
M
I2 Outer Rear View Mirror Assembly LH
H2 Outer Rear View Mirror Assembly RH
W–B
E2

E 17
White

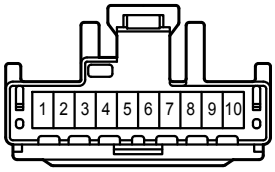

H 2
White

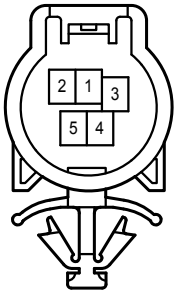

I 2
White

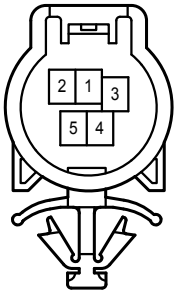

2J
White

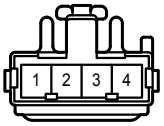

2M
White

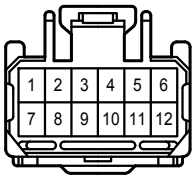

2S
White

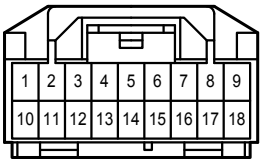

HE2
White

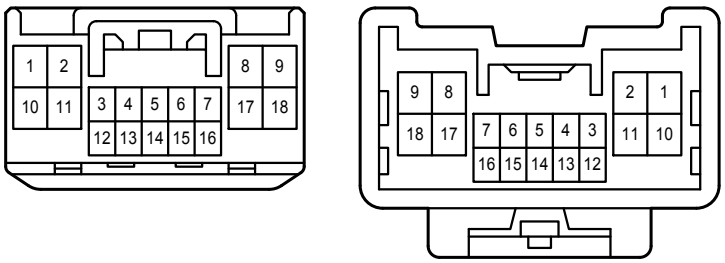

IE2
White

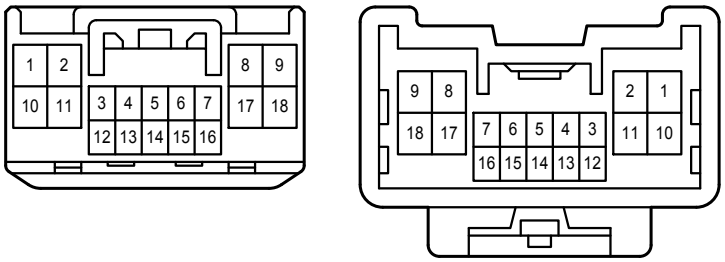

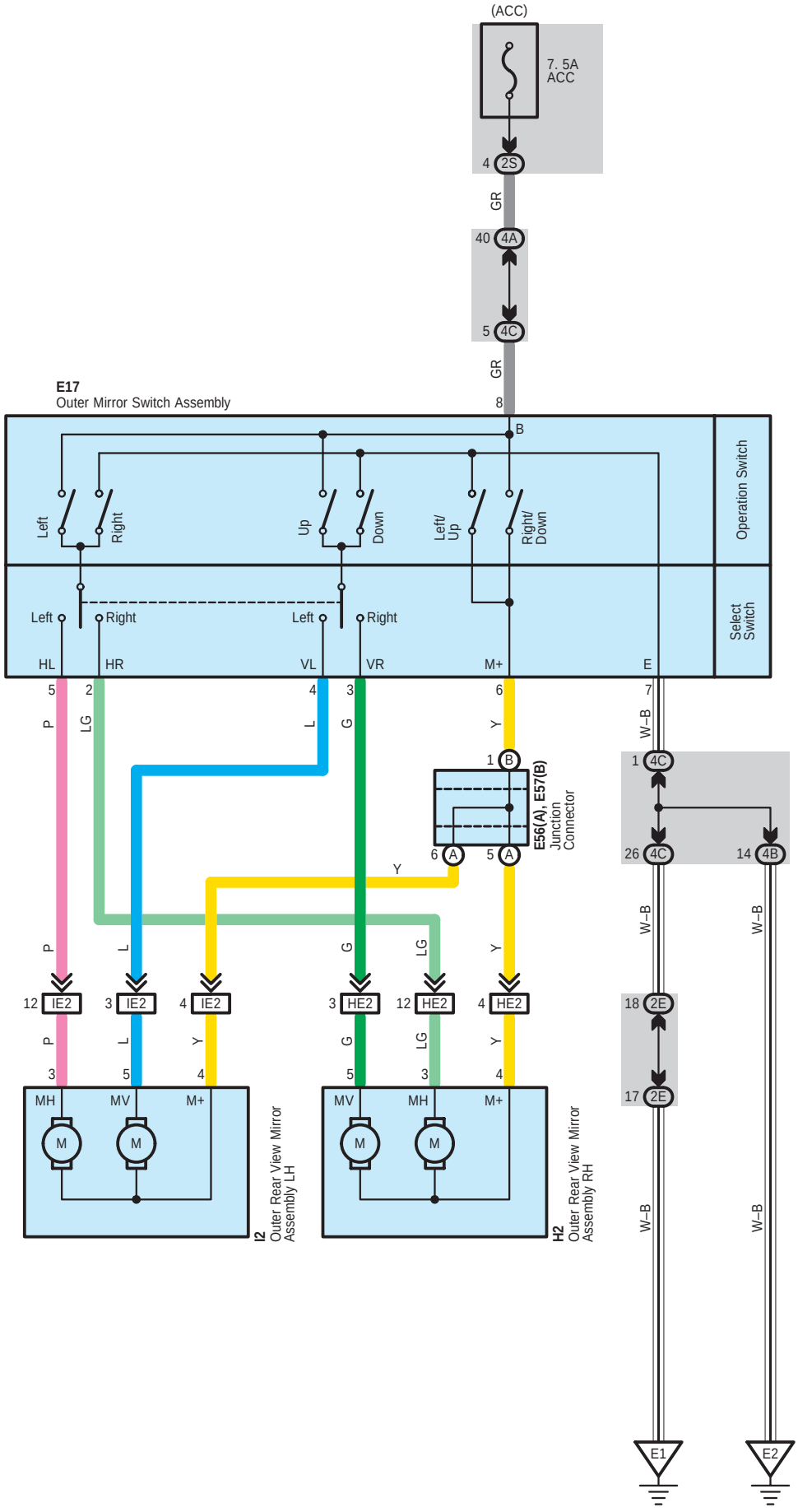
(ACC)
7. 5A
ACC
4 2S
GR
40 4A
5 4C
GR
8
E17
Outer Mirror Switch Assembly
B
Left
Right
Up
Down
Left/
Up
Right/
Down
Operation Switch
Left
Right
Left
Right
Select
Switch
HL
HR
VL
VR
M+
E
5
2
4
3
6
7
P
LG
L
G
Y
W–B
1 B
E56(A), E57(B)
Junction
Connector
6 A
5 A
Y
1 4C
26 4C
14 4B
W–B
W–B
P
L
G
LG
Y
12 IE2
3 IE2
4 IE2
3 HE2
12 HE2
4 HE2
18 2E
17 2E
P
L
G
LG
Y
3
5
4
5
3
4
MH
MV
M+
MV
MH
M+
M
M
M
M
I2
Outer Rear View Mirror
Assembly LH
H2
Outer Rear View Mirror
Assembly RH
W–B
W–B
E1
E2

E 17
White

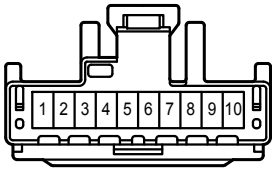

E 56
White

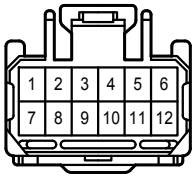

E 57
White

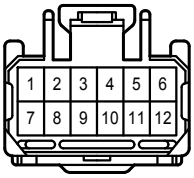

H 2
White

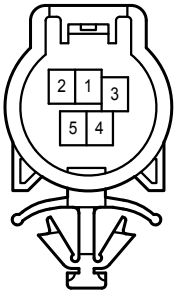

I 2
White

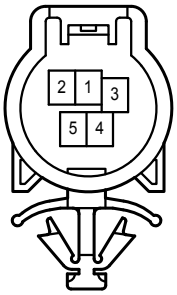

2E
White

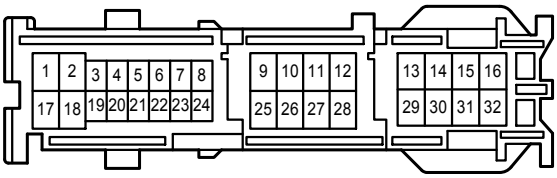

2S
White

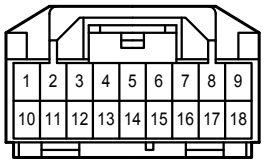

4A
White

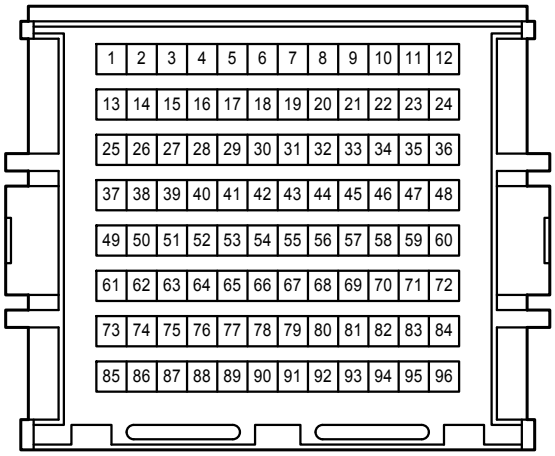

4B
White

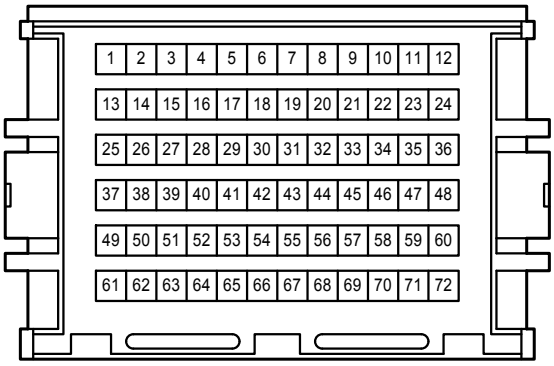

4C
White

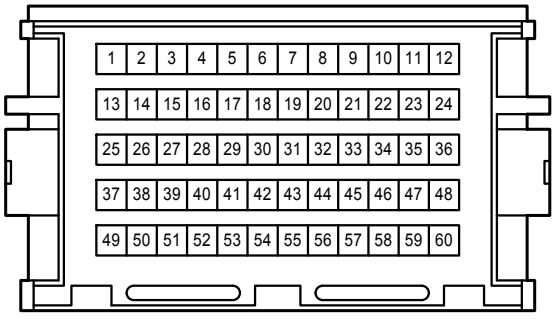

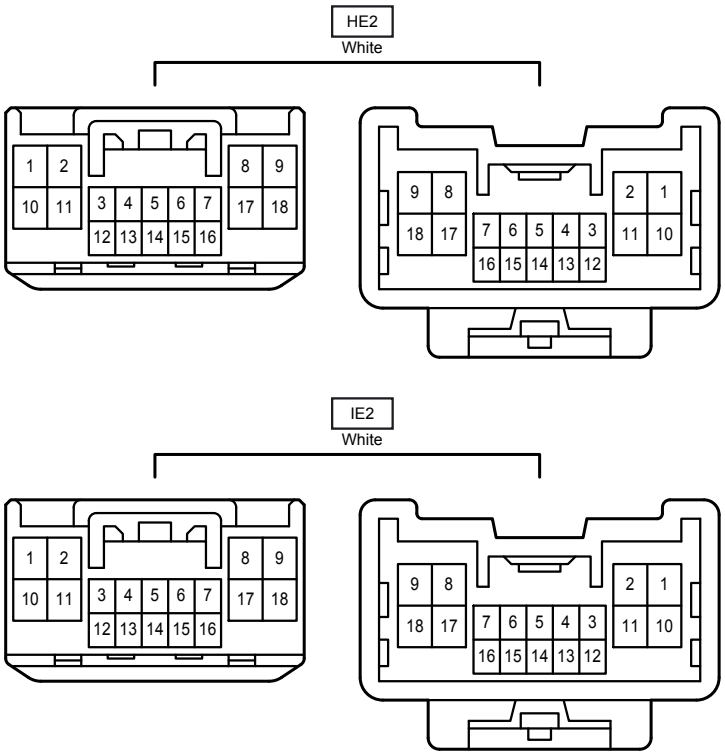
HE2
White
1 2 8 9
10 11 3 4 5 6 7 17 18
12 13 14 15 16
9 8 2 1
18 17 7 6 5 4 3 11 10
16 15 14 13 12
IE2
White
1 2 8 9
10 11 3 4 5 6 7 17 18
12 13 14 15 16
9 8 2 1
18 17 7 6 5 4 3 11 10
16 15 14 13 12

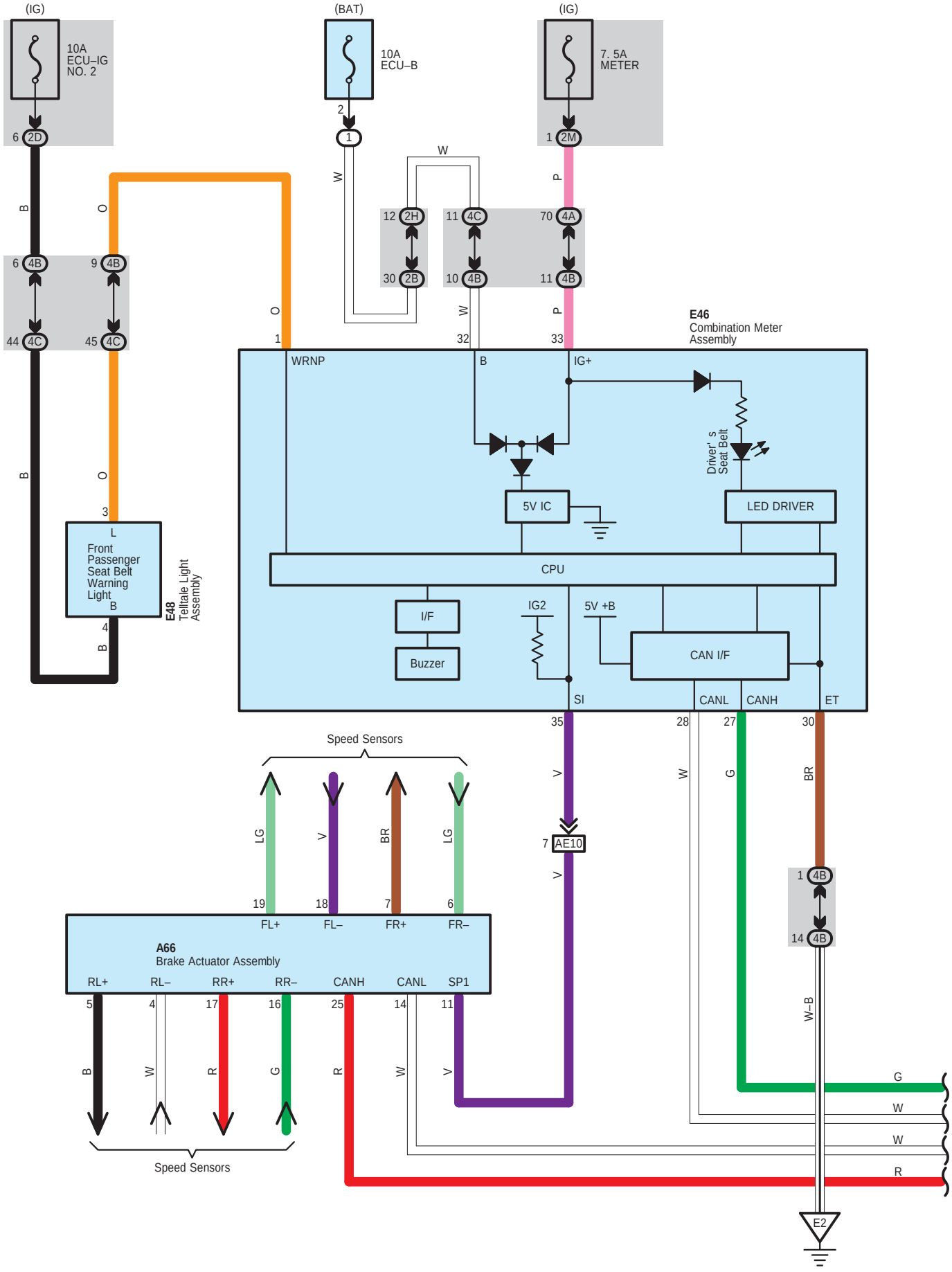
(IG)
10A
ECU–IG
NO. 2
6 2D
(BAT)
10A
ECU–B
2
1
(IG)
7. 5A
METER
1 2M
W
P
12 2H
30 2B
11 4C
10 4B
70 4A
11 4B
6 4B
44 4C
9 4B
45 4C
B
O
W
P
32
33
1
E46
Combination Meter
Assembly
WRNP
B
IG+
Driver' s
Seat Belt
5V IC
LED DRIVER
CPU
I/F
Buzzer
IG2
5V +B
CAN I/F
SI
CANL
CANH
ET
3
L
Front
Passenger
Seat Belt
Warning
Light
B
4
E48
Telltale Light
Assembly
35
28
27
30
V
W
G
BR
7 AE10
Speed Sensors
LG
V
BR
LG
19
18
7
6
FL+
FL–
FR+
FR–
A66
Brake Actuator Assembly
RL+
RL–
RR+
RR–
CANH
CANL
SP1
5
4
17
16
25
14
11
B
W
R
G
R
W
V
Speed Sensors
1 4B
14 4B
W–B
G
W
W
R
E2

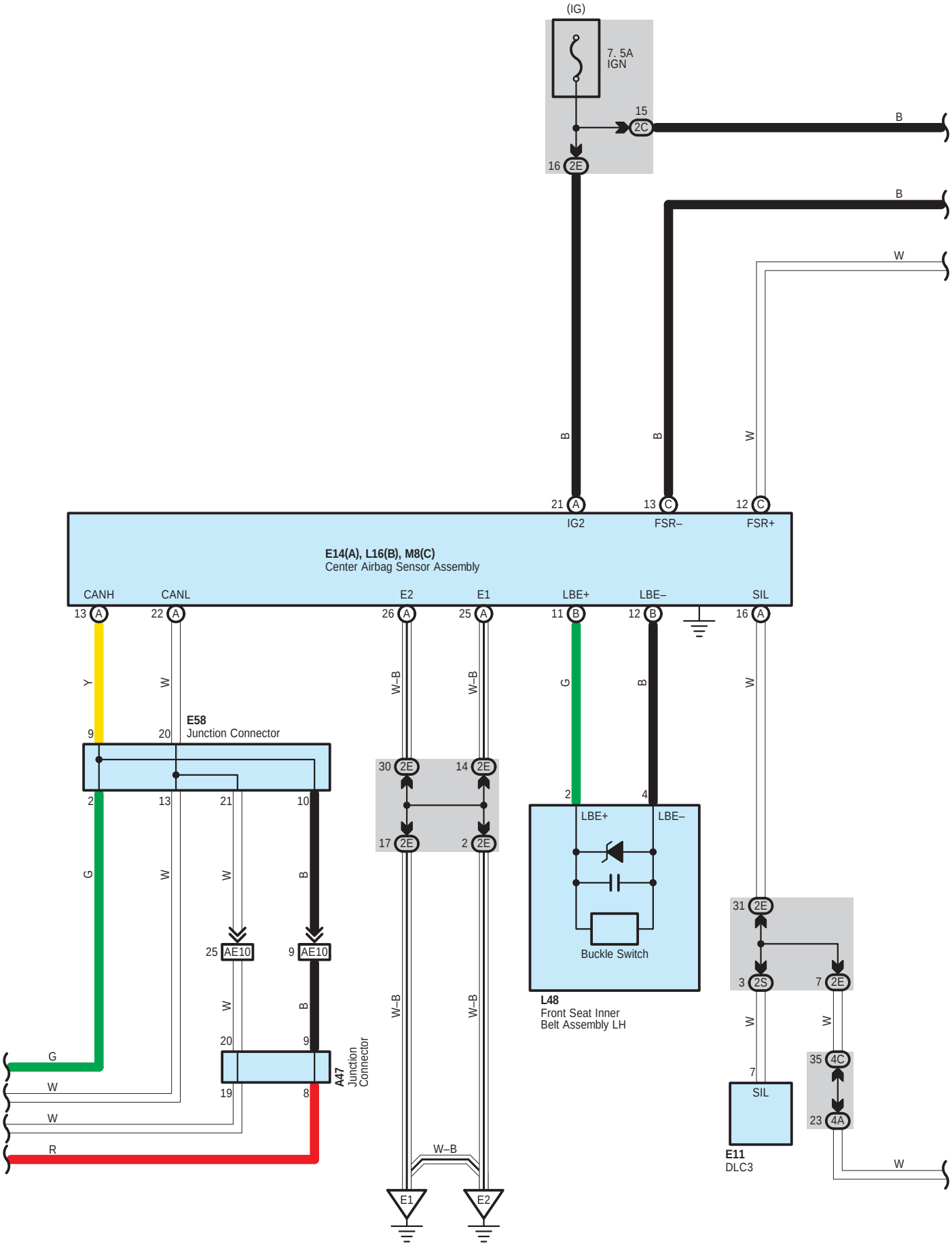
(IG)
7. 5A
IGN
15
2C
16
2E
B
B
W
B
B
W
21
A
IG2
13
C
FSR–
12
C
FSR+
E14(A), L16(B), M8(C)
Center Airbag Sensor Assembly
CANH
CANL
E2
E1
LBE+
LBE–
SIL
13
A
22
A
26
A
25
A
11
B
12
B
16
A
Y
W
W–B
W–B
G
B
W
E58
Junction Connector
9
20
30
2E
14
2E
17
2E
2
2E
2
4
LBE+
LBE–
Buckle Switch
L48
Front Seat Inner
Belt Assembly LH
31
2E
3
2S
7
2E
2
13
21
10
G
W
W
B
25
AE10
9
AE10
W
B
20
9
19
8
A47
Junction
Connector
W–B
W–B
W–B
W
W
7
SIL
E11
DLC3
35
4C
23
4A
G
W
W
R
E1
E2
W

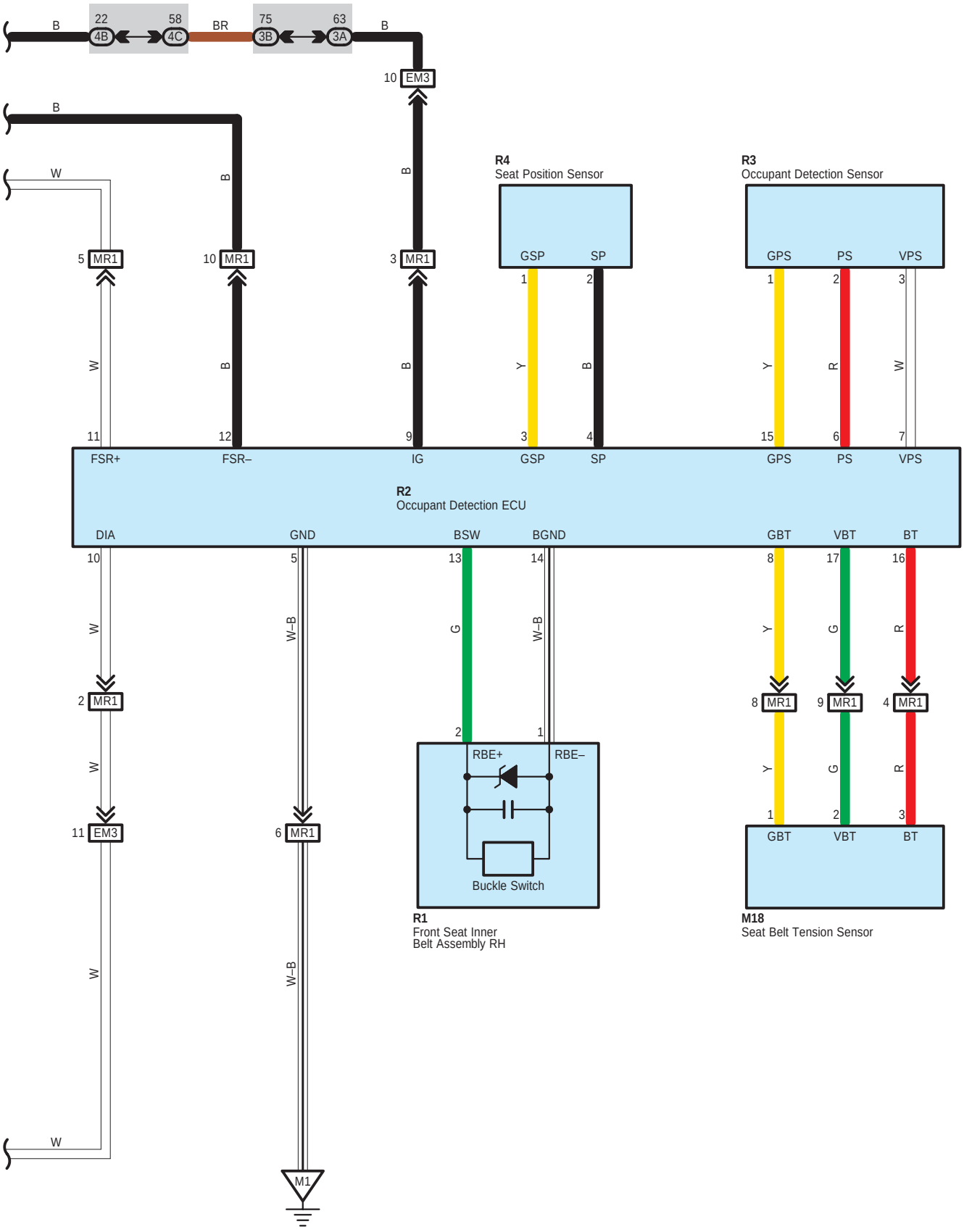
B
22
4B
58
4C
BR
75
3B
63
3A
B
10 EM3
B
W
B
B
5 MR1
10 MR1
3 MR1
R4
Seat Position Sensor
GSP
SP
R3
Occupant Detection Sensor
GPS
PS
VPS
W
B
B
Y
B
Y
R
W
11
12
9
3
4
15
6
7
FSR+
FSR–
IG
GSP
SP
GPS
PS
VPS
R2
Occupant Detection ECU
DIA
GND
BSW
BGND
GBT
VBT
BT
10
5
13
14
8
17
16
W
W–B
G
W–B
Y
G
R
2 MR1
8 MR1
9 MR1
4 MR1
W
Y
G
R
11 EM3
6 MR1
2
1
1
2
3
RBE+
RBE–
GBT
VBT
BT
W
W–B
Buckle Switch
W
M1
R1
Front Seat Inner
Belt Assembly RH
M18
Seat Belt Tension Sensor

A 47
White

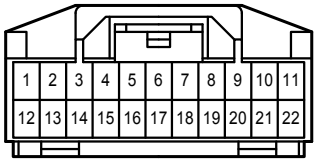

A 66
Black

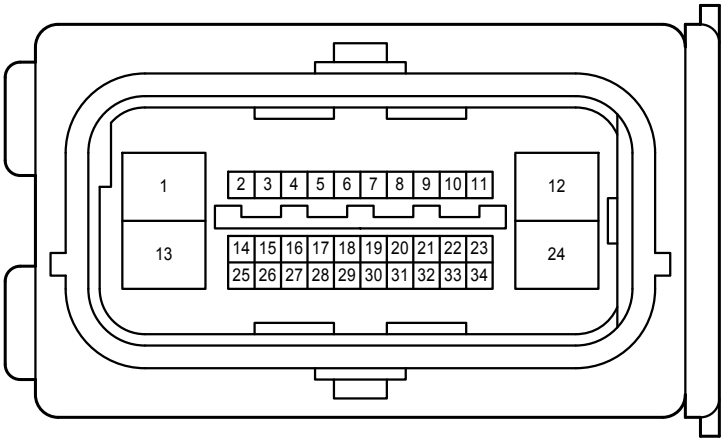

E 11
White

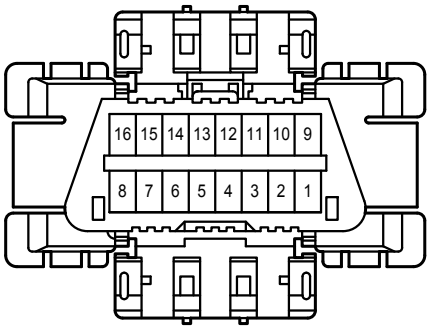

E 14
Yellow

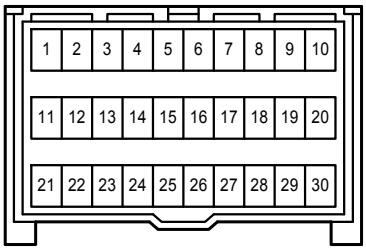

E 46
White

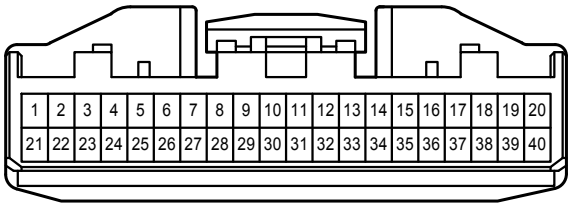

E 48
Black

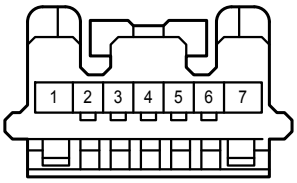

E 58
Gray

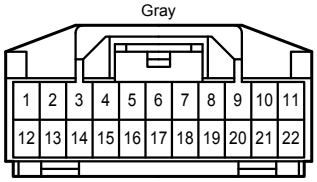

L 16
Yellow

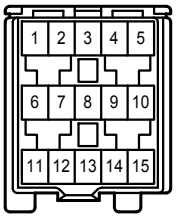

L 48
White



M 8
Yellow

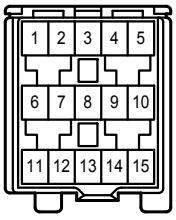

M 18
White

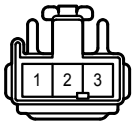

R 1
White

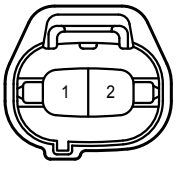

R 2
Black

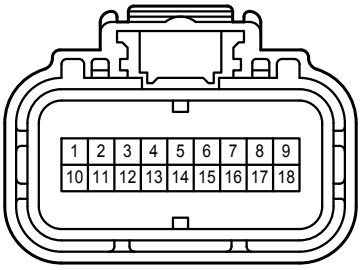

R 3
Gray

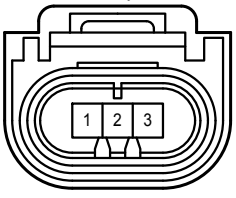

R 4
Black

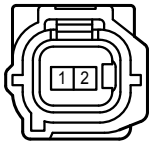

2B
White

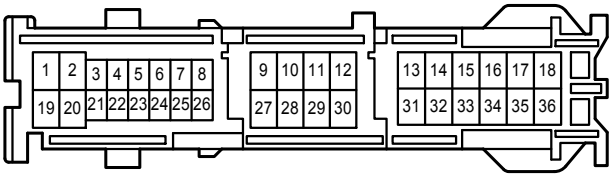

2C
White

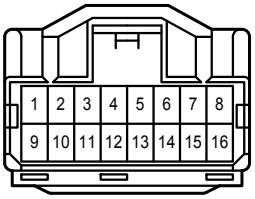

2D
White

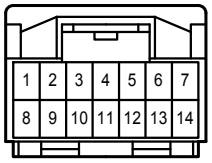

2E
White

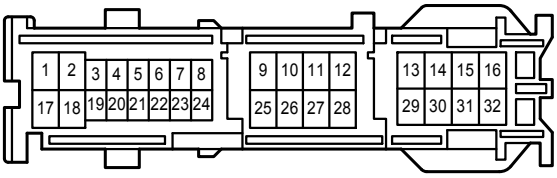

2H
White

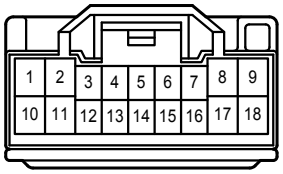

2M
White

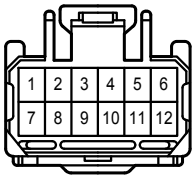

2S
White

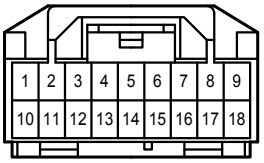

3A
White

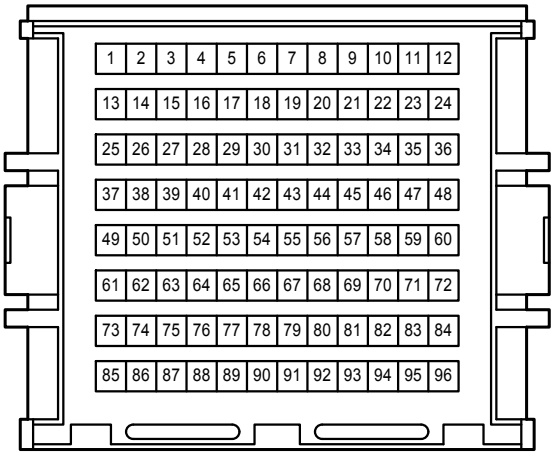

3B
White

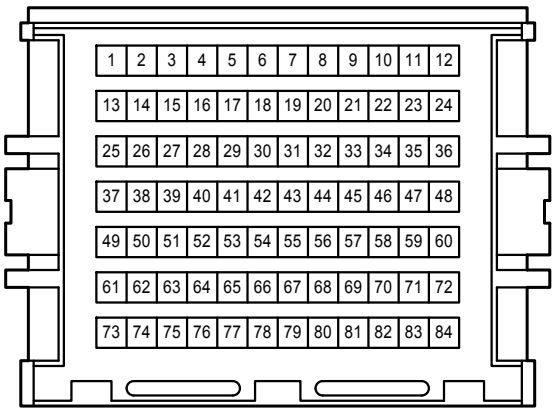

4A
White

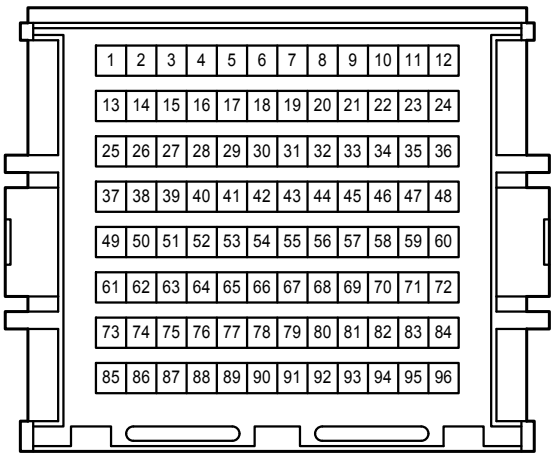

4B
White

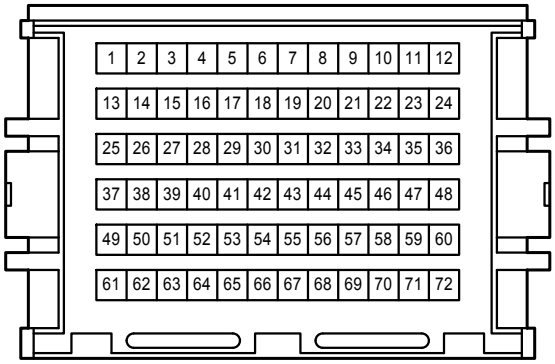

4C
White

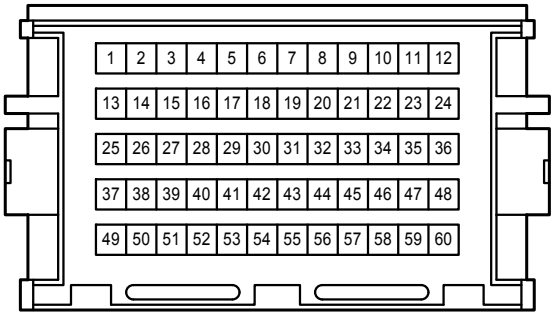

AE10
Gray

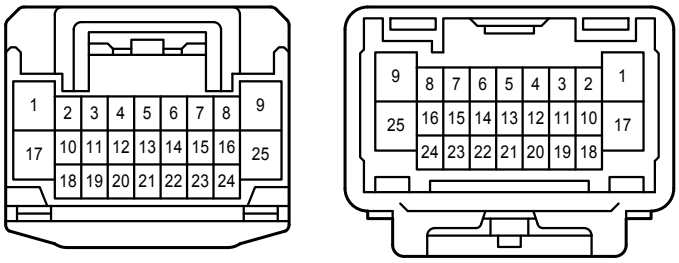

EM3
White

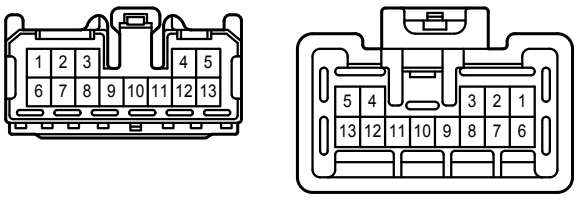

MR1
Black

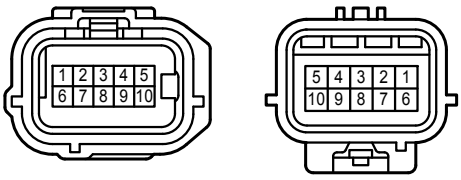

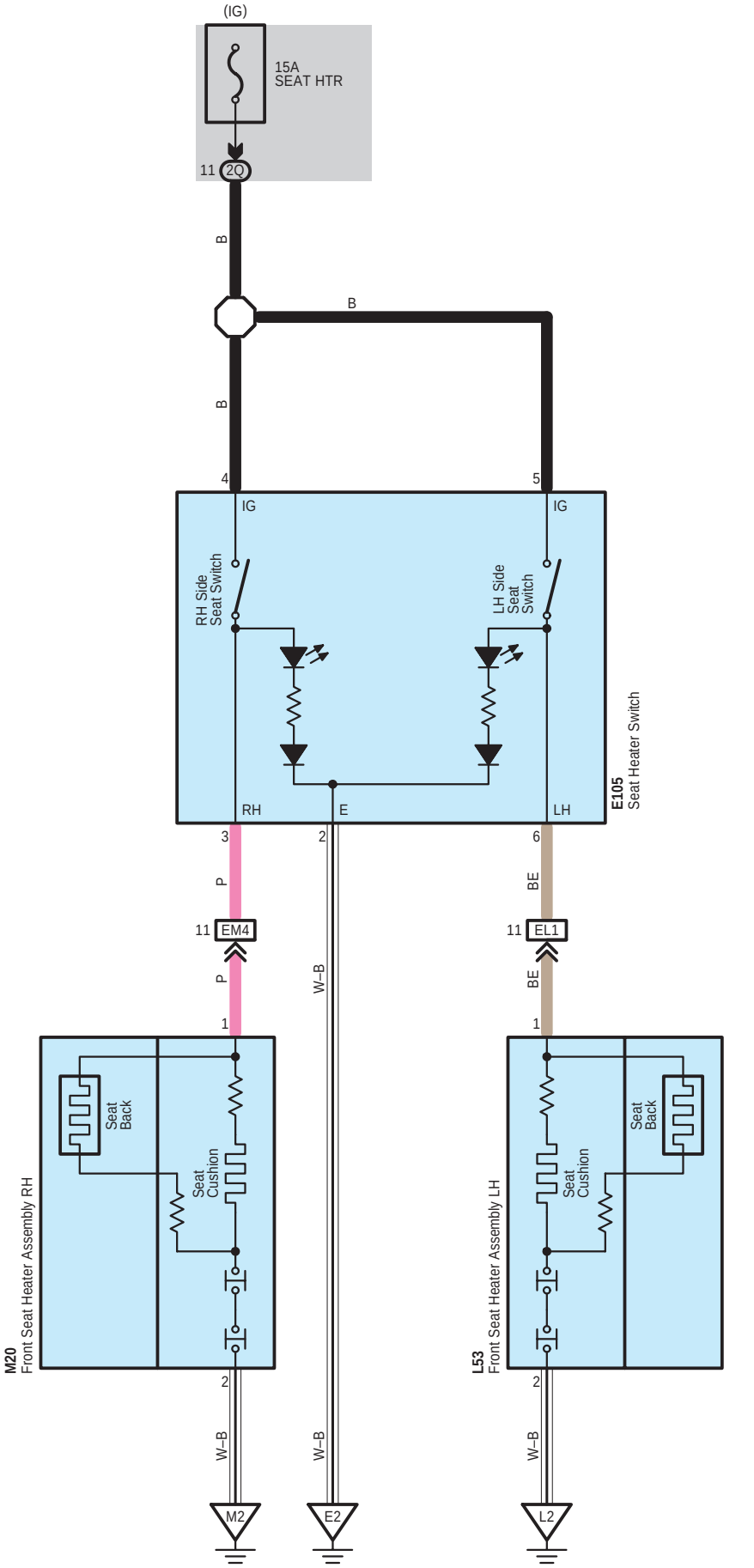
(IG)
15A
SEAT HTR
11 2Q
B
B
B
4
5
IG
IG
RH Side
Seat Switch
LH Side
Seat
Switch
E105
Seat Heater Switch
RH
E
LH
3
2
6
P
BE
11 EM4
11 EL1
P
BE
W-B
1
1
Seat
Back
Seat
Cushion
M20
Front Seat Heater Assembly RH
L53
Front Seat Heater Assembly LH
2
2
W-B
W-B
W-B
M2
E2
L2

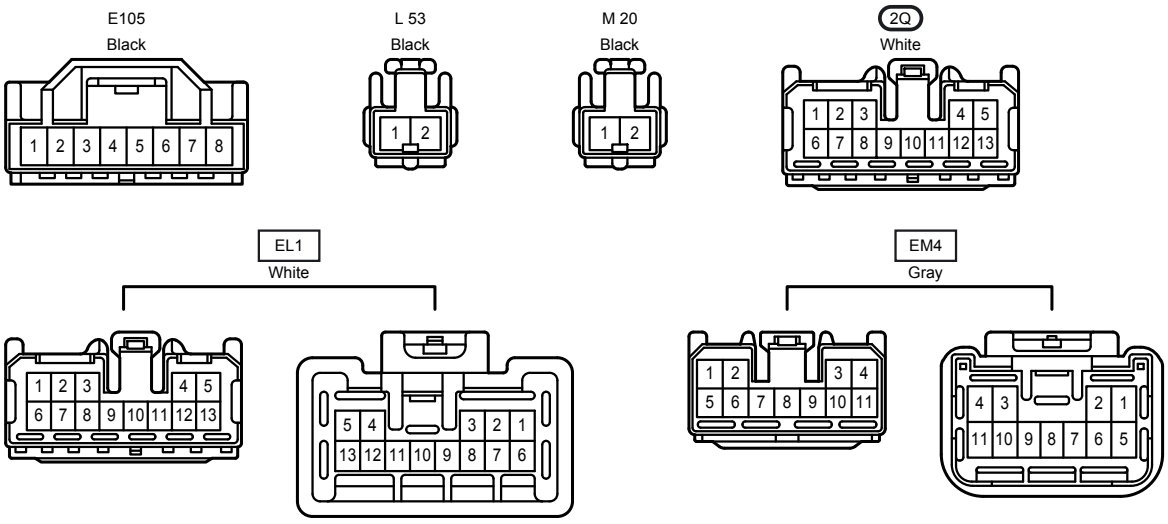
E105
Black
1 2 3 4 5 6 7 8
L 53
Black
1 2
M 20
Black
1 2
2Q
White
1 2 3 4 5
6 7 8 9 10 11 12 13
EL1
White
1 2 3 4 5
6 7 8 9 10 11 12 13
5 4 3 2 1
13 12 11 10 9 8 7 6
EM4
Gray
1 2 3 4
5 6 7 8 9 10 11
4 3 2 1
11 10 9 8 7 6 5

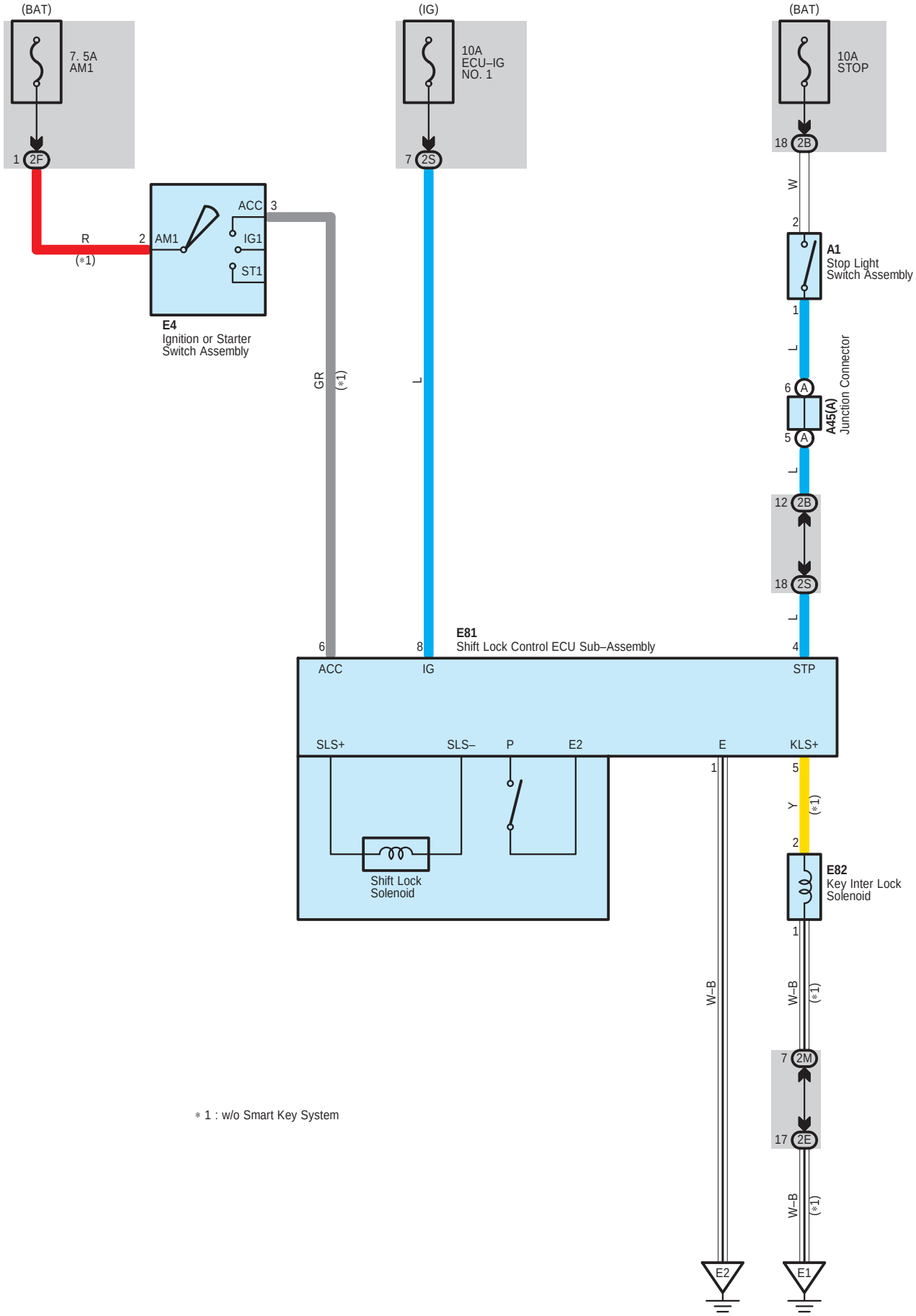

* 1 : w/o Smart Key System

A 1
Black

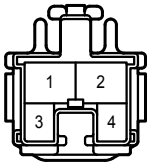

A 45
White

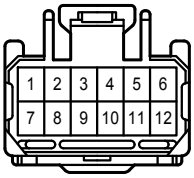

E 4
White

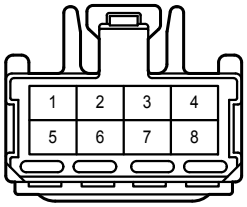

E 81
White

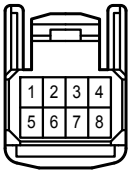

E 82
Black

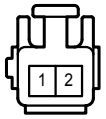

2B
White

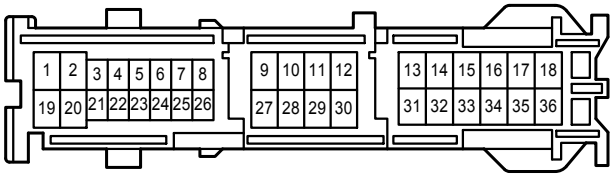

2E
White

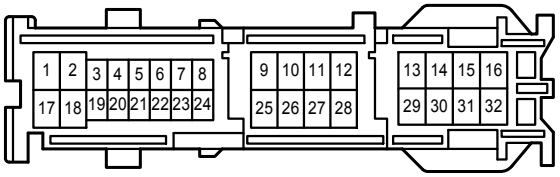

2F
White

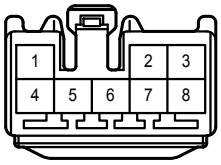

2M
White

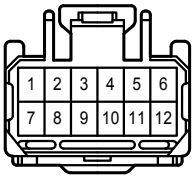

2S
White

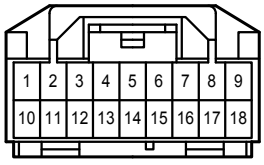

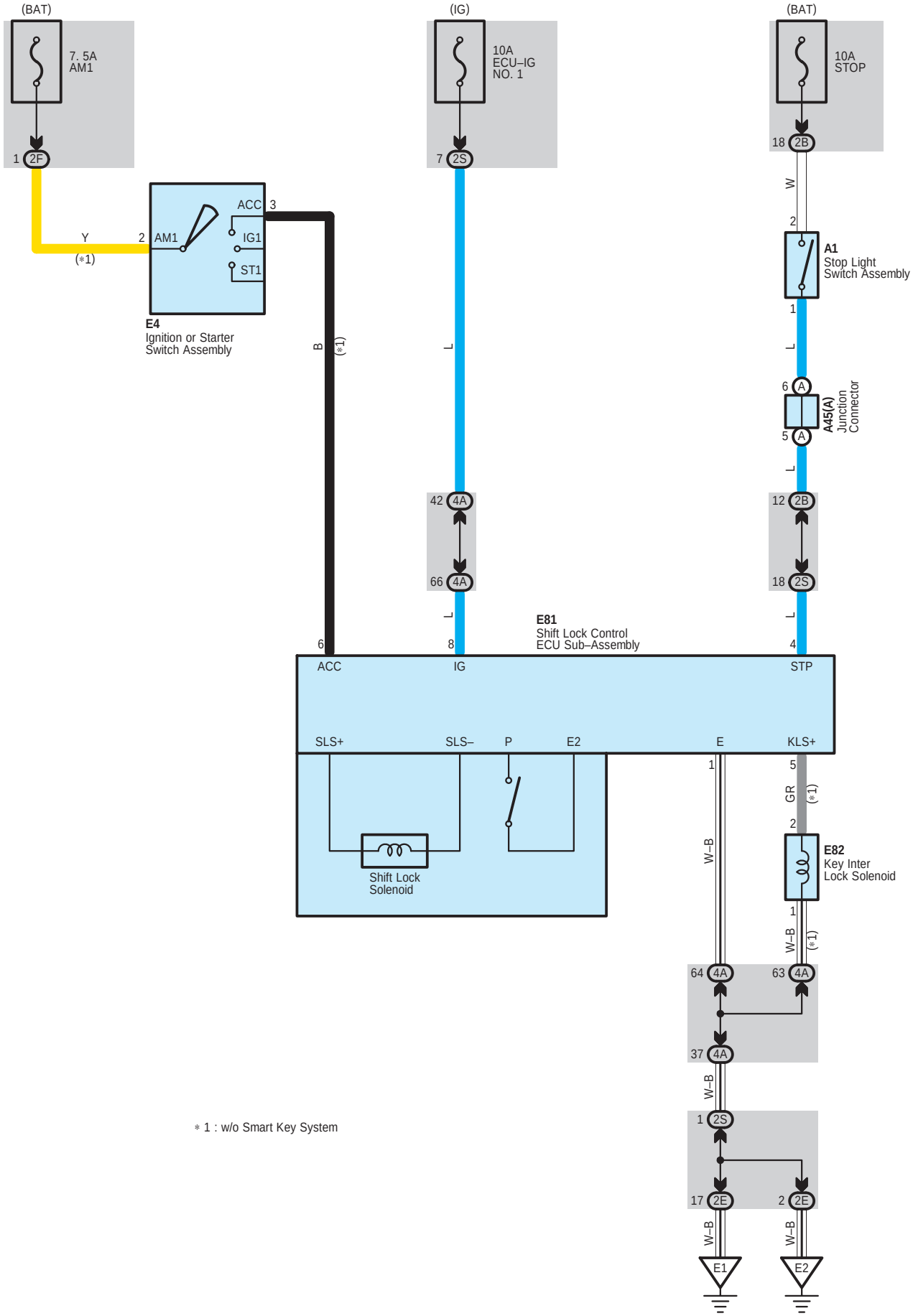

* 1 : w/o Smart Key System

A 1
Black

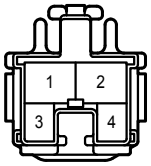

A 45
White

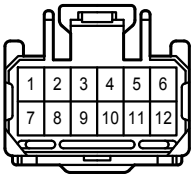

E 4
White

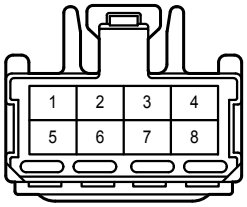

E 81
White

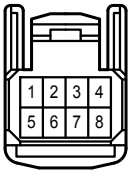

E 82
Black

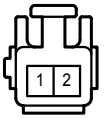

2B
White

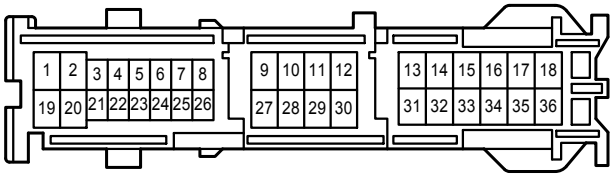

2E
White

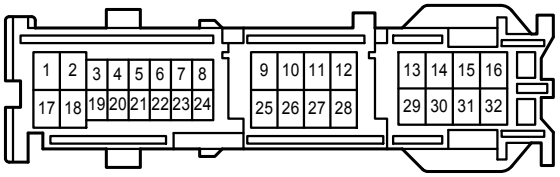

2F
White

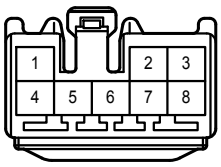

2S
White

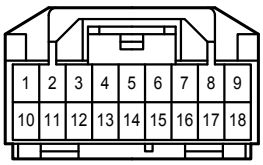

4A
White

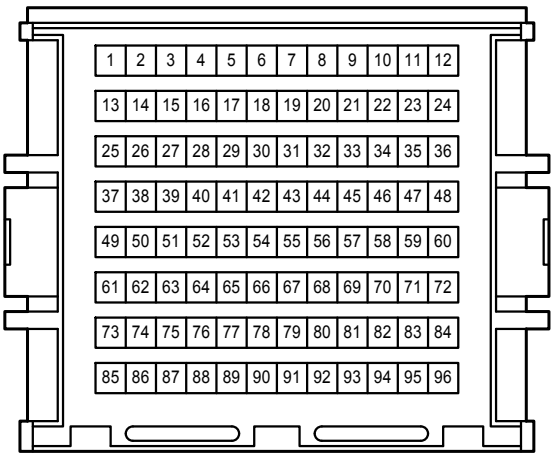

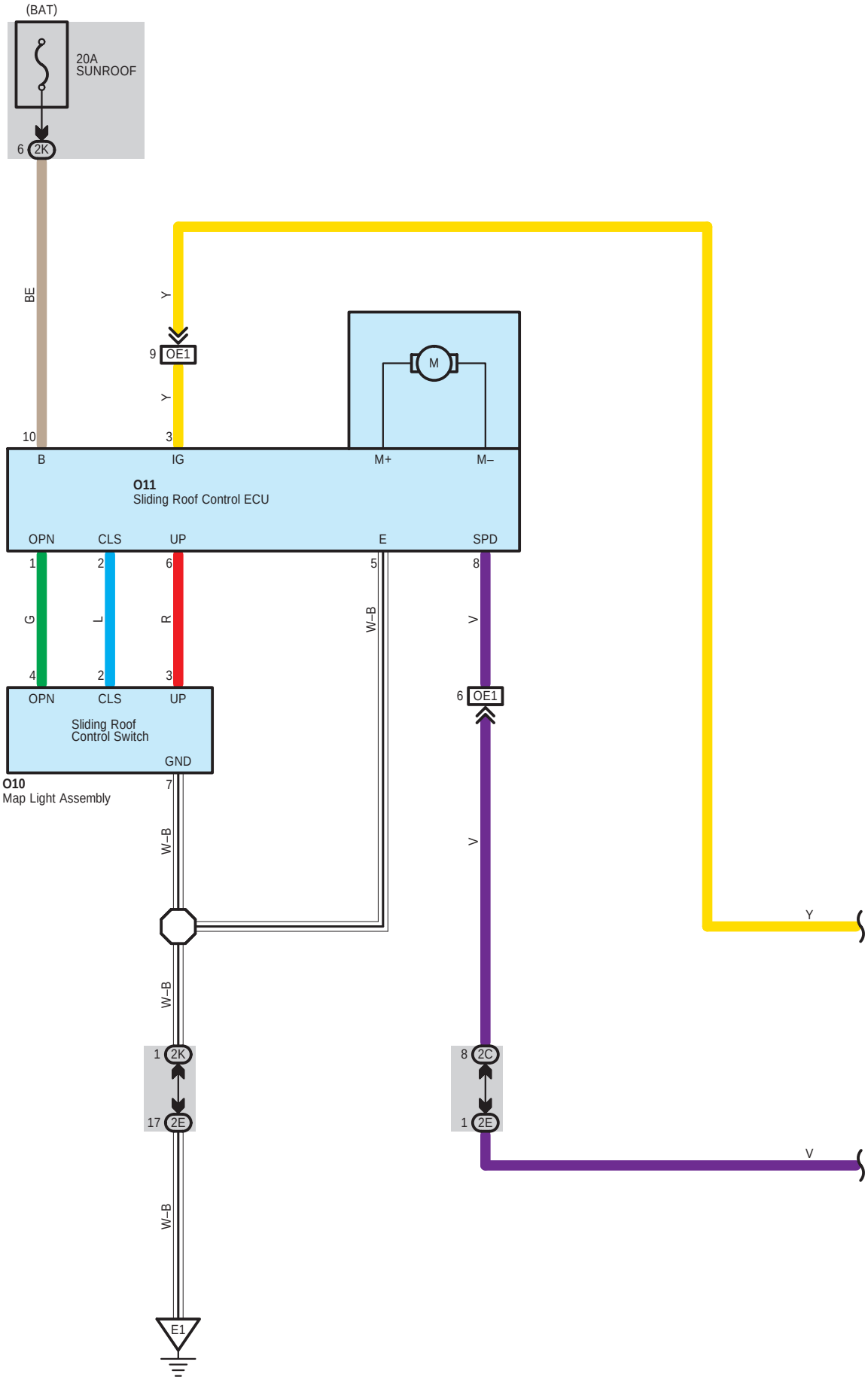
(BAT)
20A
SUNROOF
6 2K
BE
10
B
Y
9 OE1
Y
3
IG
M
M+
M–
O11
Sliding Roof Control ECU
OPN
CLS
UP
E
SPD
1
2
6
5
8
G
L
R
W–B
V
4
2
3
OPN
CLS
UP
Sliding Roof
Control Switch
GND
O10
Map Light Assembly
7
W–B
6 OE1
V
W–B
Y
1 2K
17 2E
8 2C
1 2E
V
W–B
E1

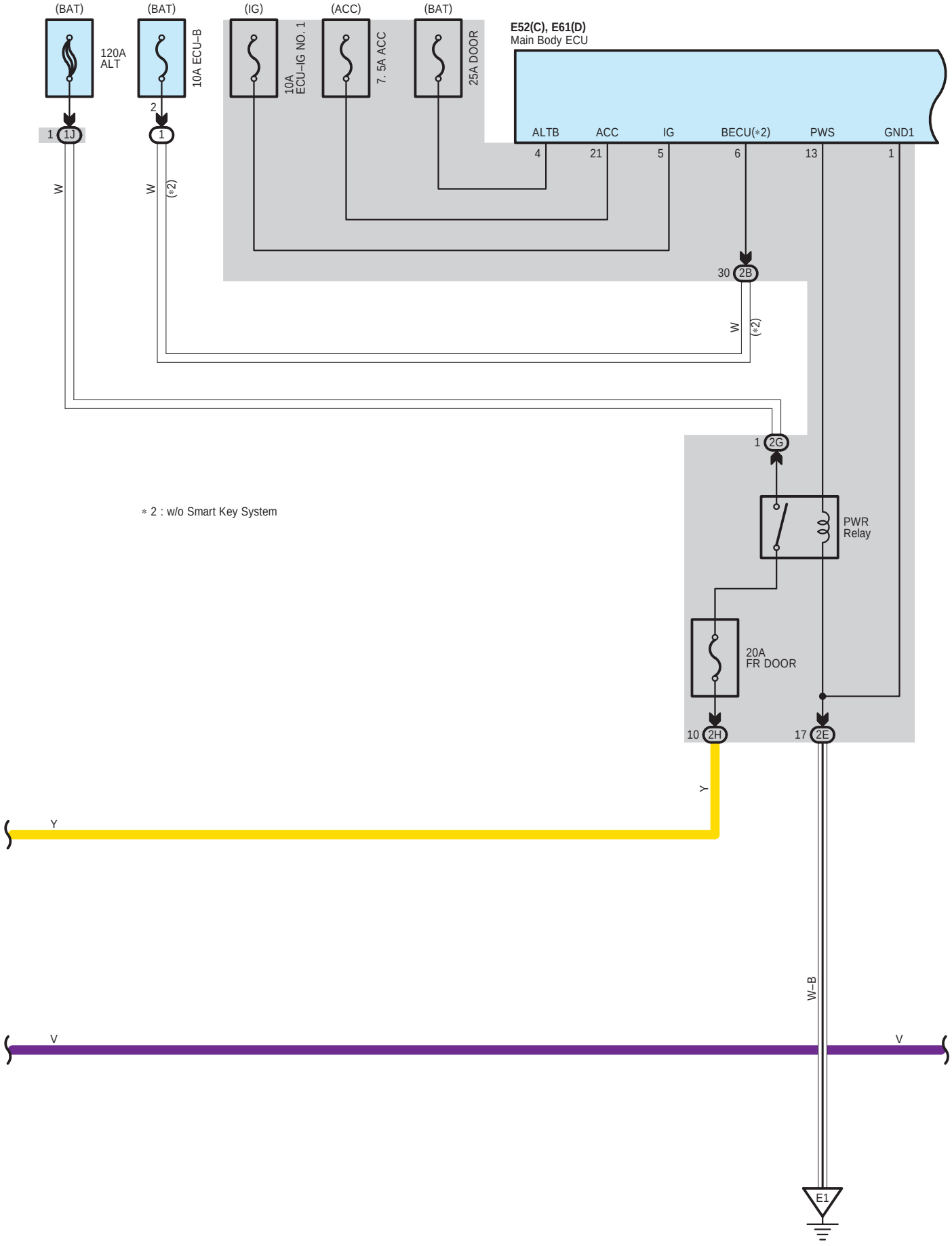
(BAT)
(BAT)
(IG)
(ACC)
(BAT)
120A
ALT
10A ECU–B
10A
ECU–IG NO. 1
7. 5A ACC
25A DOOR
E52(C), E61(D)
Main Body ECU
ALTB
ACC
IG
BECU(∗2)
PWS
GND1
4
21
5
6
13
1
1 1J
2
1
W
W
(∗2)
30 2B
W
(∗2)
1 2G
∗ 2 : w/o Smart Key System
PWR
Relay
20A
FR DOOR
10 2H
17 2E
Y
Y
W–B
V
V
E1

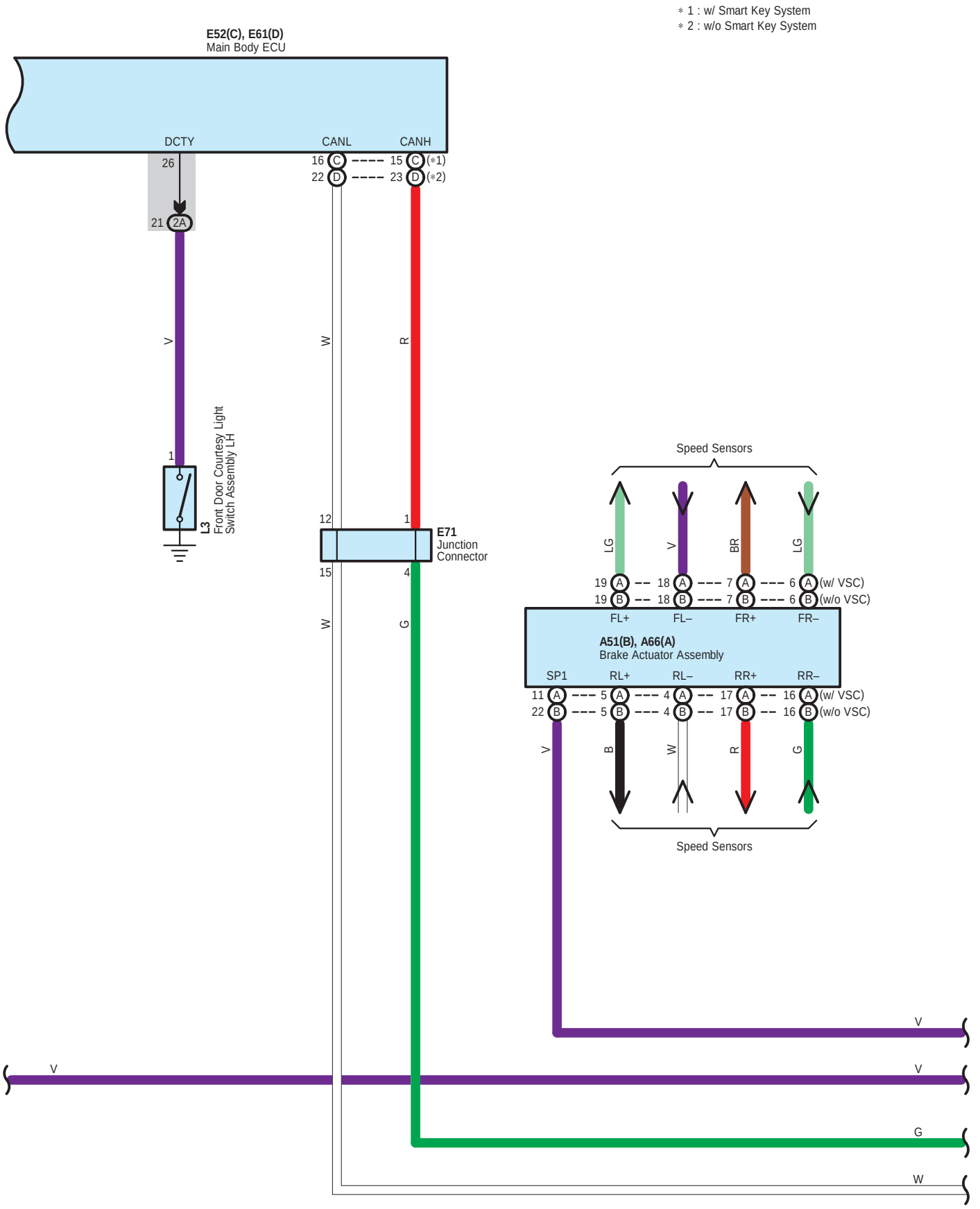
∗ 1 : w/ Smart Key System
∗ 2 : w/o Smart Key System
E52(C), E61(D)
Main Body ECU
DCTY
CANL
CANH
26
21 2A
16 C
22 D
15 C (∗1)
23 D (∗2)
V
W
R
1
L3
Front Door Courtesy Light Switch Assembly LH
12
1
15
4
E71
Junction Connector
W
G
Speed Sensors
LG
V
BR
LG
19 A
19 B
18 A
18 B
7 A
7 B
6 A
6 B
(w/ VSC)
(w/o VSC)
FL+
FL–
FR+
FR–
A51(B), A66(A)
Brake Actuator Assembly
SP1
RL+
RL–
RR+
RR–
11 A
22 B
5 A
5 B
4 A
4 B
17 A
17 B
16 A
16 B
(w/ VSC)
(w/o VSC)
V
B
W
R
G
Speed Sensors
V
V
V
G
W

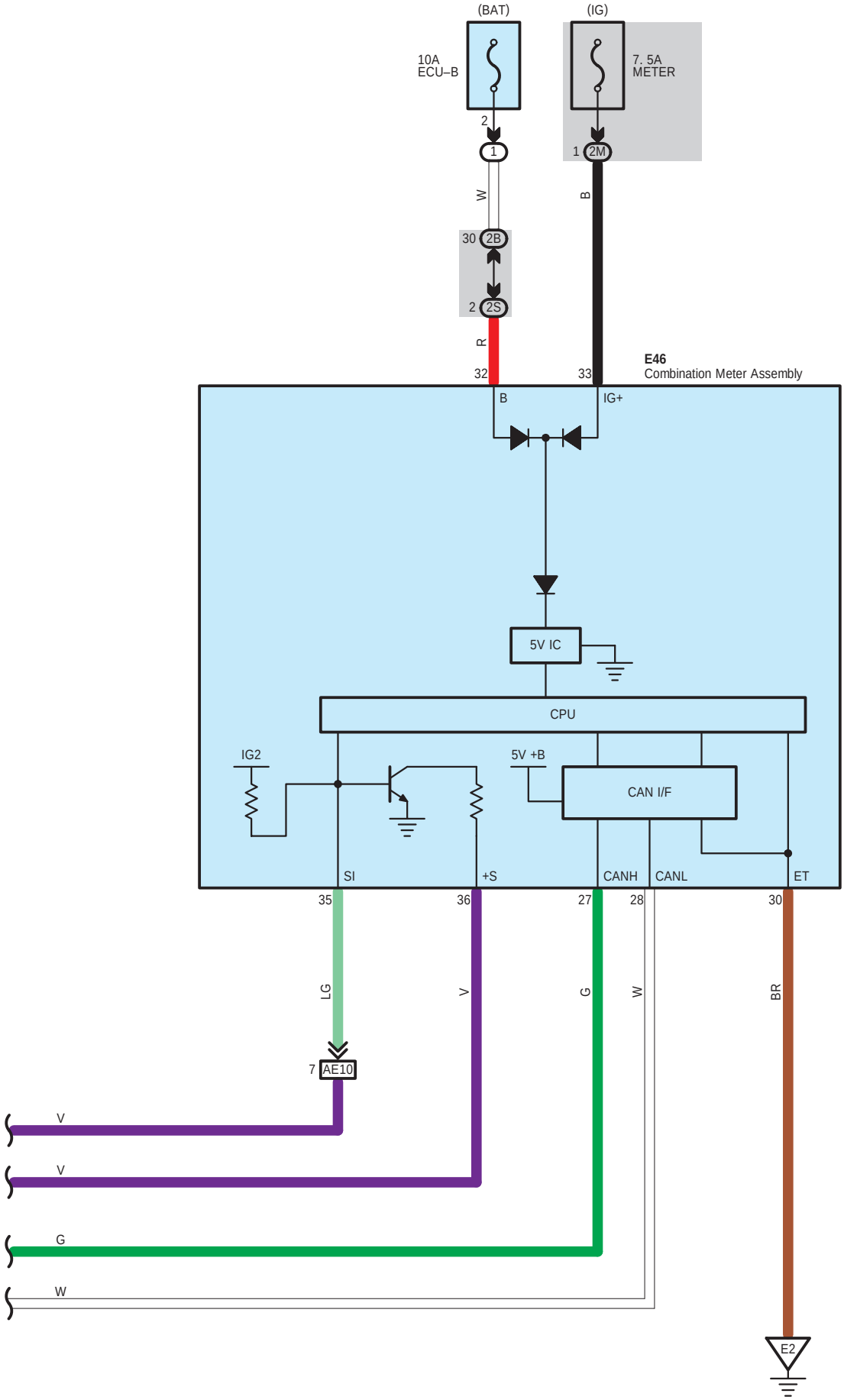
(BAT)
(IG)
10A
ECU–B
7. 5A
METER
2
1
1
2M
W
B
30
2B
2
2S
R
32
33
E46
Combination Meter Assembly
B
IG+
5V IC
CPU
IG2
5V +B
CAN I/F
SI
+S
CANH
CANL
ET
35
36
27
28
30
LG
V
G
W
BR
7
AE10
V
V
G
W
E2

A 51
Gray

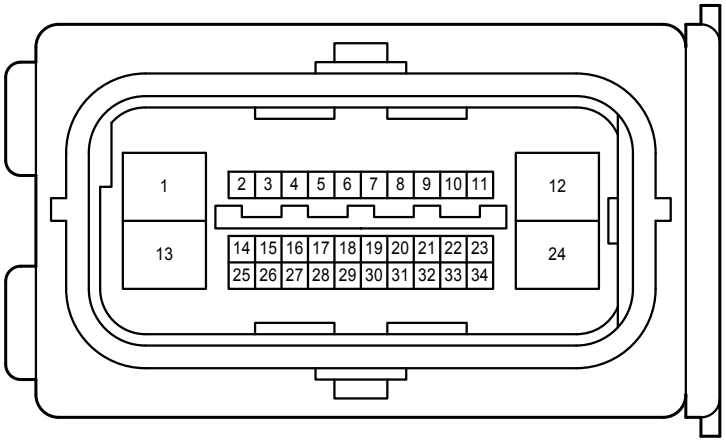

A 66
Black

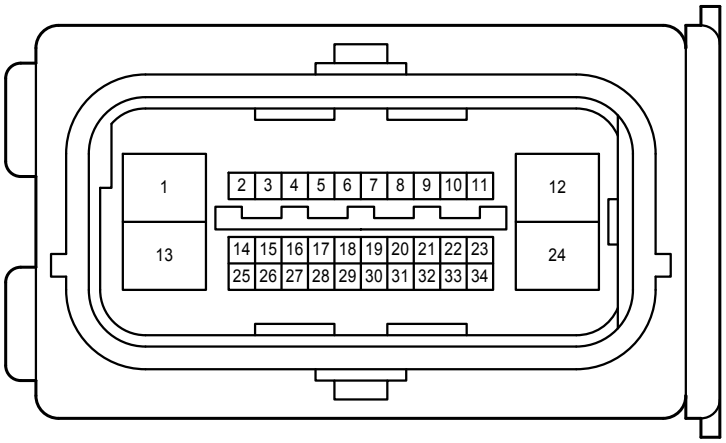

E 46
White

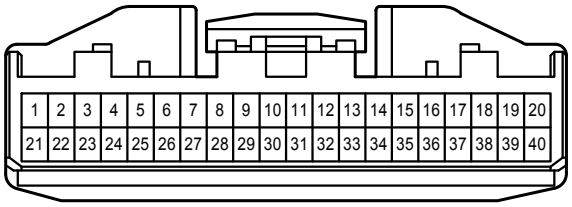

E 52
White

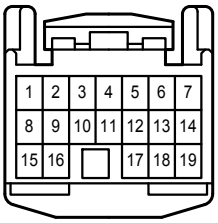

E 61
White

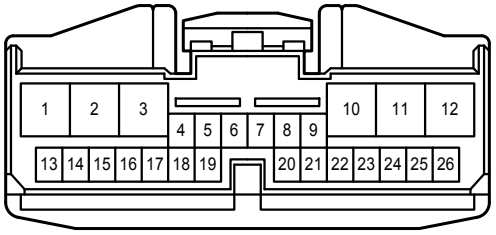

E 71
White

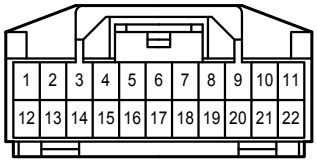

L 3
Black



O 10
Black

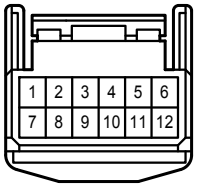

O 11
Gray

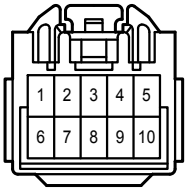

1J

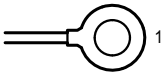

2A
White

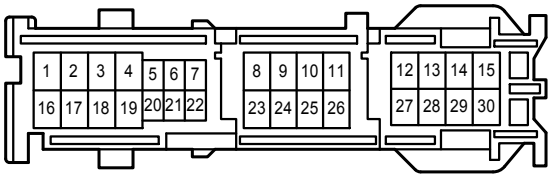

2B
White

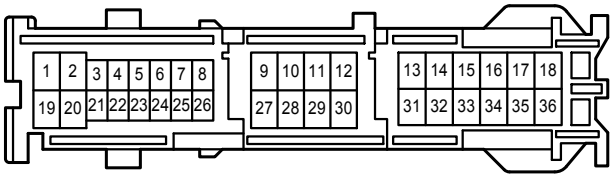

2C
White

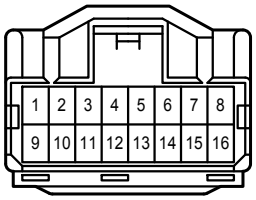

2E
White

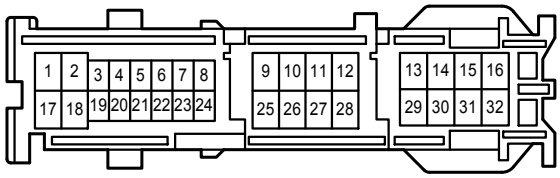

2G
White

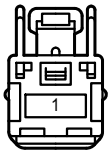

2H
White

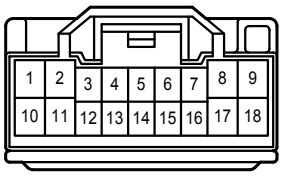

2K
White



2M
White

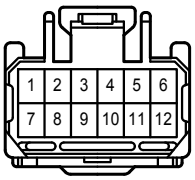

2S
White

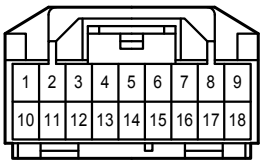

AE10
Gray

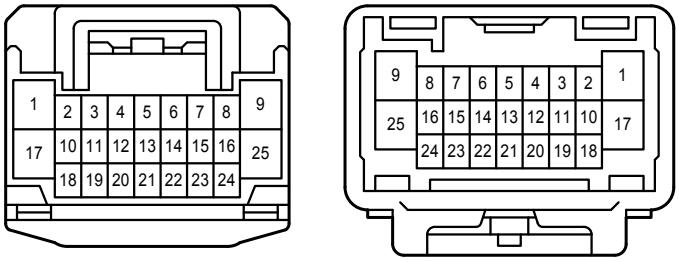

OE1
White

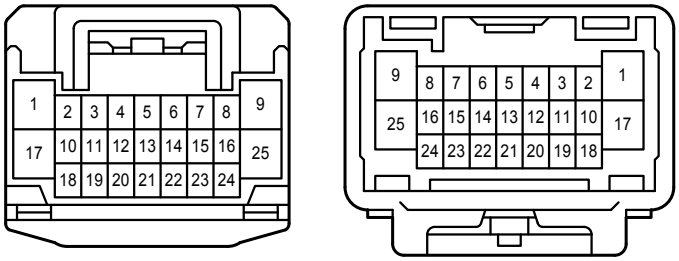

NOTICE : When inspecting or repairing the SRS, perform service in accordance with the following precautionary instructions and the procedure, and precautions in the Repair Manual applicable for the model year.

∗ Malfunction symptoms of the SRS are difficult to confirm, so the DTCs become the most important source of information when troubleshooting. When troubleshooting the SRS, always inspect the DTCs before disconnecting the battery.

∗ **Work must be started more than 90 seconds after the ignition or starter switch assembly is turned to the " LOCK" position (Ignition switch type) or the engine switch is pushed to the " OFF" poition (Engine switch type) and the negative (–) terminal cable is disconnected from the battery.**
(The SRS is equipped with a back–up power source so that if work is started within 90 seconds from disconnecting the negative (–) terminal cable of the battery, the SRS may deploy.)

∗ When the negative (–) terminal cable is disconnected from the battery, the memory of the clock and audio system will be cleared. So before starting work, make a record of the contents in the audio memory system. When work is finished, reset the audio systems as they were before and adjust the clock. Some vehicles have power tilt steering, power telescopic steering, power seat and power outside rear view mirror which are all equipped with memory function. However, it is not possible to make a record of these memory contents. So when the work is finished, it will be necessary to explain it to your customer, and ask the customer to adjust the features and reset the memory. To avoid erasing the memory in each system, never use a back–up power supply from outside the vehicle.

∗ Before repair, remove the airbag sensor if shocks are likely to be applied to the sensor during repair.

∗ Do not expose the following parts directly to hot air or flame;

∗ Even in cases of a minor collision where the SRS does not deploy, the following parts should be inspected;

∗ Never use SRS parts from another vehicle. When replacing parts, replace with new parts.

∗ For the purpose of reuse, never disassemble and repair the following parts.

∗ If the following parts have been dropped, or have cracks, dents and other defects in their case, bracket, and connector replace with new one.

∗ Use a volt/ohmmeter with high impedance (10 k /V minimum) for troubleshooting electrical circuits of the system.

∗ Information labels are attached to the periphery of the SRS components. Follow the instructions of the notice.

∗ After work on the SRS is completed, check the SRS warning light.

∗ If the vehicle is equipped with a mobile communication system, refer to the precaution in the IN section of the Repair Manual.

- ∗ Steering wheel pad
- ∗ Front passenger airbag assembly
- ∗ Side airbag assembly
- ∗ Curtain shield airbag assembly
- ∗ Seat belt pretensioner
- ∗ Center airbag sensor assembly
- ∗ Front airbag sensor assembly
- ∗ Side airbag sensor assembly
- ∗ Rear airbag sensor assembly

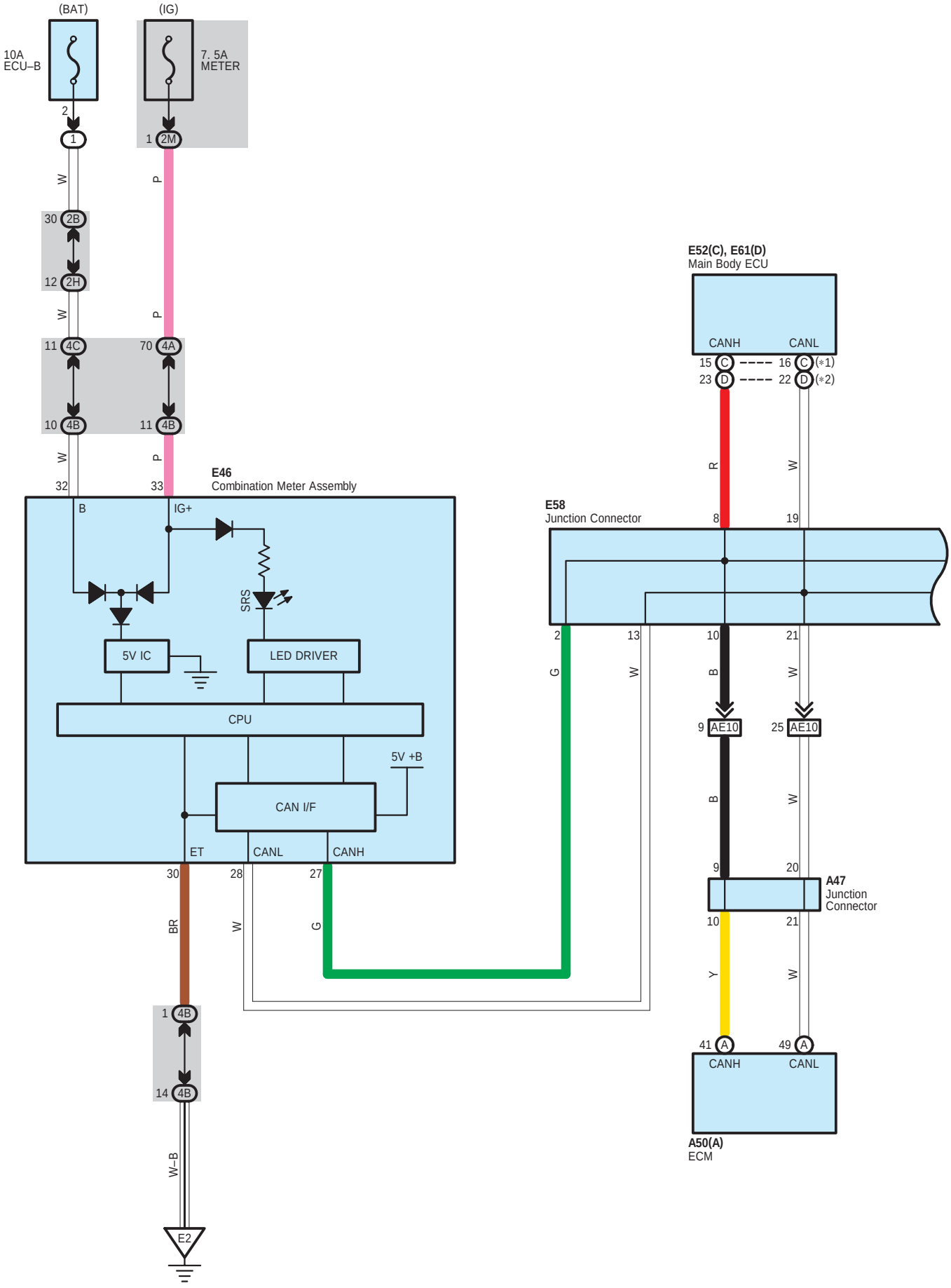
(BAT)
(IG)
10A
ECU–B
7. 5A
METER
2
1
1
2M
W
P
30
2B
12
2H
11
4C
70
4A
10
4B
11
4B
32
33
E46
Combination Meter Assembly
B
IG+
SRS
5V IC
LED DRIVER
CPU
5V +B
CAN I/F
ET
CANL
CANH
30
28
27
BR
W
G
1
4B
14
4B
W–B
E2
E52(C), E61(D)
Main Body ECU
CANH
CANL
15
C
23
D
16
C
(*1)
22
D
(*2)
R
W
E58
Junction Connector
8
19
2
13
10
21
G
W
B
W
9
AE10
25
AE10
B
W
9
20
A47
Junction
Connector
10
21
Y
W
41
A
49
A
CANH
CANL
A50(A)
ECM

* 1 : w/ Smart Key System
* 2 : w/o Smart Key System

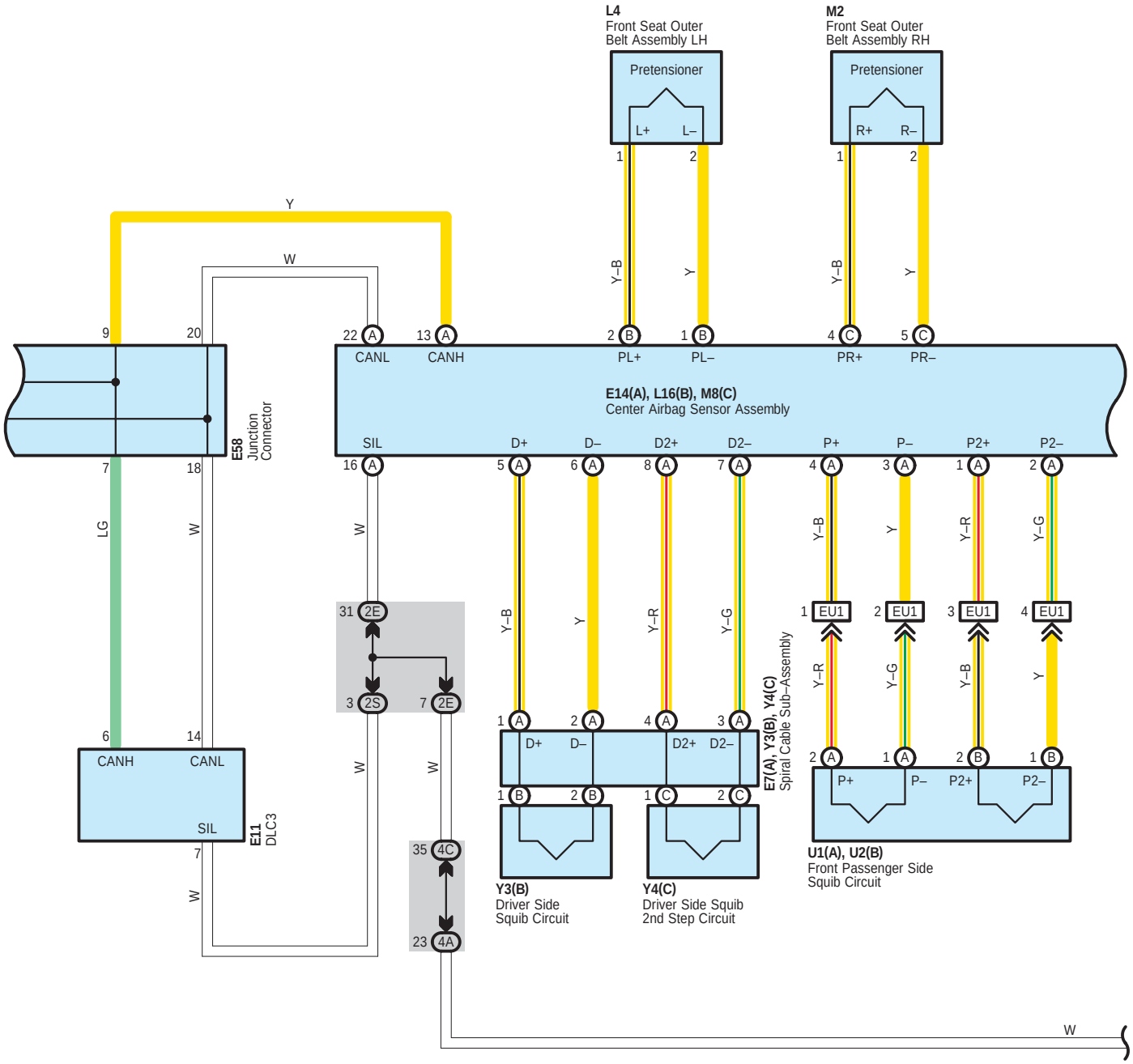

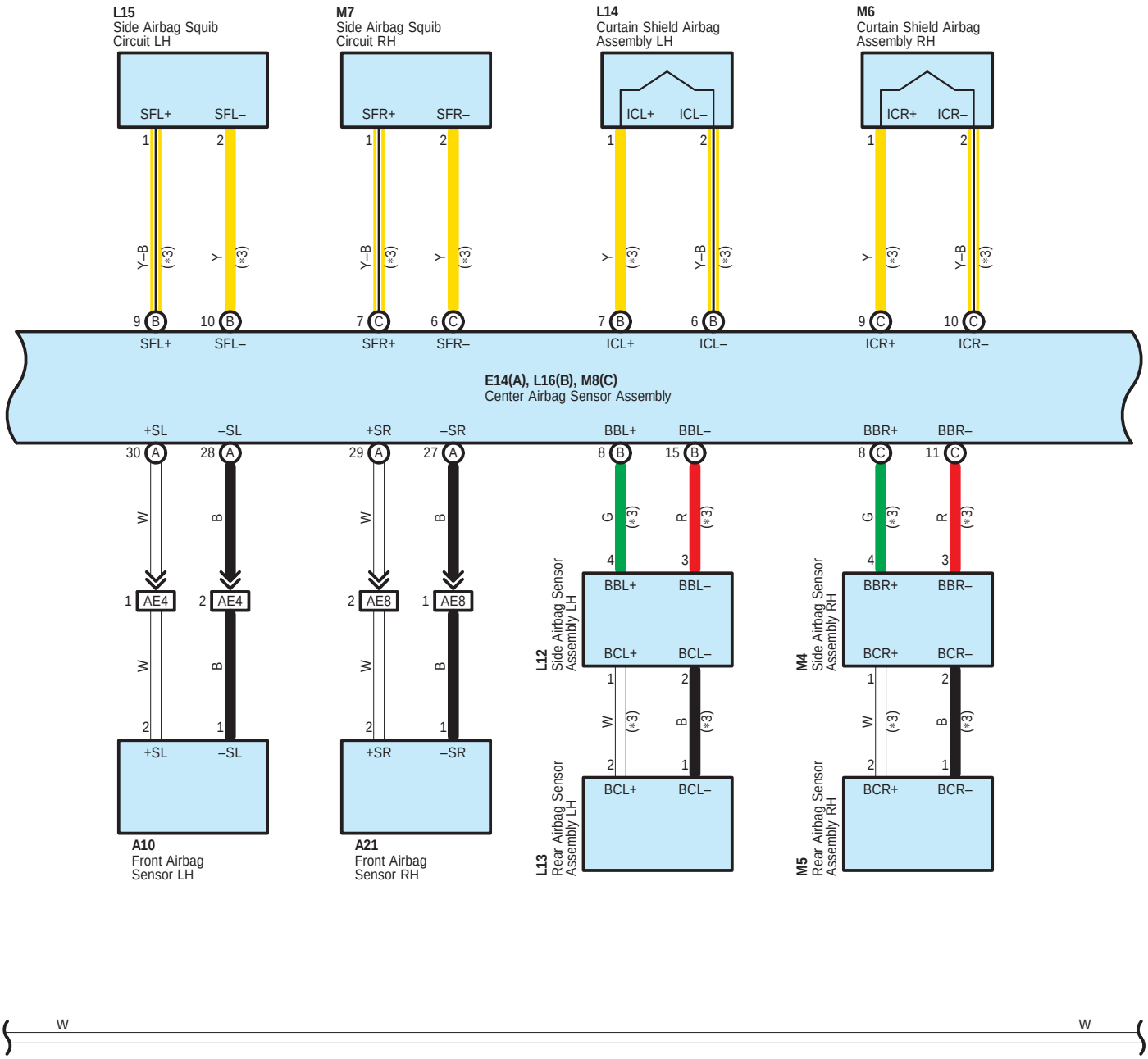
L15
Side Airbag Squib
Circuit LH
M7
Side Airbag Squib
Circuit RH
L14
Curtain Shield Airbag
Assembly LH
M6
Curtain Shield Airbag
Assembly RH
SFL+
SFL–
SFR+
SFR–
ICL+
ICL–
ICR+
ICR–
E14(A), L16(B), M8(C)
Center Airbag Sensor Assembly
+SL
–SL
+SR
–SR
BBL+
BBL–
BBR+
BBR–
AE4
AE8
A10
Front Airbag
Sensor LH
A21
Front Airbag
Sensor RH
L12
Side Airbag Sensor
Assembly LH
L13
Rear Airbag Sensor
Assembly LH
M4
Side Airbag Sensor
Assembly RH
M5
Rear Airbag Sensor
Assembly RH
BCL+
BCL–
BCR+
BCR–
W
B
G
R
Y
Y–B
(*3)

W
W

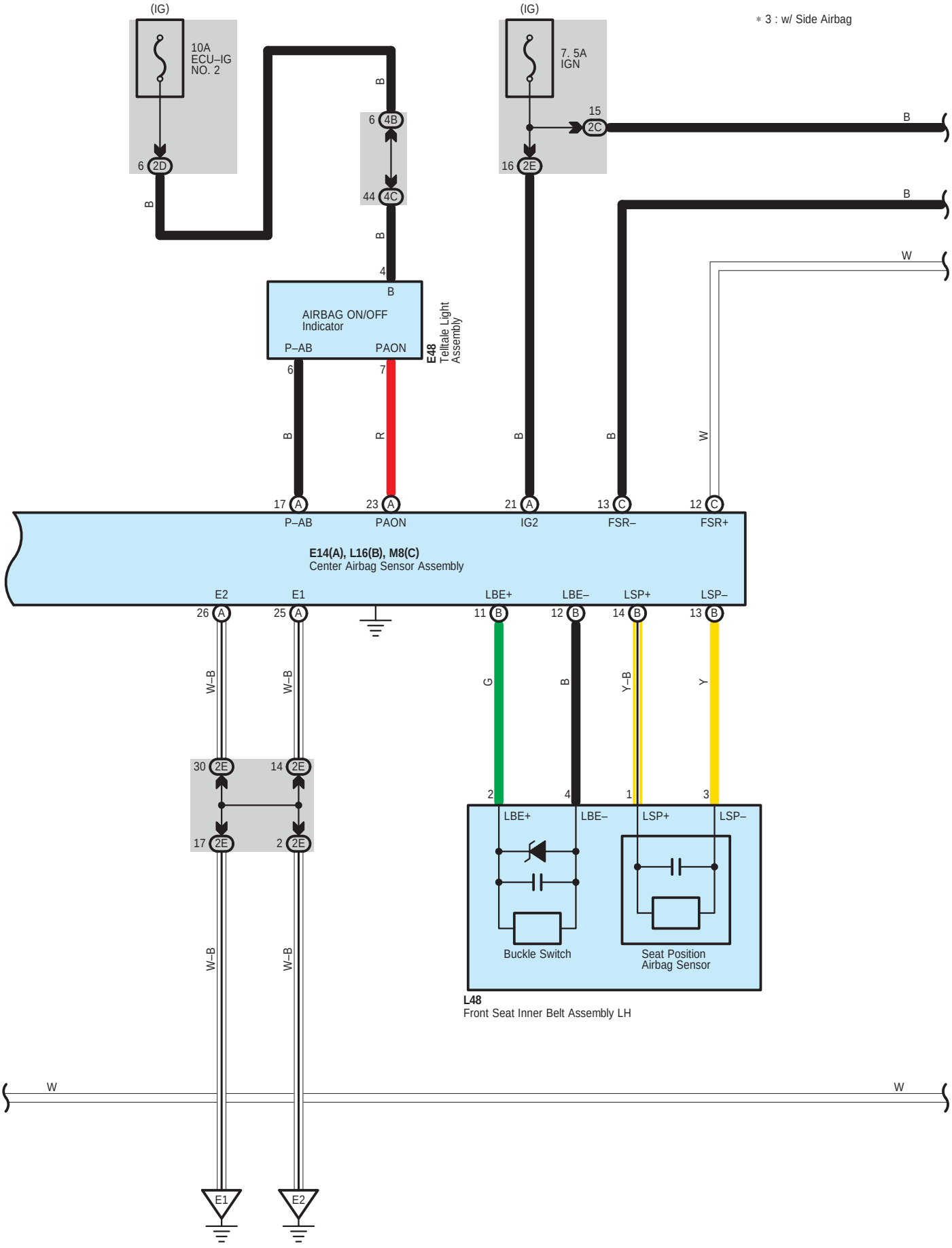
(IG)
10A
ECU–IG
NO. 2
6 2D
B
B
6 4B
44 4C
B
4
B
AIRBAG ON/OFF
Indicator
P–AB
PAON
E48
Telltale Light
Assembly
6
7
B
R
17 A
23 A
P–AB
PAON
(IG)
7. 5A
IGN
15
2C
16 2E
B
B
W
B
B
W
21 A
13 C
12 C
IG2
FSR–
FSR+
E14(A), L16(B), M8(C)
Center Airbag Sensor Assembly
E2
E1
LBE+
LBE–
LSP+
LSP–
26 A
25 A
11 B
12 B
14 B
13 B
W–B
W–B
G
B
Y–B
Y
30 2E
14 2E
17 2E
2 2E
2
4
1
3
LBE+
LBE–
LSP+
LSP–
Buckle Switch
Seat Position
Airbag Sensor
L48
Front Seat Inner Belt Assembly LH
W–B
W–B
W
W
E1
E2
* 3 : w/ Side Airbag

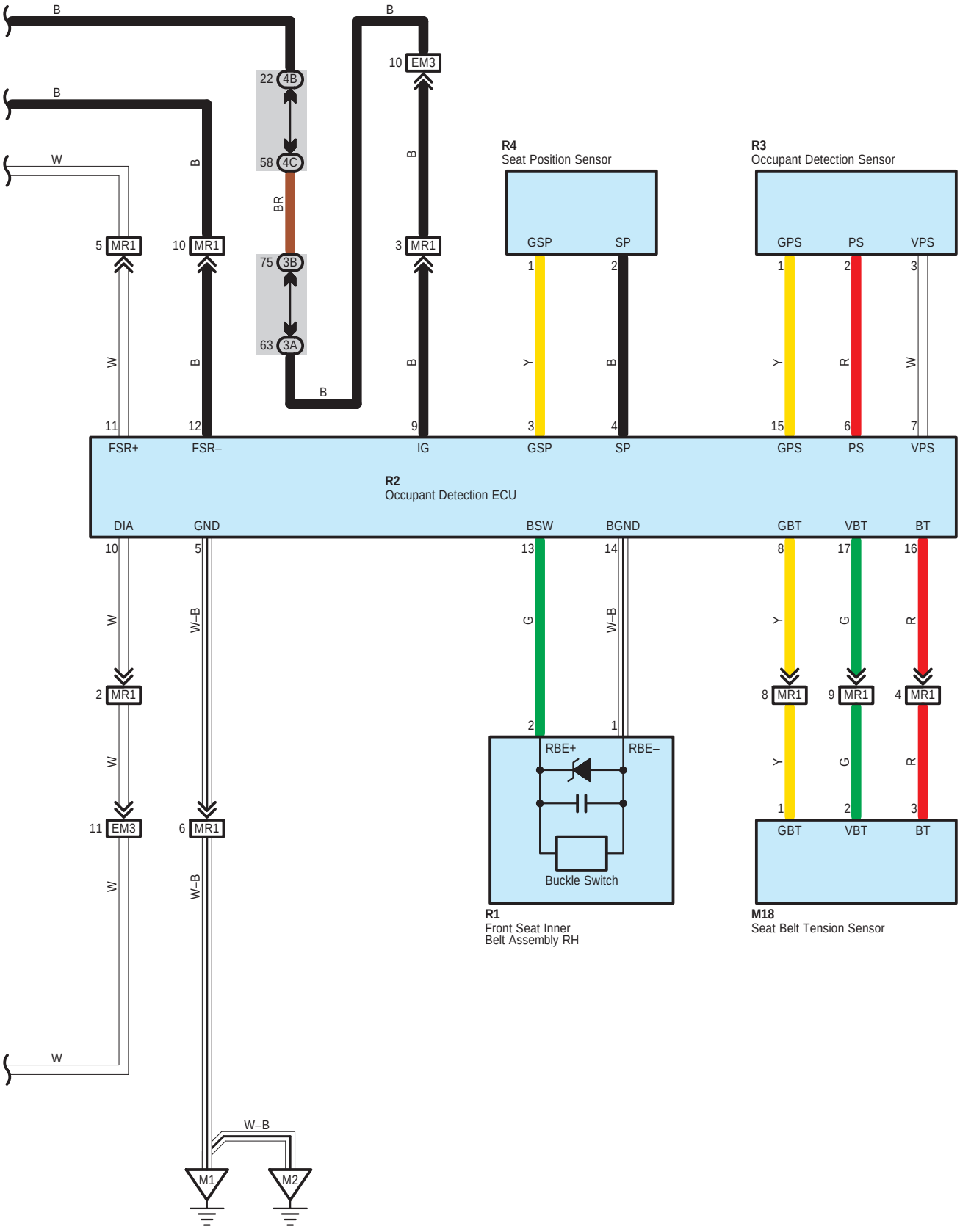
B
B
W
B
B
22 4B
58 4C
BR
75 3B
63 3A
B
10 EM3
B
3 MR1
5 MR1
10 MR1
W
B
B
11
12
9
FSR+
FSR–
IG
R4
Seat Position Sensor
GSP
SP
1
2
Y
B
3
4
GSP
SP
R3
Occupant Detection Sensor
GPS
PS
VPS
1
2
3
Y
R
W
15
6
7
GPS
PS
VPS
R2
Occupant Detection ECU
DIA
GND
BSW
BGND
GBT
VBT
BT
10
5
13
14
8
17
16
W
W–B
G
W–B
Y
G
R
2 MR1
8 MR1
9 MR1
4 MR1
W
Y
G
R
11 EM3
6 MR1
1
2
3
W
W–B
GBT
VBT
BT
RBE+
RBE–
Buckle Switch
R1
Front Seat Inner
Belt Assembly RH
M18
Seat Belt Tension Sensor
W
W–B
M1
M2

A 10
Yellow



A 21
Yellow



A 47
White

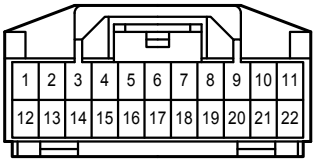

A 50
Black

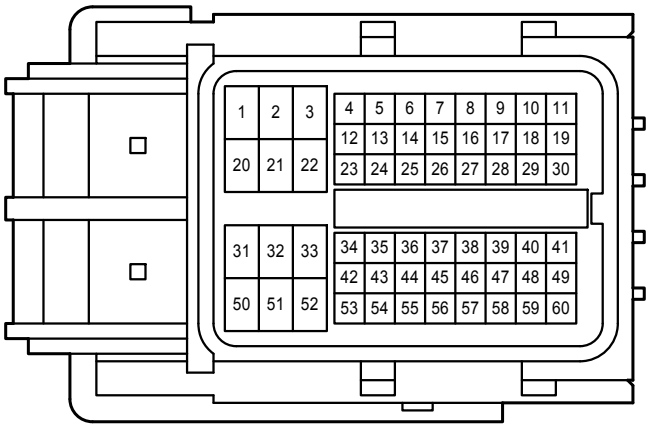

E 7
Yellow

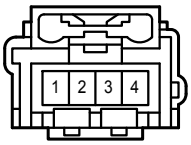

E 11
White

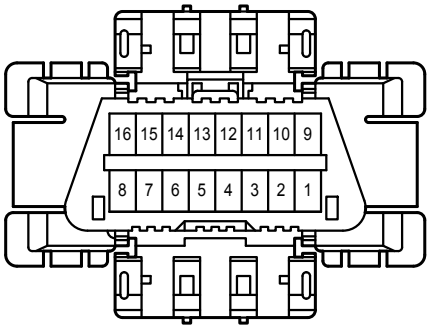

E 14
Yellow

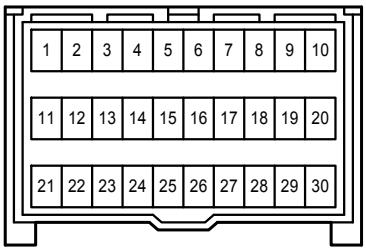

E 46
White

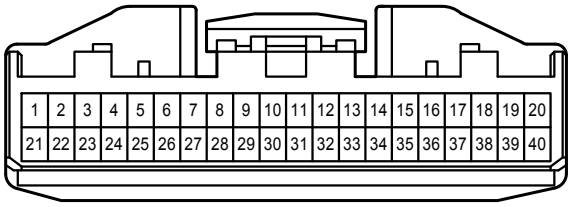

E 48
Black

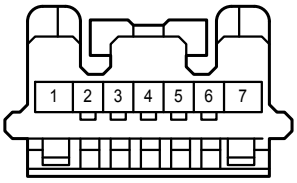

E 52
White

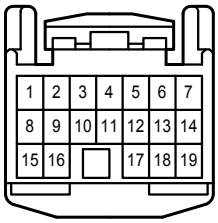

E 58
Gray

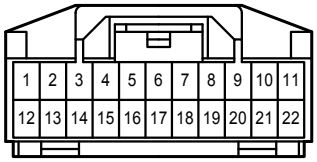

E 61
White

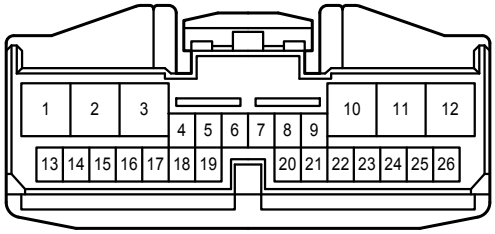

L 4
Black

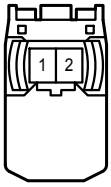

L 12
Yellow

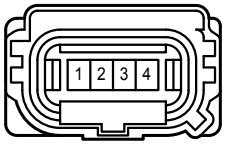

L 13
Yellow

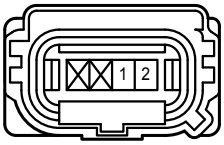

L 14
Black

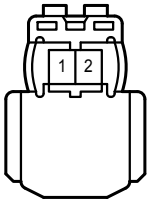

L 15
Yellow



L 16
Yellow

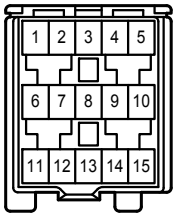

L 48
White



M 2
Black

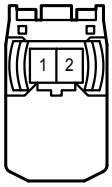

M 4
Yellow

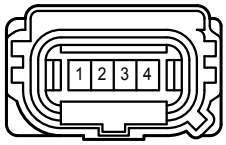

M 5
Yellow

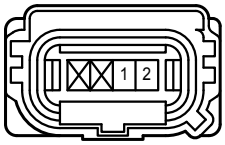

M 6
Black

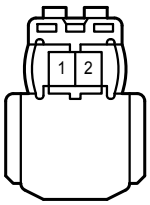

M 7
Yellow

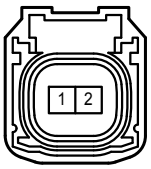

M 8
Yellow

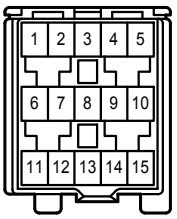

M 18
White

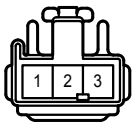

R 1
White

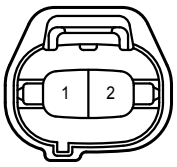

R 2
Black

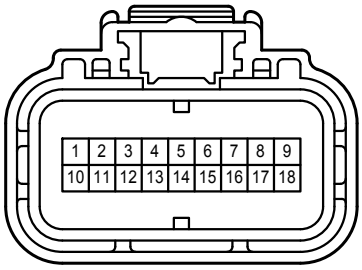

R 3
Gray

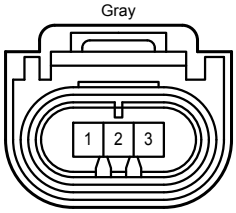

R 4
Black

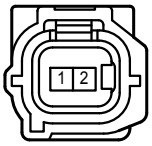

U 1
Orange

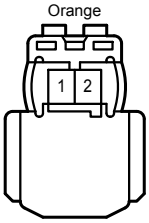

U 2
Black

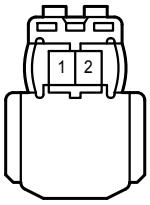

Y 3
Orange

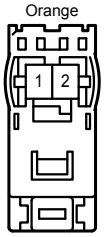

Y 4
Black

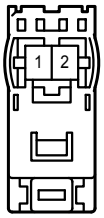

2B
White

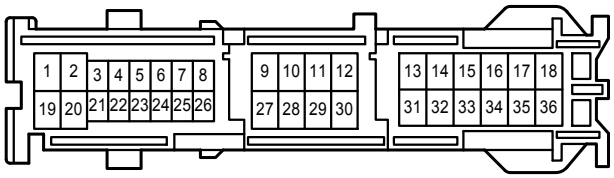

2C
White

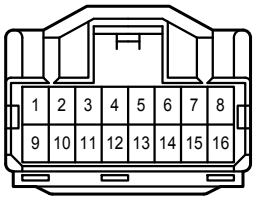

2D
White

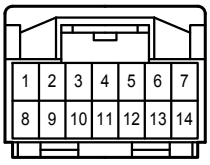

2E
White

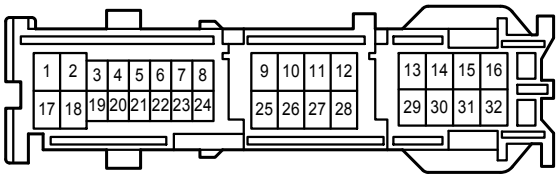

2H
White

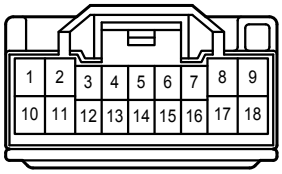

2M
White

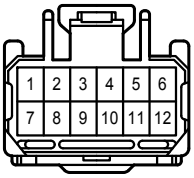

2S
White

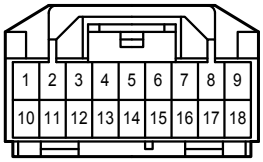

3A
White

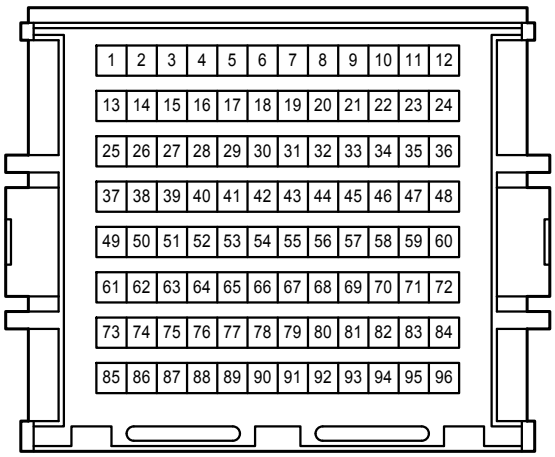

3B
White

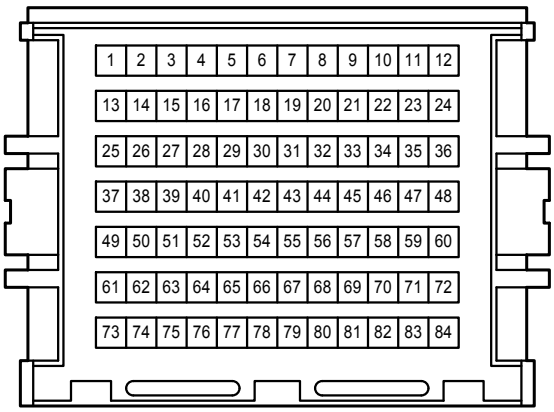

4A
White

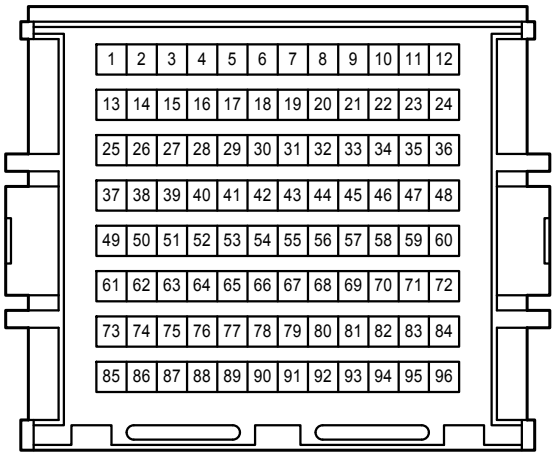

4B
White

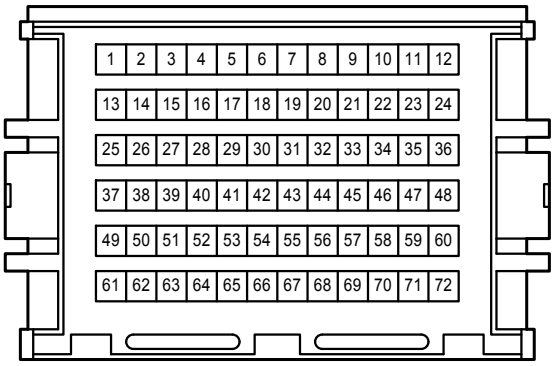

4C
White

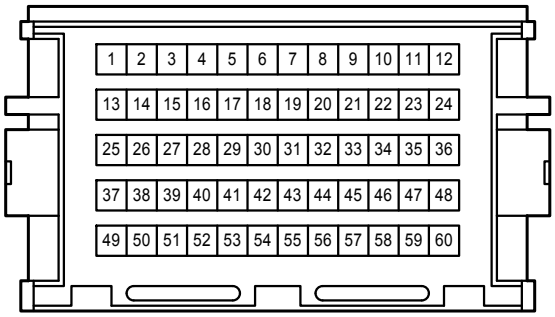

AE4
Yellow

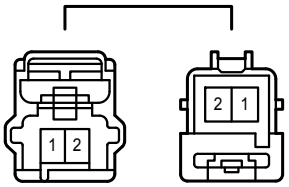

AE8
Yellow

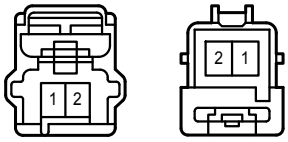

AE10
Gray

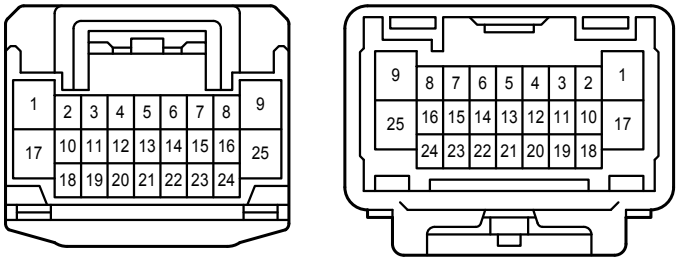

EM3
White

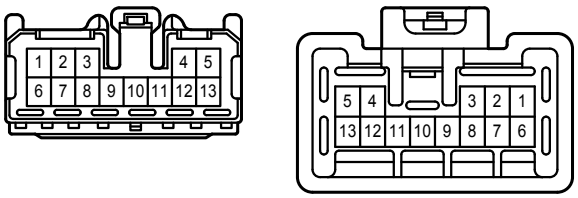

EU1
Yellow

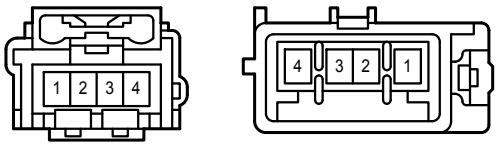

MR1
Black

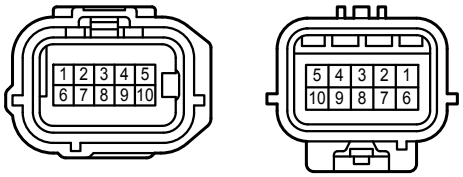

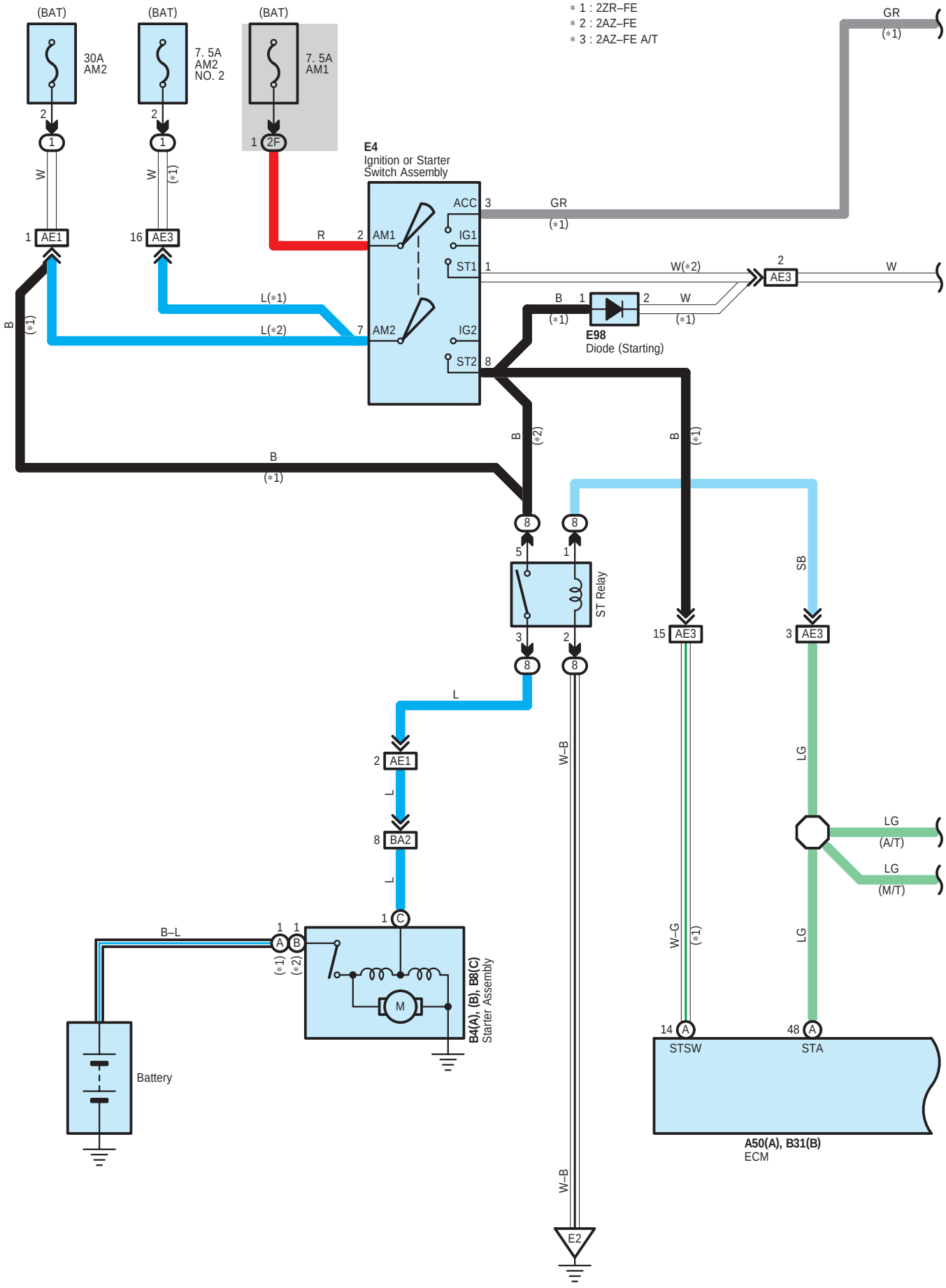

(BAT)
30A
AM2
(BAT)
7. 5A
AM2
NO. 2
(BAT)
7. 5A
AM1
∗ 1 : 2ZR–FE
∗ 2 : 2AZ–FE
∗ 3 : 2AZ–FE A/T
GR
(∗1)
E4
Ignition or Starter
Switch Assembly
ACC
IG1
ST1
IG2
ST2
AM1
AM2
AE1
AE3
W
(∗1)
R
L(∗1)
L(∗2)
B
(∗1)
W(∗2)
W
E98
Diode (Starting)
(∗2)
ST Relay
SB
L
BA2
W–B
LG
(A/T)
(M/T)
W–G
B–L
B4(A), (B), B8(C)
Starter Assembly
Battery
STSW
STA
A50(A), B31(B)
ECM
E2

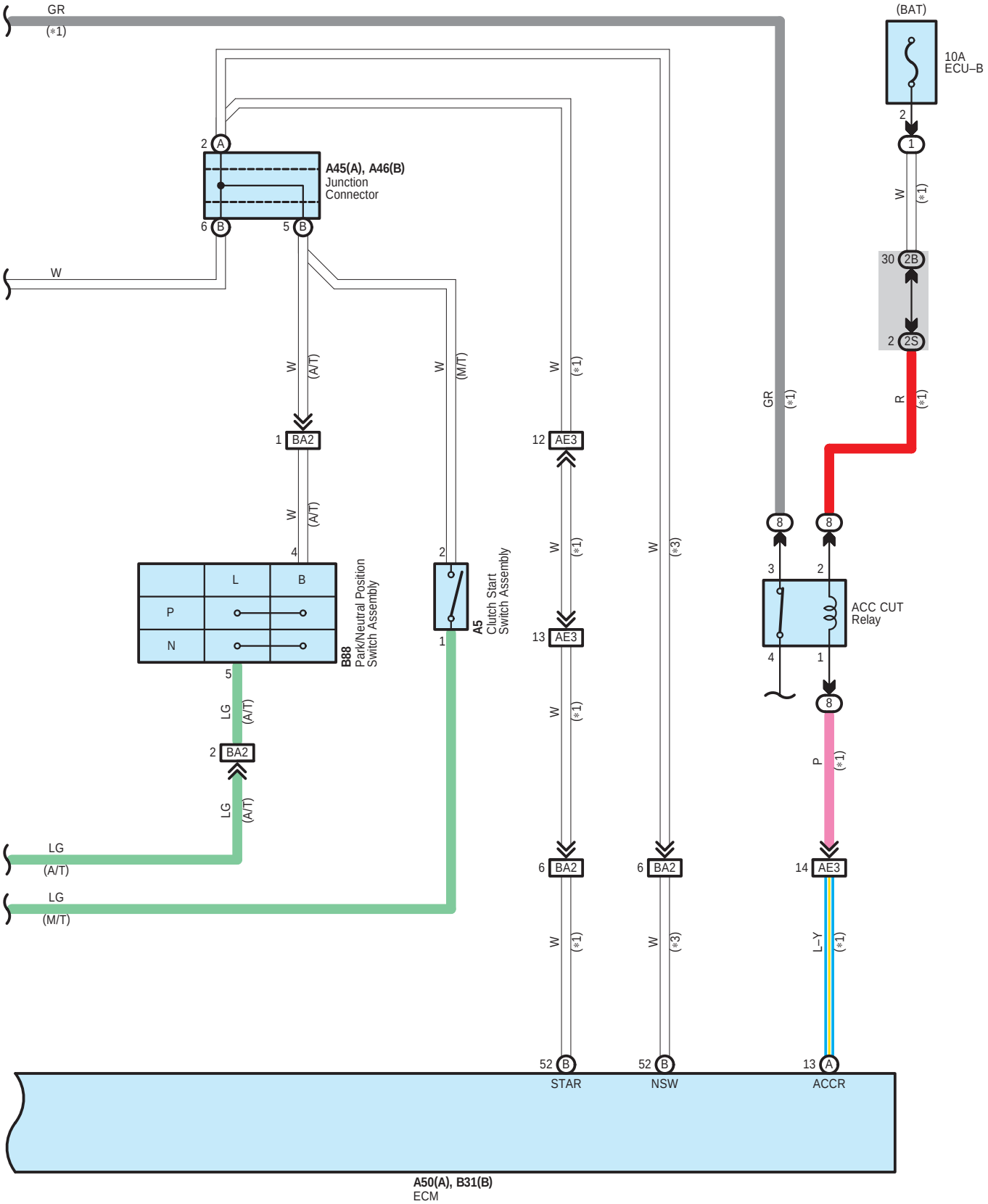
GR
(*1)
(BAT)
10A
ECU–B
2
1
W
(*1)
30
2B
2
2S
R
(*1)
GR
(*1)
2
A
A45(A), A46(B)
Junction
Connector
6
B
5
B
W
W
(A/T)
W
(M/T)
W
(*1)
1
BA2
12
AE3
W
(A/T)
4
L
B
P
N
B88
Park/Neutral Position
Switch Assembly
2
1
A5
Clutch Start
Switch Assembly
W
(*1)
13
AE3
W
(*3)
8
8
3
2
ACC CUT
Relay
4
1
8
5
LG
(A/T)
2
BA2
LG
(A/T)
P
(*1)
LG
(A/T)
LG
(M/T)
W
(*1)
6
BA2
6
BA2
14
AE3
W
(*1)
W
(*3)
L–Y
(*1)
52
B
STAR
52
B
NSW
13
A
ACCR
A50(A), B31(B)
ECM

A 5
Black

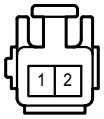

A 45
White

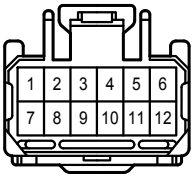

A 46
White

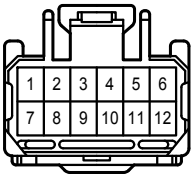

A 50
Black

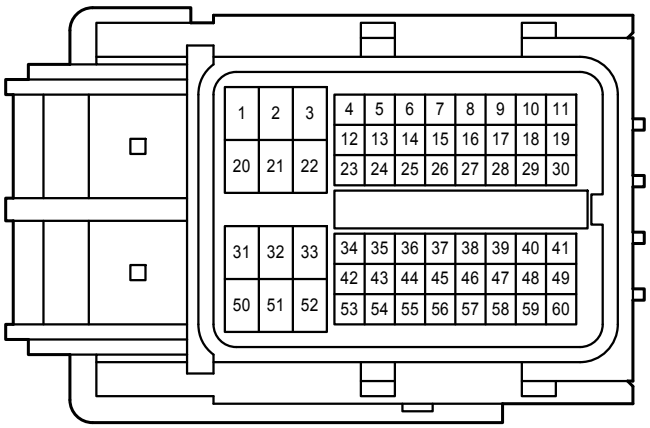

B 4

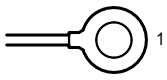

(2AZ-FE)

B 4

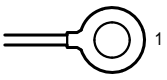

(2ZR-FE)

B 8
Black



B 31
Black

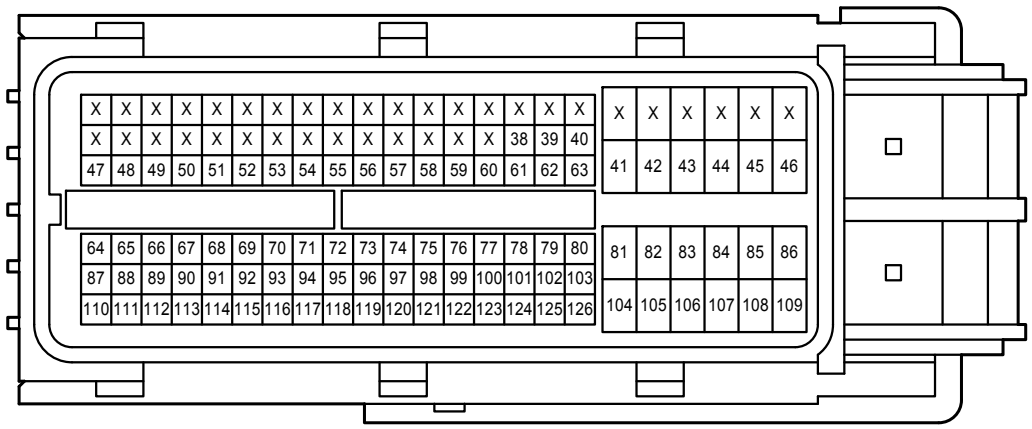

B 88
Gray

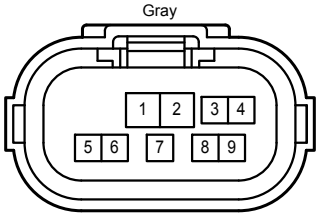

E 4
White

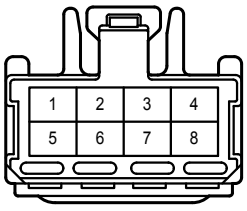

E 98
Black



2B
White

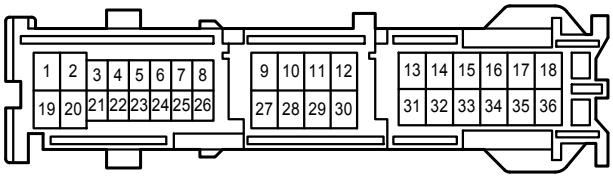

2F
White

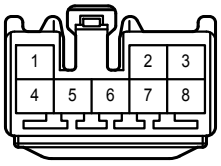

2S
White

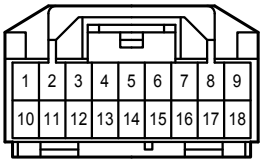

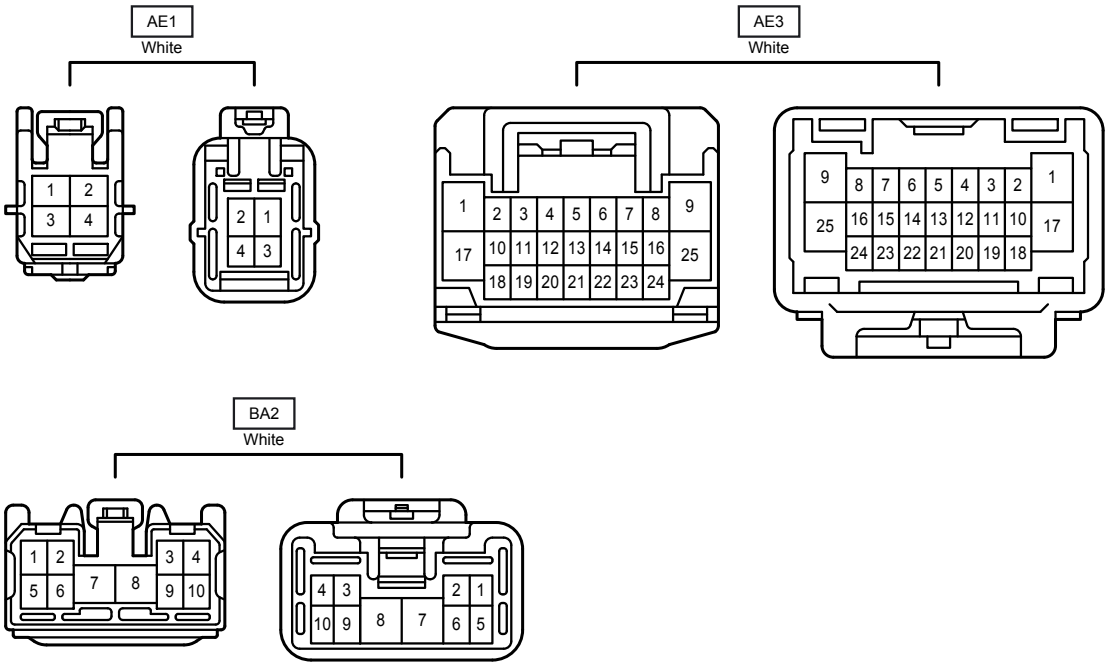
AE1
White
1 2
3 4
2 1
4 3
AE3
White
1 2 3 4 5 6 7 8 9
17 10 11 12 13 14 15 16 25
18 19 20 21 22 23 24
9 8 7 6 5 4 3 2 1
25 16 15 14 13 12 11 10 17
24 23 22 21 20 19 18

BA2
White
1 2 3 4
5 6 7 8 9 10
4 3 2 1
10 9 8 7 6 5

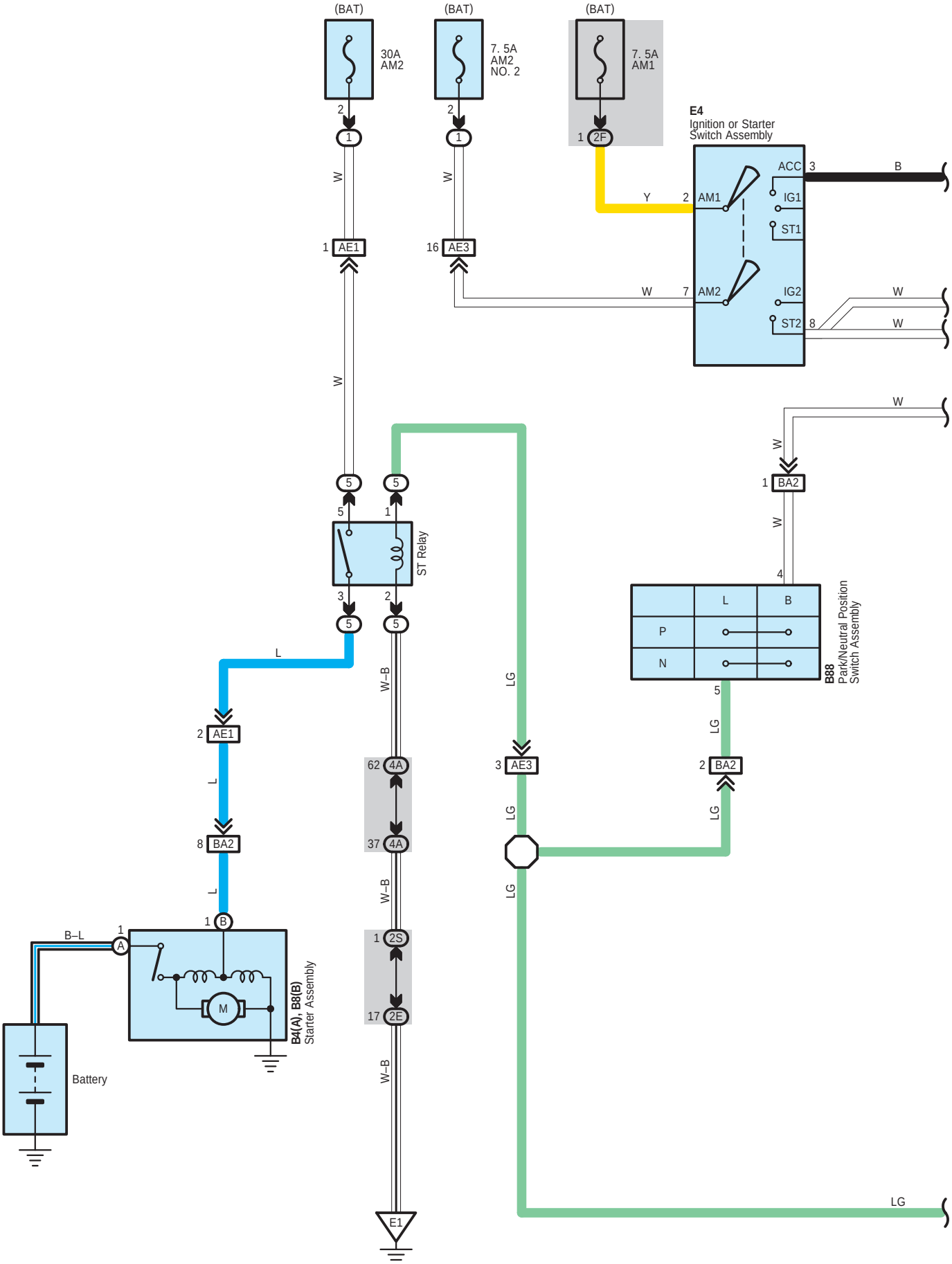
(BAT)
30A
AM2
(BAT)
7. 5A
AM2
NO. 2
(BAT)
7. 5A
AM1
E4
Ignition or Starter
Switch Assembly
ACC
IG1
ST1
AM1
AM2
IG2
ST2
AE1
AE3
BA2
ST Relay
B88
Park/Neutral Position
Switch Assembly
P
N
L
B
W
W–B
LG
B–L
B4(A), B8(B)
Starter Assembly
Battery
M
E1

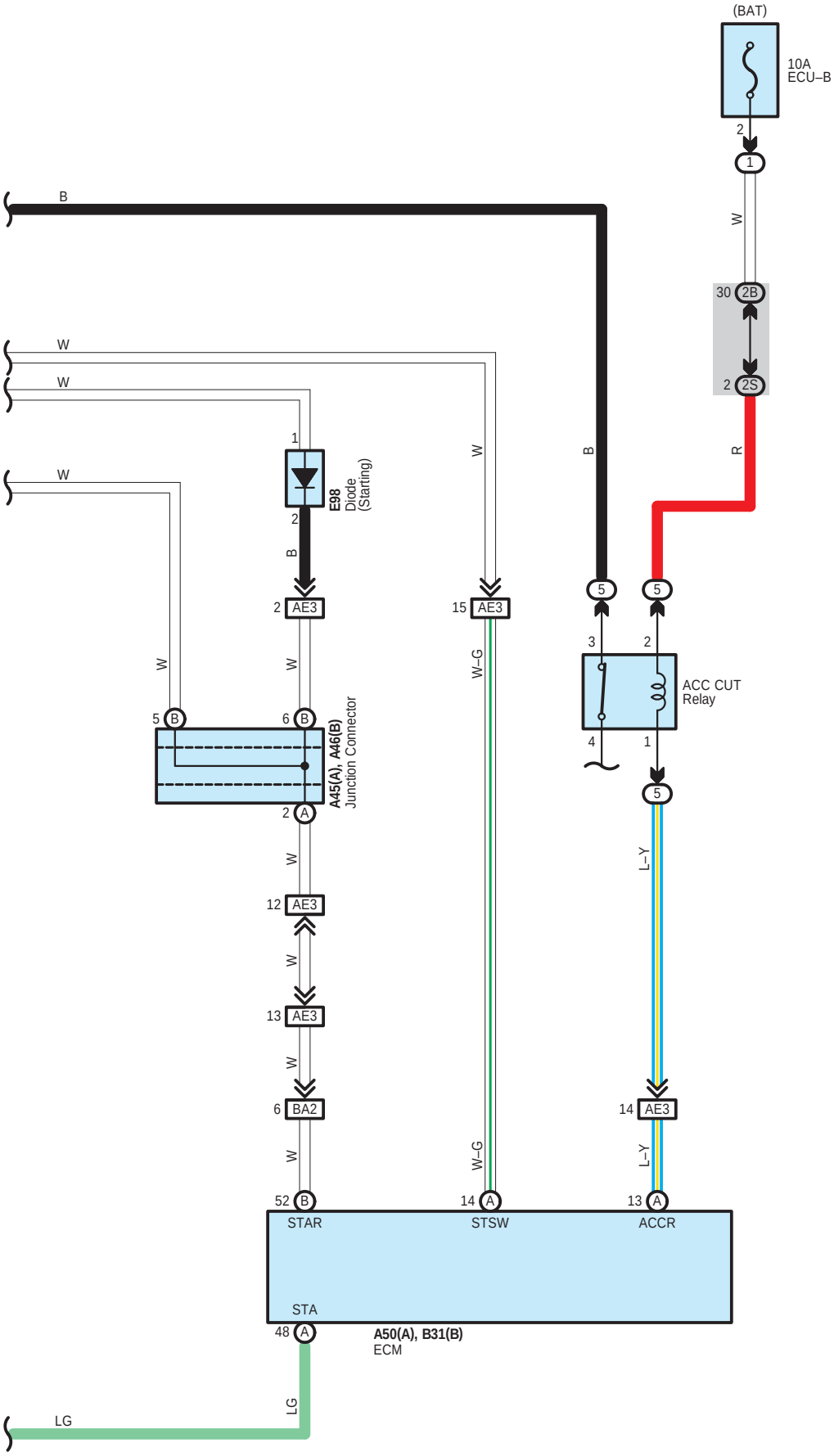
(BAT)
10A
ECU–B
2
1
W
30
2B
2
2S
R
B
W
W
W
W
1
E98
Diode
(Starting)
2
B
2
AE3
15
AE3
W
W
W–G
5
5
3
2
ACC CUT
Relay
4
1
5
5
B
6
B
A45(A), A46(B)
Junction Connector
2
A
W
L–Y
12
AE3
W
13
AE3
W
6
BA2
14
AE3
W
W–G
L–Y
52
B
14
A
13
A
STAR
STSW
ACCR
STA
48
A
A50(A), B31(B)
ECM
LG
LG

A 45
White

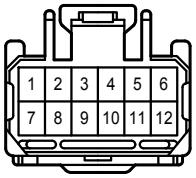

A 46
White

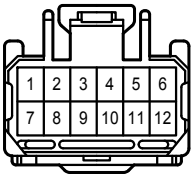

A 50
Black

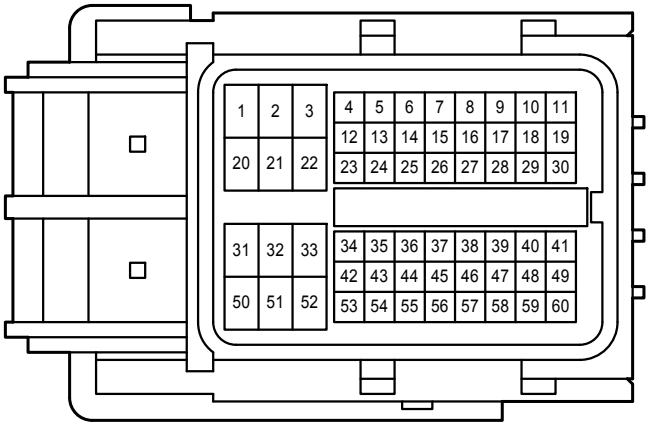

B 4

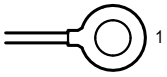

(2ZR-FE)

B 8
Black



B 31
Black

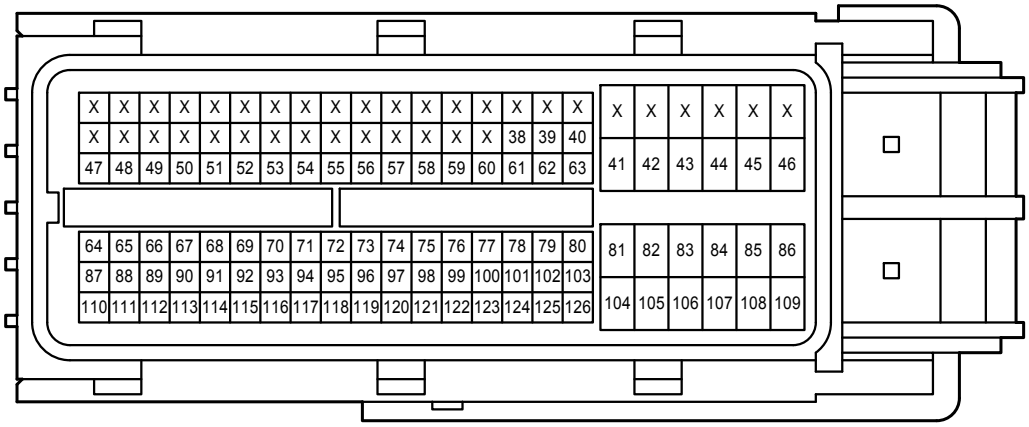

B 88
Gray

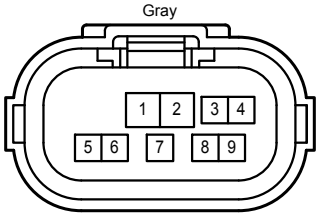

E 4
White

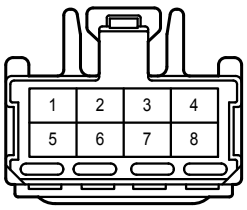

E 98
Black



2B
White

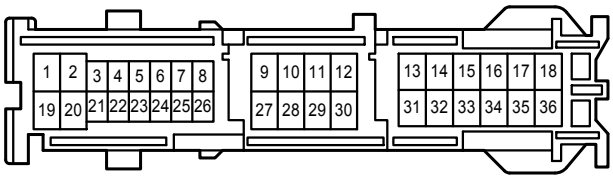

2E
White

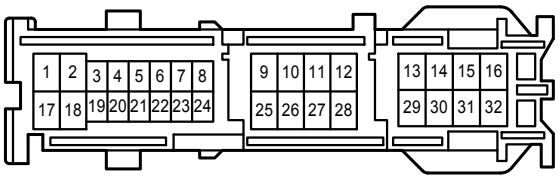

2F
White

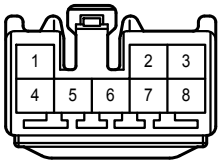

2S
White

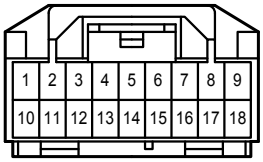

4A
White

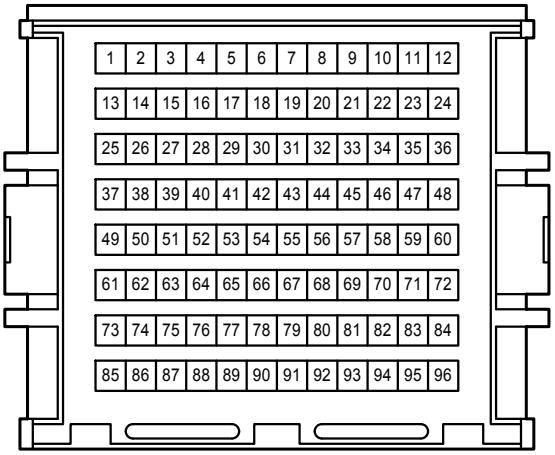

AE1
White

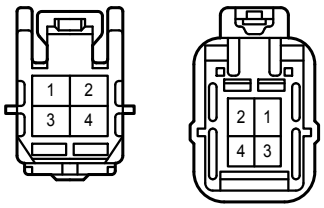

AE3
White

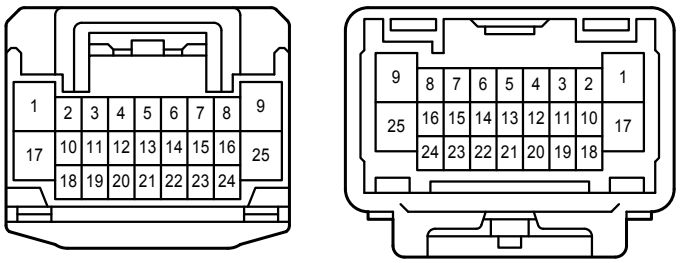

BA2
White

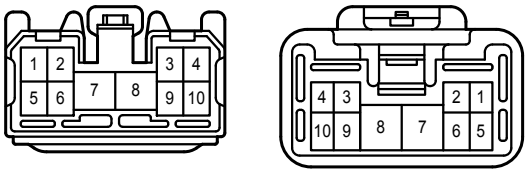

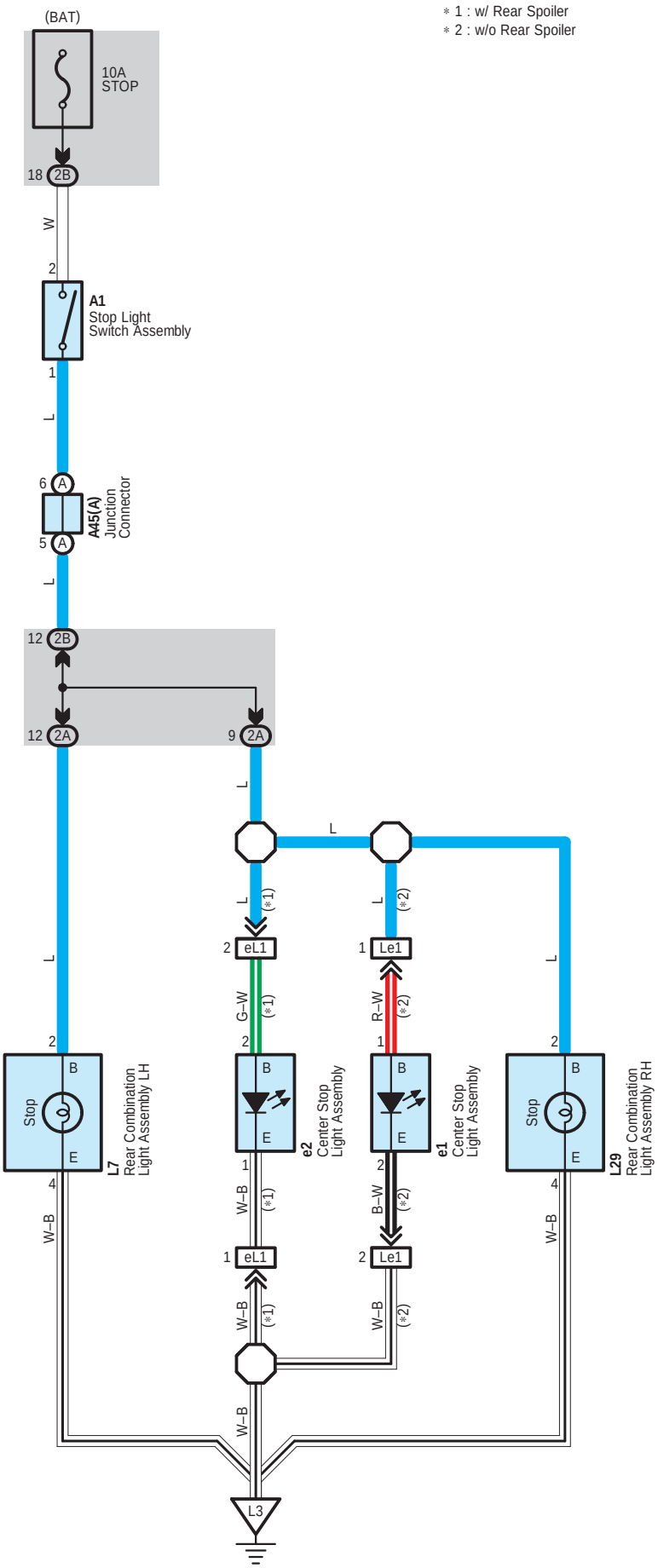
∗ 1 : w/ Rear Spoiler
∗ 2 : w/o Rear Spoiler
(BAT)
10A
STOP
18 2B
W
2
A1
Stop Light
Switch Assembly
1
L
6 A
A45(A)
Junction
Connector
5 A
L
12 2B
12 2A
9 2A
L
L
L (∗1)
L (∗2)
2 eL1
1 Le1
G–W (∗1)
R–W (∗2)
2
1
B
Stop
E
L7
Rear Combination
Light Assembly LH
B
E
e2
Center Stop
Light Assembly
B
E
e1
Center Stop
Light Assembly
B
Stop
E
L29
Rear Combination
Light Assembly RH
4
W–B
1
W–B (∗1)
2
B–W (∗2)
4
W–B
1 eL1
2 Le1
W–B (∗1)
W–B (∗2)
W–B
L3

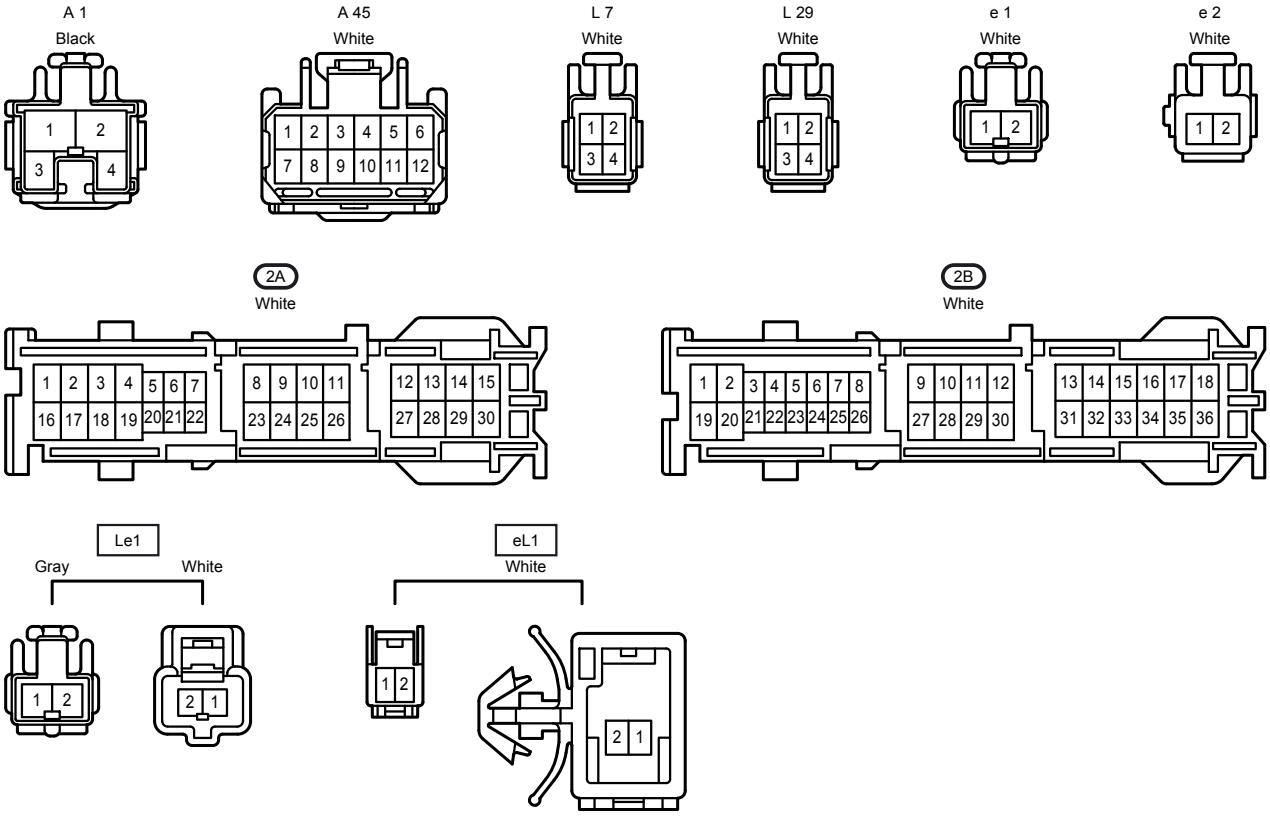
A 1
Black
1 2 3 4
A 45
White
1 2 3 4 5 6
7 8 9 10 11 12
L 7
White
1 2
3 4
L 29
White
1 2
3 4
e 1
White
1 2
e 2
White
1 2
2A
White
1 2 3 4 5 6 7
16 17 18 19 20 21 22
8 9 10 11
23 24 25 26
12 13 14 15
27 28 29 30
2B
White
1 2 3 4 5 6 7 8
19 20 21 22 23 24 25 26
9 10 11 12
27 28 29 30
13 14 15 16 17 18
31 32 33 34 35 36
Le1
Gray
White
1 2
2 1
eL1
White
1 2
2 1

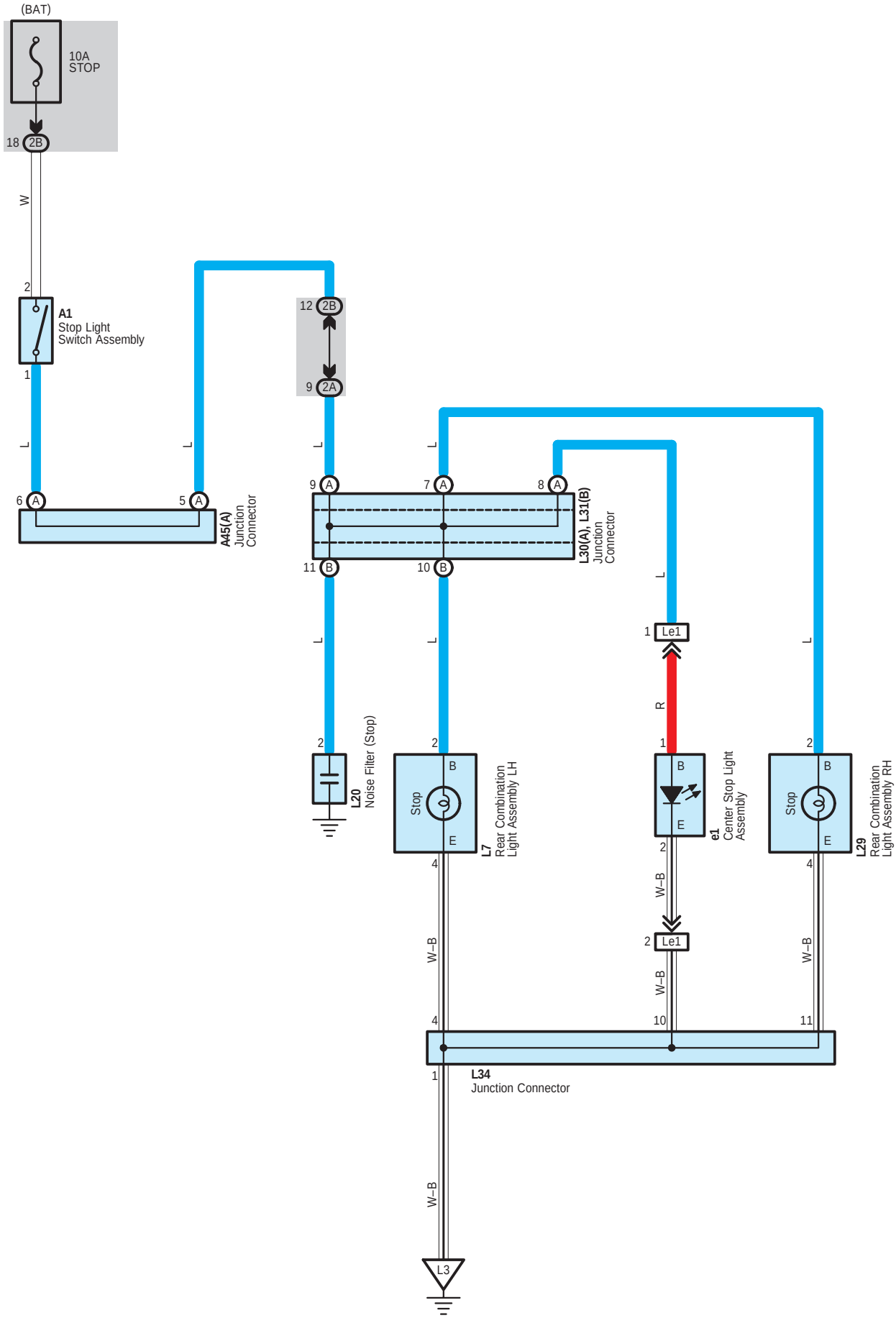
(BAT)
10A
STOP
18 2B
W
2
A1
Stop Light
Switch Assembly
1
L
6 A
5 A
A45(A)
Junction
Connector
12 2B
9 2A
9 A
7 A
8 A
11 B
10 B
L30(A), L31(B)
Junction
Connector
1 Le1
R
2
L20
Noise Filter (Stop)
2
Stop
B
E
L7
Rear Combination
Light Assembly LH
1
B
E
e1
Center Stop Light
Assembly
2
Stop
B
E
L29
Rear Combination
Light Assembly RH
4
W–B
2 Le1
4
10
11
L34
Junction Connector
1
W–B
L3

A 1
Black

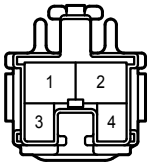

A 45
White

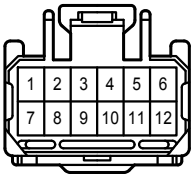

L 7
White

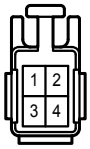

L 20
White

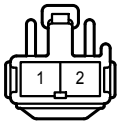

L 29
White

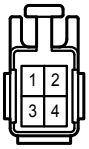

L 30
White

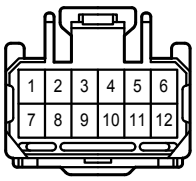

L 31
White

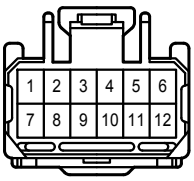

L 34
Blue

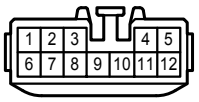

e 1
White

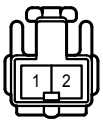

2A
White

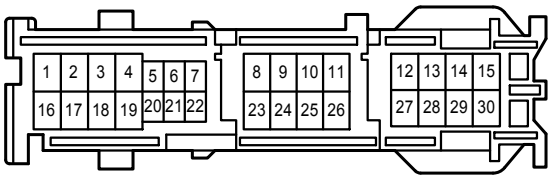

2B
White

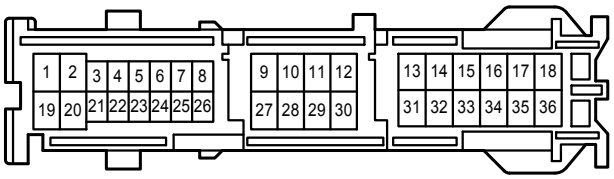

Le1
Gray White

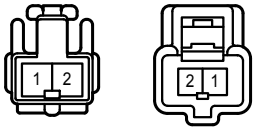

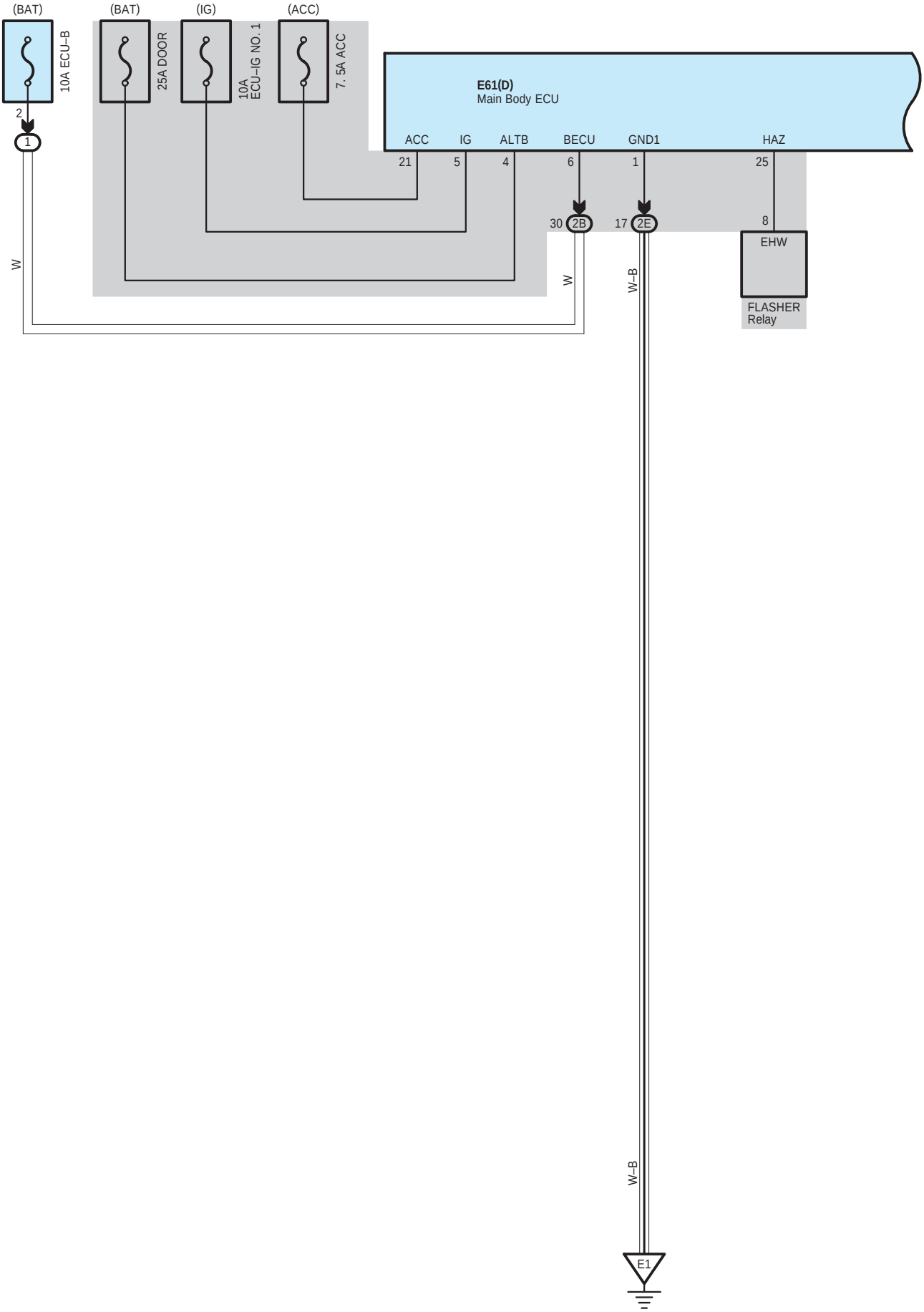
(BAT)
(BAT)
(IG)
(ACC)
10A ECU–B
25A DOOR
10A ECU–IG NO. 1
7. 5A ACC
E61(D)
Main Body ECU
ACC
IG
ALTB
BECU
GND1
HAZ
21
5
4
6
1
25
2
1
30
2B
17
2E
8
EHW
FLASHER Relay
W
W
W–B
W–B
E1

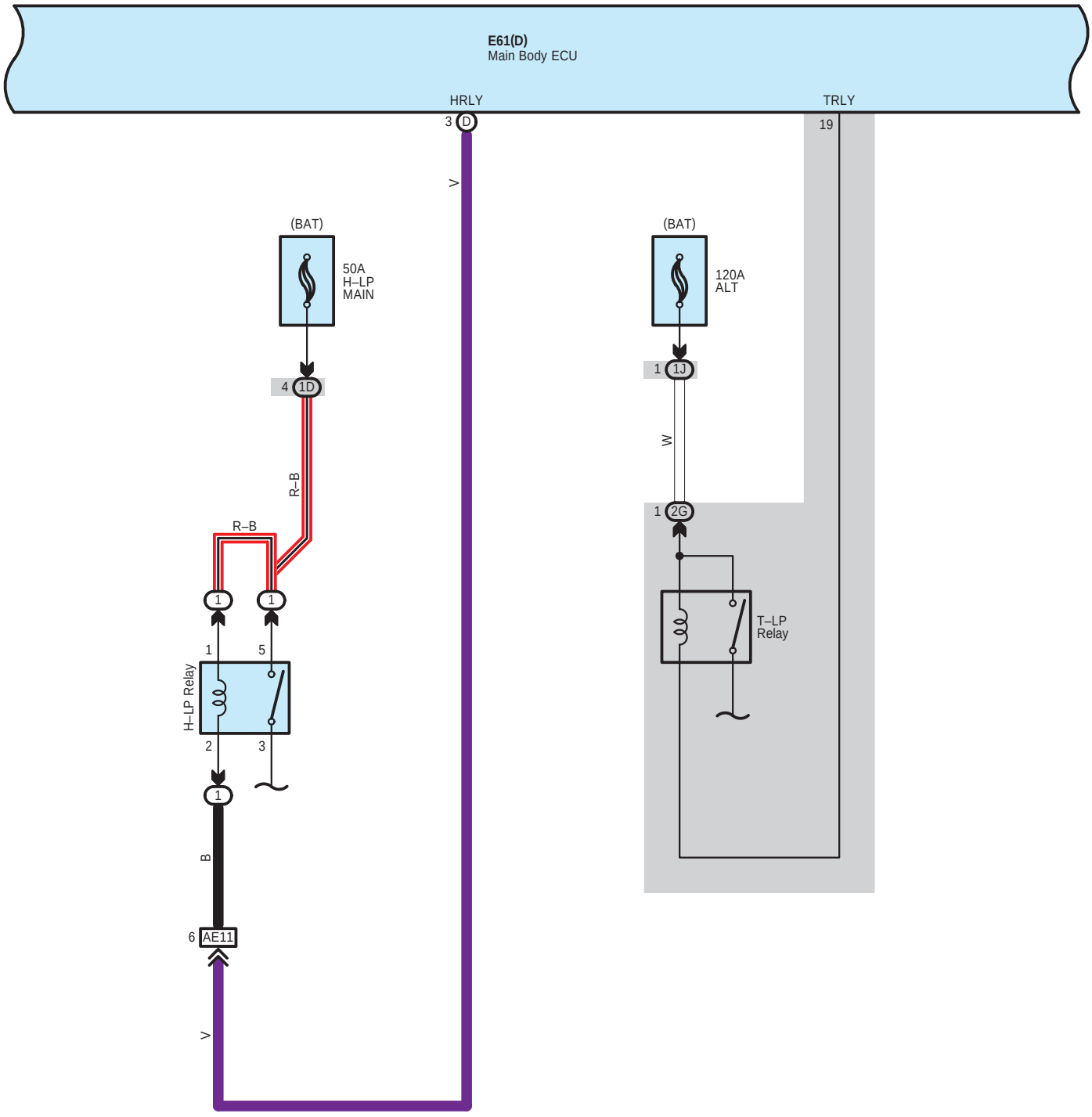
E61(D)
Main Body ECU
HRLY
3 D
V
TRLY
19
(BAT)
50A
H–LP
MAIN
4 1D
R–B
R–B
1
1
1
5
H–LP Relay
2
3
1
B
6 AE11
V
(BAT)
120A
ALT
1 1J
W
1 2G
T–LP
Relay

∗1 : w/ Sliding Roof

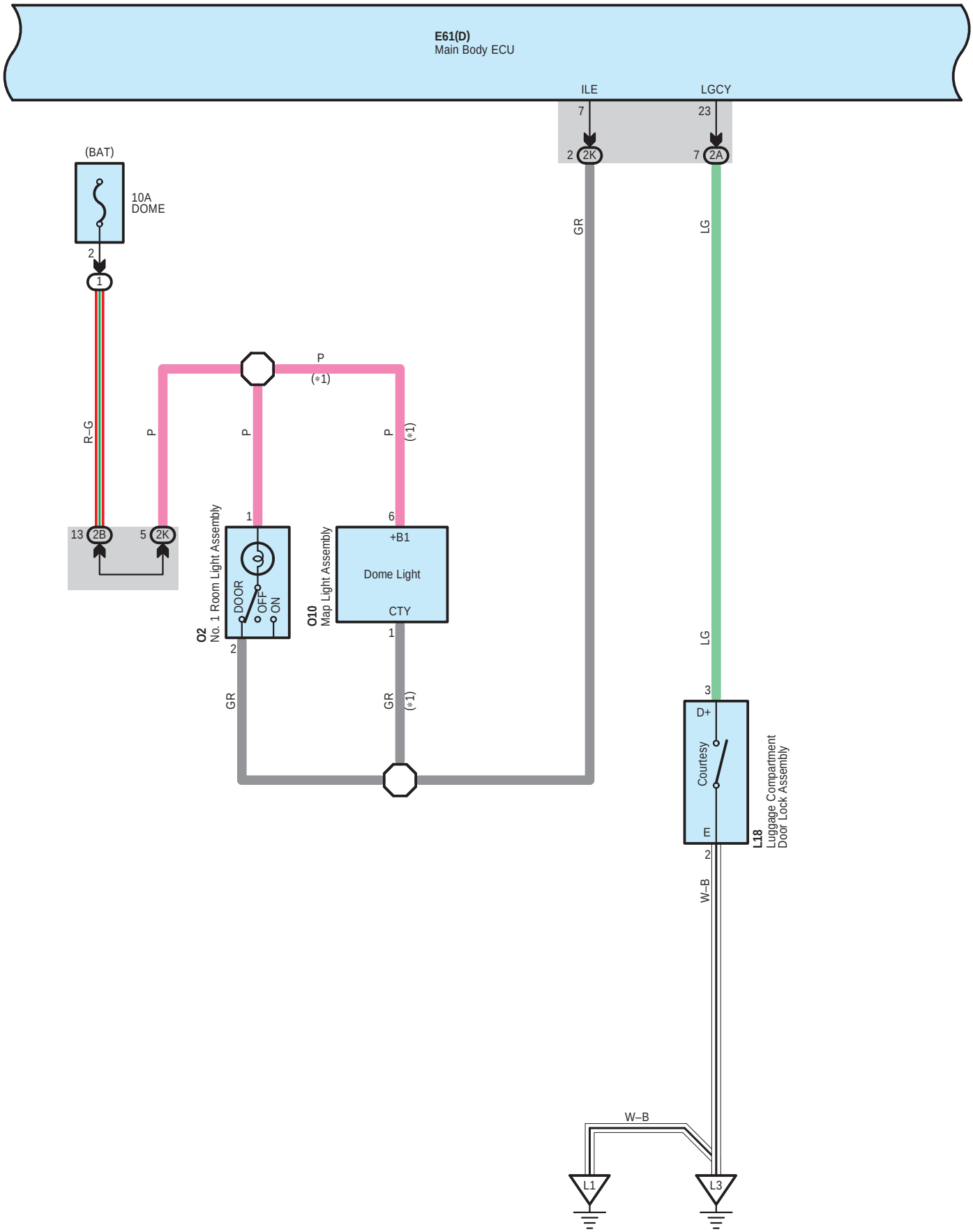

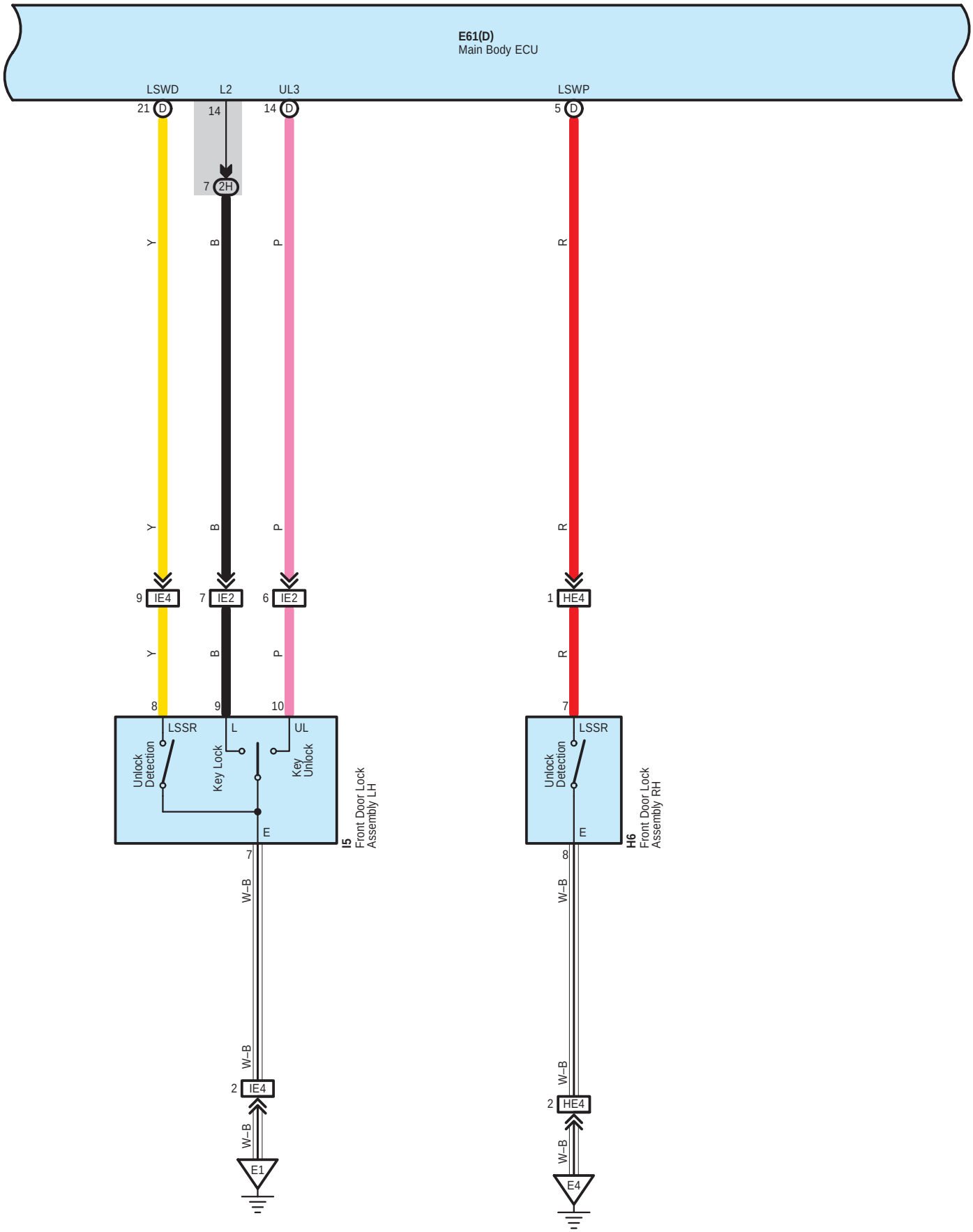
E61(D)
Main Body ECU
LSWD
L2
UL3
LSWP
21 D
14
14 D
5 D
7 2H
Y
B
P
R
9 IE4
7 IE2
6 IE2
1 HE4
8
9
10
7
LSSR
L
UL
LSSR
Unlock Detection
Key Lock
Key Unlock
Unlock Detection
E
I5
Front Door Lock Assembly LH
H6
Front Door Lock Assembly RH
7
8
W–B
2 IE4
2 HE4
E1
E4

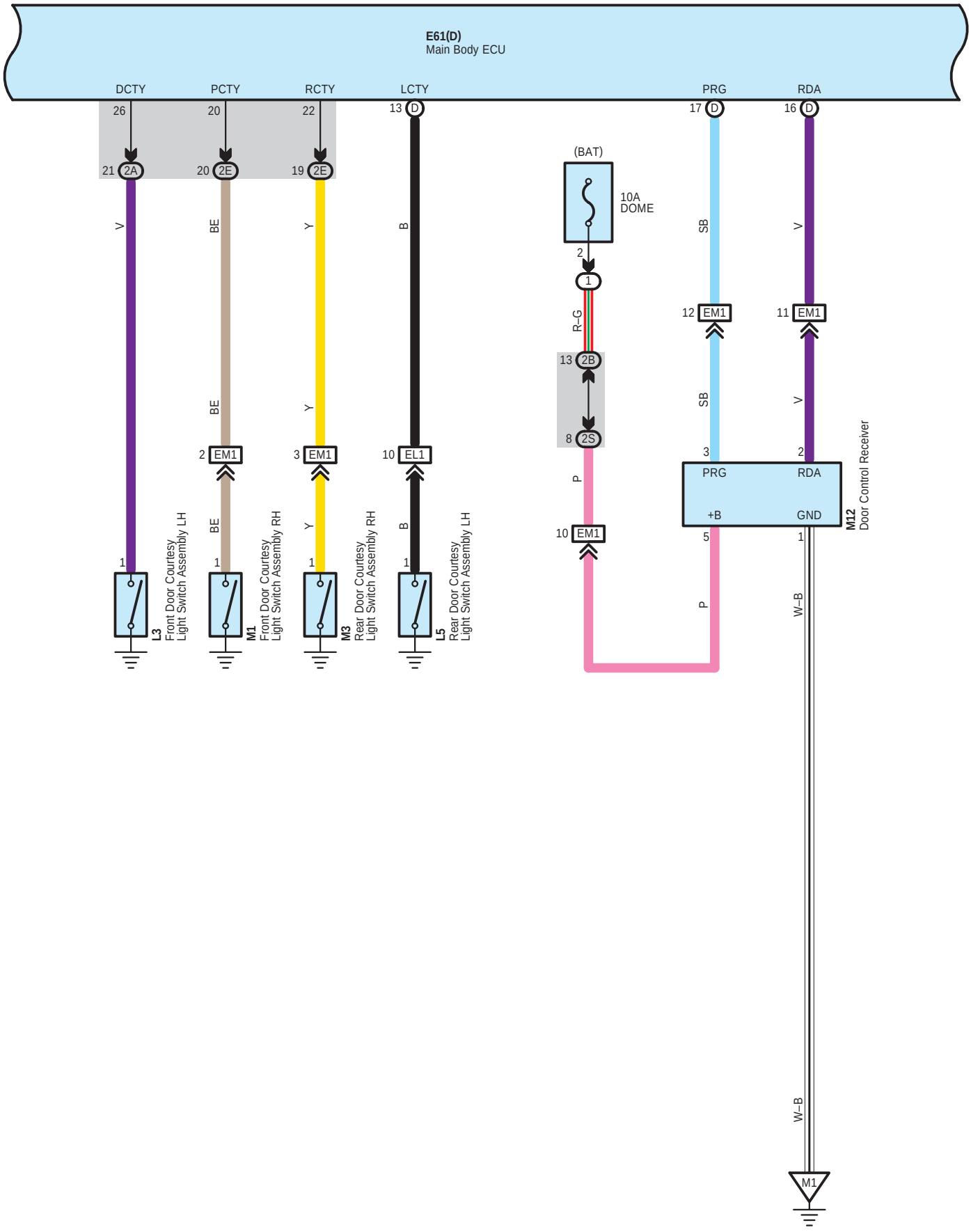
E61(D)
Main Body ECU
DCTY
PCTY
RCTY
LCTY
PRG
RDA
26
21 2A
20
20 2E
22
19 2E
13 D
17 D
16 D
(BAT)
10A
DOME
2
1
R–G
13 2B
8 2S
P
10 EM1
SB
12 EM1
SB
3
V
11 EM1
V
2
PRG
RDA
+B
GND
5
1
P
W–B
W–B
M1
V
BE
BE
2 EM1
BE
1
L3
Front Door Courtesy
Light Switch Assembly LH
Y
Y
3 EM1
Y
1
M3
Rear Door Courtesy
Light Switch Assembly RH
B
B
10 EL1
1
L5
Rear Door Courtesy
Light Switch Assembly LH
M12
Door Control Receiver

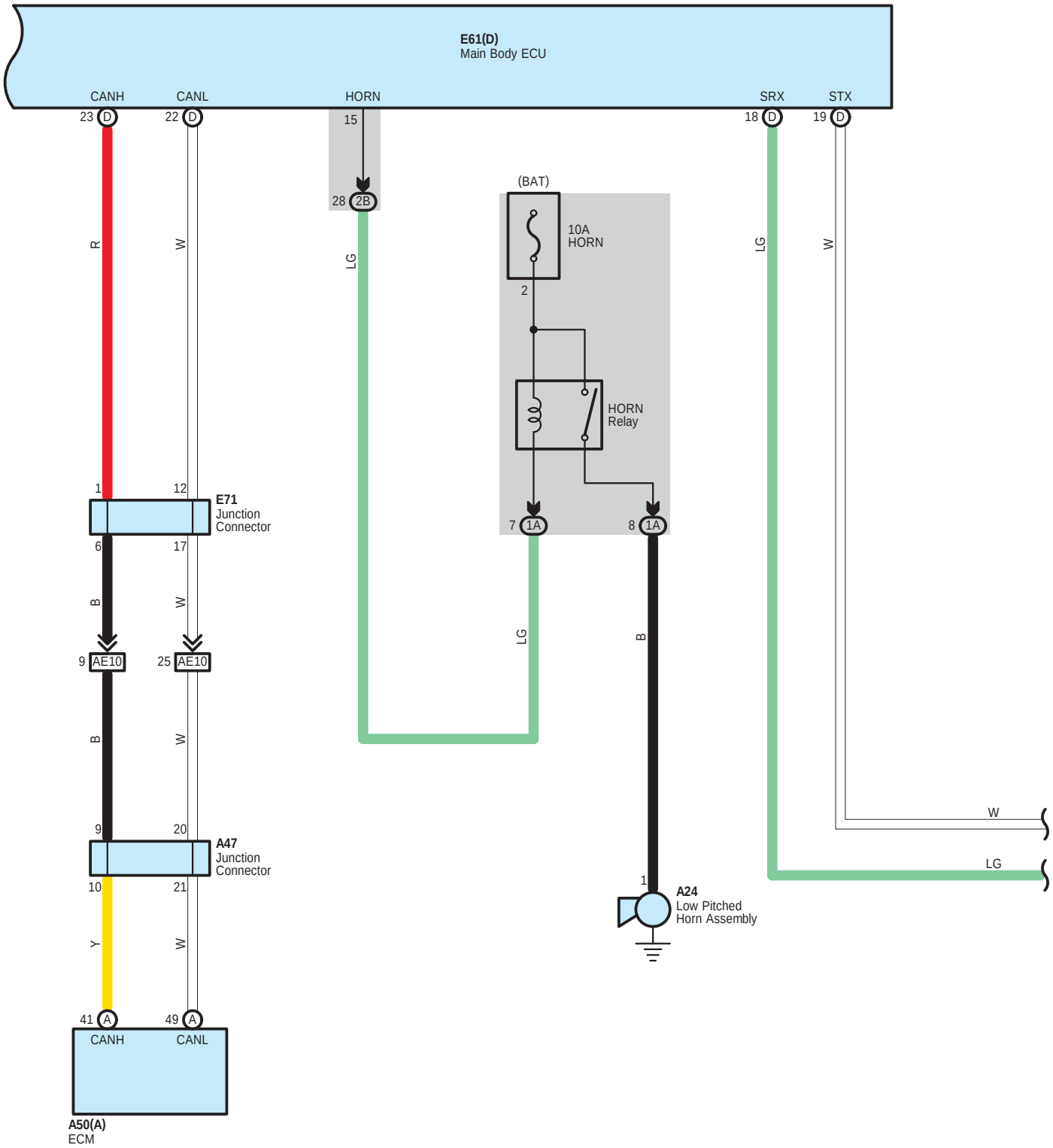
E61(D)
Main Body ECU
CANH
CANL
HORN
SRX
STX
23 D
22 D
15
18 D
19 D
28 2B
(BAT)
10A
HORN
2
HORN
Relay
7 1A
8 1A
R
W
LG
LG
W
1
12
E71
Junction
Connector
6
17
B
W
9 AE10
25 AE10
B
W
9
20
A47
Junction
Connector
10
21
Y
W
41 A
49 A
CANH
CANL
A50(A)
ECM
LG
B
1
A24
Low Pitched
Horn Assembly
W
LG

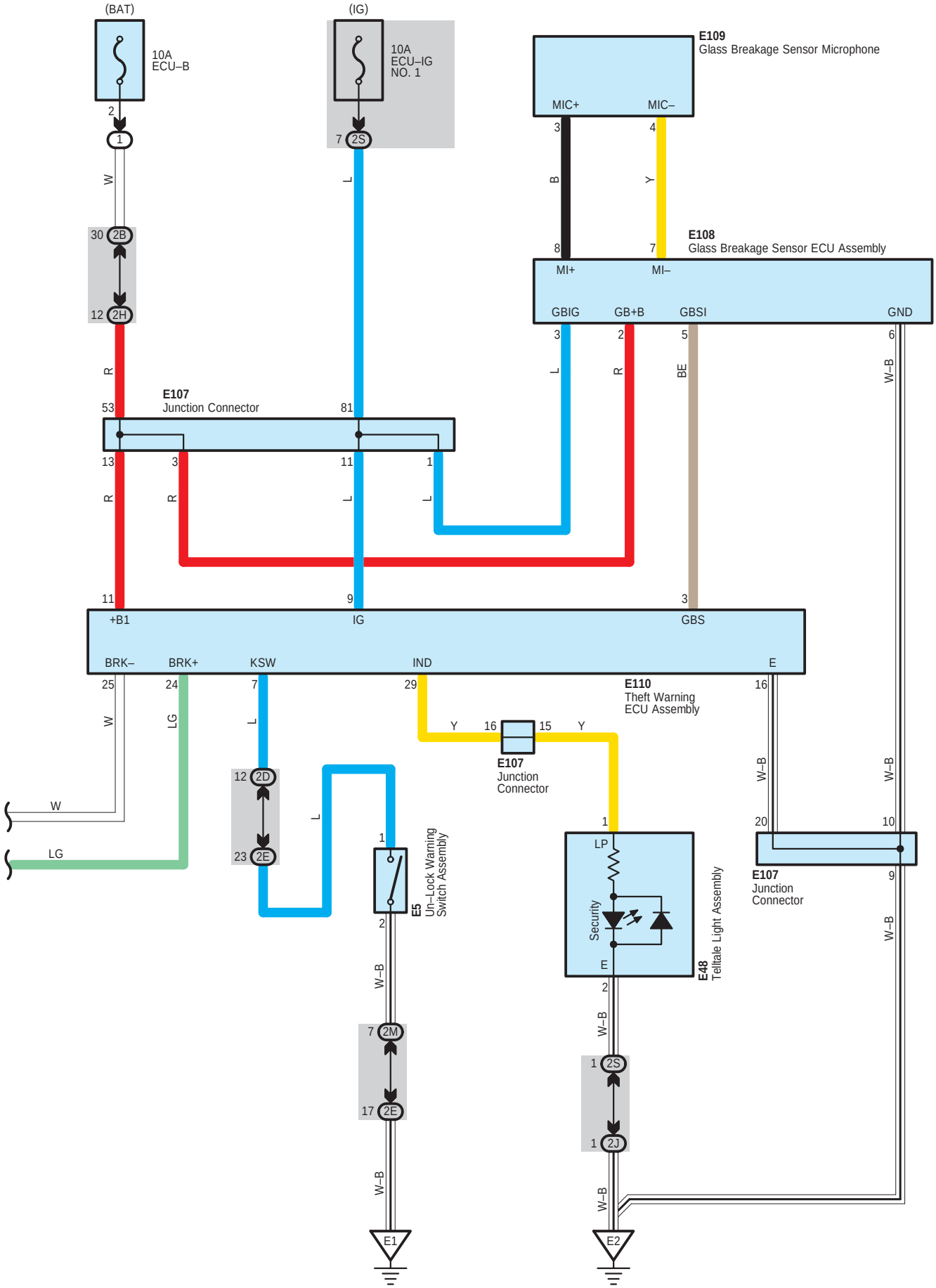
(BAT)
10A
ECU–B
(IG)
10A
ECU–IG
NO. 1
E109
Glass Breakage Sensor Microphone
MIC+
MIC–
E108
Glass Breakage Sensor ECU Assembly
MI+
MI–
GBIG
GB+B
GBSI
GND
E107
Junction Connector
+B1
IG
GBS
BRK–
BRK+
KSW
IND
E
E110
Theft Warning
ECU Assembly
E107
Junction
Connector
E5
Un–Lock Warning
Switch Assembly
E48
Telltale Light Assembly
Security
LP
E1
E2

A 24
Black

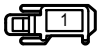

A 47
White

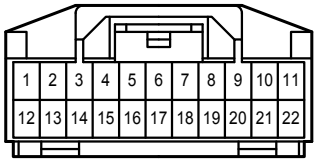

A 50
Black

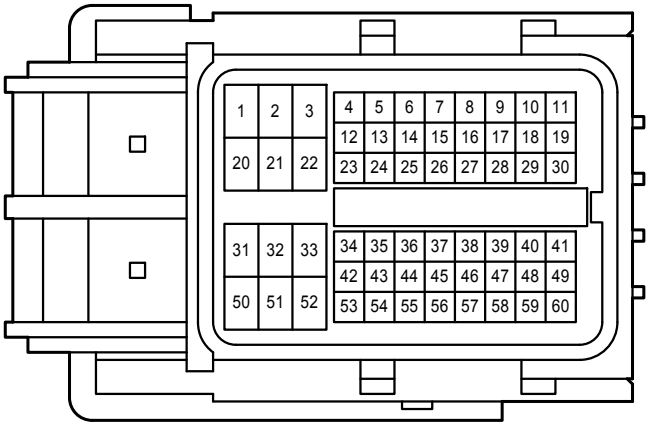

E 5
White

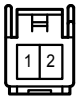

E 48
Black

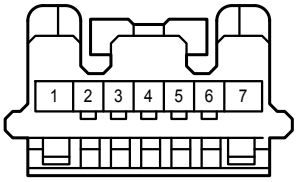

E 61
White

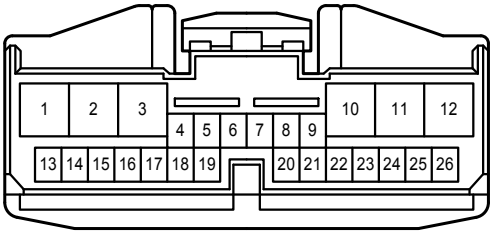

E 71
White

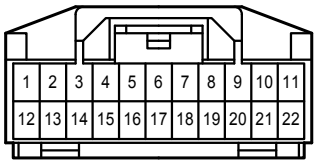

E107
White

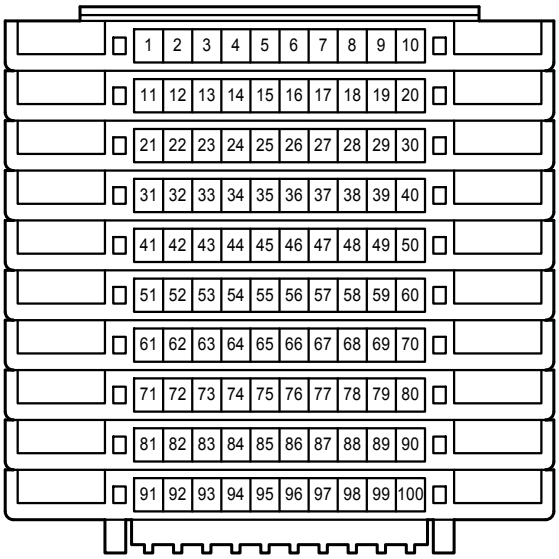

E108
White

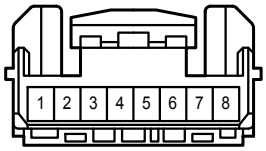

E109
White

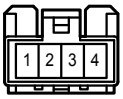

E110
White

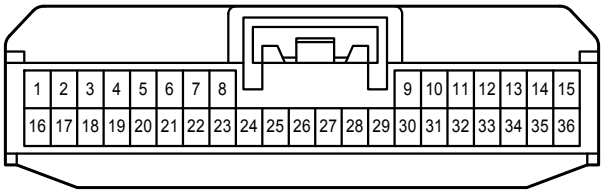

H 6
White

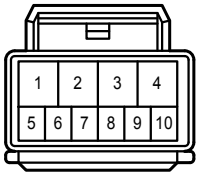

I 5
White

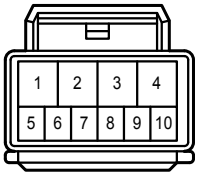

L 3
Black



L 5
Black



L 18
Black

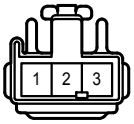

M 1
Black



M 3
Black



M 12
White

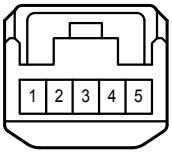

O 2
White

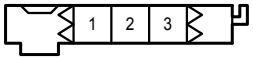

O 10
Black

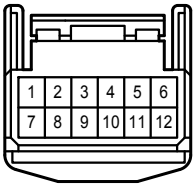

1A
White

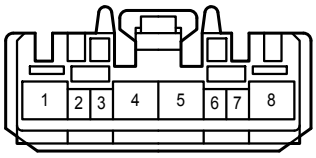

1D
White

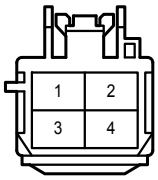

1J

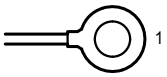

2A
White

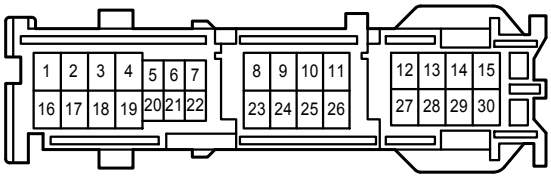

2B
White

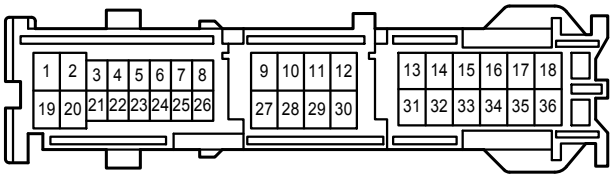

2D
White

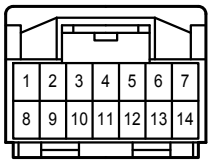

2E
White

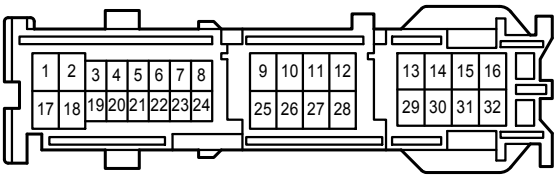

2G
White

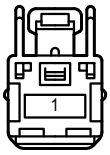

2H
White

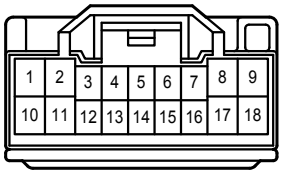

2J
White

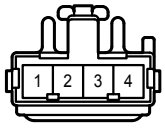

2K
White

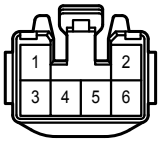

2M
White

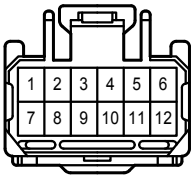

2S
White

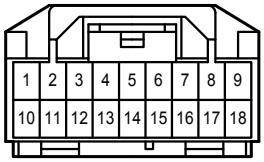

AE10
Gray

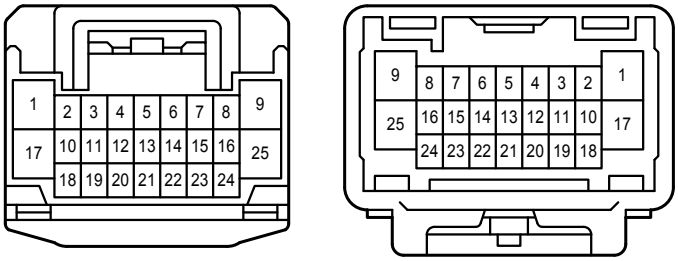

AE11
White

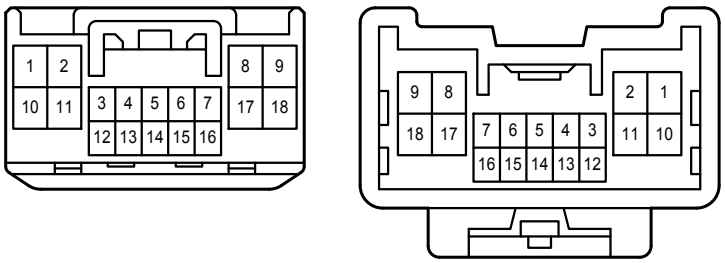

EL1
White

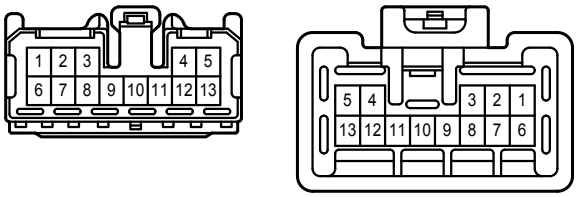

EM1
Gray

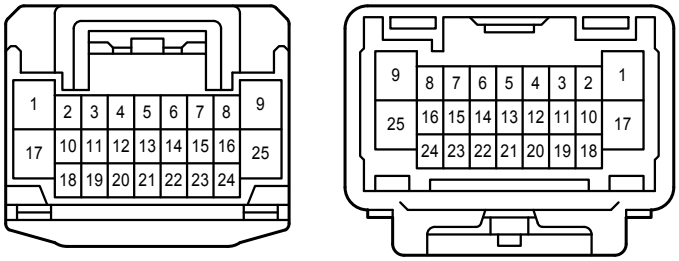

HE4
White

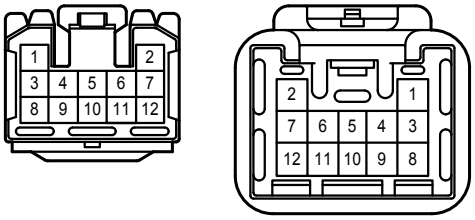

IE2
White

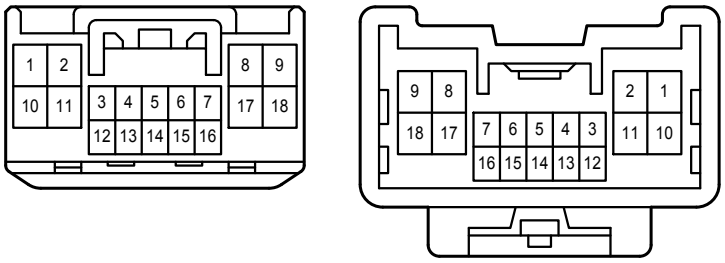

IE4
White

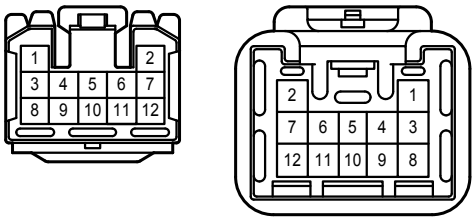

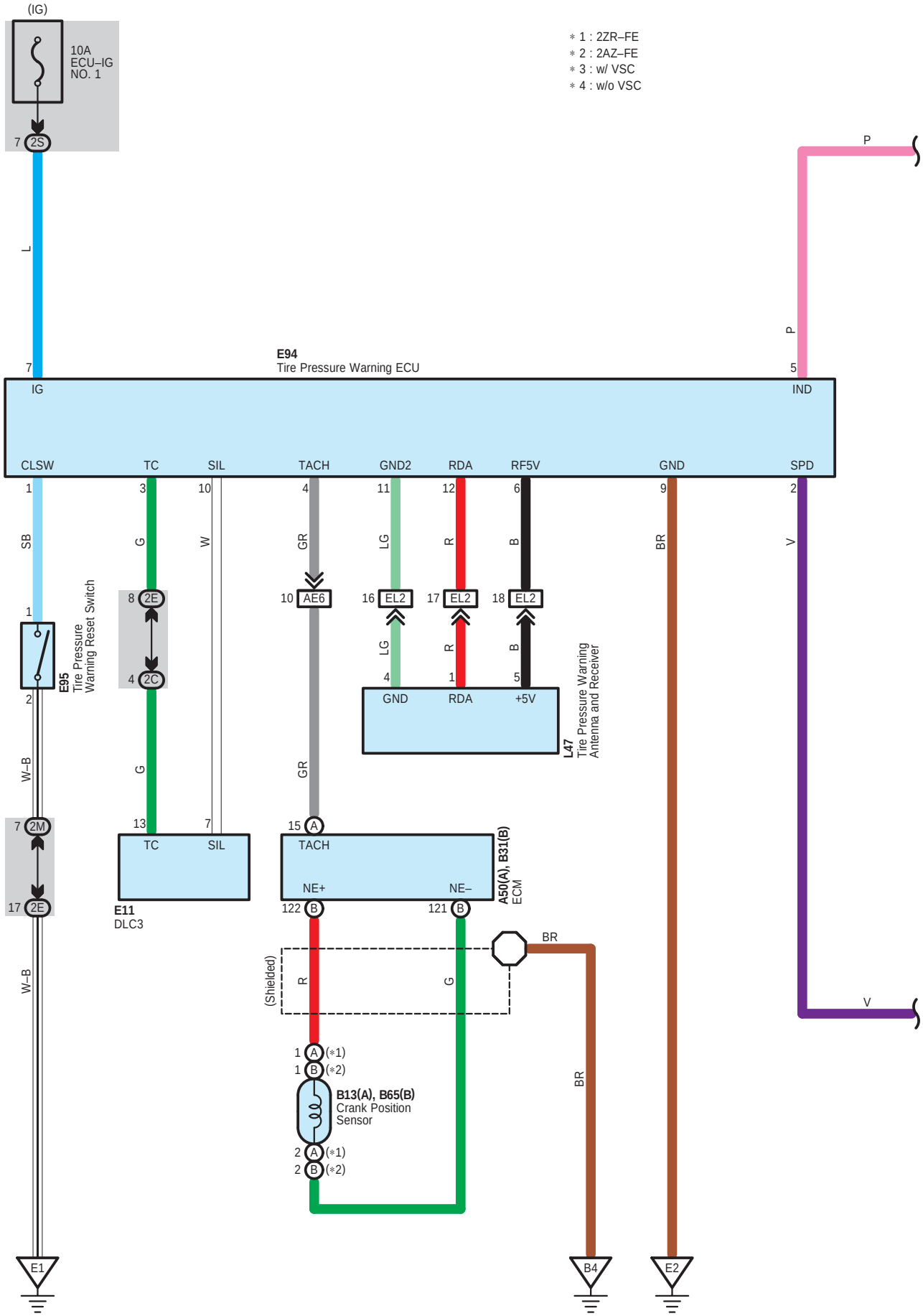

* 1 : 2ZR–FE
* 2 : 2AZ–FE
* 3 : w/ VSC
* 4 : w/o VSC

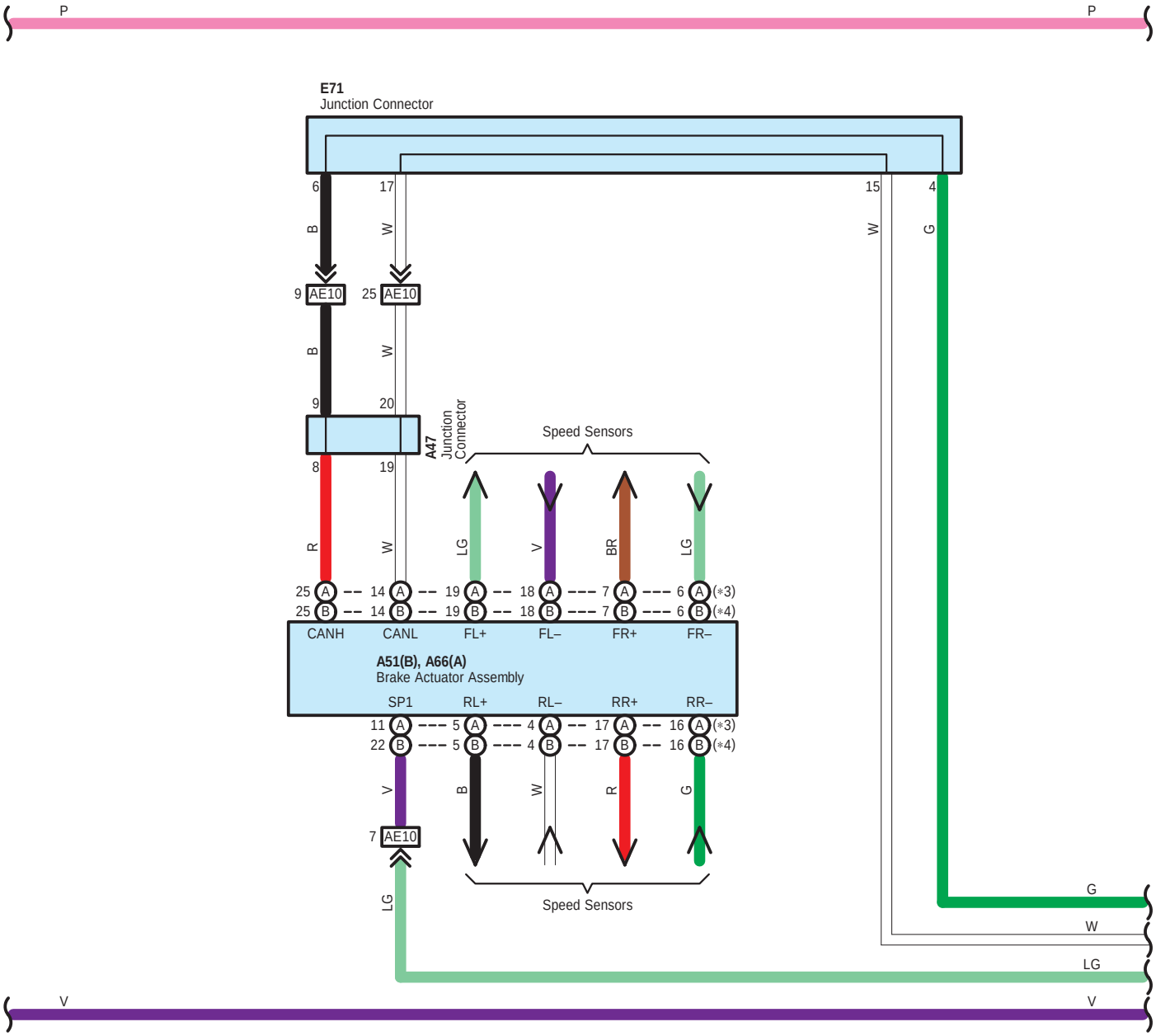
P
P
E71
Junction Connector
6
17
15
4
B
W
W
G
9 AE10
25 AE10
B
W
9
20
A47
Junction
Connector
Speed Sensors
8
19
R
W
LG
V
BR
LG
25 A
25 B
14 A
14 B
19 A
19 B
18 A
18 B
7 A
7 B
6 A
6 B
(*3)
(*4)
CANH
CANL
FL+
FL–
FR+
FR–
A51(B), A66(A)
Brake Actuator Assembly
SP1
RL+
RL–
RR+
RR–
11 A
22 B
5 A
5 B
4 A
4 B
17 A
17 B
16 A
16 B
(*3)
(*4)
V
B
W
R
G
7 AE10
LG
Speed Sensors
G
W
LG
V
V

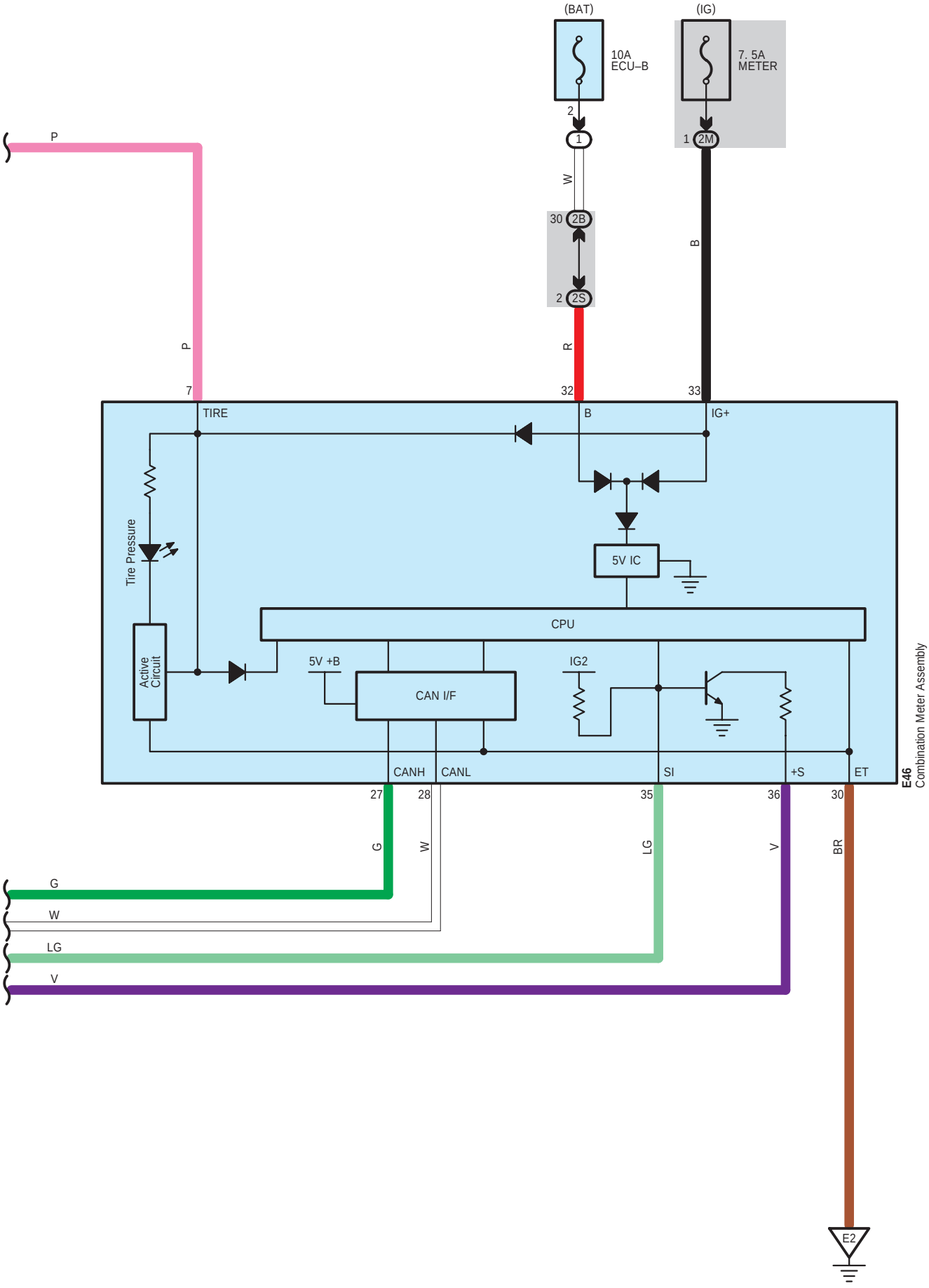
(BAT)
(IG)
10A
ECU–B
7. 5A
METER
2
1
1
2M
W
30
2B
2
2S
B
R
P
P
7
32
33
TIRE
B
IG+
Tire Pressure
5V IC
CPU
Active
Circuit
5V +B
CAN I/F
IG2
CANH
CANL
SI
+S
ET
E46
Combination Meter Assembly
27
28
35
36
30
G
W
LG
V
BR
G
W
LG
V
E2

A 47
White

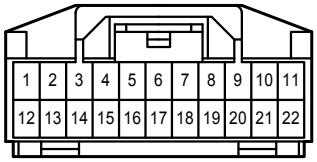

A 50
Black

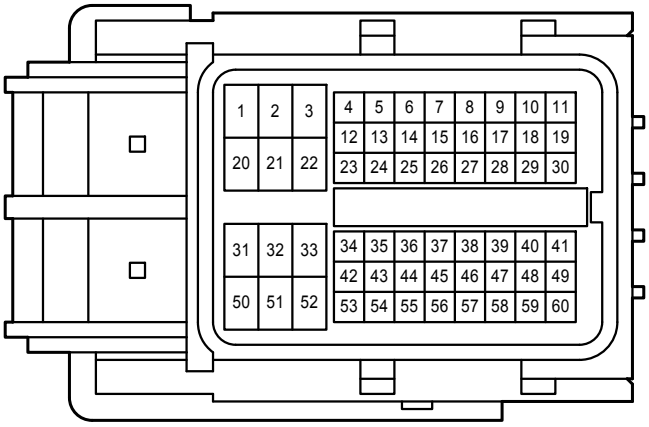

A 51
Gray

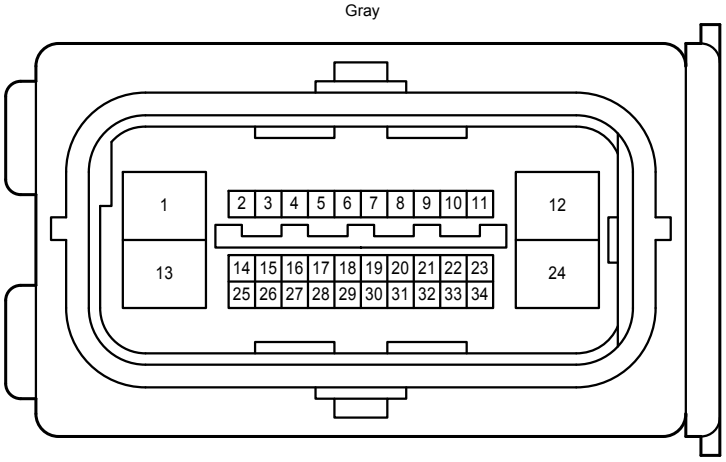

A 66
Black

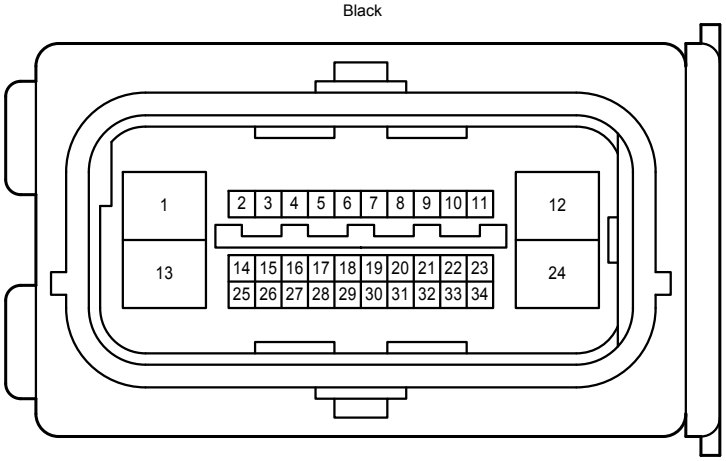

B 13
Black

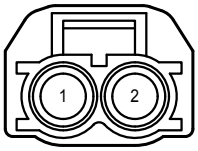

B 31
Black

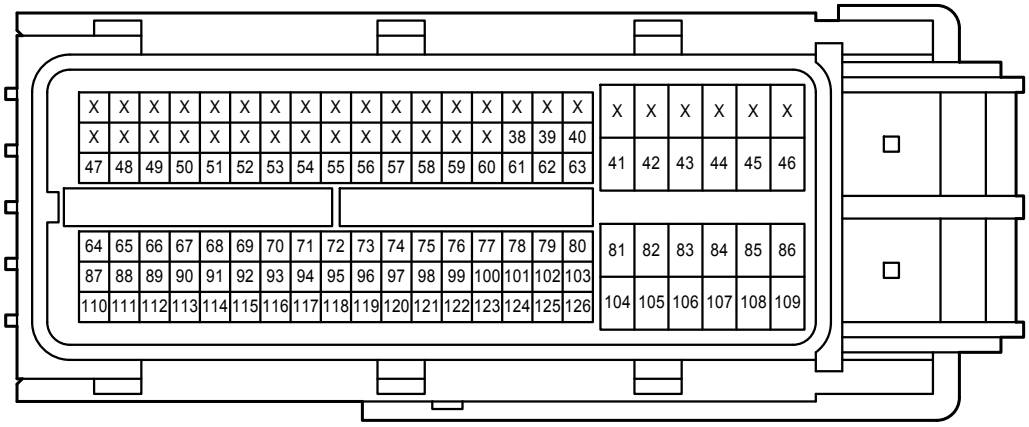

B 65
Gray



E 11
White

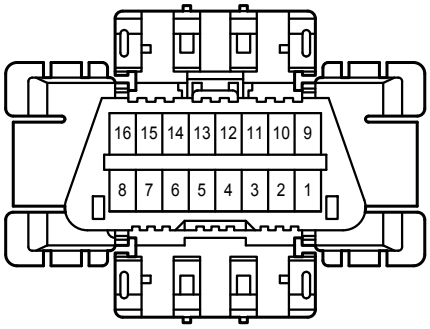

E 46
White

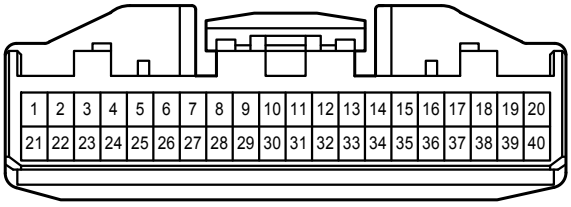

E 71
White

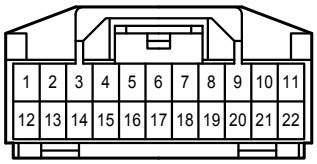

E 94
Black



E 95
Black

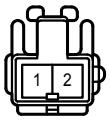

L 47
White

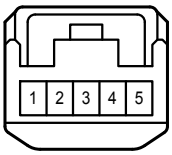

2B
White

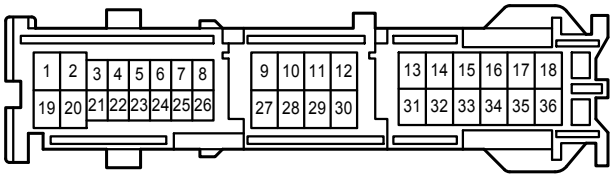

2C
White

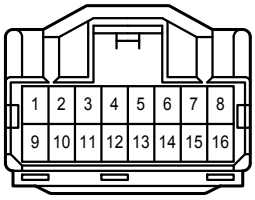

2E
White

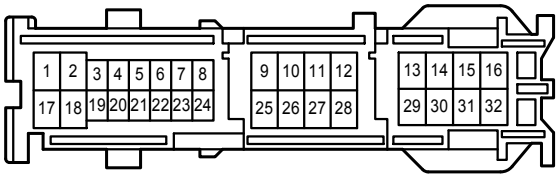

2M
White

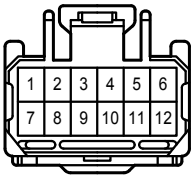

2S
White

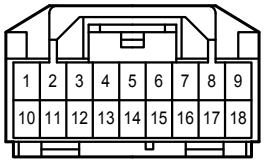

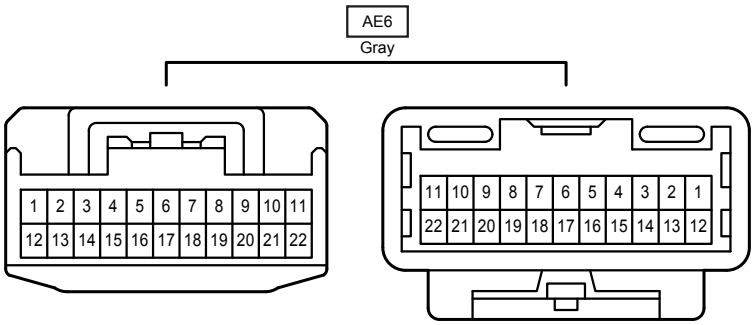
AE6
Gray
1 2 3 4 5 6 7 8 9 10 11
12 13 14 15 16 17 18 19 20 21 22
11 10 9 8 7 6 5 4 3 2 1
22 21 20 19 18 17 16 15 14 13 12

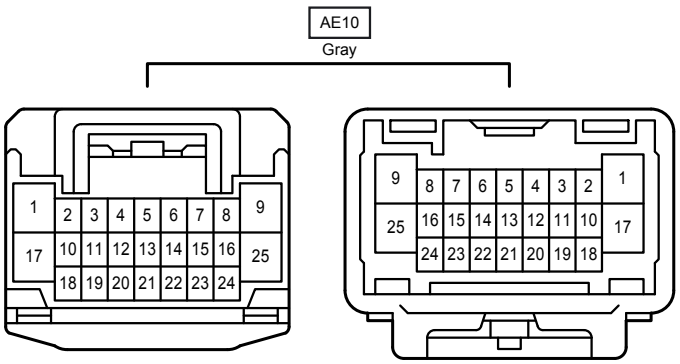
AE10
Gray
1
2 3 4 5 6 7 8
9
17
10 11 12 13 14 15 16
25
18 19 20 21 22 23 24
9
8 7 6 5 4 3 2
1
25
16 15 14 13 12 11 10
17
24 23 22 21 20 19 18

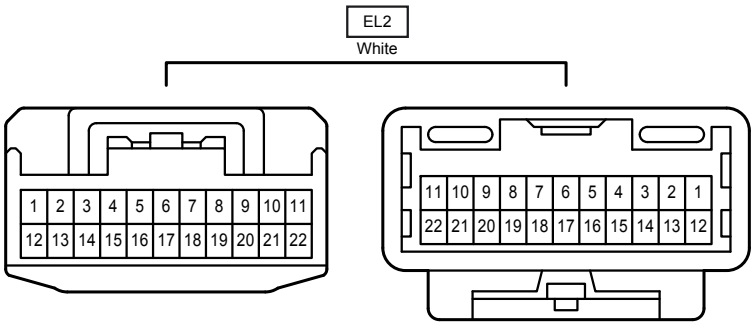
EL2
White
1 2 3 4 5 6 7 8 9 10 11
12 13 14 15 16 17 18 19 20 21 22
11 10 9 8 7 6 5 4 3 2 1
22 21 20 19 18 17 16 15 14 13 12

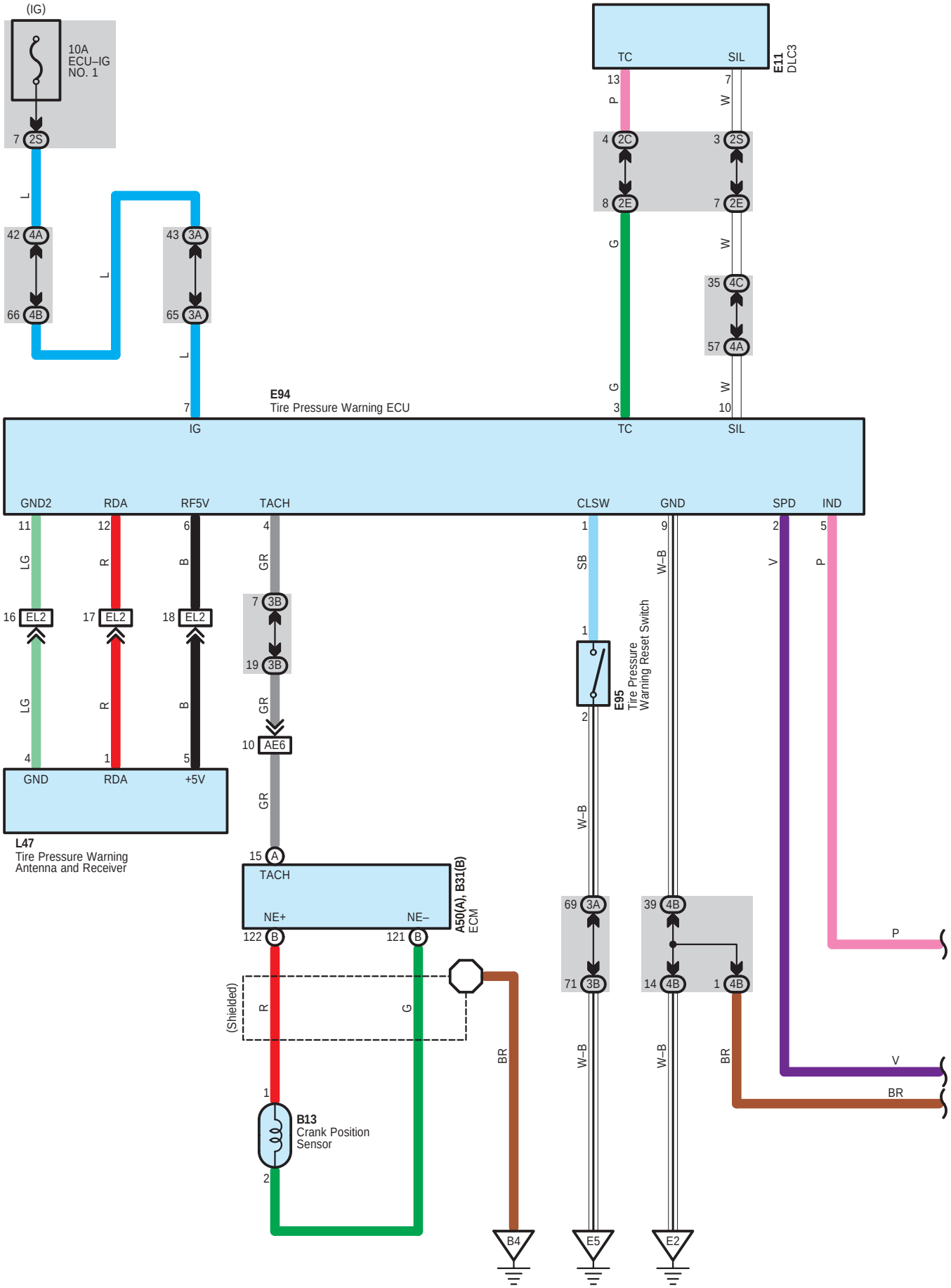
(IG)
10A
ECU–IG
NO. 1
7 2S
L
42 4A
66 4B
L
43 3A
65 3A
L
7
IG
E94
Tire Pressure Warning ECU
TC
SIL
E11
DLC3
13
P
7
W
4 2C
8 2E
3 2S
7 2E
G
W
35 4C
57 4A
G
3
TC
W
10
SIL
GND2
RDA
RF5V
TACH
CLSW
GND
SPD
IND
11
LG
12
R
6
B
4
GR
1
SB
9
W–B
2
V
5
P
16 EL2
17 EL2
18 EL2
7 3B
19 3B
1
2
E95
Tire Pressure
Warning Reset Switch
LG
R
B
GR
10 AE6
W–B
4
GND
1
RDA
5
+5V
L47
Tire Pressure Warning
Antenna and Receiver
15 A
TACH
NE+
NE–
A50(A), B31(B)
ECM
122 B
121 B
69 3A
71 3B
39 4B
14 4B
1 4B
P
(Shielded)
R
G
BR
W–B
W–B
BR
V
BR
1
2
B13
Crank Position
Sensor
B4
E5
E2

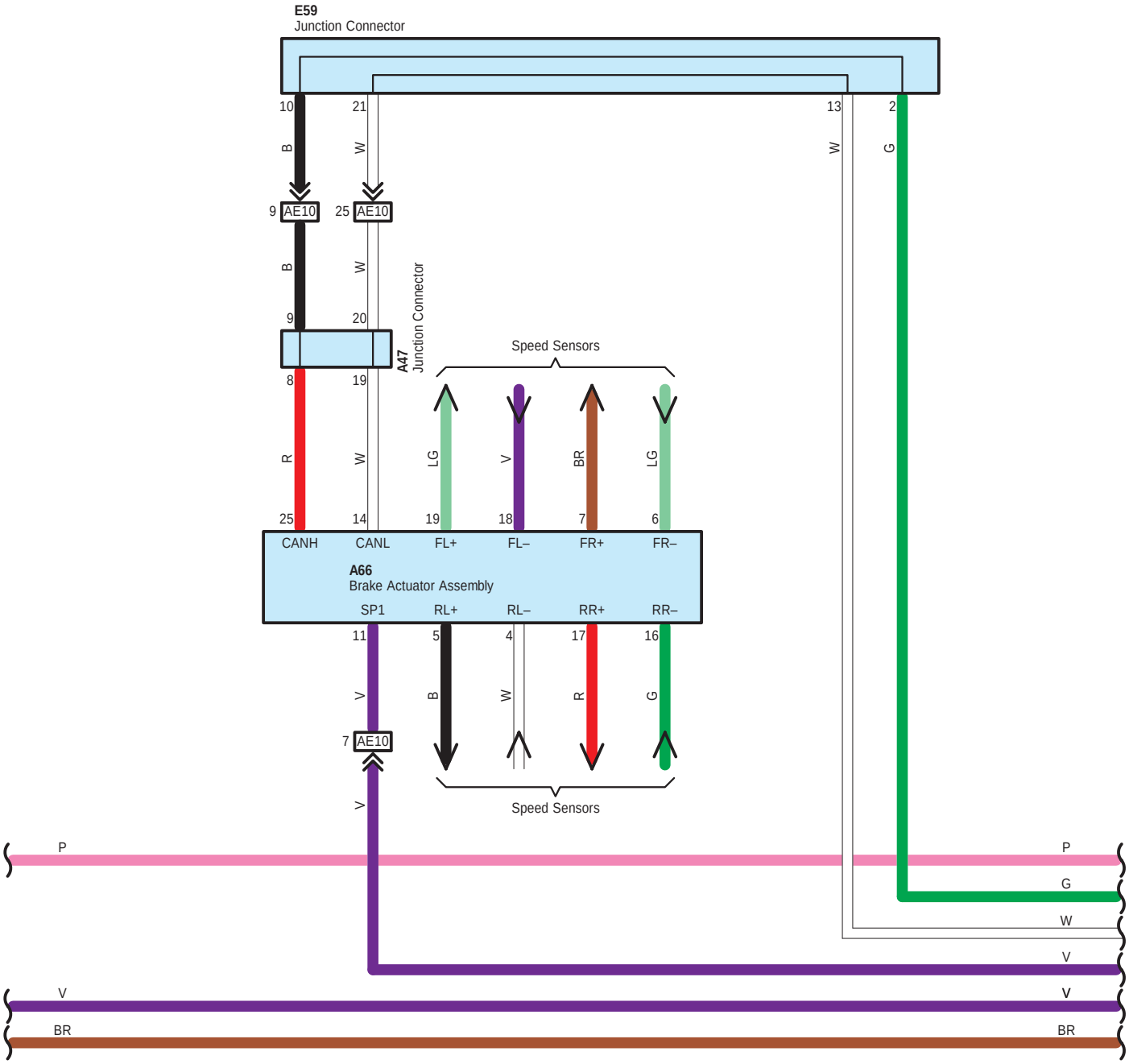
E59
Junction Connector
10
B
9
AE10
B
9
21
W
25
AE10
W
20
A47
Junction Connector
13
W
2
G
Speed Sensors
8
R
25
19
W
14
LG
19
V
18
BR
7
LG
6
CANH
CANL
FL+
FL–
FR+
FR–
A66
Brake Actuator Assembly
SP1
RL+
RL–
RR+
RR–
11
V
7
AE10
V
5
B
4
W
17
R
16
G
Speed Sensors
P
P
G
W
V
V
V
BR
BR

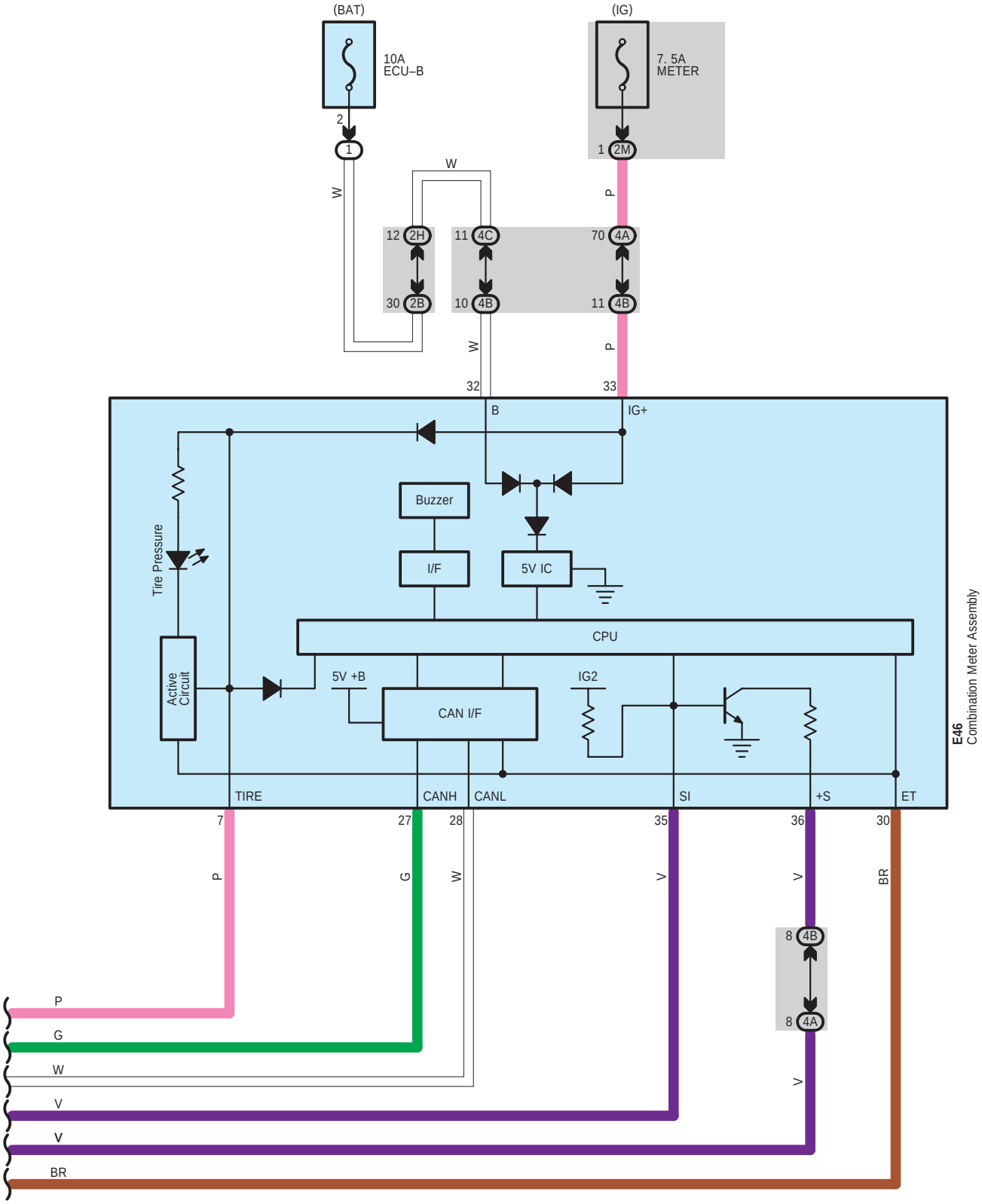
(BAT)
10A
ECU–B
2
1
W
W
12 2H
30 2B
11 4C
10 4B
32
(IG)
7. 5A
METER
1 2M
P
70 4A
11 4B
P
33
B
IG+
Buzzer
I/F
5V IC
Tire Pressure
Active Circuit
CPU
5V +B
CAN I/F
IG2
E46
Combination Meter Assembly
TIRE
CANH
CANL
SI
+S
ET
7
27
28
35
36
30
P
G
W
V
V
BR
8 4B
8 4A
V
P
G
W
V
V
BR

A 47
White

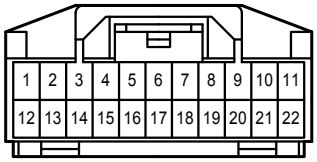

A 50
Black

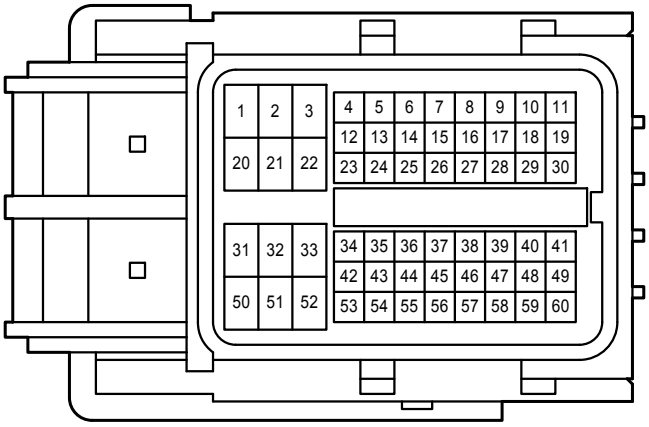

A 66
Black

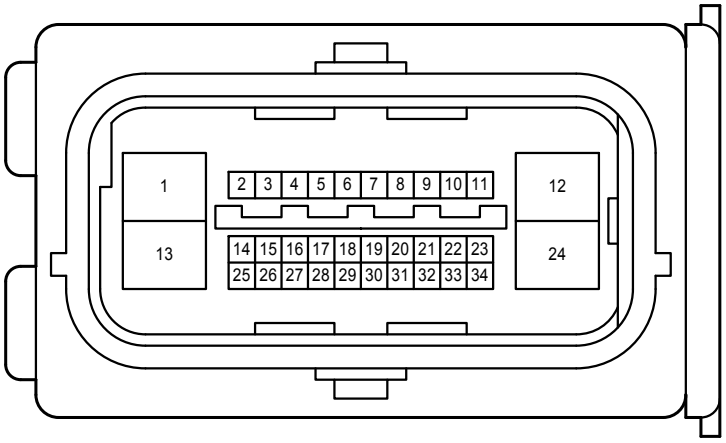

B 13
Black

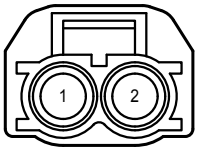

B 31
Black

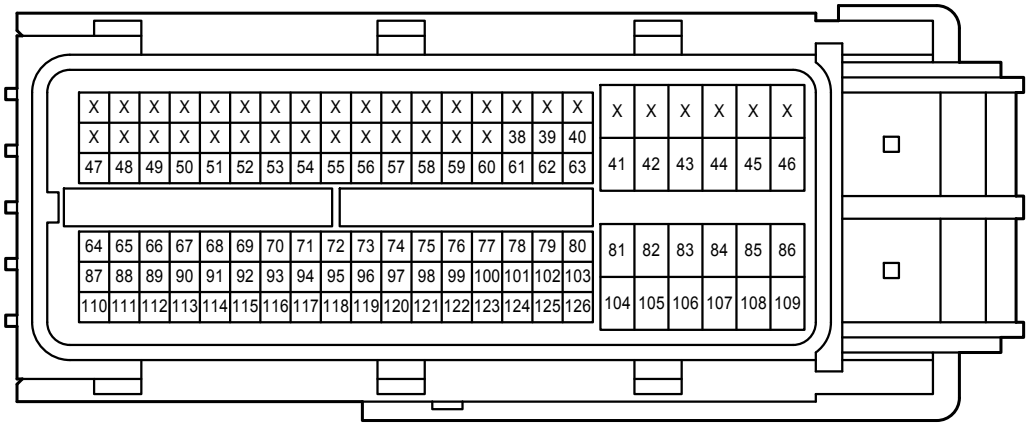

E 46
White

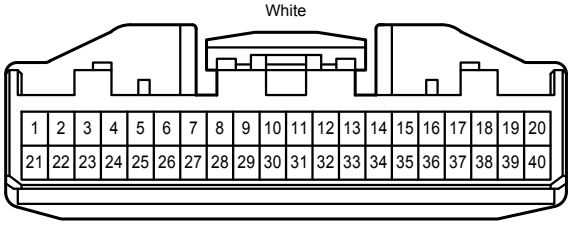

E 59
White

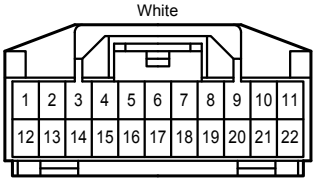

E 94
Black

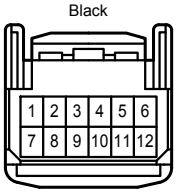

E 95
Black

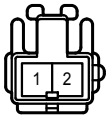

L 47
White

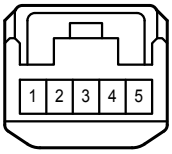

2B
White

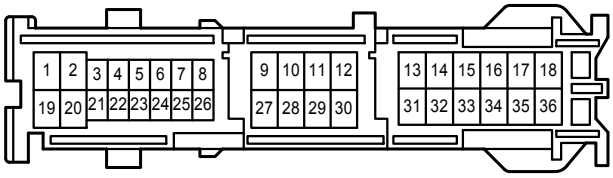

2C
White

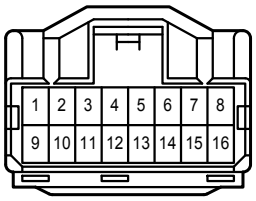

2E
White

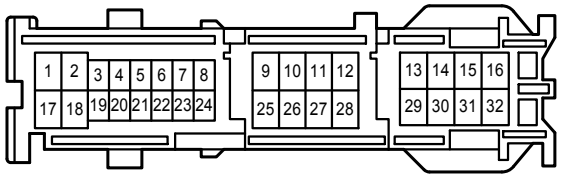

2H
White

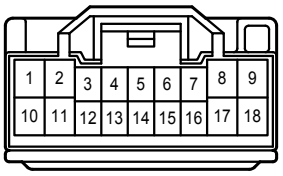

2M
White

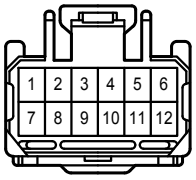

2S
White

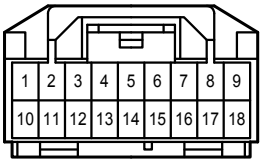

3A
White

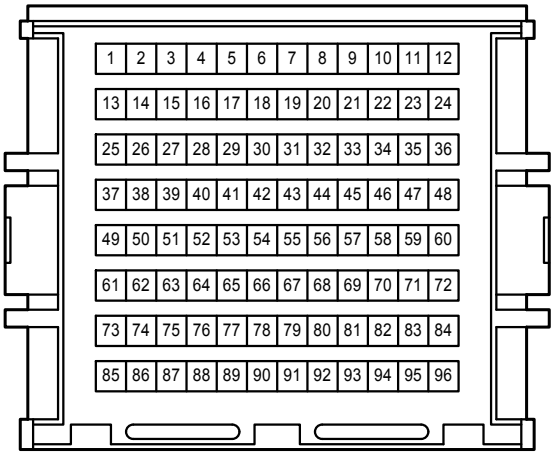

3B
White

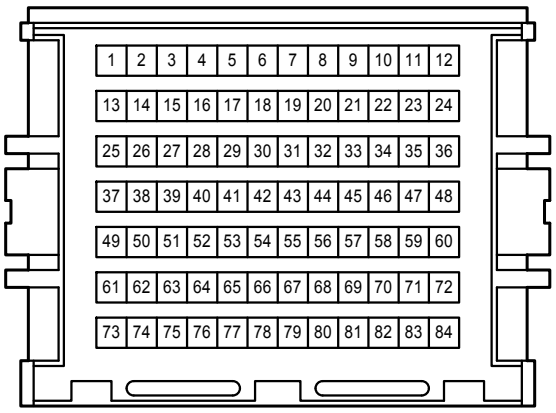

4A
White

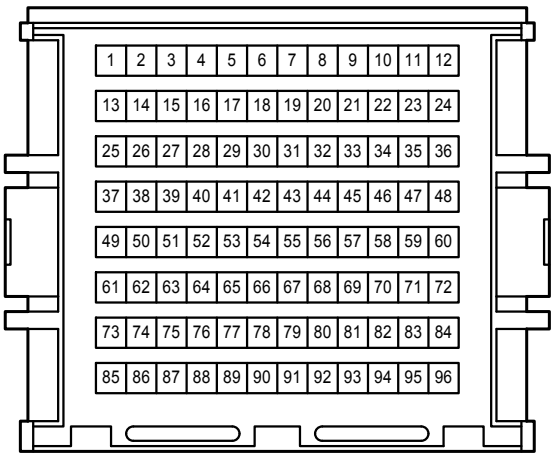

4B
White

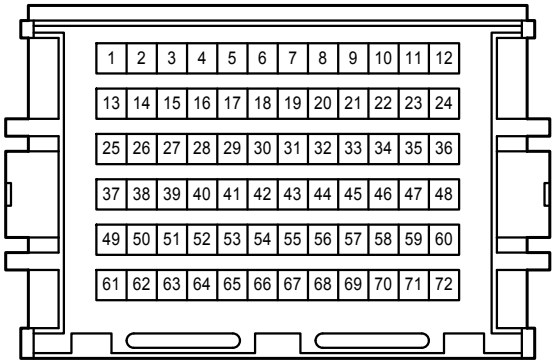

4C
White

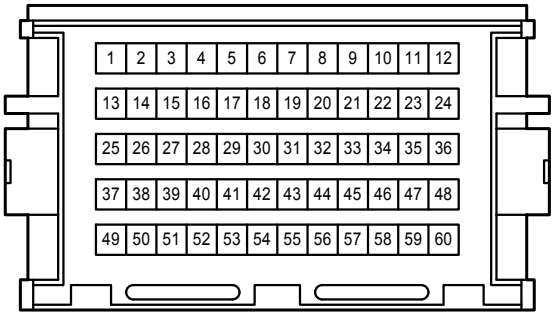

AE6
Gray

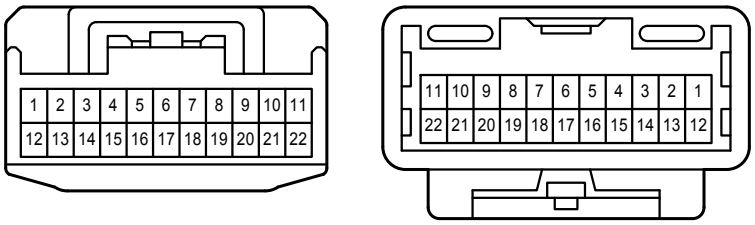

AE10
Gray

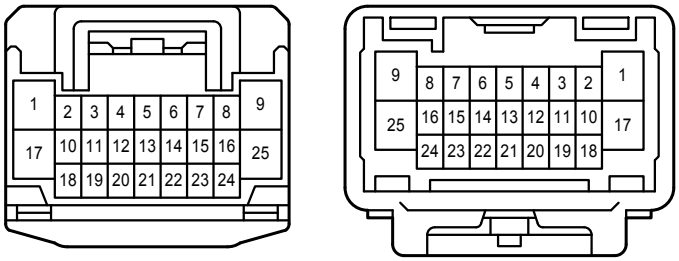

EL2
White

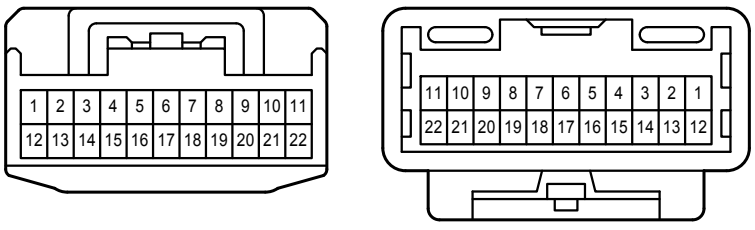

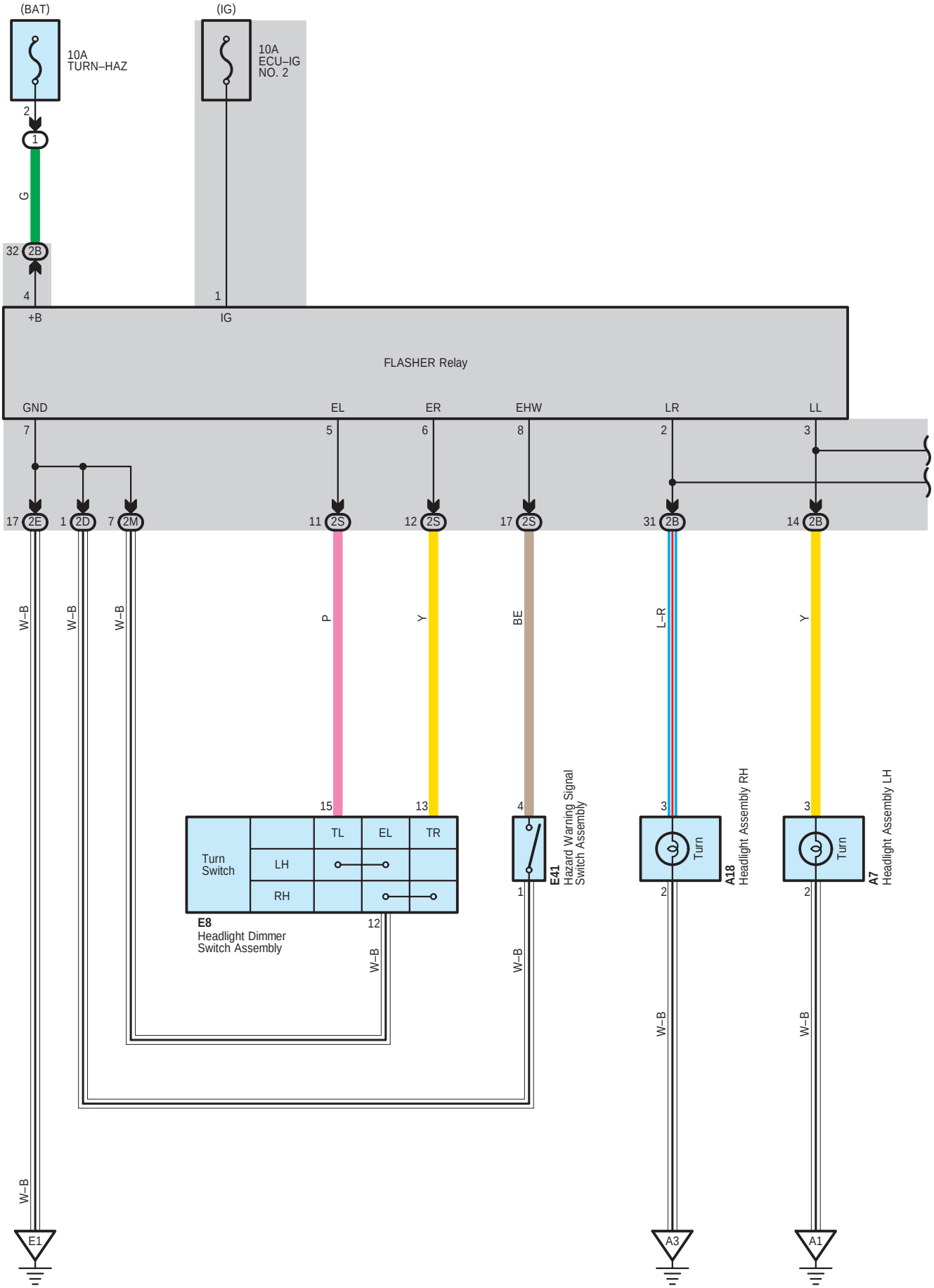
(BAT)
(IG)
10A
TURN–HAZ
10A
ECU–IG
NO. 2
2
1
G
32 2B
4
+B
1
IG
FLASHER Relay
GND
EL
ER
EHW
LR
LL
7
5
6
8
2
3
17 2E
1 2D
7 2M
11 2S
12 2S
17 2S
31 2B
14 2B
W–B
W–B
W–B
P
Y
BE
L–R
Y
15
13
4
3
3
Turn
Switch
TL
EL
TR
LH
RH
E8
Headlight Dimmer
Switch Assembly
12
W–B
E41
Hazard Warning Signal
Switch Assembly
1
W–B
Turn
A18
Headlight Assembly RH
2
W–B
Turn
A7
Headlight Assembly LH
2
W–B
W–B
E1
A3
A1

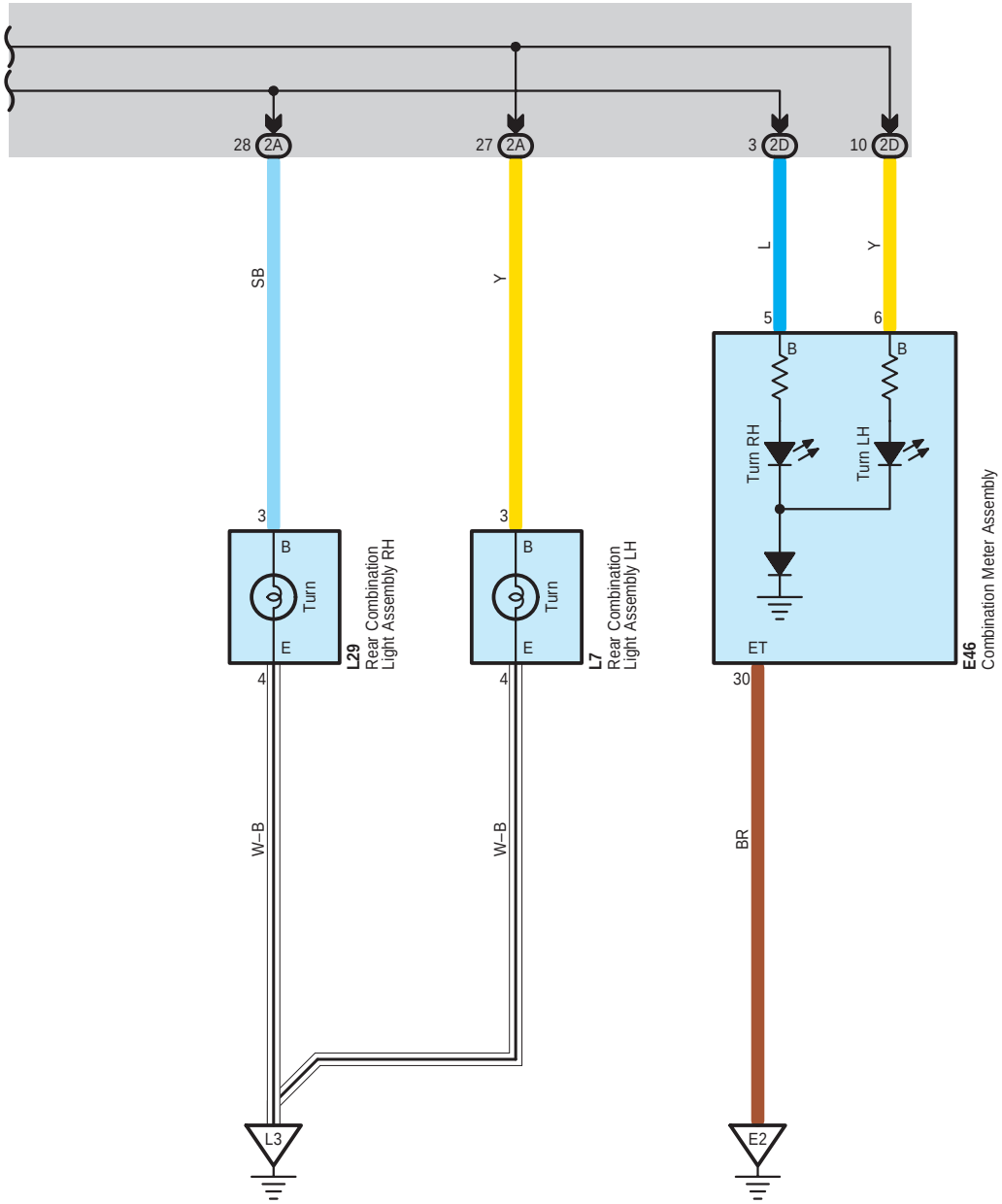
28 2A
27 2A
3 2D
10 2D
SB
Y
L
Y
5
6
B
B
Turn RH
Turn LH
3
3
B
Turn
E
L29
Rear Combination
Light Assembly RH
B
Turn
E
L7
Rear Combination
Light Assembly LH
ET
E46
Combination Meter Assembly
4
4
30
W–B
W–B
BR
L3
E2

A 7
Gray



A 18
Gray



E 8
White

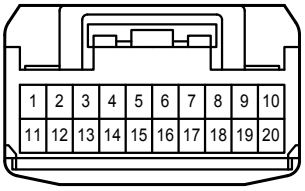

E 41
Gray

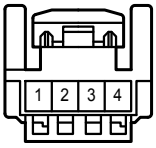

E 46
White

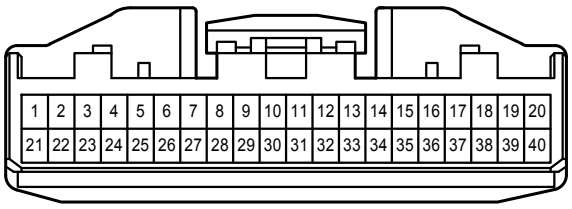

L 7
White

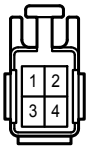

L 29
White

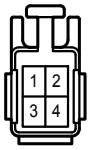

2A
White

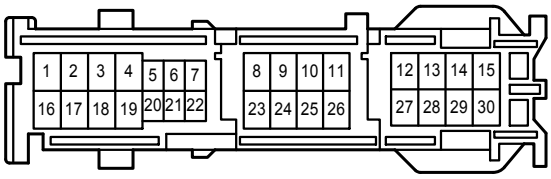

2B
White

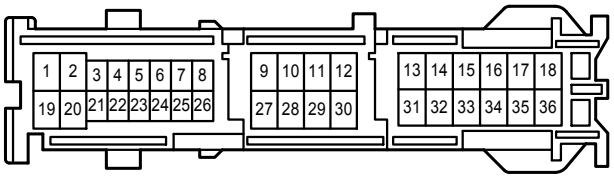

2D
White

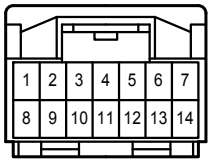

2E
White

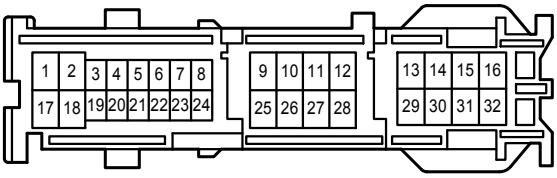

2M
White

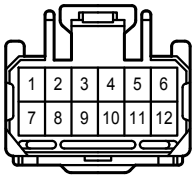

2S
White

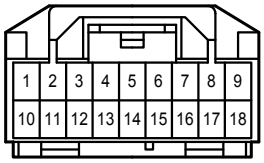

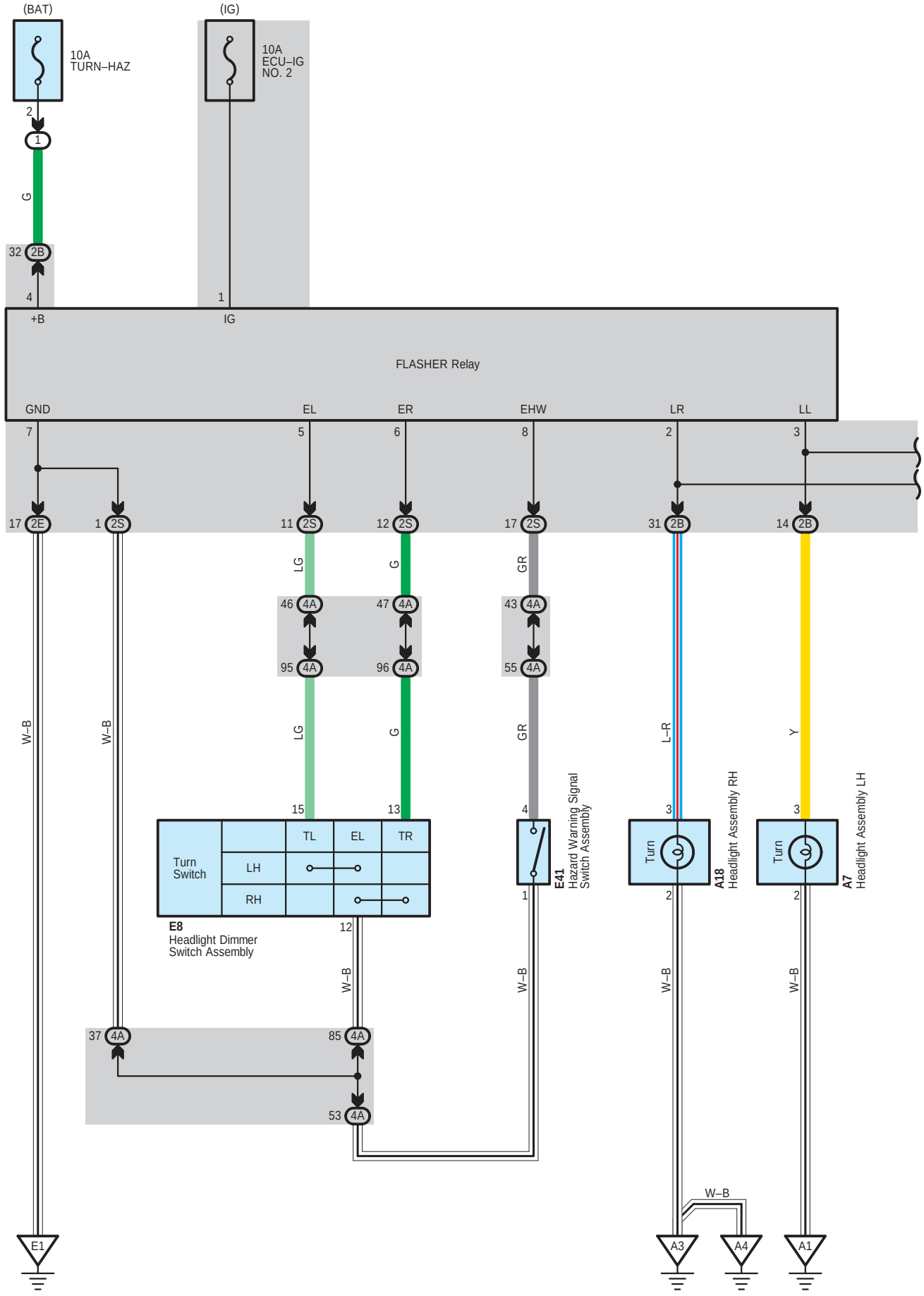
(BAT)
(IG)
10A
TURN–HAZ
10A
ECU–IG
NO. 2
2
1
G
32 2B
4
+B
1
IG
FLASHER Relay
GND
EL
ER
EHW
LR
LL
7
5
6
8
2
3
17 2E
1 2S
11 2S
12 2S
17 2S
31 2B
14 2B
LG
G
GR
46 4A
47 4A
43 4A
95 4A
96 4A
55 4A
W–B
W–B
LG
G
GR
L–R
Y
15
13
4
3
3
Turn Switch
TL
EL
TR
LH
RH
E8
Headlight Dimmer Switch Assembly
12
1
E41
Hazard Warning Signal Switch Assembly
Turn
A18
Headlight Assembly RH
2
Turn
A7
Headlight Assembly LH
2
W–B
W–B
W–B
37 4A
85 4A
53 4A
W–B
E1
A3
A4
A1

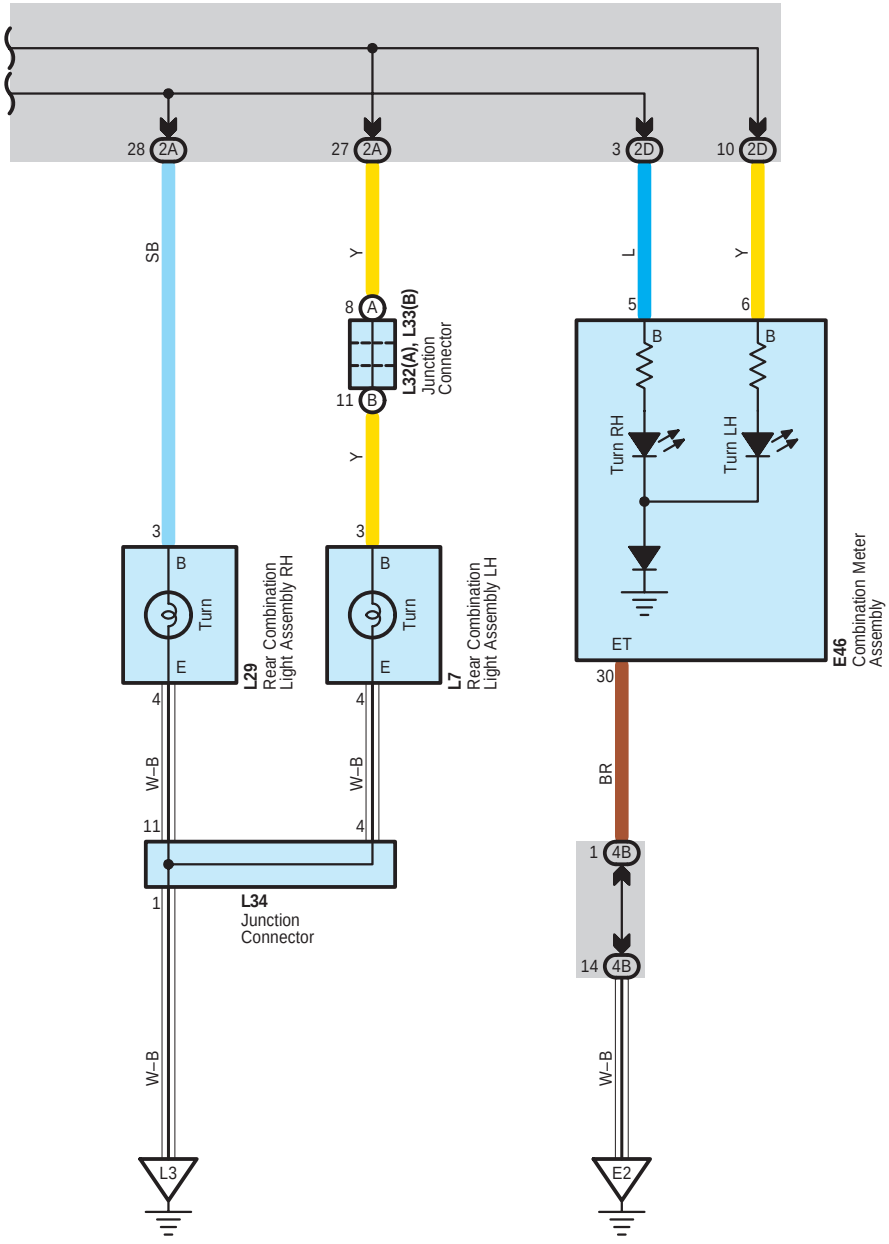
28 2A
27 2A
3 2D
10 2D
SB
Y
L
Y
8 A
11 B
L32(A), L33(B)
Junction
Connector
Y
5
6
B
B
Turn RH
Turn LH
ET
E46
Combination Meter
Assembly
3
3
B
Turn
E
L29
Rear Combination
Light Assembly RH
B
Turn
E
L7
Rear Combination
Light Assembly LH
4
4
W–B
W–B
11
4
1
L34
Junction
Connector
30
BR
1 4B
14 4B
W–B
W–B
L3
E2

A 7
Gray



A 18
Gray



E 8
White

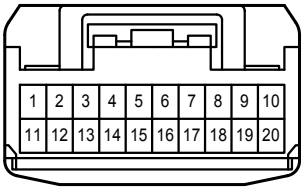

E 41
Gray

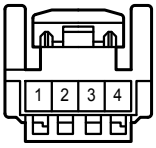

E 46
White

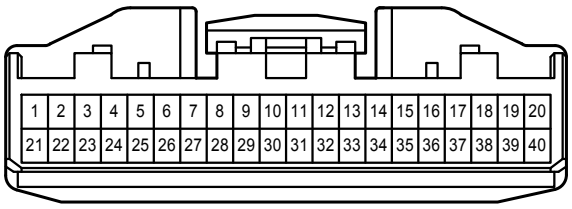

L 7
White

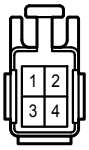

L 29
White

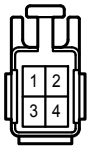

L 32
White

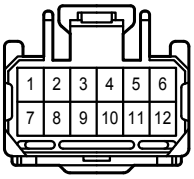

L 33
White

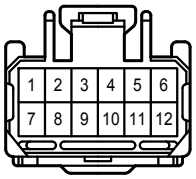

L 34
Blue

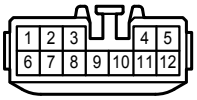

2A
White

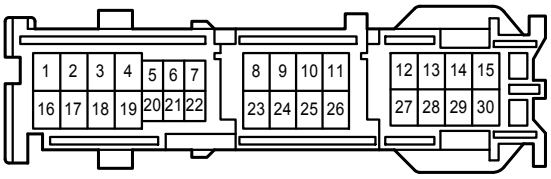

2B
White

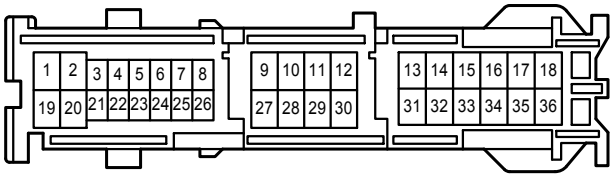

2D
White

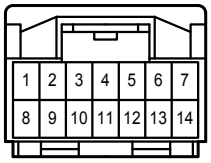

2E
White

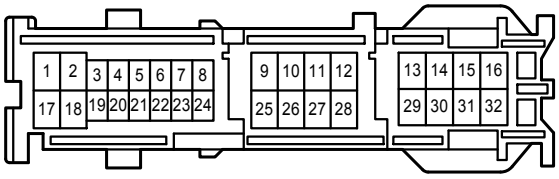

2S
White

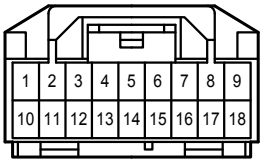

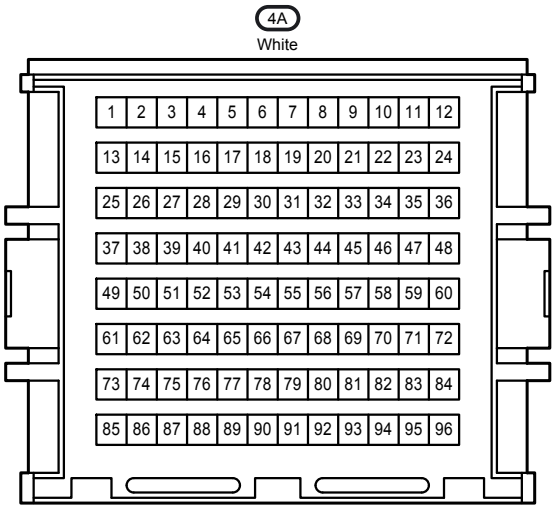
4A
White
1 2 3 4 5 6 7 8 9 10 11 12
13 14 15 16 17 18 19 20 21 22 23 24
25 26 27 28 29 30 31 32 33 34 35 36
37 38 39 40 41 42 43 44 45 46 47 48
49 50 51 52 53 54 55 56 57 58 59 60
61 62 63 64 65 66 67 68 69 70 71 72
73 74 75 76 77 78 79 80 81 82 83 84
85 86 87 88 89 90 91 92 93 94 95 96

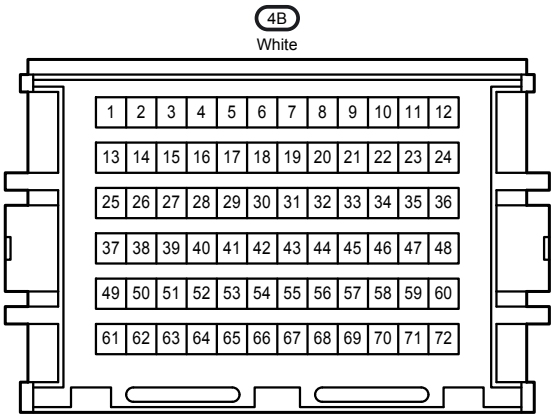
4B
White
1 2 3 4 5 6 7 8 9 10 11 12
13 14 15 16 17 18 19 20 21 22 23 24
25 26 27 28 29 30 31 32 33 34 35 36
37 38 39 40 41 42 43 44 45 46 47 48
49 50 51 52 53 54 55 56 57 58 59 60
61 62 63 64 65 66 67 68 69 70 71 72

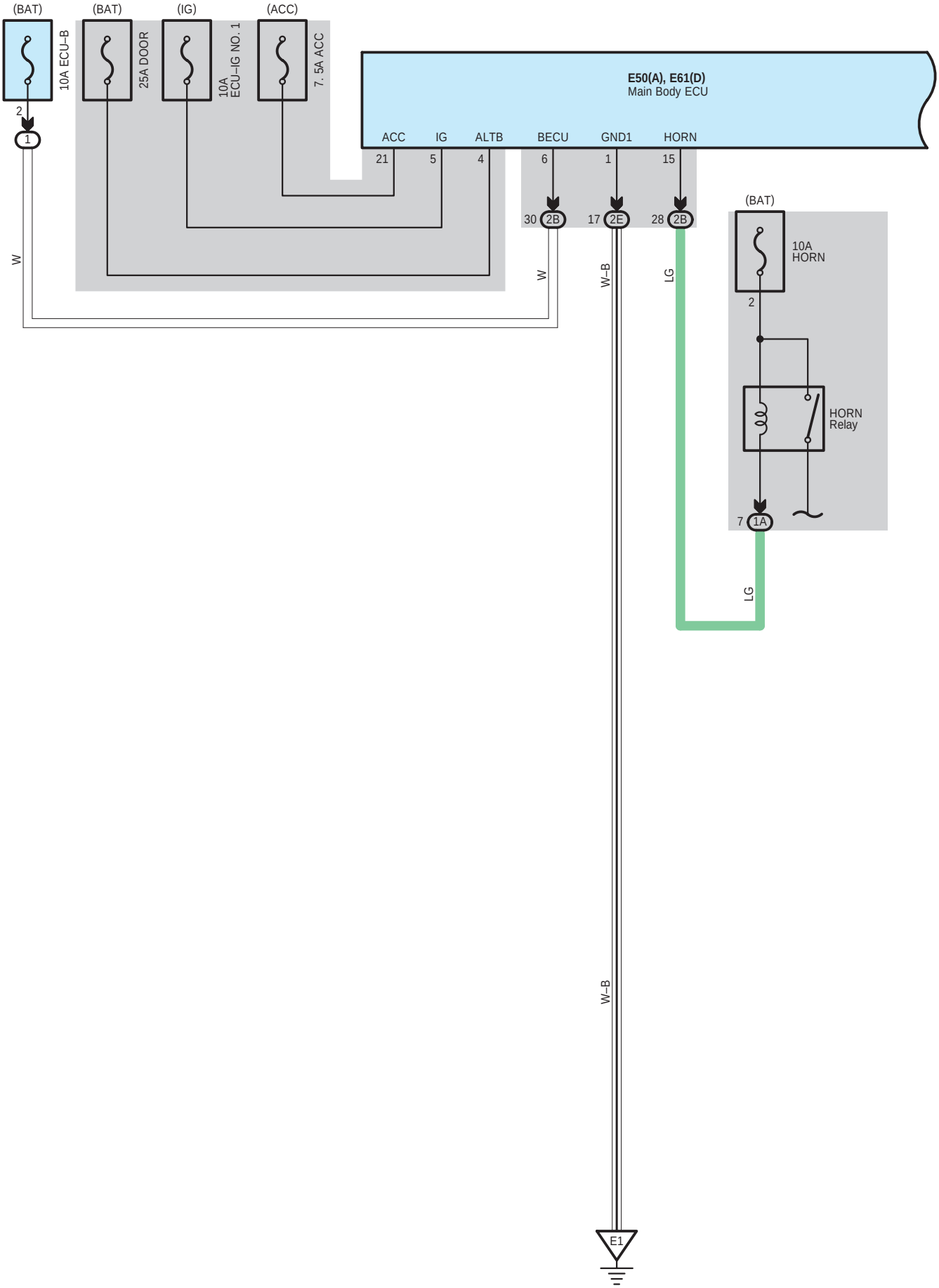
(BAT)
(BAT)
(IG)
(ACC)
10A ECU–B
25A DOOR
10A ECU–IG NO. 1
7. 5A ACC
2
1
W
E50(A), E61(D)
Main Body ECU
ACC
IG
ALTB
BECU
GND1
HORN
21
5
4
6
1
15
30 2B
17 2E
28 2B
W
W–B
LG
(BAT)
10A HORN
2
HORN Relay
7 1A
LG
W–B
E1

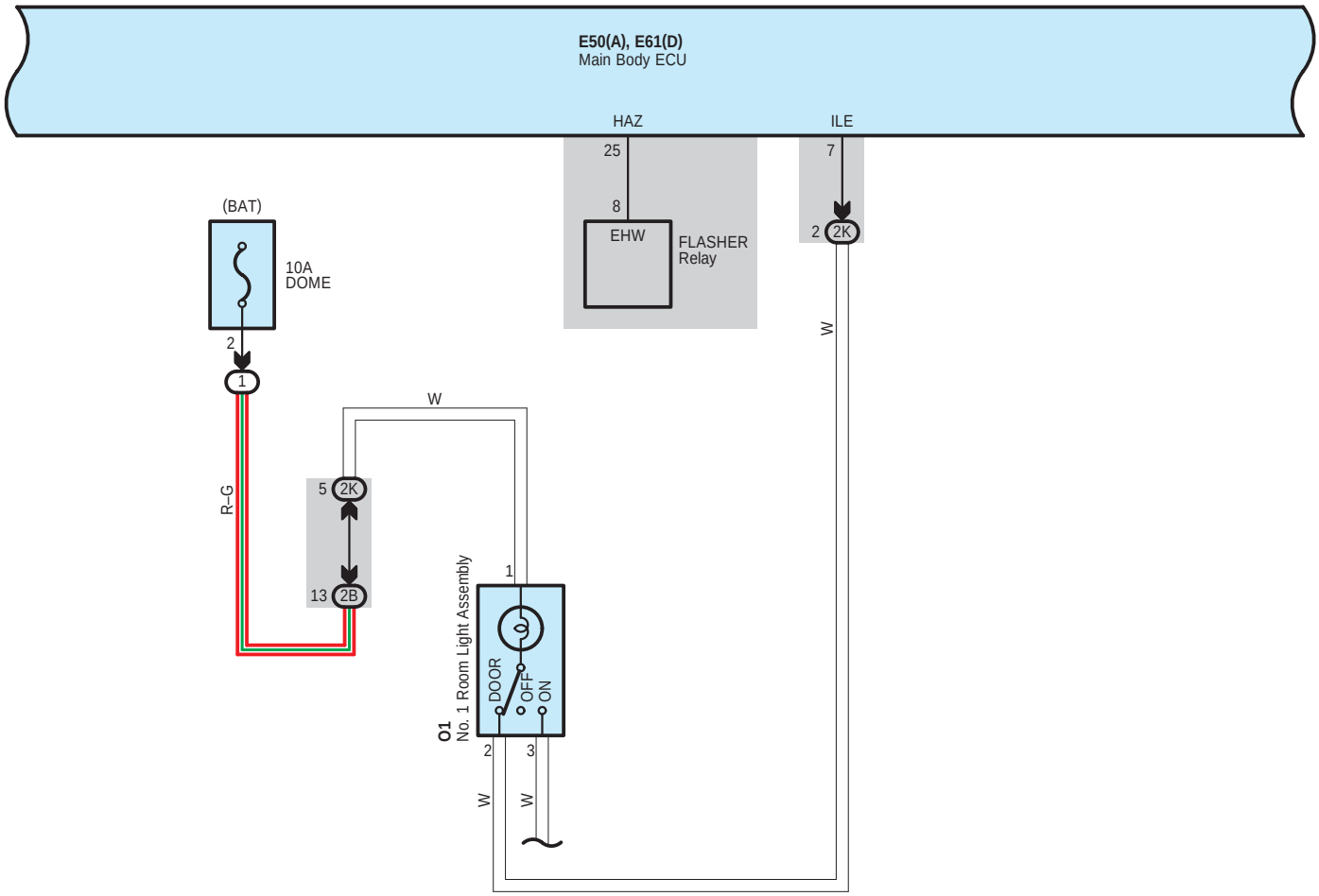
E50(A), E61(D)
Main Body ECU
HAZ
25
8
EHW
FLASHER
Relay
ILE
7
2
2K
W
(BAT)
10A
DOME
2
1
W
R–G
5
2K
13
2B
1
O1
No. 1 Room Light Assembly
DOOR
OFF
ON
2
3
W
W

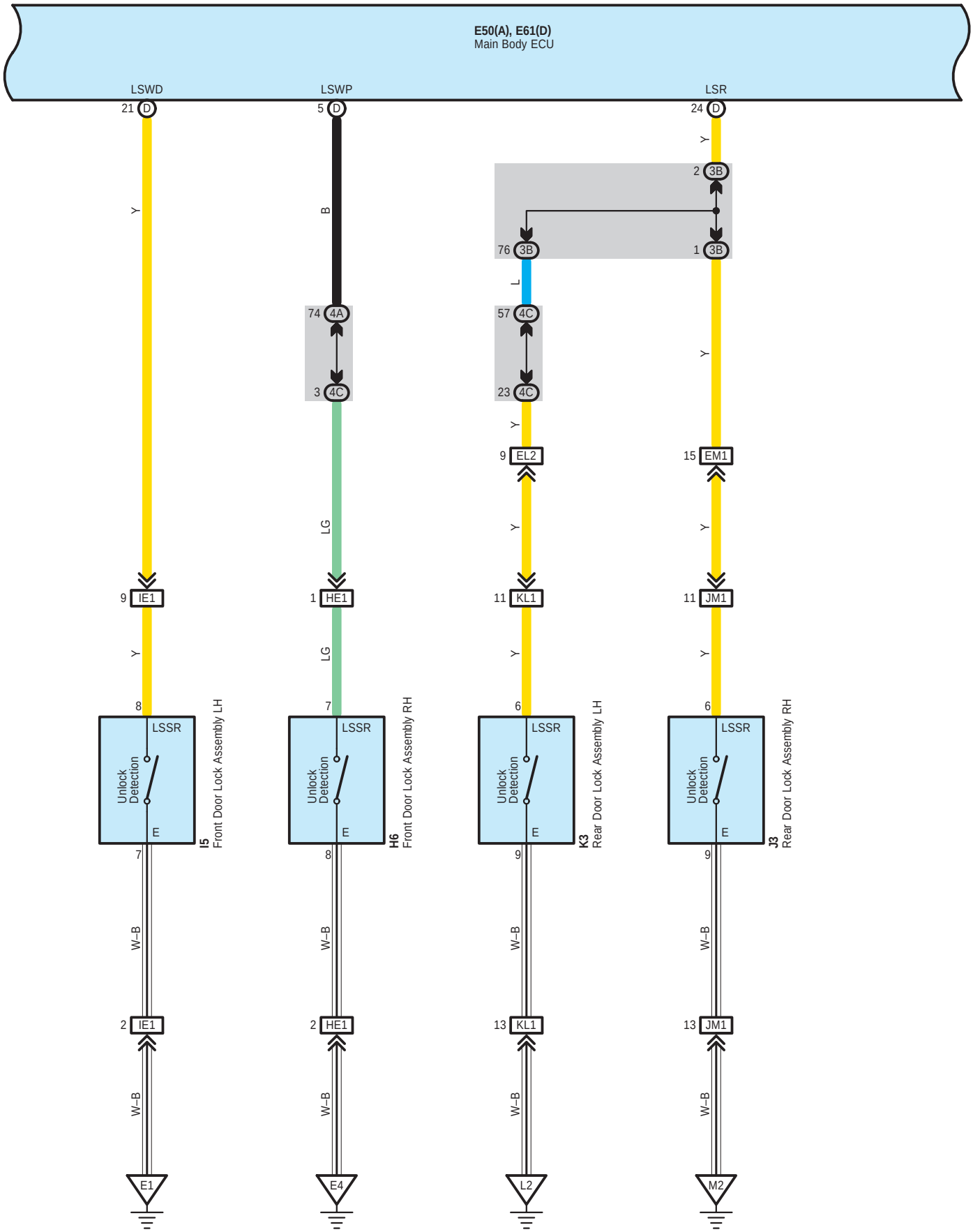
E50(A), E61(D)
Main Body ECU
LSWD
LSWP
LSR
21 D
5 D
24 D
Y
B
2 3B
76 3B
1 3B
L
74 4A
3 4C
57 4C
23 4C
Y
LG
9 EL2
15 EM1
9 IE1
1 HE1
11 KL1
11 JM1
8
7
6
6
LSSR
Unlock Detection
E
I5 Front Door Lock Assembly LH
H6 Front Door Lock Assembly RH
K3 Rear Door Lock Assembly LH
J3 Rear Door Lock Assembly RH
7
8
9
9
W–B
2 IE1
2 HE1
13 KL1
13 JM1
E1
E4
L2
M2

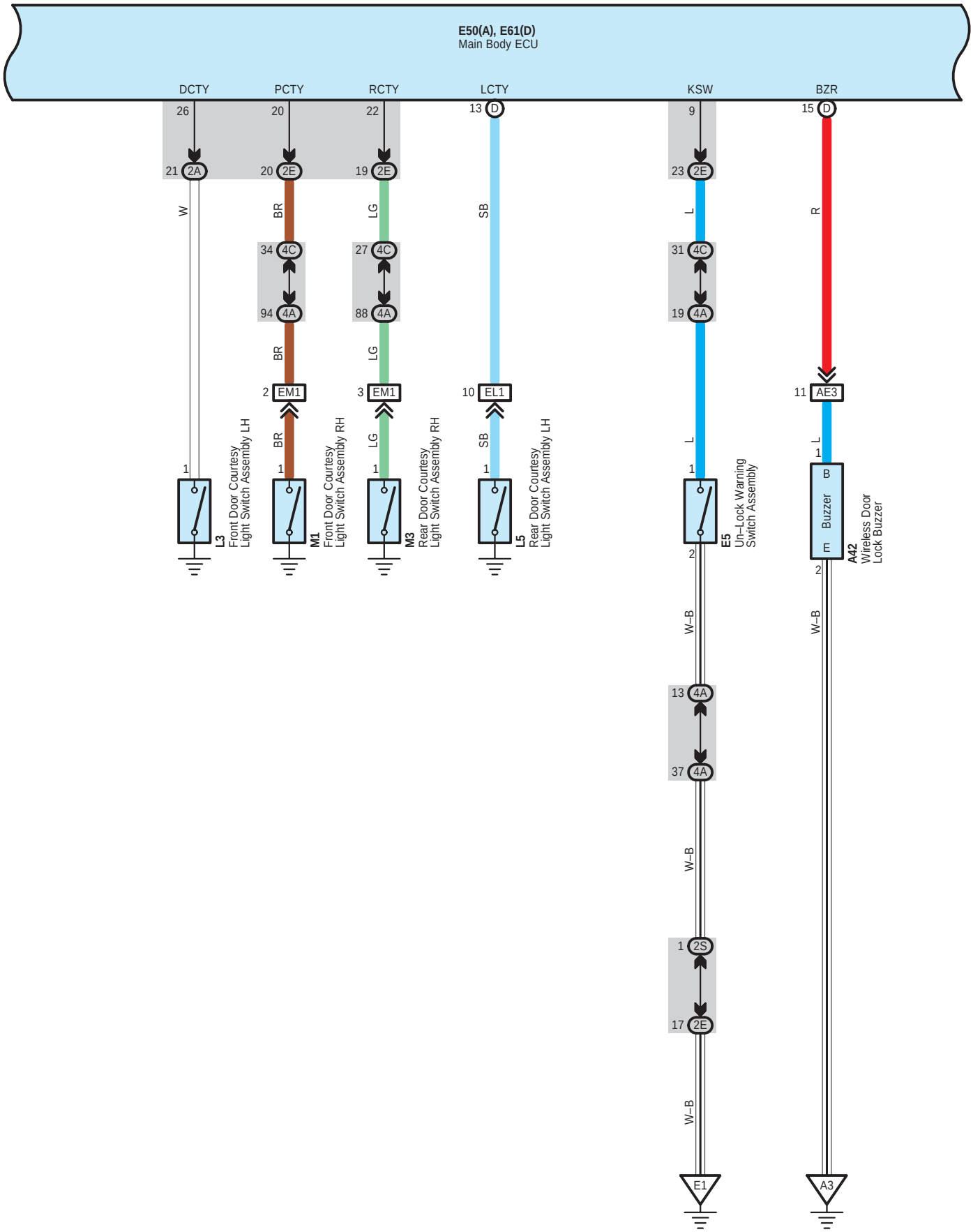
E50(A), E61(D)
Main Body ECU
DCTY
PCTY
RCTY
LCTY
KSW
BZR
26
21 2A
20
20 2E
22
19 2E
13 D
9
23 2E
15 D
W
BR
LG
SB
L
R
34 4C
94 4A
27 4C
88 4A
31 4C
19 4A
2 EM1
3 EM1
10 EL1
11 AE3
1
L3
Front Door Courtesy Light Switch Assembly LH
M1
Front Door Courtesy Light Switch Assembly RH
M3
Rear Door Courtesy Light Switch Assembly RH
L5
Rear Door Courtesy Light Switch Assembly LH
E5
Un–Lock Warning Switch Assembly
A42
Wireless Door Lock Buzzer
B
Buzzer
E
W–B
13 4A
37 4A
1 2S
17 2E
E1
A3

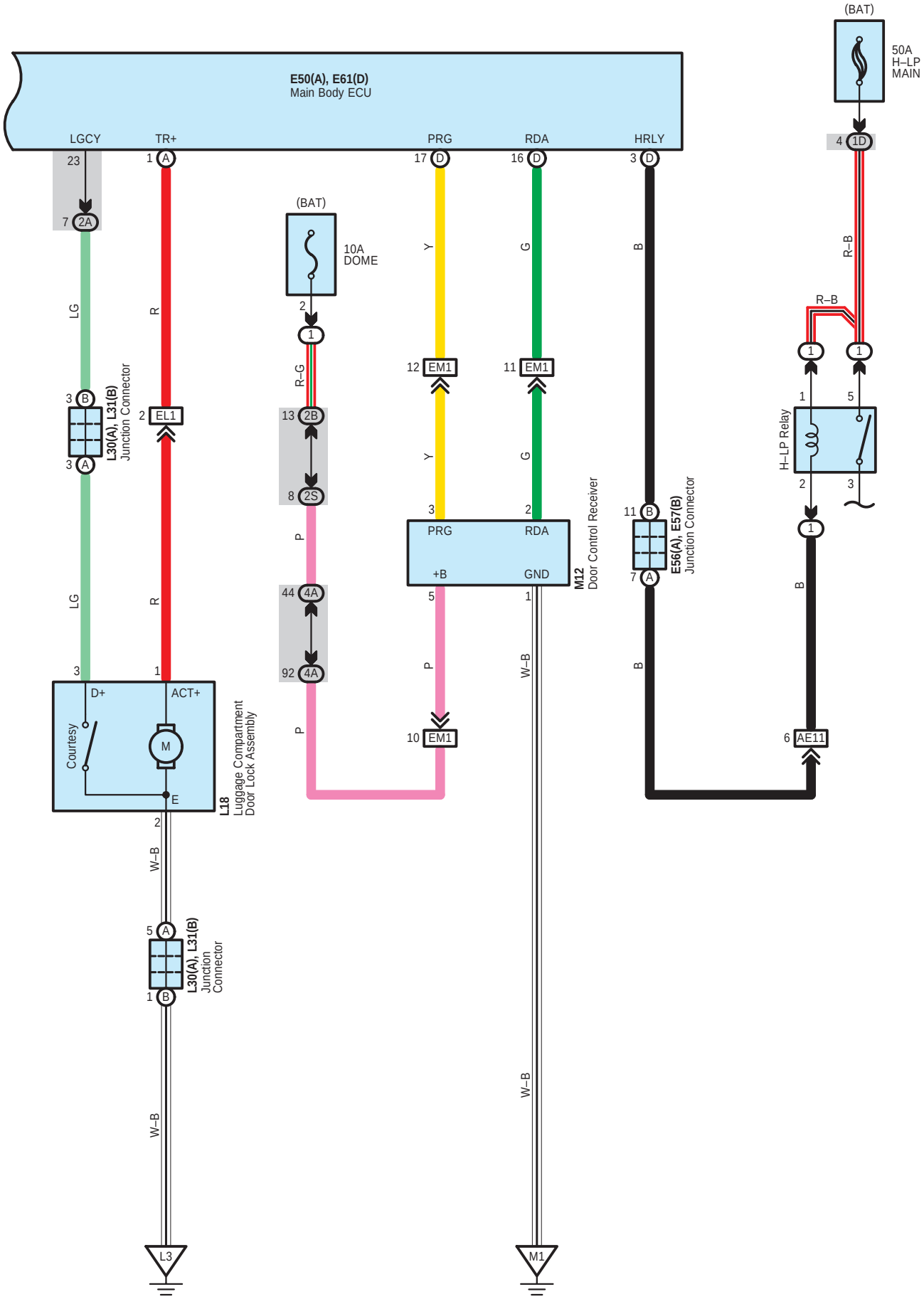
E50(A), E61(D)
Main Body ECU
LGCY
TR+
PRG
RDA
HRLY
(BAT)
50A
H–LP
MAIN
10A
DOME
H–LP Relay
L30(A), L31(B)
Junction Connector
L18
Luggage Compartment
Door Lock Assembly
M12
Door Control Receiver
E56(A), E57(B)
Junction Connector
D+
ACT+
Courtesy
PRG
RDA
+B
GND
L3
M1
AE11
EL1
EM1
2A
2B
2S
4A
1D
LG
R
R–B
R–G
Y
G
P
W–B
B

A 42
Black



E 5
White

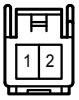

E 50
White

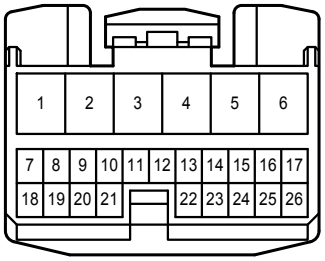

E 56
White

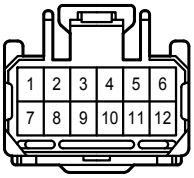

E 57
White

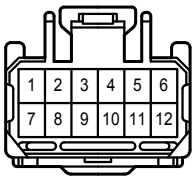

E 61
White

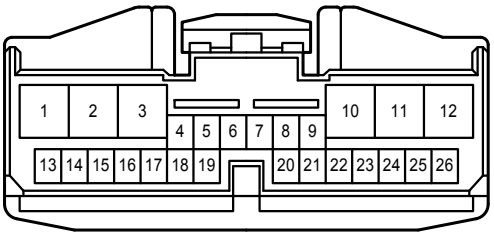

H 6
White

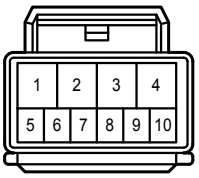

I 5
White

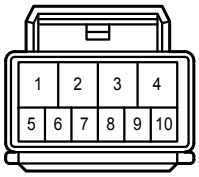

J 3
White

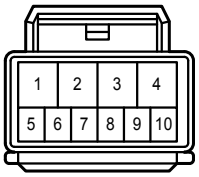

K 3
White

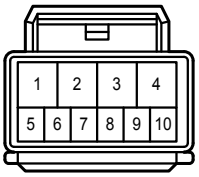

L 3
Black



L 5
Black



L 18
Black

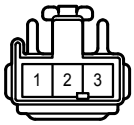

L 30
White

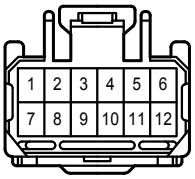

L 31
White

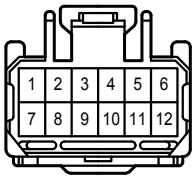

M 1
Black



M 3
Black



M 12
White

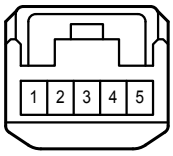

O 1
Gray



1A
White

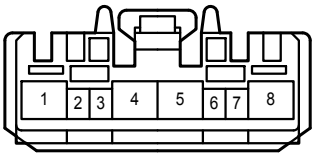

1D
White

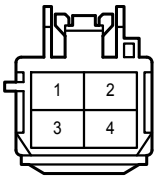

2A
White

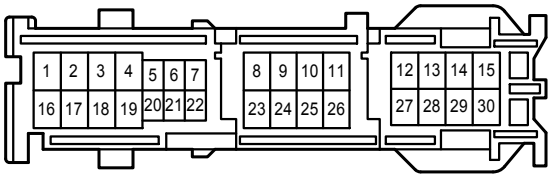

2B
White

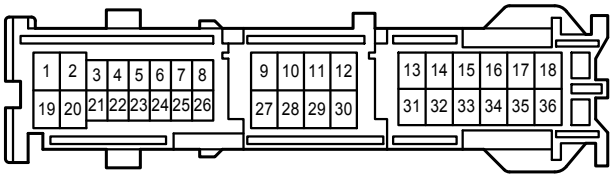

2E
White

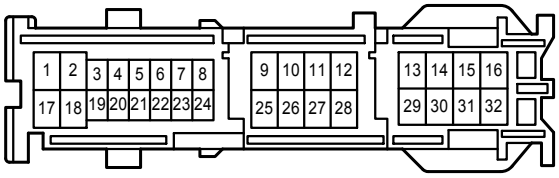

2K
White



2S
White

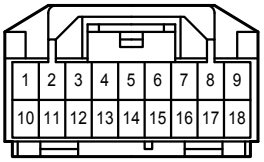

3B
White

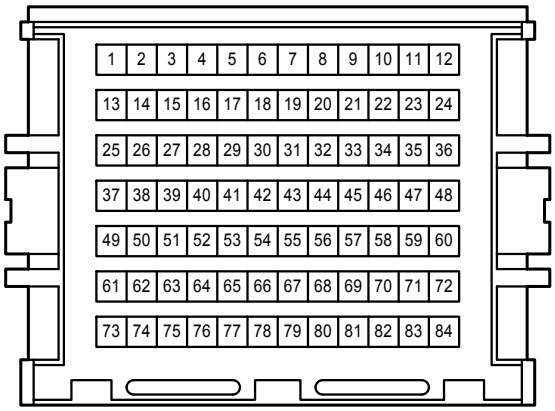

4A
White

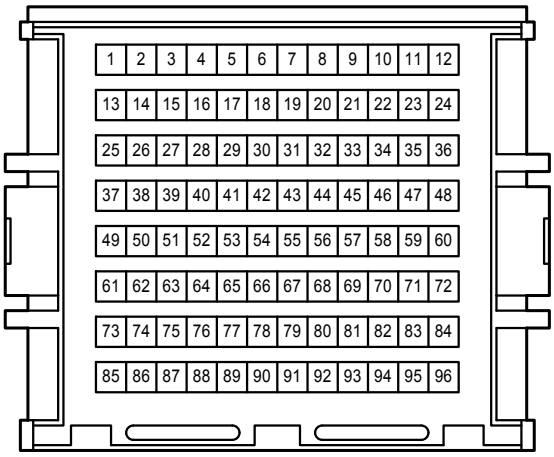

4C
White

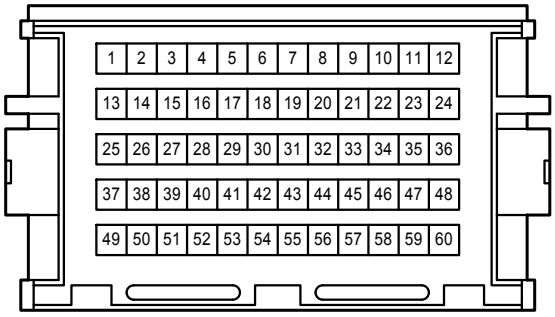

AE3
White

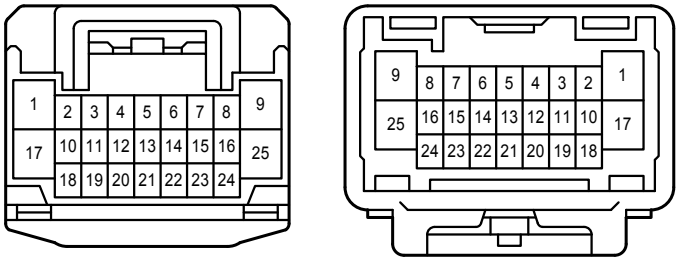

AE11
White

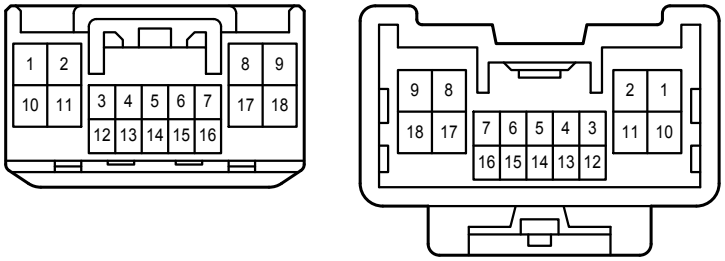

EL1
White

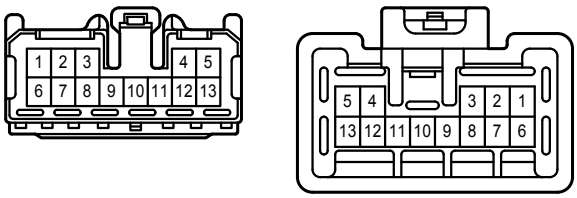

EL2
White

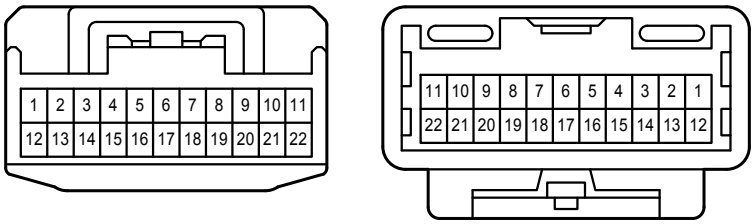

EM1
Gray

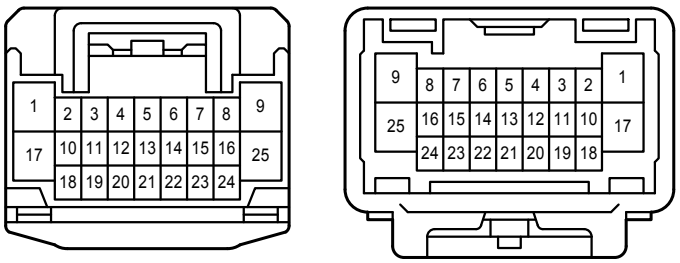

HE1
Blue

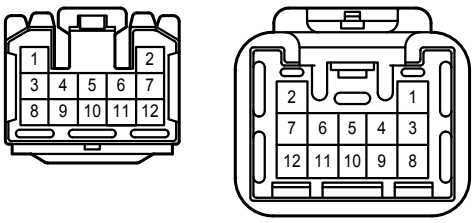

IE1
Blue

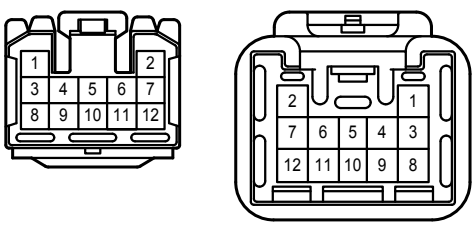

JM1
White

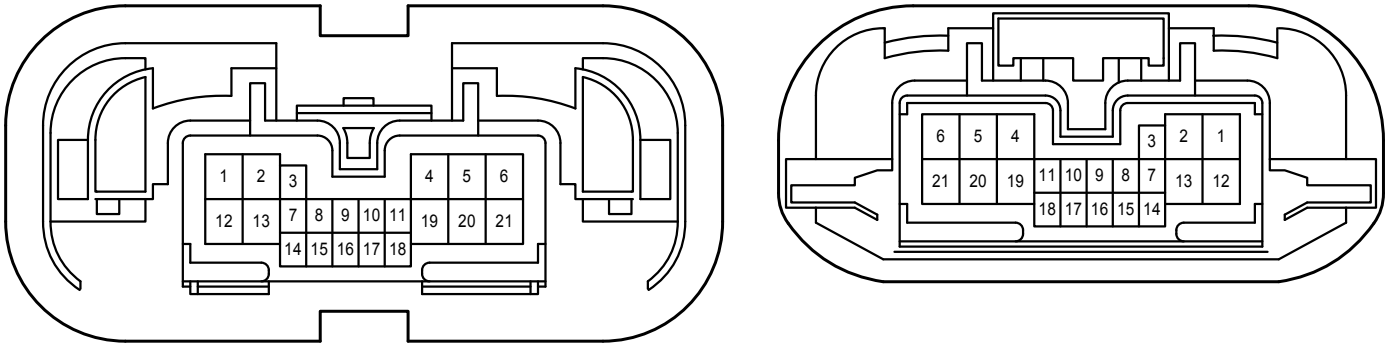

KL1
White

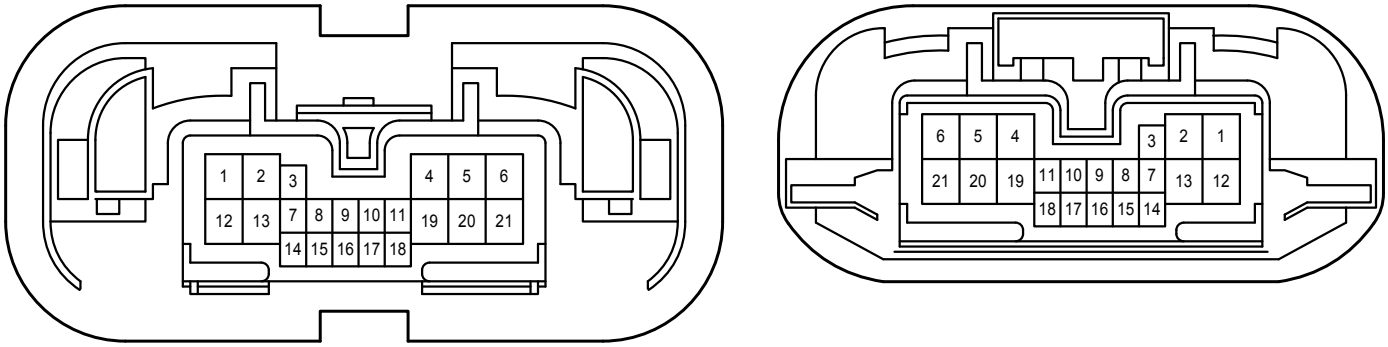

FOREWORD

This repair manual has been prepared to provide essential information on body panel repair methods (including cutting and welding operations, but excluding painting) for the TOYOTA COROLLA

Applicable models: AZE141 series
ZRE142 series

This manual consists of body repair methods, exploded diagrams and illustrations of the body components and other information relating to body panel replacement such as handling precautions, etc. However, it should be noted that the front fenders of the TOYOTA model is bolted on and require no welding.

When repairing, don't cut and join areas that are not shown in this manual. Only work on the specified contents to maintain body strength.

Body construction will sometimes differ depending on specifications and country of destination. Therefore, please keep in mind that the information contained herein is based on vehicles for general destinations.

For the repair procedures and specifications other than collision-damaged body components of the TOYOTA COROLLA refer to the repair manuals.

If you require the above manuals, please contact your TOYOTA Dealer.

All information contained in this manual is the most up-to-date at the time of publication. However, specifications and procedures are subject to change without prior notice.

TOYOTA MOTOR CORPORATION

ABOUT THIS MANUAL

Scope of the repair work explanation

- This text explains the welding panel replacement instructions from the vehicle's white body condition. We have abbreviated the explanations of the removal and reinstallation of the equipment parts up to the white body condition and of the installation, inspection, adjustment and final inspection of equipment parts after replacing the weld panel.

Section categories

- This manual has been divided as shown below.

Section Title	Contents	Examples
INTRODUCTION	Explanation of general body repair. Views of weld panel replacement instructions.	Precaution About this vehicle
BODY PANEL REPLACEMENT	Instructions for replacing the weld panels from the white body condition, from which bolted parts have been removed, with individual supply parts.	Front side member replacement. Quarter panel replacement.
BODY DIMENSIONS	Body aligning measurements.	Dimension diagrams.
PAINT • COATING	Scope and type of anti-rust treatment, etc. together with weld panel replacement.	Body sealer. Under coat.

Contents omitted in this manual

- Make sure to perform the following essential procedures, although they are omitted in this manual.
  (1) Clean and wash removed parts, if necessary.
  (2) Visual inspection

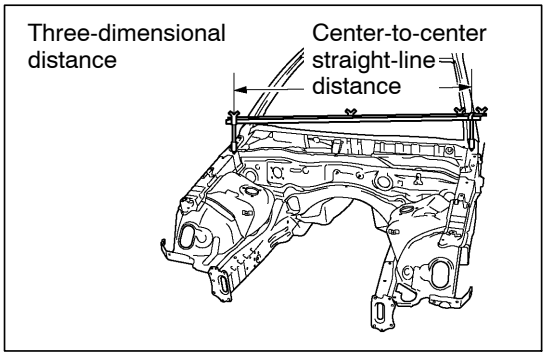

GENERAL INFORMATION

1. BASIC DIMENSIONS

(a) There are two types of dimensions in the diagram.

(1) (Three-dimensional distance)

- Straight-line distance between the centers of two measuring points.

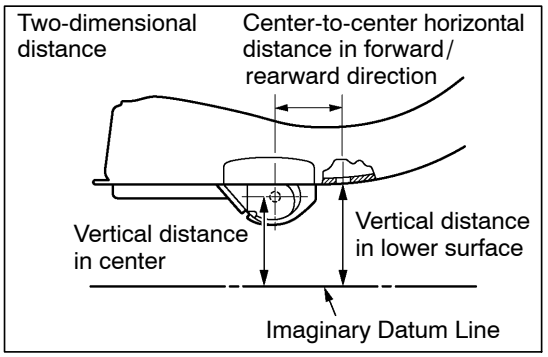

(2) (Two-dimensional distance)

- Horizontal distance in forward/rearward direction between the centers of two measuring points.
- The height from an imaginary datum line.

(b) In cases in which only one dimension is given, left and right are symmetrical.

(c) The dimensions in the following drawing indicate actual distance. Therefore, please use the dimensions as a reference.

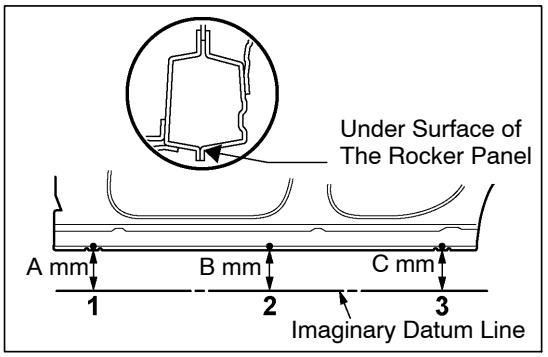

(d) The line that connects the places listed below is the imaginary datum line when measuring the height. (The dimensions are printed in the text.)

SYMBOL	Name
1	The place that was lowered A mm from the under surface of the rocker panel centered on the front jack up point.
2	The place that was lowered B mm from the under surface of the rocker panel centered between 1 and 3.
3	The place that was lowered C mm from the under surface of the rocker panel centered on the rear jack up point.

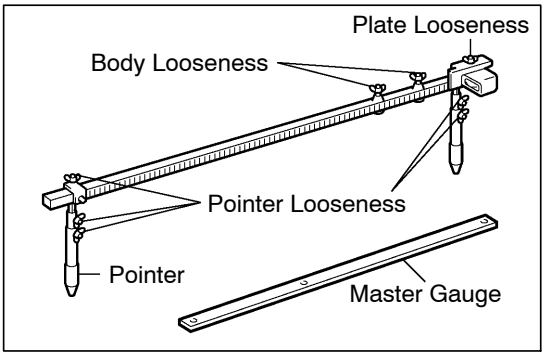

2. MEASURING

(a) Basically, all measurements are to be done with a tracking gauge. For portions where it is not possible to use a tracking gauge, a tape measure should be used.

(b) Use only a tracking gauge that has no looseness in the body, measuring plate, or pointers.

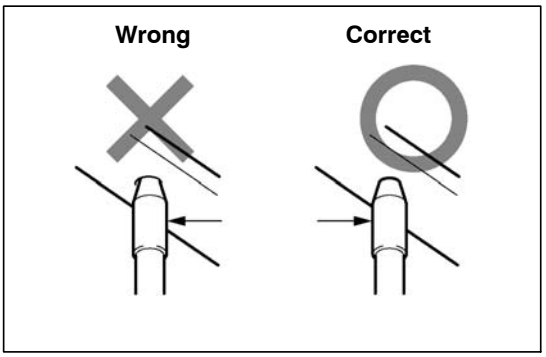

HINT:

1) The height of the left and right pointers must be equal.

2) Always calibrate the tracking gauge before measuring or after adjusting the pointer height.

3) Take care not to drop the tracking gauge or otherwise shock it.

4) Confirm that the pointers are securely in the holes.

(c) When using a tape measure, avoid twists and bends in the tape.

BODY DIMENSION DRAWINGS

ENGINE COMPARTMENT

(Three-Dimensional Distance)

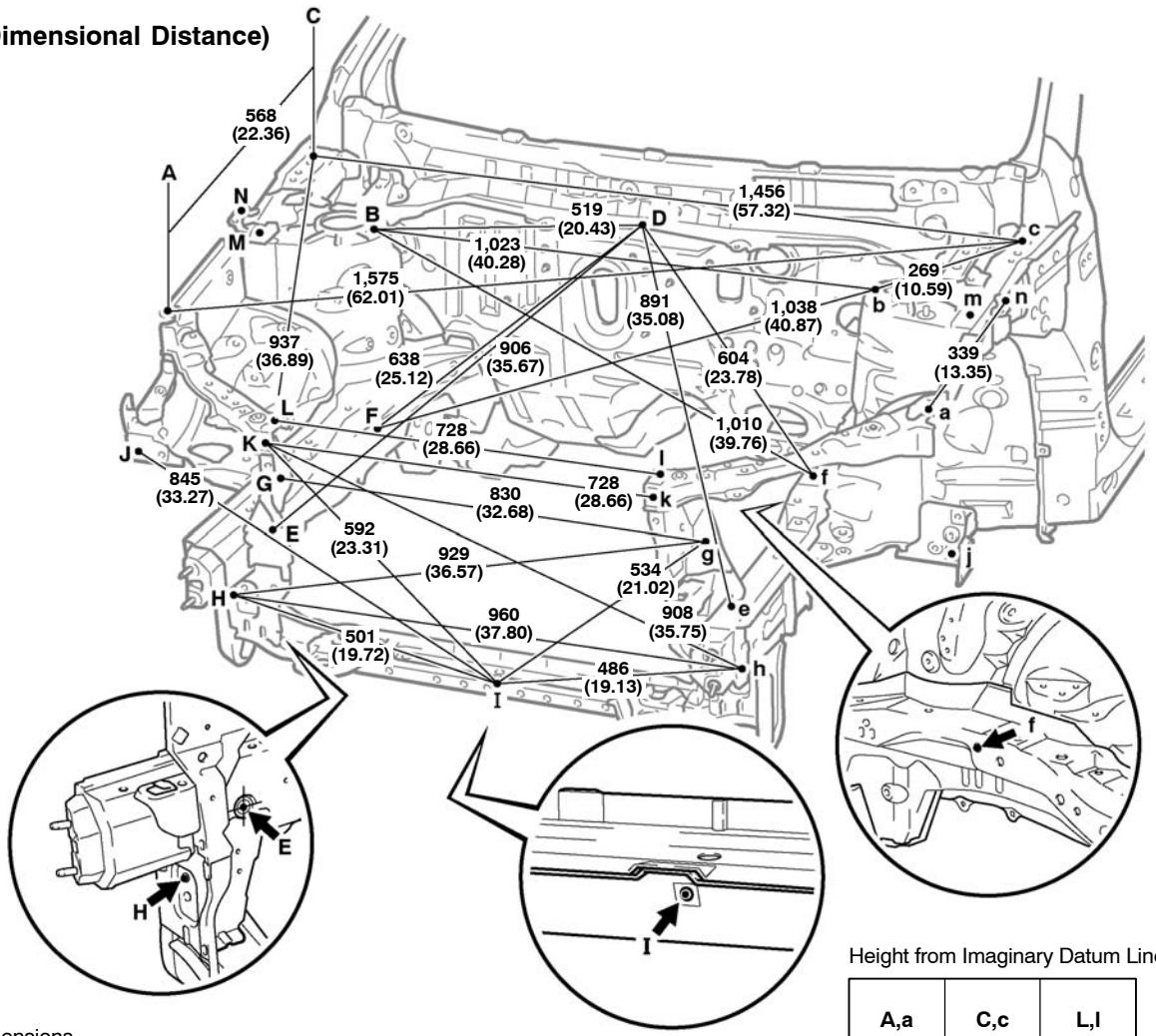

Height from Imaginary Datum Line

A,a	C,c	L,l
700 (27.56)	783 (30.83)	666 (26.22)

Vehicle Dimensions

A-n or a-N	B-c or b-C	C-l or c-L	C-M or c-m	C-m or c-M	I-j	J-j	M-m
1,537 (60.51)	1,250 (49.21)	1,392 (54.80)	263 (10.35)	1,457 (57.36)	852 (33.54)	1,561 (61.46)	1,410 (55.51)

N-n	L-N or l-n	L-n or l-N
1,517 (59.72)	747 (29.41)	1,290 (50.79)

HINT: For symbols, capital letters indicate right side of vehicle, small letters indicate left side of vehicle (seen from rear).

mm (in.)

Symbol	Name	Hole dia.	Symbol	Name	Hole dia.
A, a	Front fender installation nut	M6 (0.24)	H, h	Front cross member side gusset standard hole	ø10 (0.39)
B, b	Front suspension support installation hole-inner	ø11 (0.43)	I	Hood lock support brace installation nut	M6 (0.24)
C, c	Hood hinge installation nut-erar	M8 (0.31)	J, j	Front fender extension standard hole	ø10 (0.39)
D	Cowl top panel center mark	–	K, k	Radiator upper support installation nut	M6 (0.24)
E, e	Front side member standard hole	ø18 (0.71)	L, l	Radiator upper support installation nut	M6 (0.24)
F	Front side member standard hole	ø12 (0.47)	M, m	Front apron to cowl side membe upper standard hole	ø10 (0.39)
f	Engin mounting installation nut	M12 (0.47)	N, n	Front fender installation nut	M6 (0.24)
G, g	Radiator support standard hole	ø10 (0.39)	–	–	–

BODY OPENING AREAS (Side View: Front)

(Three-Dimensional Distance)

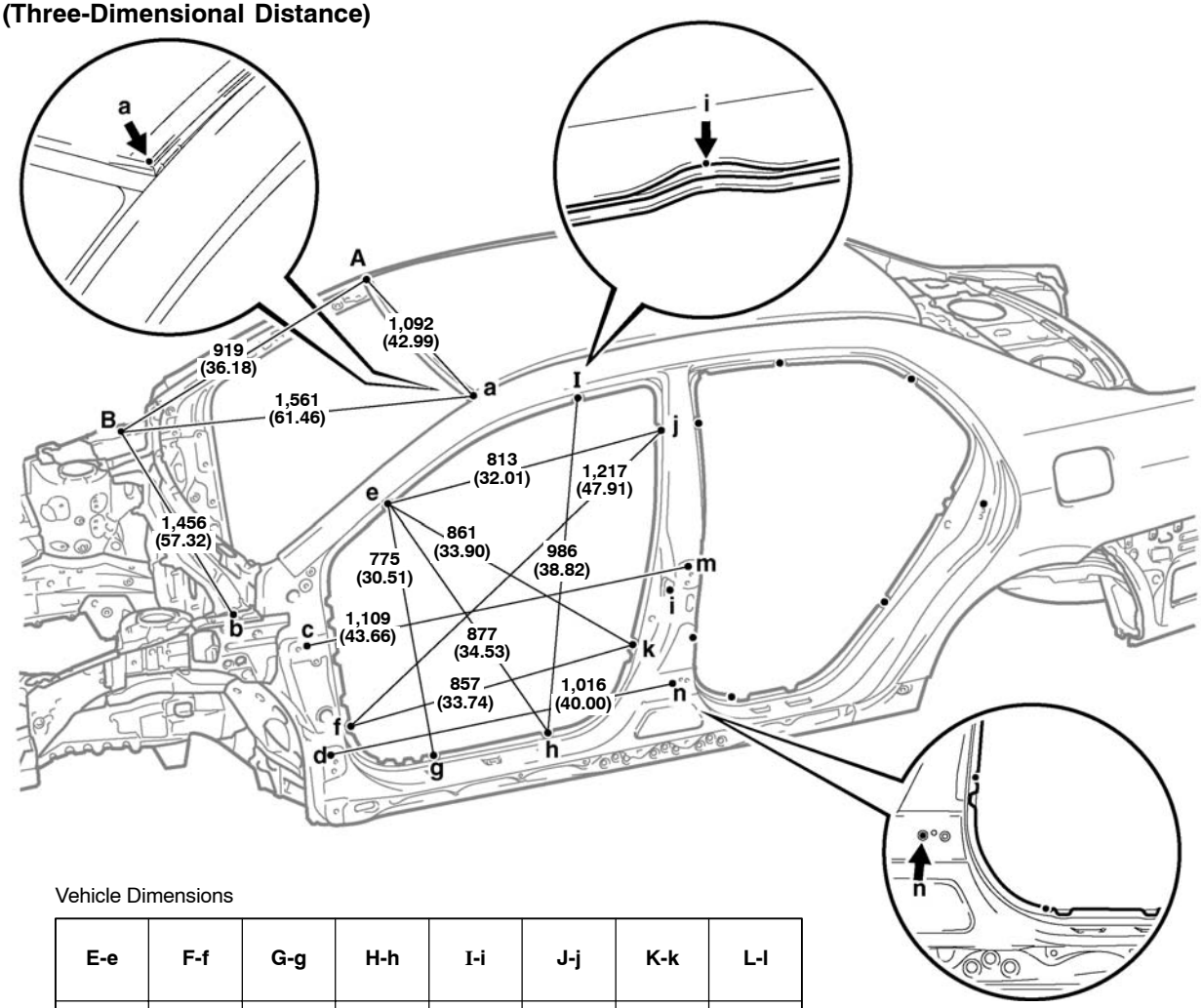

Vehicle Dimensions

E-e	F-f	G-g	H-h	I-i	J-j	K-k	L-l
1,327 (52.24)	1,417 (55.79)	1,420 (55.91)	1,418 (55.83)	1,159 (45.63)	1,280 (50.39)	1,448 (57.01)	1,563 (61.54)

E-f or e-F	E-h or e-H	E-i or e-I	E-k or e-K	F-j or f-J	F-k or f-K	H-i or h-I	C-L or c-l	C-N or c-n	D-L or d-l	D-M or d-m	G-I or g-i
1,519 (59.80)	1,629 (64.13)	1,389 (54.68)	1,632 (64.25)	1,815 (71.46)	1,670 (65.75)	1,617 (63.66)	1,062 (41.81)	1,101 (43.35)	1,069 (42.09)	1,135 (44.68)	1,104 (43.46)

HINT: For symbols, capital letters indicate right side of vehicle, small letters indicate left side of vehicle (seen from rear).

mm (in.)

Symbol	Name	Hole dia.	Symbol	Name	Hole dia.
A, a	Roof panel corner	—	H, h	Rocker panel assembly mark	—
B, b	Hood hinge installation nut-rear	M8 (0.31)	I, i	Roof side rail assembly mark	—
C, c	Front door hinge installation nut	M8 (0.31)	J, j	Center body pillar assembly mark	—
D, d	Front door hinge installation nut	M8 (0.31)	K, k	Center body pillar assembly mark	—
E, e	Front body pillar assembly mark	—	L, l	Front door lock striker installation nut	M8 (0.31)
F, f	Front body pillar assembly mark	—	M, m	Rear door hinge installation nut	M8 (0.31)
G, g	Rocker panel assembly mark	—	N, n	Rear door hinge installation nut	M8 (0.31)

BODY OPENING AREAS (Side View: Rear)
Sedan

(Three-Dimensional Distance)

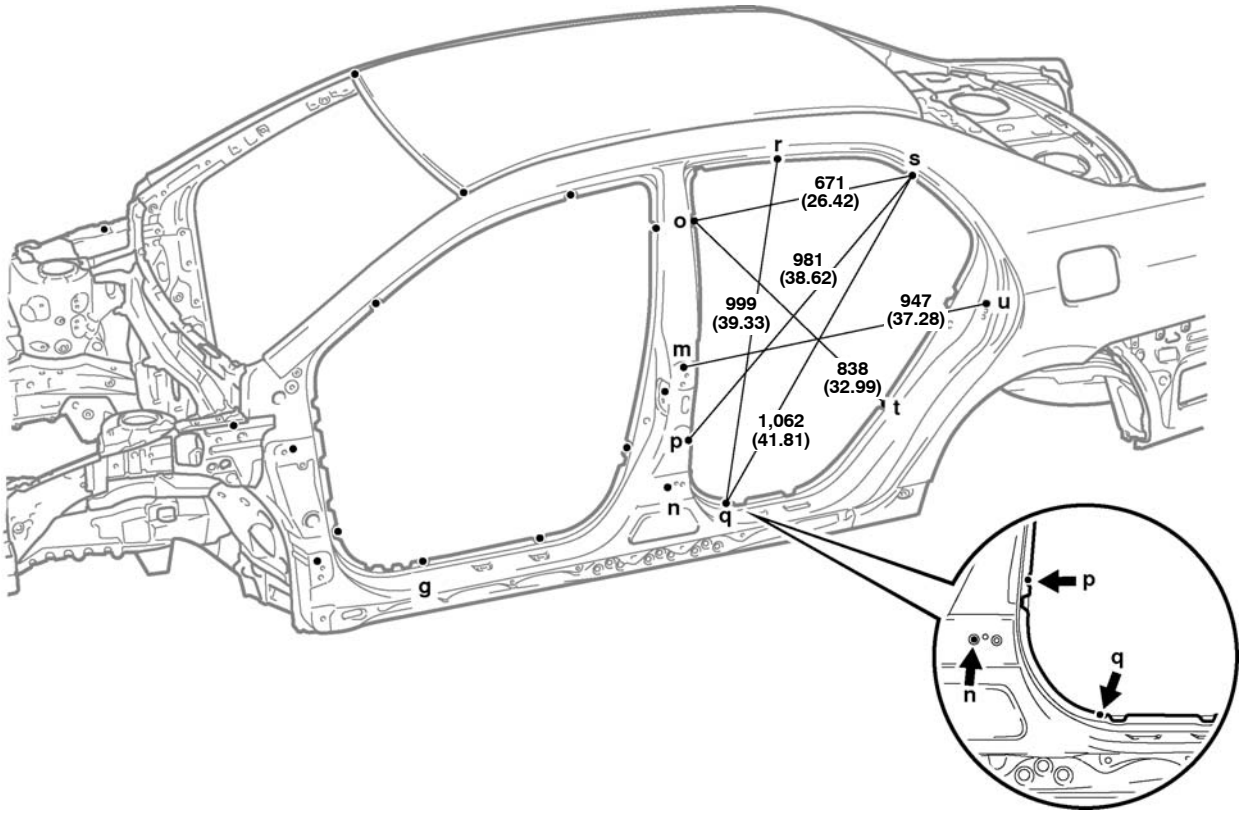

Vehicle Dimensions

O-o	P-p	Q-q	R-r	S-s	T-t	U-u
1,280 (50.39)	1,450 (57.09)	1,418 (55.83)	1,145 (45.08)	1,226 (48.27)	1,421 (55.94)	1,526 (60.08)

G-q or g-Q	O-q or o-Q	O-s or o-S	O-t or o-T	P-s or p-S	P-t or p-T	Q-r or q-R	S-t or s-T	N-U or n-u
1,702 (67.01)	1,603 (63.11)	1,421 (55.94)	1,588 (62.52)	1,656 (65.20)	1,559 (61.38)	1,619 (63.74)	1,478 (58.19)	1,066 (41.97)

HINT: For symbols, capital letters indicate right side of vehicle, small letters indicate left side of vehicle (seen from rear).

mm (in.)

Symbol	Name	Hole dia.	Symbol	Name	Hole dia.
G, g	Rocker panel assembly mark	—	Q, q	Rocker panel notch edge	—
M, m	Rear door hinge installation nut	M8 (0.31)	R, r	Roof side rail assembly mark	—
N, n	Rear door hinge installation nut	M8 (0.31)	S, s	Quarter panel assembly mark	—
O, o	Center body pillar assembly mark	—	T, t	Quarter panel assembly mark	—
P, p	Center body pillar assembly mark	—	U, u	Rear door lock striker installation nut	M8 (0.31)

BODY OPENING AREAS (Rear View)
Sedan

(Three-Dimensional Distance)

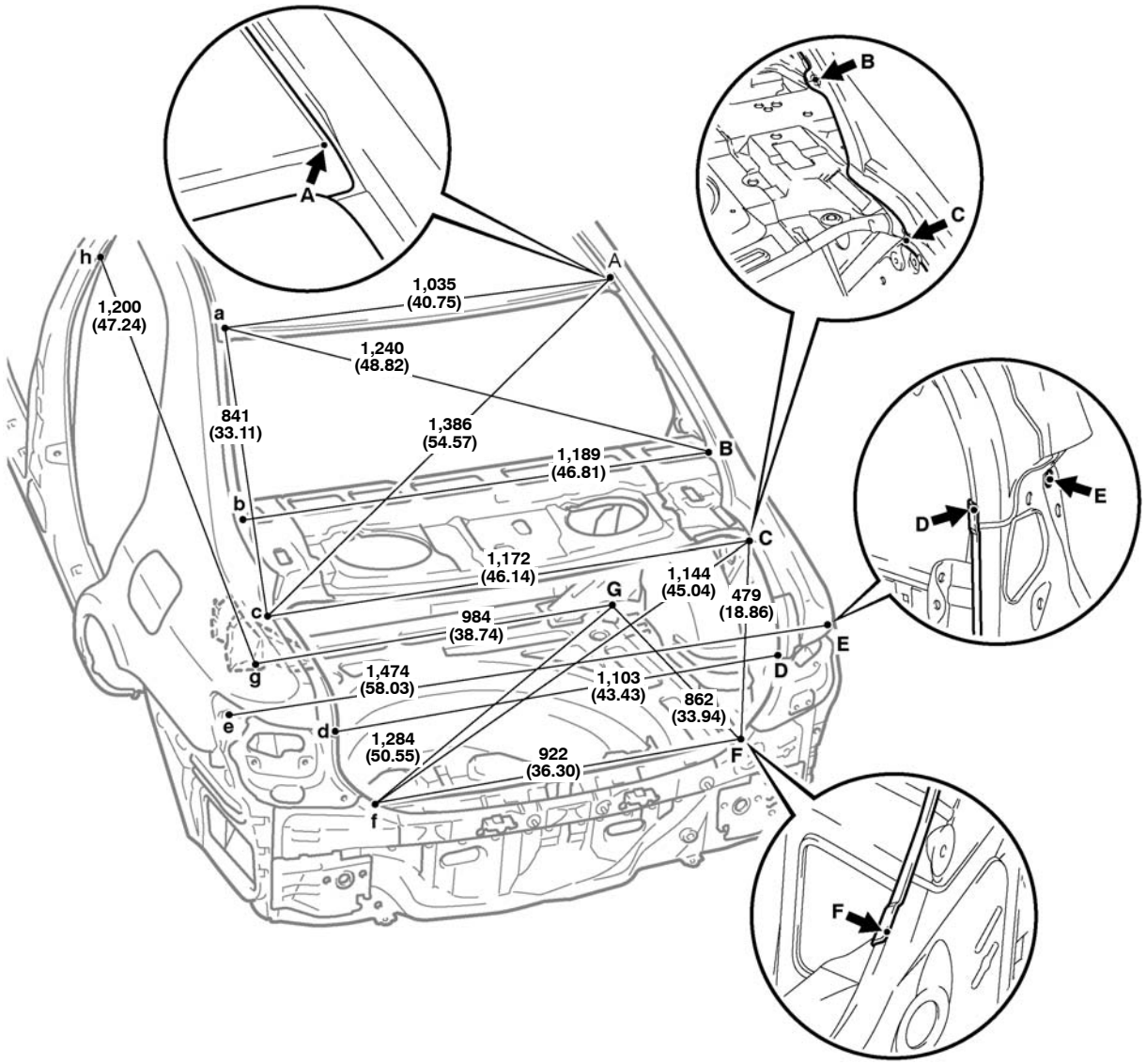

Vehicle Dimensions

D-c or d-C
1,284 (50.55)

HINT: For symbols, capital letters indicate right side of vehicle, small letters indicate left side of vehicle (seen from rear).

mm (in.)

Symbol	Name	Hole dia.	Symbol	Name	Hole dia.
A, a	Roof panel corner	—	E, e	Quarter panel standard hole	ø13 (0.51)
B, b	Quarter panel standard hole	13.5 x 10.5 (0.53 x 0.41)	F, f	Quarter panel end housing / Body lower back panel adjoining portion	—
C, c	Quarter panel / upper back panel adjoining portion	—	G, g	Rear suspension installation hole	ø16 (0.63)
D, d	Quarter panel end housing / Luggage compartment opening trough adjoining portion	—	H, h	Center body pillar assembly mark	—

UNDER BODY

(Three-Dimensional Distance)

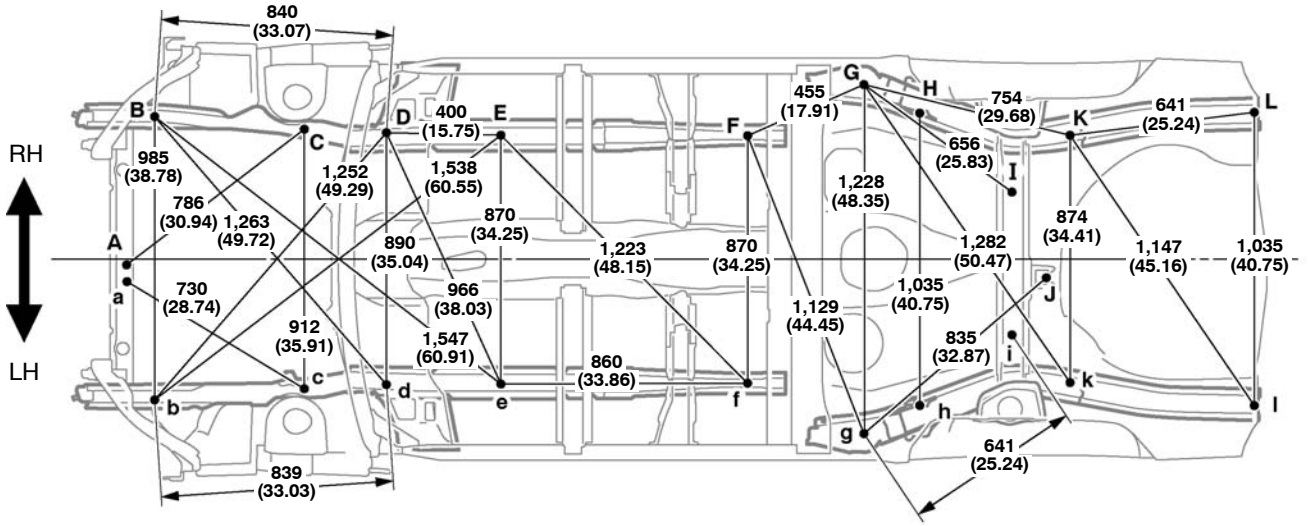

1	2	3
100 (3.94)	100 (3.94)	100 (3.94)

Front

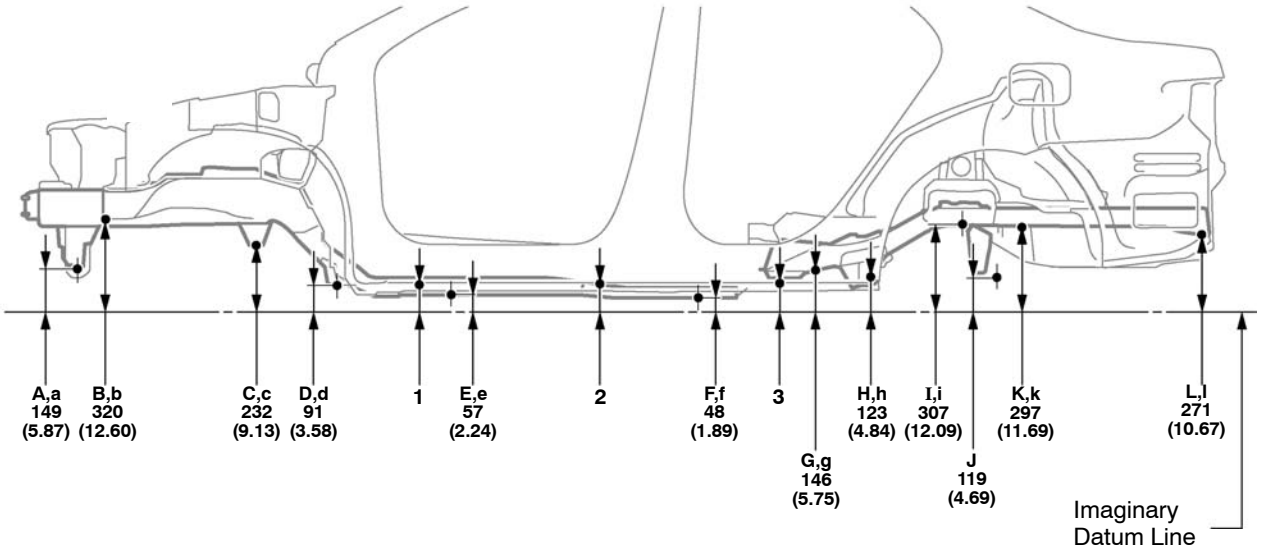

HINT:
1) For symbols, capital letters indicate right side of vehicle, small letters indicate left side of vehicle (seen from rear).
2) Point A,a, B,b, I,i on the vehicle are asymmetrical.

mm (in.)

Symbol	Name	Hole dia.	Symbol	Name	Hole dia.
A, a	Engine mounting center member installation nut	M10 (0.39)	G, g	Rear floor side front member standard hole	ø25 (0.98)
B, b	Front side member standard hole	ø18 (0.71)	H, h	Trailing arm installation hole	ø13 (0.51)
C, c	Front suspension crossmember installation nut	M14 (0.55)	I, i	Rear floor NO. 2 crossmember standard hole	ø10 (0.39)
D, d	Front suspension crossmember installation nut	M14 (0.55)	J	Rear floor centermember NO. 4 reinforcement standard hole	ø8 (0.31)
E, e	Front side member standard hole	ø18 (0.71)	K, k	Rear floor side rear member standard hole	19 x 16 (0.75 x 0.63)
F, f	Front floor under reinforcement standard hole	ø10 (0.39)	L, l	Transport hook installation hole-rear	ø15 (0.59)

UNDER BODY

(Two-Dimensional Distance)

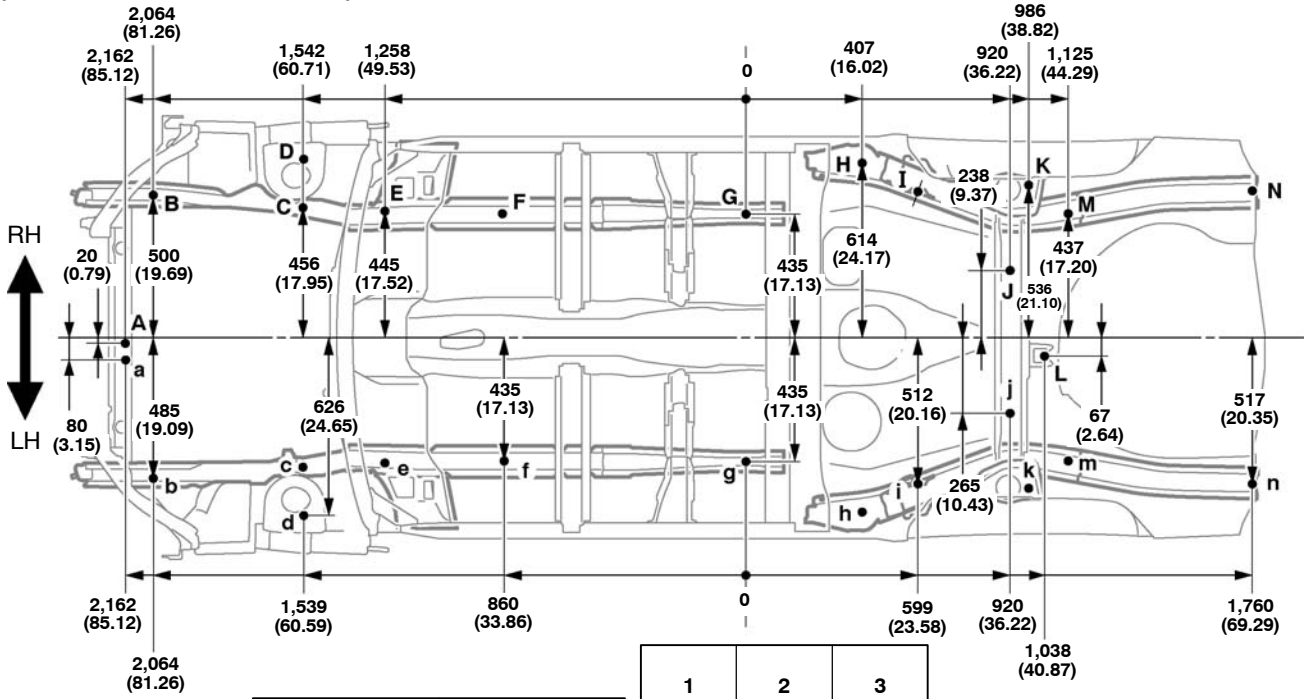

Wheel base	2,600 (102.36)

1	2	3
100 (3.94)	100 (3.94)	100 (3.94)

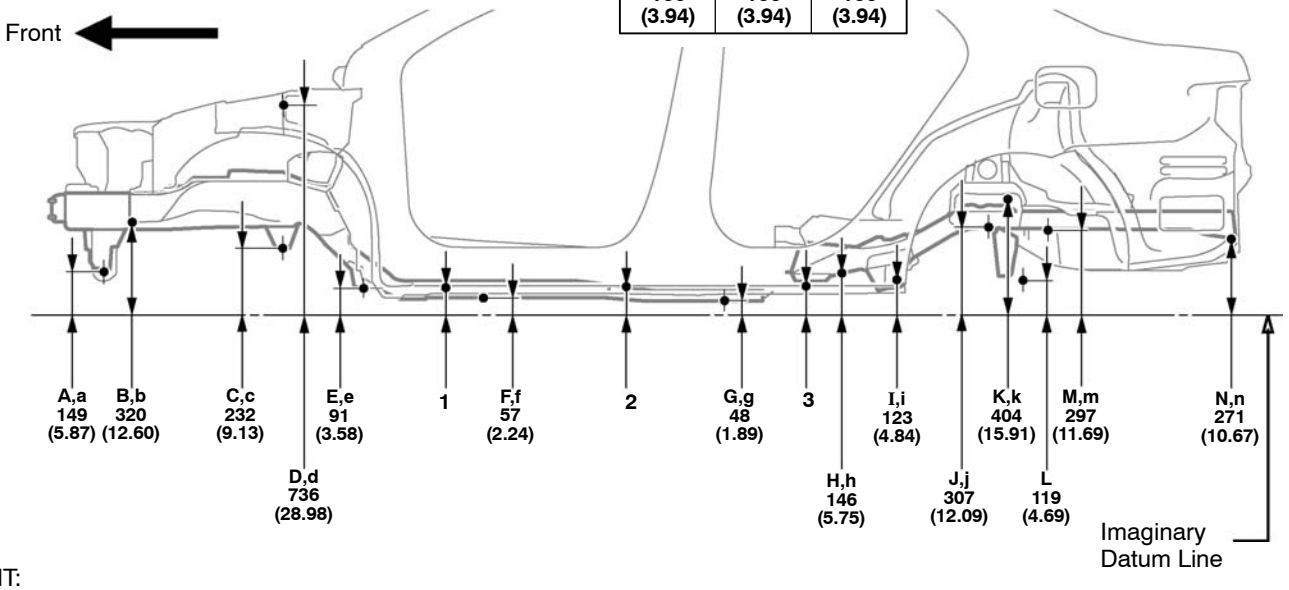

HINT:

1) For symbols, capital letters indicate right side of vehicle, small letters indicate left side of vehicle (seen from rear).
2) Point A,a, B,b, J,j on the vehicle are asymmetrical.

mm (in.)

Symbol	Name	Hole dia.	Symbol	Name	Hole dia.
A, a	Engine mounting center member installation nut	M10 (0.39)	H, h	Rear floor side front member standard hole	ø25 (0.98)
B, b	Front side member standard hole	ø18 (0.71)	I, i	Trailing arm installation hole	ø13 (0.51)
C, c	Front suspension crossmember installation nut	M14 (0.55)	J, j	Rear absorber mounting member standard hole	ø10 (0.39)
D, d	Front suspension support installation hole	ø11 (0.43)	K, k	Rear spring bracket installation hole	ø15 (0.59)
E, e	Front suspension crossmember installation nut	M14 (0.55)	L	Rear floor centermember NO. 4 reinforcement standard hole	ø8 (0.31)
F, f	Front side member standard holet	ø18 (0.71)	M, m	Rear floor side rear member standard hole	19 x 16 (0.75 x 0.63)
G, g	Front floor under reinforcement standard hole	ø10 (0.39)	N, n	Transport hook installation hole-rea	ø15 (0.59)

FRONT SUSPENSION CROSSMEMBER

(Three-Dimensional Distance)

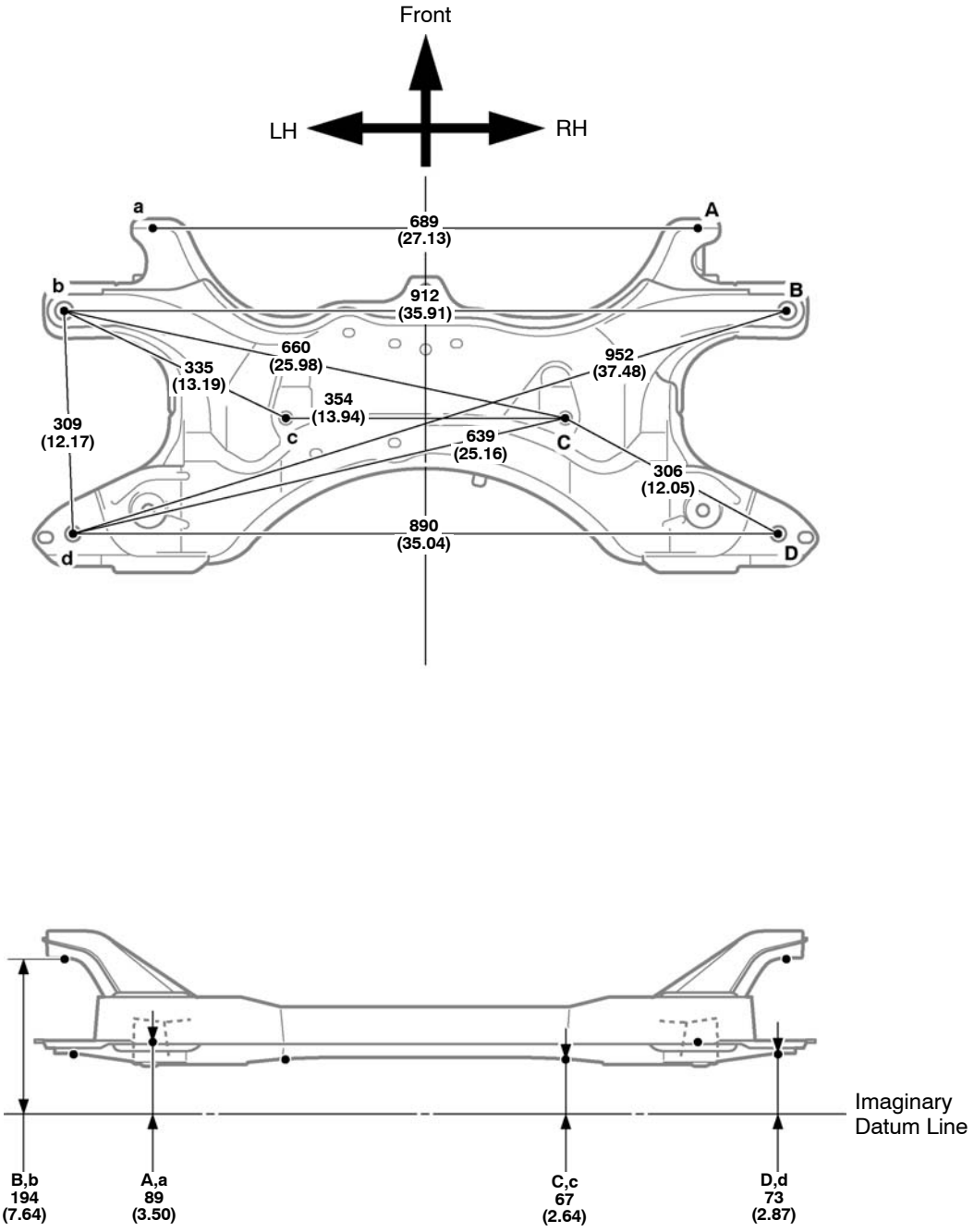

HINT: For symbols, capital letters indicate right side of vehicle, small letters indicate left side of vehicle (seen from rear).

mm (in.)

Symbol	Name	Hole dia.	Symbol	Name	Hole dia.
A, a	Lower arm installation hole	ø15.5 (0.61)	C, c	Front suspension crossmember standard hole	ø13 (0.51)
B, b	Front suspension crossmember installation hole	ø22 (0.87)	D, d	Front suspension crossmember installation hole	ø20 (0.79)

FRONT SUSPENSION CROSSMEMBER

(Two-Dimensional Distance)

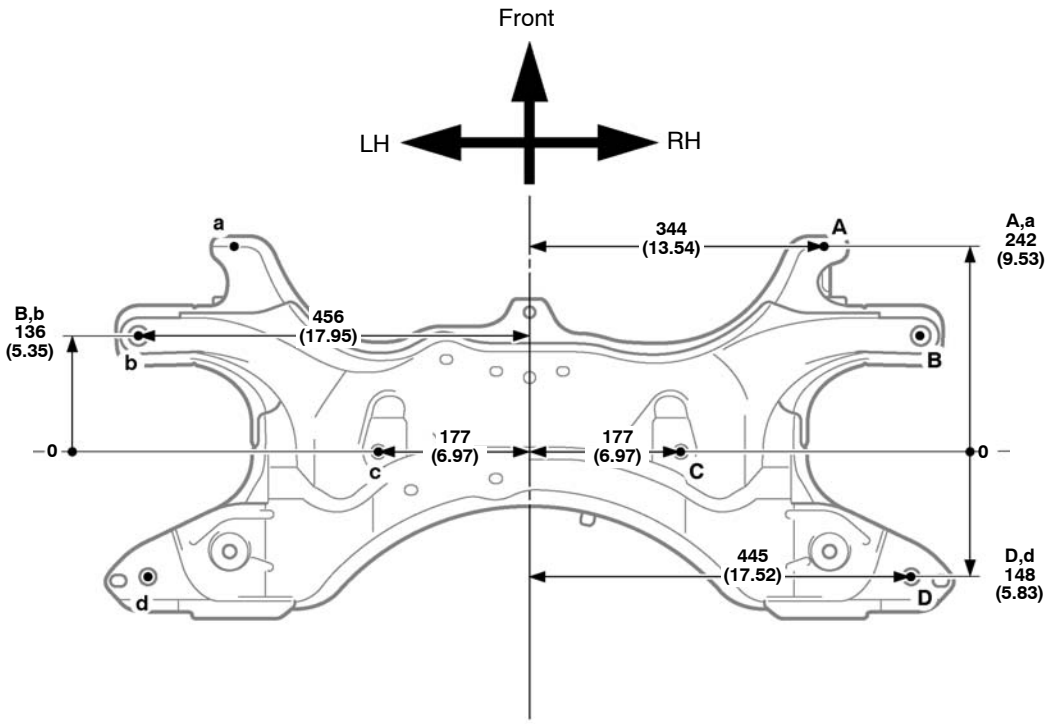

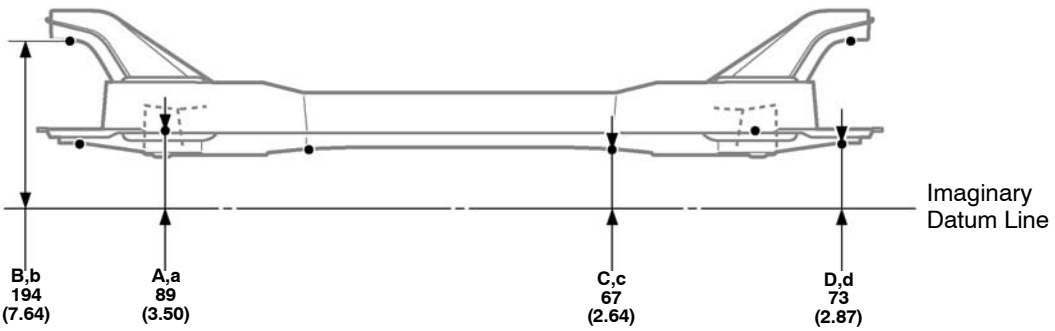

HINT: For symbols, capital letters indicate right side of vehicle, small letters indicate left side of vehicle (seen from rear).

mm (in.)

Symbol	Name	Hole dia.	Symbol	Name	Hole dia.
A, a	Lower arm installation hole	ø15.5 (0.61)	C, c	Lower arm installation hole	ø13 (0.51)
B, b	Front suspension crossmember installation hole	ø22 (0.87)	D, d	Front suspension crossmember installation hole	ø20 (0.79)

REFERENCE VALUE
ENGINE COMPARTMENT

(Three-Dimensional Distance)

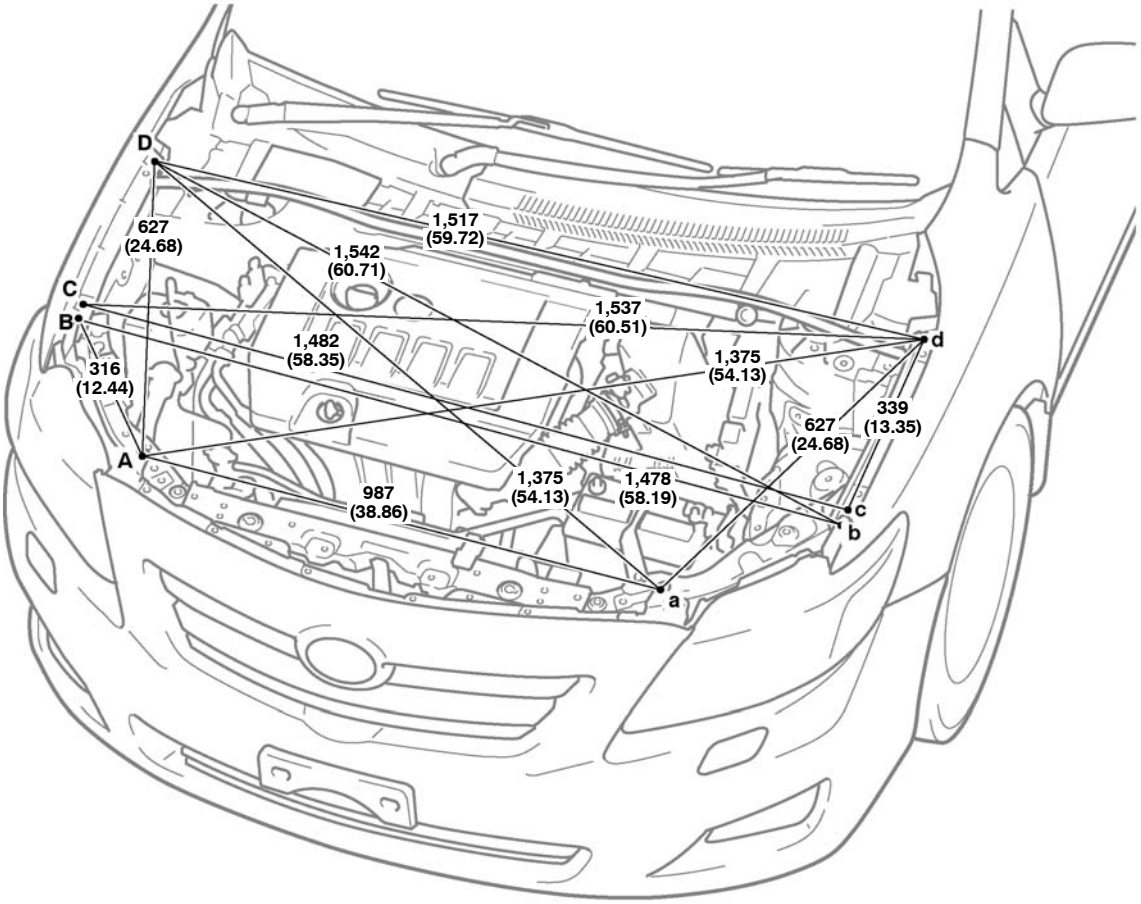

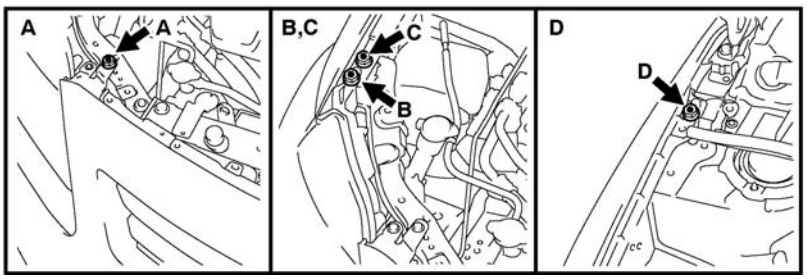

HINT:
1) For symbols, capital letters indicate right side of vehicle, small letters indicate left side of vehicle (seen from rear).
2) These values are actual measurements made on model. Use these reference values.

mm (in.)

Symbol	Name	Hole dia.	Symbol	Name	Hole dia.
A, a	Front bumper cover installation bolt	—	D, d	Front fender installation bolt	—
B, b	Headlight installation bolt	—	E, e	Front fender installation bolt	—

UNDER BODY

(Two-Dimensional Distance)

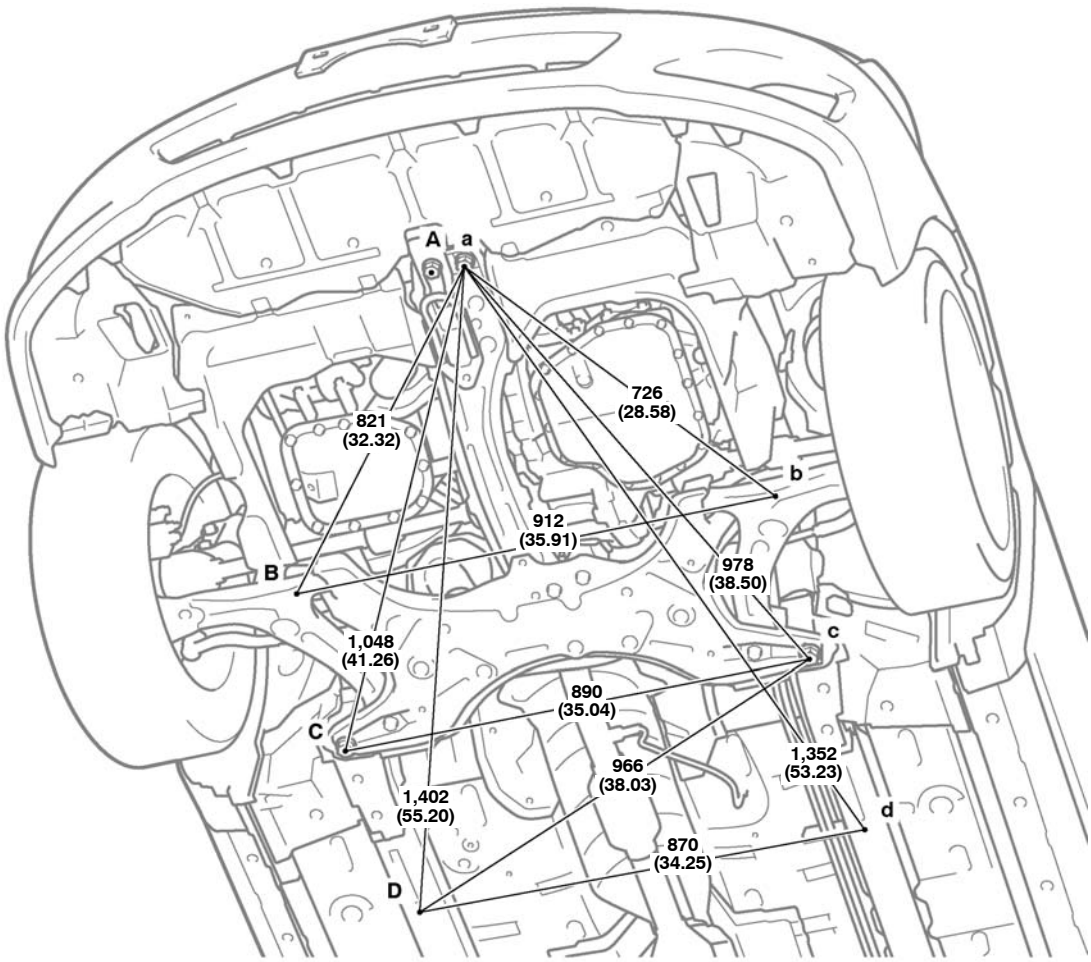

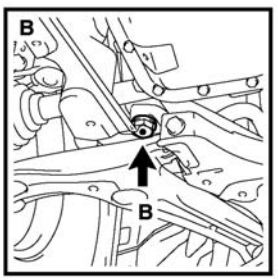

Vehicle Dimensions

A-B	A-b	A-C	A-c	A-D	A-d
782 (30.79)	759 (29.88)	1,020 (40.16)	1,002 (39.45)	1,382 (54.41)	1,369 (53.90)

HINT:
1) For symbols, capital letters indicate right side of vehicle, small letters indicate left side of vehicle (seen from rear).
2) These values are actual measurements made on model. Use these reference values.

mm (in.)

Symbol	Name	Hole dia.	Symbol	Name	Hole dia.
A, a	Center member installation bolt	–	C, c	Front suspension crossmember installation bolt	–
B, b	Front suspension crossmember installation bolt	–	D, d	Front side member installation hole	ø18 (0.71)

UNDER BODY

(Two-Dimensional Distance)

Front bumper reinforcement

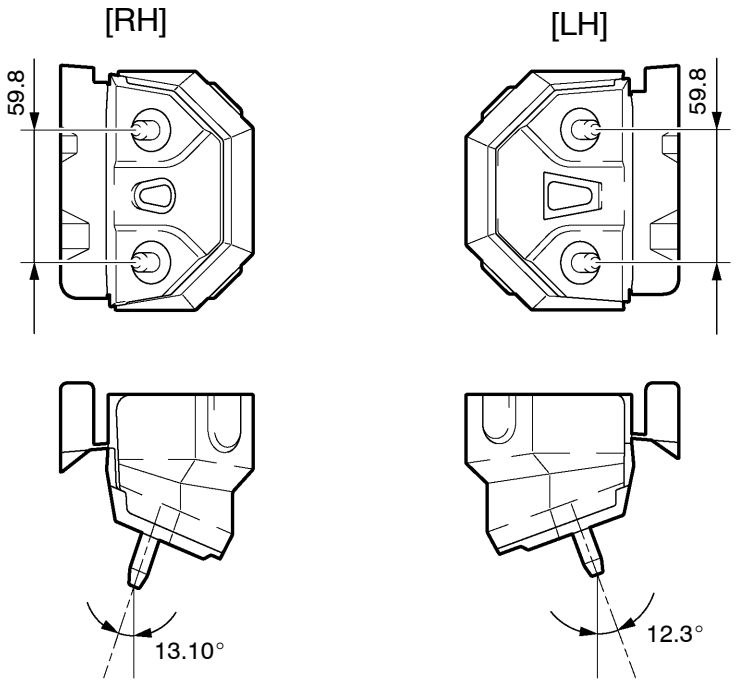

Front suspension support

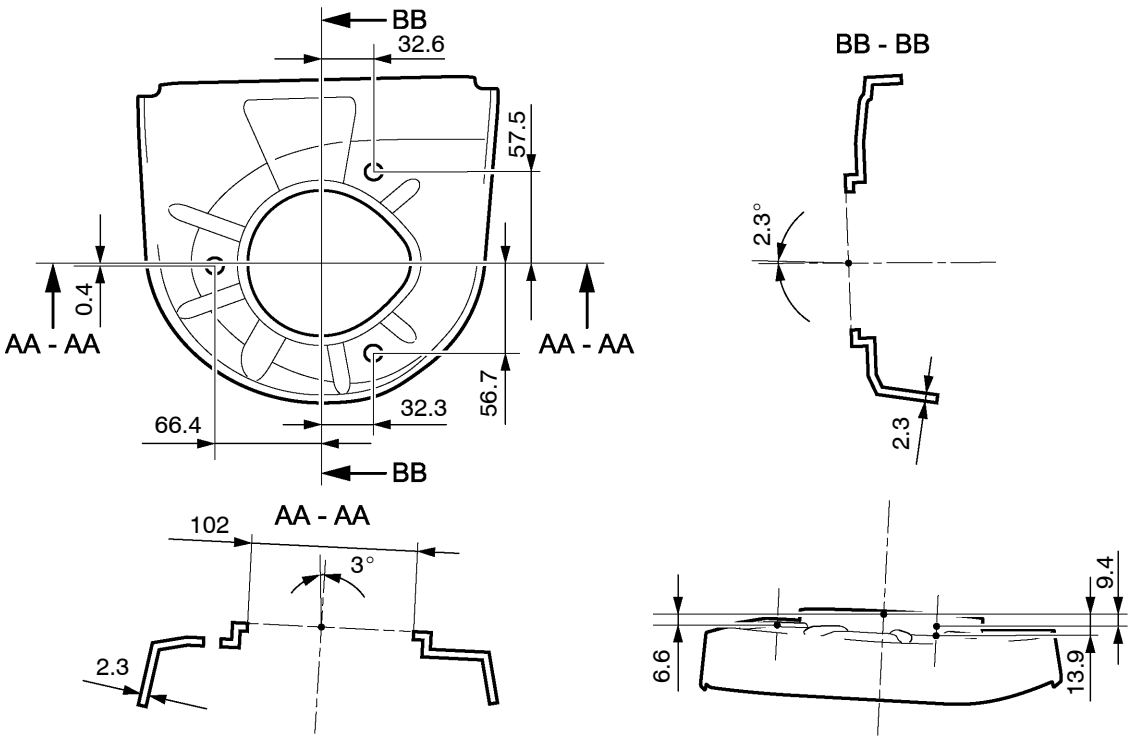

Unit: mm

MEMO

4. ANTI-RUST TREATMENT AFTER INSTALLATION

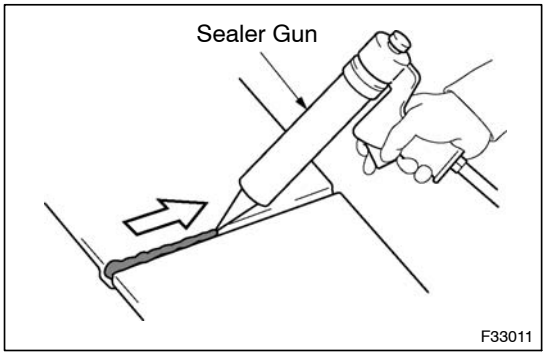

(a) BODY SEALER APPLICATION

PURPOSE:
For water-proofing and anti-rust measures, always apply the body sealer to the body panel seams and hems of the doors, hood, etc.

NOTICE:
Apply body sealer neatly to parts that require a high quality appearance.

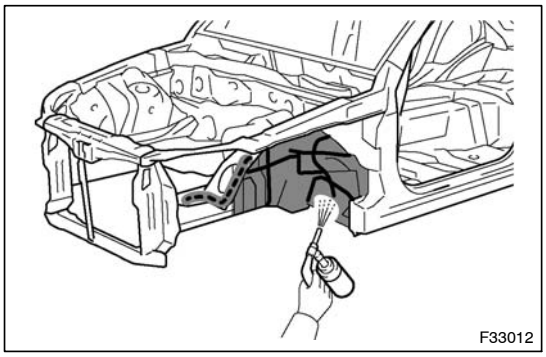

(b) UNDERCORT APPLICATION

PURPOSE:
To prevent corrosion and protect the body from gravel, always apply a sufficient undercoating to the areas indicated.

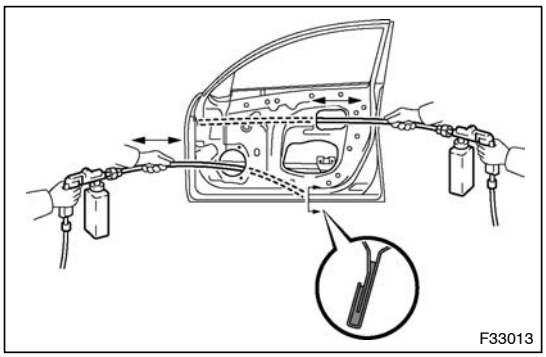

(c) VEHICLE BODY ANTI-RUST AGENT APPLICATION

PURPOSE:
The purpose is to protect areas from rust which are difficult to paint such as the backside of the box-shaped cross section frame parts.

METHOD:
Apply anti-rust agent through the service holes and/or installation holes of the parts.

5. HEADLIGHT BRACKET REPAIR

HINT:

- If the installation area of the headlight assembly is damaged, use the supply retainer for low-cost repair.
- Ensure that the headlight assembly is not damaged.

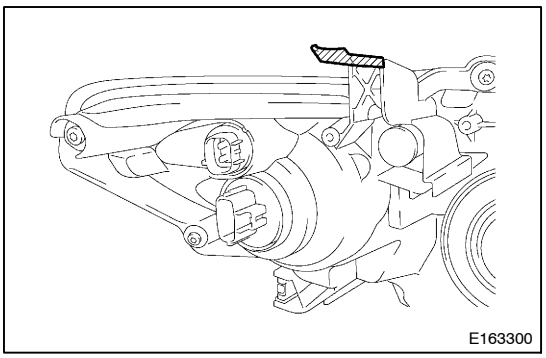

(a) INSTALL UPPER HEADLIGHT PROTECTOR RETAINER

(1) Cut off the part shaded in the illustration and smooth with sandpaper.

NOTICE:
After cutting off the part, place the upper headlight protector retainer against the bosses and gradually file away the old bracket if it interferes with the installation of the supply bracket.

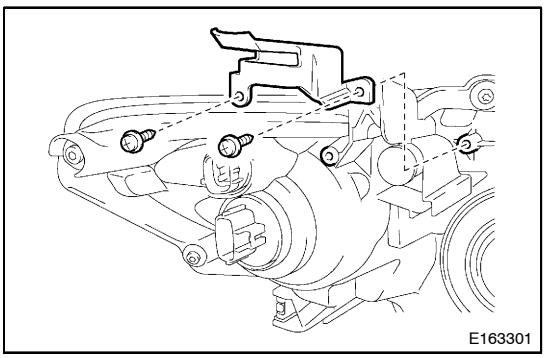

(2) Install the upper headlight protector retainer with the 2 screws.

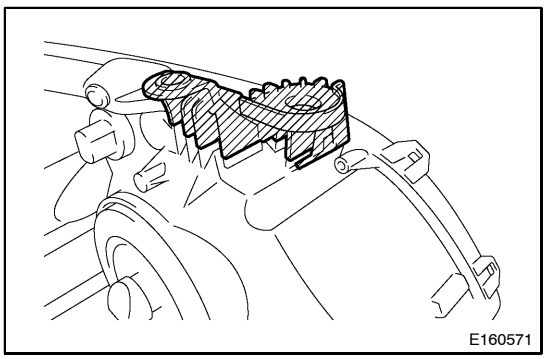

(b) INSTALL LOWER HEADLIGHT PROTECTOR RETAINER

(1) Cut off the part shaded in the illustration and smooth with sandpaper.

NOTICE:
After cutting off the part, place the lower headlight protector retainer against the bosses and gradually file away the old bracket if it interferes with the installation of the supply bracket.

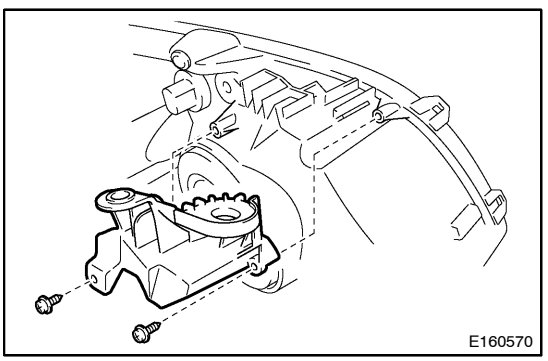

(2) Install the lower headlight protector retainer with the 2 screws.

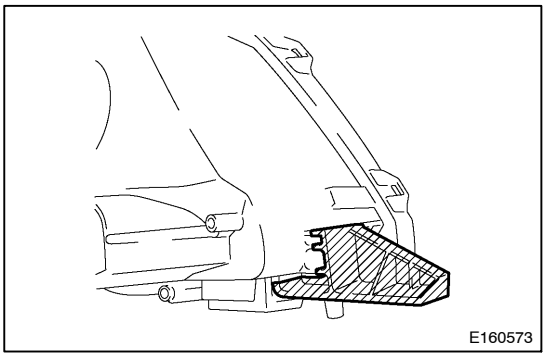

(c) INSTALL LOWER HEADLIGHT BRACKET

(1) Cut off the part shaded in the illustration and smooth with sandpaper.

NOTICE:
After cutting off the part, place the lower headlight bracket against the bosses and gradually file away the old bracket if it interferes with the installation of the supply bracket.

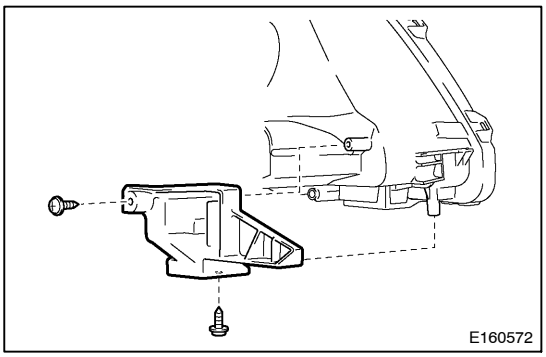

(2) Install the lower headlight bracket with the 2 screws.

6. PROCEDURES NECESSARY WHEN ECU OR OTHER PARTS ARE REPLACED

(a) THE WORK LIST

(1) Each inspection procedure refers to the TOYOTA Repair Manual.

Replacement Part	Necessary Procedure	Effect/Inoperative Function When Necessary Procedures are not Performed	Note
ECM	Vehicle Identification Number (VIN) registration	MIL comes on	Using the Techstream.
	ECU commnication ID registration	• Wireless door lock control system (*4) • Smart key system (*4) • Engine start	—
	Reset memory (*1)	• Large shift shock • The deterioration of fuel efficiency	Using the Techstream.
• Automatic transmission assembly (*1) • Engine assembly (*1)	Reset memory	• Large shift shock • The deterioration of fuel efficiency	Using the intelligent tester.
Tire pressure warning ECU	1. Register transmitter IDs 2. Initialize tire pressure warning system	• When DTC detection conditions of “transmitter ID not received” DTC are met, TPWS indicator blinks for 1 minute, and then illuminates • Tire pressure monitoring function	—
Tire pressure warning valve and transmitter	1. Register transmitter IDs 2. Initialize tire pressure warning system	1. When DTC detection conditions of “transmitter ID not received” DTC are met, TPWS indicator blinks for 1 minute, and then illuminates 2. Tire pressure monitoring function of replaced wheel	Even if only one wheel is replaced, IDs for all 4 wheels must be registered.
Brake actuator assembly (Skid control ECU)	Perform yaw rate and acceleration sensor zero point calibration	• VSC OFF indicator light blinks • VSC disabled or malfunctioning	Perform yaw rate and acceleration sensor zero point calibration with the ignition switch on (engine stopped).
• Yaw rate and acceleration sensor • Front wheel alignment adjustment	1. Clear zero point calibration data 2. Perform yaw rate and acceleration sensor zero point calibration	• VSC OFF indicator light blinks • VSC disabled or malfunctioning	Perform yaw rate and acceleration sensor zero point calibration with the ignition switch on (engine stopped).
• Power steering ECU (*2) • Steering column (*2)	Perform rotation angle sensor initialization and torque sensor zero point calibration.	• P/S warning light comes on • EPS control	DTC (C1515/C1525) will be stored when the power steering ECU is replaced.
Power steering ECU (*3)	1. Assist map writing 2. Torque sensor zero point calibration	• P /S warning light comes on • EPS control	DTC (C1515/C1525) will be stored when the power steering ECU is replaced.
Steering column (*3)	Torque sensor zero point calibration	Steering effort is different between turning steering wheel to left and right	—

Replacement Part	Necessary Procedure	Effect/Inoperative Function When Necessary Procedures are not Performed	Note
• Door control transmitter (*5) • Door control receiver (*5)	1. Perform identification code registration (key code) 2. Refer to wireless door lock control system "REGISTRATION" procedures	wireless door lock control system	—
Steering lock actuator (Steering lock ECU) (*4)	ECU code registration	Engine start	—
• Certification ECU (*4) • Electrical key transmitter (*4)	Key ID registration	• Wireless door lock control system • Smart key system • Engine start	—
ID code box (*4)	1. ECU code registration 2. ECU communication ID registration	• Wireless door lock control system • Smart key system • Engine start	—
Occupant classification ECU	• Perform zero point calibration • Registration ECU data	• Occupant classification system • Passenger airbag ON/OFF indicator • Airbag system (Front passenger side) • Seat belt warning system (Front passenger side)	—
• Sliding roof drive gear (Sliding roof ECU) • Sliding roof housing • Sliding roof drive cable	Perform sliding roof drive gear reset.	• Automatic open/close function of roof glass • Jam protection function • Operation function after ignition switch off	Necessary when removed and installed (Not necessary when the sliding roof drive gear (sliding roof ECU) is removed and installed together with the sliding roof housing.)

*1: for U341E, U250E Automatic Transaxle
*2: for 2AZ−FE
*3: for 2ZR−FE
*4: w/ Smart Key System
*5: w/o Smart Key System

PRECAUTION

1. WORK PRECAUTIONS

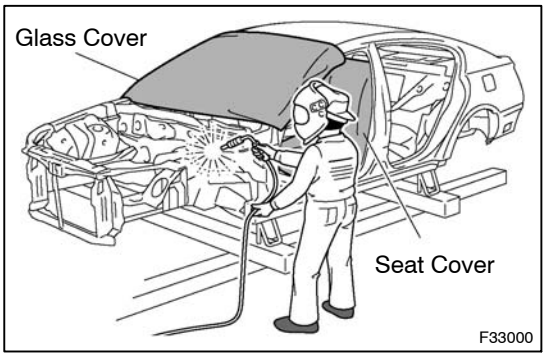

(a) VEHICLE PROTECTION

(1) When welding, cover glass, seats, carpets, etc. with heat resistant fireploof covers to protect them.

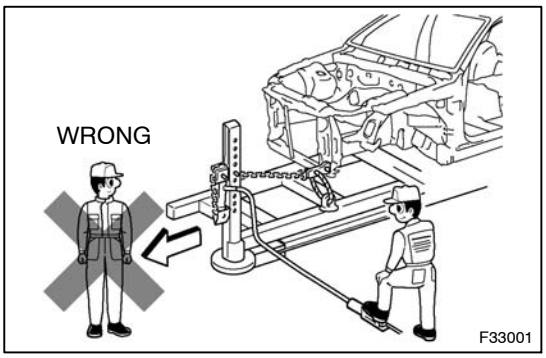

(b) SAFETY

(1) Never stand in the path of the chain when using a puller on the body or frame, and be sure to attach a safety cable.

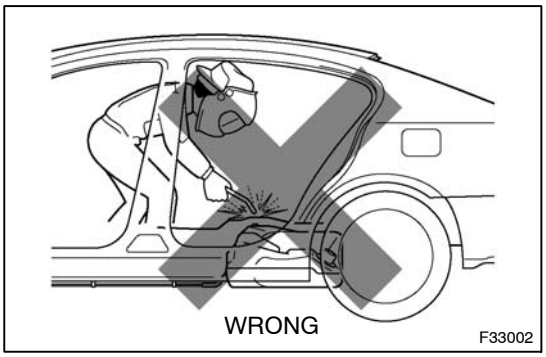

(2) If it is necessary to use a frame in the area of the fuel tank, first remove the tank and plug the fuel line.

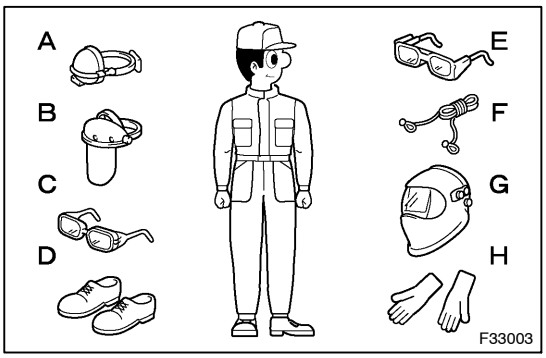

(c) SAFETY WORK CLOTHES

(1) In addition to the usual mechanic's wear, cap and safety shoes, the appropriate gloves, head protector, welder's glasses, ear plugs, face protector, dust mask, etc. should be worn as the situation demands.

Code	Name
A	Dust mask
B	Face protector
C	Safety glasses
D	Safety shoes
E	Welder's glasses
F	Ear plugs
G	Head protector
H	Welder's gloves

2. PRECAUTIONS WHEN REPAIRING BODY FRAME PARTS (INCLUDING CRUSH BOX)

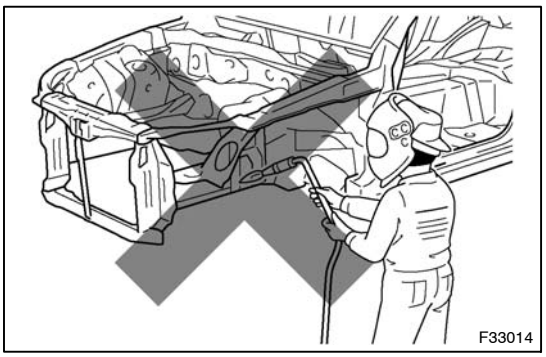

(a) PROHIBITION OF HEAT REPAIR FOR BODY FRAME PARTS

(1) Rustproof high strength steel sheets are used for the body frame. Therefore, if these parts are heat repaired using an acetylene torch or equivalent, the crystalline structure changes, causing the strength of the steel sheets to decrease. Also, the zinc corting which is used to protect the body from rust will be damaged. This causes the surface of the steel sheets to become oxidized, which reduces their ability to resist rust.

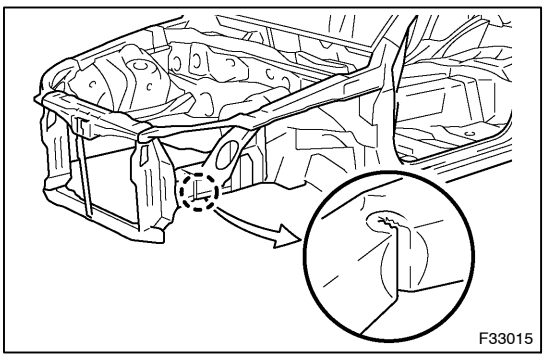

(b) WHEN TO REPLACE FRAME PARTS

NOTICE:
Replace frame parts that have kinks.

HINT:
What is kink?

A deformatision bon a steel sheet that cannot be returned to its original shape by pulling or hammering due to the deformation angle being sharp.

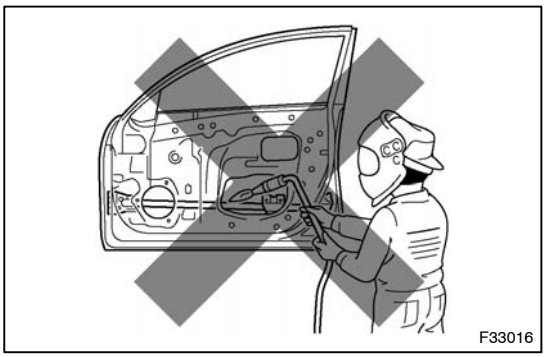

(c) REPAIR OF DOOR SIDE IMPACT BEAM IS PROHIBITED

(1) The impact beam is desined so that it performs at 100% in its original shape.
However, if the impact beam is repaired, its performance may not be the same as before the accident.

PARTS EHICH ARE PROHIBITED TO BE REPAIRED: Door side impact beam

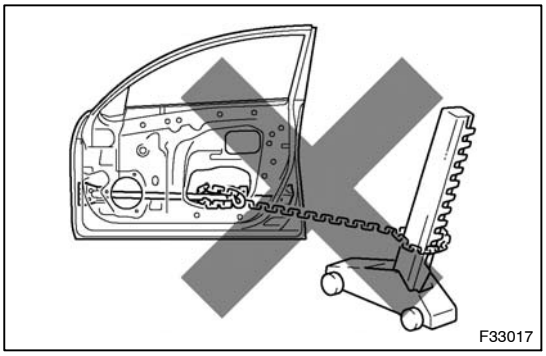

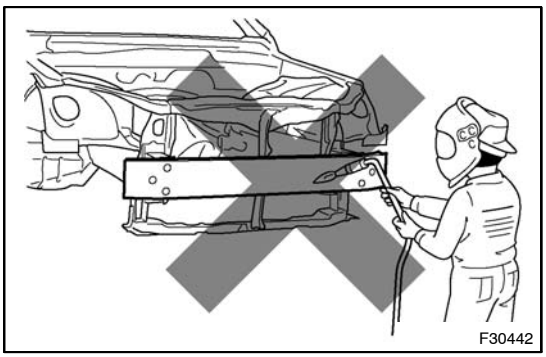

(d) REPAIR OF BUMPER REINFORCEMENT IS PROHIBITED

(1) The bumper reinforcement is designed so that it parforms at 100% in uts original shape.
However, if the impact beam is repaired, its performance may not be the same as before the accident.

PARTS EHICH ARE PROHIBITED TO BE REPAIRED: Bumper reinforcement

3. PRECAUTIONS FOR CORRECT REPAIR

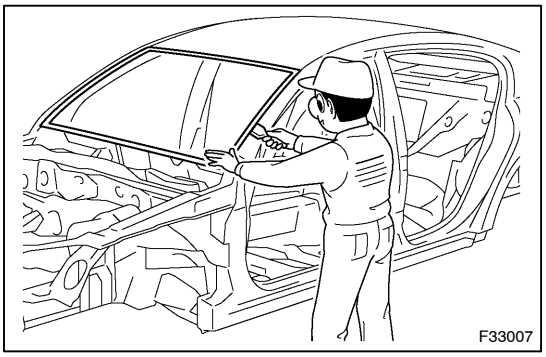

(a) REMOVAL OF ADJACENT COMPONENTS

(1) When removing adjacent components, apply protective tape to the surrounding body and your tools to prevent damage.

NOTICE:
If the paint film is damaged, make sure to refinish the paint.

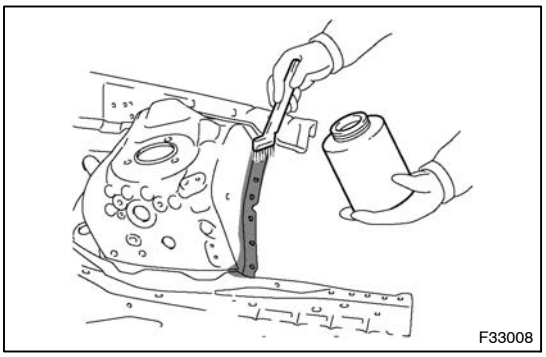

(b) ANTI-RUST TREATMENT BEFORE WELDING

(1) Apply welding primer to the contact surfaces of the welding areas to protect them from rust.

NOTICE:
Do not apply welding primer outside of the contact surfaces.

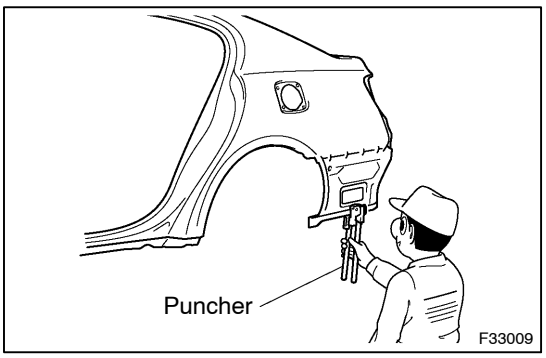

(c) MAKING HOLES FOR PLUG WELDING

(1) For areas where a spot welder cannot be used, use a puncher or drill to make holes for plug welding.

Thickness of welded portion	Diameter of plug hole
Under 10 mm (0.04 in.)	Over 5 mm (0.20 in.)
1.0 to 1.6 mm (0.04 to 0.06 in.)	Over 6.5 mm (0.26 in.)
1.7 to 2.3 mm (0.07 to 0.09 in.)	Over 8 mm (0.31 in.)
Over 2.4 mm (0.09 in.)	Over 10 mm (0.39 in.)

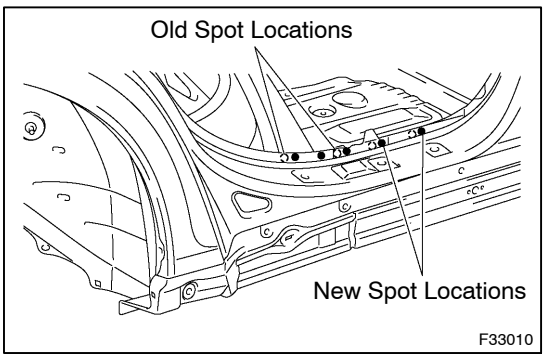

(d) WELDING PRECAUTIONS

(1) The number of welding spots should be as follows.

Spot weld: 1.3 X No. of manufacturer's spots
Plug weld: More than No. of manufacturer's plugs

(2) Spot weld locations
Avoid welding over previously welded areas.

8. PRECAUTIONS FOR RESIN PARTS

(a) PLASTIC PROPERTIES CHART

(1) When repairing, some parts may be deformed by the heat. Therefore, confirm the properties of the platic parts, and remove parts beforehand as necessary.

Code	Material name	Heat* resistant temperature limit °C (°F)	Resistance to alcohol or gasoline	Notes
ABS	Acrylonitrile Butadiene Styrene	80 (176)	Alcohol is harmless if applied only for short time in small amounts (e.g., quick wiping to remove grease).	Avoid gasoline and organic or aromatic solvents.
AES	Acrylonitrile Ethylene Styrene	80 (176)	Alcohol is harmless if applied only for short time in small amounts (e.g., quick wiping to remove grease).	Avoid gasoline and organic or aromatic solvents.
ASA	Acrylonitrile Styrene Acrylate	80 (176)	Alcohol is harmless if applied only for short time in small amounts (e.g., quick wiping to remove grease).	Avoid gasoline and organic or aromatic solvents.
EPDM	Ethylene Propylene	100 (212)	Alcohol is harmless. Gasoline is harmless if applied only for short time in small amounts.	Most solvents are harmless but avoid dipping in gasoline,solvents, etc.
PA	Polyamide (Nylon)	80 (176)	Alcohol and gasoline are harmless.	Avoid battery acid.
PBT	Polybutylene Terephthalate	160 (320)	Alcohol and gasoline are harmless.	Most solvents are harmless.
PC	Polycarbonate	120 (248)	Alcohol is harmless.	Avoid gasoline brake fluid, wax, wax removers and organic solvents. Avoid alkali.
PE	Polyethylene	80 (176)	Alcohol and gasoline are harmless.	Most solvents are harmless.
PET	Polyethylene Terephthalate	75 (167)	Alcohol and gasoline are harmless.	Avoid dipping in water.
PMMA	Polymethyl Methacrylate	80 (176)	Alcohol is harmless if applied only for short time in small amounts	Avoid dipping or immersing in alcohol, gasoline, solvents, etc.
PP	Polypropylene	80 (176)	Alcohol and gasoline are harmless.	Most solvents are harmless.
PVC	Polyvinylchloride (Vinyl)	80 (176)	Alcohol and Gasoline are harmless. if applied only for short time in small amounts. (e.g., quick wiping to remove grease).	Avoid dipping or immersing in alcohol, gasoline, solvents, etc.
TPE	Thermoplastic Elastomer	80 (176)	Alcohol and Gasoline are harmless. if applied only for short time in small amounts. (e.g., quick wiping to remove grease).	Most solvents are harmless but avoid dipping in gasoline, solvents, etc.
TPO	Thermoplastic Olefine	80 (176)	Alcohol and Gasoline are harmless. if applied only for short time in small amounts. (e.g., quick wiping to remove grease).	Most solvents are harmless but avoid dipping in gasoline, solvents, etc.TSOP

Code	Material name	Heat* resistant temperature limit °C (°F)	Resistance to alcohol or gasoline	Notes
TSOP	TOYOTA Super Olefine Polymer	80 (176)	Alcohol and gasoline are harmless.	Most solvents are harmless.

* Temperatures higher than those listed here may result in material deformation during repair.

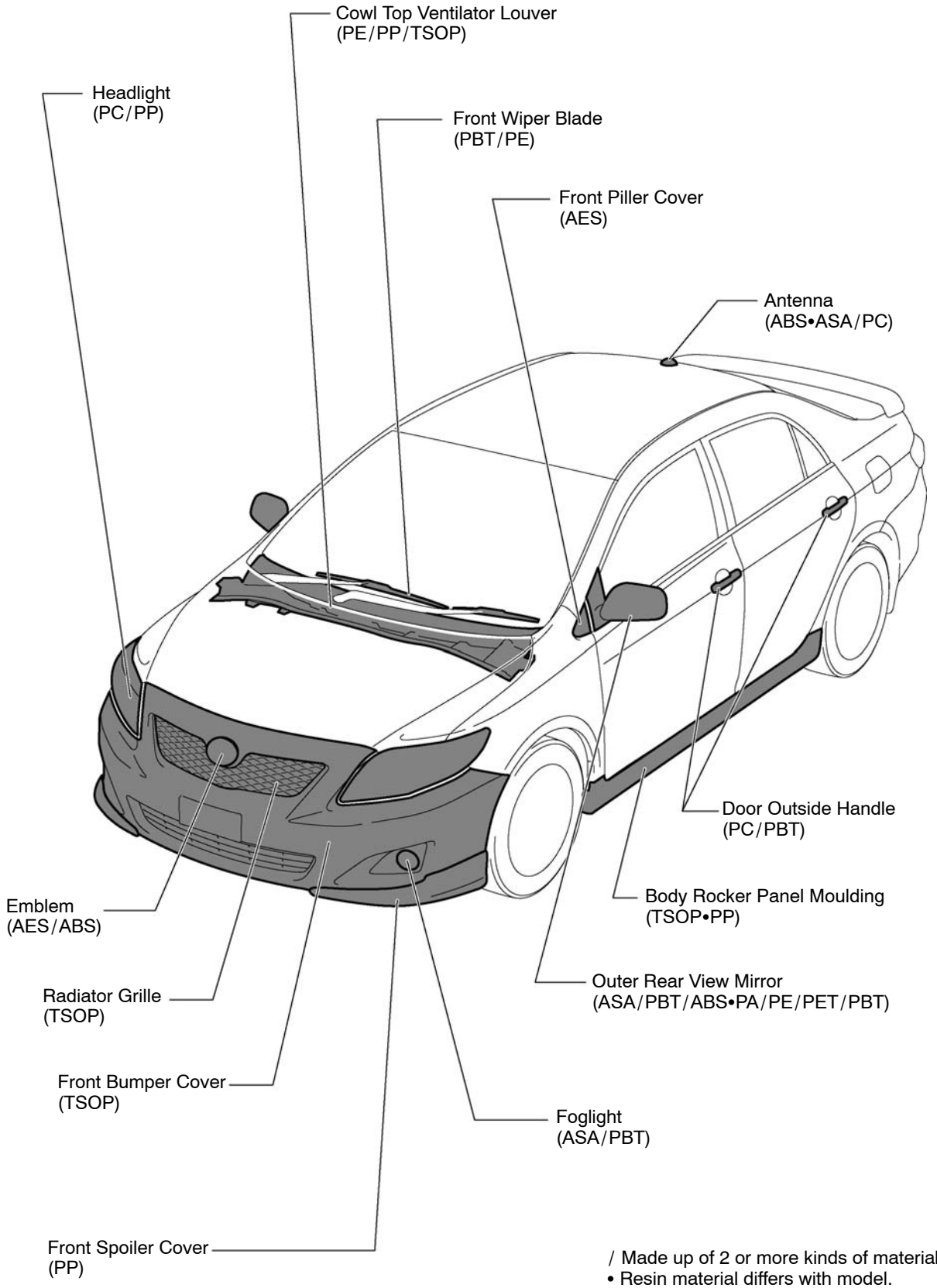

B0709140118B

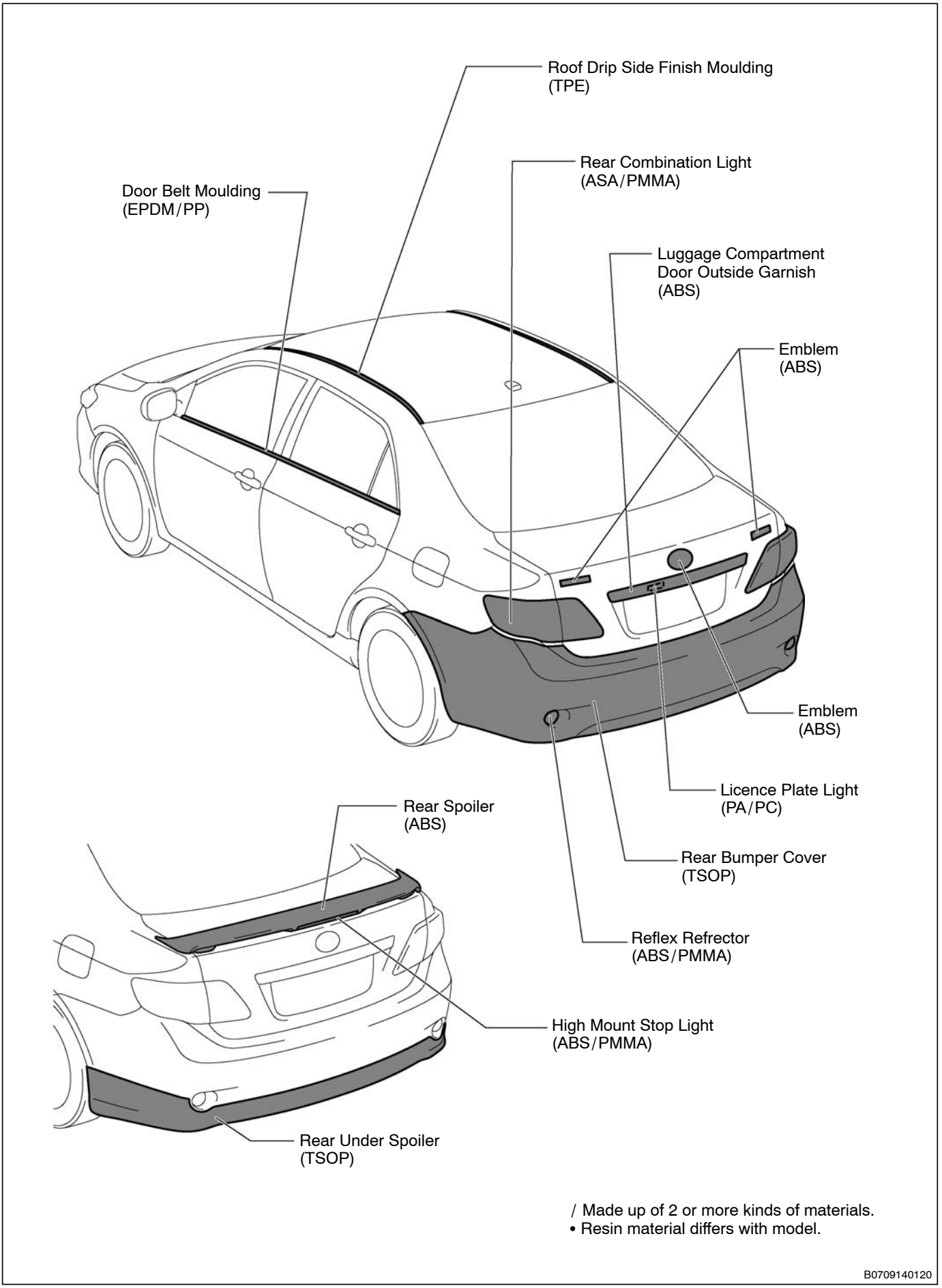

/ Made up of 2 or more kinds of materials.
• Resin material differs with model.

B0709140120

ABOUT THIS VEHICLE

1. STRUCTURAL OUTLINE

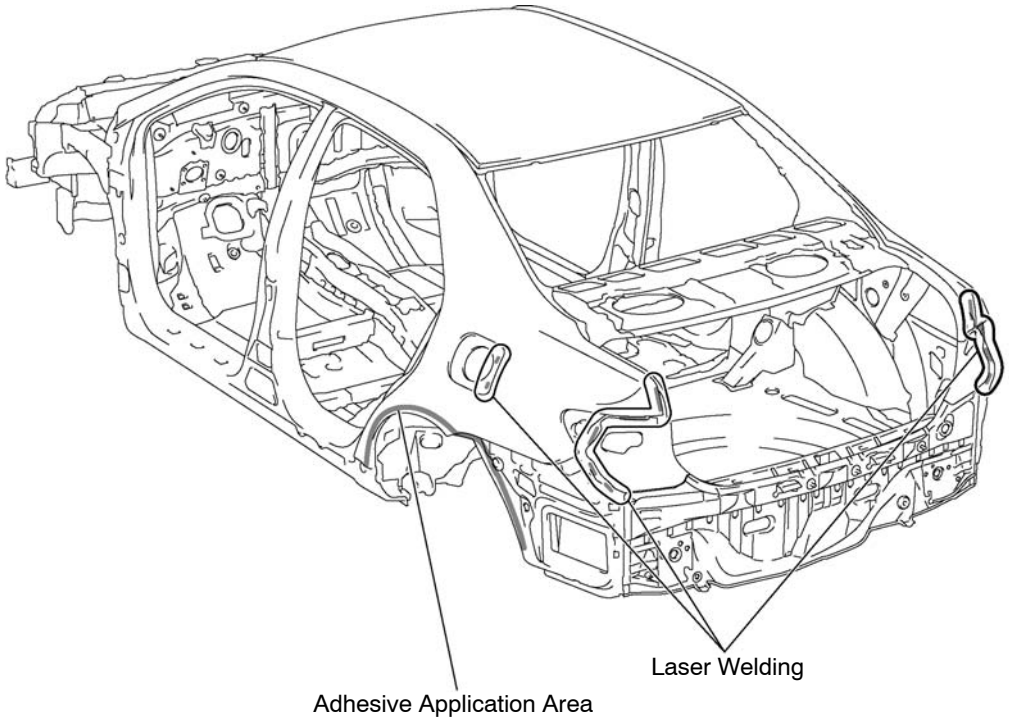

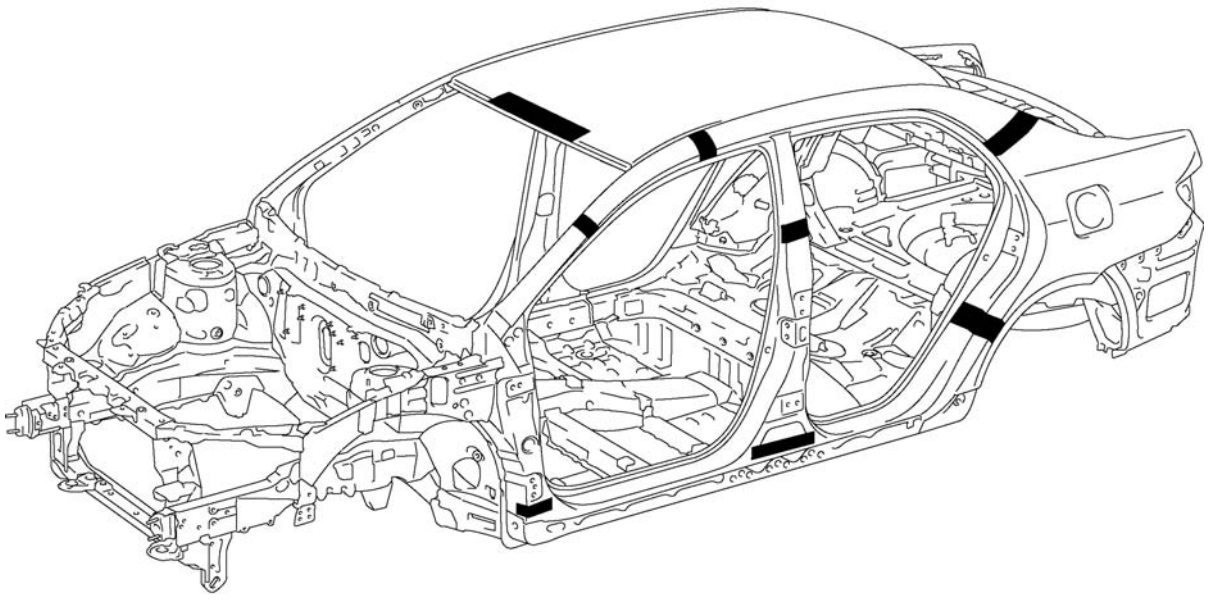

· · · Formed material application areas (refer to PC-8)

B0706260033

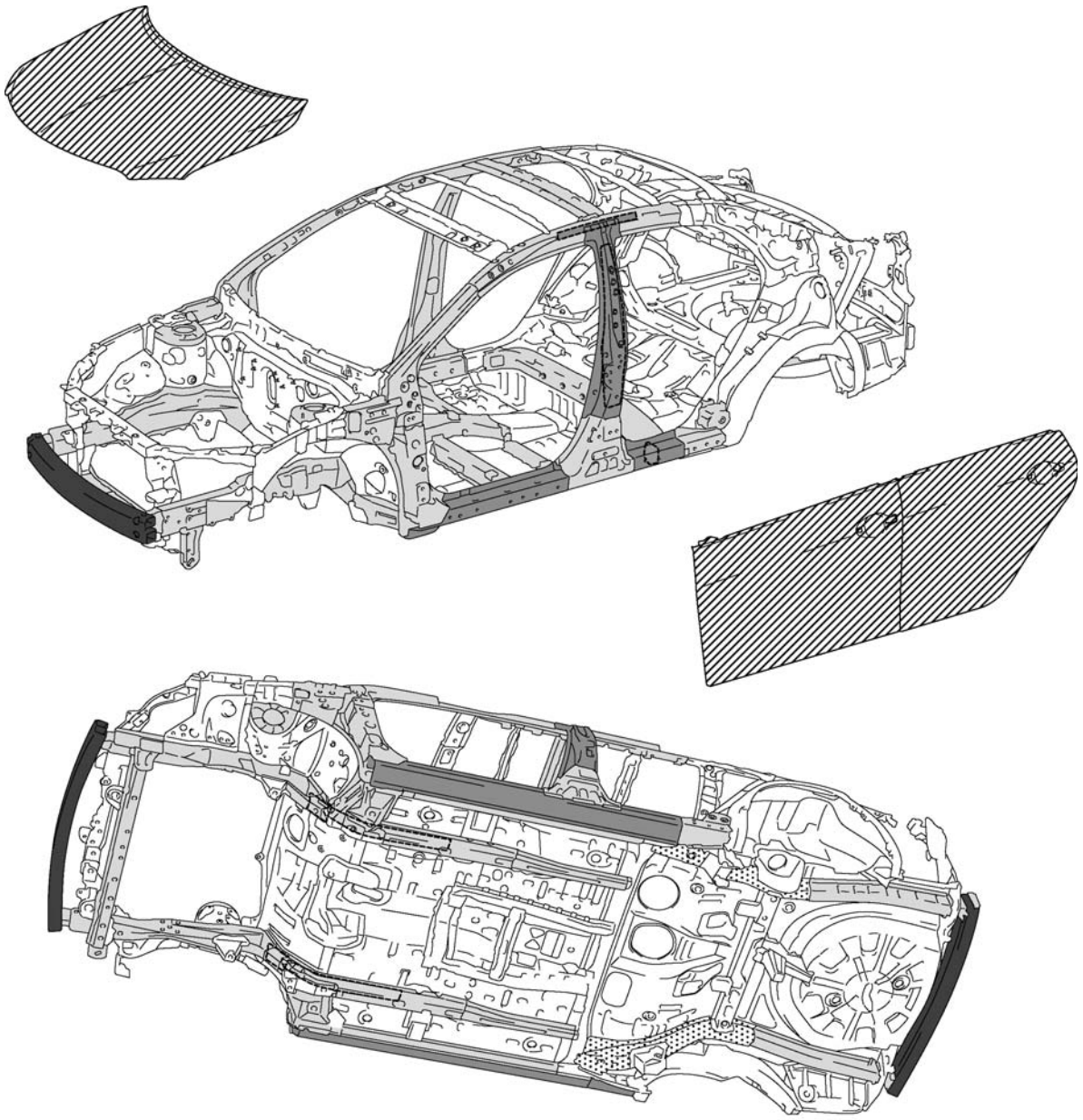

B0710190003

2. NOTICE ABOUT VEHICLE CONDITION WHEN JACKING UP VEHICLE

(a) NOTICE FOR USING JACK AND SAFETY STAND

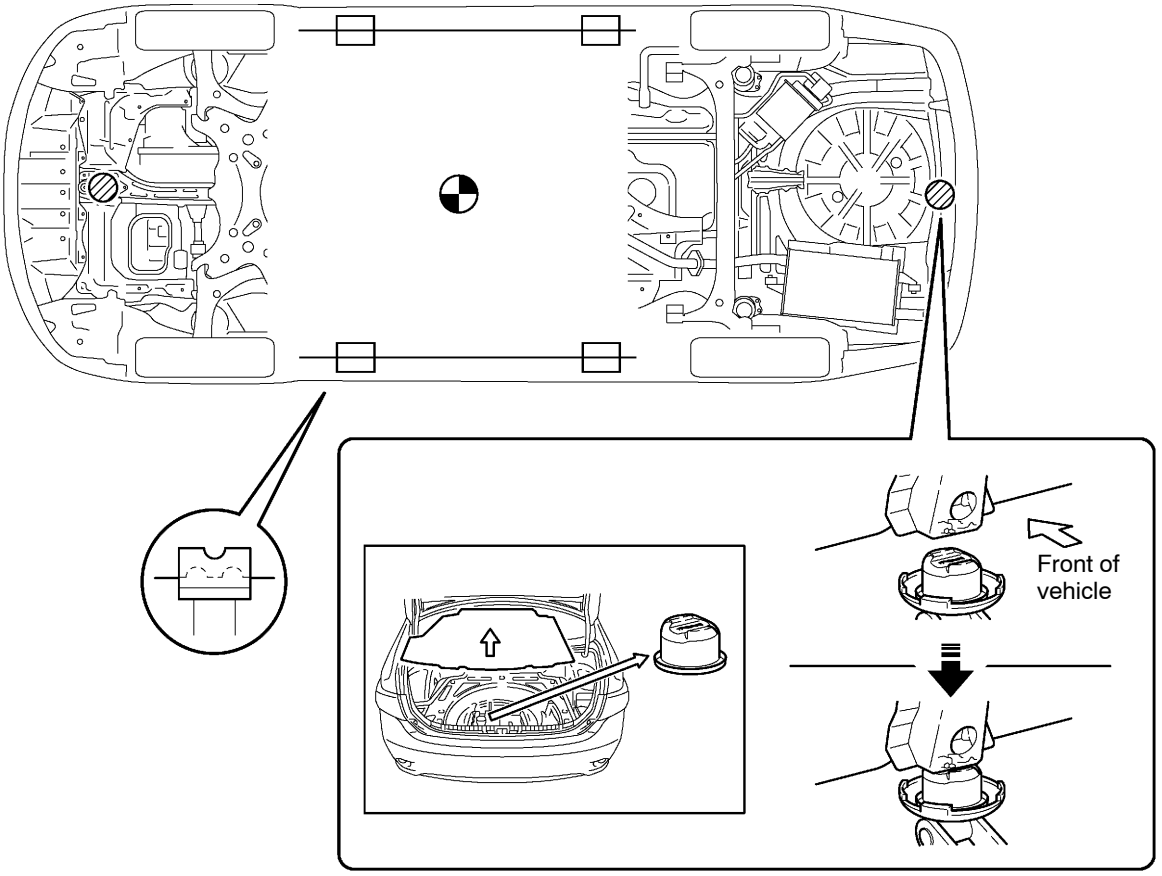

Remove the jack attachment from the the spare tire cover in the trunk, then, align the concave portion with the rear jack position and jack up the vehicle.
NOTICE: Set the jack attachment with the arrow facing towards the front of the vehicle.

: JACK POSITION

: SUPPORT POSITION, PANTOGRAPH JACK POSITION

: VEHICLE CENTER OF GRVITY (unloaded condition)

B0709140118A

(b) NOTICE FOR USING SWING ARM TYPE LIFT

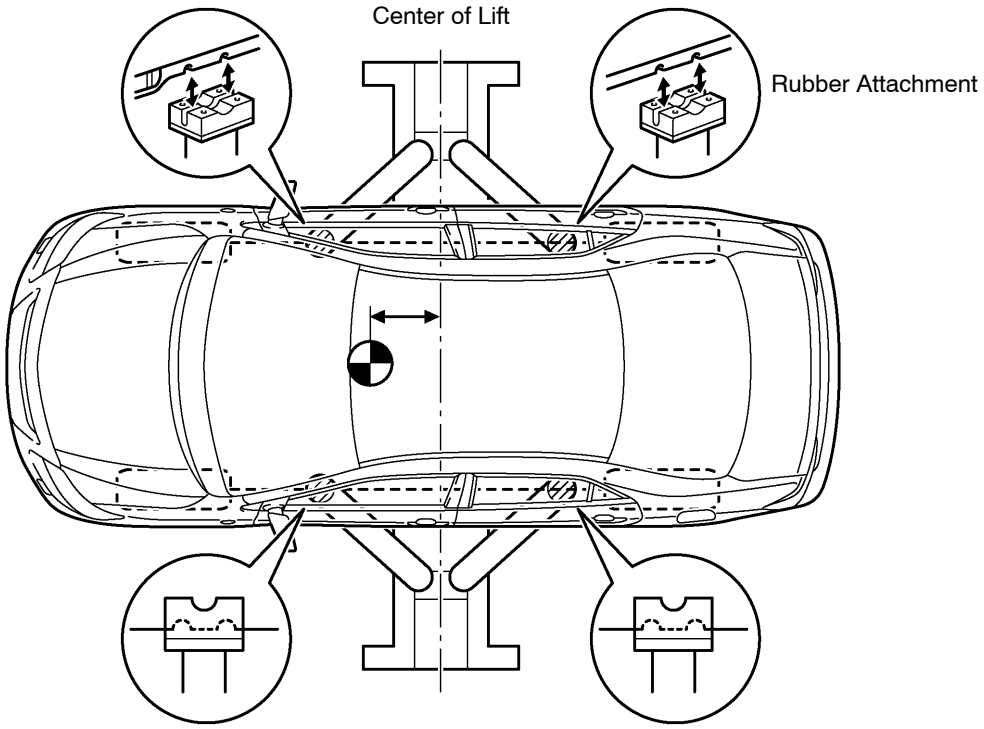

: VEHICLE CENTER OF GRAVITY (unloaded condition)

B0701260007

(c) NOTICE FOR USING PLATE TYPE LIFT

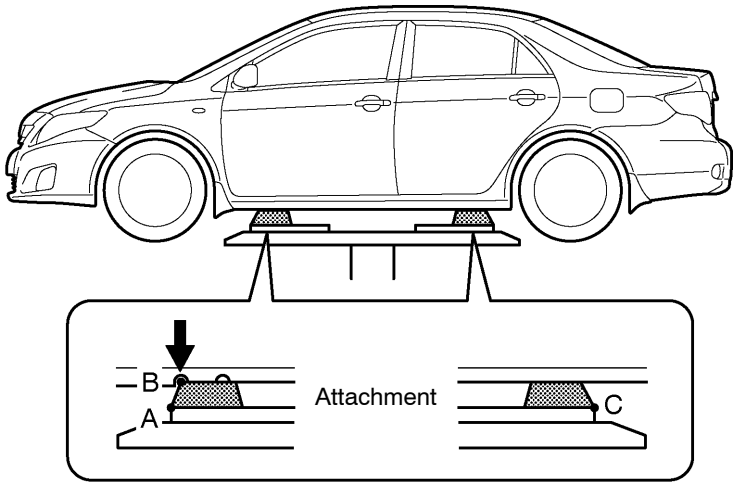

Attachment Dimensions

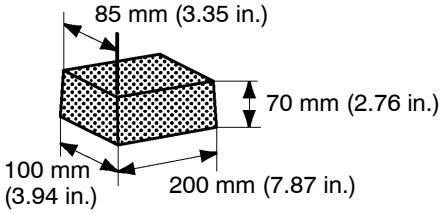

Right and left set position	• Place the vehicle over the center of the lift.
Front and rear set position	• Align the cushion ends of the plate with the attachment lower ends (A and C). • Align the attachment upper end (B) with the rocker flange front side notch.

B0701260008

3. DAMAGE DIAGNOSIS

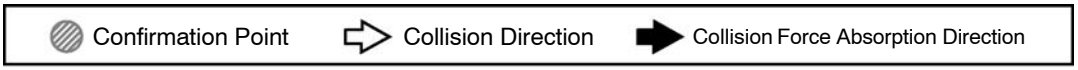

Head-on Collision:

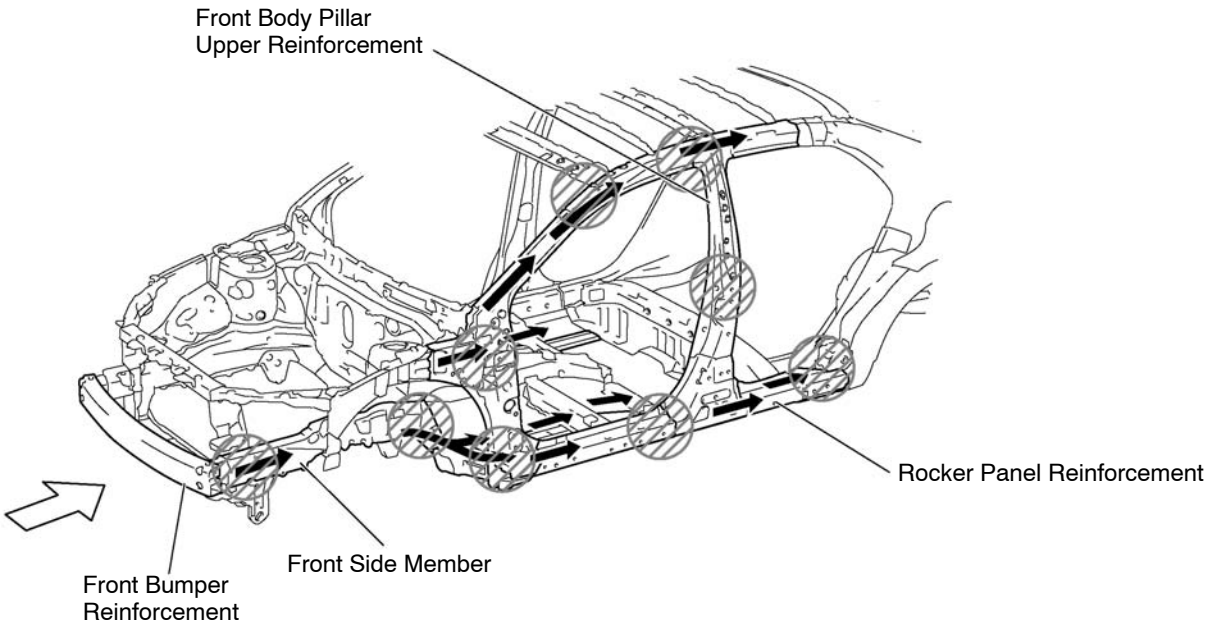

Side Collision:

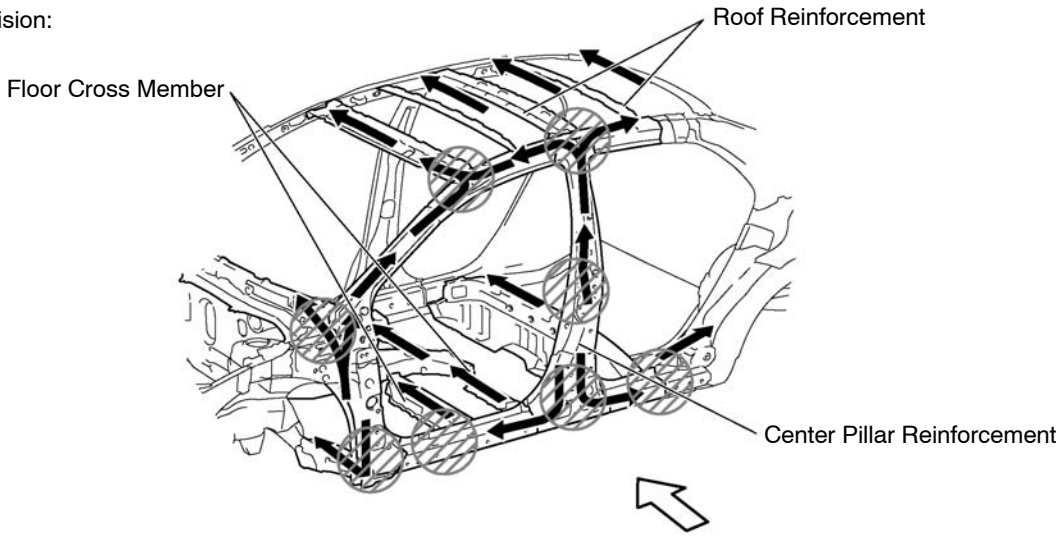

B0706260035

4. COMPONENTS

(a) Front bumper

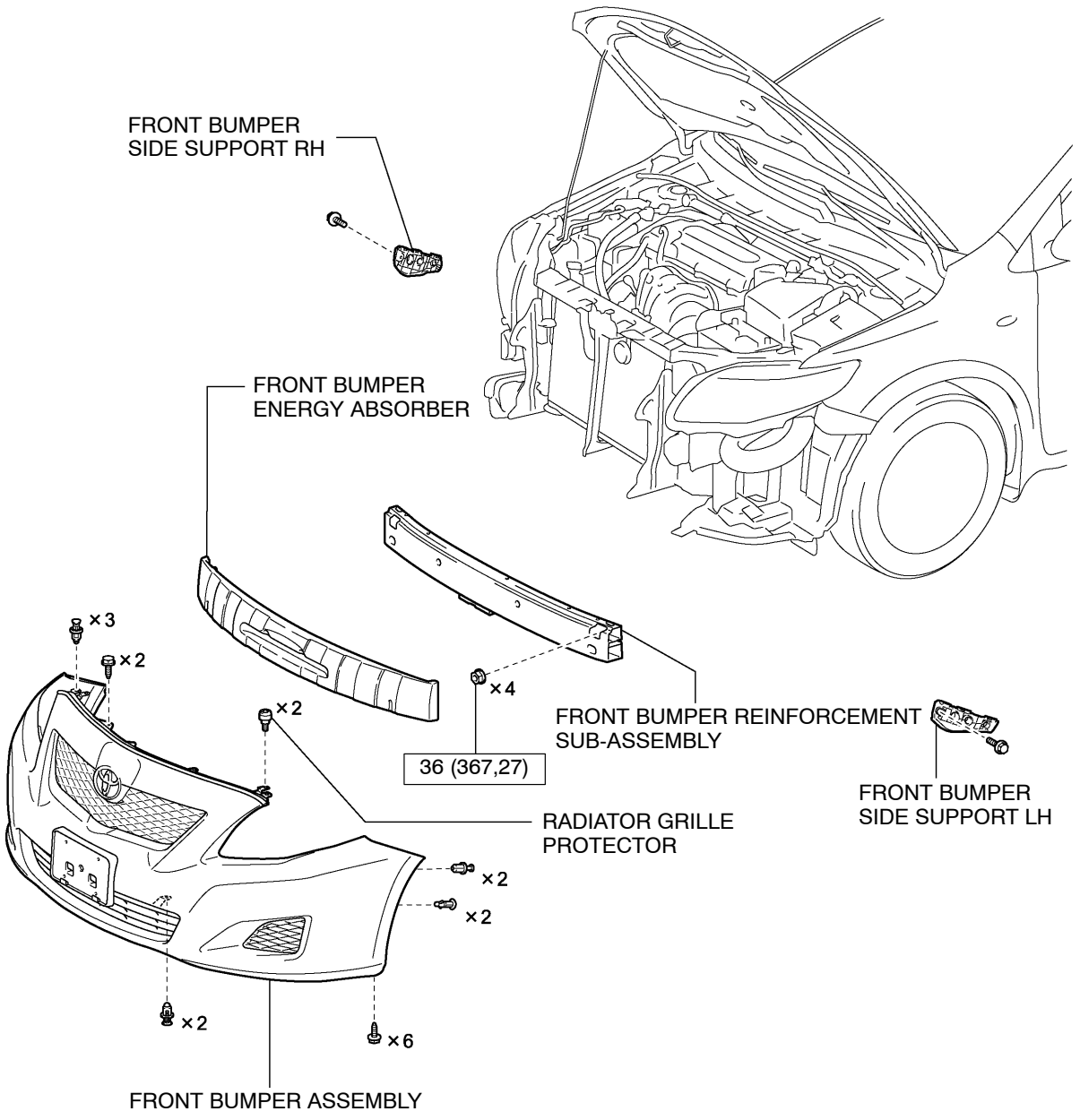

CAUTION:
The bolts must be tightened to the torque specification, as they are related to vehicle safety during a collision.

N·m (kgf·cm, ft.·lbf)	: Specified torque

B0710120001B

(b) Side Mudguard

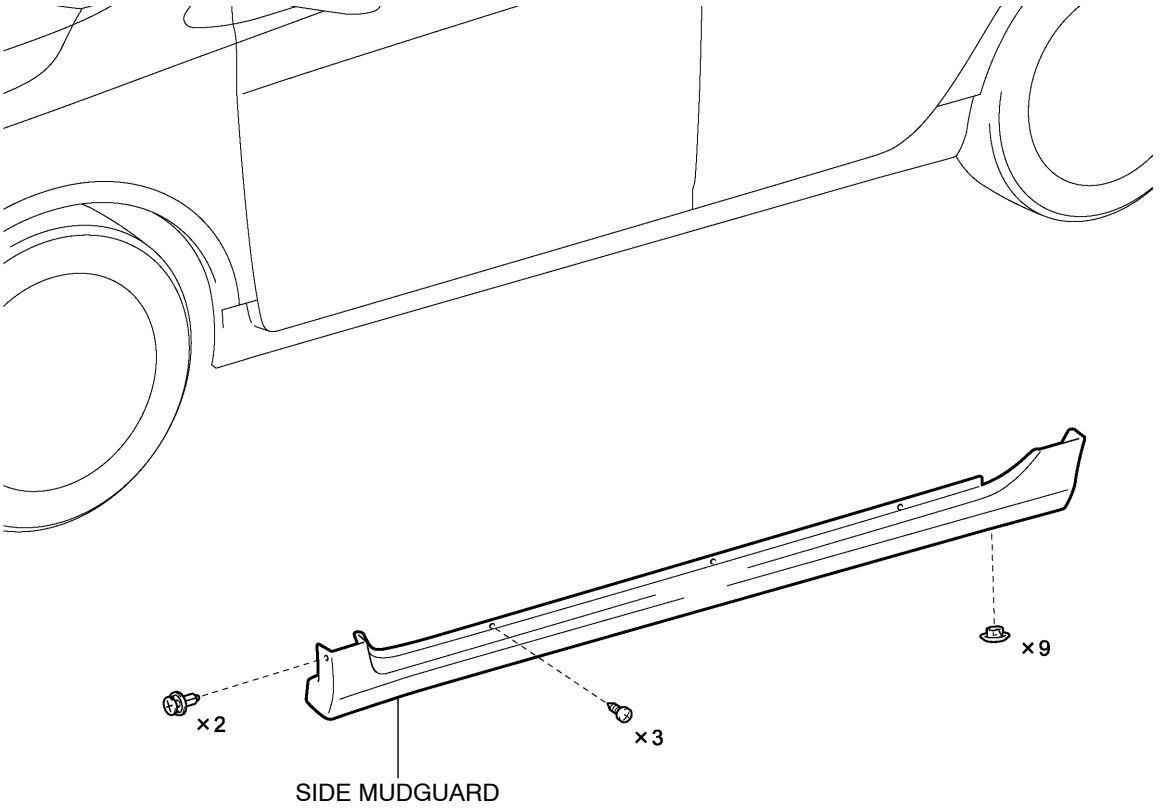

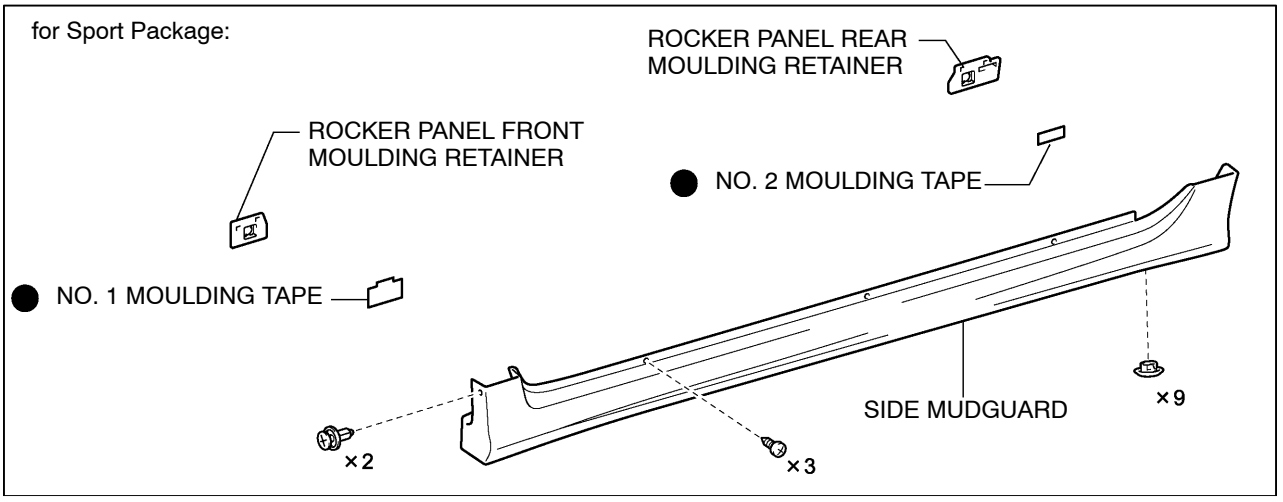

● Non-reusable part

B192955E01

(c) Rear bumper

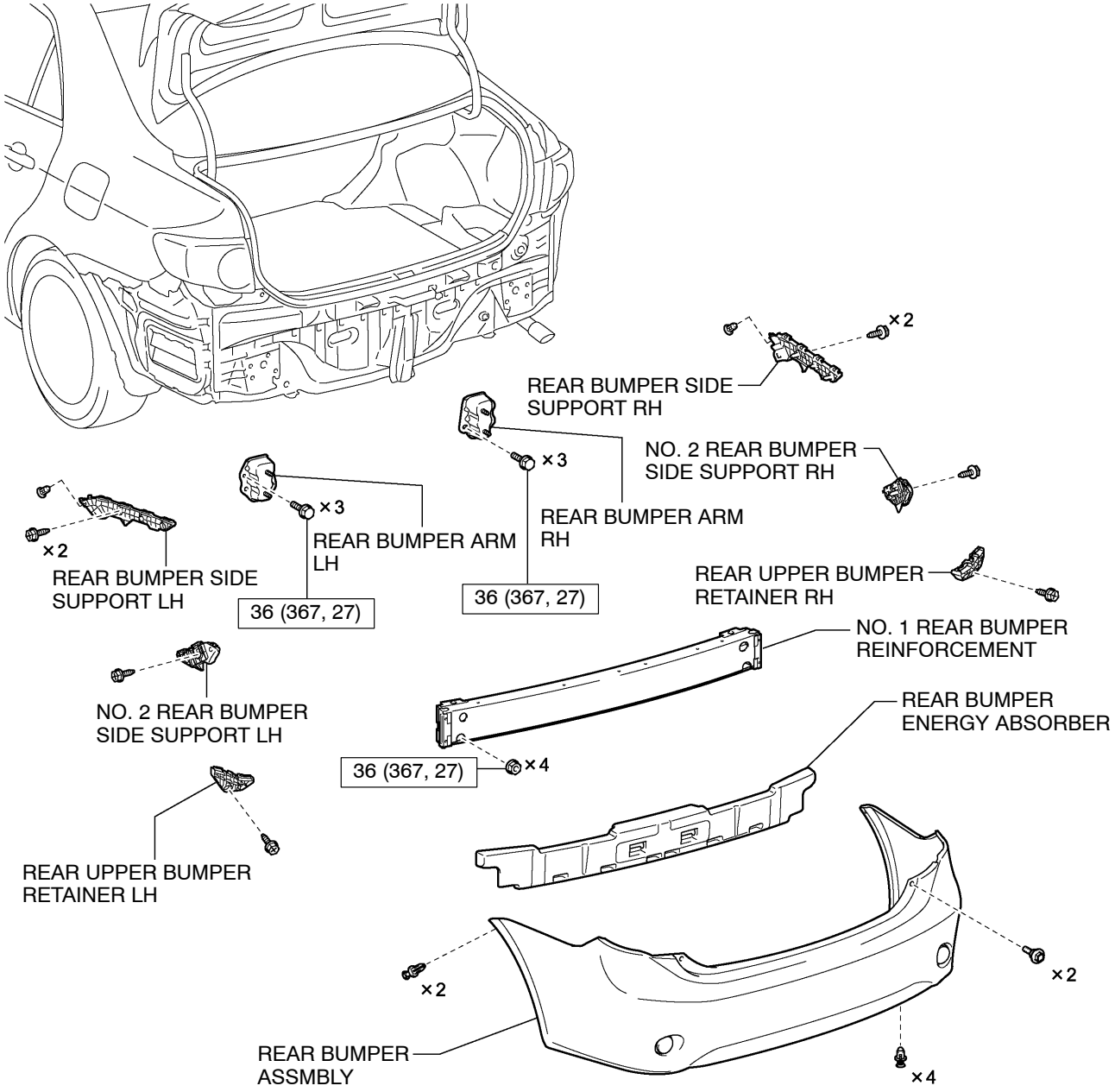

w/ Rear Fender Mudguard:

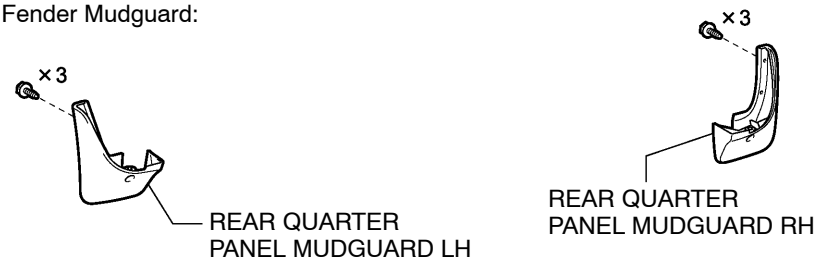

CAUTION:
The bolts must be tightened to the torque specification, as they are related to vehicle safety during a collision.

N·m (kgf·cm, ft.·lbf) : Specified torque

B0710120002

(d) Door

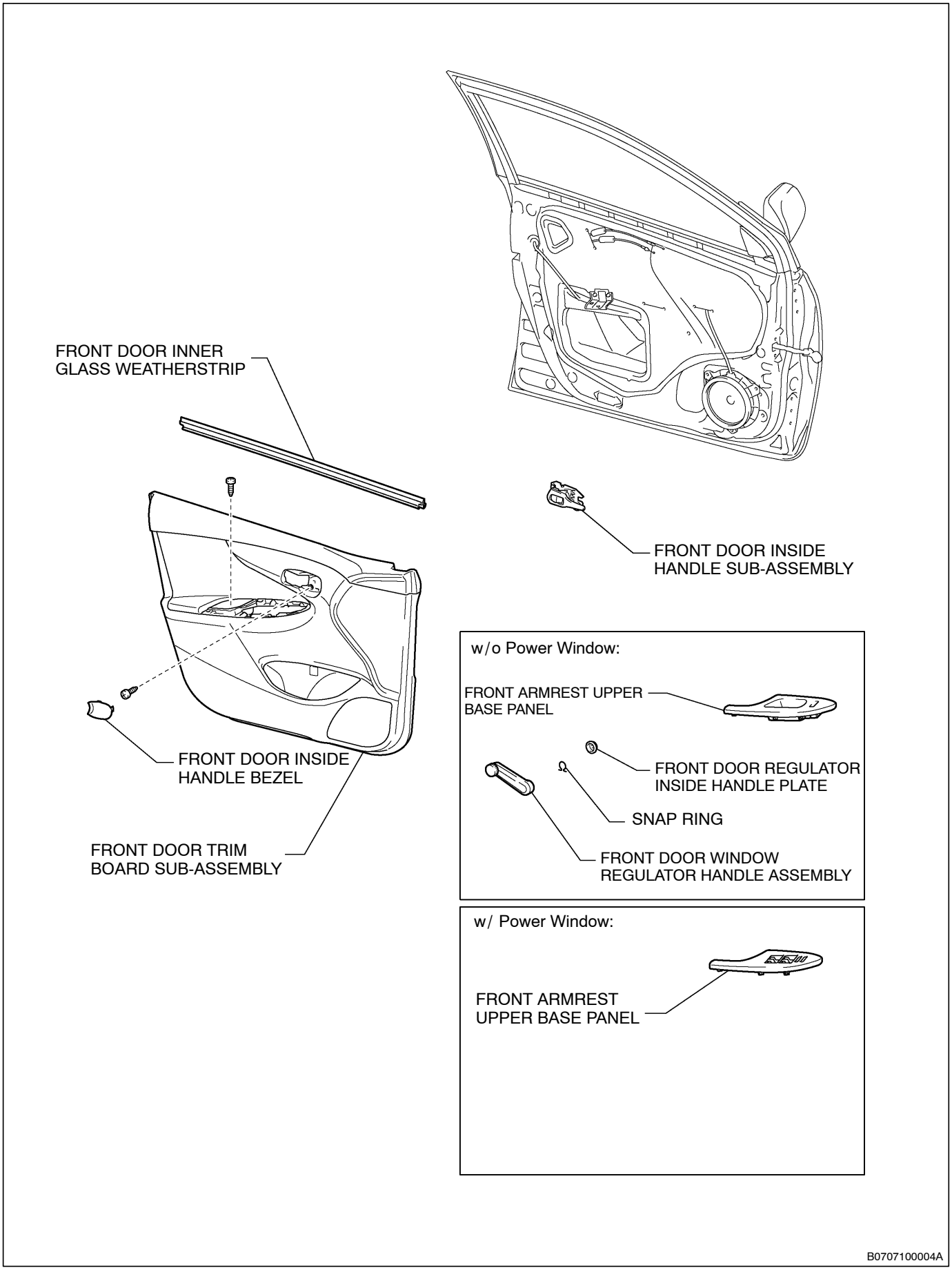
FRONT DOOR INNER GLASS WEATHERSTRIP
FRONT DOOR INSIDE HANDLE SUB-ASSEMBLY
FRONT DOOR INSIDE HANDLE BEZEL
FRONT DOOR TRIM BOARD SUB-ASSEMBLY
w/o Power Window:
FRONT ARMREST UPPER BASE PANEL
FRONT DOOR REGULATOR INSIDE HANDLE PLATE
SNAP RING
FRONT DOOR WINDOW REGULATOR HANDLE ASSEMBLY
w/ Power Window:
FRONT ARMREST UPPER BASE PANEL
B0707100004A

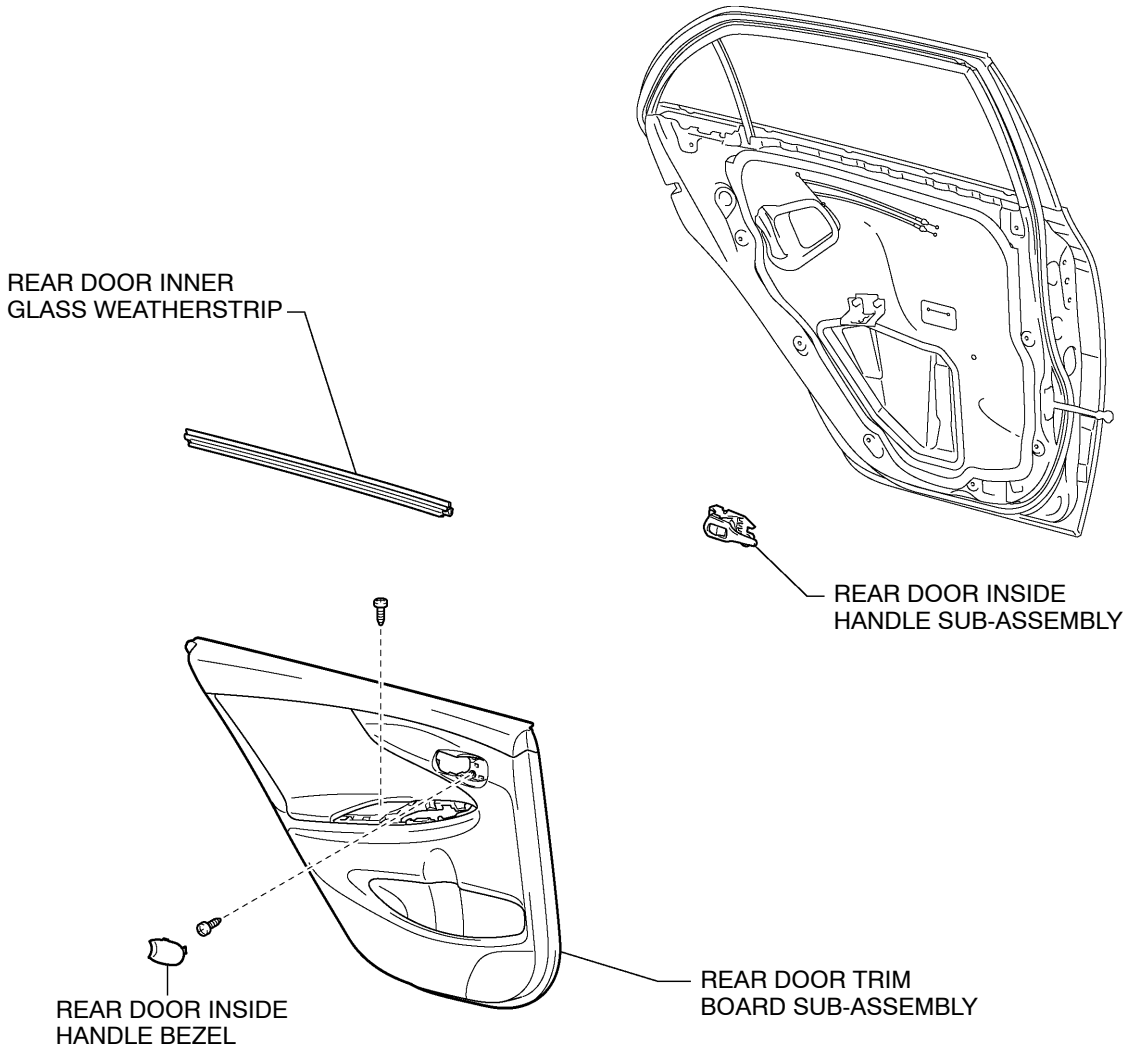

w/o Power Window:

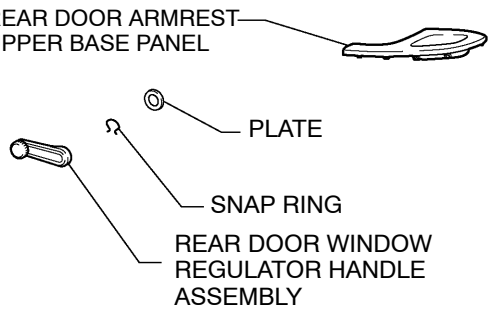

w/ Power Window:

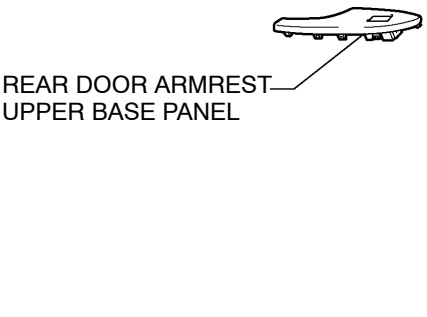

B0707100005A

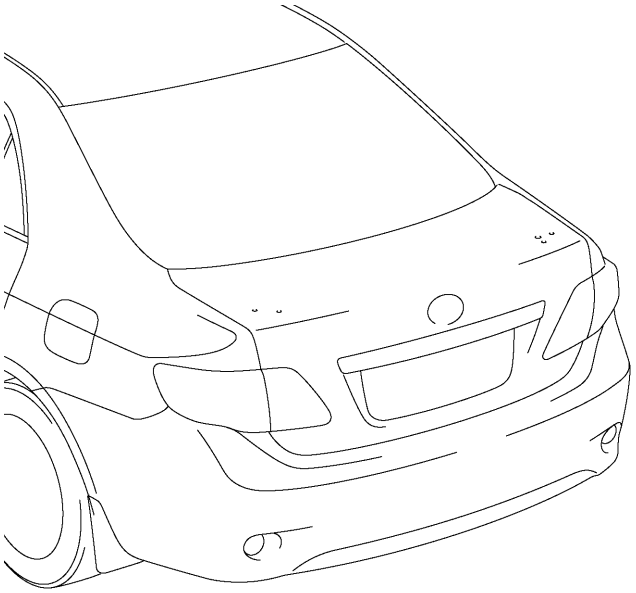

w/ Rear Spoiler:

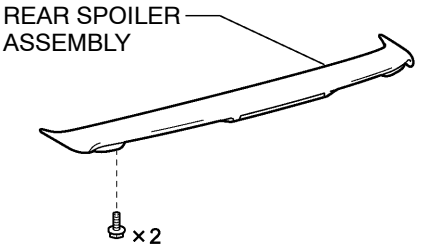

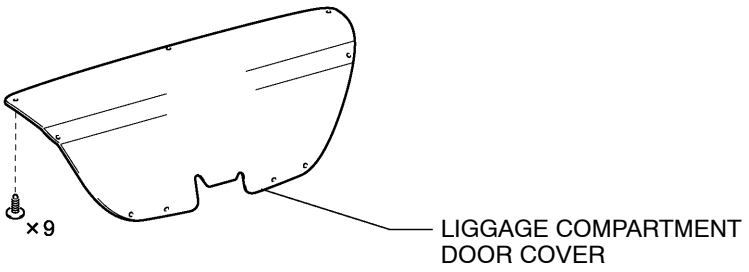

B0707100006

(e) Cowl Top Ventilator Louver

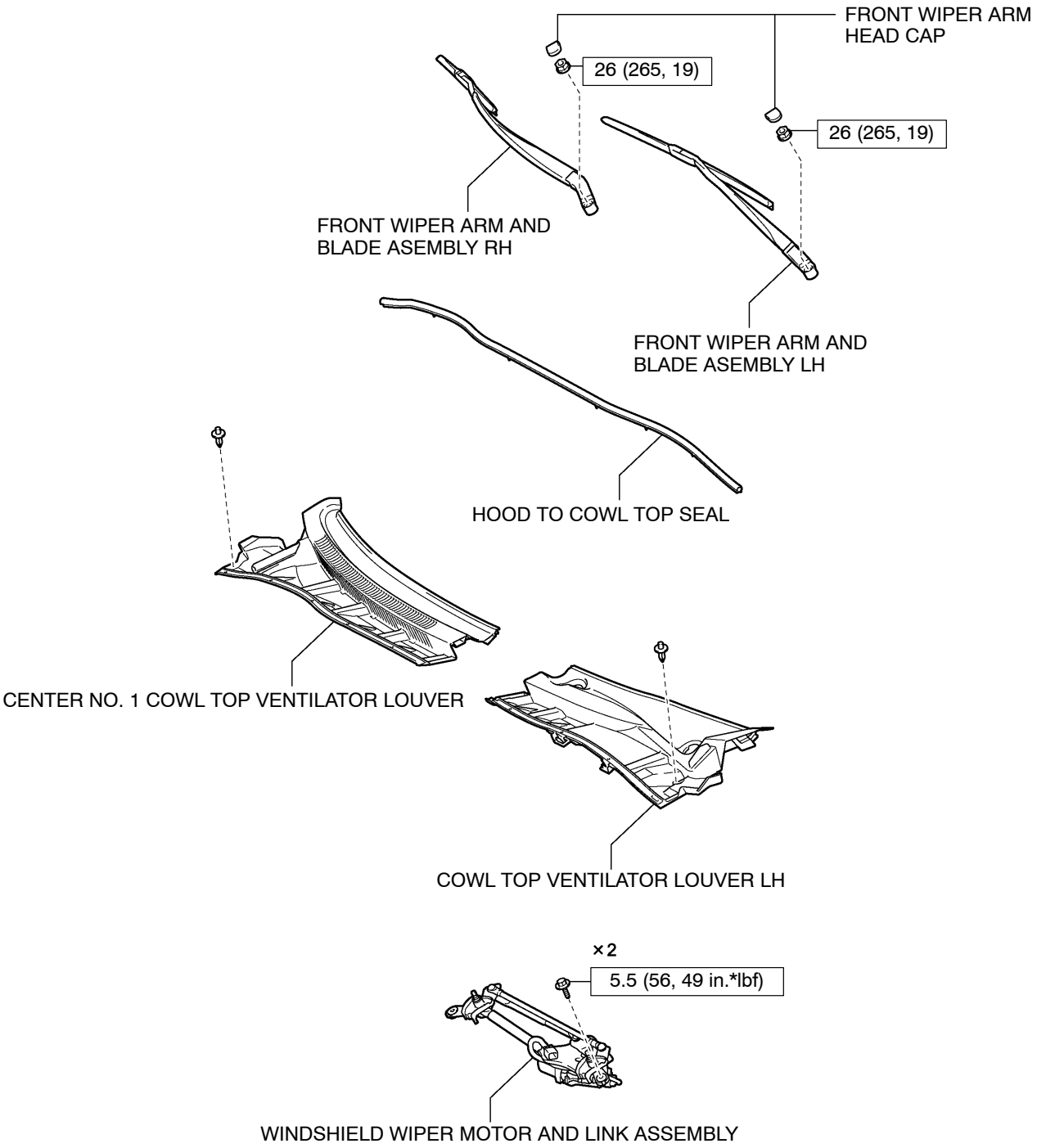

CAUTION:
The bolts must be tightened to the torque specification, as they are related to vehicle safety during a collision.

N·m (kgf·cm, ft.·lbf) : Specified torque

B0707100007

(f) Instrument panel

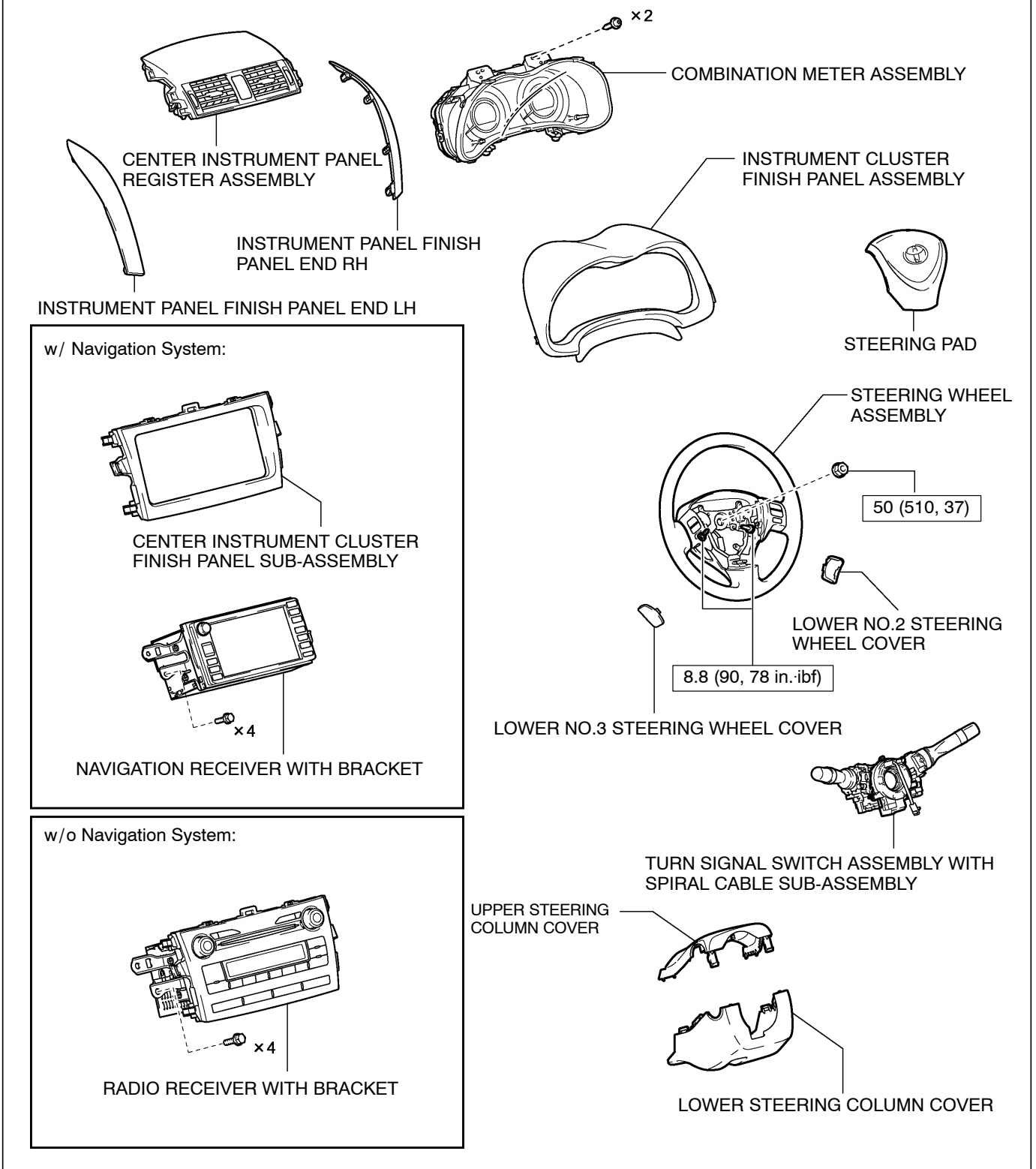

CAUTION:
The bolts must be tightened to the torque specification, as they are related to vehicle safety during a collision.

N·m (kgf·cm, ft.·lbf) : Specified torque

B0710150022

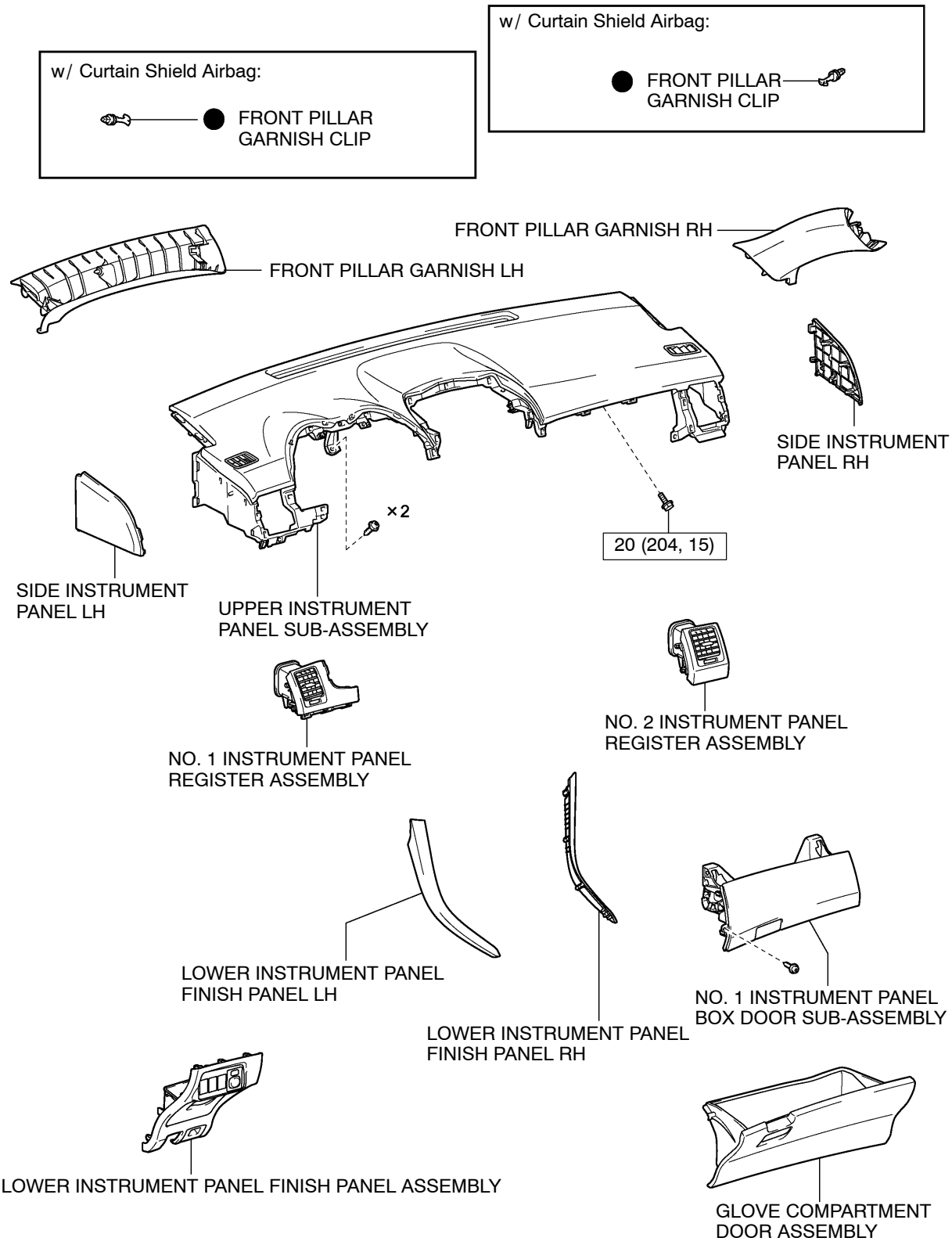

CAUTION:
The bolts must be tightened to the torque specification, as they are related to vehicle safety during a collision.

N·m (kgf·cm, ft.·lbf) : Specified torque ● Non-reusable part

B0710150023

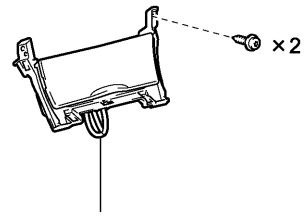

INSTRUMENT PANEL BOX ASSEMBLY

for Automatic Transaxle:



SHIFT LEVER KNOB SUB-ASSEMBLY

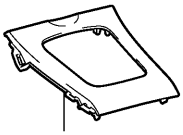

CENTER NO. 1 INSTRUMENT CLUSTER FINISH PANEL ASSEMBLY

for Manual Transaxle:



SHIFT LEVER KNOB SUB-ASSEMBLY

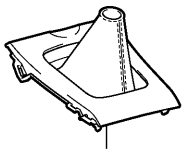

CENTER NO. 1 INSTRUMENT CLUSTER FINISH PANEL ASSEMBLY

FRONT NO. 2 CONSOLE BOX INSERT

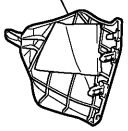

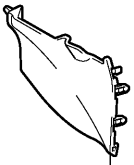

FRONT NO. 1 CONSOLE BOX INSERT

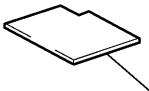

CONSOLE BOX CARPET

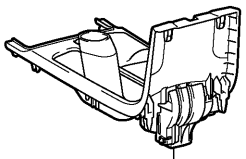

UPPER CONSOLE PANEL SUB-ASSEMBLY

for Automatic Transaxle:

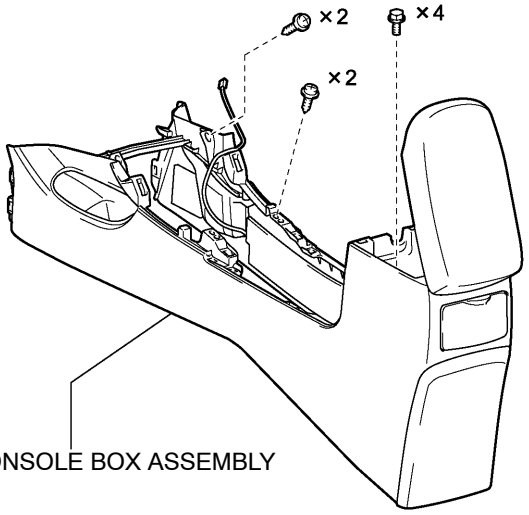

CONSOLE BOX ASSEMBLY

for Manual Transaxle:

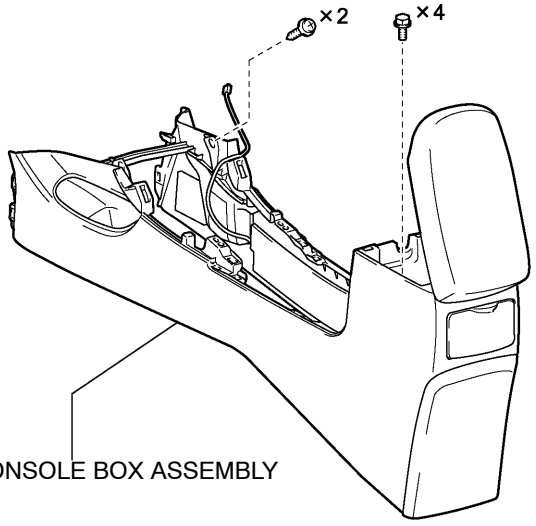

CONSOLE BOX ASSEMBLY

B0710150026

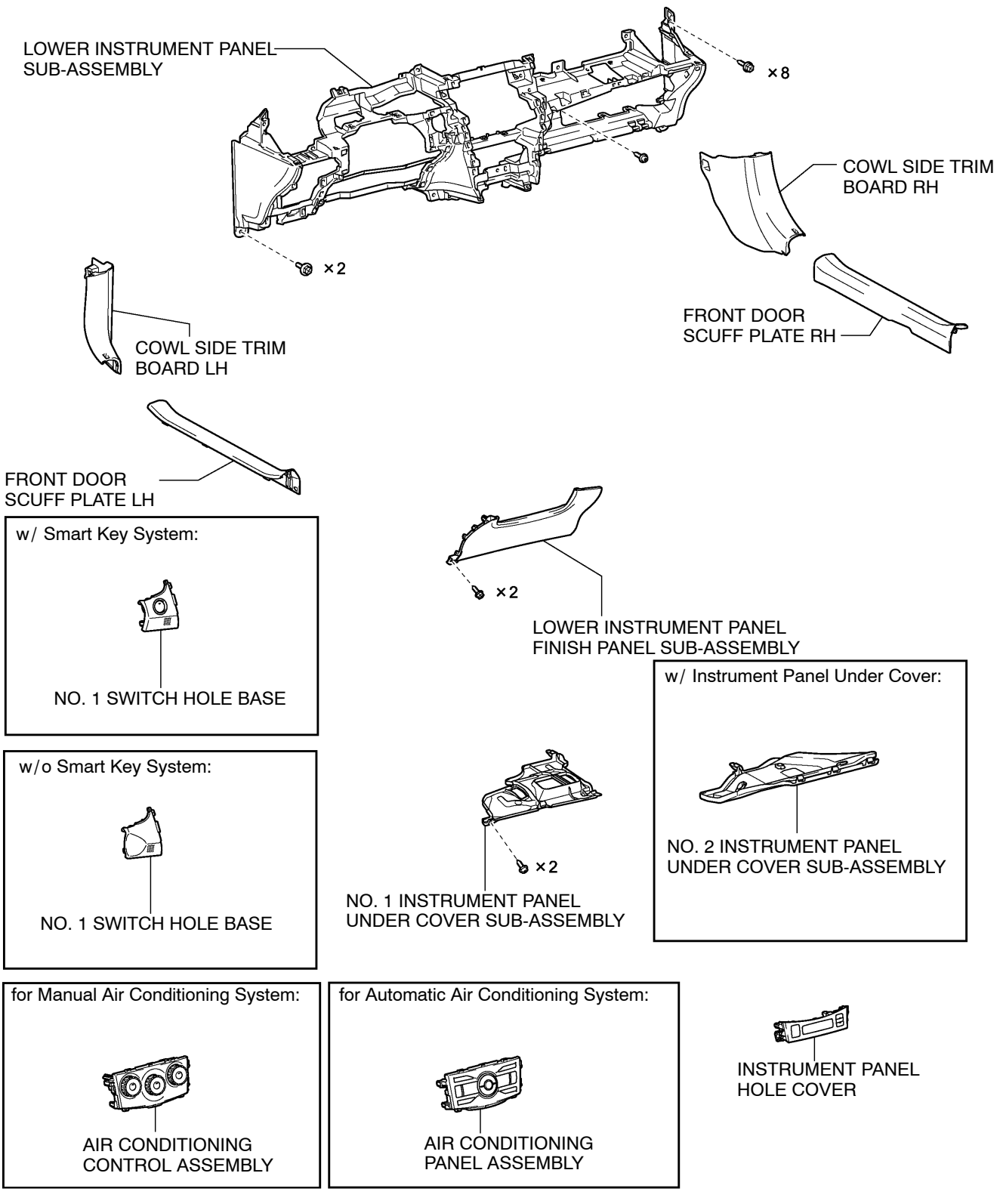

CAUTION:
The bolts must be tightened to the torque specification, as they are related to vehicle safety during a collision.

N·m (kgf·cm, ft.·lbf)	: Specified torque

B0710150027

(g) Interior trim

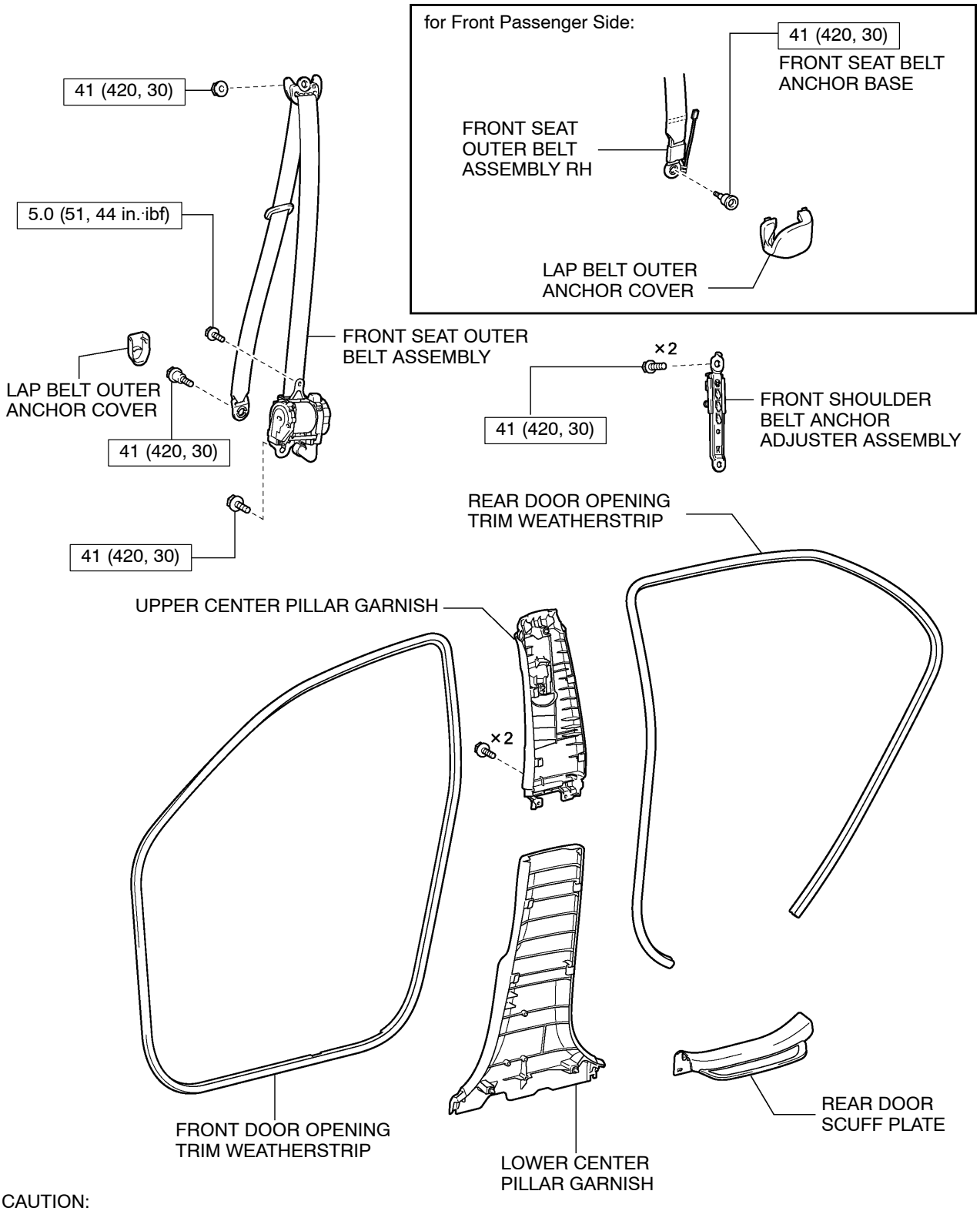

CAUTION:
The bolts must be tightened to the torque specification, as they are related to vehicle safety during a collision.

N·m (kgf·cm, ft.·lbf) : Specified torque

B0710120003

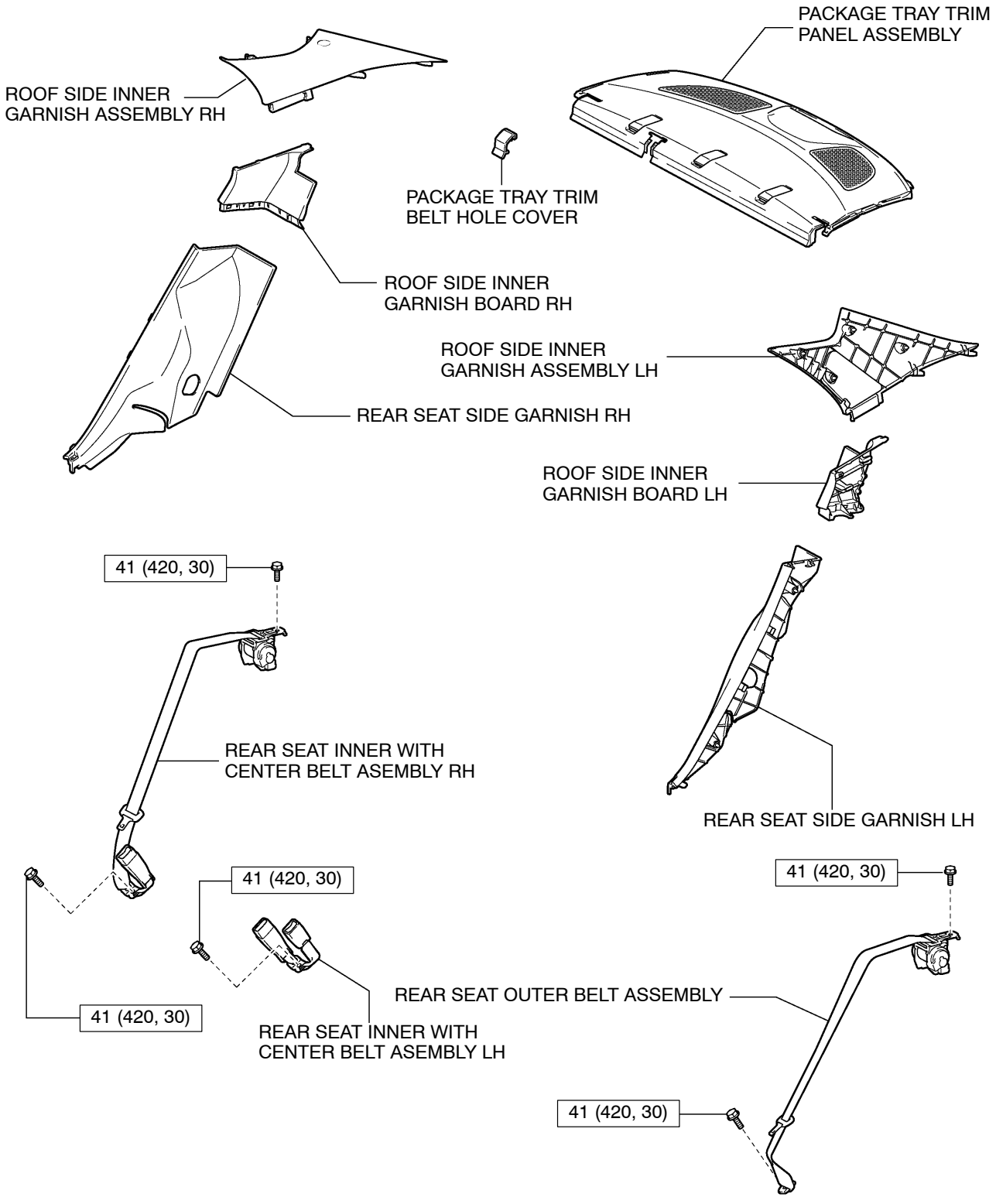

CAUTION:
The bolts must be tightened to the torque specification, as they are related to vehicle safety during a collision.

N·m (kgf·cm, ft.·lbf) : Specified torque

B0710120006

(h) Seat

for Manual Seat:

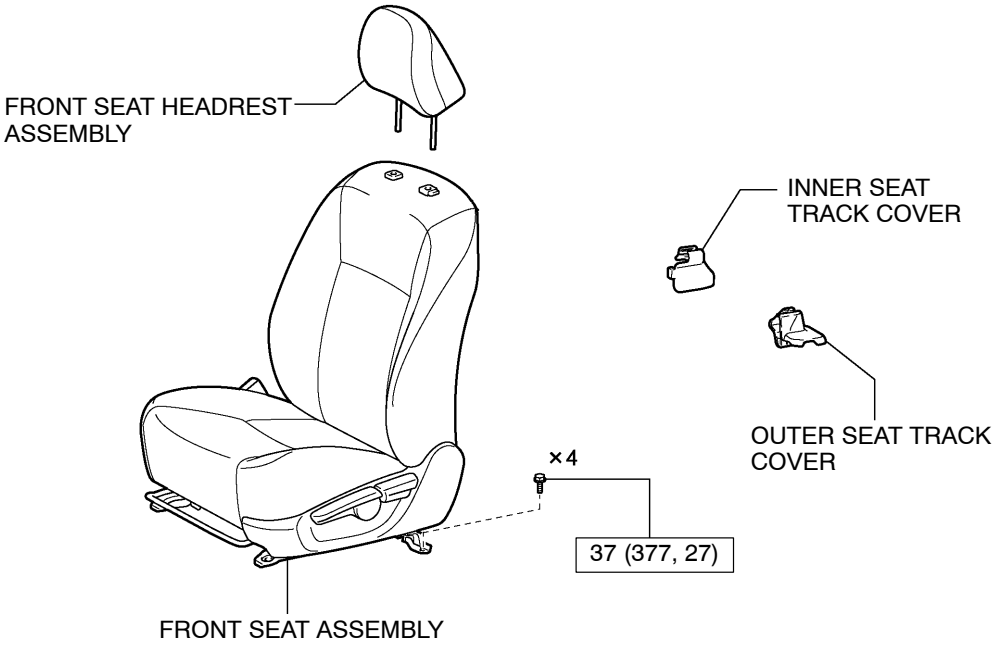

for Power Seat:

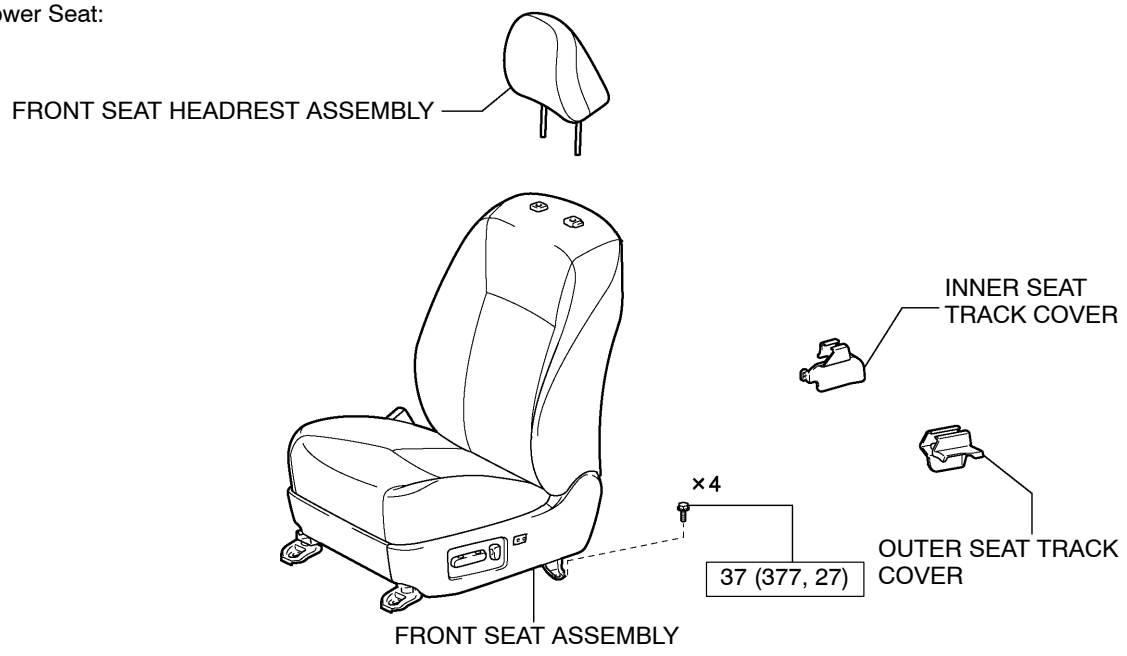

CAUTION:
The bolts must be tightened to the torque specification, as they are related to vehicle safety during a collision.

N·m (kgf·cm, ft.·lbf)	: Specified torque

B0707100014A

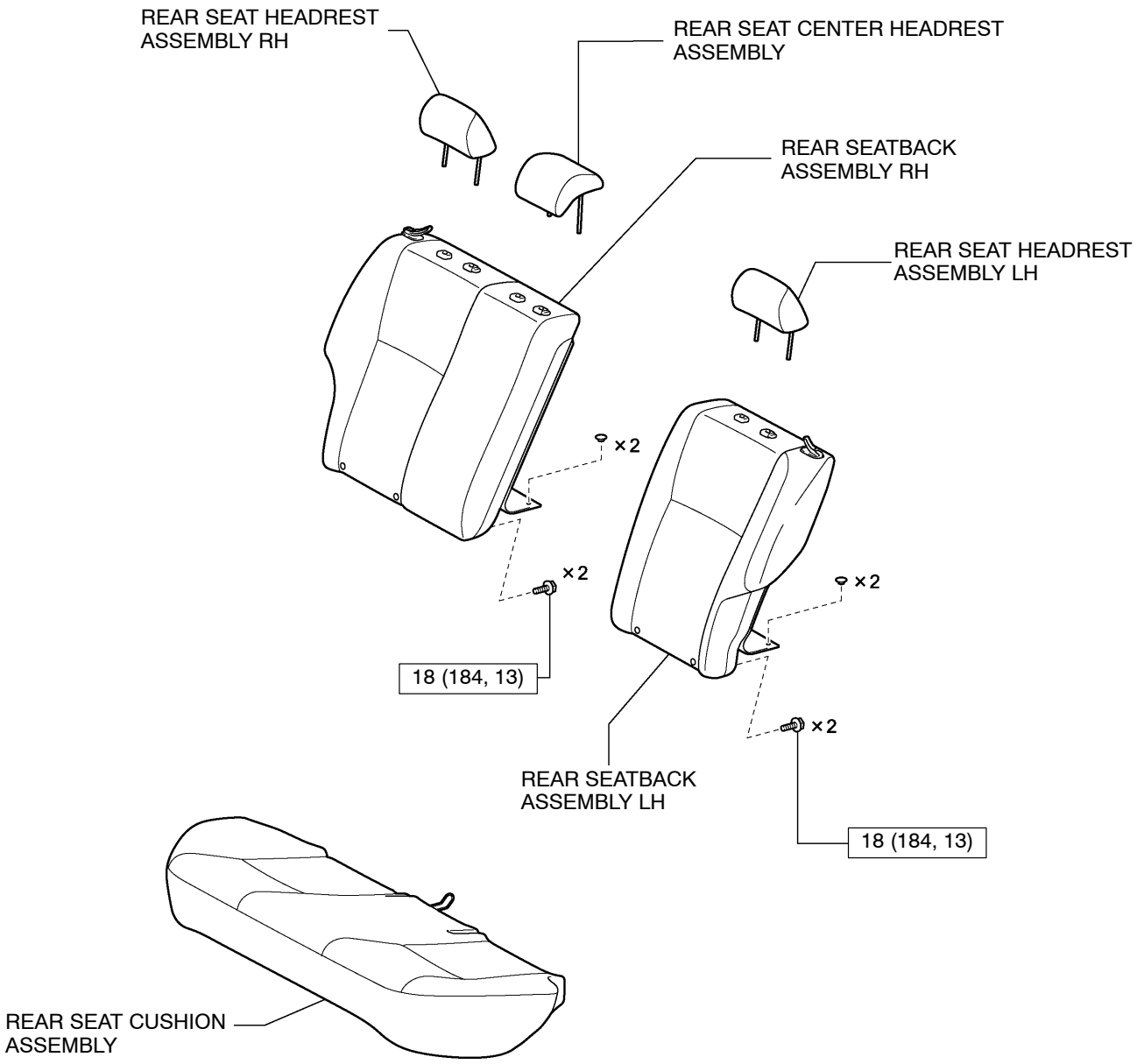

CAUTION:
The bolts must be tightened to the torque specification, as they are related to vehicle safety during a collision.

N·m (kgf·cm, ft.·lbf) : Specified torque

B0710120007

5. WHEEL ALIGNMENT STANDARD

(a) FRONT WHEEL ALIGNMENT

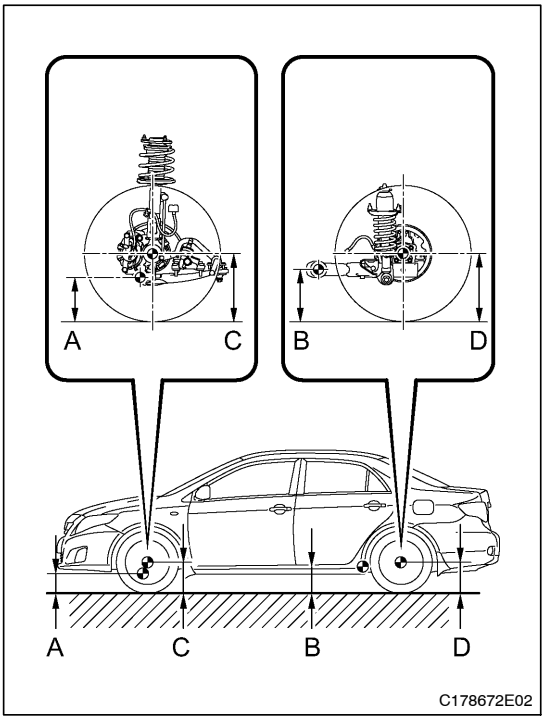

(1) Vehicle Height (Unloaded Vehicle)

NOTICE:

- **Before inspecting the wheel alignment, adjust the vehicle height to the specified value.**
- **Be sure to perform measurement on a level surface.**
- **If it is necessary to go under the vehicle for measurement, confirm that the parking brake is applied and the vehicle is secured with chocks.**

Measuring points:

A: No. 1 lower suspension arm bushing set bolt ground clearance

B: Rear axle beam set bolt ground clearance

C: Front wheel center ground clearance

D: Rear wheel center ground clearance

–	Engine	Front C – A	Rear D – B
for TMC Made	2ZR-FE	92 mm (3.62 in.)	45 mm (1.77 in.)
except TMC Made	2ZR-FE	92 mm (3.62 in.) 80 mm (3.15 in.)*	45 mm (1.77 in.) 32 mm (1.26 in.)*
	2AZ-FE	96 mm (3.78 in.) 81 mm (3.19 in.)*	51 mm (2.01 in.) 36 mm (1.42 in.)*

*for vehicle height for Mexico, add 15 mm (0.591 in.)

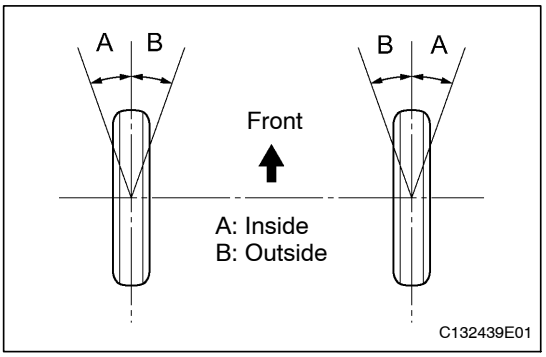

(2) Wheel Angle (Unloaded Vehicle)

–	Engine	Tire Size	Inside Wheel	Outside Wheel Reference
for TMC Made	2ZR-FE	195/65R15	38°13' +/-2° (38.22° +/-2°)	32°50' (32.83°)
		205/55R16		
except TMC Made	2ZR-FE	195/65R15	38°13' +/-2° (38.22° +/-2°) 38°29' +/-2° (38.48° +/-2°)*	32°50' (32.83°) 33°04' (33.07°)*
		205/55R16	38°13' +/-2° (38.22° +/-2°) 38°31' +/-2° (38.52° +/-2°)*	32°50' (32.83°) 33°04' (33.07°)*
	2AZ-FE	205/55R16*	37°19' +/-2° (37.32° +/-2°)*	32°18' (32.30°)*
		215/45R17	36°59' +/-2° (36.98° +/-2°)	32°01' (32.02°)

*for vehicle height for Mexico, add 15 mm (0.591 in.)
If the angles are not as specified, check and adjust the right and left rack end lengths.

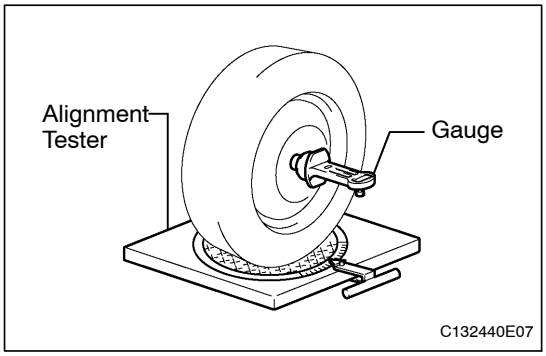

(3) Camber (Unloaded Vehicle)

–	Engine	Tire Size	Camber Inclination	Right-Left Difference
for TMC Made	2ZR-FE	195/65R15	-0°35' (-0.58°)	45' (0.75°) or less
		205/55R16		
except TMC Made	2ZR-FE	195/65R15	-0°34' (-0.57°) -0°26' (-0.43°)*	
		205/55R16	-0°35' (-0.58°) -0°26' (-0.43°)*	
	2AZ-FE	205/55R16*	-0°27' (-0.62°)*	
		215/45R17	-0°37' (-0.62°)	

* for vehicle height for Mexico, add 15 mm (0.591 in.)

(4) Caster (Unloaded Vehicle)

–	Engine	Tire Size	Camber Inclination	Right-Left Difference
for TMC Made	2ZR-FE	195/65R15	2°50' +/-45' (2.83° +/-0.75°)	45' (0.75°) or less
		205/55R16	2°51' +/-45' (2.85° +/-0.75°)	
except TMC Made	2ZR-FE	195/65R15	2°50' +/-45' (2.83° +/-0.75°) 2°40' +/-45' (2.67° +/-0.75°)*	
		205/55R16	2°50' +/-45' (2.83° +/-0.75°) 2°41' +/-45' (2.68° +/-0.75°)*	
	2AZ-FE	205/55R16*	2°45' +/-45' (2.75° +/-0.75°)*	
		215/45R17	2°55' +/-45' (2.92° +/-0.75°)	

* for vehicle height for Mexico, add 15 mm (0.591 in.)

(5) Steering Axis Inclination (Unloaded Vehicle) except TMC Made:

–	Engine	Tire Size	Steering Axis Inclination
for TMC Made	2ZR-FE	195/65R15	12°32' (12.53°)
		205/55R16	
except TMC Made	2ZR-FE	195/65R15	12°32' (12.53°)
		205/55R16	12°13' (12.22°)*
	2AZ-FE	205/55R16*	12°16' (12.27°)*
		215/45R17	12°37' (12.62°)

* for vehicle height for Mexico, add 15 mm (0.591 in.)

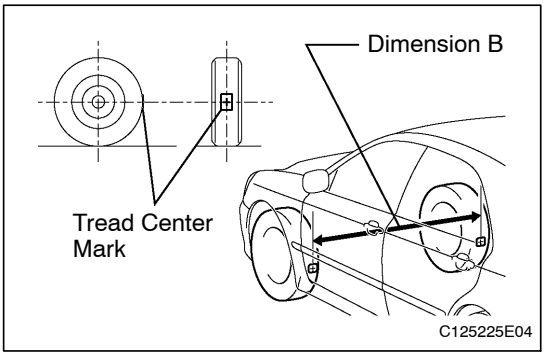

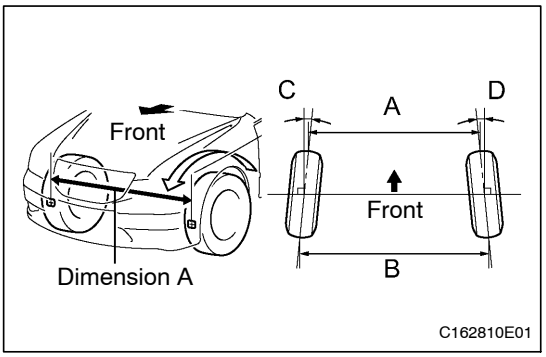

(6) Toe-in

HINT:

- *Measure “B - A” only when “C + D” cannot be measured.*
- *If toe-in is not within the specified range, adjust it at the rack ends.*

Specified Condition
C + D: 0°00’ +/-0°12’ (0° +/-0.2°) B - A: 0 +/-2.0 mm (0 +/-0.08 in.)

(b) REAR WHEEL ALIGNMENT

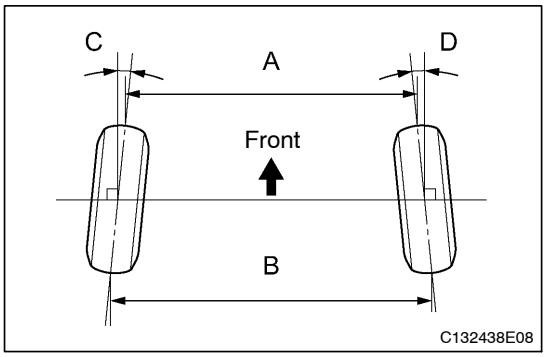

(6) Toe-in (Unloaded Vehicle)

- *Measure "B - A" only when "C + D" cannot be measured.*

–	Grade	Specified Condition	Right-Left Difference
for TMC Made	except XRS	C + D: 0°16' +/-0°15' (0.27° +/-0.25°)	45' (0.75°) or less
		B - A: 2.5 +/- 2.5 mm (0.098 +/-0.098 in.)	–
except TMC Made	except XRS	C + D: 0°16' +/-0°15' (0.27° +/-0.25°) C + D: 0°16' +/-0°15' (0.27° +/-0.25°)*	45' (0.75°) or less
		B - A: 2.6 +/-2.5 mm (0.102 +/-0.098 in.) B - A: 2.0 +/-2.5 mm (0.0787 +/-0.098 in.)*	–
	for XRS	C + D: 0°16' +/-0°15' (0.27° +/-0.25°) C + D: 0°16' +/-0°15' (0.27° +/-0.25°)*	45' (0.75°) or less
		B - A: 3.1 +/-2.5 mm (0.102 +/-0.098 in.) B - A: 2.2 +/-2.5 mm (0.0866 +/-0.098 in.)*	–

* for vehicle height for Mexico, add 15 mm (0.591 in.) If the toe-in is not within the specified range, inspect the suspension parts and replace them if necessary.

(2) Camber (Unloaded Vehicle)

HINT:
Camber is not adjustable. If the measurement is not within the specified range, inspect the suspension parts for damage and/or wear, and replace them if necessary.

–	Grade	Specified Condition	Right-Left Difference
for TMC Made	except XRS	-1°28' +/-30' (-1.47° +/-0.50°) 30' (0.50°) or less	30' (0.50°) or less
except TMC Made	except XRS	-1°27' +/-30' (-1.45° +/-0.50°) 30' (0.50°) or less	
	for XRS	-1°28' +/-30' (-1.47° +/-0.50°) 30' (0.50°) or less	

HOW TO USE THIS MANUAL

1. BODY PANEL REPLACEMENT IN THIS MANUAL

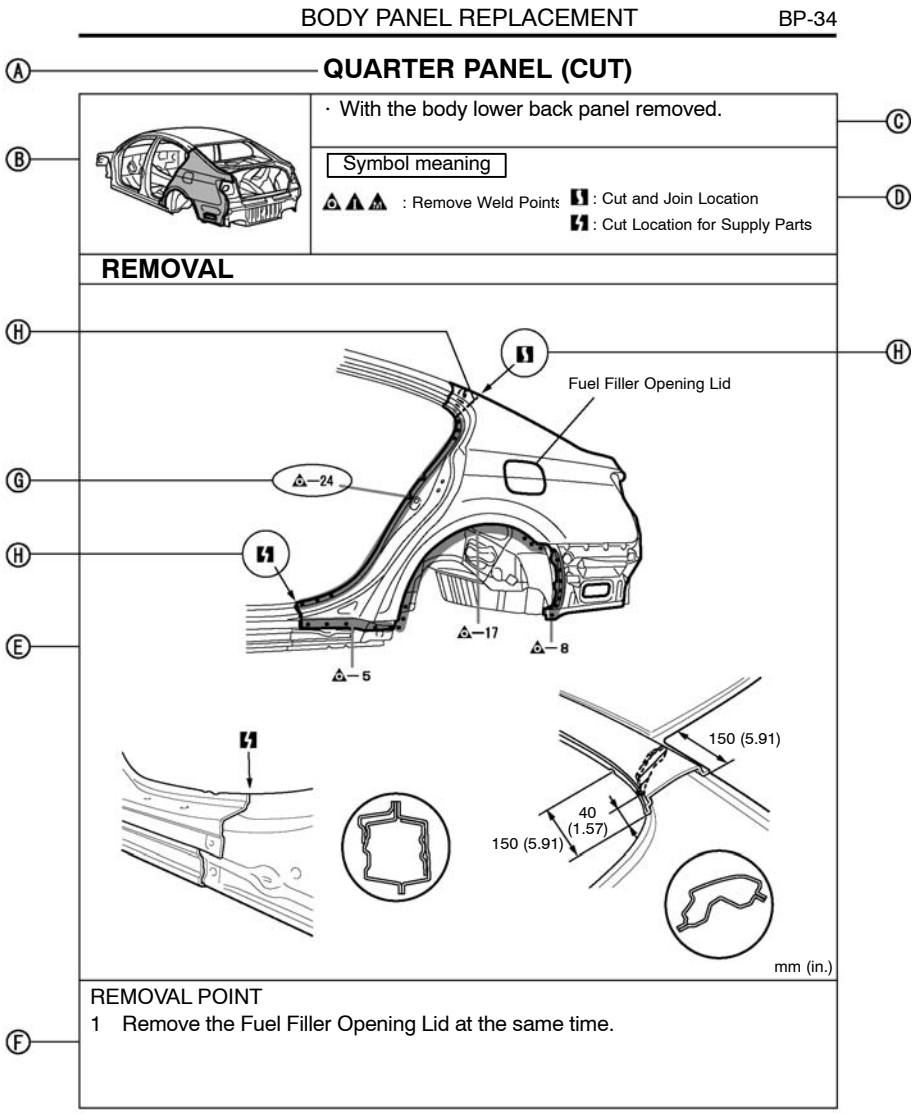

Ⓐ REPLACEMENT PART

QUARTER PANEL (CUT)

- Replacement method
  - (ASSY) ...Assembly replacement
  - (CUT) ...Major cutting (less than 1/2 of part used)
  - (CUT-H) ...Half cutting (about 1/2 of part used)
  - (CUT-P) ...Partial cutting (most of part used)
- Replacement part

Ⓑ PART LOCATION

Ⓒ REMOVAL AND INSTALLATION CONDITIONS

Ⓓ SYMBOL MEANING

Ⓔ REMOVAL DIAGRAM

Ⓕ REMOVAL GUIDE

Ⓖ WELDING EXPLANATION (See page IN-46)

Ⓗ SYMBOLS (See page IN-44)

B0608210134

BP-38 BODY PANEL REPLACEMENT

Symbol meaning

I M : Mig Plug Weld
2 : Body Sealer
: Spot Weld
: Butt Weld

INSTALLATION

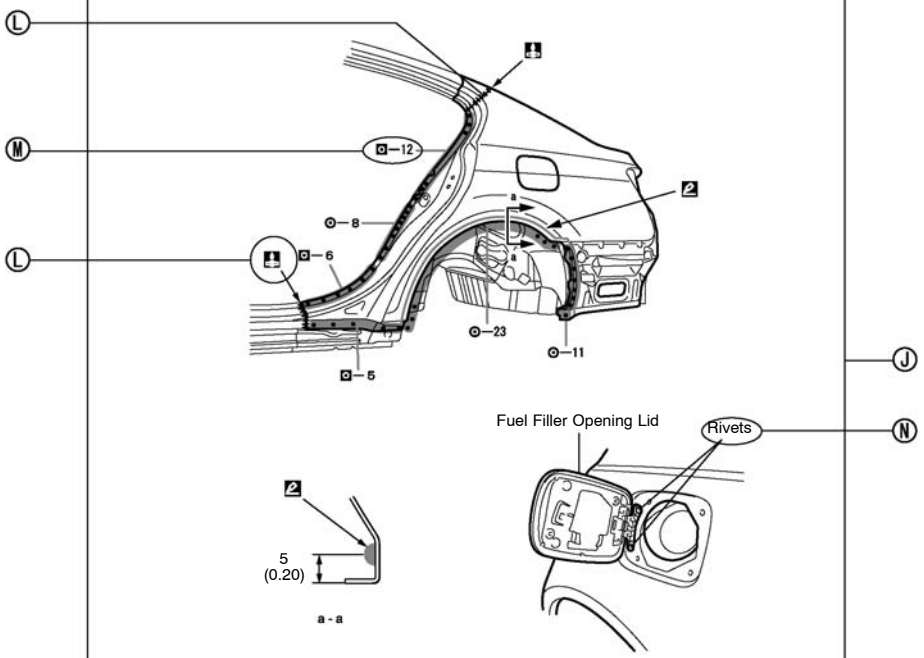

INSTALLATION POINT

1 Before temporarily installing the new parts, apply body sealer to the wheel arch.
HINT:
1) Apply body sealer evenly about 5 mm (0.20 in.) from the flange, avoiding any oozing.
2) Apply sealer evenly, about 3 – 4 mm (0.12 – 0.16 in.) in diameter.

2 Temporarily install the new parts and measure each part of the new parts in accordance with the body dimension diagram. (See the body dimension diagram)

3 After welding, apply body sealer and undercoating to the corresponding parts.

K

Ⓘ SYMBOLS

Ⓙ INSTALLATION DIAGRAM

Ⓚ INSTALLATION GUIDE

Ⓛ SYMBOLS (See page IN-44)

Ⓜ INSTALLATION OF WELD POINTS (See page IN-46)

Ⓝ PART NAME

B0608210135

2. SYMBOLS

<table>
<tr><th colspan="2">REPAIR AREA INDICATOR SYMBOLS</th><th colspan="2">REPAIR METHOD INDICATOR SYMBOLS</th><th>ILLUSTRATION</th></tr>
<tr><td rowspan="4"></td><td rowspan="4">CUT</td><td></td><td>CUT AND JOIN LOCATION (Saw Cut)</td><td rowspan="4"> 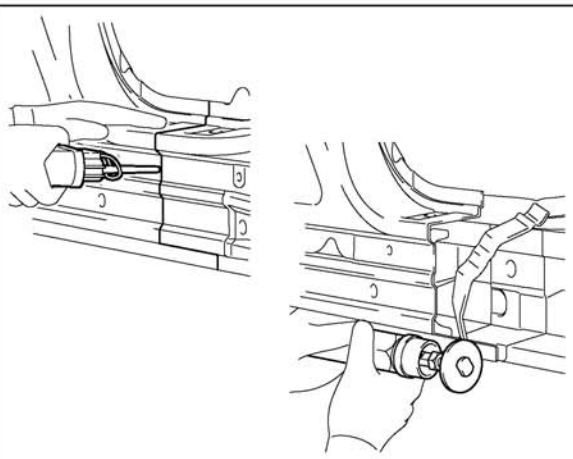 </td></tr>
<tr><td></td><td>CUT AND JOIN LOCATION (Cut Location for Supply Parts)</td></tr>
<tr><td></td><td>CUT LOCATION</td></tr>
<tr><td></td><td>CUT WITH DISC SANDER ETC.</td></tr>
<tr><td></td><td>BRAZE</td><td></td><td>BRAZING OR ARC BRAZING FOR REMOVAL</td><td> 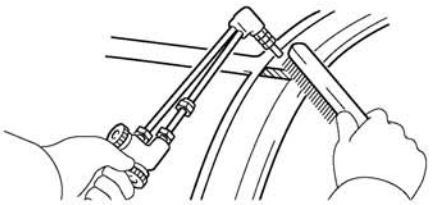 </td></tr>
<tr><td></td><td>BRAZE</td><td></td><td>BRAZE</td><td> 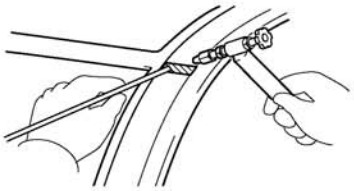 </td></tr>
<tr><td></td><td>WELD POINTS</td><td>—</td><td>SPOT WELD OR PLUG WELD (refer to “ILLUSTRATION OF WELD POINT SYMBOLS”)</td><td> 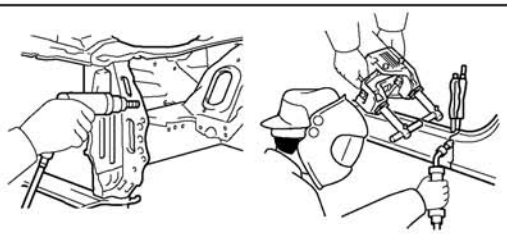 </td></tr>
<tr><td rowspan="2"></td><td rowspan="2">WELDING</td><td></td><td>BUTT WELD</td><td rowspan="2"> 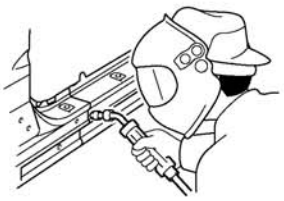 </td></tr>
<tr><td></td><td>FILLET WELD</td></tr>
<tr><td></td><td>SEALER</td><td></td><td>BODY SEALER</td><td> 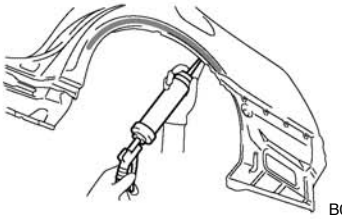
B0608210136</td></tr>
</table>

REPAIR AREA INDICATOR SYMBOLS		REPAIR METHOD INDICATOR SYMBOLS		ILLUSTRATION
—	ASSEMBLY MARK	⊕	STANDARD HOLE FOR INSTALLATION	—
++++++++++	BODY SEALER	—	FLAT FINISHING	
———			NO FLAT FINISHING	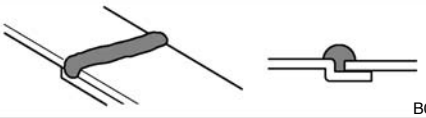 B0608210137

3. ILLUSTRATION OF WELD POINT SYMBOLS

REMOVAL

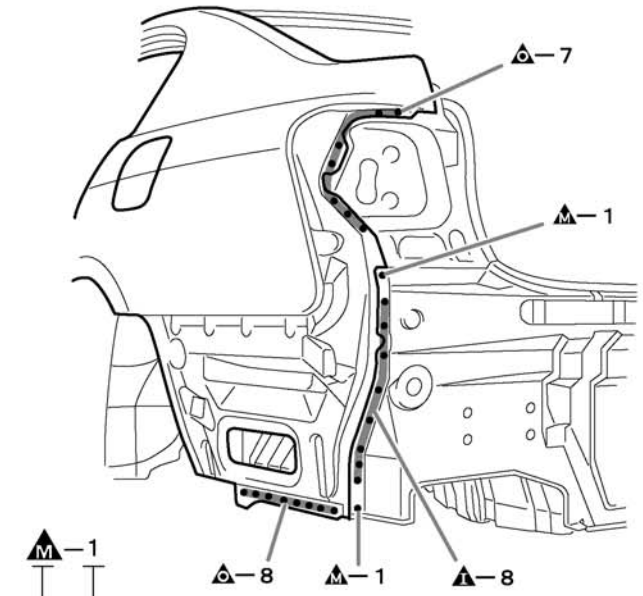

Weld points

Position of panels that are removed

INSTALLATION

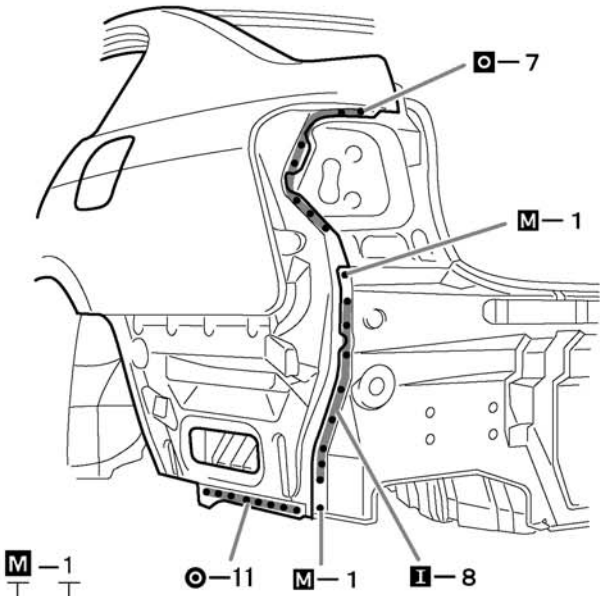

Weld points

Welding method and panel position

SYMBOLS	MEANING	ILLUSTRATION
▲	Remove Weld Points	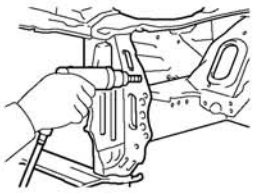
O	Position of Panel Being Replaced is on Outside	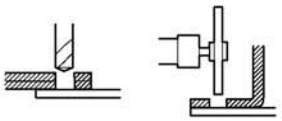
M	Position of Panel Being Replaced is in Center	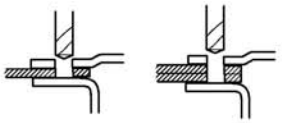
I	Position of Panel Being Replaced is on Inside	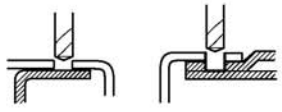

SYMBOLS	MEANING	ILLUSTRATION
●	Spot Welding	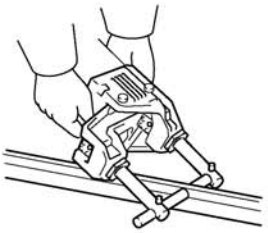
■	Plug Welding	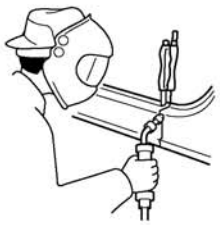
+	Spot MIG Welding	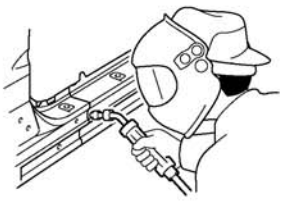

B0608210138

BODY PANEL SEALING AREAS

Be sure to apply body sealer to the body panel joints and door edges (tip of outer panel folded part), etc., to waterproof and rustproof them.

HINT:

1) *Apply degreasing agent to a clean cloth and clean the sealer application areas.*
2) *After removing the applied spot sealer from the sealer application areas using thinner or equivalent, rustproof the areas by applying primer or equivalent. Then apply body sealer.*
3) *If sealer is unnecessarily applied to an area, apply degreasing agent to a clean cloth and clean off the sealer immediately.*

++++++++++	Flat Finishing	————	No Flat Finishing

1. ENGINE COMPARTMENT

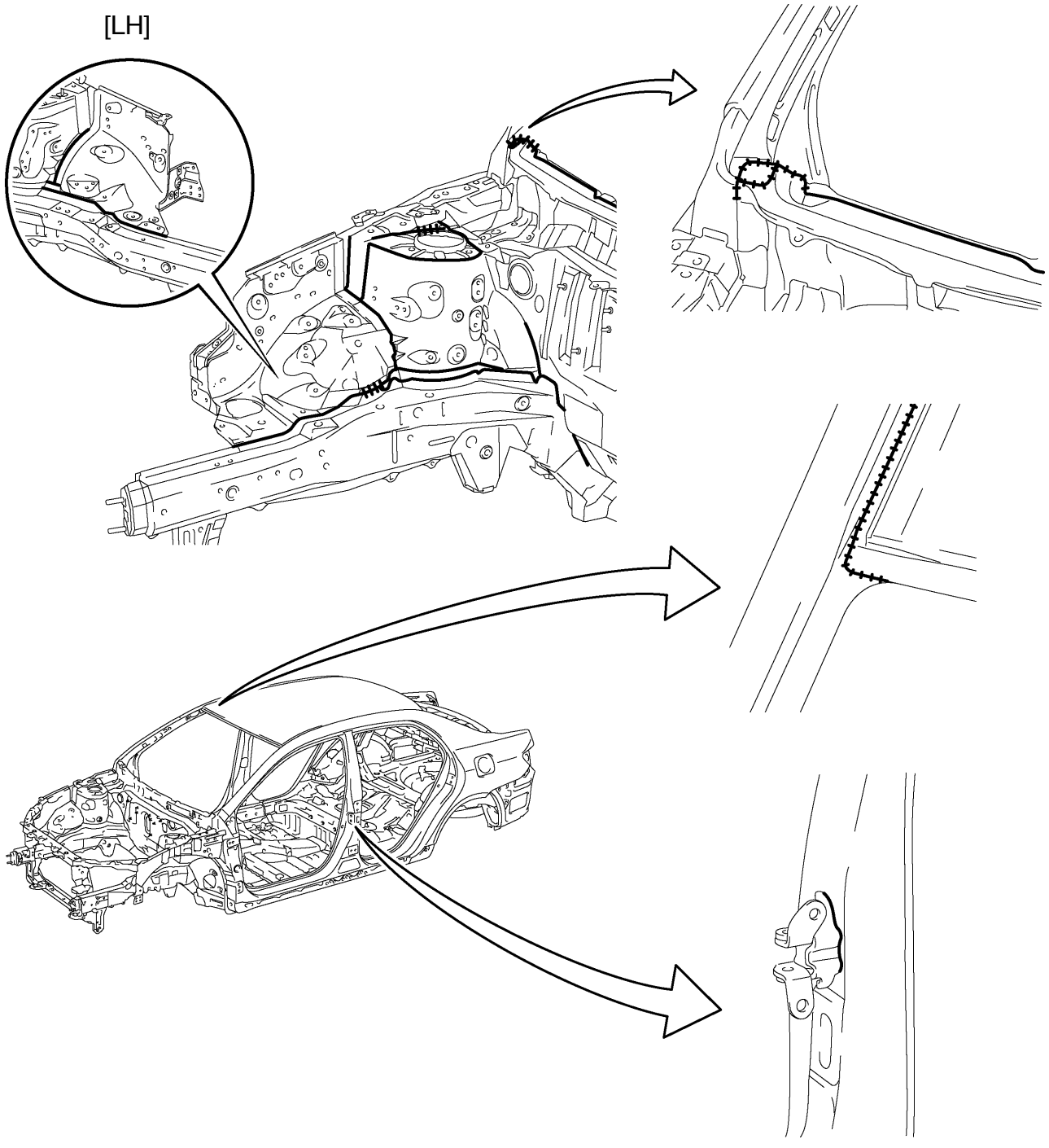

B0709250158

2. INSIDE

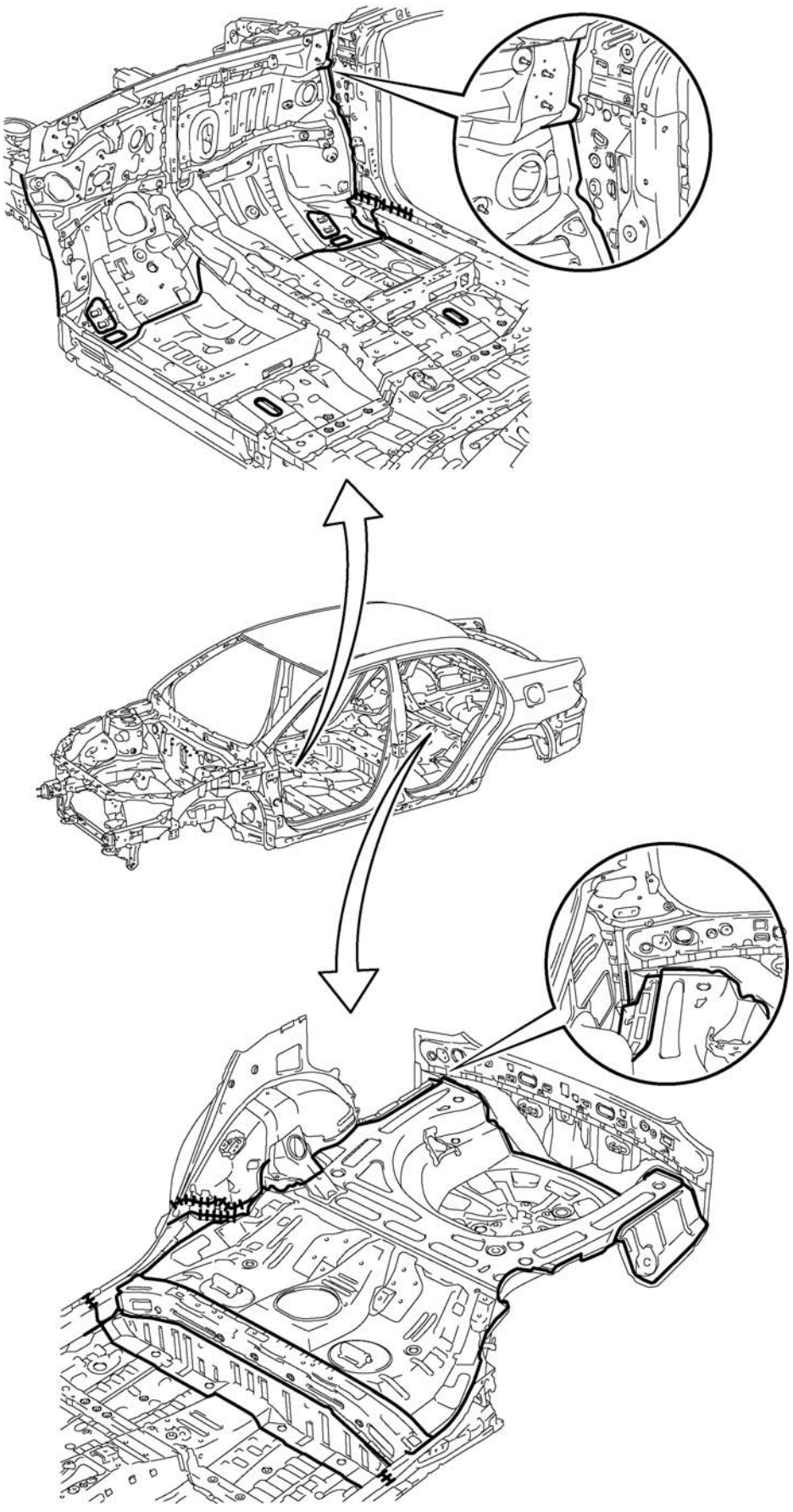

B0709260006

3. OUTSIDE

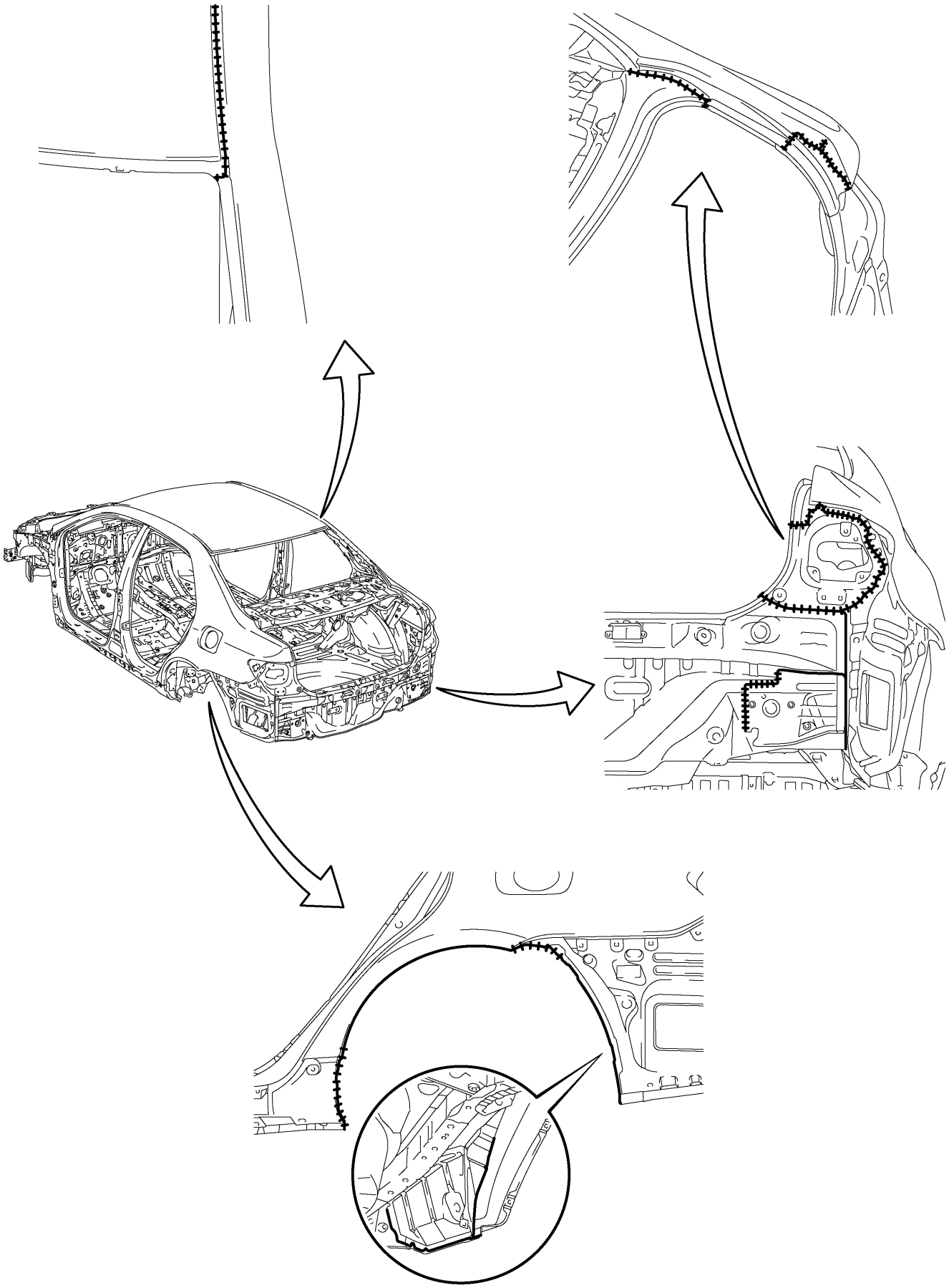

B0709250159

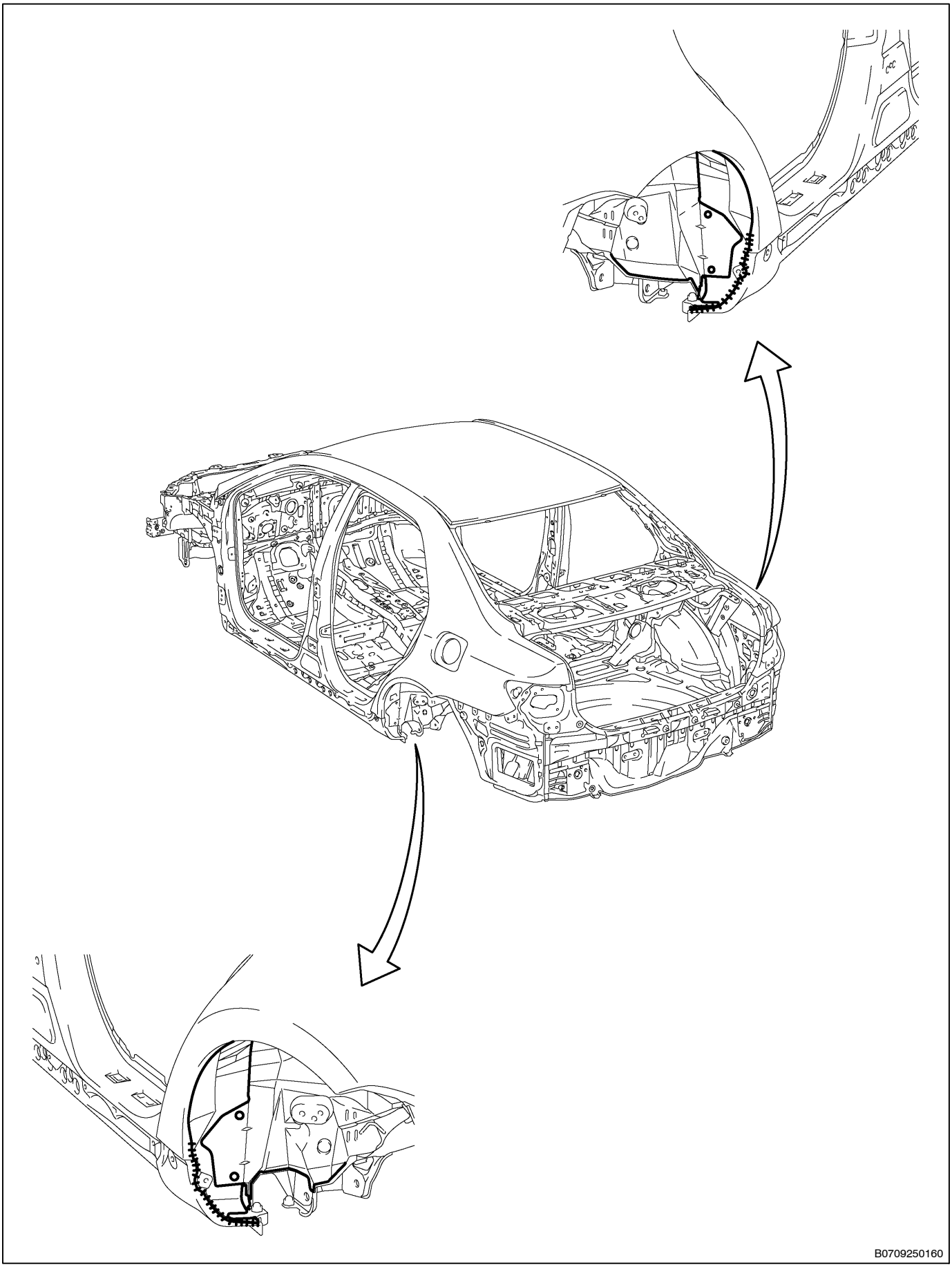
B0709250160

4. DOOR PARTS

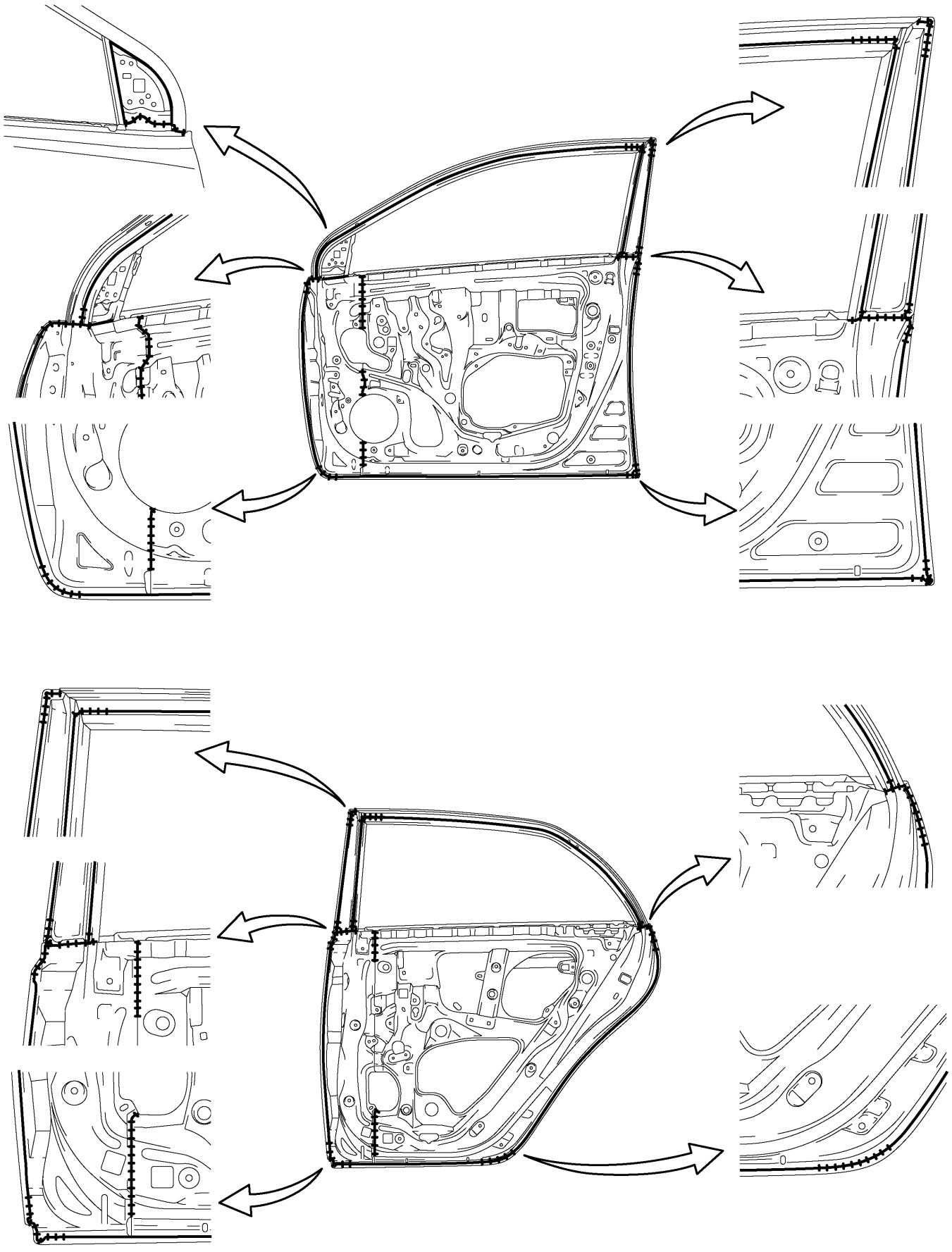

B0709250161

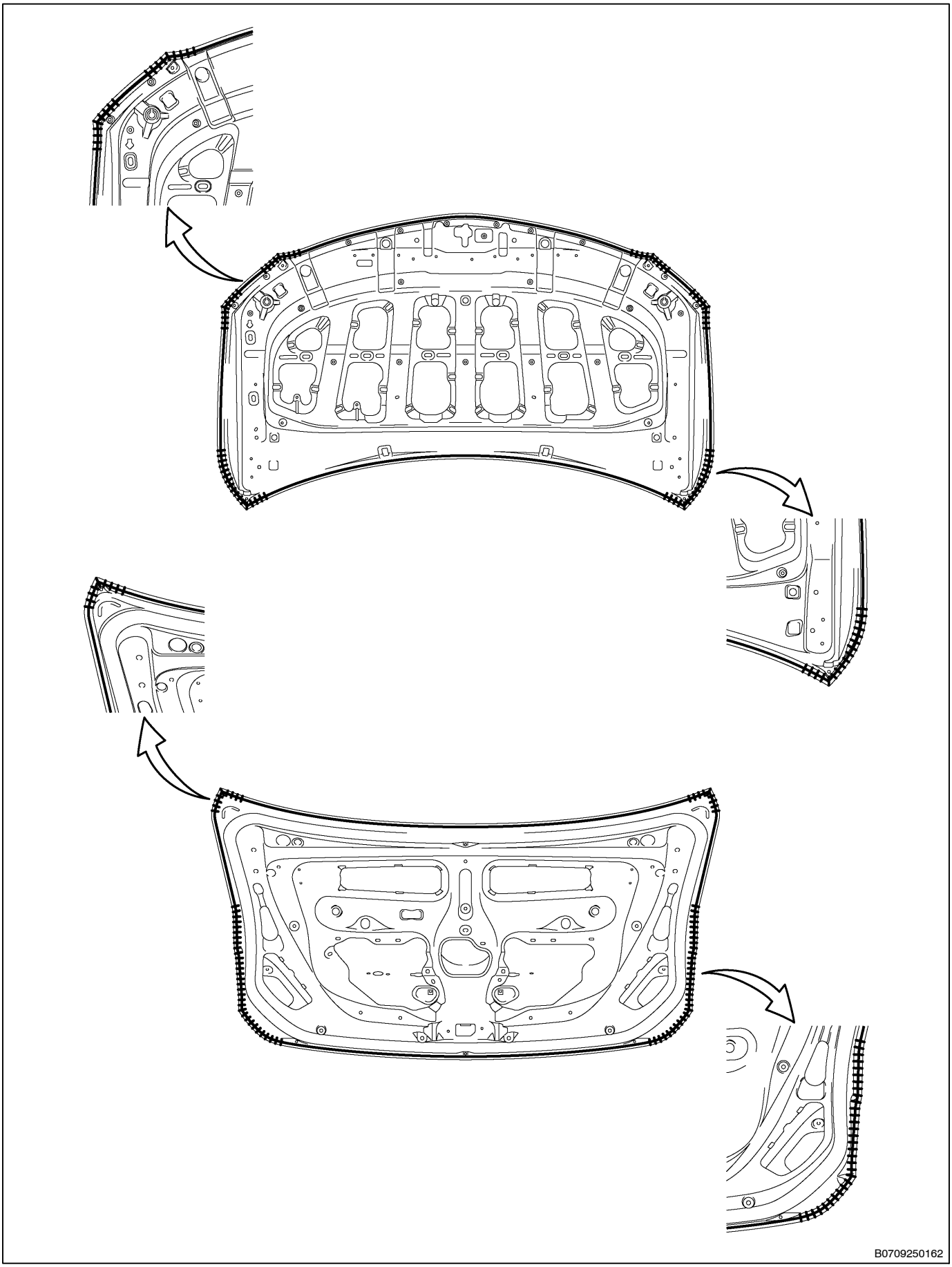
B0709250162

BODY PANEL UNDERCOATING AREAS

Apply PASTAR UWE or PASTAR UC to the chassis, floor underside, sheet metal fitting weld points of the body, and inside of the wheel house to prevent rust and noise, as well as protect the body from flying rocks.

HINT:

1) Work must be performed while wearing the appropriate protective gear and in a well-ventilated area.
2) Apply degreasing agent to a clean cloth and clean any dirt and oil from the application areas.
3) Cover the surrounding areas of the application areas with masking paper to avoid coating unnecessary areas.
4) Do not coat high temperature areas, such as the tailpipe, or moving parts, such as the driveshaft.
5) Do not leave any gaps between the panel joints.
6) Apply sealer to the panel joints in advance.

HINT:

1) Parts coated using the PASTAR UWE should be left until dry to the touch in a 25°C environment for 60 to 75 minutes. Parts coated using PASTAR UC should be left until dry to the touch in a 25°C environment for 15 to 30 minutes.
2) If using a PASTAR gun, one spray applies a 0.5 mm thick coating.
3) PASTAR UWE: Part number V9240-0025 PASTAR UC: Spray type :Part number V9240-0008
Aerosol type : Part number V9240-0021

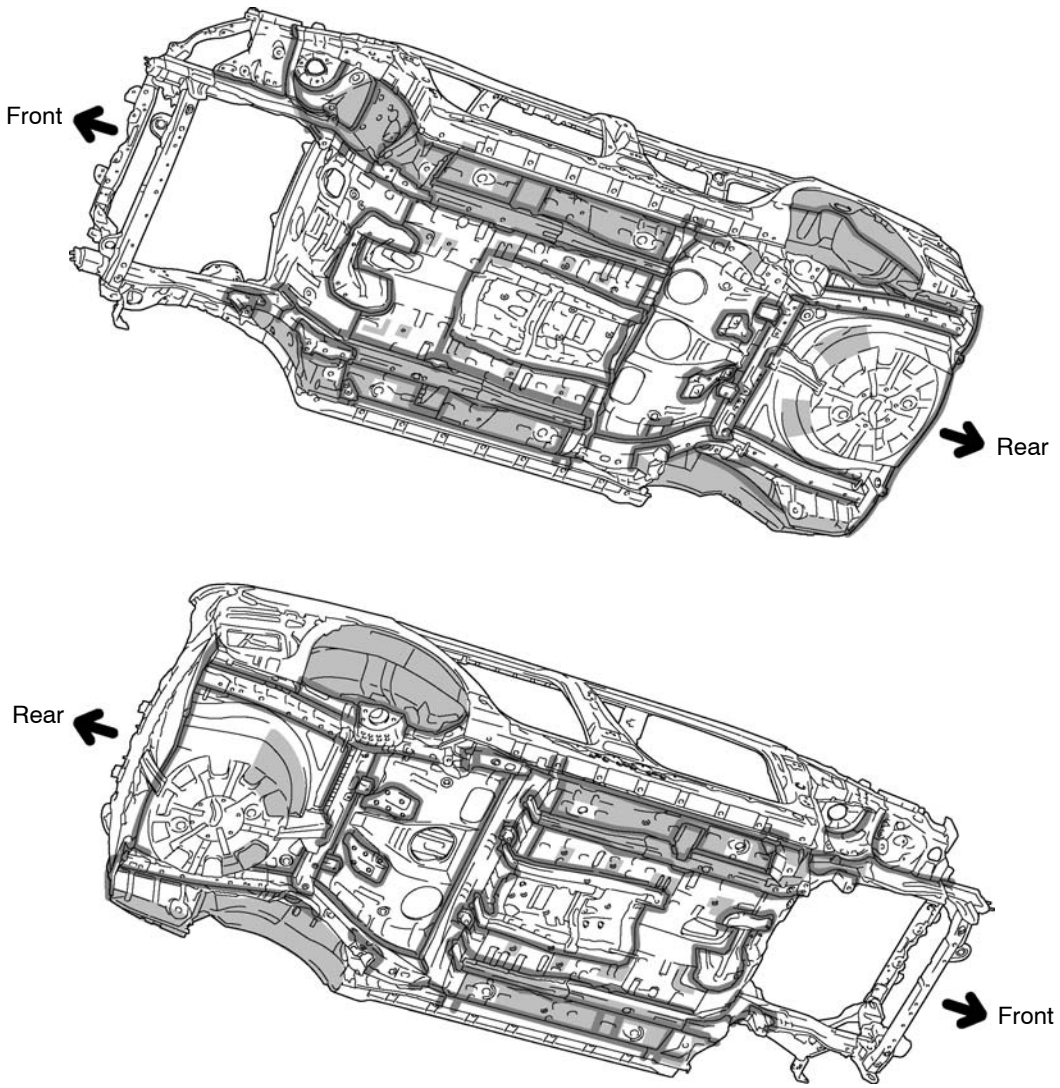

B0710040023

REFERENCE

The undercoating should be applied according to the specifications for your country while referring to the notes above.

FOAMED MATERIAL APPLICATION AREAS

If an increase in temperature or other condition damages the foamed material when repairing or replacing the panel, fill in the insufficient areas with urethane foam. The following illustration shows the areas for one side, but the foamed material must be applied equally to both the left and right sides.

HINT:

1) *Work must be performed while wearing the appropriate protective gear and in a will-ventilated area.*
2) *Apply tape or equivalent to any holes, nuts, etc., near the areas to be filled.*

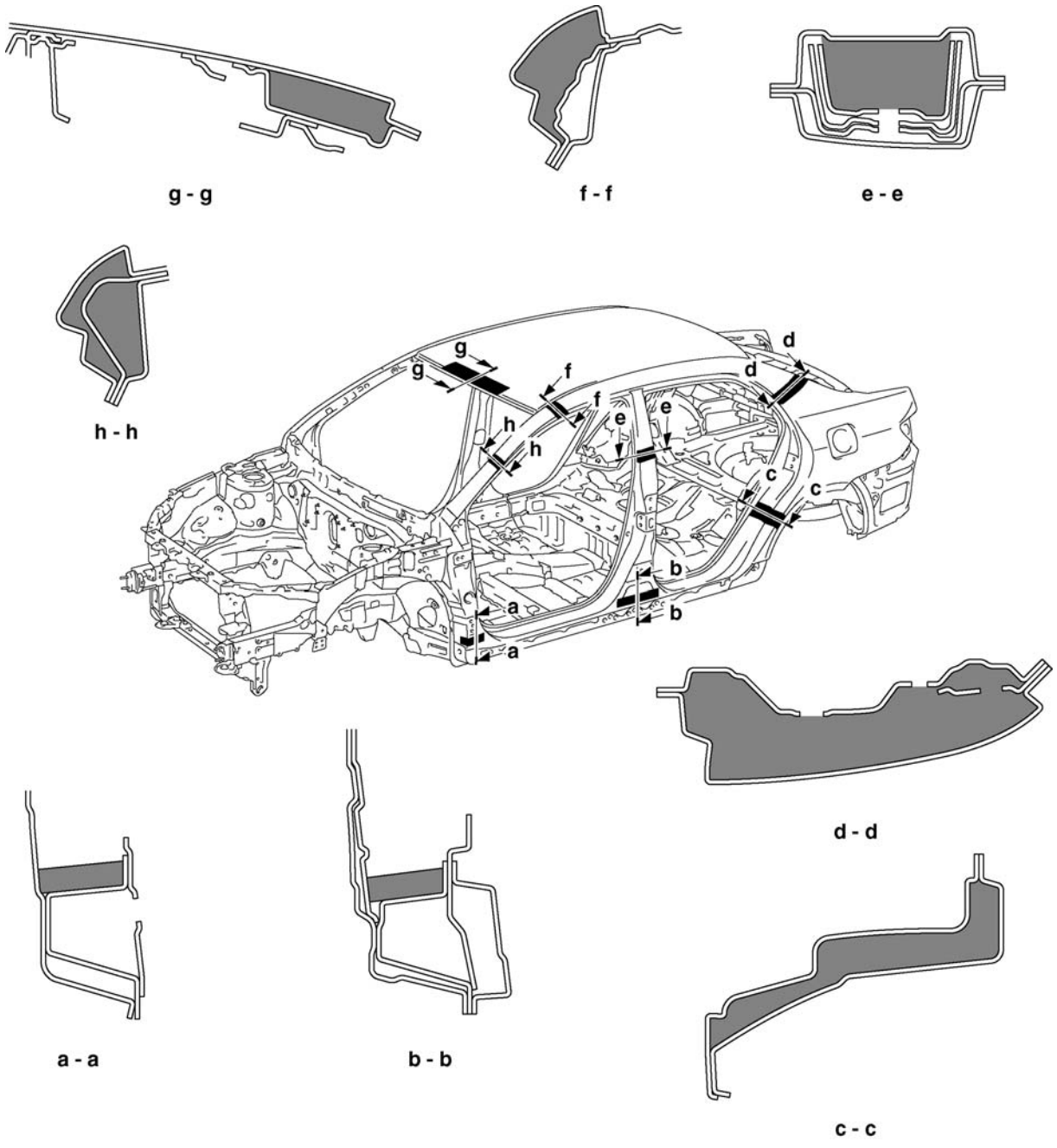

B0709250165

BODY PANEL ANTI-RUST AGENT (WAX) APPLICATION AREAS

Apply RUSTOP W to the doors and hood edges (tips of outer panel folded parts) and undersides, areas around hinges, etc.to prevent rust. Coat the undersides of the edges using a nozzle and air gun, and coat the areas around the hinges using a brush.

HINT:

1) If RUSTOP is unnecessarily applied to an area, apply degreasing agent to a clean cloth and clean off the RUSTOP immediately.

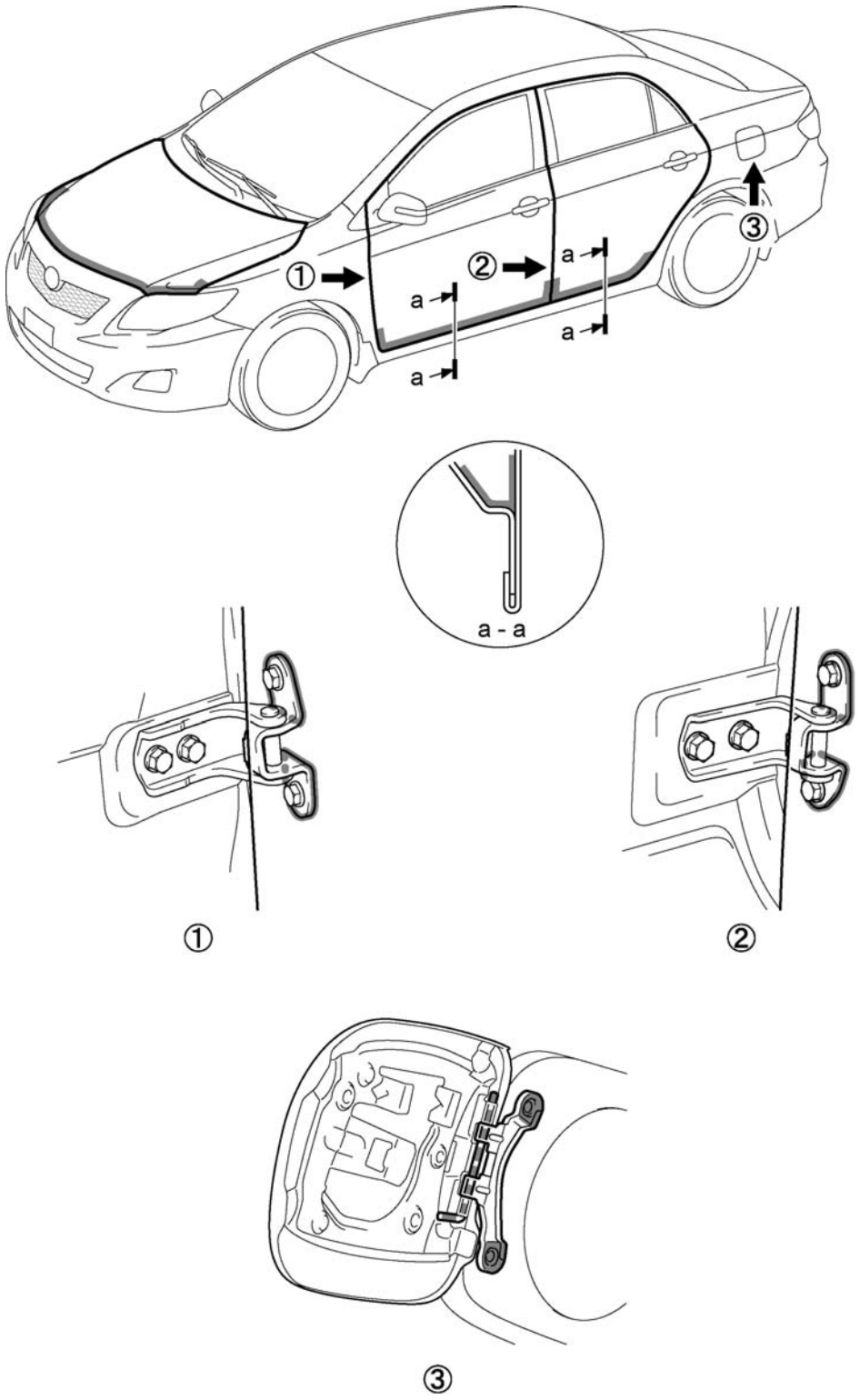

B0709250166A

SILENCER SHEET INSTALLATION AREAS

Substitute silencer sheets for the laminate coat application areas.



B0710040024